Dist	COUNTY	ROUTE	POST MILES TOTAL PROJECT	SHEET No.	TOTAL SHEETS
01	Men	20	R0.0	1	21

INDEX OF PLANS

SHEET No.	DESCRIPTION
1	TITLE AND LOCATION MAP
2	TYPICAL CROSS SECTIONS
3	LAYOUT
4-5	CONSTRUCTION DETAILS
6	DRAINAGE PLAN
7	DRAINAGE PROFILES, DETAILS AND QUANTITIES
8	UTILITY PLANS
9	CONSTRUCTION AREA SIGNS
10	TRAFFIC HANDLING PLAN
11	PAVEMENT DELINEATION AND SIGN PLAN
12	SUMMARY OF QUANTITIES
13	RETAINING WALL PLAN
14	PLANT LIST, PLANTING AND MULCH PLAN
15,16	TRAFFIC CONTROL SYSTEMS
17-21	REVISED AND NEW STANDARD PLANS

THE STANDARD PLANS LIST APPLICABLE TO THIS CONTRACT IS INCLUDED IN THE NOTICE TO BIDDERS AND SPECIAL PROVISSIONS BOOK.

STATE OF CALIFORNIA

DEPARTMENT OF TRANSPORTATION

PROJECT PLANS FOR CONSTRUCTION ON

STATE HIGHWAY

IN MENDOCINO COUNTY NEAR FORT BRAGG AT ROUTE 1

TO BE SUPPLEMENTED BY STANDARD PLANS DATED 2010

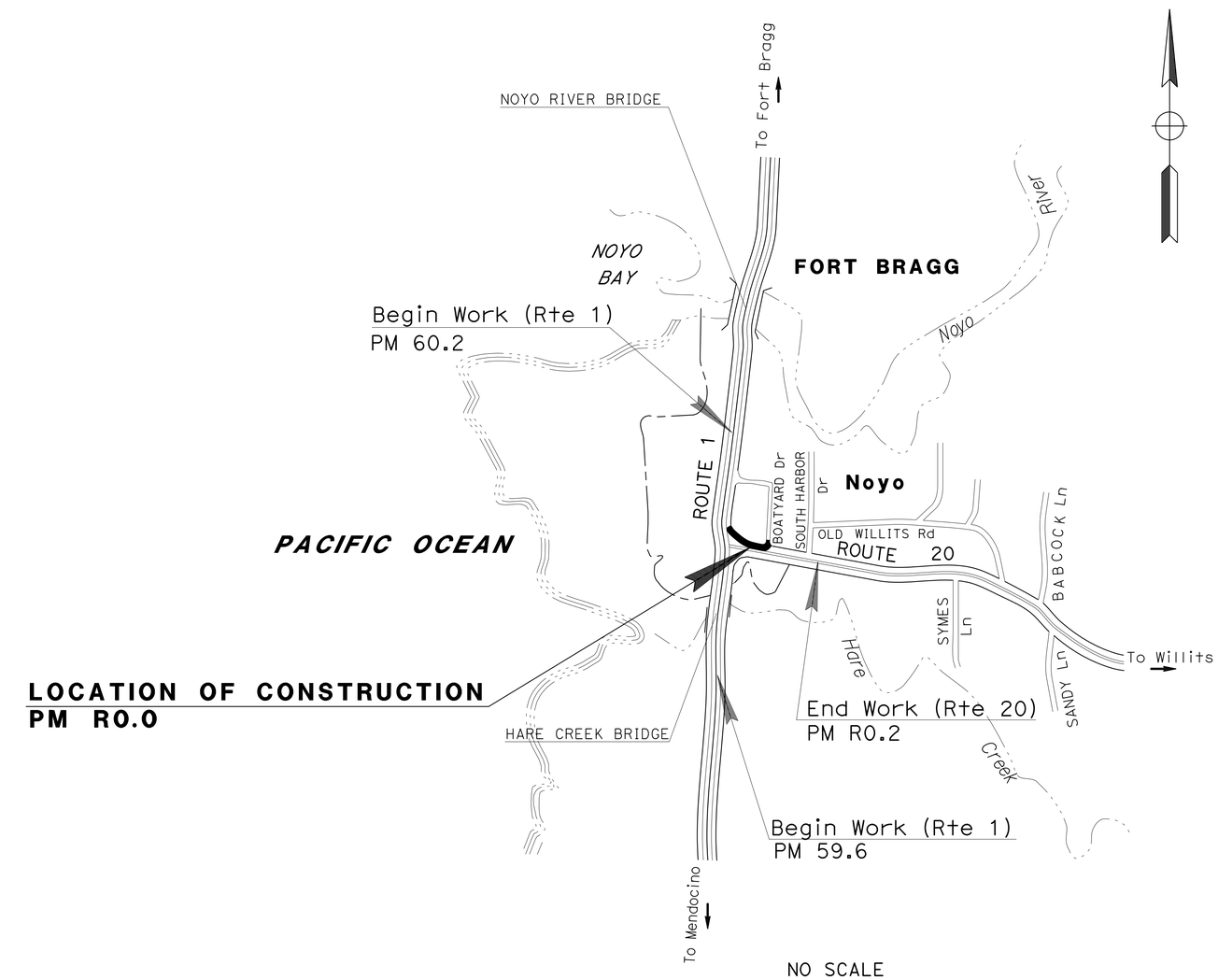

PROJECT MANAGER: FRANK DEMLING

DESIGN ENGINEER: KEN KEATON

THE CONTRACTOR SHALL POSSESS THE CLASS (OR CLASSES) OF LICENSE AS SPECIFIED IN THE "NOTICE TO BIDDERS."

9-24-12

PROJECT ENGINEER REGISTERED CIVIL ENGINEER — DATE

REGISTERED PROFESSIONAL ENGINEER — KENNETH KEATON — No. 45864 — Exp. 12-31-14 — CIVIL — STATE OF CALIFORNIA

February 19, 2013

PLANS APPROVAL DATE

THE STATE OF CALIFORNIA OR ITS OFFICERS OR AGENTS SHALL NOT BE RESPONSIBLE FOR THE ACCURACY OR COMPLETENESS OF SCANNED COPIES OF THIS PLAN SHEET.

CONTRACT No.	01-0A2304
PROJECT ID	0100020260

LAST REVISION 00-00-00 — DATE PLOTTED => 15-FEB-2013 — TIME PLOTTED => 11:50

Dist	COUNTY	ROUTE	POST MILES TOTAL PROJECT	SHEET No.	TOTAL SHEETS
01	Men	20	R0.0	2	21

REGISTERED CIVIL ENGINEER 9-24-12 DATE

2-19-13
PLANS APPROVAL DATE

REGISTERED PROFESSIONAL ENGINEER KENNETH KEATON No. 45864 Exp. 12-31-14 CIVIL STATE OF CALIFORNIA

THE STATE OF CALIFORNIA OR ITS OFFICERS OR AGENTS SHALL NOT BE RESPONSIBLE FOR THE ACCURACY OR COMPLETENESS OF SCANNED COPIES OF THIS PLAN SHEET.

NOTES:

1. DIMENSIONS OF THE PAVEMENT STRUCTURES (STRUCTURAL SECTIONS) ARE SUBJECT TO TOLERANCES SPECIFIED IN THE STANDARD SPECIFICATIONS.

LEGEND

1. 0.35′ CI 2 AB
2. 0.50′ HMA
   0.50′ CI 2 AB
3. 0.50′ PCC
   0.50′ CI 2 AB
4. COLD PLANE AC Pvmt (0.08′ Max)
   0.08′ HMA
5. Exist
   0.40′ AC
   0.55′ CI 2 AB

ABBREVIATION

SCL SAW CUT LINE

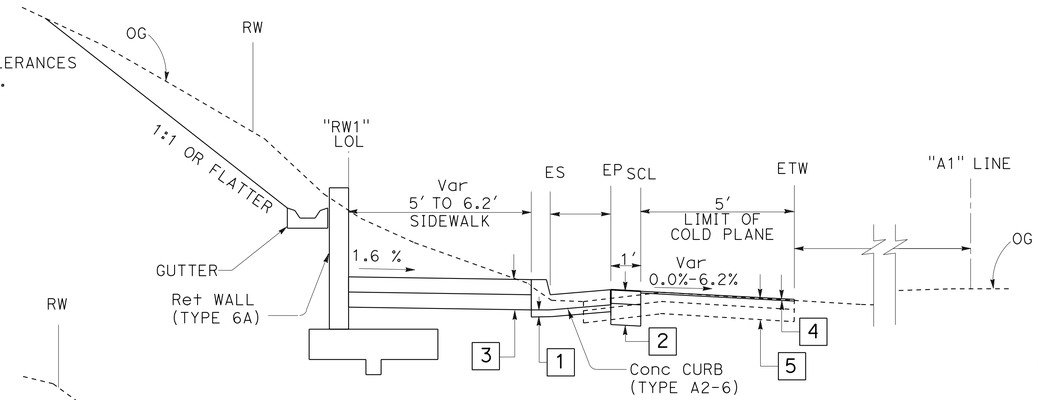

Sta "A1" 15+74.00 TO Sta "A1" 15+85.54

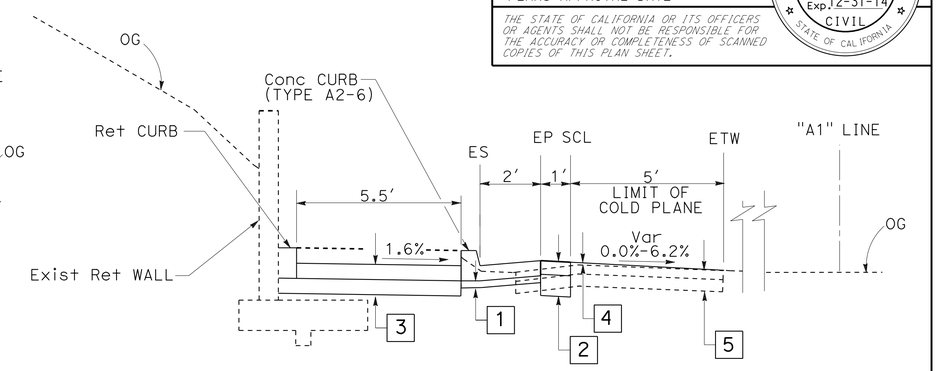

Sta "A1" 15+85.54 TO Sta "A1" 16+01.09

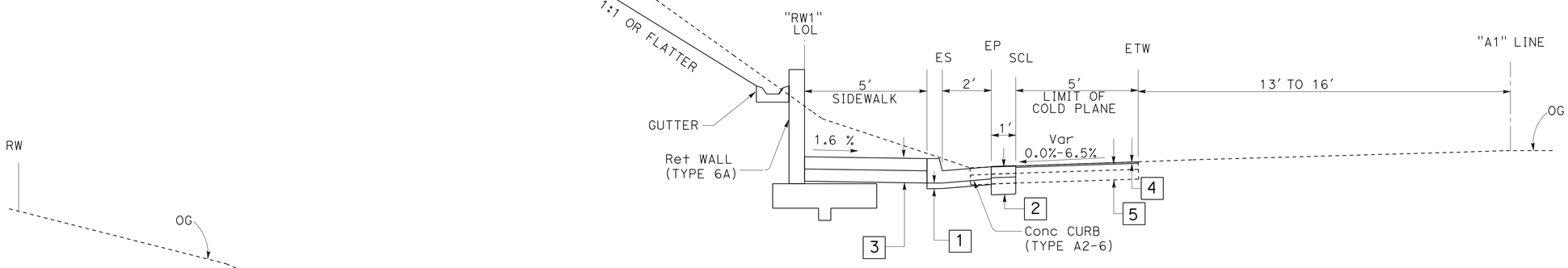

Sta "A1" 11+25.08 TO Sta "A1" 15+74.00

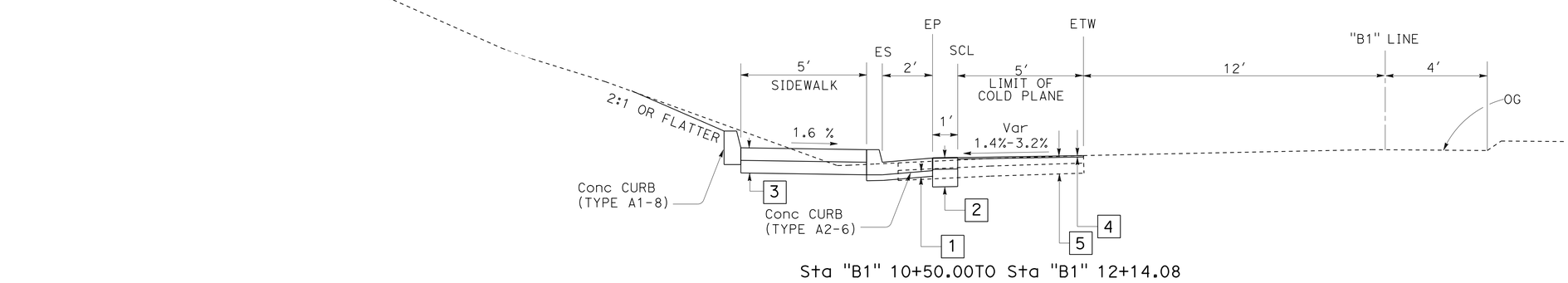

Sta "B1" 10+50.00TO Sta "B1" 12+14.08

ROUTE 20

TYPICAL CROSS SECTIONS

NO SCALE

X-1

STATE OF CALIFORNIA - DEPARTMENT OF TRANSPORTATION
Caltrans
NORTH REGION
DIVISION OF ENGINEERING

FUNCTIONAL SUPERVISOR: KEN KEATON
CALCULATED-DESIGNED BY: VINH LAO
CHECKED BY: GARY DUGHI
REVISED BY
DATE REVISED

LAST REVISION 00-00-00
DATE PLOTTED => 15-FEB-2013
TIME PLOTTED => 11:51

Dist	COUNTY	ROUTE	POST MILES TOTAL PROJECT	SHEET No.	TOTAL SHEETS
01	Men	20	R0.0	3	21

REGISTERED CIVIL ENGINEER 9-24-12 DATE

2-19-13
PLANS APPROVAL DATE

REGISTERED PROFESSIONAL ENGINEER KENNETH KEATON No. 45864 Exp. 12-31-14 CIVIL STATE OF CALIFORNIA

THE STATE OF CALIFORNIA OR ITS OFFICERS OR AGENTS SHALL NOT BE RESPONSIBLE FOR THE ACCURACY OR COMPLETENESS OF SCANNED COPIES OF THIS PLAN SHEET.

NOTES:

1. FOR ACCURATE RIGHT OF WAY DATA, CONTACT RIGHT OF WAY ENGINEERING AT THE DISTRICT OFFICE.
2. FOR RETAINING WALL, SEE RETAINING WALL PLAN.
3. FOR ISLAND PASSAGEWAY, SEE CONSTRUCTION DETAILS.

ABBREVIATIONS

SW	SIDEWALK
CC( )	Conc CURB (TYPE)
TCE	TEMPORARY CONSTRUCTION EASEMENT

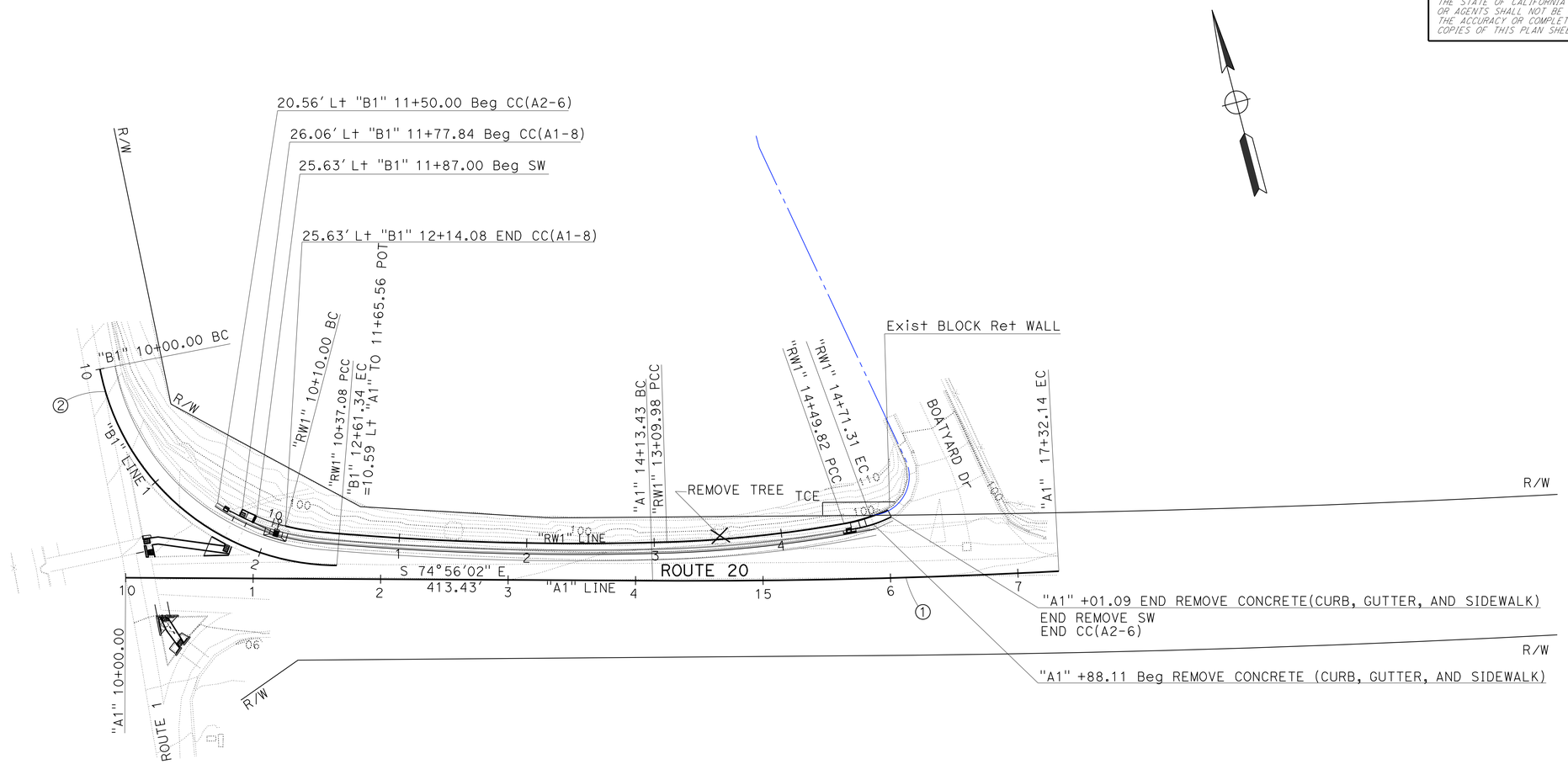

CURVE DATA

No. ⓗ	R	Δ	T	L
1	5497'	3°19'19"	159.40'	318.70'
2	190'	78°41'22"	156.00'	261.34'

LAYOUT

SCALE: 1"=50'

L-1

REVISED BY | DATE REVISED
VINH LAO | GARY DUGHI
CALCULATED-DESIGNED BY | CHECKED BY
FUNCTIONAL SUPERVISOR
KEN KEATON

STATE OF CALIFORNIA - DEPARTMENT OF TRANSPORTATION
Caltrans
NORTH REGION
DIVISION OF ENGINEERING

LAST REVISION 00-00-00 | DATE PLOTTED => 15-FEB-2013 | TIME PLOTTED => 11:51

Dist	COUNTY	ROUTE	POST MILES TOTAL PROJECT	SHEET No.	TOTAL SHEETS
01	Men	20	R0.0	4	21

REGISTERED CIVIL ENGINEER 9-24-12 DATE

2-19-13
PLANS APPROVAL DATE

REGISTERED PROFESSIONAL ENGINEER KENNETH KEATON No. 45864 Exp. 12-31-14 CIVIL STATE OF CALIFORNIA

THE STATE OF CALIFORNIA OR ITS OFFICERS OR AGENTS SHALL NOT BE RESPONSIBLE FOR THE ACCURACY OR COMPLETENESS OF SCANNED COPIES OF THIS PLAN SHEET.

NOTE:

1. FOR ACCURATE RIGHT OF WAY DATA, CONTACT RIGHT OF WAY ENGINEERING AT THE DISTRICT OFFICE.

LEGEND

- TEMPORARY CONSTRUCTION EASEMENT (TCE)
- GROOVED RAMP BOUNDARY. SEE STANDARD PLAN RSP A88A
- ROADWAY EXCAVATION (1.00′) 0.50′ HMA (TYPE A) 0.50′ CLASS 2 AGGREGATE BASE
- CURB RAMP DETECTABLE WARNING SURFACE SEE STANDARD PLAN RSP A88A
- REMOVE CONCRETE (CURB AND GUTTER) AND REMOVE CONCRETE SIDEWALK
- DIRECTION OF SIDEWALK OR CURB RAMP SLOPE
- (X) LOCATION
- NEW MINOR CONCRETE (CURB, SIDEWALK, AND CURB RAMP)
- Exist PCC

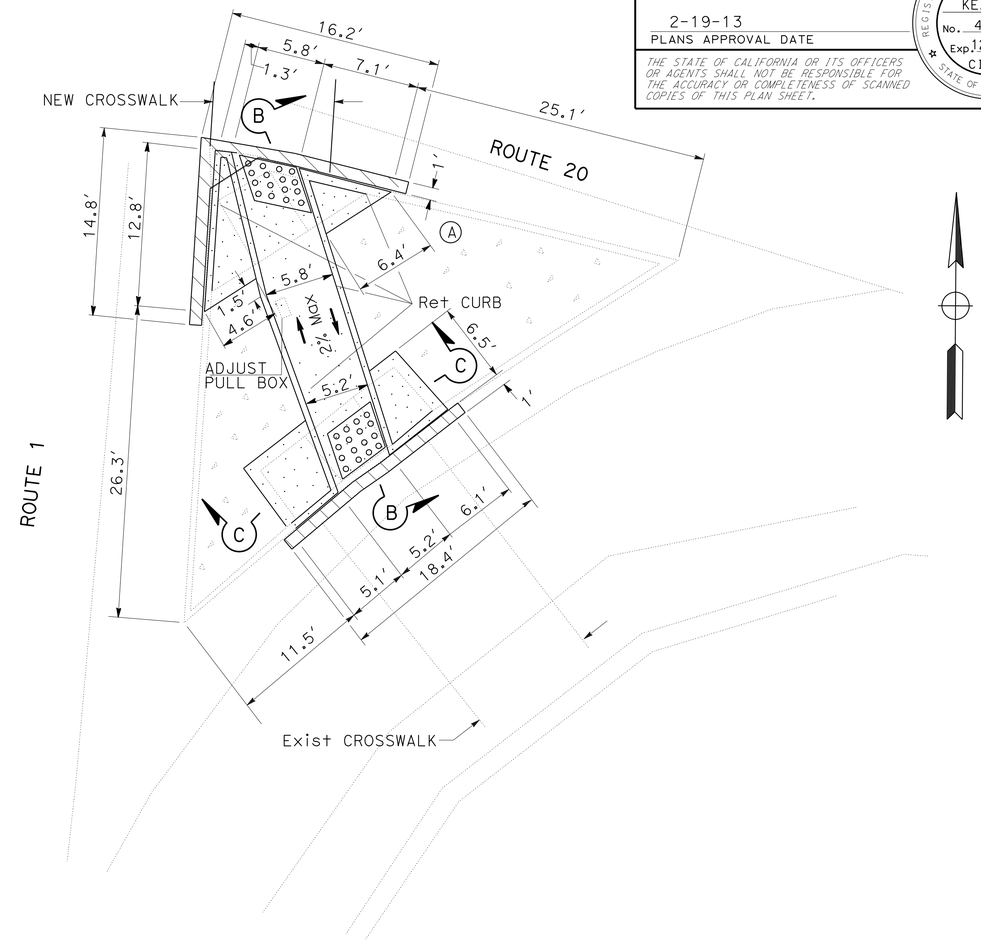

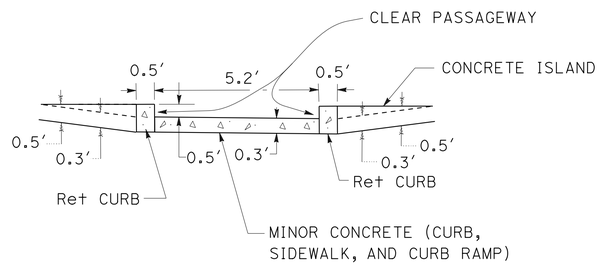

SECTION C-C

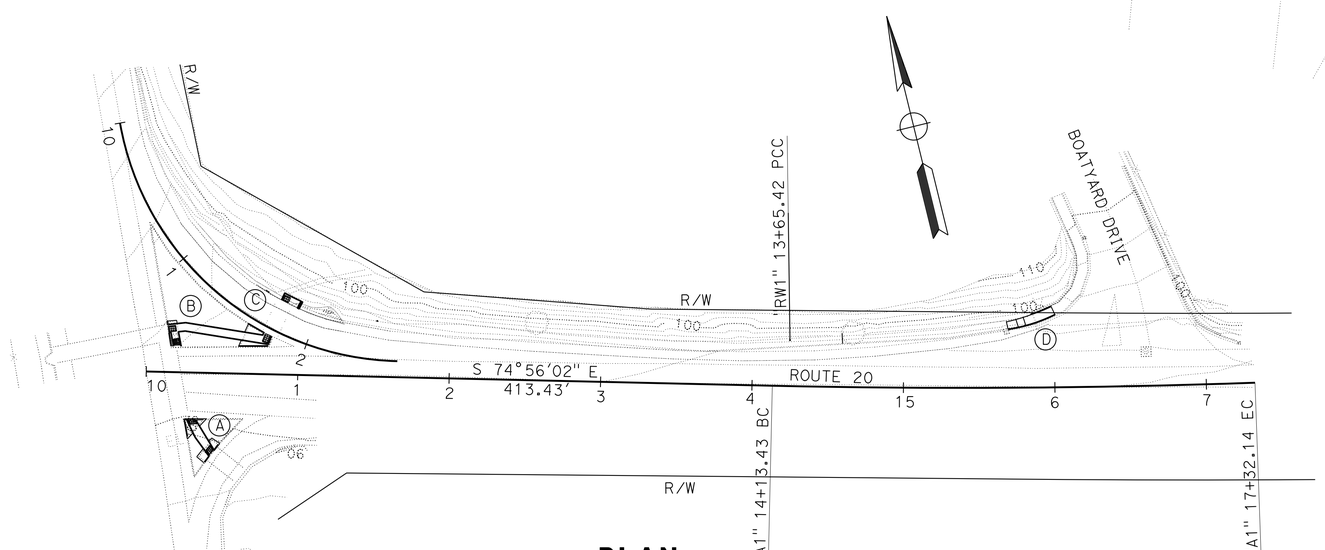

PLAN

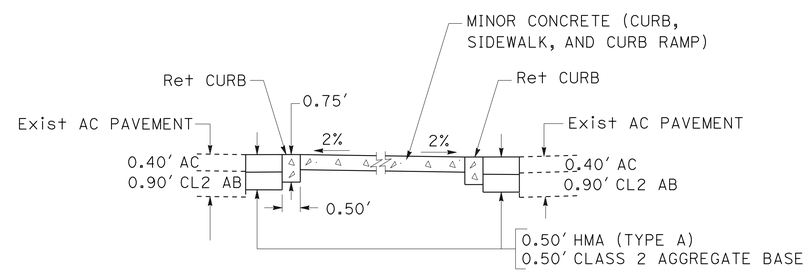

SECTION B-B

CONSTRUCTION DETAILS

NO SCALE

C-1

STATE OF CALIFORNIA - DEPARTMENT OF TRANSPORTATION
Caltrans
NORTH REGION DIVISION OF ENGINEERING

FUNCTIONAL SUPERVISOR: KEN KEATON
CALCULATED-DESIGNED BY: VINH LAO
CHECKED BY: GARY DUGHI
REVISED BY / DATE REVISED

LAST REVISION 00-00-00
DATE PLOTTED => 15-FEB-2013
TIME PLOTTED => 11:51

Dist	COUNTY	ROUTE	POST MILES TOTAL PROJECT	SHEET No.	TOTAL SHEETS
01	Men	20	R0.0	5	21

REGISTERED CIVIL ENGINEER 9-24-12 DATE

2-19-13
PLANS APPROVAL DATE

REGISTERED PROFESSIONAL ENGINEER KENNETH KEATON No. 45864 Exp. 12-31-14 CIVIL STATE OF CALIFORNIA

THE STATE OF CALIFORNIA OR ITS OFFICERS OR AGENTS SHALL NOT BE RESPONSIBLE FOR THE ACCURACY OR COMPLETENESS OF SCANNED COPIES OF THIS PLAN SHEET.

NOTES:

1. FOR ACCURATE RIGHT OF WAY DATA, CONTACT RIGHT OF WAY ENGINEERING AT THE DISTRICT OFFICE.
2. EXISTING CURB & GUTTER WILL TRANSITION TO CURB & GUTTER A2-6 IN 5 FEET.
3. CONSTRUCT JOINT AT "A1" 11+25.08 AT BEGINNING OF RETAINING WALL ON SIDEWALK.

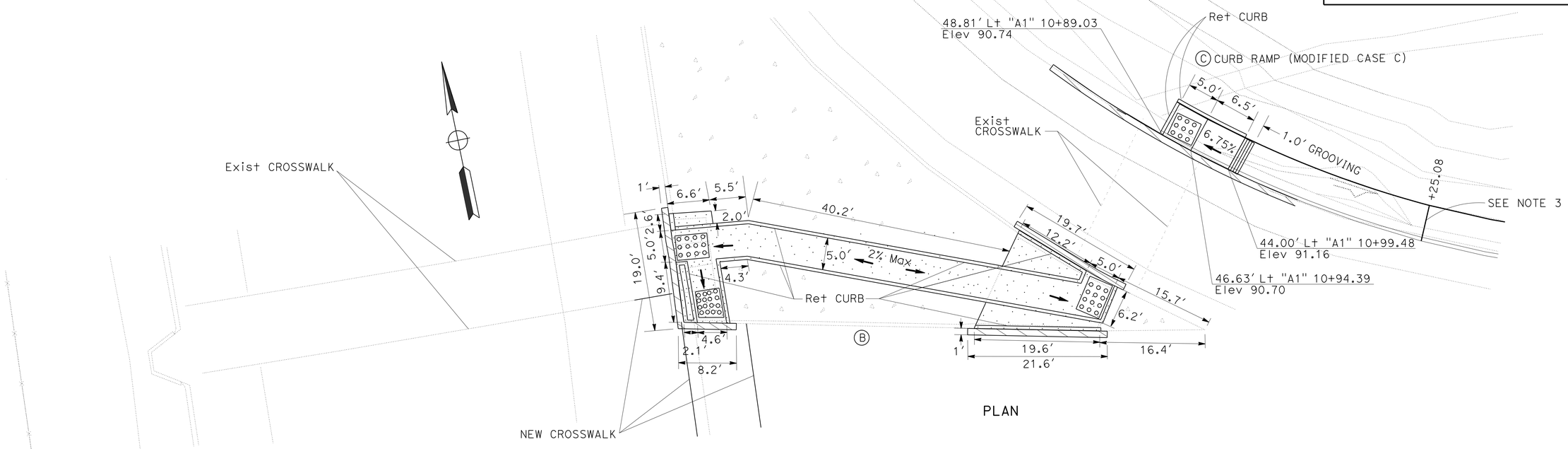

PLAN

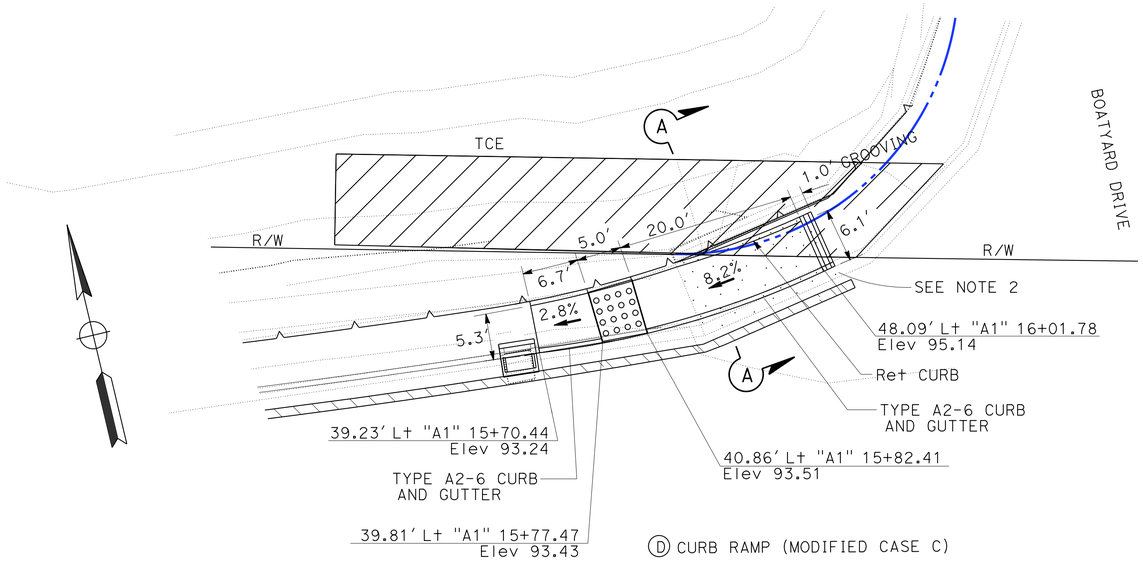

PLAN

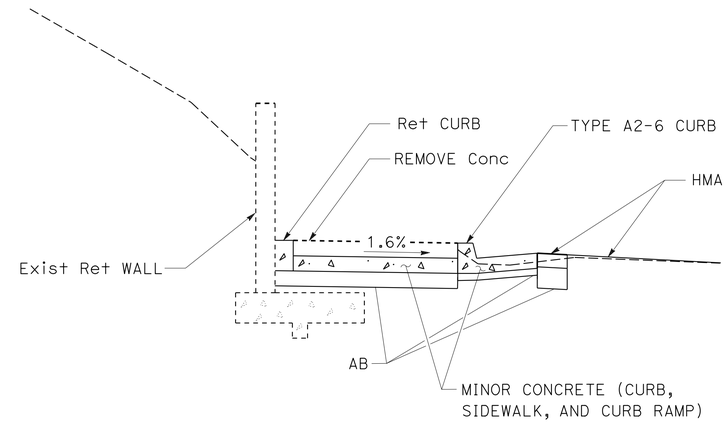

SECTION A-A

CONSTRUCTION DETAILS

NO SCALE

C-2

STATE OF CALIFORNIA - DEPARTMENT OF TRANSPORTATION
Caltrans
NORTH REGION
DIVISION OF ENGINEERING

FUNCTIONAL SUPERVISOR: KEN KEATON
CALCULATED-DESIGNED BY: VINH LAO
CHECKED BY: GARY DUGHI
REVISED BY
DATE REVISED

LAST REVISION DATE PLOTTED => 15-FEB-2013
00-00-00 TIME PLOTTED => 11:51

Dist	COUNTY	ROUTE	POST MILES TOTAL PROJECT	SHEET No.	TOTAL SHEETS
01	Men	20	R0.0	6	21

REGISTERED CIVIL ENGINEER 9-24-12 DATE

2-19-13
PLANS APPROVAL DATE

REGISTERED PROFESSIONAL ENGINEER
KENNETH KEATON
No. 45864
Exp. 12-31-14
CIVIL
STATE OF CALIFORNIA

THE STATE OF CALIFORNIA OR ITS OFFICERS OR AGENTS SHALL NOT BE RESPONSIBLE FOR THE ACCURACY OR COMPLETENESS OF SCANNED COPIES OF THIS PLAN SHEET.

NOTES:

1. FOR ACCURATE RIGHT OF WAY DATA, CONTACT RIGHT OF WAY ENGINEERING AT THE DISTRICT OFFICE.
2. FOR PP USE HIGH DENSITY POLYETHYLENE PIPE WITH A SMOOTH INTERIOR.

LEGEND

X DRAINAGE SYSTEM

X DRAINAGE UNIT

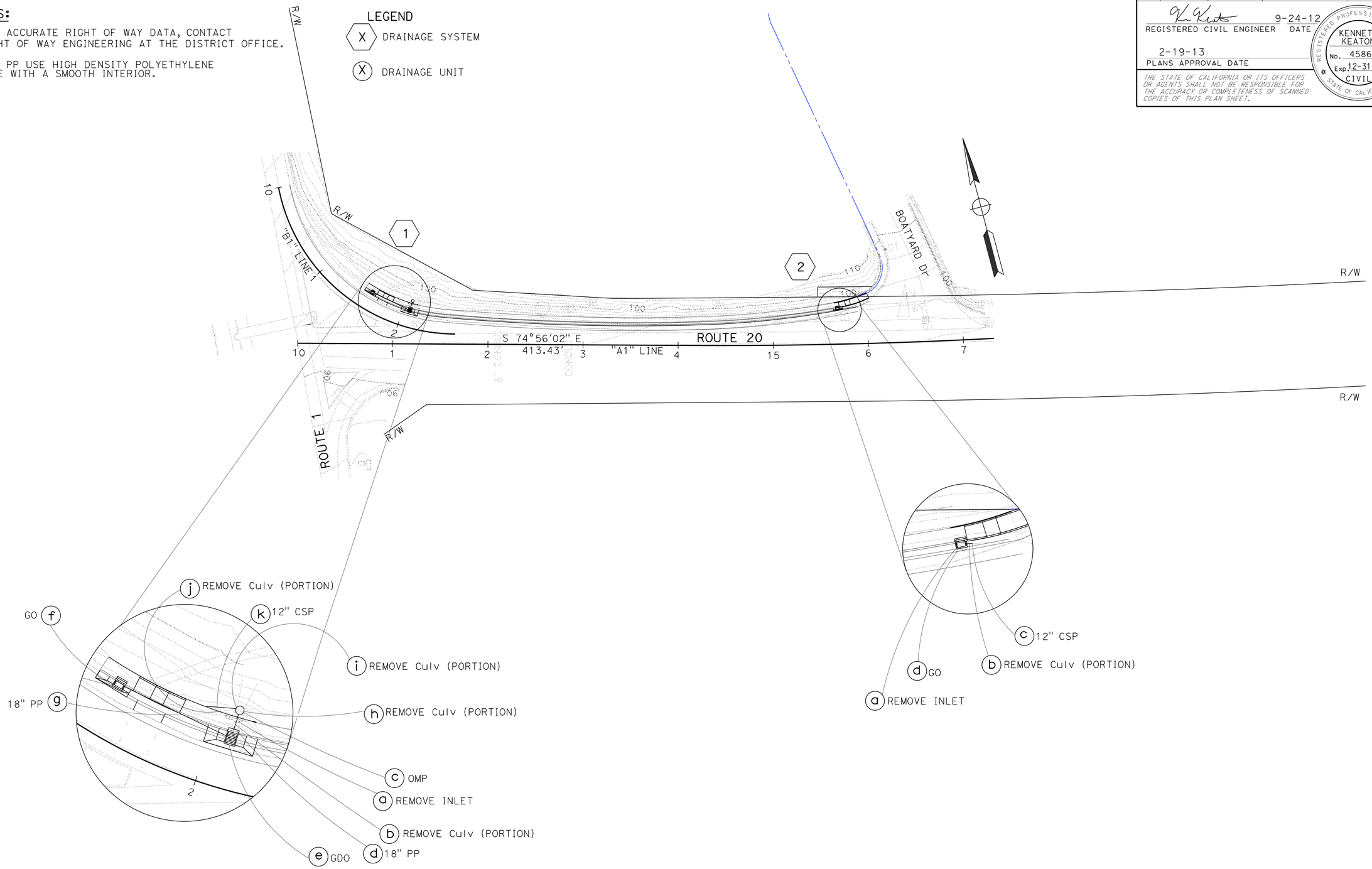

DRAINAGE PLAN

SCALE: 1"=50'

D-1

APPROVED FOR DRAINAGE WORK ONLY

STATE OF CALIFORNIA - DEPARTMENT OF TRANSPORTATION
Caltrans®
NORTH REGION
DIVISION OF ENGINEERING

FUNCTIONAL SUPERVISOR: KEN KEATON

CALCULATED-DESIGNED BY: VINH LAO
CHECKED BY: GARY DUGHI

REVISED BY | DATE REVISED

LAST REVISION 00-00-00 | DATE PLOTTED => 15-FEB-2013 | TIME PLOTTED => 11:51

Dist	COUNTY	ROUTE	POST MILES TOTAL PROJECT	SHEET No.	TOTAL SHEETS
01	Men	20	R0.0	7	21

REGISTERED CIVIL ENGINEER 9-24-12 DATE

2-19-13
PLANS APPROVAL DATE

REGISTERED PROFESSIONAL ENGINEER KENNETH KEATON No. 45864 Exp. 12-31-14 CIVIL STATE OF CALIFORNIA

THE STATE OF CALIFORNIA OR ITS OFFICERS OR AGENTS SHALL NOT BE RESPONSIBLE FOR THE ACCURACY OR COMPLETENESS OF SCANNED COPIES OF THIS PLAN SHEET.

NOTES:

1. APRONS FOR DRAINAGE SYSTEM 1 e AND f ARE PER STANDARD PLAN D78B.
2. APRON QUANTITIES ARE INCLUDED IN SIDEWALK QUANTITY.
3. BACK OF RET WALL GUTTER WILL END AT OPENING OF OMP INLET.
4. ALL CONNECTIONS WILL BE STANDARD CONNECTION.
5. TYPE OF MARKER SHALL BE STAMPED CONCRETE IMPRINT.

ABBREVIATION:

CH CURB HEIGHT.

DRAINAGE QUANTITIES

DRAINAGE SYSTEM No.	DRAINAGE UNIT	REMOVE INLET	REMOVE CULVERT	12" CORRUGATED STEEL PIPE INLET (0.079" THICK)	18" PLASTIC PIPE	36" CORRUGATED STEEL PIPE INLET (0.109" THICK)	MINOR CONCRETE (MINOR STRUCTURE)	(N) HEIGHT OF INLET	MISCELLANEOUS IRON & STEEL	DRAINAGE INLET MARKER	DESCRIPTION
		EA	LF	LF	LF	LF	CY	LF	LB	EA	
1	a	1									REMOVE INLET
	b		8.2								REMOVE Culv 30" x 8.2' CSP
	c					6.0	0.13	5.5	177		OMP INLET
	d				5.9						18" x 5.9' PP
	e						2.04	4.2	391	1	GDO INLET GRATE TYPE 24-10C
	f						1.24	3.0	202	1	GO INLET GRATE TYPE 24-10C
	g				40.3						18" x 40.3' PP
	h		2.5								REMOVE Culv 18" x 2.5' PP
	i		2.5								REMOVE Culv 18" x 2.5' PP
	j		5.0								REMOVE Culv 12" x 5.0' CSP
	k			5.4							12" X 5.4' CSP
2	a	1									REMOVE INLET
	b		2.0								REMOVE Culv 12" x 2.0' CSP
	c			2.0							12" x 2.0' CSP
	d						0.83	1.8	202	1	GO INLET GRATE TYPE 24-10C
TOTAL		2	20.2	7.4	46.2	6.0	4.24		972	3	

(N) = NOT A SEPARATE PAY ITEM, FOR INFORMATION ONLY.

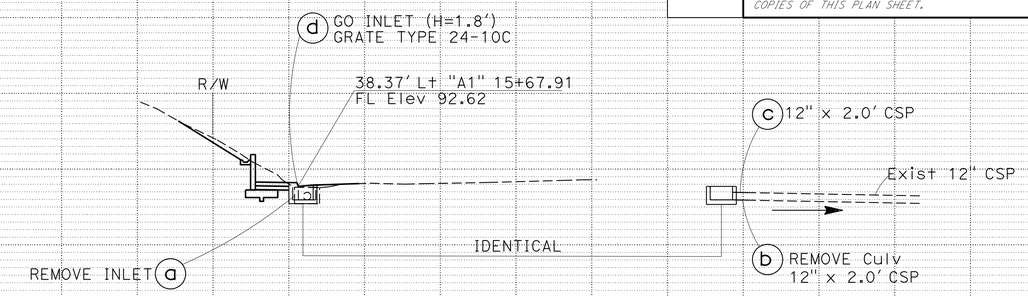

DRAINAGE SYSTEM No. 2

"A1" 15+67.91

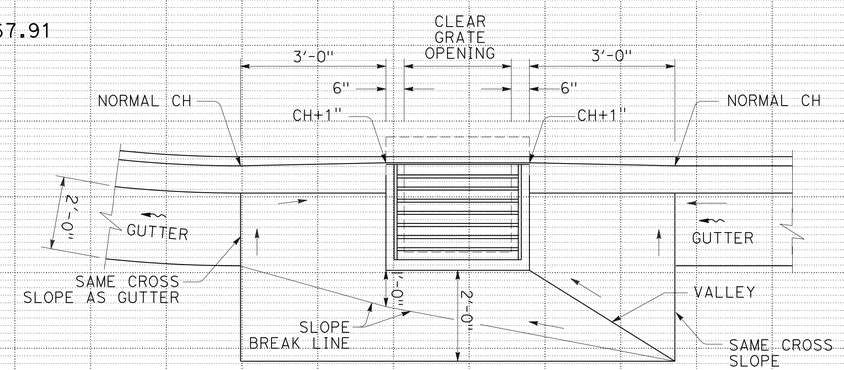

PLAN

2 d

NO SCALE

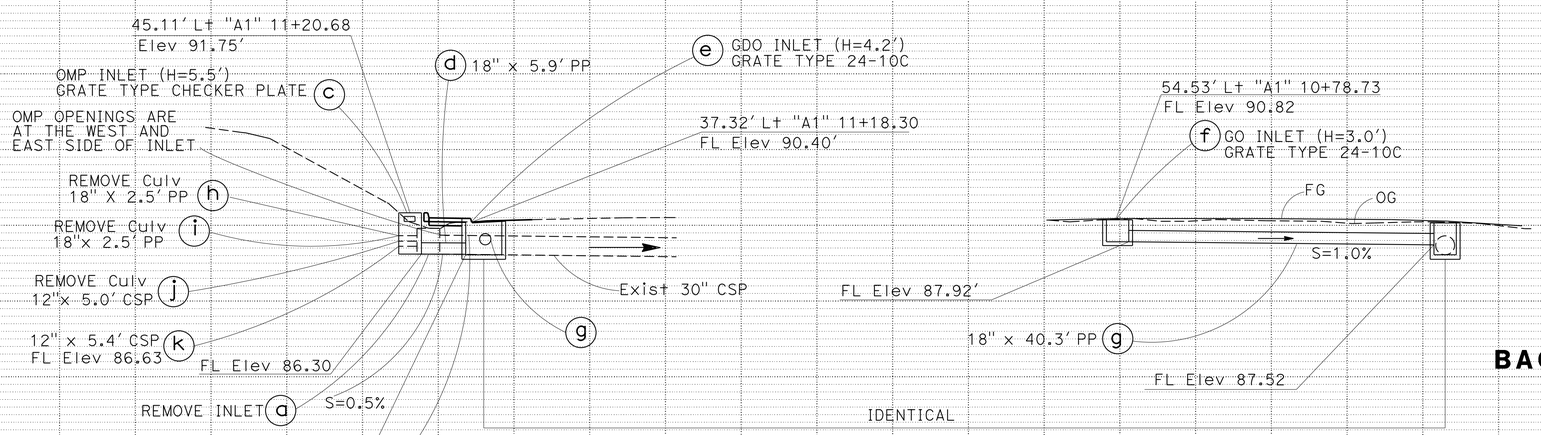

DRAINAGE SYSTEM No. 1

"A1" 10+79.53 TO 11+18.30

1

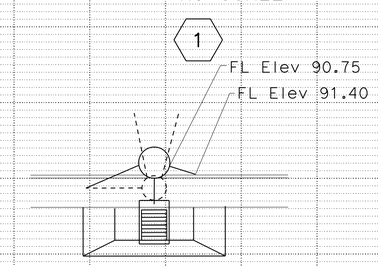

PLAN

BACK OF Ret WALL GUTTER TO DI

NO SCALE

SEE NOTE 3

DRAINAGE PROFILES

SCALE: Horiz 1"=10'
Vert 1"=10'

DP-1

STATE OF CALIFORNIA - DEPARTMENT OF TRANSPORTATION
NORTH REGION DIVISION OF ENGINEERING
Caltrans

FUNCTIONAL SUPERVISOR: KEN KEATON
CALCULATED-DESIGNED BY: VINH LAO
CHECKED BY: GARY DUGHI
REVISED BY / DATE REVISED

LAST REVISION 00-00-00 | DATE PLOTTED => 15-FEB-2013 | TIME PLOTTED => 11:51

Dist	COUNTY	ROUTE	POST MILES TOTAL PROJECT	SHEET No.	TOTAL SHEETS
01	Men	20	R0.0	8	21

REGISTERED CIVIL ENGINEER 9-24-12 DATE

2-19-13
PLANS APPROVAL DATE

REGISTERED PROFESSIONAL ENGINEER
KENNETH KEATON
No. 45864
Exp. 12-31-14
CIVIL
STATE OF CALIFORNIA

THE STATE OF CALIFORNIA OR ITS OFFICERS OR AGENTS SHALL NOT BE RESPONSIBLE FOR THE ACCURACY OR COMPLETENESS OF SCANNED COPIES OF THIS PLAN SHEET.

NOTES:

1. FOR ACCURATE RIGHT OF WAY DATA, CONTACT RIGHT OF WAY ENGINEERING AT THE DISTRICT OFFICE.
2. UTILITY OWNERSHIP:

   FIBER OPTIC - AT&T
   TELEPHONE - AT&T
   ELECTRICAL - PACIFIC GAS & ELECTRIC (PG&E)

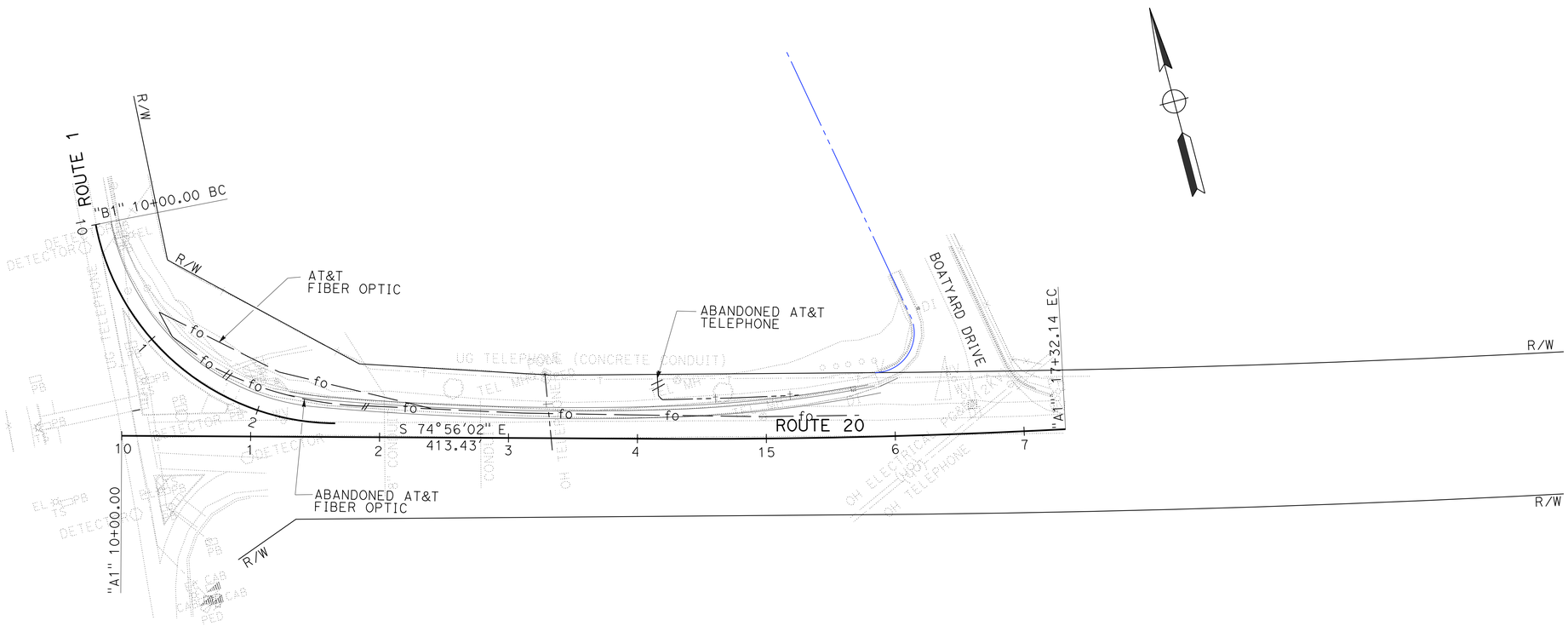

APPROVED FOR UTILITY INFORMATION ONLY

UTILITY PLAN

SCALE: 1"=50'

U-1

STATE OF CALIFORNIA - DEPARTMENT OF TRANSPORTATION
Caltrans
NORTH REGION
DIVISION OF ENGINEERING

FUNCTIONAL SUPERVISOR: KEN KEATON
CALCULATED-DESIGNED BY: VINH LAO
CHECKED BY: GARY DUGHI
REVISED BY
DATE REVISED

LAST REVISION 00-00-00
DATE PLOTTED => 15-FEB-2013
TIME PLOTTED => 11:51

Dist	COUNTY	ROUTE	POST MILES TOTAL PROJECT	SHEET No.	TOTAL SHEETS
01	Men	20	R0.0	9	21

REGISTERED CIVIL ENGINEER 9-24-12 DATE

2-19-13
PLANS APPROVAL DATE

REGISTERED PROFESSIONAL ENGINEER KENNETH KEATON No. 45864 Exp. 12-31-14 CIVIL STATE OF CALIFORNIA

THE STATE OF CALIFORNIA OR ITS OFFICERS OR AGENTS SHALL NOT BE RESPONSIBLE FOR THE ACCURACY OR COMPLETENESS OF SCANNED COPIES OF THIS PLAN SHEET.

STATIONARY MOUNTED CONSTRUCTION AREA SIGNS

SIGN LETTER	SIGN CODE FEDERAL	SIGN CODE CALIFORNIA	PANEL SIZE	SIGN MESSAGE	NUMBER OF POSTS AND SIZE	NUMBER OF SIGNS
A	W20-1	C23 (CA)	48'' X 48''	ROAD WORK AHEAD	2 - 4" X 6"	3
B	W20-1	C23 (CA)	30'' X 30''	ROAD WORK AHEAD	1 - 4'' X 4''	2
C	G20-2	C14 (CA)	36'' X 18''	END ROAD WORK	1 - 4'' X 4''	3
D		C40 (Mod) (CA)	72'' X 42''	TRAFFIC FINES DOUBLED IN WORK ZONES	2 - 4'' X 6''	3
E	W16-1P		24" X 30"	SHARE THE ROAD	1 - 4'' X 4''	3
	W11-1		36" x 36"	BICYCLE SYMBOL		

NOTE: EXACT SIGN LOCATIONS TO BE DETERMINED BY THE ENGINEER.

LEGEND

(X) CONSTRUCTION AREA SIGN

SIGN-DOUBLE POST

SIGN-SINGLE POST

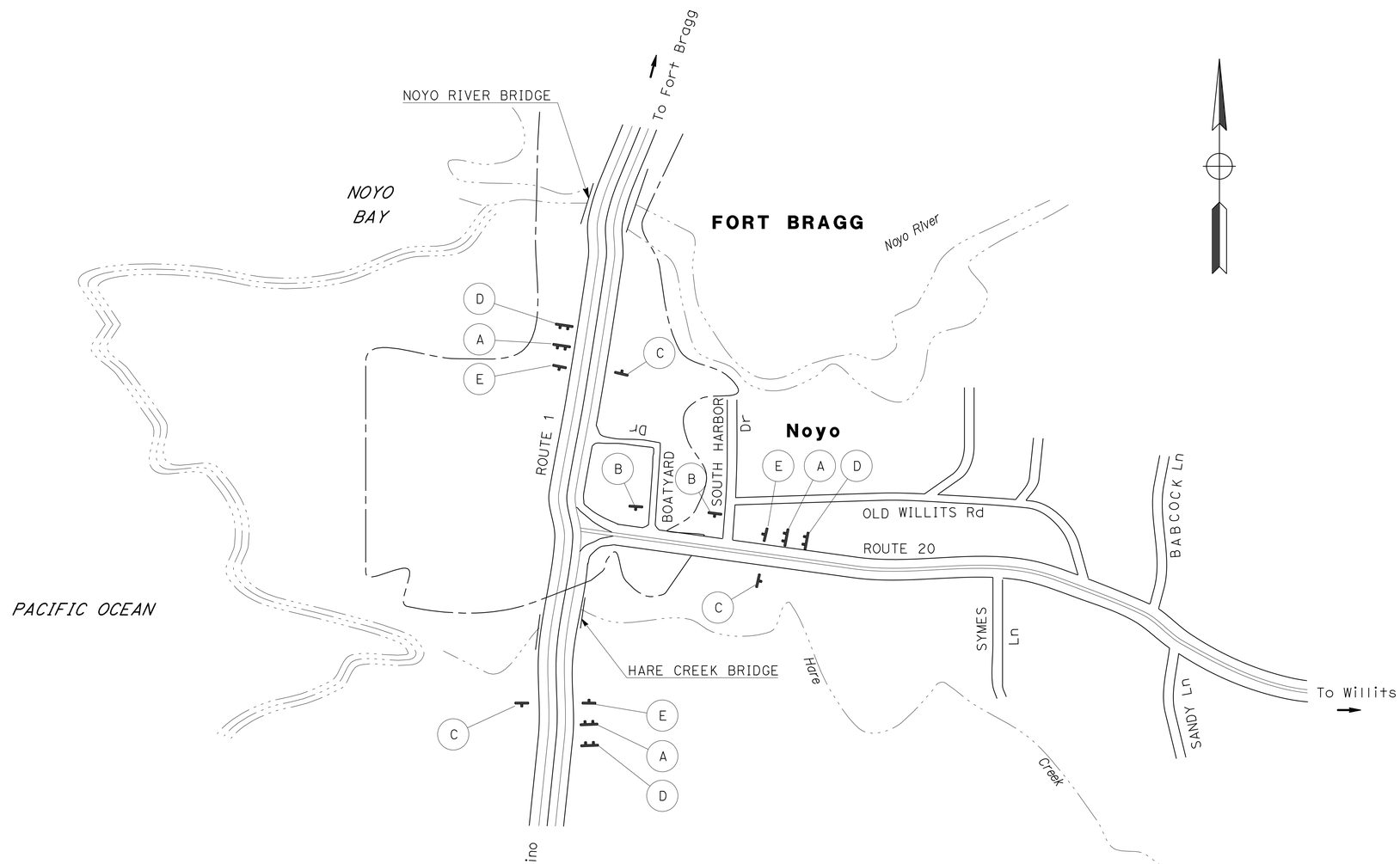

APPROVED FOR CONSTRUCTION AREA SIGN WORK ONLY

CONSTRUCTION AREA SIGNS

NO SCALE

CS-1

STATE OF CALIFORNIA - DEPARTMENT OF TRANSPORTATION
Caltrans®
NORTH REGION
DIVISION OF ENGINEERING

FUNCTIONAL SUPERVISOR: KEN KEATON

CALCULATED-DESIGNED BY: GARY DUGHI
CHECKED BY: VINH LAO

REVISED BY / DATE REVISED

LAST REVISION 00-00-00

DATE PLOTTED => 15-FEB-2013
TIME PLOTTED => 11:52

Dist	COUNTY	ROUTE	POST MILES TOTAL PROJECT	SHEET No.	TOTAL SHEETS
01	Men	20	R0.0	10	21

REGISTERED CIVIL ENGINEER 9-24-12 DATE

2-19-13
PLANS APPROVAL DATE

REGISTERED PROFESSIONAL ENGINEER
KENNETH KEATON
No. 45864
Exp. 12-31-14
CIVIL
STATE OF CALIFORNIA

THE STATE OF CALIFORNIA OR ITS OFFICERS OR AGENTS SHALL NOT BE RESPONSIBLE FOR THE ACCURACY OR COMPLETENESS OF SCANNED COPIES OF THIS PLAN SHEET.

NOTES:

1. FOR COMPLETE RIGHT OF WAY AND ACCURATE ACCESS DATA, SEE RIGHT OF WAY RECORD MAPS AT DISTRICT OFFICE.
2. WHEN RIGHT TURN LANE TO NB ROUTE 1 IS CLOSED, IT IS REQUIRED THAT THE INSIDE LEFT-TURN LANE FROM SB ROUTE 1 TO EB ROUTE 20 SHALL ALSO BE CLOSED. ADDITIONALLY, A C30 (CA) SHALL BE PLACED IN EACH CLOSED LANE, AND R60 (CA) SHALL BE PLACED ADJACENT TO WB ROUTE 20 LANE AT THE INTERSECTION.
3. NO OTHER LANE CLOSURE SHALL BE ALLOWED WHEN CLOSURE IN NOTE 2 IS IN PLACE.
4. ADDITIONAL SIGNS AS REQUIRED BY THIS PLAN SHALL BE CONSIDERED AS INCLUDED IN THE LUMP SUM ITEM FOR TRAFFIC CONTROL SYSTEM.

LEGEND

• CHANNELIZER (SURFACE MOUNTED)

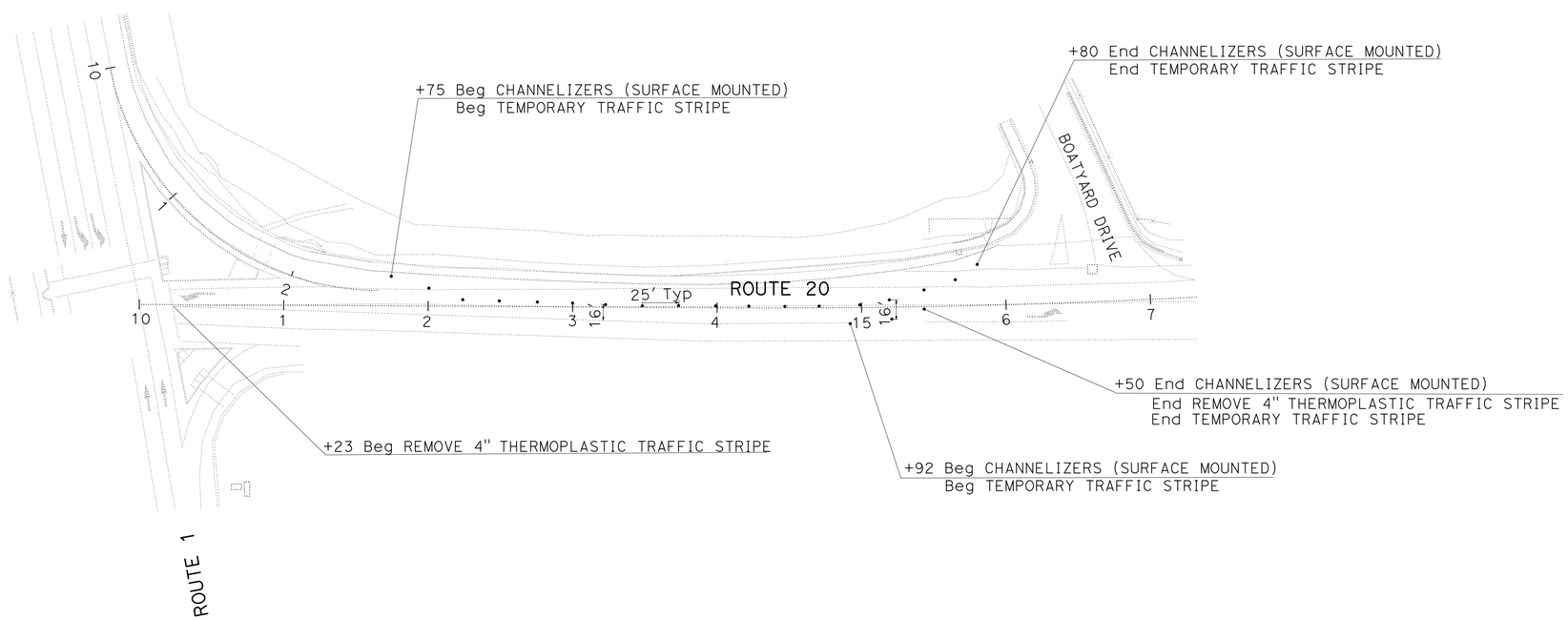

TRAFFIC HANDLING PLAN

SCALE: 1"=50'

TH-1

STATE OF CALIFORNIA - DEPARTMENT OF TRANSPORTATION
Caltrans
NORTH REGION
DIVISION OF ENGINEERING

FUNCTIONAL SUPERVISOR: KEN KEATON
CALCULATED-DESIGNED BY: VINH LAO
CHECKED BY: GARY DUGHI
REVISED BY
DATE REVISED

LAST REVISION 00-00-00
DATE PLOTTED => 15-FEB-2013
TIME PLOTTED => 11:52

Dist	COUNTY	ROUTE	POST MILES TOTAL PROJECT	SHEET No.	TOTAL SHEETS
01	Men	20	R0.0	11	21

REGISTERED CIVIL ENGINEER 9-24-12 DATE

2-19-13
PLANS APPROVAL DATE

REGISTERED PROFESSIONAL ENGINEER
KENNETH KEATON
No. 45864
Exp. 12-31-14
CIVIL
STATE OF CALIFORNIA

THE STATE OF CALIFORNIA OR ITS OFFICERS OR AGENTS SHALL NOT BE RESPONSIBLE FOR THE ACCURACY OR COMPLETENESS OF SCANNED COPIES OF THIS PLAN SHEET.

NOTES:

1. EXACT LOCATION OF SIGNS TO BE DETERMINED BY ENGINEER.

LEGEND

No.	PAVEMENT DELINEATION DETAIL NUMBER
LL	LIMIT LINE
→	LIMIT OF STRIPE PATTERN
Sht. No.	ROADSIDE SIGN NUMBER
	SIGN - SINGLE POST
	SIGN - TWO POST
*	RELOCATE SIGN/SIGN PANEL

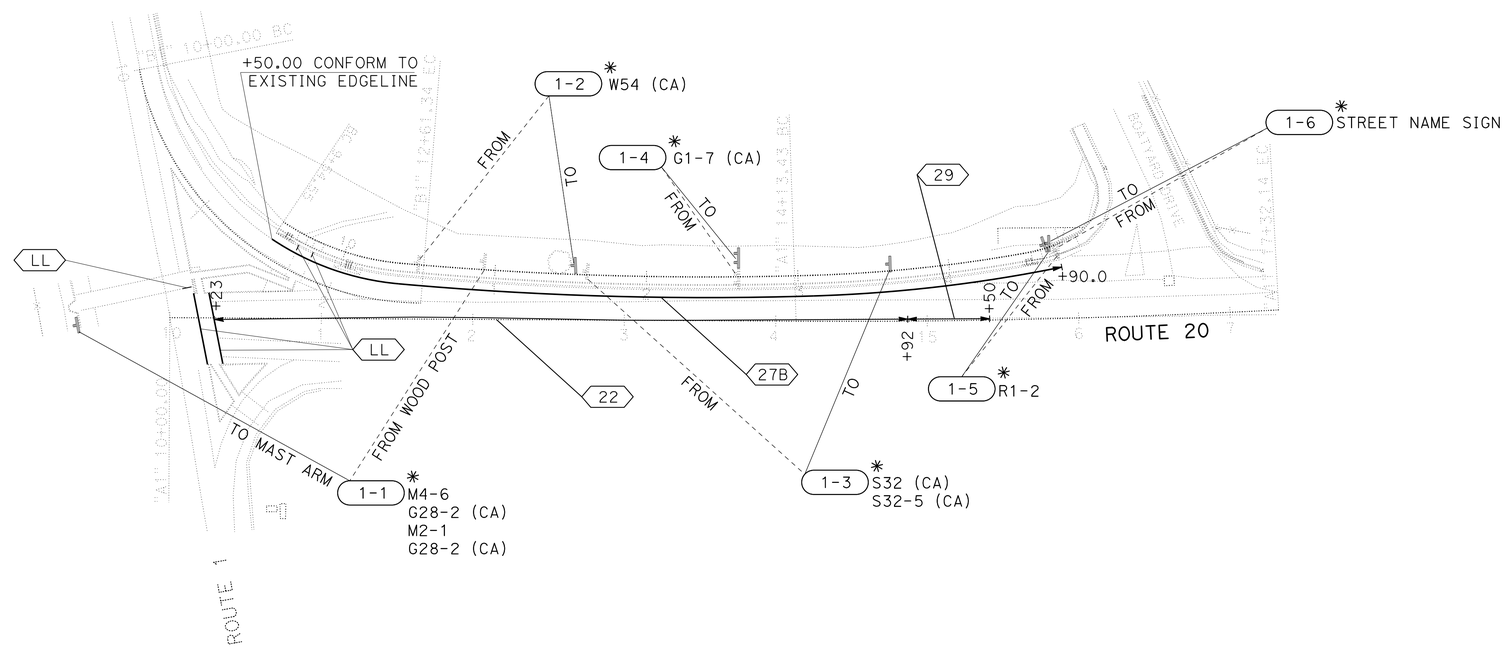

APPROVED FOR PAVEMENT DELINEATION AND SIGN WORK ONLY

PAVEMENT DELINEATION AND SIGN PLAN

SCALE: 1"=50'

PD-1

STATE OF CALIFORNIA - DEPARTMENT OF TRANSPORTATION
Caltrans
NORTH REGION
DIVISION OF ENGINEERING

FUNCTIONAL SUPERVISOR: KEN KEATON
CALCULATED-DESIGNED BY: GARY DUGHI
CHECKED BY: VINH LAO
REVISED BY
DATE REVISED

LAST REVISION 00-00-00
DATE PLOTTED => 15-FEB-2013
TIME PLOTTED => 11:52

Dist	COUNTY	ROUTE	POST MILES TOTAL PROJECT	SHEET No.	TOTAL SHEETS
01	Men	20	R0.0	12	21

REGISTERED CIVIL ENGINEER 9-24-12 DATE

2-19-13
PLANS APPROVAL DATE

REGISTERED PROFESSIONAL ENGINEER KENNETH KEATON No. 45864 Exp. 12-31-14 CIVIL STATE OF CALIFORNIA

THE STATE OF CALIFORNIA OR ITS OFFICERS OR AGENTS SHALL NOT BE RESPONSIBLE FOR THE ACCURACY OR COMPLETENESS OF SCANNED COPIES OF THIS PLAN SHEET.

NOTES:

1. MINOR CONCRETE (CURB, SIDEWALK, AND CURB RAMP) INCLUDES A2-6 CURB AND GUTTER, RETAINING CURB, CURB RAMP, AND SIDEWALK AREAS.
2. REMOVE CONCRETE (CURB, GUTTER, AND SIDEWALK) INCLUDES REMOVE CONCRETE AREA (CURB, CURB RAMP, CURB AND GUTTER, ISLAND AND SIDEWALK).

REMOVE YELLOW THERMOPLASTIC TRAFFIC STRIPE (HAZARDOUS WASTE)

DETAIL NUMBER	LF
22	910
29	124
TOTAL	1,034

REMOVE PAVEMENT MARKER

DETAIL NUMBER	RETROREFLECTIVE (TYPE C) EA
22	19
29	10
TOTAL	29

PAVEMENT MARKER (RETROREFLECTIVE)

DETAIL NUMBER	RETROREFLECTIVE (TYPE C) EA
22	19
29	10
TOTAL	29

ROADWAY QUANTITIES

Sht No.	LOCATION	(N) A2-6 CURB	(N) RETAINING CURB	(N) RETAINING CURB PASSAGEWAY OPENING	(N) REMOVE CONCRETE (AREA)	(N) CONCRETE ISLAND (6" PCC)	(N) CONCRETE PASSAGEWAY (4" PCC)	(N) SIDEWALK AREA	MINOR CONCRETE (CURB, SIDEWALK AND CURB RAMP)	REMOVE CONCRETE (CURB, GUTTER, AND SIDEWALK)	COLD PLANE ASPHALT CONCRETE PAVEMENT	MINOR HOT MIX ASPHALT	PLACE HOT MIX ASPHALT (MISCELLANEOUS AREA)	ROADWAY EXCAVATION	CLASS 2 AGGREGATE BASE	(N) CURB RAMP DETECTABLE WARNING SURFACE	ADJUST PULLBOX
		LF	LF	LF	SQFT	SQFT	SQFT	SQFT	CY	CY	SQYD	TON	SQYD	CY	CY	SQYD	EA
C-1	A		83.0	11.1	270.5	101.2	139.0		4.9	5.4		1.7	5.2	3.1	0.9	3.0	1
C-2	B		200.6	13.4	600.6	98.0	385.0		9.6	11.2		2.5	7.5	6.2	1.3	3.4	
C-2	C		18.0					90.1	1.9						1.7	1.7	
C-2	D		31.2		118.0			176.6	3.8	2.2					1.2	1.7	
Sta "A1" 10+74.62 TO Sta "A1" 16+01.09		525.5						2424.6	76.0		299.3	35.8	299.3	92.6	72.1		
TOTAL									96.2	18.8	299.3	40.0	311.9	101.9	77.2		1

(N) NOT A SEPARATE PAY ITEM. FOR INFORMATION ONLY

REMOVE TREE

LOCATION	EA
35.89' Lt "A1" 14+66.66	1
TOTAL	1

4" THERMOPLASTIC TRAFFIC STRIPE

DETAIL NUMBER	LF
27B	529
22	910
29	124
TOTAL	1563

REMOVE THERMOPLASTIC PAVEMENT MARKING

DESCRIPTION	SQFT
LIMIT LINE	114
TOTAL	114

THERMOPLASTIC PAVEMENT MARKING

DESCRIPTION	SQFT
LIMIT LINE	110
TOTAL	110

TEMPORARY TRAFFIC STRIPE (TAPE)

LOCATION	LF
Sta 11+25 TO 15+80	450

CHANNELIZER (SURFACE MOUNTED)

LOCATION	EA
Sta 11+25 TO 15+80	21

TEMPORARY EROSION CONTROL QUANTITIES

TEMPORARY DRAINAGE INLET PROTECTION	3 EA
TEMPORARY CHECK DAM	100 LF
TEMPORARY HYDRAULIC MULCH (BONDED FIBER MATRIX)	500 SQYD

ROADSIDE SIGN QUANTITIES

SIGN NUMBER	SIGN CODE FEDERAL	SIGN CODE CALIFORNIA	REMOVE SIGN POST	RELOCATE ROADSIDE SIGN 1 POST	RELOCATE ROADSIDE SIGN 2 POST	RELOCATE SIGN PANEL	REMARKS
1-1	M4-6 M2-1	G28-2 (CA) G28-2 (CA)	1			4	SIGN PANELS TO BE MOUNTED ON SIGNAL MAST ARM
1-2	-	W54 (CA)	-	1	-	-	-
1-3	-	S32 (CA) S32-5 (CA)	-	1	-	-	-
1-4	-	G1-7 (CA)	-	-	1	-	-
1-5	-	R1-2	-	1	-	-	-
1-6	-	-	-	1	-	-	STREET SIGNS
TOTAL			1	4	1	4	

RETAINING WALL QUANTITIES

LOCATION	DESCRIPTION	QUANTITIES
Sta "RW1" 10+10.00 TO "RW1" 14+71.31	STRUCTURE EXCAVATION (RETAINING WALL)	400 CY
	STRUCTURE BACKFILL (RETAINING WALL)	91 CY
	STRUCTURAL CONCRETE, RETAINING WALL	97 CY
	BAR REINFORCING STEEL (RETAINING WALL)	6140 LB
	RETAINING WALL (MASONRY WALL)	236 SQYD
	ANTI-GRAFFITI COATING	1600 SQFT
	MINOR CONCRETE (GUTTER)	11 CY

SUMMARY OF QUANTITIES

Q-1

REVISED BY | DATE REVISED
GARY DUGHI | VINH LAO
CALCULATED-DESIGNED BY | CHECKED BY
FUNCTIONAL SUPERVISOR
KEN KEATON

STATE OF CALIFORNIA - DEPARTMENT OF TRANSPORTATION
NORTH REGION
DIVISION OF ENGINEERING
Caltrans

LAST REVISION 00-00-00 | DATE PLOTTED => 15-FEB-2013 | TIME PLOTTED => 11:52

Dist	COUNTY	ROUTE	POST MILES TOTAL PROJECT	SHEET No.	TOTAL SHEETS
01	Men	20	R0.0	13	21

Litton Wang 9-24-12
REGISTERED CIVIL ENGINEER DATE

2-19-13
PLANS APPROVAL DATE

REGISTERED PROFESSIONAL ENGINEER LITTON WONG No. 67615 Exp. 6-30-13 CIVIL STATE OF CALIFORNIA

THE STATE OF CALIFORNIA OR ITS OFFICERS OR AGENTS SHALL NOT BE RESPONSIBLE FOR THE ACCURACY OR COMPLETENESS OF SCANNED COPIES OF THIS PLAN SHEET.

NOTES:

1. ALL REINFORCEMENT SHALL BE EPOXY COATED REBAR.
2. THIS PLAN ACCURATE FOR Ret WALL WORK ONLY.
3. PLACE EXPANSION JOINT BETWEEN EXISTING Ret WALL AND NEW Ret WALL.

LEGEND:

STANDARD PLAN SHEET No.

DETAIL No.

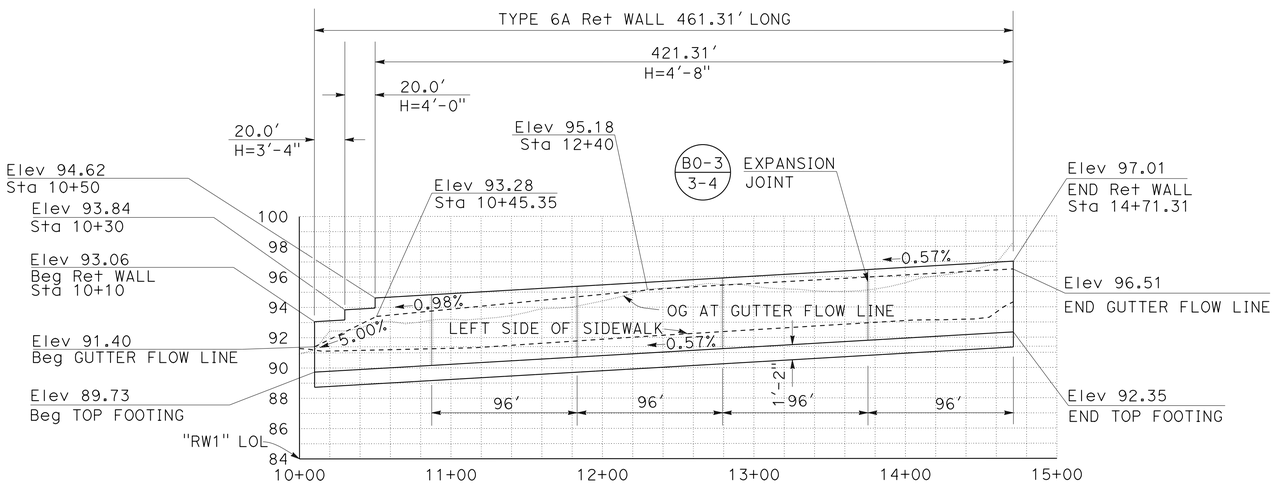

ELEVATION
SCALE: Horiz 1"=50'
Vert 1"=5'

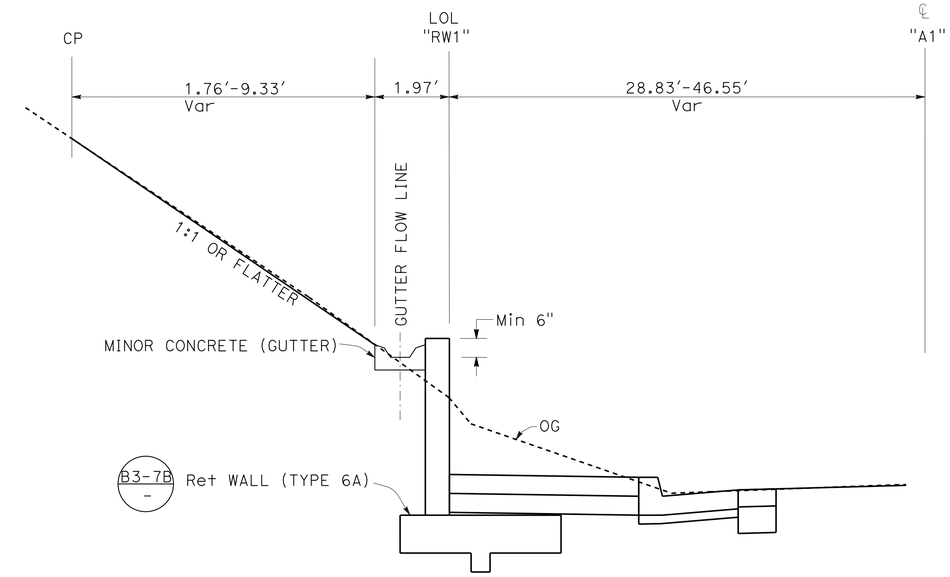

TYPICAL SECTION
NO SCALE

CURVE DATA

No. ⊕	R	Δ	T	L
1	190'	78°41'22"	156.00'	261.34'
2	5497'	3°19'19"	159.40'	318.70'
3	165'	9°25'17"	13.57'	27.08'
4	2264'	6°54'18"	136.62'	272.90'
5	960'	8°20'38"	70.05'	139.84'
6	123'	10°1'20"	10.77'	21.49'

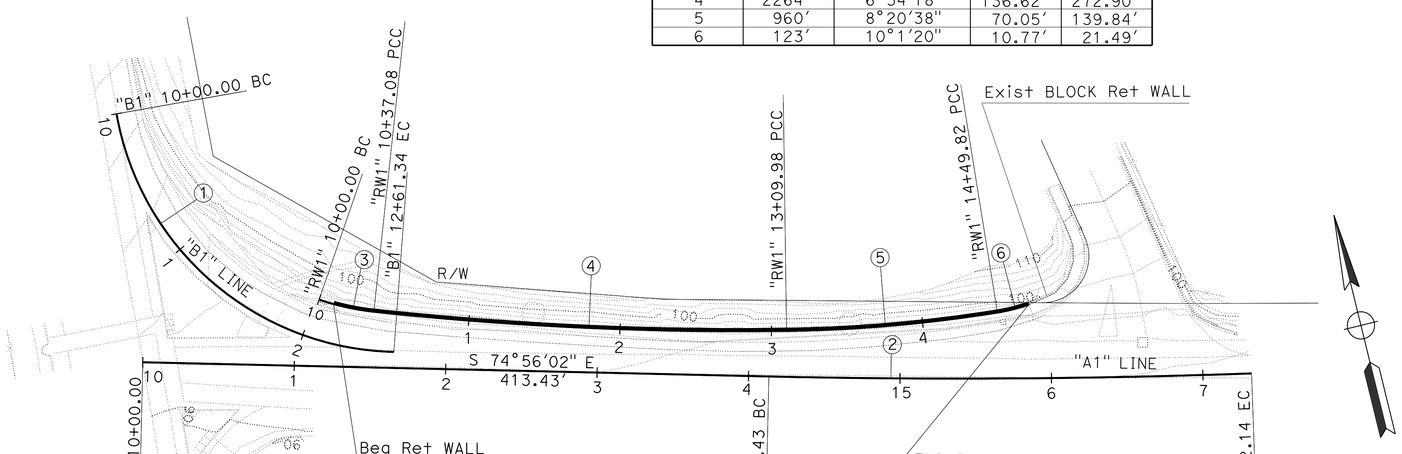

PLAN
SCALE: 1"=50'

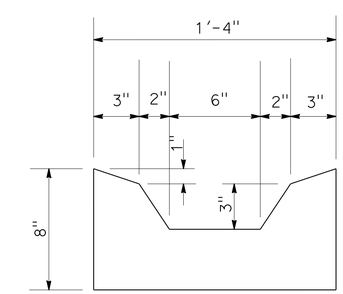

GUTTER DETAIL

RETAINING WALL PLAN
SCALE AS SHOWN

R-1

REVISED BY	DATE REVISED
VINH LAO	KEN KEATON
CALCULATED-DESIGNED BY	CHECKED BY
FUNCTIONAL SUPERVISOR	KEN KEATON

STATE OF CALIFORNIA - DEPARTMENT OF TRANSPORTATION
Caltrans
NORTH REGION
DIVISION OF ENGINEERING

LAST REVISION 00-00-00
DATE PLOTTED => 15-FEB-2013
TIME PLOTTED => 11:52

Dist	COUNTY	ROUTE	POST MILES TOTAL PROJECT	SHEET No.	TOTAL SHEETS
01	Men	20	R0.0	14	21

Laura Lazzarotto
LICENSED LANDSCAPE ARCHITECT

2-19-13
PLANS APPROVAL DATE

LICENSED LANDSCAPE ARCHITECT Laura Lazzarotto L.A. 4015 — Signature — 8-31-13 Renewal Date — Date — STATE OF CALIFORNIA

THE STATE OF CALIFORNIA OR ITS OFFICERS OR AGENTS SHALL NOT BE RESPONSIBLE FOR THE ACCURACY OR COMPLETENESS OF SCANNED COPIES OF THIS PLAN SHEET.

ABBREVIATIONS

AMEND — amendment
Dia — diameter
EA — each
LB — pound
Oz — ounce
Ft — foot/feet
SQFT — square feet
SQYD — square yard
CF — cubic feet
Max — maximum
Min — minimum
No. — number
Pkt — packet
PLT ESTB — plant establishment
Pvmt — pavement
R/W — right of way
SF — state furnished
TRVD — traveled

APPLICABLE WHEN CIRCLED:

1 - Quantities shown are "per plant"
2 - Sufficient to receive root ball.
3 - Does not apply to mulch areas.
4 - As shown on plans.
5 - Unless otherwise shown on plans.
6 - See detail.
7 - See Special Provisions.

PLANT LIST AND PLANTING SPECIFICATIONS

PLANT GROUP	PLANT No.	SYMBOL	BOTANICAL NAME	COMMON NAME	SIZE	QUANTITY EACH	HOLE SIZE (INCH) Dia	HOLE SIZE (INCH) DEPTH	BASIN TYPE	SOIL AMEND 1	COMMERCIAL FERTILIZER 1 PLANTING	COMMERCIAL FERTILIZER 1 PLT ESTB	BASIN MULCH	PLANTING LIMITS MIN. DISTANCE (Ft) FROM TRVD WAY	PVMT	WALL	PAVED DITCH	EARTH DITCH	ON CENTER (Ft)	REMARKS
A	No. 1	◯	ARCTOSTAPHYLOS UVA-URSI	BEARBERRY	1 GAL	22	8	10	II	0.25 CF	1 pkt	4 oz	—	—	6	6	6	—	4	GROUNDCOVER
	No. 1	⊕	CEANOTHUS GLORIOSUS VAR. GLORIOSUS	POINT REYES CEANOTHUS	1 GAL	47	8	10	II	0.25 CF	1 pkt	4 oz	—	—	6	6	6	—	4	GROUNDCOVER
	No. 1	⬡	VACCINUM OVATUM	HUCKLEBERRY	1 GAL	21	8	10	II	0.25 CF	1 pkt	4 oz	—	—	6	6	6	—	4	SHRUB
B	No. 5	⊗	PINUS CONTORTA	SHORE PINE	5 GAL	3	12	18	II	0.30 CF	2 pkt	6 oz	—	—	6	6	6	—	4	SMALL TREE
	No. 5	⊙	RHODODENDRON MACROPHYLLUM	PACIFIC RHODODENDRON	5 GAL	16	12	18	II	0.30 CF	2 pkt	6 oz	—	—	6	6	6	—	4	LARGE SHRUB

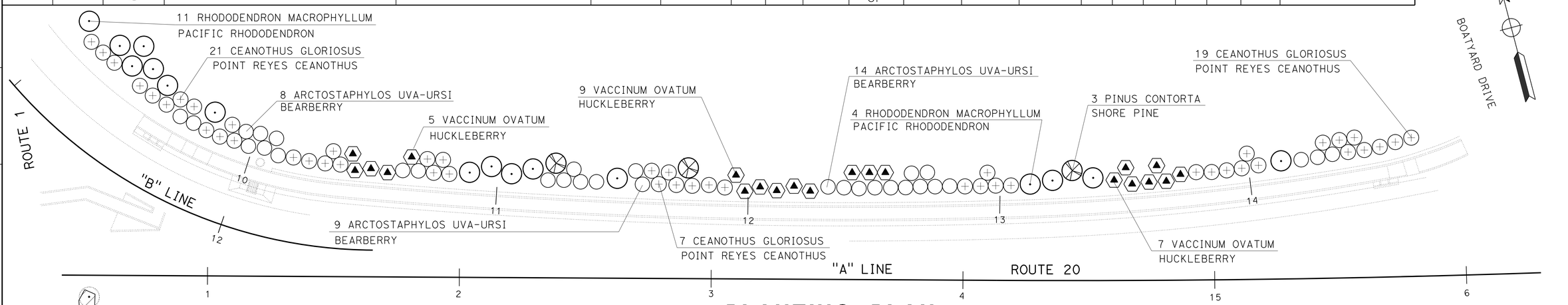

PLANTING PLAN

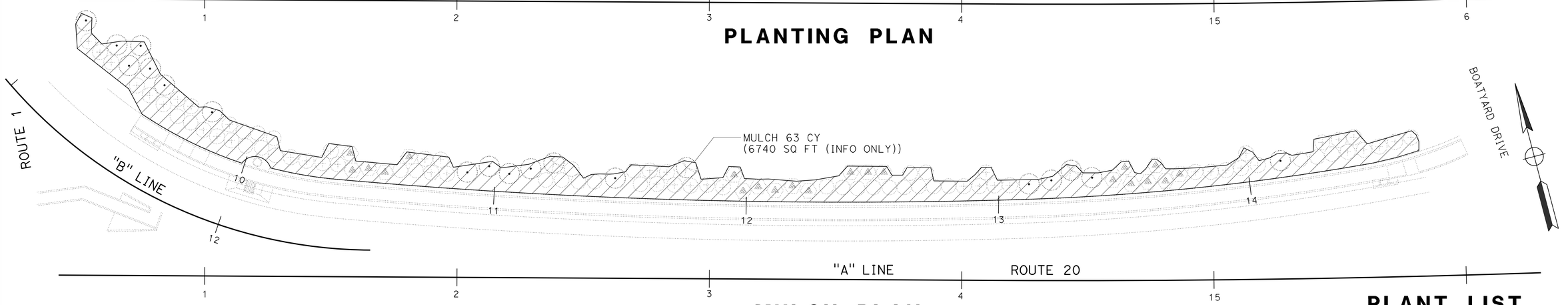

MULCH PLAN

MULCH

MATERIAL	
DESCRIPTION	TYPE
BARK	MEDIUM

PLANT LIST
PLANTING PLAN
MULCH PLAN

SCALE: 1"=20'

PL-1

L.LAZZAROTTO 06/07/12
REVISED BY DATE REVISED
LAURA LAZZAROTTO LAURA LAZZAROTTO
CALCULATED-DESIGNED BY CHECKED BY
SENIOR LANDSCAPE ARCHITECT RON FLORY
STATE OF CALIFORNIA - DEPARTMENT OF TRANSPORTATION
Caltrans
LANDSCAPE

LAST REVISION 00-00-00
DATE PLOTTED => 15-FEB-2013
TIME PLOTTED => 11:52

Dist	COUNTY	ROUTE	POST MILES TOTAL PROJECT	SHEET No.	TOTAL SHEETS
01	Men	20	R0.0	15	21

REGISTERED CIVIL ENGINEER 12-7-12 DATE

2-19-13
PLANS APPROVAL DATE

REGISTERED PROFESSIONAL ENGINEER Gurinderpal Bhullar No. C48815 Exp. 9-30-14 CIVIL STATE OF CALIFORNIA

THE STATE OF CALIFORNIA OR ITS OFFICERS OR AGENTS SHALL NOT BE RESPONSIBLE FOR THE ACCURACY OR COMPLETENESS OF SCANNED COPIES OF THIS PLAN SHEET.

TYPICAL LANE CLOSURE

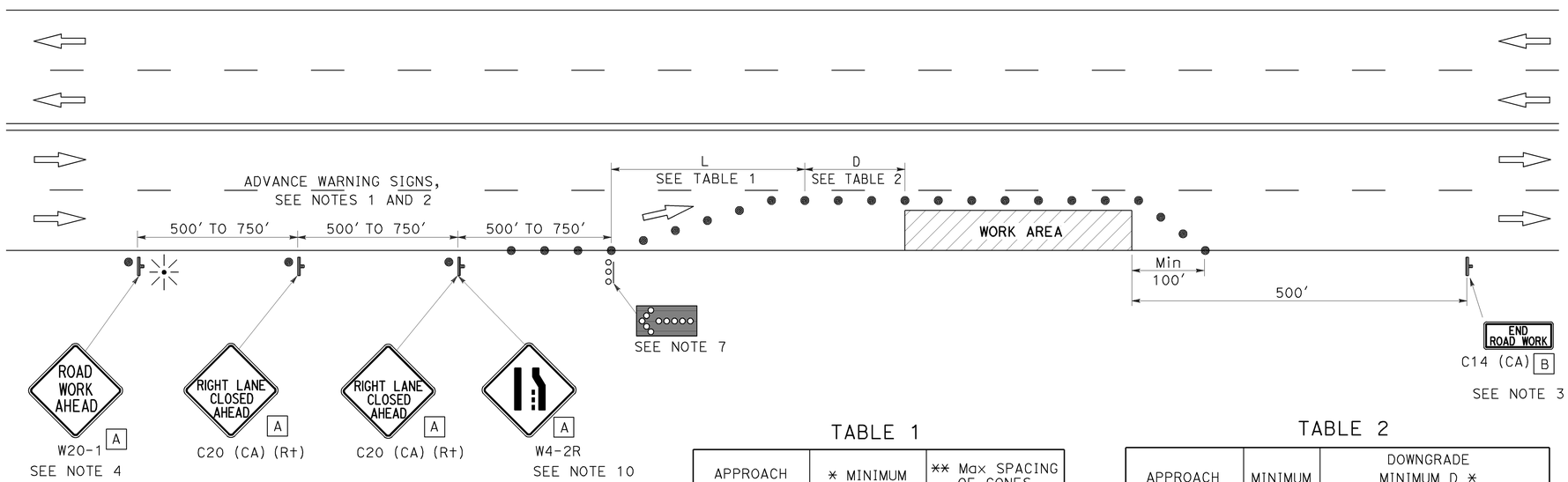

NOTES:

Unless otherwise specified in the special provisions, all temporary warning signs shall have black legend on orange background.

California code are designated by (CA). Otherwise, Federal (MUTCD) codes are shown.

LEGEND

- TRAFFIC CONE
- TEMPORARY SIGN
- FLASHING ARROW SIGN (FAS)
- FAS SUPPORT OR TRAILER
- PORTABLE FLASHING BEACON

SIGN PANEL SIZE (Min)

A 36" x 36"

B 36" x 18"

TABLE 1

APPROACH SPEED	* MINIMUM L	** Max SPACING OF CONES ALONG TAPER
mph	ft	ft
20 AND BELOW	80	20
25	125	25
30	180	30
35	245	35
40	320	40
45	540	45
50	600	50
Over 50	SEE NOTE 9	

* USE L FOR LANE WIDTHS LESS THAN OR EQUAL TO 12'.
** SEE NOTE 8.

TABLE 2

APPROACH SPEED	MINIMUM D	DOWNGRADE MINIMUM D *		
		-3%	-6%	-9%
mph	ft	ft	ft	ft
25 AND BELOW	155	158	165	173
30	200	205	215	227
35	250	257	271	287
40	305	315	333	354
45	360	378	400	427
50	425	446	474	507
OVER 50	SEE NOTE 9			

* USE ON SUSTAINED DOWNGRADE STEEPER THAN -3 PERCENT AND LONGER THAN 1 MILE.

NOTES:

1. Where approach speeds are low, advance warning signs may be placed at 300' spacing and placed closer in urban areas.
2. Each advance warning sign shall be equipped with at least two flags for daytime closure. Each flag shall be at least 16" x 16" in size and shall be orange or fluorescent red-orange in color. Flashing beacons shall be placed at the locations indicated for lane closure during hours of darkness.
3. A C14 (CA) "END ROAD WORK" sign, as appropriate, shall be placed at the end of the lane closure unless the end of work area is obvious, or ends within a larger project's limits.
4. If the W20-1 sign would follow within 2000' of a stationary W20-1 or C11 (CA) "ROAD WORK NEXT _____ MILES", use a C20 (CA) sign for the first advance warning sign.
5. All cones used for lane closures during the hours of darkness shall be fitted with retroreflective bands (or sleeves) as specified in the specifications.
6. Portable delineators, placed at one-half the spacing indicated for traffic cones, may be used instead of cones for daytime closures only.
7. Flashing arrow sign shall be either Type I or Type II.
8. The maximum spacing between cones along a tangent shall be 50' and along a taper shall be approximately as shown in Table 1.
9. For approach speeds over 50 mph, use the "Traffic Control System for Lane Closure On Freeways And Expressways" plan for lane closure details and requirements.
10. When specified in the special provisions, a W4-2 "LANE ENDS" symbol sign is to be used in place of the C20 (CA) "RIGHT LANE CLOSED AHEAD" sign.

STATE OF CALIFORNIA
DEPARTMENT OF TRANSPORTATION

TRAFFIC CONTROL SYSTEM FOR LANE CLOSURE ON MULTILANE CONVENTIONAL HIGHWAYS

NO SCALE

TCS-1

STATE OF CALIFORNIA - DEPARTMENT OF TRANSPORTATION
Caltrans

FUNCTIONAL SUPERVISOR | CALCULATED-DESIGNED BY | CHECKED BY | REVISED BY | DATE REVISED

LAST REVISION 00-00-00 | DATE PLOTTED => 10-DEC-2012 | TIME PLOTTED => 09:45

Dist	COUNTY	ROUTE	POST MILES TOTAL PROJECT	SHEET No.	TOTAL SHEETS
01	Men	20	R0.0	16	21

REGISTERED CIVIL ENGINEER 12-7-12 DATE

2-19-13
PLANS APPROVAL DATE

REGISTERED PROFESSIONAL ENGINEER Gurinderpal Bhullar No. C48815 Exp. 9-30-14 CIVIL STATE OF CALIFORNIA

THE STATE OF CALIFORNIA OR ITS OFFICERS OR AGENTS SHALL NOT BE RESPONSIBLE FOR THE ACCURACY OR COMPLETENESS OF SCANNED COPIES OF THIS PLAN SHEET.

NOTES:

Unless otherwise specified in the special provisions, all temporary warning signs shall have black legend on orange background.

California code are designated by (CA). Otherwise, Federal (MUTCD) codes are shown.

TYPICAL LANE CLOSURE WITH REVERSIBLE CONTROL

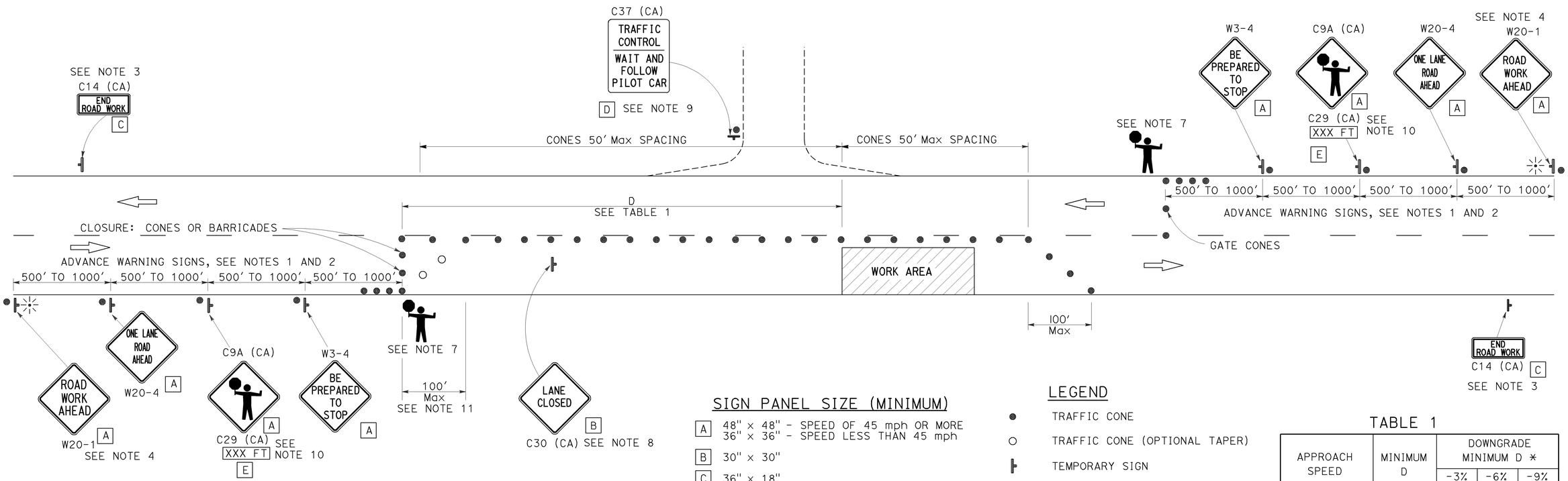

SIGN PANEL SIZE (MINIMUM)

- A — 48" x 48" - SPEED OF 45 mph OR MORE; 36" x 36" - SPEED LESS THAN 45 mph
- B — 30" x 30"
- C — 36" x 18"
- D — 36" x 42"
- E — 36" x 9"

LEGEND

- TRAFFIC CONE
- TRAFFIC CONE (OPTIONAL TAPER)
- TEMPORARY SIGN
- PORTABLE FLASHING BEACON
- FLAGGER

TABLE 1

APPROACH SPEED	MINIMUM D	DOWNGRADE MINIMUM D *		
		-3%	-6%	-9%
mph	ft	ft	ft	ft
25 AND BELOW	155	158	165	173
30	200	205	215	227
35	250	257	271	287
40	305	315	333	354
45	360	378	400	427
50	425	446	474	507
55	495	520	553	593
60	570	598	638	686
65	645	682	728	785

* USE ON SUSTAINED DOWNGRADE STEEPER THAN -3 PERCENT AND LONGER THAN 1 MILE.

NOTES:

1. Where approach speeds are low, advance warning signs may be placed at 300' spacing, and closer in urban areas.
2. Each advance warning sign in each direction of travel shall be equipped with at least two flags for daytime closure. Each flag shall be at least 16" x 16" in size and shall be orange or fluorescent red-orange in color. Flashing beacons shall be placed at the locations indicated for lane closure during hours of darkness.
3. A C14 (CA) "END ROAD WORK" sign, as appropriate, shall be placed at the end of the lane control unless the end of work area is obvious, or ends within a larger project's limits.
4. If the W20-1 sign would follow within 2000' of a stationary W20-1 or C11 (CA) "ROAD WORK NEXT _____MILES", use a W20-4 sign for the first advance warning sign.
5. All cones used for lane closures during the hours of darkness shall be fitted with retroreflective bands (or sleeves) as specified in the specifications.
6. Portable delineators, placed at one-half the spacing indicated for traffic cones, may be used instead of cones for daytime closures only.
7. Additional advance flaggers may be required. Flagger should stand in a conspicuous place, be visible to approaching traffic as well as approaching vehicles after the first vehicle has stopped. During the hours of darkness, the flagging-station and flagger shall be illuminated and clearly visible to approaching traffic. The illumination footprint of the lighting on the ground shall be at least 20' in diameter. Place a minimum of four cones at 50' intervals in advance of flagger station as shown.
8. Place C30 (CA) "LANE CLOSED" sign at 500' to 1000' intervals throughout extended work areas. They are optional if the work area is visible from the flagger station.
9. When a pilot car is used, place a C37 (CA) "TRAFFIC CONTROL-WAIT AND FOLLOW PILOT CAR" sign at all intersections within traffic control area. Signs shall be clean and visible at all times.
10. An optional C29 (CA) sign may be placed below the C9A (CA) sign.
11. Traffic cones or barricades may be placed on the optional taper as shown, barricades shall be Type I, II, or III.

STATE OF CALIFORNIA
DEPARTMENT OF TRANSPORTATION

TRAFFIC CONTROL SYSTEM FOR LANE CLOSURE ON TWO LANE CONVENTIONAL HIGHWAYS

NO SCALE

TCS-2

STATE OF CALIFORNIA - DEPARTMENT OF TRANSPORTATION

FUNCTIONAL SUPERVISOR | CALCULATED-DESIGNED BY | CHECKED BY | REVISED BY | DATE REVISED

LAST REVISION 00-00-00 | DATE PLOTTED => 10-DEC-2012 | TIME PLOTTED => 09:45

Dist	COUNTY	ROUTE	POST MILES TOTAL PROJECT	SHEET No.	TOTAL SHEETS
01	Men	20	R0.0	17	21

REGISTERED CIVIL ENGINEER

July 20, 2012
PLANS APPROVAL DATE

REGISTERED PROFESSIONAL ENGINEER
Roberta L. McLaughlin
No. C40375
Exp. 3-31-13
CIVIL
STATE OF CALIFORNIA

THE STATE OF CALIFORNIA OR ITS OFFICERS OR AGENTS SHALL NOT BE RESPONSIBLE FOR THE ACCURACY OR COMPLETENESS OF SCANNED COPIES OF THIS PLAN SHEET.

TO ACCOMPANY PLANS DATED 2-19-13

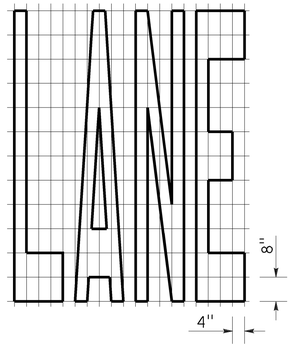

A=24 ft²

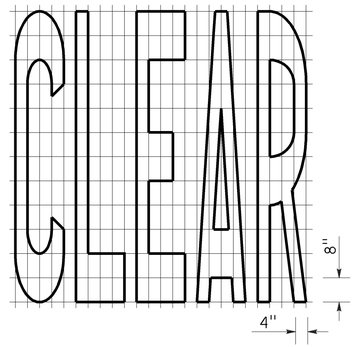

A=27 ft²

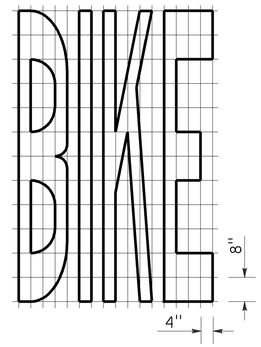

A=21 ft²

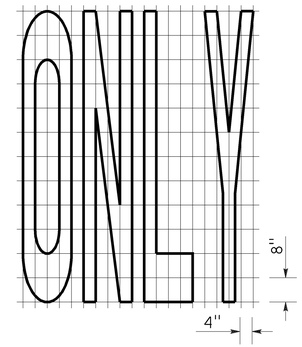

A=22 ft²

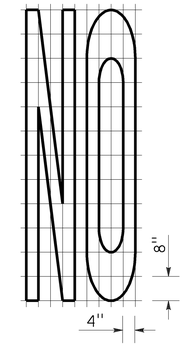

A=14 ft²

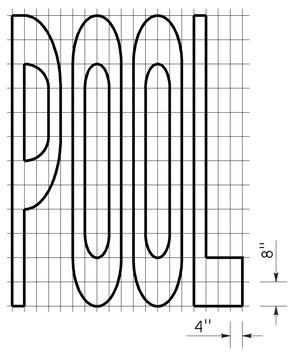

A=23 ft²

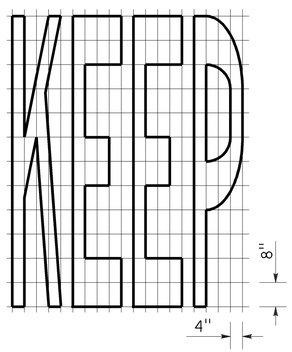

A=24 ft²

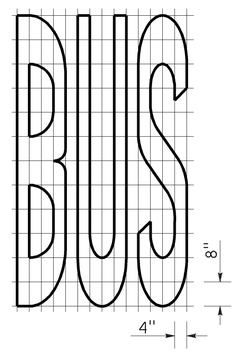

A=20 ft²

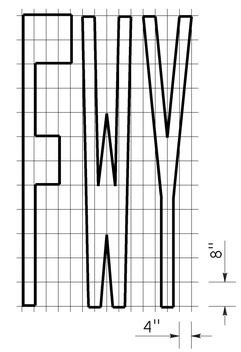

A=16 ft²

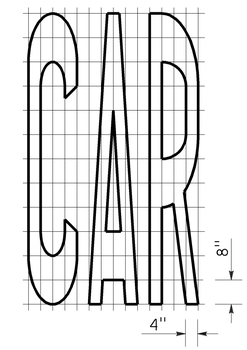

A=17 ft²

WORD MARKINGS			
ITEM	ft²	ITEM	ft²
LANE	24	NO	14
POOL	23	BIKE	21
CAR	17	BUS	20
CLEAR	27	ONLY	22
KEEP	24	FWY	16

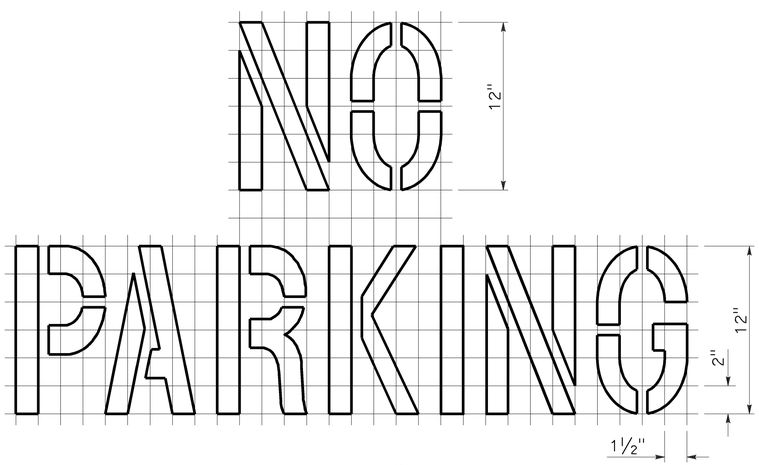

A=2 ft²
See Notes 6 and 7

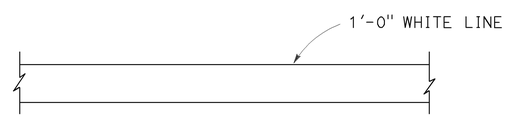

LIMIT LINE (STOP LINE)

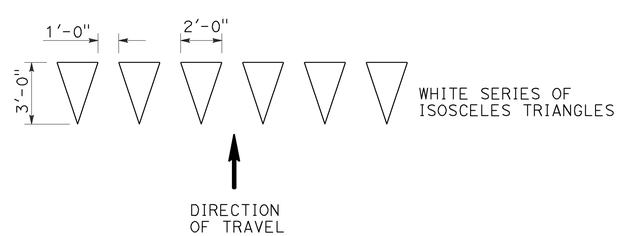

YIELD LINE

NOTES:

1. If a message consists of more than one word, it should read "UP", i.e., the first word should be nearest the driver.
2. The space between words should be at least four times the height of the characters for low speed roads, but not more than ten times the height of the characters. The space may be reduced appropriately where there is limited space because of local conditions.
3. Minor variations in dimensions may be accepted by the Engineer.
4. Portions of a letter, number or symbol may be separated by connecting segments not to exceed 2" in width.
5. The words "NO PARKING" pavement marking is to be used for parking facilities. For typical locations of markings, see Standard Plans A90A and A90B.
6. The words "NO PARKING", shall be painted in white letters no less than 1'-0" high on a contrasting background and located so that it is visible to traffic enforcement officials.

STATE OF CALIFORNIA
DEPARTMENT OF TRANSPORTATION

PAVEMENT MARKINGS WORDS, LIMIT AND YIELD LINES

NO SCALE

RSP A24E DATED JULY 20, 2012 SUPERSEDES STANDARD PLAN A24E
DATED MAY 20, 2011 - PAGE 17 OF THE STANDARD PLANS BOOK DATED 2010.

REVISED STANDARD PLAN RSP A24E

2010 REVISED STANDARD PLAN RSP A24E

6-12-12

Dist	COUNTY	ROUTE	POST MILES TOTAL PROJECT	SHEET No.	TOTAL SHEETS
01	Men	20	R0.0	18	21

REGISTERED CIVIL ENGINEER

April 20, 2012
PLANS APPROVAL DATE

REGISTERED PROFESSIONAL ENGINEER Gary Wang No. C58298 Exp. 6-30-12 CIVIL STATE OF CALIFORNIA

THE STATE OF CALIFORNIA OR ITS OFFICERS OR AGENTS SHALL NOT BE RESPONSIBLE FOR THE ACCURACY OR COMPLETENESS OF SCANNED COPIES OF THIS PLAN SHEET.

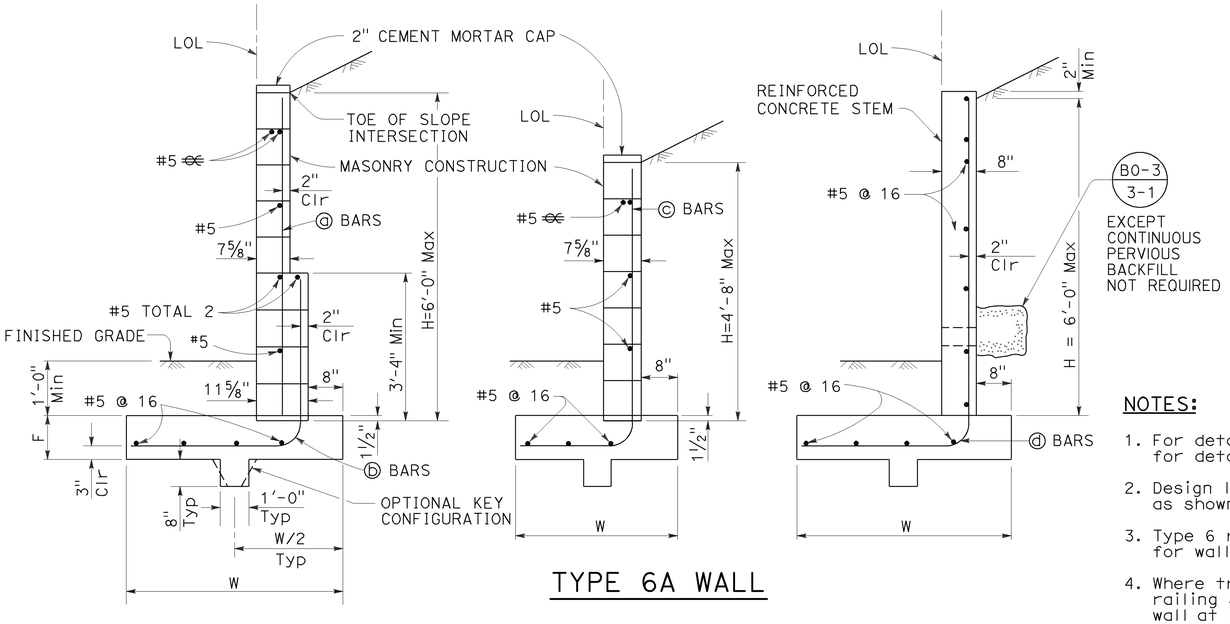

TYPE 6A WALL

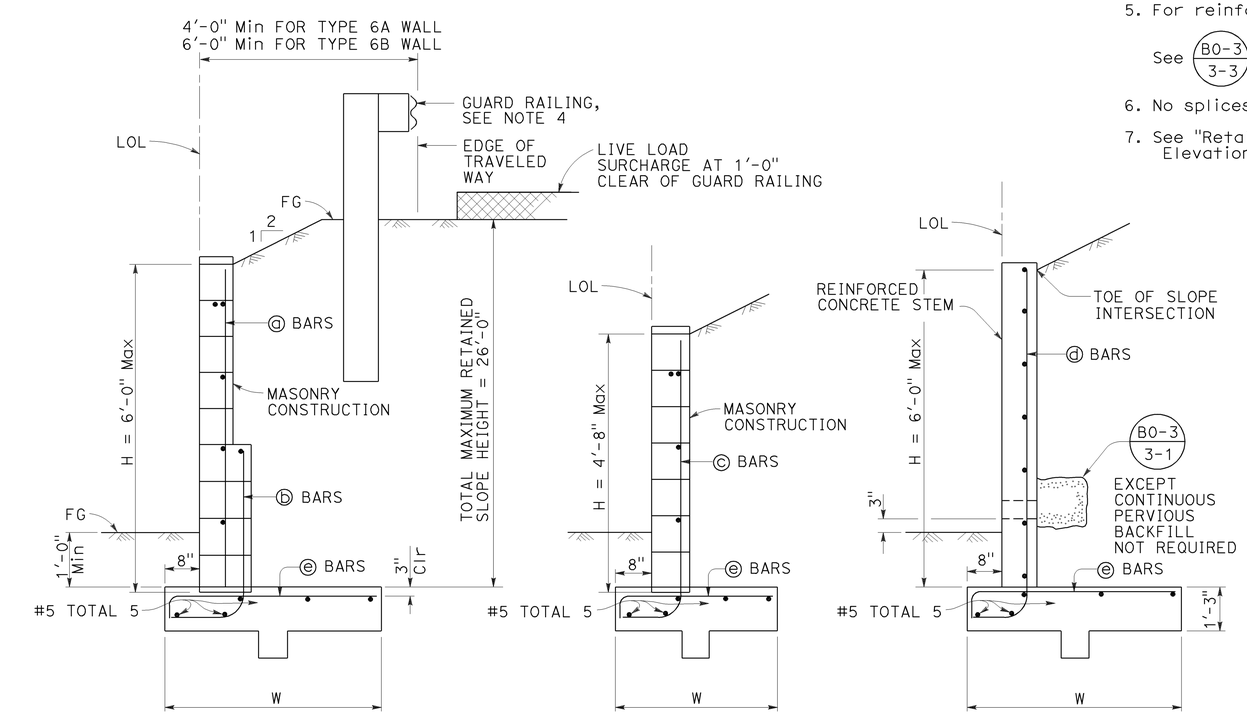

TYPE 6B WALL

SYMBOLS:

Ser - service limit state 1
Str - strength limit state 1
Ext - extreme event limit state I
B′ - effective footing width (ft)
q'_o - net bearing stress (ksf), OG assumed to be FG at toe
q_o - gross uniform bearing stress (ksf)

NOTES:

1. For details not shown at "6B", see "6A", similarly, for details not shown at "6A", see "6B".
2. Design loading for both Type "6A" and "6B" is as shown at "6B".
3. Type 6 retaining wall shall be limited to use for walls of Design H of 6′-0" or less.
4. Where traffic is adjacent to the top of wall, guard railing should be set back from the top front face of wall at least 4′-0" or 6′-0", dependent on wall type.
5. For reinforced concrete wall stem joint details,

   See B0-3 / 3-3 and B0-3 / 3-4
6. No splices are allowed on ⓐ, ⓑ, ⓒ and ⓓ bars.
7. See "Retaining Wall Type 6 Details" sheet for Elevation View and Footing Step Details.

DESIGN NOTES:

TO ACCOMPANY PLANS DATED 2-19-13

DESIGN: AASHTO LRFD Bridge Design Specifications, 4th Edition with California Amendments

Building Code Requirements for Masonry Structures (TMS 402-08/ACI 530-08/ASCE 5-08)

LS: 240 psf surcharge on level ground surface as limited by Guard Railing location

SEISMIC: $k_h = 0.2$
$k_v = 0.0$

SOIL: $\phi = 34°$
$\gamma = 120$ pcf

REINFORCED CONCRETE: $f'c = 3{,}600$ psi
$fy = 60{,}000$ psi

REINFORCED MASONRY: $fm' = 1{,}500$ psi
$fy = 60{,}000$ psi

LOAD COMBINATIONS AND LIMIT STATES:

Service I	$Q = 1.00DC+1.00EV+1.00EH+1.00LS$
Strength I	$Q = \alpha DC+\phi EV+\eta EH+1.75LS$
Extreme I	$Q = 1.00DC+1.00EV+1.00EH+1.00EQD+1.00EQE$

Where:

Q:	Force Effects
α:	1.25 or 0.90, Whichever Controls Design
ϕ:	1.35 or 1.00, Whichever Controls Design
η:	1.50 or 0.90, Whichever Controls Design
DC:	Dead Load of Structure Components
EH:	Horizontal Earth Fill Pressure
EV:	Vertical Earth Pressure from Earth Fill Weight
LS:	Live Load Surcharge
EQE:	Seismic Earth Pressure
EQD:	Soil and Structural and Nonstructural Components Inertia

TYPE 6A WALL - TABLE OF REINFORCING STEEL, DIMENSIONS AND DATA

DESIGN H	3′-4"	4′-0"	4′-8"	5′-4"	6′-0"
W	3′-8"	4′-1"	4′-8"	5′-3"	6′-9"
F	1′-0"	1′-0"	1′-2"	1′-3"	1′-4"
ⓐ BARS	NONE	NONE	NONE	#5 @ 16"	#5 @ 16"
ⓑ BARS	NONE	NONE	NONE	#5 @ 16"	#5 @ 16"
ⓒ BARS	#5 @ 16	#5 @ 16	#5 @ 16	NONE	NONE
ⓓ BARS	#5 @ 16	#5 @ 16	#5 @ 16	#5 @ 16	#6 @ 16
Ser: B′, q'_o	3.4, 0.3	3.8, 0.3	4.3, 0.3	4.9, 0.4	6.0, 0.4
Str: B′, q_o	3.3, 0.7	3.6, 0.7	4.1, 0.8	4.7, 0.8	5.7, 0.9
Ext: B′, q_o	1.3, 1.9	1.4, 2.0	1.7, 2.1	1.9, 2.2	3.9, 1.4

TYPE 6B WALL - TABLE OF REINFORCING STEEL, DIMENSIONS AND DATA

DESIGN H	3′-4"	4′-0"	4′-8"	5′-4"	6′-0"
W	4′-6"	5′-1"	5′-7"	6′-2"	6′-9"
ⓐ BARS	NONE	NONE	NONE	#5 @ 16"	#5 @ 16"
ⓑ BARS	NONE	NONE	NONE	#5 @ 16"	#5 @ 16"
ⓒ BARS	#5 @ 16	#5 @ 16	#5 @ 16	NONE	NONE
ⓓ BARS	#5 @ 16	#5 @ 16	#5 @ 16	#5 @ 16	#6 @ 16
ⓔ BARS	#5 @ 16	#5 @ 16	#6 @ 16	#6 @ 16	#7 @ 16
Ser: B′, q'_o	3.3, 0.6	3.7, 0.8	4.0, 0.9	4.5, 1.0	4.1, 1.4
Str: B′, q_o	1.9, 1.4	2.3, 1.6	2.5, 1.8	2.8, 1.9	1.8, 3.6
Ext: B′, q_o	1.5, 2.8	1.8, 3.1	1.9, 3.6	2.1, 3.8	2.4, 3.9

RSP B3-7B DATED APRIL 20, 2012 SUPPLEMENTS THE STANDARD PLANS BOOK DATED 2010.

STATE OF CALIFORNIA
DEPARTMENT OF TRANSPORTATION

RETAINING WALL TYPE 6 (CASE 2)

NO SCALE

REVISED STANDARD PLAN RSP B3-7B

2010 REVISED STANDARD PLAN RSP B3-7B

2-22-12

Dist	COUNTY	ROUTE	POST MILES TOTAL PROJECT	SHEET No.	TOTAL SHEETS
01	Men	20	R0.0	19	21

REGISTERED CIVIL ENGINEER

April 20, 2012
PLANS APPROVAL DATE

REGISTERED PROFESSIONAL ENGINEER
Gary Wang
No. C58298
Exp. 6-30-12
CIVIL
STATE OF CALIFORNIA

THE STATE OF CALIFORNIA OR ITS OFFICERS OR AGENTS SHALL NOT BE RESPONSIBLE FOR THE ACCURACY OR COMPLETENESS OF SCANNED COPIES OF THIS PLAN SHEET.

TO ACCOMPANY PLANS DATED 2-19-13

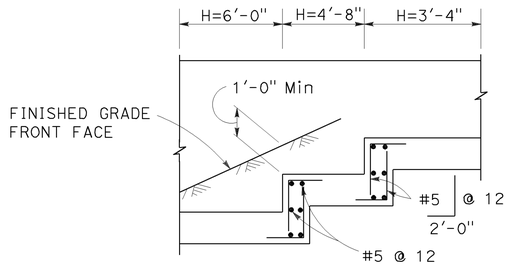

ELEVATION

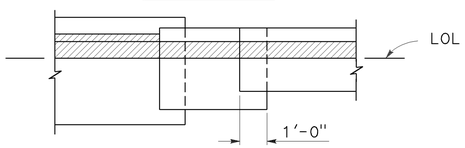

PLAN

FOOTING STEP DETAILS

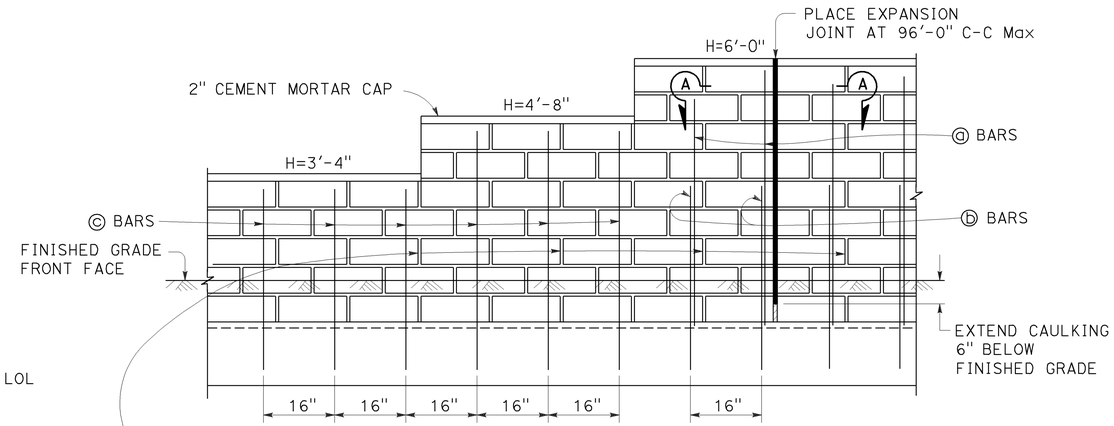

OMIT MORTAR FROM VERTICAL JOINT IN FIRST COURSE ABOVE FINISHED GRADE AT 32" CENTERS FOR WEEP HOLES. FILL ALL CELLS WITH GROUT.

ELEVATION - MASONRY CONSTRUCTION

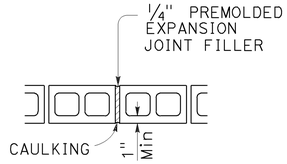

SECTION A-A

STATE OF CALIFORNIA
DEPARTMENT OF TRANSPORTATION

RETAINING WALL TYPE 6 DETAILS

NO SCALE

RSP B3-7C DATED APRIL 20, 2012 SUPPLEMENTS THE STANDARD PLANS BOOK DATED 2010.

REVISED STANDARD PLAN RSP B3-7C

REVISED STANDARD PLAN RSP B3-7C

2-22-12

Dist	COUNTY	ROUTE	POST MILES TOTAL PROJECT	SHEET No.	TOTAL SHEETS
01	Men	20	R0.0	20	21

REGISTERED CIVIL ENGINEER

July 20, 2012
PLANS APPROVAL DATE

Raymond Don Tsztoo No. C37332 Exp. 6-30-14 CIVIL — REGISTERED PROFESSIONAL ENGINEER — STATE OF CALIFORNIA

THE STATE OF CALIFORNIA OR ITS OFFICERS OR AGENTS SHALL NOT BE RESPONSIBLE FOR THE ACCURACY OR COMPLETENESS OF SCANNED COPIES OF THIS PLAN SHEET.

TO ACCOMPANY PLANS DATED 2-19-13

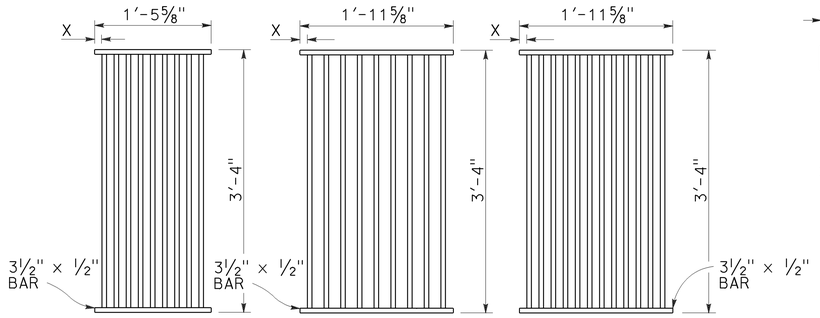

TYPE 18-9

1⅜" Clear spacing. Use within the roadbed on highways where bicycles and pedestrians are excluded.

TYPE 24-9

2" Clear spacing. Use in locations off the roadbed on all types of highways.

TYPE 24-12

1⅜" Clear spacing. Use within the roadbed on highways where bicycles and pedestrians are excluded.

RECTANGULAR GRATE DETAILS

(See table below)

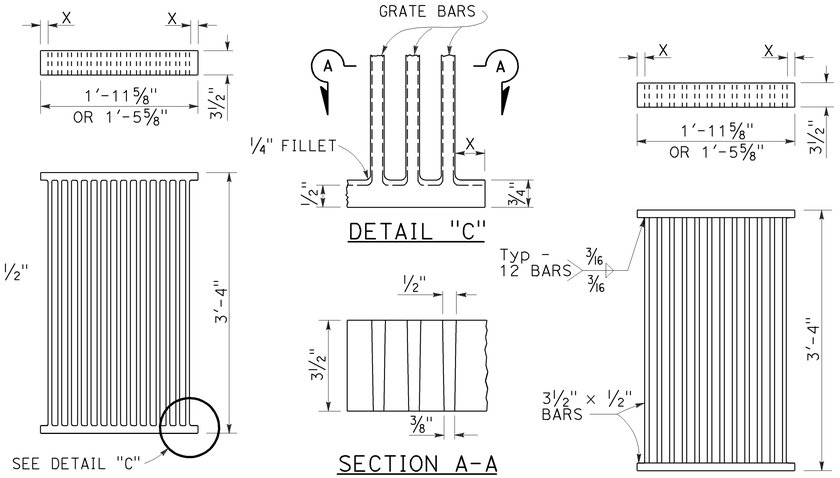

ALTERNATIVE CAST DUCTILE IRON GRATE OR CAST CARBON STEEL GRATE

ALTERNATIVE WELDED GRATE

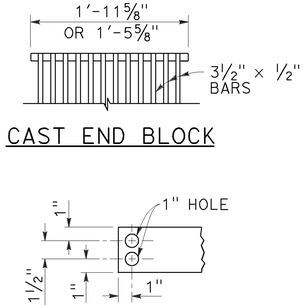

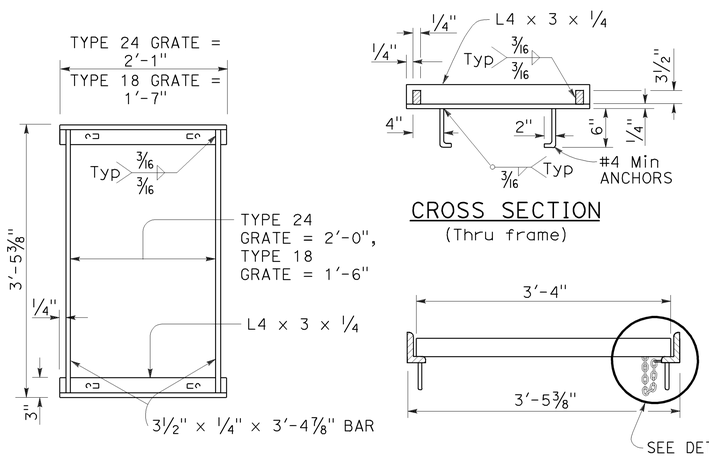

RECTANGULAR FRAME DETAILS

(For all rectangular grates)

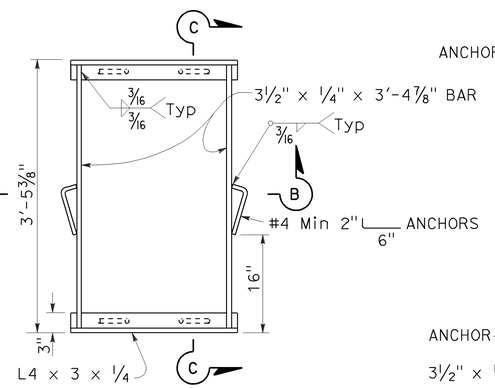

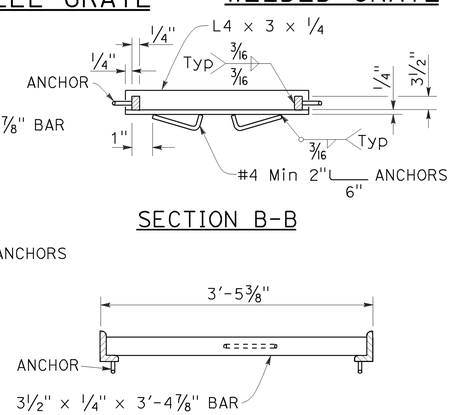

ALTERNATIVE ANCHOR FOR RECTANGULAR FRAME

(For details not shown, See Rectangular Frame Details)

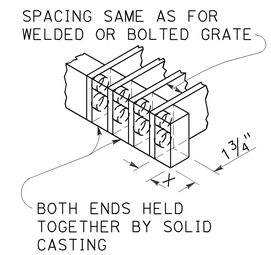

ALTERNATIVE CAST DUCTILE IRON OR CAST CARBON STEEL END BLOCK GRATE

NOTES:

1. Grate type numbers refer to approximate width of grate in inches and number of bars, respectively.
2. Contractor has the option of using cast ductile iron, cast carbon steel, welded, bolted, or cast end block grate.
3. Rounded top of bars optional on all grates.
4. Pipe inlets with a grate shall be placed so that bars parallel direction of principle surface flow.
5. Complete joint penetration butt welds may be substituted for the fillet welds on all anchors.
6. Standard square, hexagon, round or equivalent headed anchors may be substituted for the right angle hooks on the anchors shown on this plan.
7. Grate and frame weights are based on welded grates (weights of face angles, steps, protection bars, etc. are not included).
8. Connect chain to grate and frame only at locations shown on the plans. When chain is required, do not use cast ductile iron grates.

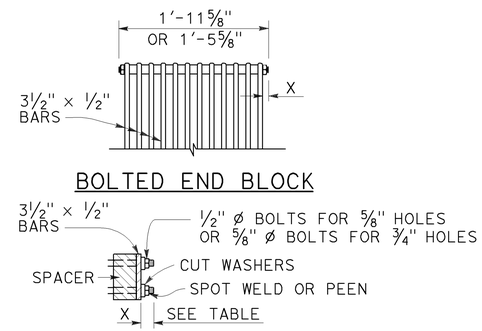

ALTERNATIVE BOLTED GRATE

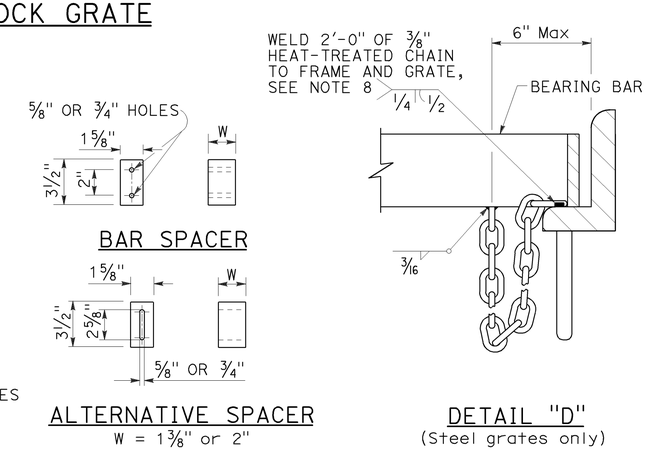

GRATE BAR SPACING TABLE

TYPE	No. OF BARS	CLEAR BAR SPACING	X
18-9	9	1⅜"	1 1/16"
24-9	9	2"	1 9/16"
24-12	12	1⅜"	1¼"

INLET TYPE	COVER TYPE	WEIGHT LB
OS	PLATE	174
OL-7	PLATE	170
OL-10	PLATE	170
OL-14	PLATE	170
OL-21	PLATE	170
OCP	PLATE	112
OCPI	PLATE	112
OCPI	REDWOOD	42
OMP	PLATE	177
OMPI	PLATE	177

INLET TYPE	GRATE TYPE	No. OF GRATES	WEIGHT LB
GDO	24-12	2	634
GOL-7	24-12	1	326
GOL-10	24-12	1	326
GO,G1,G2,G3,G4 (TYPE 24)	24-9	1	263
	24-12	1	326
G4 (TYPE 18),G5,G6	18-9	1	249
GT1	18-9	2	498
GT2	18-9	2	498
GT3	24-12	2	652
GT4	24-12	2	652
TRASH RACK			22
GRATE CHAIN			3

BASIS FOR Misc IRON & STEEL FINAL PAY WEIGHTS FOR DRAINAGE INLETS

(See Note 7)

STATE OF CALIFORNIA
DEPARTMENT OF TRANSPORTATION

GRATE DETAILS

NO SCALE

RSP D77A DATED JULY 20, 2012 SUPERSEDES STANDARD PLAN D77A DATED MAY 20, 2011 - PAGE 164 OF THE STANDARD PLANS BOOK DATED 2010.

REVISED STANDARD PLAN RSP D77A

2010 REVISED STANDARD PLAN RSP D77A

6-13-12

Dist	COUNTY	ROUTE	POST MILES TOTAL PROJECT	SHEET No.	TOTAL SHEETS
01	Men	20	R0.0	21	21

REGISTERED CIVIL ENGINEER

July 20, 2012
PLANS APPROVAL DATE

Raymond Don Tsztoo
No. C37332
Exp. 6-30-14
CIVIL
STATE OF CALIFORNIA
REGISTERED PROFESSIONAL ENGINEER

THE STATE OF CALIFORNIA OR ITS OFFICERS OR AGENTS SHALL NOT BE RESPONSIBLE FOR THE ACCURACY OR COMPLETENESS OF SCANNED COPIES OF THIS PLAN SHEET.

TO ACCOMPANY PLANS DATED 2-19-13

2010 REVISED STANDARD PLAN RSP D77B

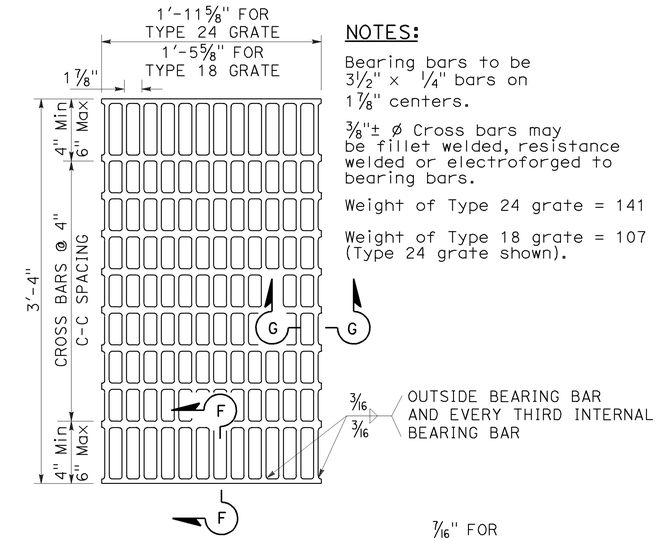

NOTES:

Bearing bars to be 3½" × ¼" bars on 1⅞" centers.

⅜"± ø Cross bars may be fillet welded, resistance welded or electroforged to bearing bars.

Weight of Type 24 grate = 141 LBS.

Weight of Type 18 grate = 107 LBS. (Type 24 grate shown).

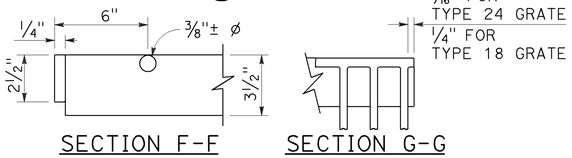

SECTION F-F SECTION G-G

TYPE 18-10 AND 24-13 GRATE

(Welded Steel)

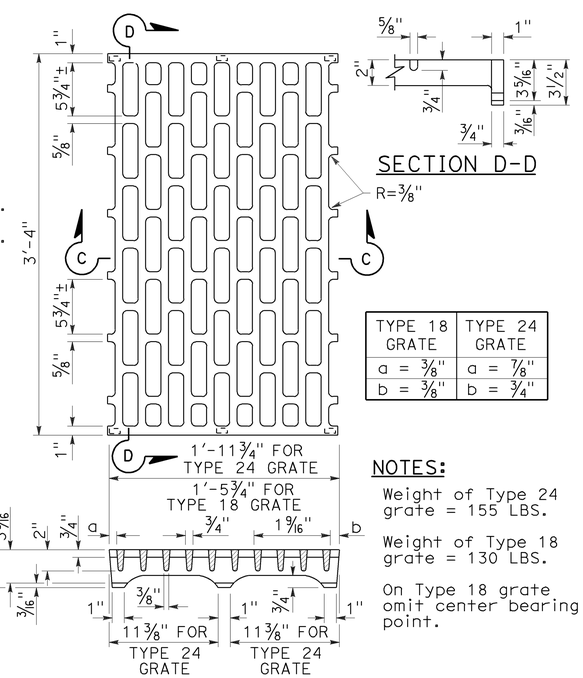

SECTION C-C

NOTES:

Weight of Type 24 grate = 155 LBS.

Weight of Type 18 grate = 130 LBS.

On Type 18 grate omit center bearing point.

TYPE 18 GRATE	TYPE 24 GRATE
a = ⅜"	a = ⅞"
b = ⅜"	b = ¾"

TYPE 18-8C AND 24-10C GRATE

(Cast ductile iron)

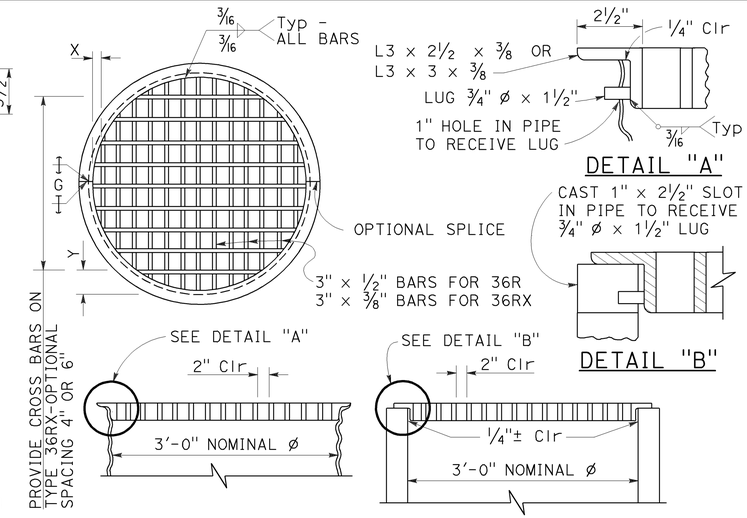

TYPE 36R AND 36RX GRATE DETAILS

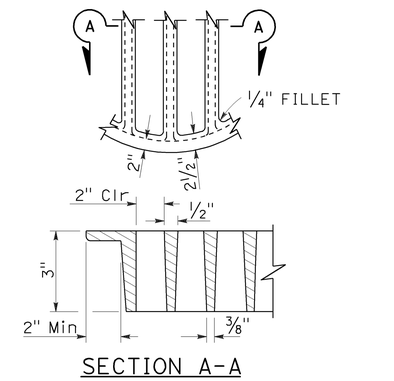

SECTION A-A

ALTERNATIVE CAST DUCTILE IRON GRATE OR CAST CARBON STEEL GRATE TYPE 36R AND 36RX

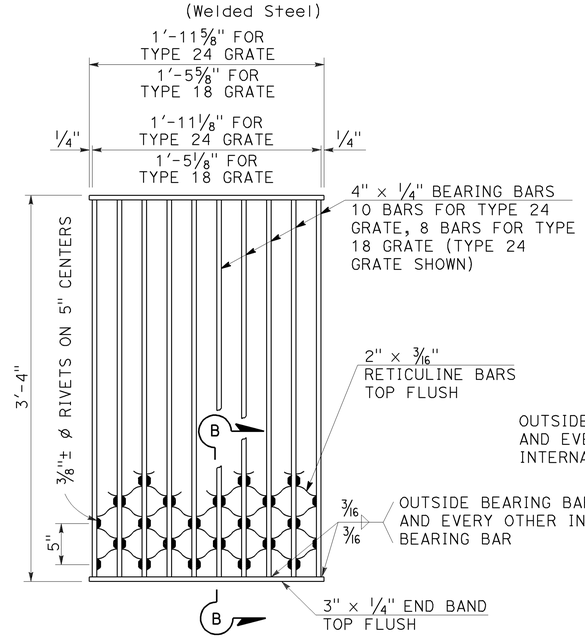

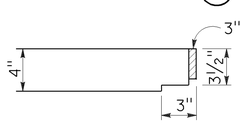

SECTION B-B

NOTES:

Weight of Type 24 grate = 182 LBS.
Weight of Type 18 grate = 145 LBS.

TYPE 18-8S AND 24-10S GRATE

(Welded Steel) Reticuline type

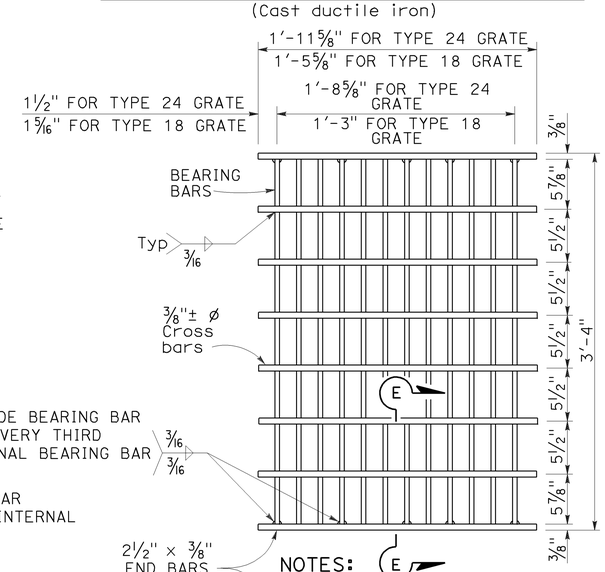

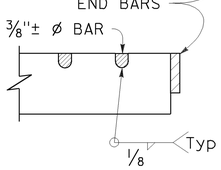

SECTION E-E

NOTES:

Bearing bars to be 3½" × ⅜" bars on 1⅞" centers.

12 Bars for Type 24 grate - 9 bars for Type 18 grates. (Type 24 grate shown).

Weight of Type 24 grate = 192 LBS.

Weight of Type 18 grate = 145 LBS.

⅜"± ø Cross bars may be fillet welded, resistance welded or electroforged to bearing bars.

TYPE 18-9X AND 24-12X GRATE

(Welded Steel)

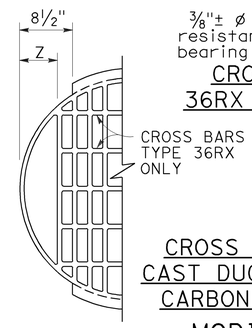

⅜"± ø Cross bars may be fillet welded, resistance welded or electroforged to bearing bars.

CROSS BAR DETAIL TYPE 36RX GRATE (WELDED STEEL)

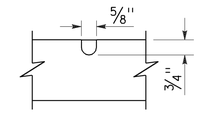

CROSS BAR DETAIL ALTERNATIVE CAST DUCTILE IRON GRATE OR CAST CARBON STEEL GRATE TYPE 36RX

MODIFIED TYPE 36R AND 36RX GRATE FOR ODI INLET

NOTES:

1. When alternative grates are allowed - Final pay based on alternative with the lesser weight.
2. Use frame shown on Standard Plan D74A, D74B or RSP D77A as appropriate.
3. When Type 24-10S, 24-12X or 24-13 grates are used with GDO Inlets, a ¼" × 3½" × 3'-4⅞" steel bar shall be welded across the center of inlet frame to separate the individual grates.
4. See Revised Standard Plan RSP D77A for connecting chain to welded grate and frame. When chain is required, do not use cast ductile iron grate.

GRATE BAR SPACING TABLE

TYPE	No. OF BARS	CLEAR BAR SPACING	X	Y 4" SPACING	Y 6" SPACING	Z
36R	13	2"	2⅛"	-	-	-
36RX (STEEL)	15	2"	9/16"	3¾"	5¾"	-
36RX (CAST)	13	2"	2⅛"	3¾"	5¾"	-
36R Mod	12	2"	2⅛"	-	-	5"
36RX Mod (STEEL)	13	2"	9/16"	3¾"	5¾"	5 11/16"
36RX Mod (CAST)	12	2"	2⅛"	3¾"	5¾"	5"

BASIS FOR Misc IRON AND STEEL FINAL PAY WEIGHTS FOR DRAINAGE INLETS

INLET TYPE	GRATE TYPE	No. OF GRATES	WEIGHT LB
GDO (SEE NOTE 4)	24-10C	2	391
	24-10S	2	456
	24-12X	2	473
	24-13	2	374
GO,GOL,G1,G2, G3,G4 (TYPE 24)	24-10C	1	202
	24-10S	1	229
	24-12X	1	239
	24-13	1	188
G4 (TYPE 18) G5,G6	18-8S	1	187
	18-9X	1	187
	18-10	1	149
GT1,GT2	18-8S	2	374
	18-9X	2	374
	18-10	2	298
GT3,GT4	24-10C	2	404
	24-10S	2	458
	24-12X	2	478
	24-13	2	376
ODI	36RX (Mod)	1	196
GMP,GCP,GCPI	36RX	1	215
ODI	36R (Mod)	1	220
GMP,GCP,GCPI	36R	1	236
TRASH RACK			22
GRATE CHAIN			3

STATE OF CALIFORNIA
DEPARTMENT OF TRANSPORTATION

BICYCLE TRAVERSABLE GRATE DETAILS

NO SCALE

RSP D77B DATED JULY 20, 2012 SUPERSEDES STANDARD PLAN D77B DATED MAY 20, 2011 - PAGE 165 OF THE STANDARD PLANS BOOK DATED 2010.

REVISED STANDARD PLAN RSP D77B

4-17-12