Dist	COUNTY	ROUTE	POST MILES TOTAL PROJECT	SHEET No.	TOTAL SHEETS
01	Hum	299	30.2/30.6	1	57

STATE OF CALIFORNIA

DEPARTMENT OF TRANSPORTATION

ACHSNH-P299(193)E

PROJECT PLANS FOR CONSTRUCTION ON

STATE HIGHWAY

IN HUMBOLDT COUNTY
ABOUT 9 MILES WEST OF WILLOW CREEK
FROM 0.3 MILE WEST
TO 0.1 MILE EAST
OF CEDAR CREEK ROAD

TO BE SUPPLEMENTED BY STANDARD PLANS DATED 2010

INDEX OF PLANS

SHEET No.	DESCRIPTION
1	TITLE AND LOCATION MAP
2-5	TYPICAL CROSS SECTIONS
6-7	LAYOUTS
8-9	PROFILES AND SUPERELEVATION DIAGRAMS
10-15	CONSTRUCTION DETAILS
16-22	DRAINAGE PLANS, PROFILES, DETAILS AND QUANTITIES
23	CONSTRUCTION AREA SIGNS
24-25	STAGE CONSTRUCTION PLANS
26	TRAFFIC HANDLING PLAN
27-30	PAVEMENT DELINEATION, SIGN PLANS AND QUANTITIES
31	SUMMARY OF QUANTITIES
32-40	EROSION CONTROL PLANS, LEGEND, DETAILS AND QUANTITIES
41-57	REVISED STANDARD PLANS

THE STANDARD PLANS LIST APPLICABLE TO THIS CONTRACT IS INCLUDED IN THE NOTICE TO BIDDERS AND SPECIAL PROVISIONS BOOK.

LOCATION MAP

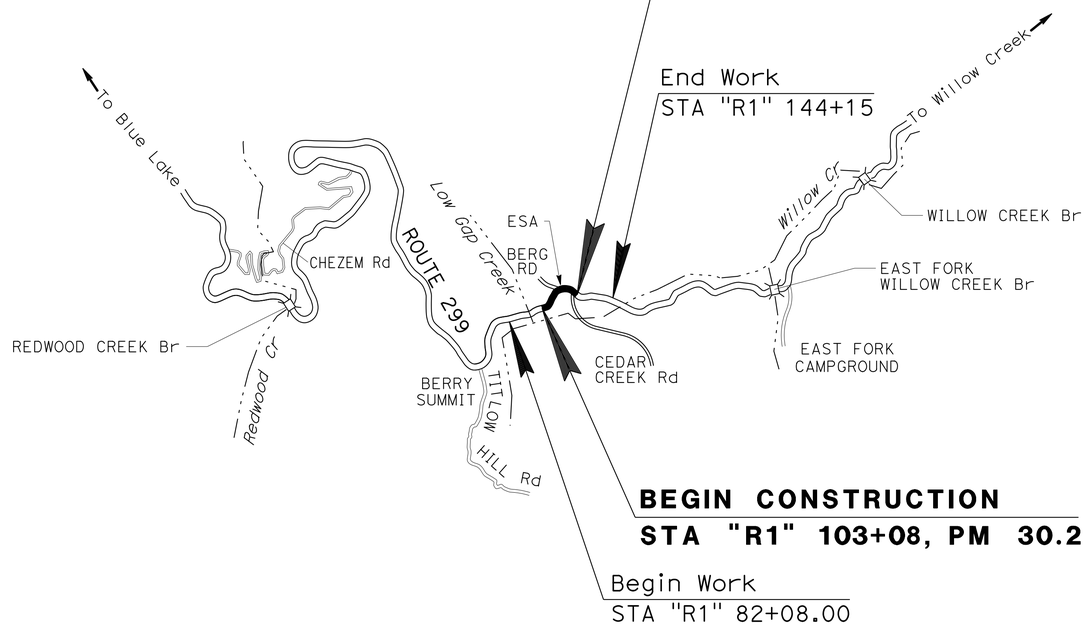

THE CONTRACTOR SHALL POSSESS THE CLASS (OR CLASSES) OF LICENSE AS SPECIFIED IN THE "NOTICE TO BIDDERS."

NO SCALE

PROJECT ENGINEER
REGISTERED CIVIL ENGINEER

04-06-15
DATE

April 6, 2015
PLANS APPROVAL DATE

REGISTERED PROFESSIONAL ENGINEER
ROBERT J. NIXON
No. C69123
Exp. 06-30-16
CIVIL
STATE OF CALIFORNIA

THE STATE OF CALIFORNIA OR ITS OFFICERS OR AGENTS SHALL NOT BE RESPONSIBLE FOR THE ACCURACY OR COMPLETENESS OF SCANNED COPIES OF THIS PLAN SHEET.

CONTRACT No.	01-0A3204
PROJECT ID	0100020307

PROJECT MANAGER: KIM FLOYD
DESIGN ENGINEER: JOHN L. MARTIN

P:\proj1\01\0a320_plans\pse\0100020307ab001.dgn

LAST REVISION 04-06-15
DATE PLOTTED => 06-APR-2015
TIME PLOTTED => 07:43

Dist	COUNTY	ROUTE	POST MILES TOTAL PROJECT	SHEET No.	TOTAL SHEETS
01	Hum	299	30.2/30.6	2	57

REGISTERED CIVIL ENGINEER 04-06-15 DATE

04-06-15
PLANS APPROVAL DATE

REGISTERED PROFESSIONAL ENGINEER ROBERT J. NIXON No. C69123 Exp. 6-30-16 CIVIL STATE OF CALIFORNIA

THE STATE OF CALIFORNIA OR ITS OFFICERS OR AGENTS SHALL NOT BE RESPONSIBLE FOR THE ACCURACY OR COMPLETENESS OF SCANNED COPIES OF THIS PLAN SHEET.

NOTES:

1. DIMENSIONS OF THE PAVEMENT STRUCTURES (STRUCTURAL SECTIONS) ARE SUBJECT TO TOLERANCES SPECIFIED IN THE STANDARD SPECIFICATIONS.
2. SUPERELEVATIONS ARE SHOWN ON THE SUPERELEVATION DIAGRAMS.
3. SEE SHEET C-3 FOR COLD PLANE AC PAVEMENT AREAS.

ABBREVIATIONS:

(E)	EXISTING
GPI	GEOSYNTHETIC PAVEMENT INTERLAYER
HMA-A	HOT MIX ASPHALT (TYPE A)
RS	RUMBLE STRIP (HMA, GROUND-IN INDENTATIONS)
S/C	SAWCUT
SE	SAFETY EDGE
SUPER	SUPERELEVATION
WEED MAT	WEED CONTROL MAT (FIBER)

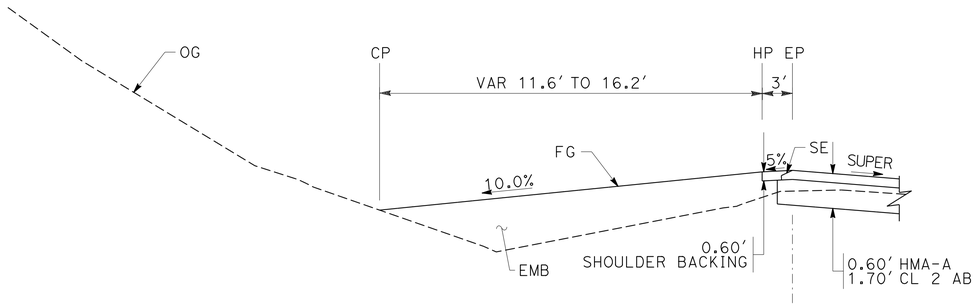

"R1" 106+86.30 TO "R1" 107+00.00

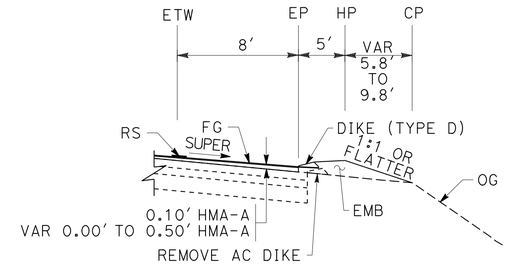

"R1" 106+50.00 TO "R1" 107+00.00

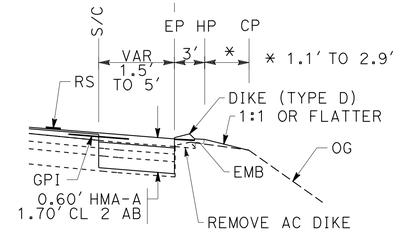

"R1" 104+50.00 TO "R1" 104+88.63

"R1" 103+08.61 TO "R1" 104+50.00

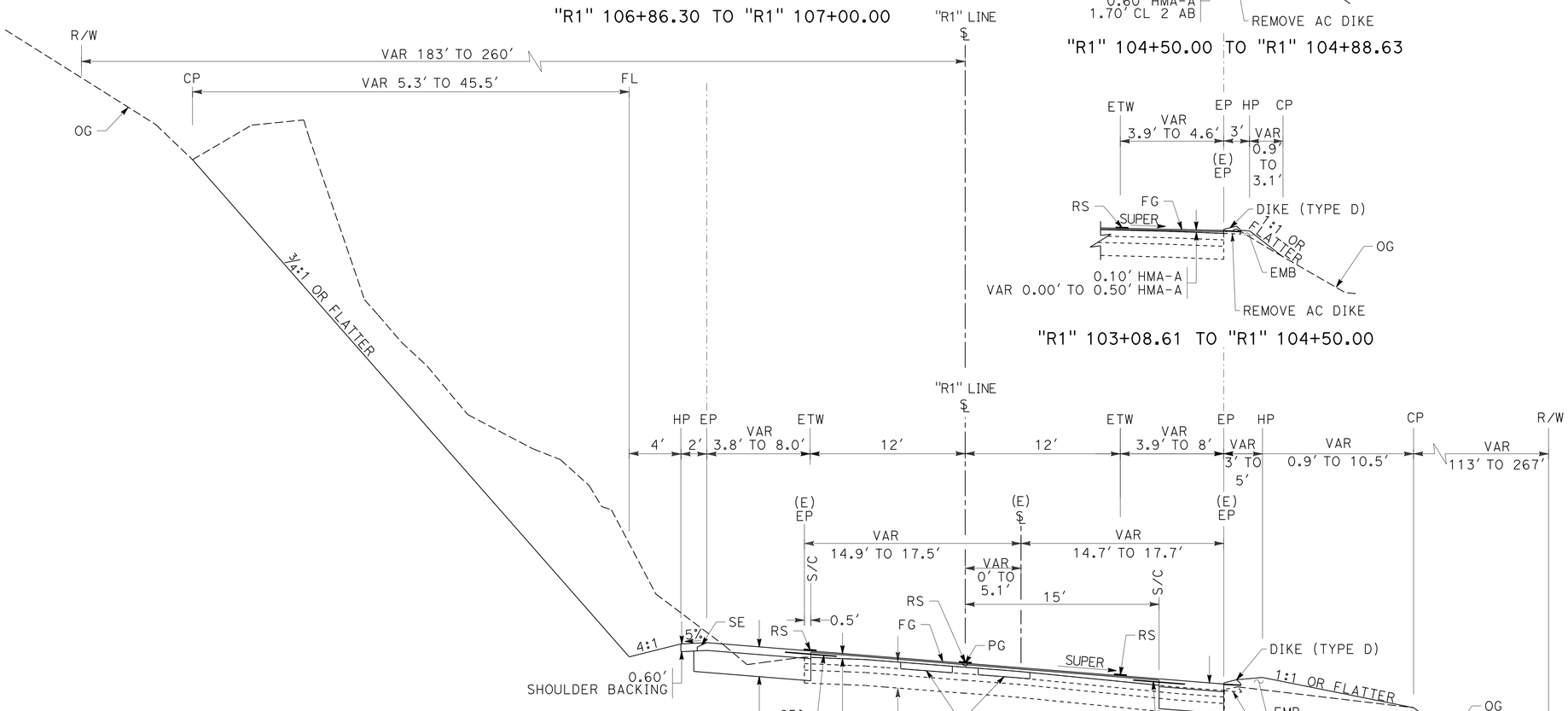

ROUTE 299
"R1" 103+08.61 TO "R1" 107+00.00

DESIGN DESIGNATION

ADT (2014)	3,260	D	60%
ADT (2035)	3,940	T	11%
DHV (2014)	450	V	55 mph
DHV (2015)	460	TI_{20}	9.5
DHV (2035)	540		
ESAL (10 YR)	619,000		
ESAL (20 YR)	1,575,000		

PAVEMENT CLIMATE REGION: LOW MOUNTAIN

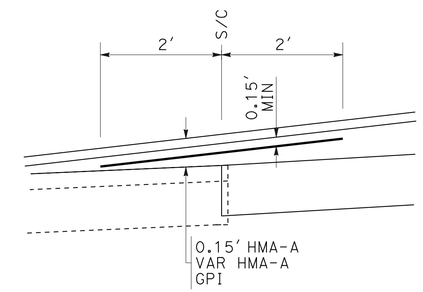

0.15' OR MORE HMA

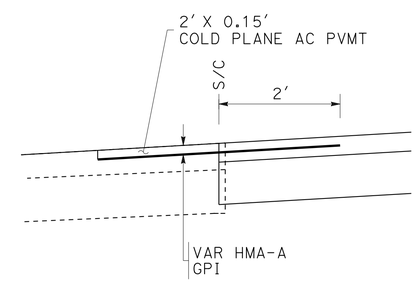

LESS THAN 0.15' HMA

GPI DETAIL

"R1" 103+08.61 TO "R1" 104+88.63	LT
"R1" 104+88.63 TO "R1" 106+50.00	LT/RT
"R1" 106+50.00 TO "R1" 116+34.74	LT
"R1" 121+42.00 TO "R1" 123+14.88	LT/RT

TYPICAL CROSS SECTIONS

NO SCALE

X-1

REVISED BY | DATE REVISED
JOLENA ASTIN | ROBERT NIXON
CALCULATED-DESIGNED BY | CHECKED BY
FUNCTIONAL SUPERVISOR: JOHN L. MARTIN
STATE OF CALIFORNIA - DEPARTMENT OF TRANSPORTATION
Caltrans® DESIGN

P:\proj1\01\0a320_plans\pse\0100020307ca001.dgn

LAST REVISION 12-30-14 | DATE PLOTTED => 06-APR-2015 | TIME PLOTTED => 07:43

Dist	COUNTY	ROUTE	POST MILES TOTAL PROJECT	SHEET No.	TOTAL SHEETS
01	Hum	299	30.2/30.6	3	57

REGISTERED CIVIL ENGINEER 04-06-15 DATE

PLANS APPROVAL DATE 04-06-15

REGISTERED PROFESSIONAL ENGINEER ROBERT J. NIXON No. C69123 Exp. 6-30-16 CIVIL STATE OF CALIFORNIA

THE STATE OF CALIFORNIA OR ITS OFFICERS OR AGENTS SHALL NOT BE RESPONSIBLE FOR THE ACCURACY OR COMPLETENESS OF SCANNED COPIES OF THIS PLAN SHEET.

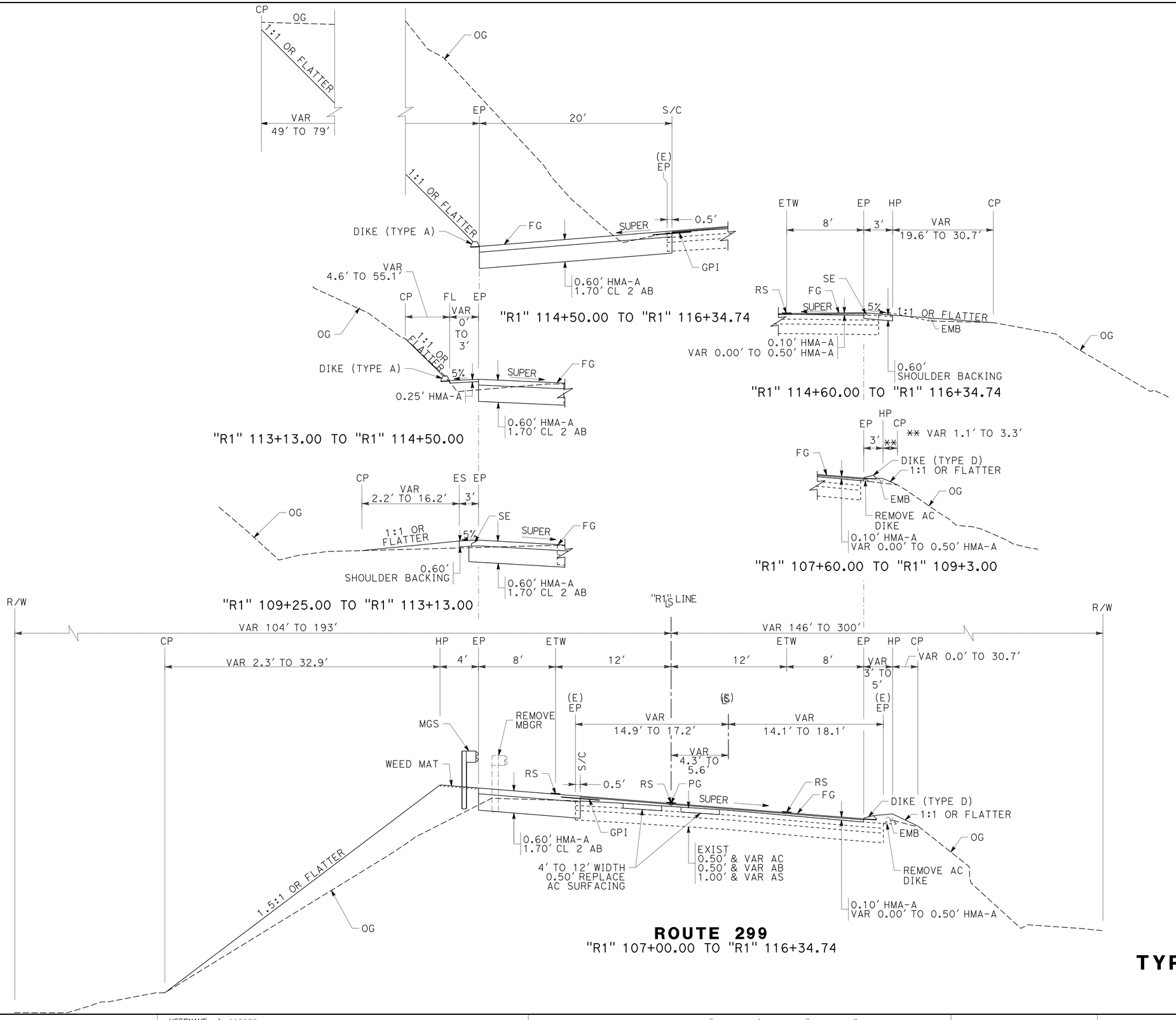

ROUTE 299

"R1" 107+00.00 TO "R1" 116+34.74

TYPICAL CROSS SECTIONS

NO SCALE

X-2

REVISED BY	DATE REVISED
JOLENA ASTIN	ROBERT NIXON
CALCULATED-DESIGNED BY	CHECKED BY
FUNCTIONAL SUPERVISOR	JOHN L. MARTIN

STATE OF CALIFORNIA - DEPARTMENT OF TRANSPORTATION

Caltrans® DESIGN

P:\proj1\01\0a320_plans\pse\0100020307ca002.dgn

LAST REVISION 12-30-14 | DATE PLOTTED => 06-APR-2015 | TIME PLOTTED => 07:43

BORDER LAST REVISED 7/2/2010 | USERNAME => s115152 | DGN FILE => 0100020307ca002.dgn | RELATIVE BORDER SCALE IS IN INCHES 0 1 2 3 | UNIT 0315 | PROJECT NUMBER & PHASE 0100020307-1 | EA: 01-0A3201

Dist	COUNTY	ROUTE	POST MILES TOTAL PROJECT	SHEET No.	TOTAL SHEETS
01	Hum	299	30.2/30.6	4	57

REGISTERED CIVIL ENGINEER 04-06-15 DATE

04-06-15
PLANS APPROVAL DATE

REGISTERED PROFESSIONAL ENGINEER ROBERT J. NIXON No. C69123 Exp. 6-30-16 CIVIL STATE OF CALIFORNIA

THE STATE OF CALIFORNIA OR ITS OFFICERS OR AGENTS SHALL NOT BE RESPONSIBLE FOR THE ACCURACY OR COMPLETENESS OF SCANNED COPIES OF THIS PLAN SHEET.

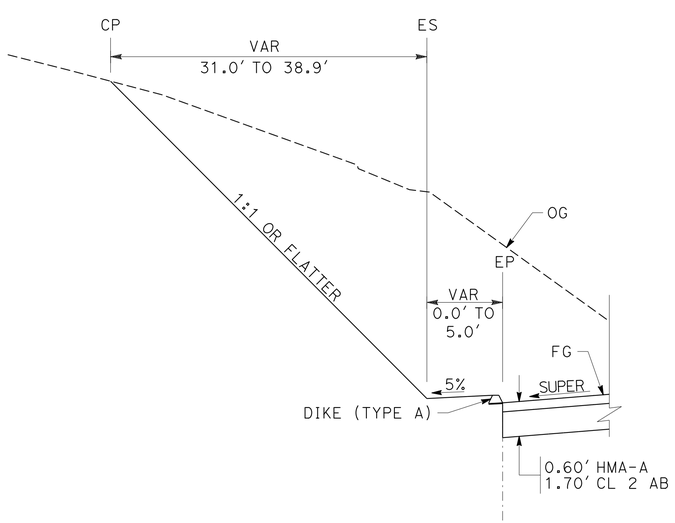

"R1" 120+00.00 TO "R1" 120+25.37

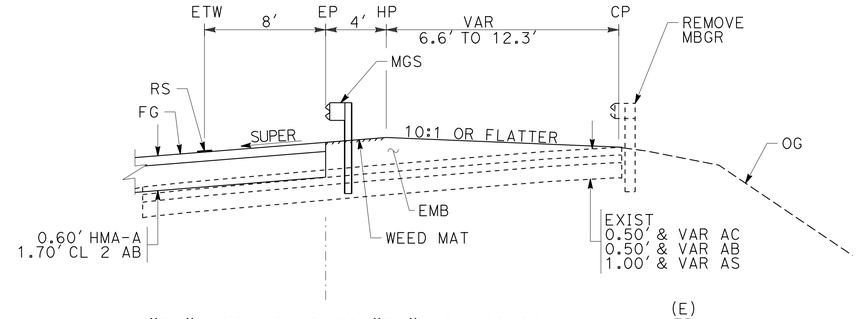

"R1" 120+12.50 TO "R1" 121+42.00

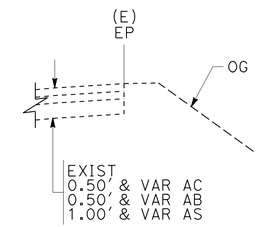

"R1" 116+34.74 TO "R1" 116+60.00

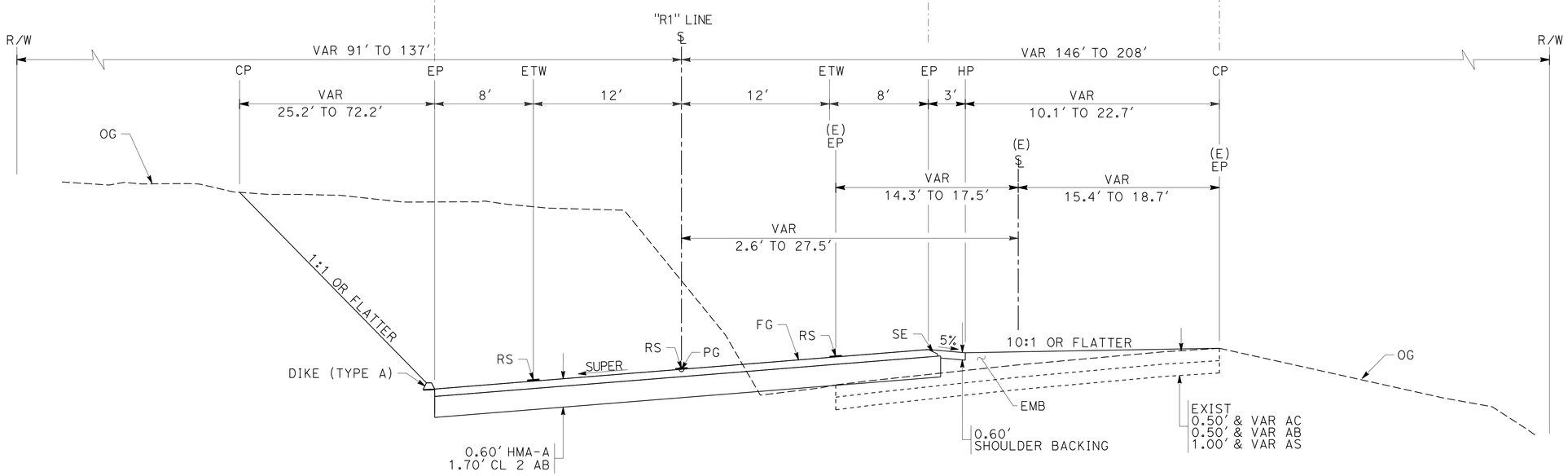

ROUTE 299

"R1" 116+34.74 TO "R1" 121+42.00

TYPICAL CROSS SECTIONS

NO SCALE

X-3

REVISED BY | DATE REVISED
JOLENA ASTIN | ROBERT NIXON
CALCULATED-DESIGNED BY | CHECKED BY
FUNCTIONAL SUPERVISOR | JOHN L. MARTIN

STATE OF CALIFORNIA - DEPARTMENT OF TRANSPORTATION
Caltrans
DESIGN

P:\proj1\01\0a320_plans\pse\0100020307ca003.dgn

LAST REVISION 12-30-14 | DATE PLOTTED => 06-APR-2015 | TIME PLOTTED => 07:44

Dist	COUNTY	ROUTE	POST MILES TOTAL PROJECT	SHEET No.	TOTAL SHEETS
01	Hum	299	30.2/30.6	5	57

REGISTERED CIVIL ENGINEER 04-06-15 DATE

04-06-15
PLANS APPROVAL DATE

REGISTERED PROFESSIONAL ENGINEER ROBERT J. NIXON No. C69123 Exp. 6-30-16 CIVIL STATE OF CALIFORNIA

THE STATE OF CALIFORNIA OR ITS OFFICERS OR AGENTS SHALL NOT BE RESPONSIBLE FOR THE ACCURACY OR COMPLETENESS OF SCANNED COPIES OF THIS PLAN SHEET.

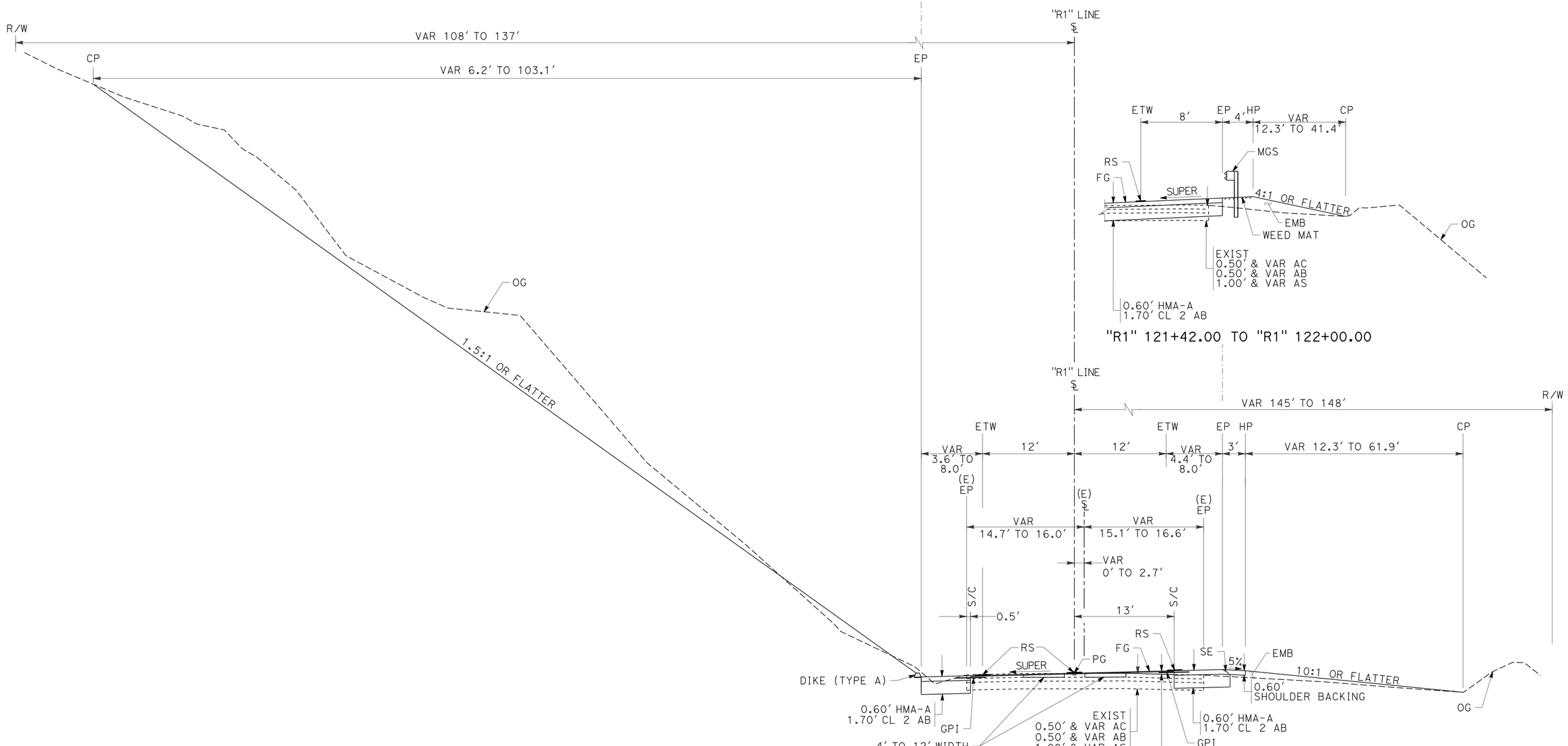

ROUTE 299
"R1" 121+42.00 TO "R1" 123+14.88

TYPICAL CROSS SECTIONS

NO SCALE

X-4

REVISED BY	JOLENA ASTIN
DATE REVISED	ROBERT NIXON
CALCULATED-DESIGNED BY	
CHECKED BY	
FUNCTIONAL SUPERVISOR	JOHN L. MARTIN

STATE OF CALIFORNIA - DEPARTMENT OF TRANSPORTATION
Caltrans
DESIGN

P:\proj1\01\0a320_plans\pse\0100020307ca004.dgn

LAST REVISION 12-19-14 | DATE PLOTTED => 06-APR-2015 | TIME PLOTTED => 07:44

Dist	COUNTY	ROUTE	POST MILES TOTAL PROJECT	SHEET No.	TOTAL SHEETS
01	Hum	299	30.2/30.6	6	57

REGISTERED CIVIL ENGINEER 04-06-15 DATE

04-06-15
PLANS APPROVAL DATE

REGISTERED PROFESSIONAL ENGINEER ROBERT J. NIXON No. C69123 Exp. 6-30-16 CIVIL STATE OF CALIFORNIA

THE STATE OF CALIFORNIA OR ITS OFFICERS OR AGENTS SHALL NOT BE RESPONSIBLE FOR THE ACCURACY OR COMPLETENESS OF SCANNED COPIES OF THIS PLAN SHEET.

NOTE:

1. FOR ACCURATE RIGHT OF WAY DATA, CONTACT RIGHT OF WAY ENGINEERING AT THE DISTRICT OFFICE.

LEGEND:

- NEW STRUCTURAL SECTION
- HMA OVERLAY AREA VARIABLE DEPTH
- ESA FENCE

ABBREVIATIONS:

AITS	ALTERNATIVE IN-LINE TERMINAL SYSTEM
DIKE (A)	PLACE HOT MIX ASPHALT DIKE (TYPE A)
DIKE (D)	PLACE HOT MIX ASPHALT DIKE (TYPE D)
RS	RUMBLE STRIP (HMA, GROUND-IN INDENTATIONS)
SE	SAFETY EDGE
WM	WEED CONTROL MAT (FIBER)

CURVE DATA

No. ⊕	R	Δ	T	L
1	500′	52°46′05″	248.03′	460.49′
2	450′	102°57′40″	565.33′	808.65′

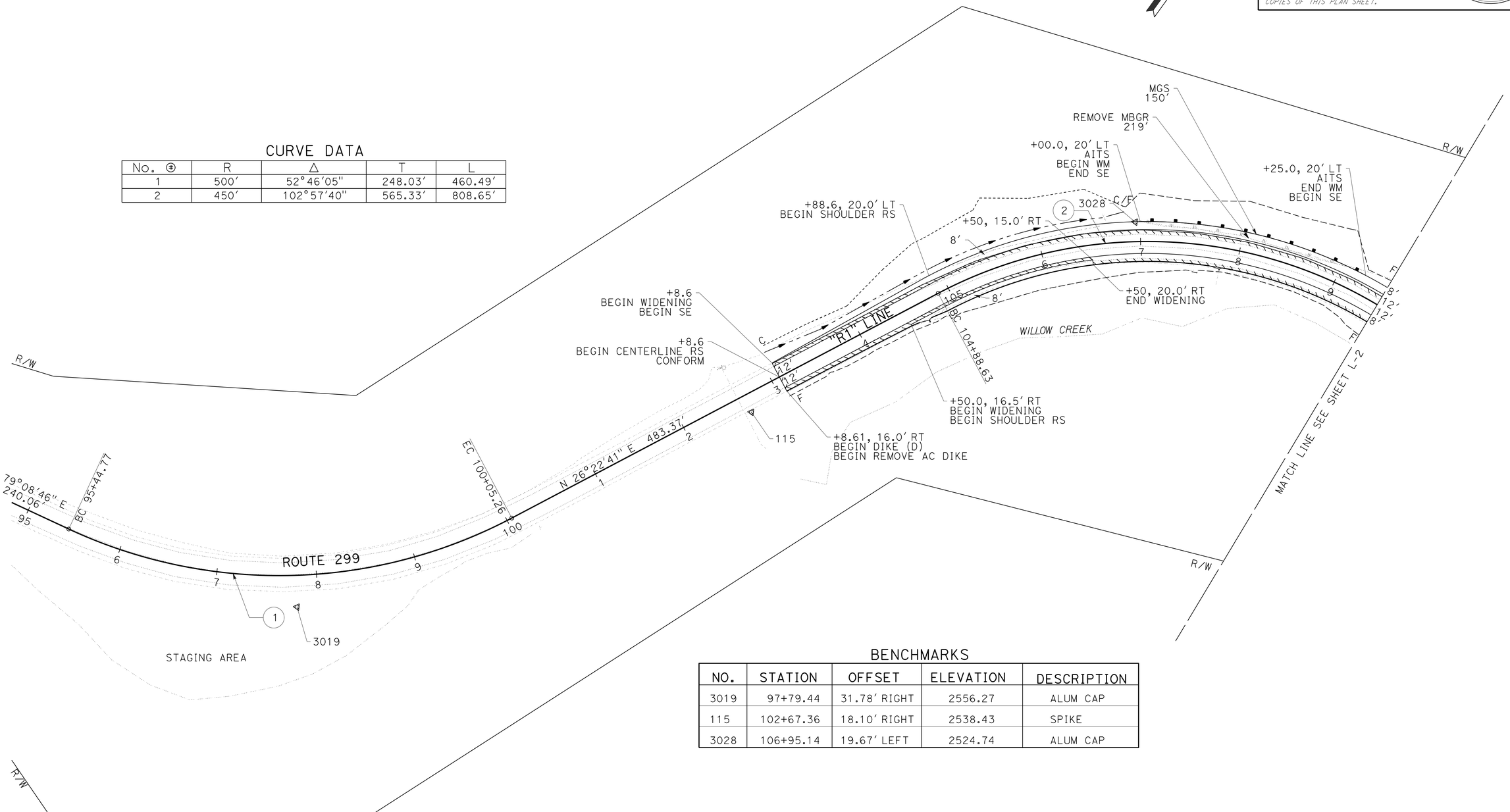

BENCHMARKS

NO.	STATION	OFFSET	ELEVATION	DESCRIPTION
3019	97+79.44	31.78′ RIGHT	2556.27	ALUM CAP
115	102+67.36	18.10′ RIGHT	2538.43	SPIKE
3028	106+95.14	19.67′ LEFT	2524.74	ALUM CAP

LAYOUT

SCALE: 1″ = 50′

L-1

REVISED BY | DATE REVISED
JOLENA ASTIN | ROBERT NIXON
CALCULATED-DESIGNED BY | CHECKED BY
FUNCTIONAL SUPERVISOR: JOHN L. MARTIN

STATE OF CALIFORNIA - DEPARTMENT OF TRANSPORTATION
Caltrans
DESIGN

P:\proj1\01\0a320_plans\pse\0100020307ea001.dgn

LAST REVISION 12-30-14 | DATE PLOTTED => 06-APR-2015 | TIME PLOTTED => 07:44

Dist	COUNTY	ROUTE	POST MILES TOTAL PROJECT	SHEET No.	TOTAL SHEETS
01	Hum	299	30.2/30.6	7	57

REGISTERED CIVIL ENGINEER 04-06-15 DATE

04-06-15
PLANS APPROVAL DATE

REGISTERED PROFESSIONAL ENGINEER ROBERT J. NIXON No. C69123 Exp. 6-30-16 CIVIL STATE OF CALIFORNIA

THE STATE OF CALIFORNIA OR ITS OFFICERS OR AGENTS SHALL NOT BE RESPONSIBLE FOR THE ACCURACY OR COMPLETENESS OF SCANNED COPIES OF THIS PLAN SHEET.

NOTE:

1. FOR ACCURATE RIGHT OF WAY DATA, CONTACT RIGHT OF WAY ENGINEERING AT THE DISTRICT OFFICE.

CURVE DATA

No. ⊛	R	Δ	T	L
2	450′	102°57′40"	565.33′	808.65′
3	700′	48°44′57"	317.16′	595.58′
4	900′	22°44′32"	181.00′	357.23′

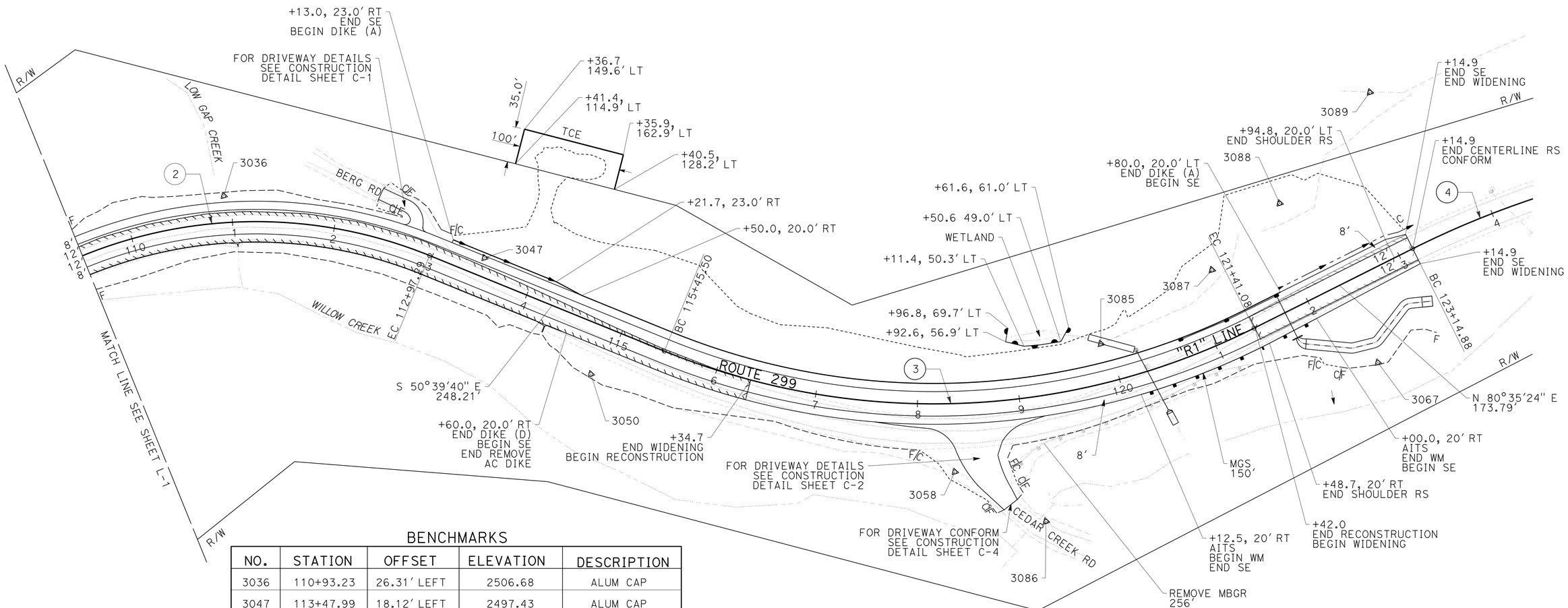

BENCHMARKS

NO.	STATION	OFFSET	ELEVATION	DESCRIPTION
3036	110+93.23	26.31′ LEFT	2506.68	ALUM CAP
3047	113+47.99	18.12′ LEFT	2497.43	ALUM CAP
3050	114+87.38	48.03′ RIGHT	2485.05	SPIKE
3058	118+34.82	66.88′ RIGHT	2467.08	ALUM CAP
3086	119+09.78	122.44′ RIGHT	2456.03	SPIKE
3085	119+90.72	38.28′ LEFT	2475.38	SPIKE
3087	121+28.50	69.35′ LEFT	2489.03	SPIKE
3088	122+18.26	98.13′ LEFT	2502.13	SPIKE
3067	122+34.46	84.39′ RIGHT	2440.05	SPIKE
3089	123+41.37	21.16′ LEFT	2516.54	SPIKE

LAYOUT
SCALE: 1" = 50′

L-2

REVISED BY	DATE REVISED
JOLENA ASTIN	ROBERT NIXON
CALCULATED-DESIGNED BY	CHECKED BY
FUNCTIONAL SUPERVISOR	JOHN L. MARTIN

STATE OF CALIFORNIA - DEPARTMENT OF TRANSPORTATION
Caltrans
DESIGN

P:\proj1\01\0a320_plans\pse\0100020307ea002.dgn

LAST REVISION 12-30-14 | DATE PLOTTED => 06-APR-2015 | TIME PLOTTED => 07:44

Dist	COUNTY	ROUTE	POST MILES TOTAL PROJECT	SHEET No.	TOTAL SHEETS
01	Hum	299	30.2/30.6	8	57

REGISTERED CIVIL ENGINEER 04-06-15 DATE

04-06-15
PLANS APPROVAL DATE

REGISTERED PROFESSIONAL ENGINEER ROBERT J. NIXON No. C69123 Exp. 6-30-16 CIVIL STATE OF CALIFORNIA

THE STATE OF CALIFORNIA OR ITS OFFICERS OR AGENTS SHALL NOT BE RESPONSIBLE FOR THE ACCURACY OR COMPLETENESS OF SCANNED COPIES OF THIS PLAN SHEET.

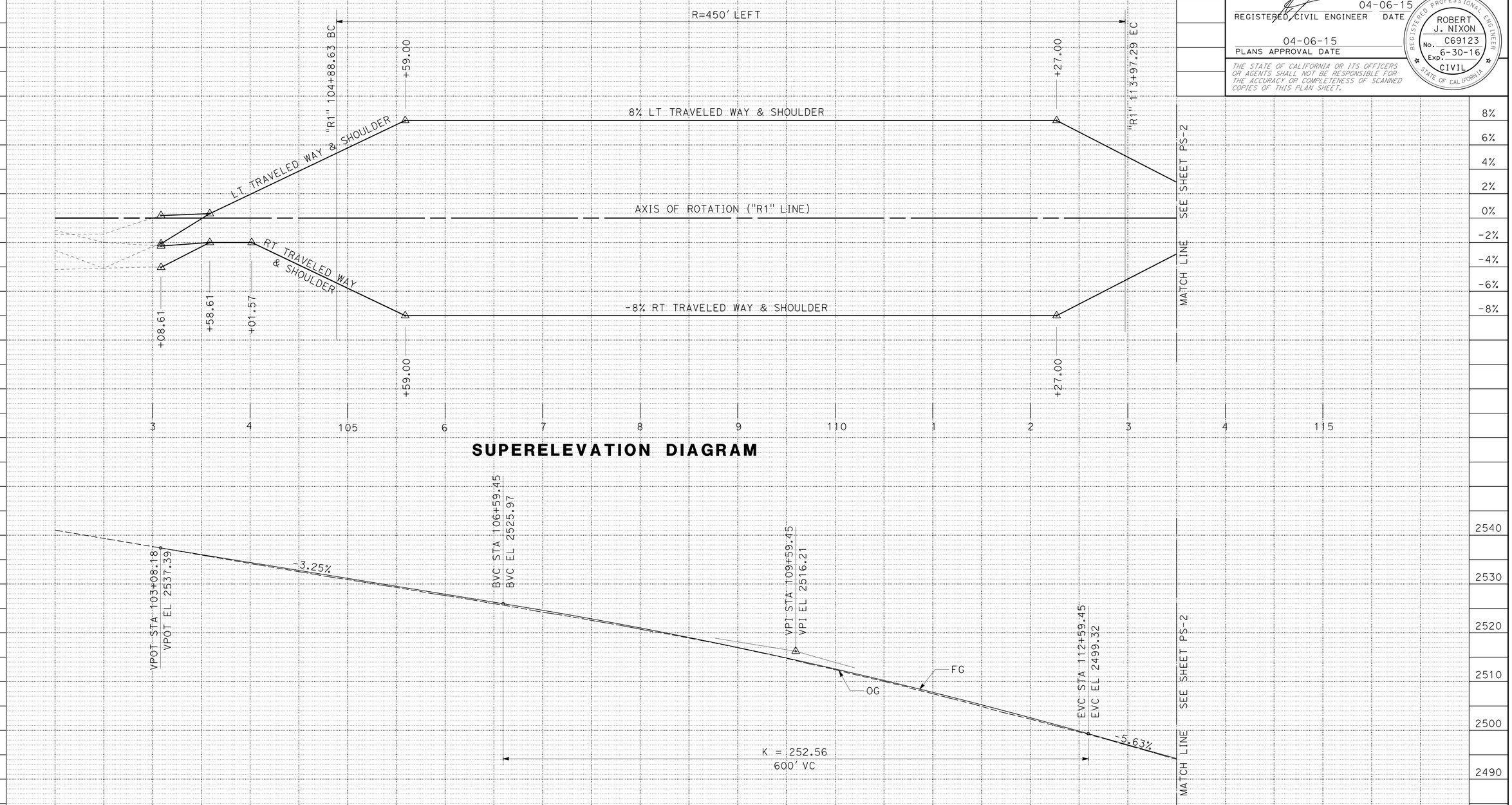

ROUTE 299
"R1" LINE

PROFILE AND SUPERELEVATION DIAGRAM

SCALE: 1" = 50' Horiz
1" = 10' Vert

PS-1

STATION		3	4	105	6	7	8	9	110	1	2	3	4	115	TOTAL
CY	Exc	24	344	1034	576	41	54	76	108	62	133				2452
	Emb	27	18	35	60	272	489	78	136	58	24				1197

REVISED BY | DATE REVISED
JOLENA ASTIN | ROBERT NIXON
CALCULATED-DESIGNED BY | CHECKED BY
FUNCTIONAL SUPERVISOR: JOHN L. MARTIN

STATE OF CALIFORNIA - DEPARTMENT OF TRANSPORTATION
Caltrans® DESIGN

P:\proj1\01\0a320_plans\pse\0100020307fb001.dgn

LAST REVISION 12-15-14 | DATE PLOTTED => 06-APR-2015 | TIME PLOTTED => 07:44

Dist	COUNTY	ROUTE	POST MILES TOTAL PROJECT	SHEET No.	TOTAL SHEETS
01	Hum	299	30.2/30.6	9	57

REGISTERED CIVIL ENGINEER 04-06-15 DATE

04-06-15
PLANS APPROVAL DATE

REGISTERED PROFESSIONAL ENGINEER ROBERT J. NIXON No. C69123 Exp. 6-30-16 CIVIL STATE OF CALIFORNIA

THE STATE OF CALIFORNIA OR ITS OFFICERS OR AGENTS SHALL NOT BE RESPONSIBLE FOR THE ACCURACY OR COMPLETENESS OF SCANNED COPIES OF THIS PLAN SHEET.

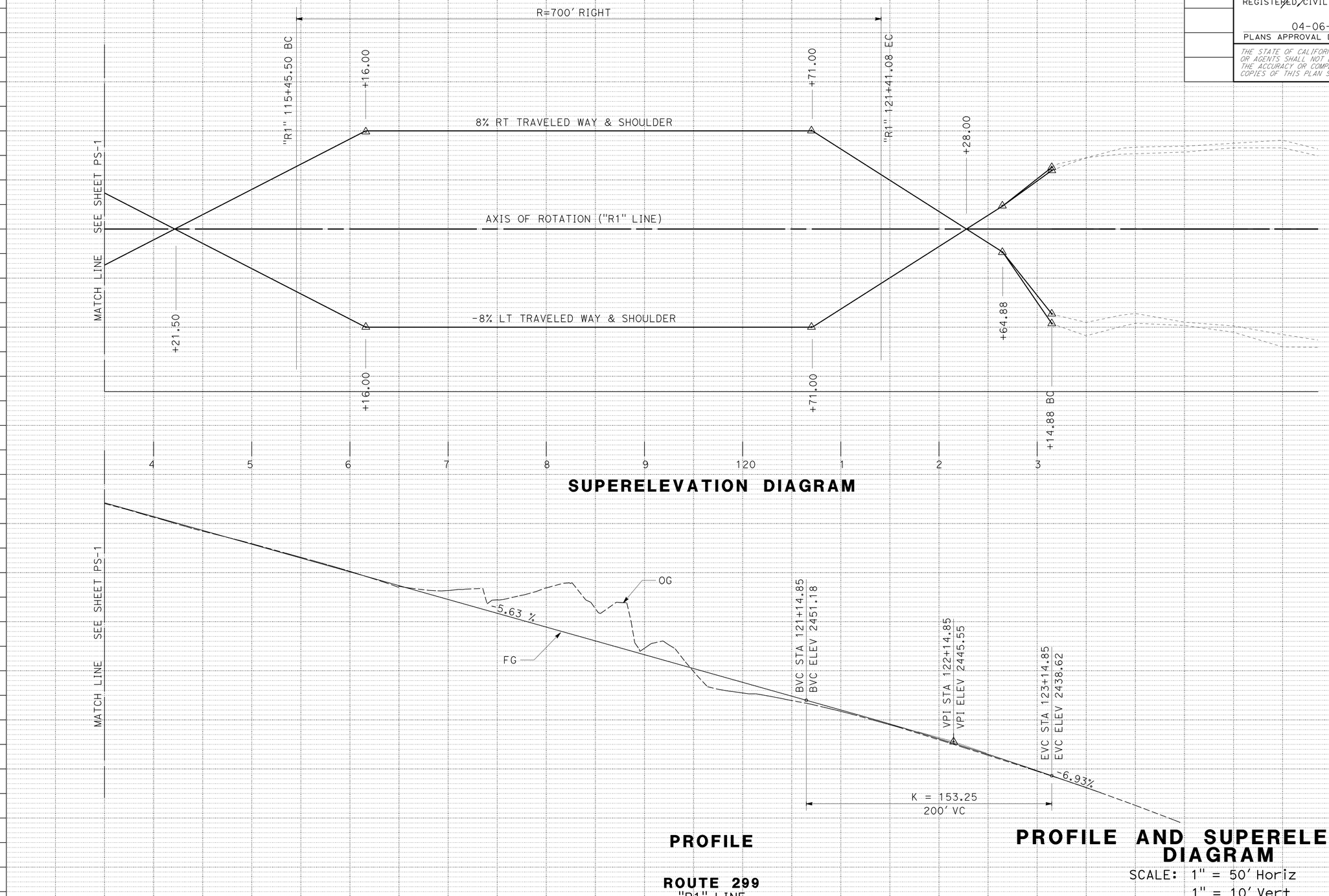

PS-2

STATION		3	4	115	6	7	8	9	120	1	2	3	SHEET TOTAL	TOTAL
CY	Exc		3357	2702	2089	2688	1949	1133	1690	1968	2398		19,974	22,426
	Emb		38	1	10	15	3	41	44	67	11		230	1427

REVISED BY | DATE REVISED
JOLENA ASTIN | ROBERT NIXON
CALCULATED-DESIGNED BY | CHECKED BY
FUNCTIONAL SUPERVISOR: JOHN L. MARTIN

STATE OF CALIFORNIA - DEPARTMENT OF TRANSPORTATION
Caltrans
DESIGN

P:\proj1\01\0a320_plans\pse\0100020307fb002.dgn

LAST REVISION 12-15-14 | DATE PLOTTED => 06-APR-2015 | TIME PLOTTED => 07:44

Dist	COUNTY	ROUTE	POST MILES TOTAL PROJECT	SHEET No.	TOTAL SHEETS
01	Hum	299	30.2/30.6	10	57

REGISTERED CIVIL ENGINEER 04-06-15 DATE

04-06-15
PLANS APPROVAL DATE

REGISTERED PROFESSIONAL ENGINEER ROBERT J. NIXON No. C69123 Exp. 6-30-16 CIVIL STATE OF CALIFORNIA

THE STATE OF CALIFORNIA OR ITS OFFICERS OR AGENTS SHALL NOT BE RESPONSIBLE FOR THE ACCURACY OR COMPLETENESS OF SCANNED COPIES OF THIS PLAN SHEET.

CURVE DATA

No. ⊕	R	Δ	T	L
2	450′	15°44′36"	62.22′	123.65′
20	18′	84°22′17"	16.31′	26.51′
21	5′	132°00′12"	11.23′	11.52′
22	5′	79°09′31"	4.13′	6.91′

DRIVEWAY DATA

A "R1" +63.75, 25.00′ LT = "B1" +9.69, 11.00′ LT	G "R1" +81.37, 24.07′ LT = "B1" +99.04, 6.00′ RT ELEV= 2499.82
B "R1" +67.25, 28.36′ LT = "B1" +9.69, 6.00′ LT ELEV= 2499.52	H "R1" +83.00, 21.15′ LT = "B1" +96.78, 7.34′ RT ELEV= 2499.49
C "R1" +68.42, 25.81′ LT = "B1" +5.39, 6.48′ LT ELEV= 2499.55	I "R1" +86.03, 20.00′ LT = "B1" +95.88, 10.47′ RT ELEV= 2498.94
D "R1" +68.10, 22.99′ LT = "B1" +1.26, 7.88′ LT ELEV= 2499.03	J "R1" +86.03, 25.00′ LT = "B1" +99.04, 11.00′ RT
E "R1" +66.35, 20.81′ LT = "B1" +97.61, 10.06′ LT ELEV= 2498.42	
F "R1" +63.75, 20.00′ LT = "B1" +95.84, 12.72′ LT ELEV= 2500.37	

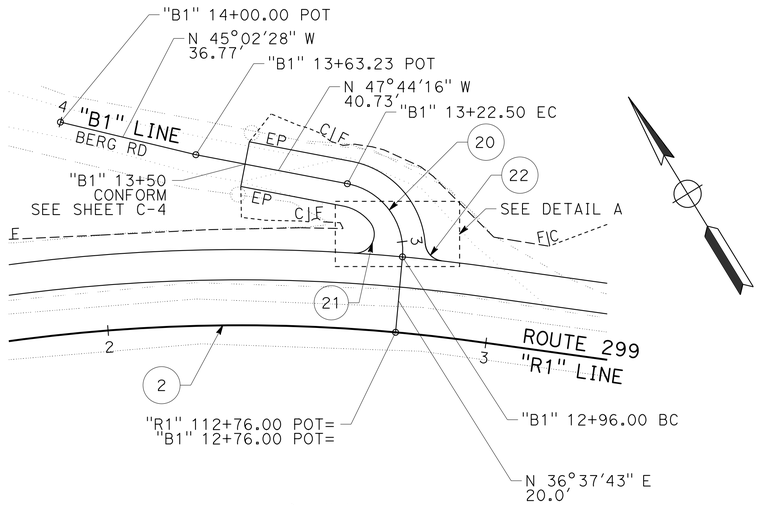

PLAN
SCALE: 1" = 20′

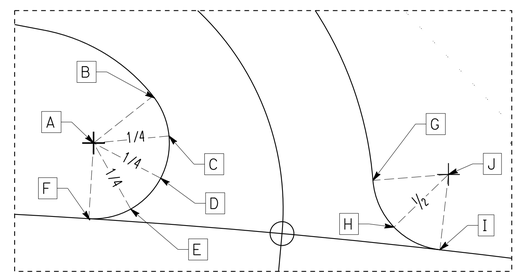

DETAIL A
NO SCALE

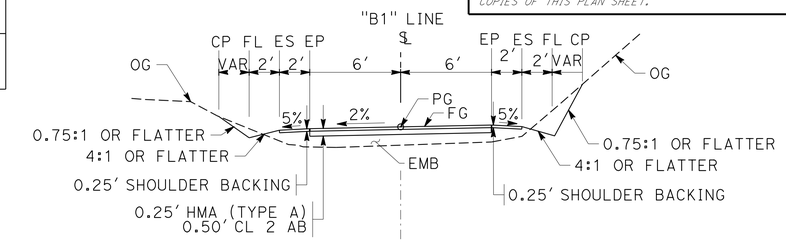

"B1" 13+30.00 TO "B1" 13+50.00

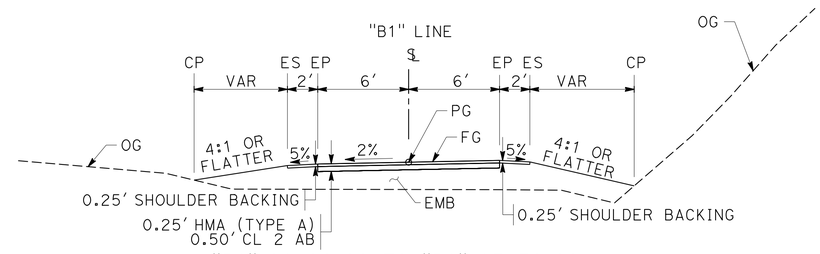

"B1" 12+96.00 TO "B1" 13+30.00

TYPICAL SECTION
NO SCALE

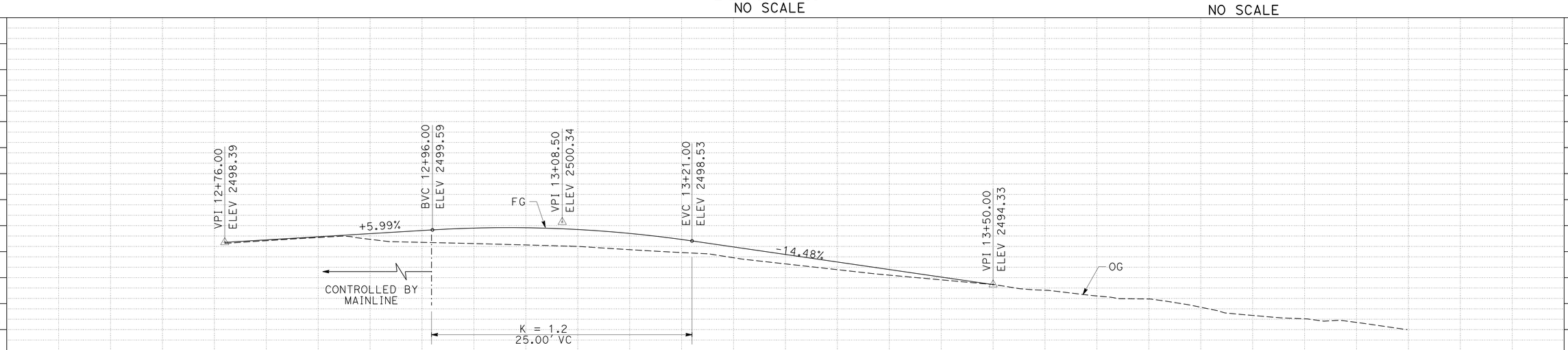

"B1" LINE PROFILE
SCALE: 1" = 5′ Horiz
1" = 5′ Vert

CONSTRUCTION DETAILS
SCALE AS SHOWN

C-1

STATION		13+00	13+50	14+00	TOTAL
CY	Exc	10			10
	Emb	29			29

REVISED BY | DATE REVISED
JOLENA ASTIN | ROBERT NIXON
CALCULATED-DESIGNED BY | CHECKED BY
FUNCTIONAL SUPERVISOR: JOHN L. MARTIN

STATE OF CALIFORNIA - DEPARTMENT OF TRANSPORTATION
Caltrans
DESIGN

P:\proj1\01\0a320_plans\pse\0100020307ga001.dgn

LAST REVISION 12-30-14 | DATE PLOTTED => 06-APR-2015 | TIME PLOTTED => 07:44

Dist	COUNTY	ROUTE	POST MILES TOTAL PROJECT	SHEET No.	TOTAL SHEETS
01	Hum	299	30.2/30.6	11	57

REGISTERED CIVIL ENGINEER 04-06-15 DATE

04-06-15
PLANS APPROVAL DATE

REGISTERED PROFESSIONAL ENGINEER ROBERT J. NIXON No. C69123 Exp. 6-30-16 CIVIL STATE OF CALIFORNIA

THE STATE OF CALIFORNIA OR ITS OFFICERS OR AGENTS SHALL NOT BE RESPONSIBLE FOR THE ACCURACY OR COMPLETENESS OF SCANNED COPIES OF THIS PLAN SHEET.

NOTES:

1. FOR DRIVEWAY PAVEMENT CONFORM, SEE CONSTRUCTION DETAIL SHEET C-4.

CURVE DATA

No. ⊕	R	Δ	T	L
3	700′	25°47′14"	160.24′	315.05′
30	100′	34°16′06"	30.83′	59.81′
31	724′	04°06′00"	25.92′	51.81′
32	33′	66°09′16"	21.64′	38.36′
33	112′	21°46′47"	21.55′	42.57′
34	112′	18°17′35"	18.03′	35.76′
35	41′	41°47′00"	15.51′	29.64′

DRIVEWAY DATA

K	"R1" +59.47, 20.00′ RT = "CC1" +49.71, 105.09′ LT ELEV=2472.77
L	"R1" +7.18, 57.13′ RT = "CC1" +13.84, 60.22′ LT
M	"R1" +9.55, 24.00′ RT = "CC1" +40.03, 54.20′ LT ELEV= 2466.02
N	"R1" +21.33, 27.49′ LT = "CC1" +35.74, 42.24′ LT ELEV= 2466.48
O	"R1" +30.80, 35.46′ RT = "CC1" +27.27, 32.77′ LT ELEV= 2467.03
P	"R1" +36.52, 46.63′ RT = "CC1" +17.81, 27.49′ LT ELEV= 2468.13
Q	"R1" +73.37, 108.58′ RT = "CC1" +84.17, 15.94′ LT ELEV=2463.47
R	"R1" +73.37, 108.58′ RT = "CC1" +55.02, 8.57′ LT ELEV=2460.56
S	"R1" +74.44, 52.66′ RT = "CC1" +55.02, 7.77′ RT ELEV= 2460.15
T	"R1" +74.44, 52.66′ RT = "CC1" +67.05, 9.96′ RT ELEV= 2461.66
U	"R1" +74.44, 52.66′ RT = "CC1" +07.26, 12.00′ RT ELEV= 2466.70
V	"R1" +79.29, 40.21′ RT = "CC1" +21.36, 18.23′ RT ELEV= 2467.35
W	"R1" +85.50, 32.84′ RT = "CC1" +29.58, 24.60′ LT ELEV= 2467.12
X	"R1" +93.34, 27.34′ RT = "CC1" +35.39, 32.56′ RT ELEV= 2466.69
Y	"R1" +2.31, 24.08′ RT = "CC1" +39.12, 41.68′ LT ELEV= 2466.32
Z	"R1" +22.34, 20.00′ RT = "CC1" +44.67, 61.99′ LT ELEV= 2463.65
ZZ	"R1" +10.05, 63.88′ RT = "CC1" +76.56, 46.22′ LT

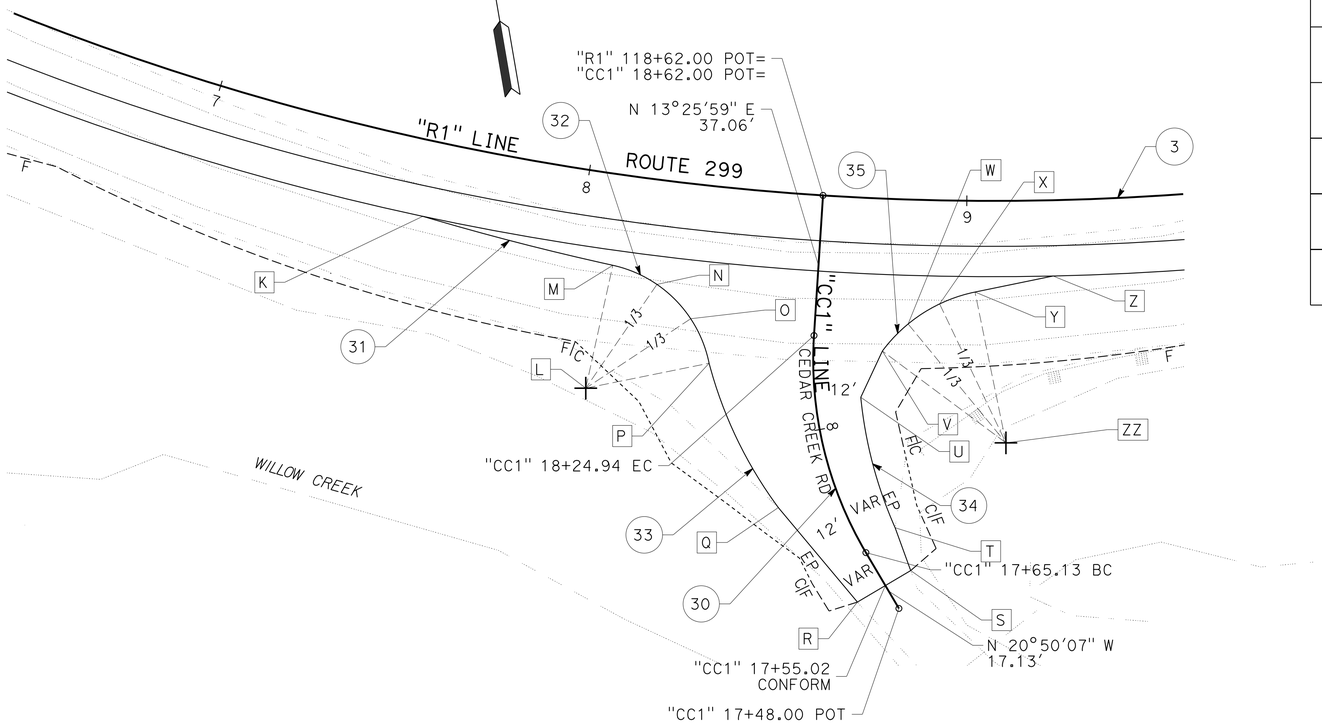

PLAN
SCALE: 1" = 20′

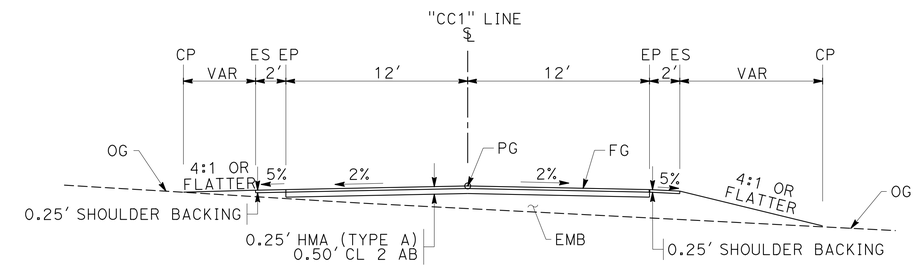

TYPICAL SECTION
"CC1" 17+87.00 TO "CC1" 18+62.00
NO SCALE

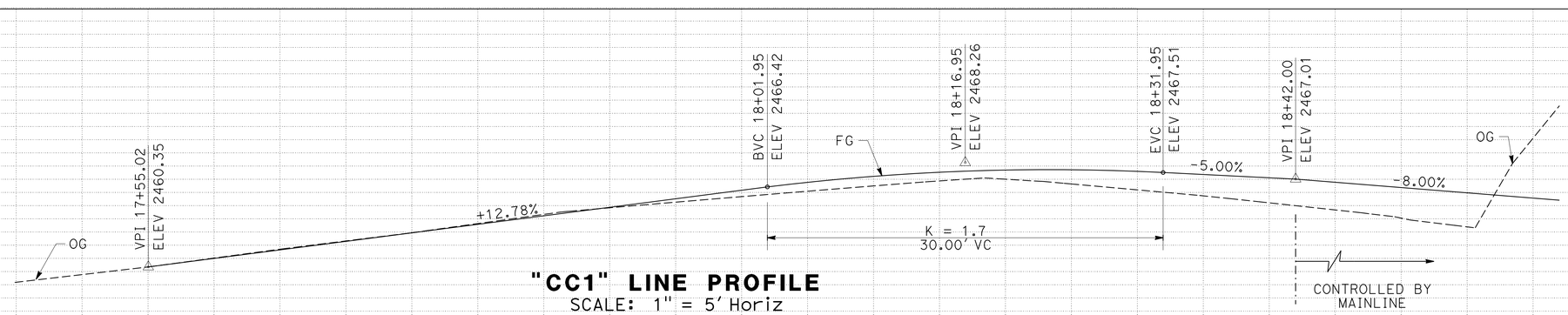

"CC1" LINE PROFILE
SCALE: 1" = 5′ Horiz
1" = 5′ Vert

CONSTRUCTION DETAILS
SCALE: AS SHOWN

C-2

STATION		17+50	18+00	18+50	TOTAL
CY	Exc		182		182
	Emb		60		60

REVISED BY	DATE REVISED	JOLENA ASTIN	ROBERT NIXON	CALCULATED-DESIGNED BY	CHECKED BY	FUNCTIONAL SUPERVISOR	JOHN L. MARTIN

STATE OF CALIFORNIA - DEPARTMENT OF TRANSPORTATION
Caltrans® DESIGN

P:\proj1\01\0a320_plans\pse\0100020307ga002.dgn

LAST REVISION 12-30-14 | DATE PLOTTED => 06-APR-2015 | TIME PLOTTED => 07:44

Dist	COUNTY	ROUTE	POST MILES TOTAL PROJECT	SHEET No.	TOTAL SHEETS
01	Hum	299	30.2/30.6	12	57

REGISTERED CIVIL ENGINEER 04-06-15 DATE

PLANS APPROVAL DATE 04-06-15

REGISTERED PROFESSIONAL ENGINEER ROBERT J. NIXON No. C69123 Exp. 6-30-16 CIVIL STATE OF CALIFORNIA

THE STATE OF CALIFORNIA OR ITS OFFICERS OR AGENTS SHALL NOT BE RESPONSIBLE FOR THE ACCURACY OR COMPLETENESS OF SCANNED COPIES OF THIS PLAN SHEET.

LEGEND

COLD PLANE LIMITS

HMA OVERLAY AREA VARIABLE DEPTH

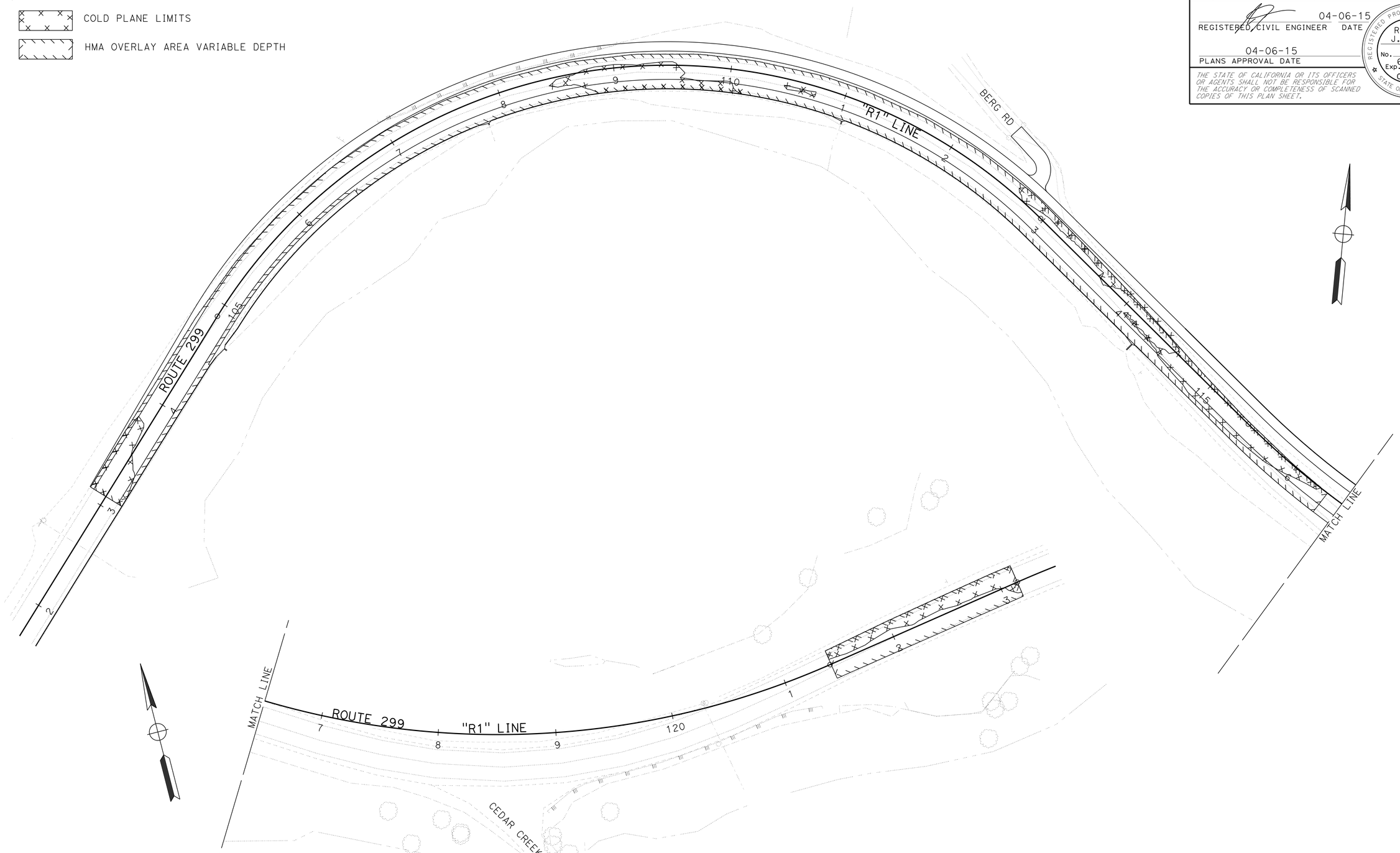

COLD PLANE AC PAVEMENT AND OVERLAY WITH VARIABLE HMA

CONSTRUCTION DETAILS

SCALE: 1" = 40'

C-3

STATE OF CALIFORNIA - DEPARTMENT OF TRANSPORTATION

Caltrans® **DESIGN**

FUNCTIONAL SUPERVISOR: JOHN L. MARTIN

CALCULATED-DESIGNED BY: JOLENA ASTIN

CHECKED BY: ROBERT NIXON

REVISED BY | DATE REVISED

P:\proj1\01\0a320_plans\pse\0100020307ga003.dgn

LAST REVISION 12-30-14 | DATE PLOTTED => 06-APR-2015 | TIME PLOTTED => 07:44

BORDER LAST REVISED 7/2/2010 | USERNAME => s115152 | DGN FILE => 0100020307ga003.dgn | RELATIVE BORDER SCALE IS IN INCHES 0 1 2 3 | UNIT 0315 | PROJECT NUMBER & PHASE 0100020307-1 | EA: 01-0A3201

Dist	COUNTY	ROUTE	POST MILES TOTAL PROJECT	SHEET No.	TOTAL SHEETS
01	Hum	299	30.2/30.6	13	57

REGISTERED CIVIL ENGINEER 04-06-15 DATE

PLANS APPROVAL DATE 04-06-15

REGISTERED PROFESSIONAL ENGINEER ROBERT J. NIXON No. C69123 Exp. 6-30-16 CIVIL STATE OF CALIFORNIA

THE STATE OF CALIFORNIA OR ITS OFFICERS OR AGENTS SHALL NOT BE RESPONSIBLE FOR THE ACCURACY OR COMPLETENESS OF SCANNED COPIES OF THIS PLAN SHEET.

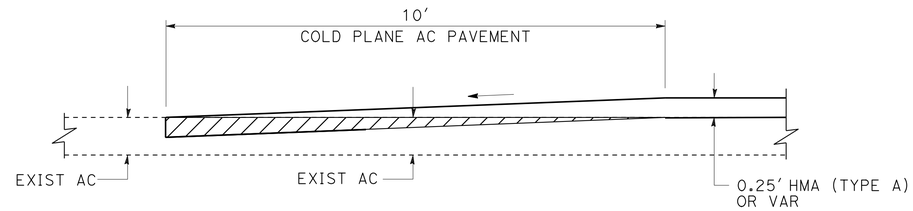

DRIVEWAY PAVEMENT CONFORM
NO SCALE

LEGEND:

COLD PLANE AC PAVEMENT

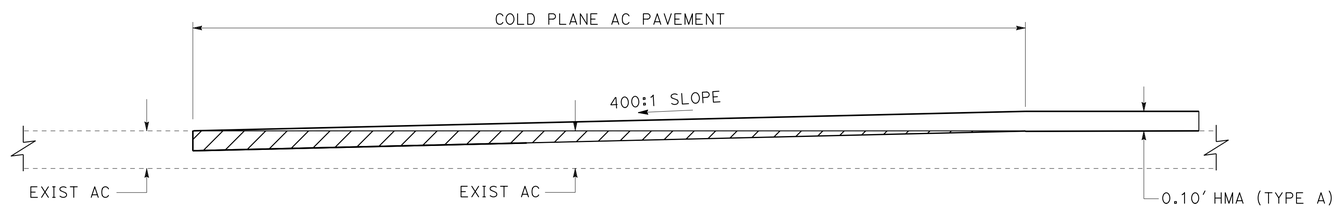

PROFILE
PAVEMENT CONFORM

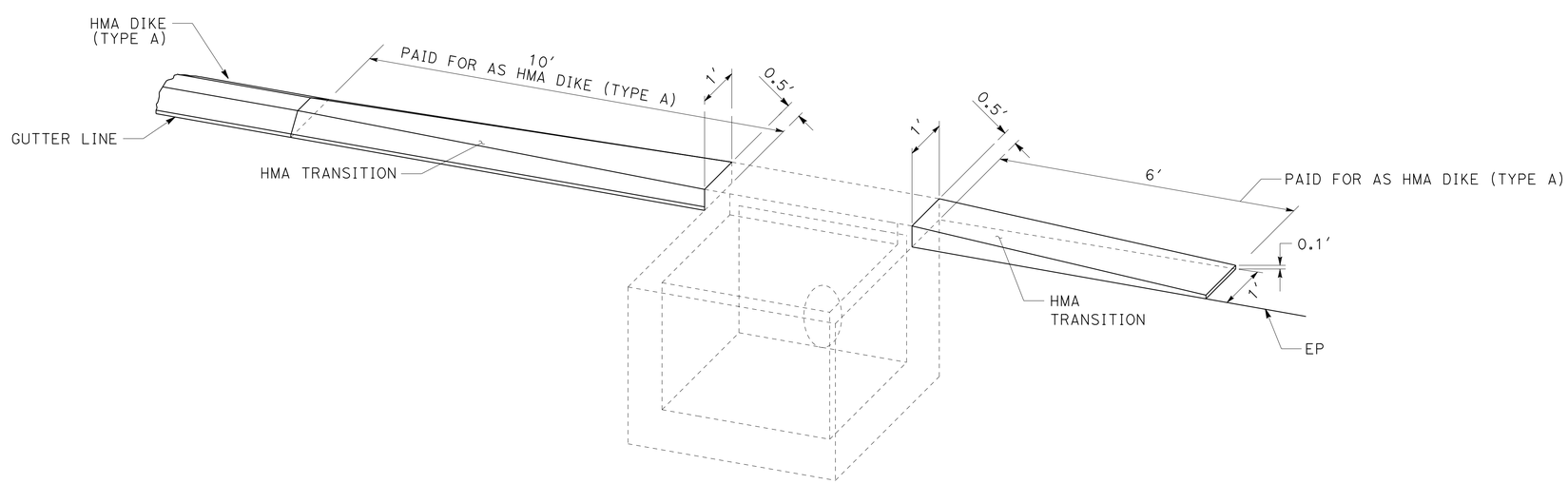

TRANSITION HMA DIKE (TYPE A) TO DI

CONSTRUCTION DETAILS
NO SCALE

C-4

REVISED BY | DATE REVISED
JOLENA ASTIN | ROBERT NIXON
CALCULATED-DESIGNED BY | CHECKED BY
FUNCTIONAL SUPERVISOR
JOHN L. MARTIN

STATE OF CALIFORNIA - DEPARTMENT OF TRANSPORTATION
Caltrans® DESIGN

P:\proj1\01\0a320_plans\pse\0100020307ga004.dgn

LAST REVISION 12-30-14 | DATE PLOTTED => 06-APR-2015 | TIME PLOTTED => 07:44

Dist	COUNTY	ROUTE	POST MILES TOTAL PROJECT	SHEET No.	TOTAL SHEETS
01	Hum	299	30.2/30.6	14	57

REGISTERED CIVIL ENGINEER 04-06-15 DATE

PLANS APPROVAL DATE 04-06-15

REGISTERED PROFESSIONAL ENGINEER ROBERT J. NIXON No. C69123 Exp. 6-30-16 CIVIL STATE OF CALIFORNIA

THE STATE OF CALIFORNIA OR ITS OFFICERS OR AGENTS SHALL NOT BE RESPONSIBLE FOR THE ACCURACY OR COMPLETENESS OF SCANNED COPIES OF THIS PLAN SHEET.

NOTES:

1. RUMBLE STRIPS MUST BE CONSTRUCTED PRIOR TO INSTALLING FINAL TRAFFIC STRIPES.

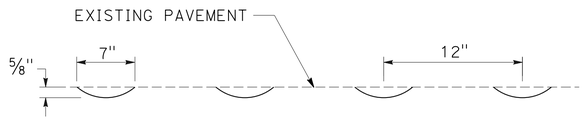

ELEVATION

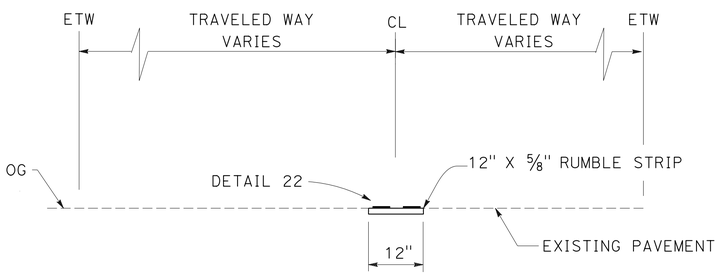

SECTION A-A

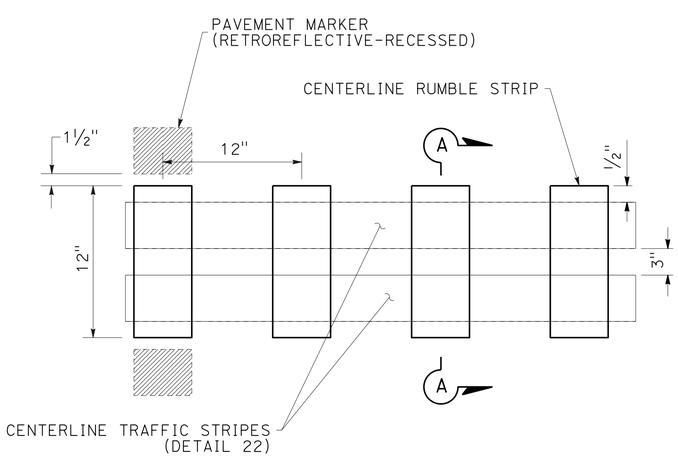

PLAN

CENTERLINE RUMBLE STRIP (HMA, GROUND-IN INDENTATIONS)

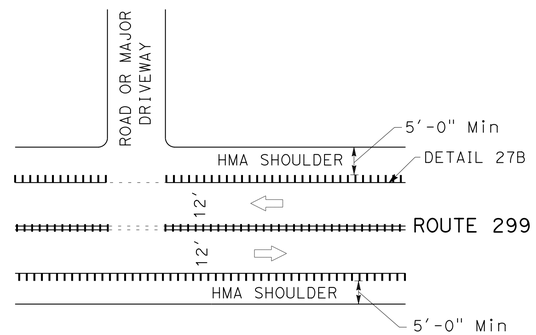

RUMBLE STRIP INTERSECTING ROADS AND MAJOR DRIVEWAYS

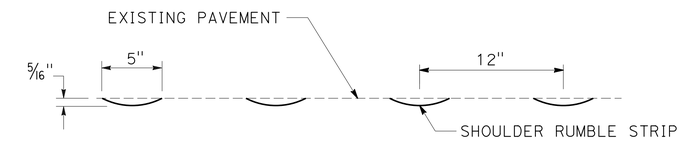

ELEVATION

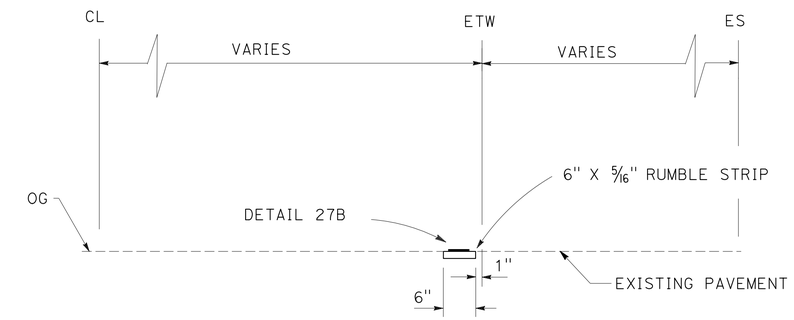

SECTION B-B

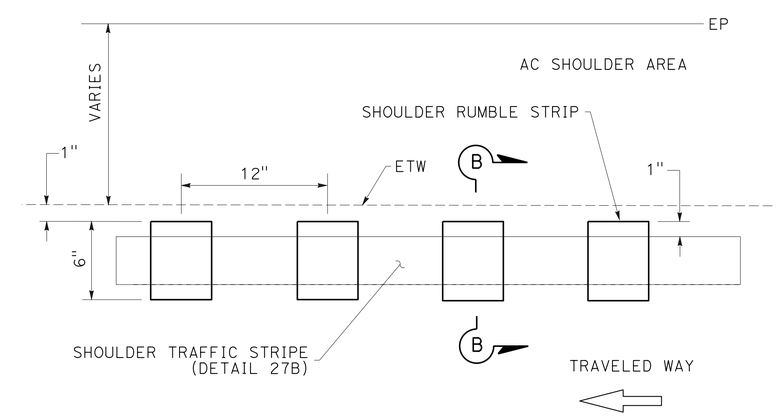

PLAN

SHOULDER RUMBLE STRIP (HMA, GROUND-IN INDENTATIONS)

CONSTRUCTION DETAILS

NO SCALE

C-5

REVISED BY	DATE REVISED
JOLENA ASTIN	ROBERT NIXON
CALCULATED-DESIGNED BY	CHECKED BY
FUNCTIONAL SUPERVISOR	JOHN L. MARTIN

STATE OF CALIFORNIA - DEPARTMENT OF TRANSPORTATION

DESIGN

Caltrans

P:\proj1\01\0a320_plans\pse\0100020307ga005.dgn

LAST REVISION 12-30-14 | DATE PLOTTED => 06-APR-2015 | TIME PLOTTED => 07:44

Dist	COUNTY	ROUTE	POST MILES TOTAL PROJECT	SHEET No.	TOTAL SHEETS
01	Hum	299	30.2/30.6	15	57

REGISTERED CIVIL ENGINEER 04-06-15 DATE

PLANS APPROVAL DATE 04-06-15

REGISTERED PROFESSIONAL ENGINEER ROBERT J. NIXON No. C69123 Exp. 6-30-16 CIVIL STATE OF CALIFORNIA

THE STATE OF CALIFORNIA OR ITS OFFICERS OR AGENTS SHALL NOT BE RESPONSIBLE FOR THE ACCURACY OR COMPLETENESS OF SCANNED COPIES OF THIS PLAN SHEET.

NOTES:

1. WHERE DIKE IS CONSTRUCTED UNDER GUARDRAIL, PLACE WEED CONTROL MAT (FIBER) TO BACK EDGE OF DIKE. WHERE PAVED SHOULDER IS CONSTRUCTED WITHIN 36" IN FRONT OF THE POST, PLACE WEED CONTROL MAT (FIBER) TO THE EDGE OF PAVED SHOULDER.

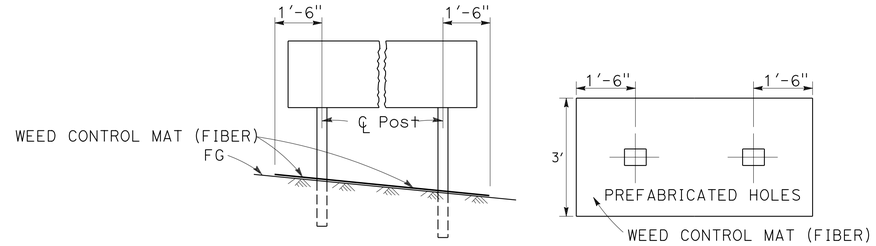

PLACEMENT UNDER ROADSIDE SIGN (TWO POST)

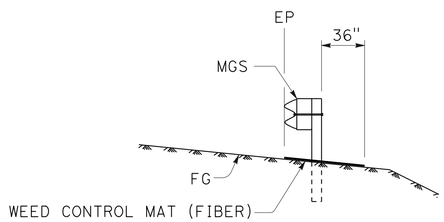

SECTION

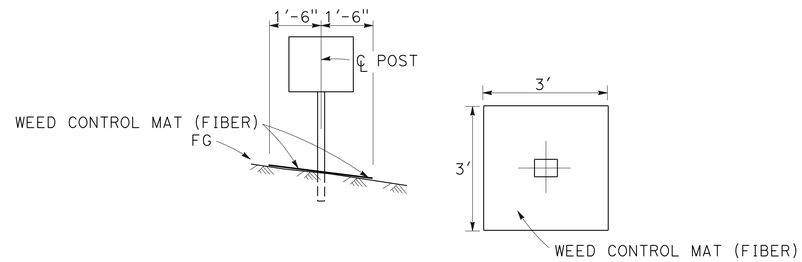

PLACEMENT UNDER ROADSIDE SIGN (ONE POST)

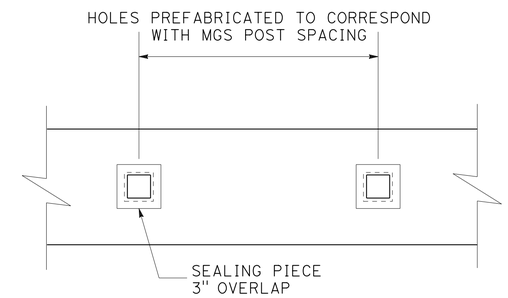

PLAN

DETAILS AT GUARDRAIL POSTS

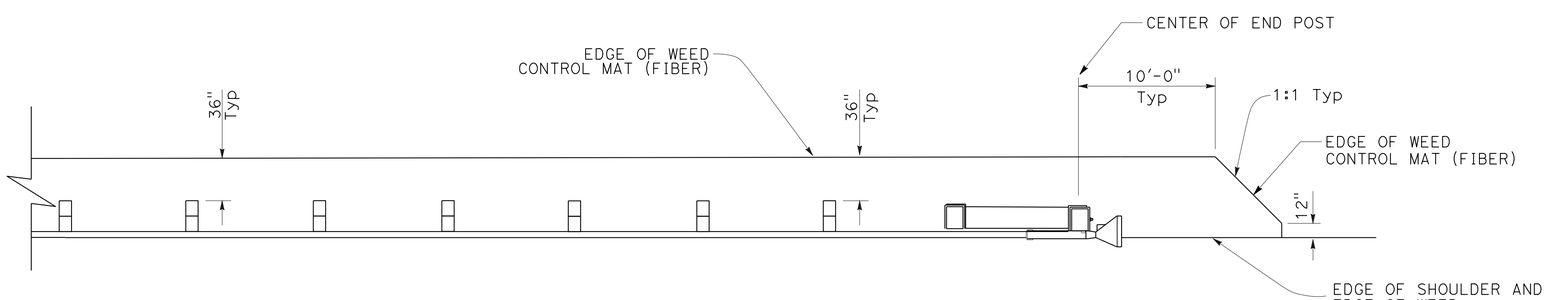

PLACEMENT UNDER ALTERNATIVE IN-LINE TERMINAL SYSTEM

WEED CONTROL MAT (FIBER)

CONSTRUCTION DETAILS

NO SCALE

C-6

REVISED BY	DATE REVISED
JOLENA ASTIN	ROBERT NIXON
CALCULATED-DESIGNED BY	CHECKED BY
FUNCTIONAL SUPERVISOR	JOHN L. MARTIN

STATE OF CALIFORNIA - DEPARTMENT OF TRANSPORTATION

Caltrans® DESIGN

P:\proj\01\0a320_plans\pse\0100020307ga006.dgn

LAST REVISION 11-05-14 | DATE PLOTTED => 06-APR-2015 | TIME PLOTTED => 07:44

Dist	COUNTY	ROUTE	POST MILES TOTAL PROJECT	SHEET No.	TOTAL SHEETS
01	Hum	299	30.2/30.6	16	57

REGISTERED CIVIL ENGINEER DATE 04-06-15

PLANS APPROVAL DATE 04-06-15

REGISTERED PROFESSIONAL ENGINEER ROBERT J. NIXON No. C69123 Exp. 6-30-16 CIVIL STATE OF CALIFORNIA

THE STATE OF CALIFORNIA OR ITS OFFICERS OR AGENTS SHALL NOT BE RESPONSIBLE FOR THE ACCURACY OR COMPLETENESS OF SCANNED COPIES OF THIS PLAN SHEET.

NOTES:

1. FOR ACCURATE RIGHT OF WAY DATA, CONTACT RIGHT OF WAY ENGINEERING AT THE DISTRICT OFFICE.
2. HMA DIKE LOCATIONS SHOWN ON LAYOUT SHEETS

LEGEND:

BS # BIO-SWALE No.

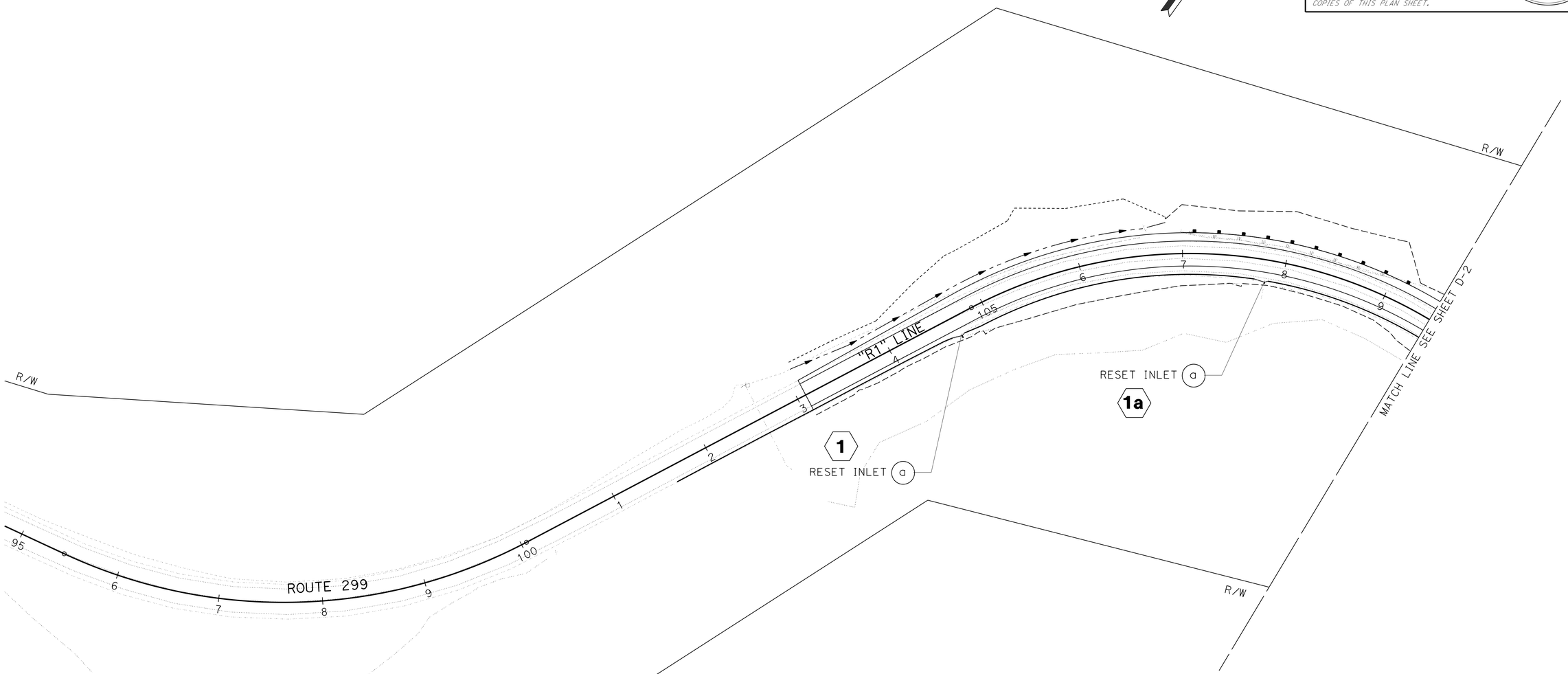

APPROVED FOR DRAINAGE WORK ONLY

DRAINAGE PLAN

SCALE: 1" = 50'

D-1

REVISED BY	DATE REVISED
ROBERT NIXON	JOHN L. MARTIN

CALCULATED-DESIGNED BY | CHECKED BY

FUNCTIONAL SUPERVISOR: JOHN L. MARTIN

STATE OF CALIFORNIA - DEPARTMENT OF TRANSPORTATION

Caltrans DESIGN

P:\proj1\01\0a320_plans\pse\0100020307ia001.dgn

LAST REVISION 12-30-14 | DATE PLOTTED => 06-APR-2015 | TIME PLOTTED => 07:44

Dist	COUNTY	ROUTE	POST MILES TOTAL PROJECT	SHEET No.	TOTAL SHEETS
01	Hum	299	30.2/30.6	17	57

REGISTERED CIVIL ENGINEER 04-06-15 DATE

04-06-15
PLANS APPROVAL DATE

REGISTERED PROFESSIONAL ENGINEER ROBERT J. NIXON No. C69123 Exp. 6-30-16 CIVIL STATE OF CALIFORNIA

THE STATE OF CALIFORNIA OR ITS OFFICERS OR AGENTS SHALL NOT BE RESPONSIBLE FOR THE ACCURACY OR COMPLETENESS OF SCANNED COPIES OF THIS PLAN SHEET.

NOTE:

1. FOR ACCURATE RIGHT OF WAY DATA, CONTACT RIGHT OF WAY ENGINEERING AT THE DISTRICT OFFICE.

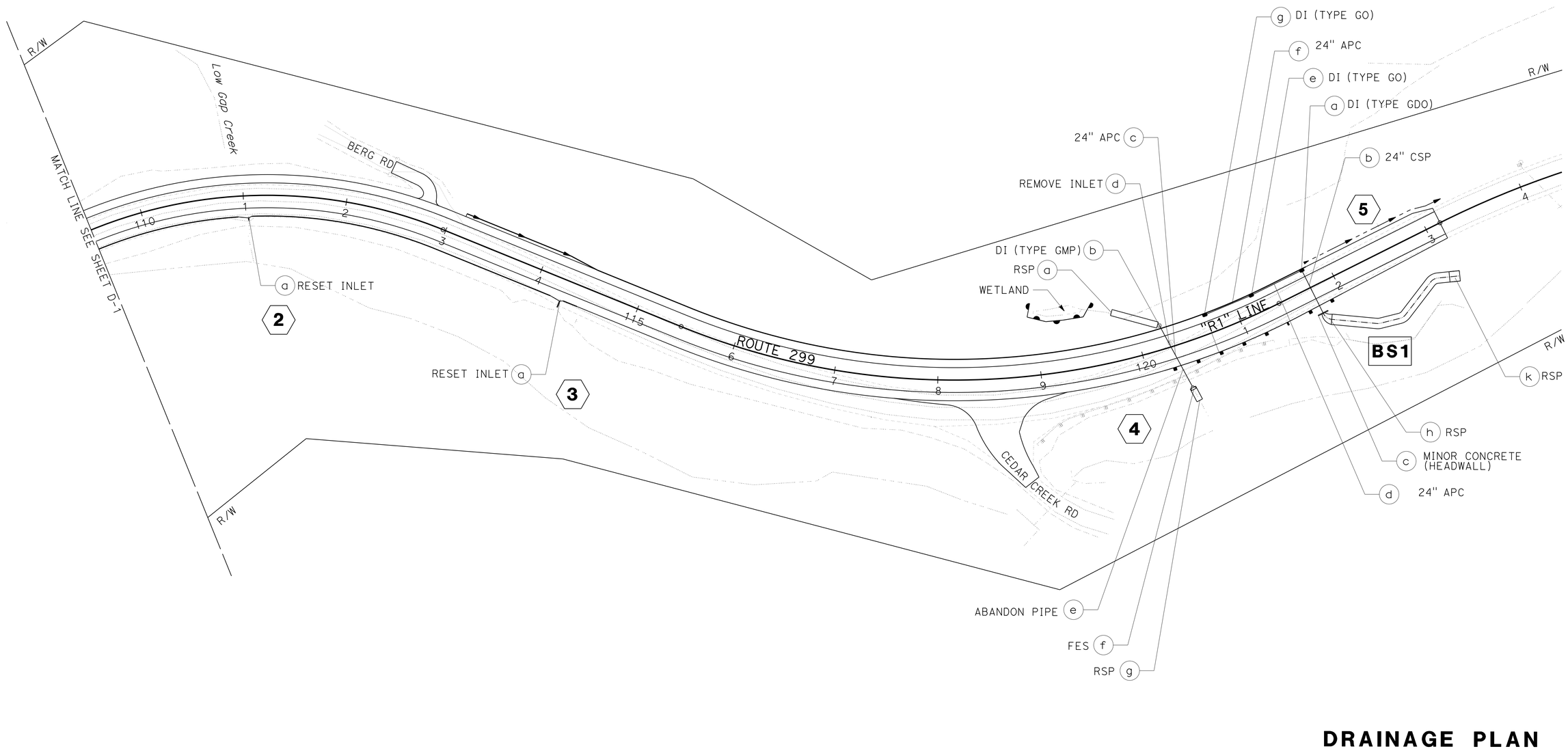

APPROVED FOR DRAINAGE WORK ONLY

DRAINAGE PLAN

SCALE: 1" = 50'

D-2

REVISED BY	DATE REVISED

CALCULATED-DESIGNED BY	ROBERT NIXON
CHECKED BY	JOHN L. MARTIN
FUNCTIONAL SUPERVISOR	JOHN L. MARTIN

STATE OF CALIFORNIA - DEPARTMENT OF TRANSPORTATION
Caltrans
DESIGN

P:\proj1\01\0a320_plans\pse\0100020307ia002.dgn

LAST REVISION 12-30-14
DATE PLOTTED => 06-APR-2015
TIME PLOTTED => 07:44

Dist	COUNTY	ROUTE	POST MILES TOTAL PROJECT	SHEET No.	TOTAL SHEETS
01	Hum	299	30.2/30.6	18	57

REGISTERED CIVIL ENGINEER DATE 04-06-15

PLANS APPROVAL DATE 04-06-15

REGISTERED PROFESSIONAL ENGINEER ROBERT J. NIXON No. C69123 Exp. 6-30-16 CIVIL STATE OF CALIFORNIA

THE STATE OF CALIFORNIA OR ITS OFFICERS OR AGENTS SHALL NOT BE RESPONSIBLE FOR THE ACCURACY OR COMPLETENESS OF SCANNED COPIES OF THIS PLAN SHEET.

NOTES:

1. CONTROL POINT FOR PLACEMENT OF DRAINAGE INLET SHALL BE THE CENTER-CENTER OF DI OR CENTER OF DRAINAGE INLET AT GFL. FOR RSP (NO.2, METHOD B) DETAILS, SEE DD-1 SHEET.
2. ALL PIPES SHALL HAVE POSITIVE WATERTIGHT JOINTS.
3. ALL GO AND GDO GRATES WILL BE IN PLANE WITH CROSS SLOPE AND PROFILE OF ROADWAY.

ABBREVIATIONS:

GFL GRATE FLOW LINE

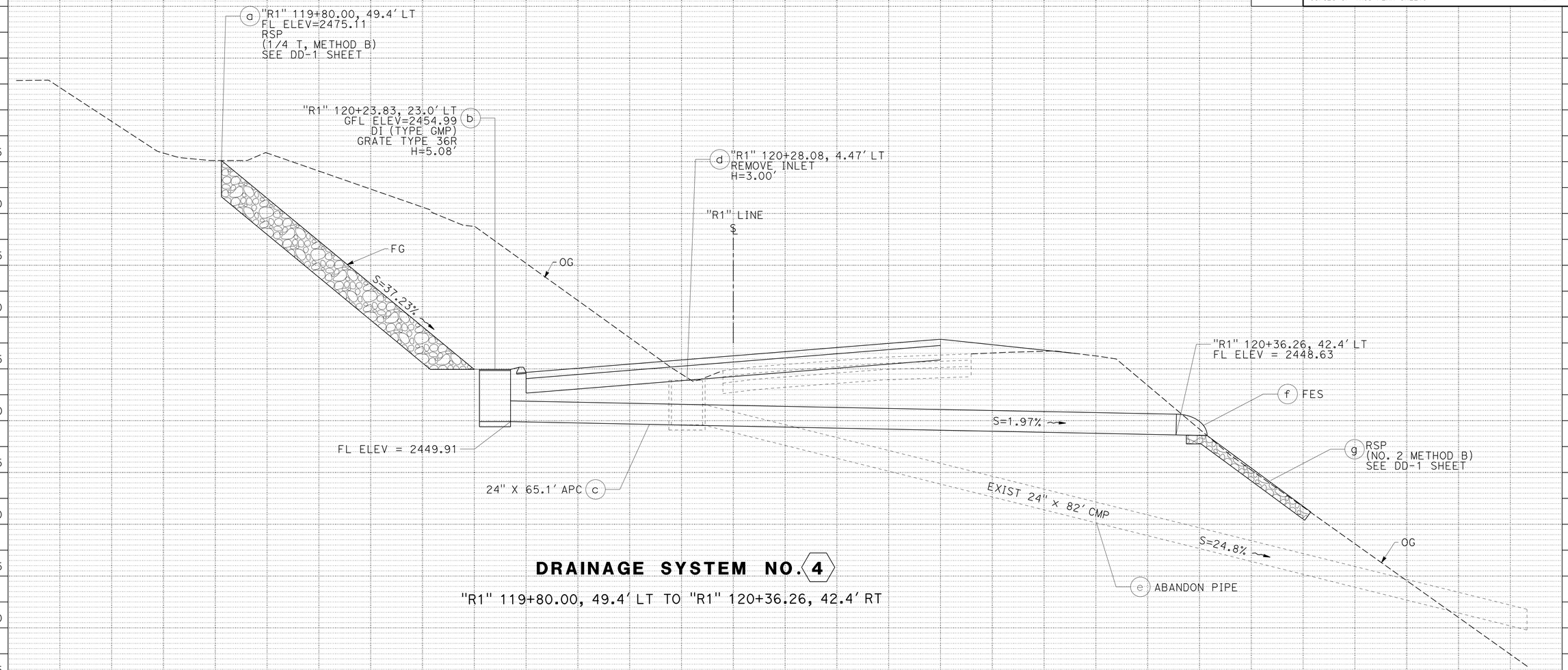

DRAINAGE SYSTEM NO. 4

"R1" 119+80.00, 49.4' LT TO "R1" 120+36.26, 42.4' RT

DRAINAGE PROFILES

SCALE: 1" = 5' HORIZ
1" = 5' VERT

DP-1

REVISED BY | DATE REVISED
ROBERT NIXON | JOHN L. MARTIN
CALCULATED-DESIGNED BY | CHECKED BY
FUNCTIONAL SUPERVISOR
JOHN L. MARTIN

STATE OF CALIFORNIA - DEPARTMENT OF TRANSPORTATION
Caltrans
DESIGN

P:\proj1\01\0a320_plans\pse\0100020307ib001.dgn

LAST REVISION 12-30-14 | DATE PLOTTED => 06-APR-2015 TIME PLOTTED => 07:44

Dist	COUNTY	ROUTE	POST MILES TOTAL PROJECT	SHEET No.	TOTAL SHEETS
01	Hum	299	30.2/30.6	19	57

REGISTERED CIVIL ENGINEER DATE 04-06-15

PLANS APPROVAL DATE 04-06-15

REGISTERED PROFESSIONAL ENGINEER ROBERT J. NIXON No. C69123 Exp. 6-30-16 CIVIL STATE OF CALIFORNIA

THE STATE OF CALIFORNIA OR ITS OFFICERS OR AGENTS SHALL NOT BE RESPONSIBLE FOR THE ACCURACY OR COMPLETENESS OF SCANNED COPIES OF THIS PLAN SHEET.

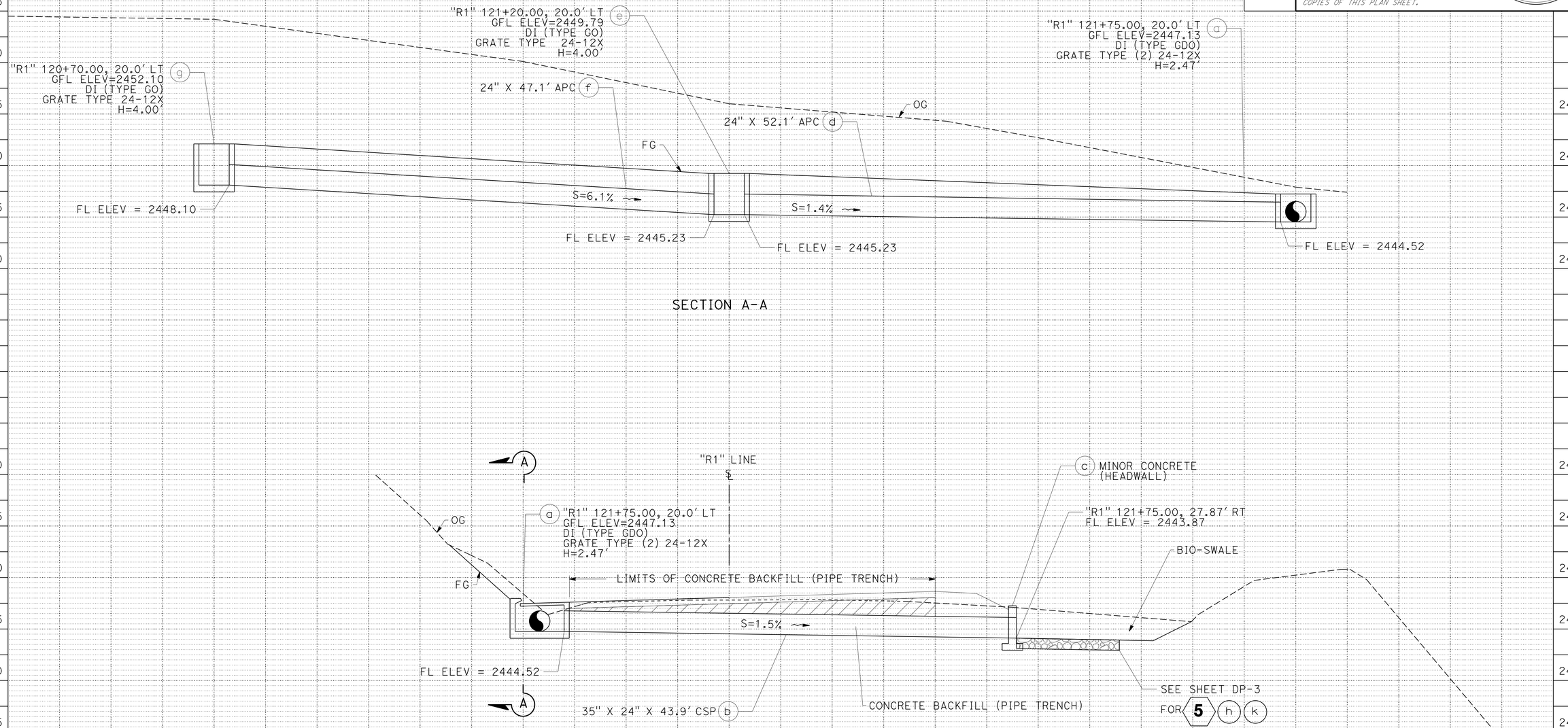

SECTION A-A

DRAINAGE SYSTEM NO. 5

"R1" 121+30.00, 20.0' LT TO "R1" 121+75.00, 27.9' RT

DRAINAGE PROFILES

SCALE: 1" = 5' HORIZ
1" = 5' VERT

DP-2

REVISED BY | DATE REVISED

ROBERT NIXON | JOHN L. MARTIN

CALCULATED-DESIGNED BY | CHECKED BY

FUNCTIONAL SUPERVISOR: JOHN L. MARTIN

STATE OF CALIFORNIA - DEPARTMENT OF TRANSPORTATION

Caltrans DESIGN

P:\proj1\01\0a320_plans\pse\0100020307ib002.dgn

LAST REVISION 12-30-14 | DATE PLOTTED => 06-APR-2015 | TIME PLOTTED => 07:44

Dist	COUNTY	ROUTE	POST MILES TOTAL PROJECT	SHEET No.	TOTAL SHEETS
01	Hum	299	30.2/30.6	20	57

REGISTERED CIVIL ENGINEER 04-06-15 DATE

04-06-15
PLANS APPROVAL DATE

REGISTERED PROFESSIONAL ENGINEER ROBERT J. NIXON No. C69123 Exp. 6-30-16 CIVIL STATE OF CALIFORNIA

THE STATE OF CALIFORNIA OR ITS OFFICERS OR AGENTS SHALL NOT BE RESPONSIBLE FOR THE ACCURACY OR COMPLETENESS OF SCANNED COPIES OF THIS PLAN SHEET.

CURVE DATA

No. ⊕	R	Δ	T	L
3	700	06°50′38″	41.86	83.61
4	900	10°57′10″	86.29	172.05
5	10	58°05′14″	5.55	10.14
6	10	19°15′24″	1.70	3.36
7	10	38°34′45″	3.50	6.73
8	10	46°46′39″	4.33	8.16

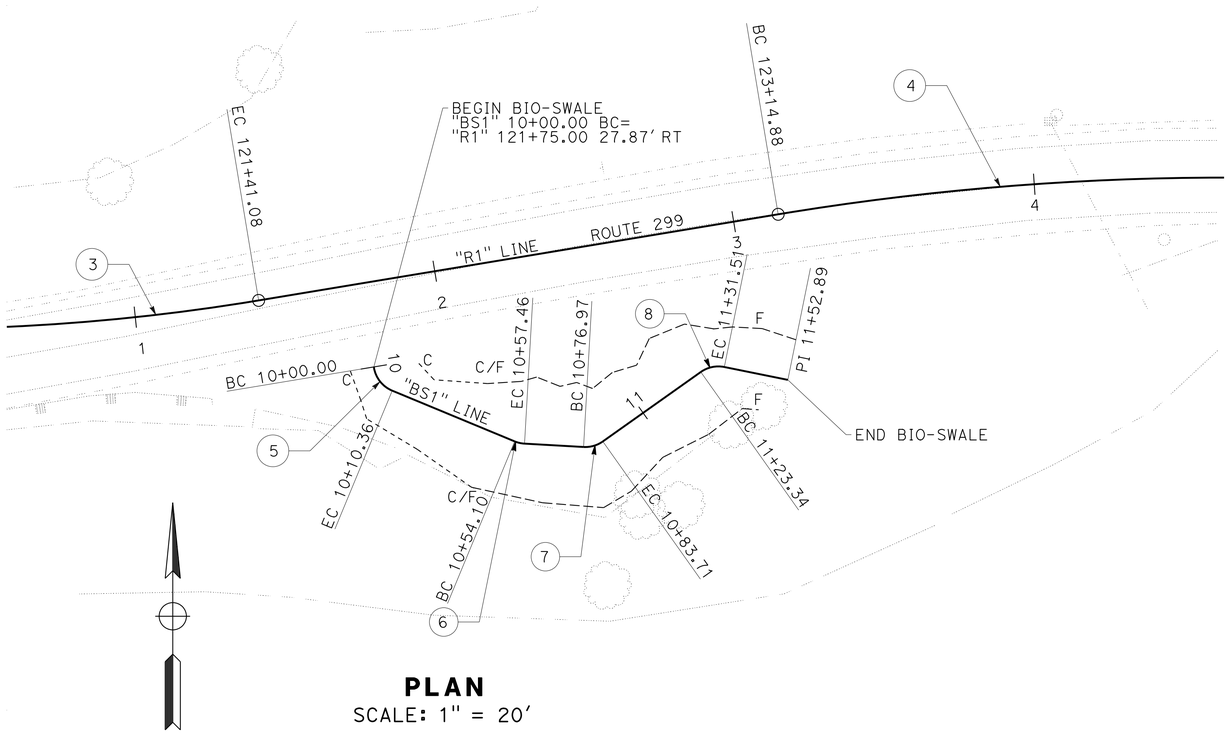

PLAN
SCALE: 1" = 20′

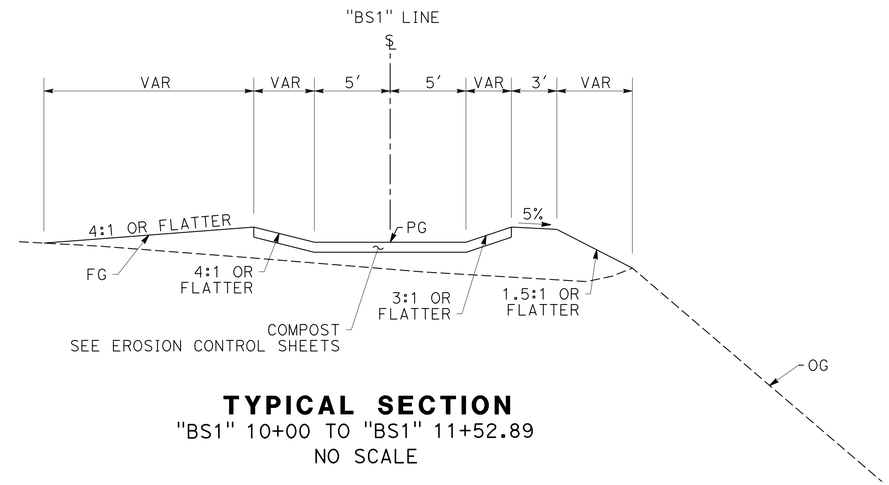

TYPICAL SECTION
"BS1" 10+00 TO "BS1" 11+52.89
NO SCALE

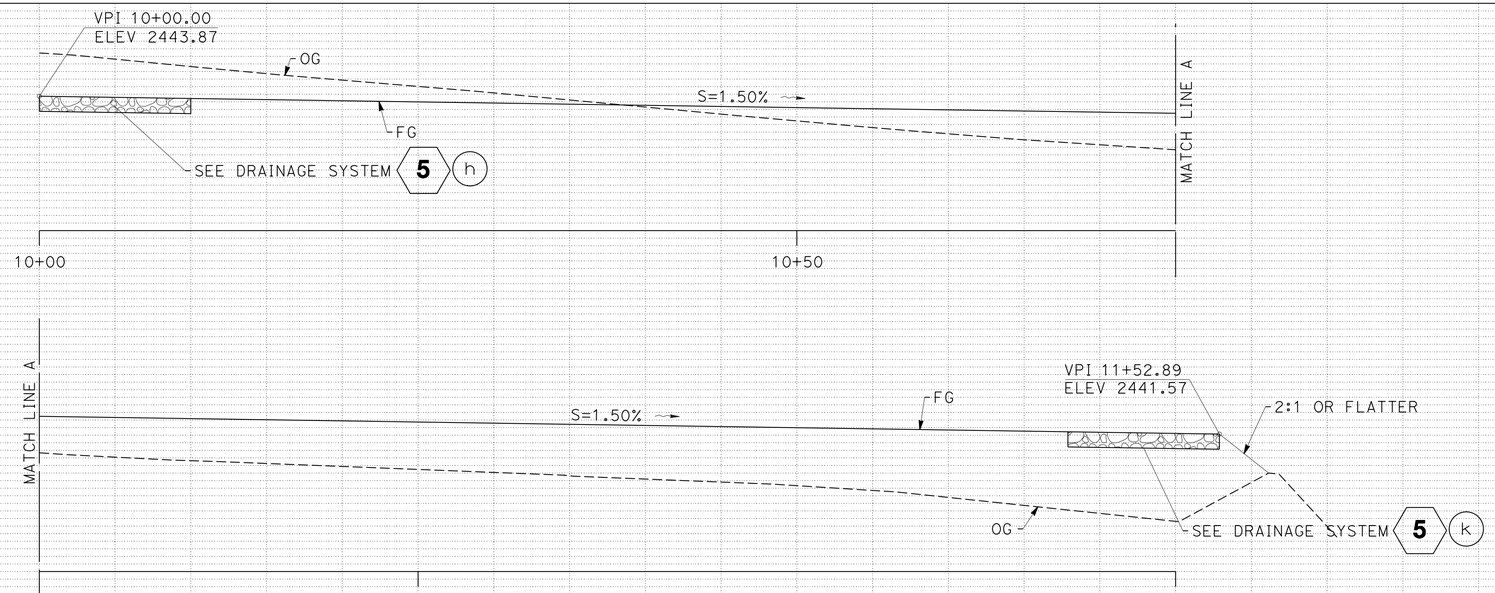

"BS1" PROFILE
"R1" 121+75.00, 27.87′ RT TO 123+09.10, 54.42′ RT
"BS1" 10+00.00 TO 11+52.89

DRAINAGE PROFILES
SCALE: 1" = 5′ HORIZ
1" = 5′ VERT

DP-3

REVISED BY | DATE REVISED
JOLENA ASTIN | ROBERT NIXON
CALCULATED-DESIGNED BY | CHECKED BY
FUNCTIONAL SUPERVISOR: JOHN L. MARTIN

STATE OF CALIFORNIA - DEPARTMENT OF TRANSPORTATION
Caltrans DESIGN

P:\proj1\01\0a320_plans\pse\0100020307ib003.dgn

LAST REVISION 12-30-14 | DATE PLOTTED => 06-APR-2015 | TIME PLOTTED => 07:44

Dist	COUNTY	ROUTE	POST MILES TOTAL PROJECT	SHEET No.	TOTAL SHEETS
01	Hum	299	30.2/30.6	21	57

REGISTERED CIVIL ENGINEER DATE 04-06-15

PLANS APPROVAL DATE 04-06-15

REGISTERED PROFESSIONAL ENGINEER ROBERT J. NIXON No. C69123 Exp. 6-30-16 CIVIL STATE OF CALIFORNIA

THE STATE OF CALIFORNIA OR ITS OFFICERS OR AGENTS SHALL NOT BE RESPONSIBLE FOR THE ACCURACY OR COMPLETENESS OF SCANNED COPIES OF THIS PLAN SHEET.

NOTES:

1. ALL RSP WILL BE BACKING No. 2, METHOD B

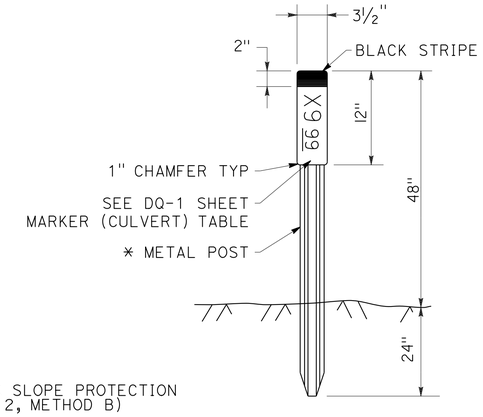

* SEE STANDARD PLAN A73B FOR METAL POST DETAILS

CULVERT MARKER

ROCK SLOPE PROTECTION LOCATION AND VARIABLES

DRAINAGE SYSTEM No.	CP STATION & OFFSET	VARIABLE "A" FT	"B" FT	"L" FT	"T" FT	"Z"	NOTES
4 (a)	"R1" 119+80.00, 49.40' LT	0	32	6.0	2.7	SEE SHEET DP-1	
4 (g)	"R1" 120+36.26, 42.70' RT	2.0	12	6.0	1.0	MATCH EXIST	FG ELEV TO CONFORM WITH EXIST
5 (h)	"R1" 121+75.00, 27.87' RT	*	*	*	1.0	MATCH BIO-SWALE	FG ELEV TO CONFORM WITH EXIST
5 (k)	"R1" 123+09.10, 54.42' RT	0	10	10	1.0	MATCH BIO-SWALE	FG ELEV TO CONFORM WITH EXIST

* SEE DRAINAGE SYSTEM No. 5 DETAIL ON THIS SHEET

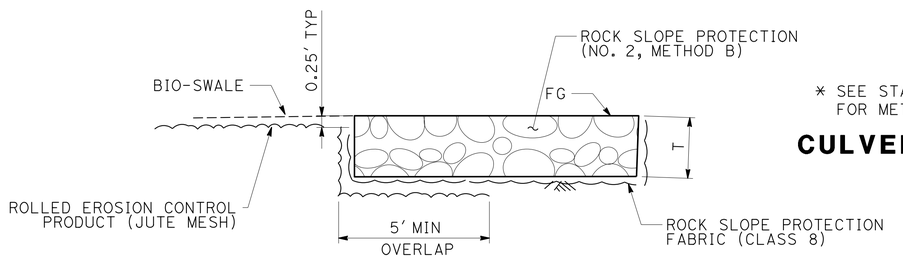

SECTION B-B

5 (h) (k)

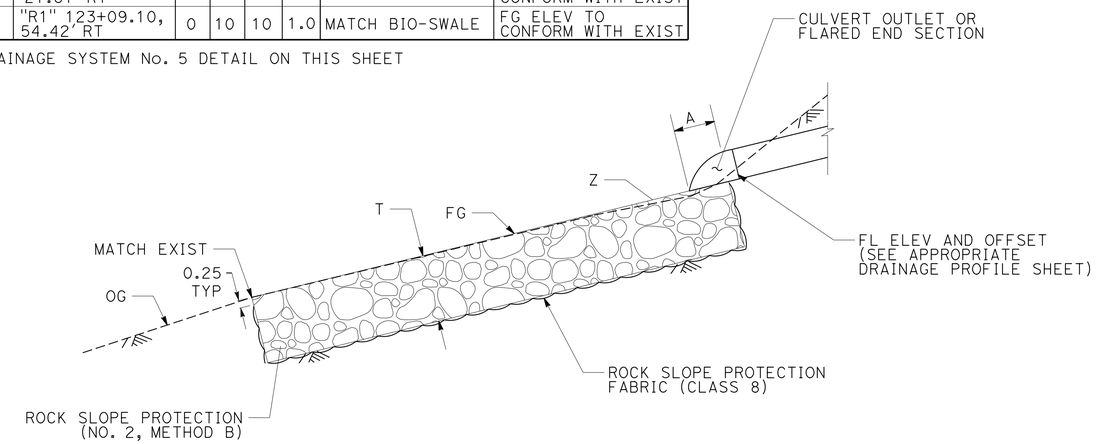

SECTION A-A

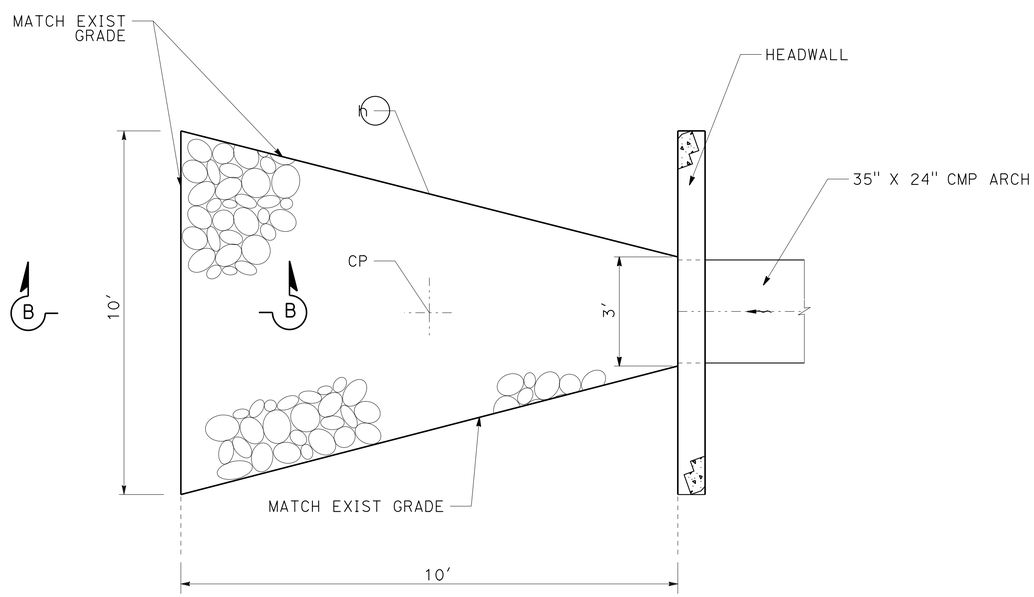

PLAN

DRAINAGE SYSTEM NO. 5

"R1" 121+30.00, 20.0' LT TO
"R1" 121+70.00, 42.7' RT

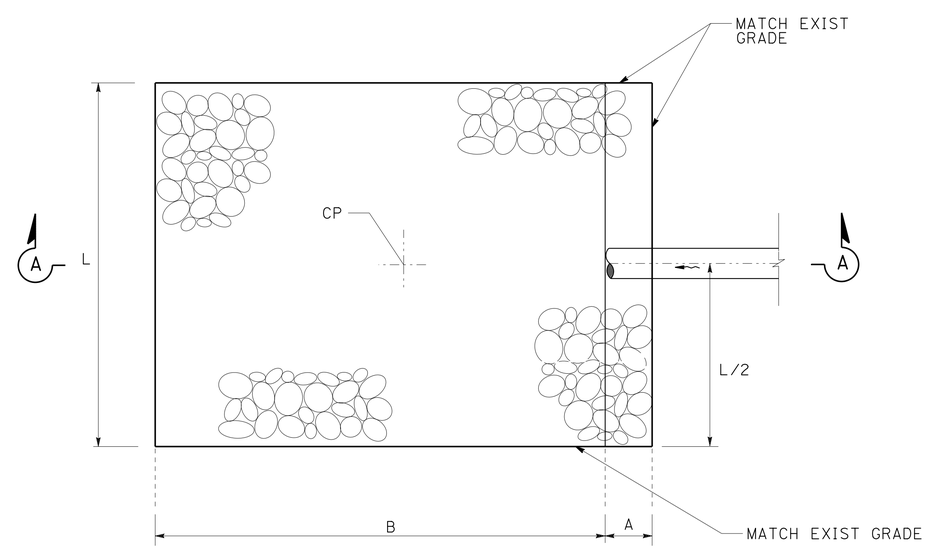

PLAN

ROCK SLOPE PROTECTION

4 (a) (g)

DRAINAGE DETAILS

NO SCALE

DD-1

REVISED BY	DATE REVISED
ROBERT NIXON	JOHN L. MARTIN
CALCULATED-DESIGNED BY	CHECKED BY
FUNCTIONAL SUPERVISOR	JOHN L. MARTIN

STATE OF CALIFORNIA - DEPARTMENT OF TRANSPORTATION

Caltrans DESIGN

P:\proj1\01\0a320_plans\pse\0100020307ic001.dgn

LAST REVISION 12-30-14 | DATE PLOTTED => 06-APR-2015 TIME PLOTTED => 07:44

Dist	COUNTY	ROUTE	POST MILES TOTAL PROJECT	SHEET No.	TOTAL SHEETS
01	Hum	299	30.2/30.6	22	57

REGISTERED CIVIL ENGINEER 04-06-15 DATE

04-06-15
PLANS APPROVAL DATE

REGISTERED PROFESSIONAL ENGINEER ROBERT J. NIXON No. C69123 Exp. 6-30-16 CIVIL STATE OF CALIFORNIA

THE STATE OF CALIFORNIA OR ITS OFFICERS OR AGENTS SHALL NOT BE RESPONSIBLE FOR THE ACCURACY OR COMPLETENESS OF SCANNED COPIES OF THIS PLAN SHEET.

NOTE:
1. (N) NOT A SEPARATE PAY ITEM, FOR INFORMATION ONLY.

DRAINAGE QUANTITIES

DRAINAGE PLAN OR PROFILE SHEET NO.	DRAINAGE SYSTEM NO. (#)	DRAINAGE UNIT NO. (#)	ABANDON CULVERT (LF)	REMOVE INLET	RESET INLET	SAND BACKFILL	DITCH EXCAVATION	MINOR CONCRETE (MINOR STRUCTURE)	CONCRETE BACKFILL (PIPE TRENCH)	24" ALTERNATIVE PIPE CULVERT	35" X 24" CORRUGATED STEEL PIPE ARCH (.138" THICK)	36" CORRUGATED STEEL PIPE INLET (.138" THICK)	24" ALTERNATIVE FLARED END SECTION	ROCK SLOPE PROTECTION (1/4 T, METHOD B) (CY)	ROCK SLOPE PROTECTION (NO. 2, METHOD B) (CY)	ROCK SLOPE PROTECTION FABRIC (CLASS 8)	MISCELLANEOUS IRON AND STEEL	(N) DI HEIGHT	(N) MAX COVER	DRAINAGE SYSTEM NO. (#)	DRAINAGE UNIT NO. (#)	ALIGNMENT	STATION	DESCRIPTION
			LF	EA	EA	CY	CY	CY	CY	LF	LF	LF	EA	CY	CY	SQYD	LB	FT	FT					
D-1	1	a			1															1	a	R1	104+68.44	RESET INLET
D-1	1A	a			1															1A	a	R1	107+82.78	RESET INLET
D-2	2	a			1															2	a	R1	111+04.39	RESET INLET
D-3	3	a			1															3	a	R1	114+27.54	RESET INLET
DP-1	4	a												19.2		47.4				4	a	R1	119+80.00	RSP (1/4 T, METHOD B) 32' X 6' X 1', RSP FABRIC
DP-1	4	b						0.2				5.08					236	5.08		4	b	R1	120+23.83	DI (TYPE GMP), W/ (1) GRATE TYPE 36R, (H=5.08')
DP-1	4	c								65.1									7.33	4	c	R1	120+23.83	24" X 65.1' APC
DP-1	4	d		1																4	d	R1	120+28.08	REMOVE INLET (TYPE DROP INLET, H=3.0')
DP-1	4	e	82			9.5														4	e	R1	120+28.08	ABANDON CMP 24" X 82'
DP-1	4	f											1							4	f	R1	120+36.26	ALTERNATIVE FLARED END SECTION
DP-1	4	g													3.1	9				4	g	R1	120+36.26	RSP (NO. 2, METHOD B) 6' X 14' X 1', RSP FABRIC
DP-2	5	a						1.45									473	2.47		5	a	R1	121+75.00	DI (TYPE GDO), W/ (2) GRATE TYPE 24-12X (H=2.47')
DP-2	5	b							11.8		43.9								2.0	5	b	R1	121+75.00	35" X 24" X 43.9' APC, MINOR CONCRETE (BACKFILL)
DP-2	5	c						1.47												5	c	R1	121+75.00	HEADWALL (H=3.66')
DP-2	5	d								52.1									2.0	5	d	R1	121+30.00	24" X 52.1' APC
DP-2	5	e						1.49									239	4.00		5	e	R1	121+30.00	DI (TYPE GO), W/ (1) GRATE TYPE 24-12X (H=4.00')
DP-2	5	f								47.1									2.42	5	f	R1	120+70.00	24" X 47.1' APC
DP-2	5	g															239	4.00		5	g	R1	120+70.00	DI (TYPE GO), W/ (1) GRATE TYPE 24-12X (H=4.00')
DP-3	5	h													2.4	9.4				5	h	R1	121+75.00	RSP (NO. 2, METHOD B) VAR' X 10' X 1', RSP FABRIC
DP-3	5	k													3.1	16				5	k	R1	123+09.10	RSP (NO. 2, METHOD B) 10' X 10' X 1', RSP FABRIC
DP-3	BS1	a					13													BS1	a	R1	123+09.10	DITCH EXCAVATION
TOTAL			82	1	4	9.5	13	4.61	11.8	164.3	43.9	5.08	1	19.2	8.6	81.8	1187							

ALTERNATIVE PIPE CULVERT ALLOWABLE PIPE MATERIAL		
DESIGNATION	PLASTIC PIPE	CSP
	TYPE	THICKNESS (IN)
24" APC	HDPE	0.138

MARKER (CULVERT)

DRAINAGE SYSTEM NO. AND UNIT NO.	ALIGNMENT	STATION	POST MILE	LEFT	RIGHT	MARKER (CULVERT)
						EA
4b	"R1"	120+28.48	30.60	X	X	2
5a	"R1"	121+75.00	30.63	X	X	2

SEE SHEET PDQ-1 FOR QUANTITY

DRAINAGE QUANTITIES

DQ-1

REVISED BY | DATE REVISED
ROBERT NIXON | JOHN L. MARTIN
CALCULATED-DESIGNED BY | CHECKED BY
FUNCTIONAL SUPERVISOR: JOHN L. MARTIN
STATE OF CALIFORNIA - DEPARTMENT OF TRANSPORTATION
Caltrans DESIGN

P:\proj1\01\0a320_plans\pse\0100020307id001.dgn

LAST REVISION 12-30-14 | DATE PLOTTED => 06-APR-2015 | TIME PLOTTED => 07:44

Dist	COUNTY	ROUTE	POST MILES TOTAL PROJECT	SHEET No.	TOTAL SHEETS
01	Hum	299	30.2/30.6	23	57

REGISTERED CIVIL ENGINEER 04-06-15 DATE

PLANS APPROVAL DATE 04-06-15

REGISTERED PROFESSIONAL ENGINEER ROBERT J. NIXON No. C69123 Exp. 6-30-16 CIVIL STATE OF CALIFORNIA

THE STATE OF CALIFORNIA OR ITS OFFICERS OR AGENTS SHALL NOT BE RESPONSIBLE FOR THE ACCURACY OR COMPLETENESS OF SCANNED COPIES OF THIS PLAN SHEET.

NOTES:

1. EXACT LOCATION OF ALL SIGNS TO BE DETERMINED BY THE ENGINEER.
2. CALIFORNIA CODES ARE DESIGNATED BY (CA), OTHERWISE FEDERAL CODES ARE SHOWN.
3. ALL CONSTRUCTION AREA SIGNS EXCEPT C40(CA) SHALL HAVE A BLACK LEGEND WITH AN ORANGE BACKGROUND.

CONSTRUCTION AREA SIGNS (STATIONARY MOUNTED)

◯	TYPE	PANEL SIZE	SIGN MESSAGE	NUMBER AND SIZE OF POSTS	No. OF SIGNS
A	W20-1 C23B(CA)	36" x 36" 36" x 18"	ROAD WORK AHEAD CURVE IMPROVEMENT	1 - 4" x 6"	2
B	C40(CA)	108" x 42"	TRAFFIC FINES DOUBLED IN CONSTRUCTION ZONES	2 - 6" x 6"	2
C	G20-2	36" x 18"	END ROAD WORK	1 - 4" x 4"	2
D	W11-1 W16-1	36" x 36" 24" x 30"	BICYCLE (SYMBOL) SHARE THE ROAD	1 - 4" x 6"	2
E	W20-1	36" x 36"	ROAD WORK AHEAD	1 - 4" x 6"	2

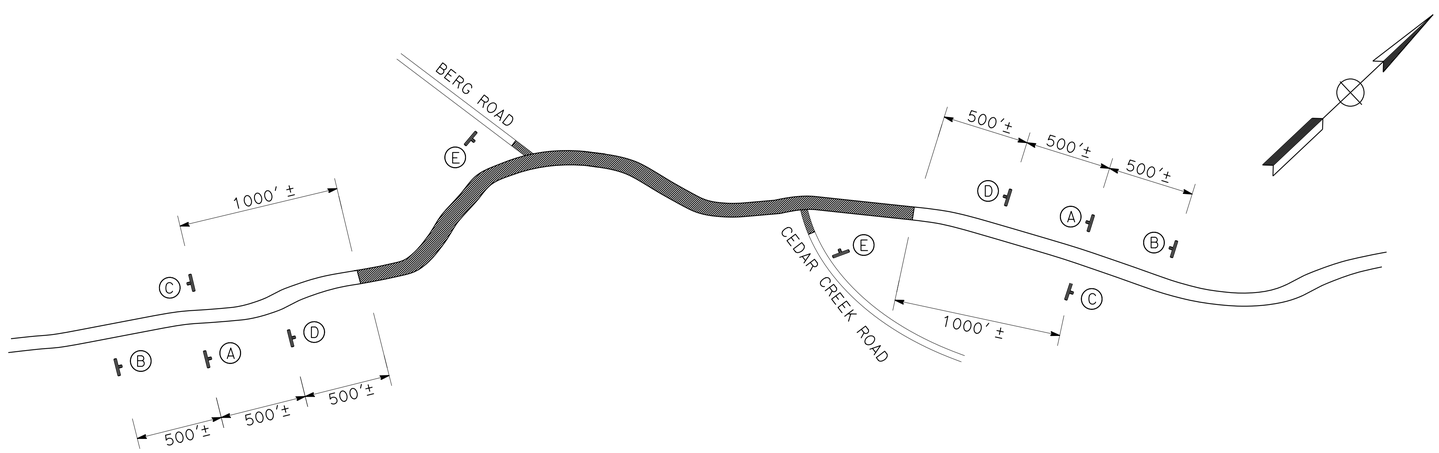

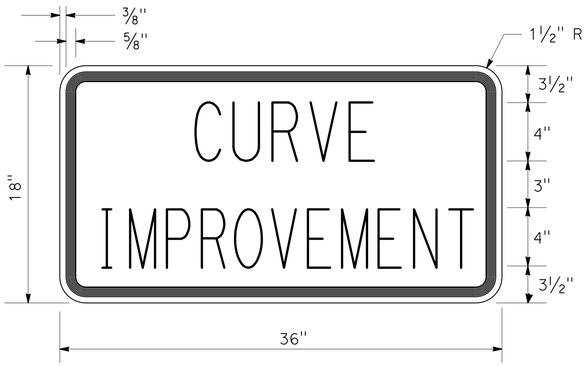

C23B(CA) SIGN PANEL DETAIL
TYPE "C" LETTERING

CONSTRUCTION AREA SIGNS
NO SCALE

CS-1

REVISED BY | DATE REVISED
JOLENA ASTIN | ROBERT NIXON
CALCULATED-DESIGNED BY | CHECKED BY
FUNCTIONAL SUPERVISOR
JOHN L. MARTIN

STATE OF CALIFORNIA - DEPARTMENT OF TRANSPORTATION
Caltrans
DESIGN

P:\proj1\01\0a320_plans\pse\0100020307ia001.dgn

LAST REVISION 07-24-13 | DATE PLOTTED => 06-APR-2015 | TIME PLOTTED => 07:44

Dist	COUNTY	ROUTE	POST MILES TOTAL PROJECT	SHEET No.	TOTAL SHEETS
01	Hum	299	30.2/30.6	24	57

REGISTERED CIVIL ENGINEER 04-06-15 DATE

PLANS APPROVAL DATE 04-06-15

REGISTERED PROFESSIONAL ENGINEER ROBERT J. NIXON No. C69123 Exp. 6-30-16 CIVIL STATE OF CALIFORNIA

THE STATE OF CALIFORNIA OR ITS OFFICERS OR AGENTS SHALL NOT BE RESPONSIBLE FOR THE ACCURACY OR COMPLETENESS OF SCANNED COPIES OF THIS PLAN SHEET.

NOTE:

1. FOR ACCURATE RIGHT OF WAY DATA, CONTACT RIGHT OF WAY ENGINEERING AT THE DISTRICT OFFICE.

LEGEND:

WORK AREA

STAGE 1 TRAFFIC HANDLING AND CONSTRUCTION

CONSTRUCT STAGE 1 USING DAYTIME REVERSING ONE-WAY TRAFFIC CONTROL (SEE SHEET TH-1)

EXCAVATION ON LEFT

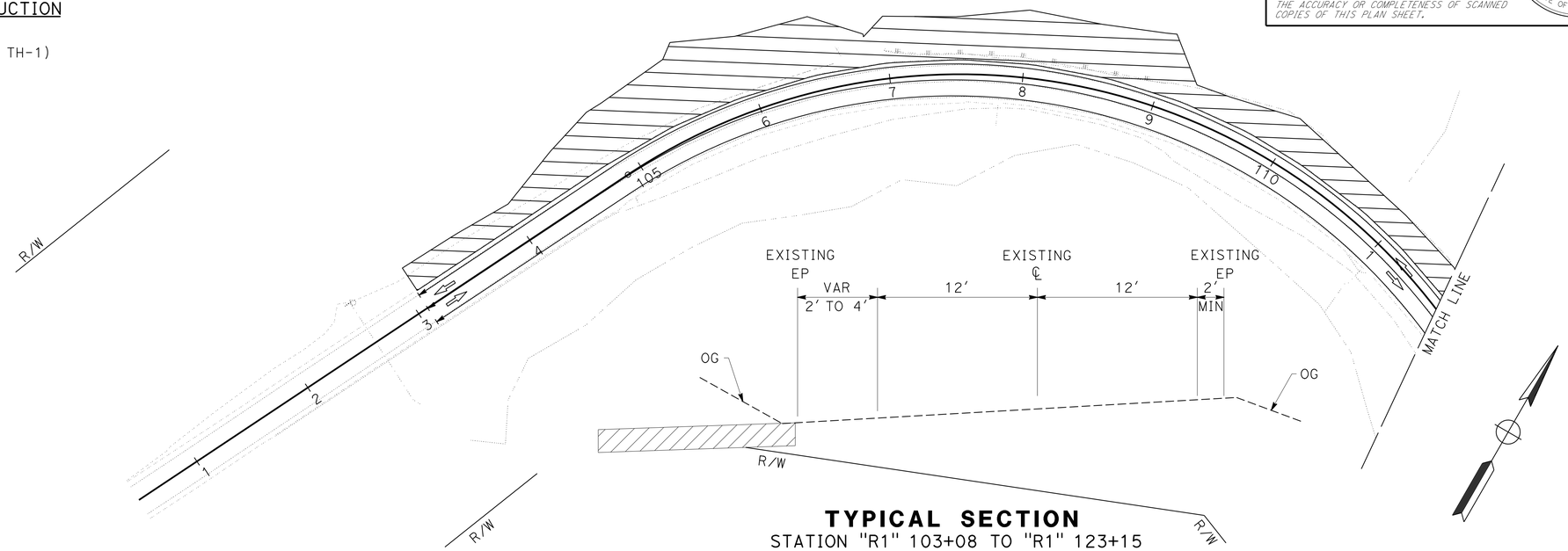

TYPICAL SECTION
STATION "R1" 103+08 TO "R1" 123+15

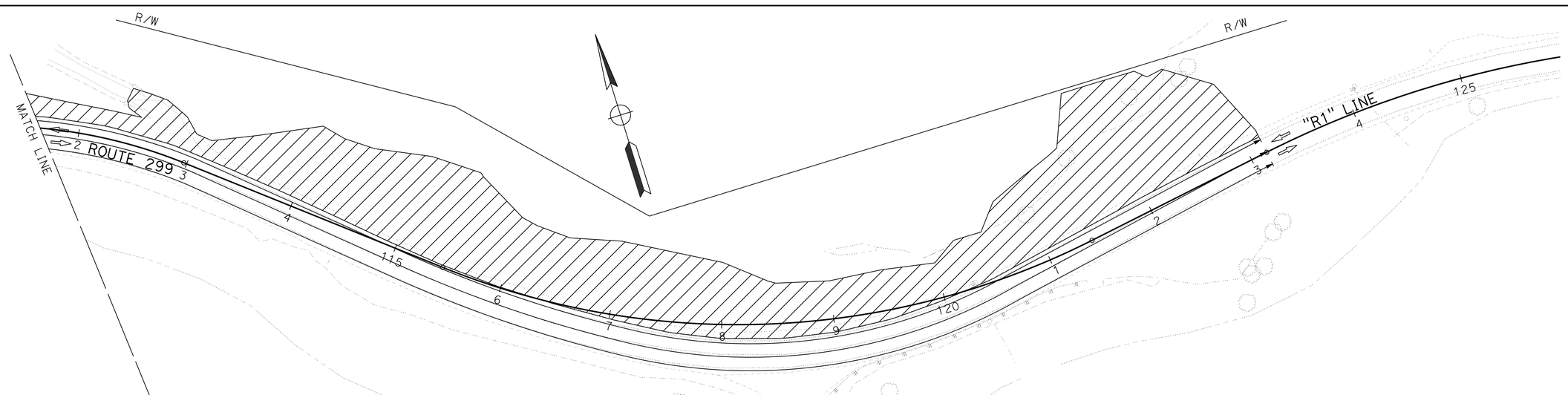

STAGE 1
STAGE CONSTRUCTION AND TRAFFIC HANDLING PLAN

SCALE: 1" = 50'

SC-1

APPROVED FOR STAGE CONSTRUCTION AND TRAFFIC HANDLING WORK ONLY

REVISED BY	DATE REVISED

CALCULATED-DESIGNED BY: JOLENA ASTIN
CHECKED BY: ROBERT NIXON
FUNCTIONAL SUPERVISOR: JOHN L. MARTIN

STATE OF CALIFORNIA - DEPARTMENT OF TRANSPORTATION
Caltrans® DESIGN

P:\proj1\01\0a320_plans\pse\0100020307ma001.dgn

LAST REVISION 12-30-14 | DATE PLOTTED => 06-APR-2015 | TIME PLOTTED => 07:44

Dist	COUNTY	ROUTE	POST MILES TOTAL PROJECT	SHEET No.	TOTAL SHEETS
01	Hum	299	30.2/30.6	25	57

REGISTERED CIVIL ENGINEER 04-06-15 DATE

04-06-15
PLANS APPROVAL DATE

REGISTERED PROFESSIONAL ENGINEER ROBERT J. NIXON No. C69123 Exp. 6-30-16 CIVIL STATE OF CALIFORNIA

THE STATE OF CALIFORNIA OR ITS OFFICERS OR AGENTS SHALL NOT BE RESPONSIBLE FOR THE ACCURACY OR COMPLETENESS OF SCANNED COPIES OF THIS PLAN SHEET.

STAGE 2 TRAFFIC HANDLING AND CONSTRUCTION

CONDUCT STAGE 2 DAYTIME OR 24-HOUR REVERSING ONE-WAY TRAFFIC CONTROL

COLD PLANE ASPHALT CONCRETE PAVEMENT

REPLACE AC SURFACING

PLACE VARIABLE DEPTH HMA (TYPE A)

WIDEN PAVEMENT ON RIGHT

FULL WIDTH STRUCTUAL SECTION
STA 116+34.84 TO STA 121+41.08

PLACE UPPER LAYER OF HMA (TYPE A)

PLACE PAVEMENT DELINEATION AND SIGNS

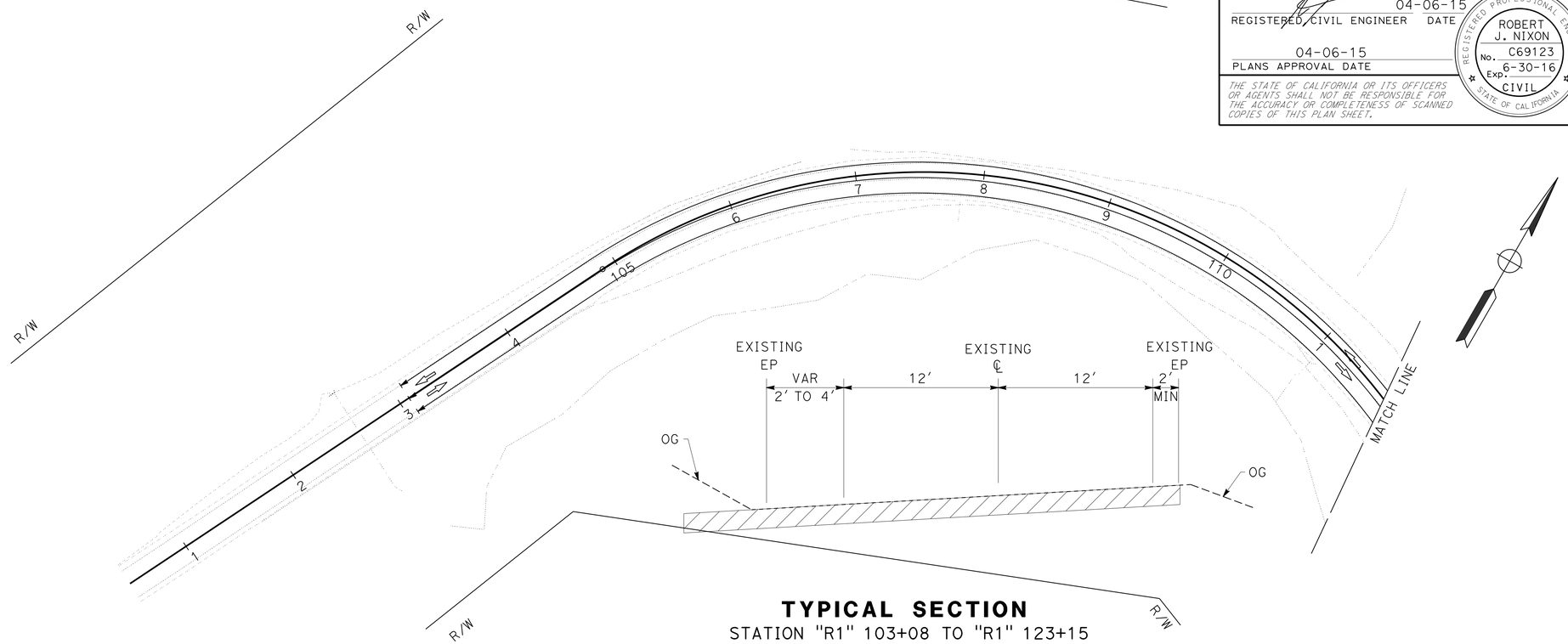

TYPICAL SECTION
STATION "R1" 103+08 TO "R1" 123+15

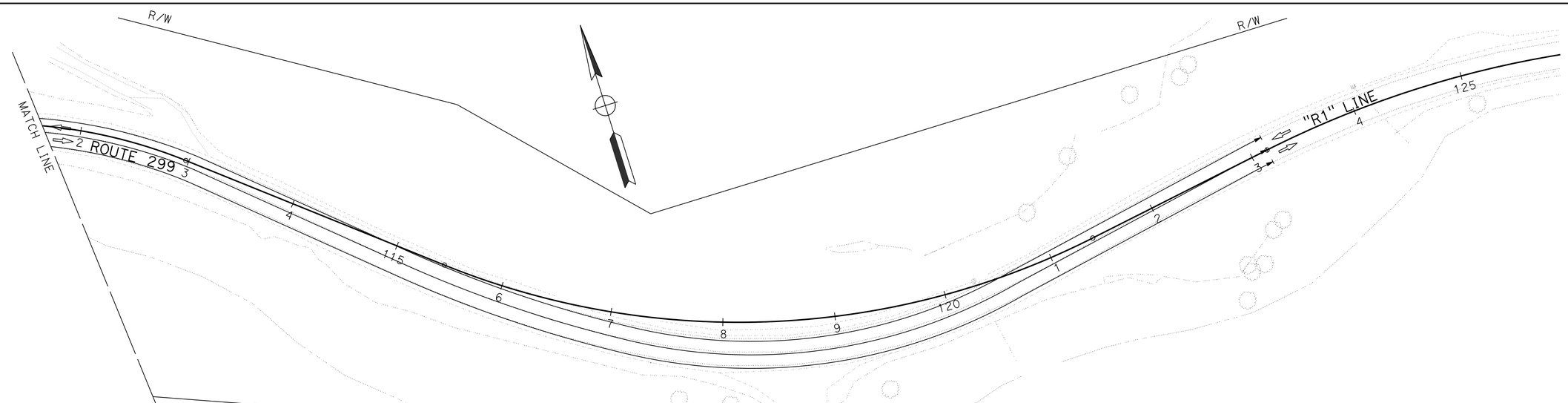

APPROVED FOR STAGE CONSTRUCTION AND TRAFFIC HANDLING WORK ONLY

STAGE 2
STAGE CONSTRUCTION AND TRAFFIC HANDLING PLAN

SCALE: 1" = 50'

SC-2

REVISED BY	DATE REVISED
JOLENA ASTIN	ROBERT NIXON
CALCULATED-DESIGNED BY	CHECKED BY
FUNCTIONAL SUPERVISOR	JOHN L. MARTIN

STATE OF CALIFORNIA - DEPARTMENT OF TRANSPORTATION
Caltrans
DESIGN

P:\proj1\01\0a320_plans\pse\0100020307ma002.dgn

LAST REVISION 12-30-14 | DATE PLOTTED => 06-APR-2015 | TIME PLOTTED => 07:44

Dist	COUNTY	ROUTE	POST MILES TOTAL PROJECT	SHEET No.	TOTAL SHEETS
01	Hum	299	30.2/30.6	26	57

REGISTERED CIVIL ENGINEER 04-06-15 DATE

04-06-15
PLANS APPROVAL DATE

SHERI M. RODRIGUEZ No. C66861 Exp. 09-30-16 CIVIL — REGISTERED PROFESSIONAL ENGINEER — STATE OF CALIFORNIA

THE STATE OF CALIFORNIA OR ITS OFFICERS OR AGENTS SHALL NOT BE RESPONSIBLE FOR THE ACCURACY OR COMPLETENESS OF SCANNED COPIES OF THIS PLAN SHEET.

NOTES:

1. CALIFORNIA CODES ARE DESIGNATED BY (CA). OTHERWISE, FEDERAL (MUTCD) CODES ARE SHOWN.
2. ALL SIGNS SHALL HAVE A BLACK LEGEND ON FLUORESCENT ORANGE BACKGROUND AND SHALL BE EQUIPPED WITH AT LEAST TWO 16" x 16" ORANGE FLAGS FOR DAYTIME CLOSURE OR FLASHING BEACONS FOR LANE CLOSURE DURING HOURS OF DARKNESS.
3. ALL CONES USED FOR LANE CLOSURES DURING THE HOURS OF DARKNESS SHALL BE FITTED WITH RETROREFLECTIVE BANDS OR SLEEVES.
4. WHEN A PILOT CAR IS USED, PLACE A C37 (CA) SIGN AT ALL INTERSECTIONS WITHIN TRAFFIC CONTROL AREA. WHERE VEHICULAR TRAFFIC CAN NOT EFFECTIVELY SELF-REGULATE, AT LEAST ONE FLAGGER SHALL BE USED AT EACH INTERSECTION WITHIN THE TRAFFIC CONTROL AREA.
5. FLAGGER SHOULD STAND IN A CONSPICUOUS PLACE, FACING TRAFFIC AT ALL TIMES, BE VISIBLE TO APPROACHING TRAFFIC AS WELL AS APPROACHING VEHICLES AFTER THE FIRST VEHICLE HAS STOPPED.
6. ADDITIONAL ADVANCE FLAGGERS ARE REQUIRED.
7. WHEN FLAGGER IS NOT VISIBLE FROM THIS LOCATION PLACE A C29 (CA) SIGN BELOW THE C9A (CA) SIGN.

LEGEND

- TRAFFIC CONE
- TEMPORARY SIGN
- DIRECTION OF TRAVEL
- PORTABLE FLASHING BEACON
- FLAGGER

SIGN PANEL SIZE (MINIMUM)

- A — 48" x 48" - SPEED OF 45 mph OR MORE; 36" x 36" - SPEED LESS THAN 45 mph
- B — 30" x 30"
- C — UNUSED
- D — UNUSED
- E — 20" x 7"

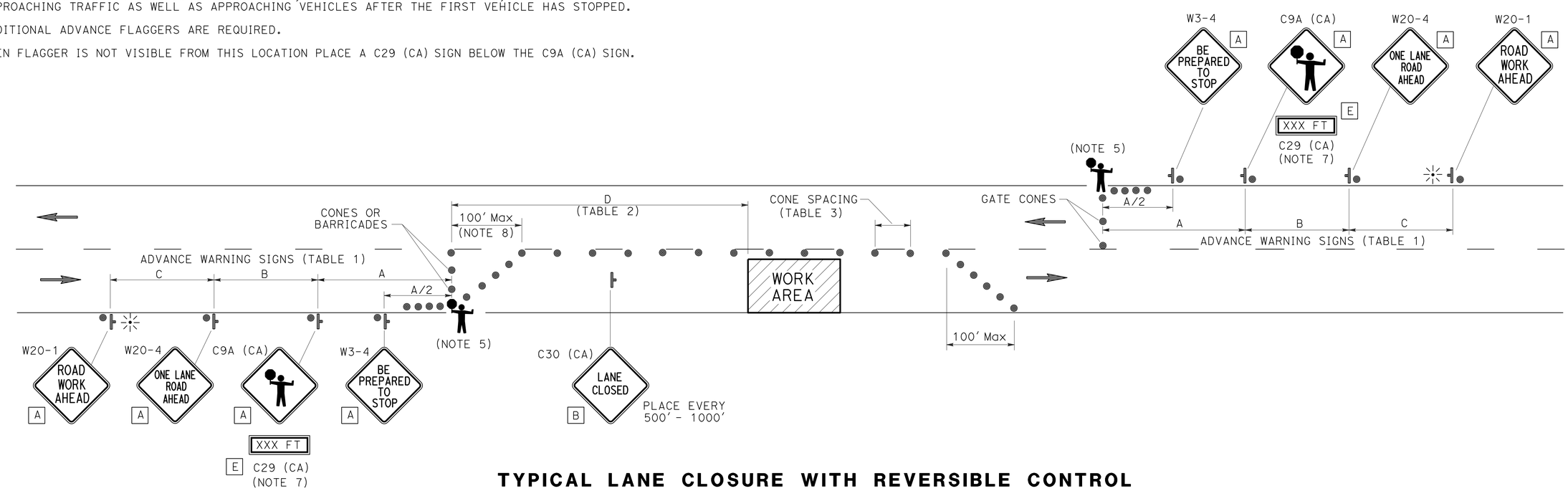

TYPICAL LANE CLOSURE WITH REVERSIBLE CONTROL

TABLE 1

ADVANCE WARNING SIGN SPACING

ROAD TYPE	Min A	Min B	Min C
	ft		
URBAN (25 mph OR LESS)	100	100	100
URBAN (30 mph TO 40 mph)	250	250	250
URBAN (MORE THAN 40 mph)	350	350	350
RURAL	500	500	500
EXPRESSWAY / FREEWAY	1000	1500	2640

TABLE 2

BUFFER SPACE

APPROACH SPEED	Min D	DOWNGRADE Min D		
		-3%*	-6%*	-9%*
mph	ft			
25 & BELOW	155	158	165	173
30	200	205	215	227
35	250	257	271	287
40	305	315	333	354
45	360	378	400	427
50	425	446	474	507
55	495	520	553	593
60	570	598	638	686
65	645	682	728	785

* USE ON SUSTAINED DOWNGRADE STEEPER THAN -3 PERCENT AND LONGER THAN 1 MILE.

TABLE 3

Max CONE SPACING

POSTED SPEED	TAPER	TANGENT	CONFLICT
mph	ft		
20	20	40	10
25	25	50	12
30	30	60	15
35	35	70	17
40	40	80	20
45	45	90	22
50	50	100	25
55	55	110	27
60	60	120	30
65	65	130	32

TRAFFIC HANDLING PLAN

NO SCALE

TH-1

REVISED BY | DATE REVISED
SHERI M. RODRIGUEZ | TONY A. ARSENEAU
CALCULATED-DESIGNED BY | CHECKED BY
FUNCTIONAL SUPERVISOR: TONY A. ARSENEAU

STATE OF CALIFORNIA - DEPARTMENT OF TRANSPORTATION
Caltrans TRAFFIC OPERATIONS

P:\proj1\01\0a320_plans\pse\0100020307md001.dgn

LAST REVISION 04-06-15 | DATE PLOTTED => 06-APR-2015 | TIME PLOTTED => 07:44

Dist	COUNTY	ROUTE	POST MILES TOTAL PROJECT	SHEET No.	TOTAL SHEETS
01	Hum	299	30.2/30.6	27	57

REGISTERED CIVIL ENGINEER 04-06-15 DATE

PLANS APPROVAL DATE 04-06-15

REGISTERED PROFESSIONAL ENGINEER ROBERT J. NIXON No. C69123 Exp. 6-30-16 CIVIL STATE OF CALIFORNIA

THE STATE OF CALIFORNIA OR ITS OFFICERS OR AGENTS SHALL NOT BE RESPONSIBLE FOR THE ACCURACY OR COMPLETENESS OF SCANNED COPIES OF THIS PLAN SHEET.

NOTES:

1. FOR ACCURATE RIGHT OF WAY DATA, CONTACT RIGHT OF WAY ENGINEERING AT THE DISTRICT OFFICE.
2. CALIFORNIA SIGN CODES ARE DESIGNATED BY (CA), OTHERWISE, FEDERAL MUTCD SIGN CODES ARE SHOWN.
3. EXACT SIGN LOCATIONS TO BE DETERMINED BY ENGINEER.
4. SEE DRAINAGE PLANS FOR MARKER (CULVERT) LOCATIONS

LEGEND:

- MILEPOST MARKER
- REMOVE ROADSIDE SIGN
- ROADSIDE SIGN (2-POST)
- EXIST ROADSIDE SIGN
- ROADSIDE SIGN (1-POST)
- #-# ROADSIDE SIGN
- #-# PAVEMENT DELINEATION STRIPE DETAIL No.
- DELINEATOR (TYPE E)
- C MARKER (CULVERT)

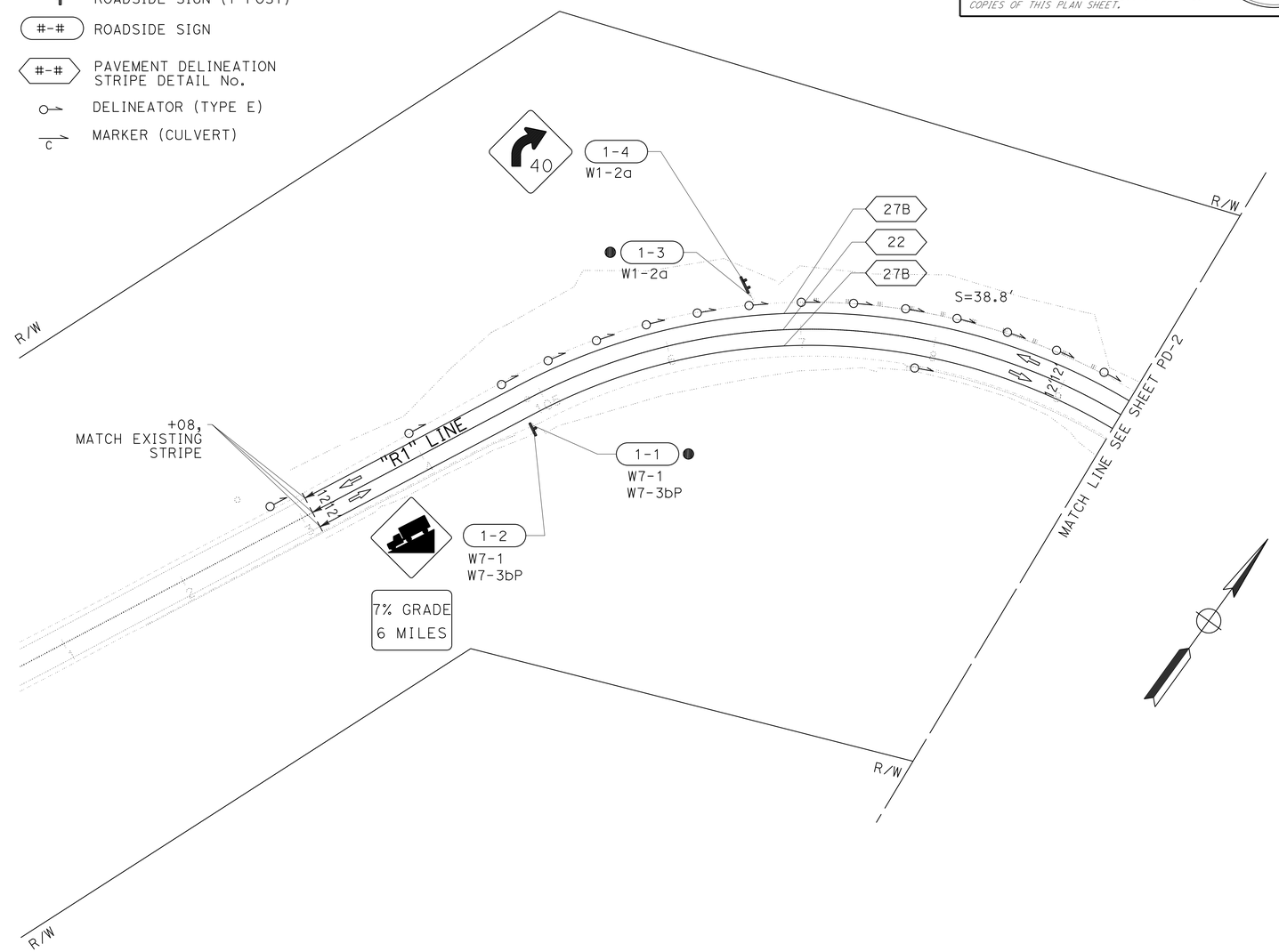

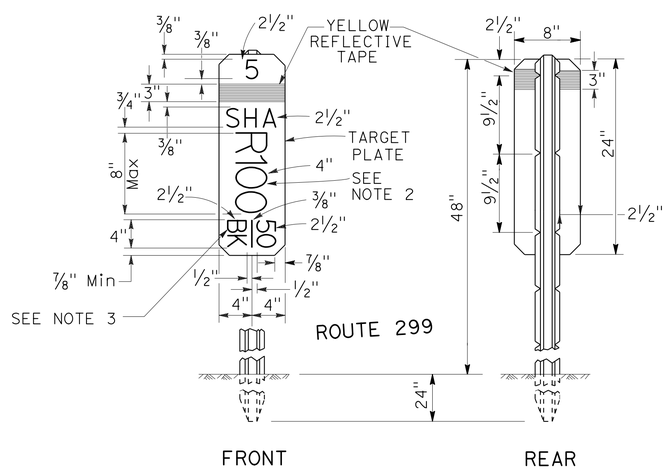

NOTES:

1. THE MARKER SHALL BE WHITE (NON-REFLECTIVE) TARGET PLATE WITH BLACK SERIES D NUMERALS AND LETTERS.
2. A POST MILE PREFIX, SUCH AS "R", SHALL APPLY ONLY WHEN DIRECTED BY THE ENGINEER.
3. "BK" (BACK), "AH" (AHEAD), OR A BLANK SPACE SHALL APPLY AS DIRECTED BY THE ENGINEER.
4. ALL INFORMATION SHALL BE IN ENGLISH UNITS (MILES).

POST MILE MARKER DETAIL

APPROVED FOR PAVEMENT DELINEATION AND SIGN WORK ONLY

PAVEMENT DELINEATION AND SIGN PLAN

SCALE: 1" = 50'

PD-1

REVISED BY	DATE REVISED
JOLENA ASTIN	ROBERT NIXON

CALCULATED-DESIGNED BY / CHECKED BY

FUNCTIONAL SUPERVISOR: JOHN L. MARTIN

STATE OF CALIFORNIA - DEPARTMENT OF TRANSPORTATION

Caltrans DESIGN

P:\proj1\01\0a320_plans\pse\0100020307na001.dgn

LAST REVISION 12-30-14 | DATE PLOTTED => 06-APR-2015 | TIME PLOTTED => 07:44

Dist	COUNTY	ROUTE	POST MILES TOTAL PROJECT	SHEET No.	TOTAL SHEETS
01	Hum	299	30.2/30.6	28	57

REGISTERED CIVIL ENGINEER 04-06-15 DATE

04-06-15
PLANS APPROVAL DATE

REGISTERED PROFESSIONAL ENGINEER ROBERT J. NIXON No. C69123 Exp. 6-30-16 CIVIL STATE OF CALIFORNIA

THE STATE OF CALIFORNIA OR ITS OFFICERS OR AGENTS SHALL NOT BE RESPONSIBLE FOR THE ACCURACY OR COMPLETENESS OF SCANNED COPIES OF THIS PLAN SHEET.

NOTE:

1. FOR ACCURATE RIGHT OF WAY DATA, CONTACT RIGHT OF WAY ENGINEERING AT THE DISTRICT OFFICE.

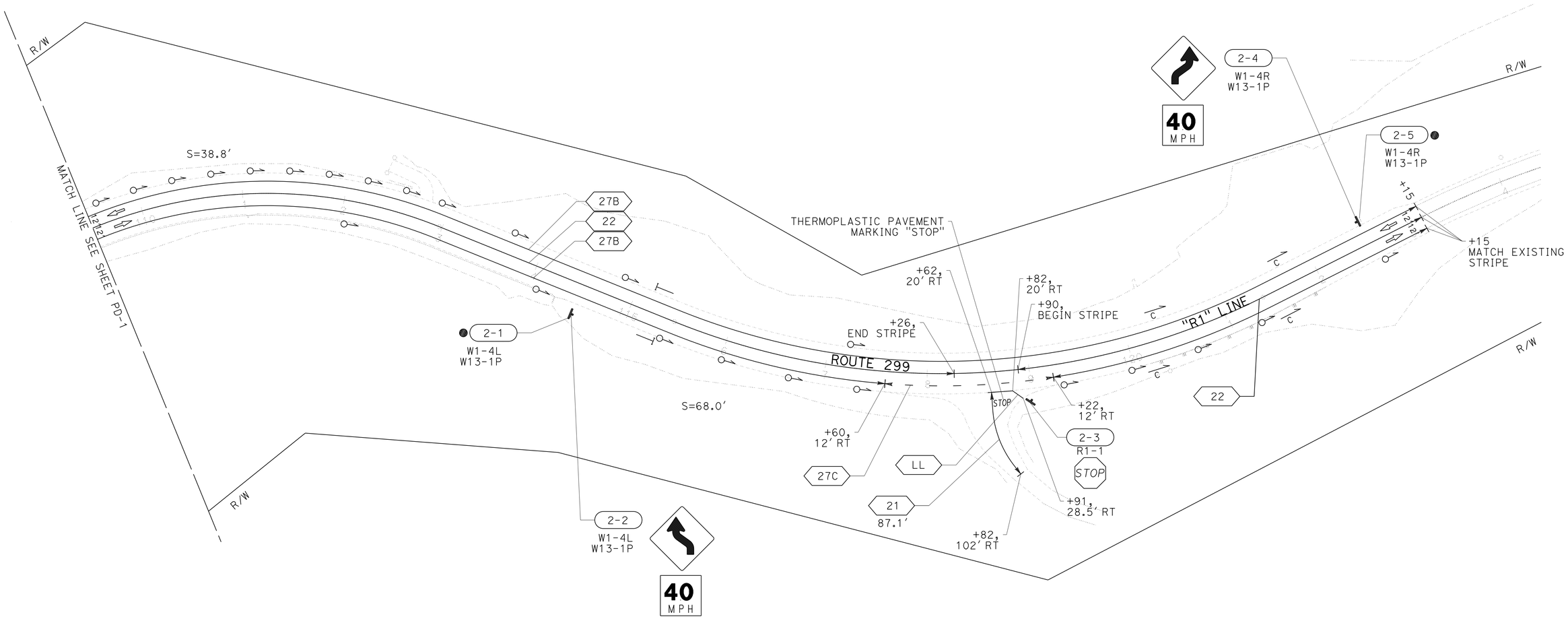

PAVEMENT DELINEATION AND SIGN PLAN

SCALE: 1" = 50'

PD-2

APPROVED FOR PAVEMENT DELINEATION AND SIGN WORK ONLY

STATE OF CALIFORNIA - DEPARTMENT OF TRANSPORTATION
Caltrans
DESIGN

FUNCTIONAL SUPERVISOR: JOHN L. MARTIN
CALCULATED-DESIGNED BY: JOLENA ASTIN
CHECKED BY: ROBERT NIXON
REVISED BY
DATE REVISED

P:\proj1\01\0a320_plans\pse\0100020307na002.dgn

LAST REVISION 12-30-14
DATE PLOTTED => 06-APR-2015
TIME PLOTTED => 07:44

BORDER LAST REVISED 7/2/2010
USERNAME => s115152
DGN FILE => 0100020307na002.dgn
RELATIVE BORDER SCALE IS IN INCHES 0 1 2 3
UNIT 0315
PROJECT NUMBER & PHASE 0100020307-1
EA: 01-0A3201

Dist	COUNTY	ROUTE	POST MILES TOTAL PROJECT	SHEET No.	TOTAL SHEETS
01	Hum	299	30.2/30.6	29	57

REGISTERED CIVIL ENGINEER 04-06-15 DATE

PLANS APPROVAL DATE 04-06-15

REGISTERED PROFESSIONAL ENGINEER ROBERT J. NIXON No. C69123 Exp. 6-30-16 CIVIL STATE OF CALIFORNIA

THE STATE OF CALIFORNIA OR ITS OFFICERS OR AGENTS SHALL NOT BE RESPONSIBLE FOR THE ACCURACY OR COMPLETENESS OF SCANNED COPIES OF THIS PLAN SHEET.

NOTE:

1. (N) - NOT A SEPARATE PAY ITEM, FOR INFORMATION ONLY

TRAFFIC STRIPE, AND PAVEMENT MARKINGS AND MARKERS

SHEET NO.	LOCATION			LT/RT	THERMOPLASTIC TRAFFIC STRIPE (ENHANCED WET NIGHT VISIBILITY)				THERMOPLASTIC CROSSWALK AND PAVEMENT MARKING (ENHANCED WET NIGHT VISIBILITY)	PAVEMENT MARKER (RETROREFLECTIVE RECESSED)	NOTES
					WHITE 4"	YELLOW 4"	YELLOW 4"	WHITE 4" (BROKEN 12-3)			
					DETAIL 27B	DETAIL 21	DETAIL 22	DETAIL 27C		TYPE D	
					LF		LF	LF	SQFT	EA	
PD-1	"R1"	103+08	109+50	LT/RT	1284		1284			55	
PD-2	"R1"	109+60	123+15	LT/RT	2568		2602	162		114	
	"CC1"	118+62	118+82	RT		174			45		CEDAR CREEK RD
SUBTOTAL					3852	174	3886	162	45	169	
TOTAL					7912			162	45	169	

ROADSIDE SIGNS

SHEET No.	SIGN No.	SIGN CODE	PANEL SIZE	(N) POST SIZE & LENGTH WOOD POST 4" x 6"	(N) POST SIZE & LENGTH WOOD POST 6" x 6"	(N) POST SIZE & LENGTH METAL POST 2 1/2" x 2 1/2"	ROADSIDE SIGN (ONE POST)	REMOVE ROADSIDE SIGN	TREATED WOOD WASTE	WEED CONTROL MAT (FIBER)	SIGN PANEL DESCRIPTION
				LF	LF	LF	EA	EA	LB	SQYD	
PD-1	1-1	W7-1 W7-3bP	48" x 48" 24" x 18"					1	100		HILL 7% GRADE, 6 MILES
	1-2	W7-1 W7-3bP	36" x 36" 24" x 18"	14			1			1	HILL 7% GRADE, 6 MILES
	1-3	W1-2a	60" x 60"					1	50		COMBINATION HORIZONTAL ALIGNMENT/ADVISORY SPEED (40)
	1-4	W1-2a	48" x 48"		14		1			2.2	COMBINATION HORIZONTAL ALIGNMENT/ADVISORY SPEED (40)
PD-2	2-1	W1-4L W13-1P	48" x 48" 24" x 24"					1	50		HORIZONTAL ALIGNMENT (LEFT) ADVISORY SPEED (40)
	2-2	W1-4L W13-1P	36" x 36" 24" x 24"	13			1			1	HORIZONTAL ALIGNMENT (LEFT) ADVISORY SPEED (40)
	2-3	R1-1	30" x 30"			12	1			1	STOP
	2-4	W1-4R W13-1P	48" x 48" 24" x 24"					1	50		HORIZONTAL ALIGNMENT (RIGHT) ADVISORY SPEED (40)
	2-5	W1-4R W13-1P	36" x 36" 24" x 24"	13			1			1	HORIZONTAL ALIGNMENT (RIGHT) ADVISORY SPEED (40)
TOTAL				40	14	12	5	4	250 *	6.2 *	

* ADDITIONAL QUANTITIES SHOWN ELSEWHERE, SEE SHEET Q-1.

DELINEATORS AND OBJECT MARKERS

SHEET NO.	MILEPOST MARKER	DELINEATOR (CLASS 2)	MARKER (CULVERT) **
	EA	EA	EA
PD-1		16	
PD-2	2	23	4
TOTAL	2	39	4

** SEE SHEET DQ-1, FOR POST MILE LOCATIONS

PAVEMENT DELINEATION AND SIGN QUANTITIES

PDQ-1

REVISED BY | DATE REVISED

JOLENA ASTIN | ROBERT NIXON

CALCULATED-DESIGNED BY | CHECKED BY

FUNCTIONAL SUPERVISOR: JOHN L. MARTIN

STATE OF CALIFORNIA - DEPARTMENT OF TRANSPORTATION

Caltrans DESIGN

P:\proj1\01\0a320_plans\pse\0100020307nc001.dgn

LAST REVISION | DATE PLOTTED => 06-APR-2015 | TIME PLOTTED => 07:44

12-30-14

Dist	COUNTY	ROUTE	POST MILES TOTAL PROJECT	SHEET No.	TOTAL SHEETS
01	Hum	299	30.2/30.6	30	57

REGISTERED CIVIL ENGINEER 04-06-15 DATE

04-06-15
PLANS APPROVAL DATE

REGISTERED PROFESSIONAL ENGINEER ROBERT J. NIXON No. C69123 Exp. 6-30-16 CIVIL STATE OF CALIFORNIA

THE STATE OF CALIFORNIA OR ITS OFFICERS OR AGENTS SHALL NOT BE RESPONSIBLE FOR THE ACCURACY OR COMPLETENESS OF SCANNED COPIES OF THIS PLAN SHEET.

MATERIAL SUMMARY CONTRACTOR FURNISHED SIGNS

SIGN No.	SIGN CODE	SIGN SIZE (L x D)	SINGLE FACED	DOUBLE FACED	BACKGROUND SHEETING COLOR	BACKGROUND RETROREFLECTIVE ASTM TYPE	LEGEND SHEETING COLOR	LEGEND RETROREFLECTIVE ASTM TYPE	FURNISH SINGLE SHEET ALUMINUM SIGN (0.063" UNFRAMED) FOR RETROREFLECTIVE SHEETING (TYPE XI) SQFT	FURNISH SINGLE SHEET ALUMINUM SIGN (0.080" UNFRAMED) FOR RETROREFLECTIVE SHEETING (TYPE XI) SQFT	RETROREFLECTIVE SHEETING (TYPE XI) SQFT	DESCRIPTION (REMARKS)
1-2	W7-1	36" X 36"	X		FL.YELLOW	XI	BLACK		9		9	HILL
	W7-3bP	24" X 18"	X		FL. YELLOW	XI	BLACK		3		3	7% GRADE, 6 MILES
1-4	W1-2a	48" X 48"	X		FL. YELLOW	XI	BLACK			16	16	COMBINATION HORIZONTAL ALIGNMENT/ADVISORY SPEED (40)
2-2	W1-4L	36" X 36"	X		FL. YELLOW	XI	BLACK		9		9	HORIZONTAL ALIGNMENT (LEFT)
	W13-1P	24" X 24"	X		FL. YELLOW	XI	BLACK		4		4	ADVISORY SPEED (40)
2-3	R1-1	30" X 30"	X		RED	XI	WHITE	XI	6.25		6.25	STOP
2-5	W1-4R	36" X 36"	X		FL. YELLOW	XI	BLACK		9		9	HORIZONTAL ALIGNMENT (RIGHT)
	W13-1P	24" X 24"	X		FL. YELLOW	XI	BLACK		4		4	ADVISORY SPEED (40)
								TOTAL	44.25	16	60.25	

PAVEMENT DELINEATION QUANTITIES

PDQ-2

JOLENA ASTIN	REVISED BY
JOHN MARTIN	DATE REVISED
CALCULATED-DESIGNED BY	
CHECKED BY	
FUNCTIONAL SUPERVISOR	
JOHN L. MARTIN	

STATE OF CALIFORNIA - DEPARTMENT OF TRANSPORTATION
Caltrans
DESIGN

P:\proj\01\0a320_plans\pse\0100020307nc002.dgn

LAST REVISION 12-30-14 | DATE PLOTTED => 06-APR-2015 | TIME PLOTTED => 07:44

Dist	COUNTY	ROUTE	POST MILES TOTAL PROJECT	SHEET No.	TOTAL SHEETS
01	Hum	299	30.2/30.6	31	57

REGISTERED CIVIL ENGINEER 04-06-15 DATE

04-06-15
PLANS APPROVAL DATE

REGISTERED PROFESSIONAL ENGINEER ROBERT J. NIXON No. C69123 Exp. 6-30-16 CIVIL STATE OF CALIFORNIA

THE STATE OF CALIFORNIA OR ITS OFFICERS OR AGENTS SHALL NOT BE RESPONSIBLE FOR THE ACCURACY OR COMPLETENESS OF SCANNED COPIES OF THIS PLAN SHEET.

NOTE:

1. (N) - NOT A SEPARATE PAY ITEM, FOR INFORMATION ONLY

ROADWAY QUANTITIES

STATION	REMOVE ASPHALT CONCRETE DIKE	ROADWAY EXCAVATION	SHOULDER BACKING	(N) * EMBANKMENT	COLD PLANE ASPHALT CONCRETE PAVEMENT	REPLACE ASPHALT CONCRETE SURFACING	CLASS 2 AGGREGATE BASE (CY)	HMA (TYPE A)	(N) VARIABLE DEPTH HMA (TYPE A)	ASPHALT BINDER (GEOSYNTHETIC PAVEMENT INTERLAYER)	GEOSYNTHETIC PAVEMENT INTERLAYER (PAVING FABRIC)	RUMBLE STRIP (HMA, GROUND-IN INDENTATIONS)		PLACE HMA DIKE		TACK COAT
												CENTERLINE	SHOULDER	(TYPE A)	(TYPE D)	
	LF	CY	TON	CY	SQYD	CY	CY	TON	TON	TON	SQYD	STA	STA	LF	LF	TON
"R1" 103+8.61 TO "R1" 123+14.88	1152	22,426	327	1427	1787.6	100	2359	2170.0	445.5	0.86	832	20.1	35.1	867	1151	1.68
"B1" 12+96.00 TO "B1" 13+50.00		10	10	29	13.3		12	13.4								0.01
"CC1" 17+55.02 TO "CC1" 18+42.00		182	4	60	20.1		39	43.1								0.02
TOTAL	1152	22,618	341	1516	1821.0	100	2410	2226.5	445.5 #	0.86	832	20.1	35.1	867	1151	1.71

* NO SHRINK/SWELL FACTOR APPLIED
\# QUANTITY INCLUDED IN HMA (TYPE A) QUANTITY

GUARDRAIL SYSTEM

STATION	REMOVE GUARDRAIL	WEED CONTROL MAT (FIBER)	MIDWEST GUARDRAIL SYSTEM (7' POST)	ALTERNATIVE IN-LINE TERMINAL SYSTEM	TREATED WOOD WASTE
	LF	SQYD	LF	EA	LB
"R1" 103+8.61 TO "R1" 123+14.88	475	186	300	4	5897
FROM SHEET PDQ-1		6.2			250
TOTAL	475	192.2	300	4	6147

SAFETY EDGE

STATION	(N) SAFETY EDGE
	LF
"R1" 103+08.61 TO "R1" 107+00.00, LT	392
"R1" 109+25.00 TO "R1" 113+13.00, LT	388
"R1" 121+80.00 TO "R1" 123+14.88, LT	135
"R1" 114+60.00 TO "R1" 120+12.50, RT	553
"R1" 122+00.00 TO "R1" 123+14.88 RT	115
TOTAL	1583

TEMPORARY FENCE (TYPE ESA)

STATION	TEMPORARY FENCE (TYPE ESA)
	LF
"R1" 118+92.62 TO "R1" 119+61.65 , LEFT	84
TOTAL	84

STORM WATER POLLUTION PREVENTION

ITEM	UNIT	QUANTITY
RAIN EVENT ACTION PLAN	EA	20
STORM WATER ANNUAL REPORT	EA	2
STORM WATER SAMPLING AND ANALYSIS DAY	EA	20
TEMPORARY CONSTRUCTION ENTRANCE	EA	4
TEMPORARY FIBER ROLL	LF	3,490
TEMPORARY LARGE SEDIMENT BARRIER	LF	75
TEMPORARY SILT FENCE	LF	2,410
TEMPORARY REINFORCED SILT FENCE	LF	1,185
TEMPORARY CHECK DAM	LF	400
TEMPORARY GRAVEL BAG BERM	LF	900
TEMPORARY DRAINAGE INLET PROTECTION	EA	6
MOVE-IN/MOVE-OUT (TEMPORARY EROSION CONTROL)	EA	4
TEMPORARY HYDRAULIC MULCH (BONDED FIBER MATRIX)	SQYD	14,500
TEMPORARY COVER	SQYD	500

SUMMARY OF QUANTITIES

Q-1

REVISED BY | DATE REVISED
JOLENA ASTIN | ROBERT NIXON
CALCULATED-DESIGNED BY | CHECKED BY
FUNCTIONAL SUPERVISOR: JOHN L. MARTIN
STATE OF CALIFORNIA - DEPARTMENT OF TRANSPORTATION
Caltrans DESIGN
P:\proj1\01\0a320_plans\pse\0100020307pa001.dgn

LAST REVISION 12-30-14 | DATE PLOTTED => 06-APR-2015 | TIME PLOTTED => 07:44

Dist	COUNTY	ROUTE	POST MILES TOTAL PROJECT	SHEET No.	TOTAL SHEETS
01	Hum	299	30.2/30.6	32	57

LICENSED LANDSCAPE ARCHITECT

04-06-15

PLANS APPROVAL DATE

LICENSED LANDSCAPE ARCHITECT RONALD MARTIN FLORY #4981 09-30-16 Renewal Date 04-06-15 Date STATE OF CALIFORNIA

THE STATE OF CALIFORNIA OR ITS OFFICERS OR AGENTS SHALL NOT BE RESPONSIBLE FOR THE ACCURACY OR COMPLETENESS OF SCANNED COPIES OF THIS PLAN SHEET.

NOTE:

1. (N) - NOT A SEPARATE PAY ITEM, FOR INFORMATION ONLY

ABBREVIATIONS:

RECP ROLLED EROSION CONTROL PRODUCT

EROSION CONTROL (TYPE 1)

SEQUENCE	ITEM	MATERIAL DESCRIPTION	MATERIAL TYPE	APPLICATION RATE
STEP 1	ROUGHEN SOIL (N)	TRACK WALK	--	--
STEP 2	HYDROSEED (SEED MIX "UPLAND")	PURE LIVE SEED	"UPLAND"	81 LB/ACRE
		FIBER	WOOD	2000 LB/ACRE
		ORGANIC FERTILIZER	SLOW RELEASE	1200 LB/ACRE
STEP 3	HYDROMULCH	FIBER	WOOD	1000 LB/ACRE
		TACKIFIER	PSYLLIUM	150 LB/ACRE

EROSION CONTROL (TYPE 2)

SEQUENCE	ITEM	MATERIAL DESCRIPTION	MATERIAL TYPE	APPLICATION RATE	REMARKS
STEP 1	COMPOST SOCK	8"	2	--	SEE STANDARD PLANS H51 FOR DETAILS
STEP 2	BONDED FIBER MATRIX	FIBER	--	4000 LB/ACRE FOR SLOPES > 2:1 and ≤ 1:1 (Horiz:Vert) 4500 LB/ACRE FOR SLOPES > 1:1 (Horiz:Vert)	APPLICATION RATE IS FOR FIBER AND TACKIFIER COMBINED
		TACKIFIER	--		
STEP 3	BONDED FIBER MATRIX	FIBER	--	500 LB/ACRE	
		TACKIFIER	--		
		SEED MIX	"UPLAND"	81 LB/ACRE	--
		ORGANIC FERTILIZER	SLOW RELEASE	1500 LB/ACRE	

EROSION CONTROL (TYPE 3)

SEQUENCE	ITEM	MATERIAL DESCRIPTION	MATERIAL TYPE	APPLICATION RATE	REMARKS
STEP 1	BONDED FIBER MATRIX	FIBER	--	4000 LB/ACRE FOR SLOPES > 2:1 and ≤ 1:1 (Horiz:Vert) 4500 LB/ACRE FOR SLOPES > 1:1 (Horiz:Vert)	APPLICATION RATE IS FOR FIBER AND TACKIFIER COMBINED
		TACKIFIER	--		
STEP 2	BONDED FIBER MATRIX	FIBER	--	500 LB/ACRE	
		TACKIFIER	--		
		SEED MIX	"UPLAND"	81 LB/ACRE	--
		ORGANIC FERTILIZER	SLOW RELEASE	1500 LB/ACRE	
STEP 3	RECP (NETTING)	COCONUT COIR	TYPE B	--	SEE STANDARD PLANS H52 FOR DETAILS
STEP 4	COMPOST SOCK	8"	2	--	SEE STANDARD PLANS H51 FOR DETAILS

EROSION CONTROL (TYPE 4)

SEQUENCE	ITEM	MATERIAL DESCRIPTION	MATERIAL TYPE	APPLICATION RATE	DEPTH
STEP 1	RECP (NETTING)(FLAP)	COCONUT COIR	TYPE B	--	--
STEP 2	COMPOST	MEDIUM TEXTURE	1,2,OR 3	135 CY/ACRE	1"
STEP 3	HYDROSEED	PURE LIVE SEED	"UPLAND"	81 LB/ACRE	--
		COMPOST/ FINE TEXTURE	1, 2, OR 3	135 CY/ACRE	1"
		ORGANIC FERTILIZER	SLOW RELEASE	1500 LB/ACRE	--
STEP 4	HYDROMULCH	FIBER	WOOD	1200 LB/ACRE	--
		TACKIFIER	PSYLLIUM	175 LB/ACRE	--

SEED MIX "UPLAND"

SEED	BOTANICAL NAME (COMMON NAME)	PERCENT GERMINATION (MINIMUM)	POUNDS PURE LIVE SEED PER ACRE (SLOPE MEASUREMENT)
MIX	ACHILLEA MILLEFOLIUM (WHITE YARROW)	80	2
	BACCHARIS PILULARIS COYOTE BRUSH	80	1
	BROMUS CARINATUS (CALIFORNIA BROME)	85	20
	ELYMUS GLAUCUS 'SHASTA TRINITY" (SHASTA TRINITY WILD RYE)	70	15
	FESTUCA CALIFORNICA (CALIFORNIA FESCUE)	80	7
	CEANOTHUS VELUTINUS (SCARIFIED) SNOW BUSH	80	5
	LOTUS PURSHIANUS (SPANISH CLOVER)	70	15
	LUPINUS BICOLOR (ANNUAL LUPINE)	80	6
	VULPIA MICROSTACHYS (SMALL FESCUE)	70	10

EROSION CONTROL LEGEND AND DETAIL

ECL-1

REVISED BY | DATE REVISED

ROBIN SOLARI | RON FLORY

CALCULATED-DESIGNED BY | CHECKED BY

SENIOR LANDSCAPE ARCHITECT | RON FLORY

STATE OF CALIFORNIA - DEPARTMENT OF TRANSPORTATION

Caltrans® LANDSCAPE ARCHITECTURE

P:\proj1\01\0a320_plans\pse\0100020307tc001.dgn

LAST REVISION 04-06-14 | DATE PLOTTED => 06-APR-2015 | TIME PLOTTED => 07:44

Dist	COUNTY	ROUTE	POST MILES TOTAL PROJECT	SHEET No.	TOTAL SHEETS
01	Hum	299	30.2/30.6	33	57

LICENSED LANDSCAPE ARCHITECT

04-06-15
PLANS APPROVAL DATE

LICENSED LANDSCAPE ARCHITECT
RONALD MARTIN FLORY
#4981
09-30-16
Renewal Date
04-06-15
Date
STATE OF CALIFORNIA

THE STATE OF CALIFORNIA OR ITS OFFICERS OR AGENTS SHALL NOT BE RESPONSIBLE FOR THE ACCURACY OR COMPLETENESS OF SCANNED COPIES OF THIS PLAN SHEET.

NOTE:

1. (N) - NOT A SEPARATE PAY ITEM, FOR INFORMATION ONLY

IMPORTED BIOFILTRATION SOIL

SEQUENCE	ITEM	MATERIAL		REMARKS
		DESCRIPTION	TYPE	
STEP 1	COMPOST (N)	MEDIUM TEXTURE	1,2,OR 3	42 CY
STEP 2	SAND (N)	--	--	82 CY
STEP 3	TOPSOIL (N)	--	--	20 CY
STEP 4	INCORPORATE MATERIALS (N)*	COMPOST		MIX THOROUGHLY
		SAND		
		TOPSOIL		
STEP 5	PLACE MATERIALS (N)	INCORPORATED MATERIALS		PLACE INCORPORATED MATERIALS INTO SWALE IN 9" LIFTS

* INCORPORATE MATERIALS OUTSIDE OF SWALE

BIOFILTRATION SWALE

SEQUENCE	ITEM	MATERIAL		APPLICATION RATE	DEPTH
		DESCRIPTION	TYPE		
STEP 1	IMPORTED BIOFILTRATION SOIL	--	--	--	18"
STEP 3	RECP (JUTE MESH)	--	--	--	--
STEP 4	HYDROSEED	PURE LIVE SEED	"SWALE"	30 LB/ACRE	--
		COMPOST/MEDIUM TEXTURE	1, 2, OR 3	135 LB/ACRE	--
		ORGANIC FERTILIZER	SLOW RELEASE	1500 LB/ACRE	--
STEP 5	HYDROMULCH	FIBER	WOOD	1200 LB/ACRE	--
		TACKIFIER	PSYLLIUM	150 LB/ACRE	--

SEED MIX "SWALE"

SEED	BOTANICAL NAME (COMMON NAME)	PERCENT GERMINATION (MINIMUM)	POUNDS PURE LIVE SEED PER ACRE (SLOPE MEASUREMENT)
MIX	ASCLEPIAS FASCICULARIS (NARROW-LEAF MILKWEED)	80	5
	AGROSTIS EXARATA (SPIKE BENTGRASS)	80	3
	CAREX PRAEGRACILIS CLUSTERED FIELD SEDGE	85	4
	DESCHAMPSIA CAESPITOSA (TUFTED HAIRGRASS)	85	2
	HORDEUM BRACHYANTHERUM (MEADOW BARLEY)	80	15
	MIMULUS GUTTATUS (SEEP MONKEYFLOWER)	70	1

EROSION CONTROL LEGEND AND DETAILS

ECL-2

REVISED BY | DATE REVISED
ROBIN SOLARI | RON FLORY
CALCULATED-DESIGNED BY | CHECKED BY
SENIOR LANDSCAPE ARCHITECT | RON FLORY

STATE OF CALIFORNIA - DEPARTMENT OF TRANSPORTATION
Caltrans® LANDSCAPE ARCHITECTURE

P:\proj1\01\0a320_plans\pse\0100020307tc002.dgn

LAST REVISION 04-06-14 | DATE PLOTTED => 06-APR-2015 | TIME PLOTTED => 07:44

Dist	COUNTY	ROUTE	POST MILES TOTAL PROJECT	SHEET No.	TOTAL SHEETS
01	Hum	299	30.2/30.6	34	57

LICENSED LANDSCAPE ARCHITECT

04-06-15
PLANS APPROVAL DATE

LICENSED LANDSCAPE ARCHITECT
RONALD MARTIN FLORY
#4981
09-30-16
Renewal Date
04-06-15
Date
STATE OF CALIFORNIA

THE STATE OF CALIFORNIA OR ITS OFFICERS OR AGENTS SHALL NOT BE RESPONSIBLE FOR THE ACCURACY OR COMPLETENESS OF SCANNED COPIES OF THIS PLAN SHEET.

NOTES:

1. FOR ACCURATE RIGHT OF WAY DATA, CONTACT RIGHT OF WAY ENGINEERING AT THE DISTRICT OFFICE.
2. EXISTING UTILITY FACILITIES HAVE NOT BEEN PLOTTED ON THESE PLANS.

LEGEND:

- EROSION CONTROL (TYPE 1)
- EROSION CONTROL (TYPE 2)
- EROSION CONTROL (TYPE 3)
- EROSION CONTROL (TYPE 4)
- BIOFILTRATION SWALE
- COMPOST SOCK

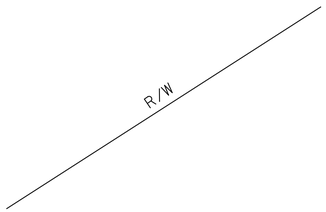

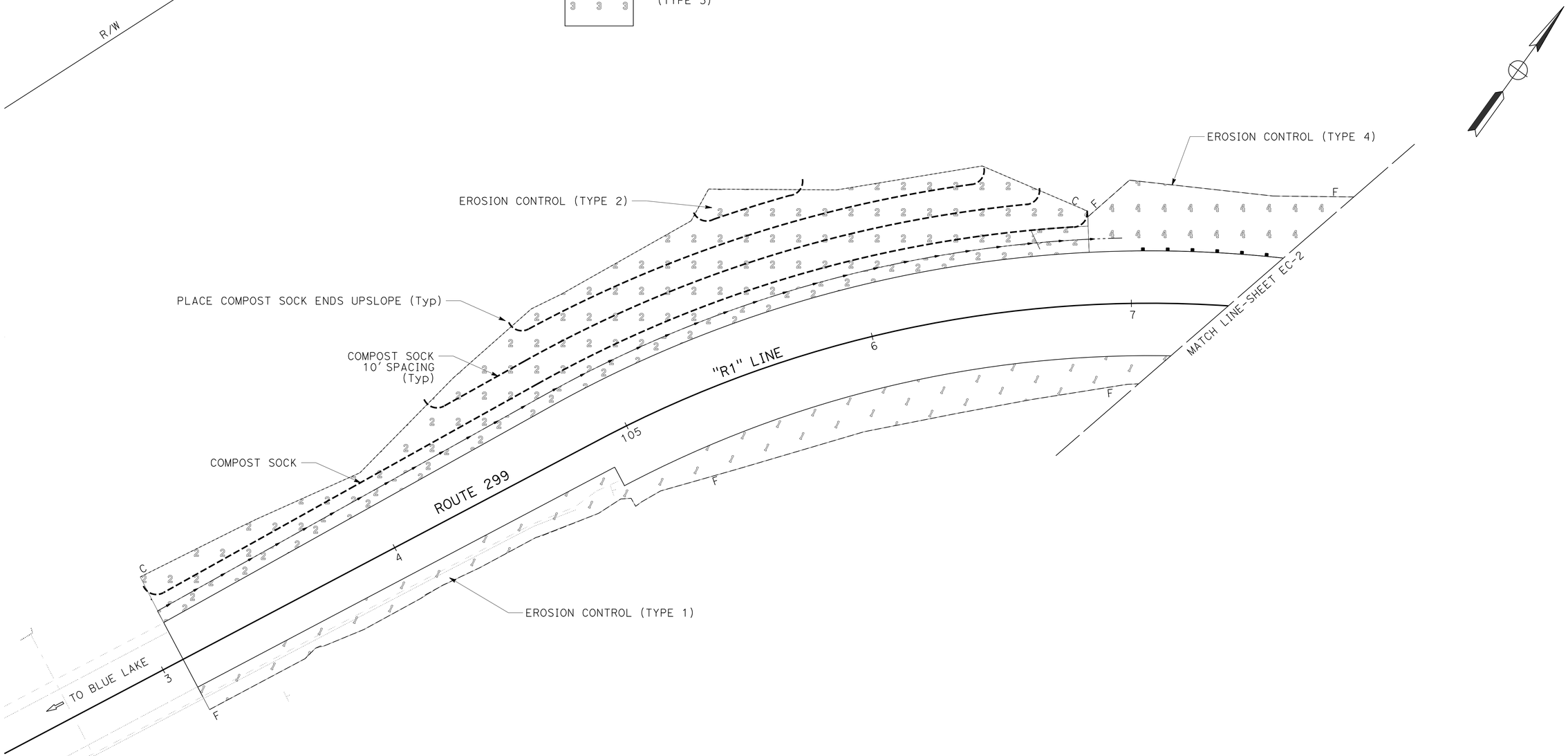

EROSION CONTROL PLAN

SCALE: 1" = 20'

EC-1

APPROVED FOR EROSION CONTROL WORK ONLY

STATE OF CALIFORNIA - DEPARTMENT OF TRANSPORTATION
Caltrans® LANDSCAPE ARCHITECTURE

SENIOR LANDSCAPE ARCHITECT: RON FLORY
CALCULATED-DESIGNED BY: ROBIN SOLARI
CHECKED BY: RON FLORY
REVISED BY
DATE REVISED

P:\proj\01\0a320_plans\pse\0100020307te001.dgn

LAST REVISION 04-06-14
DATE PLOTTED => 06-APR-2015
TIME PLOTTED => 07:44

Dist	COUNTY	ROUTE	POST MILES TOTAL PROJECT	SHEET No.	TOTAL SHEETS
01	Hum	299	30.2/30.6	35	57

LICENSED LANDSCAPE ARCHITECT

04-06-15

PLANS APPROVAL DATE

LICENSED LANDSCAPE ARCHITECT
RONALD MARTIN FLORY
#4981
09-30-16
Renewal Date
04-06-15
Date
STATE OF CALIFORNIA

THE STATE OF CALIFORNIA OR ITS OFFICERS OR AGENTS SHALL NOT BE RESPONSIBLE FOR THE ACCURACY OR COMPLETENESS OF SCANNED COPIES OF THIS PLAN SHEET.

NOTE:

1. FOR ACCURATE RIGHT OF WAY DATA, CONTACT RIGHT OF WAY ENGINEERING AT THE DISTRICT OFFICE.
2. EXISTING UTILITY FACILITIES HAVE NOT BEEN PLOTTED ON THESE PLANS.

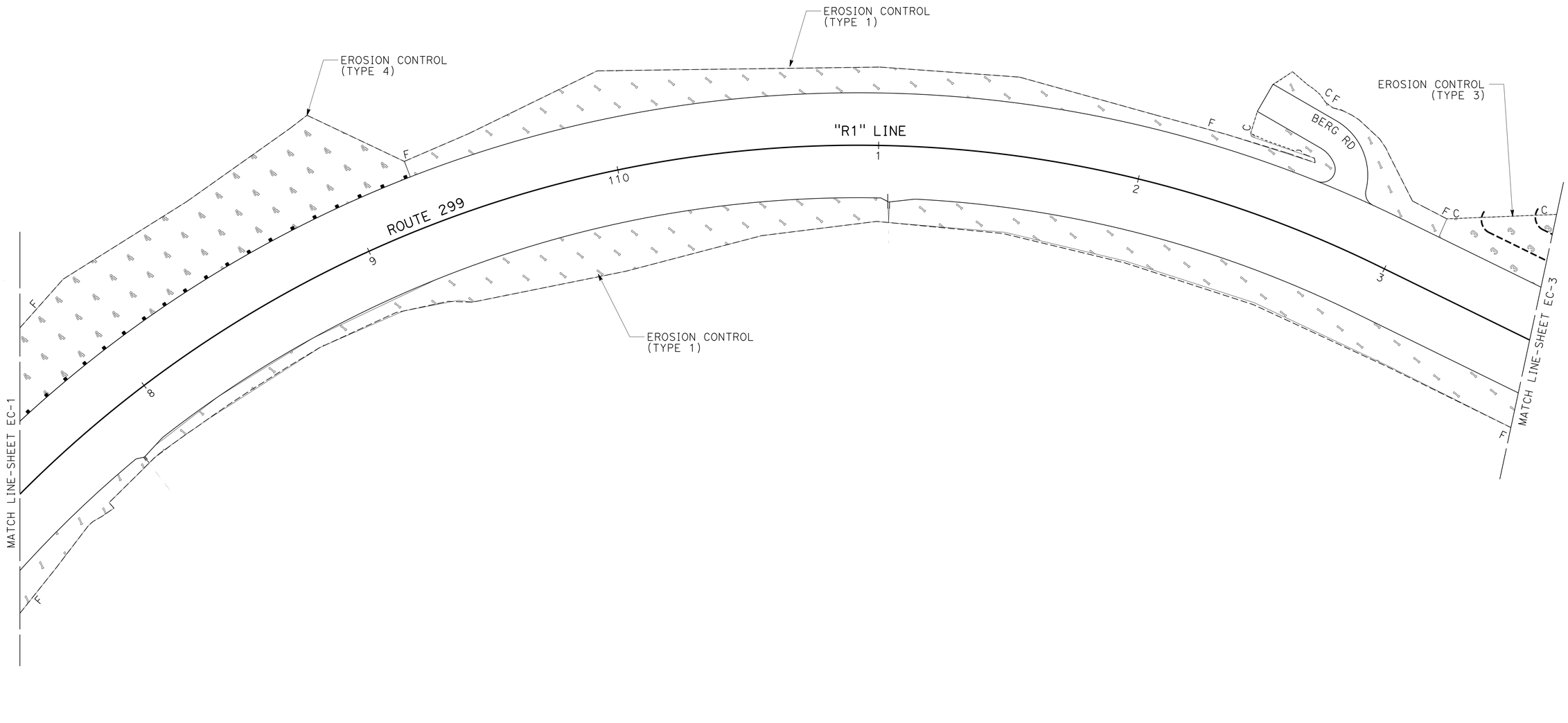

APPROVED FOR EROSION CONTROL WORK ONLY

EROSION CONTROL PLAN

SCALE: 1" = 20'

EC-2

REVISED BY | DATE REVISED

ROBIN SOLARI | RON FLORY

CALCULATED-DESIGNED BY | CHECKED BY

SENIOR LANDSCAPE ARCHITECT | RON FLORY

STATE OF CALIFORNIA - DEPARTMENT OF TRANSPORTATION

Caltrans® LANDSCAPE ARCHITECTURE

P:\proj1\01\0a320_plans\pse\0100020307te002.dgn

LAST REVISION 04-06-14 | DATE PLOTTED => 06-APR-2015 | TIME PLOTTED => 07:44

Dist	COUNTY	ROUTE	POST MILES TOTAL PROJECT	SHEET No.	TOTAL SHEETS
01	Hum	299	30.2/30.6	36	57

LICENSED LANDSCAPE ARCHITECT

04-06-15
PLANS APPROVAL DATE

LICENSED LANDSCAPE ARCHITECT
RONALD MARTIN FLORY
#4981
09-30-16
Renewal Date
04-06-15
Date
STATE OF CALIFORNIA

THE STATE OF CALIFORNIA OR ITS OFFICERS OR AGENTS SHALL NOT BE RESPONSIBLE FOR THE ACCURACY OR COMPLETENESS OF SCANNED COPIES OF THIS PLAN SHEET.

NOTE:

1. FOR ACCURATE RIGHT OF WAY DATA, CONTACT RIGHT OF WAY ENGINEERING AT THE DISTRICT OFFICE.
2. EXISTING UTILITY FACILITIES HAVE NOT BEEN PLOTTED ON THESE PLANS.

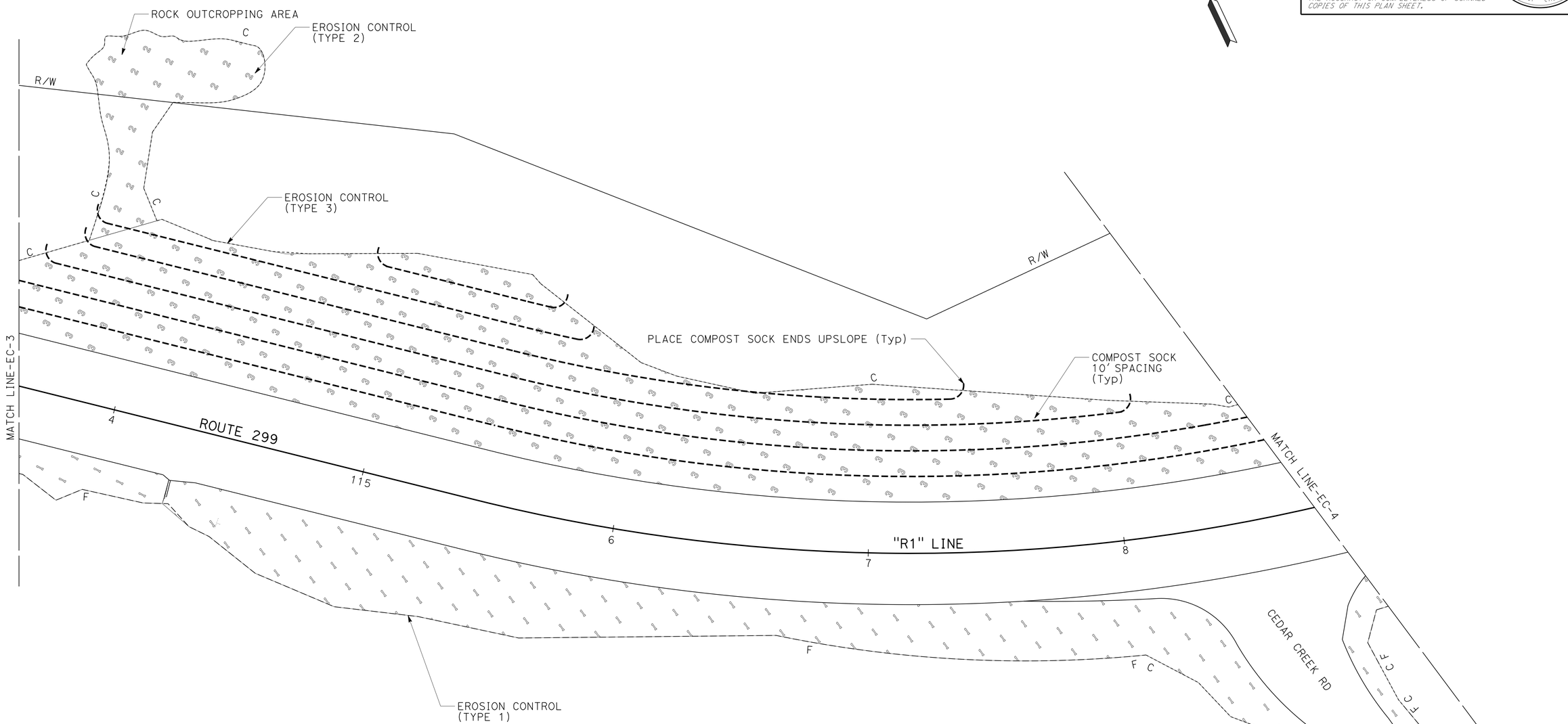

EROSION CONTROL PLAN

SCALE: 1" = 20'

EC-3

APPROVED FOR EROSION CONTROL WORK ONLY

REVISED BY | DATE REVISED
ROBIN SOLARI | RON FLORY
CALCULATED-DESIGNED BY | CHECKED BY
SENIOR LANDSCAPE ARCHITECT | RON FLORY

STATE OF CALIFORNIA - DEPARTMENT OF TRANSPORTATION
Caltrans® LANDSCAPE ARCHITECTURE

P:\proj1\01\0a320_plans\pse\0100020307te003.dgn

LAST REVISION | DATE PLOTTED => 06-APR-2015
04-06-14 | TIME PLOTTED => 07:44

BORDER LAST REVISED 7/2/2010 | USERNAME => s115152 | DGN FILE => 0100020307te003.dgn | RELATIVE BORDER SCALE IS IN INCHES 0 1 2 3 | UNIT 0382 | PROJECT NUMBER & PHASE 0100020307-1 | EA: 01-0A3201

Dist	COUNTY	ROUTE	POST MILES TOTAL PROJECT	SHEET No.	TOTAL SHEETS
01	Hum	299	30.2/30.6	37	57

LICENSED LANDSCAPE ARCHITECT

04-06-15
PLANS APPROVAL DATE

LICENSED LANDSCAPE ARCHITECT
RONALD MARTIN FLORY
#4981
09-30-16
Renewal Date
04-06-15
Date
STATE OF CALIFORNIA

THE STATE OF CALIFORNIA OR ITS OFFICERS OR AGENTS SHALL NOT BE RESPONSIBLE FOR THE ACCURACY OR COMPLETENESS OF SCANNED COPIES OF THIS PLAN SHEET.

NOTE:

1. FOR ACCURATE RIGHT OF WAY DATA, CONTACT RIGHT OF WAY ENGINEERING AT THE DISTRICT OFFICE.
2. EXISTING UTILITY FACILITIES HAVE NOT BEEN PLOTTED ON THESE PLANS.

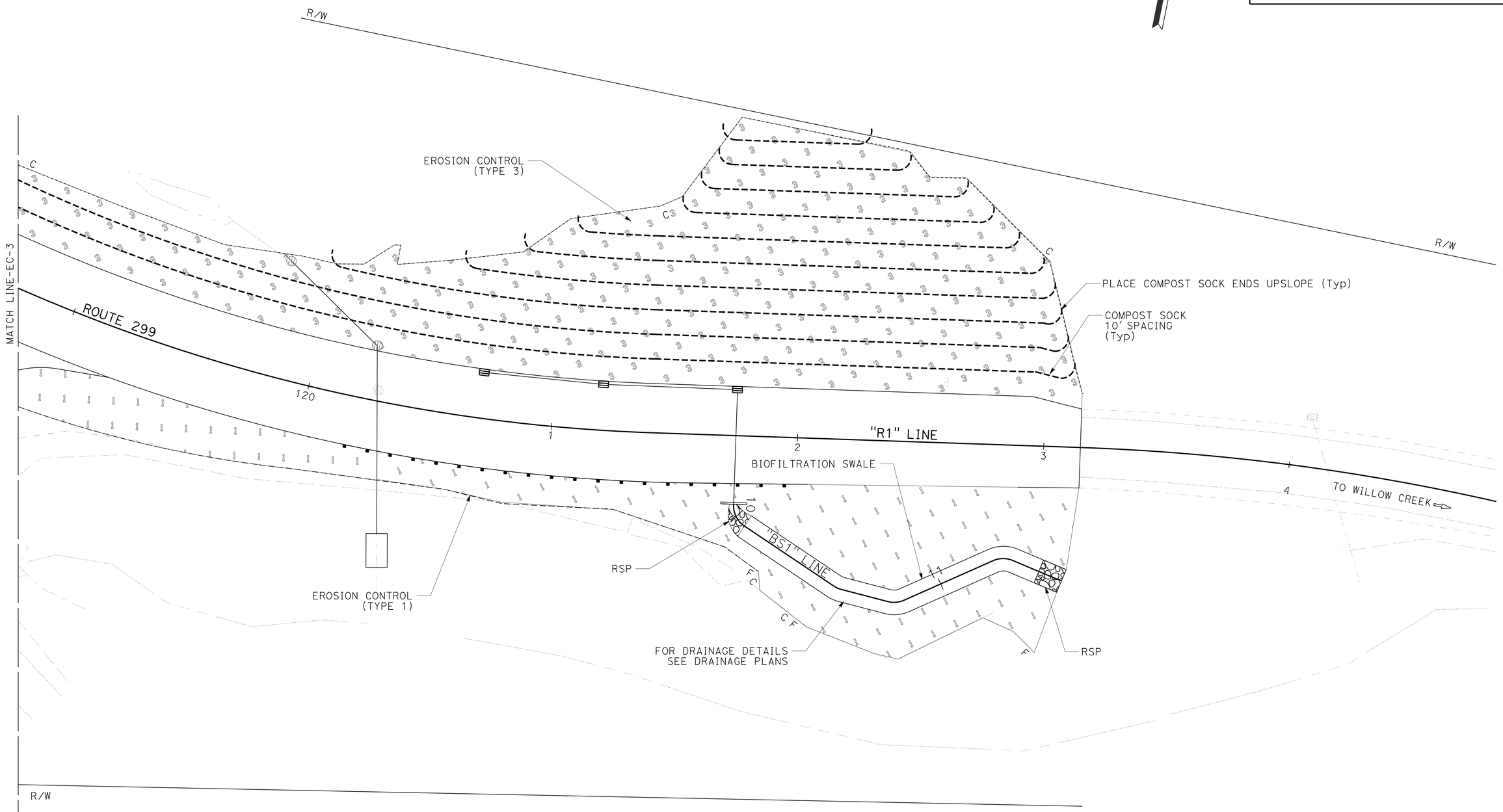

EROSION CONTROL PLAN

SCALE: 1" = 20'

EC-4

APPROVED FOR EROSION CONTROL WORK ONLY

REVISED BY | DATE REVISED
ROBIN SOLARI | RON FLORY
CALCULATED-DESIGNED BY | CHECKED BY
SENIOR LANDSCAPE ARCHITECT | RON FLORY
STATE OF CALIFORNIA - DEPARTMENT OF TRANSPORTATION
Caltrans® LANDSCAPE ARCHITECTURE

P:\proj1\01\0a320_plans\pse\0100020307te004.dgn

LAST REVISION 04-06-14 | DATE PLOTTED => 06-APR-2015 | TIME PLOTTED => 07:44

Dist	COUNTY	ROUTE	POST MILES TOTAL PROJECT	SHEET No.	TOTAL SHEETS
01	Hum	299	30.2/30.6	38	57

LICENSED LANDSCAPE ARCHITECT

04-06-15

PLANS APPROVAL DATE

LICENSED LANDSCAPE ARCHITECT RONALD MARTIN FLORY #4981 Exp. Date 09-30-16 Renewal Date 04-06-15 Date STATE OF CALIFORNIA

THE STATE OF CALIFORNIA OR ITS OFFICERS OR AGENTS SHALL NOT BE RESPONSIBLE FOR THE ACCURACY OR COMPLETENESS OF SCANNED COPIES OF THIS PLAN SHEET.

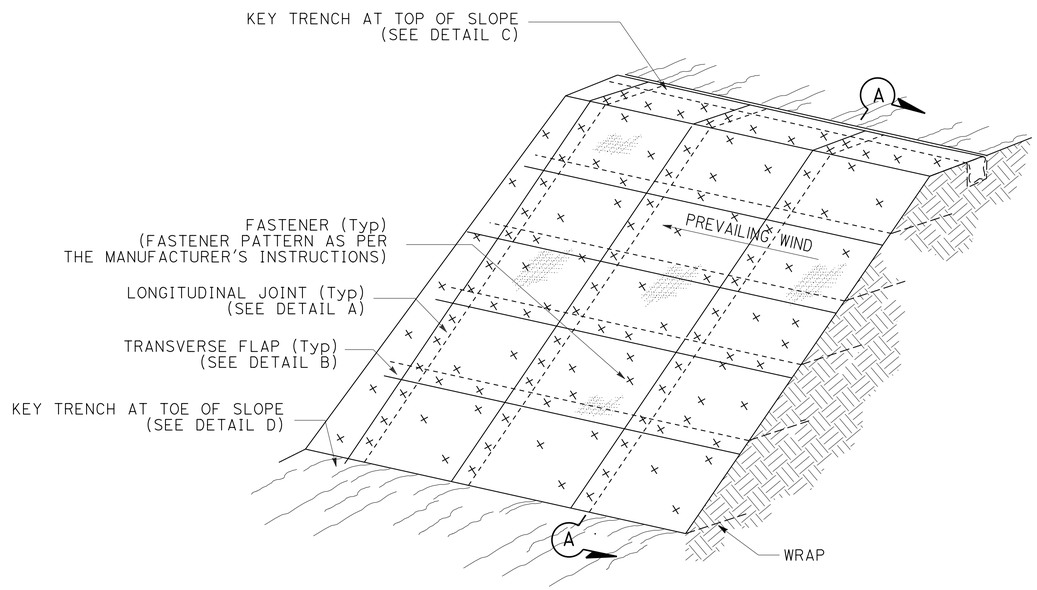

ISOMETRIC

RECP (NETTING) (FLAP)

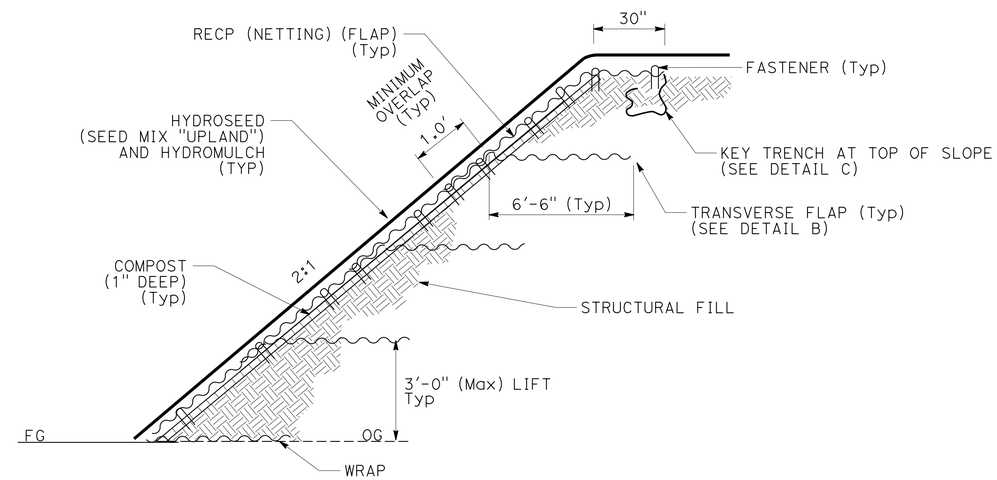

SECTION A-A

RECP (NETTING) (FLAP)

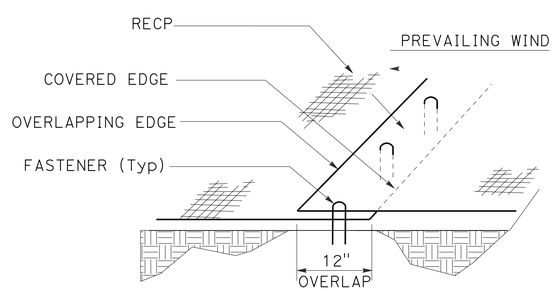

PERSPECTIVE

DETAIL A
LONGITUDINAL JOINT

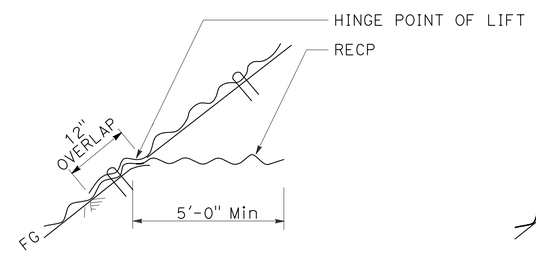

SECTION

DETAIL B
TRANSVERSE FLAP

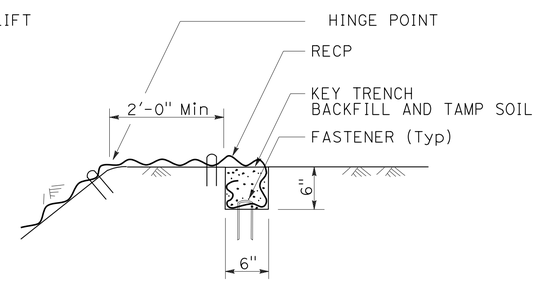

SECTION

DETAIL C
KEY TRENCH AT TOP OF SLOPE

EROSION CONTROL (TYPE 4)

EROSION CONTROL DETAILS

NO SCALE

ECD-1

REVISED BY | DATE REVISED

ROBIN SOLARI | RON FLORY

CALCULATED-DESIGNED BY | CHECKED BY

SENIOR LANDSCAPE ARCHITECT | RON FLORY

STATE OF CALIFORNIA - DEPARTMENT OF TRANSPORTATION

Caltrans® LANDSCAPE ARCHITECTURE

P:\proj1\01\0a320_plans\pse\0100020307tf001.dgn

LAST REVISION 04-06-14 | DATE PLOTTED => 06-APR-2015 | TIME PLOTTED => 07:44

Dist	COUNTY	ROUTE	POST MILES TOTAL PROJECT	SHEET No.	TOTAL SHEETS
01	Hum	299	30.2/30.6	39	57

LICENSED LANDSCAPE ARCHITECT

04-06-15
PLANS APPROVAL DATE

LICENSED LANDSCAPE ARCHITECT
RONALD MARTIN FLORY
#4981
09-30-16
Renewal Date
04-06-15
Date
STATE OF CALIFORNIA

THE STATE OF CALIFORNIA OR ITS OFFICERS OR AGENTS SHALL NOT BE RESPONSIBLE FOR THE ACCURACY OR COMPLETENESS OF SCANNED COPIES OF THIS PLAN SHEET.

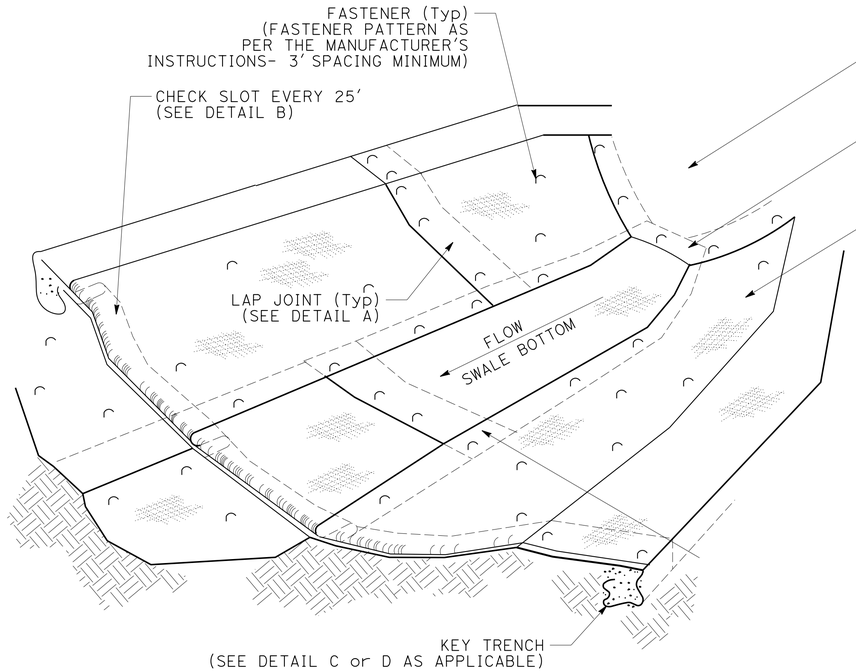

ISOMETRIC

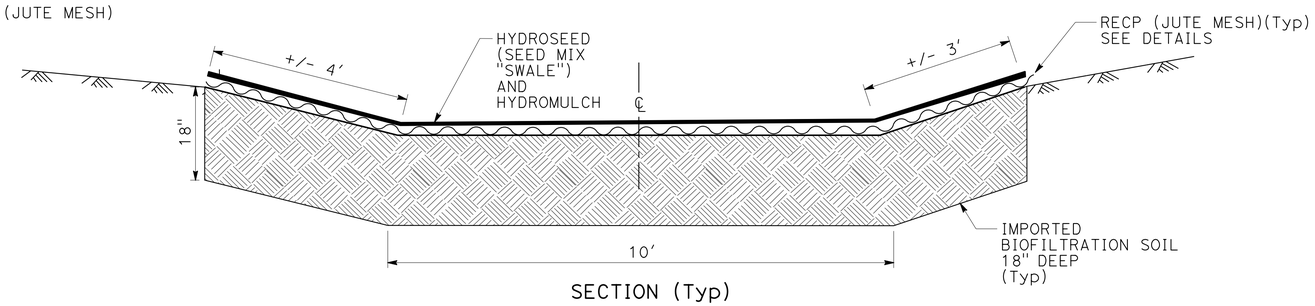

SECTION (Typ)

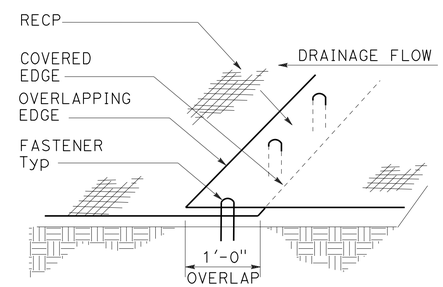

PERSPECTIVE
DETAIL A
LAP JOINT

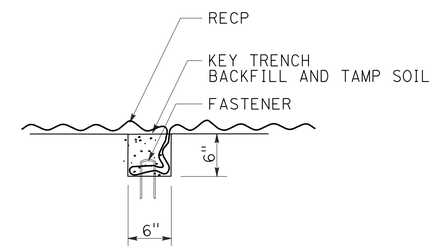

SECTION
DETAIL B
CHECK SLOT

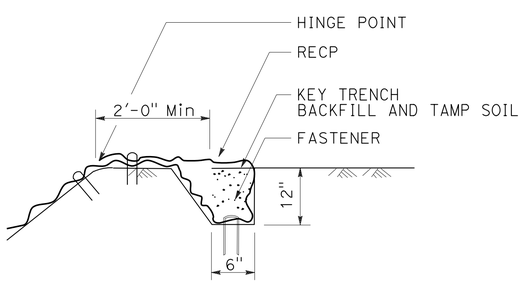

SECTION
DETAIL C
KEY TRENCH
AT TOP OF SLOPE

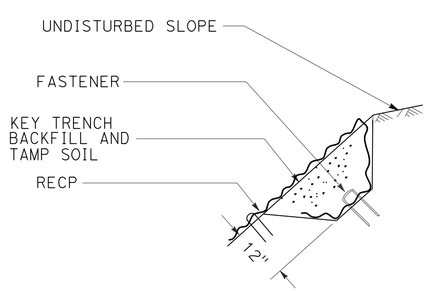

SECTION
DETAIL D
KEY TRENCH
AT UPPER CONFORM

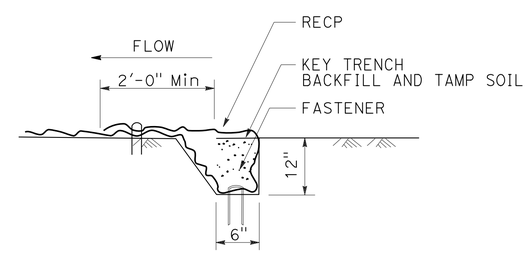

SECTION
DETAIL E
KEY TRENCH
AT BEGIN/END SWALE

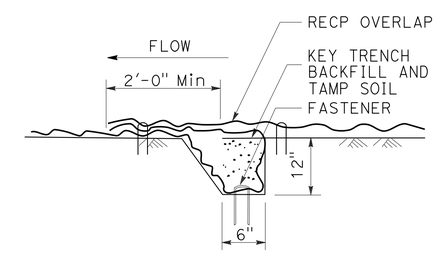

SECTION
DETAIL F
KEY TRENCH
WITH LAP JOINT

BIOFILTRATION SWALE

EROSION CONTROL DETAILS

NO SCALE

ECD-2

REVISED BY | DATE REVISED
ROBIN SOLARI | RON FLORY
CALCULATED-DESIGNED BY | CHECKED BY
SENIOR LANDSCAPE ARCHITECT | RON FLORY

STATE OF CALIFORNIA - DEPARTMENT OF TRANSPORTATION
Caltrans® LANDSCAPE ARCHITECTURE

P:\proj1\01\0a320_plans\pse\0100020307tf002.dgn

LAST REVISION 04-06-14 | DATE PLOTTED => 06-APR-2015 | TIME PLOTTED => 07:44

Dist	COUNTY	ROUTE	POST MILES TOTAL PROJECT	SHEET No.	TOTAL SHEETS
01	Hum	299	30.2/30.6	40	57

LICENSED LANDSCAPE ARCHITECT

04-06-15
PLANS APPROVAL DATE

LICENSED LANDSCAPE ARCHITECT
RONALD MARTIN FLORY
#4981
09-30-16
Renewal Date
04-06-15
Date
STATE OF CALIFORNIA

THE STATE OF CALIFORNIA OR ITS OFFICERS OR AGENTS SHALL NOT BE RESPONSIBLE FOR THE ACCURACY OR COMPLETENESS OF SCANNED COPIES OF THIS PLAN SHEET.

NOTE:

1. (N) - NOT A SEPARATE PAY ITEM, FOR INFORMATION ONLY

EROSION CONTROL QUANTITIES

SHEET	LOCATION STATION "R1" LINE	L+	R+	AREA (SQFT)	DESCRIPTION	ROUGHEN SLOPE (N) SQFT	BONDED FIBER MATRIX SQFT	COMPOST SQFT	HYDROSEED (SEED MIX "UPLAND") SQFT	HYDROMULCH SQFT	RECP (NETTING) SQFT	RECP (NETTING) (FLAP) SQFT	COMPOST SOCK LF	REMARKS
EC-1	103+08 TO 106+85	X		16,300	EROSION CONTROL (TYPE 2)		16,396						900	1:1 CUT SLOPE/ROCK FACE
EC-1,2	106+85 TO 109+25	X		7,736	EROSION CONTROL (TYPE 4)			7736	7736	7736		19,112*		1.5:1 FILL SLOPE (24 CY COMPOST)
EC-2	109+25 TO 113+13	X		3,936	EROSION CONTROL (TYPE 1)	4038			4038	4038				< 4:1 FILL SLOPE
EC-2,3,4	113+13 TO 123+15	X		59,536	EROSION CONTROL (TYPE 3)		70,378				70,378		4400	1.5:1 CUT SLOPE
EC-3	113+67 TO 114+24	X			EROSION CONTROL (TYPE 2)		3560							1:1 CUT SLOPE/ROCK FACE
EC-1,2,3,4	103+08 TO 123+15		X	33,909	EROSION CONTROL (TYPE 1)	34,212			34,212	34,212				< 4:1 FILL SLOPE
					EROSION CONTROL TOTALS	38,250	90,334	7736	45,986	45,986	70,378	19,112*	5300	

* INCLUDES SURFACE AND FLAP SQUARE FOOTAGE

BIOFILTRATION SWALE QUANTITIES

SHEET	LOCATION STATION "BS1" LINE	L+	R+	LF	AREA (SQFT)	DESCRIPTION	IMPORTED BIOFILTRATION SOIL CY	RECP (JUTE MESH) SQFT	HYDROSEED (SEED MIX "SWALE") SQFT	HYDROMULCH SQFT
EC-4	10+00 to 11+40	X	X	140	2584	BIOFILTRATION SWALE	144	2584	2584	2584

TOTAL QUANTITIES

	ROUGHEN SLOPE (N) SQFT	BONDED FIBER MATRIX SQFT	COMPOST SQFT	IMPORTED BIOFILTRATION SOIL CY	HYDROSEED (SEED MIX "UPLAND") SQFT	HYDROSEED (SEED MIX "SWALE") SQFT	HYDROMULCH SQFT	RECP (NETTING) SQFT	RECP (NETTING) (FLAP) SQFT	RECP (JUTE MESH) SQFT	COMPOST SOCK LF
TOTAL	38,250	90,334	7736	144	45,986	2584	48,570	70,378	19,112*	2584	5300

* INCLUDES SURFACE AND FLAP SQUARE FOOTAGE

EROSION CONTROL QUANTITIES

ECQ-1

REVISED BY | DATE REVISED
ROBIN SOLARI | RON FLORY
CALCULATED-DESIGNED BY | CHECKED BY
SENIOR LANDSCAPE ARCHITECT | RON FLORY
STATE OF CALIFORNIA - DEPARTMENT OF TRANSPORTATION
Caltrans® LANDSCAPE ARCHITECTURE
P:\proj1\01\0a320_plans\pse\0100020307tg001.dgn

LAST REVISION 04-06-14 | DATE PLOTTED => 06-APR-2015 | TIME PLOTTED => 07:44

M

Maint	MAINTENANCE
Max	MAXIMUM
MB	METAL BEAM
MBB	METAL BEAM BARRIER
MBGR	METAL BEAM GUARD RAILING
Med	MEDIAN
MGS	MIDWEST GUARDRAIL SYSTEM
MH	MANHOLE
Min	MINIMUM
Misc	MISCELLANEOUS
Misc I & S	MISCELLANEOUS IRON AND STEEL
Mkr	MARKER
Mod	MODIFIED, MODIFY
Mon	MONUMENT
MP	METAL PLATE
MPGR	METAL PLATE GUARD RAILING
MR	MOVEMENT RATING
MSE	MECHANICALLY STABILIZED EMBANKMENT
Mt	MOUNTAIN, MOUNT
Mtl	MATERIAL
MVP	MAINTENANCE VEHICLE PULLOUT

N

N	NORTH
NB	NORTHBOUND
No.	NUMBER (MUST HAVE PERIOD)
Nos.	NUMBERS (MUST HAVE PERIOD)
NPS	NOMINAL PIPE SIZE
NS	NEAR SIDE
NSP	NEW STANDARD PLAN
NTS	NOT TO SCALE

O

Oblr	OBLITERATE
OC	OVERCROSSING
OD	OUTSIDE DIAMETER
OF	OUTSIDE FACE
OG	ORIGINAL GROUND
OGAC	OPEN GRADED ASPHALT CONCRETE
OGFC	OPEN GRADED FRICTION COURSE
OH	OVERHEAD
OHWM	ORDINARY HIGH WATER MARK
O-O	OUT TO OUT
Opp	OPPOSITE
OSD	OVERSIDE DRAIN

P

P	PAGE
PAP	PERFORATED ALUMINUM PIPE
PB	PULL BOX
PC	POINT OF CURVATURE, PRECAST
PCC	POINT OF COMPOUND CURVE, PORTLAND CEMENT CONCRETE
PCMS	PORTABLE CHANGEABLE MESSAGE SIGN
PCP	PERFORATED CONCRETE PIPE, PRESTRESSED CONCRETE PIPE
PCVC	POINT OF COMPOUND VERTICAL CURVE
PEC	PERMIT TO ENTER AND CONSTRUCT
Ped	PEDESTRIAN
Ped OC	PEDESTRIAN OVERCROSSING
Ped UC	PEDESTRIAN UNDERCROSSING
Perm Mtl	PERMEABLE MATERIAL

P continued

PG	PROFILE GRADE
PI	POINT OF INTERSECTION
PJP	PARTIAL JOINT PENETRATION
Pkwy	PARKWAY
₱,PL	PLATE
P/L	PROPERTY LINE
PM	POST MILE, TIME FROM NOON TO MIDNIGHT
PN	PAVING NOTCH
POC	POINT OF HORIZONTAL CURVE
POT	POINT OF TANGENT
POVC	POINT OF VERTICAL CURVE
PP	PIPE PILE, PLASTIC PIPE, POWER POLE
PPL	PREFORMED PERMEABLE LINER
PPP	PERFORATED PLASTIC PIPE
PRC	POINT OF REVERSE CURVE
PRF	PAVEMENT REINFORCING FABRIC
PRVC	POINT OF REVERSE VERTICAL CURVE
PS&E	PLANS, SPECIFICATIONS AND ESTIMATES
PS, P/S	PRESTRESSED
PSP	PERFORATED STEEL PIPE
PT	POINT OF TANGENCY
PVC	POLYVINYL CHLORIDE
Pvmt	PAVEMENT

Q

Qty	QUANTITY

R

R	RADIUS
R & D	REMOVE AND DISPOSE
R & S	REMOVE AND SALVAGE
R/C	RATE OF CHANGE
RCA	REINFORCED CONCRETE ARCH
RCB	REINFORCED CONCRETE BOX
RCP	REINFORCED CONCRETE PIPE
RCPA	REINFORCED CONCRETE PIPE ARCH
Rd	ROAD
Reinf	REINFORCED, REINFORCEMENT, REINFORCING
Rel	RELOCATE
Repl	REPLACEMENT
Ret	RETAINING
Rev	REVISED, REVISION
Rdwy	ROADWAY
RHMA	RUBBERIZED HOT MIX ASPHALT
Riv	RIVER
RM	ROAD-MIXED
RP	RADIUS POINT, REFERENCE POINT
RR	RAILROAD
RSP	ROCK SLOPE PROTECTION, REVISED STANDARD PLAN
Rt	RIGHT
Rte	ROUTE
RW	REDWOOD, RETAINING WALL
R/W	RIGHT OF WAY
Rwy	RAILWAY

S

S	SOUTH, SUPPLEMENT
SAE	STRUCTURE APPROACH EMBANKMENT
Salv	SALVAGE
SAPP	STRUCTURAL ALUMINUM PLATE PIPE
SB	SOUTHBOUND
SC	SAND CUSHION
SCSP	SLOTTED CORRUGATED STEEL PIPE
SD	STORM DRAIN
Sec	SECOND, SECTION
Sep	SEPARATION
SG	SUBGRADE
Shld	SHOULDER
Sht	SHEET
Sim	SIMILAR
℄	STATION LINE
SM	SELECTED MATERIAL
Spec	SPECIAL, SPECIFICATIONS
SPP	SLOTTED PLASTIC PIPE
SS	SLOPE STAKE
SSBM	STRAP AND SADDLE BRACKET METHOD
SSD	STRUCTURAL SECTION DRAIN
SSPA	STRUCTURAL STEEL PLATE ARCH
SSPP	STRUCTURAL STEEL PLATE PIPE
SSPPA	STRUCTURAL STEEL PLATE PIPE ARCH
SSRP	STEEL SPIRAL RIB PIPE
St	STREET
Sta	STATION
STBB	SINGLE THRIE BEAM BARRIER
Std	STANDARD
Str	STRUCTURE
Surf	SURFACING
SW	SIDEWALK, SOUND WALL
Swr	SEWER
Sym	SYMMETRICAL
S4S	SURFACE 4 SIDES

T

T	SEMI-TANGENT
Tan	TANGENT
TBB	THRIE BEAM BARRIER
Tbr	TIMBER
TC	TOP OF CURB
TCB	TRAFFIC CONTROL BOX
TCE	TEMPORARY CONSTRUCTION EASEMENT
Tel	TELEPHONE
Temp	TEMPORARY
TG	TOP OF GRADE
Tot	TOTAL
TP	TELEPHONE POLE
TPB	TREATED PERMEABLE BASE
TPM	TREATED PERMEABLE MATERIAL
Trans	TRANSITION

T continued

TS	TRANSVERSE, TRAFFIC SIGNAL, TUBULAR STEEL
Typ	TYPICAL

U

UC	UNDERCROSSING
UD	UNDERDRAIN
UG	UNDERGROUND
UON	UNLESS OTHERWISE NOTED
UP	UNDERPASS

V

V	VALVE, DESIGN SPEED
Var	VARIABLE, VARIES
VC	VERTICAL CURVE
VCP	VITRIFIED CLAY PIPE
Vert	VERTICAL
Via	VIADUCT
Vol	VOLUME

W

W	WEST, WIDTH
WB	WESTBOUND
WH	WEEP HOLE
WM	WIRE MESH
WS	WATER SURFACE
WSP	WELDED STEEL PIPE
Wt	WEIGHT
WV	WATER VALVE
WW	WINGWALL
WWLOL	WINGWALL LAYOUT LINE

X

X Sec	CROSS SECTION
Xing	CROSSING

Y

Yr	YEAR
Yrs	YEARS

Dist	COUNTY	ROUTE	POST MILES TOTAL PROJECT	SHEET No.	TOTAL SHEETS
01	Hum	299	30.2/30.6	41	57

Grace M. Tsushima
REGISTERED CIVIL ENGINEER

July 19, 2013
PLANS APPROVAL DATE

REGISTERED PROFESSIONAL ENGINEER Grace M. Tsushima No. C49814 Exp. 9-30-14 CIVIL STATE OF CALIFORNIA

THE STATE OF CALIFORNIA OR ITS OFFICERS OR AGENTS SHALL NOT BE RESPONSIBLE FOR THE ACCURACY OR COMPLETENESS OF SCANNED COPIES OF THIS PLAN SHEET.

TO ACCOMPANY PLANS DATED 04-06-15

UNIT OF MEASUREMENT SYMBOLS:

Some of the symbols used in the project plan quantity tables and in the Bid Item List are:

TABLE A

SYMBOL USED	DEFINITIONS
ACRE	ACRE
CF	CUBIC FOOT
CY	CUBIC YARD
EA	EACH
GAL	GALLON
LB	POUND
LF	LINEAR FOOT
SQFT	SQUARE FOOT
SQYD	SQUARE YARD
STA	100 FEET
TAB	TABLET
TON	2,000 POUNDS

Some of the symbols used in the plans other than in the project plan quantity tables are:

TABLE B

SYMBOL USED	DEFINITIONS
ksi	KIPS PER SQUARE INCH
ksf	KIPS PER SQUARE FOOT
psi	POUNDS PER SQUARE INCH
psf	POUNDS PER SQUARE FOOT
lb/ft^3, pcf	POUNDS PER CUBIC FOOT
tsf	TONS PER SQUARE FOOT
mph, MPH *	MILES PER HOUR
ø	NOMINAL DIAMETER
oz	OUNCE
lb	POUND
kip	1,000 POUNDS
cal	CALORIE
ft	FOOT OR FEET
gal	GALLON

* For use on a sign panel only

STATE OF CALIFORNIA
DEPARTMENT OF TRANSPORTATION

ABBREVIATIONS (SHEET 2 OF 2)

NO SCALE

RSP A10B DATED JULY 19, 2013 SUPERSEDES STANDARD PLAN A10B DATED MAY 20, 2011 - PAGE 2 OF THE STANDARD PLANS BOOK DATED 2010.

REVISED STANDARD PLAN RSP A10B

2010 REVISED STANDARD PLAN RSP A10B

DATE PLOTTED => 06-APR-2015
TIME PLOTTED => 07:44

Dist	COUNTY	ROUTE	POST MILES TOTAL PROJECT	SHEET No.	TOTAL SHEETS
01	Hum	299	30.2/30.6	42	57

REGISTERED CIVIL ENGINEER

July 20, 2012
PLANS APPROVAL DATE

REGISTERED PROFESSIONAL ENGINEER
Roberta L. McLaughlin
No. C40375
Exp. 3-31-13
CIVIL
STATE OF CALIFORNIA

THE STATE OF CALIFORNIA OR ITS OFFICERS OR AGENTS SHALL NOT BE RESPONSIBLE FOR THE ACCURACY OR COMPLETENESS OF SCANNED COPIES OF THIS PLAN SHEET.

TO ACCOMPANY PLANS DATED 04-06-15

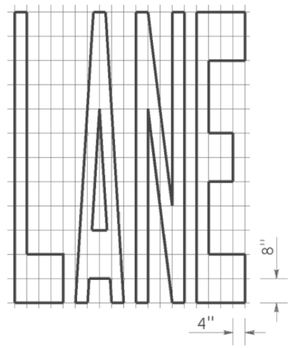

A=24 ft^2

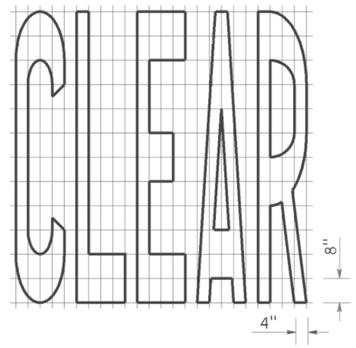

A=27 ft^2

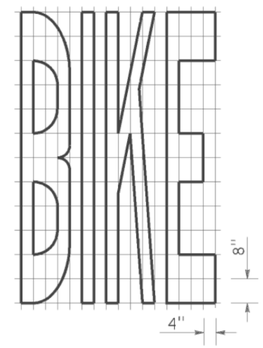

A=21 ft^2

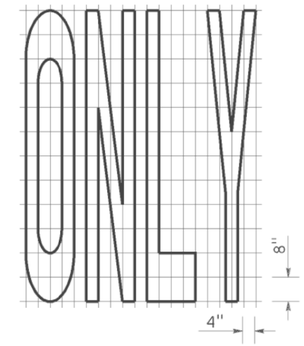

A=22 ft^2

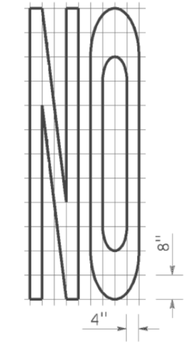

A=14 ft^2

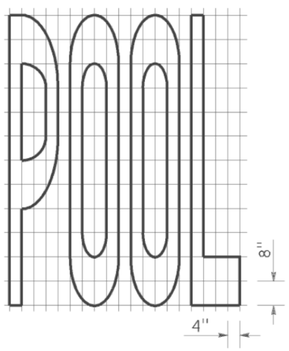

A=23 ft^2

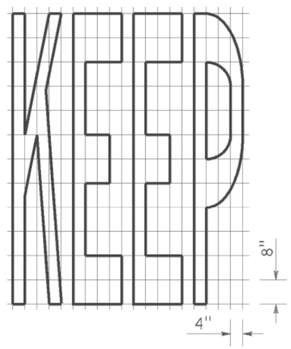

A=24 ft^2

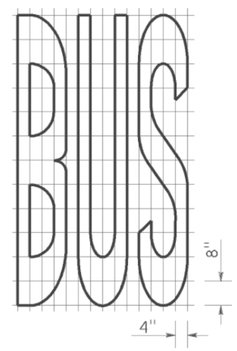

A=20 ft^2

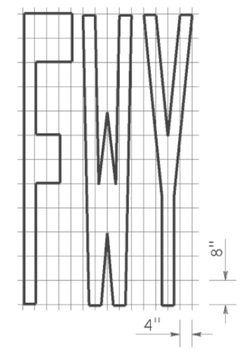

A=16 ft^2

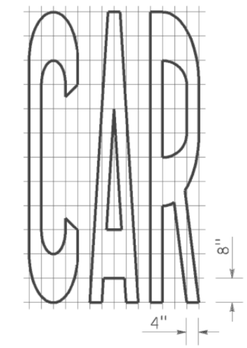

A=17 ft^2

WORD MARKINGS			
ITEM	ft^2	ITEM	ft^2
LANE	24	NO	14
POOL	23	BIKE	21
CAR	17	BUS	20
CLEAR	27	ONLY	22
KEEP	24	FWY	16

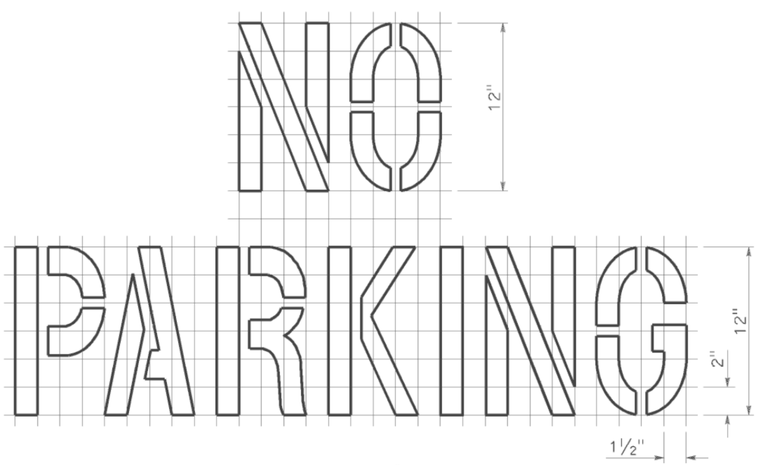

A=2 ft^2
See Notes 6 and 7

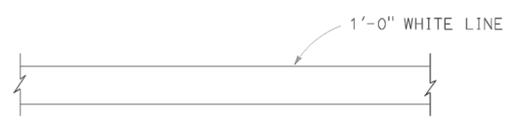

LIMIT LINE (STOP LINE)

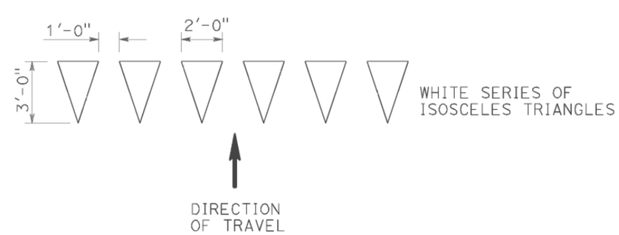

YIELD LINE

NOTES:

1. If a message consists of more than one word, it should read "UP", i.e., the first word should be nearest the driver.
2. The space between words should be at least four times the height of the characters for low speed roads, but not more than ten times the height of the characters. The space may be reduced appropriately where there is limited space because of local conditions.
3. Minor variations in dimensions may be accepted by the Engineer.
4. Portions of a letter, number or symbol may be separated by connecting segments not to exceed 2" in width.
5. The words "NO PARKING" pavement marking is to be used for parking facilities. For typical locations of markings, see Standard Plans A90A and A90B.
6. The words "NO PARKING", shall be painted in white letters no less than 1'-0" high on a contrasting background and located so that it is visible to traffic enforcement officials.

STATE OF CALIFORNIA
DEPARTMENT OF TRANSPORTATION

PAVEMENT MARKINGS WORDS, LIMIT AND YIELD LINES

NO SCALE

RSP A24E DATED JULY 20, 2012 SUPERSEDES STANDARD PLAN A24E
DATED MAY 20, 2011 - PAGE 17 OF THE STANDARD PLANS BOOK DATED 2010.

REVISED STANDARD PLAN RSP A24E

2010 REVISED STANDARD PLAN RSP A24E

DATE PLOTTED => 06-APR-2015
TIME PLOTTED => 07:44

Dist	COUNTY	ROUTE	POST MILES TOTAL PROJECT	SHEET No.	TOTAL SHEETS
01	Hum	299	30.2/30.6	43	57

REGISTERED CIVIL ENGINEER

July 18, 2014
PLANS APPROVAL DATE

REGISTERED PROFESSIONAL ENGINEER
Carl M. Duan
No. C59976
Exp. 6-30-16
CIVIL
STATE OF CALIFORNIA

THE STATE OF CALIFORNIA OR ITS OFFICERS OR AGENTS SHALL NOT BE RESPONSIBLE FOR THE ACCURACY OR COMPLETENESS OF SCANNED COPIES OF THIS PLAN SHEET.

TO ACCOMPANY PLANS DATED 04-06-15

DESIGN NOTES:

Design: AASHTO LRFD Bridge Design Specifications, 4th edition with California Amendments. ACPA DESIGN DATA 1, October 2007. INDIRECT DESIGN METHOD

Soil: w Fe = 162 pcf Installation Type 1
w Fe = 168 pcf Installation Types 2 & 3
w = Unit weight of soil (pcf)
Fe = Soil-structure interaction factor

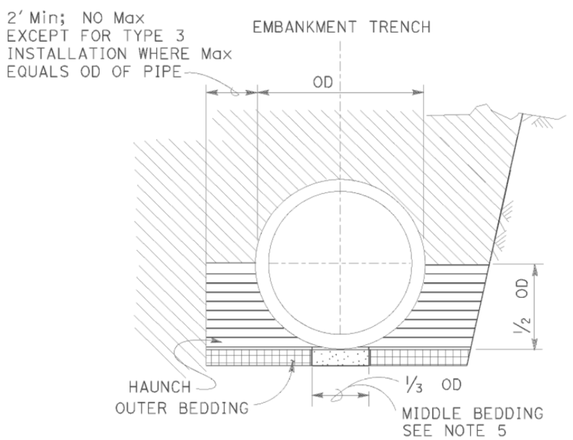

BACKFILL

LEGEND:

- ROADWAY EMBANKMENT
- STRUCTURE BACKFILL (CULVERT) FOR HAUNCH SEE NOTE 6
- STRUCTURE BACKFILL (CULVERT) FOR OUTER BEDDING SEE NOTE 6
- LOOSE BACKFILL
- STRUCTURE EXCAVATION (CULVERT)

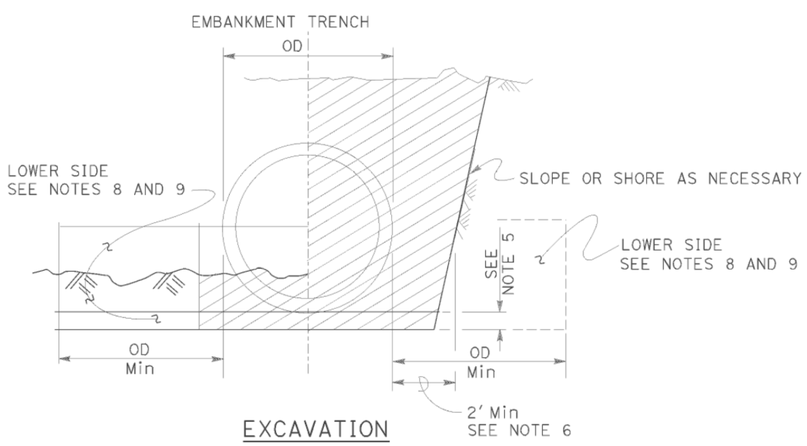

EXCAVATION

INSTALLATION TYPE 1:

The haunch and outer bedding shall be compacted to a minimum 90 percent relative compaction. In addition, the minimum sand equivalent in these areas shall be 30 and the maximum percentage passing the No. 200 sieve size shall be 12.

INSTALLATION TYPE 2:

The haunch and outer bedding shall be compacted to a minimum 90 percent relative compaction. In addition, the minimum sand equivalent in these areas shall be 25.

INSTALLATION TYPE 3:

The haunch and outer bedding shall be compacted to a minimum 85 percent relative compaction. 90 percent relative compaction will be required where the fill over the pipe is less than 4′-0″ or ½ OD. In addition, the minimum sand equivalent in these areas shall be 25 and the material shall not contain rocks, broken concrete, or other solid material exceeding 3″ in greatest dimension.

INSTALLATION TYPE 1

MINIMUM CLASS AND D-LOAD	COVER	
	60″ Dia AND SMALLER	OVER 60″ Dia TO 120″ Dia Max
CLASS II 1000D	14.9′	12.9′
CLASS III 1350D	15.0′ - 21.9′	13.0′ - 18.9′
CLASS III SPECIAL 1700D	22.0′ - 27.9′	19.0′ - 24.9′
CLASS IV 2000D	28.0′ - 32.9′	25.0′ - 29.9′
CLASS IV SPECIAL 2500D	33.0′ - 41.9′	30.0′ - 38.9′
CLASS V 3000D	42.0′ - 49.9′	39.0′ - 46.9′
CLASS V SPECIAL 3600D	50.0′ - 60.0′	47.0′ - 58.0′

INSTALLATION TYPE 2

MINIMUM CLASS AND D-LOAD	COVER	
	60″ Dia AND SMALLER	OVER 60″ Dia TO 120″ Dia Max
CLASS II 1000D	11.9′	9.9′
CLASS III 1350D	12.0′ - 15.9′	10.0′ - 14.9′
CLASS III SPECIAL 1700D	16.0′ - 20.9′	15.0′ - 19.9′
CLASS IV 2000D	21.0′ - 24.9′	20.0′ - 23.9′
CLASS IV SPECIAL 2500D	25.0′ - 31.9′	24.0′ - 30.9′
CLASS V 3000D	32.0′ - 37.9′	31.0′ - 37.9′
CLASS V SPECIAL 3600D	38.0′ - 46.0′	38.0′ - 46.0′

INSTALLATION TYPE 3

MINIMUM CLASS AND D-LOAD	COVER	
	60″ Dia AND SMALLER	OVER 60″ Dia TO 120″ Dia Max
CLASS II 1000D	8.9′	5.9′
CLASS III 1350D	9.0′ - 11.9′	6.0′ - 10.9′
CLASS III SPECIAL 1700D	12.0′ - 15.9′	11.0′ - 13.9′
CLASS IV 2000D	16.0′ - 18.9′	14.0′ - 17.9′
CLASS IV SPECIAL 2500D	19.0′ - 24.9′	18.0′ - 22.9′
CLASS V 3000D	25.0′ - 29.9′	23.0′ - 28.9′
CLASS V SPECIAL 3600D	30.0′ - 36.0′	29.0′ - 35.0′

NOTES:

1. Unless otherwise shown on the plans or specified in the special provision, the Contractor shall have the option of selecting the class of RCP and the type of installation to be used, provided the height of cover does not exceed the value shown for the RCP selected.
   Example: 24″ RCP culvert with maximum cover of 24′-0″ the options are:
   a) Class III Special or stronger with Installation Type 1.
   b) Class IV or stronger with Installation Type 2.
   c) Class IV Special or stronger with Installation Type 3.
   Cover is defined as the maximum vertical distance from top of the pipe to finished grade within the length of any given culvert.
2. The class of RCP and Installation Type selected shall be the same throughout the length of any given culvert.
3. The "length of any culvert" is defined as the culvert between:
   a) Successive drainage structure (inlets, junction boxes, headwalls, etc.).
   b) A drainage structure and the inlet or outlet end of the culvert.
   c) The inlet and outlet end of the culvert when there are no intervening drainage structures.
4. Oval and arch shaped RCP shall not be used.
5. Bedding depth: 1/25 OD Min, not less than 3″.
6. Slurry cement backfill may be substituted for backfill in the outer bedding and haunch areas. If slurry is used, the outer and middle beddings shall be omitted. Prior to installation, the soil under the middle ⅓ of the outside diameter of the pipe shall be softened by scarifying or other means to a minimum depth of 1/25 OD, but not less than 3″. Where slurry cement backfill is used, clear distance to trench wall may be reduced as set forth in the Standard Specifications.
7. Backfill shall be placed full width of excavation except where dimensions are shown for backfill width or thickness. Dimensions shown are minimum.
8. Lower side shall be suitable material as determined by the Engineer. Otherwise it shall be considered unsuitable as set forth in of the Standard Specifications. See Note 9.
9. Where the pipe is placed in a trench, if the trench walls are sloped at 5 vertical to 1 horizontal or steeper for at least 90 percent of the trench height or up to not less than 12″ from the grading plane, the firmness of the soil in the lower side need not be considered.
10. Non-reinforced precast concrete pipe sizes 3′-0″ or smaller may be placed under installation Types 1, 2 or 3.

STATE OF CALIFORNIA
DEPARTMENT OF TRANSPORTATION

EXCAVATION AND BACKFILL CONCRETE PIPE CULVERTS INDIRECT DESIGN METHOD

NO SCALE

RSP A62DA DATED JULY 18, 2014 SUPERSEDES STANDARD PLAN A62DA DATED MAY 20, 2011 - PAGE 24 OF THE STANDARD PLANS BOOK DATED 2010.

REVISED STANDARD PLAN RSP A62DA

2010 REVISED STANDARD PLAN RSP A62DA

DATE PLOTTED => 06-APR-2015
TIME PLOTTED => 07:44

Dist	COUNTY	ROUTE	POST MILES TOTAL PROJECT	SHEET No.	TOTAL SHEETS
01	Hum	299	30.2/30.6	44	57

Randell D. Hiatt
REGISTERED CIVIL ENGINEER

July 19, 2013
PLANS APPROVAL DATE

REGISTERED PROFESSIONAL ENGINEER
Randell D. Hiatt
No. C50200
Exp. 6-30-15
CIVIL
STATE OF CALIFORNIA

THE STATE OF CALIFORNIA OR ITS OFFICERS OR AGENTS SHALL NOT BE RESPONSIBLE FOR THE ACCURACY OR COMPLETENESS OF SCANNED COPIES OF THIS PLAN SHEET.

TO ACCOMPANY PLANS DATED 04-06-15

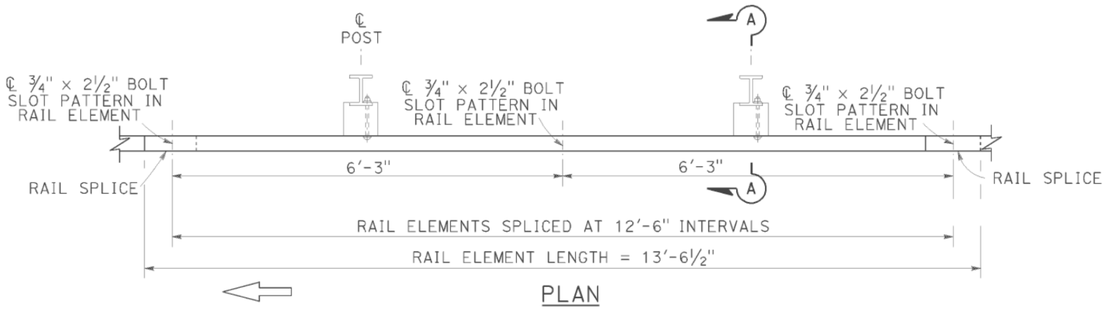

PLAN

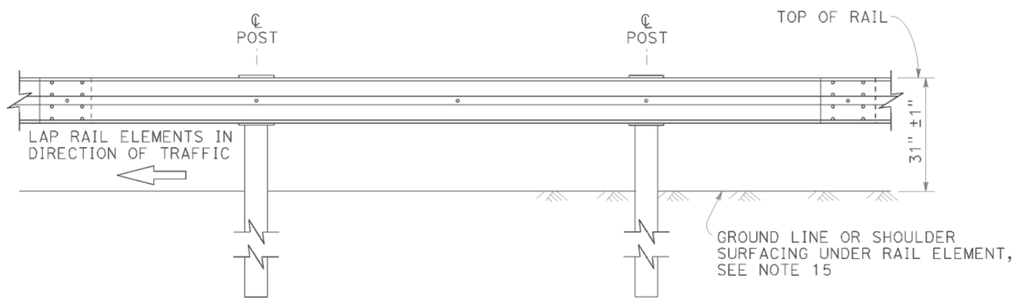

ELEVATION

MIDWEST GUARDRAIL SYSTEM WITH STEEL POSTS AND NOTCHED WOOD OR NOTCHED RECYCLED PLASTIC BLOCKS

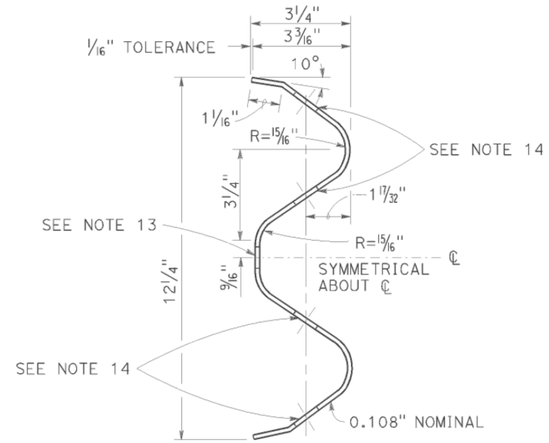

SECTION THRU RAIL ELEMENT

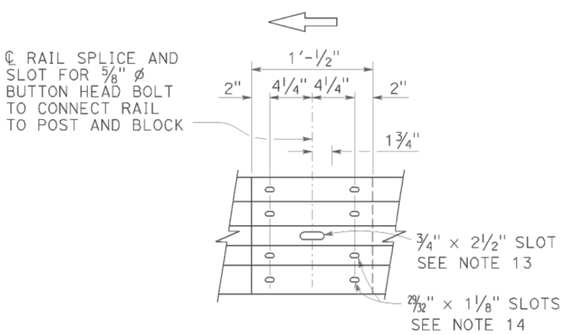

ELEVATION

RAIL ELEMENT SPLICE DETAIL

a) Connect the over lapped end of the rail elements with ⅝" ø × 1⅜" button head oval shoulder splice bolts inserted into the 29/32" × 1⅛" slots and bolted together with ⅝" ø recessed hex nuts. Recess of hex nut points toward rail element. A total of 8 bolts and nuts are to be used at each rail splice connection.

b) The ends of the rail elements are to be overlapped in the direction of traffic (see details).

c) Where end cap is to be attached to the end of a rail element, a total of 4 of the above described splice bolts and nuts are to be used.

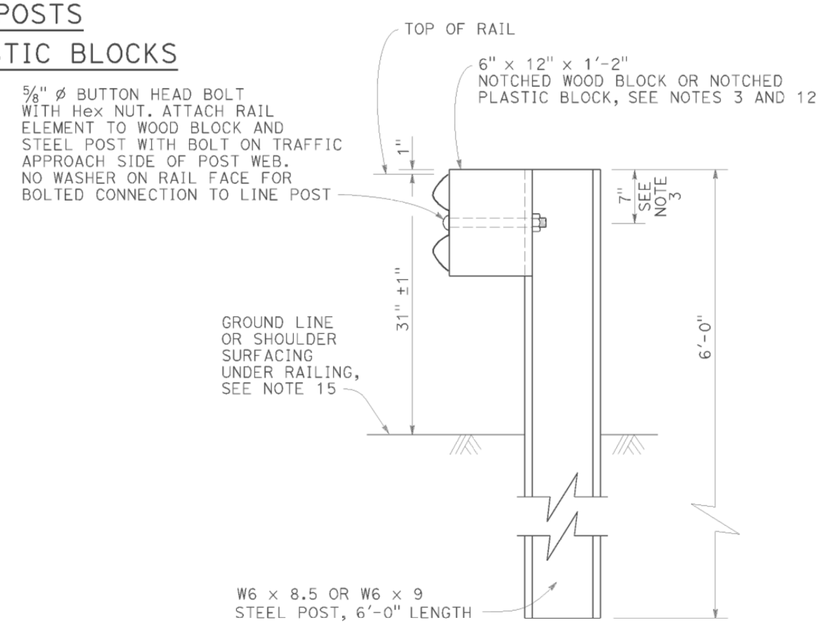

SECTION A-A

TYPICAL STEEL LINE POST INSTALLATION

See Note 4

NOTES:

1. For details of wood post installations, see Revised Standard Plan RSP A77L1.
2. For details of standard hardware used to construct MGS, see Revised Standard Plan RSP A77M1.
3. For details of steel posts and notched wood blocks used to construct MGS, see Revised Standard Plan RSP A77N2.
4. For additional installation details, see Revised Standard Plan RSP A77N3.
5. MGS post spacing to be 6'-3" center to center, except as otherwise noted.
6. For MGS typical layouts, see the A77P, A77Q and A77R Series of Standard Plans.
7. If railing is connected to terminal system end treatment, use 31" height terminal system end treatment.
8. For MGS end anchor details, see Revised Standard Plans RSP A77S1 and RSP A77T2.
9. For details of MGS transition to bridge railing, see Revised Standard Plan RSP A77U4.
10. For additional details of MGS connection to bridge railings, see Revised Standard Plans RSP A77U1, RSP A77U2 and RSP A77V1.
11. For dike positioning and MGS delineation details, see Revised Standard Plan RSP A77N4.
12. Notched face of block faces steel post.
13. Slotted hole for bolted connection of rail element to block and post. See "Section Thru Rail Element".
14. Slotted holes for splice bolts to overlap ends of rail element. See "Section Thru Rail Element".
15. Install posts in soil.

STATE OF CALIFORNIA
DEPARTMENT OF TRANSPORTATION

MIDWEST GUARDRAIL SYSTEM STANDARD RAILING SECTION (STEEL POST WITH NOTCHED WOOD OR NOTCHED RECYCLED PLASTIC BLOCK)

NO SCALE

RSP A77L2 DATED JULY 19, 2013 SUPPLEMENTS THE STANDARD PLANS BOOK DATED 2010.

REVISED STANDARD PLAN RSP A77L2

2010 REVISED STANDARD PLAN RSP A77L2

DATE PLOTTED => 06-APR-2015
TIME PLOTTED => 07:44

Dist	COUNTY	ROUTE	POST MILES TOTAL PROJECT	SHEET No.	TOTAL SHEETS
01	Hum	299	30.2/30.6	45	57

Randell D. Hiatt
REGISTERED CIVIL ENGINEER

July 19, 2013
PLANS APPROVAL DATE

REGISTERED PROFESSIONAL ENGINEER
Randell D. Hiatt
No. C50200
Exp. 6-30-15
CIVIL
STATE OF CALIFORNIA

THE STATE OF CALIFORNIA OR ITS OFFICERS OR AGENTS SHALL NOT BE RESPONSIBLE FOR THE ACCURACY OR COMPLETENESS OF SCANNED COPIES OF THIS PLAN SHEET.

TO ACCOMPANY PLANS DATED 04-06-15

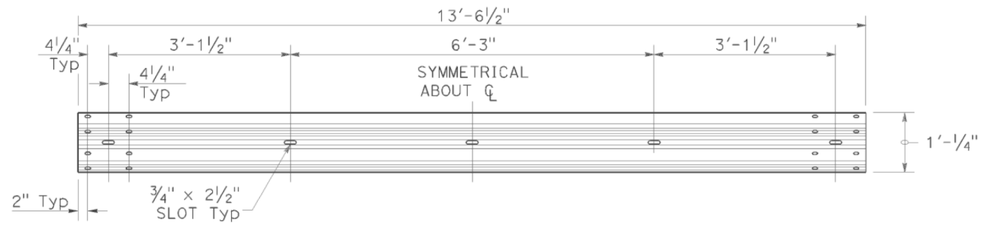

TYPICAL RAIL ELEMENT

NOTE:

1. Slotted holes for splice bolts to overlap ends of rail element.

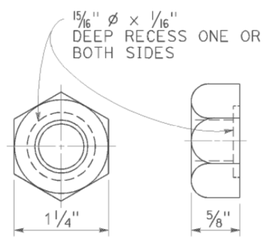

⅝" ø RECESS NUT

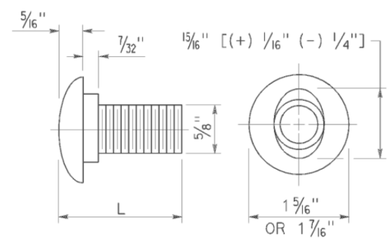

⅝" ø BUTTON HEAD BOLT

BUTTON HEAD BOLT

L	THREAD LENGTH
1⅜"	FULL THREAD LENGTH
2"	FULL THREAD LENGTH
10"	4" Min THREAD LENGTH
18"	4" Min THREAD LENGTH
20"	4" Min THREAD LENGTH
22"	4" Min THREAD LENGTH
26"	4" Min THREAD LENGTH
36"	4" Min THREAD LENGTH
** 2¾"	2" Min THREAD LENGTH
** 19"	4" Min THREAD LENGTH

** For nested rail applications.

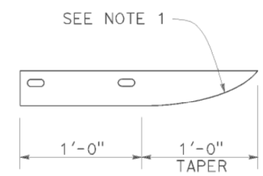

PLAN

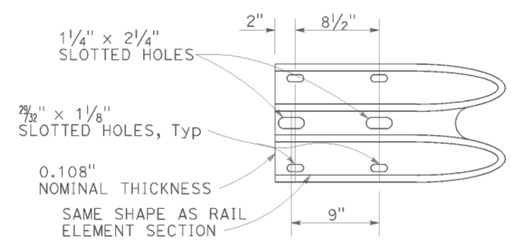

ELEVATION

END CAP
(TYPE A)

STATE OF CALIFORNIA
DEPARTMENT OF TRANSPORTATION

MIDWEST GUARDRAIL SYSTEM STANDARD HARDWARE

NO SCALE

RSP A77M1 DATED JULY 19, 2013 SUPPLEMENTS THE STANDARD PLANS BOOK DATED 2010.

REVISED STANDARD PLAN RSP A77M1

2010 REVISED STANDARD PLAN RSP A77M1

DATE PLOTTED => 06-APR-2015
TIME PLOTTED => 07:44

Dist	COUNTY	ROUTE	POST MILES TOTAL PROJECT	SHEET No.	TOTAL SHEETS
01	Hum	299	30.2/30.6	46	57

Randell D. Hiatt
REGISTERED CIVIL ENGINEER

November 15, 2013
PLANS APPROVAL DATE

REGISTERED PROFESSIONAL ENGINEER
Randell D. Hiatt
No. C50200
Exp. 6-30-15
CIVIL
STATE OF CALIFORNIA

THE STATE OF CALIFORNIA OR ITS OFFICERS OR AGENTS SHALL NOT BE RESPONSIBLE FOR THE ACCURACY OR COMPLETENESS OF SCANNED COPIES OF THIS PLAN SHEET.

TO ACCOMPANY PLANS DATED 04-06-15

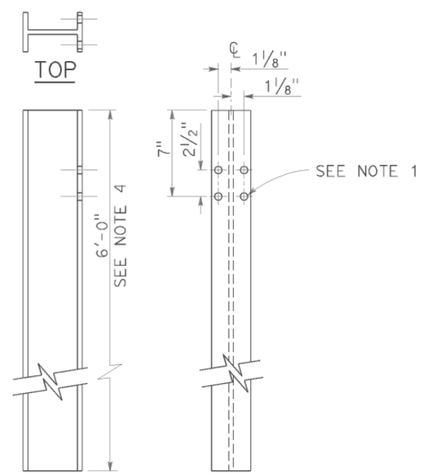

W6 x 9 OR W6 x 8.5
STEEL POST
See Note 4

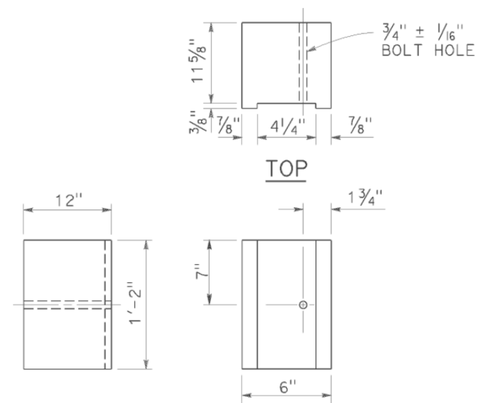

6" x 12"
NOTCHED WOOD BLOCK
See Notes 2 and 3

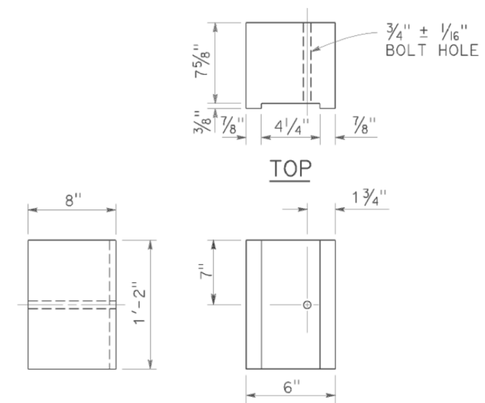

6" x 8"
NOTCHED WOOD BLOCK
Only for use with metal beam guard railing. See Note 5

NOTES:

1. All holes in steel post shall be 13/16" Dia maximum.
2. Dimensions shown for wood block are nominal.
3. Notched face of block faces steel post.
4. 6'-0" length posts to be used for typical roadway installation. See Revised Standard Plan RSP A77N3.
5. See Revised Standard Plan RSP A77L3 for use of 6" x 8" and 8" x 8" notched wood blocks.
6. This post and 8" x 12" block combination to be used for line post sections of MGS on narrow roadways and where strengthened line post sections of MGS are warranted to shield fixed objects.

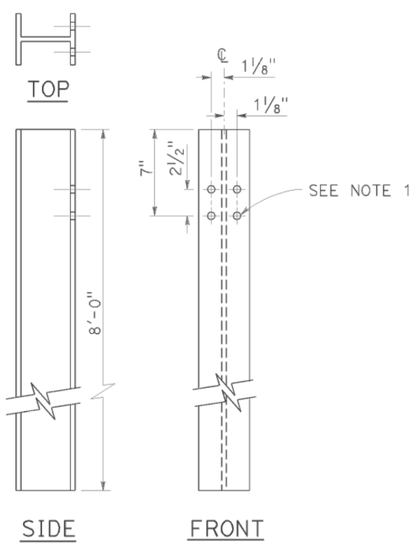

W6 x 15
STEEL POST
See Note 6

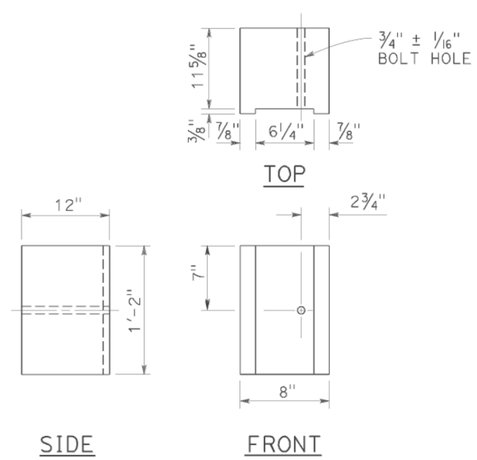

8" x 12"
NOTCHED WOOD BLOCK
See Notes 2 and 3

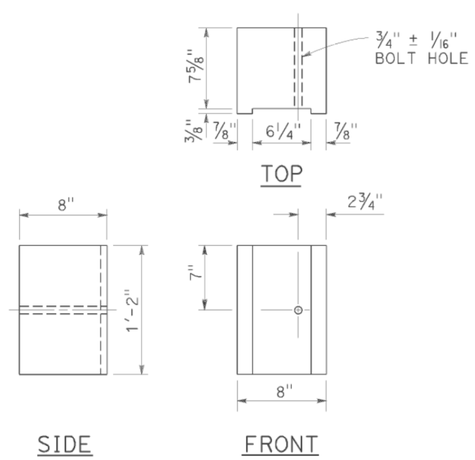

8" x 8"
NOTCHED WOOD BLOCK
Only for use with metal beam guard railing. See Note 5

STATE OF CALIFORNIA
DEPARTMENT OF TRANSPORTATION

MIDWEST GUARDRAIL SYSTEM STEEL POST AND NOTCHED WOOD BLOCK DETAILS

NO SCALE

RSP A77N2 DATED NOVEMBER 15, 2013 SUPERSEDES RSP A77N2
DATED JULY 19, 2013 THAT SUPPLEMENTS THE STANDARD PLANS BOOK DATED 2010.

REVISED STANDARD PLAN RSP A77N2

2010 REVISED STANDARD PLAN RSP A77N2

DATE PLOTTED => 06-APR-2015
TIME PLOTTED => 07:45

Dist	COUNTY	ROUTE	POST MILES TOTAL PROJECT	SHEET No.	TOTAL SHEETS
01	Hum	299	30.2/30.6	47	57

Randell D. Hiatt
REGISTERED CIVIL ENGINEER

November 15, 2013
PLANS APPROVAL DATE

REGISTERED PROFESSIONAL ENGINEER
Randell D. Hiatt
No. C50200
Exp. 6-30-15
CIVIL
STATE OF CALIFORNIA

THE STATE OF CALIFORNIA OR ITS OFFICERS OR AGENTS SHALL NOT BE RESPONSIBLE FOR THE ACCURACY OR COMPLETENESS OF SCANNED COPIES OF THIS PLAN SHEET.

TO ACCOMPANY PLANS DATED 04-06-15

2010 REVISED STANDARD PLAN RSP A77N3

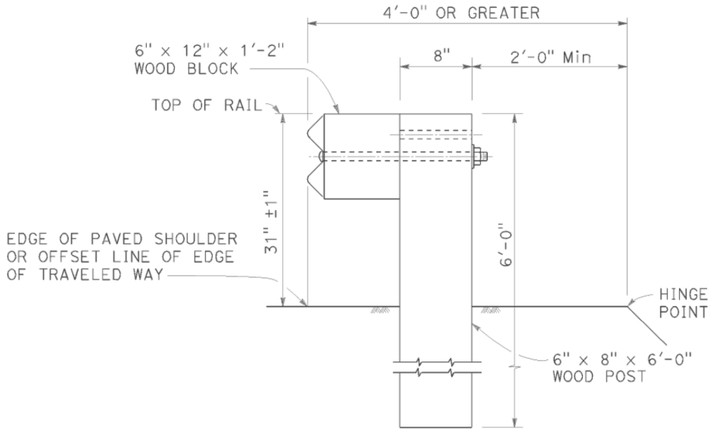

DETAIL A
TYPICAL ROADWAY INSTALLATION
See Note 1

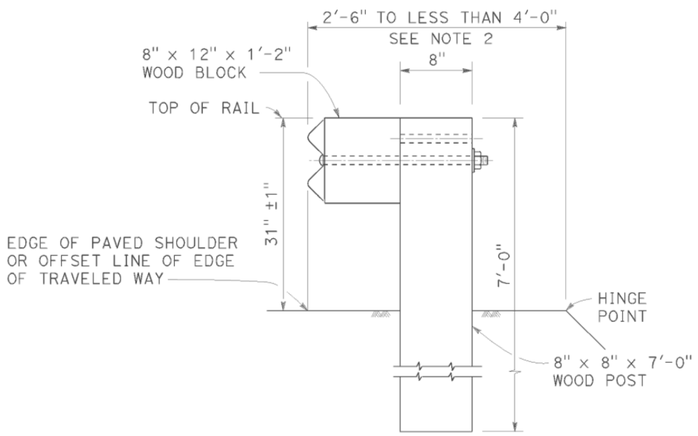

DETAIL B
NARROW ROADWAY INSTALLATION
See Note 1

POST EMBEDMENT

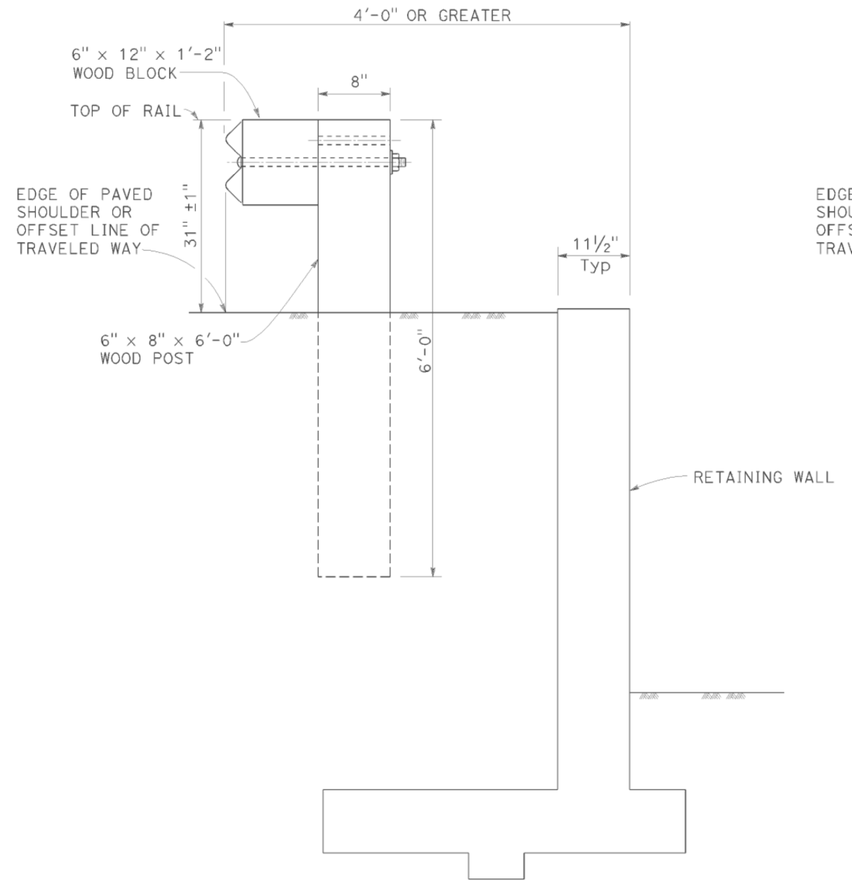

DETAIL C

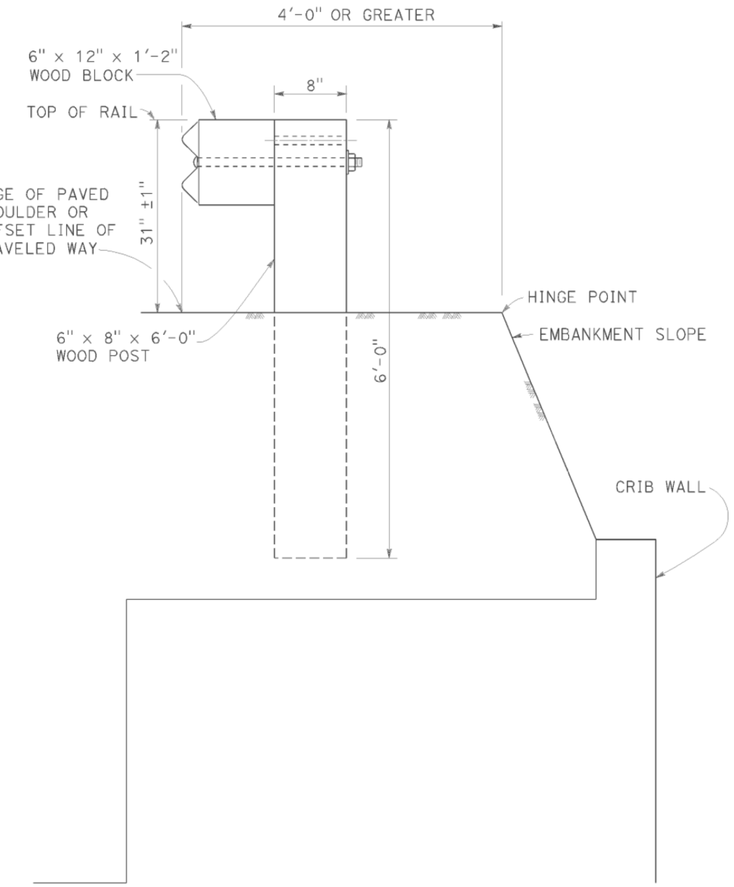

DETAIL D

INSTALLATION AT EARTH RETAINING WALLS

NOTES:

1. These installation details also applicable to steel line post installations. For Detail A, C, and D, where steel line post installations are constructed, W6 x 8.5 or W6 x 9 steel post, 6'-0" in length, with 6" x 12" x 1'-2" notched wood blocks or notched recycled plastic blocks are to be used in place of the size of wood post and wood block shown. For Detail B, where steel line post installations are constructed, W6 x 15 steel post, 8'-0" in length, with 8" x 12" x 1'-2" notched wood blocks or notched recycled plastic blocks are to be used in place of the size of wood post and wood block shown. For additional installation details, see Revised Standard Plan RSP A77L1 and RSP A77L2.
2. Where the distance between the face of the rail and the hinge point is less than 2'-6", see the Project Plans for special details.
3. For dike positioning with MGS installations, see Revised Standard Plan RSP A77N4.

STATE OF CALIFORNIA
DEPARTMENT OF TRANSPORTATION

MIDWEST GUARDRAIL SYSTEM TYPICAL LINE POST EMBEDMENT AND HINGE POINT OFFSET DETAILS

NO SCALE

RSP A77N3 DATED NOVEMBER 15, 2013 SUPERSEDES RSP A77N3 DATED JULY 19, 2013 THAT SUPPLEMENTS THE STANDARD PLANS BOOK DATED 2010.

REVISED STANDARD PLAN RSP A77N3

DATE PLOTTED => 06-APR-2015
TIME PLOTTED => 07:45

Dist	COUNTY	ROUTE	POST MILES TOTAL PROJECT	SHEET No.	TOTAL SHEETS
01	Hum	299	30.2/30.6	48	57

Randell D. Hiatt
REGISTERED CIVIL ENGINEER

July 19, 2013
PLANS APPROVAL DATE

REGISTERED PROFESSIONAL ENGINEER
Randell D. Hiatt
No. C50200
Exp. 6-30-15
CIVIL
STATE OF CALIFORNIA

THE STATE OF CALIFORNIA OR ITS OFFICERS OR AGENTS SHALL NOT BE RESPONSIBLE FOR THE ACCURACY OR COMPLETENESS OF SCANNED COPIES OF THIS PLAN SHEET.

TO ACCOMPANY PLANS DATED 04-06-15

NOTES:

1. When necessary to place dike more than 7" in front of face of MGS, only Type C dike may be used. For dike details, see Revised Standard Plan RSP A87B.
2. For standard railing post embedment, see Revised Standard Plan RSP A77N3.
3. MGS delineation to be used where shown on the Project Plans.
4. When dike or curb is placed under MGS, the maximum height of the dike or curb shall be 6". Mountable dike should not be used. For dike and curb details, see Revised Standard Plans RSP A87A and RSP A87B.
5. For details of typical distance between the face of rail and hinge point, see Revised Standard Plan RSP A77N3.
6. For steel line posts, use 1/4 - 20 self-tapping screws in 0.22" diameter holes or 1/4" bolts in 9/32" diameter holes.

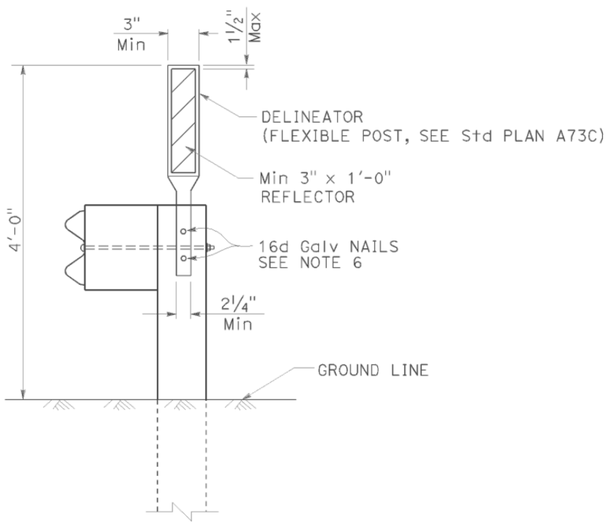

MGS DELINEATION
See Note 3

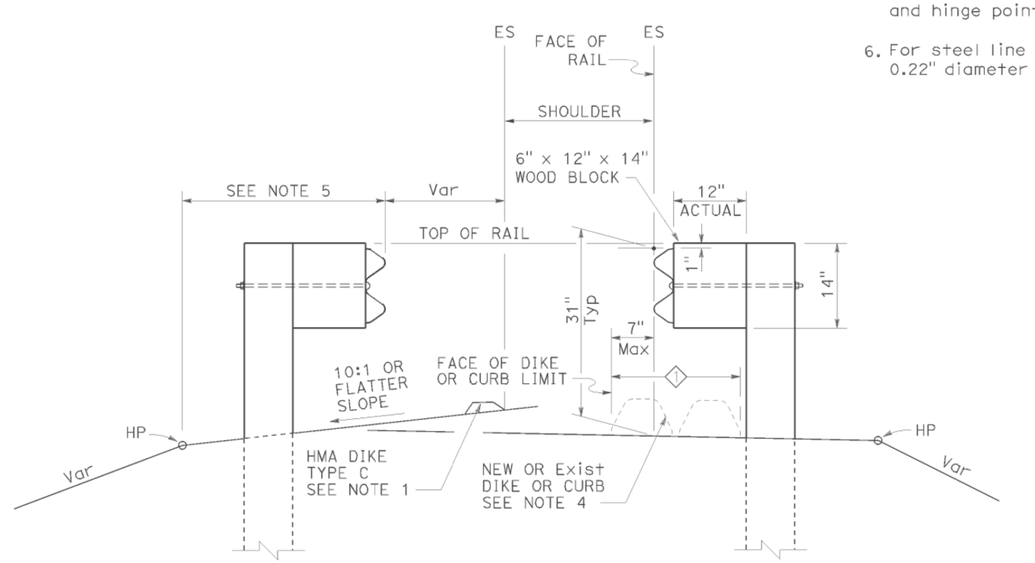

DIKE POSITIONING
See Note 1

1 PERMISSIBLE DIKE OR CURB PLACEMENT AREA

STATE OF CALIFORNIA
DEPARTMENT OF TRANSPORTATION

MIDWEST GUARDRAIL SYSTEM TYPICAL RAILING DELINEATION AND DIKE POSITIONING DETAILS

NO SCALE

RSP A77N4 DATED JULY 19, 2013 SUPPLEMENTS THE STANDARD PLANS BOOK DATED 2010.

REVISED STANDARD PLAN RSP A77N4

2010 REVISED STANDARD PLAN RSP A77N4

DATE PLOTTED => 06-APR-2015
TIME PLOTTED => 07:45

Dist	COUNTY	ROUTE	POST MILES TOTAL PROJECT	SHEET No.	TOTAL SHEETS
01	Hum	299	30.2/30.6	49	57

Randell D. Hiatt
REGISTERED CIVIL ENGINEER

July 19, 2013
PLANS APPROVAL DATE

REGISTERED PROFESSIONAL ENGINEER
Randell D. Hiatt
No. C50200
Exp. 6-30-15
CIVIL
STATE OF CALIFORNIA

THE STATE OF CALIFORNIA OR ITS OFFICERS OR AGENTS SHALL NOT BE RESPONSIBLE FOR THE ACCURACY OR COMPLETENESS OF SCANNED COPIES OF THIS PLAN SHEET.

TO ACCOMPANY PLANS DATED 04-06-15

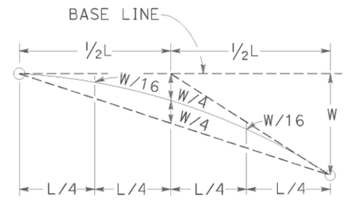

TYPICAL PARABOLIC LAYOUT

BASE LINE (EDGE OF PAVED SHOULDER OR OFFSET LINE OF EDGE OF TRAVELED WAY)

$$Y = \frac{WX^2}{L^2}$$

Y = OFFSET FROM BASE LINE
W = MAXIMUM OFFSET
X = DISTANCE ALONG BASE LINE
L = LENGTH OF FLARE

PARABOLIC FLARE OFFSETS

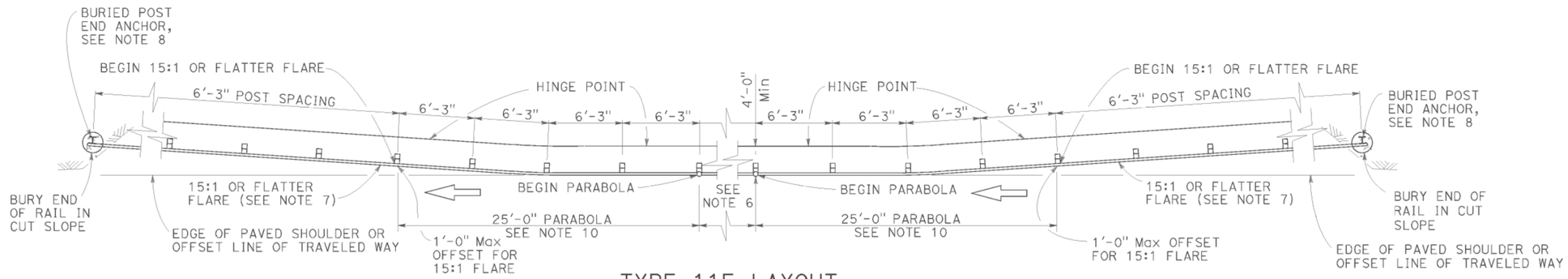

TYPE 11F LAYOUT

(Embankment MGS installation with a buried end anchor treatment at each end of railing)
See Notes 4 and 9

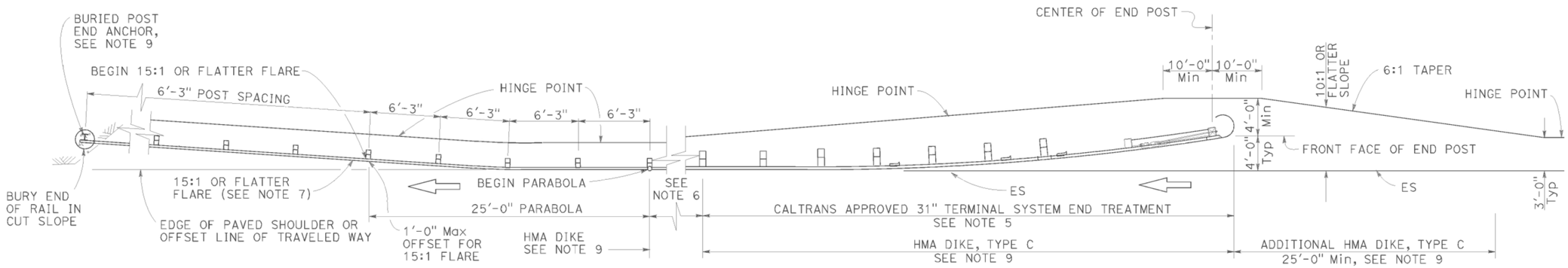

TYPE 11G LAYOUT

(Embankment MGS installation with 31" flared end treatment and a buried end anchor treatment at the ends of railing)
See Notes 4 and 9

NOTES:

1. Line post, blocks and hardware to be used are shown on Revised Standard Plans RSP A77L1, RSP A77L2, RSP A77M1, RSP A77N1 and RSP A77N2.
2. MGS post spacing to be 6'-3" center to center, except as otherwise noted.
3. Except as noted, line posts are 6" x 8" x 6'-0" wood with 6" x 12" x 1'-2" wood blocks. W6 x 8.5 or W6 x 9 steel posts, 6'-0" in length, with 6" x 12" x 1'-2" notched wood blocks or plastic blocks may be used for 6" x 8" x 6'-0" wood post with 6" x 12" x 1'-2" wood blocks where applicable and when specified.
4. Layout Types 11D through 11L, shown on the A77P Series of Standard Plans, are typically used where MGS is recommended to shield embankment slopes and a crashworthy 31" end treatment is required for both directions of traffic.
5. The type of 31" terminal system end treatment to be used will be shown on the Project Plans.
6. Dependent on site conditions (embankment height and side slope), construction of additional MGS (length equal to multiples of 12'-6" with 6'-3" post spacing) may be advisable.
7. The 15:1 or flatter flare used with buried end anchors is based on the edge of the paved shoulder or offset line of edge of the traveled way. The length of MGS within the 15:1 or flatter flare is based on site conditions and should be a length equal to multiples of 12'-6".
8. For details of the buried post end anchor used with Type 11F and 11G Layouts, see Revised Standard Plan RSP A77T2.
9. Where placement of dike is required with MGS installations, see Revised Standard Plan RSP A77N4 for dike positioning details.
10. For typical flare offsets for 25'-0" length parabola with maximum offset of 1'-0", see Revised Standard Plan RSP A77P1.

STATE OF CALIFORNIA
DEPARTMENT OF TRANSPORTATION

MIDWEST GUARDRAIL SYSTEM TYPICAL LAYOUTS FOR EMBANKMENTS

NO SCALE

RSP A77P3 DATED JULY 19, 2013 SUPPLEMENTS THE STANDARD PLANS BOOK DATED 2010.

REVISED STANDARD PLAN RSP A77P3

2010 REVISED STANDARD PLAN RSP A77P3

DATE PLOTTED => 06-APR-2015
TIME PLOTTED => 07:45

Dist	COUNTY	ROUTE	POST MILES TOTAL PROJECT	SHEET No.	TOTAL SHEETS
01	Hum	299	30.2/30.6	50	57

REGISTERED CIVIL ENGINEER

July 19, 2013
PLANS APPROVAL DATE

REGISTERED PROFESSIONAL ENGINEER
Michael Janzen
No. 44788
Exp. 03-31-14
CIVIL
STATE OF CALIFORNIA

THE STATE OF CALIFORNIA OR ITS OFFICERS OR AGENTS SHALL NOT BE RESPONSIBLE FOR THE ACCURACY OR COMPLETENESS OF SCANNED COPIES OF THIS PLAN SHEET.

TO ACCOMPANY PLANS DATED 04-06-15

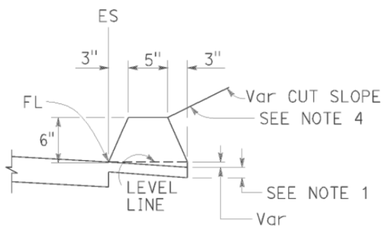

TYPE A
See Note 3

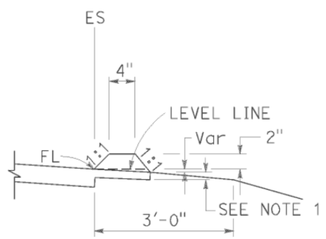

TYPE C

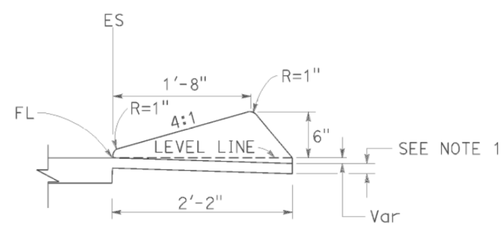

TYPE D

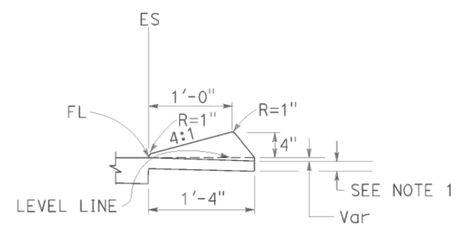

TYPE E

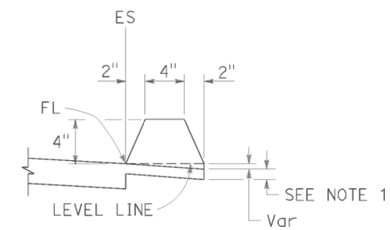

TYPE F
See Note 5

DIKES

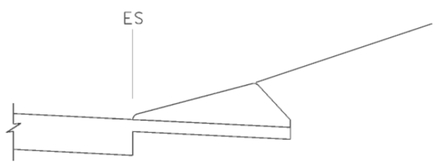

CASE C-1
Cut Slope

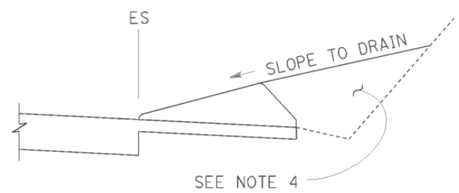

CASE C-2
Cut Slope

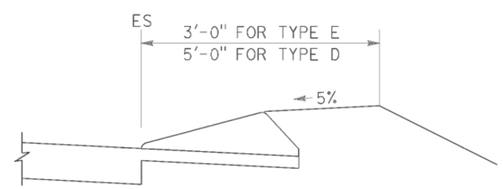

CASE F

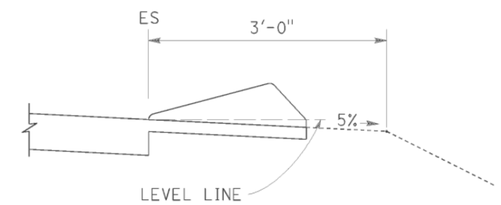

CASE R
See Note 2

TYPE D AND E BACKFILL DETAILS

NOTES:

1. For HMA shoulders only, extend top layer of HMA placed on the shoulder under dike with no joint at the ES. For projects with OGFC shoulders, do not extend OGFC under dike. See project plans for modified dike detail.
2. Case R applies to retrofit only projects where restrictive conditions do not provide enough width for Case F backfill.
3. Type A dike only to be used where restrictive slope conditions do not provide enough width to use Type D or Type E dike.
4. Fill and compact with excavated material to top of dike.
5. Use Type F dike, where dike is required with guard railing installations. See Revised Standard Plan RSP A77N4 for dike positioning details.

DIKE QUANTITIES

TYPE	CUBIC YARDS PER LINEAR FOOT
A	0.0135
C	0.0038
D	0.0293
E	0.0130
F	0.0066

Quantities based on 5% cross slope.

STATE OF CALIFORNIA
DEPARTMENT OF TRANSPORTATION

HOT MIX ASPHALT DIKES

NO SCALE

RSP A87B DATED JULY 19, 2013 SUPERSEDES STANDARD PLAN A87B
DATED MAY 20, 2011 - PAGE 120 OF THE STANDARD PLANS BOOK DATED 2010.

REVISED STANDARD PLAN RSP A87B

2010 REVISED STANDARD PLAN RSP A87B

DATE PLOTTED => 06-APR-2015
TIME PLOTTED => 07:45

DIST	COUNTY	ROUTE	POST MILES TOTAL PROJECT	SHEET No.	TOTAL SHEETS
01	Hum	299	30.2/30.6	51	57

REGISTERED CIVIL ENGINEER

November 15, 2013
PLANS APPROVAL DATE

Cornelis M. Hakim No. C55610 Exp. 12-31-14 CIVIL STATE OF CALIFORNIA REGISTERED PROFESSIONAL ENGINEER

THE STATE OF CALIFORNIA OR ITS OFFICERS OR AGENTS SHALL NOT BE RESPONSIBLE FOR THE ACCURACY OR COMPLETENESS OF SCANNED COPIES OF THIS PLAN SHEET.

TO ACCOMPANY PLANS DATED 04-06-15

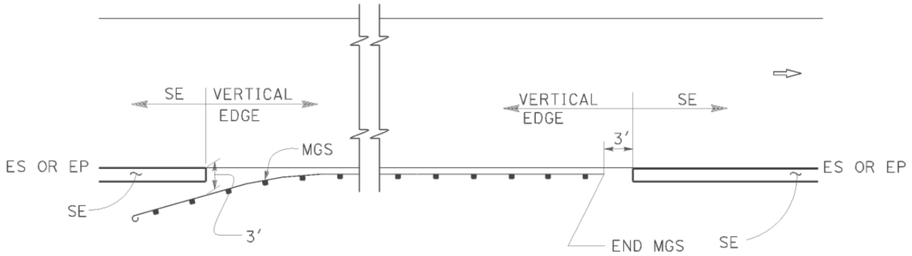

MGS

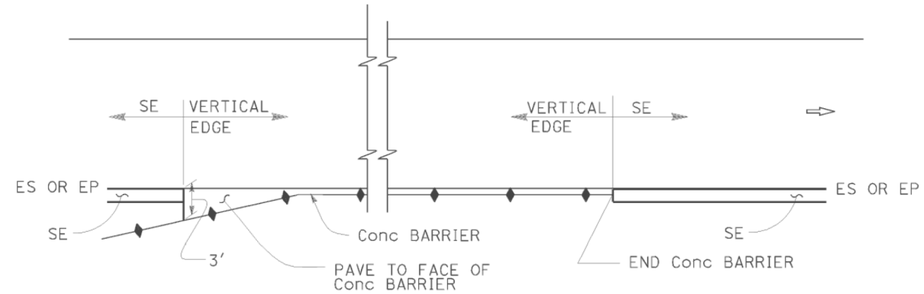

CONCRETE BARRIER

ABBREVIATIONS:

SE SAFETY EDGE

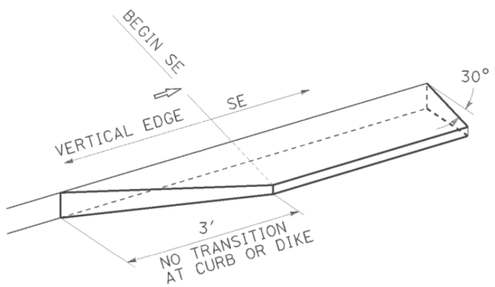

TRANSITION DETAIL FOR CONCRETE ONLY

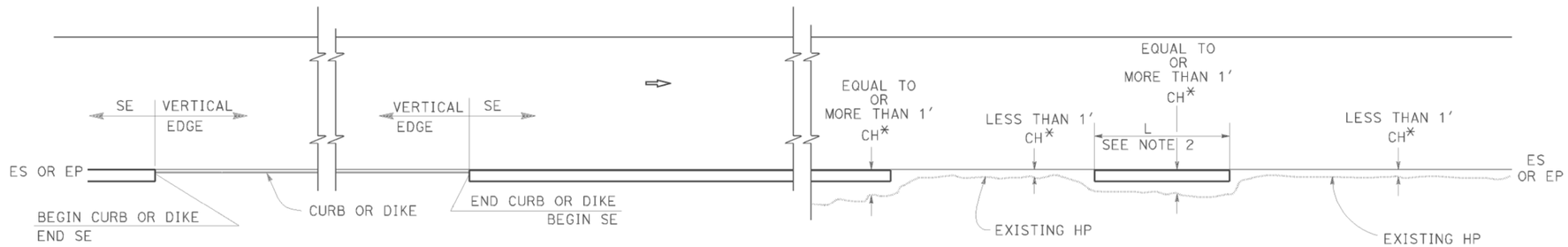

CURB OR DIKE

NARROW SIDE SLOPE

* CH = Distance from ES or EP to existing HP.

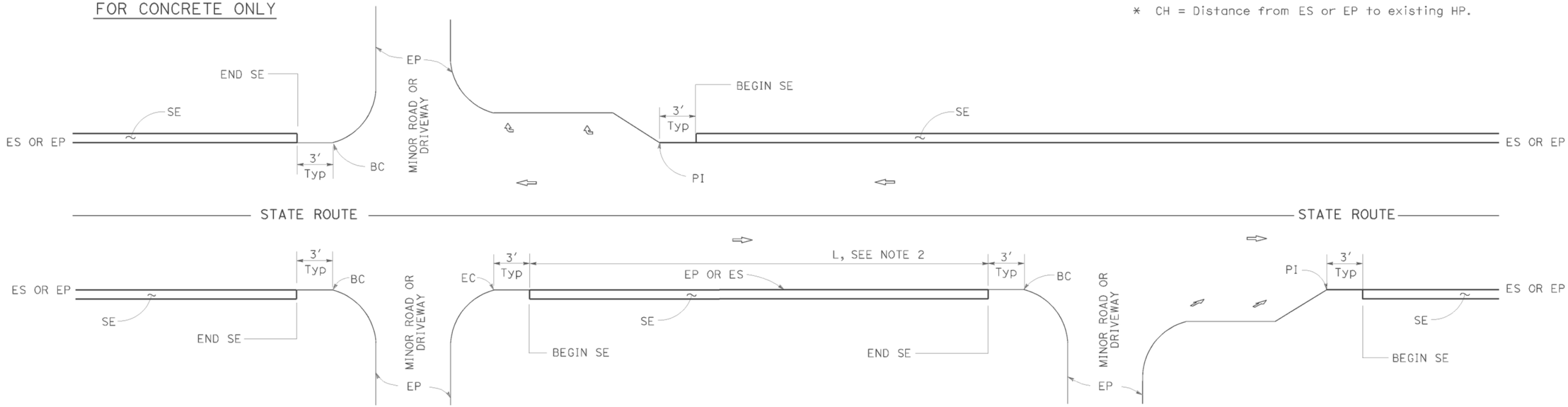

INTERSECTION

DRIVEWAY AND INTERSECTION

MINOR ROADWAY OR DRIVEWAY

NOTES:

1. For details not shown, see Revised Standard Plans RSP P75 and RSP P76.
2. Safety edge is optional when L is less than 30′.

STATE OF CALIFORNIA
DEPARTMENT OF TRANSPORTATION

PAVEMENT EDGE TREATMENTS

NO SCALE

RSP P74 DATED NOVEMBER 15, 2013 SUPERSEDES RSP P74 DATED JANUARY 20, 2012 THAT SUPPLEMENTS THE STANDARD PLANS BOOK DATED 2010.

REVISED STANDARD PLAN RSP P74

2010 REVISED STANDARD PLAN RSP P74

DATE PLOTTED => 06-APR-2015
TIME PLOTTED => 07:45

DIST	COUNTY	ROUTE	POST MILES TOTAL PROJECT	SHEET No.	TOTAL SHEETS
01	Hum	299	30.2/30.6	52	57

REGISTERED CIVIL ENGINEER

November 15, 2013
PLANS APPROVAL DATE

REGISTERED PROFESSIONAL ENGINEER
Cornelis M. Hakim
No. C55610
Exp. 12-31-14
CIVIL
STATE OF CALIFORNIA

THE STATE OF CALIFORNIA OR ITS OFFICERS OR AGENTS SHALL NOT BE RESPONSIBLE FOR THE ACCURACY OR COMPLETENESS OF SCANNED COPIES OF THIS PLAN SHEET.

TO ACCOMPANY PLANS DATED 04-06-15

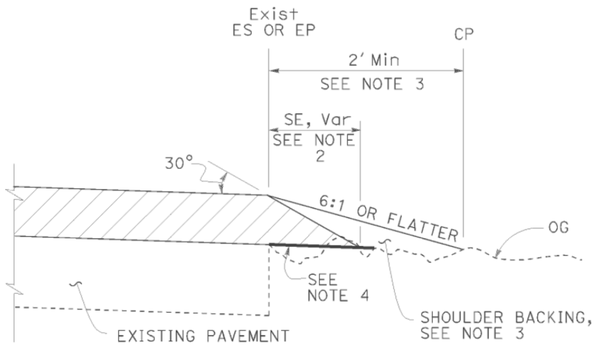

CASE A
Safety Edge

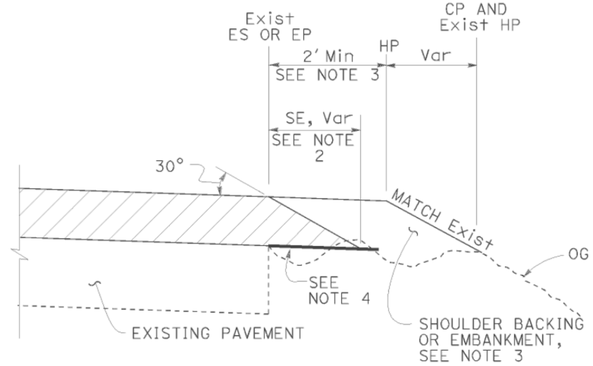

CASE B
Safety Edge

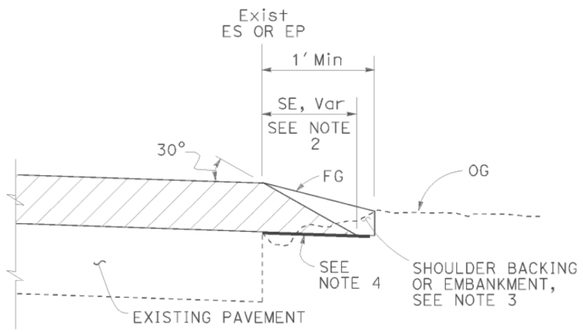

CASE C
Safety Edge

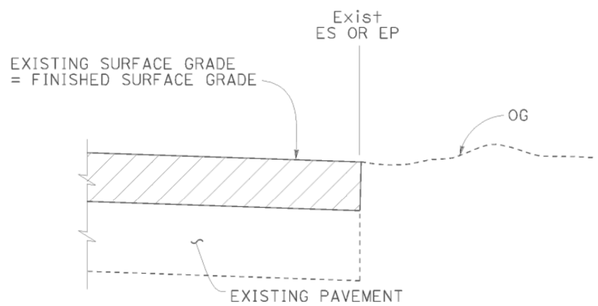

CASE D
Vertical Edge

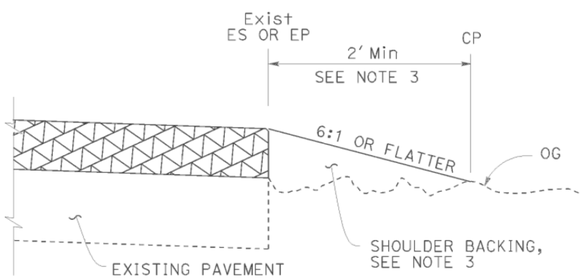

CASE E
Vertical Edge

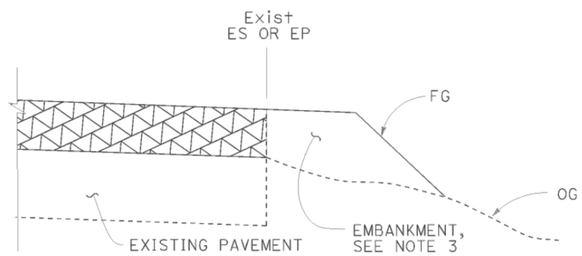

CASE F
Vertical Edge
* See Table A and Revised Std Plan RSP P74

LEGEND:

- HMA OVERLAY
- HMA OR CONCRETE OVERLAY
- CONCRETE OVERLAY

ABBREVIATIONS:

SE SAFETY EDGE
TT TOTAL THICKNESS OF SE

TABLE A
EDGE TREATMENT FOR VARIOUS OVERLAY THICKNESS AND CONDITIONS

	OVERLAY THICKNESS	
FIELD CONDITION	LESS THAN 0.15'	0.15' OR MORE
Exist SLOPE 6:1 OR FLATTER	CASE E	CASE A
Exist SLOPE 3:1 TO 6:1	CASE E	CASE B
Exist SLOPE STEEPER THAN 3:1	CASE F	CASE F
CUT SECTION (REPLACE, COLD PLANE, MILL PAVEMENT)	CASE D	CASE C

ADDITIONAL HMA OR CONCRETE QUANTITIES FOR SE/SIDE/MILE

TYPICAL CROSS SECTION	TT	TOTAL ADDITIONAL MATERIAL FOR SE/SIDE/MILE		
		HMA (TON)	CONCRETE (CY)*	CONCRETE (CY)**
TT	0.15'	NA	NA	NA
	0.20'	13.7	NA	NA
	0.30'	30.9	NA	NA
	0.40'	54.9	NA	NA
	0.45'	69.4	NA	NA
TT 0.43'	0.50'	84.2	NA	NA
	0.60'	113.9	NA	NA
	0.70'	143.6	70.9	94.2
	0.80'	173.3	85.6	112.2
	0.90'	203.0	100.3	130.2
	1.00'	232.7	114.9	148.2
	1.10'	262.4	129.6	166.2
	1.20'	292.1	144.3	184.2

* For Detail "A"
** For Optional Detail "A"

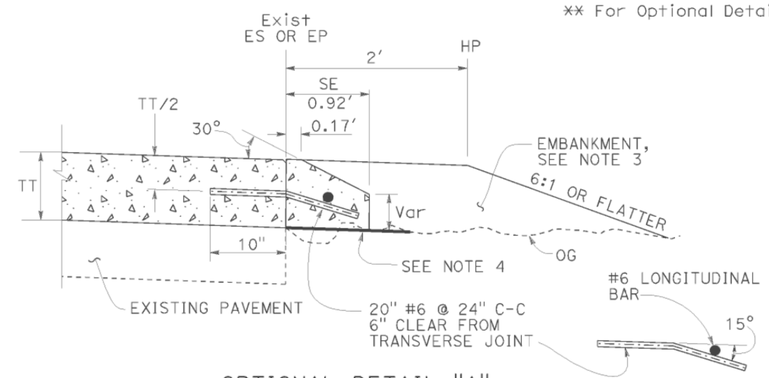

OPTIONAL DETAIL "A"
For concrete overlay
See Note 5

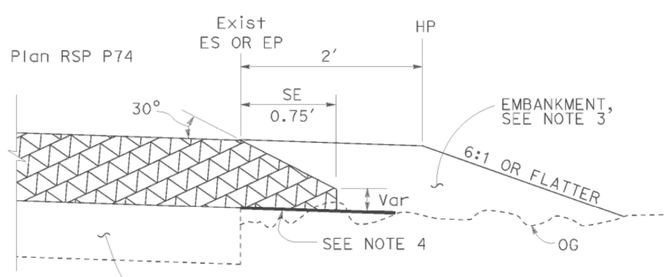

DETAIL "A"
For HMA overlay thickness more than 0.43' or concrete overlay

NOTES:

1. For limits of safety edge and vertical edge treatments, see Revised Standard Plan RSP P74.
2. Details shown for HMA overlay thickness less than 0.43'. See Detail "A" for HMA overlay thickness more than 0.43' or concrete overlay.
3. For locations and limits of shoulder backing or embankment see project plans.
4. Grade existing ground to place safety edge. 1' minimum width
5. Safety edge transverse joint must match overlay transverse joint. End of #6 longitudinal bar must be 2" ±½" clear from transverse joint.
6. Safety edge is not needed in the area of MGS, barrier, right turn lane and acceleration lane. See Revised Standard Plan RSP P74.

STATE OF CALIFORNIA
DEPARTMENT OF TRANSPORTATION

PAVEMENT EDGE TREATMENTS-OVERLAYS

NO SCALE

RSP P75 DATED NOVEMBER 15, 2013 SUPERSEDES RSP P75 DATED JANUARY 20, 2012 THAT SUPPLEMENTS THE STANDARD PLANS BOOK DATED 2010.

REVISED STANDARD PLAN RSP P75

2010 REVISED STANDARD PLAN RSP P75

DATE PLOTTED => 06-APR-2015
TIME PLOTTED => 07:45

DIST	COUNTY	ROUTE	POST MILES TOTAL PROJECT	SHEET No.	TOTAL SHEETS
01	Hum	299	30.2/30.6	53	57

REGISTERED CIVIL ENGINEER

November 15, 2013
PLANS APPROVAL DATE

REGISTERED PROFESSIONAL ENGINEER Cornelis M. Hakim No. C55610 Exp. 12-31-14 CIVIL STATE OF CALIFORNIA

THE STATE OF CALIFORNIA OR ITS OFFICERS OR AGENTS SHALL NOT BE RESPONSIBLE FOR THE ACCURACY OR COMPLETENESS OF SCANNED COPIES OF THIS PLAN SHEET.

TO ACCOMPANY PLANS DATED 04-06-15

LEGEND:

- HMA PAVEMENT
- HMA OR CONCRETE PAVEMENT
- CONCRETE PAVEMENT

ABBREVIATIONS:

SE SAFETY EDGE
TT TOTAL THICKNESS OF SE
HW HINGE WIDTH, DISTANCE FROM ES OR EP TO HP

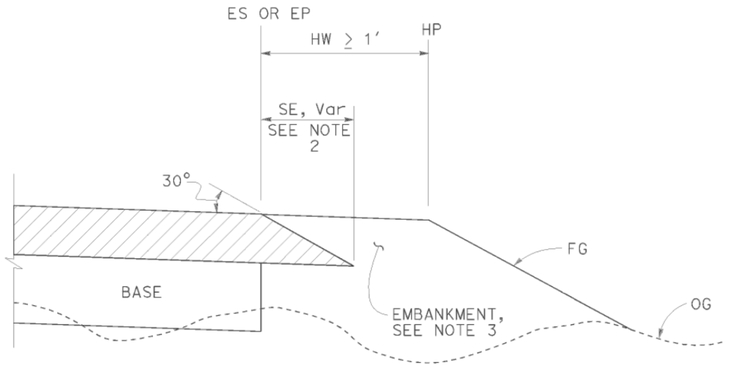

CASE K
Safety Edge - Fill Section, HW ≥ 1′

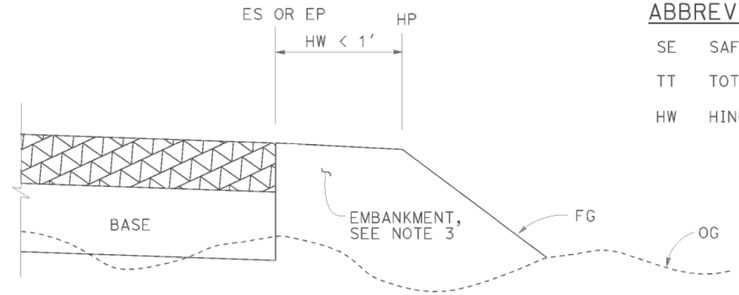

CASE L
Vertical Edge - Fill Section, HW < 1′

FILL SECTION

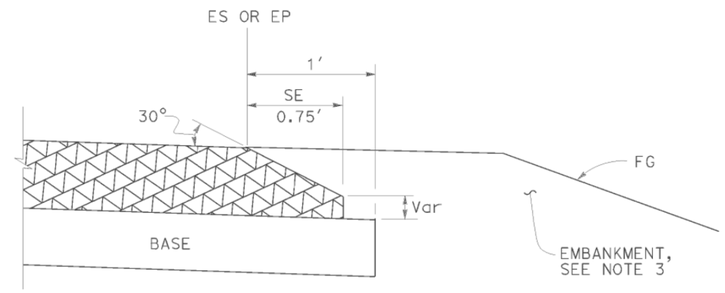

DETAIL "B"
For HMA pavement thickness more than 0.43′ or concrete pavement

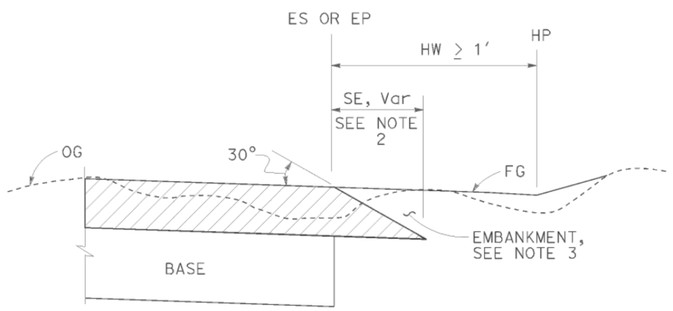

CASE M
Safety Edge - Cut Section, HW ≥ 1′

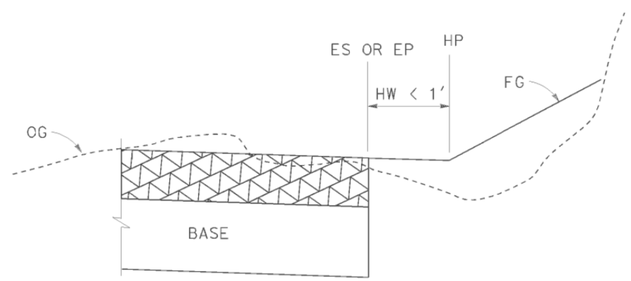

CASE N
Vertical Edge - Cut Section, HW < 1′

CUT SECTION

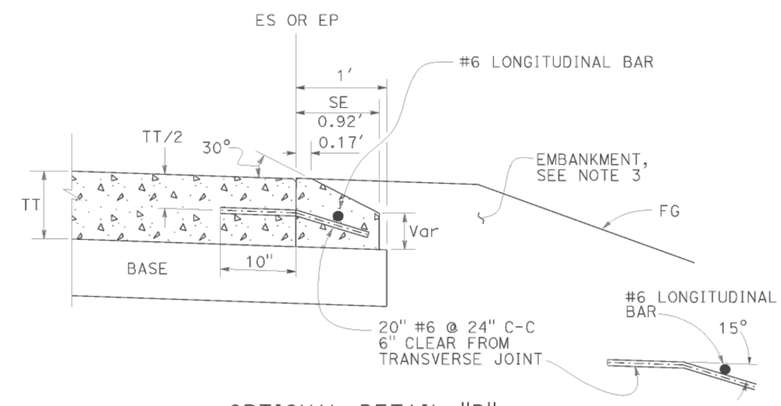

OPTIONAL DETAIL "B"
For concrete pavement
See Note 4

NOTES:

1. For limits of safety edge and vertical edge treatments, see Revised Standard Plan RSP P74
2. Details shown for HMA pavement thickness less than 0.43′. See Detail "B" for HMA pavement thickness more than 0.43′ or concrete pavement.
3. For locations and limits of embankment see project plans.
4. Safety edge transverse joint must match pavement transverse joint. End of #6 longitudinal bar must be 2" ±½" clear from transverse joint.
5. Safety edge is not needed in the area of MGS, barrier, right turn lane and acceleration lane. See Revised Standard Plan RSP P74.

STATE OF CALIFORNIA
DEPARTMENT OF TRANSPORTATION

PAVEMENT EDGE TREATMENTS-NEW CONSTRUCTION

NO SCALE

RSP P76 DATED NOVEMBER 15, 2013 SUPERSEDES RSP P76 DATED JANUARY 20, 2012 THAT SUPPLEMENTS THE STANDARD PLANS BOOK DATED 2010.

REVISED STANDARD PLAN RSP P76

2010 REVISED STANDARD PLAN RSP P76

DATE PLOTTED => 06-APR-2015
TIME PLOTTED => 07:45

Dist	COUNTY	ROUTE	POST MILES TOTAL PROJECT	SHEET No.	TOTAL SHEETS
01	Hum	299	30.2/30.6	54	57

Raymond Don Tsztoo
REGISTERED CIVIL ENGINEER

April 19, 2013
PLANS APPROVAL DATE

REGISTERED PROFESSIONAL ENGINEER Raymond Don Tsztoo No. C37332 Exp. 6-30-14 CIVIL STATE OF CALIFORNIA

THE STATE OF CALIFORNIA OR ITS OFFICERS OR AGENTS SHALL NOT BE RESPONSIBLE FOR THE ACCURACY OR COMPLETENESS OF SCANNED COPIES OF THIS PLAN SHEET.

TO ACCOMPANY PLANS DATED 04-06-15

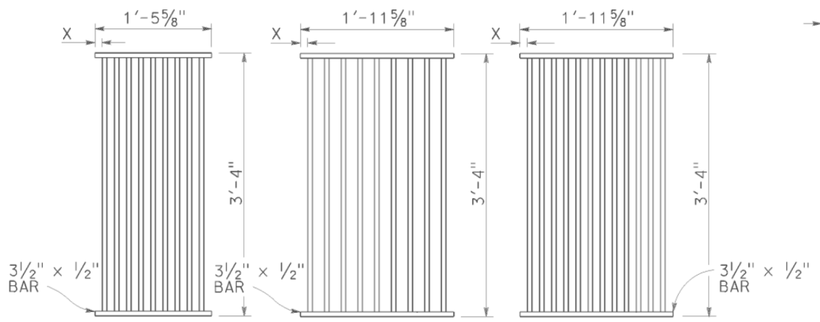

TYPE 18-9

1⅜" Clear spacing. Use within the roadbed on highways where bicycles and pedestrians are excluded.

TYPE 24-9

2" Clear spacing. Use in locations off the roadbed on all types of highways.

TYPE 24-12

1⅜" Clear spacing. Use within the roadbed on highways where bicycles and pedestrians are excluded.

RECTANGULAR GRATE DETAILS

(See table below)

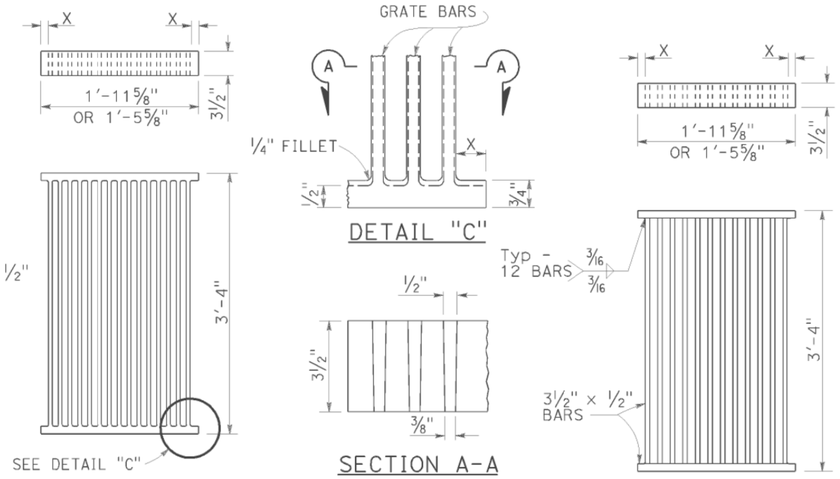

ALTERNATIVE CAST DUCTILE IRON GRATE OR CAST CARBON STEEL GRATE

ALTERNATIVE WELDED GRATE

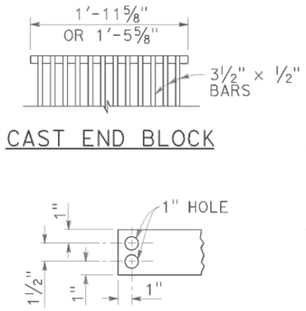

CAST END BLOCK

END OF BAR

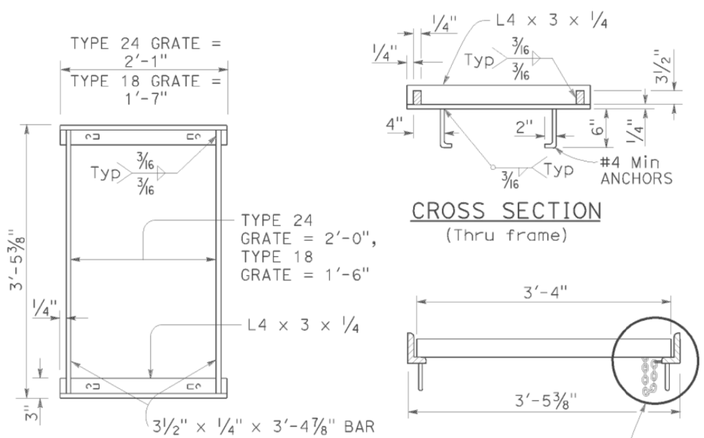

TYPICAL FRAME

CROSS SECTION

(Thru frame)

LONGITUDINAL SECTION

(Thru frame and grate)

RECTANGULAR FRAME DETAILS

(For all rectangular grates)

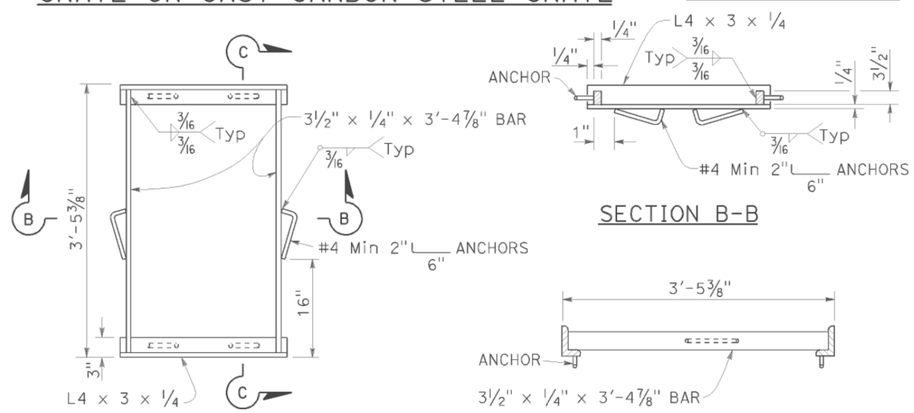

ALTERNATIVE ANCHOR FOR RECTANGULAR FRAME

(For details not shown, See Rectangular Frame Details)

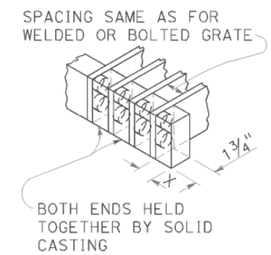

ALTERNATIVE CAST DUCTILE IRON OR CAST CARBON STEEL END BLOCK GRATE

NOTES:

1. Grate type numbers refer to approximate width of grate in inches and number of bars, respectively.
2. Contractor has the option of using cast ductile iron, cast carbon steel, welded, bolted, or cast end block grate.
3. Rounded top of bars optional on all grates.
4. Pipe inlets with a grate shall be placed so that bars parallel direction of principle surface flow.
5. Complete joint penetration butt welds may be substituted for the fillet welds on all anchors.
6. Standard square, hexagon, round or equivalent headed anchors may be substituted for the right angle hooks on the anchors shown on this plan.
7. Grate and frame weights are based on welded grates (weights of face angles, steps, protection bars, etc. are not included).
8. Connect chain to grate and frame only at locations shown on the plans. When chain is required, do not use cast ductile iron grates.

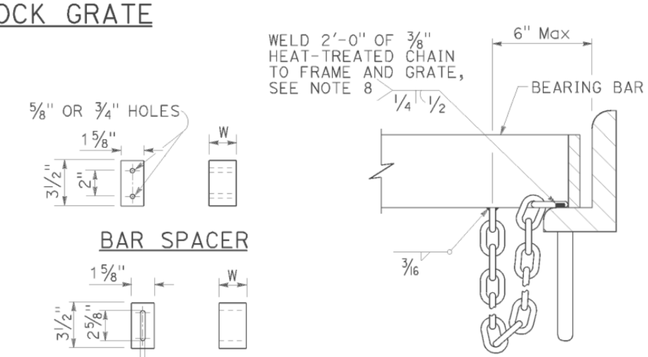

BAR SPACER

ALTERNATIVE SPACER

W = 1⅜" or 2"

DETAIL "D"

(Steel grates only)

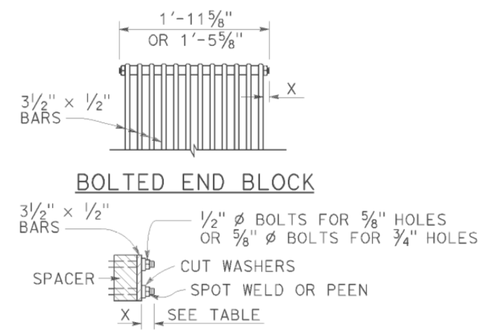

BOLTED END BLOCK

BOLTING DETAIL

ALTERNATIVE BOLTED GRATE

GRATE BAR SPACING TABLE

TYPE	No. OF BARS	CLEAR BAR SPACING	X
18-9	9	1⅜"	1 1/16"
24-9	9	2"	1 9/16"
24-12	12	1⅜"	1¼"

INLET TYPE	COVER TYPE	WEIGHT LB
OS	PLATE	174
OL-7	PLATE	170
OL-10	PLATE	170
OL-14	PLATE	170
OL-21	PLATE	170
OCP	PLATE	112
OCPI	PLATE	112
OCPI	REDWOOD	42
OMP	PLATE	177
OMPI	PLATE	177

INLET TYPE	GRATE TYPE	No. OF GRATES	WEIGHT LB
GDO	24-12	2	634
GOL-7	24-12	1	326
GOL-10	24-12	1	326
GO,G1,G2,G3,G4 (TYPE 24)	24-9	1	263
	24-12	1	326
G4 (TYPE 18),G5,G6	18-9	1	249
GT1	18-9	2	498
GT2	18-9	2	498
GT3	24-12	2	652
GT4	24-12	2	652
TRASH RACK			22
GRATE CHAIN			3

BASIS FOR Misc IRON & STEEL FINAL PAY WEIGHTS FOR DRAINAGE INLETS

(See Note 7)

STATE OF CALIFORNIA
DEPARTMENT OF TRANSPORTATION

GRATE DETAILS No. 1

NO SCALE

RSP D77A DATED APRIL 19, 2013 SUPERSEDES RSP D77A DATED JULY 20, 2012 AND STANDARD PLAN D77A DATED MAY 20, 2011 - PAGE 164 OF THE STANDARD PLANS BOOK DATED 2010.

REVISED STANDARD PLAN RSP D77A

2010 REVISED STANDARD PLAN RSP D77A

DATE PLOTTED => 06-APR-2015
TIME PLOTTED => 07:46

Dist	COUNTY	ROUTE	POST MILES TOTAL PROJECT	SHEET No.	TOTAL SHEETS
01	Hum	299	30.2/30.6	55	57

REGISTERED CIVIL ENGINEER

April 19, 2013
PLANS APPROVAL DATE

Raymond Don Tsztoo No. C37332 Exp. 6-30-14 CIVIL STATE OF CALIFORNIA REGISTERED PROFESSIONAL ENGINEER

THE STATE OF CALIFORNIA OR ITS OFFICERS OR AGENTS SHALL NOT BE RESPONSIBLE FOR THE ACCURACY OR COMPLETENESS OF SCANNED COPIES OF THIS PLAN SHEET.

TO ACCOMPANY PLANS DATED 04-06-15

2010 REVISED STANDARD PLAN RSP D77B

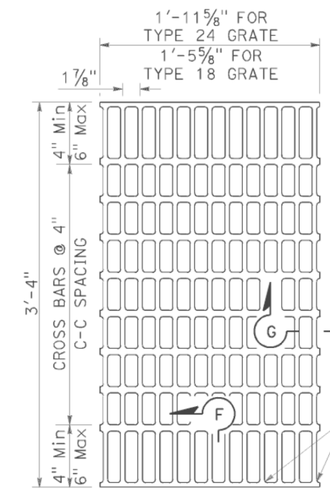

NOTES:

Bearing bars to be 3½" × ¼" bars on 1⅞" centers.

⅜"± ø Cross bars may be fillet welded, resistance welded or electroforged to bearing bars.

Weight of Type 24 grate = 141 LBS.

Weight of Type 18 grate = 107 LBS. (Type 24 grate shown).

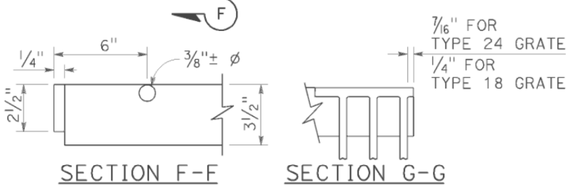

SECTION F-F SECTION G-G

TYPE 18-10 AND 24-13 GRATE

(Welded Steel)

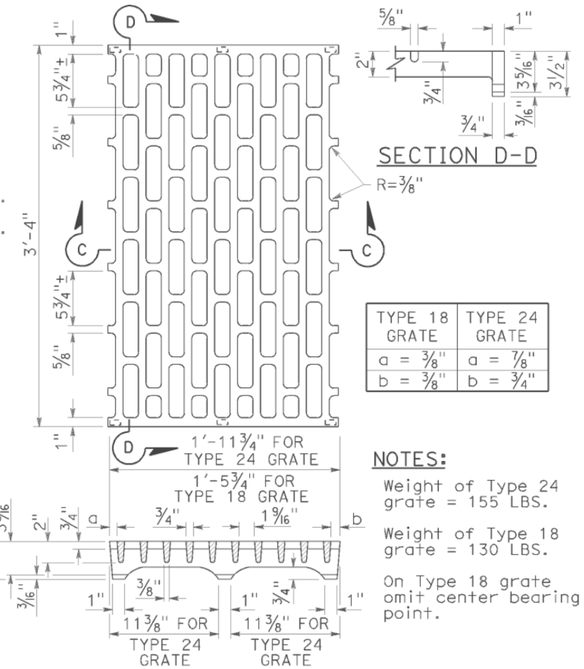

TYPE 18 GRATE	TYPE 24 GRATE
a = ⅜"	a = ⅞"
b = ⅜"	b = ¾"

SECTION D-D

NOTES:

Weight of Type 24 grate = 155 LBS.

Weight of Type 18 grate = 130 LBS.

On Type 18 grate omit center bearing point.

SECTION C-C

TYPE 18-8C AND 24-10C GRATE

(Cast ductile iron)

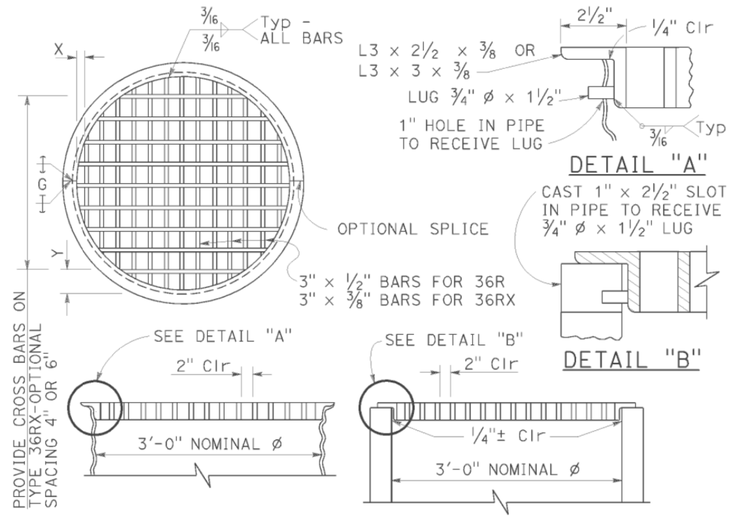

DETAIL "A"

DETAIL "B"

TYPE 36R AND 36RX GRATE DETAILS

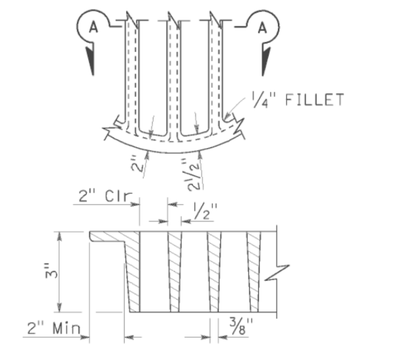

SECTION A-A

ALTERNATIVE CAST DUCTILE IRON GRATE OR CAST CARBON STEEL GRATE TYPE 36R AND 36RX

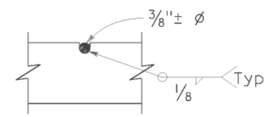

⅜"± ø Cross bars may be fillet welded, resistance welded or electroforged to bearing bars.

CROSS BAR DETAIL TYPE 36RX GRATE (WELDED STEEL)

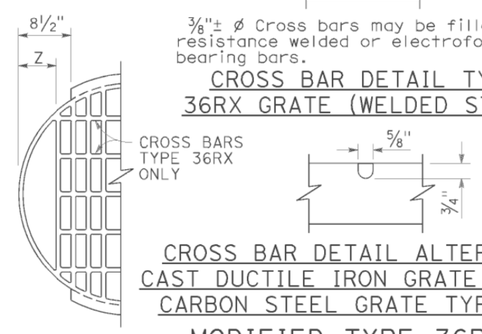

CROSS BAR DETAIL ALTERNATIVE CAST DUCTILE IRON GRATE OR CAST CARBON STEEL GRATE TYPE 36RX

MODIFIED TYPE 36R AND 36RX GRATE FOR ODI INLET

BASIS FOR Misc IRON AND STEEL FINAL PAY WEIGHTS FOR DRAINAGE INLETS

INLET TYPE	GRATE TYPE	No. OF GRATES	WEIGHT LB
GDO (SEE NOTE 4)	24-10C	2	391
	24-10S	2	456
	24-12X	2	473
	24-13	2	374
GO,GOL,G1,G2, G3,G4 (TYPE 24)	24-10C	1	202
	24-10S	1	229
	24-12X	1	239
	24-13	1	188
G4 (TYPE 18) G5,G6	18-8S	1	187
	18-9X	1	187
	18-10	1	149
GT1,GT2	18-8S	2	374
	18-9X	2	374
	18-10	2	298
GT3,GT4	24-10C	2	404
	24-10S	2	458
	24-12X	2	478
	24-13	2	376
ODI	36RX (Mod)	1	196
GMP,GCP,GCPI	36RX	1	215
ODI	36R (Mod)	1	220
GMP,GCP,GCPI	36R	1	236
TRASH RACK			22
GRATE CHAIN			3

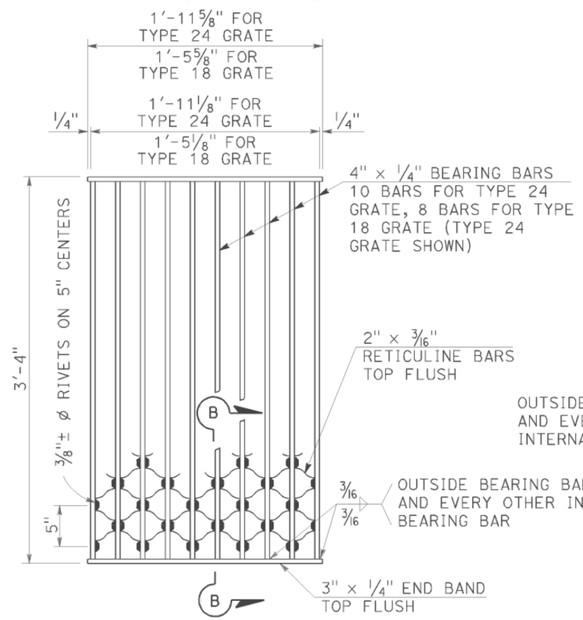

NOTES:

Weight of Type 24 grate = 182 LBS.
Weight of Type 18 grate = 145 LBS.

SECTION B-B

TYPE 18-8S AND 24-10S GRATE

(Welded Steel) Reticuline type

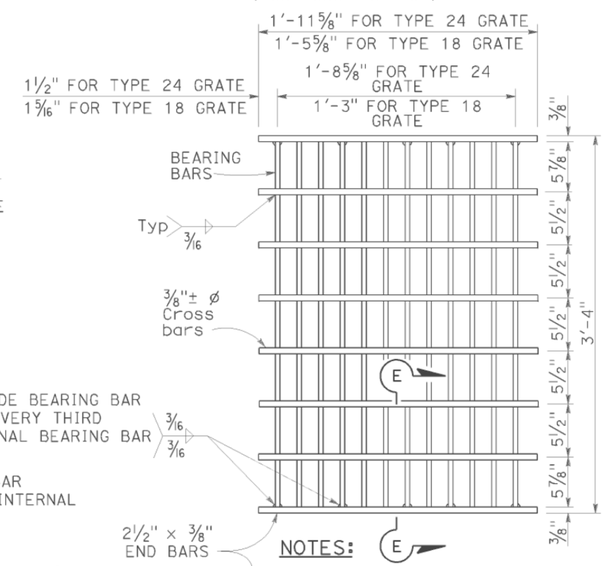

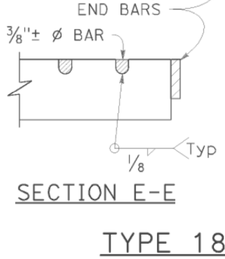

SECTION E-E

NOTES:

Bearing bars to be 3½" × ⅜" bars on 1⅞" centers.

12 Bars for Type 24 grate - 9 bars for Type 18 grates. (Type 24 grate shown).

Weight of Type 24 grate = 192 LBS.

Weight of Type 18 grate = 145 LBS.

⅜"± ø Cross bars may be fillet welded, resistance welded or electroforged to bearing bars.

TYPE 18-9X AND 24-12X GRATE

(Welded Steel)

NOTES:

1. When alternative grates are allowed - Final pay based on alternative with the lesser weight.
2. Use frame shown on Standard Plan D74A, D74B or RSP D77A as appropriate.
3. When Type 24-10S, 24-12X or 24-13 grates are used with GDO Inlets, a ¼" × 3½" × 3'-4⅞" steel bar shall be welded across the center of inlet frame to separate the individual grates.
4. See Revised Standard Plan RSP D77A for connecting chain to welded grate and frame. When chain is required, do not use cast ductile iron grate.

GRATE BAR SPACING TABLE

TYPE	No. OF BARS	CLEAR BAR SPACING	X	Y 4" SPACING	Y 6" SPACING	Z
36R	13	2"	2⅛"	–	–	–
36RX (STEEL)	15	2"	9/16"	3¾"	5¾"	–
36RX (CAST)	13	2"	2⅛"	3¾"	5¾"	–
36R Mod	12	2"	2⅛"	–	–	5"
36RX Mod (STEEL)	13	2"	9/16"	3¾"	5¾"	5 11/16"
36RX Mod (CAST)	12	2"	2⅛"	3¾"	5¾"	5"

STATE OF CALIFORNIA
DEPARTMENT OF TRANSPORTATION

GRATE DETAILS No. 2

NO SCALE

RSP D77B DATED APRIL 19, 2013 SUPERSEDES RSP D77B DATED JULY 20, 2012 AND STANDARD PLAN D77B DATED MAY 20, 2011 - PAGE 165 OF THE STANDARD PLANS BOOK DATED 2010.

REVISED STANDARD PLAN RSP D77B

DATE PLOTTED => 06-APR-2015
TIME PLOTTED => 07:46

Dist	COUNTY	ROUTE	POST MILES TOTAL PROJECT	SHEET No.	TOTAL SHEETS
01	Hum	299	30.2/30.6	56	57

REGISTERED CIVIL ENGINEER

July 19, 2013
PLANS APPROVAL DATE

REGISTERED PROFESSIONAL ENGINEER
Gurinderpal Bhullar
No. C48815
Exp. 9-30-14
CIVIL
STATE OF CALIFORNIA

THE STATE OF CALIFORNIA OR ITS OFFICERS OR AGENTS SHALL NOT BE RESPONSIBLE FOR THE ACCURACY OR COMPLETENESS OF SCANNED COPIES OF THIS PLAN SHEET.

TO ACCOMPANY PLANS DATED 04-06-15

TABLE 1

TAPER LENGTH CRITERIA AND CHANNELIZING DEVICE SPACING

SPEED (S)	MINIMUM TAPER LENGTH * FOR WIDTH OF OFFSET 12 FEET (W)				MAXIMUM CHANNELIZING DEVICE SPACING		
					X	Y	Z **
	TANGENT 2L	MERGING L	SHIFTING L/2	SHOULDER L/3	TAPER	TANGENT	CONFLICT
mph	ft	ft	ft	ft	ft	ft	ft
20	160	80	40	27	20	40	10
25	250	125	63	42	25	50	12
30	360	180	90	60	30	60	15
35	490	245	123	82	35	70	17
40	640	320	160	107	40	80	20
45	1080	540	270	180	45	90	22
50	1200	600	300	200	50	100	25
55	1320	660	330	220	55	110	27
60	1440	720	360	240	60	120	30
65	1560	780	390	260	65	130	32
70	1680	840	420	280	70	140	35

* - For other offsets, use the following merging taper length formula for L:
For speed of 40 mph or less, $L = WS^2/60$
For speed of 45 mph or more, $L = WS$

Where: L = Taper length in feet
W = Width of offset in feet
S = Posted speed limit, off-peak 85th-percentile speed prior to work starting, or the anticipated operating speed in mph

** - Use for taper and tangent sections where there are no pavement markings or where there is a conflict between existing pavement markings and channelizers (CA).

TABLE 2

LONGITUDINAL BUFFER SPACE AND FLAGGER STATION SPACING

SPEED *	Min D **	DOWNGRADE Min D ***		
		-3%	-6%	-9%
mph	ft	ft	ft	ft
20	115	116	120	126
25	155	158	165	173
30	200	205	215	227
35	250	257	271	287
40	305	315	333	354
45	360	378	400	427
50	425	446	474	507
55	495	520	553	593
60	570	598	638	686
65	645	682	728	785
70	730	771	825	891

* - Speed is posted speed limit, off-peak 85th-percentile speed prior to work starting, or the anticipated operating speed in mph

** - Longitudinal buffer space or flagger station spacing

*** - Use on sustained downgrade steeper than -3 percent and longer than 1 mile.

TABLE 3

ADVANCE WARNING SIGN SPACING

ROAD TYPE	DISTANCE BETWEEN SIGNS *		
	A	B	C
	ft	ft	ft
URBAN - 25 mph OR LESS	100	100	100
URBAN - MORE THAN 25 mph TO 40 mph	250	250	250
URBAN - MORE THAN 40 mph	350	350	350
RURAL	500	500	500
EXPRESSWAY / FREEWAY	1000	1500	2640

* - The distances are approximate, are intended for guidance purposes only, and should be applied with engineering judgment. These distances should be adjusted by the Engineer for field conditions, if necessary, by increasing or decreasing the recommmended distances.

STATE OF CALIFORNIA
DEPARTMENT OF TRANSPORTATION

TRAFFIC CONTROL SYSTEM TABLES FOR LANE AND RAMP CLOSURES

NO SCALE

RSP T9 DATED JULY 19, 2013 SUPERSEDES RSP T9 DATED APRIL 19, 2013 THAT SUPPLEMENTS THE STANDARD PLANS BOOK DATED 2010.

REVISED STANDARD PLAN RSP T9

2010 REVISED STANDARD PLAN RSP T9

DATE PLOTTED => 06-APR-2015
TIME PLOTTED => 07:46

Dist	COUNTY	ROUTE	POST MILES TOTAL PROJECT	SHEET No.	TOTAL SHEETS
01	Hum	299	30.2/30.6	57	57

REGISTERED CIVIL ENGINEER

April 19, 2013
PLANS APPROVAL DATE

REGISTERED PROFESSIONAL ENGINEER Gurinderpal Bhullar No. C48815 Exp. 9-30-14 CIVIL STATE OF CALIFORNIA

THE STATE OF CALIFORNIA OR ITS OFFICERS OR AGENTS SHALL NOT BE RESPONSIBLE FOR THE ACCURACY OR COMPLETENESS OF SCANNED COPIES OF THIS PLAN SHEET.

TO ACCOMPANY PLANS DATED 04-06-15

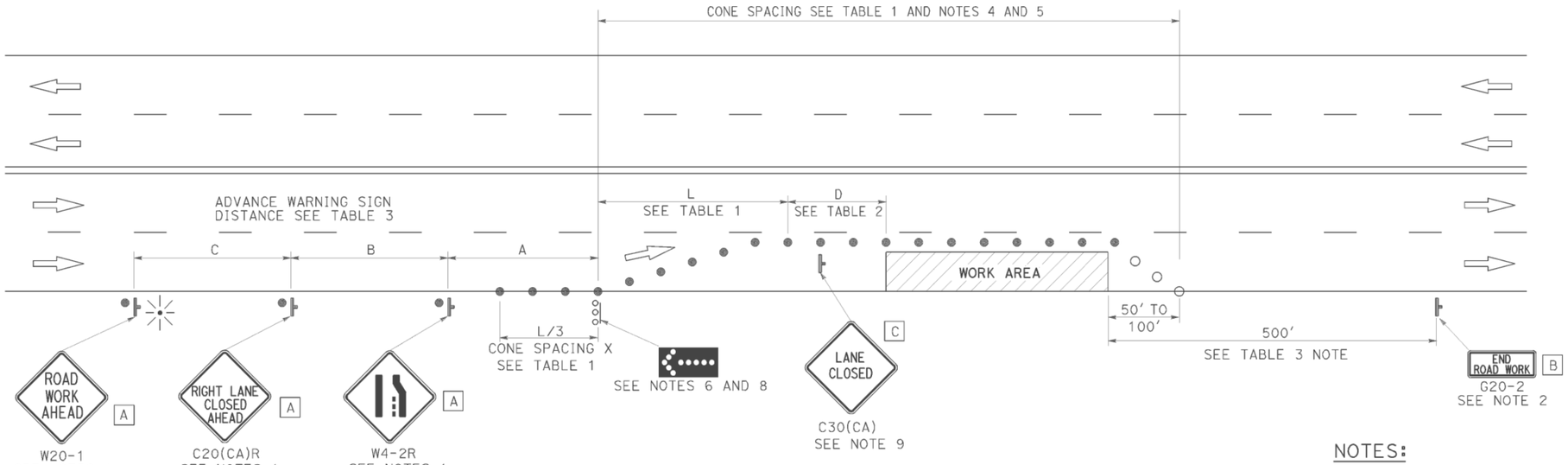

TYPICAL LANE CLOSURE

NOTES:

See Revised Standard Plan RSP T9 for tables.

Use cone spacing X for taper segment, Y for tangent segment or Z for conflict situations, as approriate, per Table 1, unless X, Y, or Z cone spacing is shown on this sheet.

Unless otherwise specified in the special provisions, all temporary warning signs shall have black legend on fluorescent orange background.

California codes are designated by (CA). Otherwise, Federal (MUTCD) codes are shown.

NOTES:

1. Each advance warning sign shall be equipped with at least two flags for daytime closure. Each flag shall be at least 16" x 16" in size and shall be orange or fluorescent red-orange in color. Flashing beacons shall be placed at the locations indicated for lane closure during hours of darkness.
2. A G20-2 "END ROAD WORK" sign, as appropriate, shall be placed at the end of the lane closure unless the end of work area is obvious, or ends within a larger project's limits.
3. If the W20-1 sign would follow within 2000' of a stationary W20-1 or G20-1 "ROAD WORK NEXT _____ MILES", use a C20(CA) sign for the first advance warning sign.
4. All cones used for lane closures during the hours of darkness shall be fitted with retroreflective bands (or sleeves) as specified in the specifications.
5. Portable delineators, placed at one-half the spacing indicated for traffic cones, may be used instead of cones for daytime closures only.
6. Flashing arrow sign shall be either Type I or Type II.
7. For approach speeds over 50 mph, use the "Traffic Control System for Lane Closure On Freeways And Expressways" plan for lane closure details and requirements.
8. A minimum 1500' of sight distance shall be provided where possible for vehicles approaching the first flashing arrow sign. Lane closures shall not begin at the top of crest vertical curve or on a horizontal curve.
9. Place a C30(CA) sign every 2000' throughout length of lane closure.
10. Median lane closures shall conform to the details as shown except that C20(CA)L and W4-2L signs shall be used.
11. At least one person shall be assigned to provide full time maintenance of traffic control devices for lane closure unless, otherwise directed by the Engineer.

LEGEND

- ● TRAFFIC CONE
- ○ TRAFFIC CONE (OPTIONAL TAPER)
- TEMPORARY TRAFFIC CONTROL SIGN
- FLASHING ARROW SIGN (FAS)
- FAS SUPPORT OR TRAILER
- PORTABLE FLASHING BEACON

SIGN PANEL SIZE (Min)

A	48" x 48"
B	36" x 18"
C	30" x 30"

STATE OF CALIFORNIA
DEPARTMENT OF TRANSPORTATION

TRAFFIC CONTROL SYSTEM FOR LANE CLOSURE ON MULTILANE CONVENTIONAL HIGHWAYS

NO SCALE

RSP T11 DATED APRIL 19, 2013 SUPERSEDES STANDARD PLAN T11 DATED MAY 20, 2011 - PAGE 239 OF THE STANDARD PLANS BOOK DATED 2010.

REVISED STANDARD PLAN RSP T11

2010 REVISED STANDARD PLAN RSP T11

DATE PLOTTED => 06-APR-2015
TIME PLOTTED => 07:46