Dist	COUNTY	ROUTE	POST MILES TOTAL PROJECT	SHEET No.	TOTAL SHEETS
01	DN,Hum	101,199	Var	1	20

STATE OF CALIFORNIA

DEPARTMENT OF TRANSPORTATION

PROJECT PLANS FOR CONSTRUCTION ON

STATE HIGHWAY

IN DEL NORTE AND HUMBOLDT COUNTIES AT VARIOUS LOCATIONS

TO BE SUPPLEMENTED BY STANDARD PLANS DATED MAY 2006

INDEX OF PLANS

SHEET No	DESCRIPTION
1	TITLE AND LOCATION MAP
2	CONSTRUCTION DETAILS AND SUMMARY OF QUANTITIES
3	CONSTRUCTION AREA SIGNS
4-8	NEW OR REVISED STANDARD PLANS

STRUCTURE PLANS

9-14	GENERAL PLANS
15-20	DETAILS

THE STANDARD PLANS LIST APPLICABLE TO THIS CONTRACT IS INCLUDED IN THE NOTICE TO BIDDERS AND SPECIAL PROVISIONS BOOK.

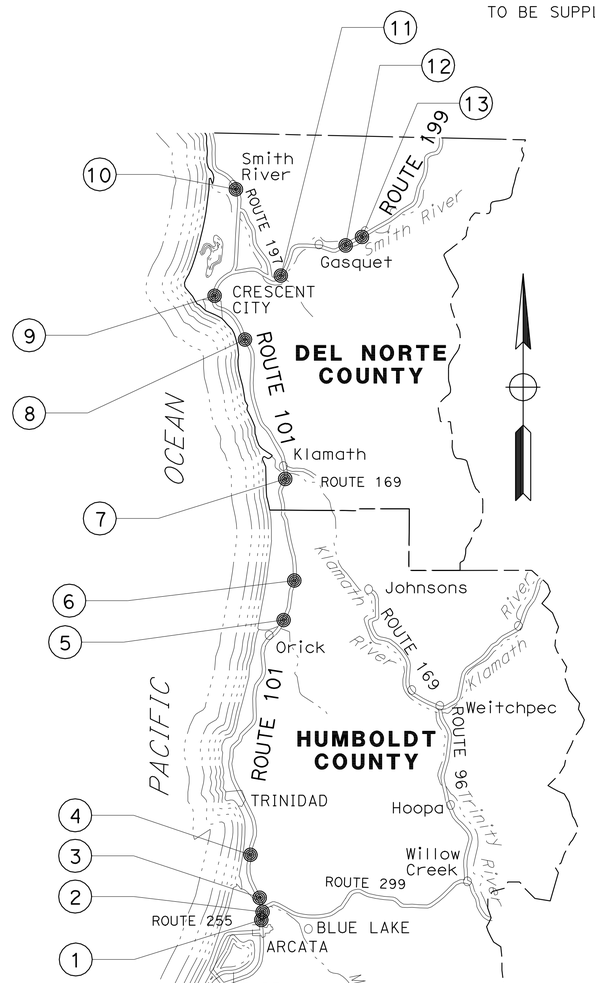

LOCATIONS OF CONSTRUCTION

LOCATION	COUNTY	ROUTE	PM	BRIDGE NAME	BRIDGE No.
1	Hum	101	87.48	ST LOUIS ROAD OC	04-0254
2	Hum	101	87.84	ARCATA OH	04-0079L
3	Hum	101	88.87	JONES SLOUGH BRIDGE	04-0083
4	Hum	101	R92.99	MURRY ROAD OC	04-0170
5	Hum	101	122.86	PRAIRIE CREEK BRIDGE	04-0029
6	Hum	101	R128.97	BOYES CREEK VIADUCT	04-0286
7	DN	101	R3.77	KLAMATH RIVER OVERFLOW	01-0032
8	DN	101	21.01	CUSHING CREEK SIDEHILL VIADUCT	01-0076
9	DN	101	R28.32	RAILROAD AVENUE OC	01-0063
10	DN	101	39.63	ROWDY CREEK BRIDGE	01-0023
11	DN	199	7.09	MYRTLE CREEK BRIDGE	01-0007
12	DN	199	R17.06	MIDDLE FORK SMITH RIVER BRIDGE	01-0044
13	DN	199	19.99	MIDDLE FORK SMITH RIVER BRIDGE	01-0019

LOCATION MAP

PROJECT MANAGER: Royal B. McCarthy

DESIGN ENGINEER: Royal B. McCarthy

THE CONTRACTOR SHALL POSSESS THE CLASS (OR CLASSES) OF LICENSE AS SPECIFIED IN THE "NOTICE TO BIDDERS."

NO SCALE

James T. Van Bonn 1/26/12
PROJECT ENGINEER DATE
REGISTERED CIVIL ENGINEER

REGISTERED PROFESSIONAL ENGINEER — James T. Van Bonn — No. 70723 — Exp. 6-30-13 — CIVIL — STATE OF CALIFORNIA

January 26, 2012
PLANS APPROVAL DATE

THE STATE OF CALIFORNIA OR ITS OFFICERS OR AGENTS SHALL NOT BE RESPONSIBLE FOR THE ACCURACY OR COMPLETENESS OF SCANNED COPIES OF THIS PLAN SHEET.

CONTRACT No.	01-0A3904
PROJECT ID	0100020279

LAST REVISION 00-00-00 | DATE PLOTTED => 31-JAN-2012 | TIME PLOTTED => 12:54

Dist	COUNTY	ROUTE	POST MILES TOTAL PROJECT	SHEET No.	TOTAL SHEETS
01	DN,Hum	101,199	Var	2	20

REGISTERED CIVIL ENGINEER — DATE 1/26/12

January 26, 2012
PLANS APPROVAL DATE

REGISTERED PROFESSIONAL ENGINEER — James T. Van Bonn — No. 70723 — Exp. 6-30-13 — CIVIL — STATE OF CALIFORNIA

THE STATE OF CALIFORNIA OR ITS OFFICERS OR AGENTS SHALL NOT BE RESPONSIBLE FOR THE ACCURACY OR COMPLETENESS OF SCANNED COPIES OF THIS PLAN SHEET.

NOTE

1. MATCH FINISHED PROFILE AND SUPERELEVATION OF STRUCTURE FOR 30' BEFORE AND AFTER.

LEGEND

- COLD PLANE AC PAVEMENT
- REMOVE AC SURFACING

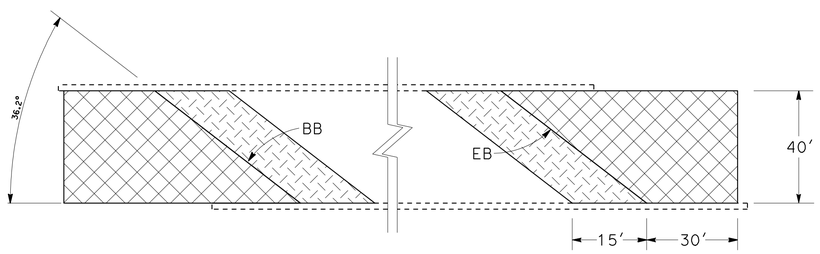

PLAN

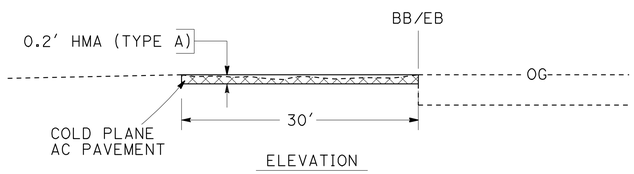

ELEVATION

LOCATION 9
BRIDGE No. 01-0063

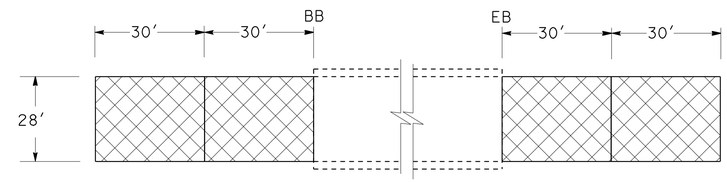

PLAN

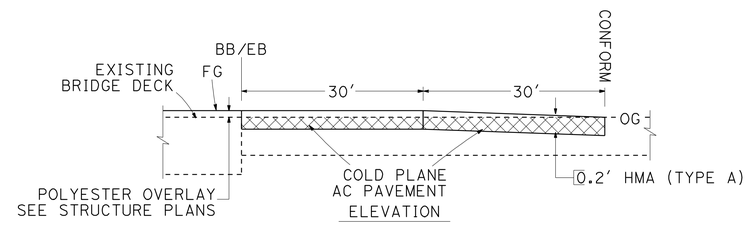

ELEVATION

LOCATION 7
BRIDGE No. 01-0032

REMOVE THERMOPLASTIC PAVEMENT MARKING

LOCATION (PM)		ORIENTATION	TYPE/LEGEND	SQFT	REMARKS
1	87.48	FWBT	BIKE LANE ARROW	7	St LOUIS Rd OC
			TOTAL	7	

THERMOPLASTIC PAVEMENT MARKING

LOCATION (PM)		ORIENTATION	TYPE/LEGEND	SQFT	REMARKS
1	87.48	FWBT	BIKE LANE ARROW	7	St LOUIS Rd OC
			TOTAL	7	

ROADWAY QUANTITIES

LOCATION			REMOVE AC SURFACING	COLD PLANE AC PAVEMENT	HMA (TYPE A)
No.	BRIDGE #		SQFT	SQYD	TON
7	01 0032	Abut 1		187	27
		Abut 3		187	27
9	01 0063	Abut 1	600	255	37
		Abut 3	600	255	37
		TOTAL	1200	884	128

TRAFFIC STRIPE AND PAVEMENT MARKER QUANTITIES

LOCATION (PM)			DETAIL No.	DETAIL LENGTH	THERMOPLASTIC TRAFFIC STRIPE: REMOVE HAZARDOUS WASTE YELLOW	REMOVE WHITE	4" SOLID YELLOW	4" SOLID WHITE	4" BROKEN (36-12) WHITE	PAVEMENT MARKERS: (N) REMOVE	NON-REFLECTIVE TYPE A	RETROREFLECTIVE TYPE D	TYPE H	TYPE G
No.	FROM	TO		LF						EA				
1	87.48		27B	770		770		770						
			22	385	770		770			8		8		
3	88.87	88.90	27B	135		135		135						
			11/13	135		34			135	16	12			4
			25	135	135		135			4			4	
4	R92.99		27B	370		370		370						
			22	185	370		370			10		10		
7	R3.77	R3.87	27B	1250		1010		1250						
			22	625	1010		1250			28		28		
9	R28.32		27B	290				290						
			22	145			290			8		8		
SUBTOTAL							2815	2815				54	4	4
TOTAL					2285	2319	5630		135	74	12	62		

(N) - NOT A SEPARATE PAY ITEM, FOR INFORMATION ONLY.

CONSTRUCTION DETAILS AND SUMMARY OF QUANTITIES
C-1

NO SCALE

STATE OF CALIFORNIA - DEPARTMENT OF TRANSPORTATION
DESIGN
Caltrans
FUNCTIONAL SUPERVISOR: Royal B. McCarthy
CALCULATED-DESIGNED BY: James T. Van Bonn
CHECKED BY: Curtis Coburn
REVISED BY
DATE REVISED

LAST REVISION 00-00-00
DATE PLOTTED => 31-JAN-2012
TIME PLOTTED => 12:55

Dist	COUNTY	ROUTE	POST MILES TOTAL PROJECT	SHEET No.	TOTAL SHEETS
01	DN,Hum	101,199	Var	3	20

REGISTERED CIVIL ENGINEER 1/26/12 DATE

January 26, 2012
PLANS APPROVAL DATE

REGISTERED PROFESSIONAL ENGINEER James T. Van Bonn No. 70723 Exp. 6-30-13 CIVIL STATE OF CALIFORNIA

THE STATE OF CALIFORNIA OR ITS OFFICERS OR AGENTS SHALL NOT BE RESPONSIBLE FOR THE ACCURACY OR COMPLETENESS OF SCANNED COPIES OF THIS PLAN SHEET.

STATIONARY MOUNTED CONSTRUCTION AREA SIGNS

SIGN NO.	SIGN CODE	SIGN MESSAGE	PANEL SIZE	No OF POSTS AND SIZE	No OF SIGNS
A	W20-1	ROAD WORK AHEAD	48"x48"	1-6"x6"	2
	C23B(CA)	BRIDGE REPAIR	36"x24"		
B	G20-2	END ROAD WORK	48"x24"	1-4"x6"	2
C	W11-1	BICYCLE SYMBOL	36"x36"	1-4"x6"	4
	W16-1	SHARE THE ROAD	24"x30"		
D	W20-1	ROAD WORK AHEAD	36"x36"	1-4"x6"	2
	C23B(CA)	BRIDGE REPAIR	30"x18"		
E	W20-1	ROAD WORK AHEAD	36"x36"	1-4"x6"	4
F	C40(CA)	TRAFFIC FINES DOUBLED IN CONSTRUCTION ZONES	144"x60"	2-6"x8"	2
G	C40(CA)	TRAFFIC FINES DOUBLED IN CONSTRUCTION ZONES	108"x42"	2-6"x6"	2
H	G20-2	END ROAD WORK	36"x18"	1-4"x4"	3

NOTES:

1. EXACT SIGN LOCATION TO BE DETERMINED BY THE ENGINEER.
2. EXISTING UTILITY FACILITIES HAVE NOT BEEN PLOTTED ON THESE PLANS.

C23B(CA)
36" x 24"
6" CAPS
BLACK/ORANGE

BRIDGE REPAIR

C23B(CA)
30" x 18"
4" CAPS
BLACK/ORANGE

BRIDGE REPAIR

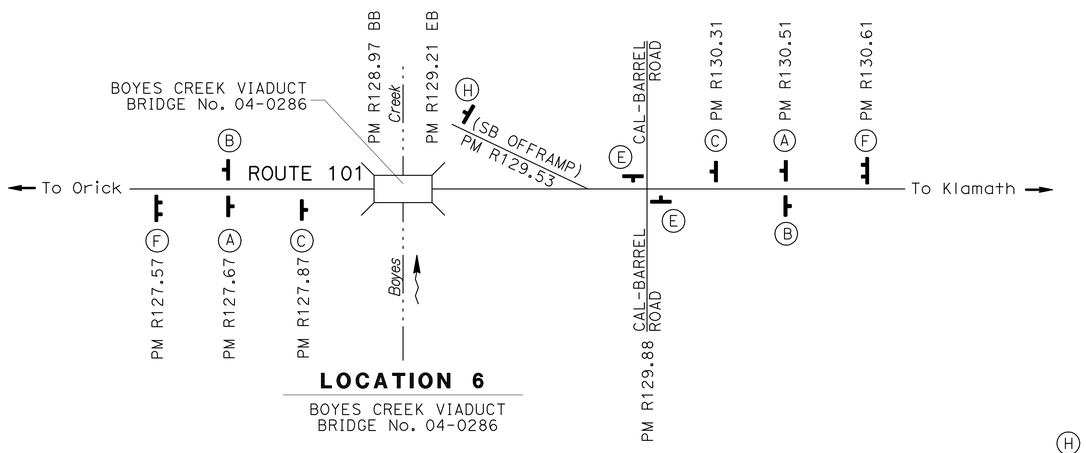

LOCATION 6

BOYES CREEK VIADUCT
BRIDGE No. 04-0286

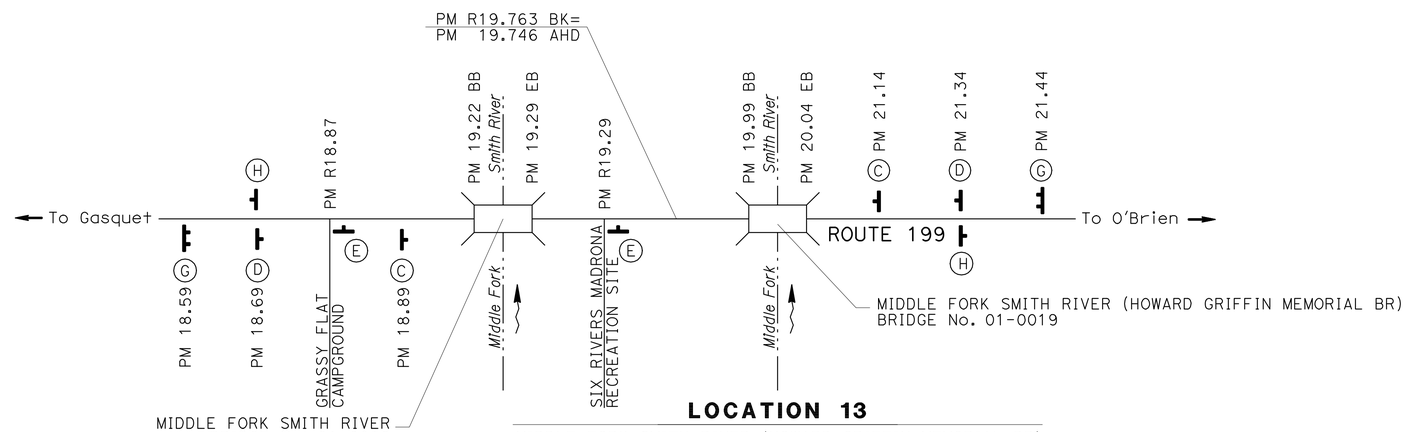

LOCATION 13

MIDDLE FORK SMITH RIVER (HOWARD GRIFFIN MEMORIAL BR)
BRIDGE No. 01-0019

CONSTRUCTION AREA SIGNS
CS-1

NO SCALE

REVISED BY | DATE REVISED
James T. Van Bonn | Curtis Coburn
CALCULATED-DESIGNED BY | CHECKED BY
FUNCTIONAL SUPERVISOR: Royal B. McCarthy

STATE OF CALIFORNIA - DEPARTMENT OF TRANSPORTATION
Caltrans
DESIGN

LAST REVISION 00-00-00 | DATE PLOTTED => 31-JAN-2012 | TIME PLOTTED => 12:55

DIST	COUNTY	ROUTE	POST MILES TOTAL PROJECT	SHEET NO.	TOTAL SHEETS
01	Dn,Hum	101,199	Var	4	20

Randell D. Hiatt
REGISTERED CIVIL ENGINEER

June 6, 2008
PLANS APPROVAL DATE

REGISTERED PROFESSIONAL ENGINEER
Randell D. Hiatt
No. C50200
Exp. 6-30-09
CIVIL
STATE OF CALIFORNIA

The State of California or its officers or agents shall not be responsible for the accuracy or completeness of electronic copies of this plan sheet.

To accompany plans dated January 26, 2012

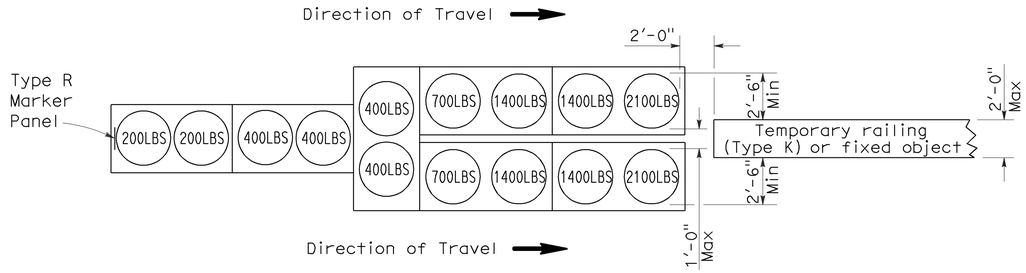

ARRAY 'TU14'

Approach speed 45 mph or more

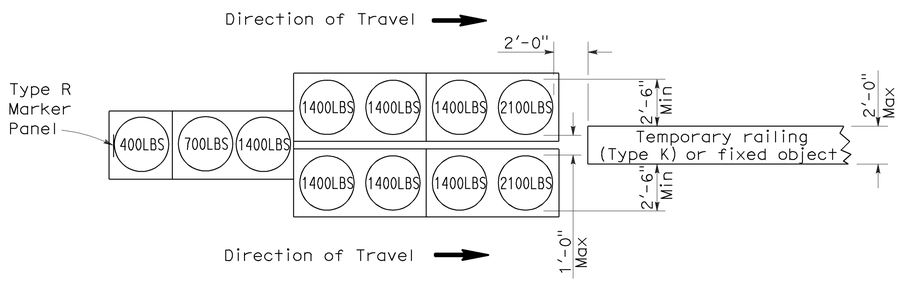

ARRAY 'TU11'

Approach speed less than 45 mph

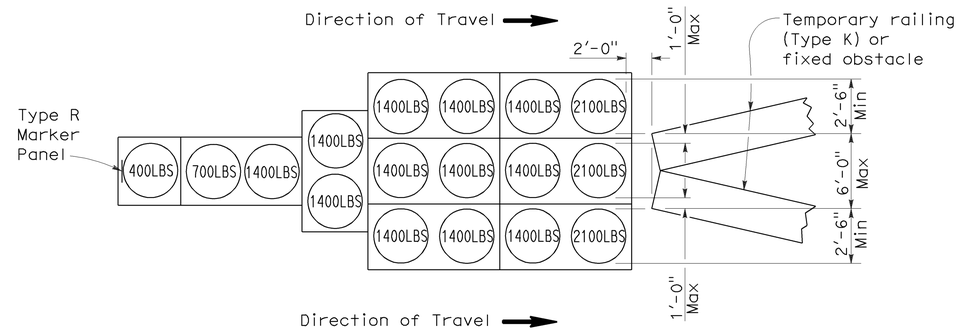

ARRAY 'TU17'

Approach speed less than 45 mph

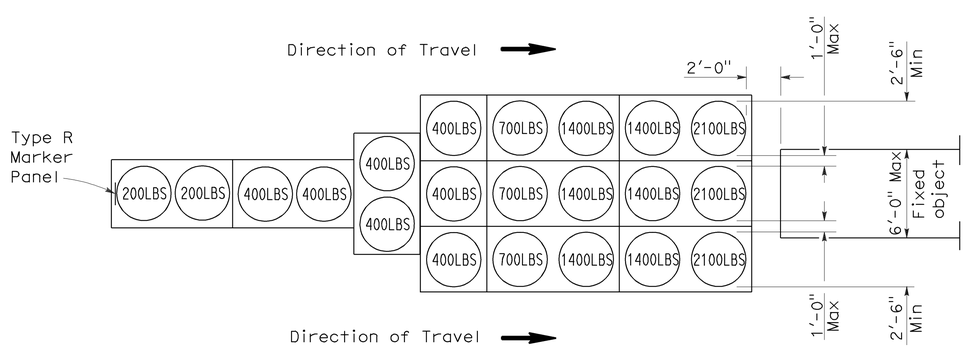

ARRAY 'TU21'

Approach speed 45 mph or more

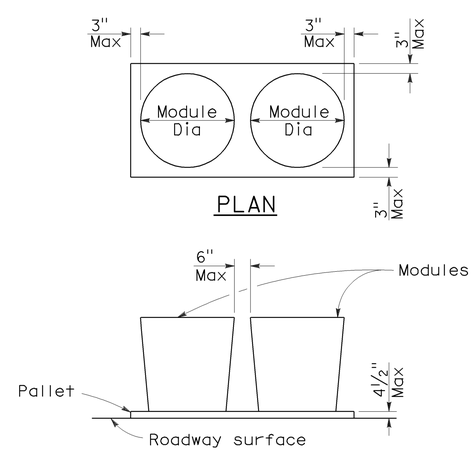

PLAN

ELEVATION

CRASH CUSHION PALLET DETAIL

See Note 7

NOTES:

1. (XXX) Indicates sand filled module location and weight of sand in pounds for each module. Module spacing is based on the greater diameter of the module.
2. All sand weights are nominal.
3. Temporary crash cushion arrays shall not encroach on the traveled way.
4. Place the top of Type R marker panel 1" below the module lid.
5. Refer to Standard Plan A73B for marker details.
6. Approach speeds indicated conform to NCHRP 350 Report criteria.
7. Use of pallets is optional.

STATE OF CALIFORNIA
DEPARTMENT OF TRANSPORTATION

TEMPORARY CRASH CUSHION, SAND FILLED (UNIDIRECTIONAL)

NO SCALE

RSP T1A DATED JUNE 6, 2008 SUPERSEDES STANDARD PLAN T1A
DATED MAY 1, 2006 - PAGE 211 OF THE STANDARD PLANS BOOK DATED MAY 2006.

REVISED STANDARD PLAN RSP T1A

2006 REVISED STANDARD PLAN RSP T1A

DIST	COUNTY	ROUTE	POST MILES TOTAL PROJECT	SHEET NO.	TOTAL SHEETS
01	Dn,Hum	101,199	Var	5	20

Randell D. Hiatt
REGISTERED CIVIL ENGINEER

June 6, 2008
PLANS APPROVAL DATE

REGISTERED PROFESSIONAL ENGINEER
Randell D. Hiatt
No. C50200
Exp. 6-30-09
CIVIL
STATE OF CALIFORNIA

The State of California or its officers or agents shall not be responsible for the accuracy or completeness of electronic copies of this plan sheet.

To accompany plans dated January 26, 2012

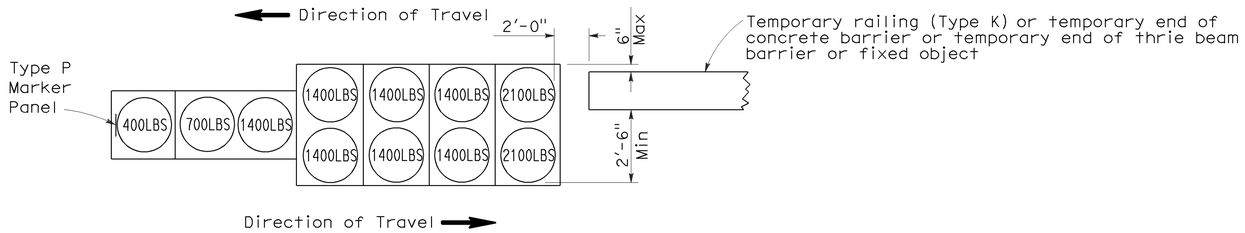

ARRAY 'TB11'

Approach speed less than 45 mph

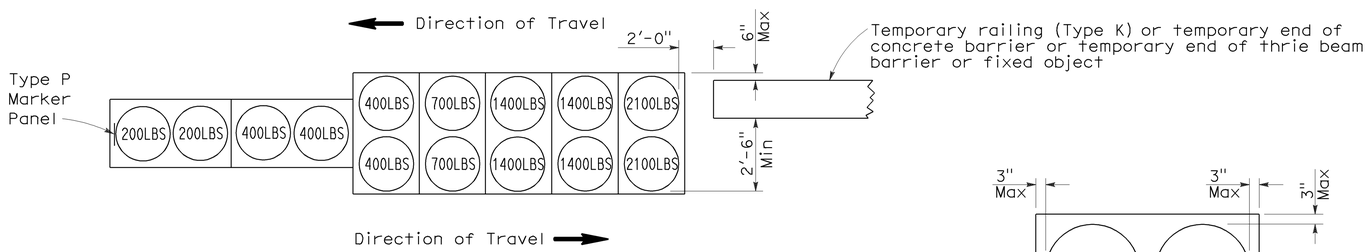

ARRAY 'TB14'

Approach speed 45 mph or more

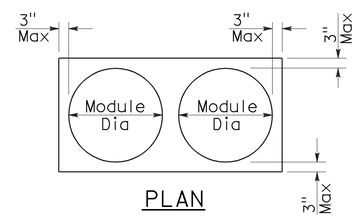

PLAN

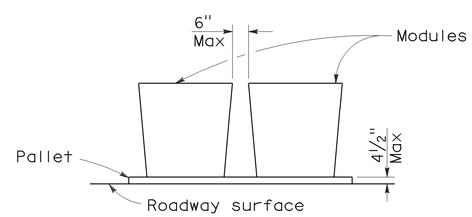

ELEVATION

CRASH CUSHION PALLET DETAIL

See Note 7

NOTES:

1. (XXX) Indicates sand filled module location and weight of sand in pounds for each module. Module spacing is based on the greater diameter of the module.
2. All sand weights are nominal.
3. Temporary crash cushion arrays shall not encroach on the traveled way.
4. Place the Type P marker panel so that the bottom of the panel rests upon the pallet.
5. Refer to Standard Plan A73B for marker details.
6. Approach speeds indicated conform to NCHRP 350 Report criteria.
7. Use of pallets is optional.

STATE OF CALIFORNIA
DEPARTMENT OF TRANSPORTATION

TEMPORARY CRASH CUSHION, SAND FILLED (BIDIRECTIONAL)

NO SCALE

RSP T1B DATED JUNE 6, 2008 SUPERSEDES STANDARD PLAN T1B
DATED MAY 1, 2006 - PAGE 212 OF THE STANDARD PLANS BOOK DATED MAY 2006.

REVISED STANDARD PLAN RSP T1B

2006 REVISED STANDARD PLAN RSP T1B

5-15-08

DIST	COUNTY	ROUTE	POST MILES TOTAL PROJECT	SHEET NO.	TOTAL SHEETS
01	Dn,Hum	101,199	Var	6	20

Randell D. Hiatt
REGISTERED CIVIL ENGINEER

June 6, 2008
PLANS APPROVAL DATE

REGISTERED PROFESSIONAL ENGINEER
Randell D. Hiatt
No. C50200
Exp. 6-30-09
CIVIL
STATE OF CALIFORNIA

The State of California or its officers or agents shall not be responsible for the accuracy or completeness of electronic copies of this plan sheet.

To accompany plans dated January 26, 2012

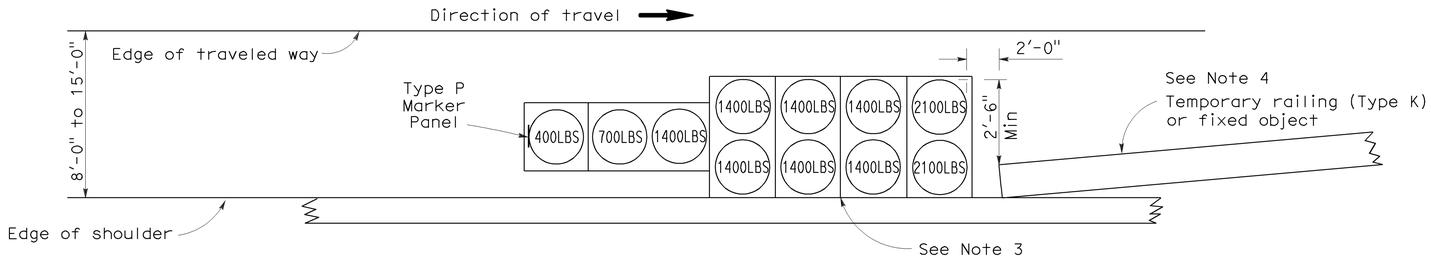

ARRAY 'TS11'

Approach speed less than 45 mph
See Note 9

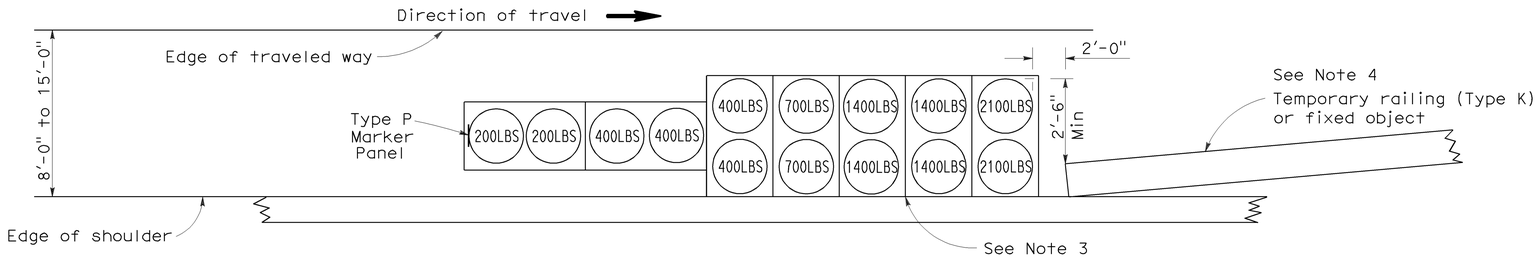

ARRAY 'TS14'

Approach speed 45 mph or more
See Note 9

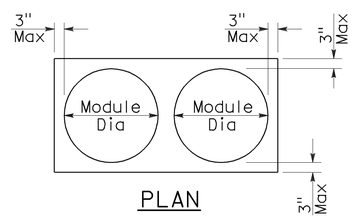

PLAN

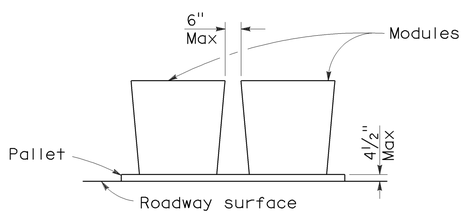

ELEVATION

CRASH CUSHION PALLET DETAIL

See Note 11

NOTES:

1. (XXX) Indicates sand filled module location and weight of sand in pounds for each module. Module spacing is based on the greater diameter of the module.
2. All sand weights are nominal.
3. The temporary crash cushion arrays shown on this plan shall be used only in locations where there will be traffic on one side of the temporary crash cushion array.
4. If the fixed object or approach end of the temporary railing is less than 15'-0" from the edge of traveled way, a temporary crash cushion is required in a construction or work zone.
5. Temporary crash cushion arrays shall not encroach on the traveled way.
6. Arrays for median shoulders shall conform to details shown on this plan for outside shoulders.
7. Place the Type P marker panel so that the bottom of the panel rests upon the pallet and faces traffic.
8. Refer to Standard Plan A73B for marker details.
9. For shoulder widths less than 8'-0", appropriate approved crash cushion protection, other than sand filled modules, shall be provided at fixed objects and at approach ends of temporary railing. The specific type of crash cushion shall be as shown on the project plans or as specified in the Special Provisions, or if not shown on the project plans or specified in the Special Provisions, shall be as approved by the Engineer.
10. Approach speeds indicated conform to NCHRP 350 Report criteria.
11. Use of pallets is optional.

STATE OF CALIFORNIA
DEPARTMENT OF TRANSPORTATION

TEMPORARY CRASH CUSHION, SAND FILLED (SHOULDER INSTALLATIONS)

NO SCALE

RSP T2 DATED JUNE 6, 2008 SUPERSEDES STANDARD PLAN T2
DATED MAY 1, 2006 - PAGE 213 OF THE STANDARD PLANS BOOK DATED MAY 2006.

REVISED STANDARD PLAN RSP T2

2006 REVISED STANDARD PLAN RSP T2

5-15-08

Dist	COUNTY	ROUTE	POST MILES TOTAL PROJECT	SHEET No.	TOTAL SHEETS
01	Dn,Hum	101,199	Var	7	20

Randell D. Hiatt
REGISTERED CIVIL ENGINEER

May 20, 2011
PLANS APPROVAL DATE

REGISTERED PROFESSIONAL ENGINEER
Randell D. Hiatt
No. C50200
Exp. 6-30-11
CIVIL
STATE OF CALIFORNIA

The State of California or its officers or agents shall not be responsible for the accuracy or completeness of electronic copies of this plan sheet.

To accompany plans dated January 26, 2012

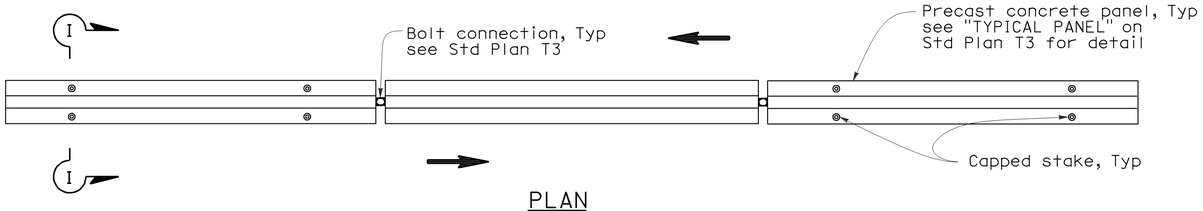

PLAN

RAILING STAKING CONFIGURATION FOR TWO-WAY TRAFFIC

See Note 1

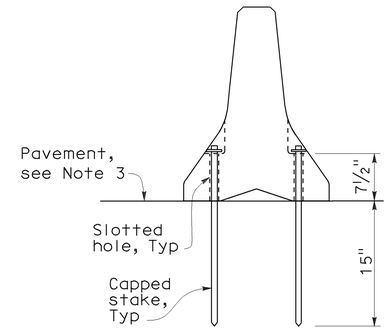

SECTION I-I

NOTES:

1. Where Type K Temporary Railing is placed as a temporary or long term barrier in two-way traffic on highways with less than 24" from the edge of traveled way, use four capped stakes per every other panel with end panels staked.
2. Where Type K Temporary Railing is placed 3" to 24" from the edge of an excavation on highways, use two capped stakes per panel along the traffic side.
3. Staked Type K Temporary Railing must be supported by at least 4" thick concrete, hot mix asphalt or existing asphalt concrete pavement.
4. The minimum yield strength for the washer must be 60,000 psi.
5. Direction of adjacent traffic indicated by ⟹.

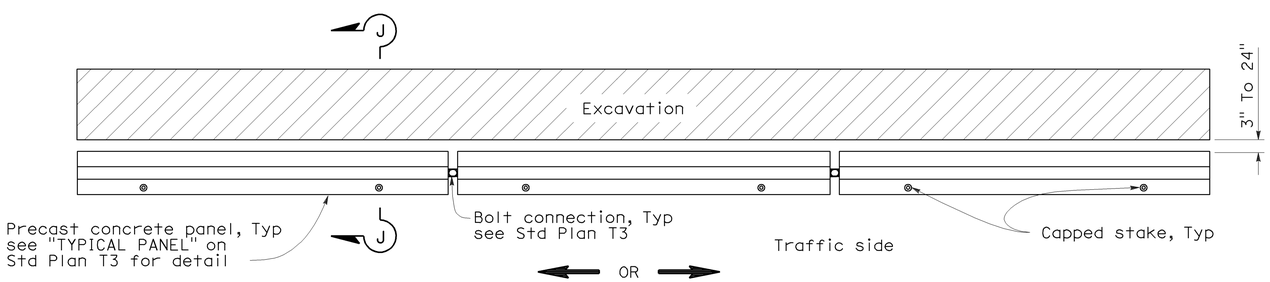

PLAN

RAILING STAKING CONFIGURATION ADJACENT TO AN EXCAVATION

See Note 2

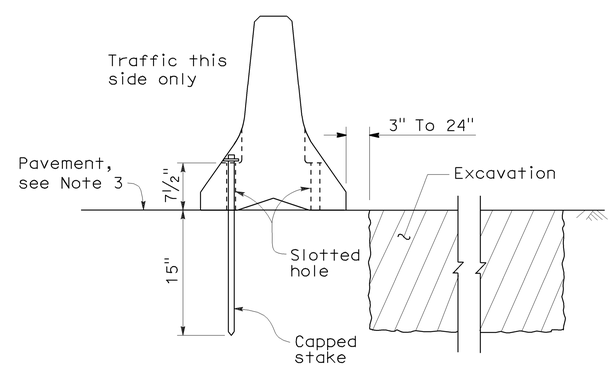

SECTION J-J

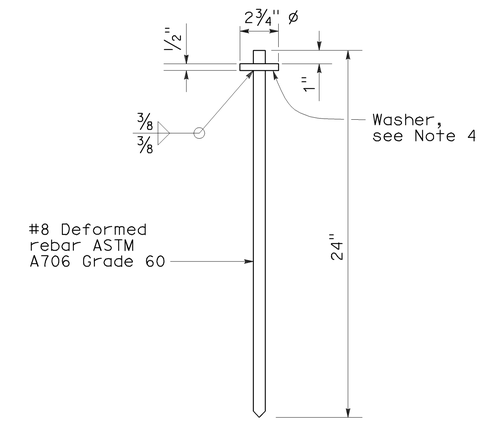

CAPPED STAKE DETAIL

STATE OF CALIFORNIA
DEPARTMENT OF TRANSPORTATION

TEMPORARY RAILING (TYPE K)

NO SCALE

NSP T3A DATED MAY 20, 2011 SUPPLEMENTS
THE STANDARD PLANS BOOK DATED MAY 2006.

NEW STANDARD PLAN NSP T3A

2006 NEW STANDARD PLAN NSP T3A

DIST	COUNTY	ROUTE	POST MILES TOTAL PROJECT	SHEET NO.	TOTAL SHEETS
01	Dn,Hum	101,199	Var	8	20

REGISTERED CIVIL ENGINEER

October 5, 2007
PLANS APPROVAL DATE

REGISTERED PROFESSIONAL ENGINEER Efthymios Delis No. C51434 Exp. 6-30-08 CIVIL STATE OF CALIFORNIA

The State of California or its officers or agents shall not be responsible for the accuracy or completeness of electronic copies of this plan sheet.

To accompany plans dated January 26, 2012

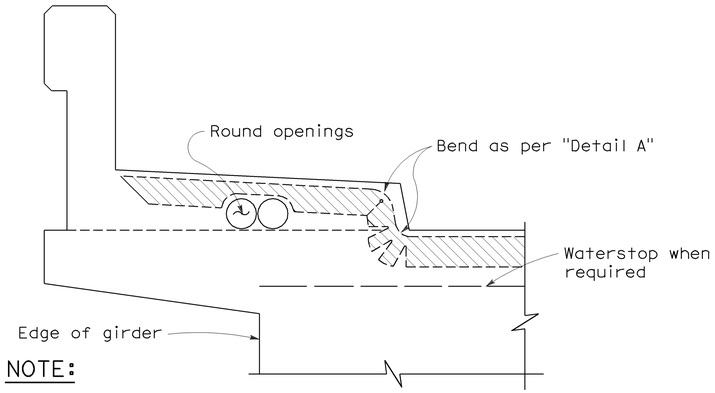

NOTE:

Type "B" seal shown. Type "A" seals to comform to the general path of seal shown, cuts for bending not required. Bend Type "A" seals 3" up into curb or barrier rail on only the low end of the seal.

CONCRETE BARRIER AND SIDEWALK

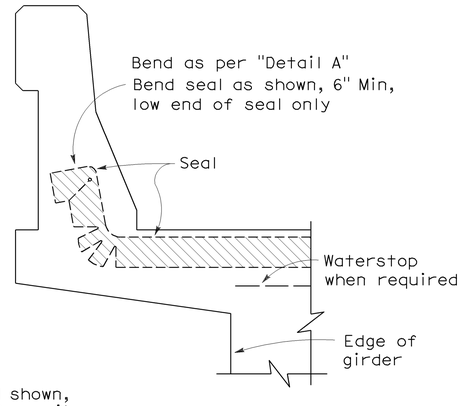

CONCRETE BARRIER

JOINT SEALS DETAILS

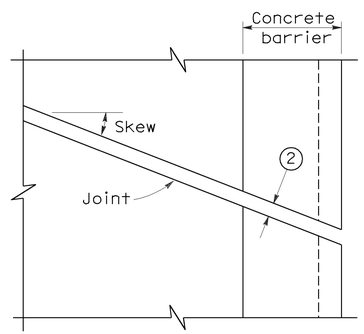

PLAN OF JOINT (SKEW ≤ 20°)

Min ℄ radius to be 4 times uncompressed width of seal or as recommended by the manufacturer, whichever is greater

In lieu of saw cutting, this area may be blocked out and reconstructed to match saw cutting on both sides.

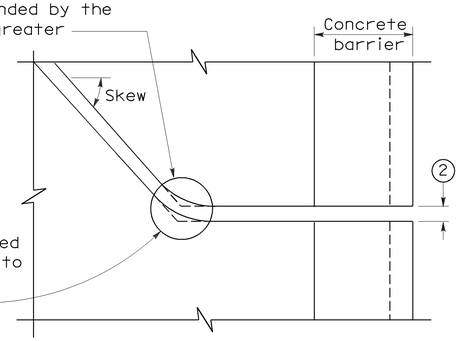

PLAN OF JOINT (SKEW > 20°)

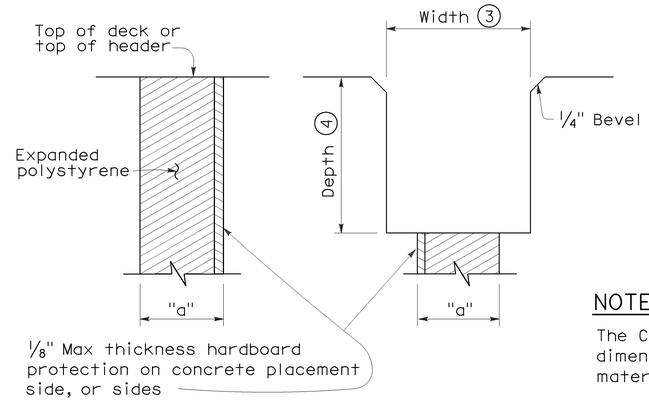

FORMING DETAIL SAWCUT DETAIL

NOTE:

The Contractor shall verify all controlling field dimensions before ordering or fabricatiing any material.

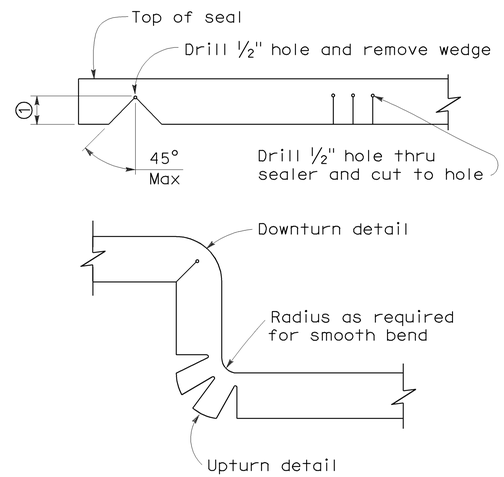

DETAIL A

NOTES:

1. Make smooth cuts from the bottom of seal to 1½" clear of top leaving at least one complete cell between the top of the cut and top of the seal. When necessary cut back of seal to clear conduit and round openings.
2. Opening in barrier to match width of sawn deck joint.
3. Sawcut groove widths shall be as ordered by the Engineer.
4. Depth of sawcut: Type A - Depth to be 2" minimum.
   Type B - Depth to be equal to or greater than the depth of seal measured along the contact surface, when compressed to minimum width position (W_2) plus dimensions shown.
5. MR (movement rating) as shown on other plan sheets.
6. Other depths must be approved by the Engineer.

DIMENSIONS "a" OF JOINT REQUIRED

Movement Rating (MR) 5	Bridge Type	"a" Dimension Deck Concrete Placed		
		Winter	Fall-Spring	Summer
2"	All except CIP/PS	1½"	1¼"	¾"
	CIP/PS	1¼"	1"	½"
1½"	All except CIP/PS	1¼"	1"	½"
	CIP/PS	1"	¾"	½"
1"	All except CIP/PS	1"	¾"	½"
	CIP/PS	¾"	½"	½"
½"	All except CIP/PS	¾"	¾"	½"
	CIP/PS	½"	½"	½"

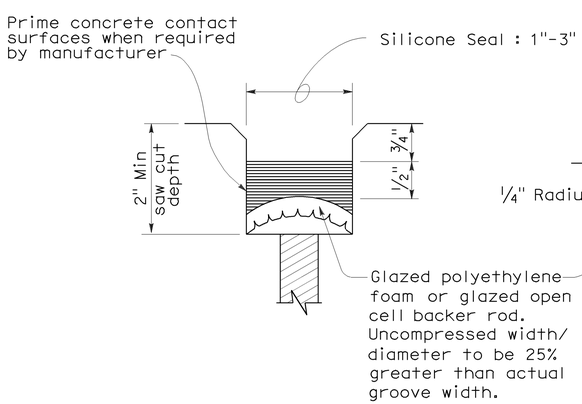

TYPE A SEAL

Movement rating : Silicone = 1" Max

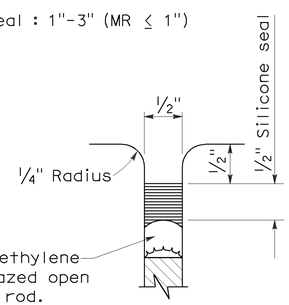

TYPE AL SEAL

Longitudinal joints only

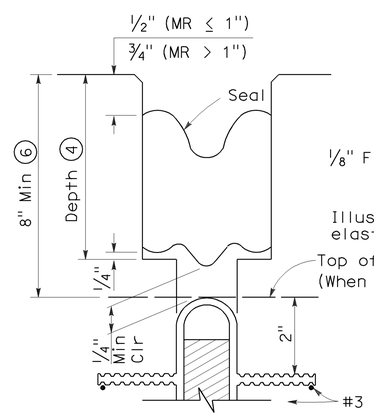

TYPE B JOINT SEAL
IN MINIMUM WIDTH POSITION (W_2)

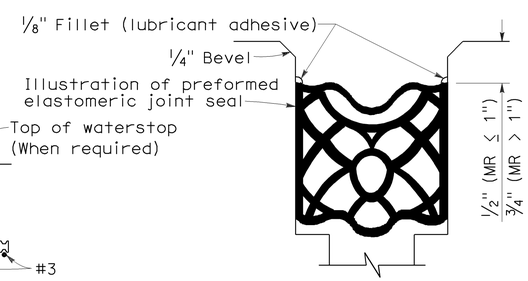

TYPE B SEAL

Movement Rating ≤ 2"

STATE OF CALIFORNIA
DEPARTMENT OF TRANSPORTATION

JOINT SEALS (MAXIMUM MOVEMENT RATING = 2")

NO SCALE

RSP B6-21 DATED OCTOBER 5, 2007 SUPERSEDES STANDARD PLAN B6-21 DATED MAY 1, 2006 - PAGE 258 OF THE STANDARD PLANS BOOK DATED MAY 2006.

REVISED STANDARD PLAN RSP B6-21

2006 REVISED STANDARD PLAN RSP B6-21

5-8-07

DIST	COUNTY	ROUTE	POST MILES TOTAL PROJECT	SHEET No.	TOTAL SHEETS
01	DN, Hum	101.199	Var	9	20

REGISTERED CIVIL ENGINEER 12-6-11 DATE

1-26-12
PLANS APPROVAL DATE

REGISTERED PROFESSIONAL ENGINEER DIOSDADO ACOBA No. 52003 Exp. 12-31-12 CIVIL STATE OF CALIFORNIA

The State of California or its officers or agents shall not be responsible for the accuracy or completeness of electronic copies of this plan sheet.

NOTE: (APPLY TO ALL SHEETS)

-·-·-·- Indicates existing.

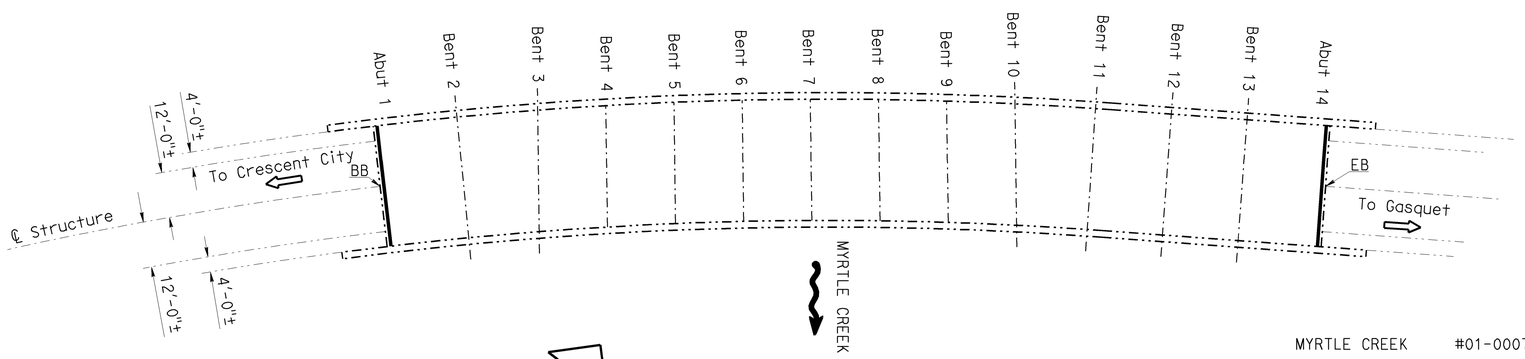

MYRTLE CREEK

Br. No. 01-0007, ROUTE 199, DN, PM 7.09
1"=20'

MYRTLE CREEK #01-0007

QUANTITIES

CLEAN EXPANSION JOINT	66	LF
JOINT SEAL (MR 1")	66	LF

INDEX TO PLANS

SHEET NO.	TITLE
1	GENERAL PLAN NO. 1
2	GENERAL PLAN NO. 2
3	GENERAL PLAN NO. 3
4	GENERAL PLAN NO. 4
5	GENERAL PLAN NO. 5
6	GENERAL PLAN NO. 6
7	DETAILS NO. 1
8	DETAILS NO. 2
9	DETAILS NO. 3
10	DETAILS NO. 4
11	JOINT SEAL DETAILS
12	JOINT SEAL ASSEMBLY (MAXIMUM MOVEMENT RATING = 4")

NOTES: (APPLY TO THIS SHEET ONLY)

Indicates location of existing joint seal removal and placement of new joint seal.

(1) Indicates location of existing expansion dam replacement. For "Section A-A" see "DETAILS NO. 1" sheet.

STANDARD PLANS DATED MAY 2006

SHEET NO.	TITLE
A10A	ACRONYMS AND ABBREVIATIONS (SHEET 1 OF 2)
A10B	ACRONYMS AND ABBREVIATIONS (SHEET 2 OF 2)
RSP B6-21	JOINT SEALS (MAXIMUM MOVEMENT RATING = 2")

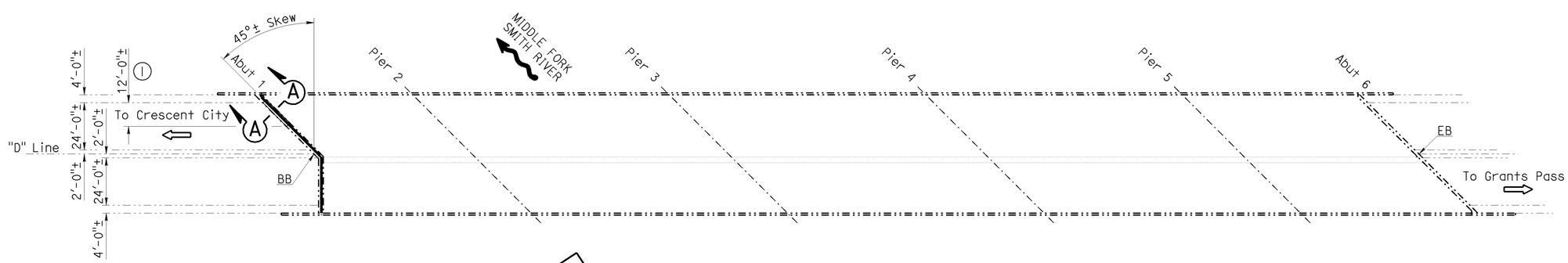

MIDDLE FORK SMITH RIVER

Br. No. 01-0044, ROUTE 199, DN, PM R017.07
1"=30'

MIDDLE FORK SMITH RIVER #01-0044

QUANTITIES

POLYESTER CONCRETE EXPANSION DAM	14	CF
CLEAN EXPANSION JOINT	75	LF
JOINT SEAL (MR 1 1/2")	75	LF

NOTE:
THE CONTRACTOR SHALL VERIFY ALL CONTROLLING FIELD DIMENSIONS BEFORE ORDERING OR FABRICATING ANY MATERIAL.

DESIGN ENGINEER 8-18-11

	BY	CHECKED
DESIGN	M. Hashimoto	D. Acoba
DETAILS	Dale Kubochi	D. Acoba
QUANTITIES	M. Hashimoto	D. Acoba

LOAD FACTOR DESIGN	LIVE LOADING: HS20-44 AND ALTERNATIVE AND PERMIT DESIGN LOAD		
LAYOUT	BY Dale Kubochi	CHECKED M. Hashimoto	
SPECIFICATIONS	BY Karla Meier	PLANS AND SPECS COMPARED Karla Meier	

STATE OF CALIFORNIA
DEPARTMENT OF TRANSPORTATION

DIVISION OF MAINTENANCE
STRUCTURE MAINTENANCE DESIGN

BRIDGE NO. VARIOUS
POST MILE VARIES

ROUTE 199 & 101 BRIDGES
GENERAL PLAN NO. 1

STRUCTURES MAINTENANCE GENERAL PLAN SHEET (ENGLISH) (REV. 09-01-10)

ORIGINAL SCALE IN INCHES FOR REDUCED PLANS 0 1 2 3

UNIT: 3488
PROJECT NUMBER & PHASE: 0100020279
CONTRACT NO.: 01-0A3901

DISREGARD PRINTS BEARING EARLIER REVISION DATES

REVISION DATES 11-2-11 11-9-11 11-16-11 11-30-11

SHEET 1 OF 12

FILE => 01-0a3901-agp01.dgn

USERNAME => s109618 DATE PLOTTED => 30-JAN-2012 TIME PLOTTED => 11:43

DIST	COUNTY	ROUTE	POST MILES TOTAL PROJECT	SHEET No.	TOTAL SHEETS
01	DN,Hum	101,199	Var	10	20

REGISTERED CIVIL ENGINEER 12-6-11 DATE

1-26-12
PLANS APPROVAL DATE

REGISTERED PROFESSIONAL ENGINEER DIOSDADO ACOBA No. 52003 Exp. 12-31-12 CIVIL STATE OF CALIFORNIA

The State of California or its officers or agents shall not be responsible for the accuracy or completeness of electronic copies of this plan sheet.

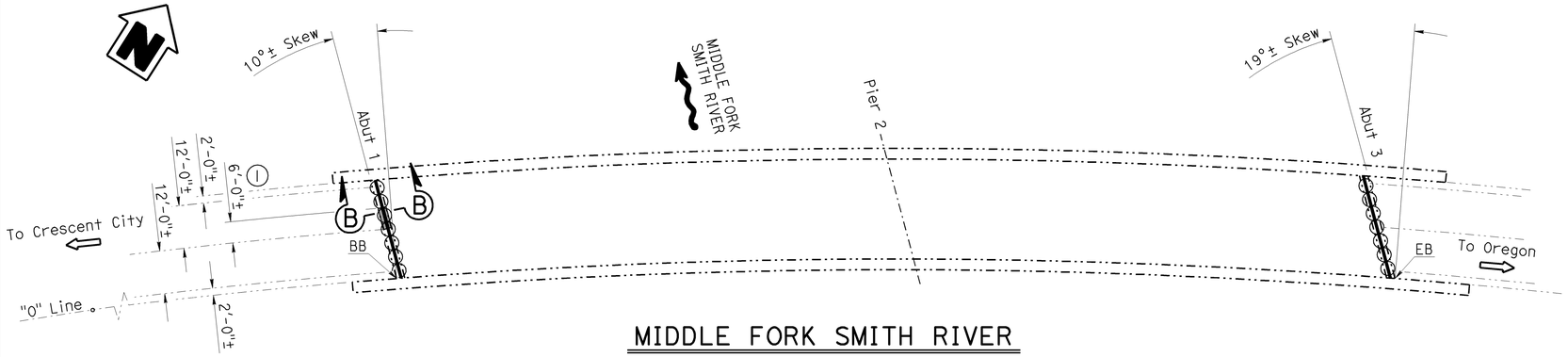

MIDDLE FORK SMITH RIVER

Br. No. 01-0019, ROUTE 199, DN, PM 19.9
1"=20'

MIDDLE FORK SMITH RIVER #01-0019

QUANTITIES

TEMPORARY SUPPORT (LOCATION A)	LUMP	SUM
BRIDGE REMOVAL (PORTION), LOCATION A	LUMP	SUM
POLYESTER CONCRETE EXPANSION DAM	4	CF
CLEAN EXPANSION JOINT	60	LF
REPAIR SPALLED SURFACE AREA	8	SQFT
CORE CONCRETE (1¼") AND PRESSURE GROUT THREADED ROD	11	LF
ELASTOMERIC BEARING PAD	8	EA
JOINT SEAL (MR 1")	60	LF
MISCELLANEOUS METAL (BRIDGE)	50	LB

NOTES: (APPLY TO THIS SHEET ONLY)

Indicates location of existing joint seal removal and placement of new joint seal.

Indicates location of remove existing elastomeric bearing pads and install new elastomeric bearing pads. See "Details No. 2" sheet for details.

Indicates limits of prepare concrete bridge deck surface, furnish and place new ¾" minimum depth polyester concrete overlay. Prior to placing new polyester concrete overlay, remove unsound concrete and patch with rapid setting concrete as shown on the "Deck Repair Detail - Overlay" on "JOINT SEAL DETAILS" sheet.

(1) Indicates location of existing expansion dam replacement. For "Section B-B" see "DETAILS NO. 1" sheet.

(2) Indicates location of AC roadway taper. See "Road Plans"

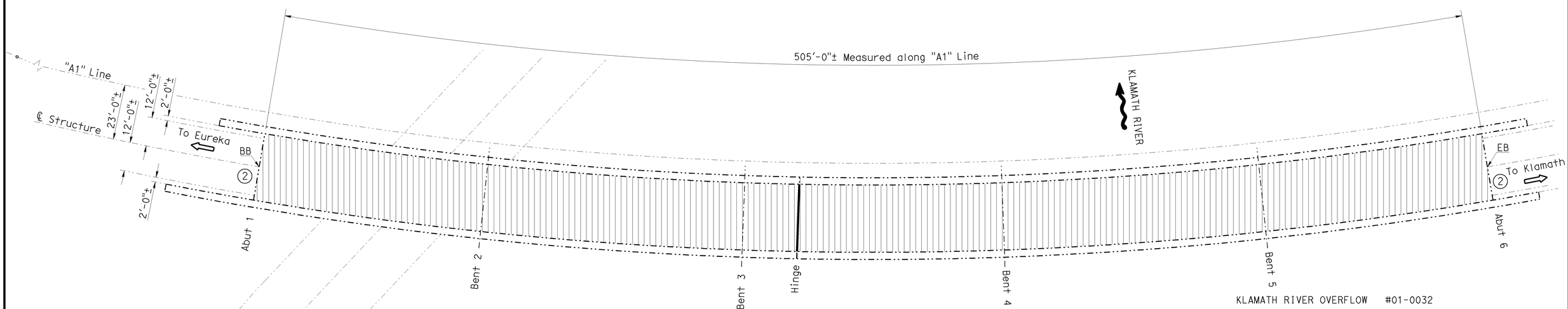

NOTE:
THE CONTRACTOR SHALL VERIFY ALL CONTROLLING FIELD DIMENSIONS BEFORE ORDERING OR FABRICATING ANY MATERIAL.

KLAMATH RIVER OVERFLOW

Br. No. 01-0032, ROUTE 101, DN, PM R003.77
1"=20'

KLAMATH RIVER OVERFLOW #01-0032

QUANTITIES

REMOVE UNSOUND CONCRETE	355	CF
PREPARE CONCRETE BRIDGE DECK SURFACE	14,140	SQFT
CLEAN EXPANSION JOINT	29	LF
RAPID SETTING CONCRETE (PATCH)	355	CF
FURNISH POLYESTER CONCRETE OVERLAY	1,060	CF
PLACE POLYESTER CONCRETE OVERLAY	14,140	SQFT
JOINT SEAL (MR 1 1/2")	29	LF

DESIGN ENGINEER 8-18-11	DESIGN	BY M. Hashimoto	CHECKED D. Acoba	LOAD FACTOR DESIGN	LIVE LOADING: HS20-44 AND ALTERNATIVE AND PERMIT DESIGN LOAD
	DETAILS	BY Dale Kubochi	CHECKED D. Acoba	LAYOUT	BY Dale Kubochi / CHECKED M. Hashimoto
	QUANTITIES	BY M. Hashimoto	CHECKED D. Acoba	SPECIFICATIONS	BY Karla Meier / PLANS AND SPECS COMPARED Karla Meier

STATE OF CALIFORNIA
DEPARTMENT OF TRANSPORTATION

DIVISION OF MAINTENANCE
STRUCTURE MAINTENANCE DESIGN

BRIDGE NO. VARIOUS
POST MILE VARIES

ROUTE 199 & 101 BRIDGES
GENERAL PLAN NO. 2

STRUCTURES MAINTENANCE GENERAL PLAN SHEET (ENGLISH) (REV. 09-01-10)

ORIGINAL SCALE IN INCHES FOR REDUCED PLANS 0 1 2 3

UNIT: 3488
PROJECT NUMBER & PHASE: 0100020279
CONTRACT NO.: 01-0A3901

DISREGARD PRINTS BEARING EARLIER REVISION DATES

REVISION DATES 7-1-11 11-30-11 10-14-11

SHEET 2 OF 12

FILE => 01-0a3901-ggp02.dgn

USERNAME => s109618 DATE PLOTTED => 30-JAN-2012 TIME PLOTTED => 11:44

DIST	COUNTY	ROUTE	POST MILES TOTAL PROJECT	SHEET No.	TOTAL SHEETS
01	DN,Hum	101,199	Var	11	20

REGISTERED CIVIL ENGINEER 12-6-11 DATE

1-26-12
PLANS APPROVAL DATE

REGISTERED PROFESSIONAL ENGINEER DIOSDADO ACOBA No. 52003 Exp. 12-31-12 CIVIL STATE OF CALIFORNIA

The State of California or its officers or agents shall not be responsible for the accuracy or completeness of electronic copies of this plan sheet.

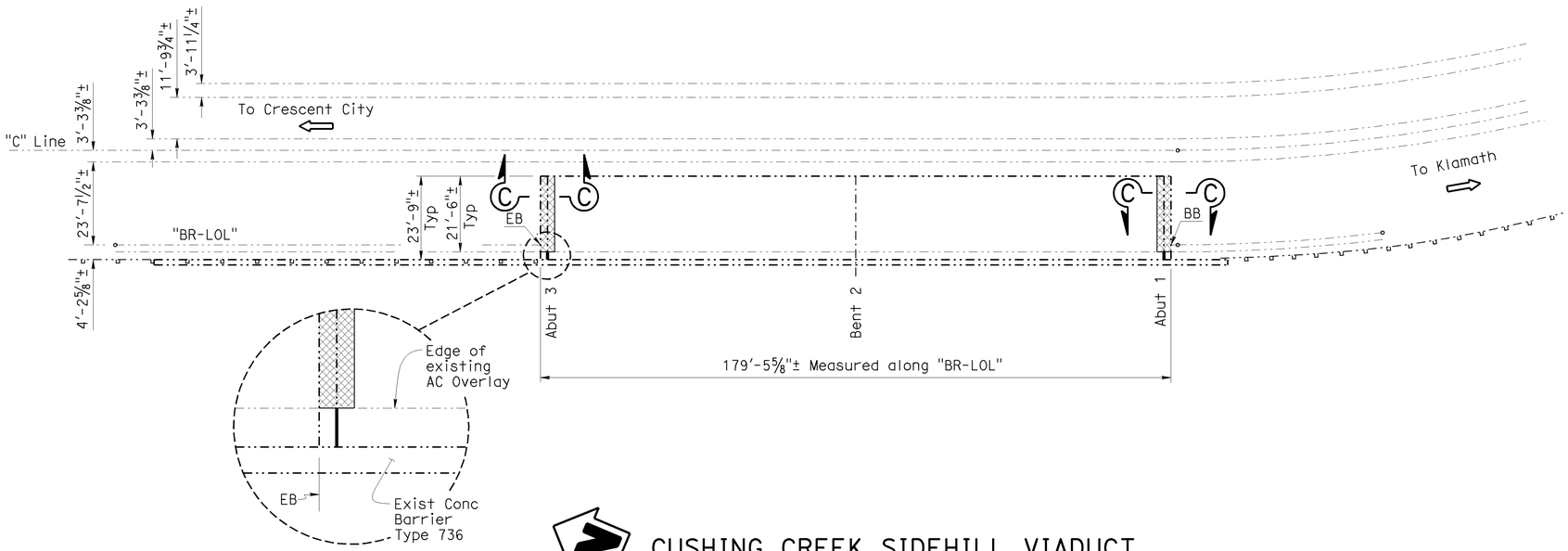

CUSHING CREEK SIDEHILL VIADUCT

Br. No. 01-0076, ROUTE 101, DN, PM 21.01
1"=20'

CUSHING CREEK SIDEHILL VIADUCT #01-0076

QUANTITIES

CLEAN EXPANSION JOINT	6	LF
JOINT SEAL (MR 1")	6	LF
JOINT SEAL (ASPHALTIC PLUG)	44	LF

NOTES: (APPLY TO THIS SHEET ONLY)

Indicates location of remove existing joint seal and place new asphaltic plug joint seal. For "Section C-C", see "DETAILS NO. 1" sheet.

Indicates location of existing joint seal removal and placement of new joint seal.

ROWDY CREEK

Br. No. 01-0023, ROUTE 101, DN, PM 39.63
1"=20'

ROWDY CREEK #01-0023

QUANTITIES

CLEAN EXPANSION JOINT	41	LF
JOINT SEAL (MR 1/2")	41	LF

NOTE:
THE CONTRACTOR SHALL VERIFY ALL CONTROLLING FIELD DIMENSIONS BEFORE ORDERING OR FABRICATING ANY MATERIAL.

8-18-11
DESIGN ENGINEER

	BY	CHECKED
DESIGN	M. Hashimoto	D. Acoba
DETAILS	Dale Kubochi	D. Acoba
QUANTITIES	M. Hashimoto	D. Acoba

LOAD FACTOR DESIGN	LIVE LOADING: HS20-44 AND ALTERNATIVE AND PERMIT DESIGN LOAD		
LAYOUT	BY Dale Kubochi	CHECKED M. Hashimoto	
SPECIFICATIONS	BY Karla Meier	PLANS AND SPECS COMPARED Karla Meier	

STATE OF CALIFORNIA
DEPARTMENT OF TRANSPORTATION

DIVISION OF MAINTENANCE
STRUCTURE MAINTENANCE DESIGN

BRIDGE NO. VARIOUS
POST MILE VARIES

ROUTE 199 & 101 BRIDGES
GENERAL PLAN NO. 3

STRUCTURES MAINTENANCE GENERAL PLAN SHEET (ENGLISH) (REV. 09-01-10)

ORIGINAL SCALE IN INCHES FOR REDUCED PLANS 0 1 2 3

UNIT: 3488
PROJECT NUMBER & PHASE: 0100020279
CONTRACT NO.: 01-0A3901

DISREGARD PRINTS BEARING EARLIER REVISION DATES
REVISION DATES 7-1-11 7-15-11 10-13-11 11-30-11

SHEET 3 OF 12

FILE => 01-0a3901-agp03.dgn

USERNAME => s109618 DATE PLOTTED => 30-JAN-2012 TIME PLOTTED => 11:44

DIST	COUNTY	ROUTE	POST MILES TOTAL PROJECT	SHEET No.	TOTAL SHEETS
01	DN,Hum	101,199	Var	12	20

REGISTERED CIVIL ENGINEER 12-6-11 DATE

1-26-12
PLANS APPROVAL DATE

REGISTERED PROFESSIONAL ENGINEER DIOSDADO ACOBA No. 52003 Exp. 12-31-12 CIVIL STATE OF CALIFORNIA

The State of California or its officers or agents shall not be responsible for the accuracy or completeness of electronic copies of this plan sheet.

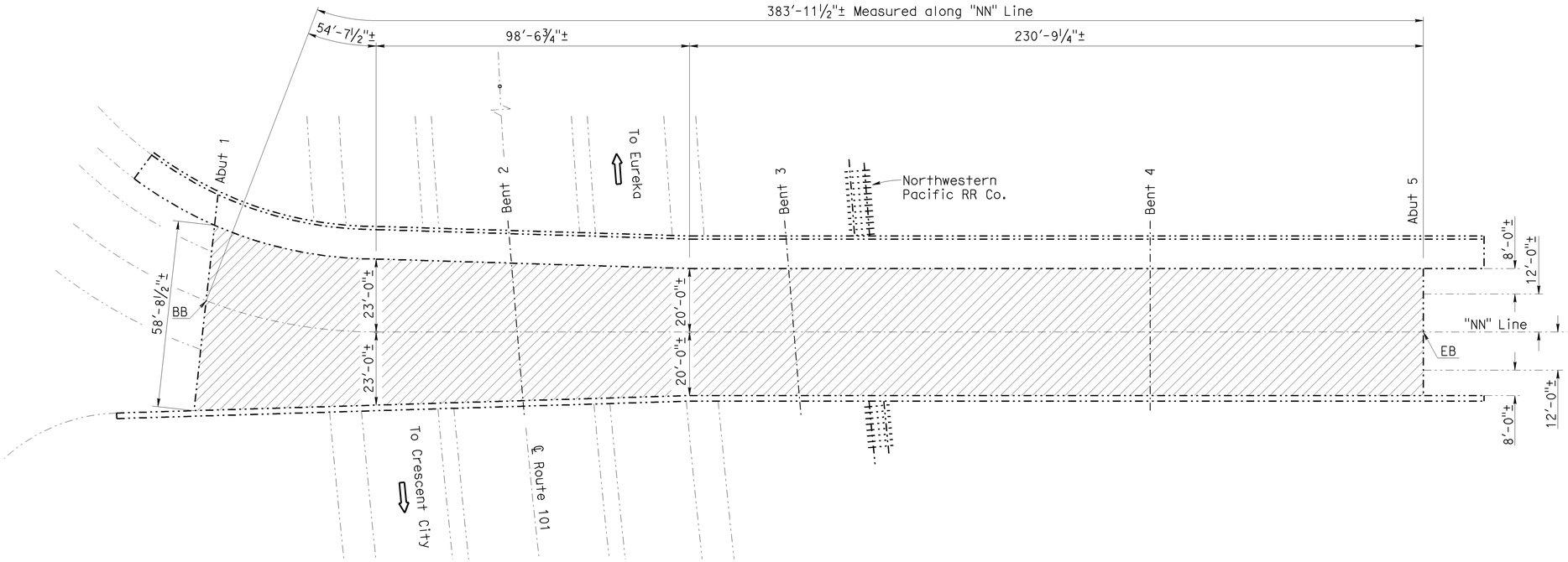

ST. LOUIS ROAD OVERCROSSING #04-0254

QUANTITIES

CLEAN BRIDGE DECK	16,000	SQFT
TREAT BRIDGE DECK	16,000	SQFT
FURNISH BRIDGE DECK TREATMENT MATERIAL	180	GAL
PUBLIC SAFETY PLAN	LUMP SUM	

ST. LOUIS ROAD OVERCROSSING

Br. No. 04-0254, ROUTE 101, Hum, PM 87.48
1"=20'

NOTES: (APPLY TO THIS SHEET ONLY)

Indicates limits of clean and treat bridge deck with high molecular weight methacrylate.

Indicates location of remove existing rocker bearings and install new elastomeric bearing pads. See "Details No. 3" sheet for details.

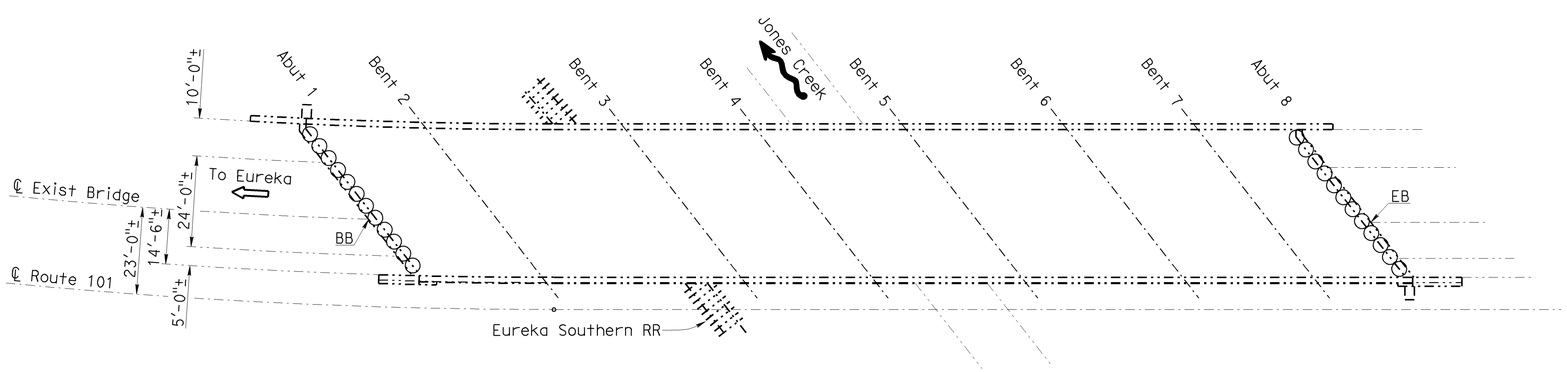

NOTE:
THE CONTRACTOR SHALL VERIFY ALL CONTROLLING FIELD DIMENSIONS BEFORE ORDERING OR FABRICATING ANY MATERIAL.

ARCATA OVERHEAD

Br. No. 04-0079L, ROUTE 101, Hum, PM 87.84
1"=20'

ARCATA OVERHEAD #04-0079L

QUANTITIES

TEMPORARY SUPPORT (LOCATION B)	LUMP SUM	
BRIDGE REMOVAL (PORTION), LOCATION B	LUMP SUM	
STRUCTURAL CONCRETE, BRIDGE	2	CY
ELASTOMERIC BEARING PAD	10	EA
BAR REINFORCING STEEL (BRIDGE)	360	LB
MISCELLANEOUS METAL (BRIDGE)	175	LB

DESIGN ENGINEER 8-18-11

	BY	CHECKED			
DESIGN	M. Hashimoto	D. Acoba	LOAD FACTOR DESIGN	LIVE LOADING: HS20-44 AND ALTERNATIVE AND PERMIT DESIGN LOAD	
DETAILS	Dale Kubochi	D. Acoba	LAYOUT	Dale Kubochi	M. Hashimoto
QUANTITIES	M. Hashimoto	D. Acoba	SPECIFICATIONS	Karla Meier	PLANS AND SPECS COMPARED Karla Meier

STATE OF CALIFORNIA
DEPARTMENT OF TRANSPORTATION

DIVISION OF MAINTENANCE
STRUCTURE MAINTENANCE DESIGN

BRIDGE NO. VARIOUS
POST MILE VARIES

ROUTE 199 & 101 BRIDGES
GENERAL PLAN NO. 4

STRUCTURES MAINTENANCE GENERAL PLAN SHEET (ENGLISH) (REV. 09-01-10)

ORIGINAL SCALE IN INCHES FOR REDUCED PLANS 0 1 2 3

UNIT: 3488
PROJECT NUMBER & PHASE: 0100020279
CONTRACT NO.: 01-0A3901

DISREGARD PRINTS BEARING EARLIER REVISION DATES

REVISION DATES 1-26-11 1-26-11 11-30-11

SHEET 4 OF 12

FILE => 01-0a3901-agp04.dgn

USERNAME => s109618 DATE PLOTTED => 30-JAN-2012 TIME PLOTTED => 11:44

DIST	COUNTY	ROUTE	POST MILES TOTAL PROJECT	SHEET No.	TOTAL SHEETS
01	DN,Hum	101,199	Var	13	20

REGISTERED CIVIL ENGINEER 12-6-11 DATE

1-26-12
PLANS APPROVAL DATE

REGISTERED PROFESSIONAL ENGINEER DIOSDADO ACOBA No. 52003 Exp. 12-31-12 CIVIL STATE OF CALIFORNIA

The State of California or its officers or agents shall not be responsible for the accuracy or completeness of electronic copies of this plan sheet.

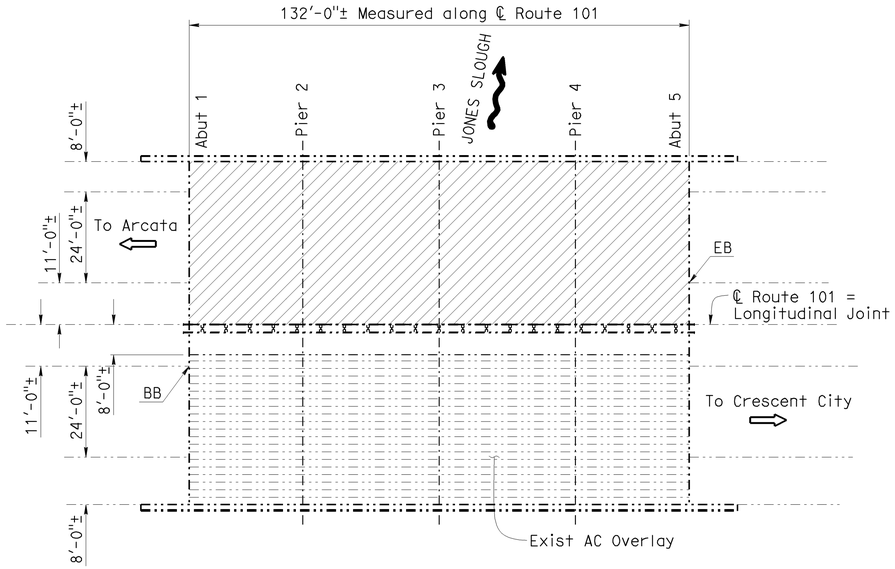

JONES SLOUGH

Br. No. 04-0083, ROUTE 101, Hum, PM 88.87
1"=20'

JONES SLOUGH #04-0083

QUANTITIES

CLEAN BRIDGE DECK	5,680	SQFT
TREAT BRIDGE DECK	5,680	SQFT
FURNISH BRIDGE DECK TREATMENT MATERIAL	65	GAL

NOTES: (APPLY TO THIS SHEET ONLY)

Indicates limits of clean and treat bridge deck with high molecular weight methacrylate.

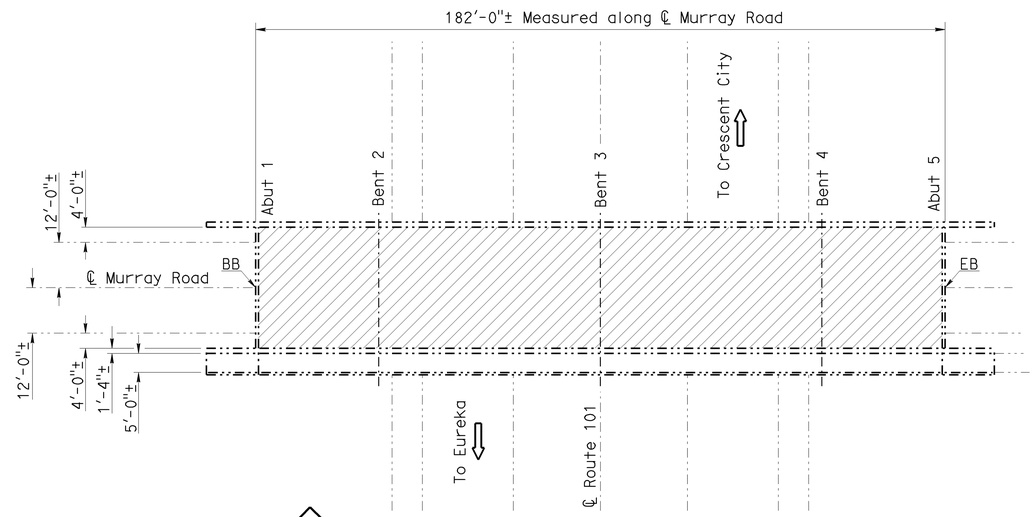

MURRAY ROAD OVERCROSSING

Br. No. 04-0170, ROUTE 101, Hum, PM R92.99
1"=20'

MURRAY ROAD OVERCROSSING #04-0170

QUANTITIES

CLEAN BRIDGE DECK	5,800	SQFT
TREAT BRIDGE DECK	5,800	SQFT
FURNISH BRIDGE DECK TREATMENT MATERIAL	65	GAL

NOTE:
THE CONTRACTOR SHALL VERIFY ALL CONTROLLING FIELD DIMENSIONS BEFORE ORDERING OR FABRICATING ANY MATERIAL.

8-18-11
DESIGN ENGINEER

	BY	CHECKED
DESIGN	M. Hashimoto	D. Acoba
DETAILS	Dale Kubochi	D. Acoba
QUANTITIES	M. Hashimoto	D. Acoba

LOAD FACTOR DESIGN — LIVE LOADING: HS20-44 AND ALTERNATIVE AND PERMIT DESIGN LOAD

	BY	CHECKED
LAYOUT	Dale Kubochi	M. Hashimoto
SPECIFICATIONS	Karla Meier	PLANS AND SPECS COMPARED Karla Meier

STATE OF CALIFORNIA
DEPARTMENT OF TRANSPORTATION

DIVISION OF MAINTENANCE
STRUCTURE MAINTENANCE DESIGN

BRIDGE NO. VARIOUS
POST MILE VARIES

ROUTE 199 & 101 BRIDGES
GENERAL PLAN NO. 5

STRUCTURES MAINTENANCE GENERAL PLAN SHEET (ENGLISH) (REV. 09-01-10)

ORIGINAL SCALE IN INCHES FOR REDUCED PLANS 0 1 2 3

UNIT: 3488
PROJECT NUMBER & PHASE: 0100020279
CONTRACT NO.: 01-0A3901

DISREGARD PRINTS BEARING EARLIER REVISION DATES

REVISION DATES 7-29-11 8-25-11 11-30-11

SHEET 5 OF 12

FILE => 01-0a3901-agp05.dgn

USERNAME => s109618 DATE PLOTTED => 30-JAN-2012 TIME PLOTTED => 11:44

DIST	COUNTY	ROUTE	POST MILES TOTAL PROJECT	SHEET No.	TOTAL SHEETS
01	DN,Hum	101,199	Var	14	20

REGISTERED CIVIL ENGINEER 12-6-11 DATE

1-26-12
PLANS APPROVAL DATE

REGISTERED PROFESSIONAL ENGINEER DIOSDADO ACOBA No. 52003 Exp. 12-31-12 CIVIL STATE OF CALIFORNIA

The State of California or its officers or agents shall not be responsible for the accuracy or completeness of electronic copies of this plan sheet.

NOTES: (APPLY TO THIS SHEET ONLY)

Indicates location of existing joint seal removal and placement of new joint seal.

Indicates location of remove existing joint seal assembly and place new joint seal assembly. For details, see "Section Thru Hinge" on "DETAILS NO. 4" sheet.

- For "Section D-D" and "Section E-E", see "DETAILS NO. 4" sheet.

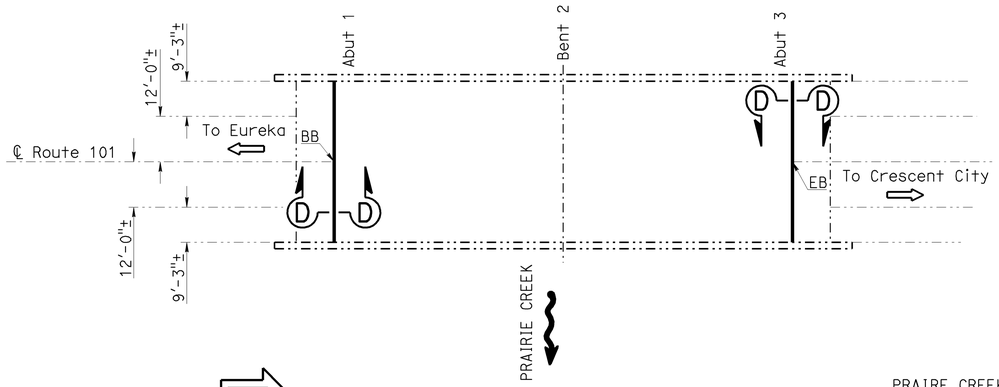

PRAIRIE CREEK

Br. No. 04-0029, ROUTE 101, Hum, PM 122.86
1"=20'

PRAIRE CREEK #04-0029

QUANTITIES

REPAIR JOINT SPALLS	LUMP SUM
CLEAN EXPANSION JOINT	88 LF
JOINT SEAL (MR 1/2")	88 LF

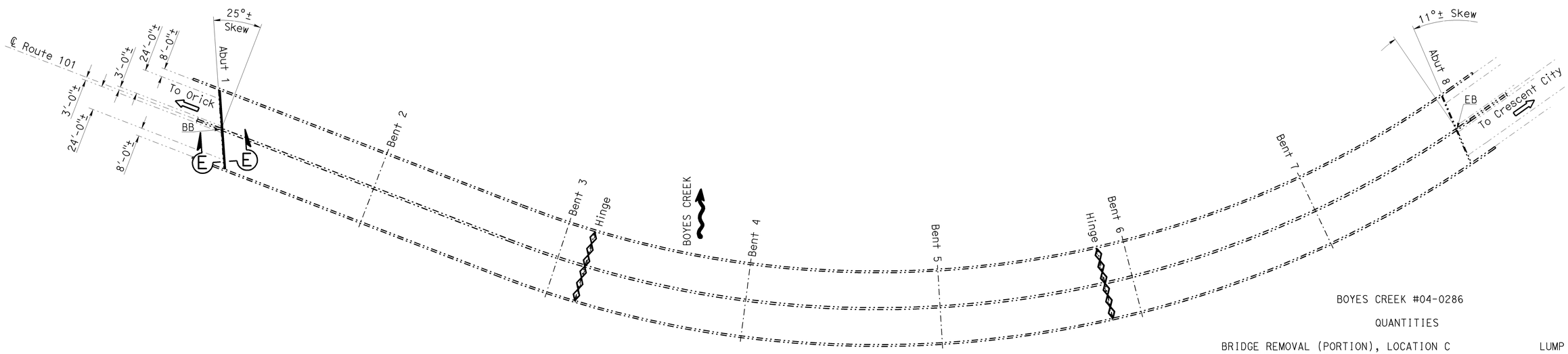

BOYES CREEK

Br. No. 04-0286, ROUTE 101, Hum, PM R128.97
1"=20'

BOYES CREEK #04-0286

QUANTITIES

BRIDGE REMOVAL (PORTION), LOCATION C	LUMP SUM
STRUCTURAL CONCRETE, BRIDGE	14 CY
REPAIR JOINT SPALLS	LUMP SUM
CLEAN EXPANSION JOINT	78 LF
JOINT SEAL (MR 1 1/2")	78 LF
JOINT SEAL ASSEMBLY (MR 2 1/2")	71 LF
JOINT SEAL ASSEMBLY (MR 3 1/2")	71 LF
BAR REINFORCING STEEL (EPOXY COATED) (BRIDGE)	25 LB

NOTE:
THE CONTRACTOR SHALL VERIFY ALL CONTROLLING FIELD DIMENSIONS BEFORE ORDERING OR FABRICATING ANY MATERIAL.

	BY	CHECKED				
DESIGN	M. Hashimoto	D. Acoba	LOAD FACTOR DESIGN	LIVE LOADING: HS20-44 AND ALTERNATIVE AND PERMIT DESIGN LOAD		
DETAILS	Dale Kubochi	D. Acoba	LAYOUT	BY Dale Kubochi	CHECKED M. Hashimoto	
QUANTITIES	M. Hashimoto	D. Acoba	SPECIFICATIONS	BY Karla Meier	PLANS AND SPECS COMPARED Karla Meier	

8-18-11
DESIGN ENGINEER

STATE OF CALIFORNIA
DEPARTMENT OF TRANSPORTATION

DIVISION OF MAINTENANCE
STRUCTURE MAINTENANCE DESIGN

BRIDGE NO. VARIOUS
POST MILE VARIES

ROUTE 199 & 101 BRIDGES
GENERAL PLAN NO. 6

STRUCTURES MAINTENANCE GENERAL PLAN SHEET (ENGLISH) (REV. 09-01-10)

ORIGINAL SCALE IN INCHES FOR REDUCED PLANS 0 1 2 3

UNIT: 3488
PROJECT NUMBER & PHASE: 0100020279
CONTRACT NO.: 01-0A3901

DISREGARD PRINTS BEARING EARLIER REVISION DATES

REVISION DATES 7-1-11 11-30-11 10-1-11

SHEET 6 OF 12

FILE => 01-0a3901-ggp06.dgn

USERNAME => s109618 DATE PLOTTED => 30-JAN-2012 TIME PLOTTED => 11:45

DIST	COUNTY	ROUTE	POST MILES TOTAL PROJECT	SHEET No.	TOTAL SHEETS
01	DN,Hum	101,199	Var	15	20

REGISTERED CIVIL ENGINEER 12-6-11 DATE

1-26-12
PLANS APPROVAL DATE

REGISTERED PROFESSIONAL ENGINEER DIOSDADO ACOBA No. 52003 Exp. 12-31-12 CIVIL STATE OF CALIFORNIA

The State of California or its officers or agents shall not be responsible for the accuracy or completeness of electronic copies of this plan sheet.

NOTES: (APPLY TO THIS SHEET ONLY)

Indicates limits of existing concrete removal and placement of new concrete expansion dam.

Indicates limits of remove existing AC overlay and prepare concrete bridge deck and top of abutment backwall surfaces.

Indicates limits of place new Asphaltic Plug Joint Seal.

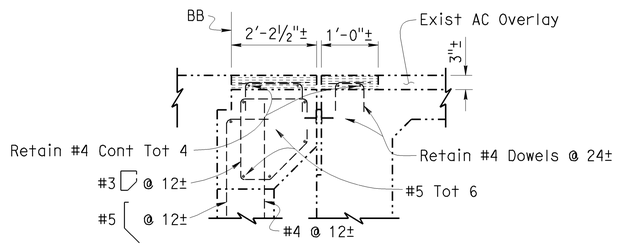

EXISTING

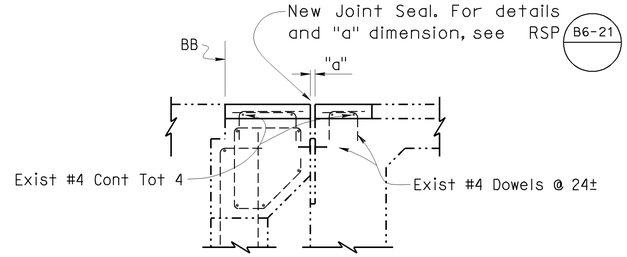

RECONSTRUCTION

SECTION A-A

Br. No. 01-0044
¾" = 1'-0"

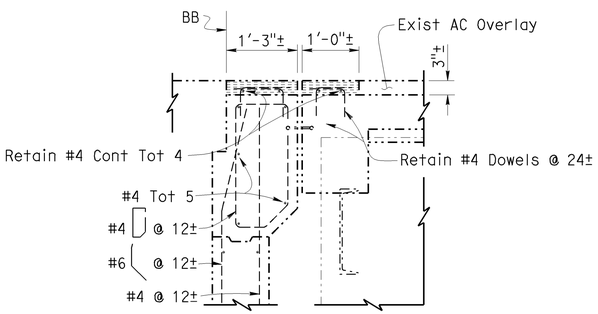

EXISTING

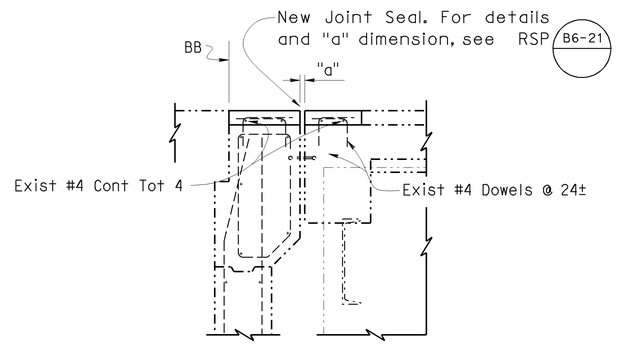

RECONSTRUCTION

SECTION B-B

Br. No. 01-0019
¾" = 1'-0"

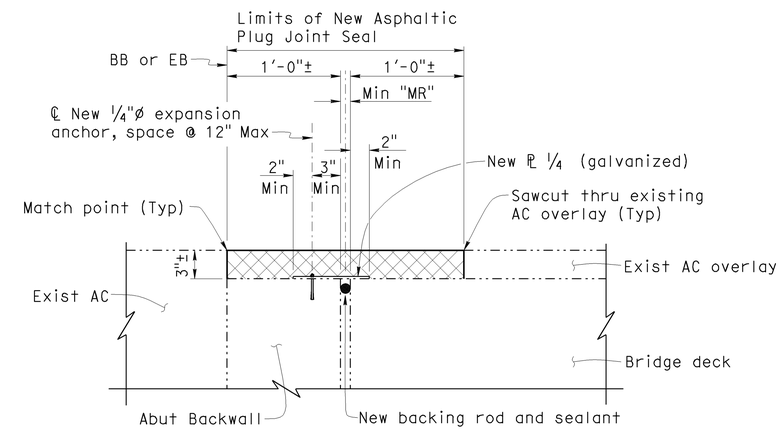

SECTION C-C

Br. No. 01-0076
1½" = 1'-0"

NOTE:
THE CONTRACTOR SHALL VERIFY ALL CONTROLLING FIELD DIMENSIONS BEFORE ORDERING OR FABRICATING ANY MATERIAL.

	BY	CHECKED
DESIGN	M. Hashimoto	D. Acoba
DETAILS	Dale Kubochi	D. Acoba
QUANTITIES	M. Hashimoto	D. Acoba

STATE OF CALIFORNIA
DEPARTMENT OF TRANSPORTATION

DIVISION OF MAINTENANCE
STRUCTURE MAINTENANCE DESIGN

BRIDGE NO. VARIOUS
POST MILE VARIES

ROUTE 199 & 101 BRIDGES
DETAILS NO. 1

STRUCTURES MAINTENANCE DETAIL SHEET (ENGLISH) (REV. 09-01-10)

ORIGINAL SCALE IN INCHES FOR REDUCED PLANS 0 1 2 3

UNIT: 3488
PROJECT NUMBER & PHASE: 0100020279
CONTRACT NO.: 01-0A3901

DISREGARD PRINTS BEARING EARLIER REVISION DATES

REVISION DATES 7-20-11 8-25-11 10-13-11 10-24-11

SHEET 7 OF 12

FILE => 01-0a3901-d-det01.dgn

USERNAME => s106618 DATE PLOTTED => 30-JAN-2012 TIME PLOTTED => 11:45

DIST	COUNTY	ROUTE	POST MILES TOTAL PROJECT	SHEET No.	TOTAL SHEETS
01	DN, Hum	101,199	Var	16	20

REGISTERED CIVIL ENGINEER 12-6-11 DATE

1-26-12
PLANS APPROVAL DATE

REGISTERED PROFESSIONAL ENGINEER DIOSDADO ACOBA No. 52003 Exp. 12-31-12 CIVIL STATE OF CALIFORNIA

The State of California or its officers or agents shall not be responsible for the accuracy or completeness of electronic copies of this plan sheet.

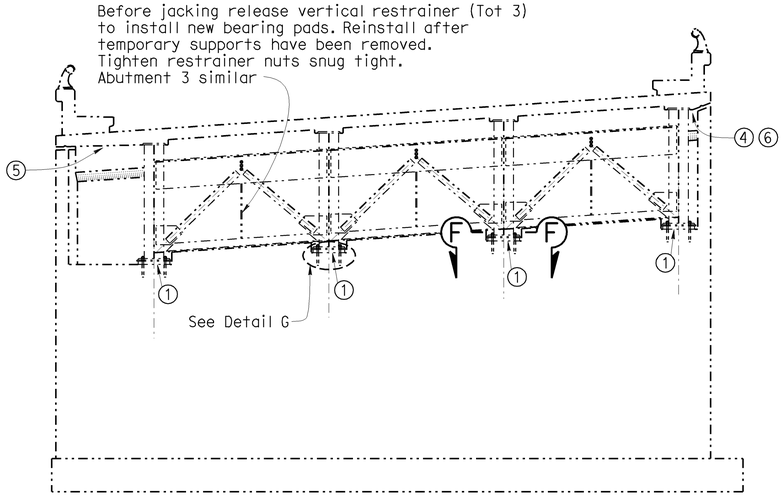

ELEVATION (ABUT 1)

Br. No. 01-0019
1/4" = 1'-0"

NOTES: (APPLY TO THIS SHEET ONLY)

BEARING PADS:

1. Remove existing 10" x 20" x 2" elastomeric bearing pad and replace with new 10" x 20" x 2" steel reinforced elastomeric bearing pad. Abutment 3 similar.
2. Remove existing 1" ø threaded rod w/nut & washer in 1 1/4"± ø hole 8"± deep. Place new 1" ø threaded rod w/nut & washer in 1 1/4" ø cored hole 8" deep and pressure grout. All anchor bolted connection shall be bearing type connection.

SPALLS:

3. Repair soffit spalled area 3' x 12" x 2". Saw cut the perimeter of the spalled area on the right side of Pier 2.
4. Repair soffit deck overhang adjacent to the backwall. Spalled area 2' x 12" x 2" (Abutment 1).
5. Repair soffit deck overhang adjacent to the backwall. Spalled area 1' x 12" x 2" (Abutment 3).
6. Repair soffit deck overhang adjacent to the backwall. Spalled area 2' x 12" x 2" (Abutment 3).

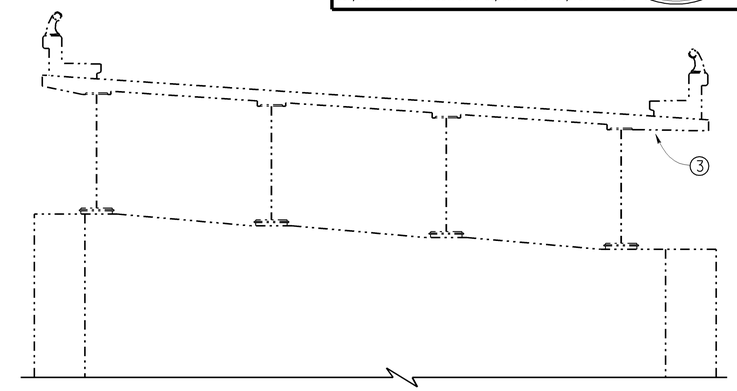

ELEVATION (PIER 2)

Br. No. 01-0019
1/4" = 1'-0"

SUGGESTED SEQUENCE:

a. Release vertical restrainer.
b. Add Temporary support.
c. Remove bearing hardware.
d. Start bridge jacking.
e. Tighten vertical restrainer.
f. After vertical restrainers are reinstalled, rest Abutment down on temporary supports.
g. Remove existing elastomeric bearing pad and core new holes.
h. Place new threaded rod w/nut and washer and pressure grout.
i. Place new steel reinforced elastomeric bearing pad and bearing hardware.
j. Release vertical restrainer before jacking starts.
k. Remove temporary support at the Abutments.
l. Set Structure on new bearing pads.
m. Tighten vertical restrainer and bearing hardware.

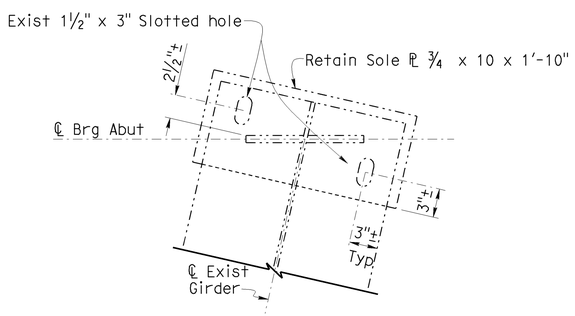

SECTION F-F

1 1/2" = 1'-0"

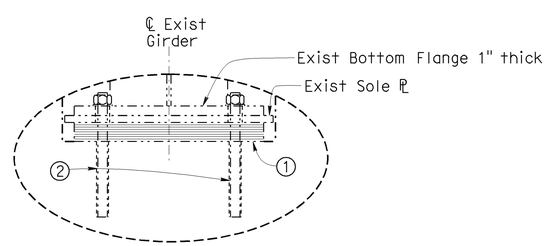

DETAIL G

1 1/2" = 1'-0"

TEMPORARY SUPPORT TABLE					
Bridge Number	Location	DL (Kips)	Minimum Design Load DL+LL+I(Kips)	Minimum Lateral Design Load (Kips)	Maximum Upward Deflection
01-0019	Abut 1	400	812	8	1/2 in
	Abut 3	375	769	8	1/2 in
04-0079L	Abut 1	528	934	11	1/2 in
	Abut 8	793	1317	16	1/2 in

JACKING NOTES:

1. Jacking operation shall not exceed the DL or maximum upward deflection.
2. The jacking force shall be applied to all jacks simultaneously across the entire width of the superstructure. The total vertical lift shall be enough to release existing bearing pads and install new bearing pads, but no greater than 1/2 inch above final grade. The differential lift between jacks shall not exceed 1/8 inch.
3. Vertical deflection shall be maintained during repair operations.

NOTE:
THE CONTRACTOR SHALL VERIFY ALL CONTROLLING FIELD DIMENSIONS BEFORE ORDERING OR FABRICATING ANY MATERIAL.

	BY	CHECKED
DESIGN	M. Hashimoto	D. Acoba
DETAILS	Dale Kubochi	D. Acoba
QUANTITIES	M. Hashimoto	D. Acoba

STATE OF CALIFORNIA
DEPARTMENT OF TRANSPORTATION

DIVISION OF MAINTENANCE
STRUCTURE MAINTENANCE DESIGN

BRIDGE NO. VARIOUS
POST MILE VARIES

ROUTE 199 & 101 BRIDGES
DETAILS NO. 2

STRUCTURES MAINTENANCE DETAIL SHEET (ENGLISH) (REV. 09-01-10)

ORIGINAL SCALE IN INCHES FOR REDUCED PLANS 0 1 2 3

UNIT: 3488
PROJECT NUMBER & PHASE: 0100020279
CONTRACT NO.: 01-0A3901

DISREGARD PRINTS BEARING EARLIER REVISION DATES

REVISION DATES 7-14-11 10-13-11 1-25-11 8-8-11

SHEET 8 OF 12

FILE => 01-0a3901-d-det02.dgn

USERNAME => s109618 DATE PLOTTED => 30-JAN-2012 TIME PLOTTED => 11:45

DIST	COUNTY	ROUTE	POST MILES TOTAL PROJECT	SHEET No.	TOTAL SHEETS
01	DN, Hum	101,199	Var	17	20

REGISTERED CIVIL ENGINEER 12-6-11 DATE

1-26-12
PLANS APPROVAL DATE

REGISTERED PROFESSIONAL ENGINEER DIOSDADO ACOBA No. 52003 Exp. 12-31-12 CIVIL STATE OF CALIFORNIA

The State of California or its officers or agents shall not be responsible for the accuracy or completeness of electronic copies of this plan sheet.

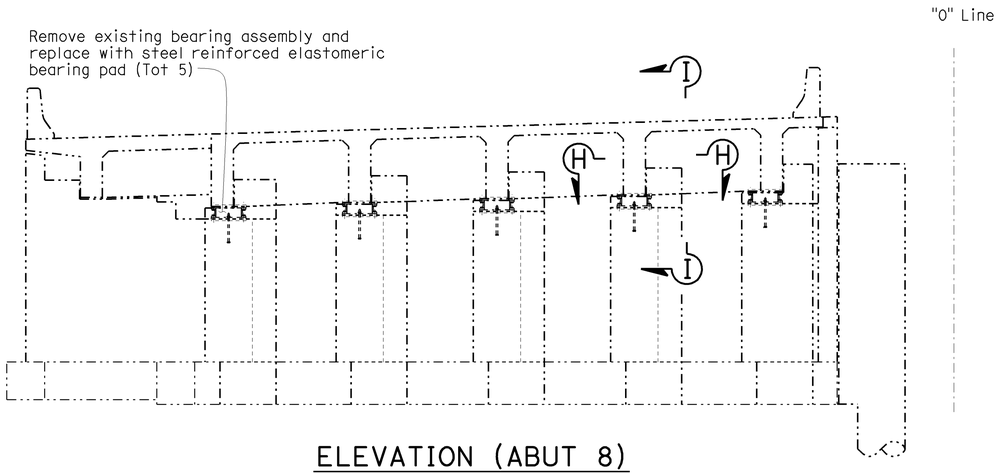

ELEVATION (ABUT 8)

Br. No. 04-0079L
1/4" = 1'-0"

Note: Abutment 1 similar

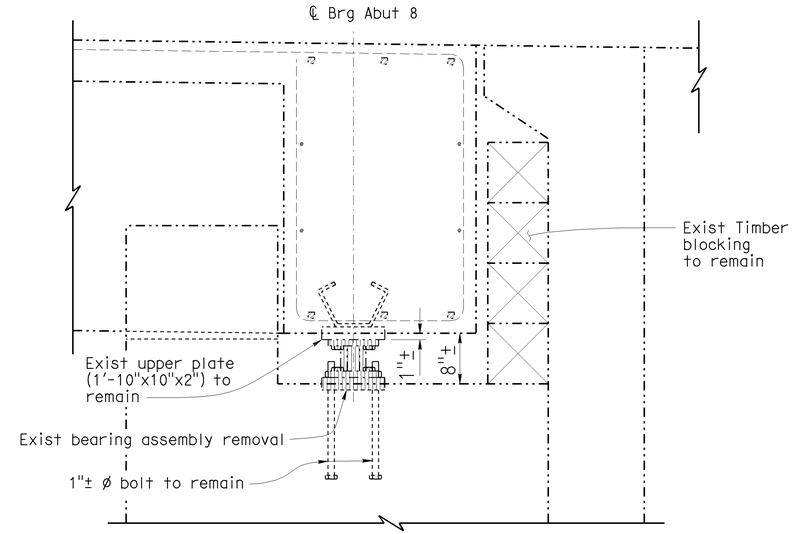

EXISTING

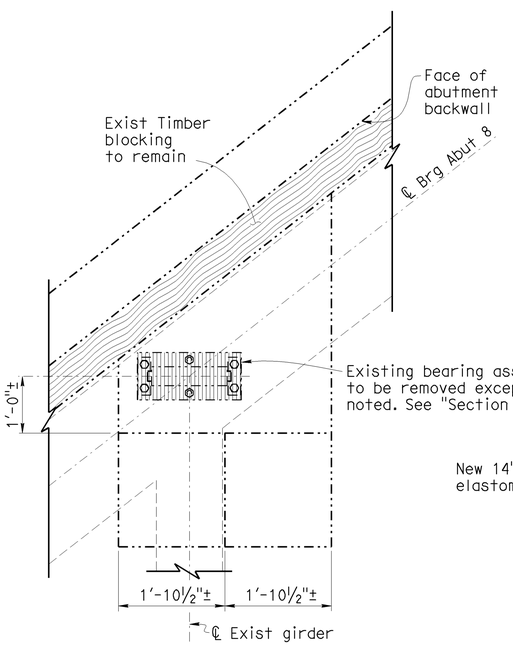

EXISTING

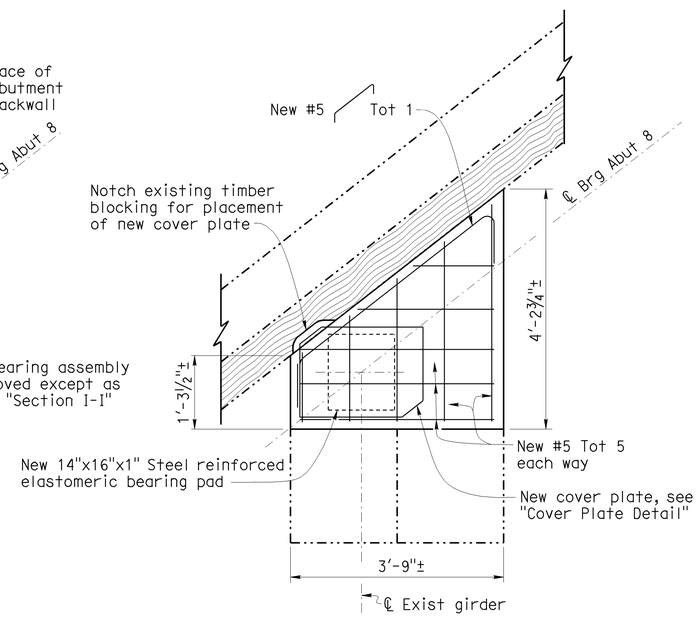

RECONSTRUCTION

SECTION H-H

¾" = 1'-0"

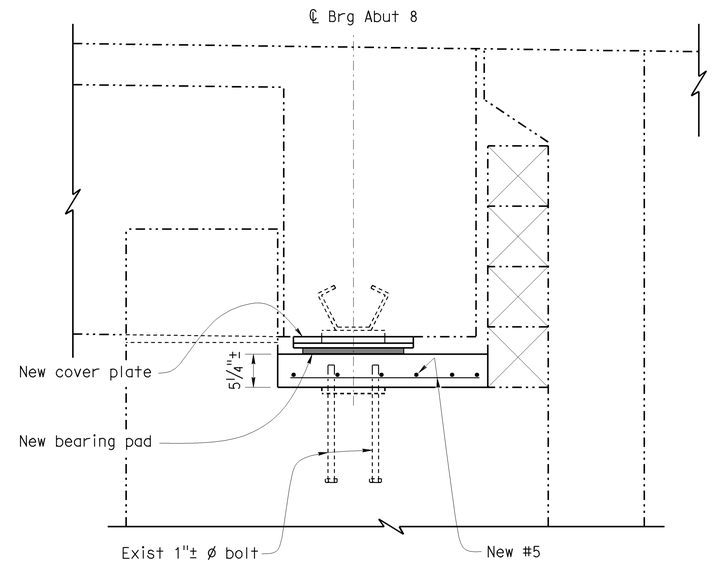

RECONSTRUCTION

SECTION I-I

1" = 1'-0"

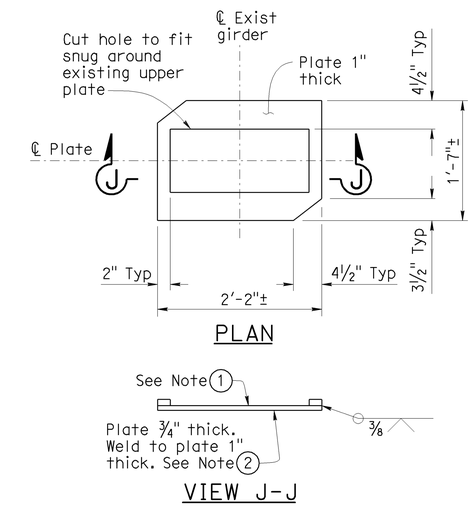

COVER PLATE DETAIL

1" = 1'-0"

NOTES:

1. Attach Galvanized Cover Plate to existing upper plate. Fully coat all interfacing surface with epoxy adhesive.
2. Grease surface between plate and new bearing pad.

NOTE:
THE CONTRACTOR SHALL VERIFY ALL CONTROLLING FIELD DIMENSIONS BEFORE ORDERING OR FABRICATING ANY MATERIAL.

	BY	CHECKED
DESIGN	M. Hashimoto	D. Acoba
DETAILS	Dale Kubochi	D. Acoba
QUANTITIES	M. Hashimoto	D. Acoba

STATE OF CALIFORNIA
DEPARTMENT OF TRANSPORTATION

DIVISION OF MAINTENANCE
STRUCTURE MAINTENANCE DESIGN

BRIDGE NO. VARIOUS
POST MILE VARIES

ROUTE 199 & 101 BRIDGES
DETAILS NO. 3

STRUCTURES MAINTENANCE DETAIL SHEET (ENGLISH) (REV. 09-01-10)

ORIGINAL SCALE IN INCHES FOR REDUCED PLANS 0 1 2 3

UNIT: 3488
PROJECT NUMBER & PHASE: 0100020279
CONTRACT NO.: 01-0A3901

DISREGARD PRINTS BEARING EARLIER REVISION DATES → 7-1-11 10-24-11 10-1-12

SHEET 9 OF 12

FILE => 01-0a3901-d-det03.dgn

USERNAME => s109618 DATE PLOTTED => 30-JAN-2012 TIME PLOTTED => 11:45

DIST	COUNTY	ROUTE	POST MILES TOTAL PROJECT	SHEET No.	TOTAL SHEETS
01	DN,Hum	101,199	Var	18	20

REGISTERED CIVIL ENGINEER 12-6-11 DATE

1-26-12
PLANS APPROVAL DATE

REGISTERED PROFESSIONAL ENGINEER DIOSDADO ACOBA No. 52003 Exp. 12-31-12 CIVIL STATE OF CALIFORNIA

The State of California or its officers or agents shall not be responsible for the accuracy or completeness of electronic copies of this plan sheet.

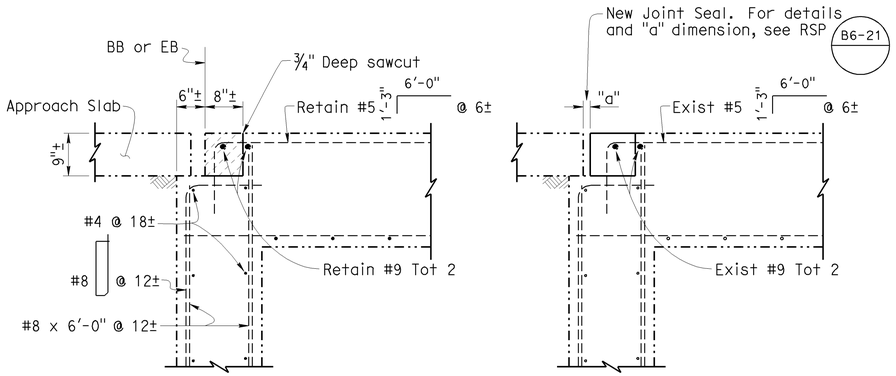

EXISTING RECONSTRUCTION

SECTION D-D

Br. No. 04-0029
3/4" = 1'-0"

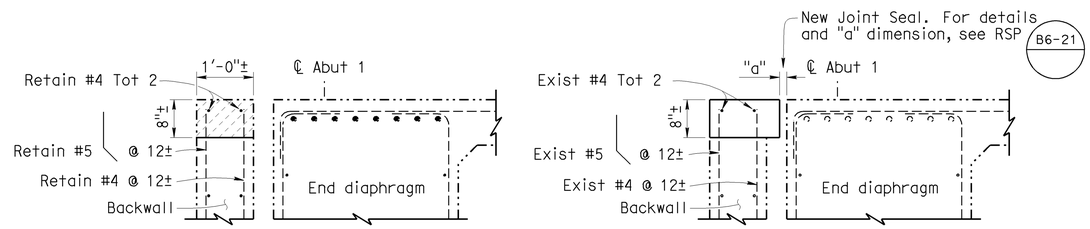

EXISTING RECONSTRUCTION

SECTION E-E

Br. No. 04-0286
3/4" = 1'-0"

NOTES: (APPLY TO THIS SHEET ONLY)

Indicates limits of remove existing concrete and joint seal assembly. Retain existing reinforcing steel.

Indicates limits of existing concrete removal and placement of new concrete.

"a" Reconstructed gap width as determined by the Engineer.

- For additional details, see "JOINT SEAL ASSEMBLY (MAXIMUM MOVEMENT RATING = 4")" sheet.

* Bar reinforcing steel (epoxy coated)

GENERAL NOTES
LOAD FACTOR DESIGN

DESIGN: BRIDGE DESIGN SPECIFICATIONS (1996 AASHTO with Interims and Revisions by CALTRANS)

REINFORCED CONCRETE: fy = 60 ksi
f'c = 3.6 ksi
n = 8

TEMPORARY DECKING DESIGN LOADING

MOMENT DEMAND/FOOT (kip-ft/ft)	BOLT SHEAR/FOOT (kip/ft)	BOLT TENSION (kip)
3.25	8.0	8.0

Plate deflection shall not exceed s/300 (s = span of plate).
Maximum anchor bolt spacing = 1'-0".

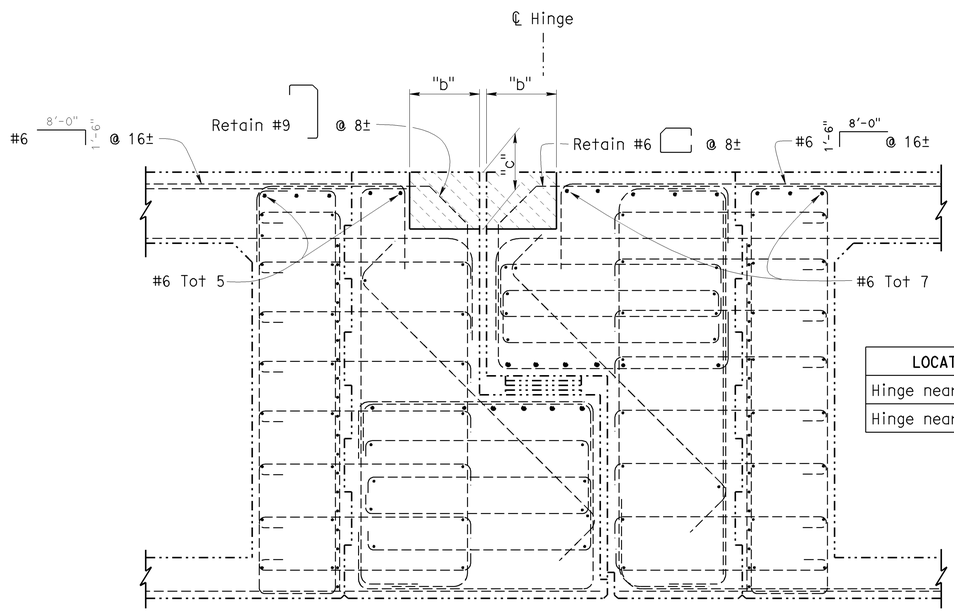

LOCATION	"b"	"c"
Hinge near Bent 3	1'-3"±	1'-0"±
Hinge near Bent 6	0'-10½"±	1'-0"±

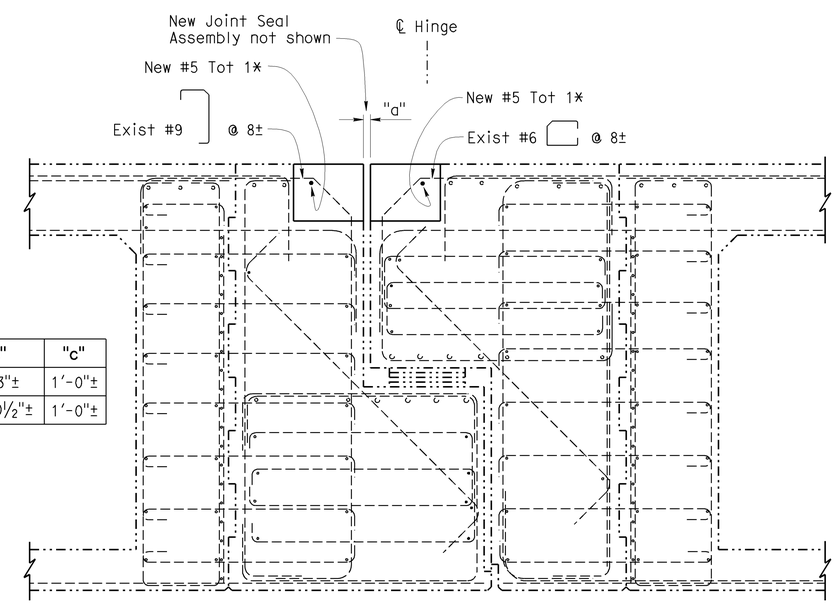

EXISTING RECONSTRUCTION

SECTION THRU HINGE

Br. No. 04-0286
3/4" = 1'-0"

NOTE:
THE CONTRACTOR SHALL VERIFY ALL CONTROLLING FIELD DIMENSIONS BEFORE ORDERING OR FABRICATING ANY MATERIAL.

	BY	CHECKED
DESIGN	M. Hashimoto	D. Acoba
DETAILS	Dale Kubochi	D. Acoba
QUANTITIES	M. Hashimoto	D. Acoba

STATE OF CALIFORNIA
DEPARTMENT OF TRANSPORTATION

DIVISION OF MAINTENANCE
STRUCTURE MAINTENANCE DESIGN

BRIDGE NO. VARIOUS
POST MILE VARIES

ROUTE 199 & 101 BRIDGES
DETAILS NO. 4

STRUCTURES MAINTENANCE DETAIL SHEET (ENGLISH) (REV. 09-01-10)

ORIGINAL SCALE IN INCHES FOR REDUCED PLANS 0 1 2 3

UNIT: 3488
PROJECT NUMBER & PHASE: 0100020279
CONTRACT NO.: 01-0A3901

DISREGARD PRINTS BEARING EARLIER REVISION DATES

REVISION DATES 1-26-11 1-26-11

SHEET 10 OF 12

FILE => 01-0a3901-d-det04.dgn

USERNAME => s108618 DATE PLOTTED => 30-JAN-2012 TIME PLOTTED => 11:46

DIST	COUNTY	ROUTE	POST MILES TOTAL PROJECT	SHEET No.	TOTAL SHEETS
01	DN,Hum	101,199	Var	19	20

REGISTERED CIVIL ENGINEER 12-6-11 DATE

1-26-12
PLANS APPROVAL DATE

REGISTERED PROFESSIONAL ENGINEER DIOSDADO ACOBA No. 52003 Exp. 12-31-12 CIVIL STATE OF CALIFORNIA

The State of California or its officers or agents shall not be responsible for the accuracy or completeness of electronic copies of this plan sheet.

JOINT SEAL TABLE

BRIDGE NAME	BRIDGE NUMBER	LOCATION		MINIMUM "MR" (INCHES)	APPROXIMATE LENGTH (FEET)	EXISTING WATERSTOP	APPROX DEPTH TO CLEAN EXP JOINT (INCHES)
MYRTLE CREEK	01-0007	Abut 1	BW	1	33	YES	6
		Abut 14	BW	1	33	YES	6
MIDDLE FORK SMITH RIVER	01-0044	Abut 1	BW	1½	75	YES	3
MIDDLE FORK SMITH RIVER	01-0019	Abut 1	BW	1	30	YES	3
		Abut 3	BW	1	30	YES	3
KLAMATH RIVER OVERFLOW	01-0032	Hinge	H	1½	29	YES	3
ROWDY CREEK	01-0023	Pier 2	JT	½	41	YES	3
CUSHING CREEK SIDEHILL VIADUCT #1	01-0076	Abut 1 ✳	BW	1	22	NO	6
		Abut 1	BW	1	3	NO	6
		Abut 3 ✳	BW	1	22	NO	6
		Abut 3	BW	1	3	NO	6
PRAIRIE CREEK	04-0029	Abut 1	BB	½	44	NO	9
		Abut 3	EB	½	44	NO	9
BOYES CREEK	04-0286	Abut 1	BW	1½	78	NO	6
		Hinge near Bent 3	H	3½	71	NO	14
		Hinge near Bent 6	H	2½	71	NO	14

LEGEND:
BW - Abutment backwall joint
BB - Paving Notch at beginning of bridge
EB - Paving Notch at end of bridge
JT - Expansion Joint
H - Hinge Joint
✳ - Asphaltic Plug Joint Seal

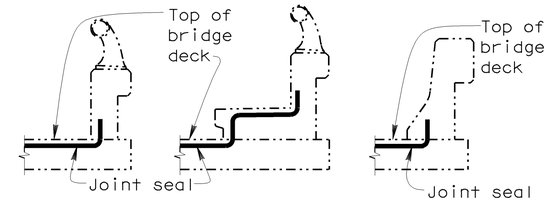

BARRIER RAIL

JOINT SEAL AT LOW SIDE OF DECK

Notes: Details shown for illustration purposes only. For use only where deck joint matches the sidewalk, curb or barrier rail joint.

DECK REPAIR TABLE
REMOVE UNSOUND CONCRETE AND RAPID SETTING CONCRETE (PATCH)

BRIDGE NAME	BRIDGE NUMBER	APPROXIMATE AREA DAMAGED (PERCENT)	APPROXIMATE DEPTH (INCHES)
KLAMATH RIVER OVERFLOW	01-0032	10	3

Locations to be determined by the Engineer.
For details see "Deck Repair Detail - Overlay".

The following notes apply to JOINT SEAL TYPE B:

1) Seal must satisfy both minimum Movement Rating (MR) and minimum W1 requirements.
2) Minimum W1 is the calculated maximum width of the joint based on field measurements. After the joints have been cleaned, minimum W1 is to be calculated by the Engineer.
3) W1 shall be the smaller of the values determined as follows:
   A) 0.85 times the manufacturer's designed minimum uncompressed width of the seal.
   B) The width of the seal on the third successive test cycle of the pressure deflection test, when compressed to an average pressure of 3 psi.
4) Bend Type B joint seal 6" up into curb or rail on the low side of the deck where deck joint matches curb or rail joint.
5) For details not shown, see RSP B6-21

The following notes apply to JOINT SEAL TYPE A:

1) Install Type A joint seal 3" up into rail on the low side of deck where joint matches curb or rail joint.
2) For details not shown, see RSP B6-21

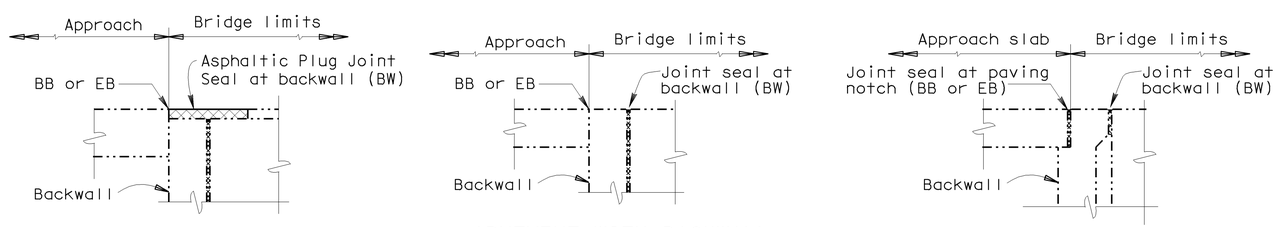

ABUTMENT WITH BACKWALL

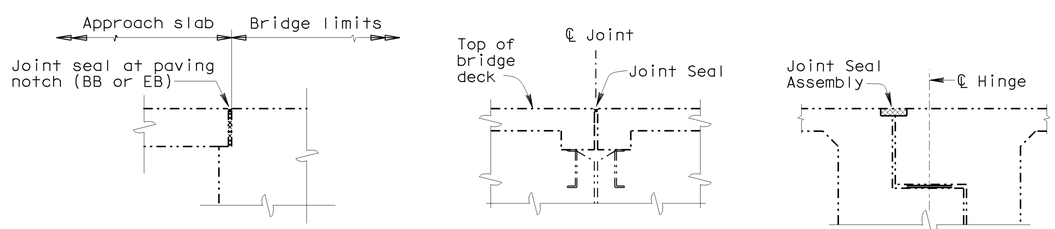

DIAPHRAGM ABUTMENT PIER HINGE

JOINT SEAL LOCATION

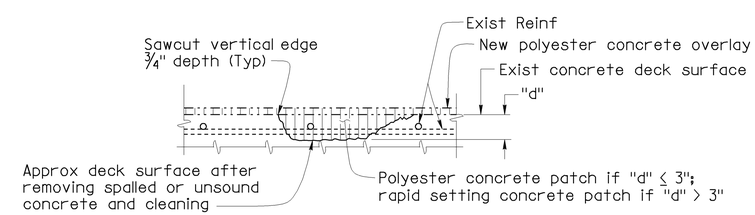

DECK REPAIR DETAIL - OVERLAY

Note: Locations to be determined by the Engineer. Reinforcement may be encountered during deck concrete removal.

NO SCALE

NOTE:
THE CONTRACTOR SHALL VERIFY ALL CONTROLLING FIELD DIMENSIONS BEFORE ORDERING OR FABRICATING ANY MATERIAL.

	BY	CHECKED
DESIGN	M. Hashimoto	D. Acoba
DETAILS	Dale Kubochi	D. Acoba
QUANTITIES	M. Hashimoto	D. Acoba

STATE OF CALIFORNIA
DEPARTMENT OF TRANSPORTATION

DIVISION OF MAINTENANCE
STRUCTURE MAINTENANCE DESIGN

BRIDGE NO. VARIOUS
POST MILE VARIES

ROUTE 199 & 101 BRIDGES
JOINT SEAL DETAILS

STRUCTURES MAINTENANCE DETAIL SHEET (ENGLISH) (REV. 09-01-10)

ORIGINAL SCALE IN INCHES FOR REDUCED PLANS 0 1 2 3

UNIT: 3488
PROJECT NUMBER & PHASE: 0100020279
CONTRACT NO.: 01-0A3901

DISREGARD PRINTS BEARING EARLIER REVISION DATES

REVISION DATES 1-27-11 10-24-11 10-19-11

SHEET 11 OF 12

FILE => 01-0a3901-j-jt-det.dgn

USERNAME => s109618 DATE PLOTTED => 30-JAN-2012 TIME PLOTTED => 11:46

DIST	COUNTY	ROUTE	POST MILES TOTAL PROJECT	SHEET No.	TOTAL SHEETS
01	DN,Hum	101,199	Var	20	20

REGISTERED CIVIL ENGINEER 12-6-11 DATE

1-26-12
PLANS APPROVAL DATE

REGISTERED PROFESSIONAL ENGINEER DIOSDADO ACOBA No. 52003 Exp. 12-31-12 CIVIL STATE OF CALIFORNIA

The State of California or its officers or agents shall not be responsible for the accuracy or completeness of electronic copies of this plan sheet.

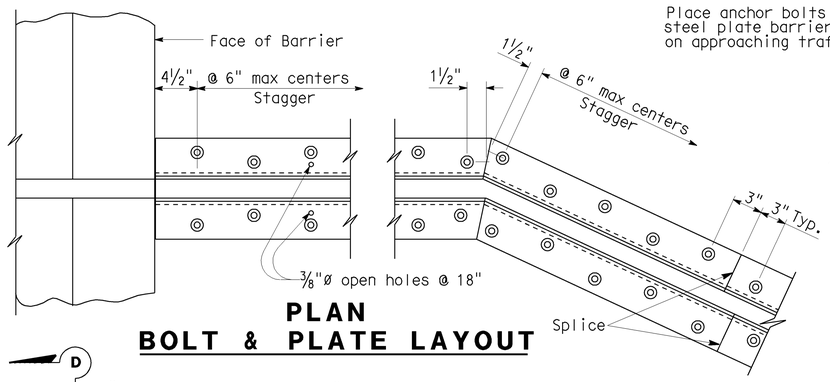

PLAN
BOLT & PLATE LAYOUT

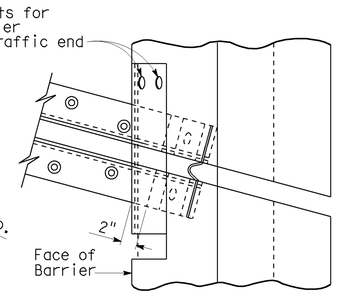

SKEW ≤ 20°

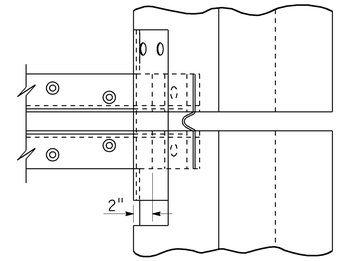

SKEW > 20°

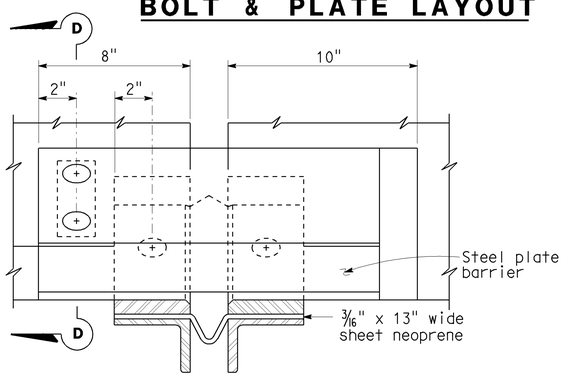

VIEW B-B

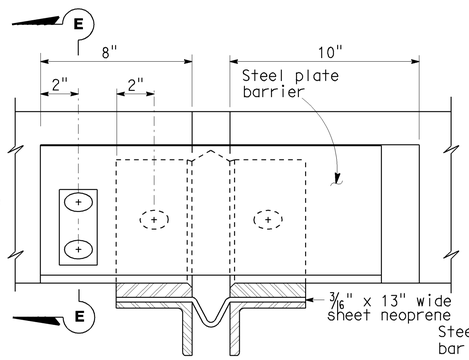

VIEW C-C

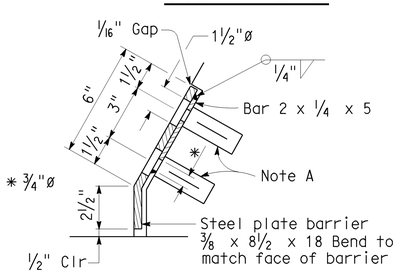

SECTION D-D

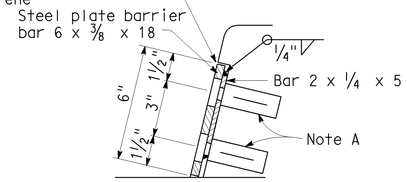

SECTION E-E

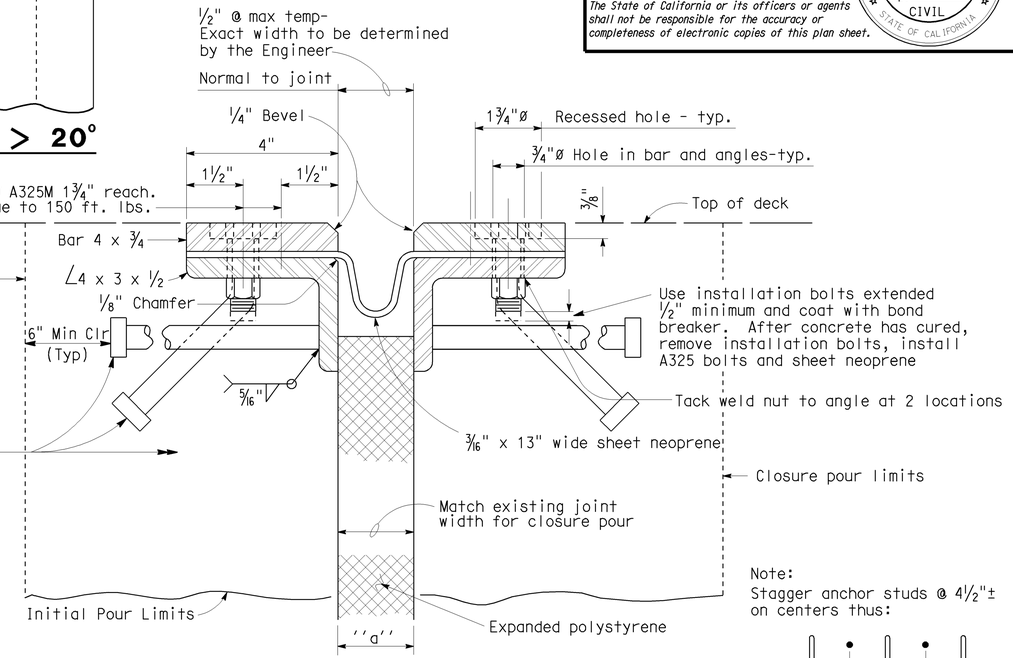

SECTION A-A

Note:
Stagger anchor studs @ 4½"± on centers thus:

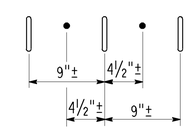

◊1

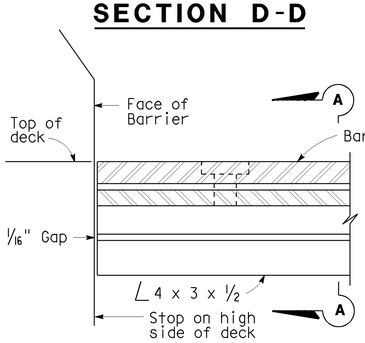

HIGH SIDE BARRIER DETAIL

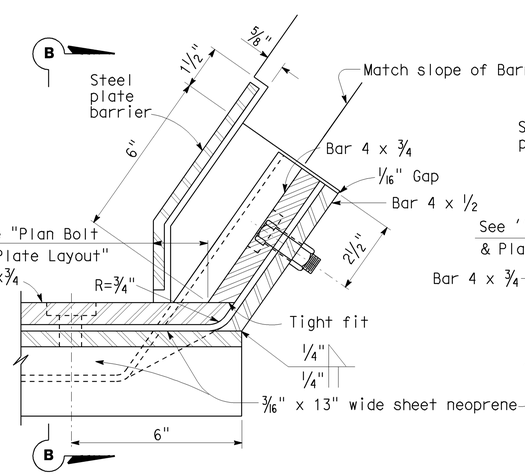

LOW SIDE BARRIER DETAIL
(See Note B)

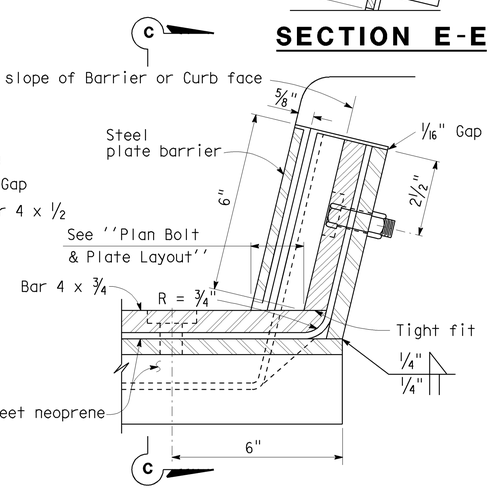

SIDEWALK DETAIL
(See Note B)

NOTES:

Full penetration butt welds may be substituted for fillet welds on all anchor studs.

Alternate types of anchor studs may be permitted subject to the approval by the Engineer.

Joint seal assembly to be used in conjunction with closure pour. (See other sheets for limits). Closure pour shall not be placed until final deck surface is within the tolerance specified.

Use joint at crown of roadway, at any change in transverse slope in deck and at changes in horizontal direction. Place other joints at or near lanes. All metal parts to be painted or galvanized after fabrication.

Sheet neoprene shall be fabricated in one continuous piece or joints shall be vulcanized. Neoprene shall be fabricated to bend around corners. 1" holes in neoprene sheets shall be drilled or punched so that the neoprene is not distorted at the time of installation.

NOTE A

Insert assembly or expansion anchorage for ⅝" x 1¾" A325M bolt.

NOTE B

Use the Sidewalk Detail at all sidewalk joints. Use the Barrier Detail at both sides if the roadway is crowned or if the difference in elevation between the ends of the seal is 0.5′ or less.

NO SCALE

ALL DIMENSIONS ARE IN MILLIMETERS UNLESS OTHERWISE SHOWN

SPECIAL DETAILS

REVISED STANDARD DRAWING

FILE NO. xs8-010e

APPROVAL DATE 5-8-08

◊ Deleted Table

STATE OF CALIFORNIA
DEPARTMENT OF TRANSPORTATION

DIVISION OF ENGINEERING SERVICES

BRIDGE NO.	VARIOUS
POST MILE	VARIES

ROUTE 199 & 101 BRIDGES

JOINT SEAL ASSEMBLY (MAXIMUM MOVEMENT RATING = 4")

DS OSD 2147A (ENGLISH STANDARD DRAWING "XS" BORDER REV. (02-02-11)

ORIGINAL SCALE IN INCHES FOR REDUCED PLANS 0 1 2 3

UNIT: 3488
PROJECT NUMBER & PHASE: 0100020279
CONTRACT NO.: 01-0A3901

DISREGARD PRINTS BEARING EARLIER REVISION DATES

REVISION DATES 7-21-11

SHEET 12 OF 12

FILE => 01-0a3901-k-jtsassem.dgn

USERNAME => s109618 DATE PLOTTED => 30-JAN-2012 TIME PLOTTED => 11:46