Dist	COUNTY	ROUTE	POST MILES TOTAL PROJECT	SHEET No.	TOTAL SHEETS
01	Men	1, 128	Var	1	21

INDEX OF PLANS

SHEET No.	DESCRIPTION
1	TITLE AND LOCATION MAP
2-5	REVISED STANDARD PLANS

STRUCTURE PLANS

6-21	ROUTE 1 BRIDGES

THE STANDARD PLANS LIST APPLICABLE TO THIS CONTRACT IS INCLUDED IN THE NOTICE TO BIDDERS AND SPECIAL PROVISIONS BOOK.

STATE OF CALIFORNIA

DEPARTMENT OF TRANSPORTATION

PROJECT PLANS FOR CONSTRUCTION ON

STATE HIGHWAY

IN MENDOCINO COUNTY AT VARIOUS LOCATIONS

TO BE SUPPLEMENTED BY STANDARD PLANS DATED 2010

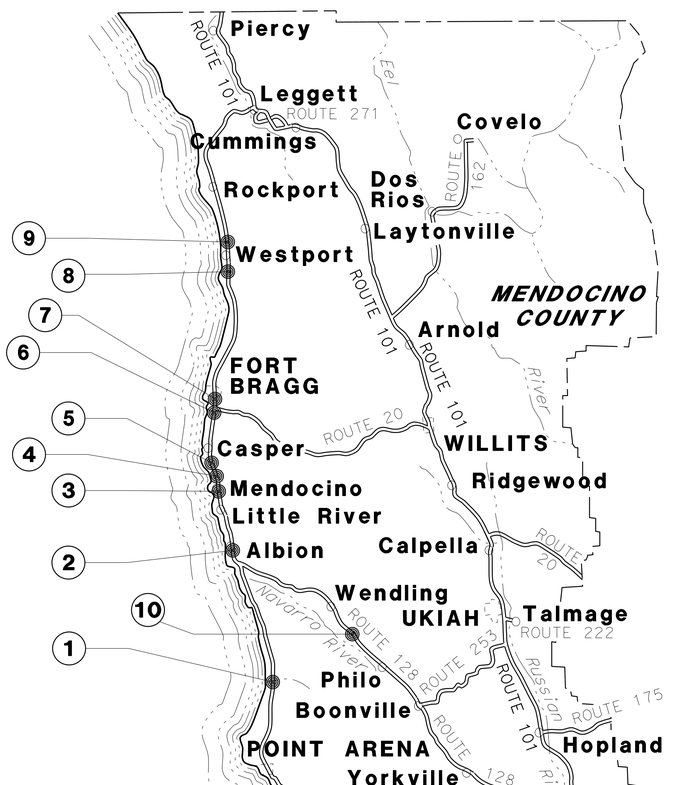

NO SCALE

LOCATIONS OF CONSTRUCTION

LOCATION	COUNTY	ROUTE	PM	BRIDGE NAME	BRIDGE No.
1	Men	1	22.73	ALDER CREEK	10-0116
2	Men	1	43.00	SALMON CREEK	10-0134
3	Men	1	51.87	JACK PETERS CREEK	10-0150
4	Men	1	R54.71	CASPAR CREEK	10-0153
5	Men	1	56.73	JUG HANDLE CREEK	10-0154
6	Men	1	59.67	HARE CREEK (Sgt EMIL H. EVENSEN MEMORIAL BRIDGE)	10-0175
7	Men	1	60.23	NOYO RIVER (LT CHARLES L. LARSON MEMORIAL BRIDGE)	10-0298
8	Men	1	75.00	BLUE SLIDE GULCH	10-0166
9	Men	1	R79.22	DE HAVEN CREEK	10-0138
10	Men	128	17.88	MILL CREEK	10-0073

Curtis D. Coburn 2-24-14
PROJECT ENGINEER DATE
REGISTERED CIVIL ENGINEER

FEBRUARY 24, 2014
PLANS APPROVAL DATE

REGISTERED PROFESSIONAL ENGINEER
CURTIS D. COBURN
No. 58431
Exp. 12-31-14
CIVIL
STATE OF CALIFORNIA

THE STATE OF CALIFORNIA OR ITS OFFICERS OR AGENTS SHALL NOT BE RESPONSIBLE FOR THE ACCURACY OR COMPLETENESS OF SCANNED COPIES OF THIS PLAN SHEET.

PROJECT MANAGER R. McCARTHY
DESIGN ENGINEER R. McCARTHY

THE CONTRACTOR SHALL POSSESS THE CLASS (OR CLASSES) OF LICENSE AS SPECIFIED IN THE "NOTICE TO BIDDERS."

CONTRACT No.	01-0A8104
PROJECT ID	0100020393

LAST REVISION 02-24-14 DATE PLOTTED => 05-MAR-2014 TIME PLOTTED => 09:15

M

Maint	MAINTENANCE
Max	MAXIMUM
MB	METAL BEAM
MBB	METAL BEAM BARRIER
MBGR	METAL BEAM GUARD RAILING
Med	MEDIAN
MGS	MIDWEST GUARDRAIL SYSTEM
MH	MANHOLE
Min	MINIMUM
Misc	MISCELLANEOUS
Misc I & S	MISCELLANEOUS IRON AND STEEL
Mkr	MARKER
Mod	MODIFIED,
	MODIFY
Mon	MONUMENT
MP	METAL PLATE
MPGR	METAL PLATE GUARD RAILING
MR	MOVEMENT RATING
MSE	MECHANICALLY STABILIZED EMBANKMENT
Mt	MOUNTAIN, MOUNT
Mtl	MATERIAL
MVP	MAINTENANCE VEHICLE PULLOUT

N

N	NORTH
NB	NORTHBOUND
No.	NUMBER (MUST HAVE PERIOD)
Nos.	NUMBERS (MUST HAVE PERIOD)
NPS	NOMINAL PIPE SIZE
NS	NEAR SIDE
NSP	NEW STANDARD PLAN
NTS	NOT TO SCALE

O

Oblr	OBLITERATE
OC	OVERCROSSING
OD	OUTSIDE DIAMETER
OF	OUTSIDE FACE
OG	ORIGINAL GROUND
OGAC	OPEN GRADED ASPHALT CONCRETE
OGFC	OPEN GRADED FRICTION COURSE
OH	OVERHEAD
OHWM	ORDINARY HIGH WATER MARK
O-O	OUT TO OUT
Opp	OPPOSITE
OSD	OVERSIDE DRAIN

P

P	PAGE
PAP	PERFORATED ALUMINUM PIPE
PB	PULL BOX
PC	POINT OF CURVATURE,
	PRECAST
PCC	POINT OF COMPOUND CURVE,
	PORTLAND CEMENT CONCRETE
PCMS	PORTABLE CHANGEABLE MESSAGE SIGN
PCP	PERFORATED CONCRETE PIPE,
	PRESTRESSED CONCRETE PIPE
PCVC	POINT OF COMPOUND VERTICAL CURVE
PEC	PERMIT TO ENTER AND CONSTRUCT
Ped	PEDESTRIAN
Ped OC	PEDESTRIAN OVERCROSSING
Ped UC	PEDESTRIAN UNDERCROSSING
Perm Mtl	PERMEABLE MATERIAL

P continued

PG	PROFILE GRADE
PI	POINT OF INTERSECTION
PJP	PARTIAL JOINT PENETRATION
Pkwy	PARKWAY
ℙL,PL	PLATE
P/L	PROPERTY LINE
PM	POST MILE,
	TIME FROM NOON TO MIDNIGHT
PN	PAVING NOTCH
POC	POINT OF HORIZONTAL CURVE
POT	POINT OF TANGENT
POVC	POINT OF VERTICAL CURVE
PP	PIPE PILE,
	PLASTIC PIPE,
	POWER POLE
PPL	PREFORMED PERMEABLE LINER
PPP	PERFORATED PLASTIC PIPE
PRC	POINT OF REVERSE CURVE
PRF	PAVEMENT REINFORCING FABRIC
PRVC	POINT OF REVERSE VERTICAL CURVE
PS&E	PLANS, SPECIFICATIONS AND ESTIMATES
PS, P/S	PRESTRESSED
PSP	PERFORATED STEEL PIPE
PT	POINT OF TANGENCY
PVC	POLYVINYL CHLORIDE
Pvmt	PAVEMENT

Q

Qty	QUANTITY

R

R	RADIUS
R & D	REMOVE AND DISPOSE
R & S	REMOVE AND SALVAGE
R/C	RATE OF CHANGE
RCA	REINFORCED CONCRETE ARCH
RCB	REINFORCED CONCRETE BOX
RCP	REINFORCED CONCRETE PIPE
RCPA	REINFORCED CONCRETE PIPE ARCH
Rd	ROAD
Reinf	REINFORCED,
	REINFORCEMENT,
	REINFORCING
Rel	RELOCATE
Repl	REPLACEMENT
Ret	RETAINING
Rev	REVISED, REVISION
Rdwy	ROADWAY
RHMA	RUBBERIZED HOT MIX ASPHALT
Riv	RIVER
RM	ROAD-MIXED
RP	RADIUS POINT,
	REFERENCE POINT
RR	RAILROAD
RSP	ROCK SLOPE PROTECTION,
	REVISED STANDARD PLAN
Rt	RIGHT
Rte	ROUTE
RW	REDWOOD,
	RETAINING WALL
R/W	RIGHT OF WAY
Rwy	RAILWAY

S

S	SOUTH,
	SUPPLEMENT
SAE	STRUCTURE APPROACH EMBANKMENT
Salv	SALVAGE
SAPP	STRUCTURAL ALUMINUM PLATE PIPE
SB	SOUTHBOUND
SC	SAND CUSHION
SCSP	SLOTTED CORRUGATED STEEL PIPE
SD	STORM DRAIN
Sec	SECOND,
	SECTION
Sep	SEPARATION
SG	SUBGRADE
Shld	SHOULDER
Sht	SHEET
Sim	SIMILAR
℄	STATION LINE
SM	SELECTED MATERIAL
Spec	SPECIAL,
	SPECIFICATIONS
SPP	SLOTTED PLASTIC PIPE
SS	SLOPE STAKE
SSBM	STRAP AND SADDLE BRACKET METHOD
SSD	STRUCTURAL SECTION DRAIN
SSPA	STRUCTURAL STEEL PLATE ARCH
SSPP	STRUCTURAL STEEL PLATE PIPE
SSPPA	STRUCTURAL STEEL PLATE PIPE ARCH
SSRP	STEEL SPIRAL RIB PIPE
St	STREET
Sta	STATION
STBB	SINGLE THRIE BEAM BARRIER
Std	STANDARD
Str	STRUCTURE
Surf	SURFACING
SW	SIDEWALK,
	SOUND WALL
Swr	SEWER
Sym	SYMMETRICAL
S4S	SURFACE 4 SIDES

T

T	SEMI-TANGENT
Tan	TANGENT
TBB	THRIE BEAM BARRIER
Tbr	TIMBER
TC	TOP OF CURB
TCB	TRAFFIC CONTROL BOX
TCE	TEMPORARY CONSTRUCTION EASEMENT
Tel	TELEPHONE
Temp	TEMPORARY
TG	TOP OF GRADE
Tot	TOTAL
TP	TELEPHONE POLE
TPB	TREATED PERMEABLE BASE
TPM	TREATED PERMEABLE MATERIAL
Trans	TRANSITION

T continued

TS	TRANSVERSE,
	TRAFFIC SIGNAL,
	TUBULAR STEEL
Typ	TYPICAL

U

UC	UNDERCROSSING
UD	UNDERDRAIN
UG	UNDERGROUND
UON	UNLESS OTHERWISE NOTED
UP	UNDERPASS

V

V	VALVE,
	DESIGN SPEED
Var	VARIABLE,
	VARIES
VC	VERTICAL CURVE
VCP	VITRIFIED CLAY PIPE
Vert	VERTICAL
Via	VIADUCT
Vol	VOLUME

W

W	WEST,
	WIDTH
WB	WESTBOUND
WH	WEEP HOLE
WM	WIRE MESH
WS	WATER SURFACE
WSP	WELDED STEEL PIPE
Wt	WEIGHT
WV	WATER VALVE
WW	WINGWALL
WWLOL	WINGWALL LAYOUT LINE

X

X Sec	CROSS SECTION
Xing	CROSSING

Y

Yr	YEAR
Yrs	YEARS

Dist	COUNTY	ROUTE	POST MILES TOTAL PROJECT	SHEET No.	TOTAL SHEETS
01	Men	1, 128	Var	2	21

Grace M. Tsushima
REGISTERED CIVIL ENGINEER

July 19, 2013
PLANS APPROVAL DATE

REGISTERED PROFESSIONAL ENGINEER
Grace M. Tsushima
No. C49814
Exp. 9-30-14
CIVIL
STATE OF CALIFORNIA

THE STATE OF CALIFORNIA OR ITS OFFICERS OR AGENTS SHALL NOT BE RESPONSIBLE FOR THE ACCURACY OR COMPLETENESS OF SCANNED COPIES OF THIS PLAN SHEET.

TO ACCOMPANY PLANS DATED 02-24-14

UNIT OF MEASUREMENT SYMBOLS:

Some of the symbols used in the project plan quantity tables and in the Bid Item List are:

TABLE A

SYMBOL USED	DEFINITIONS
ACRE	ACRE
CF	CUBIC FOOT
CY	CUBIC YARD
EA	EACH
GAL	GALLON
LB	POUND
LF	LINEAR FOOT
SQFT	SQUARE FOOT
SQYD	SQUARE YARD
STA	100 FEET
TAB	TABLET
TON	2,000 POUNDS

Some of the symbols used in the plans other than in the project plan quantity tables are:

TABLE B

SYMBOL USED	DEFINITIONS
ksi	KIPS PER SQUARE INCH
ksf	KIPS PER SQUARE FOOT
psi	POUNDS PER SQUARE INCH
psf	POUNDS PER SQUARE FOOT
lb/ft^3, pcf	POUNDS PER CUBIC FOOT
tsf	TONS PER SQUARE FOOT
mph, MPH *	MILES PER HOUR
ø	NOMINAL DIAMETER
oz	OUNCE
lb	POUND
kip	1,000 POUNDS
cal	CALORIE
ft	FOOT OR FEET
gal	GALLON

* For use on a sign panel only

STATE OF CALIFORNIA
DEPARTMENT OF TRANSPORTATION

ABBREVIATIONS (SHEET 2 OF 2)

NO SCALE

RSP A10B DATED JULY 19, 2013 SUPERSEDES STANDARD PLAN A10B DATED MAY 20, 2011 - PAGE 2 OF THE STANDARD PLANS BOOK DATED 2010.

REVISED STANDARD PLAN RSP A10B

2010 REVISED STANDARD PLAN RSP A10B

P:\PROJ\01\0A810\drafting\10a810va001.dgn

6-7-13

Dist	COUNTY	ROUTE	POST MILES TOTAL PROJECT	SHEET No.	TOTAL SHEETS
01	Men	1, 128	Var	3	21

REGISTERED CIVIL ENGINEER

July 19, 2013
PLANS APPROVAL DATE

REGISTERED PROFESSIONAL ENGINEER
Gurinderpal Bhullar
No. C48815
Exp. 9-30-14
CIVIL
STATE OF CALIFORNIA

THE STATE OF CALIFORNIA OR ITS OFFICERS OR AGENTS SHALL NOT BE RESPONSIBLE FOR THE ACCURACY OR COMPLETENESS OF SCANNED COPIES OF THIS PLAN SHEET.

TO ACCOMPANY PLANS DATED 02-24-14

2010 REVISED STANDARD PLAN RSP T9

TABLE 1

TAPER LENGTH CRITERIA AND CHANNELIZING DEVICE SPACING

SPEED (S)	MINIMUM TAPER LENGTH * FOR WIDTH OF OFFSET 12 FEET (W)				MAXIMUM CHANNELIZING DEVICE SPACING		
					X	Y	Z **
	TANGENT 2L	MERGING L	SHIFTING L/2	SHOULDER L/3	TAPER	TANGENT	CONFLICT
mph	ft	ft	ft	ft	ft	ft	ft
20	160	80	40	27	20	40	10
25	250	125	63	42	25	50	12
30	360	180	90	60	30	60	15
35	490	245	123	82	35	70	17
40	640	320	160	107	40	80	20
45	1080	540	270	180	45	90	22
50	1200	600	300	200	50	100	25
55	1320	660	330	220	55	110	27
60	1440	720	360	240	60	120	30
65	1560	780	390	260	65	130	32
70	1680	840	420	280	70	140	35

* - For other offsets, use the following merging taper length formula for L:
For speed of 40 mph or less, $L = WS^2/60$
For speed of 45 mph or more, $L = WS$

Where: L = Taper length in feet
W = Width of offset in feet
S = Posted speed limit, off-peak 85th-percentile speed prior to work starting, or the anticipated operating speed in mph

** - Use for taper and tangent sections where there are no pavement markings or where there is a conflict between existing pavement markings and channelizers (CA).

TABLE 2

LONGITUDINAL BUFFER SPACE AND FLAGGER STATION SPACING

SPEED *	Min D **	DOWNGRADE Min D ***		
		-3%	-6%	-9%
mph	ft	ft	ft	ft
20	115	116	120	126
25	155	158	165	173
30	200	205	215	227
35	250	257	271	287
40	305	315	333	354
45	360	378	400	427
50	425	446	474	507
55	495	520	553	593
60	570	598	638	686
65	645	682	728	785
70	730	771	825	891

* - Speed is posted speed limit, off-peak 85th-percentile speed prior to work starting, or the anticipated operating speed in mph

** - Longitudinal buffer space or flagger station spacing

*** - Use on sustained downgrade steeper than -3 percent and longer than 1 mile.

TABLE 3

ADVANCE WARNING SIGN SPACING

ROAD TYPE	DISTANCE BETWEEN SIGNS *		
	A	B	C
	ft	ft	ft
URBAN - 25 mph OR LESS	100	100	100
URBAN - MORE THAN 25 mph TO 40 mph	250	250	250
URBAN - MORE THAN 40 mph	350	350	350
RURAL	500	500	500
EXPRESSWAY / FREEWAY	1000	1500	2640

* - The distances are approximate, are intended for guidance purposes only, and should be applied with engineering judgment. These distances should be adjusted by the Engineer for field conditions, if necessary, by increasing or decreasing the recommmended distances.

STATE OF CALIFORNIA
DEPARTMENT OF TRANSPORTATION

TRAFFIC CONTROL SYSTEM TABLES FOR LANE AND RAMP CLOSURES

NO SCALE

RSP T9 DATED JULY 19, 2013 SUPERSEDES RSP T9 DATED APRIL 19, 2013 THAT SUPPLEMENTS THE STANDARD PLANS BOOK DATED 2010.

REVISED STANDARD PLAN RSP T9

P:\PROJ\01\0A810\drafting\10a810va002.dgn

4-30-13

Dist	COUNTY	ROUTE	POST MILES TOTAL PROJECT	SHEET No.	TOTAL SHEETS
01	Men	1, 128	Var	4	21

REGISTERED CIVIL ENGINEER

April 19, 2013
PLANS APPROVAL DATE

REGISTERED PROFESSIONAL ENGINEER Gurinderpal Bhullar No. C48815 Exp. 9-30-14 CIVIL STATE OF CALIFORNIA

THE STATE OF CALIFORNIA OR ITS OFFICERS OR AGENTS SHALL NOT BE RESPONSIBLE FOR THE ACCURACY OR COMPLETENESS OF SCANNED COPIES OF THIS PLAN SHEET.

TO ACCOMPANY PLANS DATED 02-24-14

NOTES:

See Revised Standard Plan RSP T9 for tables.

Use cone spacing X for taper segment, Y for tangent segment or Z for conflict situations, as approriate, per Table 1, unless X, Y, or Z cone spacing is shown on this sheet.

Unless otherwise specified in the special provisions, all temporary warning signs shall have black legend on fluorescent orange background.

California codes are designated by (CA). Otherwise, Federal (MUTCD) codes are shown.

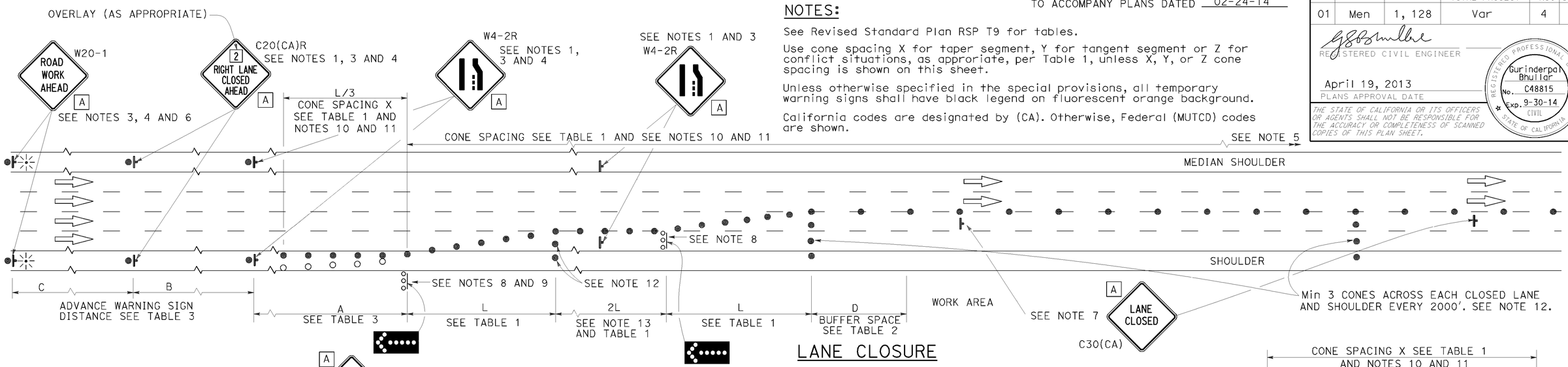

LANE CLOSURE

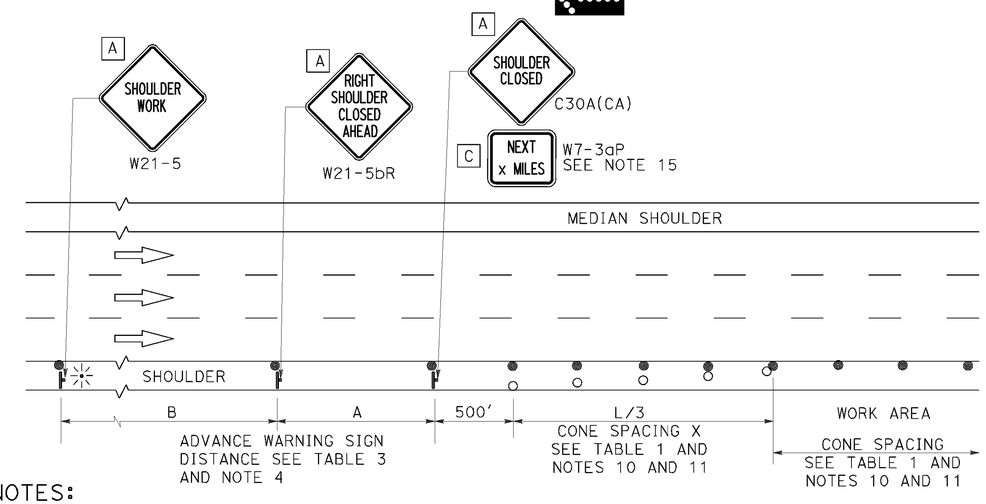

SHOULDER CLOSURE

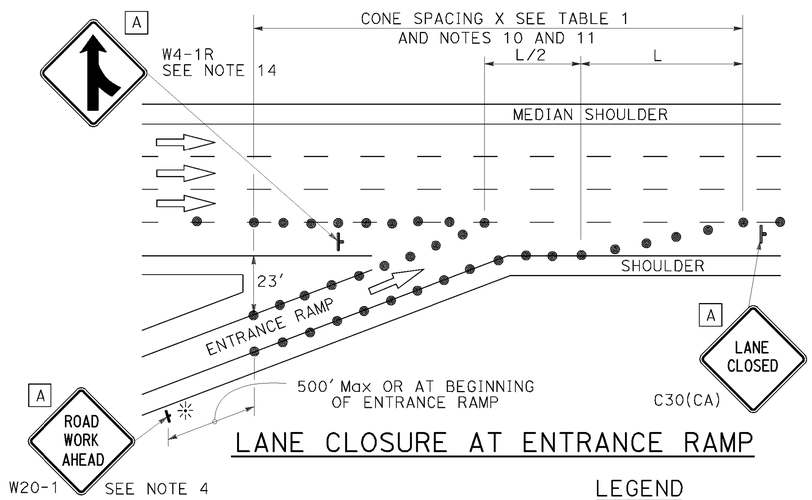

LANE CLOSURE AT ENTRANCE RAMP

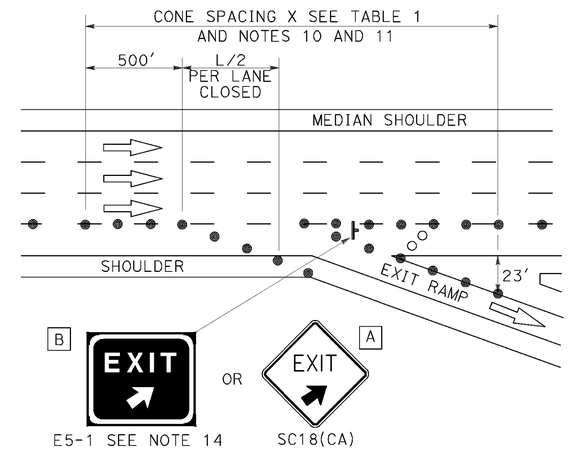

LANE CLOSURE AT EXIT RAMP

NOTES:

1. Median lane closures shall conform to the details as shown except that C20(CA)L and W4-2L signs shall be used.
2. At least one person shall be assigned to provide full time maintenance of traffic control devices for lane closures.
3. Duplicate sign installations are not required:
   a) On opposite shoulder if at least one-half of the available lanes remain open to traffic.
   b) In the median if the width of the median shoulder is less than 8' and the outside lanes are to be closed.
4. Each advance warning sign on each side of the roadway shall be equipped with at least two flags for daytime closure. Each flag shall be at least 16" x 16" in size and shall be orange or fluorescent red-orange in color. Flashing beacons shall be placed at the locations indicated for lane closure during hours of darkness.
5. A G20-2 "END ROAD WORK" sign, with minimum size of 48" x 24" as appropriate, shall be placed at the end of the lane closure unless the end of work area is obvious or ends within a larger project's limits.
6. If the W20-1 sign would follow within 2000' of a stationary W20-1 or G20-1 "ROAD WORK NEXT _____ MILES", use a C20(CA) sign for the first advance warning sign.
7. Place a C30(CA) sign every 2000' throughout length of lane closure.
8. One flashing arrow sign for each lane closed. The flashing arrow signs shall be Type I.
9. A minimum 1500' of sight distance shall be provided where possible for vehicles approaching the first flashing arrow sign. Lane closures shall not begin at top of crest vertical curve or on a horizontal curve.
10. All cones used for lane closures during the hours of darkness shall be fitted with retroreflective bands (or sleeves) as specified in the specifications.
11. Portable delineators, placed at one-half the spacing indicated for traffic cones may be used instead of cones for daytime closures only.
12. Unless otherwise specified in the special provisions, a minimum of 3 cones shall be placed transversely across each closed lane and shoulder at each location where a taper across a traffic lane ends and every 2000' as shown on the "Lane Closure" detail. Two Type II barricades may be used instead of the 3 cones. The transverse alignment of the cones or barricades on the closed shoulder may be shifted from the transverse alignment to provide access to the work.
13. Unless otherwise specified in the special provisions, the 2L tangent shown along lane lines shall be used between the L tapers required for each closed traffic lane.
14. Unless otherwise specified in the special provisions, the E5-1 or SC18(CA) and W4-1 signs shall be used as shown.
15. A W7-3aP "NEXT____ MILES" plaque must be used if theshoulder closure extends beyond the distance that can be perceived by road users.

LEGEND

- TRAFFIC CONE
- TRAFFIC CONE (OPTIONAL TAPER)
- TEMPORARY TRAFFIC CONTROL SIGN
- FLASHING ARROW SIGN (FAS)
- FAS SUPPORT OR TRAILER
- PORTABLE FLASHING BEACON

SIGN PANEL SIZE (Min)

A	48" x 48"
B	72" x 60"
C	36" x 30"

STATE OF CALIFORNIA
DEPARTMENT OF TRANSPORTATION

TRAFFIC CONTROL SYSTEM FOR LANE CLOSURE ON FREEWAYS AND EXPRESSWAYS

NO SCALE

RSP T10 DATED APRIL 19, 2013 SUPERSEDES STANDARD PLAN T10 DATED MAY 20, 2011 - PAGE 237 OF THE STANDARD PLANS BOOK DATED 2010.

REVISED STANDARD PLAN RSP T10

2010 REVISED STANDARD PLAN RSP T10

P:\PROJ\01\0A810\drafting\10a810va003.dgn

12-18-13

Dist	COUNTY	ROUTE	POST MILES TOTAL PROJECT	SHEET No.	TOTAL SHEETS
01	Men	1, 128	Var	5	21

REGISTERED CIVIL ENGINEER

April 19, 2013
PLANS APPROVAL DATE

REGISTERED PROFESSIONAL ENGINEER Gurinderpal Bhullar No. C48815 Exp. 9-30-14 CIVIL STATE OF CALIFORNIA

THE STATE OF CALIFORNIA OR ITS OFFICERS OR AGENTS SHALL NOT BE RESPONSIBLE FOR THE ACCURACY OR COMPLETENESS OF SCANNED COPIES OF THIS PLAN SHEET.

TO ACCOMPANY PLANS DATED 02-24-14

NOTES:

See Revised Standard Plan RSP T9 for tables.

Use cone spacing X for taper segment, Y for tangent segment or Z for conflict situations, as approriate, per Table 1, unless X, Y, or Z cone spacing is shown on this sheet.

Unless otherwise specified in the special provisions, all temporary warning signs shall have black legend on fluorescent orange background.

California codes are designated by (CA). Otherwise, Federal (MUTCD) codes are shown.

TYPICAL LANE CLOSURE WITH REVERSIBLE CONTROL

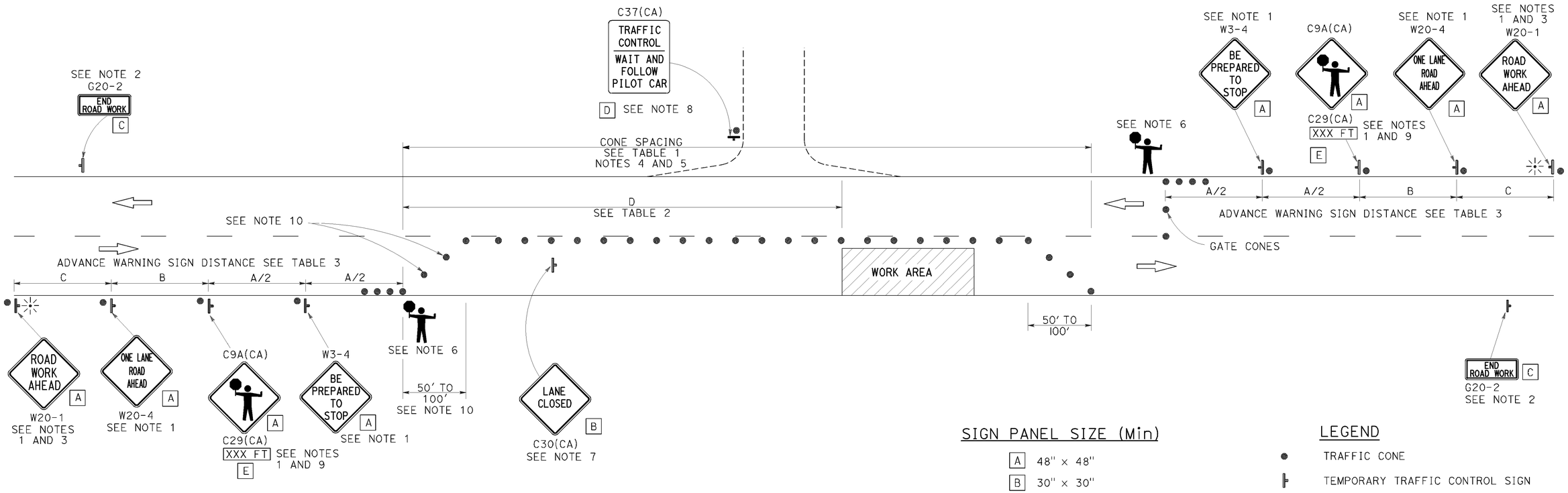

SIGN PANEL SIZE (Min)

A	48" × 48"
B	30" × 30"
C	36" × 18"
D	36" × 42"
E	20" × 7"

LEGEND

- TRAFFIC CONE
- TEMPORARY TRAFFIC CONTROL SIGN
- PORTABLE FLASHING BEACON
- FLAGGER

NOTES:

1. Each advance warning sign in each direction of travel shall be equipped with at least two flags for daytime closure. Each flag shall be at least 16" x 16" in size and shall be orange or fluorescent red-orange in color. Flashing beacons shall be placed at the locations indicated for lane closure during hours of darkness.
2. A G20-2 "END ROAD WORK" sign, as appropriate, shall be placed at the end of the lane control unless the end of work area is obvious, or ends within a larger project's limits.
3. If the W20-1 sign would follow within 2000' of a stationary W20-1 or G20-1 "ROAD WORK NEXT _____ MILES", use a W20-4 sign for the first advance warning sign.
4. All cones used for lane closures during the hours of darkness shall be fitted with retroreflective bands (or sleeves) as specified in the specifications.
5. Portable delineators, placed at one-half the spacing indicated for traffic cones, may be used instead of cones for daytime closures only.
6. Additional advance flaggers may be required. Flagger should stand in a conspicuous place, be visible to approaching traffic as well as approaching vehicles after the first vehicle has stopped. During the hours of darkness, the flagging-station and flagger shall be illuminated and clearly visible to approaching traffic. The illumination footprint of the lighting on the ground shall be at least 20' in diameter. Place a minimum of four cones at 50' intervals in advance of flagger station as shown.
7. Place C30(CA) "LANE CLOSED" sign at 500' to 1000' intervals throughout extended work areas. They are optional if the work area is visible from the flagger station.
8. When a pilot car is used, place a C37(CA) "TRAFFIC CONTROL-WAIT AND FOLLOW PILOT CAR" sign with black legend on white background at all intersections, driveways and alleys without a flagger within traffic control area. Signs shall be clean and visible at all times. Where traffic can not be effectively self-regulated, at least one flagger shall be used at each intersection within traffic control area.
9. An optional C29(CA) sign may be placed below the C9A(CA) sign.
10. Either traffic cones or barricades shall be placed on the taper. Barricades shall be Type I, II, or III.

STATE OF CALIFORNIA
DEPARTMENT OF TRANSPORTATION

TRAFFIC CONTROL SYSTEM FOR LANE CLOSURE ON TWO LANE CONVENTIONAL HIGHWAYS

NO SCALE

RSP T13 DATED APRIL 19, 2013 SUPERSEDES STANDARD PLAN T13 DATED MAY 20, 2011 - PAGE 241 OF THE STANDARD PLANS BOOK DATED 2010.

REVISED STANDARD PLAN RSP T13

2010 REVISED STANDARD PLAN RSP T13

P:\PROJ\01\0A810\drafting\10a810va004.dgn

4-2-13

DIST	COUNTY	ROUTE	POST MILES TOTAL PROJECT	SHEET No.	TOTAL SHEETS
01	Men	1, 128	Var	6	21

REGISTERED CIVIL ENGINEER 2-24-14 DATE

February 24, 2014
PLANS APPROVAL DATE

REGISTERED PROFESSIONAL ENGINEER DIOSDADO ACOBA No. 52003 Exp. 12-31-14 CIVIL STATE OF CALIFORNIA

The State of California or its officers or agents shall not be responsible for the accuracy or completeness of electronic copies of this plan sheet.

NOTE: (APPLY TO ALL SHEETS)

-·-·-·- Indicates existing.

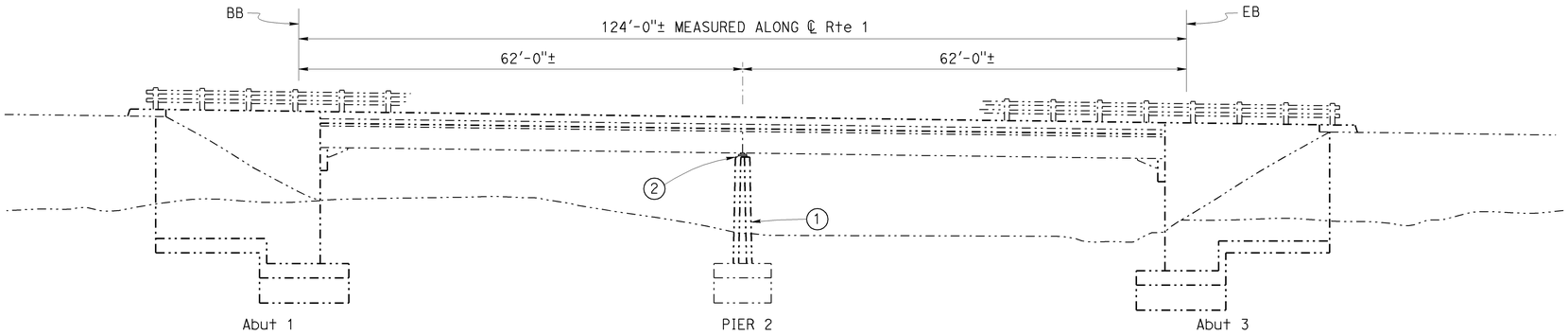

ELEVATION
1" = 10'

NOTE: (APPLY TO THIS SHEET ONLY)

◯ - Indicates Repair Spalled Surface Area. See "Spall Repair Table" on "DETAILS NO. 1" sheet.

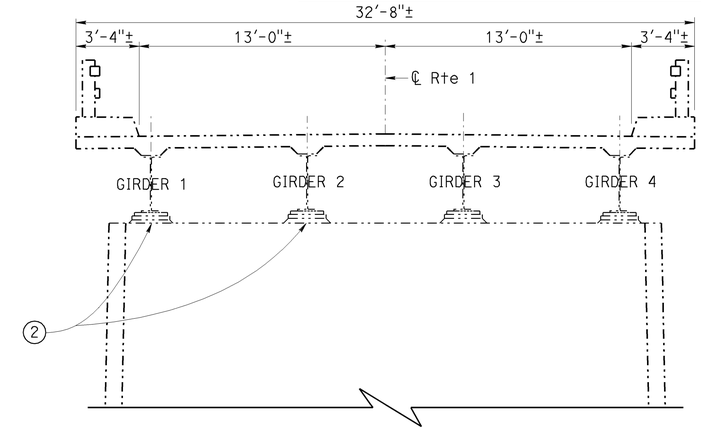

ELEVATION (Pier 2)
¼" = 1'-0"

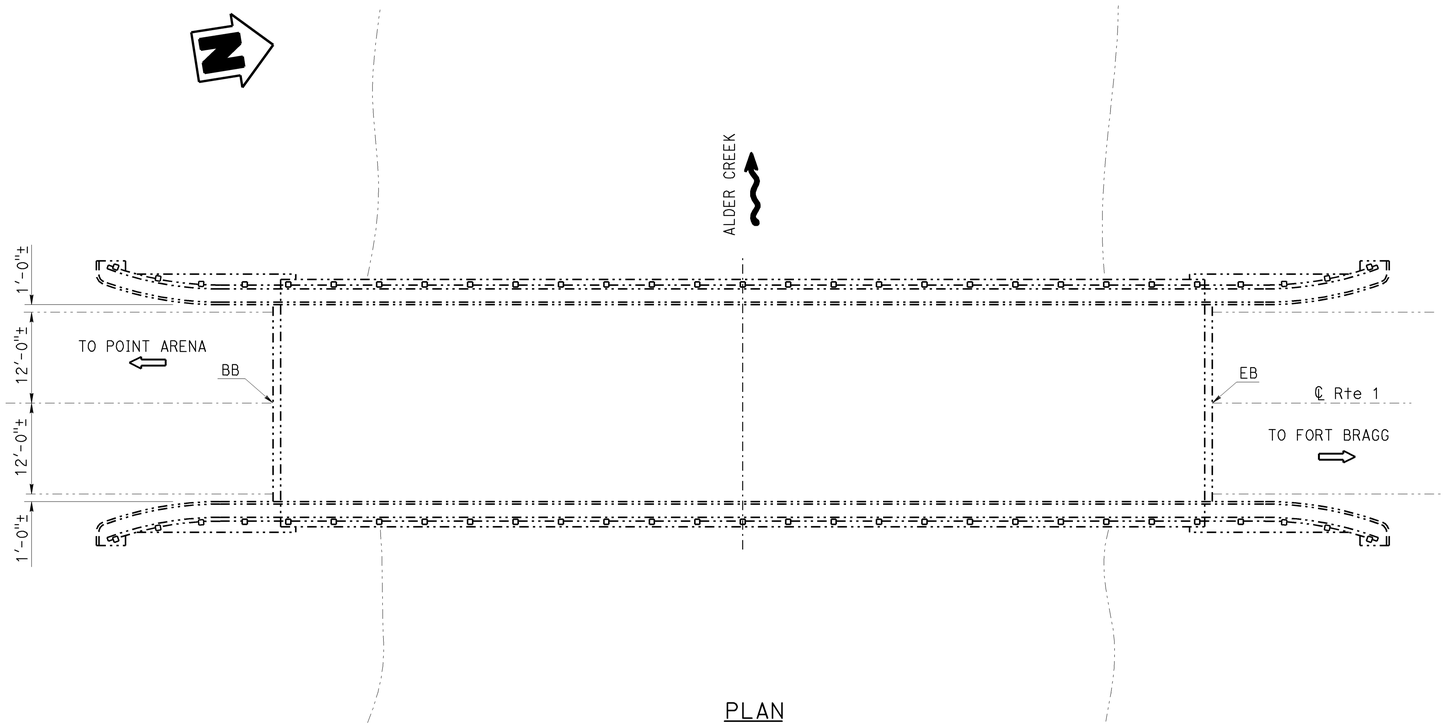

PLAN
1" = 10'

INDEX TO PLANS

SHEET NO.	TITLE
1	GENERAL PLAN NO. 1
2	GENERAL PLAN NO. 2
3	GENERAL PLAN NO. 3
4	GENERAL PLAN NO. 4
5	GENERAL PLAN NO. 5
6	GENERAL PLAN NO. 6
7	GENERAL PLAN NO. 7
8	GENERAL PLAN NO. 8
9	GENERAL PLAN NO. 9
10	GENERAL PLAN NO. 10
11	JOINT SEAL DETAILS
12	DETAILS NO. 1
13	DETAILS NO. 2
14	DETAILS NO. 3
15	DETAILS NO. 4
16	CABLE RESTRAINER ADJUSTMENT HARDWARE

STANDARD PLANS 2010

SHEET NO.	TITLE
A10A	ABBREVIATIONS (SHEET 1 OF 2)
RSP A10B	ABBREVIATIONS (SHEET 2 OF 2)
B6-21	JOINT SEALS (MAXIMUM MOVEMENT RATING = 2")

STANDARD PLAN SHEET NO.

DETAIL NO.

NOTE:
THE CONTRACTOR SHALL VERIFY ALL CONTROLLING FIELD DIMENSIONS BEFORE ORDERING OR FABRICATING ANY MATERIAL.

ALDER CREEK BRIDGE NO 10-0116

QUANTITIES

REPAIR SPALLED SURFACE AREA	5	SQFT

ALDER CREEK
Br. No. 10-0116, ROUTE 1, Men, PM 22.73

DESIGN ENGINEER 10-29-13	DESIGN	BY D. Acoba	CHECKED M. Hashimoto	LOAD FACTOR DESIGN	LIVE LOADING: HS20-44 AND ALTERNATIVE AND PERMIT DESIGN LOAD
	DETAILS	BY Dale Kubochi	CHECKED M. Hashimoto	LAYOUT	BY Dale Kubochi / CHECKED D. Acoba
	QUANTITIES	BY D. Acoba	CHECKED M. Hashimoto	SPECIFICATIONS	BY Todd Geerts / PLANS AND SPECS COMPARED Todd Geerts

STATE OF CALIFORNIA
DEPARTMENT OF TRANSPORTATION

DIVISION OF MAINTENANCE
STRUCTURE MAINTENANCE DESIGN

BRIDGE NO. VARIOUS
POST MILE VARIES

ROUTE 1 BRIDGES
GENERAL PLAN NO. 1

STRUCTURES MAINTENANCE GENERAL PLAN SHEET (ENGLISH) (REV. 09-01-10)

ORIGINAL SCALE IN INCHES FOR REDUCED PLANS 0 1 2 3

UNIT: 3488
PROJECT NUMBER & PHASE: 0100020393
CONTRACT NO.: 01-0A8101

DISREGARD PRINTS BEARING EARLIER REVISION DATES

REVISION DATES 7-5-13 8-26-13 11-25-13 2-24-14

SHEET 1 OF 16

FILE => 01-0a8101-a-gp01.dgn

USERNAME => s124428 DATE PLOTTED => 28-FEB-2014 TIME PLOTTED => 10:34

DIST	COUNTY	ROUTE	POST MILES TOTAL PROJECT	SHEET No.	TOTAL SHEETS
01	Men	1, 128	Var	7	21

REGISTERED CIVIL ENGINEER 2-24-14 DATE

February 24, 2014
PLANS APPROVAL DATE

REGISTERED PROFESSIONAL ENGINEER DIOSDADO ACOBA No. 52003 Exp. 12-31-14 CIVIL STATE OF CALIFORNIA

The State of California or its officers or agents shall not be responsible for the accuracy or completeness of electronic copies of this plan sheet.

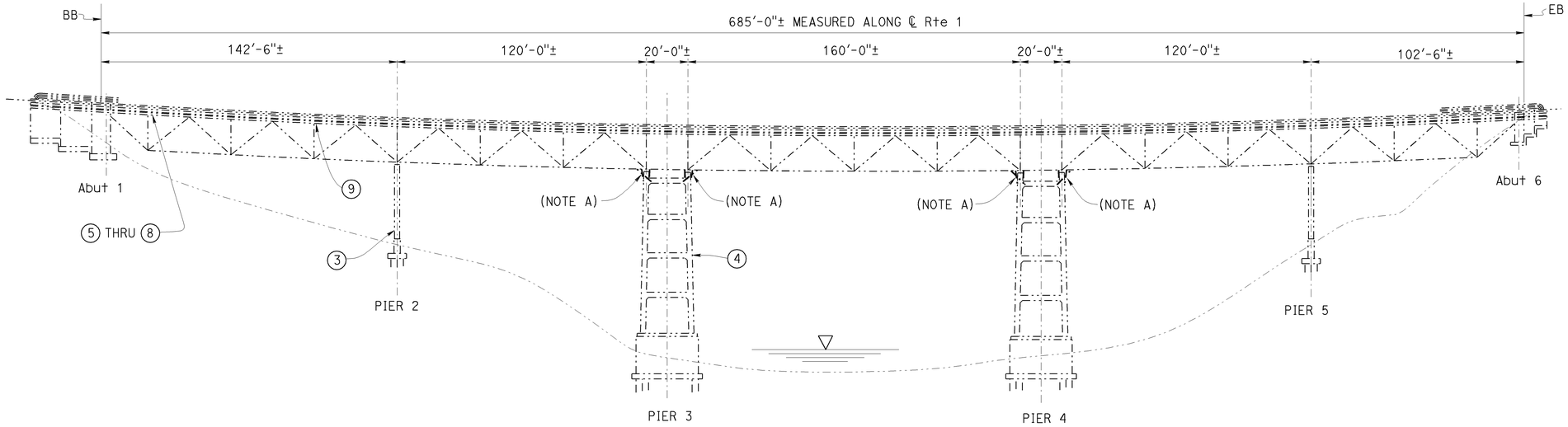

ELEVATION
1" = 30'

SALMON CREEK BRIDGE NO 10-0134

QUANTITIES

RAPID SETTING CONCRETE (PATCH)	1	CF
REPAIR SPALLED SURFACE AREA	51	SQFT
REMOVE UNSOUND CONCRETE	1	CF
BRIDGE REMOVAL (PORTION), LOCATION A	LUMP	SUM
MISCELLANEOUS METAL (RESTRAINER - CABLE TYPE)	1,560	LB

NOTES: (APPLY TO THIS SHEET ONLY)

◯ - Indicates location of Repair Spalled Surface Area. See "Spall Repair Table" on "DETAILS NO. 1" sheet.

□ - Indicates location of Remove Unsound Concrete and place Rapid Setting Concrete. See "Spall Repair Table" on "DETAILS NO. 1" sheet.

(NOTE A) - Remove and replace existing cable restrainer units and turnbuckles. No more than one cable restrainer unit at a time may be removed and replaced. For details, see "DETAILS NO. 2" sheet.

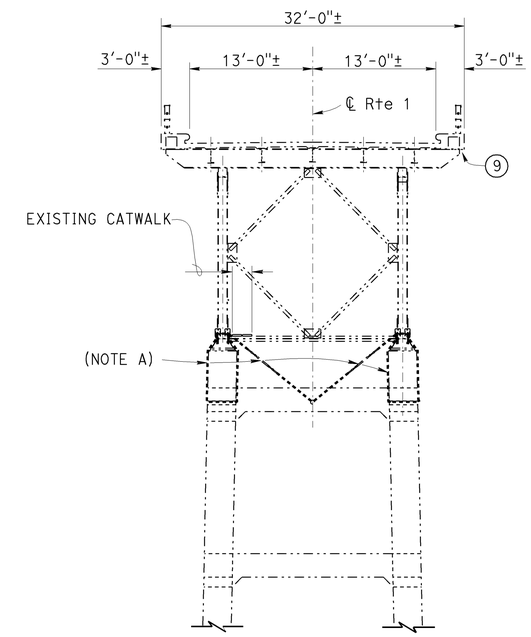

TYPICAL SECTION
1/8"=1'-0"

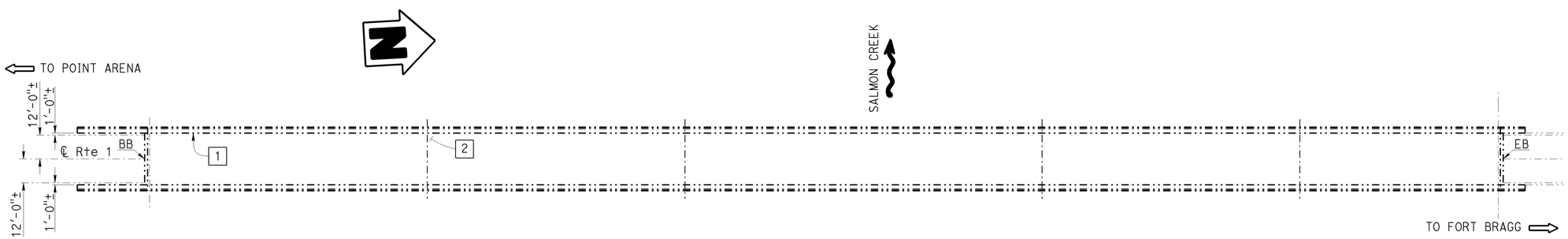

PLAN
1" = 30'

NOTE:
THE CONTRACTOR SHALL VERIFY ALL CONTROLLING FIELD DIMENSIONS BEFORE ORDERING OR FABRICATING ANY MATERIAL.

SALMON CREEK
Br. No. 10-0134, ROUTE 1, Men, PM 43.00

10-29-13 DESIGN ENGINEER	DESIGN	BY D. Acoba	CHECKED M. Hashimoto	LOAD FACTOR DESIGN	LIVE LOADING: HS20-44 AND ALTERNATIVE AND PERMIT DESIGN LOAD	
	DETAILS	BY K. Endow/D. Kubochi	CHECKED M. Hashimoto	LAYOUT	BY Dale Kubochi	CHECKED D. Acoba
	QUANTITIES	BY D. Acoba	CHECKED M. Hashimoto	SPECIFICATIONS	BY Todd Geerts	PLANS AND SPECS COMPARED Todd Geerts

STATE OF CALIFORNIA
DEPARTMENT OF TRANSPORTATION

DIVISION OF MAINTENANCE
STRUCTURE MAINTENANCE DESIGN

BRIDGE NO. VARIOUS
POST MILE VARIES

ROUTE 1 BRIDGES
GENERAL PLAN NO. 2

STRUCTURES MAINTENANCE GENERAL PLAN SHEET (ENGLISH) (REV. 09-01-10)

ORIGINAL SCALE IN INCHES FOR REDUCED PLANS 0 1 2 3

UNIT: 3488
PROJECT NUMBER & PHASE: 0100020393
CONTRACT NO.: 01-0A8101

DISREGARD PRINTS BEARING EARLIER REVISION DATES

REVISION DATES 1-5-10 8-26-13 2-7-14 2-24-14

SHEET 2 OF 16

FILE => 01-0a8101-a-gp02.dgn

USERNAME => s124228 DATE PLOTTED => 28-FEB-2014 TIME PLOTTED => 10:34

DIST	COUNTY	ROUTE	POST MILES TOTAL PROJECT	SHEET No.	TOTAL SHEETS
01	Men	1, 128	Var	8	21

REGISTERED CIVIL ENGINEER 2-24-14 DATE

February 24, 2014
PLANS APPROVAL DATE

REGISTERED PROFESSIONAL ENGINEER DIOSDADO ACOBA No. 52003 Exp. 12-31-14 CIVIL STATE OF CALIFORNIA

The State of California or its officers or agents shall not be responsible for the accuracy or completeness of electronic copies of this plan sheet.

NOTE: (APPLY TO THIS SHEET ONLY)

Indicates location of existing joint seal removal and placement of new joint seal. For details, see "JOINT SEAL DETAILS" sheet.

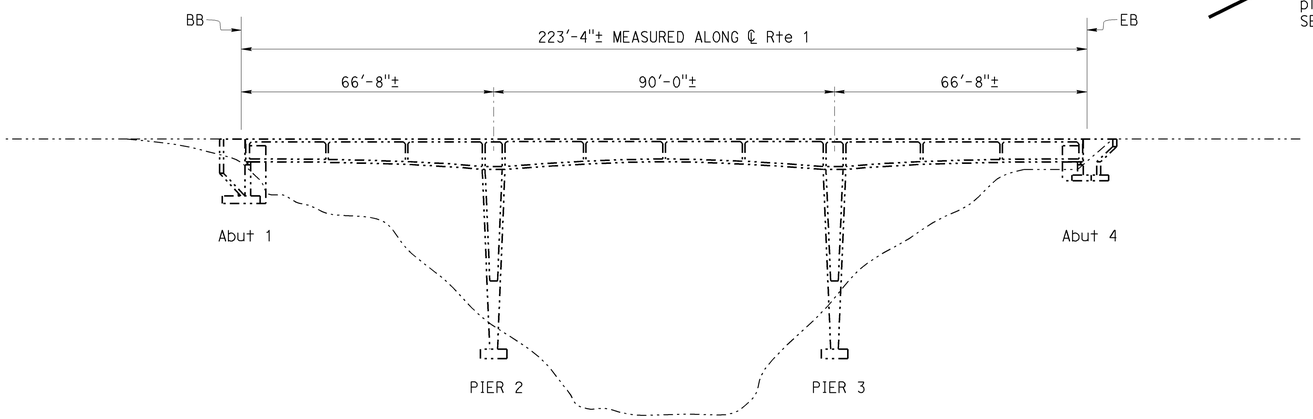

ELEVATION
1" = 20'

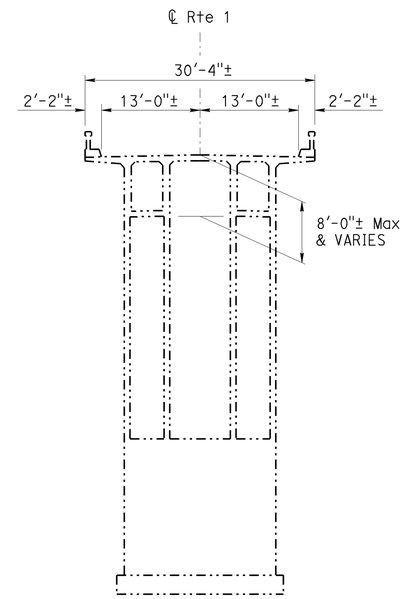

TYPICAL SECTION
1" = 10'

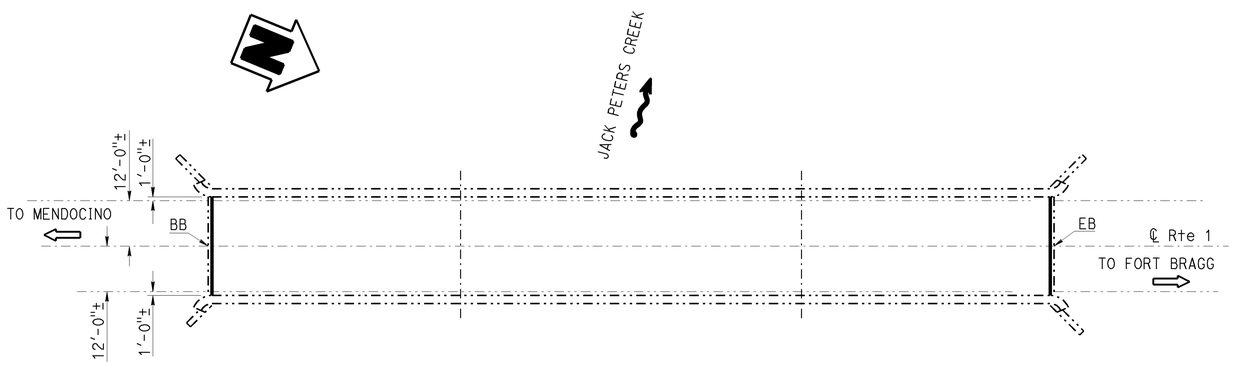

PLAN
1" = 20'

JACK PETERS CREEK BRIDGE NO 10-0150

QUANTITIES

CLEAN EXPANSION JOINT	54	LF
JOINT SEAL (MR 1/2")	54	LF

JACK PETERS CREEK

Br. No. 10-0150, ROUTE 1, Men, PM 51.87

NOTE:
THE CONTRACTOR SHALL VERIFY ALL CONTROLLING FIELD DIMENSIONS BEFORE ORDERING OR FABRICATING ANY MATERIAL.

DESIGN ENGINEER 10-29-13	DESIGN	BY D. Acoba	CHECKED M. Hashimoto	LOAD FACTOR DESIGN	LIVE LOADING: HS20-44 AND ALTERNATIVE AND PERMIT DESIGN LOAD
	DETAILS	BY Dale Kubochi	CHECKED M. Hashimoto	LAYOUT	BY Dale Kubochi / CHECKED D. Acoba
	QUANTITIES	BY D. Acoba	CHECKED M. Hashimoto	SPECIFICATIONS	BY Todd Geerts / PLANS AND SPECS COMPARED Todd Geerts

STATE OF CALIFORNIA
DEPARTMENT OF TRANSPORTATION

DIVISION OF MAINTENANCE
STRUCTURE MAINTENANCE DESIGN

BRIDGE NO. VARIOUS
POST MILE VARIES

ROUTE 1 BRIDGES
GENERAL PLAN NO. 3

STRUCTURES MAINTENANCE GENERAL PLAN SHEET (ENGLISH) (REV. 09-01-10)

ORIGINAL SCALE IN INCHES FOR REDUCED PLANS 0 1 2 3

UNIT: 3488
PROJECT NUMBER & PHASE: 0100020393
CONTRACT NO.: 01-0A8101

DISREGARD PRINTS BEARING EARLIER REVISION DATES

REVISION DATES 7-5-13 2-24-14

SHEET 3 OF 16

FILE => 01-0a8101-a-gp03.dgn

USERNAME => s124428 DATE PLOTTED => 28-FEB-2014 TIME PLOTTED => 10:34

DIST	COUNTY	ROUTE	POST MILES TOTAL PROJECT	SHEET No.	TOTAL SHEETS
01	Men	1, 128	Var	9	21

REGISTERED CIVIL ENGINEER 2-24-14 DATE

February 24, 2014
PLANS APPROVAL DATE

REGISTERED PROFESSIONAL ENGINEER DIOSDADO ACOBA No. 52003 Exp. 12-31-14 CIVIL STATE OF CALIFORNIA

The State of California or its officers or agents shall not be responsible for the accuracy or completeness of electronic copies of this plan sheet.

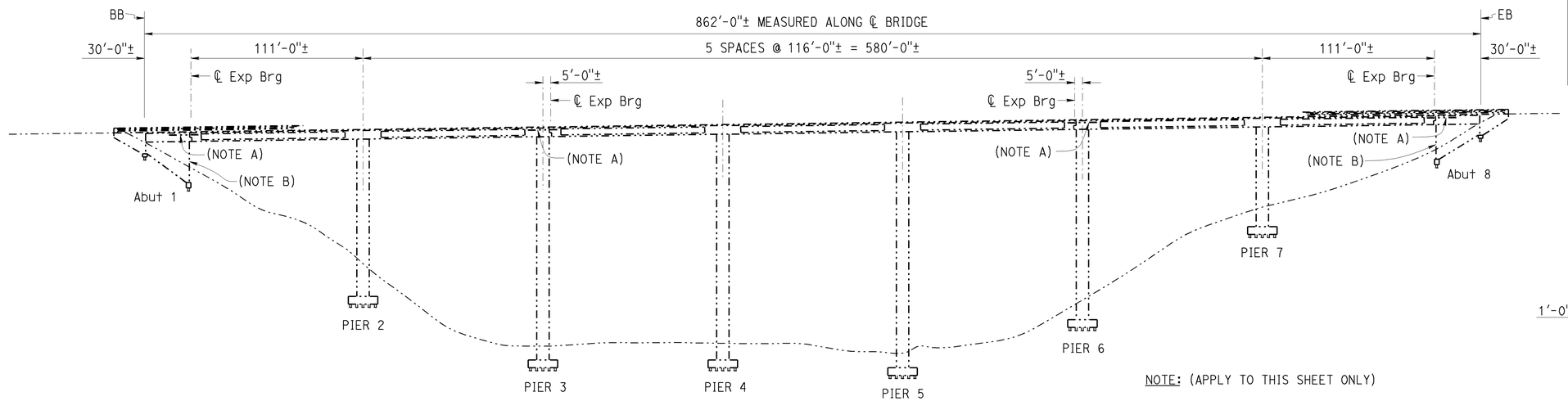

ELEVATION

1" = 40'

NOTE: (APPLY TO THIS SHEET ONLY)

(NOTE A) - Remove and replace existing cable restrainer units and turnbuckles. No more than one cable restrainer unit at a time may be removed and replaced. For details, see "DETAILS NO. 3" sheet.

(NOTE B) - Indicates location of access to deck soffit.

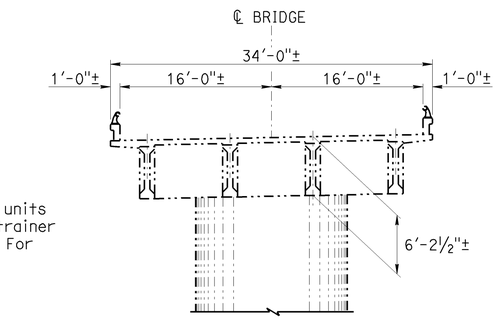

TYPICAL SECTION

⅛" = 1'-0"

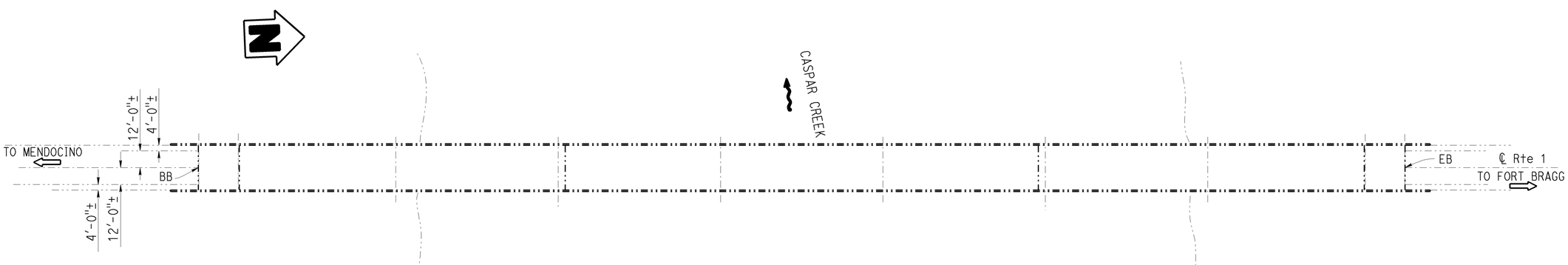

PLAN

1" = 40'

CASPAR CREEK BRIDGE NO 10-0153

QUANTITIES

BRIDGE REMOVAL (PORTION), LOCATION B	LUMP SUM
MISCELLANEOUS METAL (RESTRAINER - CABLE TYPE)	3,900 LB

NOTE:
THE CONTRACTOR SHALL VERIFY ALL CONTROLLING FIELD DIMENSIONS BEFORE ORDERING OR FABRICATING ANY MATERIAL.

CASPAR CREEK

Br. No. 10-0153, ROUTE 1, Men, PM R54.71

DESIGN ENGINEER 10-29-13	DESIGN	BY D. Acoba	CHECKED M. Hashimoto	LOAD FACTOR DESIGN	LIVE LOADING: HS20-44 AND ALTERNATIVE AND PERMIT DESIGN LOAD
	DETAILS	BY Dale Kubochi	CHECKED M. Hashimoto	LAYOUT	BY Dale Kubochi / CHECKED D. Acoba
	QUANTITIES	BY D. Acoba	CHECKED M. Hashimoto	SPECIFICATIONS	BY Todd Geerts / PLANS AND SPECS COMPARED Todd Geerts

STATE OF CALIFORNIA
DEPARTMENT OF TRANSPORTATION

DIVISION OF MAINTENANCE
STRUCTURE MAINTENANCE DESIGN

BRIDGE NO. VARIOUS
POST MILE VARIES

ROUTE 1 BRIDGES
GENERAL PLAN NO. 4

STRUCTURES MAINTENANCE GENERAL PLAN SHEET (ENGLISH) (REV. 09-01-10)

ORIGINAL SCALE IN INCHES FOR REDUCED PLANS 0 1 2 3

UNIT: 3488
PROJECT NUMBER & PHASE: 0100020393
CONTRACT NO.: 01-0A8101

DISREGARD PRINTS BEARING EARLIER REVISION DATES

REVISION DATES 7-5-13 2-7-14 2-24-14

SHEET 4 OF 16

FILE => 01-0a8101-a-gp04.dgn

USERNAME => s124428 DATE PLOTTED => 28-FEB-2014 TIME PLOTTED => 10:34

DIST	COUNTY	ROUTE	POST MILES TOTAL PROJECT	SHEET No.	TOTAL SHEETS
01	Men	1, 128	Var	10	21

REGISTERED CIVIL ENGINEER 2-24-14 DATE

February 24, 2014
PLANS APPROVAL DATE

REGISTERED PROFESSIONAL ENGINEER DIOSDADO ACOBA No. 52003 Exp. 12-31-14 CIVIL STATE OF CALIFORNIA

The State of California or its officers or agents shall not be responsible for the accuracy or completeness of electronic copies of this plan sheet.

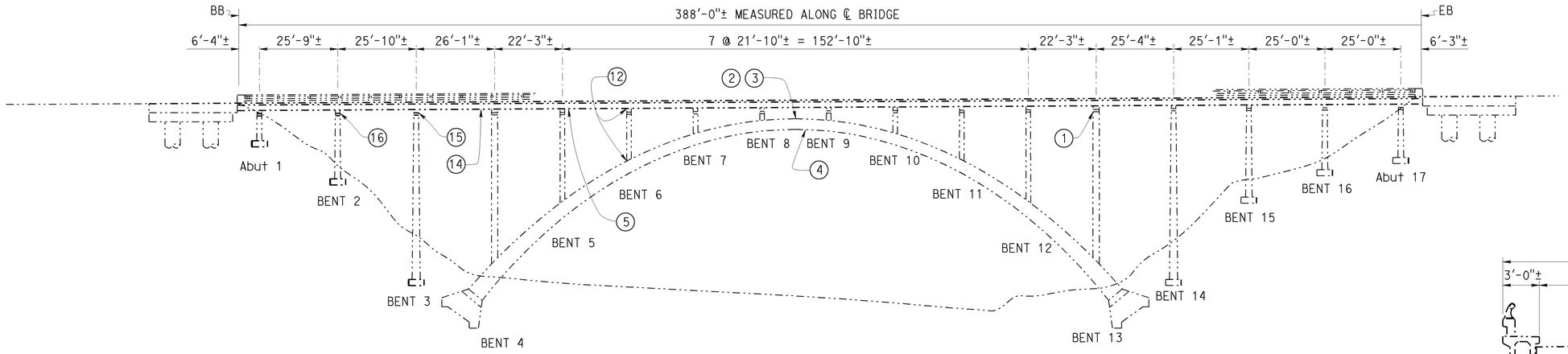

MIRRORED ELEVATION (LEFT SIDE)
1" = 20'

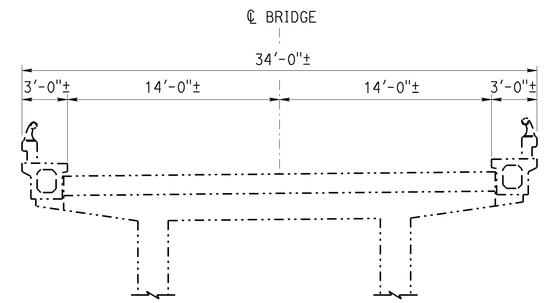

TYPICAL SECTION
1" = 5'

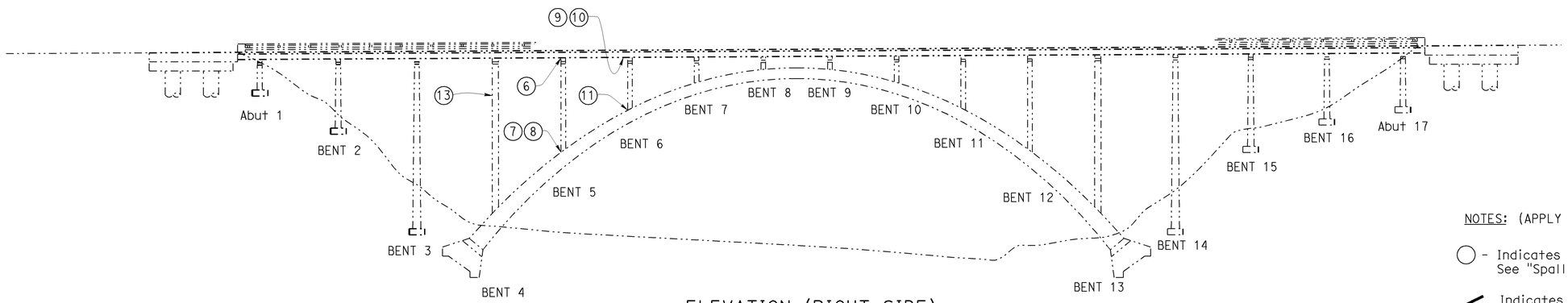

ELEVATION (RIGHT SIDE)
1" = 20'

NOTES: (APPLY TO THIS SHEET ONLY)

◯ - Indicates location of Repair Spalled Surface Area. See "Spall Repair Table" on "DETAILS NO. 1" sheet.

Indicates location of existing joint seal removal and placement of new joint seal. For details, see "JOINT SEAL DETAILS" sheet.

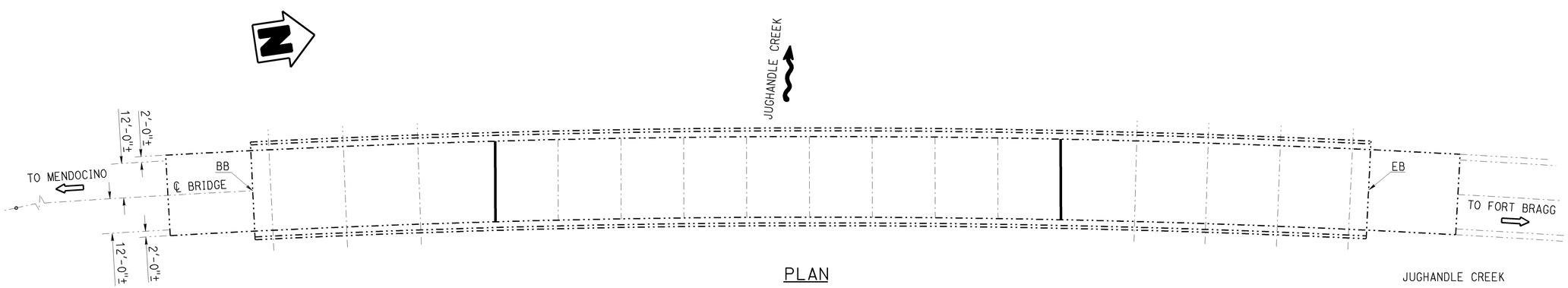

PLAN
1" = 20'

NOTE:
THE CONTRACTOR SHALL VERIFY ALL CONTROLLING FIELD DIMENSIONS BEFORE ORDERING OR FABRICATING ANY MATERIAL.

JUGHANDLE CREEK

Br. No. 10-0154, ROUTE 1, Men, PM 56.73

JUGHANDLE CREEK — BRIDGE NO 10-0154

QUANTITIES

REPAIR SPALLED SURFACE AREA	46	SQFT
CLEAN EXPANSION JOINT	58	LF
JOINT SEAL (MR 1/2")	58	LF

DESIGN ENGINEER 10-29-13	DESIGN	BY D. Acoba	CHECKED M. Hashimoto	LOAD FACTOR DESIGN	LIVE LOADING: HS20-44 AND ALTERNATIVE AND PERMIT DESIGN LOAD	
	DETAILS	BY Dale Kubochi	CHECKED M. Hashimoto	LAYOUT	BY Dale Kubochi	CHECKED D. Acoba
	QUANTITIES	BY D. Acoba	CHECKED M. Hashimoto	SPECIFICATIONS	BY Todd Geerts	PLANS AND SPECS COMPARED Todd Geerts

STATE OF CALIFORNIA
DEPARTMENT OF TRANSPORTATION

DIVISION OF MAINTENANCE
STRUCTURE MAINTENANCE DESIGN

BRIDGE NO. VARIOUS
POST MILE VARIES

ROUTE 1 BRIDGES
GENERAL PLAN NO. 5

STRUCTURES MAINTENANCE GENERAL PLAN SHEET (ENGLISH) (REV. 09-01-10)

ORIGINAL SCALE IN INCHES FOR REDUCED PLANS 0 1 2 3

UNIT: 3488
PROJECT NUMBER & PHASE: 0100020393
CONTRACT NO.: 01-0A8101

DISREGARD PRINTS BEARING EARLIER REVISION DATES

REVISION DATES 7-1-13 8-27-13 2-7-14 2-24-14

SHEET 5 OF 16

FILE => 01-0a8101-a-gp05.dgn

USERNAME => s124428 DATE PLOTTED => 28-FEB-2014 TIME PLOTTED => 10:34

DIST	COUNTY	ROUTE	POST MILES TOTAL PROJECT	SHEET No.	TOTAL SHEETS
01	Men	1, 128	Var	11	21

REGISTERED CIVIL ENGINEER 2-24-14 DATE

February 24, 2014
PLANS APPROVAL DATE

REGISTERED PROFESSIONAL ENGINEER DIOSDADO ACOBA No. 52003 Exp. 12-31-14 CIVIL STATE OF CALIFORNIA

The State of California or its officers or agents shall not be responsible for the accuracy or completeness of electronic copies of this plan sheet.

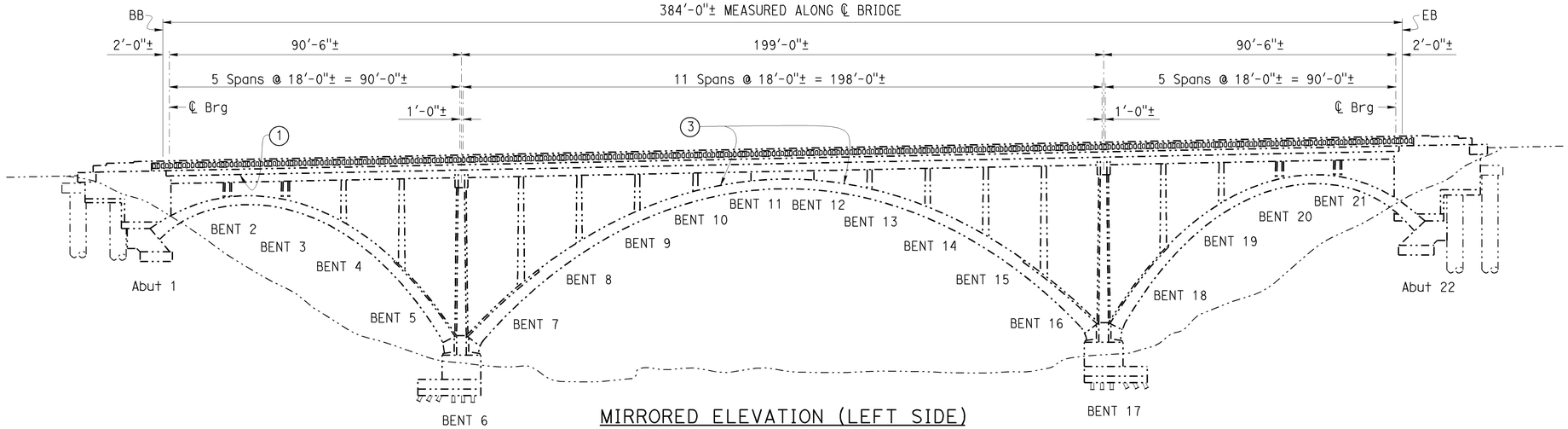

MIRRORED ELEVATION (LEFT SIDE)
1" = 20'

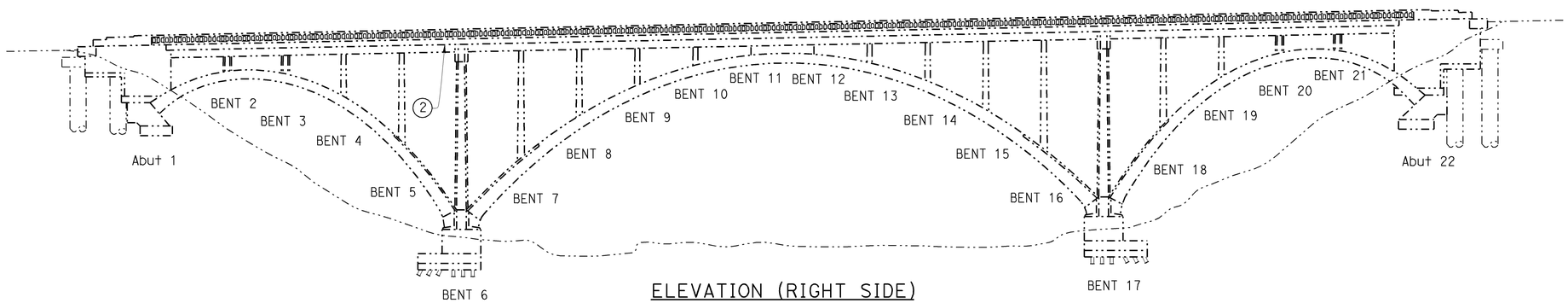

ELEVATION (RIGHT SIDE)
1" = 20'

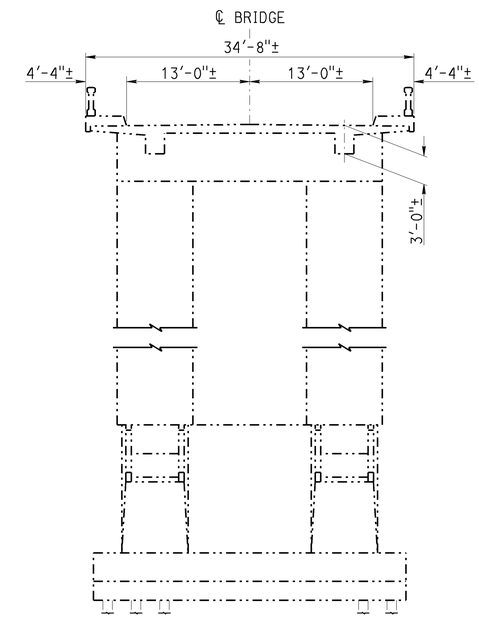

TYPICAL SECTION
1/8" = 1'-0"

NOTE: (APPLY TO THIS SHEET ONLY)

◯ - Indicates location of Repair Spalled Surface Area. See "Spall Repair Table" on "DETAILS NO. 1" sheet.

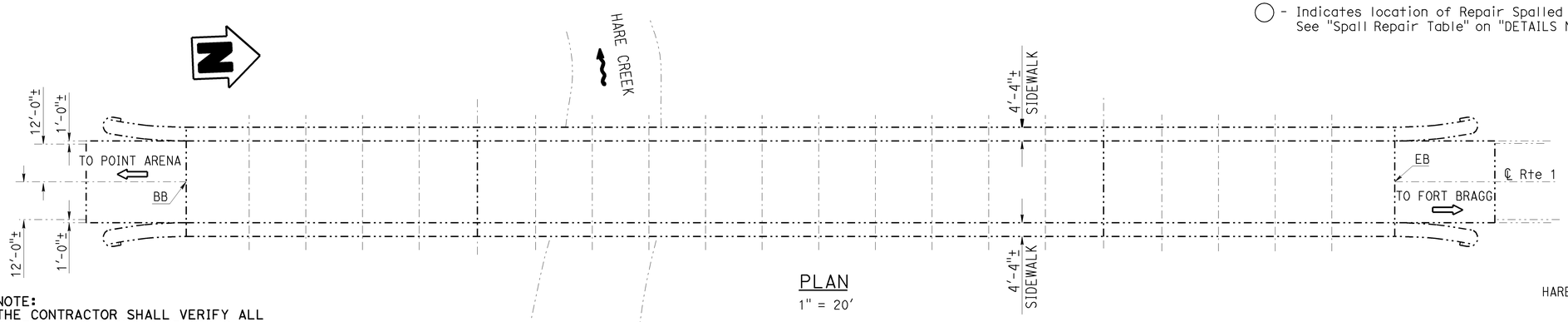

PLAN
1" = 20'

NOTE:
THE CONTRACTOR SHALL VERIFY ALL CONTROLLING FIELD DIMENSIONS BEFORE ORDERING OR FABRICATING ANY MATERIAL.

HARE CREEK

Br. No. 10-0175, ROUTE 1, PM 59.67

HARE CREEK BRIDGE NO 10-0175

QUANTITIES

REPAIR SPALLED SURFACE AREA	40 SQFT

Matthew W. Lee 10-29-13 DESIGN ENGINEER	DESIGN	BY D. Acoba	CHECKED M. Hashimoto	LOAD FACTOR DESIGN	LIVE LOADING: HS20-44 AND ALTERNATIVE AND PERMIT DESIGN LOAD
	DETAILS	BY Dale Kubochi	CHECKED M. Hashimoto	LAYOUT	BY Dale Kubochi / CHECKED D. Acoba
	QUANTITIES	BY D. Acoba	CHECKED M. Hashimoto	SPECIFICATIONS	BY Todd Geerts / PLANS AND SPECS COMPARED Todd Geerts

STATE OF CALIFORNIA
DEPARTMENT OF TRANSPORTATION

DIVISION OF MAINTENANCE
STRUCTURE MAINTENANCE DESIGN

BRIDGE NO. VARIOUS
POST MILE VARIES

ROUTE 1 BRIDGES
GENERAL PLAN NO. 6

STRUCTURES MAINTENANCE GENERAL PLAN SHEET (ENGLISH) (REV. 09-01-10)

ORIGINAL SCALE IN INCHES FOR REDUCED PLANS 0 1 2 3

UNIT: 3488
PROJECT NUMBER & PHASE: 0100020393
CONTRACT NO.: 01-0A8101

DISREGARD PRINTS BEARING EARLIER REVISION DATES
REVISION DATES 11-1-13 2-21-14 2-24-14

SHEET 6 OF 16

FILE => 01-0a8101-a-gp06.dgn

USERNAME => s124428 DATE PLOTTED => 28-FEB-2014 TIME PLOTTED => 10:35

DIST	COUNTY	ROUTE	POST MILES TOTAL PROJECT	SHEET No.	TOTAL SHEETS
01	Men	1, 128	Var	12	21

REGISTERED CIVIL ENGINEER 2-24-14 DATE

February 24, 2014
PLANS APPROVAL DATE

REGISTERED PROFESSIONAL ENGINEER DIOSDADO ACOBA No. 52003 Exp. 12-31-14 CIVIL STATE OF CALIFORNIA

The State of California or its officers or agents shall not be responsible for the accuracy or completeness of electronic copies of this plan sheet.

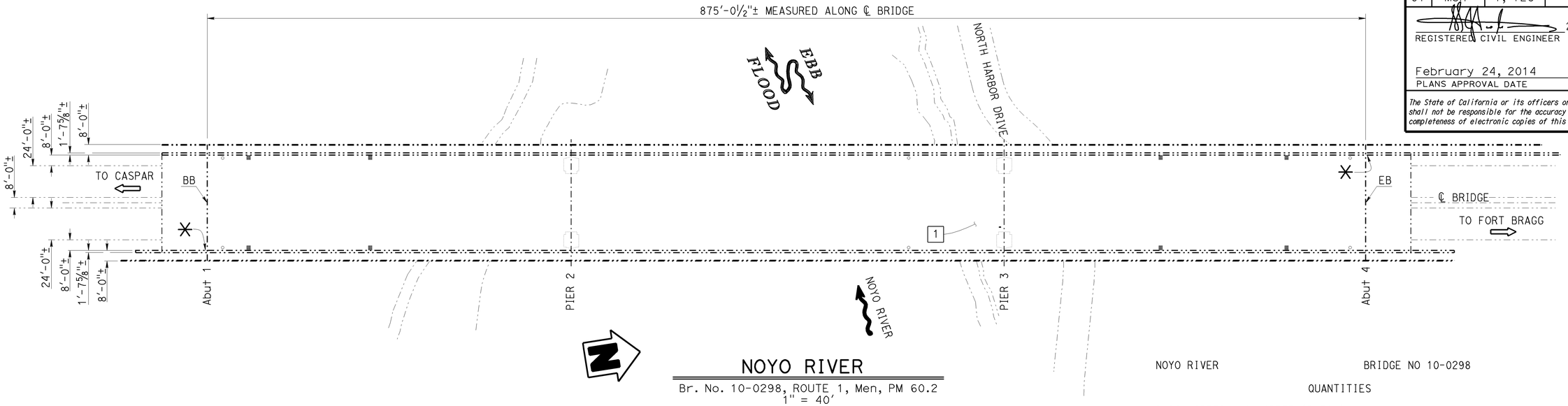

NOYO RIVER

Br. No. 10-0298, ROUTE 1, Men, PM 60.2
1" = 40'

NOYO RIVER BRIDGE NO 10-0298

QUANTITIES

RAPID SETTING CONCRETE (PATCH)	1 CF
REMOVE UNSOUND CONCRETE	1 CF

NOTES: (APPLY TO THIS SHEET ONLY)

☐ - Indicates location of Remove Unsound Concrete and place Rapid Setting Concrete. See "Spall Repair Table" on "DETAILS NO. 1" sheet.

✳ - Paint "Noyo River" and paint "Br. No. 10-0298"

NOTE:
THE CONTRACTOR SHALL VERIFY ALL CONTROLLING FIELD DIMENSIONS BEFORE ORDERING OR FABRICATING ANY MATERIAL.

10-29-13
DESIGN ENGINEER

	BY	CHECKED			
DESIGN	D. Acoba	M. Hashimoto	LOAD FACTOR DESIGN	LIVE LOADING: HS20-44 AND ALTERNATIVE AND PERMIT DESIGN LOAD	
DETAILS	Dale Kubochi	M. Hashimoto	LAYOUT	Dale Kubochi	D. Acoba
QUANTITIES	D. Acoba	M. Hashimoto	SPECIFICATIONS	Todd Geerts	PLANS AND SPECS COMPARED Todd Geerts

STATE OF CALIFORNIA
DEPARTMENT OF TRANSPORTATION

DIVISION OF MAINTENANCE
STRUCTURE MAINTENANCE DESIGN

BRIDGE NO. VARIOUS
POST MILE VARIES

ROUTE 1 BRIDGES
GENERAL PLAN NO. 7

STRUCTURES MAINTENANCE GENERAL PLAN SHEET (ENGLISH) (REV. 09-01-10)

ORIGINAL SCALE IN INCHES FOR REDUCED PLANS 0 1 2 3

UNIT: 3488
PROJECT NUMBER & PHASE: 0100020393
CONTRACT NO.: 01-0A8101

DISREGARD PRINTS BEARING EARLIER REVISION DATES

REVISION DATES 7-5-13 8-27-13 11-15-13 2-24-14

SHEET 7 OF 16

FILE => 01-0a8101-a-gp07.dgn

USERNAME => s124428 DATE PLOTTED => 28-FEB-2014 TIME PLOTTED => 10:35

DIST	COUNTY	ROUTE	POST MILES TOTAL PROJECT	SHEET No.	TOTAL SHEETS
01	Men	1, 128	Var	13	21

REGISTERED CIVIL ENGINEER 2-24-14 DATE

February 24, 2014
PLANS APPROVAL DATE

REGISTERED PROFESSIONAL ENGINEER DIOSDADO ACOBA No. 52003 Exp. 12-31-14 CIVIL STATE OF CALIFORNIA

The State of California or its officers or agents shall not be responsible for the accuracy or completeness of electronic copies of this plan sheet.

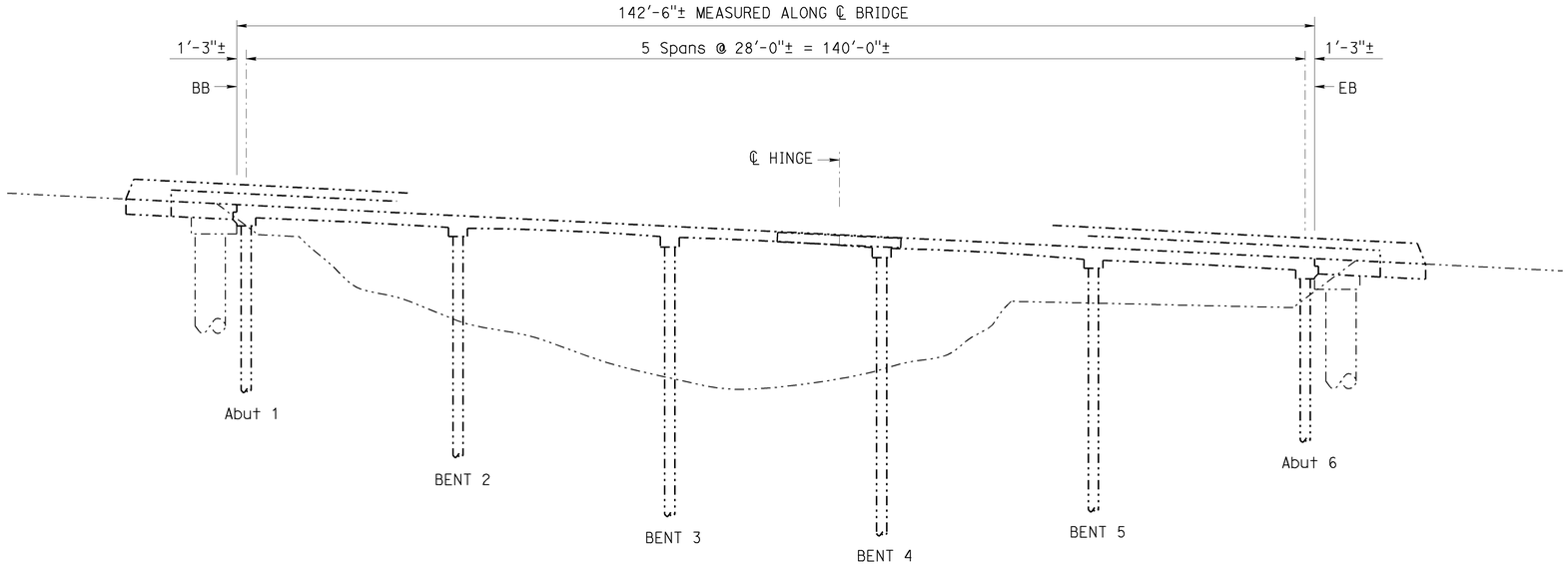

MIRRORED ELEVATION
1" = 10'

NOTE: (APPLY TO THIS SHEET ONLY)

◯ - Indicates location of Repair Spalled Surface Area. See "Spall Repair Table" on "DETAILS NO. 1" sheet.

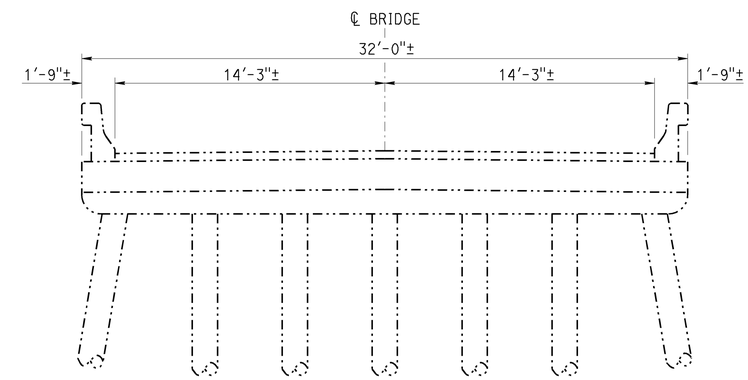

TYPICAL SECTION
¼" = 1'-0"

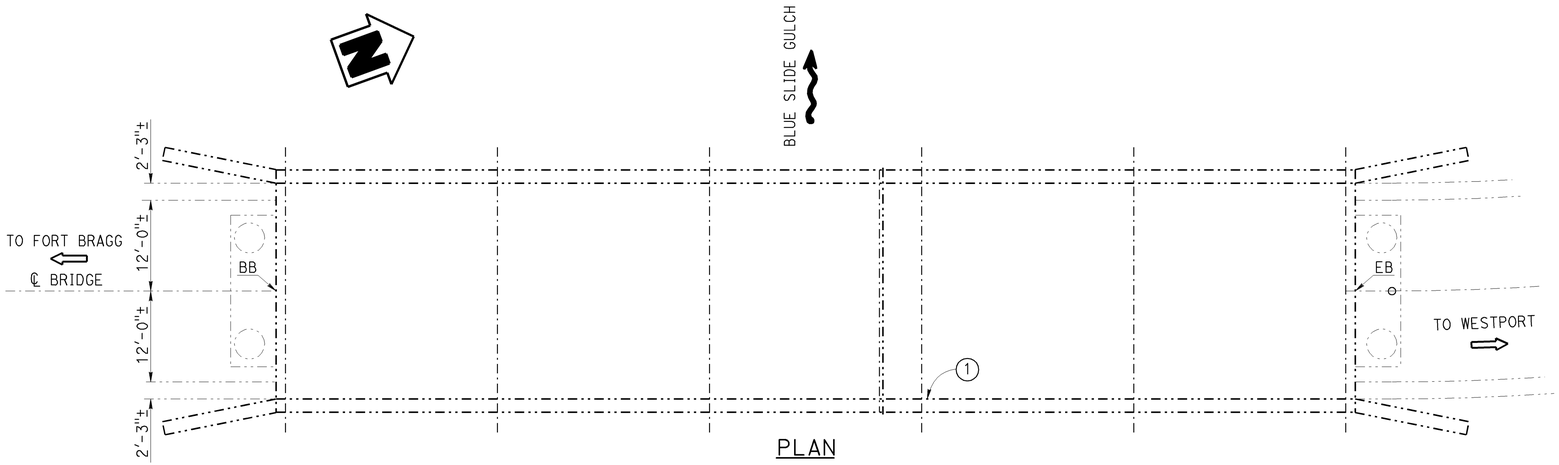

PLAN
1" = 10'

NOTE:
THE CONTRACTOR SHALL VERIFY ALL CONTROLLING FIELD DIMENSIONS BEFORE ORDERING OR FABRICATING ANY MATERIAL.

BLUE SLIDE GULCH BRIDGE NO 10-0166

QUANTITIES

REPAIR SPALLED SURFACE AREA	1 SQFT

BLUE SLIDE GULCH

Br. No. 10-0166, ROUTE 1, PM 75.0

DESIGN ENGINEER 10-29-13	DESIGN	BY D. Acoba	CHECKED M. Hashimoto	LOAD FACTOR DESIGN	LIVE LOADING: HS20-44 AND ALTERNATIVE AND PERMIT DESIGN LOAD
	DETAILS	BY Dale Kubochi	CHECKED M. Hashimoto	LAYOUT	BY Dale Kubochi / CHECKED D. Acoba
	QUANTITIES	BY D. Acoba	CHECKED M. Hashimoto	SPECIFICATIONS	BY Todd Geerts / PLANS AND SPECS COMPARED Todd Geerts

STATE OF CALIFORNIA
DEPARTMENT OF TRANSPORTATION

DIVISION OF MAINTENANCE
STRUCTURE MAINTENANCE DESIGN

BRIDGE NO. VARIOUS
POST MILE VARIES

ROUTE 1 BRIDGES
GENERAL PLAN NO. 8

STRUCTURES MAINTENANCE GENERAL PLAN SHEET (ENGLISH) (REV. 09-01-10)

ORIGINAL SCALE IN INCHES FOR REDUCED PLANS 0 1 2 3

UNIT: 3488
PROJECT NUMBER & PHASE: 0100020393
CONTRACT NO.: 01-0A8101

DISREGARD PRINTS BEARING EARLIER REVISION DATES

REVISION DATES 11-5-13 2-3-14 2-24-14

SHEET 8 OF 16

FILE => 01-0a8101-a-gp08.dgn

USERNAME => s124428 DATE PLOTTED => 28-FEB-2014 TIME PLOTTED => 10:35

DIST	COUNTY	ROUTE	POST MILES TOTAL PROJECT	SHEET No.	TOTAL SHEETS
01	Men	1, 128	Var	14	21

REGISTERED CIVIL ENGINEER 2-24-14 DATE

February 24, 2014
PLANS APPROVAL DATE

REGISTERED PROFESSIONAL ENGINEER
DIOSDADO ACOBA
No. 52003
Exp. 12-31-14
CIVIL
STATE OF CALIFORNIA

The State of California or its officers or agents shall not be responsible for the accuracy or completeness of electronic copies of this plan sheet.

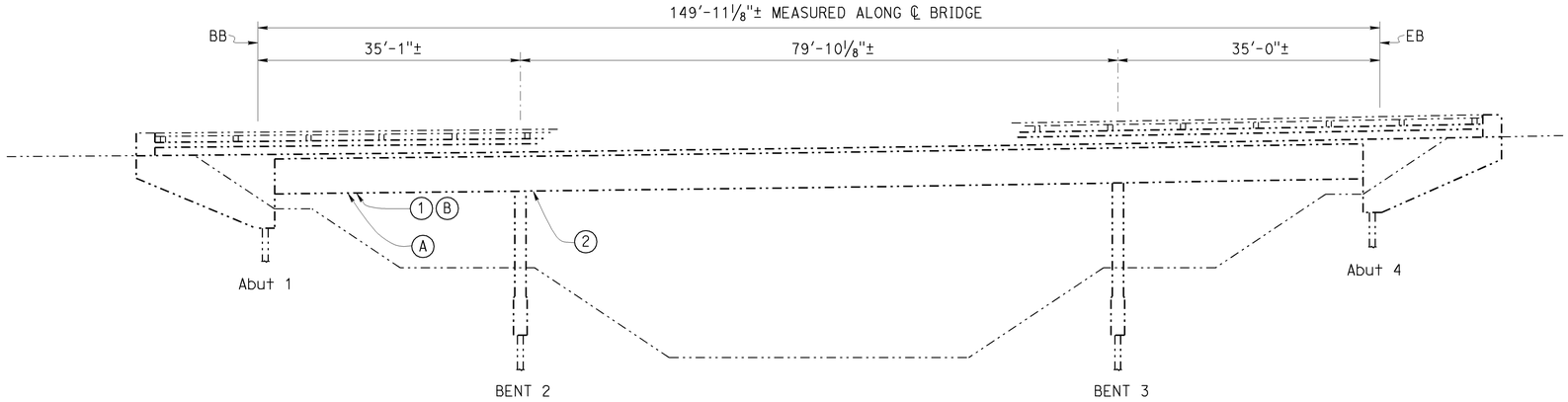

ELEVATION
1" = 10'

NOTE: (APPLY TO THIS SHEET ONLY)

◯ - Indicates location of Repair Spalled Surface Area. See "Spall Repair Table" on "DETAILS NO. 1" sheet. And indicates location of epoxy inject cracks, see "Epoxy Inject Table" on "DETAILS NO. 1" sheet.

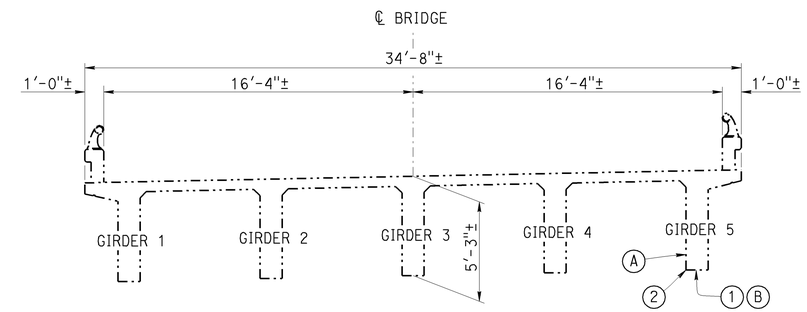

TYPICAL SECTION
1/4" = 1'-0"

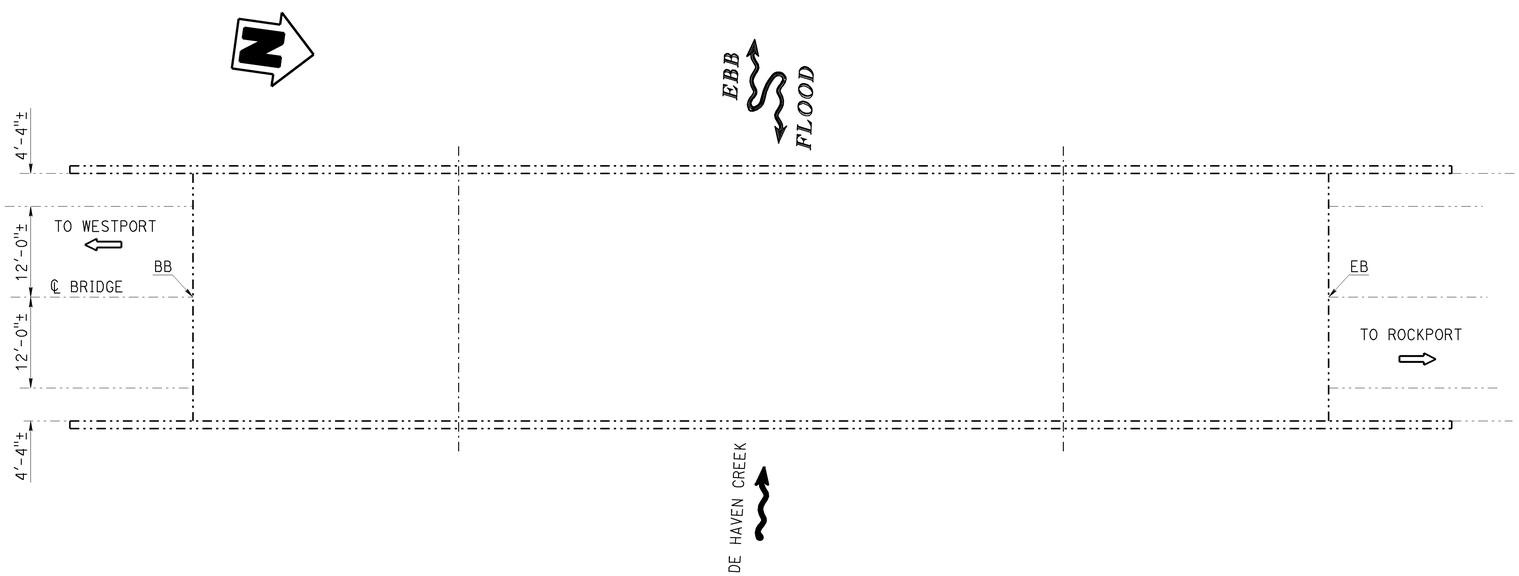

PLAN
1" = 10'

DE HAVEN CREEK BRIDGE NO 10-0138

QUANTITIES

INJECT CRACK (EPOXY)	11	LF
REPAIR SPALLED SURFACE AREA	24	SQFT

NOTE:
THE CONTRACTOR SHALL VERIFY ALL CONTROLLING FIELD DIMENSIONS BEFORE ORDERING OR FABRICATING ANY MATERIAL.

DE HAVEN CREEK

Br. No. 10-0138, ROUTE 1, PM R79.2

Matthew W. Lee 10-29-13
DESIGN ENGINEER

	BY	CHECKED			
DESIGN	D. Acoba	M. Hashimoto	LOAD FACTOR DESIGN	LIVE LOADING: HS20-44 AND ALTERNATIVE AND PERMIT DESIGN LOAD	
DETAILS	Dale Kubochi	M. Hashimoto	LAYOUT	BY Dale Kubochi	CHECKED D. Acoba
QUANTITIES	D. Acoba	M. Hashimoto	SPECIFICATIONS	BY Todd Geerts	PLANS AND SPECS COMPARED Todd Geerts

STATE OF CALIFORNIA
DEPARTMENT OF TRANSPORTATION

DIVISION OF MAINTENANCE
STRUCTURE MAINTENANCE DESIGN

BRIDGE NO. VARIOUS
POST MILE VARIES

ROUTE 1 BRIDGES
GENERAL PLAN NO. 9

STRUCTURES MAINTENANCE GENERAL PLAN SHEET (ENGLISH) (REV. 09-01-10)

ORIGINAL SCALE IN INCHES FOR REDUCED PLANS 0 1 2 3

UNIT: 3488
PROJECT NUMBER & PHASE: 0100020393
CONTRACT NO.: 01-0A8101

DISREGARD PRINTS BEARING EARLIER REVISION DATES

REVISION DATES 1-8-13 2-7-14 2-24-14

SHEET 9 OF 16

FILE => 01-0a8101-a-gp09.dgn

USERNAME => s124428 DATE PLOTTED => 28-FEB-2014 TIME PLOTTED => 10:35

DIST	COUNTY	ROUTE	POST MILES TOTAL PROJECT	SHEET No.	TOTAL SHEETS
01	Men	1, 128	Var	15	21

REGISTERED CIVIL ENGINEER 2-24-14 DATE

February 24, 2014
PLANS APPROVAL DATE

REGISTERED PROFESSIONAL ENGINEER DIOSDADO ACOBA No. 52003 Exp. 12-31-14 CIVIL STATE OF CALIFORNIA

The State of California or its officers or agents shall not be responsible for the accuracy or completeness of electronic copies of this plan sheet.

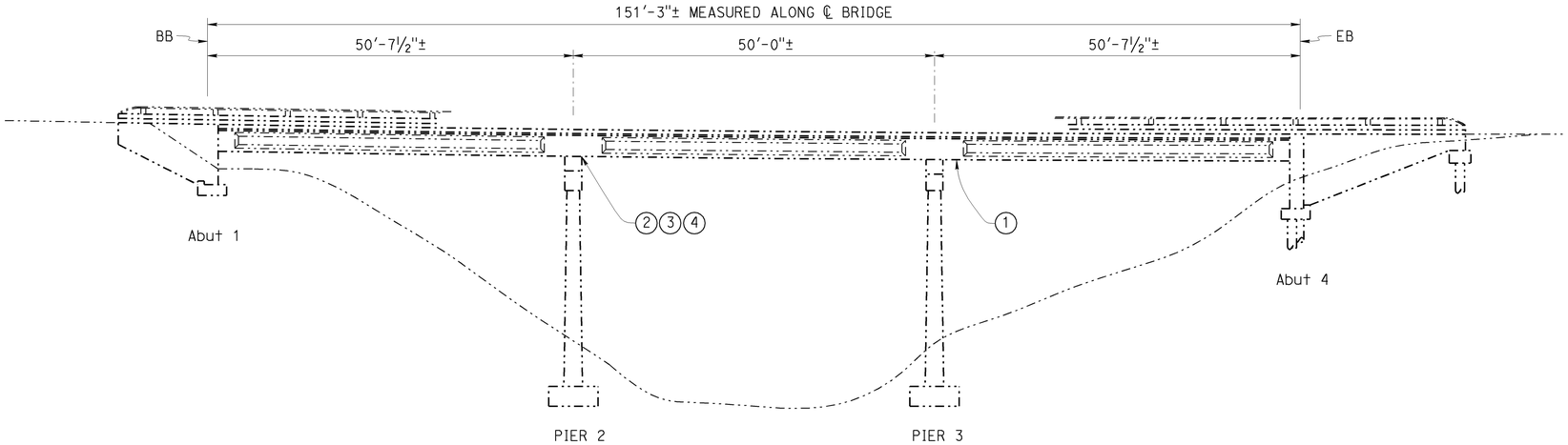

NOTE: (APPLY TO THIS SHEET ONLY)

◯ - Indicates location of Repair Spalled Surface Area. See "Spall Repair Table" on "DETAILS NO. 1" sheet.

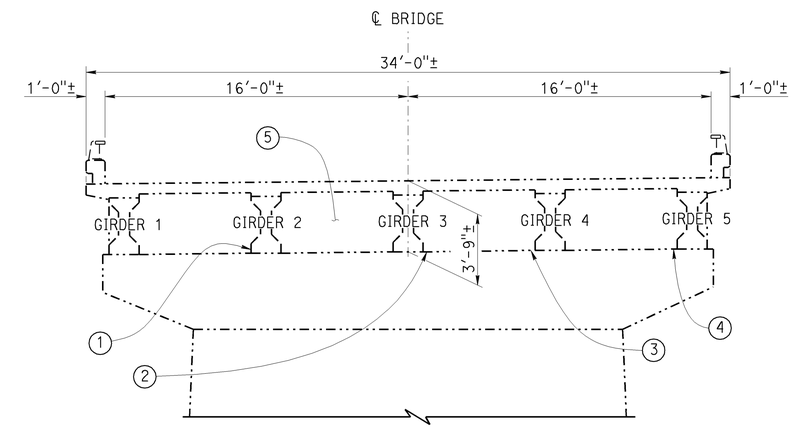

TYPICAL SECTION
¼" = 1'-0"

Note: Pier 3 shown, Pier 2 similar.

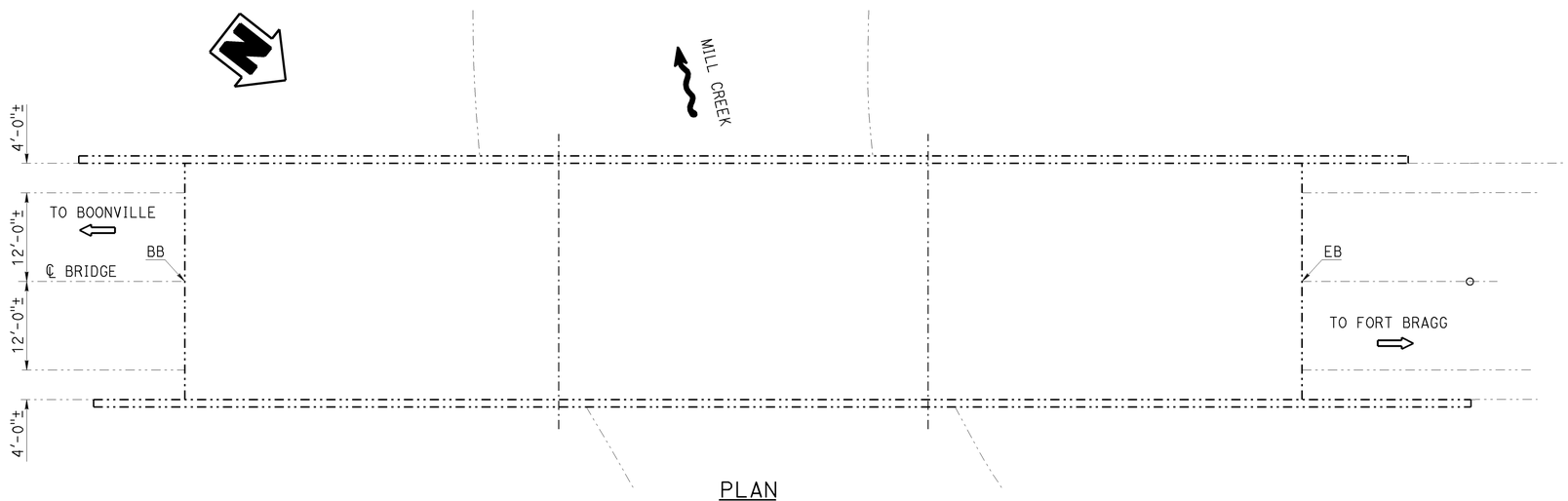

PLAN
1" = 10'

NOTE:
THE CONTRACTOR SHALL VERIFY ALL CONTROLLING FIELD DIMENSIONS BEFORE ORDERING OR FABRICATING ANY MATERIAL.

MILL CREEK
Br. No. 10-0073, ROUTE 128, PM 17.9

MILL CREEK BRIDGE NO 10-0073

QUANTITIES

REPAIR SPALLED SURFACE AREA 5 SQFT

10-29-13 DESIGN ENGINEER	DESIGN	BY D. Acoba	CHECKED M. Hashimoto	LOAD FACTOR DESIGN	LIVE LOADING: HS20-44 AND ALTERNATIVE AND PERMIT DESIGN LOAD	
	DETAILS	BY Dale Kubochi	CHECKED M. Hashimoto	LAYOUT	BY Dale Kubochi	CHECKED D. Acoba
	QUANTITIES	BY D. Acoba	CHECKED M. Hashimoto	SPECIFICATIONS	BY Todd Geerts	PLANS AND SPECS COMPARED Todd Geerts

STATE OF CALIFORNIA
DEPARTMENT OF TRANSPORTATION

DIVISION OF MAINTENANCE
STRUCTURE MAINTENANCE DESIGN

BRIDGE NO. VARIOUS
POST MILE VARIES

ROUTE 1 BRIDGES
GENERAL PLAN NO. 10

STRUCTURES MAINTENANCE GENERAL PLAN SHEET (ENGLISH) (REV. 09-01-10)

ORIGINAL SCALE IN INCHES FOR REDUCED PLANS 0 1 2 3

UNIT: 3488
PROJECT NUMBER & PHASE: 0100020393
CONTRACT NO.: 01-0A8101

DISREGARD PRINTS BEARING EARLIER REVISION DATES

REVISION DATES 1-5-10 8-30-13 2-3-14 2-24-14

SHEET 10 OF 16

FILE => 01-0a8101-a-gp10.dgn

USERNAME => s124428 DATE PLOTTED => 28-FEB-2014 TIME PLOTTED => 10:35

DIST	COUNTY	ROUTE	POST MILES TOTAL PROJECT	SHEET No.	TOTAL SHEETS
01	Men	1, 128	Var	16	21

REGISTERED CIVIL ENGINEER 2-24-14 DATE

February 24, 2014
PLANS APPROVAL DATE

REGISTERED PROFESSIONAL ENGINEER
DIOSDADO ACOBA
No. 52003
Exp. 12-31-14
CIVIL
STATE OF CALIFORNIA

The State of California or its officers or agents shall not be responsible for the accuracy or completeness of electronic copies of this plan sheet.

JOINT SEAL TABLE

BRIDGE NAME	BRIDGE NUMBER	LOCATION		MINIMUM "MR" (INCHES)	APPROXIMATE LENGTH (FEET)	EXISTING WATERSTOP	APPROX DEPTH TO CLEAN EXP JOINT (INCHES)
JACK PETERS CREEK	10-0150	Abut 1	BW	½	27	NO	12
		Abut 4	BW	½	27	NO	12
JUGHANDLE CREEK	10-0154	BENT 4	JT	½	29	NO	16
		BENT 13	JT	½	29	NO	16

LEGEND:
BW - Abutment backwall joint
JT - Expansion joint

The following notes apply to JOINT SEAL TYPE A:

1) Install Type A joint seal 3" up into rail on the low side of deck where joint matches curb or rail joint.

2) For details not shown, see B6-21

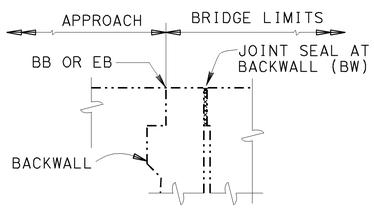

ABUTMENT WITH BACKWALL

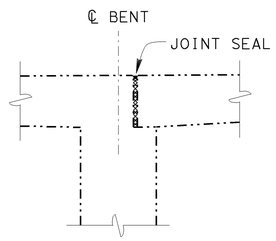

BENT

JOINT SEAL LOCATION

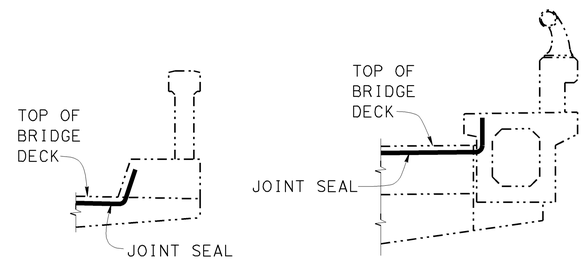

BARRIER RAIL

JOINT SEAL AT LOW SIDE OF DECK

Notes: Details shown for illustration purposes only. For use only where deck joint matches the sidewalk, curb or barrier rail joint.

NOTE:
THE CONTRACTOR SHALL VERIFY ALL CONTROLLING FIELD DIMENSIONS BEFORE ORDERING OR FABRICATING ANY MATERIAL.

	BY	CHECKED
DESIGN	Don Acoba	M. Hashimoto
DETAILS	Dale Kubochi	M. Hashimoto
QUANTITIES	Don Acoba	M. Hashimoto

STATE OF CALIFORNIA
DEPARTMENT OF TRANSPORTATION

DIVISION OF MAINTENANCE
STRUCTURE MAINTENANCE DESIGN

BRIDGE NO. VARIOUS
POST MILE VARIES

ROUTE 1 BRIDGES
JOINT SEAL DETAILS

STRUCTURES MAINTENANCE DETAIL SHEET (ENGLISH) (REV. 09-01-10)

ORIGINAL SCALE IN INCHES FOR REDUCED PLANS 0 1 2 3

UNIT: 3488
PROJECT NUMBER & PHASE: 0100020393
CONTRACT NO.: 01-0A8101

DISREGARD PRINTS BEARING EARLIER REVISION DATES

REVISION DATES 7-5-13 8-23-13 2-24-14

SHEET 11 OF 16

FILE => 01-0a8101-c-jtseal-det.dgn

USERNAME => s124428 DATE PLOTTED => 28-FEB-2014 TIME PLOTTED => 10:35

DIST	COUNTY	ROUTE	POST MILES TOTAL PROJECT	SHEET No.	TOTAL SHEETS
01	Men	1, 128	Var	17	21

REGISTERED CIVIL ENGINEER 2-24-14 DATE

February 24, 2014
PLANS APPROVAL DATE

REGISTERED PROFESSIONAL ENGINEER DIOSDADO ACOBA No. 52003 Exp. 12-31-14 CIVIL STATE OF CALIFORNIA

The State of California or its officers or agents shall not be responsible for the accuracy or completeness of scanned copies of this plan sheet.

SPALL REPAIR TABLE

BRIDGE NAME	BRIDGE NUMBER	DESIGNATION	MEMBER	SPAN	LEFT, MIDDLE OR RIGHT	GIRDER NUMBER	BENT	COLUMN NUMBER	REMARKS	LENGTH (FEET)	WIDTH (INCHES)	DEPTH (INCHES)	NUMBER (EACH)
ALDER CREEK	10-0116	1	COLUMN	1	RIGHT		2		4 FEET ABOVE GROUND	6	6	3	1
		2	COLUMN	2	LEFT		2		TOP OF PIER 2, BENEATH GIRDERS 1 AND 2	1.33	8	3	2
SALMON CREEK	10-0134	1	DECK	1					SIDEWALK	2	12	3	1
		2	DECK	2						1	8	3	1
		3	COLUMN				2	2		2	24	3	1
		4	COLUMN				3	2		1	12	3	1
		5	DECK SOFFIT	1	MIDDLE					3	12	3	1
		6	DECK SOFFIT	1	MIDDLE					1	12	3	1
		7	DECK SOFFIT	1	MIDDLE					2	12	3	1
		8	DECK SOFFIT	1	MIDDLE					3	24	3	4
		9	GIRDER		RIGHT				INNER GIRDER	4	12	3	4
JUGHANDLE CREEK	10-0154	1	BENT CAP				13		CENTER OF BENT CAP ON THE UNDERSIDE	1	12	3	4
		2	ARCH	8	LEFT		8		MIDSPAN	2.4	12	3	1
		3	ARCH	8	LEFT		8		MIDSPAN, INSIDE FACE	10	12	3	1
		4	HORIZONTAL BEAM				8		BETWEEN ARCHES	1	12	3	1
		5	DECK SOFFIT	5	MIDDLE				SECOND SET OF COLUMNS	0.5	6	3	4
		6	DECK SOFFIT	4					SECOND SET OF BENT CAPS	2.4	12	3	1
		7	ARCH	4	RIGHT			2	SECOND COLUMN	1.6	8	3	1
		8	ARCH	4	RIGHT			2	SECOND COLUMN	1	12	3	1
		9	DECK SOFFIT	5					THIRD SET OF BENT CAPS	2.4	12	3	1
		10	DECK SOFFIT	5					THIRD SET OF BENT CAPS	1	12	3	1
		11	ARCH	5	RIGHT				THIRD SET OF COLUMN BASE	2	24	3	1
		12	ARCH	5	LEFT				THIRD SET OF COLUMN (BASE AND TOP)	2	24	3	2
		13	COLUMN				4	2		3	12	3	1
		14	DECK SOFFIT	3					NEAR BENT 4	1	12	3	1
		15	BENT CAP				3		NORTH FACE OF BENT 3	1	12	3	3
		16	BENT CAP				2		LEFT SIDE OF BENT CAP	0.5	6	3	2
HARE CREEK	10-0175	1	GIRDER	2	LEFT				INSIDE FACE	2	24	3	1
		2	DECK SOFFIT	5	RIGHT				10 FEET FROM BENT 6	2	24	3	1
		3	ARCH	10, 12	LEFT				INSIDE AND OUTSIDE OF MIDSPAN	4	48	3	2
BLUE SLIDE GULCH	10-0166	1	RAIL	4	RIGHT				AT BENT 4	1	12	3	1
DE HAVEN CREEK	10-0138	1	GIRDER	1		5			10 FEET FROM ABUTMENT 1	4	12	3	1
		2	GIRDER	2		5			NEAR BENT 2	10	24	3	1
MILL CREEK	10-0073	1	GIRDER			2	3		LOWER LEFT CORNER OF GIRDER 2	1	12	3	1
		2	PIER CAP			3	2		BOTTOM OF GIRDER 3	1	12	3	1
		3	PIER CAP			4	2		BOTTOM OF GIRDER 4	1	12	3	1
		4	PIER CAP			5	2		BOTTOM OF GIRDER 5	1	12	3	1
		5	DIAPHRAGM				3	1		1	12	3	1
NOYO RIVER	10-0298	1	DECK	2					LEFT WHEEL LINE, LANE NUMBER 2 OF NORTHBOUND TRAFFIC	1.33	4	3	1

EPOXY INJECT TABLE

BRIDGE NAME	BRIDGE NUMBER	DESIGNATION	MEMBER	SPAN	GIRDER NUMBER	REMARKS	LENGTH (FEET)
DE HAVEN CREEK	10-0138	A	GIRDER	1	5	10 FEET FROM ABUTMENT 1, INSIDE FACE	5
		B	GIRDER	1	5	10 FEET FROM ABUTMENT 1, BOTTOM OF GIRDER	6

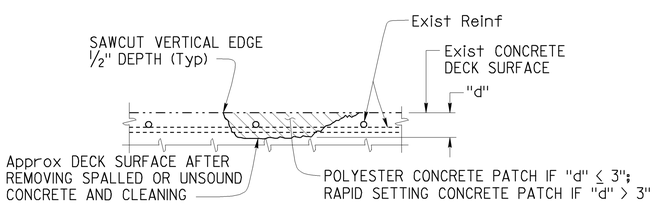

DECK REPAIR DETAIL

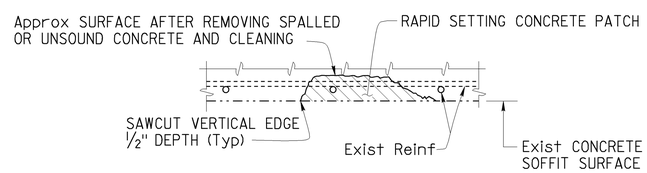

SOFFIT REPAIR DETAIL

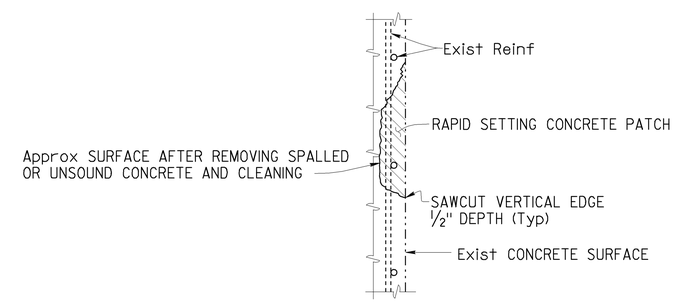

SPALL REPAIR DETAIL

NOTE:
THE CONTRACTOR SHALL VERIFY ALL CONTROLLING FIELD DIMENSIONS BEFORE ORDERING OR FABRICATING ANY MATERIAL.

Note: Locations to be determined by the Engineer. Reinforcement may be encountered during deck concrete removal.

NO SCALE

	BY	CHECKED
DESIGN	D. Acoba	M. Hashimoto
DETAILS	Dale Kubochi	M. Hashimoto
QUANTITIES	D. Acoba	M. Hashimoto

STATE OF CALIFORNIA
DEPARTMENT OF TRANSPORTATION

DIVISION OF MAINTENANCE
STRUCTURE MAINTENANCE DESIGN

BRIDGE NO. VARIOUS
POST MILE VARIES

ROUTE 1 BRIDGES
DETAILS NO. 1

STRUCTURES MAINTENANCE DETAIL SHEET (ENGLISH) (REV. 09-01-10)

ORIGINAL SCALE IN INCHES FOR REDUCED PLANS 0 1 2 3

UNIT: 3488
PROJECT NUMBER & PHASE: 0100020393
CONTRACT NO.: 01-0A8101

DISREGARD PRINTS BEARING EARLIER REVISION DATES

REVISION DATES 7-8-13 8-27-13 2-7-14 2-24-14

SHEET 12 OF 16

FILE => 01-0a8101-d-det01.dgn

USERNAME => s124428 DATE PLOTTED => 28-FEB-2014 TIME PLOTTED => 10:35

DIST	COUNTY	ROUTE	POST MILES TOTAL PROJECT	SHEET No.	TOTAL SHEETS
01	Men	1, 128	Var	18	21

REGISTERED CIVIL ENGINEER 2-24-14 DATE

February 24, 2014
PLANS APPROVAL DATE

REGISTERED PROFESSIONAL ENGINEER DIOSDADO ACOBA No. 52003 Exp. 12-31-14 CIVIL STATE OF CALIFORNIA

The State of California or its officers or agents shall not be responsible for the accuracy or completeness of scanned copies of this plan sheet.

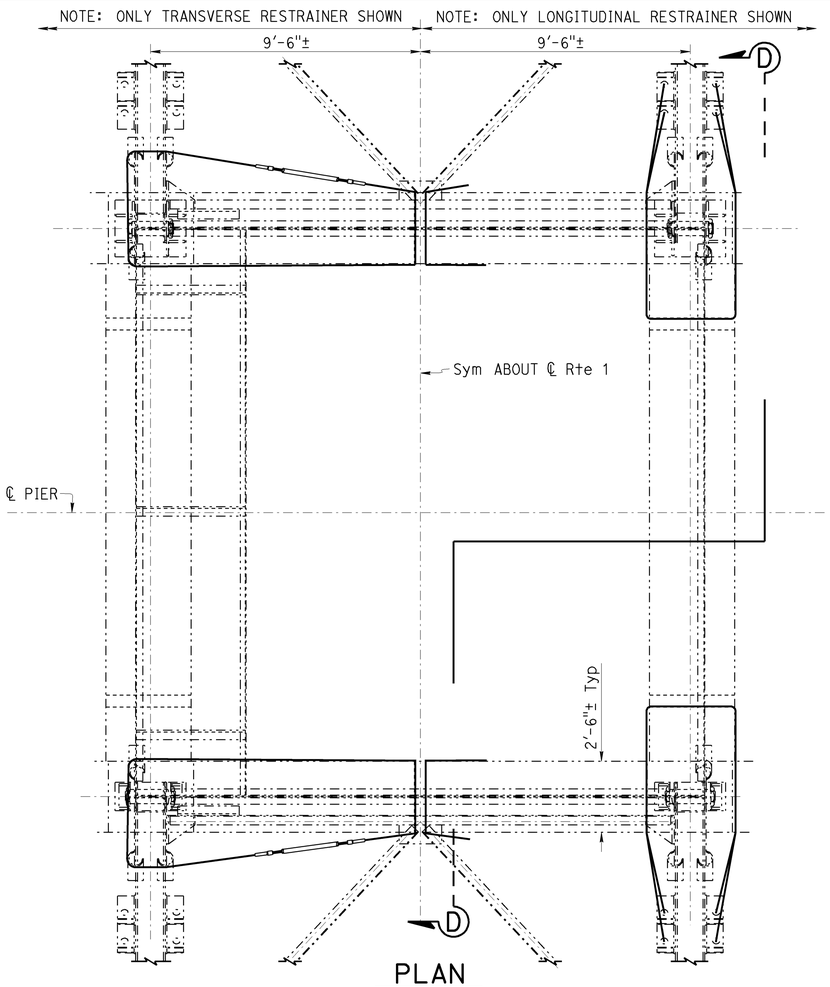

PLAN
3/8" = 1'-0"

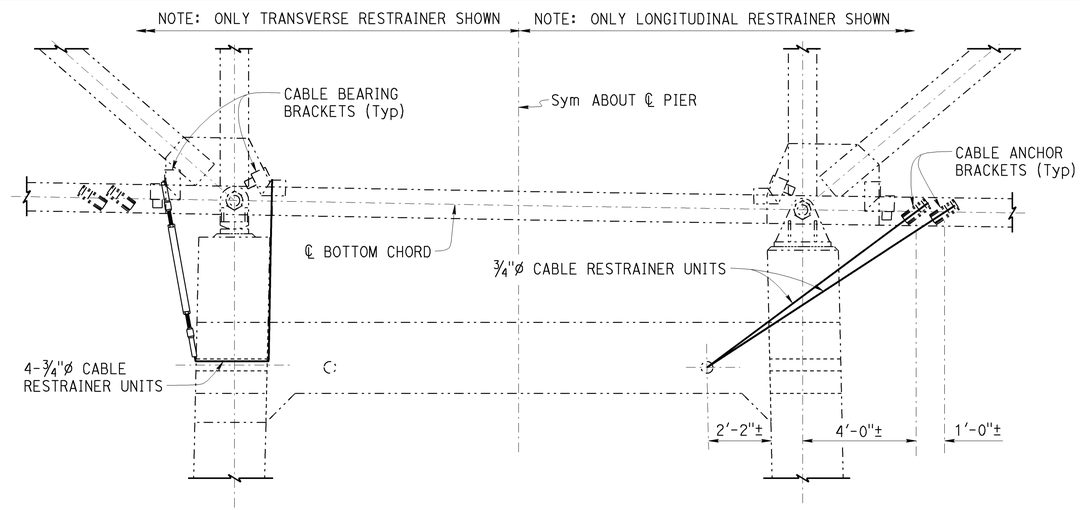

VIEW D-D
3/8" = 1'-0"

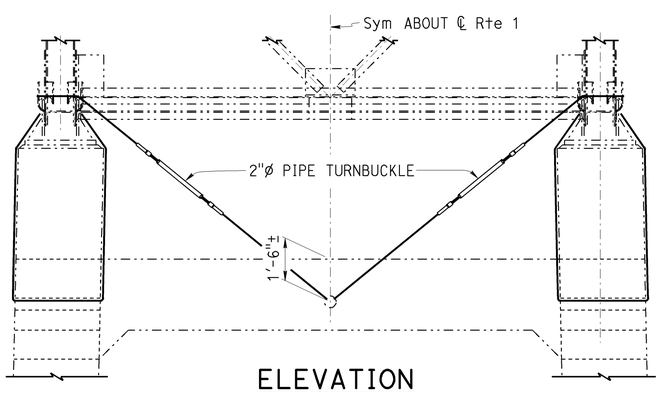

ELEVATION
3/8" = 1'-0"

RESTRAINER TABLE

LOCATION	TYPE	APPROX LENGTH (FEET)	QUANTITY	CABLE END ANCHORAGE
Pier 3	Transverse	30.8±	16	Turnbuckle
	Longitudinal	24.6±	8	Cable Yield Indicator
Pier 4	Transverse	30.8±	16	Turnbuckle
	Longitudinal	24.6±	8	Cable Yield Indicator

NOTES: (APPLY TO THIS SHEET ONLY)

Remove slack from new cable restrainer units after installation (See "Turnbuckle Installation Notes" and "Restrainer Unit Installation Procedure). For "Turnbuckle Installation Notes", see "DETAILS NO. 4" sheet. For "Restrainer Unit Installation Procedure", see "CABLE RESTRAINER ADJUSTMENT HARDWARE" sheet.

——— Indicates Bridge Removal Portion (Location A) and replace existing cable restrainer units with turnbuckles with new cable restrainer units with turnbuckles or existing cable restrainer units with cable yield indicator with new cable restrainer units with cable yield indicator. No more than one cable restrainer unit at a time may be removed and replaced. For lengths, see "Restrainer Table"

For new "Cable End Anchorage" , "Turnbuckle Detail" and "Swage Stud Detail", see "DETAILS NO. 4" sheet.

SALMON CREEK (Br. No. 10-0134)

NOTE:
THE CONTRACTOR SHALL VERIFY ALL CONTROLLING FIELD DIMENSIONS BEFORE ORDERING OR FABRICATING ANY MATERIAL.

	BY	CHECKED
DESIGN	D. Acoba	M. Hashimoto
DETAILS	Dale Kubochi	M. Hashimoto
QUANTITIES	D. Acoba	M. Hashimoto

STATE OF CALIFORNIA
DEPARTMENT OF TRANSPORTATION

DIVISION OF MAINTENANCE
STRUCTURE MAINTENANCE DESIGN

BRIDGE NO. VARIOUS
POST MILE VARIES

ROUTE 1 BRIDGES
DETAILS NO. 2

STRUCTURES MAINTENANCE DETAIL SHEET (ENGLISH) (REV. 09-01-10)

ORIGINAL SCALE IN INCHES FOR REDUCED PLANS 0 1 2 3

UNIT: 3488
PROJECT NUMBER & PHASE: 0100020393
CONTRACT NO.: 01-0A8101

DISREGARD PRINTS BEARING EARLIER REVISION DATES

REVISION DATES 1-15-13 2-24-14

SHEET 13 OF 16

FILE => 01-0a8101-d-det02.dgn

USERNAME => s124428 DATE PLOTTED => 28-FEB-2014 TIME PLOTTED => 10:36

DIST	COUNTY	ROUTE	POST MILES TOTAL PROJECT	SHEET No.	TOTAL SHEETS
01	Men	1, 128	Var	19	21

REGISTERED CIVIL ENGINEER 2-24-14 DATE

February 24, 2014
PLANS APPROVAL DATE

REGISTERED PROFESSIONAL ENGINEER DIOSDADO ACOBA No. 52003 Exp. 12-31-14 CIVIL STATE OF CALIFORNIA

The State of California or its officers or agents shall not be responsible for the accuracy or completeness of scanned copies of this plan sheet.

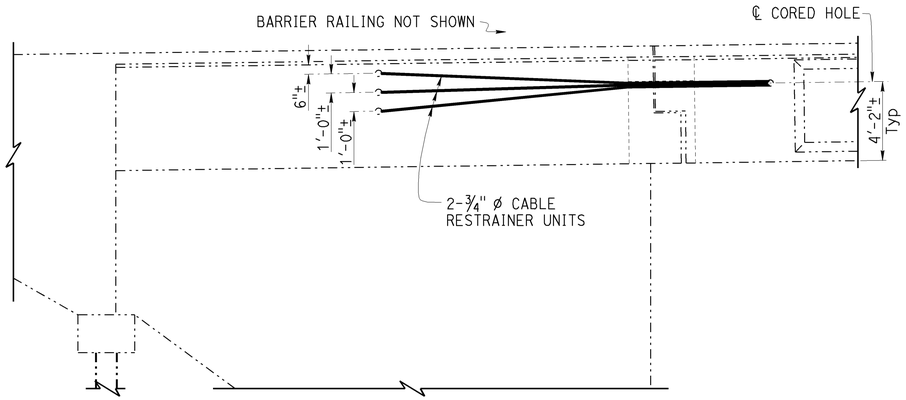

ELEVATION
¼" = 1'-0"

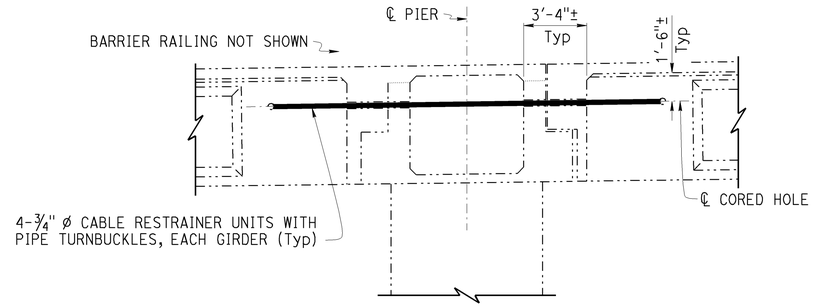

SECTION A-A
¼" = 1'-0"

NOTES: (APPLY TO THIS SHEET ONLY)

Remove slack from new cable restrainer units after installation (See "Turnbuckle Installation Notes" and "Restrainer Unit Installation Procedure). For "Turnbuckle Installation Notes", see "DETAILS NO. 4" sheet. For "Restrainer Unit Installation Procedure", see "CABLE RESTRAINER UNIT - TYPE 2 DETAILS" sheet.

——— Indicates Bridge Removal Portion (Location B) and replace existing cable restrainer units with turnbuckles with new cable restrainer units with turnbuckles. No more than one cable restrainer unit at a time may be removed and replaced. For lengths, see "Restrainer Table".

For new "Cable End Anchorage" and "Turnbuckle Detail", see "DETAILS NO. 4" sheet.

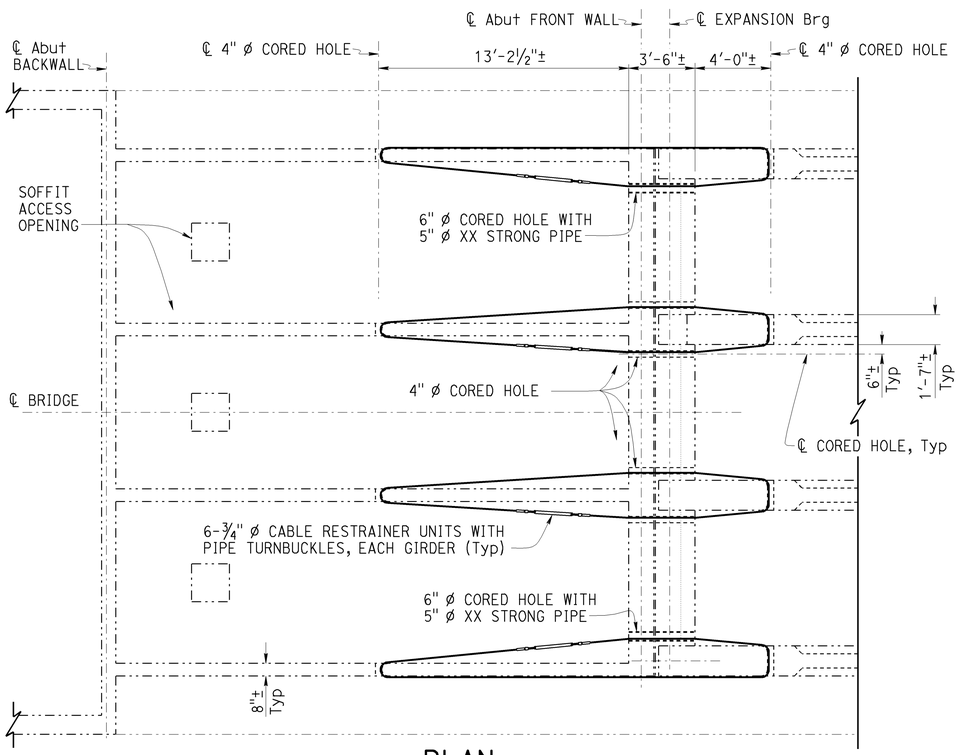

PLAN
¼" = 1'-0"
Note: Abutment 1 shown, Abutment 8 similar by rotation.

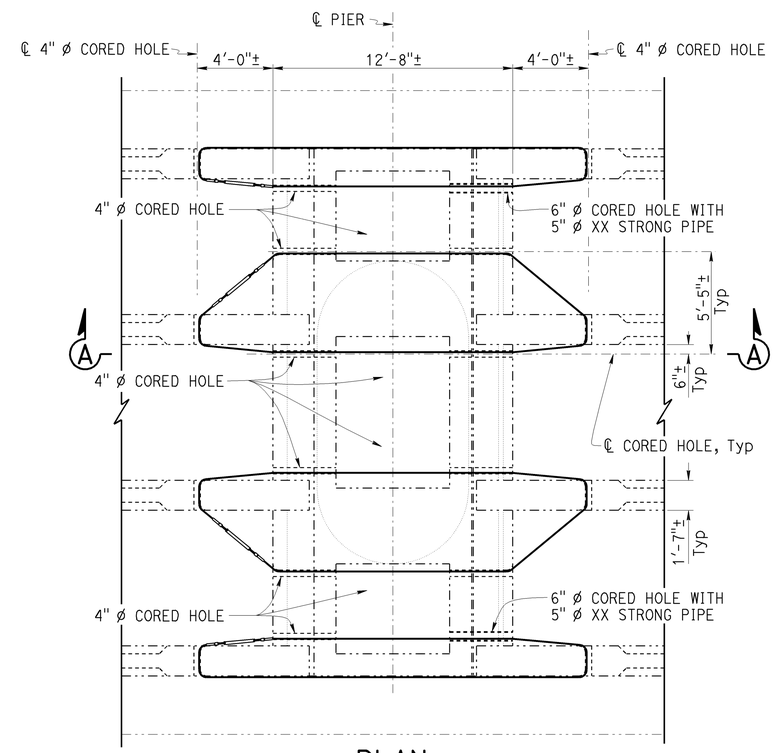

PLAN
¼" = 1'-0"
Note: Pier 3 shown, Pier 6 similar.

RESTRAINER TABLE

LOCATION	TYPE	APPROX LENGTH (FEET)	QUANTITY	CABLE END ANCHORAGE
Abut 1	Exterior Girders	42.9±	12	Turnbuckle
	Interior Girders	42.9±	12	Turnbuckle
Pier 3	Exterior Girders	43.7±	8	Turnbuckle
	Interior Girders	45.9±	8	Turnbuckle
Pier 6	Exterior Girders	43.7±	8	Turnbuckle
	Interior Girders	45.9±	8	Turnbuckle
Abut 8	Exterior Girders	42.9±	12	Turnbuckle
	Interior Girders	42.9±	12	Turnbuckle

NOTE:
THE CONTRACTOR SHALL VERIFY ALL CONTROLLING FIELD DIMENSIONS BEFORE ORDERING OR FABRICATING ANY MATERIAL.

CASPAR CREEK (Br. No. 10-0153)

	BY	CHECKED
DESIGN	D. Acoba	M. Hashimoto
DETAILS	Dale Kubochi	M. Hashimoto
QUANTITIES	D. Acoba	M. Hashimoto

STATE OF CALIFORNIA
DEPARTMENT OF TRANSPORTATION

DIVISION OF MAINTENANCE
STRUCTURE MAINTENANCE DESIGN

BRIDGE NO. VARIOUS
POST MILE VARIES

ROUTE 1 BRIDGES
DETAILS NO. 3

STRUCTURES MAINTENANCE DETAIL SHEET (ENGLISH) (REV. 09-01-10)

ORIGINAL SCALE IN INCHES FOR REDUCED PLANS 0 1 2 3

UNIT: 3488
PROJECT NUMBER & PHASE: 0100020393
CONTRACT NO.: 01-0A8101

DISREGARD PRINTS BEARING EARLIER REVISION DATES

REVISION DATES: 2-19-13, 2-24-14

SHEET 14 OF 16

FILE => 01-0a8101-d-det03.dgn

USERNAME => s124428 DATE PLOTTED => 28-FEB-2014 TIME PLOTTED => 10:36

DIST	COUNTY	ROUTE	POST MILES TOTAL PROJECT	SHEET No.	TOTAL SHEETS
01	Men	1, 128	Var	20	21

REGISTERED CIVIL ENGINEER 2-24-14 DATE

February 24, 2014
PLANS APPROVAL DATE

REGISTERED PROFESSIONAL ENGINEER DIOSDADO ACOBA No. 52003 Exp. 12-31-14 CIVIL STATE OF CALIFORNIA

The State of California or its officers or agents shall not be responsible for the accuracy or completeness of scanned copies of this plan sheet.

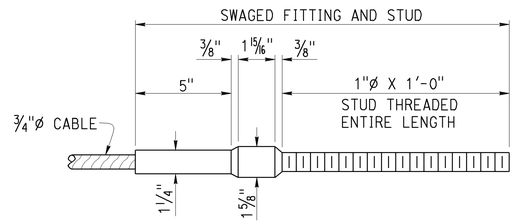

CABLE END ANCHORAGE

3" = 1'-0"

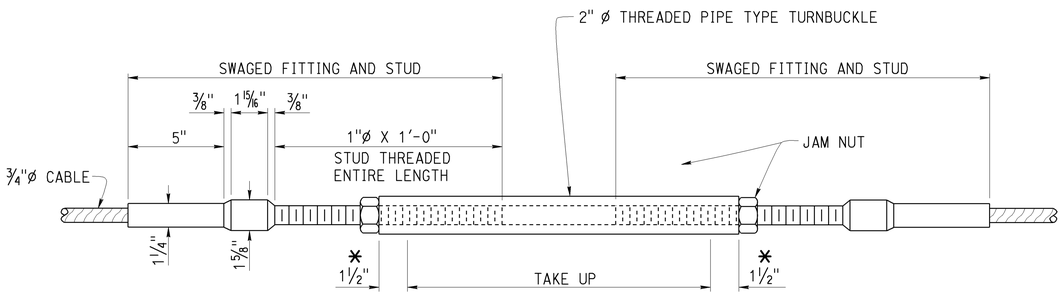

* - Minimum grip

TURNBUCKLE DETAIL

3" = 1'-0"

TURNBUCKLE TABLE	
AMBIENT TEMPERATURE	NUMBER OF TURNS
52	0
60	5
108	9

NOTE: Number of turns may be adjusted as directed by the Engineer. Interpolate for intermediate temperatures.

TURNBUCKLE INSTALLATION NOTES:

1. The turnbuckle shall be tightened as required to remove slack.
2. Tighten the turnbuckle one turn per 10 feet of cable length to tension the assembly.
3. (Bridge No. 10-0134) At the south side of Pier 3 and both sides of Pier 4, loosen the turnbuckle the number of turns specified in the "TURNBUCKLE TABLE" to allow for thermal contraction of girders.

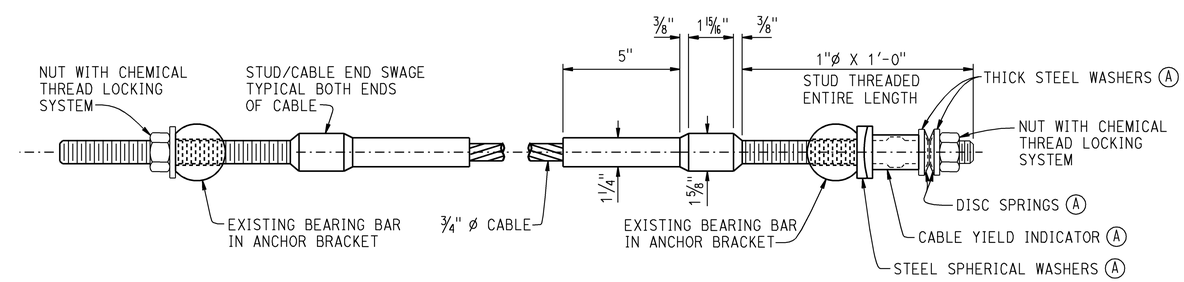

FIXED END

ADJUSTMENT END

SWAGE STUD DETAIL

(A) FOR DIMENSIONS AND INSTALLATION PROCEDURE, SEE "CABLE RESTRAINER ADJUSTMENT HARDWARE" SHEET xs7-090

NOTE:
THE CONTRACTOR SHALL VERIFY ALL CONTROLLING FIELD DIMENSIONS BEFORE ORDERING OR FABRICATING ANY MATERIAL.

	BY	CHECKED
DESIGN	D. Acoba	M. Hashimoto
DETAILS	Dale Kubochi	M. Hashimoto
QUANTITIES	D. Acoba	M. Hashimoto

STATE OF CALIFORNIA
DEPARTMENT OF TRANSPORTATION

DIVISION OF MAINTENANCE
STRUCTURE MAINTENANCE DESIGN

BRIDGE NO. VARIOUS
POST MILE VARIES

ROUTE 1 BRIDGES
DETAILS NO. 4

STRUCTURES MAINTENANCE DETAIL SHEET (ENGLISH) (REV. 09-01-10)

ORIGINAL SCALE IN INCHES FOR REDUCED PLANS 0 1 2 3

UNIT: 3488
PROJECT NUMBER & PHASE: 0100020393
CONTRACT NO.: 01-0A8101

DISREGARD PRINTS BEARING EARLIER REVISION DATES

REVISION DATES 1-4-13 2-24-14

SHEET 15 OF 16

FILE => 01-0a8101-d-det04.dgn

USERNAME => s124428 DATE PLOTTED => 28-FEB-2014 TIME PLOTTED => 10:36

DIST	COUNTY	ROUTE	POST MILES TOTAL PROJECT	SHEET No.	TOTAL SHEETS
01	Men	1, 128	Var	21	21

REGISTERED CIVIL ENGINEER 2-24-14 DATE

February 24, 2014
PLANS APPROVAL DATE

REGISTERED PROFESSIONAL ENGINEER
DIOSDADO ACOBA
No. 52003
Exp. 12-31-14
CIVIL
STATE OF CALIFORNIA

The State of California or its officers or agents shall not be responsible for the accuracy or completeness of electronic copies of this plan sheet.

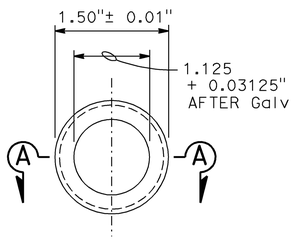

END VIEW

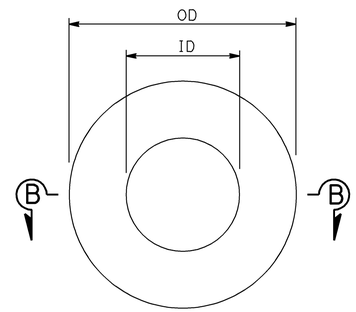

PLAN

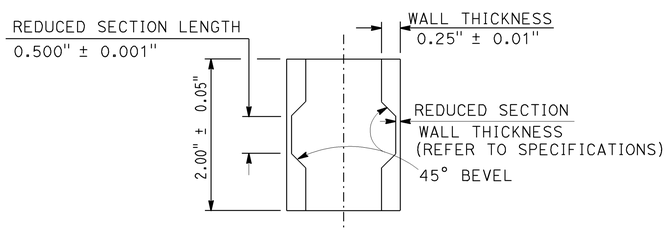

SECTION A-A

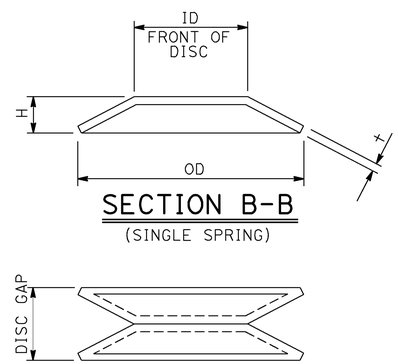

SECTION B-B
(SINGLE SPRING)

AS INSTALLED ON STUD

"ALL DIMENSIONS ARE BEFORE GALVANIZING EXCEPT AS NOTED"

CABLE YIELD INDICATOR

NOTE: FOR DIMENSIONS NOT SHOWN, SEE TABLE

DISC SPRING

DISC SPRINGS AND WASHERS

ALL DIMENSIONS IN INCHES, EXCEPT AS NOTED

	DISC SPRING					STEEL SPHERICAL WASHER			THICK WASHER		
L*	ID	OD	†	H	COLOR CODE	ID	OD	NOMINAL THICKNESS	ID	OD	†**
00.0 - 25.0	1.00	2.00	0.065	0.130	WHITE	1.19	2.25	0.50	1.03	2.00	0.25
25.1 - 31.9	1.00	2.00	0.084	0.136	RED	1.19	2.25	0.50	1.03	2.00	0.25
32.0 - 37.9	1.00	2.00	0.097	0.145	BLUE	1.19	2.25	0.50	1.03	2.00	0.25
38.0 - 45.0	1.25	2.50	0.120	0.180	YELLOW	1.31	2.50	0.50	1.16	2.00	0.25

* For limits of length L (ft), use effective length of cable, from face-to-face outer surfaces of anchorage plate or bearing bar. Refer to Bridge detail sheets for approximate length required.

** MINIMUM VALUE

NOTE: All OD and ID dimensions for washers and disc springs shall meet the dimensional tolerances for hardened steel washers, ASTM F436

RESTRAINER UNIT INSTALLATION PROCEDURE

1a. For typical 'girder to opposite girder' or 'bent cap to girder' restrainers with one adjustment end:

Place nut, washer and Thread Locking System on fixed end stud prior to tightening the cable

The adjustment end shall be at the same end of the cable for all restrainers at a specific hinge or bent

Tighten the nuts on the cable from the Adjustment End of restrainer until the disc springs collapse and there is no disc gap remaining between the discs

1b. For typical "U" or "V" shaped restrainers units with two adjustment ends: Install Cable Yield Indicator, spherical washers, disc springs, washers and nuts on both adjustment ends of cable type restrainers

The ends of the cable must be adjusted simultaneously.
Tighten the nuts on the cable from the adjustment ends of restrainer until the disc springs collapse and there is no disc gap remaining between the discs on either end of the cable

2. Place thread locking system on adjustment end(s) after tightening the cable but before backing off the nut(s)

Back off the nut(s) at the adjustable anchorage(s) a distance equal to the maximum additional amount that the hinge is expected to open, relative to existing ambient conditions, as shown on the plans for movement rating

STANDARD DRAWING
FILE NO. xs7-090
APPROVAL DATE July 2011

STATE OF CALIFORNIA
DEPARTMENT OF TRANSPORTATION

DIVISION OF ENGINEERING SERVICES

BRIDGE NO. VARIOUS
POST MILE VARIES

ROUTE 1 BRIDGES
CABLE RESTRAINER ADJUSTMENT HARDWARE

DS OSD 2147A (ENGLISH STANDARD DRAWING "XS" BORDER REV. (02-02-11)

ORIGINAL SCALE IN INCHES FOR REDUCED PLANS 0 1 2 3

UNIT: 3488
PROJECT NUMBER & PHASE: 0100020393
CONTRACT NO.: 01-0A8101

DISREGARD PRINTS BEARING EARLIER REVISION DATES

REVISION DATES 7-8-13

SHEET 16 OF 16

FILE => 01-0a8101-g-c-restra-hardware.dgn

USERNAME => s124428 DATE PLOTTED => 28-FEB-2014 TIME PLOTTED => 10:36