Dist	COUNTY	ROUTE	POST MILES TOTAL PROJECT	SHEET No.	TOTAL SHEETS
01	Hum	101	86.3/87.8	1	27

ACHSN-Q101(232)E

STATE OF CALIFORNIA
DEPARTMENT OF TRANSPORTATION

PROJECT PLANS FOR CONSTRUCTION ON
STATE HIGHWAY

IN HUMBOLDT COUNTY IN ARCATA FROM 11TH STREET OVERCROSSING TO ARCATA OVERHEAD

TO BE SUPPLEMENTED BY STANDARD PLANS DATED 2010

INDEX OF PLANS

SHEET No	DESCRIPTION
1	TITLE AND LOCATION MAP
2	TYPICAL CROSS SECTION
3-12	CONSTRUCTION DETAILS
13	EROSION CONTROL QUANTITIES
14	CONSTRUCTION AREA SIGNS
15	SUMMARY OF QUANTITIES
16-27	NEW OR REVISED STANDARD PLANS

THE STANDARD PLANS LIST APPLICABLE TO THIS CONTRACT IS INCLUDED IN THE NOTICE TO BIDDERS AND SPECIAL PROVISIONS BOOK.

LOCATION MAP

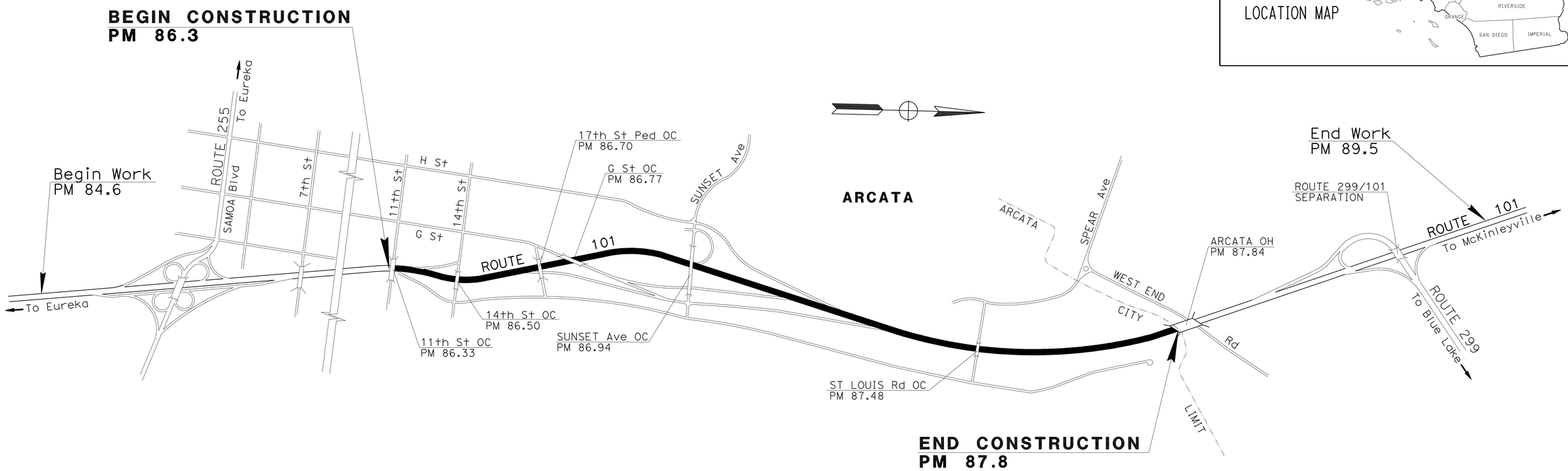

PROJECT MANAGER: Kim Floyd

DESIGN ENGINEER: Kelly B. Timmons

Kelly B. Timmons 4/26/13
PROJECT ENGINEER REGISTERED CIVIL ENGINEER — DATE

April 26, 2013
PLANS APPROVAL DATE

REGISTERED PROFESSIONAL ENGINEER — Kelly B. Timmons No. 63672 Exp. 9-30-14 CIVIL — STATE OF CALIFORNIA

THE STATE OF CALIFORNIA OR ITS OFFICERS OR AGENTS SHALL NOT BE RESPONSIBLE FOR THE ACCURACY OR COMPLETENESS OF SCANNED COPIES OF THIS PLAN SHEET.

THE CONTRACTOR SHALL POSSESS THE CLASS (OR CLASSES) OF LICENSE AS SPECIFIED IN THE "NOTICE TO BIDDERS."

NO SCALE

CONTRACT No.	01-0B1004
PROJECT ID	0112000009

LAST REVISION 00-00-00 — DATE PLOTTED => 19-JUN-2013 TIME PLOTTED => 11:00

Dist	COUNTY	ROUTE	POST MILES TOTAL PROJECT	SHEET No.	TOTAL SHEETS
01	Hum	101	86.3/87.8	2	27

REGISTERED CIVIL ENGINEER — DATE 4/26/13

PLANS APPROVAL DATE April 26, 2013

REGISTERED PROFESSIONAL ENGINEER Kelly B. Timmons No. 63672 Exp. 9-30-14 CIVIL STATE OF CALIFORNIA

THE STATE OF CALIFORNIA OR ITS OFFICERS OR AGENTS SHALL NOT BE RESPONSIBLE FOR THE ACCURACY OR COMPLETENESS OF SCANNED COPIES OF THIS PLAN SHEET.

NOTES

1. DIMENSIONS OF THE PAVEMENT STRUCTURES (STRUCTURAL SECTIONS) ARE SUBJECT TO TOLERANCES SPECIFIED IN THE STANDARD SPECIFICATIONS.
2. FOR COMPLETE RIGHT OF WAY AND ACCURATE ACCESS DATA, SEE RIGHT OF WAY RECORD MAPS AT DISTRICT OFFICE.
3. EXISTING UTILITY FACILITIES HAVE NOT BEEN PLOTTED ON THESE PLANS.
4. CONTRACTOR TO FIELD VERIFY LENGTH OF HTCB.
5. FOR LIMITS OF HTCB AND VEGETATION CONTROL (MINOR CONCRETE), SEE CONSTRUCTION DETAILS AND SUMMARY OF QUANTITIES.
6. FOR HTCB DETAILS NOT SHOWN, SEE MANUFACTURER DETAILS.

PAVEMENT CLIMATE REGION

NORTH COAST

LEGEND

HTCB = HIGH TENSION CABLE BARRIER

DESIGN DESIGNATION

2010 ADT	42,500	D = 60%	T = 4%
2023 ADT	50,800	V = 65 mph	
2013 DHV	4750	TI_{10} = 10.5	
2023 DHV	5950	TI_{20} = 11.5	
$ESAL_{10}$ = 3,652,000			
$ESAL_{20}$ = 7,845,000			

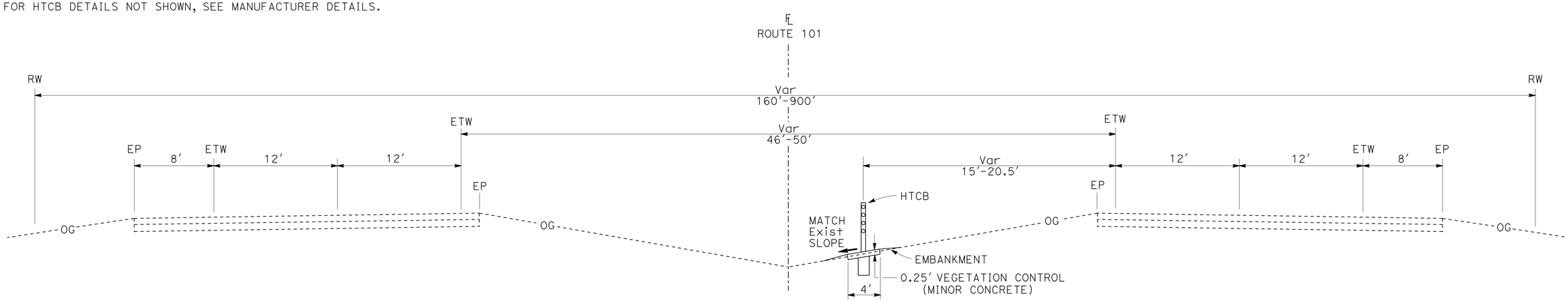

PM 86.94 TO PM 87.35

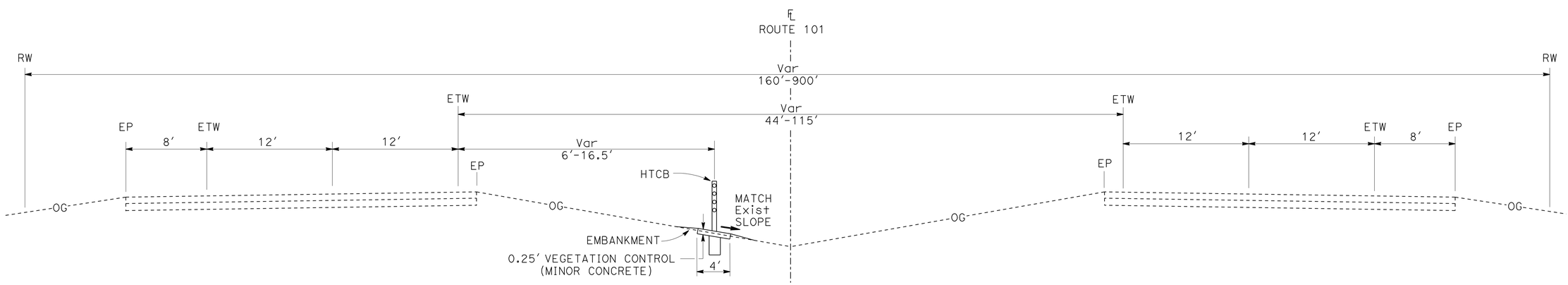

PM 86.38 TO PM 86.94
PM 87.37 TO PM 87.83

TYPICAL CROSS CECTIONS X-1

NO SCALE

STATE OF CALIFORNIA - DEPARTMENT OF TRANSPORTATION

Caltrans® DESIGN

FUNCTIONAL SUPERVISOR: Kelly B. Timmons

CALCULATED-DESIGNED BY: Eric Shada

CHECKED BY: Kelly B. Timmons

REVISED BY | DATE REVISED

LAST REVISION 00-00-00 | DATE PLOTTED => 19-JUN-2013 | TIME PLOTTED => 11:00

Dist	COUNTY	ROUTE	POST MILES TOTAL PROJECT	SHEET No.	TOTAL SHEETS
01	Hum	101	86.3/87.8	3	27

REGISTERED CIVIL ENGINEER — DATE 4/26/13

April 26, 2013
PLANS APPROVAL DATE

REGISTERED PROFESSIONAL ENGINEER — Kelly B. Timmons No. 63672 Exp. 9-30-14 CIVIL — STATE OF CALIFORNIA

THE STATE OF CALIFORNIA OR ITS OFFICERS OR AGENTS SHALL NOT BE RESPONSIBLE FOR THE ACCURACY OR COMPLETENESS OF SCANNED COPIES OF THIS PLAN SHEET.

NOTES

1. CABLE ATTACHMENT RAIL PER MANUFACTURER DETAIL.
2. MBGR CABLE ATTACHMENT ELEMENT LENGTH VARIES PER MANUFACTURER.
3. EXISTING UTILITY FACILITIES HAVE NOT BEEN PLOTTED ON THESE PLANS.

LEGEND

SFT = END ANCHOR ASSEMBLY (TYPE SFT)
CAT = TERMINAL SYSTEM (TYPE CAT)
CA = END ANCHOR ASSEMBLY (TYPE CA)
TSB = TERMINAL SYSTEM (TYPE CAT) BACKUP
AFTS = ALTERNATIVE FLARED TERMINAL SYSTEM
= (HTCB) HIGH TENSION CABLE BARRIER
= VEGETATION CONTROL (MINOR CONCRETE)
● = MARKER

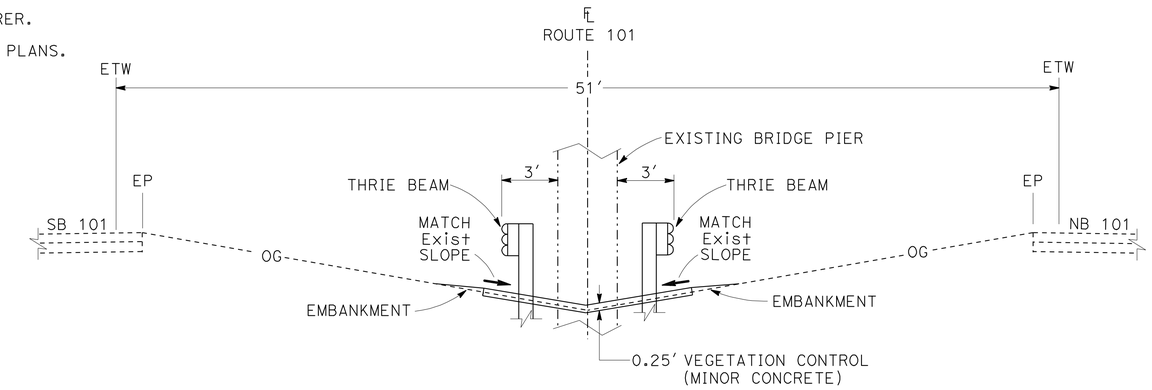

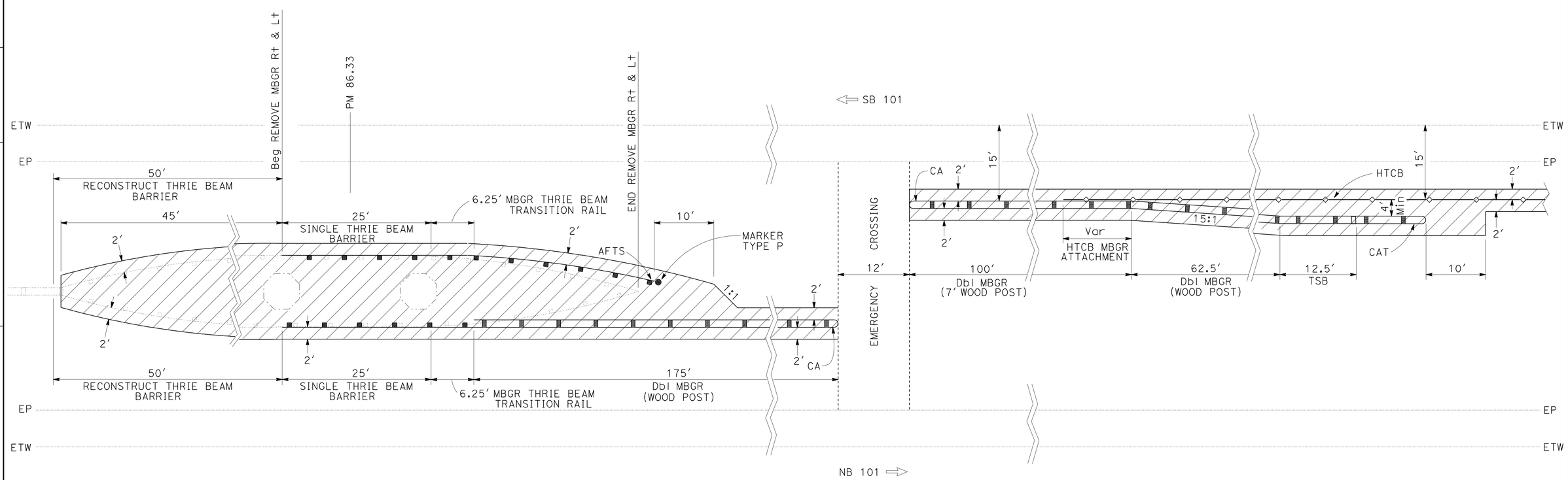

PM 86.33
11th STREET OC

CONSTRUCTION DETAILS C-1

NO SCALE

STATE OF CALIFORNIA - DEPARTMENT OF TRANSPORTATION
Caltrans
DESIGN

FUNCTIONAL SUPERVISOR: Kelly B. Timmons
CALCULATED-DESIGNED BY: Eric Shada
CHECKED BY: Kelly B. Timmons
REVISED BY
DATE REVISED

LAST REVISION 00-00-00
DATE PLOTTED => 19-JUN-2013
TIME PLOTTED => 11:00

Dist	COUNTY	ROUTE	POST MILES TOTAL PROJECT	SHEET No.	TOTAL SHEETS
01	Hum	101	86.3/87.8	4	27

REGISTERED CIVIL ENGINEER — DATE 4/26/13

April 26, 2013
PLANS APPROVAL DATE

REGISTERED PROFESSIONAL ENGINEER — Kelly B. Timmons No. 63672 Exp. 9-30-14 CIVIL — STATE OF CALIFORNIA

THE STATE OF CALIFORNIA OR ITS OFFICERS OR AGENTS SHALL NOT BE RESPONSIBLE FOR THE ACCURACY OR COMPLETENESS OF SCANNED COPIES OF THIS PLAN SHEET.

NOTES

1. CABLE ATTACHMENT RAIL PER MANUFACTURER DETAIL.
2. MBGR CABLE ATTACHMENT ELEMENT LENGTH VARIES PER MANUFACTURER.
3. EXISTING UTILITY FACILITIES HAVE NOT BEEN PLOTTED ON THESE PLANS.

LEGEND

SFT = END ANCHOR ASSEMBLY (TYPE SFT)
CAT = TERMINAL SYSTEM (TYPE CAT)
CA = END ANCHOR ASSEMBLY (TYPE CA)
TSB = TERMINAL SYSTEM (TYPE CAT) BACKUP
AFTS = ALTERNATIVE FLARED TERMINAL SYSTEM
= (HTCB) HIGH TENSION CABLE BARRIER
= VEGETATION CONTROL (MINOR CONCRETE)
● = MARKER

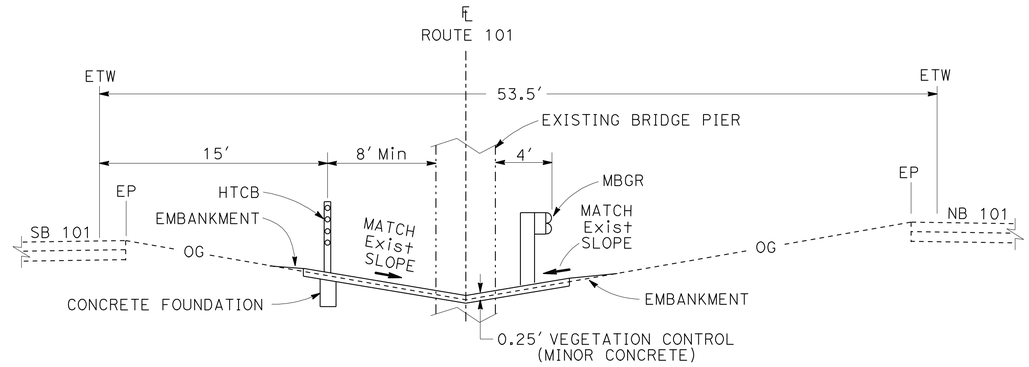

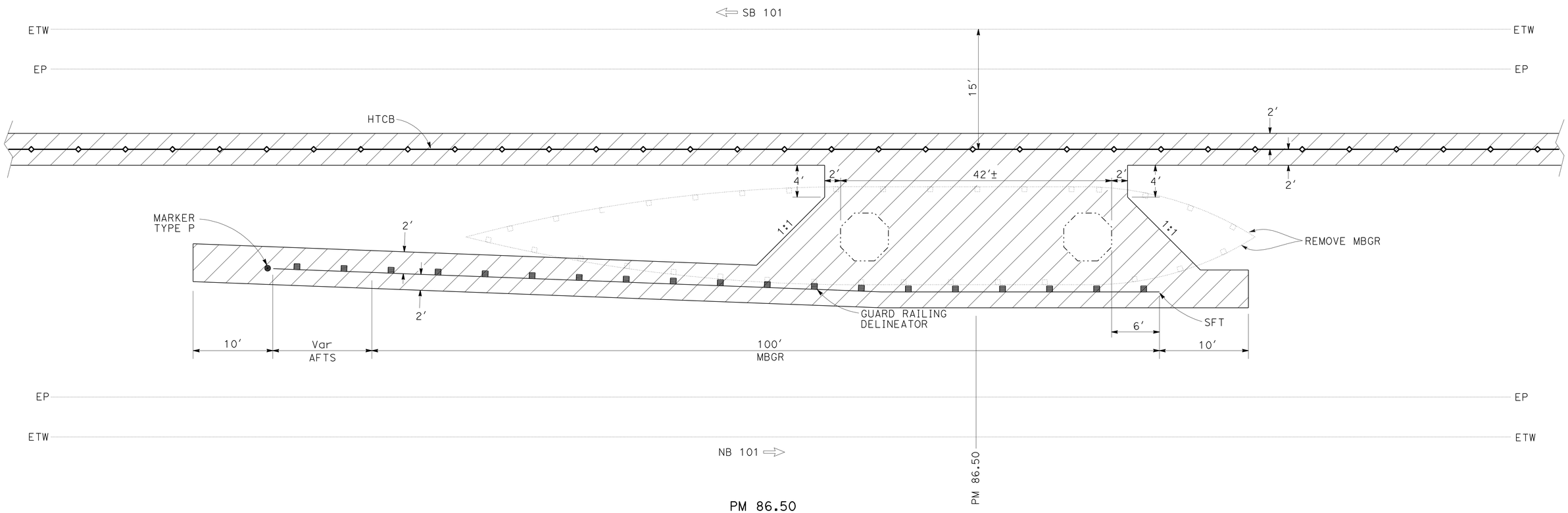

PM 86.50
14th STREET OC

CONSTRUCTION DETAILS C-2

NO SCALE

STATE OF CALIFORNIA - DEPARTMENT OF TRANSPORTATION
Caltrans® DESIGN

FUNCTIONAL SUPERVISOR: Kelly B. Timmons
CALCULATED-DESIGNED BY: Eric Shada
CHECKED BY: Kelly B. Timmons
REVISED BY / DATE REVISED

LAST REVISION 00-00-00 | DATE PLOTTED => 19-JUN-2013 | TIME PLOTTED => 11:00

Dist	COUNTY	ROUTE	POST MILES TOTAL PROJECT	SHEET No.	TOTAL SHEETS
01	Hum	101	86.3/87.8	5	27

REGISTERED CIVIL ENGINEER — DATE 4/26/13

April 26, 2013
PLANS APPROVAL DATE

REGISTERED PROFESSIONAL ENGINEER — Kelly B. Timmons No. 63672 Exp. 9-30-14 CIVIL — STATE OF CALIFORNIA

THE STATE OF CALIFORNIA OR ITS OFFICERS OR AGENTS SHALL NOT BE RESPONSIBLE FOR THE ACCURACY OR COMPLETENESS OF SCANNED COPIES OF THIS PLAN SHEET.

NOTES

1. CABLE ATTACHMENT RAIL PER MANUFACTURER DETAIL.
2. MBGR CABLE ATTACHMENT ELEMENT LENGTH VARIES PER MANUFACTURER.
3. EXISTING UTILITY FACILITIES HAVE NOT BEEN PLOTTED ON THESE PLANS.

LEGEND

SFT = END ANCHOR ASSEMBLY (TYPE SFT)
CAT = TERMINAL SYSTEM (TYPE CAT)
CA = END ANCHOR ASSEMBLY (TYPE CA)
TSB = TERMINAL SYSTEM (TYPE CAT) BACKUP
AFTS = ALTERNATIVE FLARED TERMINAL SYSTEM
—◇— = (HTCB) HIGH TENSION CABLE BARRIER
▨ = VEGETATION CONTROL (MINOR CONCRETE)
● = MARKER

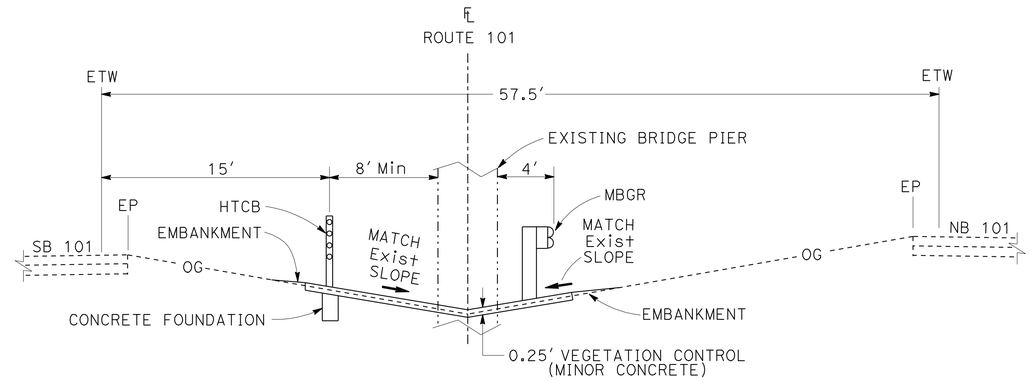

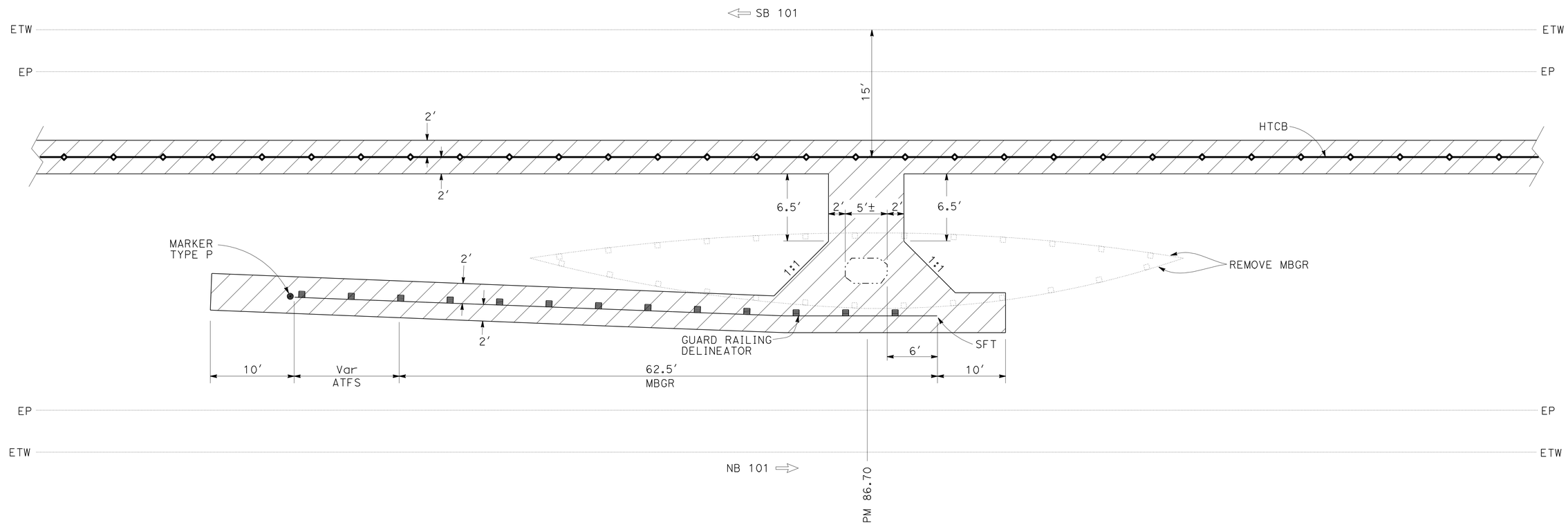

PM 86.70
17th STREET OC

CONSTRUCTION DETAILS C-3

NO SCALE

STATE OF CALIFORNIA - DEPARTMENT OF TRANSPORTATION
Caltrans DESIGN

FUNCTIONAL SUPERVISOR: Kelly B. Timmons
CALCULATED-DESIGNED BY: Eric Shada
CHECKED BY: Kelly B. Timmons
REVISED BY
DATE REVISED

LAST REVISION 00-00-00
DATE PLOTTED => 19-JUN-2013
TIME PLOTTED => 11:00

Dist	COUNTY	ROUTE	POST MILES TOTAL PROJECT	SHEET No.	TOTAL SHEETS
01	Hum	101	86.3/87.8	6	27

REGISTERED CIVIL ENGINEER 4/26/13 DATE

April 26, 2013
PLANS APPROVAL DATE

REGISTERED PROFESSIONAL ENGINEER Kelly B. Timmons No. 63672 Exp. 9-30-14 CIVIL STATE OF CALIFORNIA

THE STATE OF CALIFORNIA OR ITS OFFICERS OR AGENTS SHALL NOT BE RESPONSIBLE FOR THE ACCURACY OR COMPLETENESS OF SCANNED COPIES OF THIS PLAN SHEET.

NOTES

1. CABLE ATTACHMENT RAIL PER MANUFACTURER DETAIL.
2. MBGR CABLE ATTACHMENT ELEMENT LENGTH VARIES PER MANUFACTURER.
3. EXISTING UTILITY FACILITIES HAVE NOT BEEN PLOTTED ON THESE PLANS.

LEGEND

SFT = END ANCHOR ASSEMBLY (TYPE SFT)
CAT = TERMINAL SYSTEM (TYPE CAT)
CA = END ANCHOR ASSEMBLY (TYPE CA)
TSB = TERMINAL SYSTEM (TYPE CAT) BACKUP
AFTS = ALTERNATIVE FLARED TERMINAL SYSTEM
= (HTCB) HIGH TENSION CABLE BARRIER
= VEGETATION CONTROL (MINOR CONCRETE)
● = MARKER

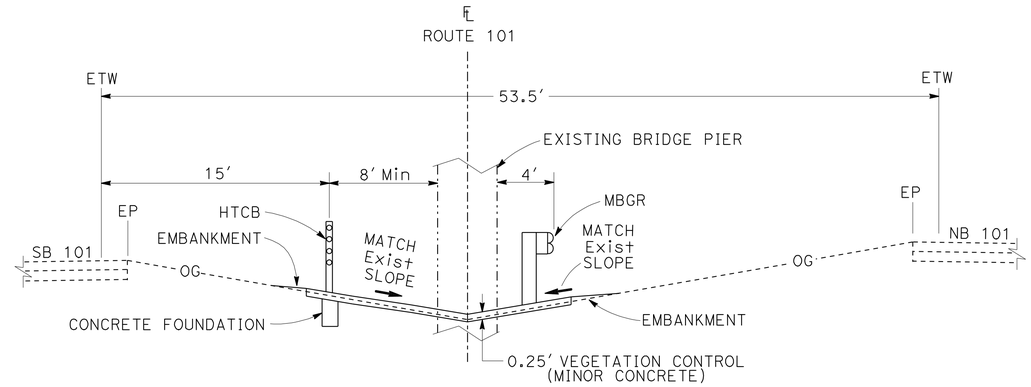

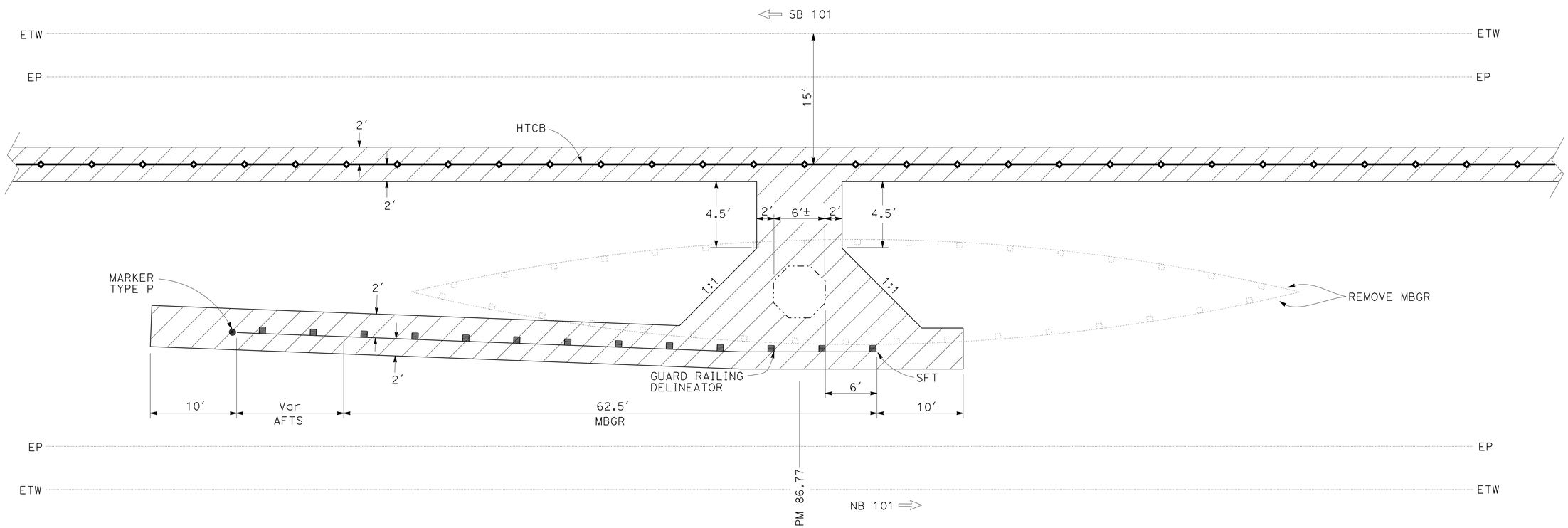

PM 86.77
G STREET OC

CONSTRUCTION DETAILS C-4

NO SCALE

STATE OF CALIFORNIA - DEPARTMENT OF TRANSPORTATION
Caltrans
DESIGN

FUNCTIONAL SUPERVISOR: Kelly B. Timmons
CALCULATED-DESIGNED BY: Eric Shada
CHECKED BY: Kelly B. Timmons
REVISED BY
DATE REVISED

LAST REVISION 00-00-00
DATE PLOTTED => 19-JUN-2013
TIME PLOTTED => 11:00

Dist	COUNTY	ROUTE	POST MILES TOTAL PROJECT	SHEET No.	TOTAL SHEETS
01	Hum	101	86.3/87.8	7	27

REGISTERED CIVIL ENGINEER — DATE 4/26/13

April 26, 2013
PLANS APPROVAL DATE

REGISTERED PROFESSIONAL ENGINEER — Kelly B. Timmons No. 63672 Exp. 9-30-14 CIVIL — STATE OF CALIFORNIA

THE STATE OF CALIFORNIA OR ITS OFFICERS OR AGENTS SHALL NOT BE RESPONSIBLE FOR THE ACCURACY OR COMPLETENESS OF SCANNED COPIES OF THIS PLAN SHEET.

NOTES

1. CABLE ATTACHMENT RAIL PER MANUFACTURER DETAIL.
2. MBGR CABLE ATTACHMENT ELEMENT LENGTH VARIES PER MANUFACTURER.
3. EXISTING UTILITY FACILITIES HAVE NOT BEEN PLOTTED ON THESE PLANS.

LEGEND

SFT = END ANCHOR ASSEMBLY (TYPE SFT)
CAT = TERMINAL SYSTEM (TYPE CAT)
CA = END ANCHOR ASSEMBLY (TYPE CA)
TSB = TERMINAL SYSTEM (TYPE CAT) BACKUP
AFTS = ALTERNATIVE FLARED TERMINAL SYSTEM
= (HTCB) HIGH TENSION CABLE BARRIER
= VEGETATION CONTROL (MINOR CONCRETE)
● = MARKER

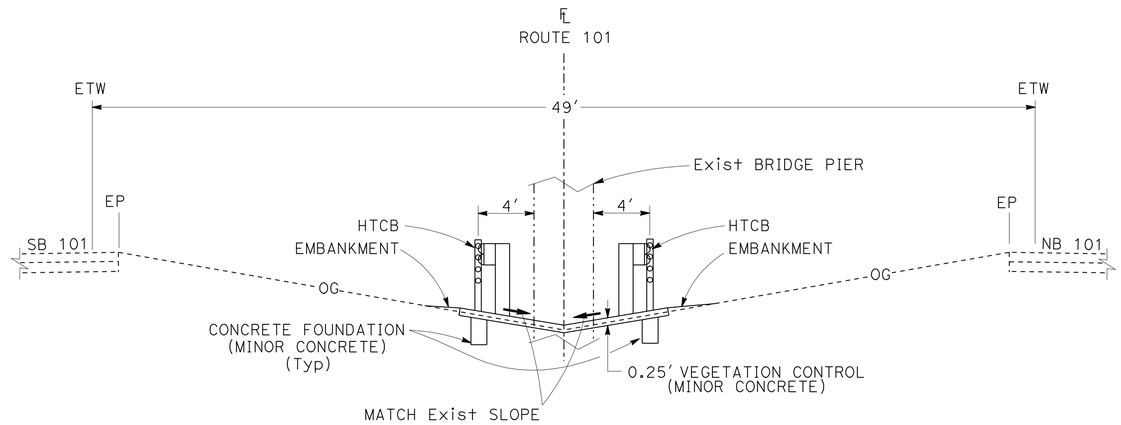

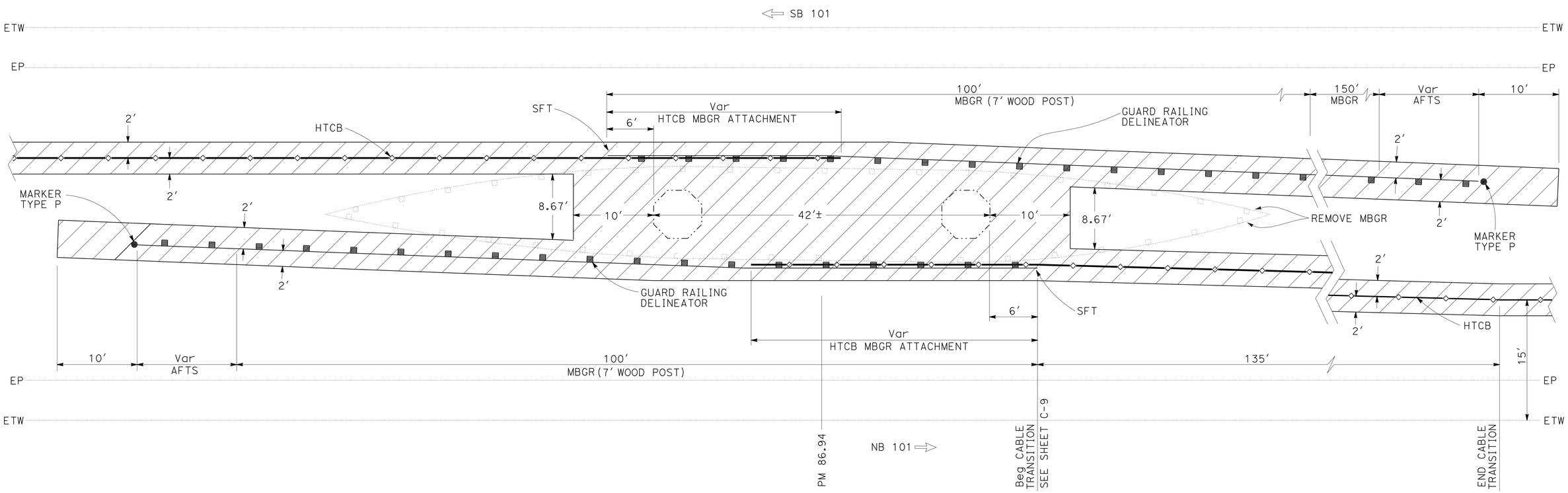

PM 86.94
SUNSET Ave OC

CONSTRUCTION DETAILS
C-5

NO SCALE

STATE OF CALIFORNIA - DEPARTMENT OF TRANSPORTATION
Caltrans
DESIGN

FUNCTIONAL SUPERVISOR: Kelly B. Timmons
CALCULATED-DESIGNED BY: Eric Shada
CHECKED BY: Kelly B. Timmons
REVISED BY
DATE REVISED

LAST REVISION 00-00-00
DATE PLOTTED => 19-JUN-2013
TIME PLOTTED => 11:00

Dist	COUNTY	ROUTE	POST MILES TOTAL PROJECT	SHEET No.	TOTAL SHEETS
01	Hum	101	86.3/87.8	8	27

REGISTERED CIVIL ENGINEER — DATE 4/26/13

April 26, 2013
PLANS APPROVAL DATE

REGISTERED PROFESSIONAL ENGINEER — Kelly B. Timmons — No. 63672 — Exp. 9-30-14 — CIVIL — STATE OF CALIFORNIA

THE STATE OF CALIFORNIA OR ITS OFFICERS OR AGENTS SHALL NOT BE RESPONSIBLE FOR THE ACCURACY OR COMPLETENESS OF SCANNED COPIES OF THIS PLAN SHEET.

NOTES

1. CABLE ATTACHMENT RAIL PER MANUFACTURER DETAIL.
2. MBGR CABLE ATTACHMENT ELEMENT LENGTH VARIES PER MANUFACTURER.
3. EXISTING UTILITY FACILITIES HAVE NOT BEEN PLOTTED ON THESE PLANS.

LEGEND

SFT = END ANCHOR ASSEMBLY (TYPE SFT)
CAT = TERMINAL SYSTEM (TYPE CAT)
CA = END ANCHOR ASSEMBLY (TYPE CA)
TSB = TERMINAL SYSTEM (TYPE CAT) BACKUP
AFTS = ALTERNATIVE FLARED TERMINAL SYSTEM
—◇— = (HTCB) HIGH TENSION CABLE BARRIER
= VEGETATION CONTROL (MINOR CONCRETE)
● = MARKER

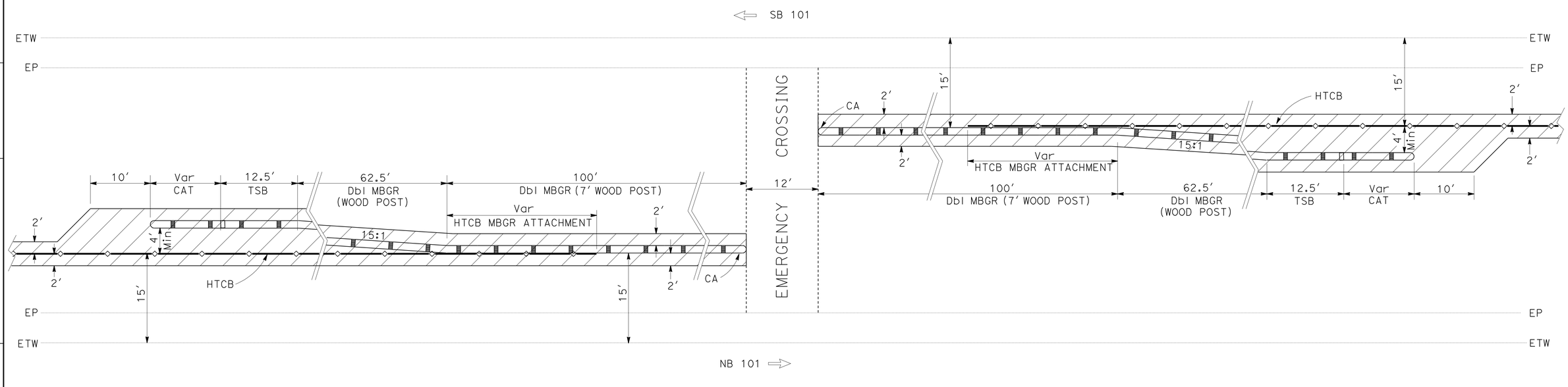

PM 87.36
EMERGENCY MEDIAN CROSSINGS

CONSTRUCTION DETAILS
C-6

NO SCALE

STATE OF CALIFORNIA - DEPARTMENT OF TRANSPORTATION
Caltrans®
DESIGN

FUNCTIONAL SUPERVISOR: Kelly B. Timmons
CALCULATED-DESIGNED BY: Eric Shada
CHECKED BY: Kelly B. Timmons
REVISED BY
DATE REVISED

LAST REVISION 00-00-00
DATE PLOTTED => 19-JUN-2013
TIME PLOTTED => 11:00

Dist	COUNTY	ROUTE	POST MILES TOTAL PROJECT	SHEET No.	TOTAL SHEETS
01	Hum	101	86.3/87.8	9	27

REGISTERED CIVIL ENGINEER 4/26/13 DATE

April 26, 2013
PLANS APPROVAL DATE

REGISTERED PROFESSIONAL ENGINEER Kelly B. Timmons No. 63672 Exp. 9-30-14 CIVIL STATE OF CALIFORNIA

THE STATE OF CALIFORNIA OR ITS OFFICERS OR AGENTS SHALL NOT BE RESPONSIBLE FOR THE ACCURACY OR COMPLETENESS OF SCANNED COPIES OF THIS PLAN SHEET.

NOTES

1. CABLE ATTACHMENT RAIL PER MANUFACTURER DETAIL.
2. MBGR CABLE ATTACHMENT ELEMENT LENGTH VARIES PER MANUFACTURER.
3. EXISTING UTILITY FACILITIES HAVE NOT BEEN PLOTTED ON THESE PLANS.

LEGEND

SFT = END ANCHOR ASSEMBLY (TYPE SFT)
CAT = TERMINAL SYSTEM (TYPE CAT)
CA = END ANCHOR ASSEMBLY (TYPE CA)
TSB = TERMINAL SYSTEM (TYPE CAT) BACKUP
AFTS = ALTERNATIVE FLARED TERMINAL SYSTEM
= (HTCB) HIGH TENSION CABLE BARRIER
= VEGETATION CONTROL (MINOR CONCRETE)
= MARKER

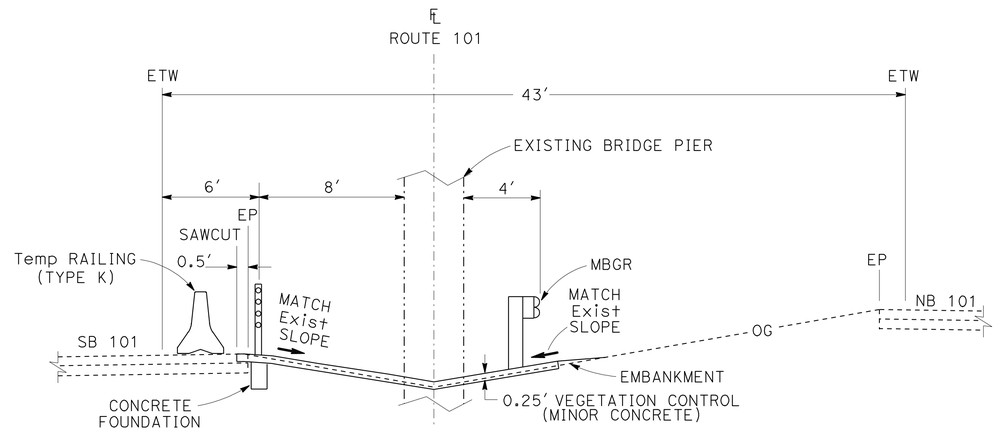

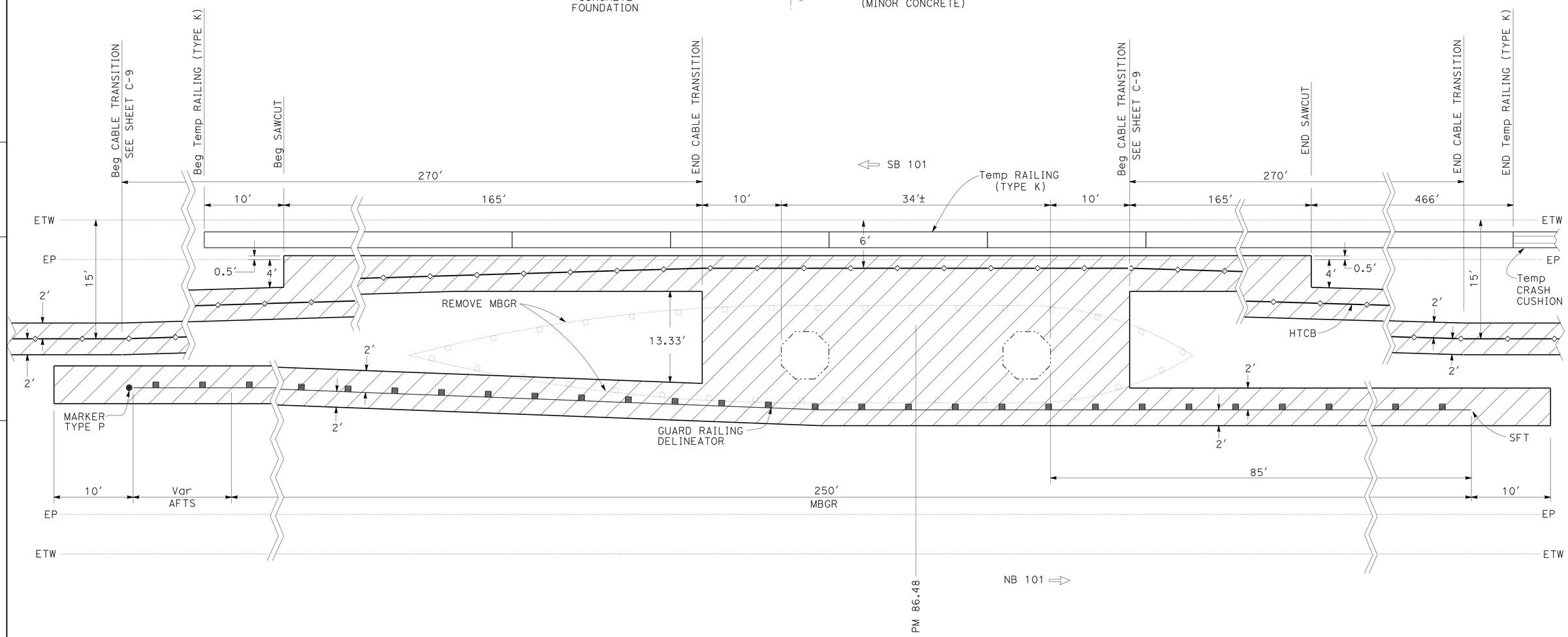

PM 87.48
St LOUIS Rd OC

CONSTRUCTION DETAILS C-7

NO SCALE

STATE OF CALIFORNIA - DEPARTMENT OF TRANSPORTATION
Caltrans DESIGN

FUNCTIONAL SUPERVISOR: Kelly B. Timmons
CALCULATED-DESIGNED BY: Eric Shada
CHECKED BY: Kelly B. Timmons
REVISED BY
DATE REVISED

LAST REVISION 00-00-00 | DATE PLOTTED => 19-JUN-2013 | TIME PLOTTED => 11:00

Dist	COUNTY	ROUTE	POST MILES TOTAL PROJECT	SHEET No.	TOTAL SHEETS
01	Hum	101	86.3/87.8	10	27

REGISTERED CIVIL ENGINEER — DATE 4/26/13

April 26, 2013
PLANS APPROVAL DATE

REGISTERED PROFESSIONAL ENGINEER — Kelly B. Timmons No. 63672 Exp. 9-30-14 CIVIL — STATE OF CALIFORNIA

THE STATE OF CALIFORNIA OR ITS OFFICERS OR AGENTS SHALL NOT BE RESPONSIBLE FOR THE ACCURACY OR COMPLETENESS OF SCANNED COPIES OF THIS PLAN SHEET.

NOTES

1. CABLE ATTACHMENT RAIL PER MANUFACTURER DETAIL.
2. MBGR CABLE ATTACHMENT ELEMENT LENGTH VARIES PER MANUFACTURER.
3. EXISTING UTILITY FACILITIES HAVE NOT BEEN PLOTTED ON THESE PLANS.

LEGEND

SFT = END ANCHOR ASSEMBLY (TYPE SFT)
CAT = TERMINAL SYSTEM (TYPE CAT)
CA = END ANCHOR ASSEMBLY (TYPE CA)
TSB = TERMINAL SYSTEM (TYPE CAT) BACKUP
AFTS = ALTERNATIVE FLARED TERMINAL SYSTEM
—◇— = (HTCB) HIGH TENSION CABLE BARRIER
▨ = VEGETATION CONTROL (MINOR CONCRETE)
● = MARKER

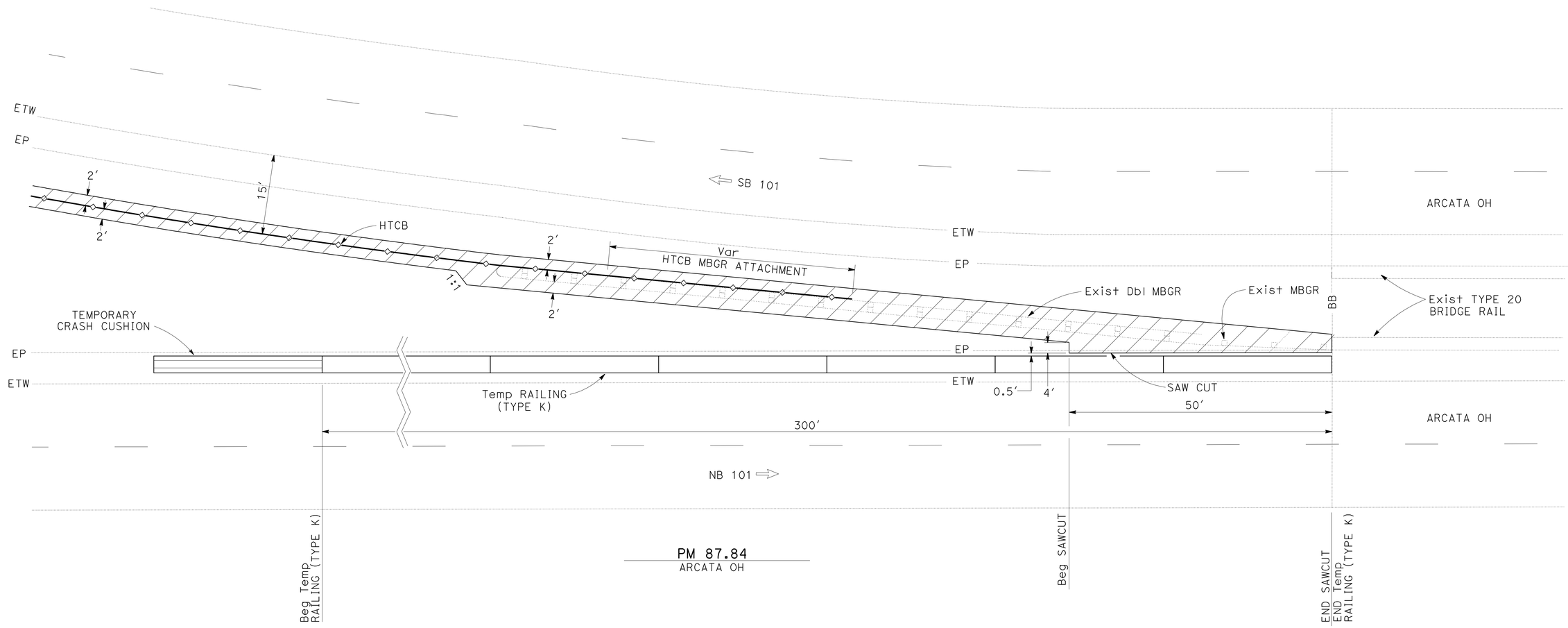

CONSTRUCTION DETAILS
C-8

NO SCALE

STATE OF CALIFORNIA - DEPARTMENT OF TRANSPORTATION
Caltrans®
DESIGN

FUNCTIONAL SUPERVISOR: Kelly B. Timmons
CALCULATED-DESIGNED BY: Eric Shada
CHECKED BY: Kelly B. Timmons
REVISED BY
DATE REVISED

LAST REVISION 00-00-00
DATE PLOTTED => 19-JUN-2013
TIME PLOTTED => 11:00

Dist	COUNTY	ROUTE	POST MILES TOTAL PROJECT	SHEET No.	TOTAL SHEETS
01	Hum	101	86.3/87.8	11	27

Kelly B. Timmons 4/26/13
REGISTERED CIVIL ENGINEER DATE

April 26, 2013
PLANS APPROVAL DATE

REGISTERED PROFESSIONAL ENGINEER Kelly B. Timmons No. 63672 Exp. 9-30-14 CIVIL STATE OF CALIFORNIA

THE STATE OF CALIFORNIA OR ITS OFFICERS OR AGENTS SHALL NOT BE RESPONSIBLE FOR THE ACCURACY OR COMPLETENESS OF SCANNED COPIES OF THIS PLAN SHEET.

NOTES

1. CABLE ATTACHMENT RAIL PER MANUFACTURER DETAIL.
2. MBGR CABLE ATTACHMENT ELEMENT LENGTH VARIES PER MANUFACTURER.
3. L = MINIMUM LENGTH OF TRANSITION.
4. CABLE TRANSITION PER MANUFACTURER SPECIFICATIONS.

LEGEND

◯ = HTCB POST

CABLE BARRIER TRANSITION LOCATIONS

LOCATION (PM)	OFFSET FROM ETW	W	L	REMARKS
	FT			
86.97	19.5 TO 15.0	4.5	135	SUNSET Ave
87.43	15.0 TO 6.0	9.0	270	St LOUIS Ave
87.54	6.0 TO 15.0	9.0	270	St LOUIS Ave

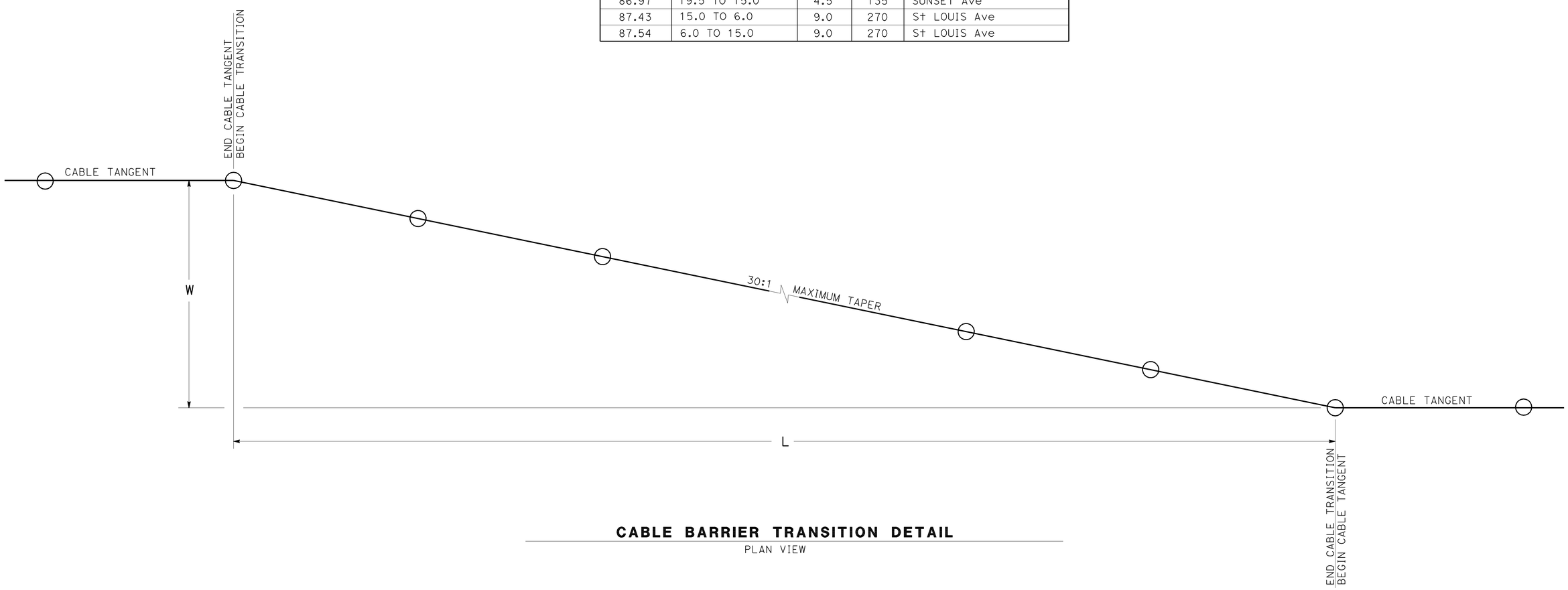

CABLE BARRIER TRANSITION DETAIL

PLAN VIEW

CONSTRUCTION DETAILS
C-9

NO SCALE

STATE OF CALIFORNIA - DEPARTMENT OF TRANSPORTATION
Caltrans®
DESIGN

FUNCTIONAL SUPERVISOR: Kelly B. Timmons
CALCULATED-DESIGNED BY: Eric Shada
CHECKED BY: Kelly B. Timmons
REVISED BY
DATE REVISED

LAST REVISION 00-00-00
DATE PLOTTED => 19-JUN-2013
TIME PLOTTED => 11:00

Dist	COUNTY	ROUTE	POST MILES TOTAL PROJECT	SHEET No.	TOTAL SHEETS
01	Hum	101	86.3/87.8	12	27

REGISTERED CIVIL ENGINEER — DATE 4/26/13

April 26, 2013
PLANS APPROVAL DATE

REGISTERED PROFESSIONAL ENGINEER — Kelly B. Timmons — No. 63672 — Exp. 9-30-14 — CIVIL — STATE OF CALIFORNIA

THE STATE OF CALIFORNIA OR ITS OFFICERS OR AGENTS SHALL NOT BE RESPONSIBLE FOR THE ACCURACY OR COMPLETENESS OF SCANNED COPIES OF THIS PLAN SHEET.

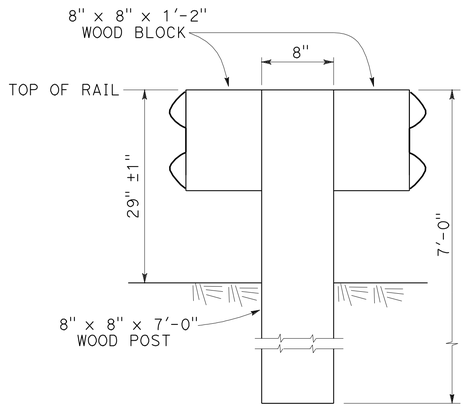

DOUBLE MBGR (7' WOOD POST)

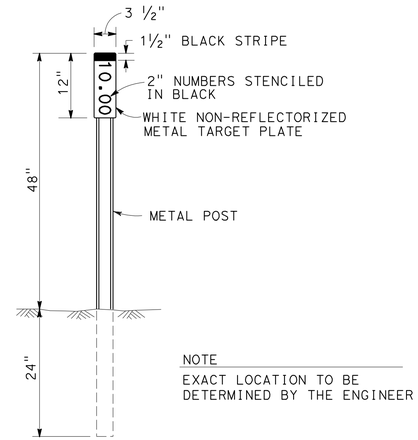

MARKER (CULVERT)

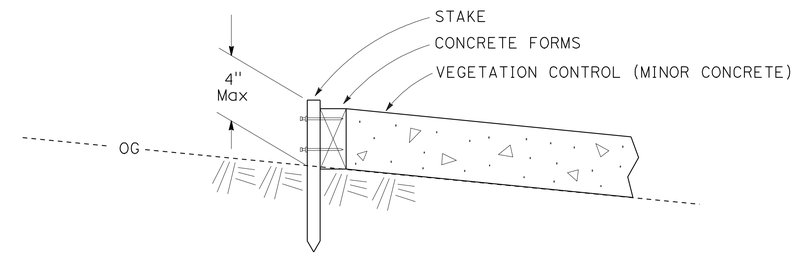

TEMPORARY CONCRETE FORMS

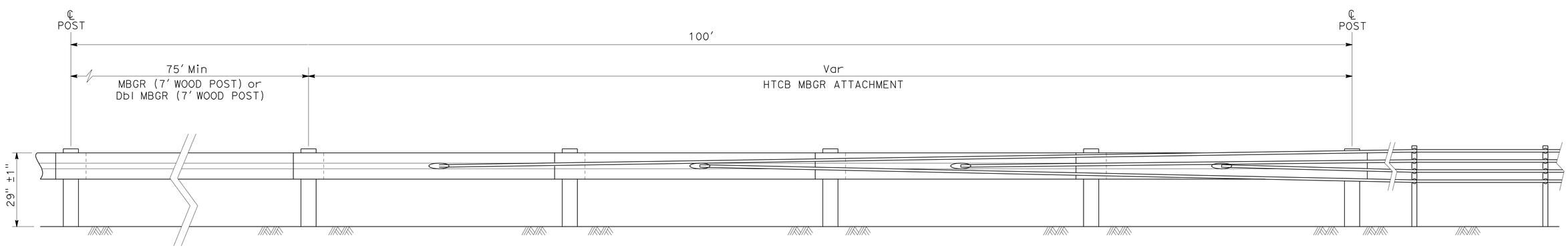

HIGH TENSION CABLE BARRIER TO METAL BEAM GUARD RAILING ATTACHMENT

CONSTRUCTION DETAILS
C-10

NO SCALE

STATE OF CALIFORNIA - DEPARTMENT OF TRANSPORTATION
Caltrans®
DESIGN

FUNCTIONAL SUPERVISOR: Kelly B. Timmons
CALCULATED-DESIGNED BY: Eric Shada
CHECKED BY: Kelly B. Timmons
REVISED BY
DATE REVISED

LAST REVISION 00-00-00
DATE PLOTTED => 19-JUN-2013
TIME PLOTTED => 11:00

Dist	COUNTY	ROUTE	POST MILES TOTAL PROJECT	SHEET No.	TOTAL SHEETS
01	Hum	101	86.3/87.8	13	27

Laura Lazzarotto
LICENSED LANDSCAPE ARCHITECT

April 26, 2013
PLANS APPROVAL DATE

LICENSED LANDSCAPE ARCHITECT
Laura Lazzarotto LA 4048
Laura Lazzarotto
Signature
8-31-13
Renewal Date
4-26-13
Date
STATE OF CALIFORNIA

THE STATE OF CALIFORNIA OR ITS OFFICERS OR AGENTS SHALL NOT BE RESPONSIBLE FOR THE ACCURACY OR COMPLETENESS OF SCANNED COPIES OF THIS PLAN SHEET.

EROSION CONTROL QUANTITIES

LOCATION		DESCRIPTION	COMPOST	STRAW	HYDROSEED	HYDROMULCH	REMARKS
FROM	TO		SQFT				
86.33		EROSION CONTROL TYPE 1	1915	1915	1915	1915	11th St OC / EMERGENCY CROSSING MBGR
86.38	86.94	EROSION CONTROL TYPE 1	47312	47312	47312	47312	
86.50		EROSION CONTROL TYPE 1	1560	1560	1560	1560	14th St OC MBGR
86.70		EROSION CONTROL TYPE 1	1940	1940	1940	1940	17th St OC MBGR
86.77		EROSION CONTROL TYPE 1	3500	3500	3500	3500	G St OC MBGR
86.94		EROSION CONTROL TYPE 1	4625	4625	4625	4625	SUNSET Ave OC MBGR
86.94	87.35	EROSION CONTROL TYPE 1	34496	34496	34496	34496	
87.37	87.83	EROSION CONTROL TYPE 1	38864	38864	38864	38864	
87.48		EROSION CONTROL TYPE 1	6570	6570	6570	6570	SAINT LOUIS OC MBGR
		TOTAL	140782	140782	140782	140782	

SEED MIX (N)

SEED	BOTANICAL NAME (COMMON NAME)	PERCENT GERMINATION (MINIMUM)	POUNDS PURE LIVE SEED PER ACRE (SLOPE MEASUREMENT)
MIX 1	FESTUCA RUBRA subsp. RUBRA [1] (CREEPING RED FESCUE)	50	10
	ESCHSCHOLZIA CALIFORNICA "MARITIMA" [1] (COASTAL CALIFORNIA POPPY)	35	2
	HORDEUM CALIFORNICUM "PROSTRATE" [1] (CALIFORNIA PROSTRATE BARLEY)	50	25
	TRIFOLIUM WILDENOVII [1] (TOMCAT CLOVER)	85	10
	SISYRINCHIUM BELLUM [1] (BLUE-EYED GRASS)	40	2
	VULPIA MICROSTACHYS [1] (THREE WEEKS FESCUE)	45	4

[1] SEED PRODUCED IN CALIFORNIA ONLY.

(N) - NOT A SEPARATE PAY ITEM, FOR INFORMATION ONLY.

EROSION CONTROL TYPE 1 (N)

SEQUENCE	ITEM	MATERIAL		APPLICATION RATE
		DESCRIPTION	TYPE	
STEP 1	COMPOST	COMPOST	MEDIUM	135 CY/ACRE
STEP 2	HYDROSEED	SEED	MIX 1	53 LB/ACRE
		FIBER	WOOD	1200 LB/ACRE
STEP 3	STRAW	STRAW	WHEAT &/OR BARLEY	3 TONS/ACRE
STEP 4	HYDROMULCH	FIBER	WOOD	1200 LB/ACRE
		TACKIFIER	GUAR	140 LB/ACRE

(N) - NOT A SEPARATE PAY ITEM, FOR INFORMATION ONLY.

EROSION CONTROL QUANTITIES
ECQ-1

STATE OF CALIFORNIA - DEPARTMENT OF TRANSPORTATION
Caltrans® LANDSCAPE ARCHITECTURE

SENIOR LANDSCAPE ARCHITECT: Ron Flory
CALCULATED-DESIGNED BY: Laura Lazzarotto
CHECKED BY: Laura Lazzarotto
REVISED BY
DATE REVISED

LAST REVISION 00-00-00
DATE PLOTTED => 19-JUN-2013
TIME PLOTTED => 11:00

Dist	COUNTY	ROUTE	POST MILES TOTAL PROJECT	SHEET No.	TOTAL SHEETS
01	Hum	101	86.3/87.8	14	27

REGISTERED CIVIL ENGINEER 4/26/13 DATE

April 26, 2013
PLANS APPROVAL DATE

REGISTERED PROFESSIONAL ENGINEER Kelly B. Timmons No. 63672 Exp. 9-30-14 CIVIL STATE OF CALIFORNIA

THE STATE OF CALIFORNIA OR ITS OFFICERS OR AGENTS SHALL NOT BE RESPONSIBLE FOR THE ACCURACY OR COMPLETENESS OF SCANNED COPIES OF THIS PLAN SHEET.

STATIONARY MOUNTED CONSTRUCTION AREA SIGNS

◯	TYPE	SIGN MESSAGE	PANEL SIZE	No. OF POSTS AND SIZE	No. OF SIGNS
A	C40(CA)	TRAFFIC FINES DOUBLED IN CONSTRUCTION ZONE	144"x60"	2 - 6"x8"	3
B	W11-1	BICYCLE SYMBOL	36"x36"	1 - 4"x6"	2
	W16-1	SHARE THE ROAD	24"x30"		
C	W20-1	ROAD WORK AHEAD	48"x48"	2 - 6"x6"	3
	C23B(CA)	MEDIAN BARRIER	36"x24"		
D	W20-1	ROAD WORK AHEAD	36"x36"	1 - 4"x6"	4
E	G20-2	END ROAD WORK	48"x24"	1 - 4"x6"	2

NOTES

1. THERE MUST BE A MINIMUM OF 500' BETWEEN SIGNS "A" AND "C", A MINIMUM OF 1500' BETWEEN "C" AND "B", AND A MINIMUM OF 1000' BETWEEN "B" AND THE BEGINING OF THE PROJECT ON MAINLINE 101.
2. THERE MUST BE 500' BETWEEN SIGNS ON Rte 101 RAMPS.
3. EXISTING UTILITIES HAVE NOT BEEN POSITIVELY LOCATED.
4. EXACT SIGN LOCATION TO BE DETERMINED BY THE ENGINEER.

1.5" RADIUS, 0.6" BORDERS, 0.4" INDENT, BLACK ON ORANGE;

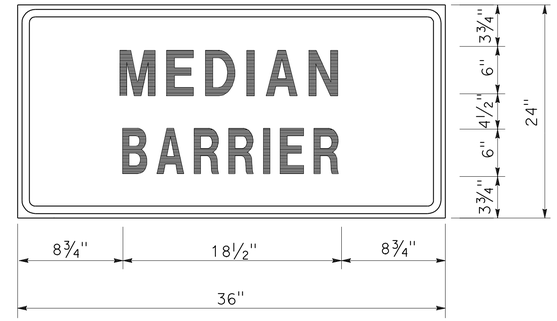

C23B (CA) SIGN PANEL

PLACE UNDER W20-1 SIGN

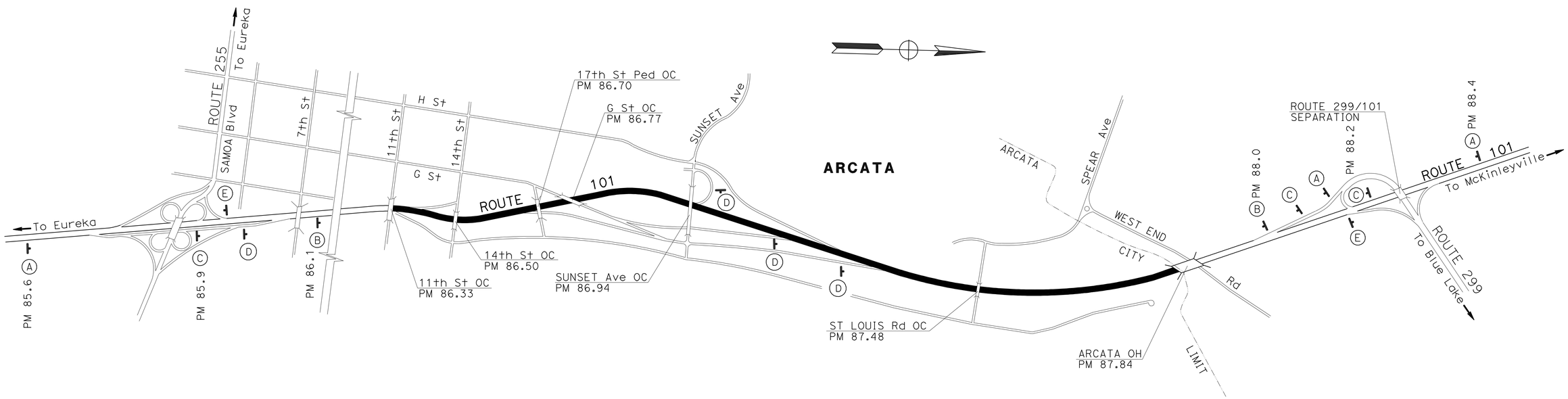

CONSTRUCTION AREA SIGNS
CS-1

NO SCALE

APPROVED FOR CONSTRUCTION AREA SIGN WORK ONLY

STATE OF CALIFORNIA - DEPARTMENT OF TRANSPORTATION
Caltrans
DESIGN

FUNCTIONAL SUPERVISOR: Kelly B. Timmons
CALCULATED-DESIGNED BY: Eric Shada
CHECKED BY: Kelly B. Timmons
REVISED BY
DATE REVISED

LAST REVISION 00-00-00
DATE PLOTTED => 19-JUN-2013
TIME PLOTTED => 11:00

Dist	COUNTY	ROUTE	POST MILES TOTAL PROJECT	SHEET No.	TOTAL SHEETS
01	Hum	101	86.3/87.8	15	27

REGISTERED CIVIL ENGINEER 4/26/13 DATE

April 26, 2013
PLANS APPROVAL DATE

REGISTERED PROFESSIONAL ENGINEER Kelly B. Timmons No. 63672 Exp. 9-30-14 CIVIL STATE OF CALIFORNIA

THE STATE OF CALIFORNIA OR ITS OFFICERS OR AGENTS SHALL NOT BE RESPONSIBLE FOR THE ACCURACY OR COMPLETENESS OF SCANNED COPIES OF THIS PLAN SHEET.

ROADSIDE SIGNS AND MARKERS QUANTITIES

LOCATION (PM)	RESET MARKERS AND DELINEATORS	REMOVE MARKER	MARKER	MARKER (CULVERT)	GUARD RAILING DELINEATOR	RESET ROADSIDE SIGN	NOTES
	EA						
86.33			1				MARKER TYPE P
86.34						1	"EMERGENCY VEHICLES ONLY" SIGN
86.35	1						CULVERT MARKER
86.46		1		1			CULVERT MARKER STENCIL "86.35"
86.50			1		1		MARKER TYPE P
86.53	1						RESET CLASS 2 TYPE G
86.57	1						CULVERT MARKER
86.62	1						CULVERT MARKER
86.70			1		1		MARKER TYPE P
86.76	1						CULVERT MARKER
86.77			1		1		MARKER TYPE P
86.88	1						CULVERT MARKER
86.94			2		2		MARKER TYPE P
86.99	1						CULVERT MARKER
87.26		1		1			CULVERT MARKER STENCIL "87.26"
87.36						1	"EMERGENCY VEHICLES ONLY" SIGN
87.47	1						CULVERT MARKER
87.48	1		1		1		RESET CLASS 2 TYPE G / MARKER TYPE P
87.52	1						CULVERT MARKER
87.55	1						CULVERT MARKER
87.65	1						CULVERT MARKER
87.73	1						CULVERT MARKER
TOTAL	13	2	7	2	6	2	

TEMPORARY WATER POLLUTION CONTROL

LOCATION (PM)	TEMPORARY DRAIN INLET PROTECTION	TEMPORARY CHECK DAM
	EA	LF
86.30 TO 87.80		1900
86.35	1	
86.46	1	
86.52	1	
86.57	1	
86.62	1	
86.76	1	
86.88	1	
86.99	1	
87.26	1	
87.44	1	
87.47	1	
87.52	1	
87.55	1	
87.65	1	
87.73	1	
TOTAL	15	1900

TEMPORARY RAILING

LOCATION (PM)	TEMPORARY RAILING (TYPE K)	ALTERNATIVE TEMPORARY CRASH CUSHION
	LF	EA
87.48	860	1
87.84	300	1
TOTAL	1160	2

MBGR AND THRIE BEAM BARRIER QUANTITIES

LOCATION (PM)	TREATED WOOD WASTE	REMOVE MBGR	RECONSTRUCT THRIE BEAM BARRIER	MBGR	MBGR (7' WOOD POST)	DOUBLE MBGR (WOOD POST)	DOUBLE MBGR (7' WOOD POST)	SINGLE THRIE BEAM BARRIER	MBGR THRIE BEAM TRANSITION RAILING	END ANCHOR ASSEMBLY (TYPE SFT)	END ANCHOR ASSEMBLY (TYPE CA)	TERMINAL SYSTEM (TYPE CAT)	TERMINAL SYSTEM (TYPE CAT) BACKUP	ALTERNATIVE FLARED TERMINAL SYSTEM	REMARKS
	LB	LF						EA							
86.33	1638	126	100			237.5	100	50	2		2	1	1	1	11th St OC / EMERGENCY CROSSING
86.50	2600	200		100.0						1				1	14th St OC
86.70	2275	175		62.5						1				1	17th St OC
86.77	2600	200		62.5						1				1	G St OC
86.94	3250	250		150.0	200					2				2	SUNSET Ave OC
87.36						125	200				2	2	2		EMERGENCY CROSSING
87.48	2600	200		250.0						1				1	SAINT LOUIS OC MBGR
87.84															
TOTAL	14963	1151	100	625.0	200	362.5	300	50	2	6	4	3	3	7	

ROADWAY QUANITIES

LOCATION (PM) FROM	LOCATION (PM) TO	VEGETATION CONTROL (MINOR CONCRETE)	REMARKS
		SQYD	
	86.33	359	11th St OC / EMERGENCY CROSSING MBGR
86.38	86.94	1314	
	86.50	168	14th St OC MBGR
	86.70	82	17th St OC MBGR
	86.77	94	G St OC MBGR
	86.94	294	SUNSET Ave OC MBGR
86.94	87.35	962	
	87.36	200	EMERGENCY CROSSING MBGR
87.37	87.84	1080	
	87.48	217	SAINT LOUIS OC MBGR
TOTAL		4770	

HIGH TENSION CABLE BARRIER QUANTITIES

LOCATION (PM) FROM	LOCATION (PM) TO	HIGH TENSION CABLE BARRIER	HIGH TENSION CABLE BARRIER ATTACHMENT	REMARKS
		LF	EA	
86.38	86.94	2957	2	11th St EMERGENCY CROSSING TO SUNSET Ave
86.94	87.35	2165	2	SUNSET Ave TO EMERGENCY CROSSING
87.37	87.83	2429	2	EMERGENCY CROSSING TO ARCATA OH
TOTAL		7551	6	

NOTE: FIELD VERIFY CABLE BARRIER LENGTHS.

SUMMARY OF QUANTITIES
Q-1

REVISED BY | DATE REVISED
Eric Shada | Kelly B. Timmons
CALCULATED-DESIGNED BY | CHECKED BY
FUNCTIONAL SUPERVISOR: Kelly B. Timmons
STATE OF CALIFORNIA - DEPARTMENT OF TRANSPORTATION
Caltrans DESIGN

LAST REVISION 00-00-00 | DATE PLOTTED => 19-JUN-2013 | TIME PLOTTED => 11:00

Dist	COUNTY	ROUTE	POST MILES TOTAL PROJECT	SHEET No.	TOTAL SHEETS
01	Hum	101	86.3/87.8	16	27

Randell D. Hiatt
REGISTERED CIVIL ENGINEER

October 19, 2012
PLANS APPROVAL DATE

REGISTERED PROFESSIONAL ENGINEER
Randell D. Hiatt
No. C50200
Exp. 6-30-13
CIVIL
STATE OF CALIFORNIA

THE STATE OF CALIFORNIA OR ITS OFFICERS OR AGENTS SHALL NOT BE RESPONSIBLE FOR THE ACCURACY OR COMPLETENESS OF SCANNED COPIES OF THIS PLAN SHEET.

TO ACCOMPANY PLANS DATED April 26, 2013

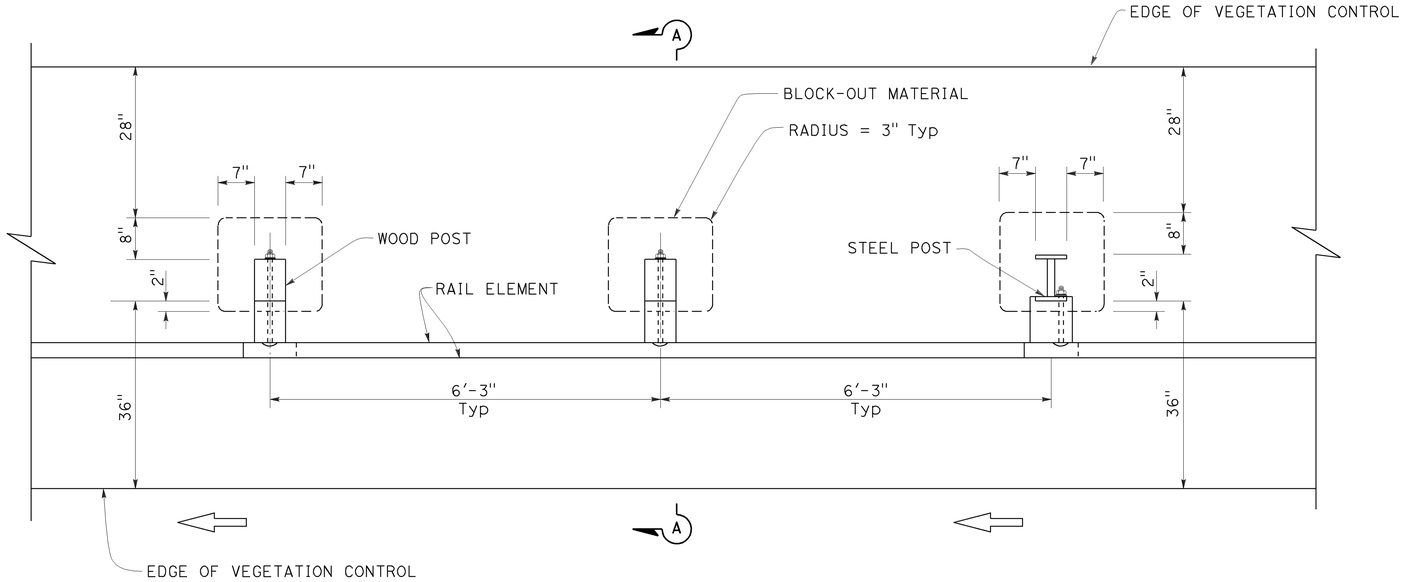

PLAN

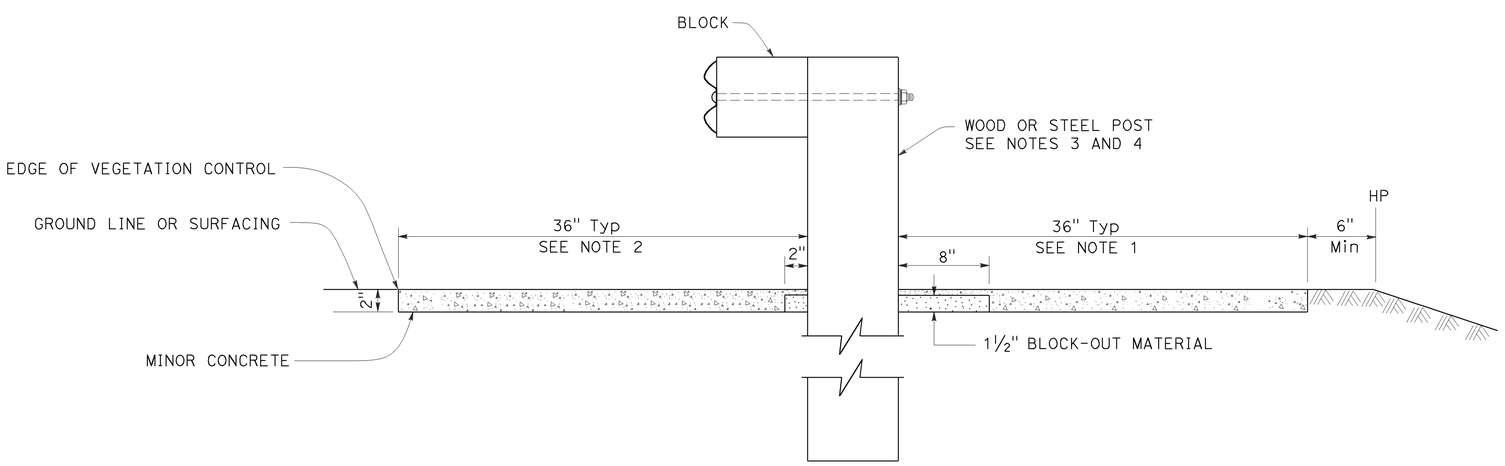

SECTION A-A

NOTES:

1. Where the distance between back of post and hinge point is less than 42", construct vegetation control to 6" from hinge point while maintaining the 8" block-out at back of post. If the 8" block-out at back of post can not be maintained, construct vegetation control flush with the back edge of post.
2. Where dike is constructed under railing, construct vegetation control to back edge of dike. Where paved shoulder is constructed within 36" in front of the post, construct vegetation control to the edge of paved shoulder.
3. For wood post sizes, see Standard Plan A77C1.
4. For steel post sizes, see Standard Plan A77C2.
5. For details not shown, see Standard Plans A77A1 and A77A2.

STATE OF CALIFORNIA
DEPARTMENT OF TRANSPORTATION

METAL BEAM GUARD RAILING TYPICAL VEGETATION CONTROL STANDARD RAILING SECTION

NO SCALE

RSP A77C5 DATED OCTOBER 19, 2012 SUPERSEDES STANDARD PLAN A77C5 DATED MAY 20, 2011 - PAGE 53 OF THE STANDARD PLANS BOOK DATED 2010.

REVISED STANDARD PLAN RSP A77C5

2010 REVISED STANDARD PLAN RSP A77C5

9-26-12

Dist	COUNTY	ROUTE	POST MILES TOTAL PROJECT	SHEET No.	TOTAL SHEETS
01	Hum	101	86.3/87.8	17	27

Randell D. Hiatt
REGISTERED CIVIL ENGINEER

October 19, 2012
PLANS APPROVAL DATE

REGISTERED PROFESSIONAL ENGINEER
Randell D. Hiatt
No. C50200
Exp. 6-30-13
CIVIL
STATE OF CALIFORNIA

THE STATE OF CALIFORNIA OR ITS OFFICERS OR AGENTS SHALL NOT BE RESPONSIBLE FOR THE ACCURACY OR COMPLETENESS OF SCANNED COPIES OF THIS PLAN SHEET.

TO ACCOMPANY PLANS DATED April 26, 2013

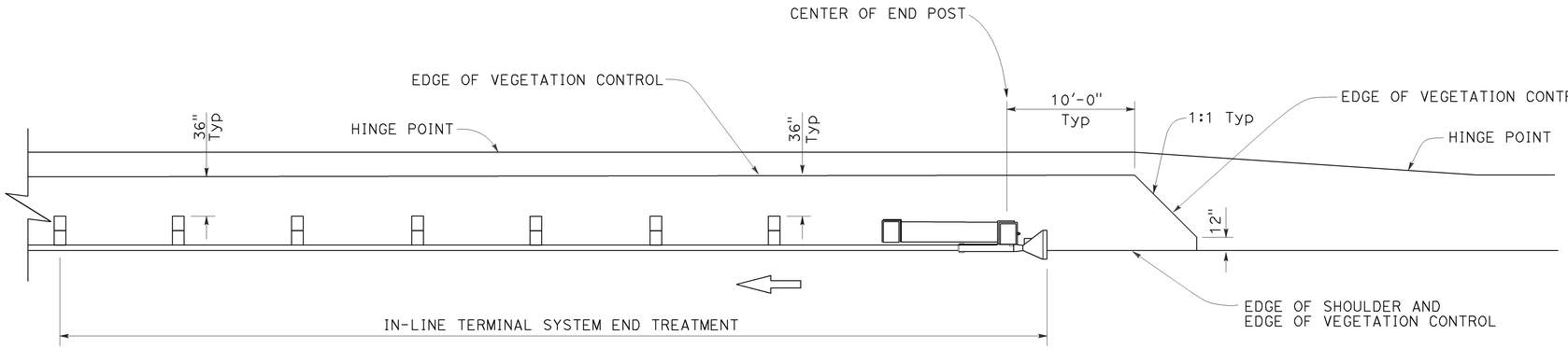

PLAN

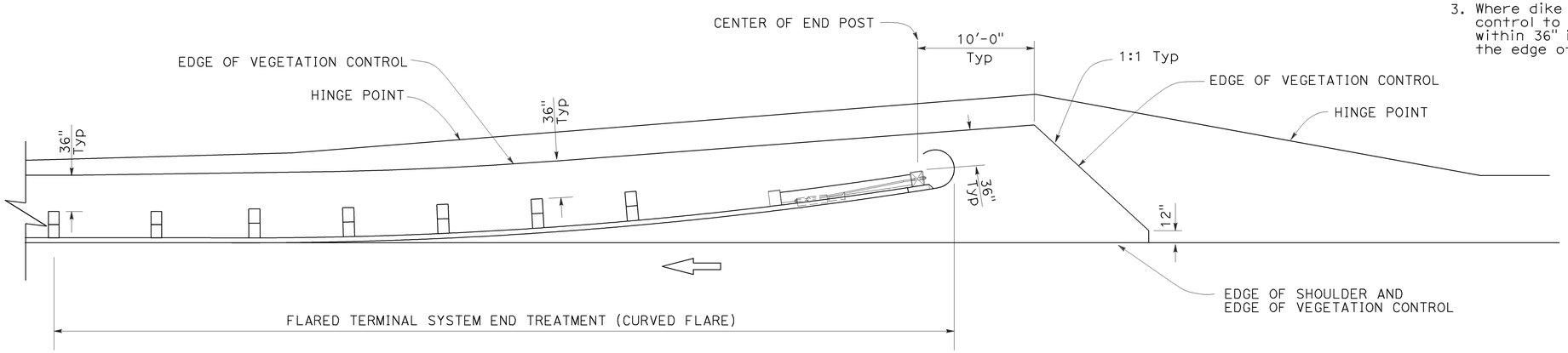

PLAN

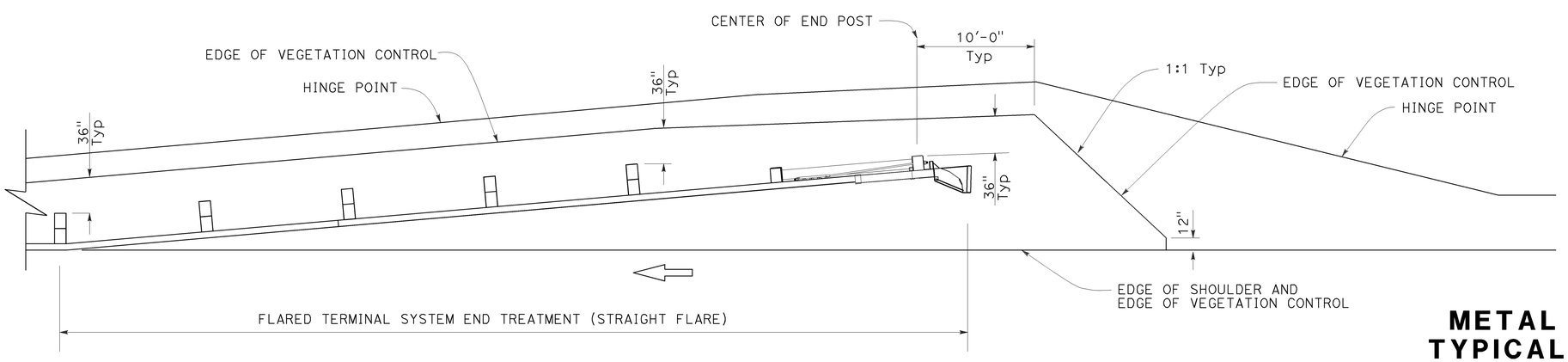

PLAN

NOTES:

1. See Revised Standard Plan RSP A77C5 for additional vegetation control details.
2. Where the distance between back of post and hinge point is less than 42", construct vegetation control to 6" from hinge point while maintaining the 8" block-out at back of post. If the 8" block-out at back of post can not be maintained, construct vegetation control flush with the back edge of post.
3. Where dike is constructed under railing, construct vegetation control to back edge of dike. Where paved shoulder is constructed within 36" in front of the post, construct vegetation control to the edge of paved shoulder.

STATE OF CALIFORNIA
DEPARTMENT OF TRANSPORTATION

METAL BEAM GUARD RAILING TYPICAL VEGETATION CONTROL FOR TERMINAL SYSTEM END TREATMENTS

NO SCALE

RSP A77C6 DATED OCTOBER 19, 2012 SUPERSEDES STANDARD PLAN A77C6 DATED MAY 20, 2011 - PAGE 54 OF THE STANDARD PLANS BOOK DATED 2010.

REVISED STANDARD PLAN RSP A77C6

2010 REVISED STANDARD PLAN RSP A77C6

9-26-12

Dist	COUNTY	ROUTE	POST MILES TOTAL PROJECT	SHEET No.	TOTAL SHEETS
01	Hum	101	86.3/87.8	18	27

Randell D. Hiatt
REGISTERED CIVIL ENGINEER

October 19, 2012
PLANS APPROVAL DATE

REGISTERED PROFESSIONAL ENGINEER
Randell D. Hiatt
No. C50200
Exp. 6-30-13
CIVIL
STATE OF CALIFORNIA

THE STATE OF CALIFORNIA OR ITS OFFICERS OR AGENTS SHALL NOT BE RESPONSIBLE FOR THE ACCURACY OR COMPLETENESS OF SCANNED COPIES OF THIS PLAN SHEET.

TO ACCOMPANY PLANS DATED April 26, 2013

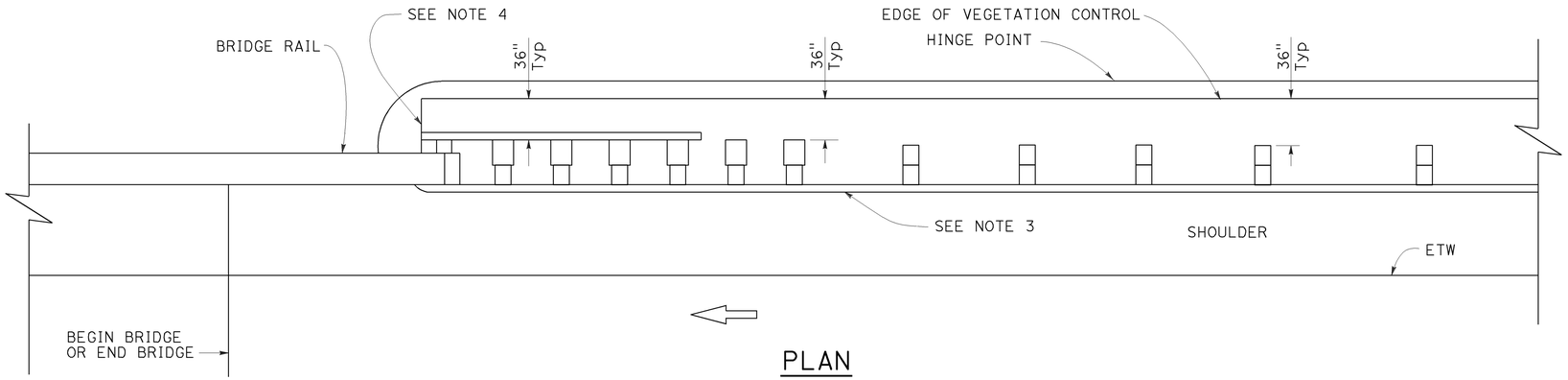

PLAN

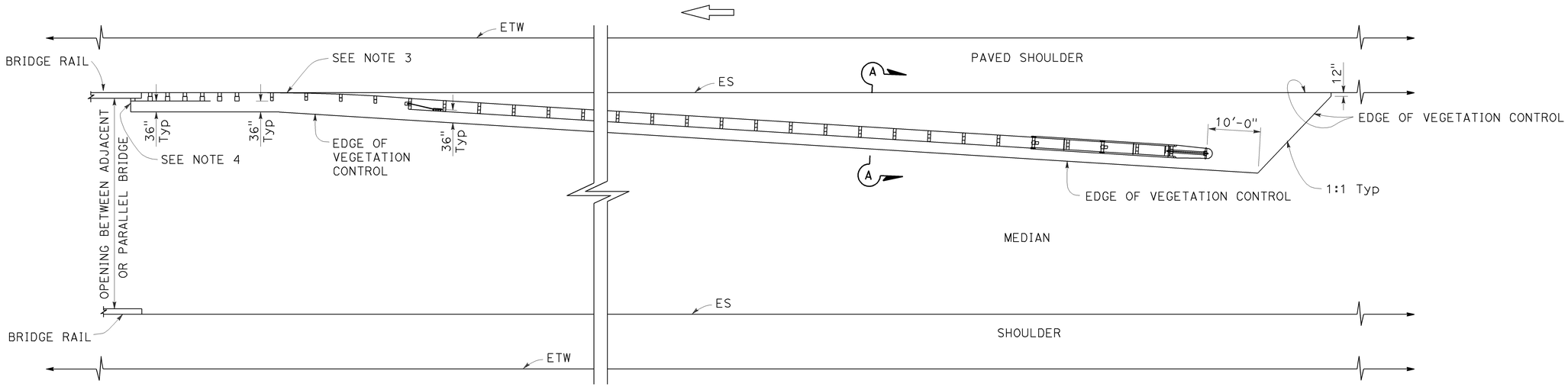

PLAN

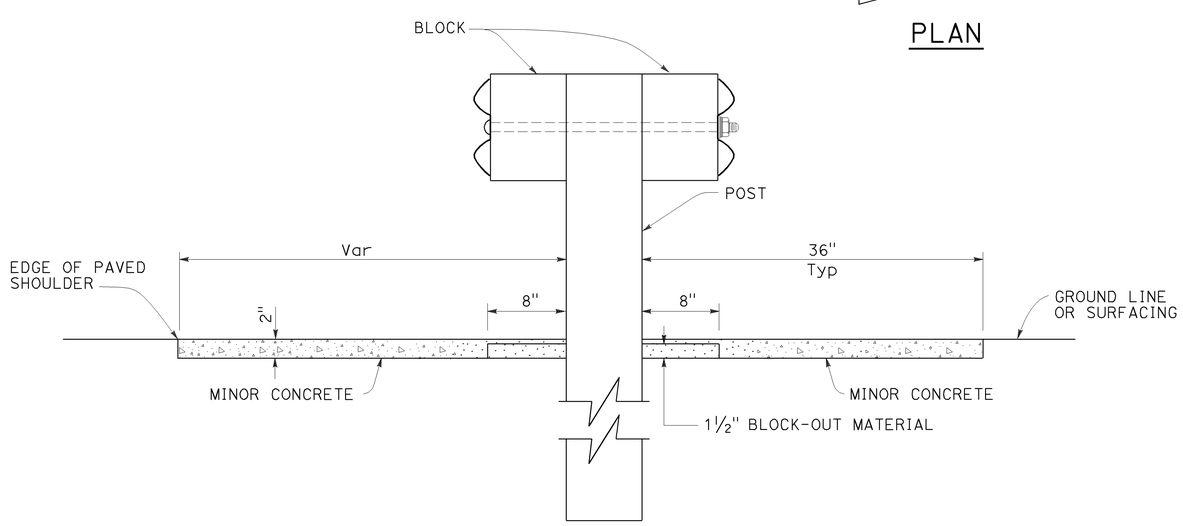

SECTION A-A

NOTES:

1. See Revised Standard Plan RSP A77C5 for additional vegetation control details.
2. Where the distance between back of post and hinge point is less than 42", construct vegetation control to 6" from hinge point while maintaining the 8" block-out at back of post. If the 8" block-out at back of post can not be maintained, construct vegetation control flush with the back edge of post.
3. Where dike is constructed under railing, construct vegetation control to back edge of dike. Where paved shoulder is constructed within 36" in front of the post, construct vegetation control to the edge of paved shoulder.
4. End vegetation control at end of backside rail element.

STATE OF CALIFORNIA
DEPARTMENT OF TRANSPORTATION

METAL BEAM GUARD RAILING TYPICAL VEGETATION CONTROL AT STRUCTURE APPROACH

NO SCALE

RSP A77C7 DATED OCTOBER 19, 2012 SUPERSEDES STANDARD PLAN A77C7 DATED MAY 20, 2011 - PAGE 55 OF THE STANDARD PLANS BOOK DATED 2010.

REVISED STANDARD PLAN RSP A77C7

2010 REVISED STANDARD PLAN RSP A77C7

9-26-12

Dist	COUNTY	ROUTE	POST MILES TOTAL PROJECT	SHEET No.	TOTAL SHEETS
01	Hum	101	86.3/87.8	19	27

Randell D. Hiatt
REGISTERED CIVIL ENGINEER

October 19, 2012
PLANS APPROVAL DATE

REGISTERED PROFESSIONAL ENGINEER
Randell D. Hiatt
No. C50200
Exp. 6-30-13
CIVIL
STATE OF CALIFORNIA

THE STATE OF CALIFORNIA OR ITS OFFICERS OR AGENTS SHALL NOT BE RESPONSIBLE FOR THE ACCURACY OR COMPLETENESS OF SCANNED COPIES OF THIS PLAN SHEET.

TO ACCOMPANY PLANS DATED April 26, 2013

2010 REVISED STANDARD PLAN RSP A77C8

NOTES:

1. See Revised Standard Plan RSP A77C5 for additional vegetation control details.
2. Where the distance between back of post and hinge point is less than 42", construct vegetation control to 6" from hinge point while maintaining the 8" block-out at back of post. If the 8" block-out at back of post can not be maintained, construct vegetation control flush with the back edge of post.
3. Where dike is constructed under railing, construct vegetation control to back edge of dike. Where paved shoulder is constructed within 36" in front of the post, construct vegetation control to the edge of paved shoulder.

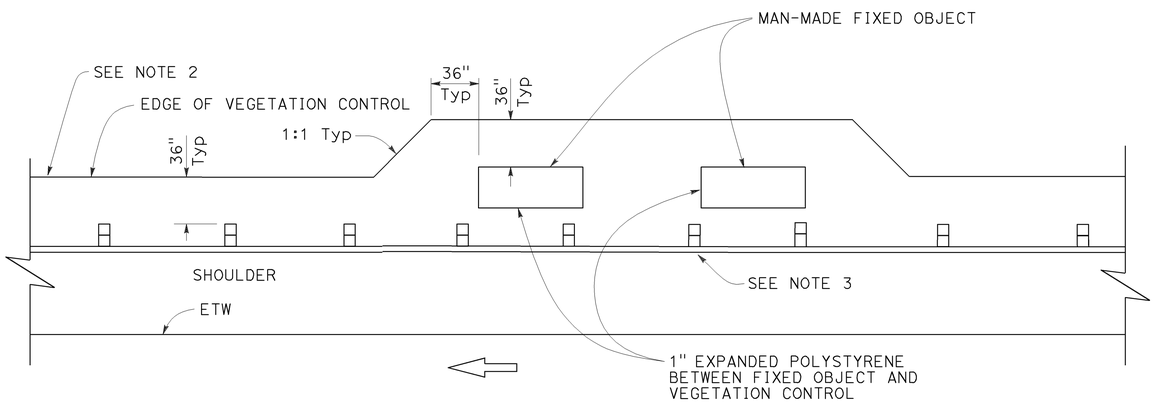

PLAN

Fixed object(s) on shoulder

STATE OF CALIFORNIA
DEPARTMENT OF TRANSPORTATION

METAL BEAM GUARD RAILING TYPICAL VEGETATION CONTROL AT FIXED OBJECT

NO SCALE

RSP A77C8 DATED OCTOBER 19, 2012 SUPERSEDES STANDARD PLAN A77C8 DATED MAY 20, 2011 - PAGE 56 OF THE STANDARD PLANS BOOK DATED 2010.

REVISED STANDARD PLAN RSP A77C8

Dist	COUNTY	ROUTE	POST MILES TOTAL PROJECT	SHEET No.	TOTAL SHEETS
01	Hum	101	86.3/87.8	20	27

Randell D. Hiatt
REGISTERED CIVIL ENGINEER

October 19, 2012
PLANS APPROVAL DATE

REGISTERED PROFESSIONAL ENGINEER
Randell D. Hiatt
No. C50200
Exp. 6-30-13
CIVIL
STATE OF CALIFORNIA

THE STATE OF CALIFORNIA OR ITS OFFICERS OR AGENTS SHALL NOT BE RESPONSIBLE FOR THE ACCURACY OR COMPLETENESS OF SCANNED COPIES OF THIS PLAN SHEET.

TO ACCOMPANY PLANS DATED April 26, 2013

2010 REVISED STANDARD PLAN RSP A77C9

NOTES:

1. See Revised Standard Plan RSP A77C5 for additional vegetation control details.
2. Where dike is constructed under railing, construct vegetation control to back edge of dike. Where paved shoulder is constructed within 36" in front of the post, construct vegetation control to the edge of paved shoulder.

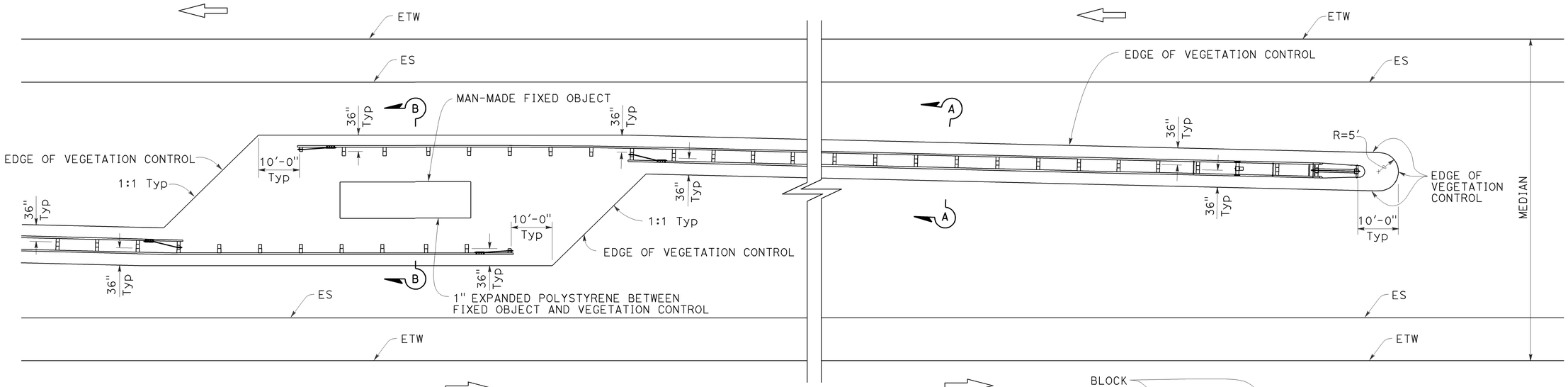

PLAN

Fixed object(s) in median

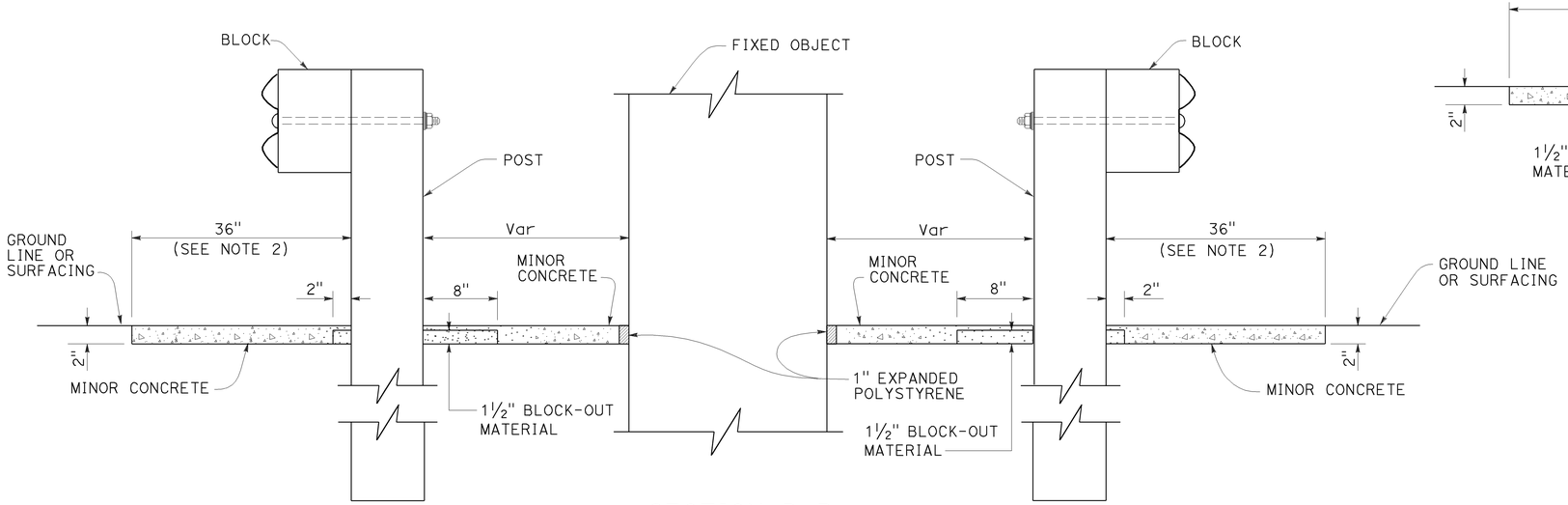

SECTION B-B

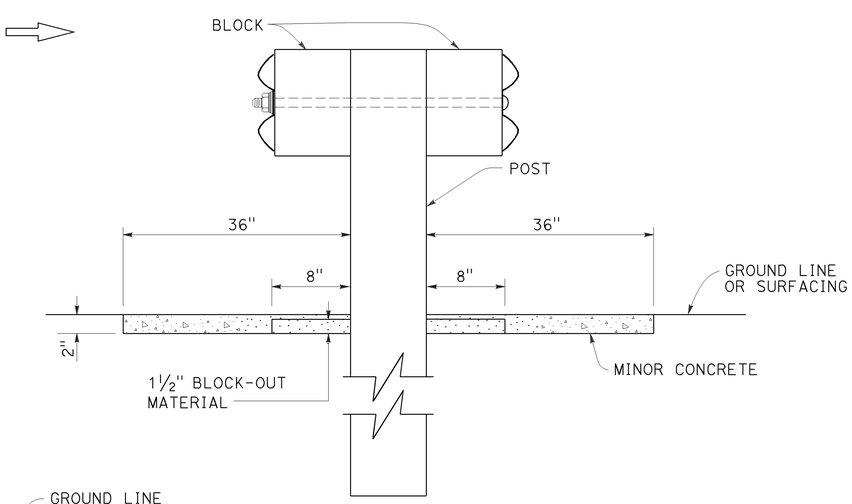

SECTION A-A

STATE OF CALIFORNIA
DEPARTMENT OF TRANSPORTATION

METAL BEAM GUARD RAILING TYPICAL VEGETATION CONTROL AT FIXED OBJECT

NO SCALE

RSP A77C9 DATED OCTOBER 19, 2012 SUPERSEDES STANDARD PLAN A77C9 DATED MAY 20, 2011 - PAGE 57 OF THE STANDARD PLANS BOOK DATED 2010.

REVISED STANDARD PLAN RSP A77C9

9-26-12

Dist	COUNTY	ROUTE	POST MILES TOTAL PROJECT	SHEET No.	TOTAL SHEETS
01	Hum	101	86.3/87.8	21	27

Randell D. Hiatt
REGISTERED CIVIL ENGINEER

October 19, 2012
PLANS APPROVAL DATE

REGISTERED PROFESSIONAL ENGINEER
Randell D. Hiatt
No. C50200
Exp. 6-30-13
CIVIL
STATE OF CALIFORNIA

THE STATE OF CALIFORNIA OR ITS OFFICERS OR AGENTS SHALL NOT BE RESPONSIBLE FOR THE ACCURACY OR COMPLETENESS OF SCANNED COPIES OF THIS PLAN SHEET.

TO ACCOMPANY PLANS DATED April 26, 2013

2010 REVISED STANDARD PLAN RSP A77C10

NOTES:

1. See Revised Standard Plan RSP A77C5 for additional vegetation control details.
2. Where dike is constructed under railing, construct vegetation control to back edge of dike. Where paved shoulder is constructed within 36" in front of the post, construct vegetation control to the edge of paved shoulder.

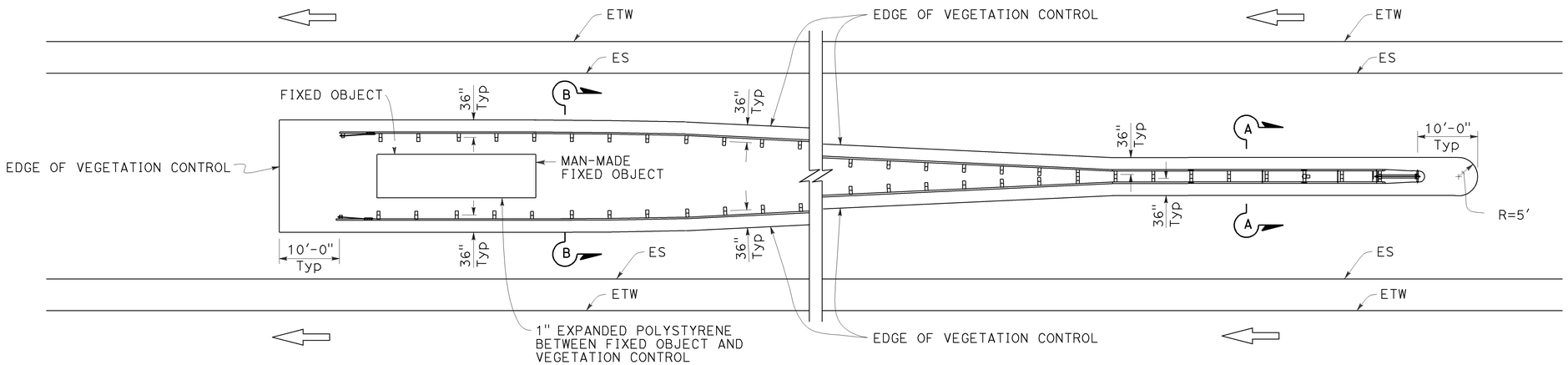

PLAN

Fixed object(s) between separate roadbeds
(One-Way Traffic)

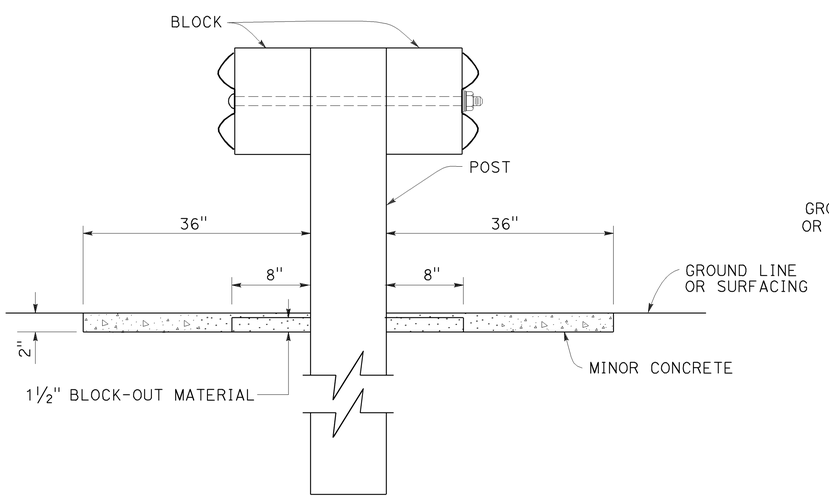

SECTION A-A

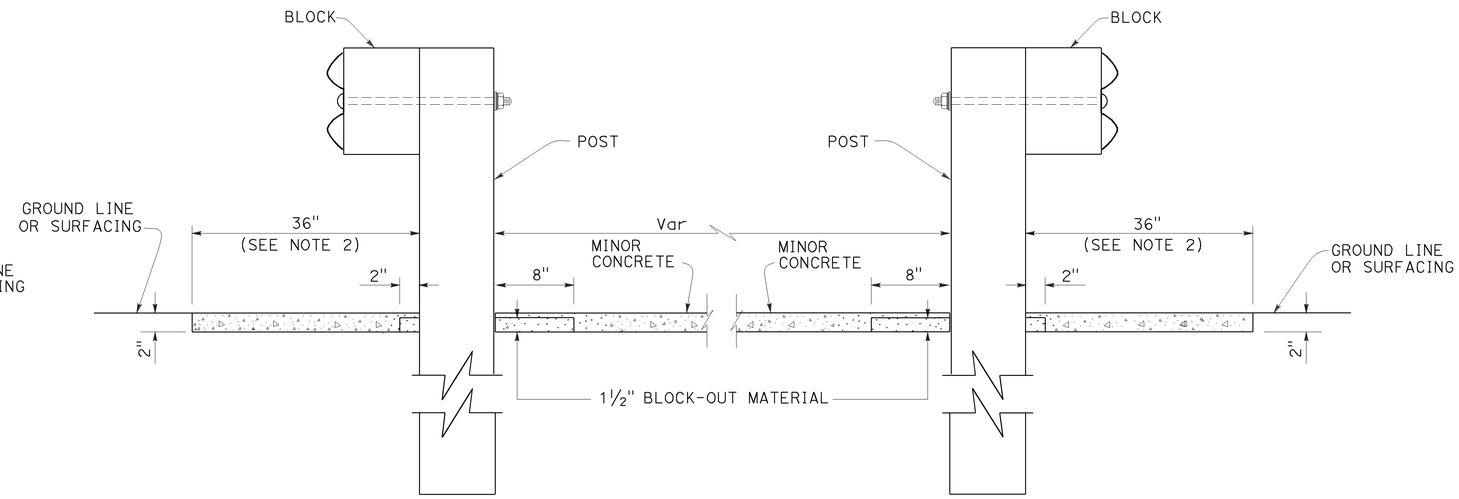

SECTION B-B

STATE OF CALIFORNIA
DEPARTMENT OF TRANSPORTATION

METAL BEAM GUARD RAILING TYPICAL VEGETATION CONTROL AT FIXED OBJECT

NO SCALE

RSP A77C10 DATED OCTOBER 19, 2012 SUPERSEDES STANDARD PLAN A77C10 DATED MAY 20, 2011 - PAGE 58 OF THE STANDARD PLANS BOOK DATED 2010.

REVISED STANDARD PLAN RSP A77C10

9-26-12

Dist	COUNTY	ROUTE	POST MILES TOTAL PROJECT	SHEET No.	TOTAL SHEETS
01	Hum	101	86.3/87.8	22	27

Randell D. Hiatt
REGISTERED CIVIL ENGINEER

October 19, 2012
PLANS APPROVAL DATE

REGISTERED PROFESSIONAL ENGINEER
Randell D. Hiatt
No. C50200
Exp. 6-30-13
CIVIL
STATE OF CALIFORNIA

THE STATE OF CALIFORNIA OR ITS OFFICERS OR AGENTS SHALL NOT BE RESPONSIBLE FOR THE ACCURACY OR COMPLETENESS OF SCANNED COPIES OF THIS PLAN SHEET.

TO ACCOMPANY PLANS DATED April 26, 2013

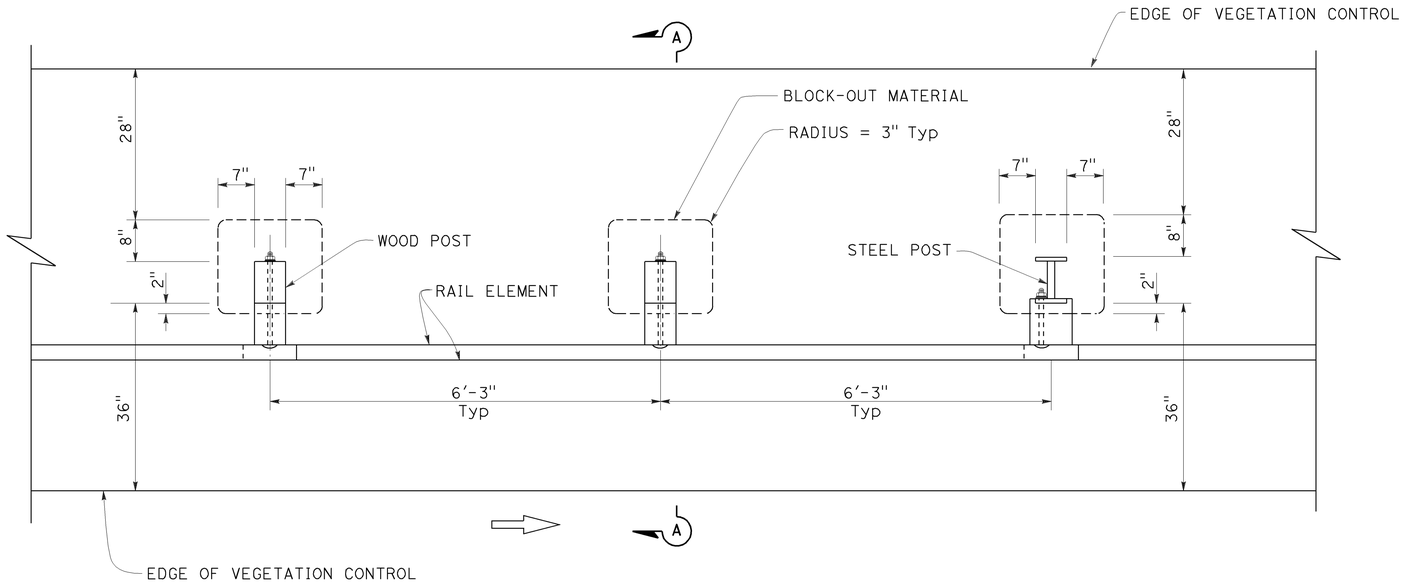

PLAN

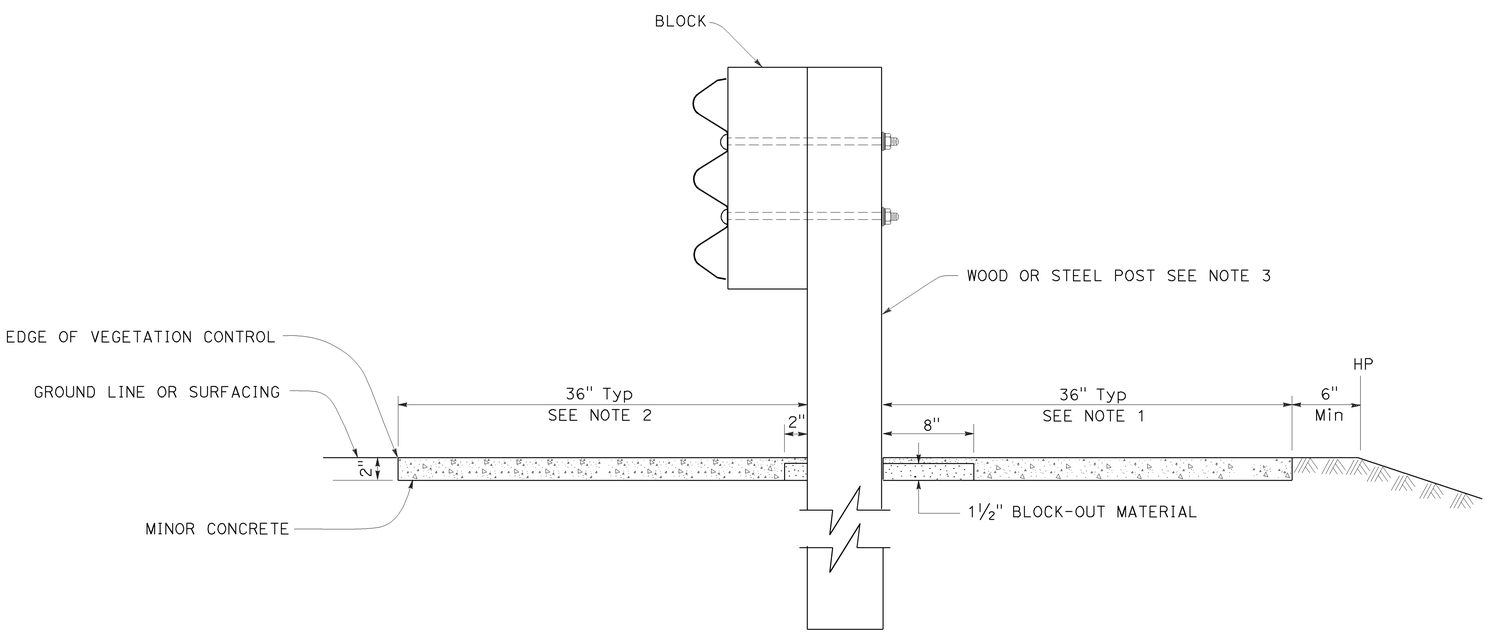

SECTION A-A

NOTES:

1. Where the distance between back of post and hinge point is less than 42", construct vegetation control to 6" from hinge point while maintaining the 8" block-out at back of post. If the 8" block-out at back of post can not be maintained, construct vegetation control flush with the back edge of post.
2. Where dike is constructed under barrier, construct vegetation control to back edge of dike. Where paved shoulder is constructed within 36" in front of the post, construct vegetation control to the edge of paved shoulder.
3. For wood and steel post sizes, see Standard Plan A77C2.
4. For details not shown, see Standard Plans A78A and A78B.

STATE OF CALIFORNIA
DEPARTMENT OF TRANSPORTATION

SINGLE THRIE BEAM BARRIER TYPICAL VEGETATION CONTROL STANDARD BARRIER RAILING SECTION

NO SCALE

RSP A78C3 DATED OCTOBER 19, 2012 SUPERSEDES STANDARD PLAN A78C3 DATED MAY 20, 2011 - PAGE 93 OF THE STANDARD PLANS BOOK DATED 2010.

REVISED STANDARD PLAN RSP A78C3

2010 REVISED STANDARD PLAN RSP A78C3

9-26-12

Dist	COUNTY	ROUTE	POST MILES TOTAL PROJECT	SHEET No.	TOTAL SHEETS
01	Hum	101	86.3/87.8	23	27

Randell D. Hiatt
REGISTERED CIVIL ENGINEER

October 19, 2012
PLANS APPROVAL DATE

REGISTERED PROFESSIONAL ENGINEER
Randell D. Hiatt
No. C50200
Exp. 6-30-13
CIVIL
STATE OF CALIFORNIA

THE STATE OF CALIFORNIA OR ITS OFFICERS OR AGENTS SHALL NOT BE RESPONSIBLE FOR THE ACCURACY OR COMPLETENESS OF SCANNED COPIES OF THIS PLAN SHEET.

TO ACCOMPANY PLANS DATED April 26, 2013

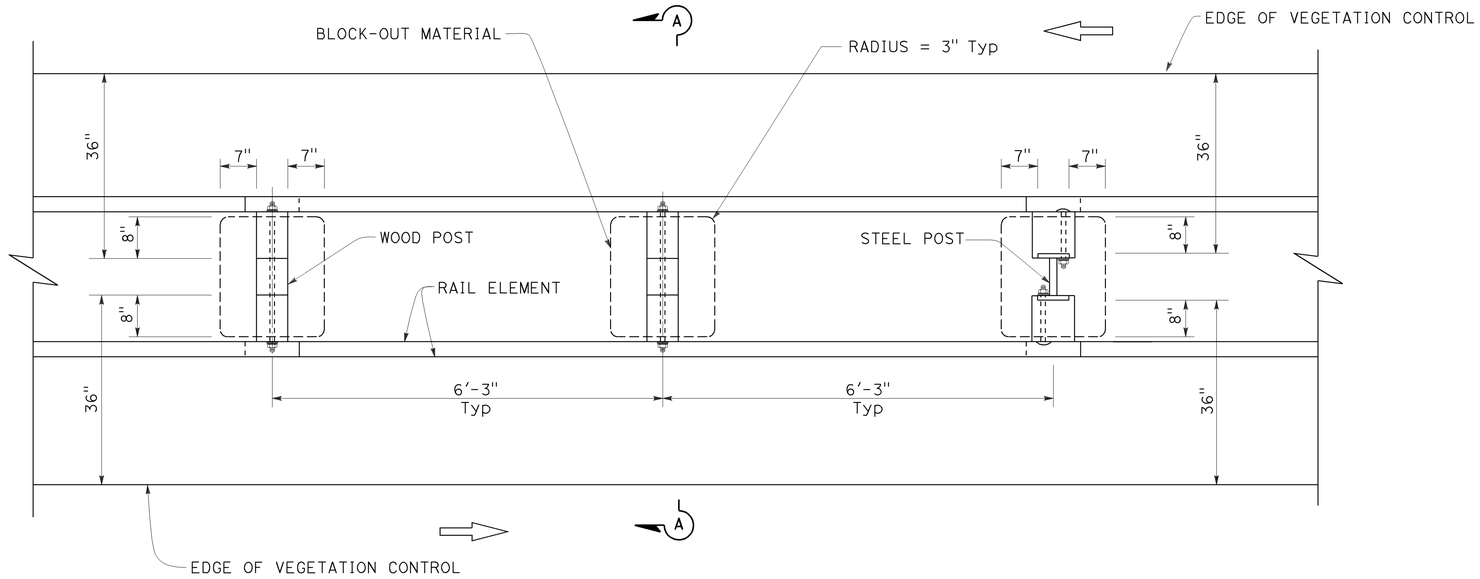

PLAN

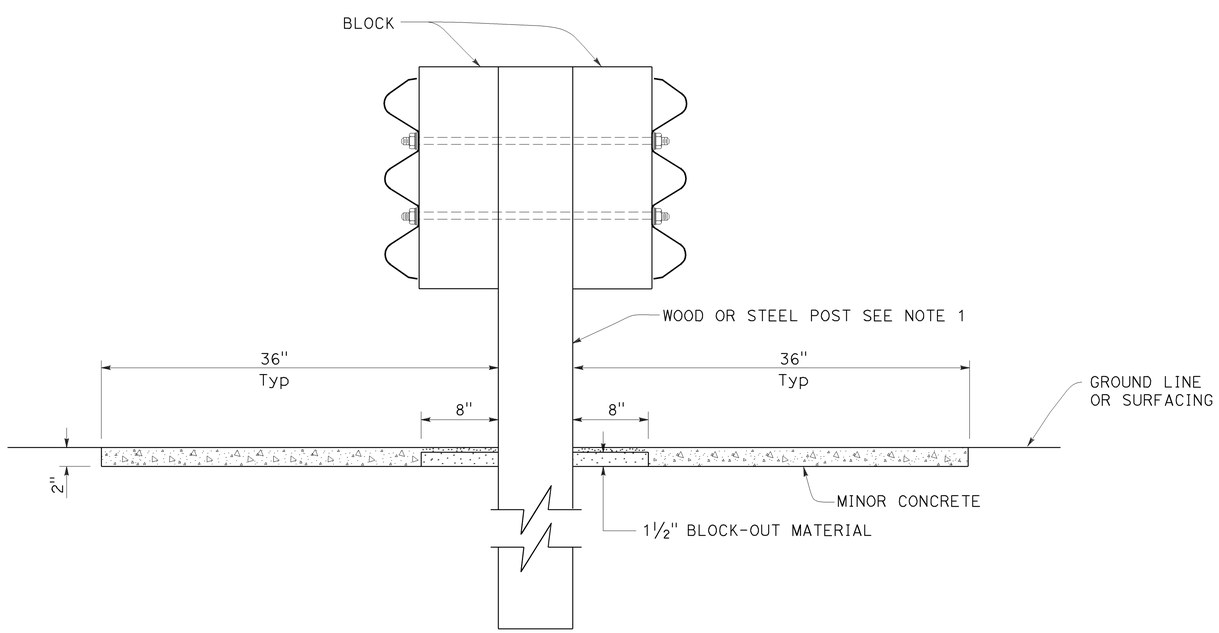

SECTION A-A

NOTES:

1. For wood and steel post sizes, see Standard Plan A78C2.
2. For details not shown, see Standard Plans A78A and A78B.

STATE OF CALIFORNIA
DEPARTMENT OF TRANSPORTATION

DOUBLE THRIE BEAM BARRIER TYPICAL VEGETATION CONTROL STANDARD BARRIER RAILING SECTION

NO SCALE

RSP A78C4 DATED OCTOBER 19, 2012 SUPERSEDES STANDARD PLAN A78C4
DATED MAY 20, 2011 - PAGE 94 OF THE STANDARD PLANS BOOK DATED 2010.

REVISED STANDARD PLAN RSP A78C4

2010 REVISED STANDARD PLAN RSP A78C4

9-26-12

Dist	COUNTY	ROUTE	POST MILES TOTAL PROJECT	SHEET No.	TOTAL SHEETS
01	Hum	101	86.3/87.8	24	27

Randell D. Hiatt
REGISTERED CIVIL ENGINEER

October 19, 2012
PLANS APPROVAL DATE

REGISTERED PROFESSIONAL ENGINEER
Randell D. Hiatt
No. C50200
Exp. 6-30-13
CIVIL
STATE OF CALIFORNIA

THE STATE OF CALIFORNIA OR ITS OFFICERS OR AGENTS SHALL NOT BE RESPONSIBLE FOR THE ACCURACY OR COMPLETENESS OF SCANNED COPIES OF THIS PLAN SHEET.

TO ACCOMPANY PLANS DATED April 26, 2013

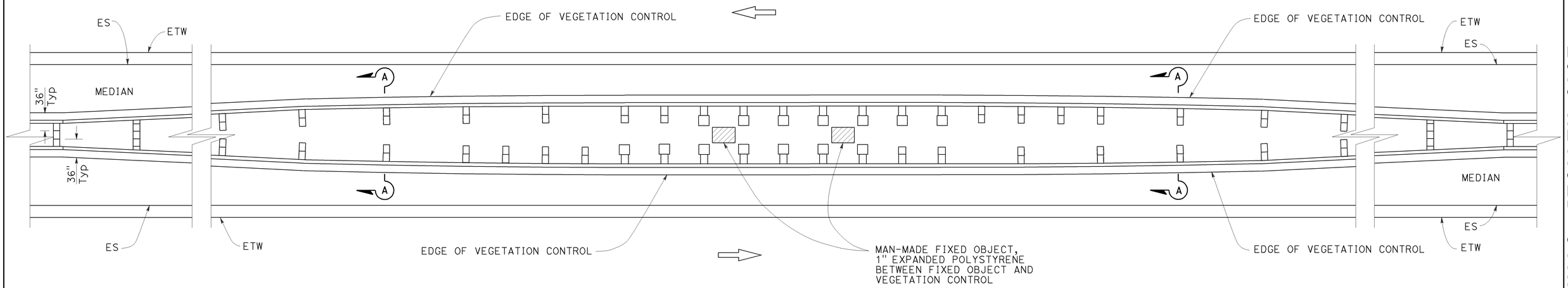

PLAN

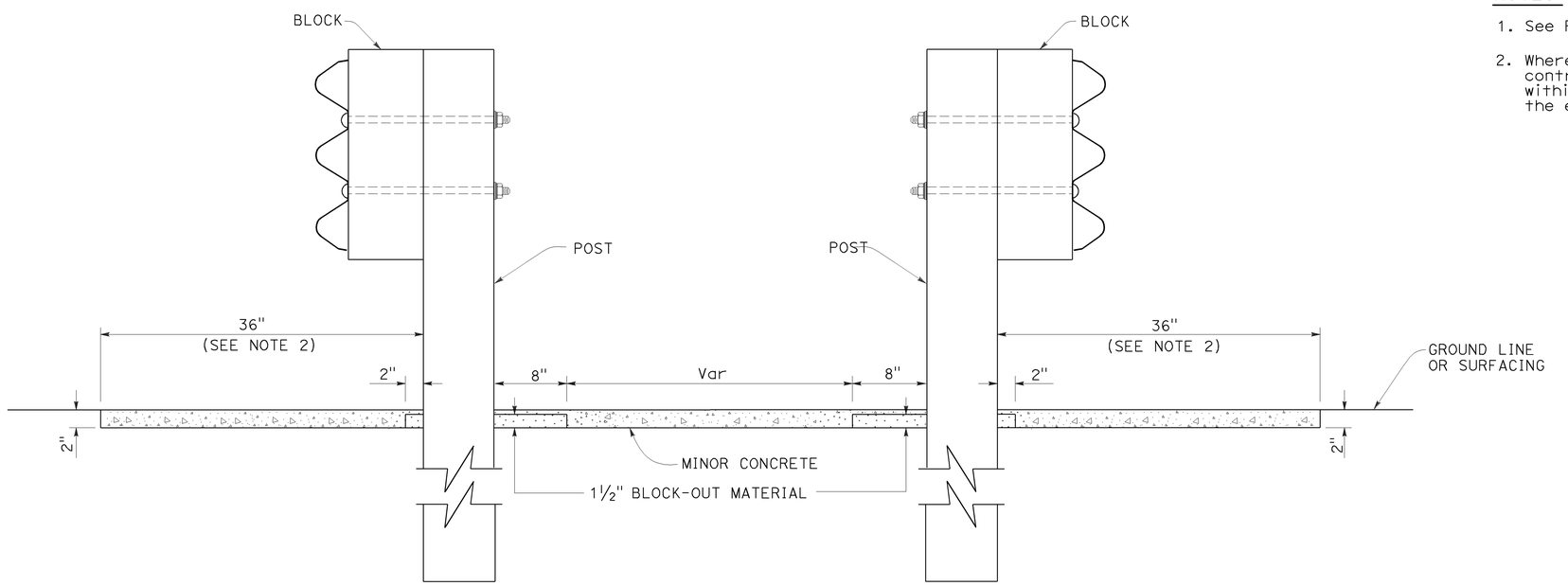

SECTION A-A

NOTES:

1. See Revised Standard Plan RSP A78C3 for additional vegetation control.
2. Where dike is constructed under barrier, construct vegetation control to back edge of dike. Where paved shoulder is constructed within 36" in front of the post, construct vegetation control to the edge of paved shoulder.

STATE OF CALIFORNIA
DEPARTMENT OF TRANSPORTATION

THRIE BEAM BARRIER TYPICAL VEGETATION CONTROL AT FIXED OBJECTS IN MEDIAN

NO SCALE

RSP A78C5 DATED OCTOBER 19, 2012 SUPERSEDES STANDARD PLAN A78C5 DATED MAY 20, 2011 - PAGE 95 OF THE STANDARD PLANS BOOK DATED 2010.

REVISED STANDARD PLAN RSP A78C5

2010 REVISED STANDARD PLAN RSP A78C5

9-26-12

Dist	COUNTY	ROUTE	POST MILES TOTAL PROJECT	SHEET No.	TOTAL SHEETS
01	Hum	101	86.3/87.8	25	27

REGISTERED CIVIL ENGINEER

April 19, 2013
PLANS APPROVAL DATE

REGISTERED PROFESSIONAL ENGINEER
Gurinderpal Bhullar
No. C48815
Exp. 9-30-14
CIVIL
STATE OF CALIFORNIA

THE STATE OF CALIFORNIA OR ITS OFFICERS OR AGENTS SHALL NOT BE RESPONSIBLE FOR THE ACCURACY OR COMPLETENESS OF SCANNED COPIES OF THIS PLAN SHEET.

TO ACCOMPANY PLANS DATED April 26, 2013

2010 REVISED STANDARD PLAN RSP T9

TABLE 1

TAPER LENGTH CRITERIA AND CHANNELIZING DEVICE SPACING

SPEED (S)	MINIMUM TAPER LENGTH * FOR WIDTH OF OFFSET 12 FEET (W)				MAXIMUM CHANNELIZING DEVICE SPACING		
					X	Y	Z **
	TANGENT 2L	MERGING L	SHIFTING L/2	SHOULDER L/3	TAPER	TANGENT	CONFLICT
mph	ft	ft	ft	ft	ft	ft	ft
20	160	80	40	27	20	40	10
25	250	125	63	42	25	50	12
30	360	180	90	60	30	60	15
35	490	245	123	82	35	70	17
40	640	320	160	107	40	80	20
45	1080	540	270	180	45	90	22
50	1200	600	300	200	50	100	25
55	1320	660	330	220	55	110	27
60	1440	720	360	240	60	120	30
65	1560	780	390	260	65	130	32
70	1680	840	420	280	70	140	35

* - For other offsets, use the following merging taper length formula for L:
For speed of 40 mph or less, $L = WS^2/60$
For speed of 45 mph or more, $L = WS$

Where: L = Taper length in feet
W = Width of offset in feet
S = Posted speed limit, off-peak 85th-percentile speed prior to work starting, or the anticipated operating speed in mph

** - Use for taper and tangent sections where there are no pavement markings or where there is a conflict between existing pavement markings and channelizers (CA).

TABLE 2

LONGITUDINAL BUFFER SPACE AND FLAGGER STATION SPACING

SPEED *	Min D **	DOWNGRADE Min D ***		
		-3%	-6%	-9%
mph	ft	ft	ft	ft
20	115	116	120	126
25	155	158	165	173
30	200	205	215	227
35	250	257	271	287
40	305	315	333	354
45	360	378	400	427
50	425	446	474	507
55	495	520	553	593
60	570	598	638	686
65	645	682	728	785
70	730	771	825	891

* - Speed is posted speed limit, off-peak 85th-percentile speed prior to work starting, or the anticipated operating speed in mph

** - Longitudinal buffer space or flagger station spacing

*** - Use on sustained downgrade steeper than -3 percent and longer than 1 mile.

TABLE 3

ADVANCE WARNING SIGN SPACING

ROAD TYPE	DISTANCE BETWEEN SIGNS *		
	A	B	C
	ft	ft	ft
URBAN - 25 mph OR LESS	100	100	100
URBAN - MORE THAN 25 mph TO 40 mph	250	250	250
URBAN - MORE THAN 40 mph	350	350	350
RURAL	500	500	500
EXPRESSWAY / FREEWAY	1000	1500	2640

* - The distances are approximate, are intended for guidance purposes only, and should be applied with engineering judgment. These distances should be adjusted by the Engineer for field conditions, if necessary, by increasing or decreasing the recommmended distances.

STATE OF CALIFORNIA
DEPARTMENT OF TRANSPORTATION

TRAFFIC CONTROL SYSTEM FOR LANE CLOSURE ON FREEWAYS AND EXPRESSWAYS

NO SCALE

RSP T9 DATED APRIL 19, 2013 SUPPLEMENTS THE STANDARD PLANS BOOK DATED 2010.

REVISED STANDARD PLAN RSP T9

1-23-13

Dist	COUNTY	ROUTE	POST MILES TOTAL PROJECT	SHEET No.	TOTAL SHEETS
01	Hum	101	86.3/87.8	26	27

REGISTERED CIVIL ENGINEER

April 19, 2013
PLANS APPROVAL DATE

REGISTERED PROFESSIONAL ENGINEER Gurinderpal Bhullar No. C48815 Exp. 9-30-14 CIVIL STATE OF CALIFORNIA

THE STATE OF CALIFORNIA OR ITS OFFICERS OR AGENTS SHALL NOT BE RESPONSIBLE FOR THE ACCURACY OR COMPLETENESS OF SCANNED COPIES OF THIS PLAN SHEET.

TO ACCOMPANY PLANS DATED April 26, 2013

NOTES:

See Revised Standard Plan RSP T9 for tables.

Use cone spacing X for taper segment, Y for tangent segment or Z for conflict situations, as approriate, per Table 1, unless X, Y, or Z cone spacing is shown on this sheet.

Unless otherwise specified in the special provisions, all temporary warning signs shall have black legend on fluorescent orange background.

California codes are designated by (CA). Otherwise, Federal (MUTCD) codes are shown.

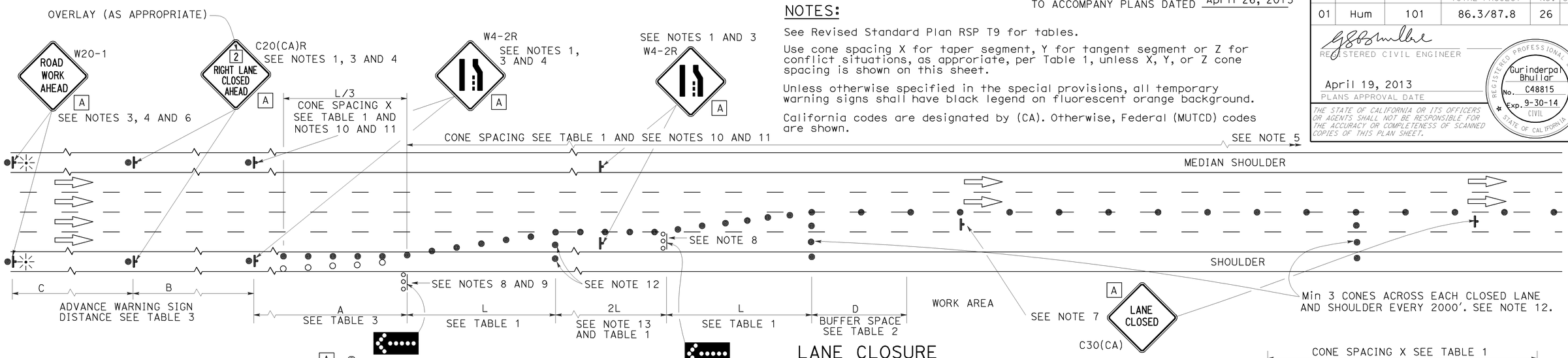

LANE CLOSURE

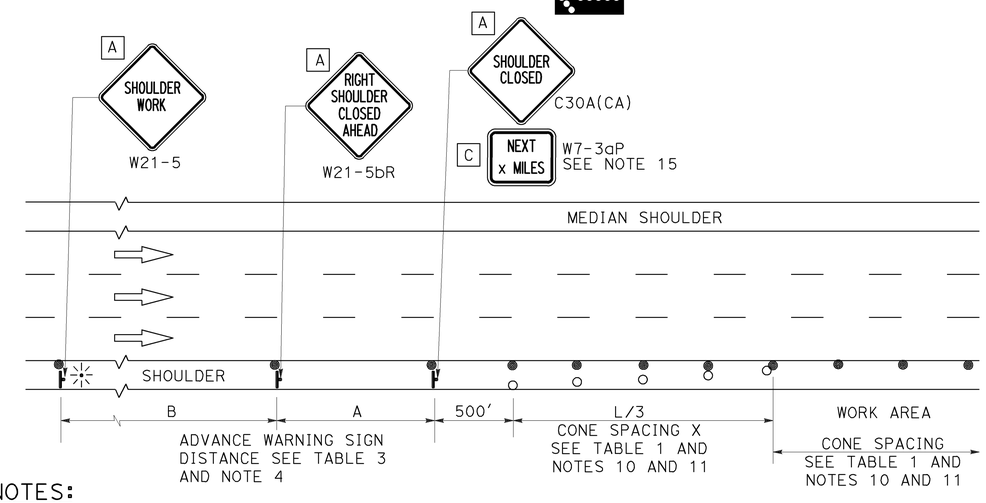

SHOULDER CLOSURE

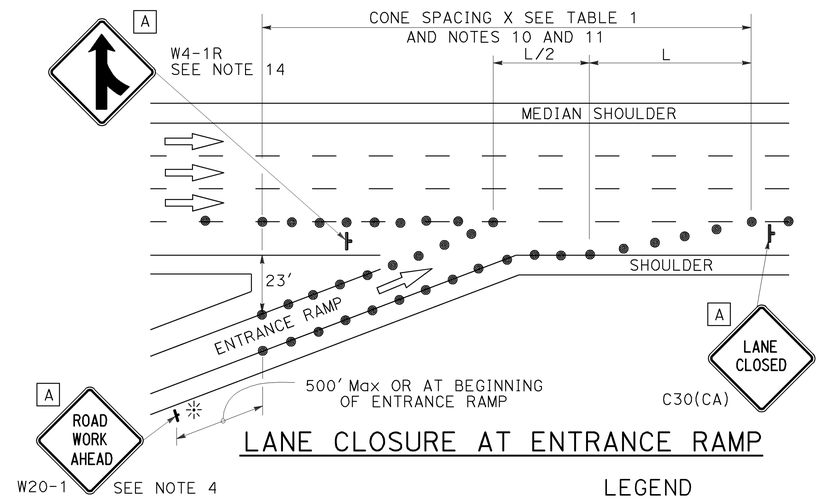

LANE CLOSURE AT ENTRANCE RAMP

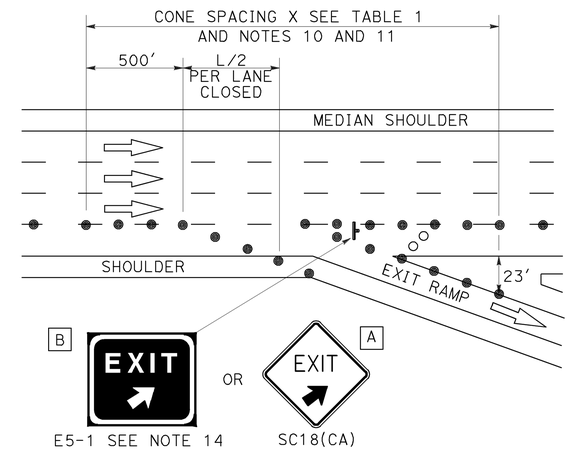

LANE CLOSURE AT EXIT RAMP

NOTES:

1. Median lane closures shall conform to the details as shown except that C20(CA)L and W4-2L signs shall be used.
2. At least one person shall be assigned to provide full time maintenance of traffic control devices for lane closures.
3. Duplicate sign installations are not required:
   a) On opposite shoulder if at least one-half of the available lanes remain open to traffic.
   b) In the median if the width of the median shoulder is less than 8' and the outside lanes are to be closed.
4. Each advance warning sign on each side of the roadway shall be equipped with at least two flags for daytime closure. Each flag shall be at least 16" x 16" in size and shall be orange or fluorescent red-orange in color. Flashing beacons shall be placed at the locations indicated for lane closure during hours of darkness.
5. A G20-2 "END ROAD WORK" sign, with minimum size of 48" x 24" as appropriate, shall be placed at the end of the lane closure unless the end of work area is obvious or ends within a larger project's limits.
6. If the W20-1 sign would follow within 2000' of a stationary W20-1 or G20-1 "ROAD WORK NEXT _____ MILES", use a C20(CA) sign for the first advance warning sign.
7. Place a C30(CA) sign every 2000' throughout length of lane closure.
8. One flashing arrow sign for each lane closed. The flashing arrow signs shall be Type I.
9. A minimum 1500' of sight distance shall be provided where possible for vehicles approaching the first flashing arrow sign. Lane closures shall not begin at top of crest vertical curve or on a horizontal curve.
10. All cones used for lane closures during the hours of darkness shall be fitted with retroreflective bands (or sleeves) as specified in the specifications.
11. Portable delineators, placed at one-half the spacing indicated for traffic cones may be used instead of cones for daytime closures only.
12. Unless otherwise specified in the special provisions, a minimum of 3 cones shall be placed transversely across each closed lane and shoulder at each location where a taper across a traffic lane ends and every 2000' as shown on the "Lane Closure" detail. Two Type II barricades may be used instead of the 3 cones. The transverse alignment of the cones or barricades on the closed shoulder may be shifted from the transverse alignment to provide access to the work.
13. Unless otherwise specified in the special provisions, the 2L tangent shown along lane lines shall be used between the L tapers required for each closed traffic lane.
14. Unless otherwise specified in the special provisions, the E5-1 or SC18(CA) and W4-1 signs shall be used as shown.
15. A W7-3aP "NEXT____ MILES" plaque must be used if theshoulder closure extends beyond the distance that can be perceived by road users.

LEGEND

- TRAFFIC CONE
- TRAFFIC CONE (OPTIONAL TAPER)
- TEMPORARY TRAFFIC CONTROL SIGN
- FLASHING ARROW SIGN (FAS)
- FAS SUPPORT OR TRAILER
- PORTABLE FLASHING BEACON

SIGN PANEL SIZE (Min)

A	48" x 48"
B	72" x 60"
C	36" x 30"

STATE OF CALIFORNIA
DEPARTMENT OF TRANSPORTATION

TRAFFIC CONTROL SYSTEM FOR LANE CLOSURE ON FREEWAYS AND EXPRESSWAYS

NO SCALE

RSP T10 DATED APRIL 19, 2013 SUPERSEDES STANDARD PLAN T10 DATED MAY 20, 2011 - PAGE 237 OF THE STANDARD PLANS BOOK DATED 2010.

REVISED STANDARD PLAN RSP T10

2010 REVISED STANDARD PLAN RSP T10

12-18-12

Dist	COUNTY	ROUTE	POST MILES TOTAL PROJECT	SHEET No.	TOTAL SHEETS
01	Hum	101	86.3/87.8	27	27

REGISTERED CIVIL ENGINEER

April 19, 2013
PLANS APPROVAL DATE

REGISTERED PROFESSIONAL ENGINEER Gurinderpal Bhullar No. C48815 Exp. 9-30-14 CIVIL STATE OF CALIFORNIA

THE STATE OF CALIFORNIA OR ITS OFFICERS OR AGENTS SHALL NOT BE RESPONSIBLE FOR THE ACCURACY OR COMPLETENESS OF SCANNED COPIES OF THIS PLAN SHEET.

TO ACCOMPANY PLANS DATED April 26, 2013

NOTES: See Revised Standard Plan RSP T9 for tables.

Use cone spacing X for taper segment, Y for tangent segment or Z for conflict situations, as approriate, per Table 1, unless X, Y, or Z cone spacing is shown on this sheet.

Unless otherwise specified in the special provisions, all temporary warning signs shall have black legend on fluorescent orange background.

California codes are designated by (CA). Otherwise, Federal (MUTCD) codes are shown.

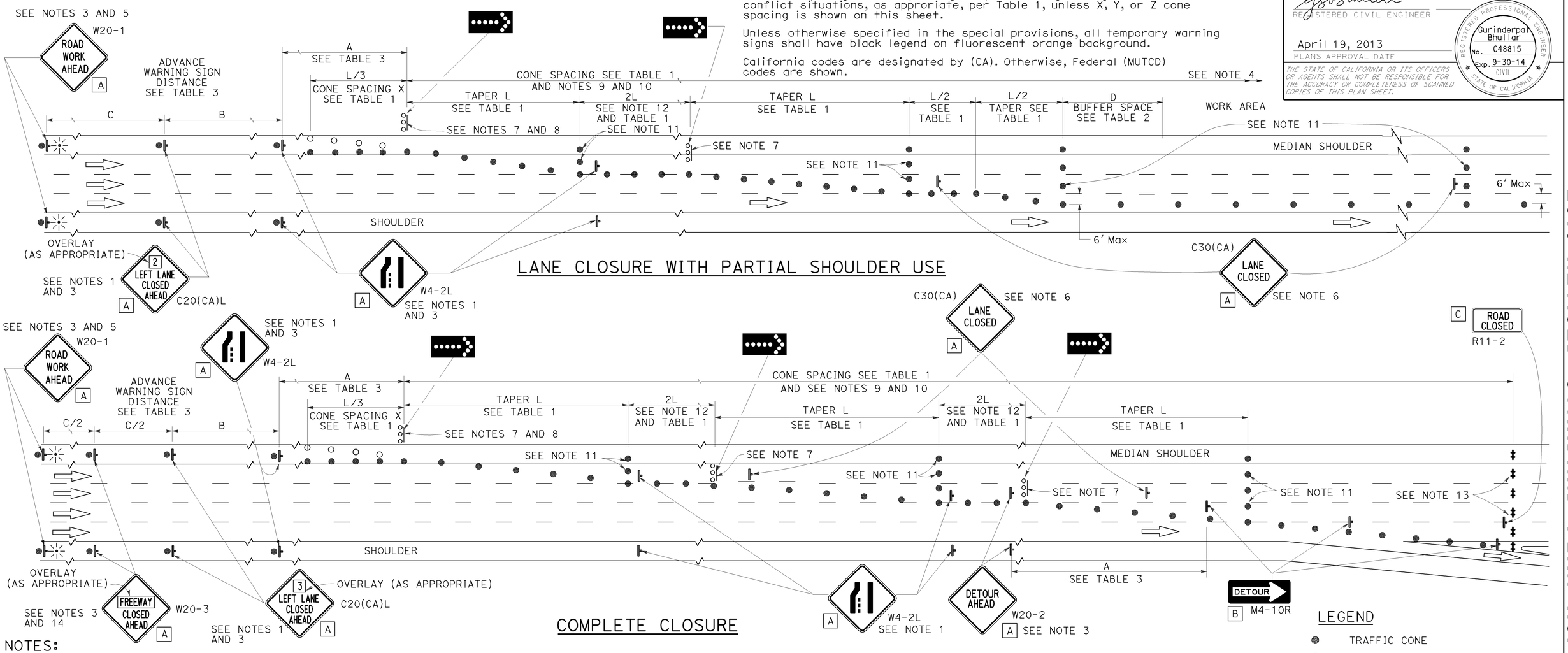

LANE CLOSURE WITH PARTIAL SHOULDER USE

COMPLETE CLOSURE

NOTES:

1. Lane closures on the right side using partial median shoulder as a traffic lane shall conform to the details as shown except that C20(CA)R and W4-2R signs shall be used.
2. At least one person shall be assigned to provide full time maintenance of traffic control devices for lane closures.
3. Each advance warning sign on each side of the roadway shall be equipped with at least two flags for daytime closure. Each flag shall be at least 16" X 16" in size and shall be orange or fluorescent red-orange in color. Flashing beacons shall be placed at the locations indicated for lane closure during hours of darkness.
4. A G20-2 "END ROAD WORK" sign, with minimum size of 48" x 24" as appropriate, shall be placed at the end of the lane closure unless the end of work area is obvious or ends within a larger project's limits.
5. If the W20-1 sign would follow within 2000' of a stationary W20-1 or G20-1 "ROAD WORK NEXT ___ MILES", use a C20(CA) sign for the first advance warning sign.
6. Place a C30(CA) sign every 2000' throughout length of lane closure.
7. One flashing arrow sign for each lane closed. The flashing arrow signs shall be Type I.
8. A minimum 1500' of sight distance shall be provided where possible for vehicles approaching the first flashing arrow sign. Lane closures shall not begin at the top of crest vertical curve or on a horizontal curve.
9. All cones used for lane closures during the hours of darkness shall be fitted with retroreflective bands (or sleeves) as specified in the specifications.
10. Portable delineators, placed at one-half the spacing indicated for traffic cones, may be used instead of cones for daytime closures only.
11. Unless otherwise specified in the special provisions, a minimum of 3 cones shall be placed transversely across each closed lane and shoulder at each location where a taper across a traffic lane ends and every 2000' as shown on the "Lane Closure With Partial Shoulder Use" detail. Two Type II barricades may be used instead of the 3 cones. The transverse alignment of the cones or barricades on the closed shoulder may be shifted from the transverse alignment to provide access to the work.
12. Unless otherwise specified in the special provisions, the 2L tangent shown along lane lines shall be used between the L tapers required for each closed traffic lane.
13. A minimum of Two Type II or III barricades shall be placed across each closed lane and shoulder at the location shown and every 2000' within the complete closure area. Within the complete closure area, the transverse alignment of the barricades on the closed shoulder may be shifted from the transverse alignment to provide access to the work.
14. When specified in the special provisions, a W20-2 "DETOUR AHEAD" sign is to be used in place of the W20-3 "FREEWAY CLOSED AHEAD" sign.

SIGN PANEL SIZE (Min)

A	48" x 48"
B	48" x 18"
C	48" x 30"

LEGEND

- TRAFFIC CONE
- TRAFFIC CONE (OPTIONAL TAPER)
- TEMPORARY TRAFFIC CONTROL SIGN
- FLASHING ARROW SIGN (FAS)
- FAS SUPPORT OR TRAILER
- PORTABLE FLASHING BEACON

STATE OF CALIFORNIA
DEPARTMENT OF TRANSPORTATION

TRAFFIC CONTROL SYSTEM FOR LANE CLOSURES ON FREEWAYS AND EXPRESSWAYS

NO SCALE

RSP T10A DATED APRIL 19, 2013 SUPERSEDES STANDARD PLAN T10A DATED MAY 20, 2011 - PAGE 238 OF THE STANDARD PLANS BOOK DATED 2010.

REVISED STANDARD PLAN RSP T10A

2010 REVISED STANDARD PLAN RSP T10A

12-18-13