ACHSNH-Q101(228)E

Dist	COUNTY	ROUTE	POST MILES TOTAL PROJECT	SHEET No.	TOTAL SHEETS
01	Hum	101	54.3/56.8	1	18

STATE OF CALIFORNIA
DEPARTMENT OF TRANSPORTATION

PROJECT PLANS FOR CONSTRUCTION ON
STATE HIGHWAY

IN HUMBOLDT COUNTY NEAR RIO DELL FROM EEL RIVER BRIDGE TO 0.3 MILE SOUTH OF VAN DUZEN RIVER BRIDGES

TO BE SUPPLEMENTED BY STANDARD PLANS DATED 2010

INDEX OF PLANS

SHEET No	DESCRIPTION
1	TITLE AND LOCATION MAP
2	TYPICAL CROSS SECTION
3-5	LAYOUT
6-7	CONSTRUCTION DETAILS
8	EROSION CONTROL QUANTITIES
9	DRAINAGE DETAILS AND QUANTITIES
10	CONSTRUCTION AREA SIGNS
11-12	SUMMARY OF QUANTITIES
13	TRAFFIC CONTROL SYSTEMS
14-18	NEW OR REVISED STANDARD PLANS

THE STANDARD PLANS LIST APPLICABLE TO THIS CONTRACT IS INCLUDED IN THE NOTICE TO BIDDERS AND SPECIAL PROVISIONS BOOK.

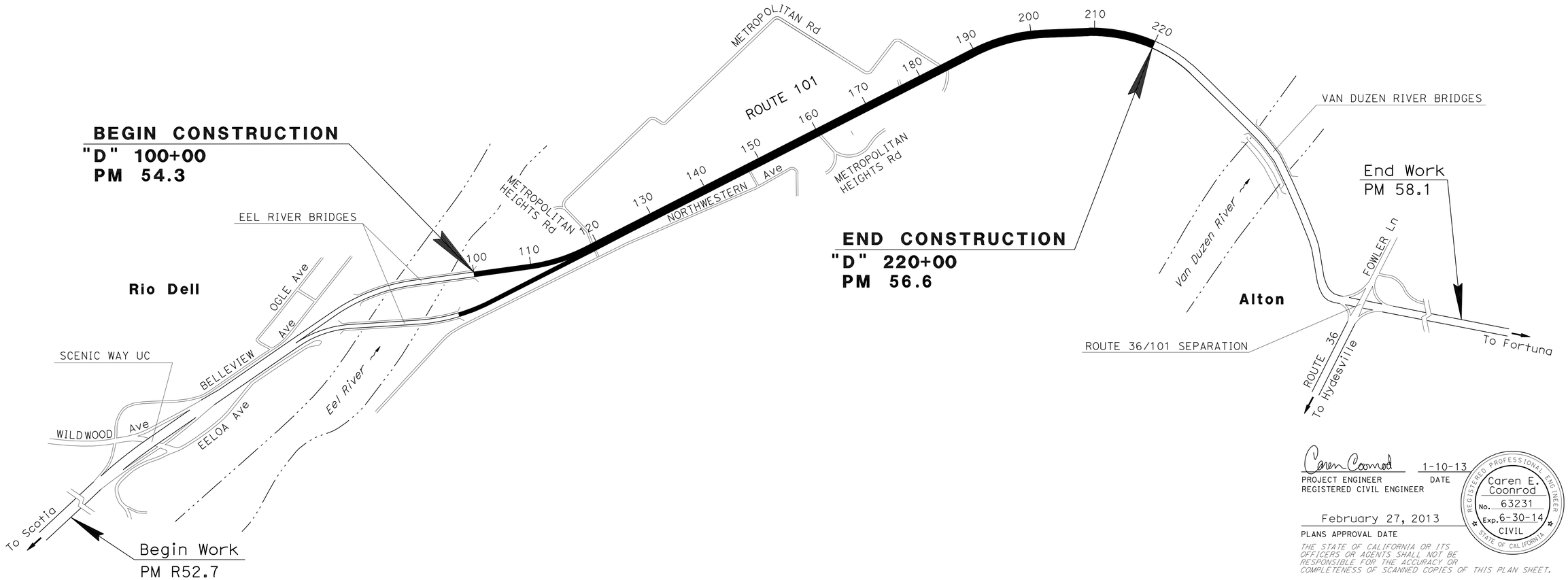

NO SCALE

THE CONTRACTOR SHALL POSSESS THE CLASS (OR CLASSES) OF LICENSE AS SPECIFIED IN THE "NOTICE TO BIDDERS."

Caren Coonrod 1-10-13
PROJECT ENGINEER DATE
REGISTERED CIVIL ENGINEER

February 27, 2013
PLANS APPROVAL DATE

REGISTERED PROFESSIONAL ENGINEER Caren E. Coonrod No. 63231 Exp. 6-30-14 CIVIL STATE OF CALIFORNIA

THE STATE OF CALIFORNIA OR ITS OFFICERS OR AGENTS SHALL NOT BE RESPONSIBLE FOR THE ACCURACY OR COMPLETENESS OF SCANNED COPIES OF THIS PLAN SHEET.

PROJECT MANAGER RICHARD MULLEN
DESIGN ENGINEER KELLY TIMMONS

CONTRACT No.	01-0B1904
PROJECT ID	0112000109

LAST REVISION 00-00-00
DATE PLOTTED => 23-APR-2013
TIME PLOTTED => 11:08

Dist	COUNTY	ROUTE	POST MILES TOTAL PROJECT	SHEET No.	TOTAL SHEETS
01	Hum	101	54.3/56.8	2	18

Caren Coonrod 1-10-13
REGISTERED CIVIL ENGINEER DATE

February 27, 2013
PLANS APPROVAL DATE

REGISTERED PROFESSIONAL ENGINEER Caren E. Coonrod No. 63231 Exp. 6-30-14 CIVIL STATE OF CALIFORNIA

THE STATE OF CALIFORNIA OR ITS OFFICERS OR AGENTS SHALL NOT BE RESPONSIBLE FOR THE ACCURACY OR COMPLETENESS OF SCANNED COPIES OF THIS PLAN SHEET.

NOTES:

1. FOR LOCATIONS AND DETAILS OF HTCB AND VEGETATION CONTROL (MINOR CONCRETE), SEE LAYOUT, CONSTRUCTION DETAILS AND SUMMARY OF QUANTITY SHEETS.
2. SUPERELEVATION AS SHOWN OR AS DIRECTED BY THE ENGINEER.

LEGEND

HTCB = HIGH TENSION CABLE BARRIER

DESIGN DESIGNATION

Hum-101-54.3/56.8

2010 ADT = 13,000
2032 ADT = 14,500
2013 DHV = 1,530
2033 DHV = 1,670
D = 60%, T = 6%
V = 65 MPH
TI_{10} = 10.0
TI_{20} = 11.0

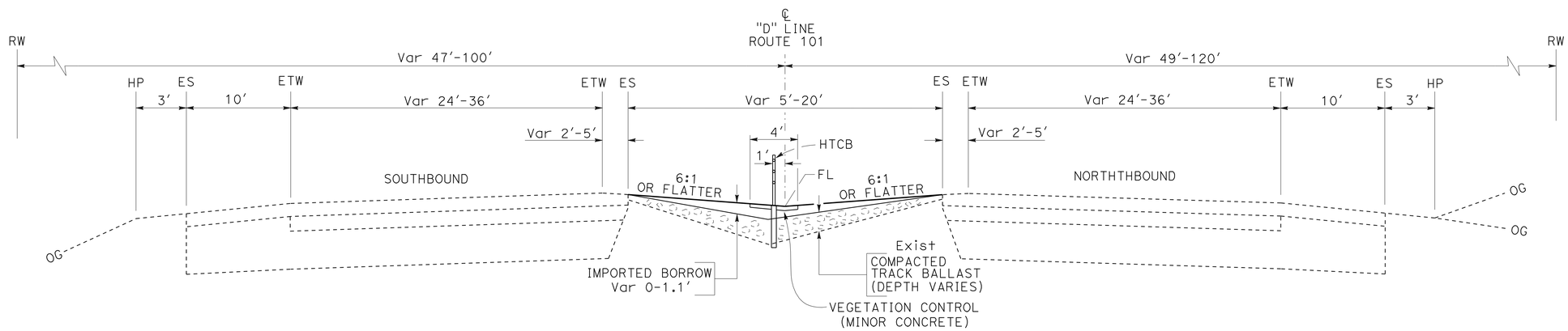

"D" 118+43.75 TO "D" 142+13.46
"D" 145+91.44 TO "D" 157+84.00
"D" 159+86.01 TO "D" 183+90.73
"D" 186+36.70 TO "D" 198+18.50
"D" 200+43.82 TO "D" 218+05.66

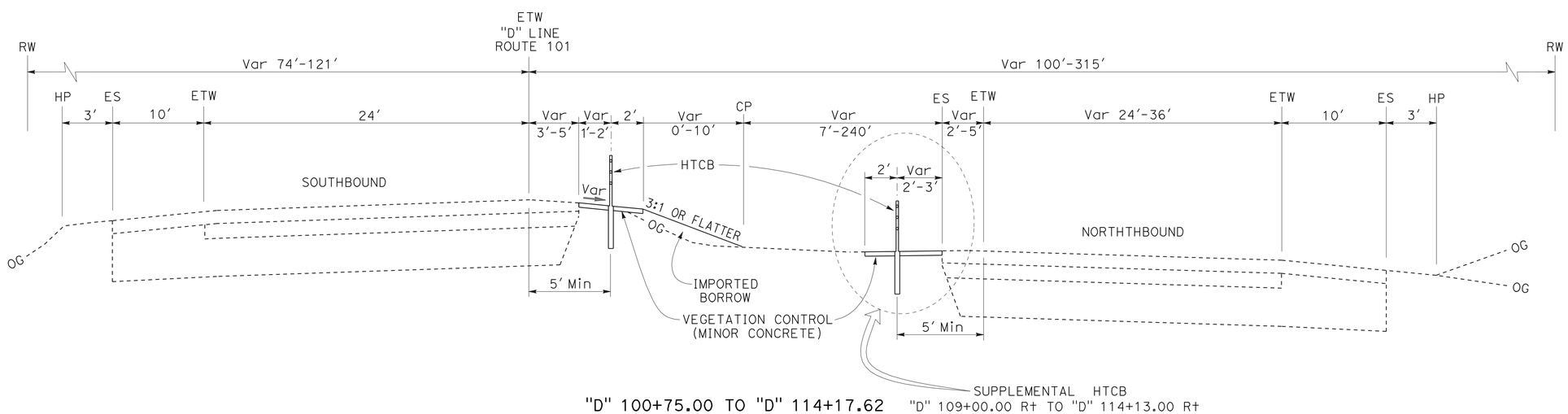

"D" 100+75.00 TO "D" 114+17.62

TYPICAL CROSS SECTIONS X-1

NO SCALE

REVISED BY | DATE REVISED
ERIC SHADA
CALCULATED-DESIGNED BY | CHECKED BY
FUNCTIONAL SUPERVISOR
KELLY TIMMONS
STATE OF CALIFORNIA - DEPARTMENT OF TRANSPORTATION
Caltrans
DESIGN

LAST REVISION 00-00-00
DATE PLOTTED => 23-APR-2013
TIME PLOTTED => 11:08

Dist	COUNTY	ROUTE	POST MILES TOTAL PROJECT	SHEET No.	TOTAL SHEETS
01	Hum	101	54.3/56.8	3	18

REGISTERED CIVIL ENGINEER — DATE 1-10-13

February 27, 2013
PLANS APPROVAL DATE

REGISTERED PROFESSIONAL ENGINEER — Caren E. Coonrod No. 63231 Exp. 6-30-14 CIVIL — STATE OF CALIFORNIA

THE STATE OF CALIFORNIA OR ITS OFFICERS OR AGENTS SHALL NOT BE RESPONSIBLE FOR THE ACCURACY OR COMPLETENESS OF SCANNED COPIES OF THIS PLAN SHEET.

NOTES:

1. FOR ACCURATE RIGHT OF WAY DATA, CONTACT RIGHT OF WAY ENGINEERING AT THE DISTRICT OFFICE.
2. CONTRACTOR TO FIELD VERIFY LENGTH OF HIGH TENSION CABLE BARRIER.
3. FOR DETAILS NOT SHOWN, SEE MANUFACTURER DETAILS.
4. COORDINATE VALUES SHOWN ARE CCS 83 (1991.35) ZONE 1. ELEVATIONS ARE BASED ON NAV D88.

LEGEND

HTCB	HIGH TENSION CABLE BARRIER
WRGT-FL	WIRE ROPE GATING TERMINAL-FLARE
A	SIGN DESIGNATION (SEE SHEET Q-2)
1	DRAINAGE SYSTEM No.
a	DRAINAGE UNIT No.
●	DELINEATOR (CLASS 1) (TYPE G)
○	OBJECT MARKER (TYPE K-1)
▣	POTHOLE LOCATION

CURVE DATA

CURVE No.	R	△	T	L	CURVE PI	
1	1950.00′	-12°03′18″	362.38′	716.58′	2077405.401 N	5970517.102 E

COORDINATE VALUES SHOWN ARE CCS 1983, ZONE 1
ELEVATION IS BASED ON NAVD 88 DATUM

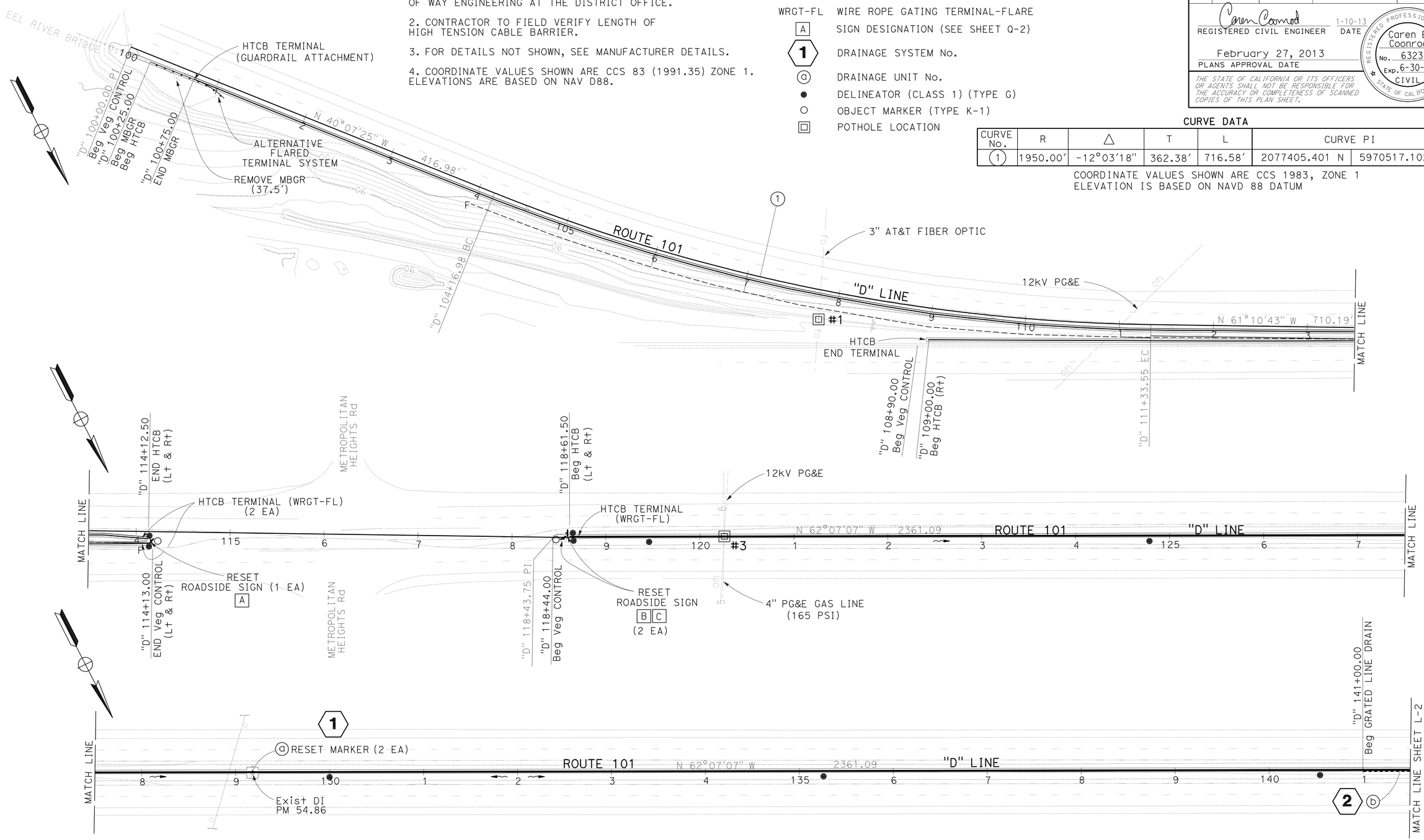

UTILITY OWNERSHIP

GAS - PACIFIC GAS & ELECTRIC (PG&E)
ELECTRICAL - PACIFIC GAS & ELECTRIC (PG&E)
TELEPHONE - AMERICAN TELEPHONE & TELEGRAPH (AT&T)
FIBER OPTIC - AMERICAN TELEPHONE & TELEGRAPH (AT&T)

POSITIVE LOCATION INFORMATION

#	LOCATION	ELEVATION	METHOD
1	"D" 107+83.2, 30.8′ Rt	79.9	POTHOLE
3	"D" 120+25.8, 0.8′ Lt	73.9	POTHOLE

LAYOUT L-1

SCALE: 1" = 50′

STATE OF CALIFORNIA - DEPARTMENT OF TRANSPORTATION
Caltrans
DESIGN

FUNCTIONAL SUPERVISOR: KELLY TIMMONS
CALCULATED-DESIGNED BY: ERIC SHADA
CHECKED BY
REVISED BY
DATE REVISED

LAST REVISION 00-00-00
DATE PLOTTED => 23-APR-2013
TIME PLOTTED => 11:08

Dist	COUNTY	ROUTE	POST MILES TOTAL PROJECT	SHEET No.	TOTAL SHEETS
01	Hum	101	54.3/56.8	4	18

Caren Coonrod 1-10-13
REGISTERED CIVIL ENGINEER DATE

February 27, 2013
PLANS APPROVAL DATE

REGISTERED PROFESSIONAL ENGINEER Caren E. Coonrod No. 63231 Exp. 6-30-14 CIVIL STATE OF CALIFORNIA

THE STATE OF CALIFORNIA OR ITS OFFICERS OR AGENTS SHALL NOT BE RESPONSIBLE FOR THE ACCURACY OR COMPLETENESS OF SCANNED COPIES OF THIS PLAN SHEET.

NOTES:

1. FOR ACCURATE RIGHT OF WAY DATA, CONTACT RIGHT OF WAY ENGINEERING AT THE DISTRICT OFFICE.

2. COORDINATE VALUES SHOWN ARE CCS 83 (1991.35) ZONE 1. ELEVATIONS ARE BASED ON NAV D88.

CURVE DATA

CURVE No.	R	△	T	L	CURVE PI	
2	1875.00′	27°50′09"	464.64′	910.92′	2080304.901 N	5965074.206 E

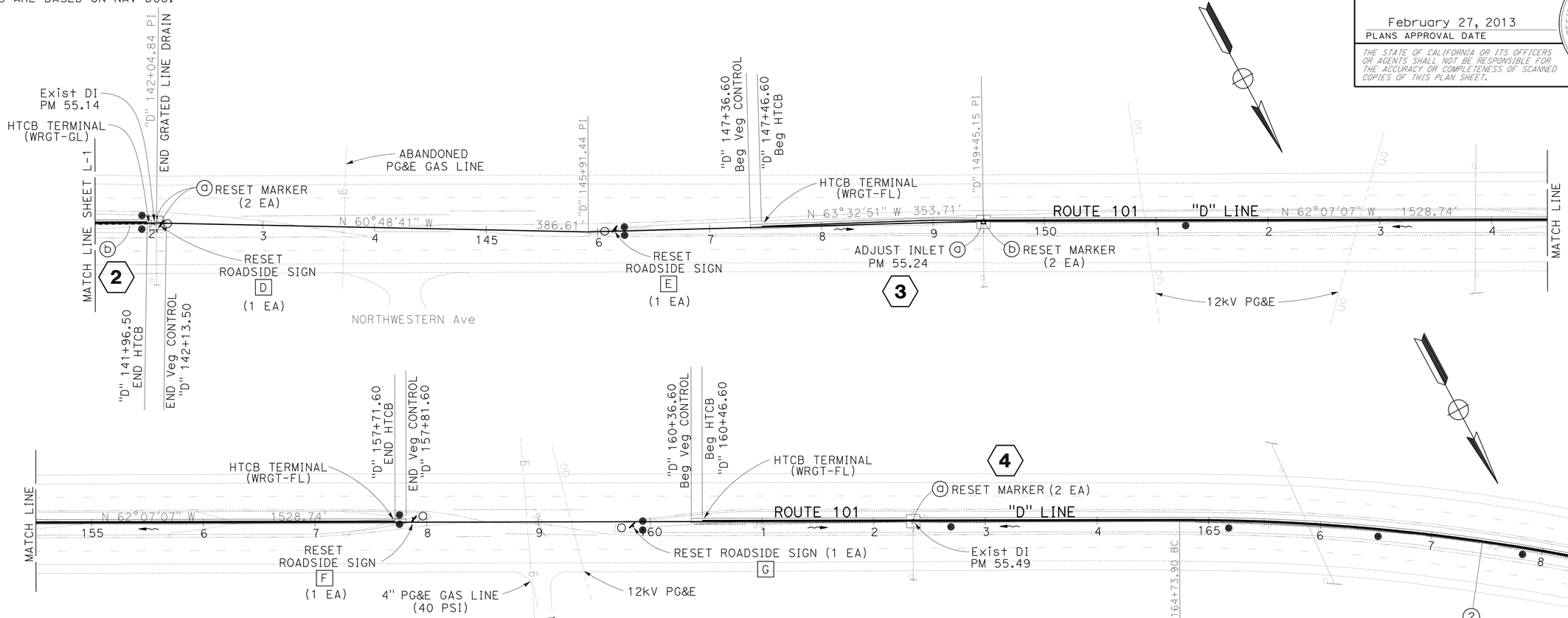

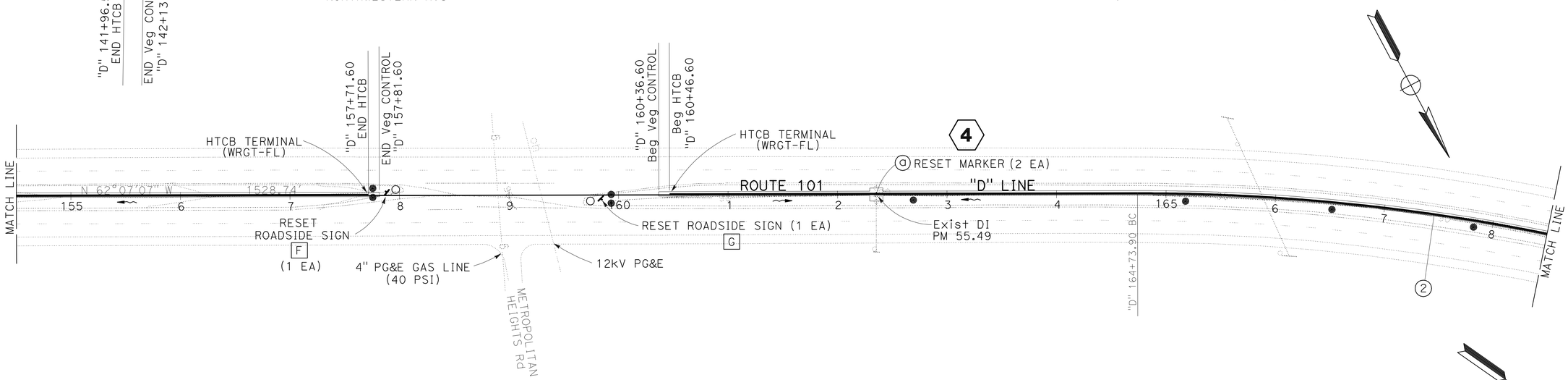

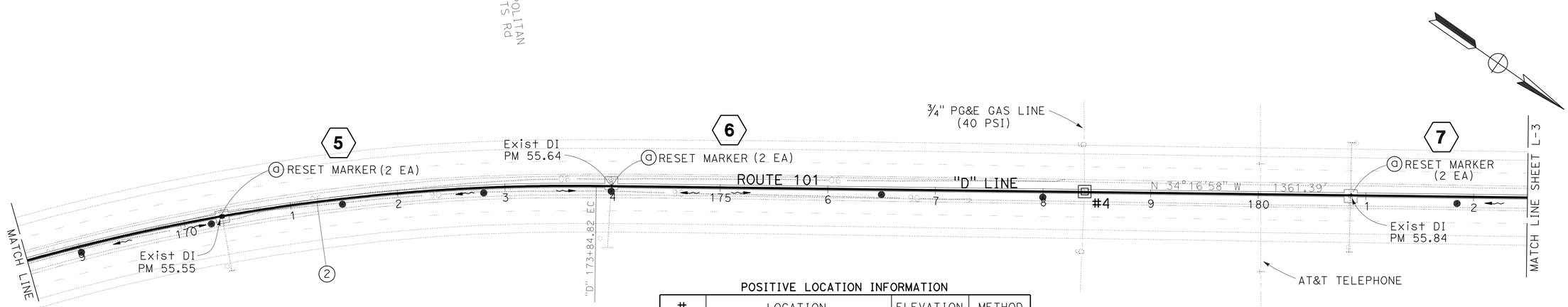

POSITIVE LOCATION INFORMATION

#	LOCATION	ELEVATION	METHOD
4	"D" 178+38.70, 1.3′ Lt	82.40	POTHOLE

LAYOUT L-2

SCALE: 1" = 50′

STATE OF CALIFORNIA - DEPARTMENT OF TRANSPORTATION
Caltrans® DESIGN
FUNCTIONAL SUPERVISOR: KELLY TIMMONS
CALCULATED-DESIGNED BY: ERIC SHADA
CHECKED BY
REVISED BY
DATE REVISED

LAST REVISION 00-00-00
DATE PLOTTED => 23-APR-2013
TIME PLOTTED => 11:08

NOTES:

1. FOR ACCURATE RIGHT OF WAY DATA, CONTACT RIGHT OF WAY ENGINEERING AT THE DISTRICT OFFICE.

2. COORDINATE VALUES SHOWN ARE CCS 83 (1991.35) ZONE 1. ELEVATIONS ARE BASED ON NAV D88.

CURVE DATA

CURVE No.	R	△	T	L	CURVE PI	
3	2000.00′	45°56′49″	847.86′	1603.85′	2082514.246 N	5963568.060 E
4	1300.00′	17°46′18″	203.25′	403.23′	2084849.621 N	5964050.165 E

Dist	COUNTY	ROUTE	POST MILES TOTAL PROJECT	SHEET No.	TOTAL SHEETS
01	Hum	101	54.3/56.8	5	18

Caren Coonrod 1-10-13
REGISTERED CIVIL ENGINEER DATE

February 27, 2013
PLANS APPROVAL DATE

REGISTERED PROFESSIONAL ENGINEER Caren E. Coonrod No. 63231 Exp. 6-30-14 CIVIL STATE OF CALIFORNIA

THE STATE OF CALIFORNIA OR ITS OFFICERS OR AGENTS SHALL NOT BE RESPONSIBLE FOR THE ACCURACY OR COMPLETENESS OF SCANNED COPIES OF THIS PLAN SHEET.

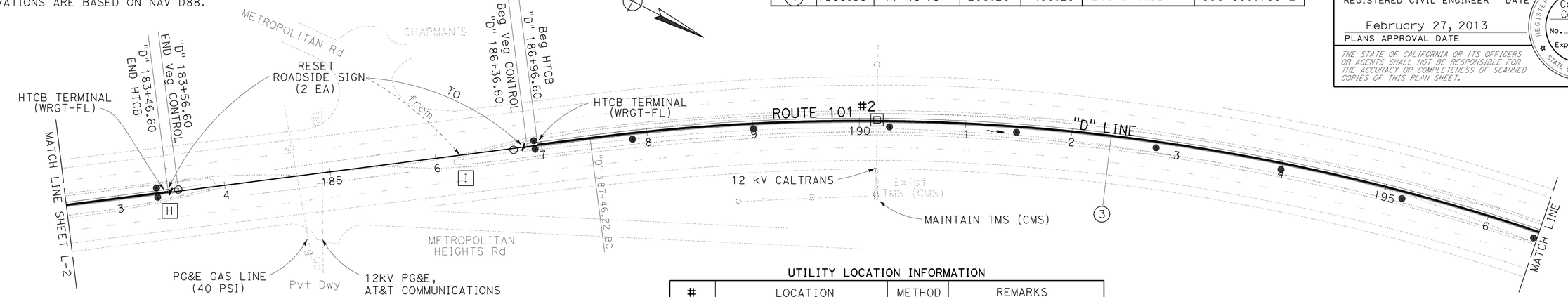

UTILITY LOCATION INFORMATION

#	LOCATION	METHOD	REMARKS
2	"D" 190+05 (Approx)	POTHOLE	UTILITY NOT LOCATED

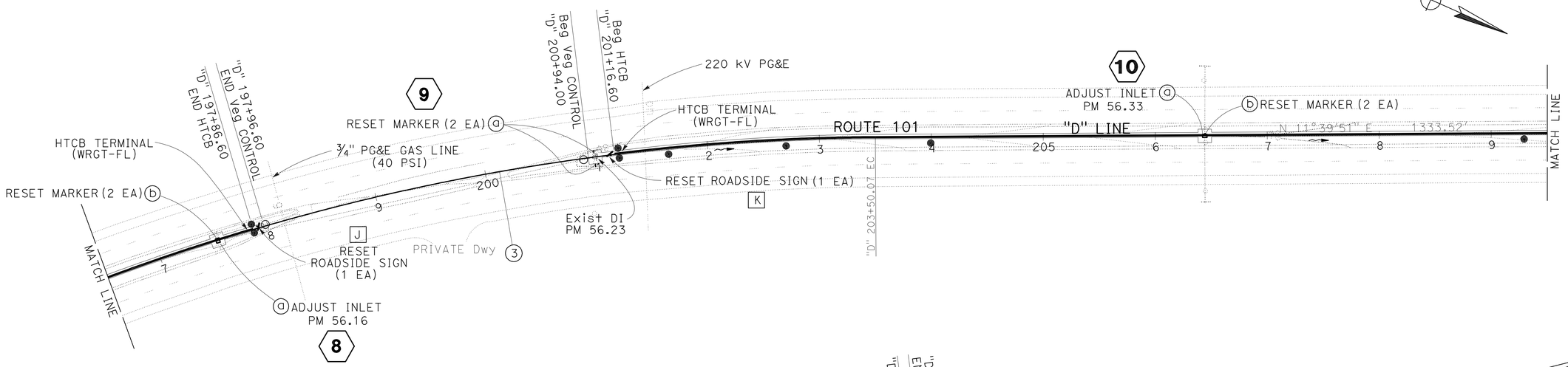

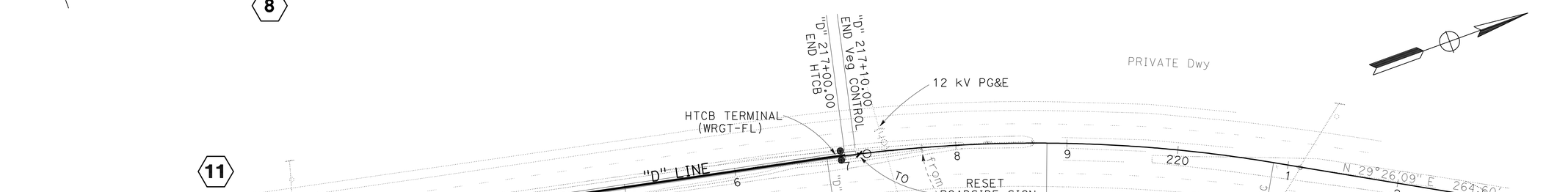

LAYOUT L-3

SCALE: 1" = 50′

STATE OF CALIFORNIA - DEPARTMENT OF TRANSPORTATION
Caltrans® DESIGN

FUNCTIONAL SUPERVISOR: KELLY TIMMONS
CALCULATED-DESIGNED BY: ERIC SHADA
CHECKED BY
REVISED BY
DATE REVISED

LAST REVISION 00-00-00 | DATE PLOTTED => 23-APR-2013 | TIME PLOTTED => 11:08

Dist	COUNTY	ROUTE	POST MILES TOTAL PROJECT	SHEET No.	TOTAL SHEETS
01	Hum	101	54.3/56.8	6	18

REGISTERED CIVIL ENGINEER — DATE 1-10-13

February 27, 2013
PLANS APPROVAL DATE

REGISTERED PROFESSIONAL ENGINEER Caren E. Coonrod No. 63231 Exp. 6-30-14 CIVIL STATE OF CALIFORNIA

THE STATE OF CALIFORNIA OR ITS OFFICERS OR AGENTS SHALL NOT BE RESPONSIBLE FOR THE ACCURACY OR COMPLETENESS OF SCANNED COPIES OF THIS PLAN SHEET.

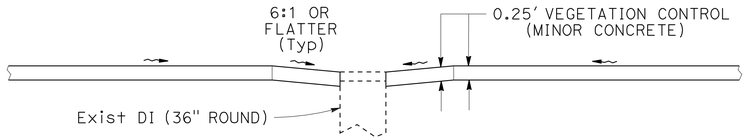

SECTION A-A

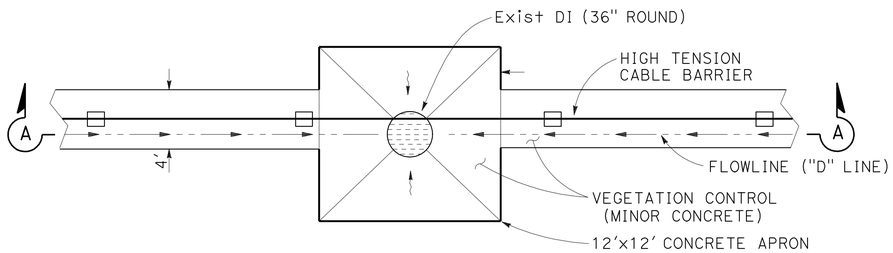

PLAN

CONCRETE APRON DETAIL (CIRCULAR DI)

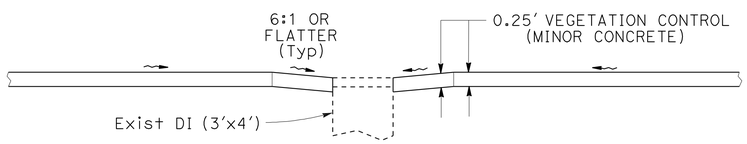

SECTION B-B

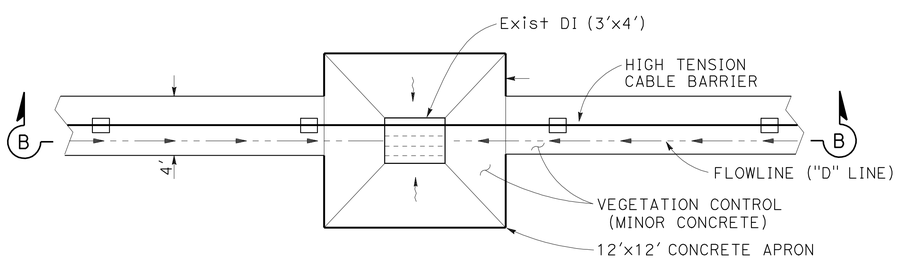

PLAN

CONCRETE APRON DETAIL (RECTANGULAR DI)

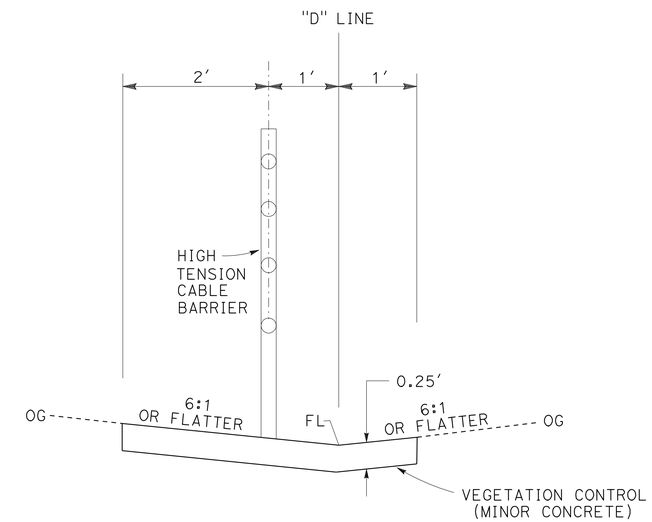

VEGETATION CONTROL (MINOR CONCRETE) DETAIL

NOTE: EXISTING UTILITY FACILITIES HAVE NOT BEEN POSITIVELY LOCATED.

CONSTRUCTION DETAILS

NO SCALE

C-1

STATE OF CALIFORNIA - DEPARTMENT OF TRANSPORTATION
Caltrans®
DESIGN
FUNCTIONAL SUPERVISOR: KELLY TIMMONS
CALCULATED-DESIGNED BY: ERIC SHADA
CHECKED BY
REVISED BY
DATE REVISED

LAST REVISION 00-00-00
DATE PLOTTED => 23-APR-2013
TIME PLOTTED => 11:08

Dist	COUNTY	ROUTE	POST MILES TOTAL PROJECT	SHEET No.	TOTAL SHEETS
01	Hum	101	54.3/56.8	7	18

Caren Coonrod 1-10-13
REGISTERED CIVIL ENGINEER DATE

February 27, 2013
PLANS APPROVAL DATE

REGISTERED PROFESSIONAL ENGINEER Caren E. Coonrod No. 63231 Exp. 6-30-14 CIVIL STATE OF CALIFORNIA

THE STATE OF CALIFORNIA OR ITS OFFICERS OR AGENTS SHALL NOT BE RESPONSIBLE FOR THE ACCURACY OR COMPLETENESS OF SCANNED COPIES OF THIS PLAN SHEET.

NOTES:

1. DETAILS DEPICT MAIN RUNS OF CABLE BARRIER. ANCHOR DETAILS PER MANUFACTURER.

ABBREVIATIONS

HTCB = HIGH TENSION CABLE BARRIER

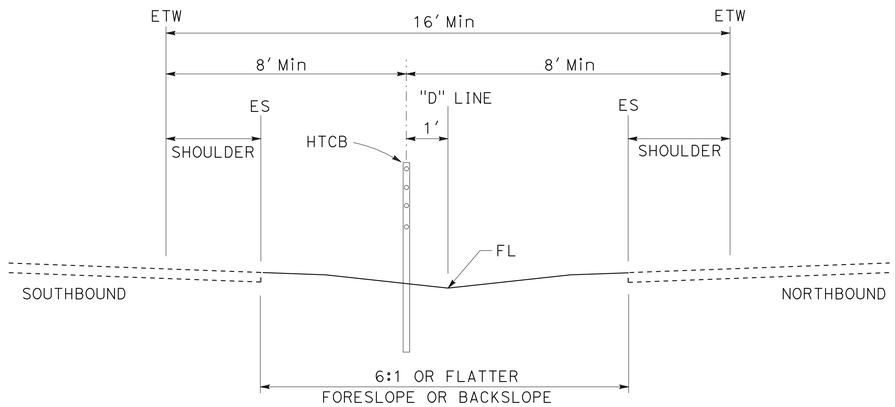

HTCB PLACEMENT AT NARROW MEDIAN

"D" 118+61.50 TO "D" 141+96.50
"D" 147+46.60 TO "D" 157+71.60
"D" 160+46.60 TO "D" 183+46.60
"D" 186+96.60 TO "D" 197+86.60
"D" 201+16.60 TO "D" 217+00.00

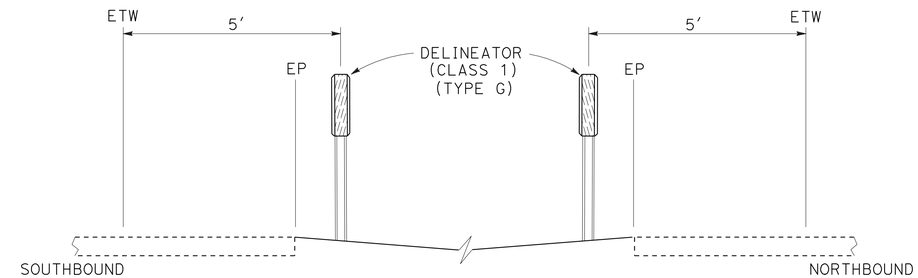

DELINEATOR PLACEMENT (CLASS 1)

"D" 118+00.00 TO "D" 220+00.00

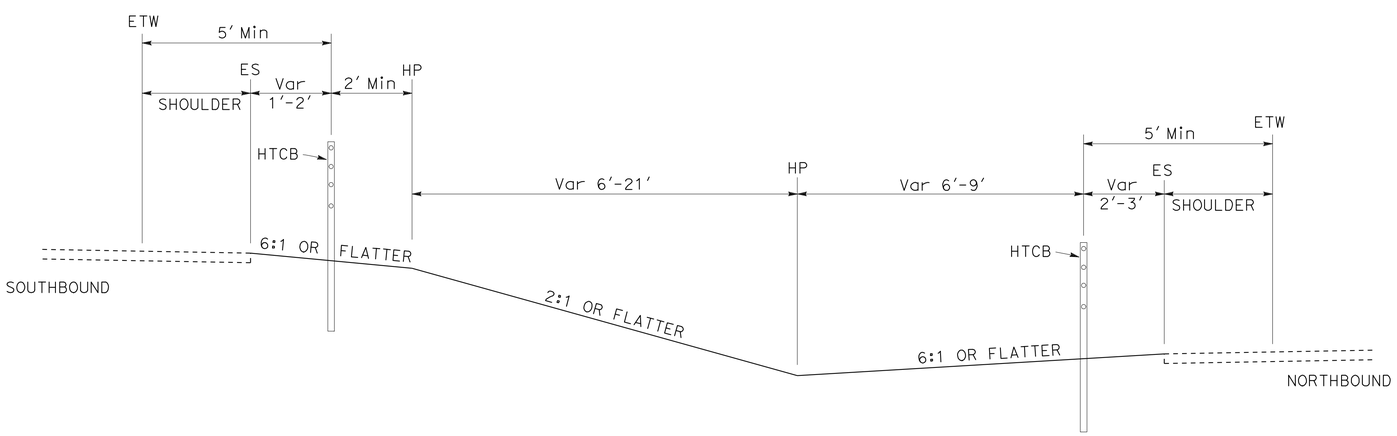

HTCB PLACEMENT AT VERTICALLY OFFSET LANES

"D" 100+50.00 TO "D" 114+12.50

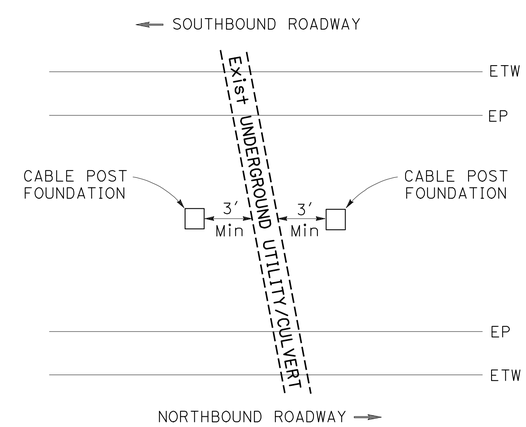

BURIED FACILITY DETAIL

CONSTRUCTION DETAILS
C-2

NO SCALE

STATE OF CALIFORNIA - DEPARTMENT OF TRANSPORTATION
Caltrans® DESIGN
FUNCTIONAL SUPERVISOR KELLY TIMMONS
CALCULATED-DESIGNED BY ERIC SHADA
CHECKED BY
REVISED BY
DATE REVISED

LAST REVISION 00-00-00
DATE PLOTTED => 23-APR-2013
TIME PLOTTED => 11:08

Dist	COUNTY	ROUTE	POST MILES TOTAL PROJECT	SHEET No.	TOTAL SHEETS
01	Hum	101	54.3/56.8	8	18

LICENSED LANDSCAPE ARCHITECT

February 27, 2013
PLANS APPROVAL DATE

LICENSED LANDSCAPE ARCHITECT
James S Hibbert III LA 5136
Signature
5/31/13
Renewal Date
Date
STATE OF CALIFORNIA

THE STATE OF CALIFORNIA OR ITS OFFICERS OR AGENTS SHALL NOT BE RESPONSIBLE FOR THE ACCURACY OR COMPLETENESS OF SCANNED COPIES OF THIS PLAN SHEET.

SEED MIX

SEED	BOTANICAL NAME (COMMON NAME)	PERCENT GERMINATION (MINIMUM)	POUNDS PURE LIVE SEED PER ACRE (SLOPE MEASUREMENT)
MIX 1	AGROSTIS PALLENS THIN GRASS	80	5
	BROMUS MARITIMUS CALIFORNIA BROME, COASTAL	85	11
	DESCHAMPSIA CESPITOSA, NATIVE TUFTED HAIRGRASS, NATIVE	75	9
	ESCHSCHOLZIA CALIFORNICA V. MARITIMA COASTAL CALIFORNIA POPPY	75	2.5
	FESTUCA OCCIDENTALIS WESTERN FESCUE	85	9
	HORDEUM VULGARE VAR "UC937" COMMON BARLEY	90	110

EROSION CONTROL TYPE 1

SEQUENCE	ITEM	MATERIAL		APPLICATION RATE
		DESCRIPTION	TYPE	
STEP 1	COMPOST	COMPOST	MEDIUM	135 CY/ACRE
STEP 2	HYDROSEED	SEED	MIX 1	169 LB/ACRE
		FIBER	COMBINATION	2000 LB/ACRE
STEP 3	HYDROMULCH	FIBER	COMBINATION	2000 LB/ACRE
		TACKIFIER	PSYLLIUM	200 LB/ACRE

EROSION CONTROL QUANTITIES

SHEET	LOCATION	DESCRIPTION	COMPOST	HYDROSEED	HYDROMULCH
	STATION		SQFT	SQFT	SQFT
EC-1	"D" 95+00 TO 114+20	EROSION CONTROL TYPE 1	42,000	42,000	42,000
	"D" 118+40 TO 142+20	EROSION CONTROL TYPE 1	31,500	31,500	31,500
	"D" 145+90 TO 157+85	EROSION CONTROL TYPE 1	16,000	16,000	16,000
	"D" 159+85 TO 183+90	EROSION CONTROL TYPE 1	34,000	34,000	34,000
	"D" 186+10 TO 198+35	EROSION CONTROL TYPE 1	18,000	18,000	18,000
	"D" 200+15 TO 218+10	EROSION CONTROL TYPE 1	19,000	19,000	19,000
		TOTAL	160,500	160,500	160,500

EROSION CONTROL QUANTITIES
ECQ-1

STATE OF CALIFORNIA - DEPARTMENT OF TRANSPORTATION
Caltrans®

SENIOR LANDSCAPE ARCHITECT: RON FLORY
CALCULATED-DESIGNED BY: JIM HIBBERT
CHECKED BY:
REVISED BY:
DATE REVISED: 00/00/00

LAST REVISION 00-00-00
DATE PLOTTED => 23-APR-2013
TIME PLOTTED => 11:08

Dist	COUNTY	ROUTE	POST MILES TOTAL PROJECT	SHEET No.	TOTAL SHEETS
01	Hum	101	54.3/56.8	9	18

REGISTERED CIVIL ENGINEER — DATE 1-10-13

February 27, 2013
PLANS APPROVAL DATE

REGISTERED PROFESSIONAL ENGINEER — Caren E. Coonrod — No. 63231 — Exp. 6-30-14 — CIVIL — STATE OF CALIFORNIA

THE STATE OF CALIFORNIA OR ITS OFFICERS OR AGENTS SHALL NOT BE RESPONSIBLE FOR THE ACCURACY OR COMPLETENESS OF SCANNED COPIES OF THIS PLAN SHEET.

NOTES:

1. MODIFIED INLETS SHALL BE CAST IN PLACE.
2. EXISTING UTILITY FACILITIES HAVE NOT BEEN POSITIVELY LOCATED.

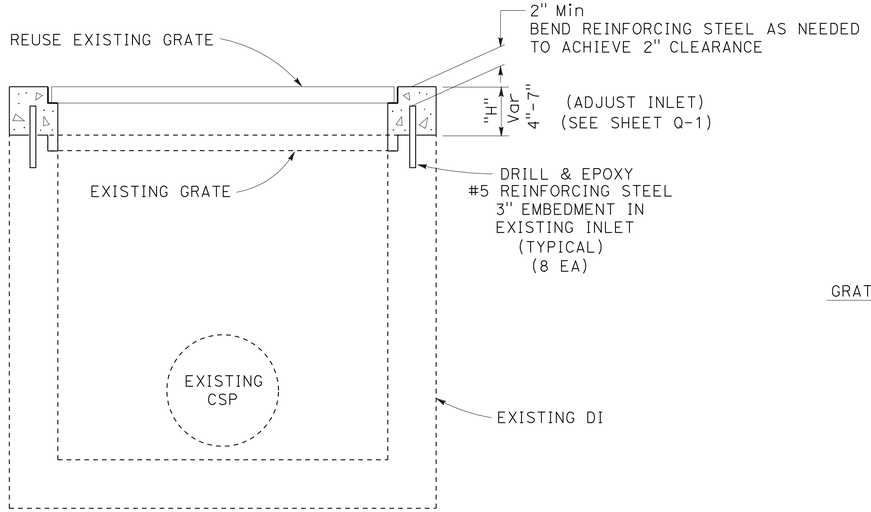

CROSS SECTION

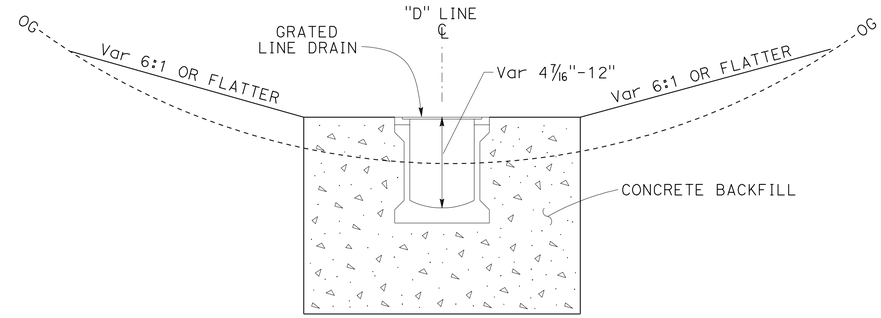

SECTION A-A

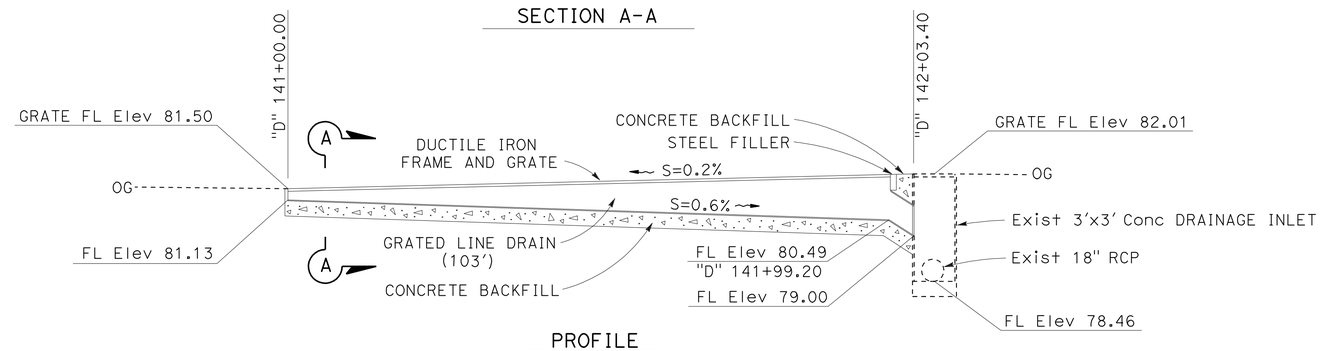

PROFILE

GRATED LINE DRAIN (2) (b)

"D" 141+00.00 TO "D" 142+03.40

NOTE: FOR GRATED LINE DRAIN DETAILS NOT SHOWN SEE STANDARD PLAN D98C.

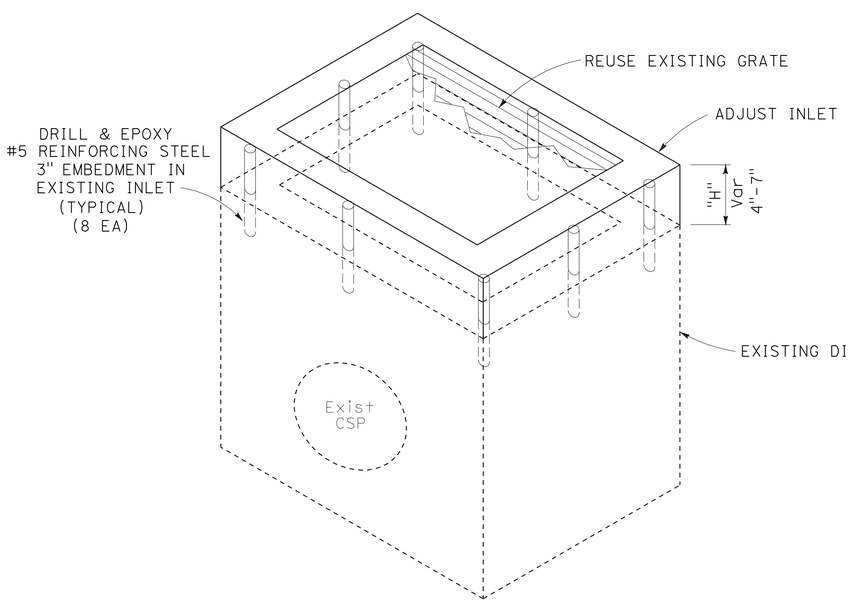

ADJUST INLET

(3) (8) (10) (11)

DRAINAGE QUANTITIES

LAYOUT SHEET No.	DRAINAGE SYSTEM No. (⬡)	DRAINAGE UNIT No. (○)	ADJUST INLET	GRATED LINE DRAIN	RESET MARKER	H (N)	NOTES	STATION	LAYOUT SHEET No.	DRAINAGE SYSTEM No. (⬡)	DRAINAGE UNIT No. (○)
			EA	LF	EA	FT					
L-1	1	a			2		PM 54.86	"D" 129+18.09	L-1	1	a
L-1/L-2	2	a			2		PM 55.14	"D" 142+04.84	L-1/L-2	2	a
		b		103			See Drainage Details				b
L-2	3	a	1			0.3	GRATE TYPE 24-12X		L-2	3	a
		b			2		PM 55.24	"D" 149+45.15			b
L-2	4	a			2		PM 55.49		L-2	4	a
L-2	5	a			2		PM 55.55		L-2	5	a
L-2	6	a			2		PM 55.64	"D" 173+98.18	L-2	6	a
L-2	7	a			2		PM 55.84	"D" 180+85.67	L-2	7	a
L-3	8	a	1			0.6	GRATE TYPE 24-12X		L-3	8	a
		b			2		PM 56.16	"D" 197+53.21			b
L-3	9	a			2		PM 56.23		L-3	9	a
L-3	10	a	1			0.3	GRATE TYPE 24-12X		L-3	10	a
		b			2		PM 56.33	"D" 206+44.12			b
L-3	11	a	1			0.3	GRATE TYPE 24-12X		L-3	11	a
		b			2		PM 56.43	"D" 212+00.00			b
TOTAL			4	103	22						

DRAINAGE DETAILS AND QUANTITIES

DD-1

NO SCALE

STATE OF CALIFORNIA - DEPARTMENT OF TRANSPORTATION — DESIGN

FUNCTIONAL SUPERVISOR: KELLY TIMMONS

CALCULATED-DESIGNED BY: ERIC SHADA

CHECKED BY

REVISED BY

DATE REVISED

LAST REVISION 00-00-00

DATE PLOTTED => 23-APR-2013
TIME PLOTTED => 11:08

Dist	COUNTY	ROUTE	POST MILES TOTAL PROJECT	SHEET No.	TOTAL SHEETS
01	Hum	101	54.3/56.8	10	18

REGISTERED CIVIL ENGINEER — DATE 1-10-13

February 27, 2013
PLANS APPROVAL DATE

REGISTERED PROFESSIONAL ENGINEER Caren E. Coonrod No. 63231 Exp. 6-30-14 CIVIL STATE OF CALIFORNIA

THE STATE OF CALIFORNIA OR ITS OFFICERS OR AGENTS SHALL NOT BE RESPONSIBLE FOR THE ACCURACY OR COMPLETENESS OF SCANNED COPIES OF THIS PLAN SHEET.

STATIONARY MOUNTED CONSTRUCTION AREA SIGNS

◯	TYPE	SIGN MESSAGE	PANEL SIZE (IN)	No. OF POSTS AND SIZE (IN)	No. OF SIGNS
A	C40(CA)	TRAFFIC FINES DOUBLED IN CONSTRUCTION ZONE	144 x 60	2 - 6 x 8	2
B	W11-1	BICYCLE SYMBOL	36 x 36	1 - 4 x 6	2
	W16-1	SHARE THE ROAD	24 x 30		
C	W20-1	ROAD WORK AHEAD	48 x 48	2 - 4 x 6	2
	C23-B(CA)	MEDIAN BARRIER	36 x 24		
D	W20-1	ROAD WORK AHEAD	36 x 36	1 - 4 x 6	6
E	G20-2	END ROAD WORK	48 x 24	1 - 4 x 6	2

NOTE: EXACT SIGN LOCATION TO BE DETERMINED BY THE ENGINEER.

NOTES:

1. A MINIMUM OF 500' MUST BE PLACED BETWEEN SIGNS "A" AND "C" AND A MINIMUM OF 1000' BETWEEN "C" THE BEGINNING OF THE PROJECT.
2. EXISTING UTILITIES HAVE NOT BEEN POSITIVELY LOCATED.

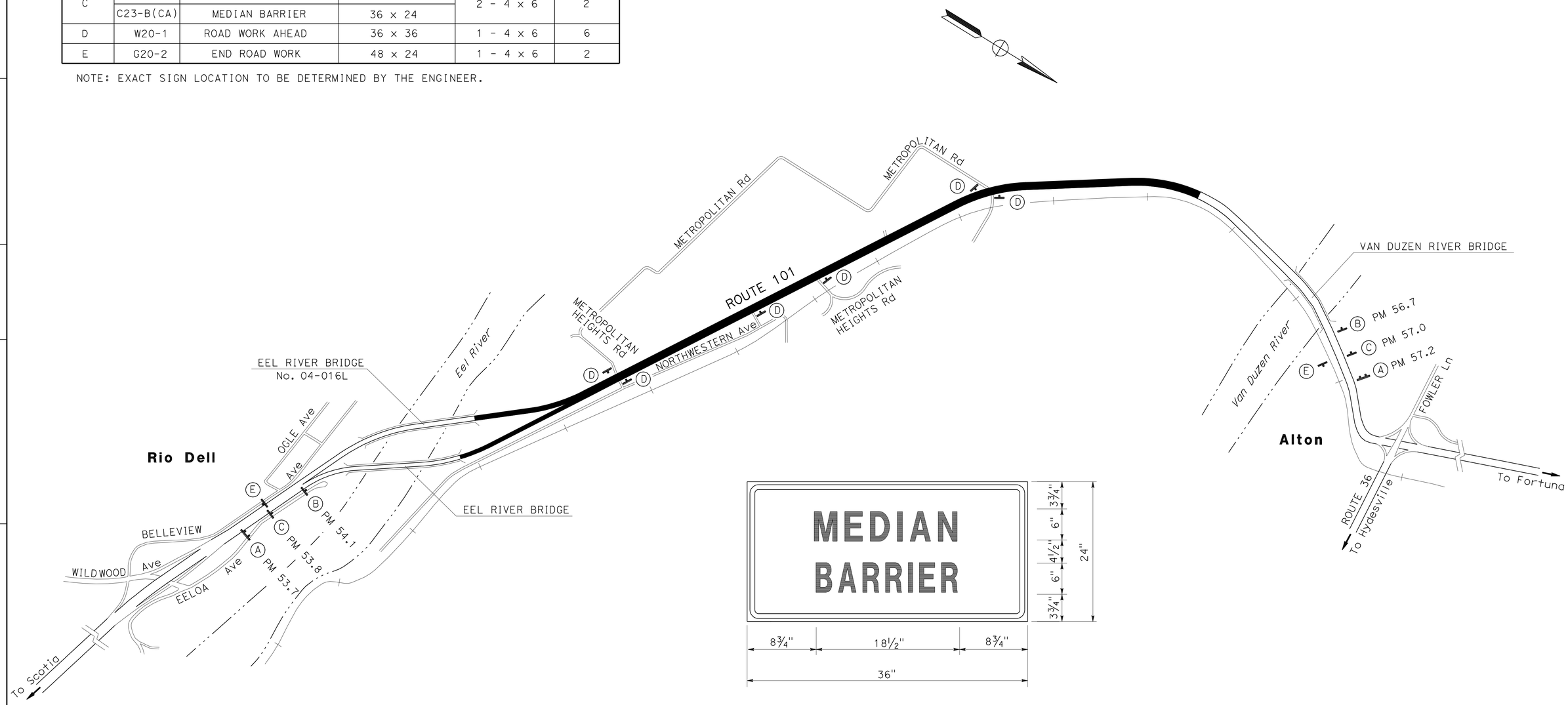

1.5" RADIUS, 0.6" BORDERS, 0.4" INDENT, BLACK ON ORANGE;

C23B SIGN PANEL DETAIL

PLACE UNDER W20-1 SIGN

THIS PLAN ACCURATE FOR CONSTRUCTION AREA SIGNS ONLY

CONSTRUCTION AREA SIGNS
CS-1

STATE OF CALIFORNIA - DEPARTMENT OF TRANSPORTATION
Caltrans® DESIGN

FUNCTIONAL SUPERVISOR: KELLY TIMMONS
CALCULATED-DESIGNED BY: ERIC SHADA
CHECKED BY
REVISED BY
DATE REVISED

LAST REVISION 00-00-00
DATE PLOTTED => 23-APR-2013
TIME PLOTTED => 11:08

Dist	COUNTY	ROUTE	POST MILES TOTAL PROJECT	SHEET No.	TOTAL SHEETS
01	Hum	101	54.3/56.8	11	18

REGISTERED CIVIL ENGINEER — DATE 1-10-13

February 27, 2013
PLANS APPROVAL DATE

REGISTERED PROFESSIONAL ENGINEER Caren E. Coonrod No. 63231 Exp. 6-30-14 CIVIL STATE OF CALIFORNIA

THE STATE OF CALIFORNIA OR ITS OFFICERS OR AGENTS SHALL NOT BE RESPONSIBLE FOR THE ACCURACY OR COMPLETENESS OF SCANNED COPIES OF THIS PLAN SHEET.

LEGEND

HTCB = HIGH TENSION CABLE BARRIER

ROADWAY QUANTITIES

LOCATION "D" LINE FROM	LOCATION "D" LINE TO	ROADWAY EXCAVATION	IMPORTED BORROW	VEGETATION CONTROL (MINOR CONCRETE)	COMMENTS
		CY		SQYD	
100+00.0	114+12.5	21	154		
100+00.0	114+13.0			628	ADJACENT TO SB TRAFFIC
108+90.0	114+13.0			228	ADJACENT TO NB TRAFFIC
118+44.0	142+50.0	28	331		
118+44.0	142+13.5			1263	
146+00.0	158+00.0	3	210		
147+36.6	157+81.6			480	
160+00.0	184+00.0	12	506		
160+36.6	183+56.6			1095	
186+00.0	198+50.0	7	227		
186+36.6	197+96.6			532	
201+00.0	218+50.0	22	157		
201+01.6	217+10.0			763	
	TOTAL	93	1585	4988	

BARRIER RAIL

LOCATION "D" LINE FROM	LOCATION "D" LINE TO	SALVAGE MBGR	MBGR	ALTERNATIVE FLARED TERMINAL SYSTEM	HTCB (10.5' POST SPACING)	HTCB TERMINAL GUARDRAIL ATTACHMENT	HTCB TERMINAL WRGT-FL	(N) HTC LENGTH	(N) BARRIER MOUNTED DELINEATOR	COMMENTS
		LF		EA	LF	EA		LF	EA	
100+25.0 L†	101+12.5 L†	37.5	50	1						ADJACENT TO SB TRAFFIC
100+25.0 L†	101+69.5 L†					1		144.5		ADJACENT TO SB TRAFFIC
101+69.5 R†	113+86.5 R†				1217.0			1217.0		ADJACENT TO NB TRAFFIC
109+00.0	109+26.0						1	26.0	4	
109+26.0	113+86.5				460.5			460.5	12	
113+86.5	114+12.5						2	52.0	8	
118+61.5	118+87.5						1	26.0	4	
118+87.5	141+70.5				2283.0			2283.0	57	
141+70.5	141+96.5						1	26.0	4	
147+46.6	147+72.6						1	26.0	4	
147+72.6	157+45.6				973.0			973.0	24	
157+45.6	157+71.6						1	26.0	4	
160+46.6	160+72.6						1	26.0	4	
160+72.6	183+20.6				2248.0			2248.0	56	
183+20.6	183+46.6						1	26.0	4	
186+96.6	187+22.6						1	26.0	4	
187+22.6	197+60.6				1038.0			1038.0	26	
197+60.6	197+86.6						1	26.0	4	
201+16.6	201+42.6						1	26.0	4	
201+42.6	216+74.0				1531.4			1531.4	38	
216+74.0	217+00.0						1	26.0	4	
	SUBTOTAL					1	13			
	TOTAL	37.5	50	1	9750.9	14		10233.4	265	

(N) NOT A PAY ITEM. FOR INFORMATION ONLY.

SUMMARY OF QUANTITIES
Q-1

STATE OF CALIFORNIA - DEPARTMENT OF TRANSPORTATION
Caltrans® DESIGN

FUNCTIONAL SUPERVISOR: KELLY TIMMONS
CALCULATED-DESIGNED BY: ERIC SHADA
CHECKED BY
REVISED BY
DATE REVISED

LAST REVISION 00-00-00
DATE PLOTTED => 23-APR-2013
TIME PLOTTED => 11:08

Dist	COUNTY	ROUTE	POST MILES TOTAL PROJECT	SHEET No.	TOTAL SHEETS
01	Hum	101	54.3/56.8	12	18

REGISTERED CIVIL ENGINEER — DATE 1-10-13

February 27, 2013
PLANS APPROVAL DATE

REGISTERED PROFESSIONAL ENGINEER Caren E. Coonrod No. 63231 Exp. 6-30-14 CIVIL STATE OF CALIFORNIA

THE STATE OF CALIFORNIA OR ITS OFFICERS OR AGENTS SHALL NOT BE RESPONSIBLE FOR THE ACCURACY OR COMPLETENESS OF SCANNED COPIES OF THIS PLAN SHEET.

TEMPORARY EROSION CONTROL

LOCATION "D" LINE	TEMPORARY FIBER ROLL	TEMPORARY CHECK DAM	TEMPORARY DRAIN INLET PROTECTION	TEMPORARY HYDRAULIC MULCH
	LF		EA	SQYD
100+00.00 TO 218+05.00	1030	1030		4090
129+18.09			1	
141+00.00 TO 142+00.00	200			
142+04.84			1	
149+45.15			1	
162+35.13			1	
170+35.27			1	
173+98.18			1	
180+85.67			1	
197+53.21			1	
201+00.00			1	
206+44.12			1	
212+00.00			1	
TOTAL	1230	1030	11	4090

NOTE: EXACT LOCATIONS TO BE DETERMINED BY THE ENGINEER.

OBJECT MARKER

LOCATION "D" LINE	OBJECT MARKER (TYPE K-1)
	EA
114+20	1
118+40	1
142+05	1
146+00	1
158+00	1
159+90	1
183+60	1
186+90	1
198+00	1
200+90	1
297+20	1
TOTAL	12

ROADWAY SIGN QUANTITIES

LOCATION "D" LINE	SIGN	TYPE	SIGN MESSAGE	PANEL SIZE INCHES	COLOR	DIRECTION	POST HEIGHT FT	NUMBER OF POSTS AND SIZE INCHES	RESET ROADSIDE SIGN EA
114+13	A	R5-1	DO NOT ENTER	36 x 36	WHITE / RED	FSBT	7	1 - 4 x 6	1
		R5-1a	WRONG WAY	36 x 21					
118+55	B	R5-1	DO NOT ENTER	36 x 36	WHITE / RED	FNBT	7	1 - 4 x 6	1
		R5-1a	WRONG WAY	36 x 21					
118+60	C	R3-5L	LT TURN ONLY	30 x 36	BLACK / WHITE	FSBT	7	1 - 4 x 6	1
142+13	D	R5-1	DO NOT ENTER	36 x 36	WHITE / RED	FSBT	7	1 - 4 x 6	1
		R5-1a	WRONG WAY	36 x 21					
146+20	E	R5-1	DO NOT ENTER	36 x 36	WHITE / RED	FNBT	7	1 - 4 x 6	1
		R5-1a	WRONG WAY	36 x 21					
157+90	F	R6-1R	ONE WAY (ARROW)	48 x 16	BLACK / WHITE	FWBT	9	1 - 6 x 6	1
		R5-1	DO NOT ENTER	36 x 36	WHITE / RED	FSBT			
		R5-1a	WRONG WAY	36 x 21					
159+90	G	R5-1	DO NOT ENTER	36 x 36	WHITE / RED	FNBT	7	1 - 4 x 6	1
		R5-1a	WRONG WAY	36 x 21					
183+46	H	R6-1R	ONE WAY (ARROW)	48 x 16	BLACK / WHITE	FWBT	9	1 - 6 x 6	1
		R5-1	DO NOT ENTER	36 x 36	WHITE / RED	FSBT			
		R5-1a	WRONG WAY	36 x 21					
186+20	I	R6-1R	ONE WAY (ARROW)	48 x 16	BLACK / WHITE	FEBT	9	1 - 6 x 6	1
		R5-1	DO NOT ENTER	36 x 36	WHITE / RED	FNBT			
		R5-1a	WRONG WAY	36 x 21					
197+90	J	R5-1	DO NOT ENTER	36 x 36	WHITE / RED	FSBT	7	1 - 4 x 6	1
		R5-1a	WRONG WAY	36 x 21					
201+05	K	R5-1	DO NOT ENTER	36 x 36	WHITE / RED	FNBT	7	1 - 4 x 6	1
		R5-1a	WRONG WAY	36 x 21					
217+60	L	R5-1	DO NOT ENTER	36 x 36	WHITE / RED	FSBT	7	1 - 4 x 6	1
		R5-1a	WRONG WAY	36 x 21					
								TOTAL	12

NOTE: EXACT SIGN LOCATION TO BE DETERMINED BY THE ENGINEER.

DELINEATORS

LOCATION "D" LINE		REMOVE DELINEATOR	DELINEATOR (CLASS 1) (TYPE G)		SPACING
			FSBT	FNBT	
FROM	TO	EA			FT
100+00.0	114+12.5	10			
114+14.0			1	1	
118+44.0	142+50.0	11			
118+50.0			1	1	
119+50.0	140+50.0			5	525
142+00.0			1	1	
146+00.0	158+00.0	5	1	3	525
160+00.0	184+00.0	22			
160+00.0			1	1	
165+25.0	174+00.0			8	125
176+50.0	181+25.0			2	525
183+25.0			1	1	
186+00.0	198+50.0	15			
187+00.0	198+00.0		2	10	125
201+00.0	204+00.0		1	4	125
201+00.0	218+50.0	11			
209+25.0	217+00.0		1	3	525
	SUBTOTAL	84	10	40	
	TOTAL	84	50		

SUMMARY OF QUANTITIES
Q-2

STATE OF CALIFORNIA - DEPARTMENT OF TRANSPORTATION
Caltrans® DESIGN
FUNCTIONAL SUPERVISOR: KELLY TIMMONS
CALCULATED-DESIGNED BY: ERIC SHADA
CHECKED BY
REVISED BY
DATE REVISED

LAST REVISION 00-00-00
DATE PLOTTED => 23-APR-2013
TIME PLOTTED => 11:08

Dist	COUNTY	ROUTE	POST MILES TOTAL PROJECT	SHEET No.	TOTAL SHEETS
01	Hum	101	54.3/56.8	13	18

REGISTERED CIVIL ENGINEER 12-7-12 DATE

February 27, 2013
PLANS APPROVAL DATE

REGISTERED PROFESSIONAL ENGINEER Gurinderpal Bhullar No. C48815 Exp. 9-30-14 CIVIL STATE OF CALIFORNIA

THE STATE OF CALIFORNIA OR ITS OFFICERS OR AGENTS SHALL NOT BE RESPONSIBLE FOR THE ACCURACY OR COMPLETENESS OF SCANNED COPIES OF THIS PLAN SHEET.

NOTES:

Unless otherwise specified in the special provisions, all temporary warning signs shall have black legend on orange background.

California code are designated by (CA). Otherwise, Federal (MUTCD) codes are shown.

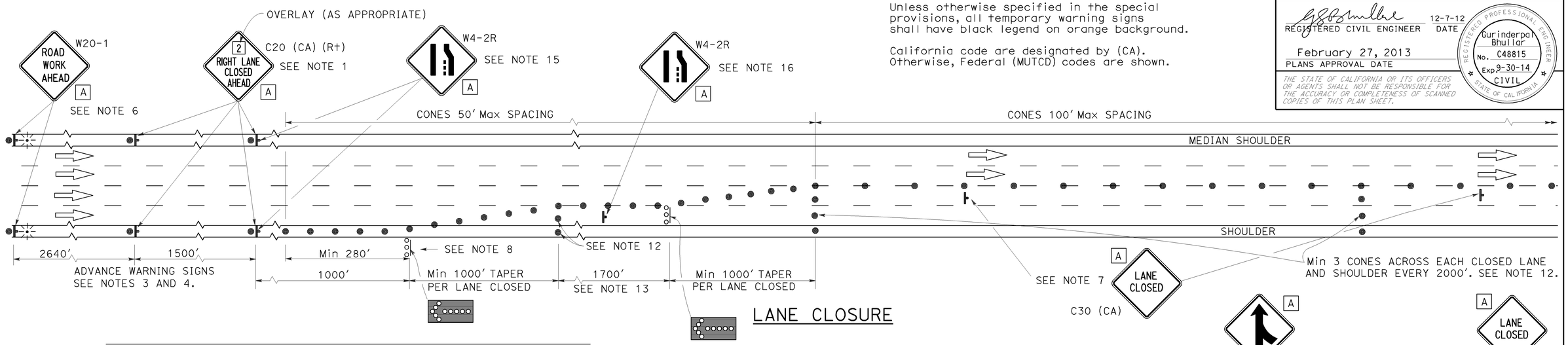

LANE CLOSURE

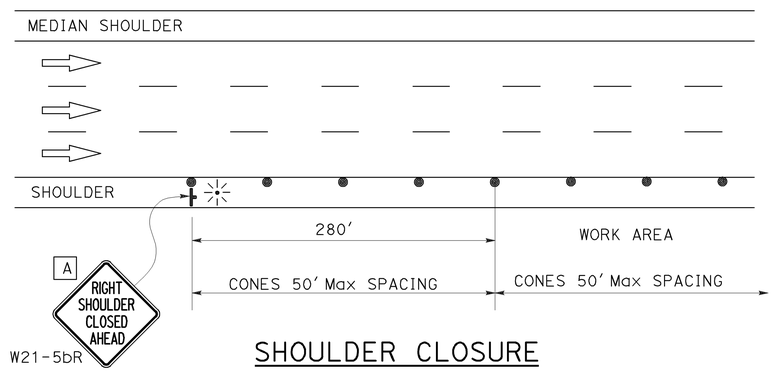

SHOULDER CLOSURE

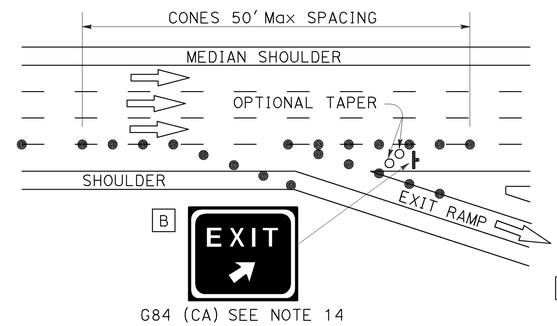

LANE CLOSURE AT EXIT RAMP

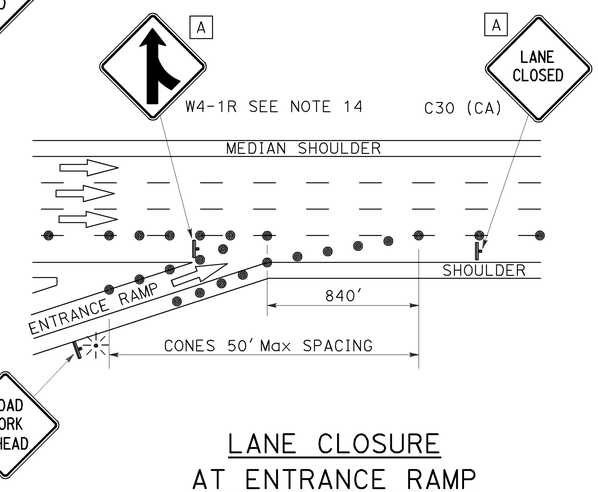

LANE CLOSURE AT ENTRANCE RAMP

NOTES:

1. Median lane closures shall conform to the details for outside lane closures except that C20 (CA) (Lt) signs shall be used.
2. At least one person shall be assigned to provide full time maintenance of traffic control devices for lane closures.
3. Duplicate sign installations are not required:
   a) On opposite shoulder if at least one-half of the available lanes remain open to traffic.
   b) In the median if the width of the median shoulder is less than 8' and the outside lanes are to be closed.
4. Each advance warning sign on each side of the roadway shall be equipped with at least two flags for daytime closure. Each flag shall be at least 16" x 16" in size and shall be orange or fluorescent red-orange in color. Flashing beacons shall be placed at the locations indicated for lane closure during hours of darkness.
5. A C14 (CA) "END ROAD WORK" sign, as appropriate, shall be placed at the end of the lane closure unless the end of work area is obvious or ends within a larger project's limits.
6. If the W20-1 sign would follow within 2000' of a stationary W20-1 or C11 (CA) "ROAD WORK NEXT _____ MILES", use a C20 (CA) sign for the first advance warning sign.
7. Place a C30 (CA) sign every 2000' throughout length of lane closure.
8. One flashing arrow sign for each lane closed. The first flashing arrow sign shall be Type I. All others may be either Type I or Type II.
9. A minimum 1500' of sight distance shall be provided where possible for vehicles approaching the first flashing arrow sign. Lane closures shall not begin at top of crest vertical curve or on a horizontal curve.
10. All cones used for lane closures during the hours of darkness shall be fitted with retroreflective bands (or sleeves) as specified in the specifications.
11. Portable delineators, placed at one-half the spacing indicated for traffic cones may be used instead of cones for daytime closures only.
12. Unless otherwise specified in the special provisions, a minimum of 3 cones shall be placed transversely across each closed lane and shoulder at each location where a taper across a traffic lane ends and every 2000' as shown on the "Lane Closure" detail. Two Type II barricades may be used instead of the 3 cones. The transverse alignment of the cones or barricades on the closed shoulder may be shifted from the transverse alignment to provide access to the work.
13. Unless otherwise specified in the special provisions, the 1700' tangent shown along lane lines shall be used between the 1000' tapers required for each closed traffic lane.
14. Unless otherwise specified in the special provisions, the G84 (CA) and W4-1 signs shall be used as shown.
15. When specified in the special provisions, a W4-2 "LANE ENDS" symbol sign is to be used in place of the C20 (CA) "RIGHT LANE CLOSED AHEAD" sign.
16. The W4-2 "LANE ENDS" symbol sign shown at this location is to be used where the W4-2 sign is used as advance warning as described in Note 15.

SIGN PANEL SIZE (Min)

A	48" x 48"
B	54" x 48"

LEGEND

- TRAFFIC CONE
- TRAFFIC CONE (OPTIONAL TAPER)
- TEMPORARY SIGN
- FLASHING ARROW SIGN (FAS)
- FAS SUPPORT OR TRAILER
- PORTABLE FLASHING BEACON

STATE OF CALIFORNIA
DEPARTMENT OF TRANSPORTATION

TRAFFIC CONTROL SYSTEM FOR LANE CLOSURE ON FREEWAYS AND EXPRESSWAYS

NO SCALE

TCS-1

REVISED BY | DATE REVISED | CALCULATED-DESIGNED BY | CHECKED BY | FUNCTIONAL SUPERVISOR

STATE OF CALIFORNIA - DEPARTMENT OF TRANSPORTATION

Caltrans

LAST REVISION 00-00-00 | DATE PLOTTED => 10-DEC-2012 | TIME PLOTTED => 09:45

Dist	COUNTY	ROUTE	POST MILES TOTAL PROJECT	SHEET No.	TOTAL SHEETS
01	Hum	101	54.3/56.8	14	18

Randell D. Hiatt
REGISTERED CIVIL ENGINEER

October 19, 2012
PLANS APPROVAL DATE

REGISTERED PROFESSIONAL ENGINEER
Randell D. Hiatt
No. C50200
Exp. 6-30-13
CIVIL
STATE OF CALIFORNIA

THE STATE OF CALIFORNIA OR ITS OFFICERS OR AGENTS SHALL NOT BE RESPONSIBLE FOR THE ACCURACY OR COMPLETENESS OF SCANNED COPIES OF THIS PLAN SHEET.

TO ACCOMPANY PLANS DATED February 27, 2013

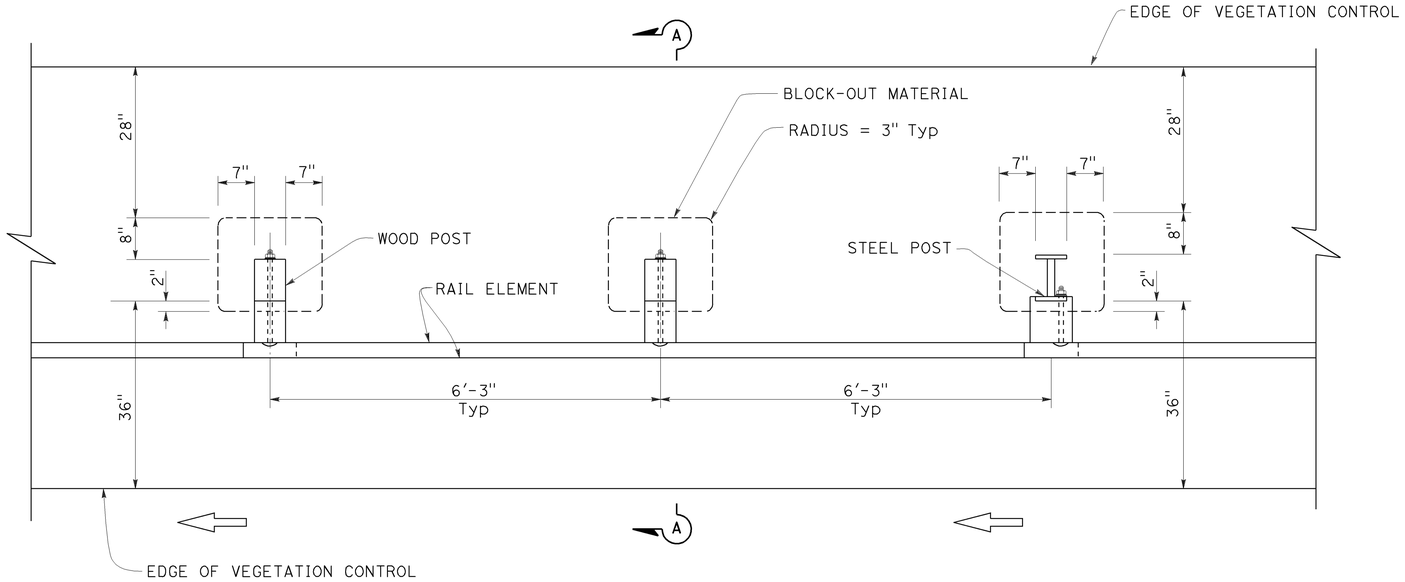

PLAN

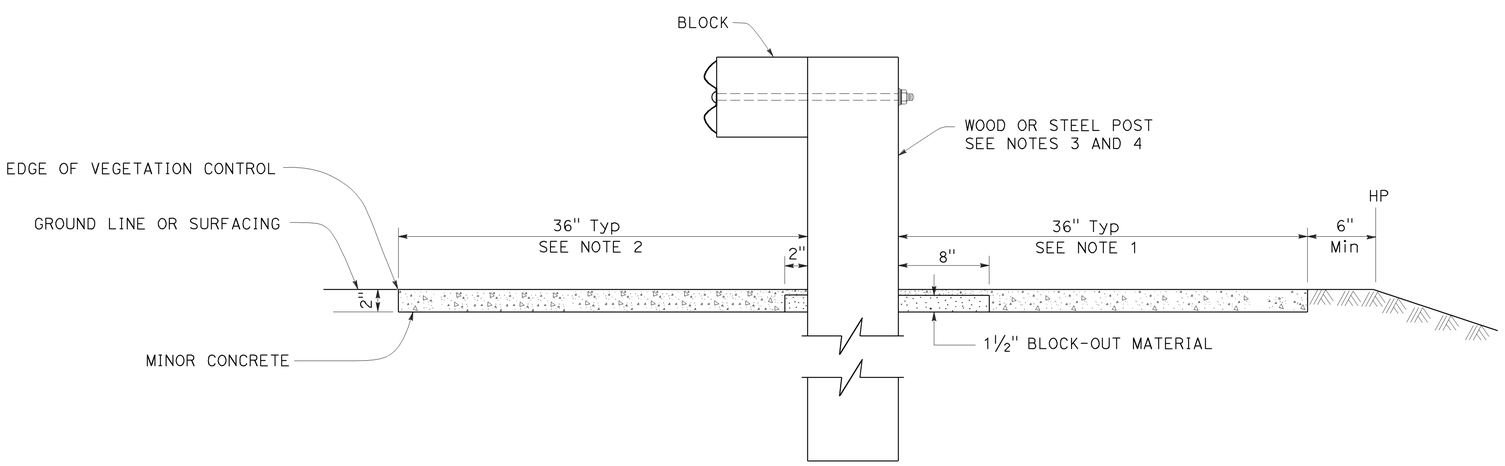

SECTION A-A

NOTES:

1. Where the distance between back of post and hinge point is less than 42", construct vegetation control to 6" from hinge point while maintaining the 8" block-out at back of post. If the 8" block-out at back of post can not be maintained, construct vegetation control flush with the back edge of post.
2. Where dike is constructed under railing, construct vegetation control to back edge of dike. Where paved shoulder is constructed within 36" in front of the post, construct vegetation control to the edge of paved shoulder.
3. For wood post sizes, see Standard Plan A77C1.
4. For steel post sizes, see Standard Plan A77C2.
5. For details not shown, see Standard Plans A77A1 and A77A2.

STATE OF CALIFORNIA
DEPARTMENT OF TRANSPORTATION

METAL BEAM GUARD RAILING TYPICAL VEGETATION CONTROL STANDARD RAILING SECTION

NO SCALE

RSP A77C5 DATED OCTOBER 19, 2012 SUPERSEDES STANDARD PLAN A77C5 DATED MAY 20, 2011 - PAGE 53 OF THE STANDARD PLANS BOOK DATED 2010.

REVISED STANDARD PLAN RSP A77C5

2010 REVISED STANDARD PLAN RSP A77C5

9-26-12

Dist	COUNTY	ROUTE	POST MILES TOTAL PROJECT	SHEET No.	TOTAL SHEETS
01	Hum	101	54.3/56.8	15	18

Randell D. Hiatt
REGISTERED CIVIL ENGINEER

October 19, 2012
PLANS APPROVAL DATE

REGISTERED PROFESSIONAL ENGINEER
Randell D. Hiatt
No. C50200
Exp. 6-30-13
CIVIL
STATE OF CALIFORNIA

THE STATE OF CALIFORNIA OR ITS OFFICERS OR AGENTS SHALL NOT BE RESPONSIBLE FOR THE ACCURACY OR COMPLETENESS OF SCANNED COPIES OF THIS PLAN SHEET.

TO ACCOMPANY PLANS DATED February 27, 2013

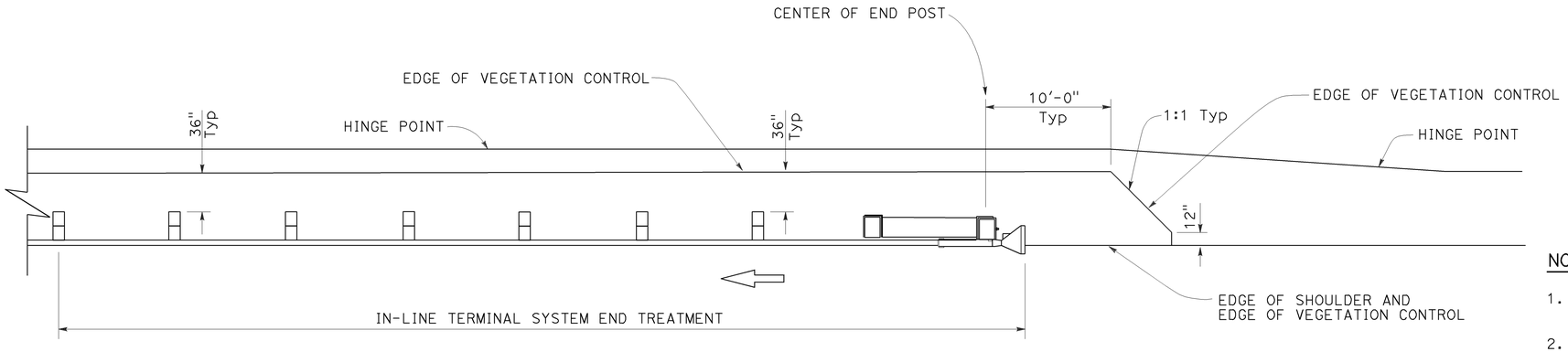

PLAN

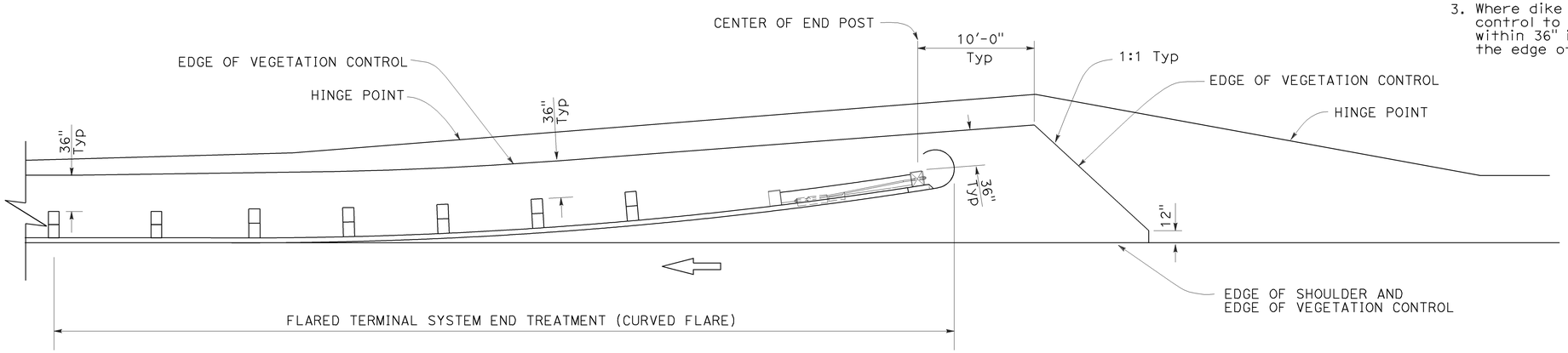

PLAN

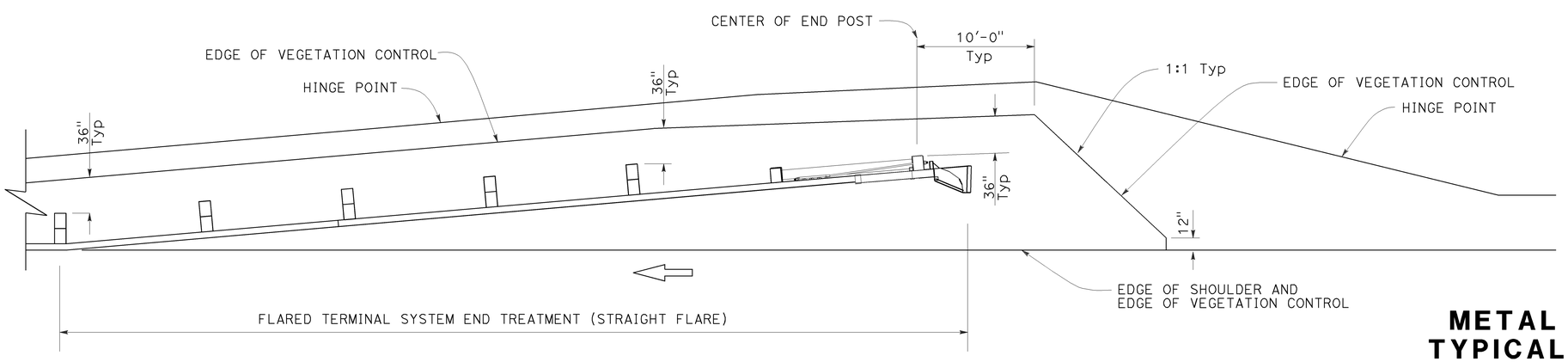

PLAN

NOTES:

1. See Revised Standard Plan RSP A77C5 for additional vegetation control details.
2. Where the distance between back of post and hinge point is less than 42", construct vegetation control to 6" from hinge point while maintaining the 8" block-out at back of post. If the 8" block-out at back of post can not be maintained, construct vegetation control flush with the back edge of post.
3. Where dike is constructed under railing, construct vegetation control to back edge of dike. Where paved shoulder is constructed within 36" in front of the post, construct vegetation control to the edge of paved shoulder.

STATE OF CALIFORNIA
DEPARTMENT OF TRANSPORTATION

METAL BEAM GUARD RAILING TYPICAL VEGETATION CONTROL FOR TERMINAL SYSTEM END TREATMENTS

NO SCALE

RSP A77C6 DATED OCTOBER 19, 2012 SUPERSEDES STANDARD PLAN A77C6 DATED MAY 20, 2011 - PAGE 54 OF THE STANDARD PLANS BOOK DATED 2010.

REVISED STANDARD PLAN RSP A77C6

2010 REVISED STANDARD PLAN RSP A77C6

9-26-12

Dist	COUNTY	ROUTE	POST MILES TOTAL PROJECT	SHEET No.	TOTAL SHEETS
01	Hum	101	54.3/56.8	16	18

Randell D. Hiatt
REGISTERED CIVIL ENGINEER

October 19, 2012
PLANS APPROVAL DATE

REGISTERED PROFESSIONAL ENGINEER
Randell D. Hiatt
No. C50200
Exp. 6-30-13
CIVIL
STATE OF CALIFORNIA

THE STATE OF CALIFORNIA OR ITS OFFICERS OR AGENTS SHALL NOT BE RESPONSIBLE FOR THE ACCURACY OR COMPLETENESS OF SCANNED COPIES OF THIS PLAN SHEET.

TO ACCOMPANY PLANS DATED February 27, 2013

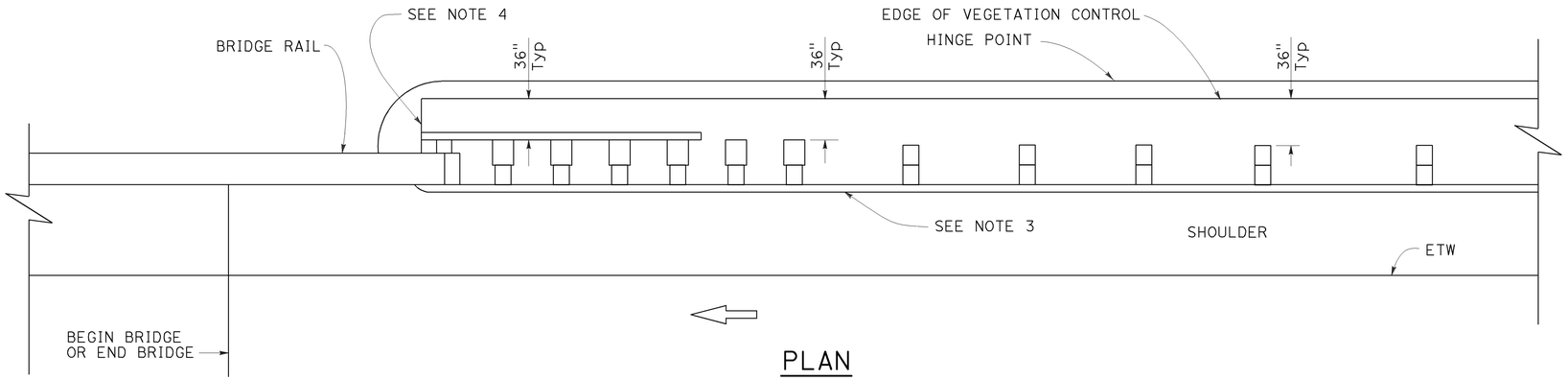

PLAN

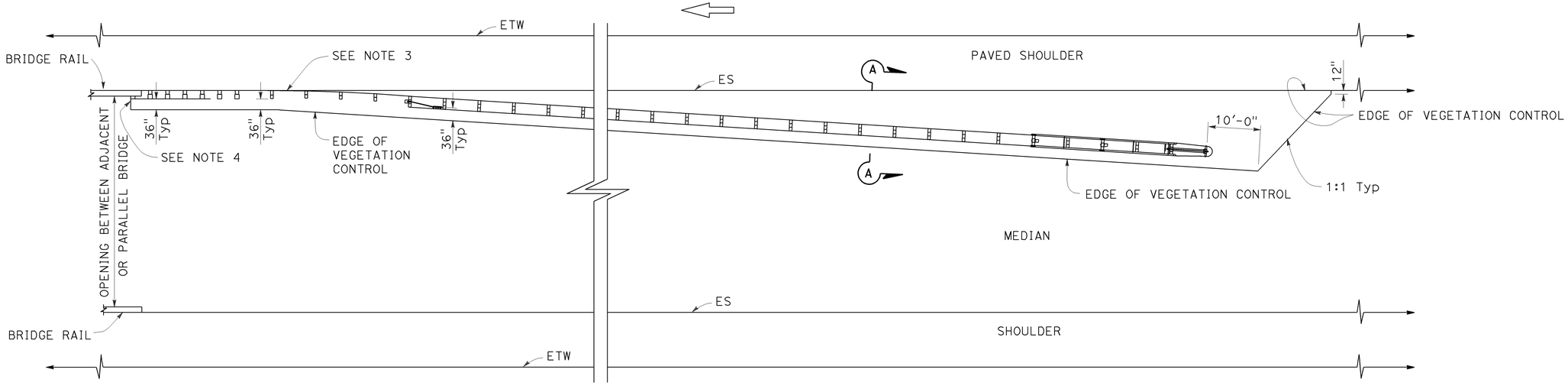

PLAN

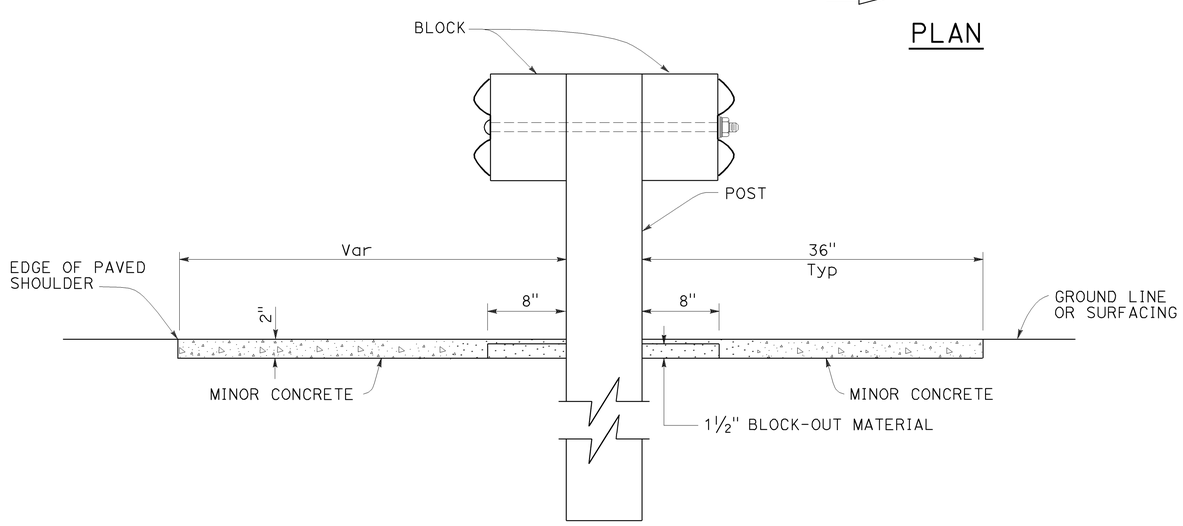

SECTION A-A

NOTES:

1. See Revised Standard Plan RSP A77C5 for additional vegetation control details.
2. Where the distance between back of post and hinge point is less than 42", construct vegetation control to 6" from hinge point while maintaining the 8" block-out at back of post. If the 8" block-out at back of post can not be maintained, construct vegetation control flush with the back edge of post.
3. Where dike is constructed under railing, construct vegetation control to back edge of dike. Where paved shoulder is constructed within 36" in front of the post, construct vegetation control to the edge of paved shoulder.
4. End vegetation control at end of backside rail element.

STATE OF CALIFORNIA
DEPARTMENT OF TRANSPORTATION

METAL BEAM GUARD RAILING TYPICAL VEGETATION CONTROL AT STRUCTURE APPROACH

NO SCALE

RSP A77C7 DATED OCTOBER 19, 2012 SUPERSEDES STANDARD PLAN A77C7 DATED MAY 20, 2011 - PAGE 55 OF THE STANDARD PLANS BOOK DATED 2010.

REVISED STANDARD PLAN RSP A77C7

2010 REVISED STANDARD PLAN RSP A77C7

9-26-12

Dist	COUNTY	ROUTE	POST MILES TOTAL PROJECT	SHEET No.	TOTAL SHEETS
01	Hum	101	54.3/56.8	17	18

REGISTERED CIVIL ENGINEER

July 20, 2012
PLANS APPROVAL DATE

Registered Professional Engineer — Raymond Don Tsztoo No. C37332 Exp. 6-30-14 CIVIL — State of California

THE STATE OF CALIFORNIA OR ITS OFFICERS OR AGENTS SHALL NOT BE RESPONSIBLE FOR THE ACCURACY OR COMPLETENESS OF SCANNED COPIES OF THIS PLAN SHEET.

TO ACCOMPANY PLANS DATED February 27, 2013

2010 REVISED STANDARD PLAN RSP D77A

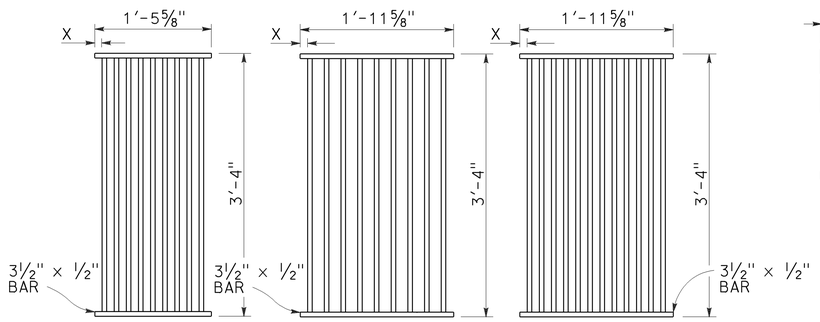

TYPE 18-9

1⅜" Clear spacing. Use within the roadbed on highways where bicycles and pedestrians are excluded.

TYPE 24-9

2" Clear spacing. Use in locations off the roadbed on all types of highways.

TYPE 24-12

1⅜" Clear spacing. Use within the roadbed on highways where bicycles and pedestrians are excluded.

RECTANGULAR GRATE DETAILS

(See table below)

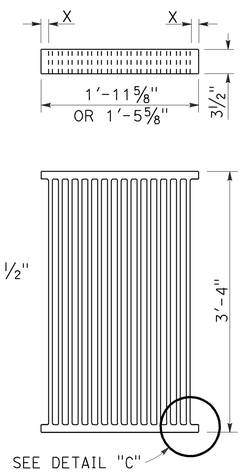

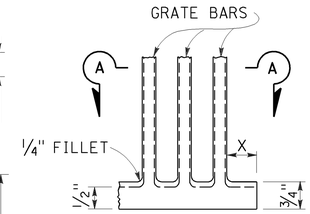

DETAIL "C"

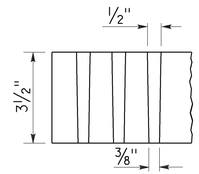

SECTION A-A

ALTERNATIVE CAST DUCTILE IRON GRATE OR CAST CARBON STEEL GRATE

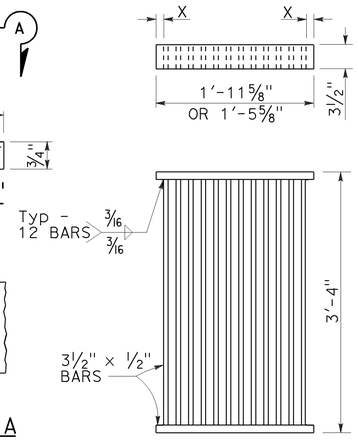

ALTERNATIVE WELDED GRATE

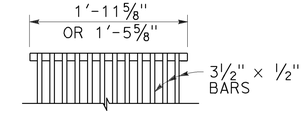

CAST END BLOCK

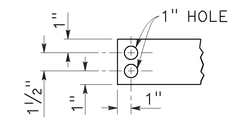

END OF BAR

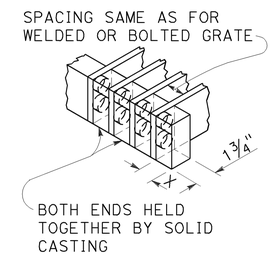

ALTERNATIVE CAST DUCTILE IRON OR CAST CARBON STEEL END BLOCK GRATE

NOTES:

1. Grate type numbers refer to approximate width of grate in inches and number of bars, respectively.
2. Contractor has the option of using cast ductile iron, cast carbon steel, welded, bolted, or cast end block grate.
3. Rounded top of bars optional on all grates.
4. Pipe inlets with a grate shall be placed so that bars parallel direction of principle surface flow.
5. Complete joint penetration butt welds may be substituted for the fillet welds on all anchors.
6. Standard square, hexagon, round or equivalent headed anchors may be substituted for the right angle hooks on the anchors shown on this plan.
7. Grate and frame weights are based on welded grates (weights of face angles, steps, protection bars, etc. are not included).
8. Connect chain to grate and frame only at locations shown on the plans. When chain is required, do not use cast ductile iron grates.

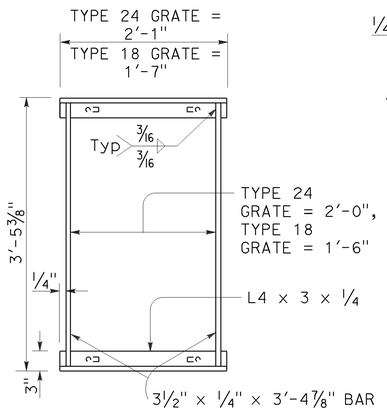

TYPICAL FRAME

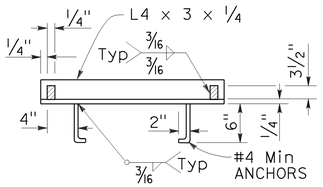

CROSS SECTION

(Thru frame)

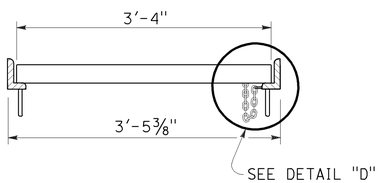

LONGITUDINAL SECTION

(Thru frame and grate)

RECTANGULAR FRAME DETAILS

(For all rectangular grates)

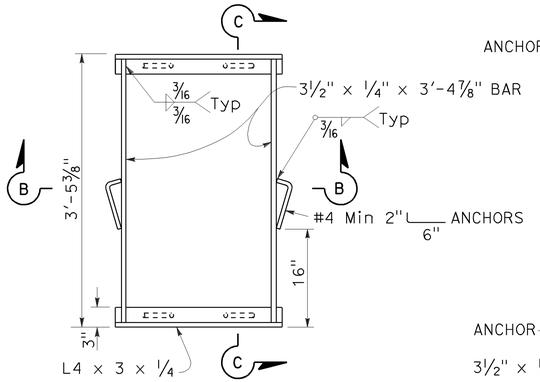

TYPICAL FRAME

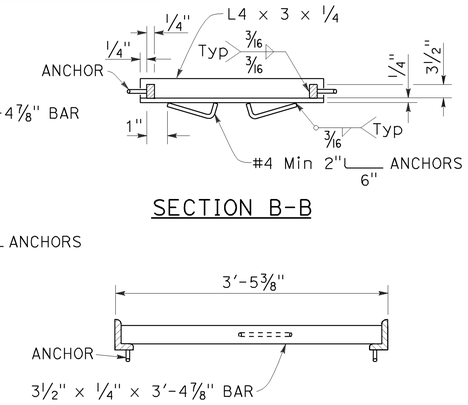

SECTION B-B

SECTION C-C

ALTERNATIVE ANCHOR FOR RECTANGULAR FRAME

(For details not shown, See Rectangular Frame Details)

INLET TYPE	GRATE TYPE	No. OF GRATES	WEIGHT LB
GDO	24-12	2	634
GOL-7	24-12	1	326
GOL-10	24-12	1	326
GO,G1,G2,G3,G4 (TYPE 24)	24-9	1	263
	24-12	1	326
G4 (TYPE 18),G5,G6	18-9	1	249
GT1	18-9	2	498
GT2	18-9	2	498
GT3	24-12	2	652
GT4	24-12	2	652
TRASH RACK			22
GRATE CHAIN			3

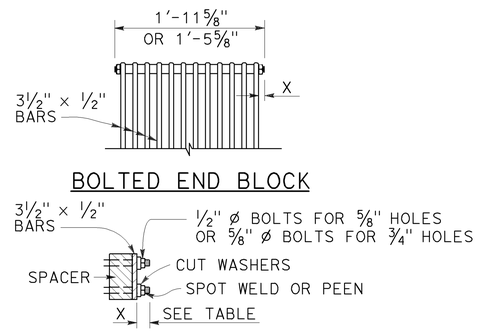

BOLTED END BLOCK

BOLTING DETAIL

ALTERNATIVE BOLTED GRATE

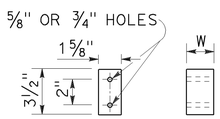

BAR SPACER

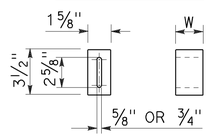

ALTERNATIVE SPACER

W = 1⅜" or 2"

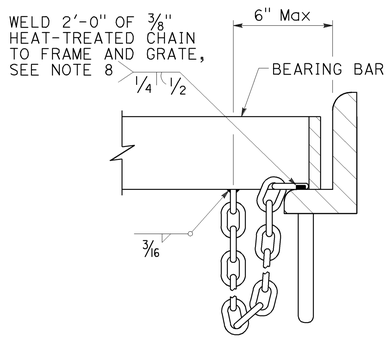

DETAIL "D"

(Steel grates only)

GRATE BAR SPACING TABLE

TYPE	No. OF BARS	CLEAR BAR SPACING	X
18-9	9	1⅜"	1 1/16"
24-9	9	2"	1 9/16"
24-12	12	1⅜"	1¼"

INLET TYPE	COVER TYPE	WEIGHT LB
OS	PLATE	174
OL-7	PLATE	170
OL-10	PLATE	170
OL-14	PLATE	170
OL-21	PLATE	170
OCP	PLATE	112
OCPI	PLATE	112
OCPI	REDWOOD	42
OMP	PLATE	177
OMPI	PLATE	177

BASIS FOR Misc IRON & STEEL FINAL PAY WEIGHTS FOR DRAINAGE INLETS

(See Note 7)

STATE OF CALIFORNIA
DEPARTMENT OF TRANSPORTATION

GRATE DETAILS

NO SCALE

RSP D77A DATED JULY 20, 2012 SUPERSEDES STANDARD PLAN D77A
DATED MAY 20, 2011 - PAGE 164 OF THE STANDARD PLANS BOOK DATED 2010.

REVISED STANDARD PLAN RSP D77A

6-13-12

Dist	COUNTY	ROUTE	POST MILES TOTAL PROJECT	SHEET No.	TOTAL SHEETS
01	Hum	101	54.3/56.8	18	18

Raymond Don Tsztoo
REGISTERED CIVIL ENGINEER

July 20, 2012
PLANS APPROVAL DATE

REGISTERED PROFESSIONAL ENGINEER Raymond Don Tsztoo No. C37332 Exp. 6-30-14 CIVIL STATE OF CALIFORNIA

THE STATE OF CALIFORNIA OR ITS OFFICERS OR AGENTS SHALL NOT BE RESPONSIBLE FOR THE ACCURACY OR COMPLETENESS OF SCANNED COPIES OF THIS PLAN SHEET.

TO ACCOMPANY PLANS DATED February 27, 2013

2010 REVISED STANDARD PLAN RSP D77B

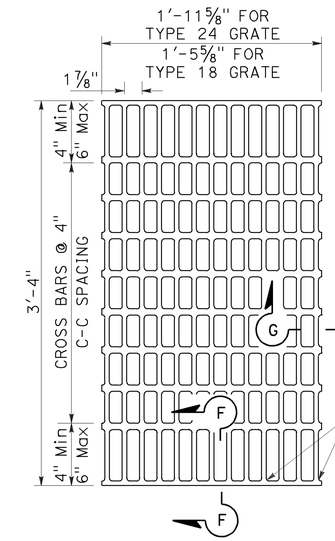

NOTES:

Bearing bars to be 3½" × ¼" bars on 1⅞" centers.

⅜"± ø Cross bars may be fillet welded, resistance welded or electroforged to bearing bars.

Weight of Type 24 grate = 141 LBS.

Weight of Type 18 grate = 107 LBS. (Type 24 grate shown).

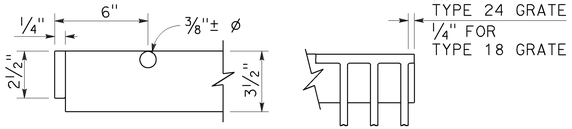

SECTION F-F SECTION G-G

TYPE 18-10 AND 24-13 GRATE

(Welded Steel)

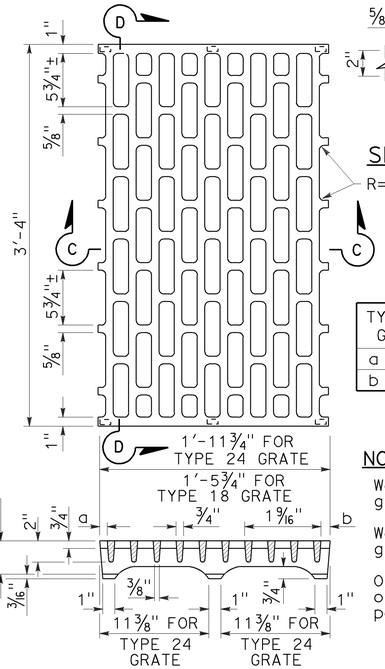

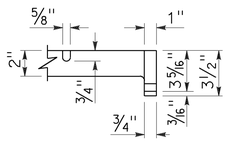

SECTION D-D

TYPE 18 GRATE	TYPE 24 GRATE
a = ⅜"	a = ⅞"
b = ⅜"	b = ¾"

NOTES:

Weight of Type 24 grate = 155 LBS.

Weight of Type 18 grate = 130 LBS.

On Type 18 grate omit center bearing point.

SECTION C-C

TYPE 18-8C AND 24-10C GRATE

(Cast ductile iron)

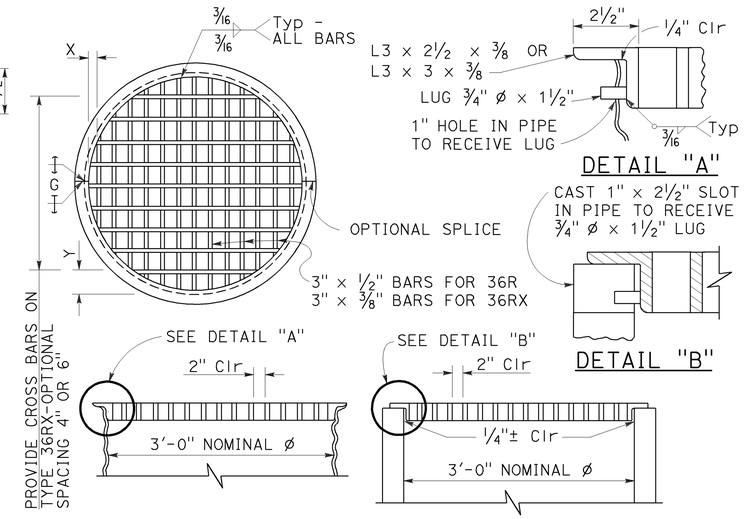

DETAIL "A"

DETAIL "B"

TYPE 36R AND 36RX GRATE DETAILS

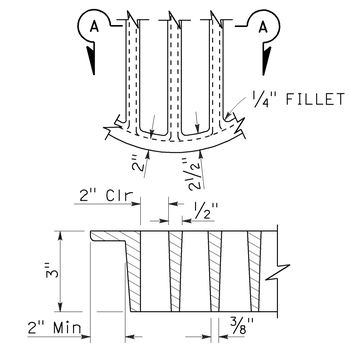

SECTION A-A

ALTERNATIVE CAST DUCTILE IRON GRATE OR CAST CARBON STEEL GRATE TYPE 36R AND 36RX

BASIS FOR Misc IRON AND STEEL FINAL PAY WEIGHTS FOR DRAINAGE INLETS

INLET TYPE	GRATE TYPE	No. OF GRATES	WEIGHT LB
GDO (SEE NOTE 4)	24-10C	2	391
	24-10S	2	456
	24-12X	2	473
	24-13	2	374
GO,GOL,G1,G2, G3,G4 (TYPE 24)	24-10C	1	202
	24-10S	1	229
	24-12X	1	239
	24-13	1	188
G4 (TYPE 18) G5,G6	18-8S	1	187
	18-9X	1	187
	18-10	1	149
GT1,GT2	18-8S	2	374
	18-9X	2	374
	18-10	2	298
GT3,GT4	24-10C	2	404
	24-10S	2	458
	24-12X	2	478
	24-13	2	376
ODI	36RX (Mod)	1	196
GMP,GCP,GCPI	36RX	1	215
ODI	36R (Mod)	1	220
GMP,GCP,GCPI	36R	1	236
TRASH RACK			22
GRATE CHAIN			3

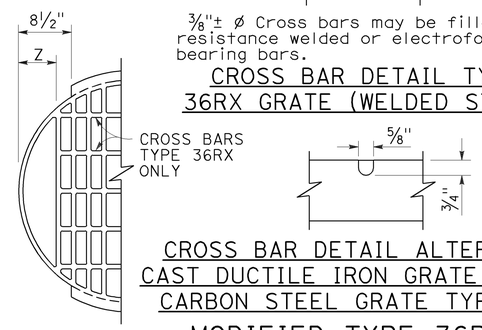

⅜"± ø Cross bars may be fillet welded, resistance welded or electroforged to bearing bars.

CROSS BAR DETAIL TYPE 36RX GRATE (WELDED STEEL)

CROSS BAR DETAIL ALTERNATIVE CAST DUCTILE IRON GRATE OR CAST CARBON STEEL GRATE TYPE 36RX

MODIFIED TYPE 36R AND 36RX GRATE FOR ODI INLET

NOTES:

1. When alternative grates are allowed - Final pay based on alternative with the lesser weight.
2. Use frame shown on Standard Plan D74A, D74B or RSP D77A as appropriate.
3. When Type 24-10S, 24-12X or 24-13 grates are used with GDO Inlets, a ¼" × 3½" × 3'-4⅞" steel bar shall be welded across the center of inlet frame to separate the individual grates.
4. See Revised Standard Plan RSP D77A for connecting chain to welded grate and frame. When chain is required, do not use cast ductile iron grate.

GRATE BAR SPACING TABLE

TYPE	No. OF BARS	CLEAR BAR SPACING	X	Y 4" SPACING	Y 6" SPACING	Z
36R	13	2"	2⅛"	-	-	-
36RX (STEEL)	15	2"	9/16"	3¾"	5¾"	-
36RX (CAST)	13	2"	2⅛"	3¾"	5¾"	-
36R Mod	12	2"	2⅛"	-	-	5"
36RX Mod (STEEL)	13	2"	9/16"	3¾"	5¾"	5 11/16"
36RX Mod (CAST)	12	2"	2⅛"	3¾"	5¾"	5"

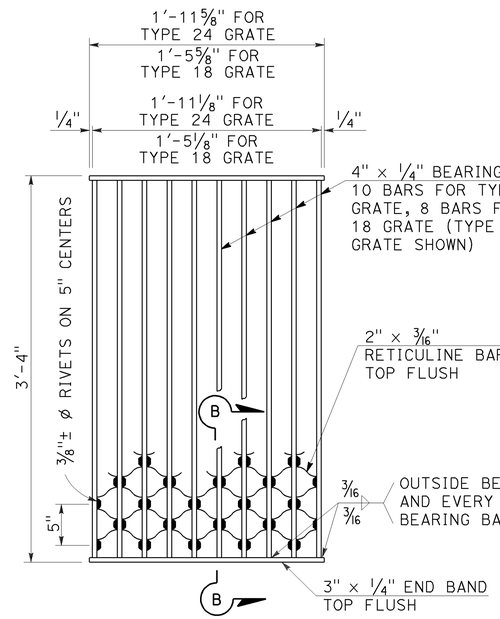

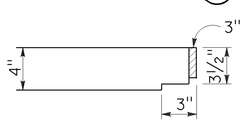

NOTES:

Weight of Type 24 grate = 182 LBS.
Weight of Type 18 grate = 145 LBS.

SECTION B-B

TYPE 18-8S AND 24-10S GRATE

(Welded Steel) Reticuline type

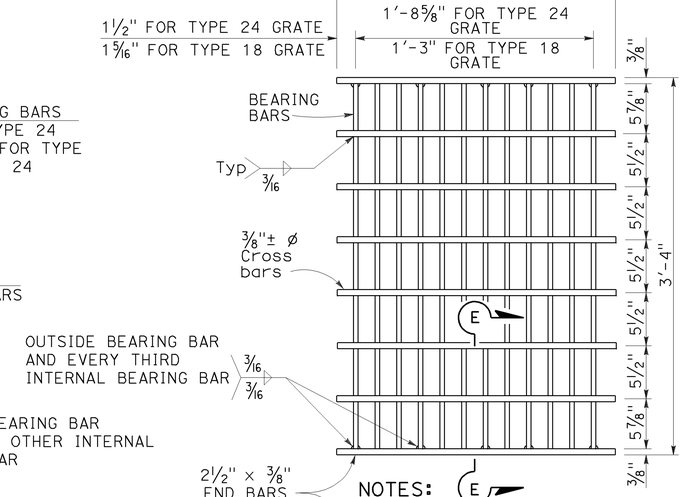

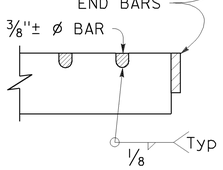

SECTION E-E

NOTES:

Bearing bars to be 3½" × ⅜" bars on 1⅞" centers.

12 Bars for Type 24 grate - 9 bars for Type 18 grates. (Type 24 grate shown).

Weight of Type 24 grate = 192 LBS.

Weight of Type 18 grate = 145 LBS.

⅜"± ø Cross bars may be fillet welded, resistance welded or electroforged to bearing bars.

TYPE 18-9X AND 24-12X GRATE

(Welded Steel)

STATE OF CALIFORNIA
DEPARTMENT OF TRANSPORTATION

BICYCLE TRAVERSABLE GRATE DETAILS

NO SCALE

RSP D77B DATED JULY 20, 2012 SUPERSEDES STANDARD PLAN D77B DATED MAY 20, 2011 - PAGE 165 OF THE STANDARD PLANS BOOK DATED 2010.

REVISED STANDARD PLAN RSP D77B

4-17-12