Dist	COUNTY	ROUTE	POST MILES TOTAL PROJECT	SHEET No.	TOTAL SHEETS
01	Hum	96	4.5/35.9	1	22

INDEX OF PLANS

SHEET No.	DESCRIPTION
1	TITLE AND LOCATION MAP
2-12	DRAINAGE PLANS
13	DRAINAGE DETAILS
14	CONSTRUCTION AREA SIGNS
15	TRAFFIC HANDLING PLAN
16	SUMMARY OF QUANTITIES
17-22	REVISED STANDARD PLANS

THE STANDARD PLANS LIST APPLICABLE TO THIS CONTRACT IS INCLUDED IN THE NOTICE TO BIDDERS AND SPECIAL PROVISIONS BOOK.

STATE OF CALIFORNIA

DEPARTMENT OF TRANSPORTATION

PROJECT PLANS FOR CONSTRUCTION ON

STATE HIGHWAY

IN HUMBOLDT COUNTY

AT VARIOUS LOCATIONS

FROM 4.1 MILES EAST OF BRANNAN MOUNTAIN RD

TO 0.9 MILES EAST OF CEDAR CAMP ROAD

TO BE SUPPLEMENTED BY STANDARD PLANS DATED 2010

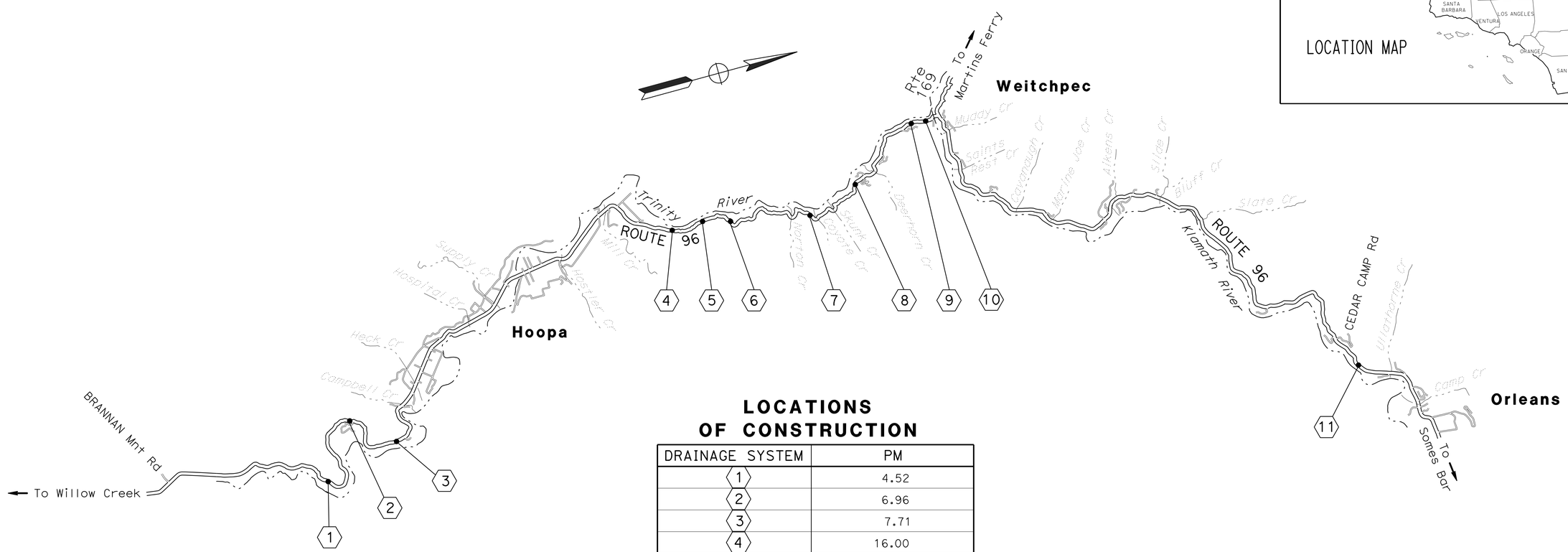

LOCATIONS OF CONSTRUCTION

DRAINAGE SYSTEM	PM
1	4.52
2	6.96
3	7.71
4	16.00
5	16.97
6	17.69
7	19.50
8	20.76
9	22.67
10	22.79
11	35.86

NO SCALE

THE CONTRACTOR SHALL POSSESS THE CLASS (OR CLASSES) OF LICENSE AS SPECIFIED IN THE "NOTICE TO BIDDERS."

3-18-16

PROJECT ENGINEER REGISTERED CIVIL ENGINEER — DATE

March 21, 2016

PLANS APPROVAL DATE

REGISTERED PROFESSIONAL ENGINEER — M.D. VINA — No. 52898 — Exp. 12/31/16 — CIVIL — STATE OF CALIFORNIA

THE STATE OF CALIFORNIA OR ITS OFFICERS OR AGENTS SHALL NOT BE RESPONSIBLE FOR THE ACCURACY OR COMPLETENESS OF SCANNED COPIES OF THIS PLAN SHEET.

CONTRACT No.	01-0E3604
PROJECT ID	0114000039

P:\PROJ\01\0E360\drafting\sheets\0114000039ab001.dgn

PROJECT MANAGER: SCOTT LEE

DESIGN MANAGER: SCOTT LEE

LAST REVISION 00-00-00

DATE PLOTTED => 03-MAY-2016
TIME PLOTTED => 11:27

Dist	COUNTY	ROUTE	POST MILES TOTAL PROJECT	SHEET No.	TOTAL SHEETS
01	Hum	96	4.5/35.9	2	22

REGISTERED CIVIL ENGINEER — DATE 3-18-16

March 21, 2016
PLANS APPROVAL DATE

REGISTERED PROFESSIONAL ENGINEER
M.D. VINA
No. 52898
Exp 12/31/16
CIVIL
STATE OF CALIFORNIA

THE STATE OF CALIFORNIA OR ITS OFFICERS OR AGENTS SHALL NOT BE RESPONSIBLE FOR THE ACCURACY OR COMPLETENESS OF SCANNED COPIES OF THIS PLAN SHEET.

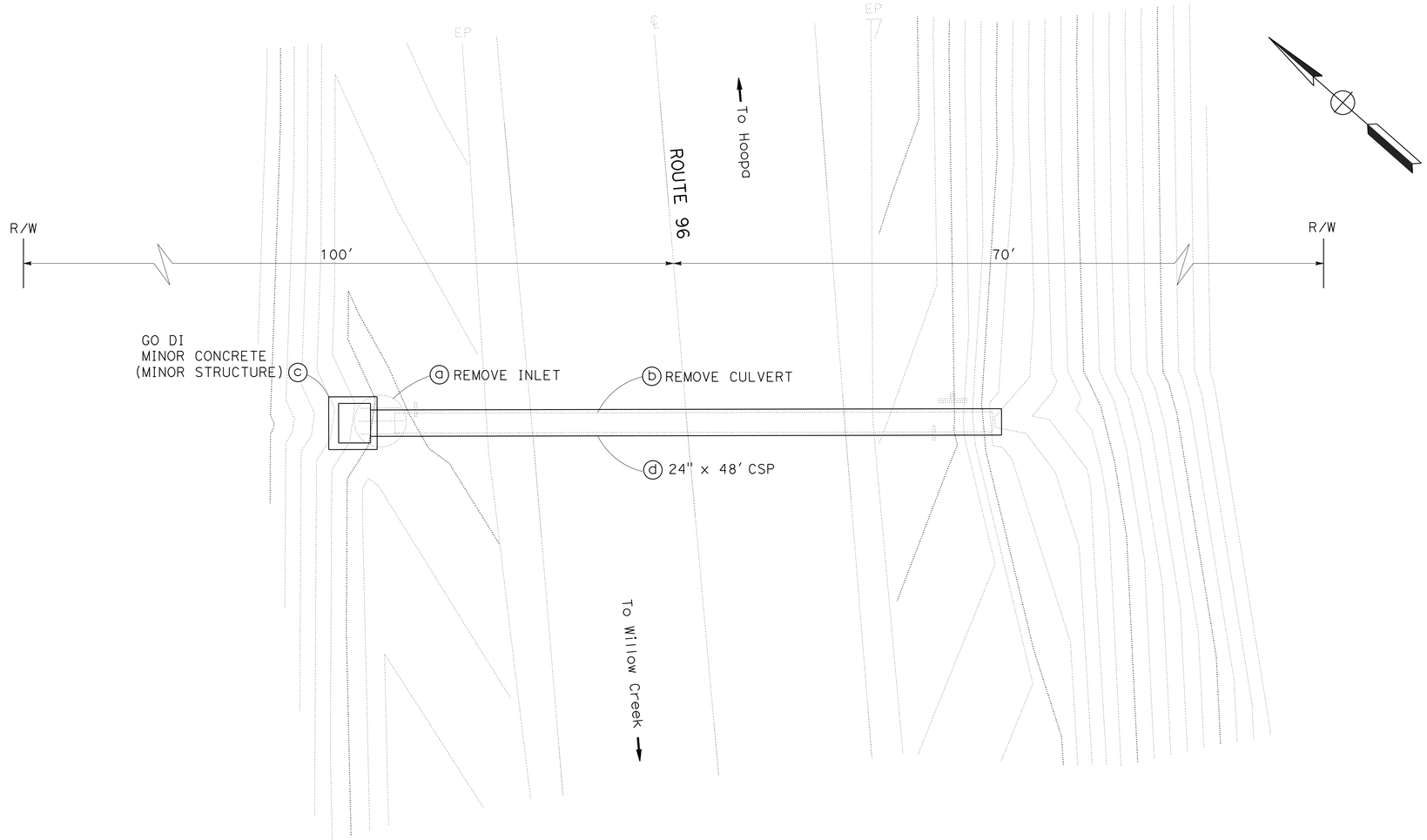

SCALE: 1" = 5'

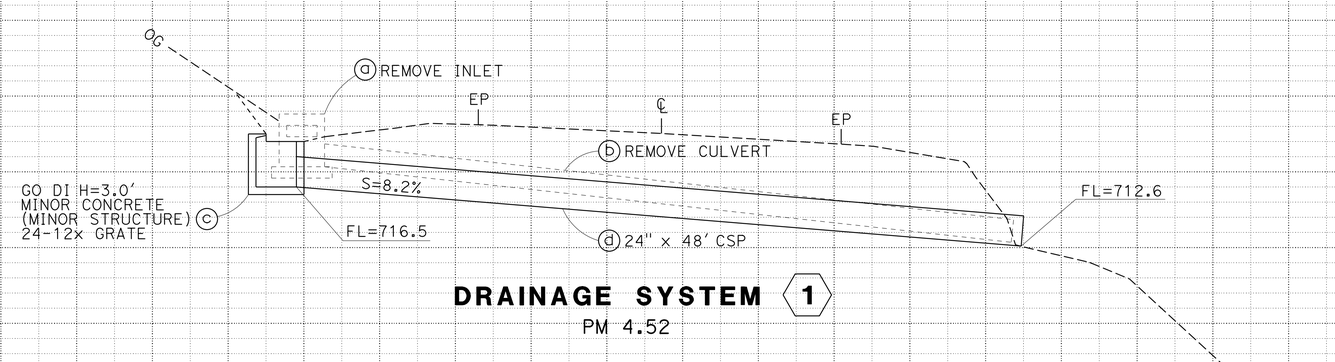

DRAINAGE SYSTEM 1

PM 4.52

SCALE: 1" = 5' Horiz
1" = 5' Vert

DRAINAGE PLAN AND PROFILE

SCALE: AS SHOWN

D-1

REVISED BY | DATE REVISED
MIKE VINA | SHANE WILSON
CALCULATED-DESIGNED BY | CHECKED BY
FUNCTIONAL SUPERVISOR: SCOTT LEE

STATE OF CALIFORNIA - DEPARTMENT OF TRANSPORTATION
MAINTENANCE HYDRAULICS
Caltrans

P:\PROJ\01\0E360\drafting\sheets\01140000039ea001.dgn

LAST REVISION | DATE PLOTTED => 03-MAY-2016
00-00-00 | TIME PLOTTED => 11:27

BORDER LAST REVISED 7/2/2010
USERNAME => s120115
DGN FILE => 0114000039ea001.dgn
RELATIVE BORDER SCALE IS IN INCHES 0 1 2 3
UNIT 0603
PROJECT NUMBER & PHASE 01140000391

Dist	COUNTY	ROUTE	POST MILES TOTAL PROJECT	SHEET No.	TOTAL SHEETS
01	Hum	96	4.5/35.9	3	22

REGISTERED CIVIL ENGINEER — DATE 3-18-16

March 21, 2016
PLANS APPROVAL DATE

REGISTERED PROFESSIONAL ENGINEER M.D. VINA No. 52898 Exp 12/31/16 CIVIL STATE OF CALIFORNIA

THE STATE OF CALIFORNIA OR ITS OFFICERS OR AGENTS SHALL NOT BE RESPONSIBLE FOR THE ACCURACY OR COMPLETENESS OF SCANNED COPIES OF THIS PLAN SHEET.

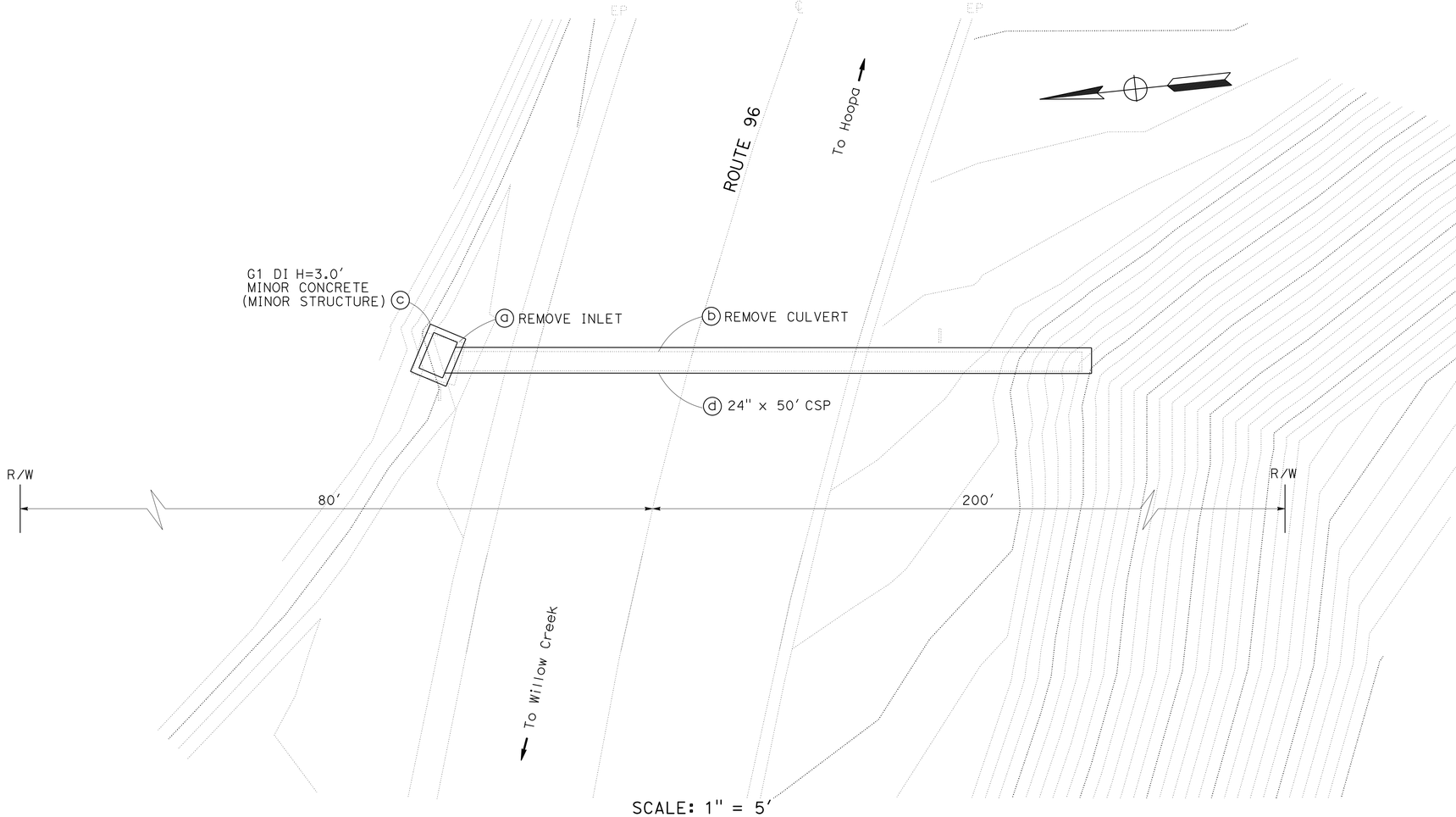

SCALE: 1" = 5'

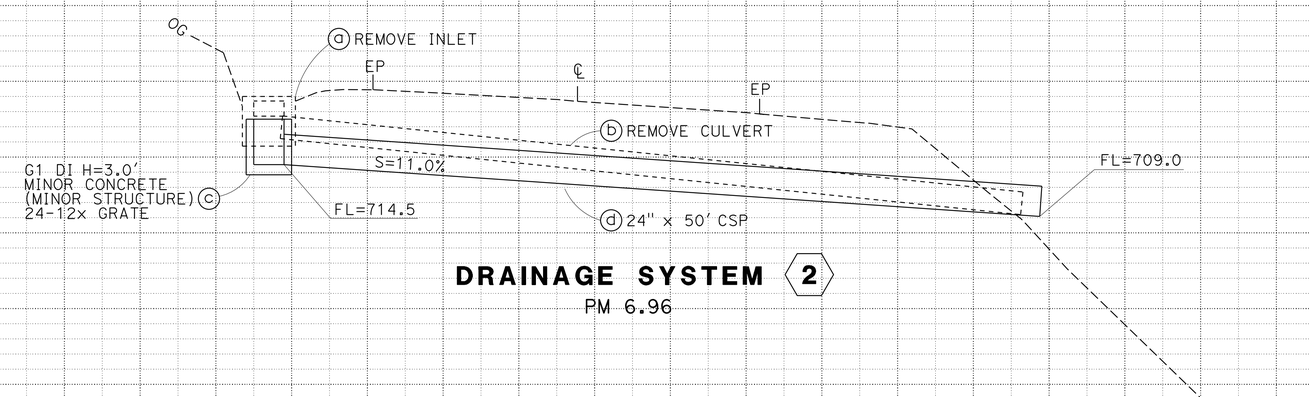

DRAINAGE SYSTEM 2
PM 6.96

SCALE: 1" = 5' Horiz
1" = 5' Vert

DRAINAGE PLAN AND PROFILE

SCALE: AS SHOWN

D-2

REVISED BY	DATE REVISED
MIKE VINA	SHANE WILSON
CALCULATED-DESIGNED BY	CHECKED BY
FUNCTIONAL SUPERVISOR	SCOTT LEE

STATE OF CALIFORNIA - DEPARTMENT OF TRANSPORTATION
MAINTENANCE HYDRAULICS
Caltrans

P:\PROJ\01\QE360\drafting\sheets\0114000039ea002.dgn

LAST REVISION 00-00-00 | DATE PLOTTED => 03-MAY-2016 | TIME PLOTTED => 11:27

Dist	COUNTY	ROUTE	POST MILES TOTAL PROJECT	SHEET No.	TOTAL SHEETS
01	Hum	96	4.5/35.9	4	22

REGISTERED CIVIL ENGINEER — DATE 3-18-16

March 21, 2016
PLANS APPROVAL DATE

REGISTERED PROFESSIONAL ENGINEER — M.D. VINA — No. 52898 — Exp 12/31/16 — CIVIL — STATE OF CALIFORNIA

THE STATE OF CALIFORNIA OR ITS OFFICERS OR AGENTS SHALL NOT BE RESPONSIBLE FOR THE ACCURACY OR COMPLETENESS OF SCANNED COPIES OF THIS PLAN SHEET.

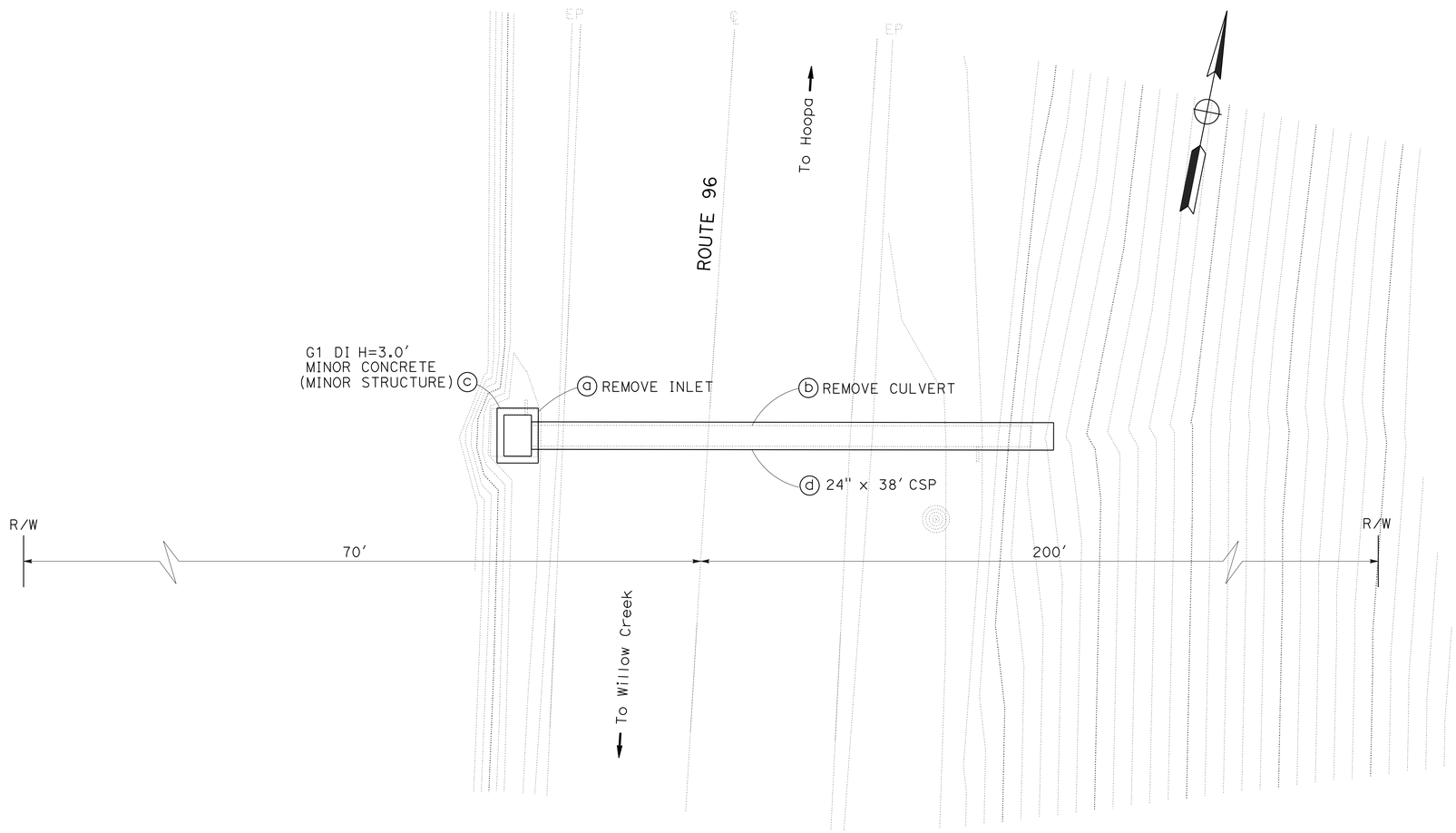

SCALE: 1" = 5′

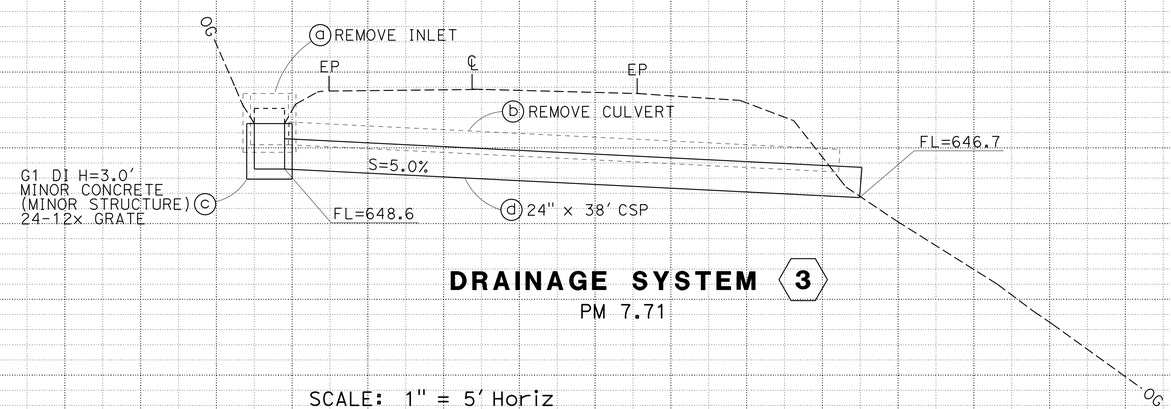

DRAINAGE SYSTEM 3
PM 7.71

SCALE: 1" = 5′ Horiz
1" = 5′ Vert

DRAINAGE PLAN AND PROFILE

SCALE: AS SHOWN

D-3

REVISED BY	DATE REVISED

CALCULATED-DESIGNED BY: MIKE VINA
CHECKED BY: SHANE WILSON
FUNCTIONAL SUPERVISOR: SCOTT LEE

STATE OF CALIFORNIA - DEPARTMENT OF TRANSPORTATION
MAINTENANCE HYDRAULICS
Caltrans

P:\PROJ\01\QE360\drafting\sheets\01140000039ea003.dgn

LAST REVISION 00-00-00 | DATE PLOTTED => 03-MAY-2016 | TIME PLOTTED => 11:27

Dist	COUNTY	ROUTE	POST MILES TOTAL PROJECT	SHEET No.	TOTAL SHEETS
01	Hum	96	4.5/35.9	5	22

REGISTERED CIVIL ENGINEER — DATE 3-18-16

March 21, 2016
PLANS APPROVAL DATE

REGISTERED PROFESSIONAL ENGINEER
M.D. VINA
No. 52898
Exp 12/31/16
CIVIL
STATE OF CALIFORNIA

THE STATE OF CALIFORNIA OR ITS OFFICERS OR AGENTS SHALL NOT BE RESPONSIBLE FOR THE ACCURACY OR COMPLETENESS OF SCANNED COPIES OF THIS PLAN SHEET.

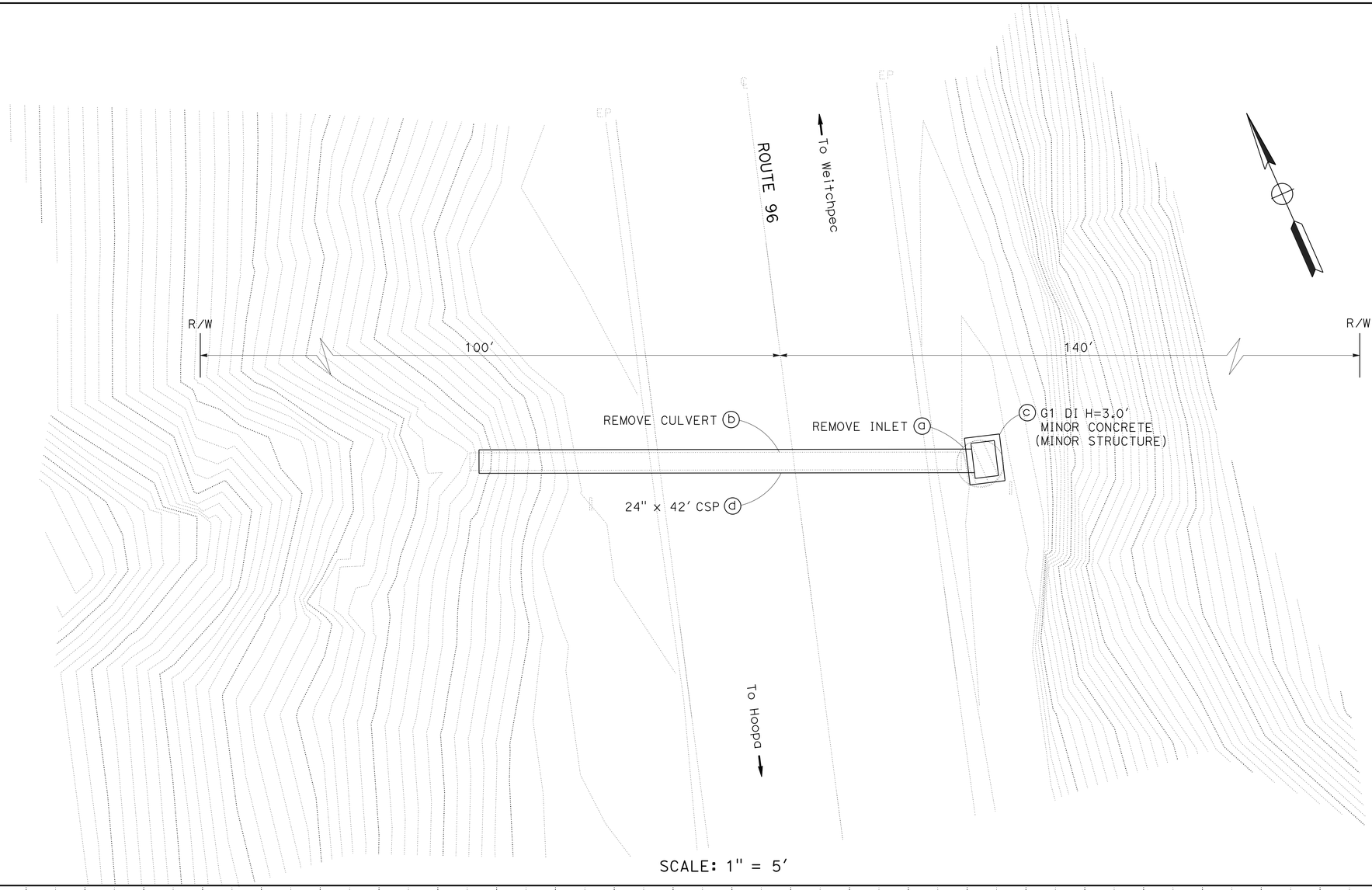

SCALE: 1" = 5'

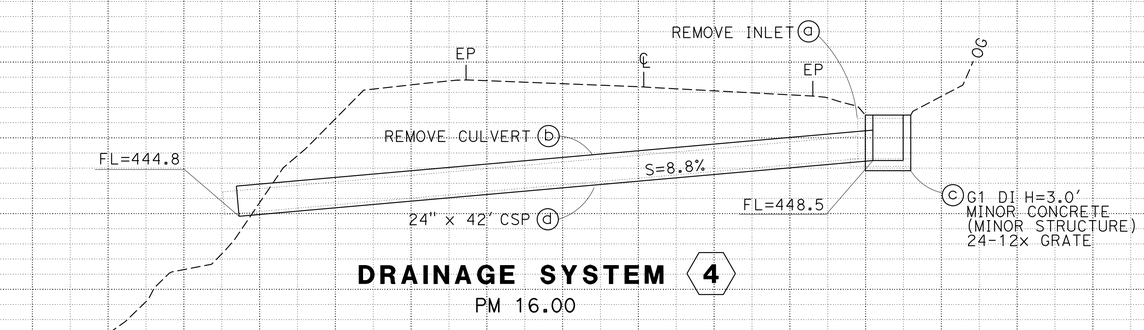

DRAINAGE SYSTEM (4)

PM 16.00

SCALE: 1" = 5' Horiz
1" = 5' Vert

DRAINAGE PLAN AND PROFILE

SCALE: AS SHOWN

D-4

REVISED BY	DATE REVISED
MIKE VINA	SHANE WILSON

CALCULATED-DESIGNED BY / CHECKED BY

FUNCTIONAL SUPERVISOR: SCOTT LEE

STATE OF CALIFORNIA - DEPARTMENT OF TRANSPORTATION
MAINTENANCE HYDRAULICS
Caltrans

P:\PROJ\01\0E360\drafting\sheets\0114000039ea004.dgn

LAST REVISION 00-00-00 | DATE PLOTTED => 03-MAY-2016 | TIME PLOTTED => 11:27

Dist	COUNTY	ROUTE	POST MILES TOTAL PROJECT	SHEET No.	TOTAL SHEETS
01	Hum	96	4.5/35.9	6	22

REGISTERED CIVIL ENGINEER — DATE 3-18-16

March 21, 2016
PLANS APPROVAL DATE

REGISTERED PROFESSIONAL ENGINEER
M.D. VINA
No. 52898
Exp 12/31/16
CIVIL
STATE OF CALIFORNIA

THE STATE OF CALIFORNIA OR ITS OFFICERS OR AGENTS SHALL NOT BE RESPONSIBLE FOR THE ACCURACY OR COMPLETENESS OF SCANNED COPIES OF THIS PLAN SHEET.

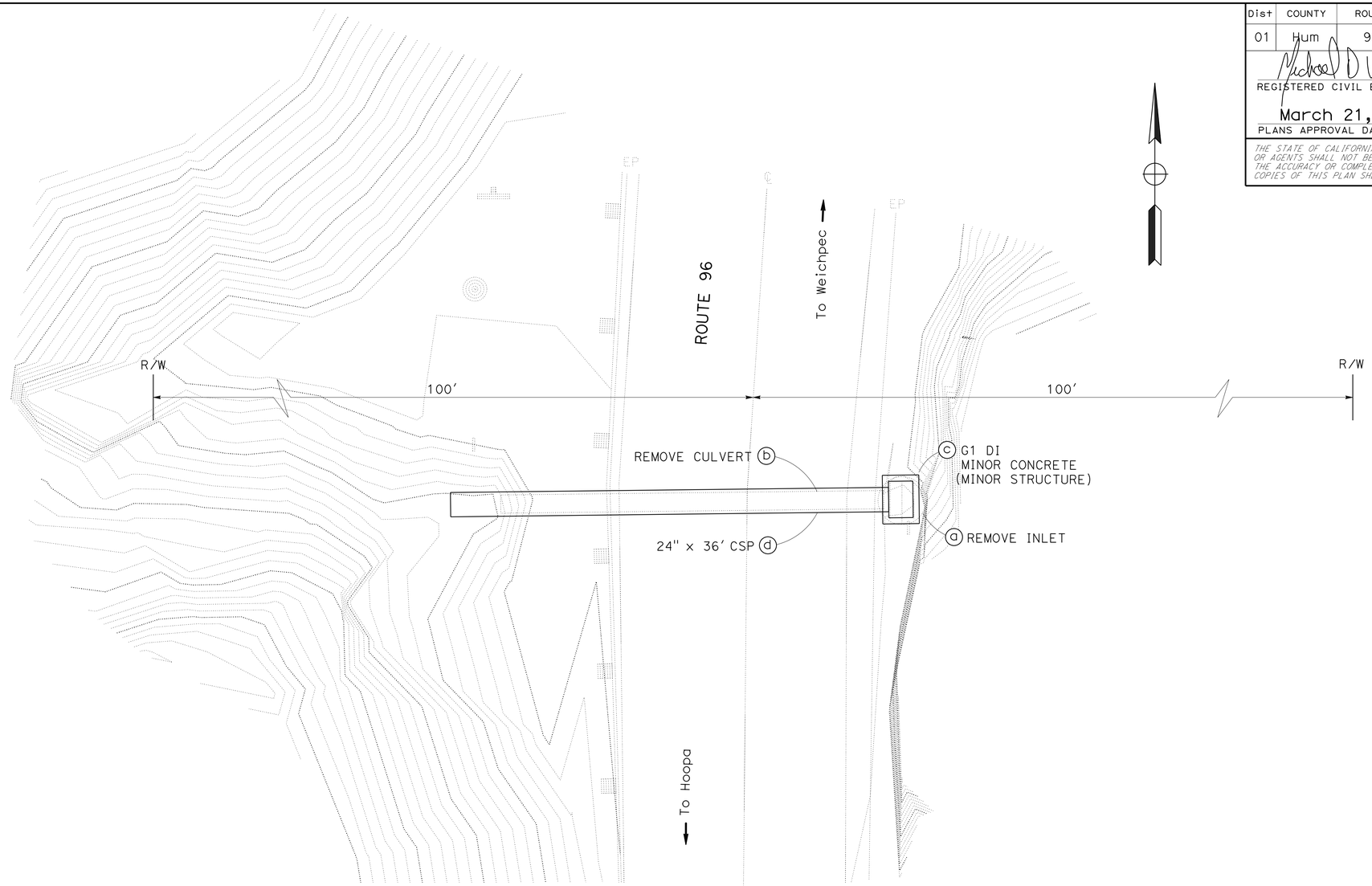

SCALE: 1" = 5'

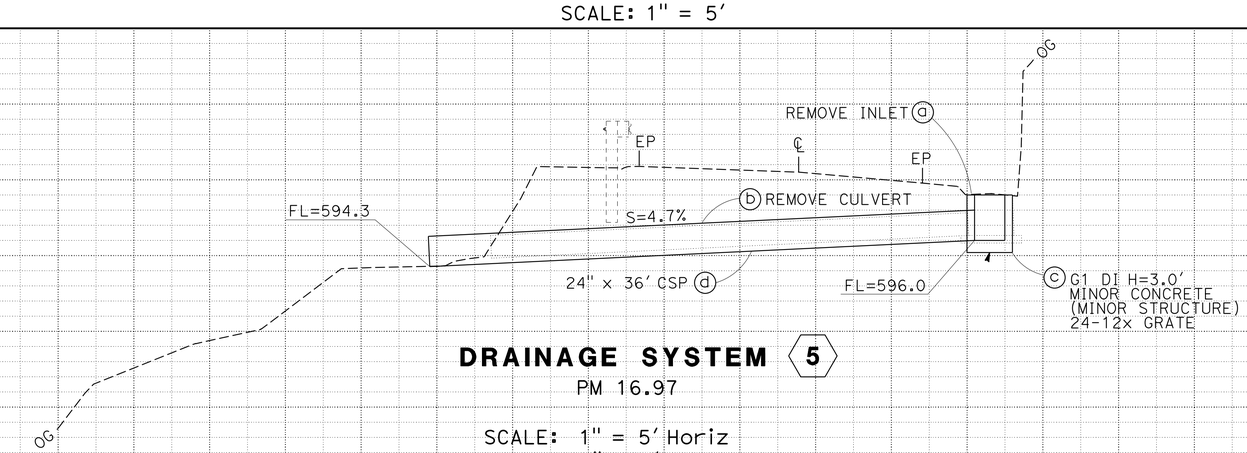

DRAINAGE SYSTEM (5)
PM 16.97

SCALE: 1" = 5' Horiz
1" = 5' Vert

DRAINAGE PLAN AND PROFILE

SCALE: AS SHOWN

D-5

REVISED BY	DATE REVISED

CALCULATED-DESIGNED BY: MIKE VINA
CHECKED BY: SHANE WILSON
FUNCTIONAL SUPERVISOR: SCOTT LEE

STATE OF CALIFORNIA - DEPARTMENT OF TRANSPORTATION
MAINTENANCE HYDRAULICS
Caltrans

P:\PROJ\01\OE360\drafting\sheets\0114000039ea005.dgn

LAST REVISION 00-00-00 | DATE PLOTTED => 03-MAY-2016 | TIME PLOTTED => 11:28

Dist	COUNTY	ROUTE	POST MILES TOTAL PROJECT	SHEET No.	TOTAL SHEETS
01	Hum	96	4.5/35.9	7	22

REGISTERED CIVIL ENGINEER — DATE 3-18-16

March 21, 2016
PLANS APPROVAL DATE

REGISTERED PROFESSIONAL ENGINEER — M.D. VINA — No. 52898 — Exp 12/31/16 — CIVIL — STATE OF CALIFORNIA

THE STATE OF CALIFORNIA OR ITS OFFICERS OR AGENTS SHALL NOT BE RESPONSIBLE FOR THE ACCURACY OR COMPLETENESS OF SCANNED COPIES OF THIS PLAN SHEET.

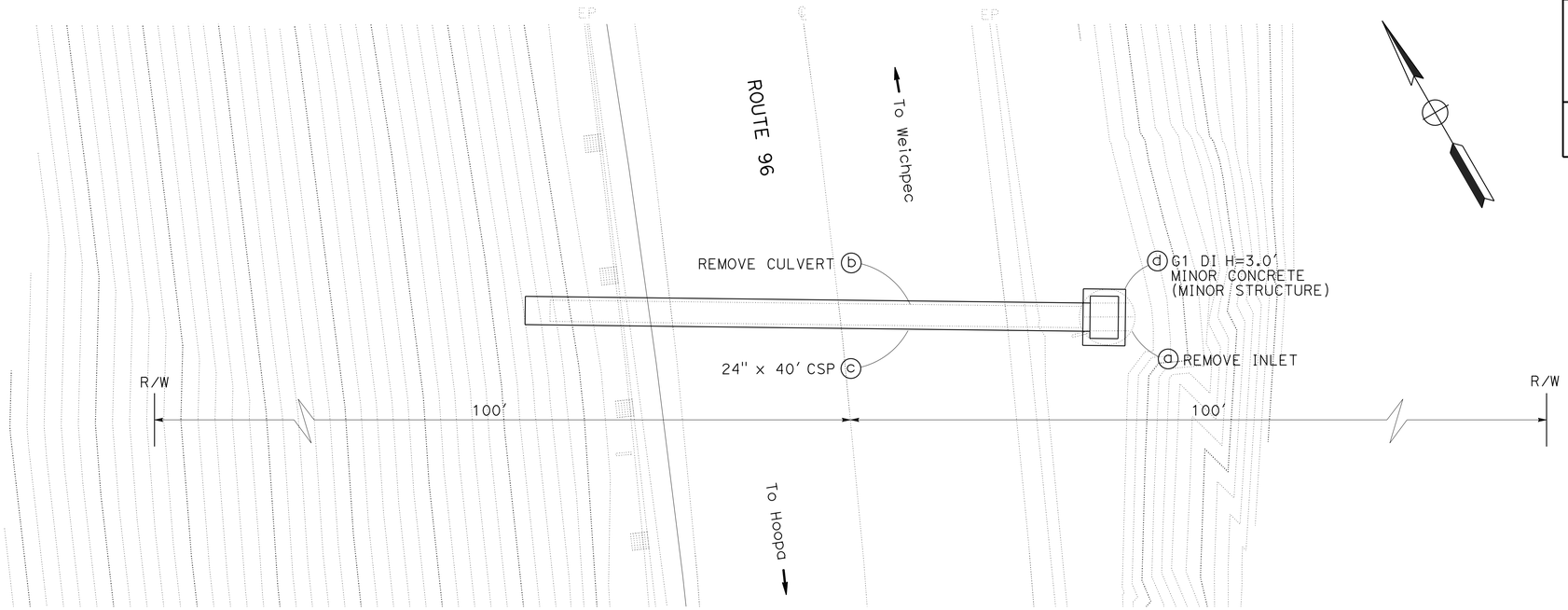

SCALE: 1" = 5'

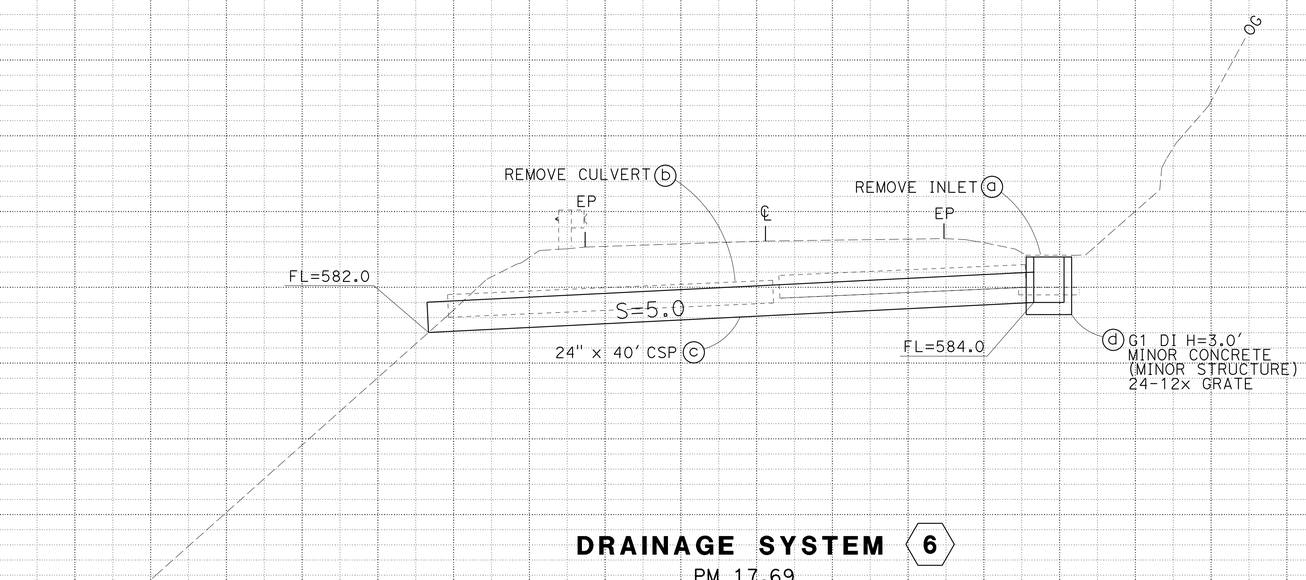

DRAINAGE SYSTEM (6)

PM 17.69

SCALE: 1" = 5' Horiz
1" = 5' Vert

DRAINAGE PLAN AND PROFILE

SCALE: AS SHOWN

D-6

REVISED BY	DATE REVISED
MIKE VINA	SHANE WILSON

CALCULATED-DESIGNED BY / CHECKED BY

FUNCTIONAL SUPERVISOR: SCOTT LEE

STATE OF CALIFORNIA - DEPARTMENT OF TRANSPORTATION
MAINTENANCE HYDRAULICS
Caltrans

P:\PROJ\01\0E360\drafting\sheets\0114000039ea006.dgn

LAST REVISION 00-00-00 | DATE PLOTTED => 03-MAY-2016 | TIME PLOTTED => 11:28

Dist	COUNTY	ROUTE	POST MILES TOTAL PROJECT	SHEET No.	TOTAL SHEETS
01	Hum	96	4.5/35.9	8	22

REGISTERED CIVIL ENGINEER — DATE 3-18-16

March 21, 2016
PLANS APPROVAL DATE

REGISTERED PROFESSIONAL ENGINEER — M.D. VINA No. 52898 Exp 12/31/16 CIVIL — STATE OF CALIFORNIA

THE STATE OF CALIFORNIA OR ITS OFFICERS OR AGENTS SHALL NOT BE RESPONSIBLE FOR THE ACCURACY OR COMPLETENESS OF SCANNED COPIES OF THIS PLAN SHEET.

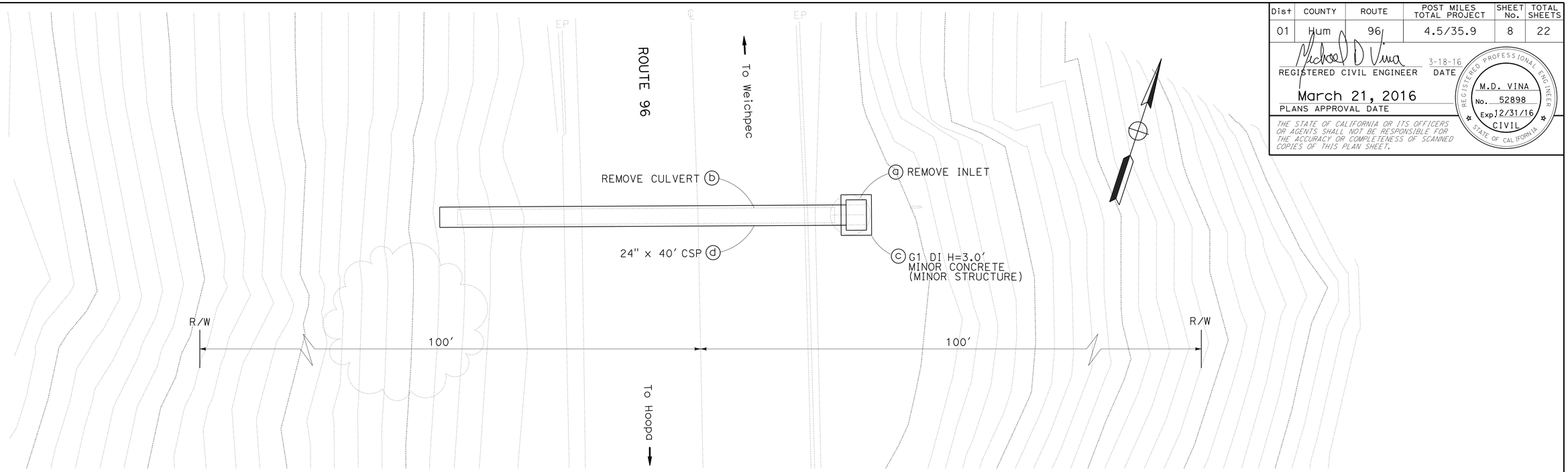

SCALE: 1" = 5'

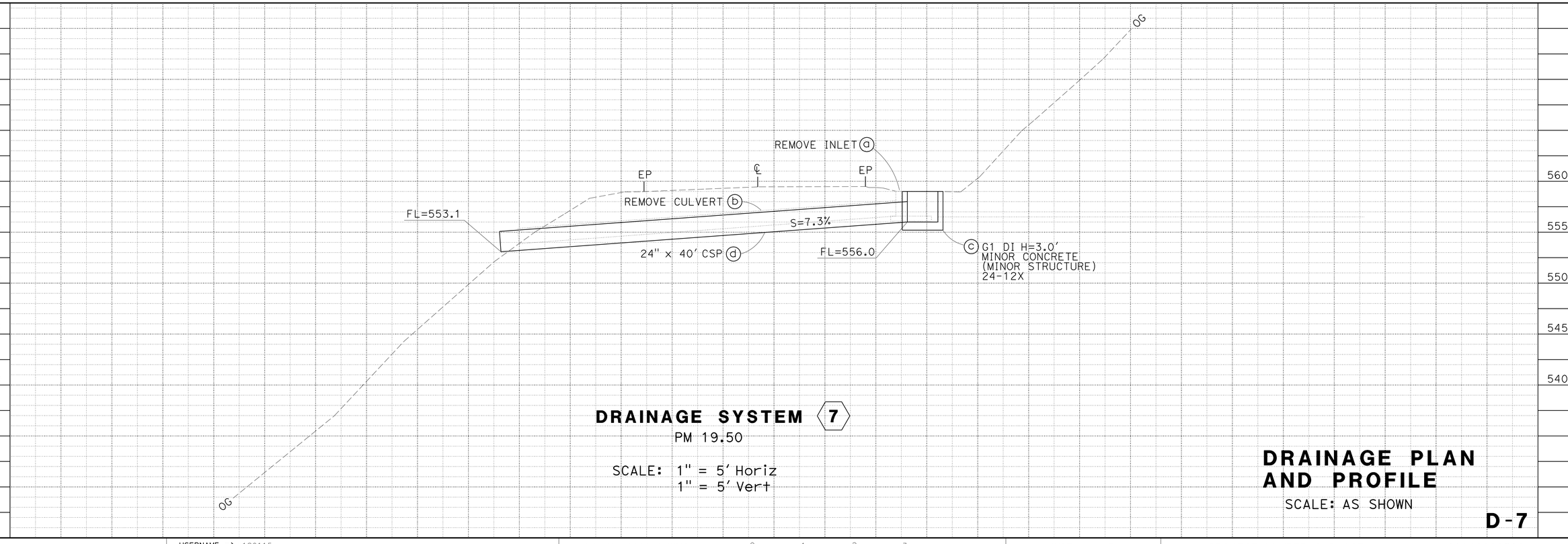

DRAINAGE SYSTEM 7

PM 19.50

SCALE: 1" = 5' Horiz
1" = 5' Vert

DRAINAGE PLAN AND PROFILE

SCALE: AS SHOWN

D-7

REVISED BY | DATE REVISED
MIKE VINA | SHANE WILSON
CALCULATED-DESIGNED BY | CHECKED BY
FUNCTIONAL SUPERVISOR: SCOTT LEE

STATE OF CALIFORNIA - DEPARTMENT OF TRANSPORTATION
MAINTENANCE HYDRAULICS
Caltrans

P:\PROJ\01\0E360\drafting\sheets\0114000039ea007.dgn

LAST REVISION 00-00-00 | DATE PLOTTED => 03-MAY-2016 | TIME PLOTTED => 11:28

Dist	COUNTY	ROUTE	POST MILES TOTAL PROJECT	SHEET No.	TOTAL SHEETS
01	Hum	96	4.5/35.9	9	22

REGISTERED CIVIL ENGINEER — DATE 3-18-16

March 21, 2016
PLANS APPROVAL DATE

REGISTERED PROFESSIONAL ENGINEER
M.D. VINA
No. 52898
Exp 12/31/16
CIVIL
STATE OF CALIFORNIA

THE STATE OF CALIFORNIA OR ITS OFFICERS OR AGENTS SHALL NOT BE RESPONSIBLE FOR THE ACCURACY OR COMPLETENESS OF SCANNED COPIES OF THIS PLAN SHEET.

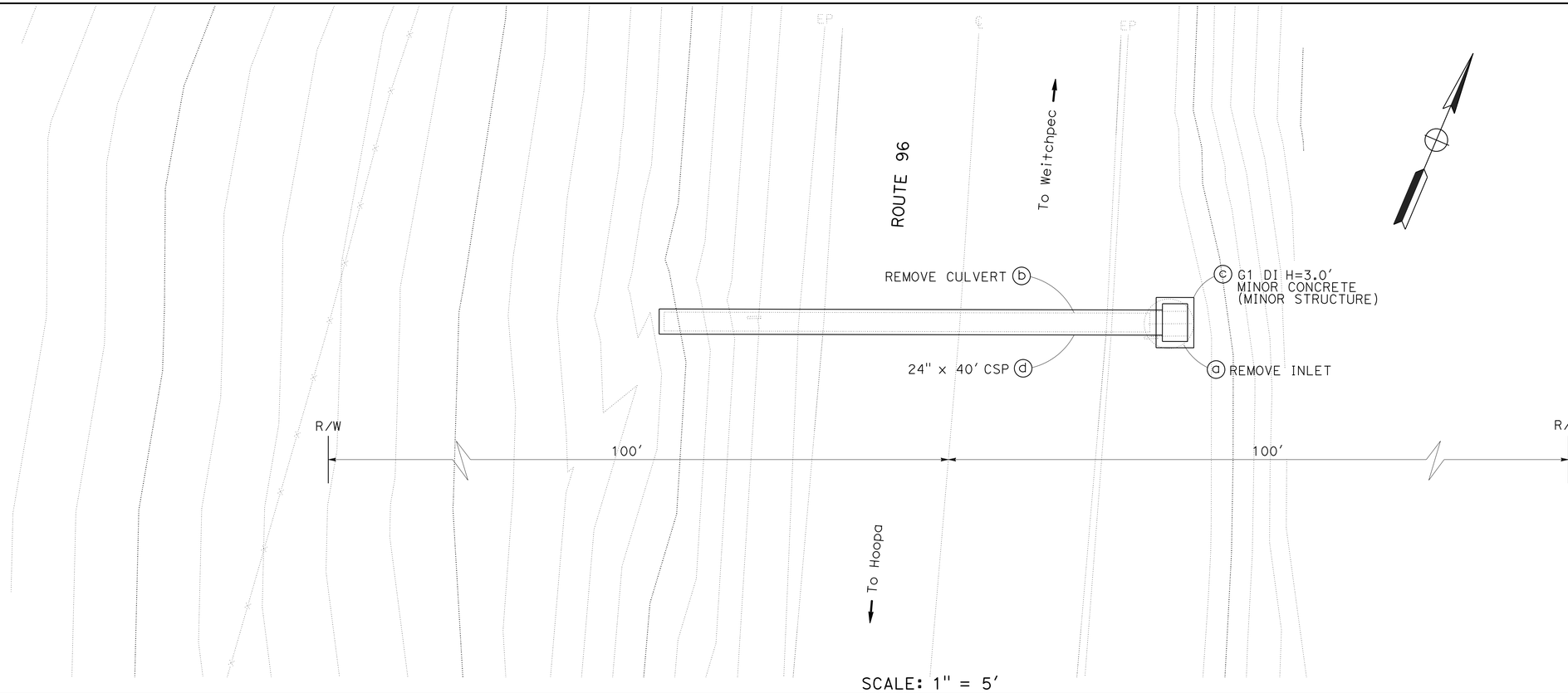

SCALE: 1" = 5'

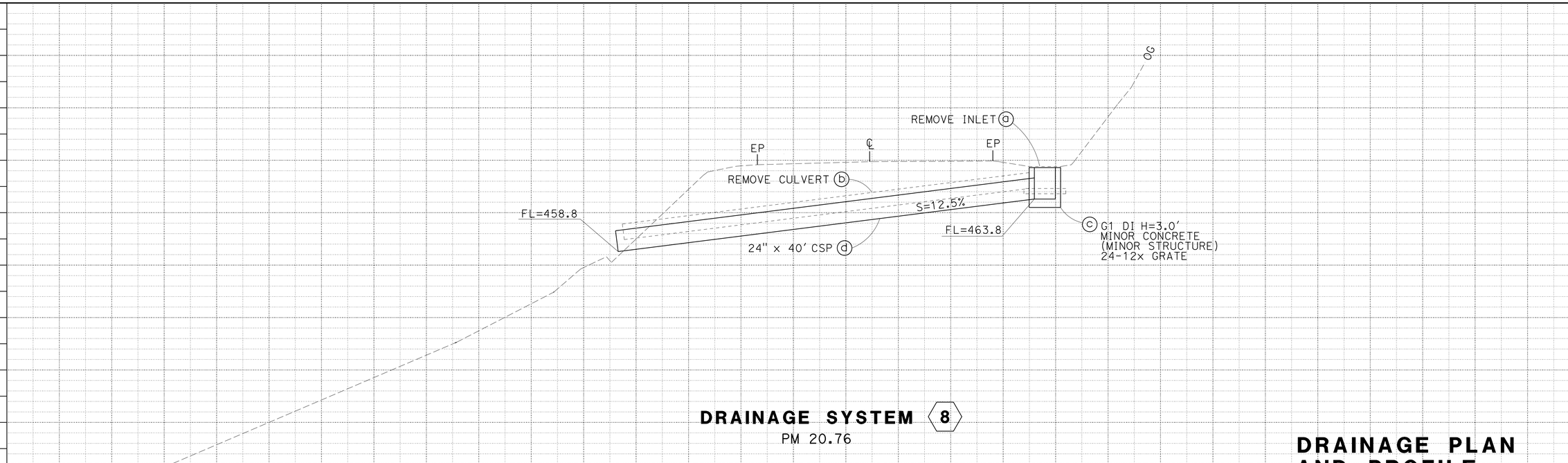

DRAINAGE SYSTEM (8)

PM 20.76

SCALE: 1" = 5' Horiz
1" = 5' Vert

DRAINAGE PLAN AND PROFILE

SCALE: AS SHOWN

D-8

REVISED BY | DATE REVISED
MIKE VINA | SHANE WILSON
CALCULATED-DESIGNED BY | CHECKED BY
FUNCTIONAL SUPERVISOR: SCOTT LEE

STATE OF CALIFORNIA - DEPARTMENT OF TRANSPORTATION
Caltrans
MAINTENANCE HYDRAULICS

P:\PROJ\01\OE360\drafting\sheets\01140000039ea008.dgn

LAST REVISION 00-00-00 | DATE PLOTTED => 03-MAY-2016 | TIME PLOTTED => 11:28

BORDER LAST REVISED 7/2/2010 | USERNAME => s120115 | DGN FILE => 01140000039ea008.dgn | RELATIVE BORDER SCALE IS IN INCHES 0 1 2 3 | UNIT 0603 | PROJECT NUMBER & PHASE 01140000391

Dist	COUNTY	ROUTE	POST MILES TOTAL PROJECT	SHEET No.	TOTAL SHEETS
01	Hum	96	4.5/35.9	10	22

REGISTERED CIVIL ENGINEER — DATE 3-18-16

March 21, 2016
PLANS APPROVAL DATE

REGISTERED PROFESSIONAL ENGINEER — M.D. VINA — No. 52898 — Exp 12/31/16 — CIVIL — STATE OF CALIFORNIA

THE STATE OF CALIFORNIA OR ITS OFFICERS OR AGENTS SHALL NOT BE RESPONSIBLE FOR THE ACCURACY OR COMPLETENESS OF SCANNED COPIES OF THIS PLAN SHEET.

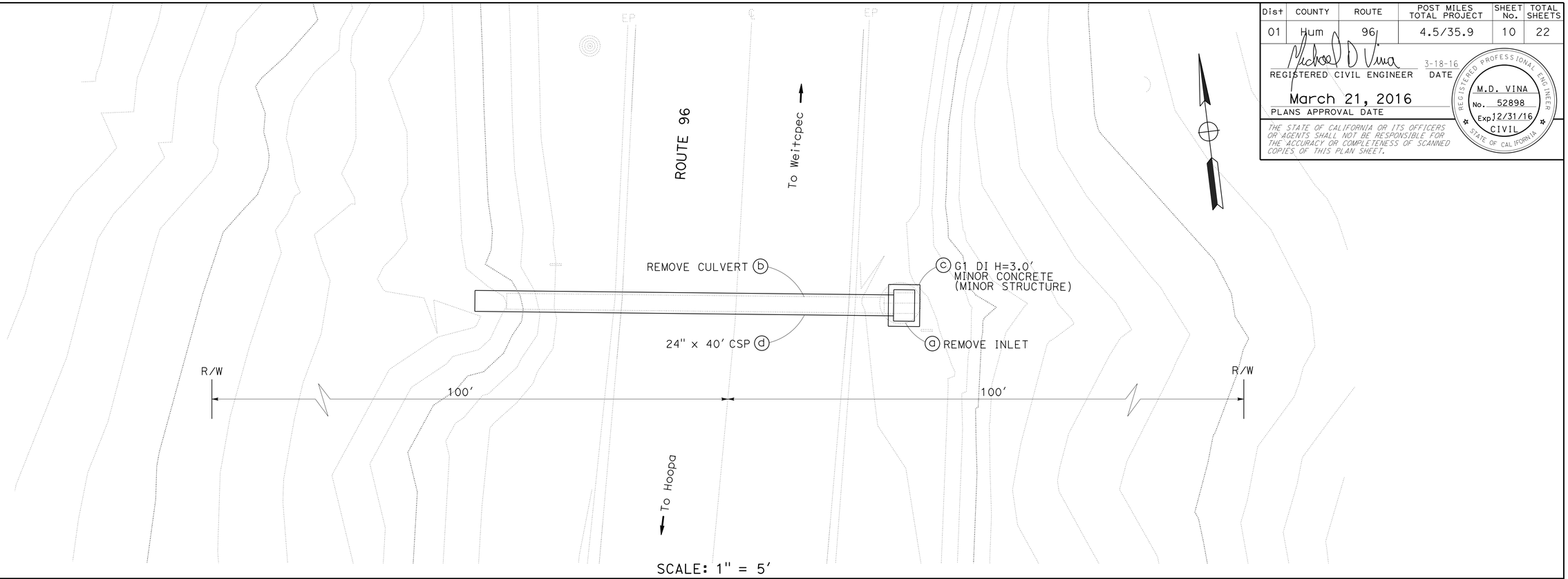

SCALE: 1" = 5'

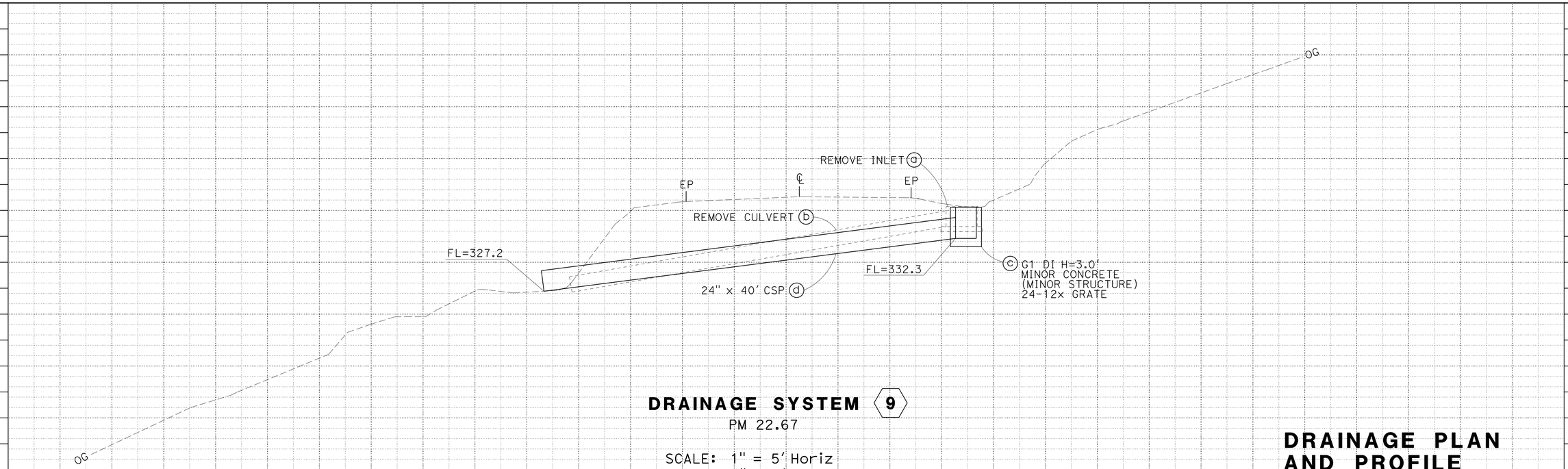

DRAINAGE SYSTEM (9)

PM 22.67

SCALE: 1" = 5' Horiz
1" = 5' Vert

DRAINAGE PLAN AND PROFILE

SCALE: AS SHOWN

D-9

REVISED BY	
DATE REVISED	
CALCULATED-DESIGNED BY	MIKE VINA
CHECKED BY	SHANE WILSON
FUNCTIONAL SUPERVISOR	SCOTT LEE

STATE OF CALIFORNIA - DEPARTMENT OF TRANSPORTATION
Caltrans
MAINTENANCE HYDRAULICS

P:\PROJ\01\0E360\drafting\sheets\01140000039ea009.dgn

LAST REVISION 00-00-00 | DATE PLOTTED => 03-MAY-2016 | TIME PLOTTED => 11:28

Dist	COUNTY	ROUTE	POST MILES TOTAL PROJECT	SHEET No.	TOTAL SHEETS
01	Hum	96	4.5/35.9	11	22

REGISTERED CIVIL ENGINEER — DATE 3-18-16

March 21, 2016
PLANS APPROVAL DATE

REGISTERED PROFESSIONAL ENGINEER — M.D. VINA — No. 52898 — Exp 12/31/16 — CIVIL — STATE OF CALIFORNIA

THE STATE OF CALIFORNIA OR ITS OFFICERS OR AGENTS SHALL NOT BE RESPONSIBLE FOR THE ACCURACY OR COMPLETENESS OF SCANNED COPIES OF THIS PLAN SHEET.

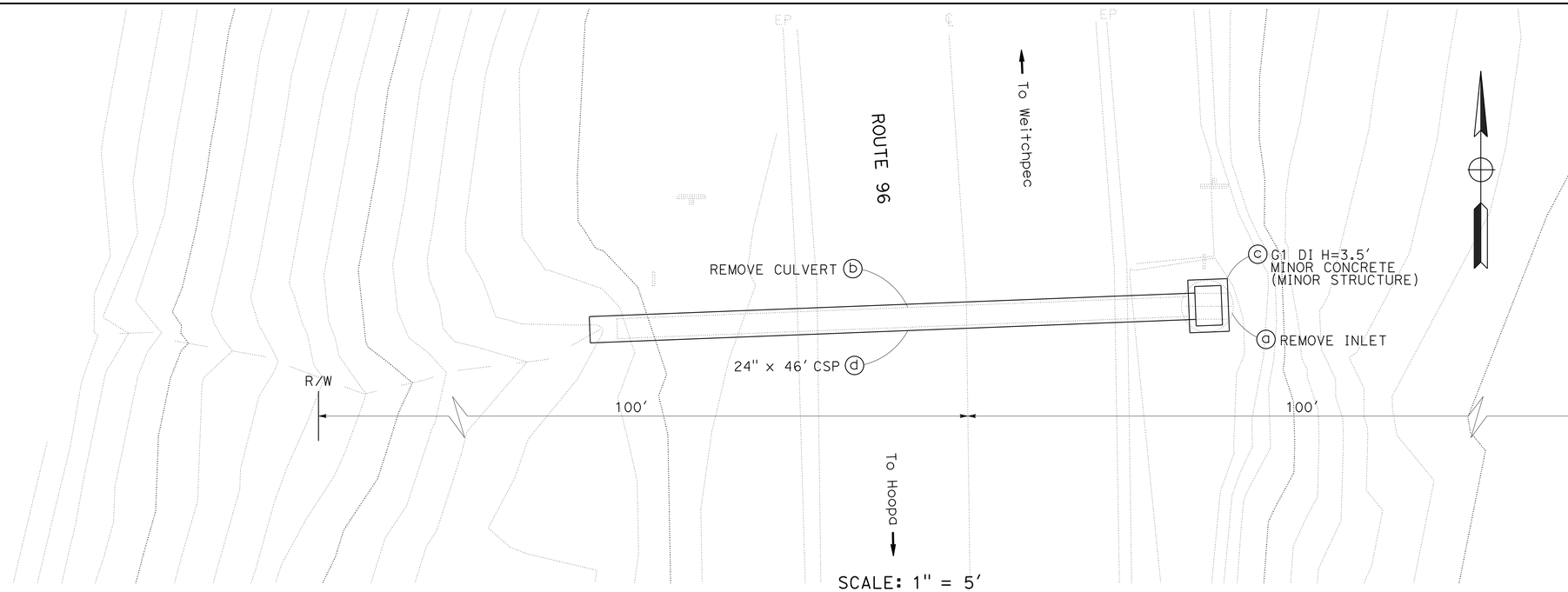

SCALE: 1" = 5'

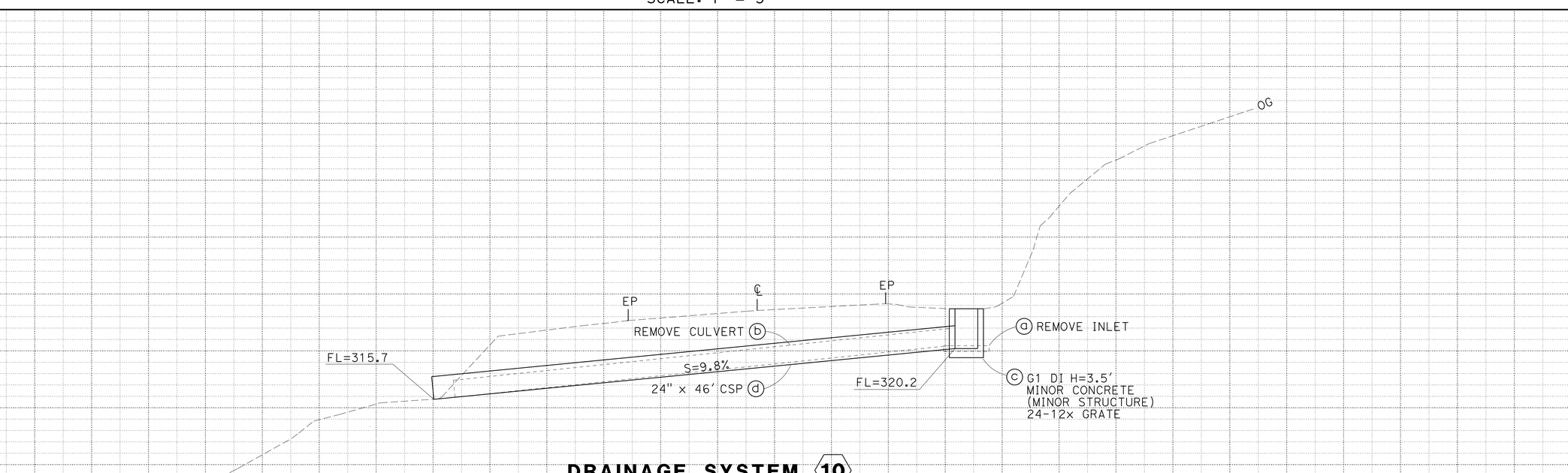

DRAINAGE SYSTEM (10)
PM 22.79

SCALE: 1" = 5' Horiz
1" = 5' Vert

DRAINAGE PLAN AND PROFILE

SCALE: AS SHOWN

D-10

REVISED BY | DATE REVISED
MIKE VINA | SHANE WILSON
CALCULATED-DESIGNED BY | CHECKED BY
FUNCTIONAL SUPERVISOR: SCOTT LEE

STATE OF CALIFORNIA - DEPARTMENT OF TRANSPORTATION
MAINTENANCE HYDRAULICS
Caltrans

P:\PROJ\01\0E360\drafting\sheets\0114000039ea010.dgn

LAST REVISION 00-00-00 | DATE PLOTTED => 03-MAY-2016 | TIME PLOTTED => 11:28

Dist	COUNTY	ROUTE	POST MILES TOTAL PROJECT	SHEET No.	TOTAL SHEETS
01	Hum	96	4.5/35.9	12	22

REGISTERED CIVIL ENGINEER — DATE: 3-18-16

March 21, 2016
PLANS APPROVAL DATE

REGISTERED PROFESSIONAL ENGINEER
M.D. VINA
No. 52898
Exp 12/31/16
CIVIL
STATE OF CALIFORNIA

THE STATE OF CALIFORNIA OR ITS OFFICERS OR AGENTS SHALL NOT BE RESPONSIBLE FOR THE ACCURACY OR COMPLETENESS OF SCANNED COPIES OF THIS PLAN SHEET.

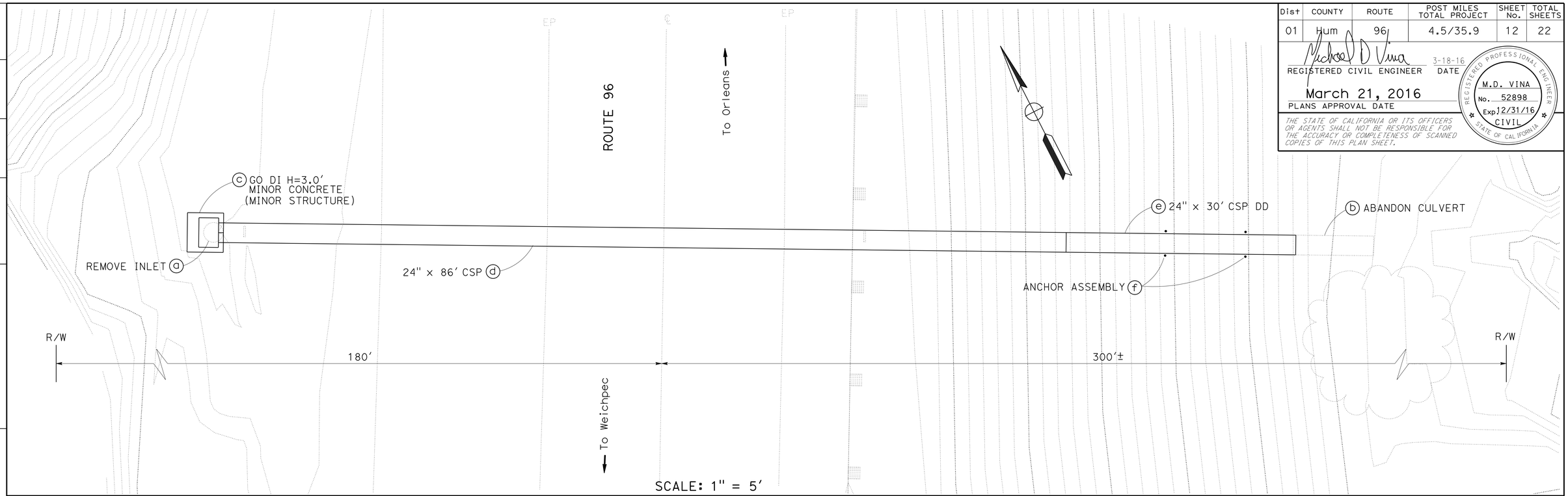

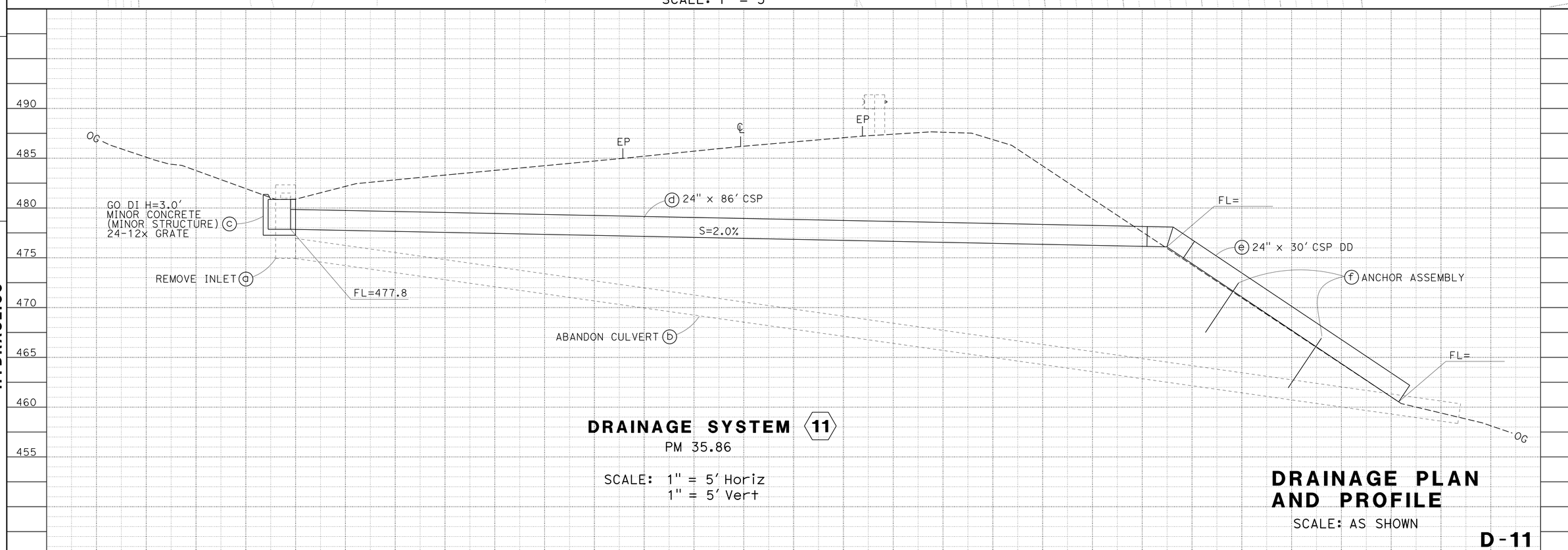

DRAINAGE SYSTEM 11

PM 35.86

SCALE: 1" = 5′ Horiz
1" = 5′ Vert

DRAINAGE PLAN AND PROFILE

SCALE: AS SHOWN

D-11

REVISED BY	DATE REVISED
MIKE VINA	SHANE WILSON

CALCULATED-DESIGNED BY — CHECKED BY

FUNCTIONAL SUPERVISOR: SCOTT LEE

STATE OF CALIFORNIA - DEPARTMENT OF TRANSPORTATION
MAINTENANCE HYDRAULICS
Caltrans

P:\PROJ\01\0E360\drafting\sheets\0114000039ed011.dgn

LAST REVISION 00-00-00 — DATE PLOTTED => 03-MAY-2016 — TIME PLOTTED => 11:28

Dist	COUNTY	ROUTE	POST MILES TOTAL PROJECT	SHEET No.	TOTAL SHEETS
01	Hum	96	4.5/35.9	13	22

REGISTERED CIVIL ENGINEER — DATE 3-18-16

March 21, 2016
PLANS APPROVAL DATE

REGISTERED PROFESSIONAL ENGINEER
M.D. VINA
No. 52898
Exp 12/31/16
CIVIL
STATE OF CALIFORNIA

THE STATE OF CALIFORNIA OR ITS OFFICERS OR AGENTS SHALL NOT BE RESPONSIBLE FOR THE ACCURACY OR COMPLETENESS OF SCANNED COPIES OF THIS PLAN SHEET.

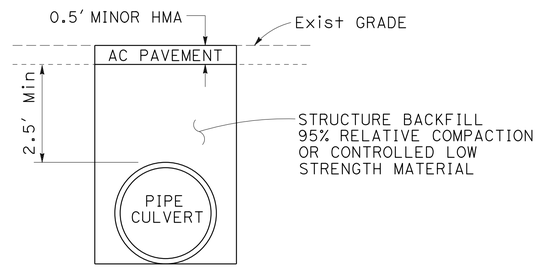

STRUCTURE BACKFILL UNDER EXISTING PAVEMENT

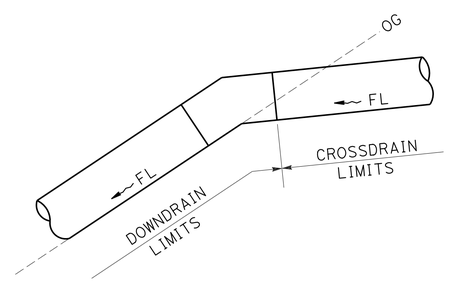

LIMITS OF MEASUREMENT FOR PAYMENT

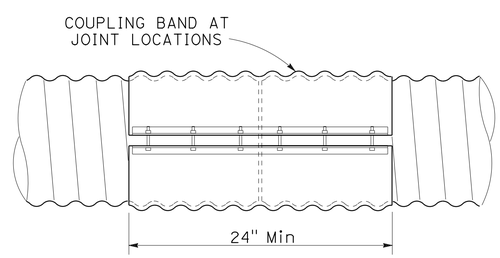

JOINT COUPLING BAND

DRAINAGE DETAILS

NO SCALE

DD-1

STATE OF CALIFORNIA - DEPARTMENT OF TRANSPORTATION
Caltrans
MAINTENANCE HYDRAULICS

FUNCTIONAL SUPERVISOR: SCOTT LEE
CALCULATED-DESIGNED BY: MIKE VINA
CHECKED BY: SHANE WILSON
REVISED BY
DATE REVISED

P:\PROJ\01\QE360\drafting\sheets\01140000391c001.dgn

LAST REVISION 00-00-00 | DATE PLOTTED => 03-MAY-2016 | TIME PLOTTED => 11:28

Dist	COUNTY	ROUTE	POST MILES TOTAL PROJECT	SHEET No.	TOTAL SHEETS
01	Hum	96	4.5/35.9	14	22

REGISTERED CIVIL ENGINEER — DATE 3-18-16

March 21, 2016
PLANS APPROVAL DATE

REGISTERED PROFESSIONAL ENGINEER M.D. VINA No. 52898 Exp 12/31/16 CIVIL STATE OF CALIFORNIA

THE STATE OF CALIFORNIA OR ITS OFFICERS OR AGENTS SHALL NOT BE RESPONSIBLE FOR THE ACCURACY OR COMPLETENESS OF SCANNED COPIES OF THIS PLAN SHEET.

NOTE:

EXACT LOCATION OF SIGNS DETERMINED BY THE ENGINEER.

LEGEND

● LOCATIONS OF WORK

CONSTRUCTION AREA SIGNS

SIGN	SIGN CODE	SIGN MESSAGE	PANEL SIZE	No. OF POSTS AND SIZE	No. OF SIGNS (N)
A	C40(CA)	TRAFFIC FINES DOUBLED IN CONSTRUCTION ZONES	108" x 42"	2 - 6" x 6"	2
B	G20-1	ROAD WORK NEXT 33 MILES	60" x 36"	2 - 4" x 6"	2
	C23B(CA)	CULVERT REPAIR	60" x 18"		
C	W11-1	BICYCLE SYMBOL	36" x 36"	1 - 4" x 6"	2
	W16-1	SHARE THE ROAD	24" x 30"		
D	G20-2	END ROAD WORK	36" x 18"	1 - 4" x 4"	2

(N) NOT A SEPARATE PAY ITEM. FOR INFORMATION ONLY.

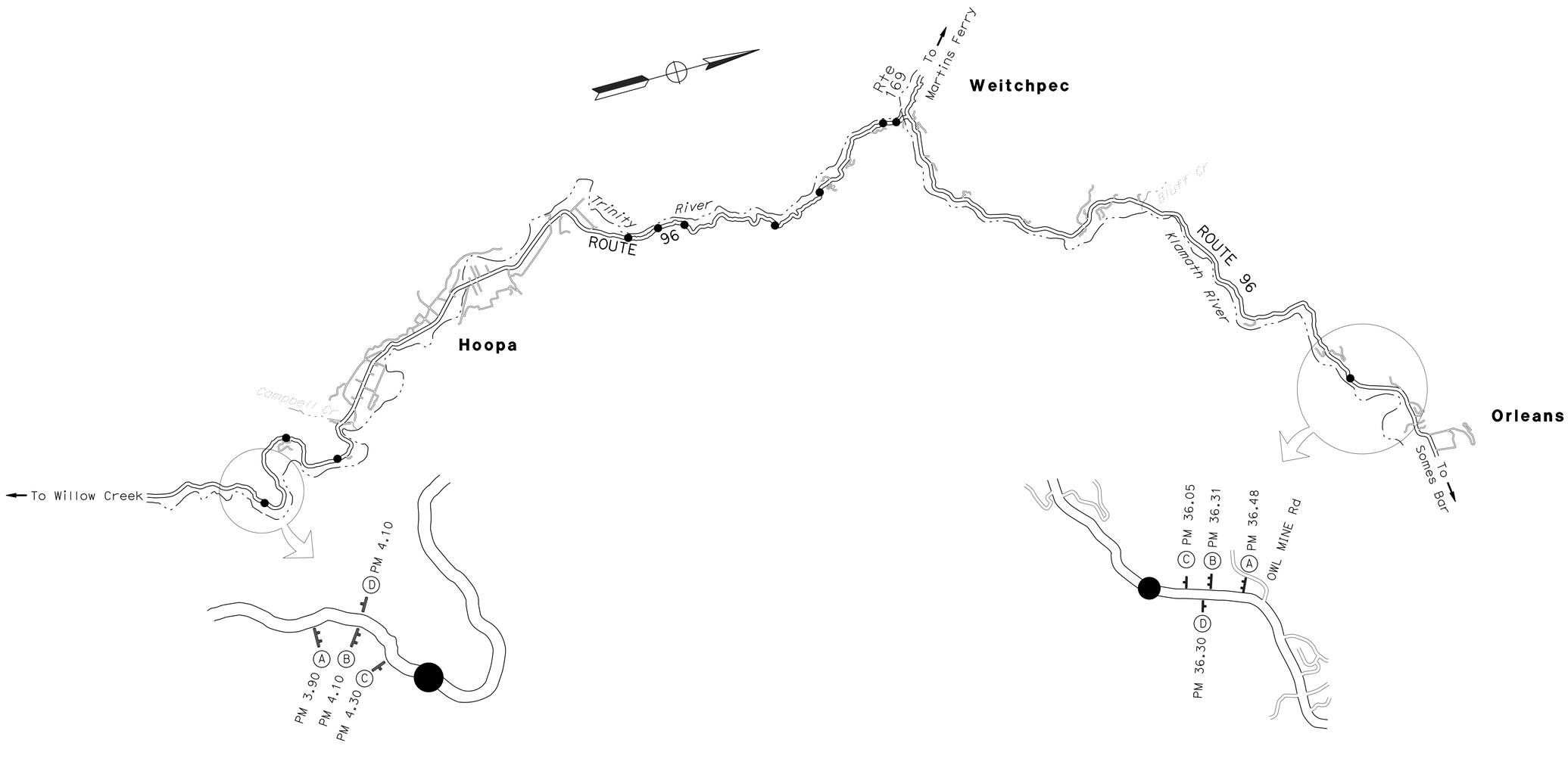

CONSTRUCTION AREA SIGNS

NO SCALE

CS-1

APPROVED FOR CONSTRUCTION AREA SIGN WORK ONLY

REVISED BY	DATE REVISED

CALCULATED-DESIGNED BY	CHECKED BY
MIKE VINA	SHANE WILSON

FUNCTIONAL SUPERVISOR: SCOTT LEE

STATE OF CALIFORNIA - DEPARTMENT OF TRANSPORTATION
Caltrans
MAINTENANCE HYDRAULICS

P:\PROJ\01\0E360\drafting\sheets\01140000391a001.dgn

LAST REVISION 00-00-00 | DATE PLOTTED => 03-MAY-2016 | TIME PLOTTED => 11:28

Dist	COUNTY	ROUTE	POST MILES TOTAL PROJECT	SHEET No.	TOTAL SHEETS
01	Hum	96	4.5/35.9	15	22

REGISTERED CIVIL ENGINEER — DATE 11-13-15

March 21, 2016
PLANS APPROVAL DATE

REGISTERED PROFESSIONAL ENGINEER — SHERI M. RODRIGUEZ — No. C66861 — Exp. 9-30-16 — CIVIL — STATE OF CALIFORNIA

THE STATE OF CALIFORNIA OR ITS OFFICERS OR AGENTS SHALL NOT BE RESPONSIBLE FOR THE ACCURACY OR COMPLETENESS OF SCANNED COPIES OF THIS PLAN SHEET.

NOTES:

1. CALIFORNIA CODES ARE DESIGNATED BY (CA). OTHERWISE, FEDERAL (MUTCD) CODES ARE SHOWN.
2. ALL SIGNS SHALL HAVE A BLACK LEGEND ON FLUORESCENT ORANGE BACKGROUND AND SHALL BE EQUIPPED WITH AT LEAST TWO 16" x 16" ORANGE FLAGS FOR DAYTIME CLOSURE OR FLASHING BEACONS FOR LANE CLOSURE DURING HOURS OF DARKNESS.
3. ALL CONES USED FOR LANE CLOSURES DURING THE HOURS OF DARKNESS SHALL BE FITTED WITH RETROREFLECTIVE BANDS OR SLEEVES.
4. WHEN A PILOT CAR IS USED, PLACE A C37 (CA) SIGN AT ALL INTERSECTIONS WITHIN TRAFFIC CONTROL AREA. WHERE VEHICULAR TRAFFIC CAN NOT EFFECTIVELY SELF-REGULATE, AT LEAST ONE FLAGGER SHALL BE USED AT EACH INTERSECTION WITHIN THE TRAFFIC CONTROL AREA.
5. FLAGGER SHOULD STAND IN A CONSPICUOUS PLACE, FACING TRAFFIC AT ALL TIMES, BE VISIBLE TO APPROACHING TRAFFIC AS WELL AS APPROACHING VEHICLES AFTER THE FIRST VEHICLE HAS STOPPED.
6. ADDITIONAL ADVANCE FLAGGERS ARE REQUIRED DURING HOURS OF DAYLIGHT. A FULL MATRIX PCMS IN PLACE OF EACH ADVANCE FLAGGER REQUIRED DURING HOURS OF DARKNESS.
7. WHEN FLAGGER IS NOT VISIBLE FROM THIS LOCATION PLACE A C29 (CA) SIGN BELOW THE C9A (CA) SIGN.

LEGEND

- TRAFFIC CONE
- TEMPORARY SIGN
- DIRECTION OF TRAVEL
- PORTABLE FLASHING BEACON
- FLAGGER

SIGN PANEL SIZE (MINIMUM)

- A — 48" x 48" - SPEED OF 45 mph OR MORE; 36" x 36" - SPEED LESS THAN 45 mph
- B — 30" x 30"
- C — UNUSED
- D — UNUSED
- E — 20" x 7"

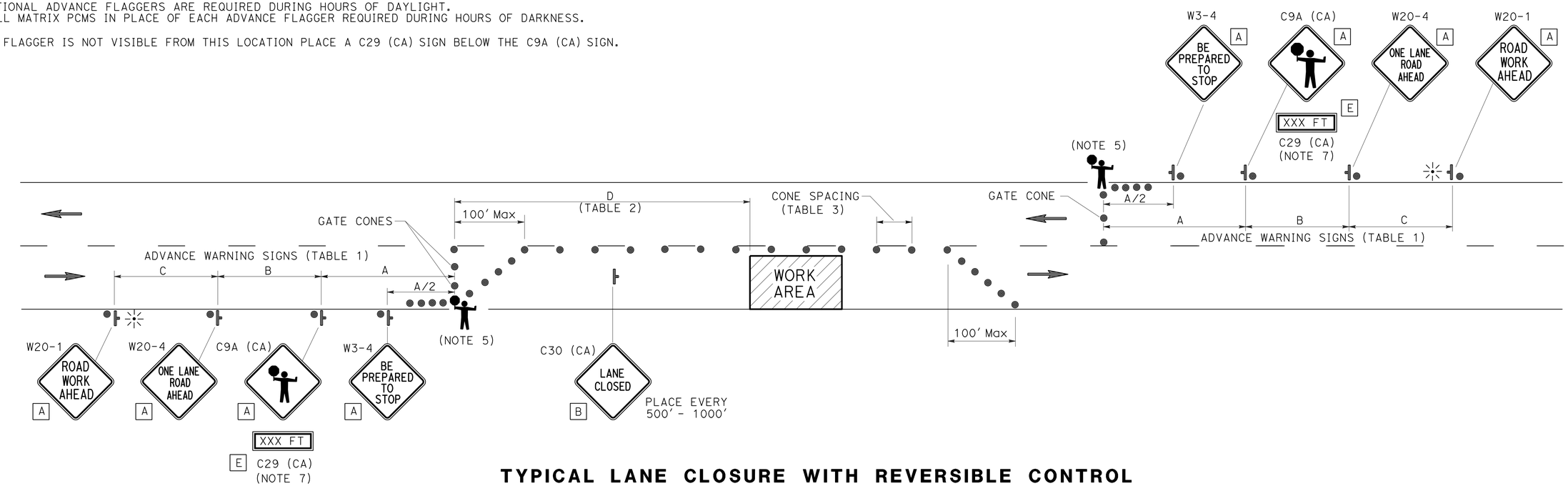

TYPICAL LANE CLOSURE WITH REVERSIBLE CONTROL

TABLE 1

ADVANCE WARNING SIGN SPACING

ROAD TYPE	Min A	Min B	Min C
	ft		
URBAN (25 mph OR LESS)	100	100	100
URBAN (30 mph TO 40 mph)	250	250	250
URBAN (MORE THAN 40 mph)	350	350	350
RURAL	500	500	500
EXPRESSWAY / FREEWAY	1000	1500	2640

TABLE 2

BUFFER SPACE

APPROACH SPEED	Min D	DOWNGRADE Min D		
		-3%*	-6%*	-9%*
mph	ft			
25 & BELOW	155	158	165	173
30	200	205	215	227
35	250	257	271	287
40	305	315	333	354
45	360	378	400	427
50	425	446	474	507
55	495	520	553	593
60	570	598	638	686
65	645	682	728	785

* USE ON SUSTAINED DOWNGRADE STEEPER THAN -3 PERCENT AND LONGER THAN 1 MILE.

TABLE 3

Max CONE SPACING

POSTED SPEED	TAPER	TANGENT	CONFLICT*
mph	ft		
20	20	40	10
25	25	50	12
30	30	60	15
35	35	70	17
40	40	80	20
45	45	90	22
50	50	100	25
55	55	110	27
60	60	120	30
65	65	130	32

* USE WHERE THERE IS A CONFLICT BETWEEN EXISTING PAVEMENT MARKINGS AND CHANNELIZERS.

TRAFFIC HANDLING PLAN

NO SCALE

APPROVED FOR TRAFFIC HANDLING WORK ONLY

TH-1

REVISED BY | DATE REVISED
SHERI M. RODRIGUEZ | TROY A. ARSENEAU
CALCULATED-DESIGNED BY | CHECKED BY
FUNCTIONAL SUPERVISOR: RICHARD MULLEN

STATE OF CALIFORNIA - DEPARTMENT OF TRANSPORTATION
Caltrans® TRAFFIC OPERATIONS

P:\PROJ\01\0E360\drafting\sheets\0114000039md001.dgn

LAST REVISION 00-00-00 | DATE PLOTTED => 03-MAY-2016 | TIME PLOTTED => 11:28

Dist	COUNTY	ROUTE	POST MILES TOTAL PROJECT	SHEET No.	TOTAL SHEETS
01	Hum	96	4.5/35.9	16	22

REGISTERED CIVIL ENGINEER 3-18-16 DATE

March 21, 2016
PLANS APPROVAL DATE

REGISTERED PROFESSIONAL ENGINEER M.D. VINA No. 52898 Exp 12/31/16 CIVIL STATE OF CALIFORNIA

THE STATE OF CALIFORNIA OR ITS OFFICERS OR AGENTS SHALL NOT BE RESPONSIBLE FOR THE ACCURACY OR COMPLETENESS OF SCANNED COPIES OF THIS PLAN SHEET.

SYSTEM NUMBER	DRAINAGE UNIT	REMOVE CULVERT (LF)	REMOVE INLET	ABANDON CULVERT (EA)	SAND BACKFILL	24" CSP (0.109" THICK)	24" CSP DD (0.109" THICK)	24" ANCHOR ASSEMBLY	MINOR CONCRETE (MINOR STRUCTURE)	Misc IRON AND STEEL	SYSTEM NUMBER	DRAINAGE UNIT	LOCATION (PM)	REMARKS
		LF	EA	EA	CY	FT	FT	EA	CY	LB				
1	a		1								1	a	4.52	REMOVE INLET
	b	46										b		REMOVE 18" CULVERT
	c								1.24	239		c		GO DI H=3.0', 24-12X GRATE
	d					48						d		24" CSP
2	a		1								2	a	6.96	REMOVE INLET
	b	50										b		REMOVE 18" CULVERT
	c								0.95	239		c		G1 DI H=3.0', 24-12X GRATE
	d					50						d		24" CSP
3	a		1								3	a	7.71	REMOVE INLET
	b	37										b		REMOVE 18" CULVERT
	c								0.95	239		c		G1 DI H=3.0', 24-12X GRATE
	d					38						d		24" CSP
4	a		1								4	a	16.00	REMOVE INLET
	b	42										b		REMOVE 18" CULVERT
	c								0.95	239		c		G1 DI (H=3.0), 24-12X GRATE
	d					42						d		24"CSP
5	a		1								5	a	16.97	REMOVE INLET
	b	32										b		REMOVE 18" CULVERT
	c								0.95	239		c		G1 DI (H=3.0), 24-12X GRATE
	d					36						d		24" CSP
6	a		1								6	a	17.69	REMOVE INLET
	b	38										b		REMOVE 18" CULVERT
	c								0.95	239		c		G1 DI (H=3.0), 24-12X GRATE
	d					40						d		24" CSP
7	a		1								7	a	19.5	REMOVE INLET
	b	37										b		REMOVE 18" CULVERT
	c								0.95	239		c		G1 DI (H=3.0), 24-12X GRATE
	d					40						d		24" CSP
8	a		1								8	a	20.76	REMOVE INLET
	b	39										b		REMOVE 18" CULVERT
	c								0.95	239		c		G1 DI (H=3.0), 24-12X GRATE
	d					40						d		24" CSP
9	a		1								9	a	22.67	REMOVE INLET
	b	39										b		REMOVE 18" CULVERT
	c								0.95	239		c		G1 DI (H=3.0), 24-12X GRATE
	d					40						d		24" CSP
10	a		1								10	a	22.79	REMOVE INLET
	b	44										b		REMOVE 18" CULVERT
	c								1.06	239		c		G1 DI (H=3.5), 24-12X GRATE
	d					46						d		24" CSP
11	a		1								11	a	35.86	REMOVE INLET
	b			1	13.7							b		ABANDON 24" CULVERT
	c								1.24	239		c		GO DI (H=3.0), 24-12X GRATE
	d					86						d		24" CSP
	e						30					e		24" CSP DD
	f							2				f		ANCHOR ASSEMBLIES
TOTALS		404	11	1	13.7	506	30	2	11.14	2629				

TEMPORARY EROSION CONTROL QUANTITIES

DRAINAGE SYSTEM No.	TEMPORARY MULCH	TEMPORARY DRAINAGE INLET PROTECTION	TEMPORARY FIBER ROLL	TEMPORARY SILT FENCE
	SQYD	EA	LF	LF
1	30	1	25	15
2	30	1	25	15
3	20	1	25	15
4	30	1	25	15
5	20	1	25	15
6	15	1	15	15
7	20	1	25	15
8	20	1	15	15
9	25	1	15	15
10	25	1	25	15
11	30	1	30	15
TOTAL	265	11	250	165

WOOD MULCH APPLICATION

ITEM	MATERIAL		APPLICATION RATE	REMARKS
	DESCRIPTION	TYPE		
WOOD MULCH	SHREDDED BARK	REDWOOD	404 CY/ACRE	3" DEPTH

EROSION CONTROL QUANTITIES

DRAINAGE SYSTEM No.	POSTMILE	AREA (N)	WOOD MULCH
		SQYD	CY
1	4.52	30	2.5
2	6.96	30	2.5
3	7.71	20	1.7
4	16.00	30	2.5
5	16.97	20	1.7
6	17.69	15	1.2
7	19.50	20	1.7
8	20.76	20	1.7
9	22.67	25	2.1
10	22.79	25	2.1
11	35.86	30	2.5
	TOTAL	265	22.2

NOTE: (N) DENOTES NON PAY ITEM, FOR INFORMATION ONLY

SUMMARY OF QUANTITIES

Q-1

REVISED BY | DATE REVISED
MIKE VINA | SHANE WILSON
CALCULATED-DESIGNED BY | CHECKED BY
FUNCTIONAL SUPERVISOR: SCOTT LEE
STATE OF CALIFORNIA - DEPARTMENT OF TRANSPORTATION
Caltrans
MAINTENANCE HYDRAULICS
P:\PROJ\01\GE360\drafting\sheets\0114000039pa001.dgn

LAST REVISION 00-00-00 | DATE PLOTTED => 03-MAY-2016 | TIME PLOTTED => 11:29

M

Maint	MAINTENANCE
Max	MAXIMUM
MB	METAL BEAM
MBB	METAL BEAM BARRIER
MBGR	METAL BEAM GUARD RAILING
Med	MEDIAN
MGS	MIDWEST GUARDRAIL SYSTEM
MH	MANHOLE
Min	MINIMUM
Misc	MISCELLANEOUS
Misc I & S	MISCELLANEOUS IRON AND STEEL
Mkr	MARKER
Mod	MODIFIED,
	MODIFY
Mon	MONUMENT
MP	METAL PLATE
MPGR	METAL PLATE GUARD RAILING
MR	MOVEMENT RATING
MSE	MECHANICALLY STABILIZED EMBANKMENT
Mt	MOUNTAIN, MOUNT
Mtl	MATERIAL
MVP	MAINTENANCE VEHICLE PULLOUT

N

N	NORTH
NB	NORTHBOUND
No.	NUMBER (MUST HAVE PERIOD)
Nos.	NUMBERS (MUST HAVE PERIOD)
NPS	NOMINAL PIPE SIZE
NS	NEAR SIDE
NSP	NEW STANDARD PLAN
NTS	NOT TO SCALE

O

Oblr	OBLITERATE
OC	OVERCROSSING
OD	OUTSIDE DIAMETER
OF	OUTSIDE FACE
OG	ORIGINAL GROUND
OGAC	OPEN GRADED ASPHALT CONCRETE
OGFC	OPEN GRADED FRICTION COURSE
OH	OVERHEAD
OHWM	ORDINARY HIGH WATER MARK
O-O	OUT TO OUT
Opp	OPPOSITE
OSD	OVERSIDE DRAIN

P

p	PAGE
PAP	PERFORATED ALUMINUM PIPE
PB	PULL BOX
PC	POINT OF CURVATURE,
	PRECAST
PCC	POINT OF COMPOUND CURVE,
	PORTLAND CEMENT CONCRETE
PCMS	PORTABLE CHANGEABLE MESSAGE SIGN
PCP	PERFORATED CONCRETE PIPE,
	PRESTRESSED CONCRETE PIPE
PCVC	POINT OF COMPOUND VERTICAL CURVE
PEC	PERMIT TO ENTER AND CONSTRUCT
Ped	PEDESTRIAN
Ped OC	PEDESTRIAN OVERCROSSING
Ped UC	PEDESTRIAN UNDERCROSSING
Perm Mtl	PERMEABLE MATERIAL

P continued

PG	PROFILE GRADE
PI	POINT OF INTERSECTION
PJP	PARTIAL JOINT PENETRATION
Pkwy	PARKWAY
ℙL,PL	PLATE
P/L	PROPERTY LINE
PM	POST MILE,
	TIME FROM NOON TO MIDNIGHT
PN	PAVING NOTCH
POC	POINT OF HORIZONTAL CURVE
POT	POINT OF TANGENT
POVC	POINT OF VERTICAL CURVE
PP	PIPE PILE,
	PLASTIC PIPE,
	POWER POLE
PPL	PREFORMED PERMEABLE LINER
PPP	PERFORATED PLASTIC PIPE
PRC	POINT OF REVERSE CURVE
PRF	PAVEMENT REINFORCING FABRIC
PRVC	POINT OF REVERSE VERTICAL CURVE
PS&E	PLANS, SPECIFICATIONS AND ESTIMATES
PS, P/S	PRESTRESSED
PSP	PERFORATED STEEL PIPE
PT	POINT OF TANGENCY
PVC	POLYVINYL CHLORIDE
Pvmt	PAVEMENT

Q

Qty	QUANTITY

R

R	RADIUS
R & D	REMOVE AND DISPOSE
R & S	REMOVE AND SALVAGE
R/C	RATE OF CHANGE
RCA	REINFORCED CONCRETE ARCH
RCB	REINFORCED CONCRETE BOX
RCP	REINFORCED CONCRETE PIPE
RCPA	REINFORCED CONCRETE PIPE ARCH
Rd	ROAD
Reinf	REINFORCED,
	REINFORCEMENT,
	REINFORCING
Rel	RELOCATE
Repl	REPLACEMENT
Ret	RETAINING
Rev	REVISED, REVISION
Rdwy	ROADWAY
RHMA	RUBBERIZED HOT MIX ASPHALT
Riv	RIVER
RM	ROAD-MIXED
RP	RADIUS POINT,
	REFERENCE POINT
RR	RAILROAD
RSP	ROCK SLOPE PROTECTION,
	REVISED STANDARD PLAN
Rt	RIGHT
Rte	ROUTE
RW	REDWOOD,
	RETAINING WALL
R/W	RIGHT OF WAY
Rwy	RAILWAY

S

S	SOUTH,
	SUPPLEMENT
SAE	STRUCTURE APPROACH EMBANKMENT
Salv	SALVAGE
SAPP	STRUCTURAL ALUMINUM PLATE PIPE
SB	SOUTHBOUND
SC	SAND CUSHION
SCSP	SLOTTED CORRUGATED STEEL PIPE
SD	STORM DRAIN
Sec	SECOND,
	SECTION
Sep	SEPARATION
SG	SUBGRADE
Shld	SHOULDER
Sht	SHEET
Sim	SIMILAR
℄	STATION LINE
SM	SELECTED MATERIAL
Spec	SPECIAL,
	SPECIFICATIONS
SPP	SLOTTED PLASTIC PIPE
SS	SLOPE STAKE
SSBM	STRAP AND SADDLE BRACKET METHOD
SSD	STRUCTURAL SECTION DRAIN
SSPA	STRUCTURAL STEEL PLATE ARCH
SSPP	STRUCTURAL STEEL PLATE PIPE
SSPPA	STRUCTURAL STEEL PLATE PIPE ARCH
SSRP	STEEL SPIRAL RIB PIPE
St	STREET
Sta	STATION
STBB	SINGLE THRIE BEAM BARRIER
Std	STANDARD
Str	STRUCTURE
Surf	SURFACING
SW	SIDEWALK,
	SOUND WALL
Swr	SEWER
Sym	SYMMETRICAL
S4S	SURFACE 4 SIDES

T

T	SEMI-TANGENT
Tan	TANGENT
TBB	THRIE BEAM BARRIER
Tbr	TIMBER
TC	TOP OF CURB
TCB	TRAFFIC CONTROL BOX
TCE	TEMPORARY CONSTRUCTION EASEMENT
Tel	TELEPHONE
Temp	TEMPORARY
TG	TOP OF GRADE
Tot	TOTAL
TP	TELEPHONE POLE
TPB	TREATED PERMEABLE BASE
TPM	TREATED PERMEABLE MATERIAL
Trans	TRANSITION

T continued

TS	TRANSVERSE,
	TRAFFIC SIGNAL,
	TUBULAR STEEL
Typ	TYPICAL

U

UC	UNDERCROSSING
UD	UNDERDRAIN
UG	UNDERGROUND
UON	UNLESS OTHERWISE NOTED
UP	UNDERPASS

V

V	VALVE,
	DESIGN SPEED
Var	VARIABLE,
	VARIES
VC	VERTICAL CURVE
VCP	VITRIFIED CLAY PIPE
Vert	VERTICAL
Via	VIADUCT
Vol	VOLUME

W

W	WEST,
	WIDTH
WB	WESTBOUND
WH	WEEP HOLE
WM	WIRE MESH
WS	WATER SURFACE
WSP	WELDED STEEL PIPE
Wt	WEIGHT
WV	WATER VALVE
WW	WINGWALL
WWLOL	WINGWALL LAYOUT LINE

X

X Sec	CROSS SECTION
Xing	CROSSING

Y

Yr	YEAR
Yrs	YEARS

Dist	COUNTY	ROUTE	POST MILES TOTAL PROJECT	SHEET No.	TOTAL SHEETS
01	Hum	96	4.5/35.9	17	22

Grace M. Tsushima
REGISTERED CIVIL ENGINEER

July 19, 2013
PLANS APPROVAL DATE

REGISTERED PROFESSIONAL ENGINEER Grace M. Tsushima No. C49814 Exp. 9-30-14 CIVIL STATE OF CALIFORNIA

THE STATE OF CALIFORNIA OR ITS OFFICERS OR AGENTS SHALL NOT BE RESPONSIBLE FOR THE ACCURACY OR COMPLETENESS OF SCANNED COPIES OF THIS PLAN SHEET.

TO ACCOMPANY PLANS DATED 3-21-16

UNIT OF MEASUREMENT SYMBOLS:

Some of the symbols used in the project plan quantity tables and in the Bid Item List are:

TABLE A

SYMBOL USED	DEFINITIONS
ACRE	ACRE
CF	CUBIC FOOT
CY	CUBIC YARD
EA	EACH
GAL	GALLON
LB	POUND
LF	LINEAR FOOT
SQFT	SQUARE FOOT
SQYD	SQUARE YARD
STA	100 FEET
TAB	TABLET
TON	2,000 POUNDS

Some of the symbols used in the plans other than in the project plan quantity tables are:

TABLE B

SYMBOL USED	DEFINITIONS
ksi	KIPS PER SQUARE INCH
ksf	KIPS PER SQUARE FOOT
psi	POUNDS PER SQUARE INCH
psf	POUNDS PER SQUARE FOOT
lb/ft^3, pcf	POUNDS PER CUBIC FOOT
tsf	TONS PER SQUARE FOOT
mph, MPH *	MILES PER HOUR
ø	NOMINAL DIAMETER
oz	OUNCE
lb	POUND
kip	1,000 POUNDS
cal	CALORIE
ft	FOOT OR FEET
gal	GALLON

* For use on a sign panel only

STATE OF CALIFORNIA
DEPARTMENT OF TRANSPORTATION

ABBREVIATIONS (SHEET 2 OF 2)

NO SCALE

RSP A10B DATED JULY 19, 2013 SUPERSEDES STANDARD PLAN A10B DATED MAY 20, 2011 - PAGE 2 OF THE STANDARD PLANS BOOK DATED 2010.

REVISED STANDARD PLAN RSP A10B

2010 REVISED STANDARD PLAN RSP A10B

P:\PROJ\01\0E360\drafting\sheets\va001.dgn

6-7-13

Dist	COUNTY	ROUTE	POST MILES TOTAL PROJECT	SHEET No.	TOTAL SHEETS
01	Hum	96	4.5/35.9	18	22

REGISTERED CIVIL ENGINEER

October 30, 2015
PLANS APPROVAL DATE

REGISTERED PROFESSIONAL ENGINEER Carl M. Duan No. C59976 Exp. 6-30-16 CIVIL STATE OF CALIFORNIA

THE STATE OF CALIFORNIA OR ITS OFFICERS OR AGENTS SHALL NOT BE RESPONSIBLE FOR THE ACCURACY OR COMPLETENESS OF SCANNED COPIES OF THIS PLAN SHEET.

TO ACCOMPANY PLANS DATED 3-21-16

2010 REVISED STANDARD PLAN RSP A62F

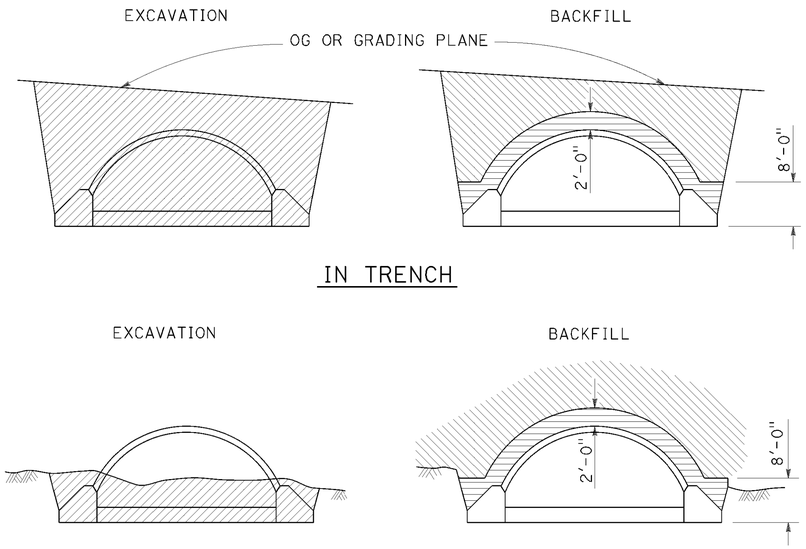

STRUCTURAL STEEL PLATE ARCHES

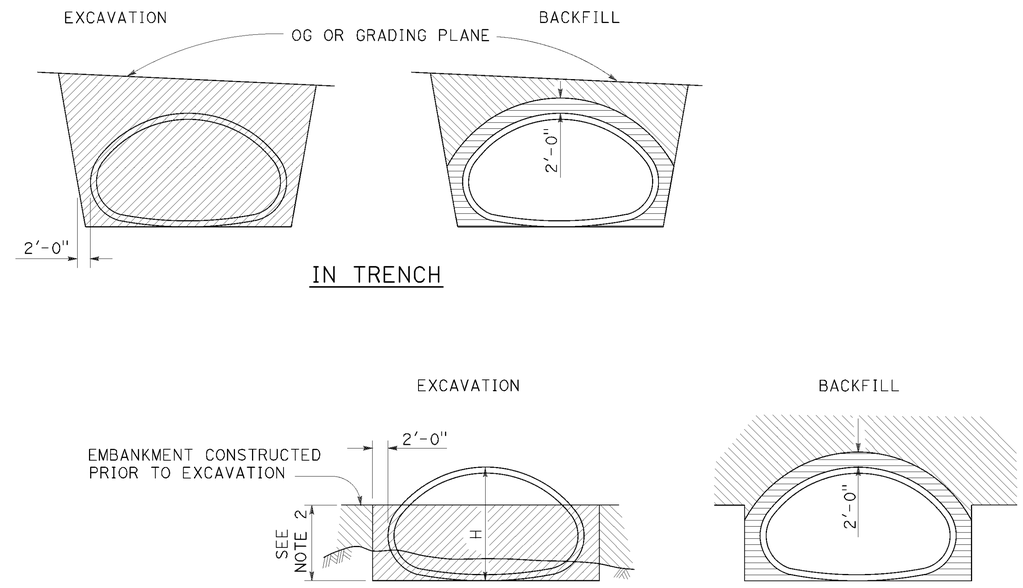

STRUCTURAL STEEL PLATE PIPE ARCHES AND VEHICULAR UNDERCROSSING

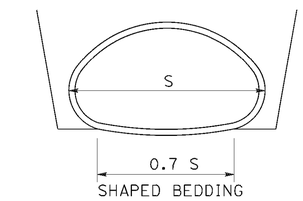

SHAPED BEDDING

S = Larger than 84"

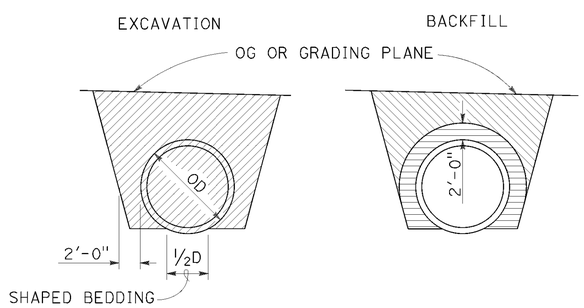

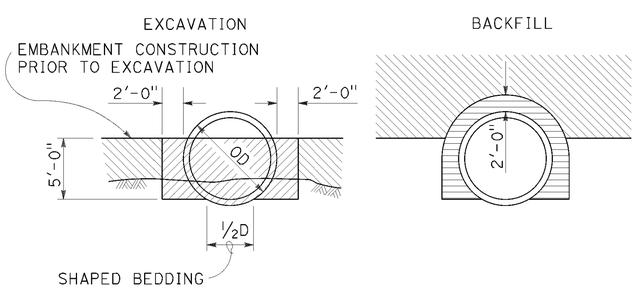

PIPES

Larger than 84"

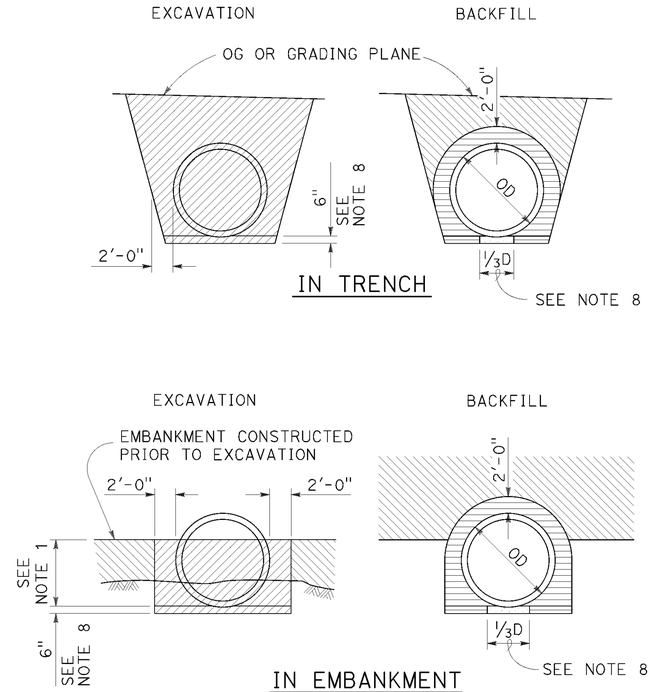

METAL AND PLASTIC PIPES AND CORRUGATED METAL PIPE ARCHES

84" or Smaller

NOTES:

1. PIPES: 30" minimum for diameters up to and including 42" then ⅔ diameter but no more than 60" required. CORRUGATED METAL PIPE ARCHES: 30" maximum.
2. ⅔ H up to 60" maximum.
3. Slope or shore excavation sides as necessary.
4. Backfill shall be placed full width of excavation except as noted.
5. Diagrams do not apply to overside drains.
6. Dimensions shown are minimum.
7. Construction strutting of structural steel plate pipe, arches and vehicular undercrossing to be used when shown on the project plans. When shown, see Standard Plan D88A for strutting requirements.
8. Excavation below pipe and 80% relative compaction requirements for plastic pipes only.
9. D is the inside diameter (ID) of the pipe.

LEGEND

- STRUCTURE EXCAVATION (CULVERT)
- ROADWAY EMBANKMENT
- STRUCTURE BACKFILL (CULVERT) 95% RELATIVE COMPACTION
- STRUCTURE BACKFILL (CULVERT) 80% RELATIVE COMPACTION

STATE OF CALIFORNIA
DEPARTMENT OF TRANSPORTATION

EXCAVATION AND BACKFILL METAL AND PLASTIC CULVERTS

NO SCALE

RSP A62F DATED OCTOBER 30, 2015 SUPERSEDES STANDARD PLAN A62F DATED MAY 20, 2011 - PAGE 26 OF THE STANDARD PLANS BOOK DATED 2010.

REVISED STANDARD PLAN RSP A62F

P:\PROJ\01\0E360\drafting\sheets\va002.dgn

10-13-15

Dist	COUNTY	ROUTE	POST MILES TOTAL PROJECT	SHEET No.	TOTAL SHEETS
01	Hum	96	4.5/35.9	19	22

REGISTERED CIVIL ENGINEER

October 30, 2015
PLANS APPROVAL DATE

REGISTERED PROFESSIONAL ENGINEER Carl M. Duan No. C59976 Exp. 6-30-16 CIVIL STATE OF CALIFORNIA

THE STATE OF CALIFORNIA OR ITS OFFICERS OR AGENTS SHALL NOT BE RESPONSIBLE FOR THE ACCURACY OR COMPLETENESS OF SCANNED COPIES OF THIS PLAN SHEET.

TO ACCOMPANY PLANS DATED 3-21-16

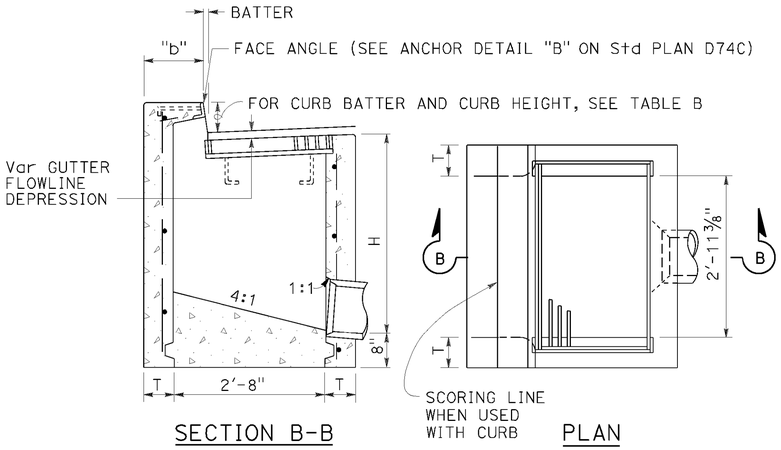

SECTION B-B PLAN

TYPE GO

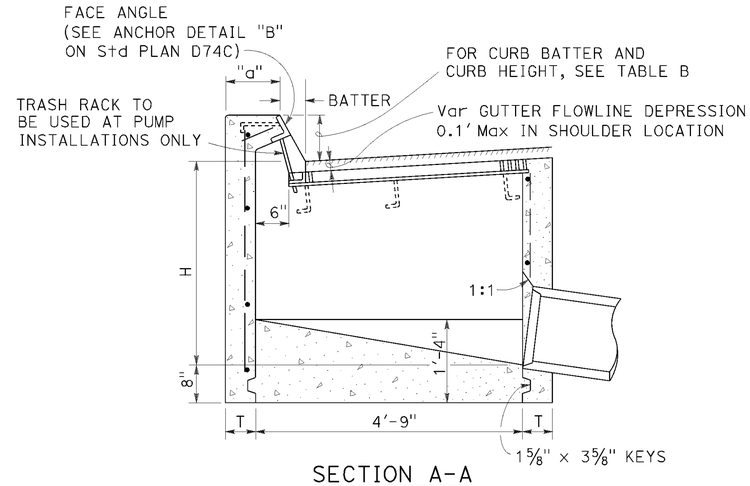

SECTION A-A

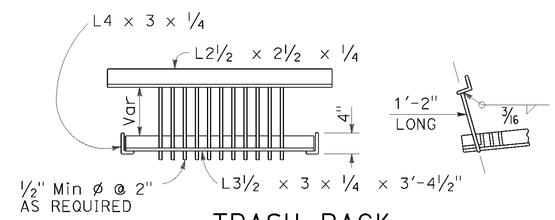

TRASH RACK

(For use with pump installation)

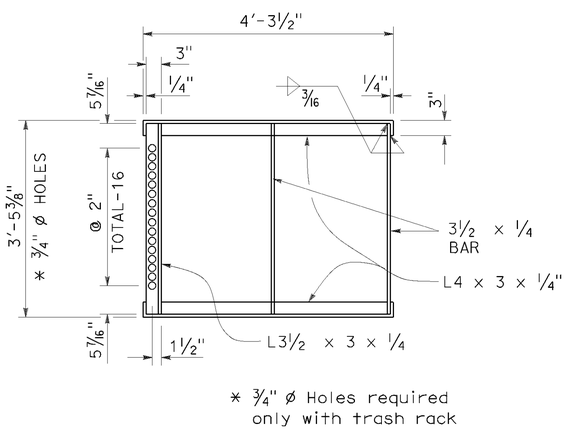

* 3/4" ø Holes required only with trash rack

GRATE FRAME FOR TYPE GDO INLET

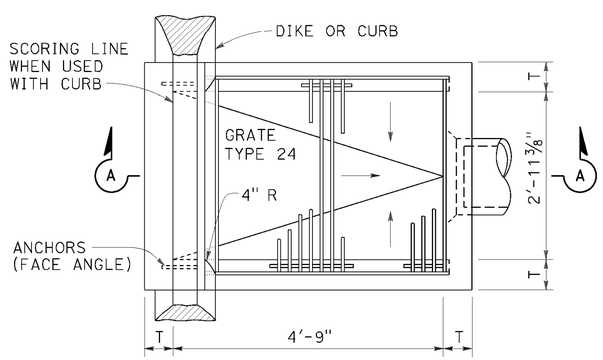

PLAN

TYPE GDO

TABLE A

CONCRETE QUANTITIES				
TYPE	H=3'-0" TO 8'-0" (T=6")		H=8'-1" TO 20'-0" (T=8")	
	H=3'-0" (CY)	ADDITIONAL PCC PER FOOT (CY)	H=8'-1" (CY)	ADDITIONAL PCC PER FOOT (CY)
GO	1.24	0.245	3.39	0.346
GDO	1.62	0.322	4.36	0.446

Table based on 8" floor slab, and curb type giving highest quantity of concrete. no deductions or adjustments are to be made to these quantities because of pipe openings, different floor alternatives or different curb type.

TABLE B

CURB TYPE	NORMAL CURB HEIGHT	CURB BATTER	"a" DIMENSION	"b" DIMENSION
A1-6	6"	1 1/2"	T+7 1/2"	T+6 1/2"
A1-8	8"	2"	T+7"	T+6"
B1-6	6"	4"	T+5"	T+4"
TYPE A DIKE	6"	3"	T+6"	T+5"

NOTES:

1. "H" is the difference in elevation between the outlet pipe flow line and the normal gutter grade line undepressed.
2. For "T" wall thickness, see Table A below.
3. Wall reinforcing not required when "H" is 8'-0" or less and the unsupported width or length is 7'-0" or less. Walls exceeding these limits shall be reinforced with #4 @ 18"± centers placed 1 1/2" clear to inside of box unless otherwise shown.
4. Inlet bottom reinforcing not required. See Standard Plan D74C for alternative reinforced bottom.
5. Steps - None required where "H" is less than 2'-6" Where "H" is 2'-6" or more, install steps with lowest rung 1'-0" above the floor and highest rung not more than 6" below top of inlet. The distance between steps shall not exceed 1'-0" and shall be uniform throughout the length of the wall. Place steps in the wall without an opening. Step inserts may be substituted for the bar steps. Step Inserts shall comply with State Industrial Safety requirements. See Standard Plan D74C for step details.
6. When shown on the project plans, place a 3/4" plain round protection bar horizontally across the length of the opening and bend back 4" into the inlet wall on each side.
7. Pipe(s) can be placed in any wall.
8. Curb section shall match adjacent curb.
9. Basin floors shall have wood trowel finish and shall slope toward the outlet pipe as shown.
10. See Revised Standard Plans RSP D77A and RSP D77B for grate and frame details and weights of miscellaneous iron and Steel.
11. See Standard Plan D78A for gutter depression details.
12. Complete joint penetration butt welds may be substituted for the fillet welds on all anchors.
13. Standard square, hexagon, round or equivalent headed anchors may be substituted for the right angle hooks on the anchors shown on this plan.
14. Cast-in-place inlets to be formed around all pipes/stubs intersecting the inlet and concrete poured in one continuous operation. Precast inlets shall have mortared pipe connections conforming to details for Type GCP inlets on Revised Standard Plan RSP D75B. See Standard Specifications for mortar composition.

STATE OF CALIFORNIA
DEPARTMENT OF TRANSPORTATION

DRAINAGE INLETS

NO SCALE

RSP D74B DATED OCTOBER 30, 2015 SUPERSEDES STANDARD PLAN D74B DATED MAY 20, 2011 - PAGE 159 OF THE STANDARD PLANS BOOK DATED 2010.

REVISED STANDARD PLAN RSP D74B

2010 REVISED STANDARD PLAN RSP D74B

P:\PROJ\01\0E360\drafting\sheets\va003.dgn

10-13-15

Dist	COUNTY	ROUTE	POST MILES TOTAL PROJECT	SHEET No.	TOTAL SHEETS
01	Hum	96	4.5/35.9	20	22

Raymond Don Tsztoo
REGISTERED CIVIL ENGINEER

April 19, 2013
PLANS APPROVAL DATE

REGISTERED PROFESSIONAL ENGINEER Raymond Don Tsztoo No. C37332 Exp. 6-30-14 CIVIL STATE OF CALIFORNIA

THE STATE OF CALIFORNIA OR ITS OFFICERS OR AGENTS SHALL NOT BE RESPONSIBLE FOR THE ACCURACY OR COMPLETENESS OF SCANNED COPIES OF THIS PLAN SHEET.

TO ACCOMPANY PLANS DATED 3-21-16

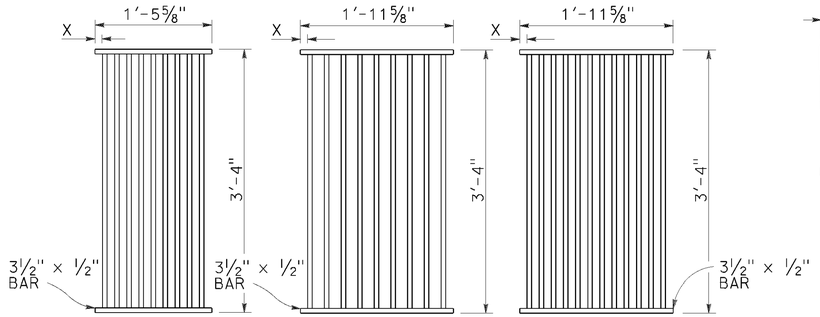

TYPE 18-9

1⅜" Clear spacing. Use within the roadbed on highways where bicycles and pedestrians are excluded.

TYPE 24-9

2" Clear spacing. Use in locations off the roadbed on all types of highways.

TYPE 24-12

1⅜" Clear spacing. Use within the roadbed on highways where bicycles and pedestrians are excluded.

RECTANGULAR GRATE DETAILS

(See table below)

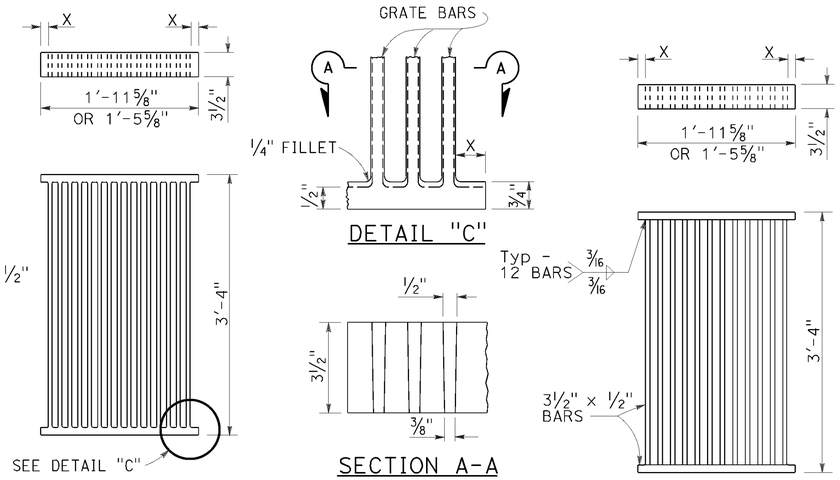

ALTERNATIVE CAST DUCTILE IRON GRATE OR CAST CARBON STEEL GRATE

ALTERNATIVE WELDED GRATE

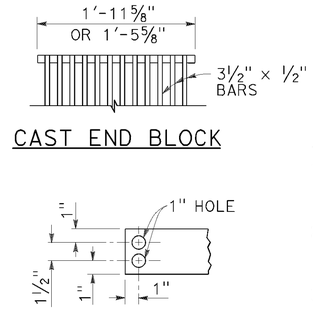

CAST END BLOCK

END OF BAR

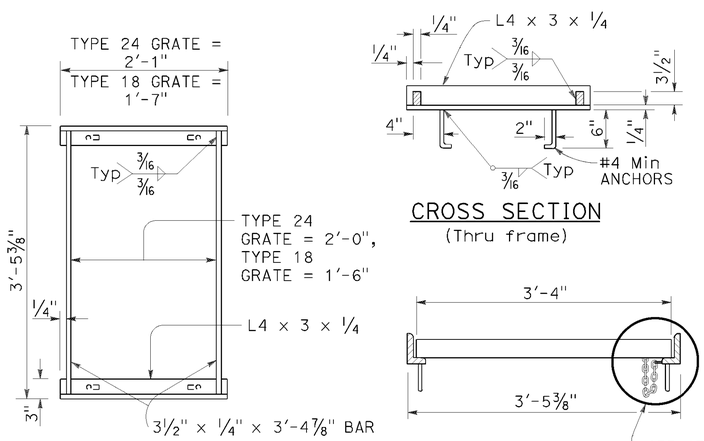

TYPICAL FRAME

CROSS SECTION (Thru frame)

LONGITUDINAL SECTION (Thru frame and grate)

RECTANGULAR FRAME DETAILS

(For all rectangular grates)

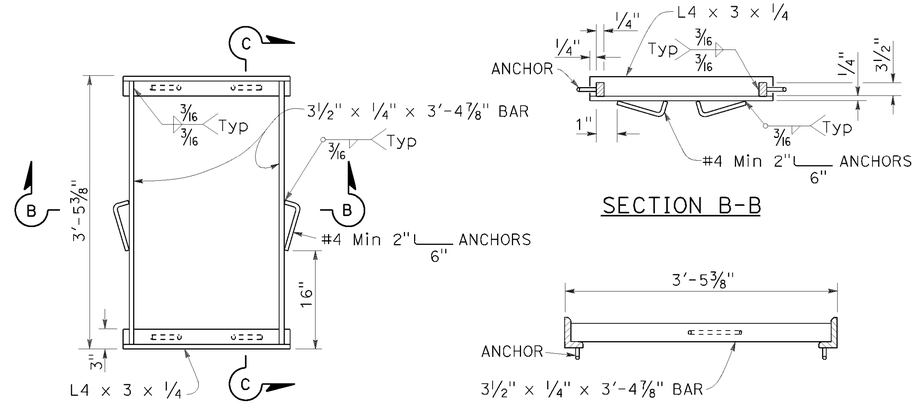

ALTERNATIVE ANCHOR FOR RECTANGULAR FRAME

(For details not shown, See Rectangular Frame Details)

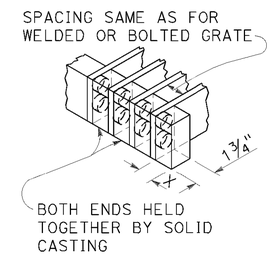

ALTERNATIVE CAST DUCTILE IRON OR CAST CARBON STEEL END BLOCK GRATE

NOTES:

1. Grate type numbers refer to approximate width of grate in inches and number of bars, respectively.
2. Contractor has the option of using cast ductile iron, cast carbon steel, welded, bolted, or cast end block grate.
3. Rounded top of bars optional on all grates.
4. Pipe inlets with a grate shall be placed so that bars parallel direction of principle surface flow.
5. Complete joint penetration butt welds may be substituted for the fillet welds on all anchors.
6. Standard square, hexagon, round or equivalent headed anchors may be substituted for the right angle hooks on the anchors shown on this plan.
7. Grate and frame weights are based on welded grates (weights of face angles, steps, protection bars, etc. are not included).
8. Connect chain to grate and frame only at locations shown on the plans. When chain is required, do not use cast ductile iron grates.

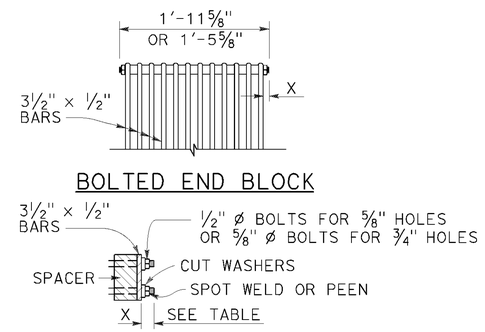

ALTERNATIVE BOLTED GRATE

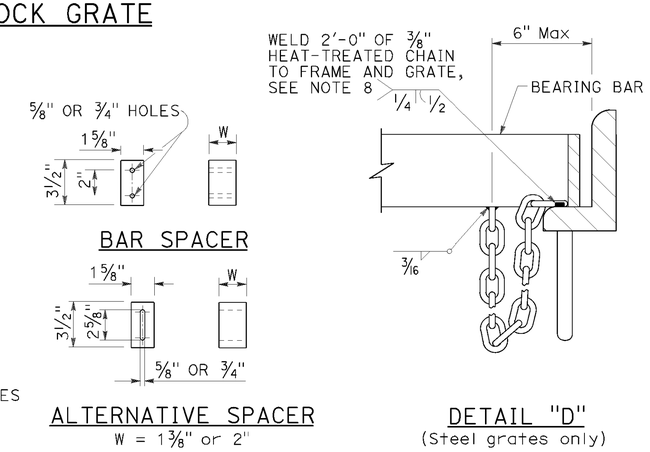

GRATE BAR SPACING TABLE

TYPE	No. OF BARS	CLEAR BAR SPACING	X
18-9	9	1⅜"	1 1/16"
24-9	9	2"	1 9/16"
24-12	12	1⅜"	1¼"

INLET TYPE	COVER TYPE	WEIGHT LB
OS	PLATE	174
OL-7	PLATE	170
OL-10	PLATE	170
OL-14	PLATE	170
OL-21	PLATE	170
OCP	PLATE	112
OCPI	PLATE	112
OCPI	REDWOOD	42
OMP	PLATE	177
OMPI	PLATE	177

INLET TYPE	GRATE TYPE	No. OF GRATES	WEIGHT LB
GDO	24-12	2	634
GOL-7	24-12	1	326
GOL-10	24-12	1	326
GO,G1,G2,G3,G4 (TYPE 24)	24-9	1	263
	24-12	1	326
G4 (TYPE 18),G5,G6	18-9	1	249
GT1	18-9	2	498
GT2	18-9	2	498
GT3	24-12	2	652
GT4	24-12	2	652
TRASH RACK			22
GRATE CHAIN			3

BASIS FOR Misc IRON & STEEL FINAL PAY WEIGHTS FOR DRAINAGE INLETS

(See Note 7)

STATE OF CALIFORNIA
DEPARTMENT OF TRANSPORTATION

GRATE DETAILS No. 1

NO SCALE

RSP D77A DATED APRIL 19, 2013 SUPERSEDES RSP D77A DATED JULY 20, 2012 AND STANDARD PLAN D77A DATED MAY 20, 2011 - PAGE 164 OF THE STANDARD PLANS BOOK DATED 2010.

REVISED STANDARD PLAN RSP D77A

2010 REVISED STANDARD PLAN RSP D77A

P:\PROJ\01\0E360\drafting\sheets\vd004.dgn

4-4-13

Dist	COUNTY	ROUTE	POST MILES TOTAL PROJECT	SHEET No.	TOTAL SHEETS
01	Hum	96	4.5/35.9	21	22

Raymond Don Tsztoo
REGISTERED CIVIL ENGINEER

April 19, 2013
PLANS APPROVAL DATE

REGISTERED PROFESSIONAL ENGINEER Raymond Don Tsztoo No. C37332 Exp. 6-30-14 CIVIL STATE OF CALIFORNIA

THE STATE OF CALIFORNIA OR ITS OFFICERS OR AGENTS SHALL NOT BE RESPONSIBLE FOR THE ACCURACY OR COMPLETENESS OF SCANNED COPIES OF THIS PLAN SHEET.

TO ACCOMPANY PLANS DATED 3-21-16

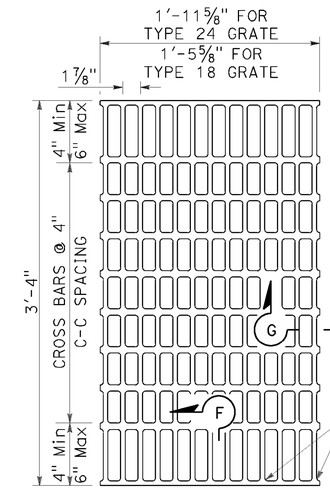

NOTES:

Bearing bars to be 3½" × ¼" bars on 1⅞" centers.

⅜"± ø Cross bars may be fillet welded, resistance welded or electroforged to bearing bars.

Weight of Type 24 grate = 141 LBS.

Weight of Type 18 grate = 107 LBS. (Type 24 grate shown).

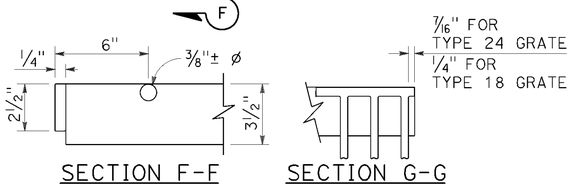

SECTION F-F SECTION G-G

TYPE 18-10 AND 24-13 GRATE

(Welded Steel)

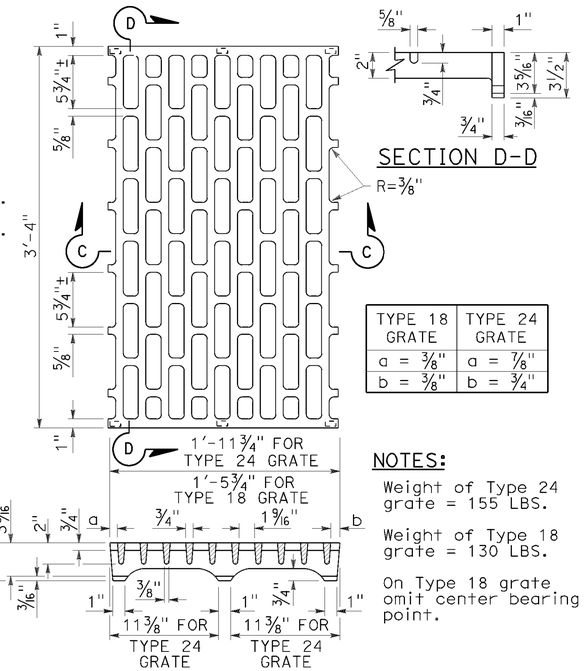

SECTION C-C

TYPE 18 GRATE	TYPE 24 GRATE
a = ⅜"	a = ⅞"
b = ⅜"	b = ¾"

NOTES:

Weight of Type 24 grate = 155 LBS.

Weight of Type 18 grate = 130 LBS.

On Type 18 grate omit center bearing point.

TYPE 18-8C AND 24-10C GRATE

(Cast ductile iron)

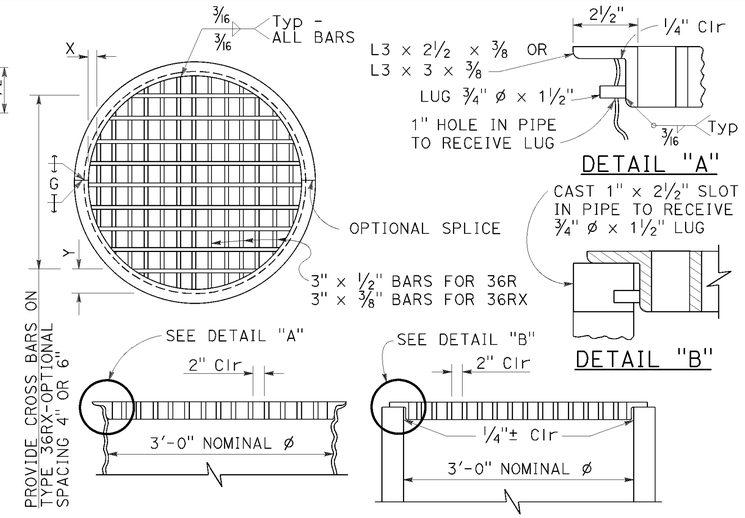

TYPE 36R AND 36RX GRATE DETAILS

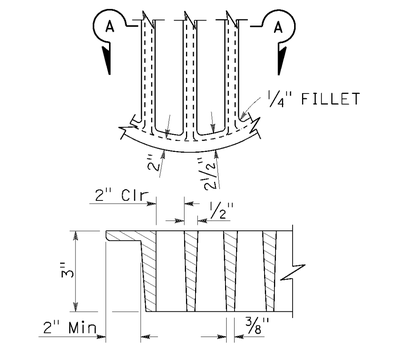

SECTION A-A

ALTERNATIVE CAST DUCTILE IRON GRATE OR CAST CARBON STEEL GRATE TYPE 36R AND 36RX

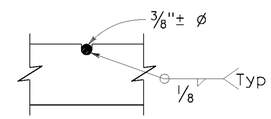

⅜"± ø Cross bars may be fillet welded, resistance welded or electroforged to bearing bars.

CROSS BAR DETAIL TYPE 36RX GRATE (WELDED STEEL)

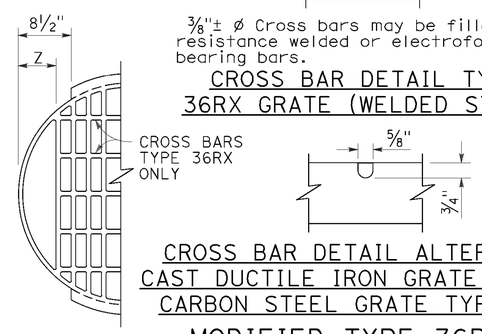

CROSS BAR DETAIL ALTERNATIVE CAST DUCTILE IRON GRATE OR CAST CARBON STEEL GRATE TYPE 36RX

MODIFIED TYPE 36R AND 36RX GRATE FOR ODI INLET

BASIS FOR Misc IRON AND STEEL FINAL PAY WEIGHTS FOR DRAINAGE INLETS

INLET TYPE	GRATE TYPE	No. OF GRATES	WEIGHT LB
GDO (SEE NOTE 4)	24-10C	2	391
	24-10S	2	456
	24-12X	2	473
	24-13	2	374
GO,GOL,G1,G2, G3,G4 (TYPE 24)	24-10C	1	202
	24-10S	1	229
	24-12X	1	239
	24-13	1	188
G4 (TYPE 18) G5,G6	18-8S	1	187
	18-9X	1	187
	18-10	1	149
GT1,GT2	18-8S	2	374
	18-9X	2	374
	18-10	2	298
GT3,GT4	24-10C	2	404
	24-10S	2	458
	24-12X	2	478
	24-13	2	376
ODI	36RX (Mod)	1	196
GMP,GCP,GCPI	36RX	1	215
ODI	36R (Mod)	1	220
GMP,GCP,GCPI	36R	1	236
TRASH RACK			22
GRATE CHAIN			3

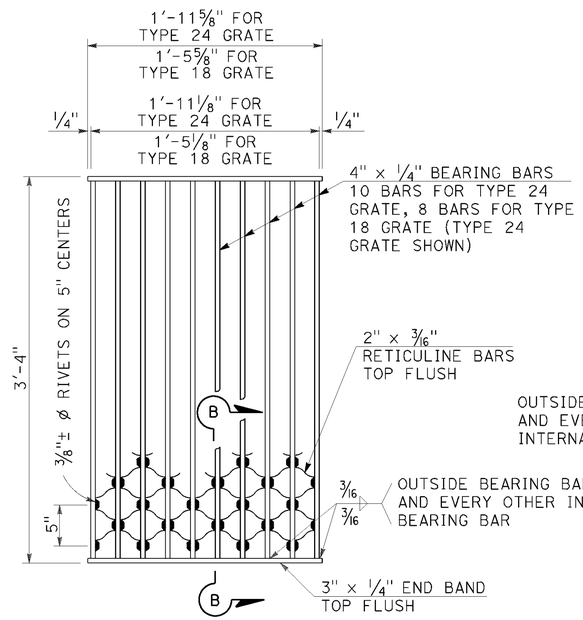

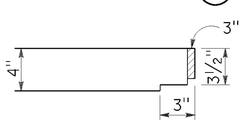

NOTES:

Weight of Type 24 grate = 182 LBS.
Weight of Type 18 grate = 145 LBS.

SECTION B-B

TYPE 18-8S AND 24-10S GRATE

(Welded Steel) Reticuline type

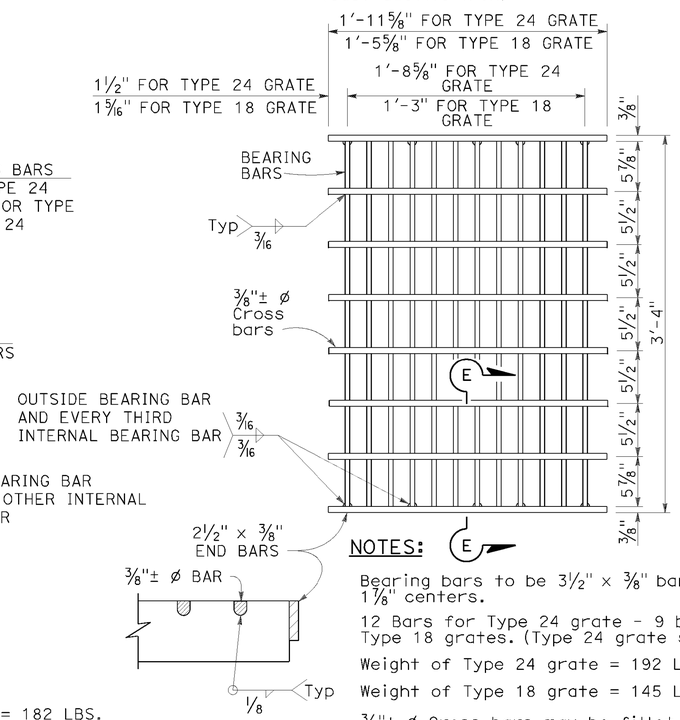

SECTION E-E

NOTES:

Bearing bars to be 3½" × ⅜" bars on 1⅞" centers.

12 Bars for Type 24 grate - 9 bars for Type 18 grates. (Type 24 grate shown).

Weight of Type 24 grate = 192 LBS.

Weight of Type 18 grate = 145 LBS.

⅜"± ø Cross bars may be fillet welded, resistance welded or electroforged to bearing bars.

TYPE 18-9X AND 24-12X GRATE

(Welded Steel)

NOTES:

1. When alternative grates are allowed - Final pay based on alternative with the lesser weight.
2. Use frame shown on Standard Plan D74A, D74B or RSP D77A as appropriate.
3. When Type 24-10S, 24-12X or 24-13 grates are used with GDO Inlets, a ¼" × 3½" × 3'-4⅞" steel bar shall be welded across the center of inlet frame to separate the individual grates.
4. See Revised Standard Plan RSP D77A for connecting chain to welded grate and frame. When chain is required, do not use cast ductile iron grate.

GRATE BAR SPACING TABLE

TYPE	No. OF BARS	CLEAR BAR SPACING	X	Y 4" SPACING	Y 6" SPACING	Z
36R	13	2"	2⅛"	-	-	-
36RX (STEEL)	15	2"	9/16"	3¾"	5¾"	-
36RX (CAST)	13	2"	2⅛"	3¾"	5¾"	-
36R Mod	12	2"	2⅛"	-	-	5"
36RX Mod (STEEL)	13	2"	9/16"	3¾"	5¾"	5 11/16"
36RX Mod (CAST)	12	2"	2⅛"	3¾"	5¾"	5"

STATE OF CALIFORNIA
DEPARTMENT OF TRANSPORTATION

GRATE DETAILS No. 2

NO SCALE

RSP D77B DATED APRIL 19, 2013 SUPERSEDES RSP D77B DATED JULY 20, 2012 AND STANDARD PLAN D77B DATED MAY 20, 2011 - PAGE 165 OF THE STANDARD PLANS BOOK DATED 2010.

REVISED STANDARD PLAN RSP D77B

2010 REVISED STANDARD PLAN RSP D77B

P:\PROJ\01\0E360\drafting\sheets\va005.dgn

4-4-13

Dist	COUNTY	ROUTE	POST MILES TOTAL PROJECT	SHEET No.	TOTAL SHEETS
01	Hum	96	4.5/35.9	22	22

Raymond Don Tsztoo
REGISTERED CIVIL ENGINEER

October 30, 2015
PLANS APPROVAL DATE

REGISTERED PROFESSIONAL ENGINEER
Raymond Don Tsztoo
No. C37332
Exp. 6-30-16
CIVIL
STATE OF CALIFORNIA

THE STATE OF CALIFORNIA OR ITS OFFICERS OR AGENTS SHALL NOT BE RESPONSIBLE FOR THE ACCURACY OR COMPLETENESS OF SCANNED COPIES OF THIS PLAN SHEET.

TO ACCOMPANY PLANS DATED 3-21-16

ANNULAR AND HELICAL PROFILE

COUPLING TYPE	PIPE CORRUGATION	PIPE SIZE	W OR A	PIPE WALL THICKNESS		BAND THICKNESS		BAR AND STRAP (CSP ONLY)				ANGLE						
												DIMENSIONS		BOLTS (No.- Dia)		RIVETS ANGLE TO BAND		SPOT WELDS ANGLE TO BAND
				CSP	CAP	CSP	CAP	STRAP THICKNESS	BOLTS Dia	BAR Dia	BAR YIELD STRENGTH	CSP	CAP	CSP	CAP	CSP	CAP	CSP
TWO PIECE INTEGRAL FLANGE	1½′ × ¼″	6″	7″	0.064″-0.168″		0.052″								3-⅜″				
	1½′ × ¼″	8″-10″	7″	0.064″-0.168″	0.060″-0.164″	0.064″	0.060″							3-⅜″	3-⅜″			
ANNULAR	2⅔″ × ½″	THROUGH 24″	12″	0.064″-0.168″	0.060″-0.164″	0.064″	0.060″					2″ × 2″ × 3/16″	2″ × 2″ × 3/16″	3-½″	3-½″	3-⅜″	3-⅜″	3-½″
HUGGER	2⅔″ × ½″ REROLLED END	THROUGH 24″	10½″	0.064″-0.168″		0.064″		0.079″	½″	⅞″	32 ksi							

SPIRAL RIB PROFILE

COUPLING TYPE	PIPE CORRUGATION	PIPE SIZE	W	PIPE WALL THICKNESS		BAND THICKNESS		BAR AND STRAP (SSRP ONLY)				ANGLE						
												DIMENSIONS		BOLTS (No.- Dia)		RIVETS ANGLE TO BAND		SPOT WELDS ANGLE TO BAND
				SSRP	ASRP	SSRP	ASRP	STRAP THICKNESS	BOLTS Dia	BAR Dia	BAR YIELD STRENGTH	SSRP	ASRP	SSRP	ASRP	SSRP	ASRP	SSRP
ANNULAR	2⅔″ × ½″ * REROLLED END	24″	12″	0.064″-0.168″	0.060″-0.164″	0.064″	0.060″					2″ × 2″ × 3/16″	2″ × 2″ × 3/16″	3-½″	3-½″	3-⅜″	3-⅜″	3-½″
HUGGER	2⅔″ × ½″ * REROLLED END	24″	10½″	0.064″-0.168″		0.064″		0.079″	½″	⅞″	32 ksi							

* See Note 11.

11. All profiles of Spiral Rib Pipe (¾″ × ¾″ ribs at 7½″ pitch and ¾″ × 1″ ribs at 11½″ pitch in both steel and aluminum and ¾″ × 1″ ribs at 8½″ pitch in steel only) shall be manufactured with rerolled ends. Corrugation profile of the rerolled ends shall be 2⅔″ × ½″ annual corrugations with a minimum of two full corrugations at each end.

NOTES:

1. For helically corrugated coupling bands, the connection angles may be oriented parallel to the pipe axis, provided connecting holes are slotted lengthwise sufficiently to allow adjustment for the helix angle.
2. Tension strap may be connected to band with either spot welds or fillet welds that develop minimum required strength of strap.
3. Use 1¼″ gage line dimension on attached angle leg for rivets and spot welds.
4. Band thickness shall not be less than:
   a. 3 standard thicknesses lighter than the thickness of the pipe for Corrugated Steel Pipe.
   b. 2 standard thicknesses lighter than the thickness of the pipe and in no case lighter than 0.060″ for Corrugated Aluminum Pipe.
5. Dimensions, thicknesses and strengths shown are minimum.
6. For pipe arches use same width band as for round pipe of equal periphery.
7. Fillet welds of equivalent strength may be substituted for spot welds or rivets.
8. Spot welds shall develop minimum required strength of strap.
9. Pipe with rerolled ends having at least two 2⅔″ × ½″ annular corrugations at each end with or without an upturned flange may be connected with any of the annular coupling bands shown for pipe of the same diameter and wall thickness and having 2⅔″ × ½″ corrugations.
10. For downdrain applications, two piece integral flange couplers shall have factory applied sleeve type rubber gaskets with a minimum length of 7″ measured along the length of the pipe.

STATE OF CALIFORNIA
DEPARTMENT OF TRANSPORTATION

CORRUGATED METAL PIPE COUPLING DETAILS No. 7 DOWNDRAIN

NO SCALE

RSP D97G DATED OCTOBER 30, 2015 SUPERSEDES STANDARD PLAN D97G DATED MAY 20, 2011 - PAGE 202 OF THE STANDARD PLANS BOOK DATED 2010.

REVISED STANDARD PLAN RSP D97G

2010 REVISED STANDARD PLAN RSP D97G

P:\PROJ\01\0E360\drafting\sheets\va006.dgn

8-19-15