Dist	COUNTY	ROUTE	POST MILES TOTAL PROJECT	SHEET No.	TOTAL SHEETS
01	Men	1	85.3 / 104.7	1	16

INDEX OF PLANS

SHEET No.	DESCRIPTION
1	TITLE AND LOCATION MAP
2	CONSTRUCTION DETAILS
3-7	DRAINAGE PLAN AND PROFILE
8	DRAINAGE DETAILS
9	DRAINAGE QUANTITIES
10	CONSTRUCTION AREA SIGNS
11	TRAFFIC HANDLING PLAN
12-16	REVISED STANDARD PLANS

THE STANDARD PLANS LIST APPLICABLE TO THIS CONTRACT IS INCLUDED IN THE NOTICE TO BIDDERS AND SPECIAL PROVISIONS BOOK.

STATE OF CALIFORNIA

DEPARTMENT OF TRANSPORTATION

PROJECT PLANS FOR CONSTRUCTION ON

STATE HIGHWAY

IN MENDOCINO COUNTY

AT VARIOUS LOCATIONS

FROM 1.5 MILES NORTH OF HARDY CREEK BRIDGE

TO 0.3 MILE SOUTH OF SOUTH FORK EEL RIVER BRIDGE

TO BE SUPPLEMENTED BY STANDARD PLANS DATED 2010

LOCATION MAP

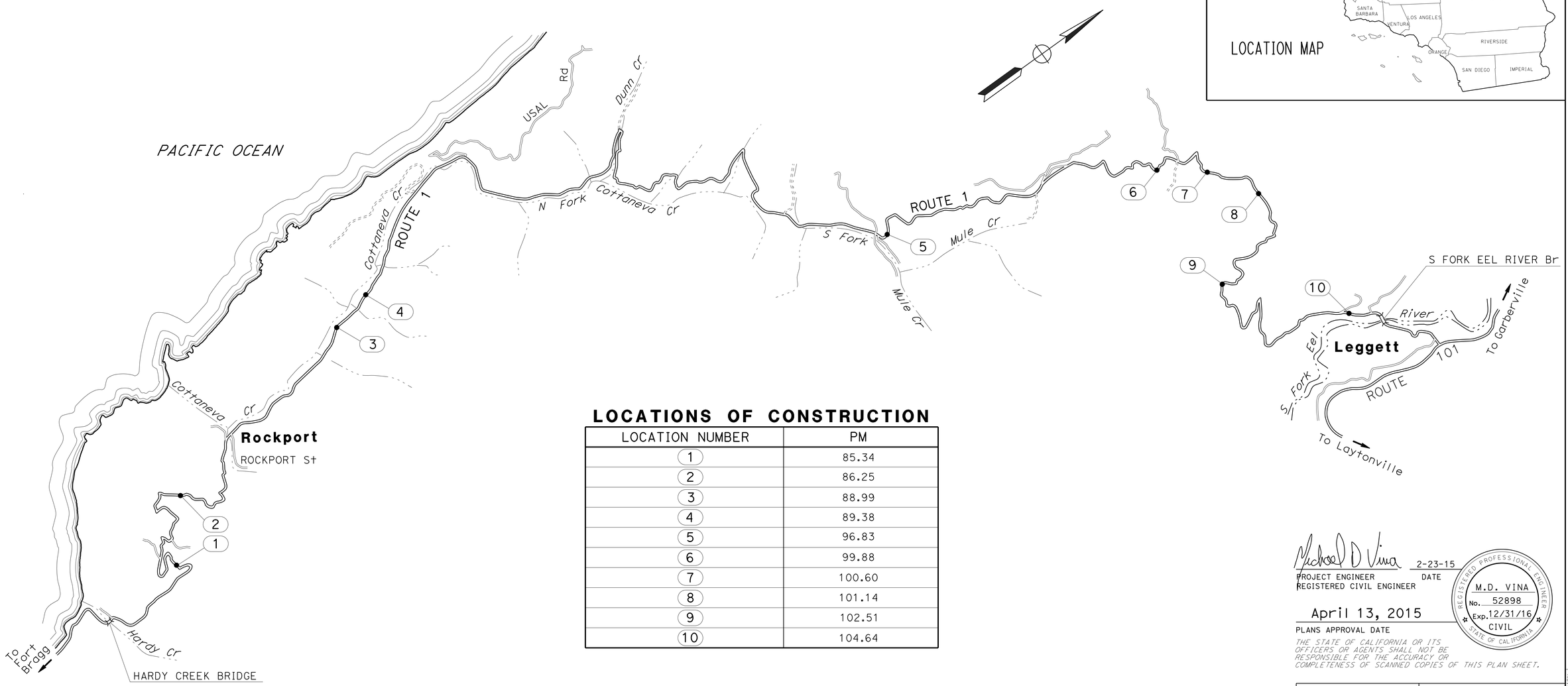

LOCATIONS OF CONSTRUCTION

LOCATION NUMBER	PM
1	85.34
2	86.25
3	88.99
4	89.38
5	96.83
6	99.88
7	100.60
8	101.14
9	102.51
10	104.64

NO SCALE

THE CONTRACTOR SHALL POSSESS THE CLASS (OR CLASSES) OF LICENSE AS SPECIFIED IN THE "NOTICE TO BIDDERS."

Michael D Vina 2-23-15
PROJECT ENGINEER DATE
REGISTERED CIVIL ENGINEER

April 13, 2015
PLANS APPROVAL DATE

REGISTERED PROFESSIONAL ENGINEER M.D. VINA No. 52898 Exp. 12/31/16 CIVIL STATE OF CALIFORNIA

THE STATE OF CALIFORNIA OR ITS OFFICERS OR AGENTS SHALL NOT BE RESPONSIBLE FOR THE ACCURACY OR COMPLETENESS OF SCANNED COPIES OF THIS PLAN SHEET.

CONTRACT No.	01-0E3704
PROJECT ID	0114000040

P:\PROJ\01\0E370\drafting\sheets\0114000040ab001.dgn
PROJECT MANAGER SCOTT LEE
DESIGN ENGINEER SCOTT LEE

LAST REVISION 00-00-00
DATE PLOTTED => 14-APR-2015
TIME PLOTTED => 12:41

NOTE:

SEE SHEET D-5, DRAINAGE SYSTEM No. 10.

Dist	COUNTY	ROUTE	POST MILES TOTAL PROJECT	SHEET No.	TOTAL SHEETS
01	Men	1	85.3 / 104.7	2	16

REGISTERED CIVIL ENGINEER — DATE 2-23-15

April 13, 2015
PLANS APPROVAL DATE

REGISTERED PROFESSIONAL ENGINEER M.D. VINA No. 52898 Exp.12/31/16 CIVIL STATE OF CALIFORNIA

THE STATE OF CALIFORNIA OR ITS OFFICERS OR AGENTS SHALL NOT BE RESPONSIBLE FOR THE ACCURACY OR COMPLETENESS OF SCANNED COPIES OF THIS PLAN SHEET.

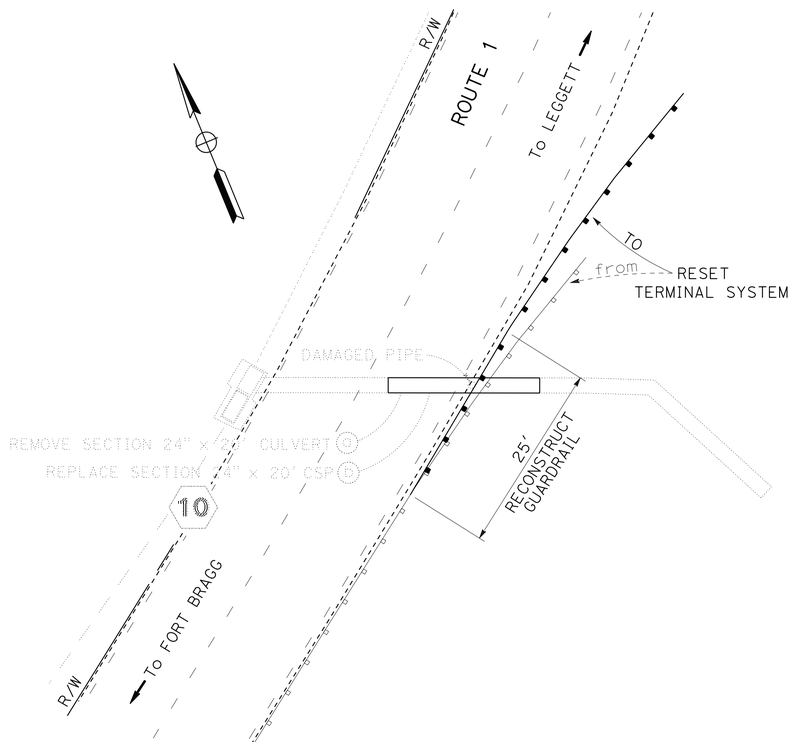

RECONSTRUCT GUARDRAIL & RESET TERMINAL SYSTEM DETAIL

DRAINAGE SYSTEM No. 10

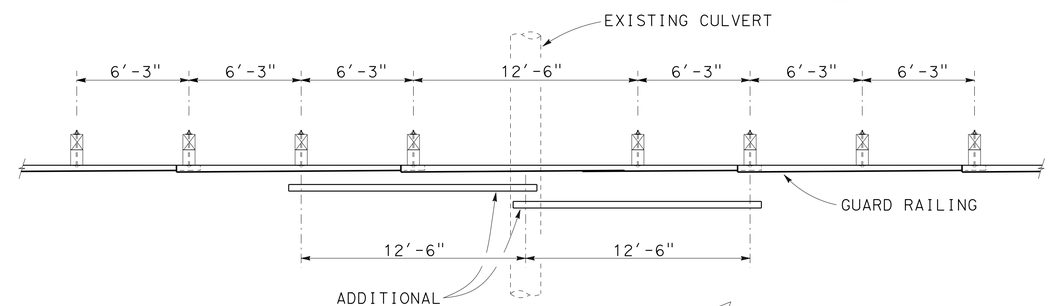

PLAN VIEW

NESTED RAIL ELEMENT DETAIL

ONE POST OMITTED
(SPLICE IN CENTER)

CONSTRUCTION DETAILS

NO SCALE

C-1

REVISED BY | DATE REVISED
M. D. VINA | SHANE WILSON
CALCULATED-DESIGNED BY | CHECKED BY
FUNCTIONAL SUPERVISOR: SCOTT LEE

STATE OF CALIFORNIA - DEPARTMENT OF TRANSPORTATION
Caltrans® MAINTENANCE DESIGN

P:\PROJ\01\0E370\drafting\sheets\0114000040ga001.dgn

LAST REVISION 00-00-00 | DATE PLOTTED => 14-APR-2015 | TIME PLOTTED => 12:41

BORDER LAST REVISED 7/2/2010 | USERNAME => s120115 | DGN FILE => 0114000040ga001.dgn | RELATIVE BORDER SCALE IS IN INCHES 0 1 2 3 | UNIT 0052 | PROJECT NUMBER & PHASE 01140000401

Dist	COUNTY	ROUTE	POST MILES TOTAL PROJECT	SHEET No.	TOTAL SHEETS
01	Men	1	85.3 / 104.7	3	16

REGISTERED CIVIL ENGINEER — DATE 2-23-15

April 13, 2015
PLANS APPROVAL DATE

REGISTERED PROFESSIONAL ENGINEER M.D. VINA No. 52898 Exp. 12/31/16 CIVIL STATE OF CALIFORNIA

THE STATE OF CALIFORNIA OR ITS OFFICERS OR AGENTS SHALL NOT BE RESPONSIBLE FOR THE ACCURACY OR COMPLETENESS OF SCANNED COPIES OF THIS PLAN SHEET.

NOTE:
FOR ACCURATE RIGHT OF WAY AND ACCESS DATA, CONTACT RIGHT OF WAY ENGINEERING AT THE DISTRICT OFFICE.

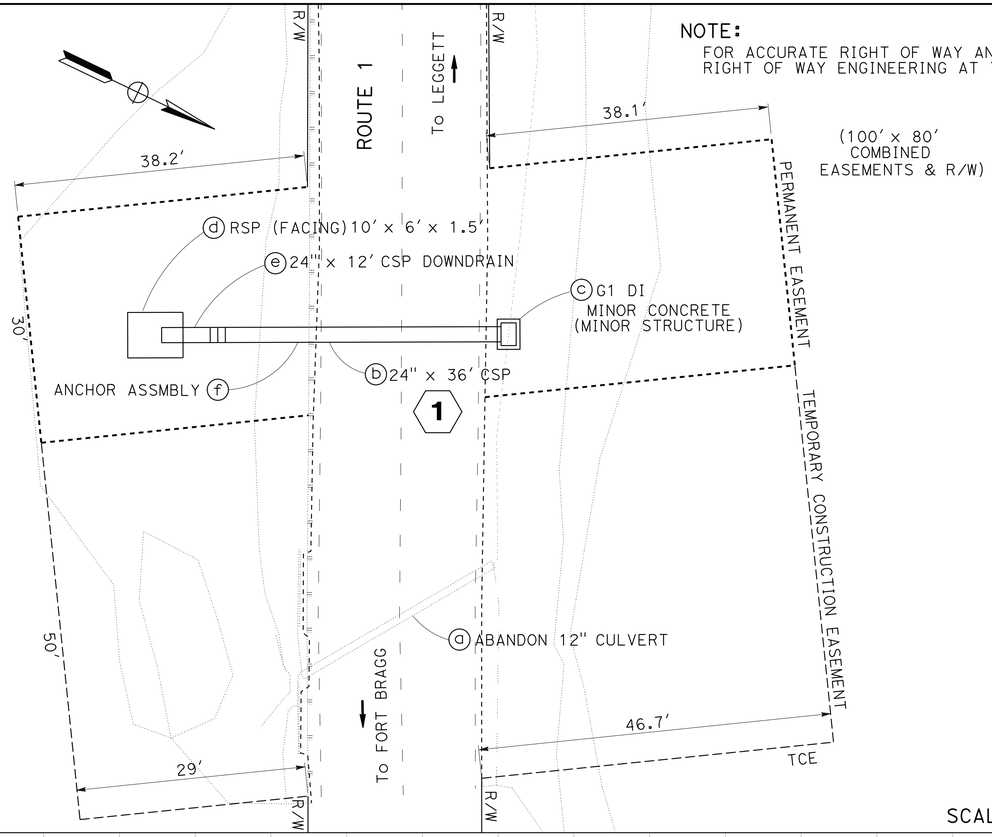

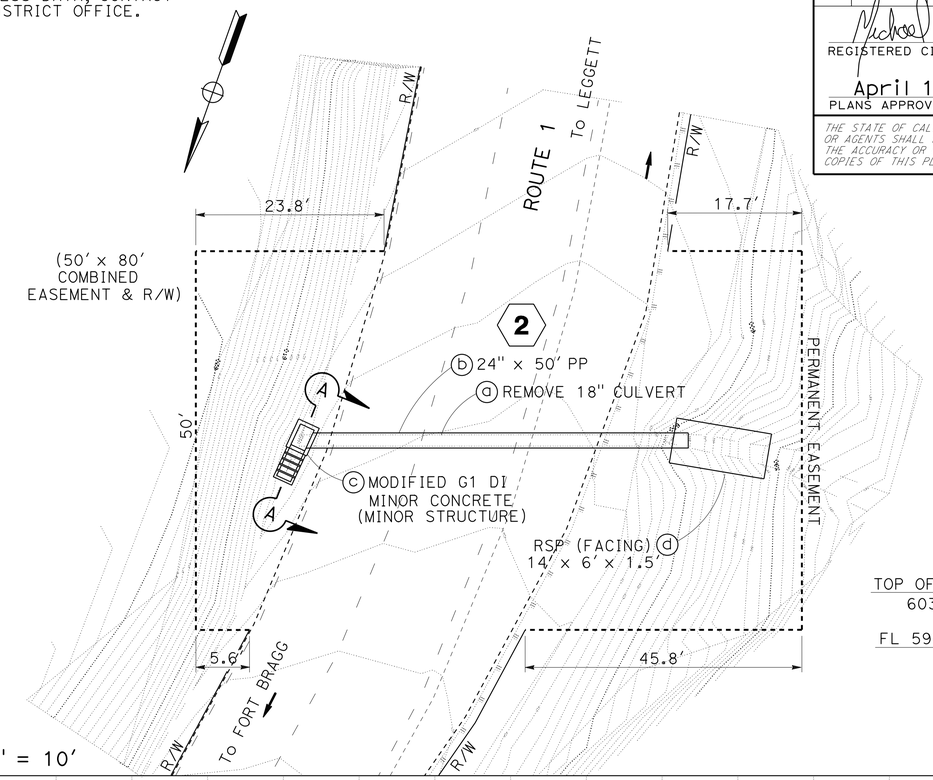

SCALE: 1" = 10'

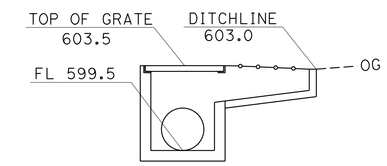

SECTION A-A

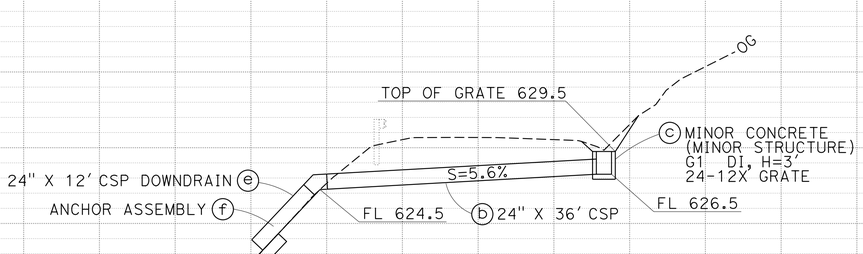

DRAINAGE SYSTEM No. 1

PM 85.34

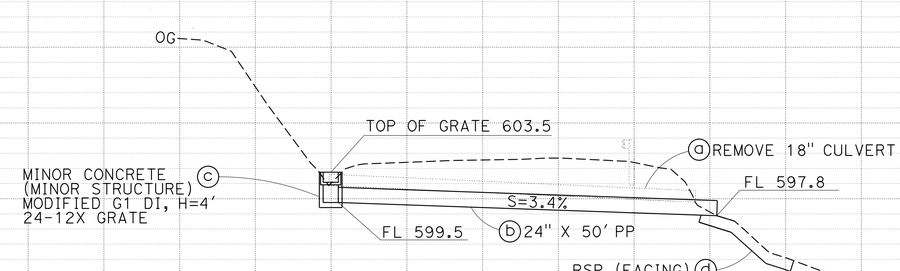

DRAINAGE SYSTEM No. 2

PM 86.25

SCALE: 1" = 10' Horiz
1" = 10' Vert

APPROVED FOR DRAINAGE WORK ONLY

DRAINAGE PLAN AND PROFILE

SCALE: AS SHOWN

D-1

STATION		TOTAL
CY	Exc	
	Emb	

REVISED BY | DATE REVISED
M. D. VINA | SHANE WILSON
CALCULATED-DESIGNED BY | CHECKED BY
FUNCTIONAL SUPERVISOR: SCOTT LEE

STATE OF CALIFORNIA - DEPARTMENT OF TRANSPORTATION
Caltrans® MAINTENANCE DESIGN

P:\PROJ\01\OE370\drafting\sheets\01140000401a001.dgn

LAST REVISION 00-00-00 | DATE PLOTTED => 14-APR-2015 | TIME PLOTTED => 12:41

Dist	COUNTY	ROUTE	POST MILES TOTAL PROJECT	SHEET No.	TOTAL SHEETS
01	Men	1	85.3 / 104.7	4	16

REGISTERED CIVIL ENGINEER — DATE 2-23-15

April 13, 2015
PLANS APPROVAL DATE

REGISTERED PROFESSIONAL ENGINEER — M.D. VINA No. 52898 Exp. 12/31/16 CIVIL — STATE OF CALIFORNIA

THE STATE OF CALIFORNIA OR ITS OFFICERS OR AGENTS SHALL NOT BE RESPONSIBLE FOR THE ACCURACY OR COMPLETENESS OF SCANNED COPIES OF THIS PLAN SHEET.

NOTE:
FOR ACCURATE RIGHT OF WAY AND ACCESS DATA, CONTACT RIGHT OF WAY ENGINEERING AT THE DISTRICT OFFICE.

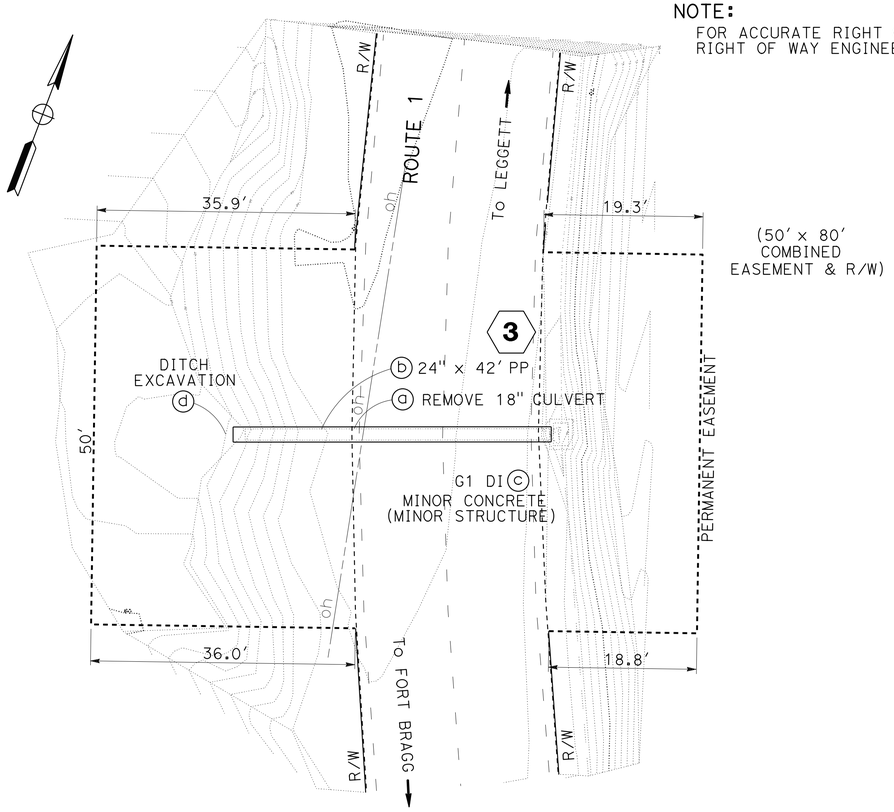

SCALE: 1" = 10'

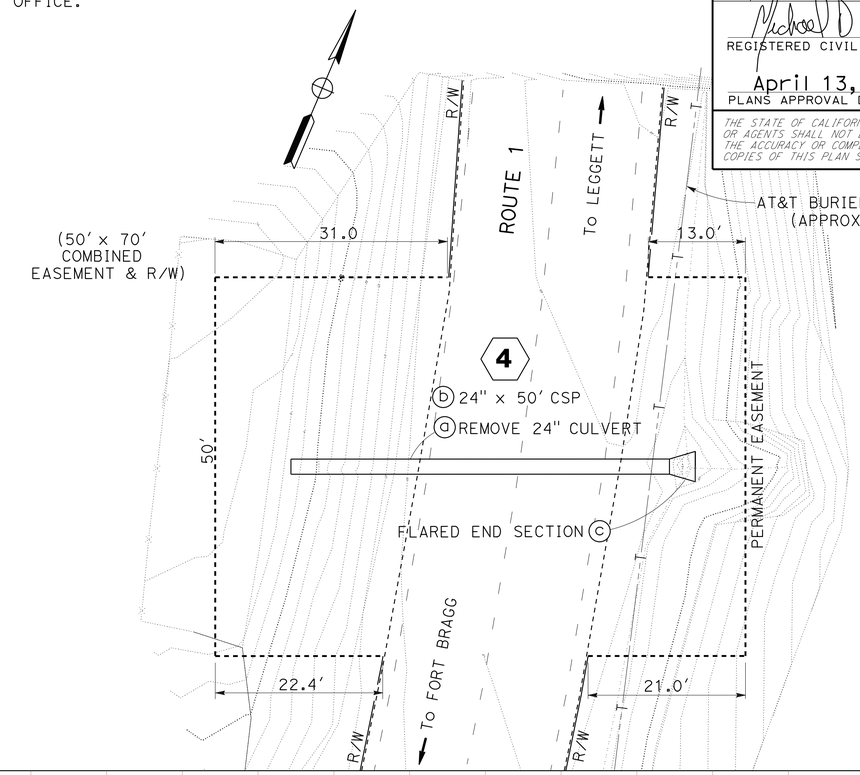

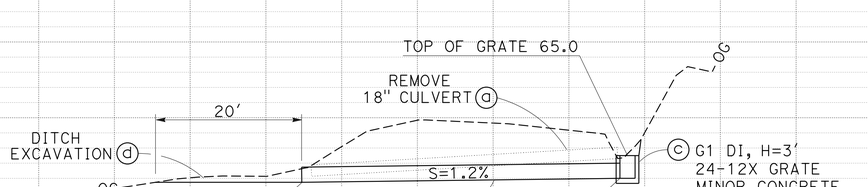

DRAINAGE SYSTEM No. 3

PM 88.99

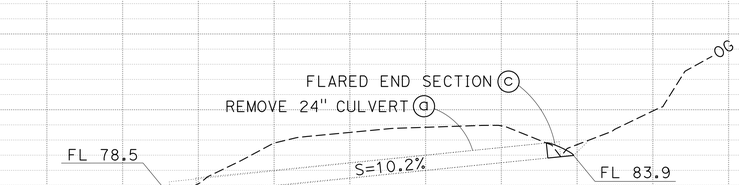

DRAINAGE SYSTEM No. 4

PM 89.38

SCALE: 1" = 10' Horiz
1" = 10' Vert

APPROVED FOR DRAINAGE WORK ONLY

DRAINAGE PLAN AND PROFILE

SCALE: AS SHOWN

D-2

STATION		TOTAL
CY	Exc	
	Emb	

REVISED BY | DATE REVISED
M. D. VINA | SHANE WILSON
CALCULATED-DESIGNED BY | CHECKED BY
FUNCTIONAL SUPERVISOR: SCOTT LEE

STATE OF CALIFORNIA - DEPARTMENT OF TRANSPORTATION
Caltrans® MAINTENANCE DESIGN

P:\PROJ\01\0E370\drafting\sheets\01140000401a002.dgn

LAST REVISION 00-00-00 | DATE PLOTTED => 14-APR-2015 | TIME PLOTTED => 12:41

Dist	COUNTY	ROUTE	POST MILES TOTAL PROJECT	SHEET No.	TOTAL SHEETS
01	Men	1	85.3 / 104.7	5	16

REGISTERED CIVIL ENGINEER — DATE: 2-23-15

April 13, 2015
PLANS APPROVAL DATE

REGISTERED PROFESSIONAL ENGINEER — M.D. VINA No. 52898 Exp. 12/31/16 CIVIL — STATE OF CALIFORNIA

THE STATE OF CALIFORNIA OR ITS OFFICERS OR AGENTS SHALL NOT BE RESPONSIBLE FOR THE ACCURACY OR COMPLETENESS OF SCANNED COPIES OF THIS PLAN SHEET.

NOTE:
FOR ACCURATE RIGHT OF WAY AND ACCESS DATA, CONTACT RIGHT OF WAY ENGINEERING AT THE DISTRICT OFFICE.

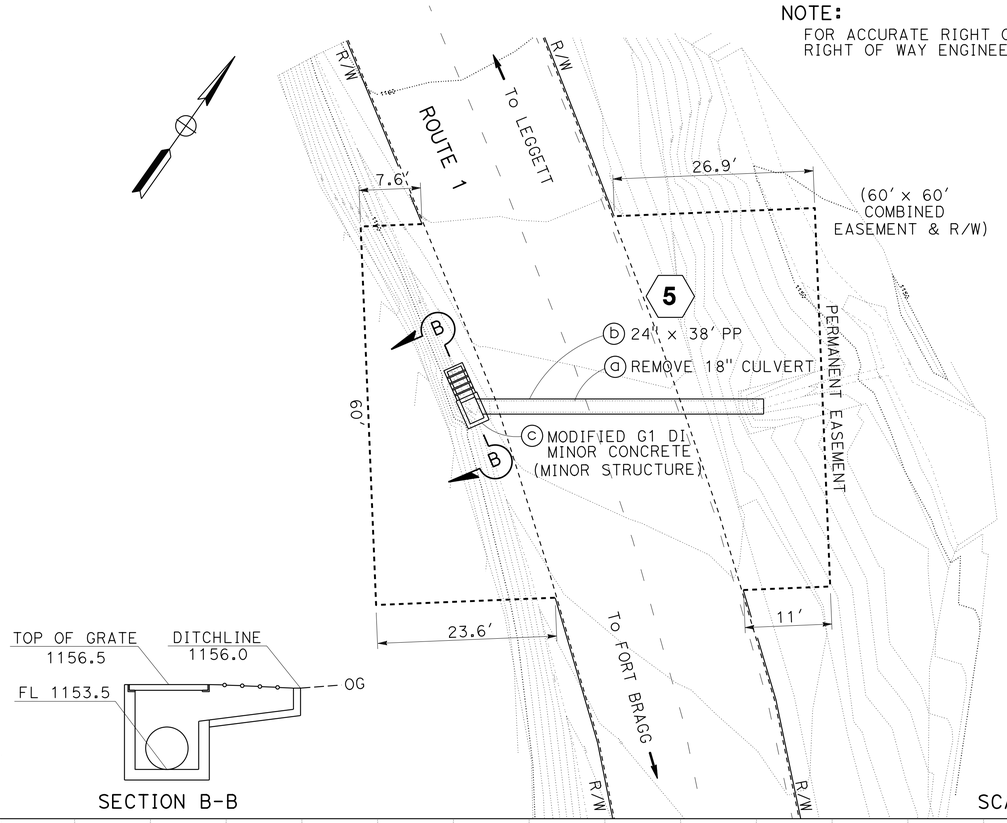

SECTION B-B

SCALE: 1" = 10'

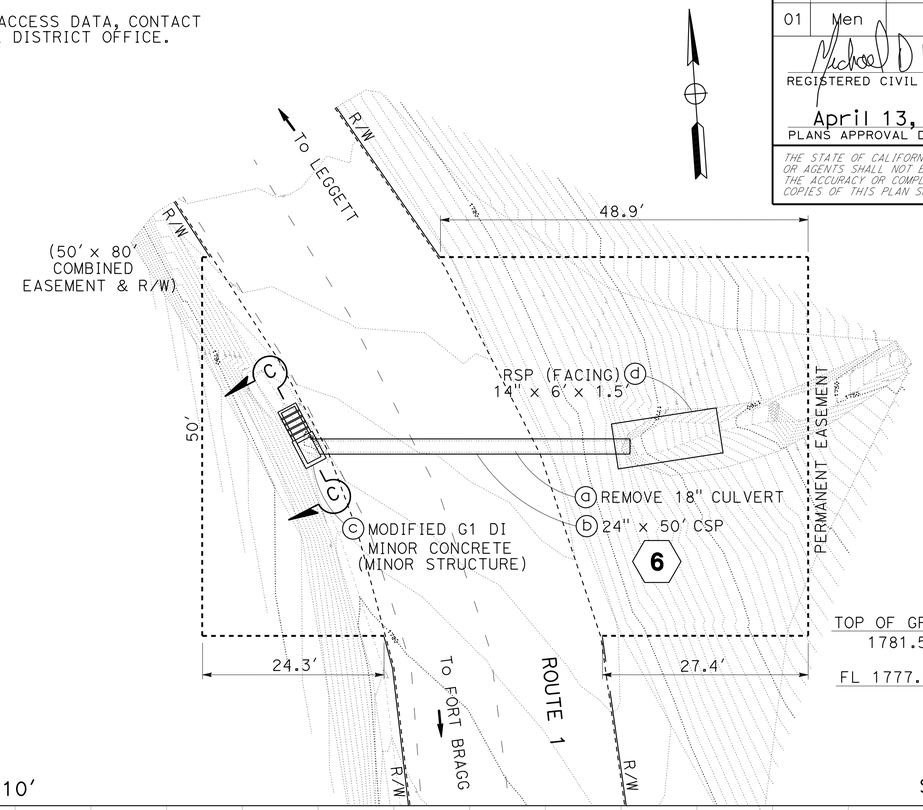

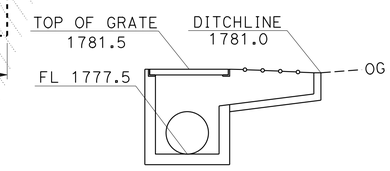

SECTION C-C

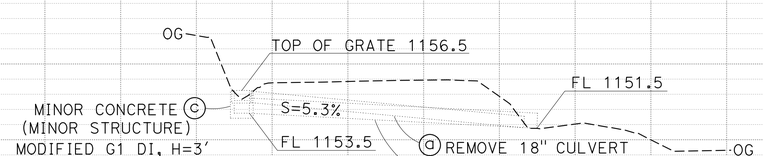

DRAINAGE SYSTEM No. 5

PM 96.83

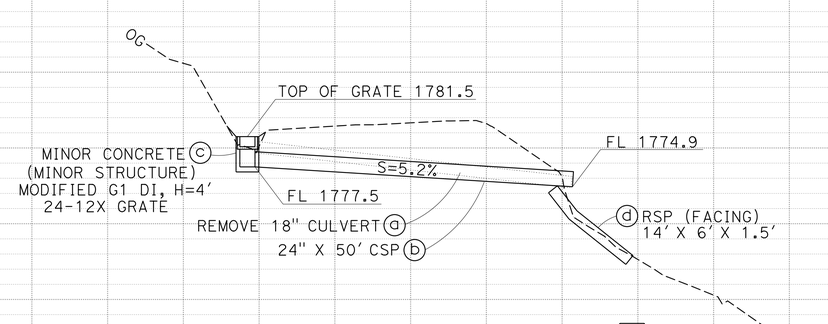

DRAINAGE SYSTEM No. 6

PM 99.88

SCALE: 1" = 10' Horiz
1" = 10' Vert

APPROVED FOR DRAINAGE WORK ONLY

DRAINAGE PLAN AND PROFILE

SCALE: AS SHOWN

D-3

STATION		TOTAL
CY	Exc	
	Emb	

REVISED BY | DATE REVISED
M. D. VINA | SHANE WILSON
CALCULATED-DESIGNED BY | CHECKED BY
FUNCTIONAL SUPERVISOR: SCOTT LEE

STATE OF CALIFORNIA - DEPARTMENT OF TRANSPORTATION
Caltrans® MAINTENANCE DESIGN

P:\PROJ\01\0E370\drafting\sheets\01140000401d003.dgn

LAST REVISION 00-00-00 | DATE PLOTTED => 14-APR-2015 | TIME PLOTTED => 12:41

Dist	COUNTY	ROUTE	POST MILES TOTAL PROJECT	SHEET No.	TOTAL SHEETS
01	Men	1	85.3 / 104.7	6	16

REGISTERED CIVIL ENGINEER — DATE 2-23-15

April 13, 2015
PLANS APPROVAL DATE

REGISTERED PROFESSIONAL ENGINEER M.D. VINA No. 52898 Exp.12/31/16 CIVIL STATE OF CALIFORNIA

THE STATE OF CALIFORNIA OR ITS OFFICERS OR AGENTS SHALL NOT BE RESPONSIBLE FOR THE ACCURACY OR COMPLETENESS OF SCANNED COPIES OF THIS PLAN SHEET.

NOTE:
FOR ACCURATE RIGHT OF WAY AND ACCESS DATA, CONTACT RIGHT OF WAY ENGINEERING AT THE DISTRICT OFFICE.

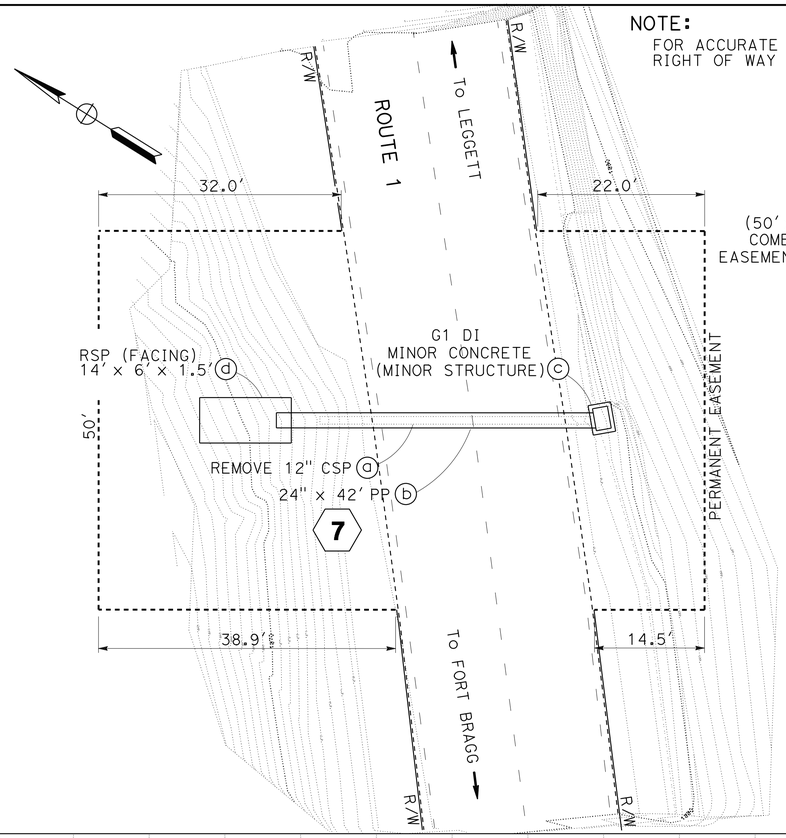

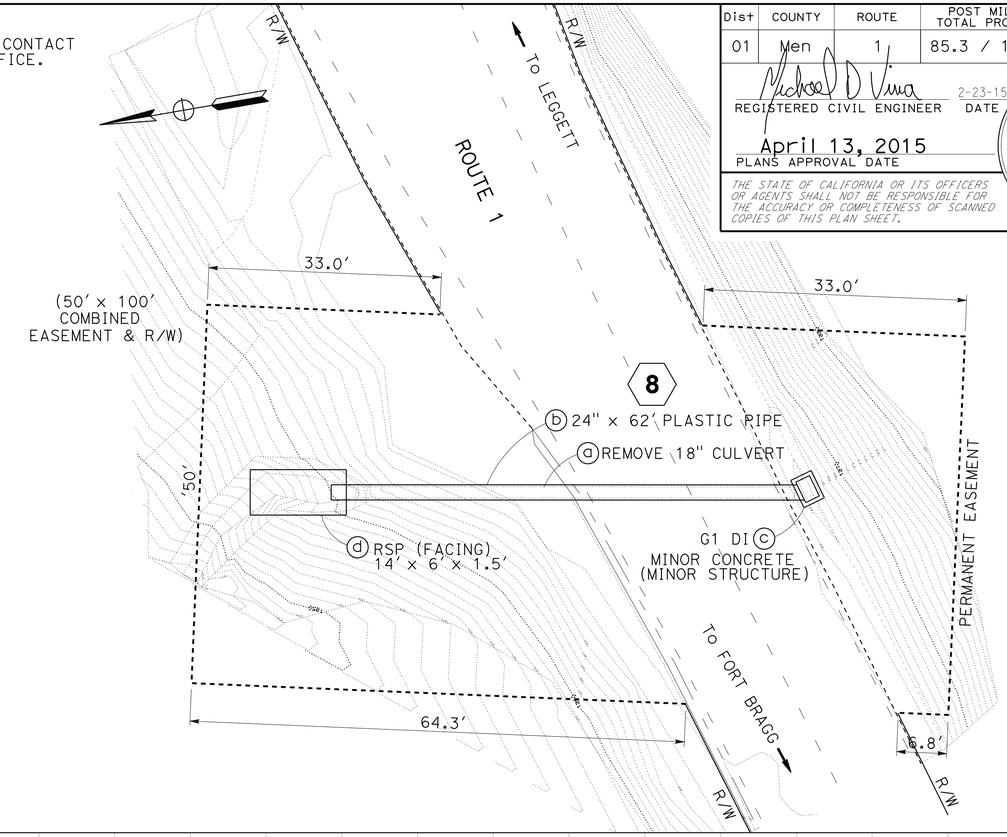

SCALE: 1" = 10'

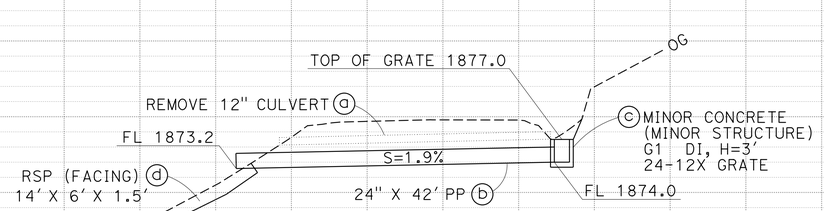

DRAINAGE SYSTEM No. 7
PM 100.60

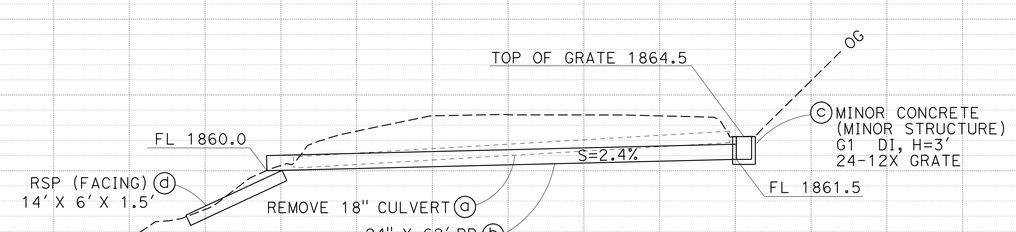

DRAINAGE SYSTEM No. 8
PM 101.14

SCALE: 1" = 10' Horiz
1" = 10' Vert

APPROVED FOR DRAINAGE WORK ONLY

DRAINAGE PLAN AND PROFILE

SCALE: AS SHOWN

D-4

STATION		TOTAL
CY	Exc	
	Emb	

REVISED BY | DATE REVISED
M. D. VINA | SHANE WILSON
CALCULATED-DESIGNED BY | CHECKED BY
FUNCTIONAL SUPERVISOR: SCOTT LEE

STATE OF CALIFORNIA - DEPARTMENT OF TRANSPORTATION
Caltrans® MAINTENANCE DESIGN

P:\PROJ\01\0E370\drafting\sheets\01140000401d004.dgn

LAST REVISION 00-00-00 | DATE PLOTTED => 14-APR-2015 | TIME PLOTTED => 12:41

Dist	COUNTY	ROUTE	POST MILES TOTAL PROJECT	SHEET No.	TOTAL SHEETS
01	Men	1	85.3 / 104.7	7	16

REGISTERED CIVIL ENGINEER — DATE 2-23-15

April 13, 2015
PLANS APPROVAL DATE

REGISTERED PROFESSIONAL ENGINEER — M.D. VINA No. 52898 Exp. 12/31/16 CIVIL — STATE OF CALIFORNIA

THE STATE OF CALIFORNIA OR ITS OFFICERS OR AGENTS SHALL NOT BE RESPONSIBLE FOR THE ACCURACY OR COMPLETENESS OF SCANNED COPIES OF THIS PLAN SHEET.

NOTE:
FOR ACCURATE RIGHT OF WAY AND ACCESS DATA, CONTACT RIGHT OF WAY ENGINEERING AT THE DISTRICT OFFICE.

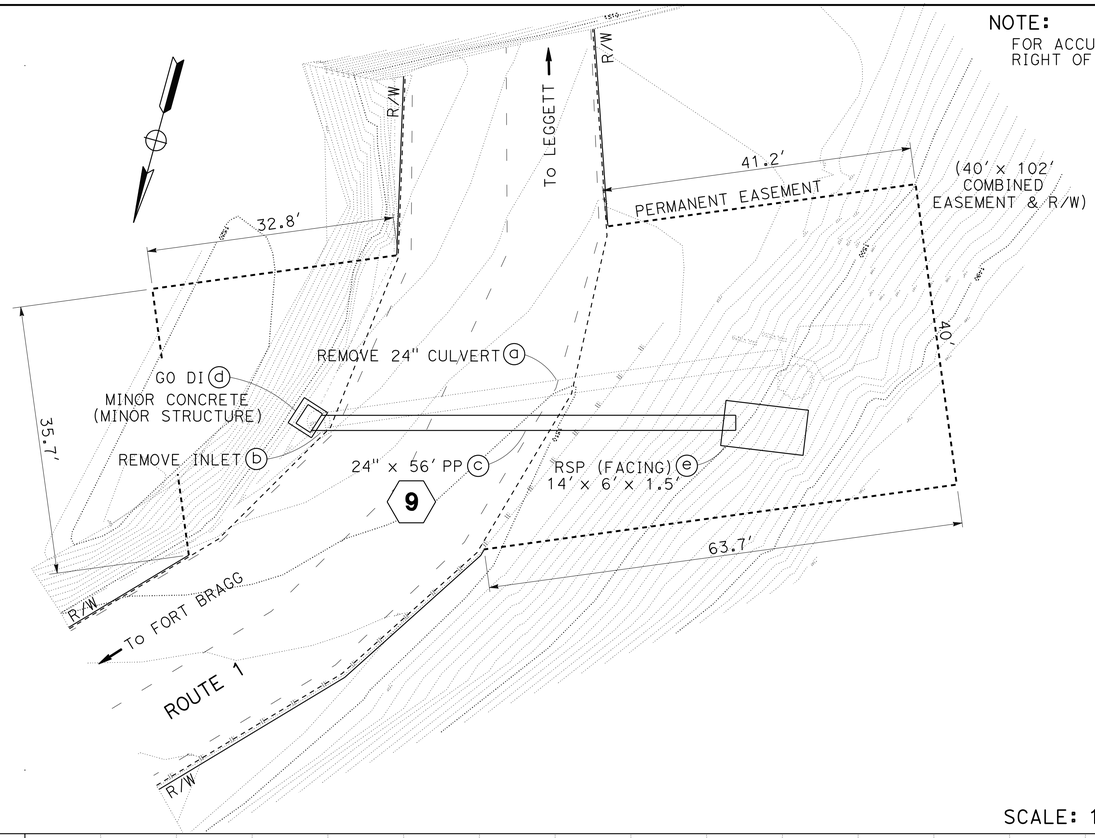

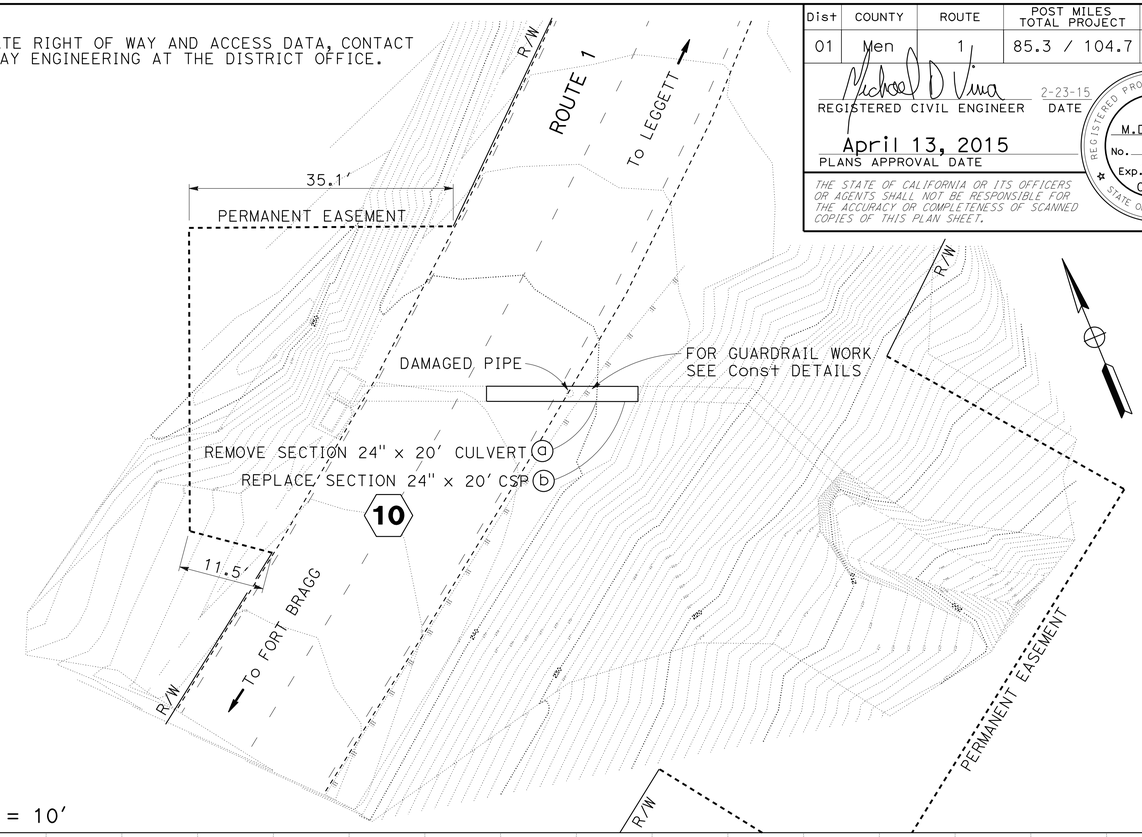

SCALE: 1" = 10'

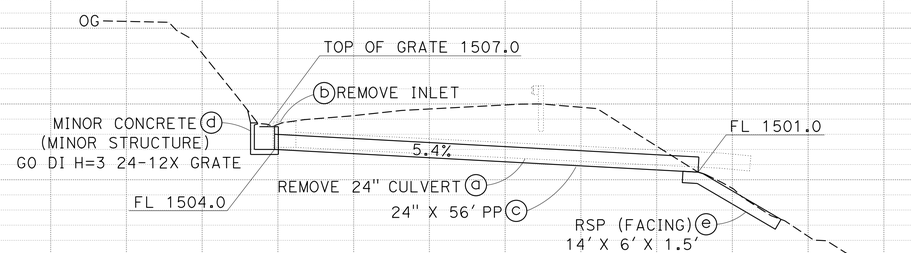

DRAINAGE SYSTEM No. 9

PM 102.51

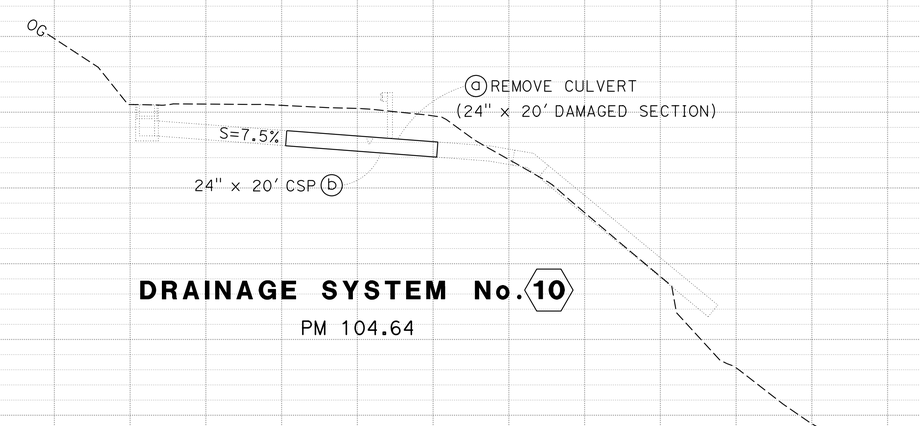

DRAINAGE SYSTEM No. 10

PM 104.64

SCALE: 1" = 10' Horiz
1" = 10' Vert

APPROVED FOR DRAINAGE WORK ONLY

DRAINAGE PLAN AND PROFILE

SCALE: AS SHOWN

D-5

STATION		TOTAL
CY	Exc	
	Emb	

REVISED BY | DATE REVISED
M. D. VINA | SHANE WILSON
CALCULATED-DESIGNED BY | CHECKED BY
FUNCTIONAL SUPERVISOR | SCOTT LEE

STATE OF CALIFORNIA - DEPARTMENT OF TRANSPORTATION
Caltrans® MAINTENANCE DESIGN

P:\PROJ\01\QE370\drafting\sheets\01140000401ia005.dgn

LAST REVISION 00-00-00 | DATE PLOTTED => 14-APR-2015 | TIME PLOTTED => 12:41

Dist	COUNTY	ROUTE	POST MILES TOTAL PROJECT	SHEET No.	TOTAL SHEETS
01	Men	1	85.3 / 104.7	8	16

REGISTERED CIVIL ENGINEER — DATE 2-23-15

April 13, 2015
PLANS APPROVAL DATE

REGISTERED PROFESSIONAL ENGINEER — M.D. VINA No. 52898 Exp. 12/31/16 CIVIL — STATE OF CALIFORNIA

THE STATE OF CALIFORNIA OR ITS OFFICERS OR AGENTS SHALL NOT BE RESPONSIBLE FOR THE ACCURACY OR COMPLETENESS OF SCANNED COPIES OF THIS PLAN SHEET.

NOTES:

1. FOR DETAILS NOT SHOWN, SEE Std PLAN D73 FOR TYPE G1 DRAINAGE INLET.
2. FOR FRAME DETAILS, SEE RSP D77-A.
3. THIS PORTION MUST BE CAST-IN-PLACE CONCRETE.

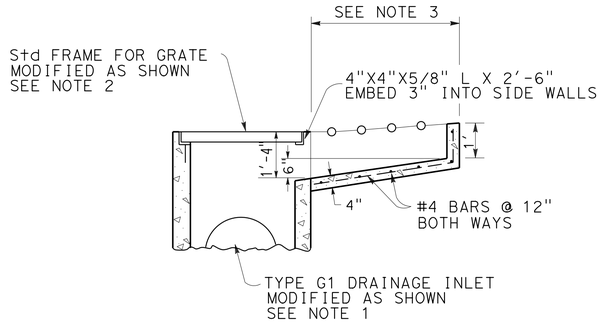

SECTION A-A

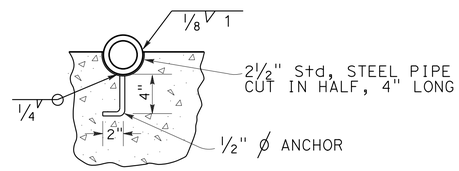

SECTION B-B

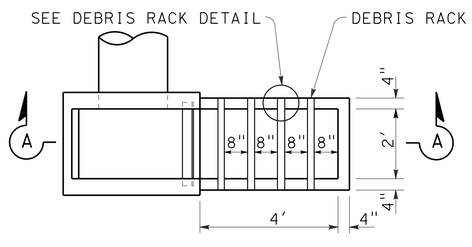

PLAN VIEW

MODIFIED G1 INLET

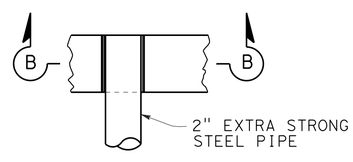

DEBRIS RACK DETAIL

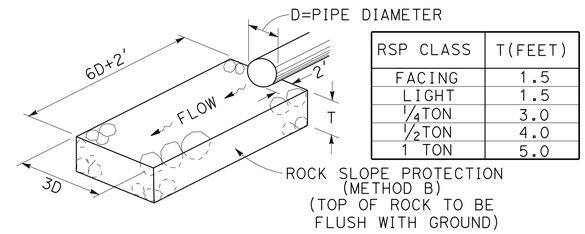

RSP CLASS	T(FEET)
FACING	1.5
LIGHT	1.5
1/4 TON	3.0
1/2 TON	4.0
1 TON	5.0

ROCK ENERGY DISSIPATOR AT DRAINAGE OUTLET

DIMENSIONS AS SHOWN OR AS DIRECTED BY THE ENGINEER

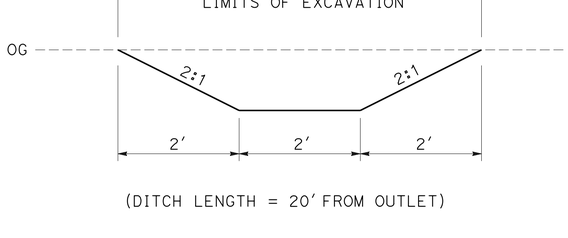

(DITCH LENGTH = 20' FROM OUTLET)

DITCH EXCAVATION LIMITS (3)

PM 88.99

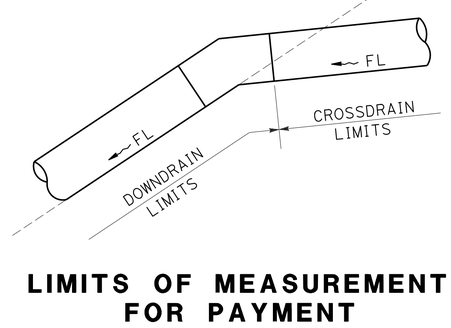

LIMITS OF MEASUREMENT FOR PAYMENT

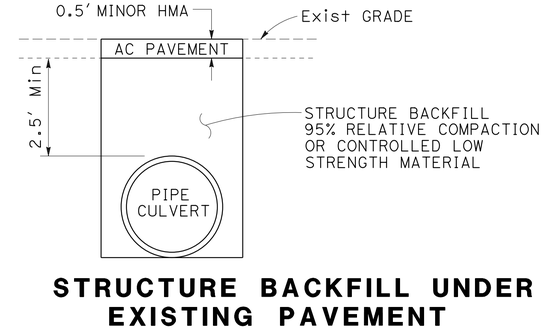

STRUCTURE BACKFILL UNDER EXISTING PAVEMENT

DRAINAGE DETAILS

NO SCALE

DD-1

REVISED BY | DATE REVISED
M. D. VINA | SHANE WILSON
CALCULATED-DESIGNED BY | CHECKED BY
FUNCTIONAL SUPERVISOR: SCOTT LEE

STATE OF CALIFORNIA - DEPARTMENT OF TRANSPORTATION
Caltrans® MAINTENANCE DESIGN

P:\PROJ\01\OE370\drafting\sheets\01140000401c001.dgn

LAST REVISION 00-00-00 | DATE PLOTTED => 14-APR-2015 | TIME PLOTTED => 12:41

BORDER LAST REVISED 7/2/2010 | USERNAME => s120115 | DGN FILE => 01140000401c001.dgn | RELATIVE BORDER SCALE IS IN INCHES 0 1 2 3 | UNIT 0052 | PROJECT NUMBER & PHASE 01140000401

Dist	COUNTY	ROUTE	POST MILES TOTAL PROJECT	SHEET No.	TOTAL SHEETS
01	Men	1	85.3 / 104.7	9	16

REGISTERED CIVIL ENGINEER — DATE 2-23-15

April 13, 2015
PLANS APPROVAL DATE

REGISTERED PROFESSIONAL ENGINEER M.D. VINA No. 52898 Exp. 12/31/16 CIVIL STATE OF CALIFORNIA

THE STATE OF CALIFORNIA OR ITS OFFICERS OR AGENTS SHALL NOT BE RESPONSIBLE FOR THE ACCURACY OR COMPLETENESS OF SCANNED COPIES OF THIS PLAN SHEET.

GUARD RAIL

DRAINAGE SYSTEM No.	RECONSTRUCT GUARD RAIL	RESET TERMINAL SYSTEM
	LF	EA
10	25.0	1

SYSTEM NUMBER	DRAINAGE UNIT	REMOVE CULVERT (EA)	REMOVE INLET (EA)	ABANDON CULVERT (EA)	SAND BACKFILL (N) (CY)	DITCH EXCAVATION (EA)	24" STEEL FES (LF)	24" CSP (0.109" THICK) (LF)	24" PLASTIC PIPE (LF)	24" CSP DD (0.109" THICK) (LF)	24" ANCHOR ASSEMBLY (EA)	MINOR CONCRETE (MINOR STRUCTURES) (CY)	Misc IRON AND STEEL (LB)	RSP (FACING, METHOD B) (CY)	SYSTEM NUMBER	DRAINAGE UNIT	POST MILE	REMARKS
1	a			1	0.84										1	a	85.34	12' x 29' RCP
	b							36								b		
	c											0.95	239			c		G1 DI (H=3.0), 24-12X GRATE
	d													3.33		d		
	e									12						e		
	f										1					f		
2	a	1													2	a	86.25	18" X 48' CSP
	b								50							b		
	c											1.41	342.8			c		MODIFIED G1 DI (H=4.0), 24-12X GRATE
	d													4.67		d		
3	a	1													3	a	88.99	18" X 40' CSP
	b								42							b		
	c											0.95	239			c		G1 DI (H=3.0), 24-12X GRATE
	d					2.9										d		DIG OUTLET DITCH TO PIPE FLOWLINE
4	a	1													4	a	89.38	24" X 52' CSP
	b							50								b		
	c						1									c		
5	a	1													5	a	96.83	18" X 36' CSP
	b								38							b		
	c											1.19	342.8			c		MODIFIED G1 DI (H=3.0), 24-12X GRATE
6	a	1													6	a	99.88	18" X 42' CSP
	b								50							b		
	c											1.41	342.8			c		MODIFIED G1 DI (H=4.0), 24-12X GRATE
	d													4.67		d		
7	a	1													7	a	100.60	18" X 36' RCP
	b								42							b		
	c											0.95	239			c		G1 DI (H=3.0), 24-12X GRATE
	d													4.67		d		
8	a	1													8	a	101.14	18" X 58' CSP
	b								62							b		
	c											0.95	239			c		G1 DI (H=3.0), 24-12X GRATE
	d													4.67		d		
9	a	1													9	a	102.51	24" X 61' CSP
	b		1													b		OMP INLET
	c								56							c		
	d											1.24	239			d		G1 DI (H=3.0), 24-12X GRATE
	e													4.67		e		
10	a	1													10	a	104.64	24" X 20' CSP
	b							20								b		
TOTALS		9	1	1	0.84	2.9	1	106	340	12	1	9.05	2223.4	26.68				

(N) NOT A SEPARATE PAY ITEM. FOR INFORMATION ONLY.

TEMPORARY EROSION CONTROL QUANTITIES

DRAINAGE SYSTEM No.	TEMPORARY EROSION CONTROL BLANKET	TEMPORARY MULCH	TEMPORARY CHECK DAM	TEMPORARY DRAINAGE INLET PROTECTION	TEMPORARY FIBER ROLL	TEMPORARY SILT FENCE
	SQYD		LF	EA	LF	
1	10	20	30	1	20	
2	10	15	15	1		10
3	10	25	30	1	20	
4		25		1		
5		15	15	1		
6		20	15	1	15	10
7	10	15	15	1	15	10
8	10	35	15	1	15	10
9		30	15	1	15	10
TOTAL	50	200	150	9	100	50

EROSION CONTROL QUANTITIES

LOCATION		AREA (N)	WOOD MULCH
DRAINAGE SYSTEM No.	PM	SQFT	CY
1	85.34	300	2.8
2	86.25	400	3.7
3	88.99	310	2.9
4	89.38	230	2.1
5	96.83	210	1.9
6	99.88	300	2.8
7	100.60	350	3.2
8	101.14	550	5.1
9	102.51	450	4.2
10	104.64	0	—
	TOTAL	3100	28.7

(N) NOT A SEPARATE PAY ITEM. FOR INFORMATION ONLY.

WOOD MULCH (EROSION CONTROL)

ITEM	MATERIAL		APPLICATION RATE	REMARKS
	DESCRIPTION	TYPE		
WOOD MULCH	SHREDDED BARK	REDWOOD	404 CY/ACRE	3" DEPTH

DRAINAGE QUANTITIES AND SUMMARY OF QUANTITIES

DQ-1

REVISED BY | DATE REVISED
M. D. VINA | SHANE WILSON
CALCULATED-DESIGNED BY | CHECKED BY
FUNCTIONAL SUPERVISOR: SCOTT LEE

STATE OF CALIFORNIA - DEPARTMENT OF TRANSPORTATION
Caltrans MAINTENANCE DESIGN

P:\PROJ\01\0E370\drafting\sheets\0114000040id001.dgn

LAST REVISION 00-00-00 | DATE PLOTTED => 14-APR-2015 | TIME PLOTTED => 12:41

Dist	COUNTY	ROUTE	POST MILES TOTAL PROJECT	SHEET No.	TOTAL SHEETS
01	Men	1	85.3 / 104.7	10	16

REGISTERED CIVIL ENGINEER — DATE 2-23-15

April 13, 2015
PLANS APPROVAL DATE

REGISTERED PROFESSIONAL ENGINEER — M.D. VINA No. 52898 Exp. 12/31/16 CIVIL — STATE OF CALIFORNIA

THE STATE OF CALIFORNIA OR ITS OFFICERS OR AGENTS SHALL NOT BE RESPONSIBLE FOR THE ACCURACY OR COMPLETENESS OF SCANNED COPIES OF THIS PLAN SHEET.

NOTE:
EXACT LOCATION OF SIGNS DETERMINED BY THE ENGINEER.

LEGEND
● LOCATIONS OF WORK

STATIONARY MOUNTED CONSTRUCTION AREA SIGNS

◯	TYPE	SIGN MESSAGE	PANEL SIZE	No. OF POSTS AND SIZE	No. OF SIGNS (N)
A	C40(CA)	TRAFFIC FINES DOUBLED IN CONSTRUCTION ZONE	108" x 42"	2 - 6" x 6"	2
B	G20-1	ROAD WORK NEXT 20 MILES	60" x 36"	2 - 4" x 6"	2
	C23B(CA)	CULVERT REPAIR	60" x 18"		
C	W11-1	BICYCLE SYMBOL	36" x 36"	1 - 4" x 6"	2
	W16-1	SHARE THE ROAD	24" x 30"		
D	G20-2	END ROAD WORK	36" x 18"	1 - 4" x 4"	2

(N) - NOT A SEPARATE PAY ITEM, FOR INFORMATION ONLY.

CONSTRUCTION AREA SIGNS
NO SCALE

CS-1

APPROVED FOR CONSTRUCTION AREA SIGN WORK ONLY

STATE OF CALIFORNIA - DEPARTMENT OF TRANSPORTATION
Caltrans® MAINTENANCE DESIGN

FUNCTIONAL SUPERVISOR: SCOTT LEE
CALCULATED-DESIGNED BY: M. D. VINA
CHECKED BY: SHANE WILSON
REVISED BY / DATE REVISED

P:\PROJ\01\0E370\drafting\sheets\0114000040ia001.dgn

LAST REVISION 00-00-00 | DATE PLOTTED => 14-APR-2015 | TIME PLOTTED => 12:41

Dist	COUNTY	ROUTE	POST MILES TOTAL PROJECT	SHEET No.	TOTAL SHEETS
01	Men	1	85.3 / 104.7	11	16

REGISTERED CIVIL ENGINEER Sheri M. Rodriguez 3-5-15 DATE

April 13, 2015
PLANS APPROVAL DATE

REGISTERED PROFESSIONAL ENGINEER SHERI M. RODRIGUEZ No. C66861 Exp. 9-30-16 CIVIL STATE OF CALIFORNIA

THE STATE OF CALIFORNIA OR ITS OFFICERS OR AGENTS SHALL NOT BE RESPONSIBLE FOR THE ACCURACY OR COMPLETENESS OF SCANNED COPIES OF THIS PLAN SHEET.

NOTES:

1. CALIFORNIA CODES ARE DESIGNATED BY (CA). OTHERWISE, FEDERAL (MUTCD) CODES ARE SHOWN.
2. ALL SIGNS SHALL HAVE A BLACK LEGEND ON FLUORESCENT ORANGE BACKGROUND AND SHALL BE EQUIPPED WITH AT LEAST TWO 16" x 16" ORANGE FLAGS FOR DAYTIME CLOSURE OR FLASHING BEACONS FOR LANE CLOSURE DURING HOURS OF DARKNESS.
3. ALL CONES USED FOR LANE CLOSURES DURING THE HOURS OF DARKNESS SHALL BE FITTED WITH RETROREFLECTIVE BANDS OR SLEEVES.
4. WHEN A PILOT CAR IS USED, PLACE A C37 (CA) SIGN AT ALL INTERSECTIONS WITHIN TRAFFIC CONTROL AREA. WHERE VEHICULAR TRAFFIC CAN NOT EFFECTIVELY SELF-REGULATE, AT LEAST ONE FLAGGER SHALL BE USED AT EACH INTERSECTION WITHIN THE TRAFFIC CONTROL AREA.
5. FLAGGER SHOULD STAND IN A CONSPICUOUS PLACE, FACING TRAFFIC AT ALL TIMES, BE VISIBLE TO APPROACHING TRAFFIC AS WELL AS APPROACHING VEHICLES AFTER THE FIRST VEHICLE HAS STOPPED.
6. ADDITIONAL ADVANCE FLAGGERS ARE REQUIRED.
7. WHEN FLAGGER IS NOT VISIBLE FROM THIS LOCATION PLACE A C29 (CA) SIGN BELOW THE C9A (CA) SIGN.

LEGEND

- TRAFFIC CONE
- TEMPORARY SIGN
- DIRECTION OF TRAVEL
- PORTABLE FLASHING BEACON
- FLAGGER

SIGN PANEL SIZE (MINIMUM)

- A — 48" x 48" - SPEED OF 45 mph OR MORE; 36" x 36" - SPEED LESS THAN 45 mph
- B — 30" x 30"
- C — UNUSED
- D — UNUSED
- E — 20" x 7"

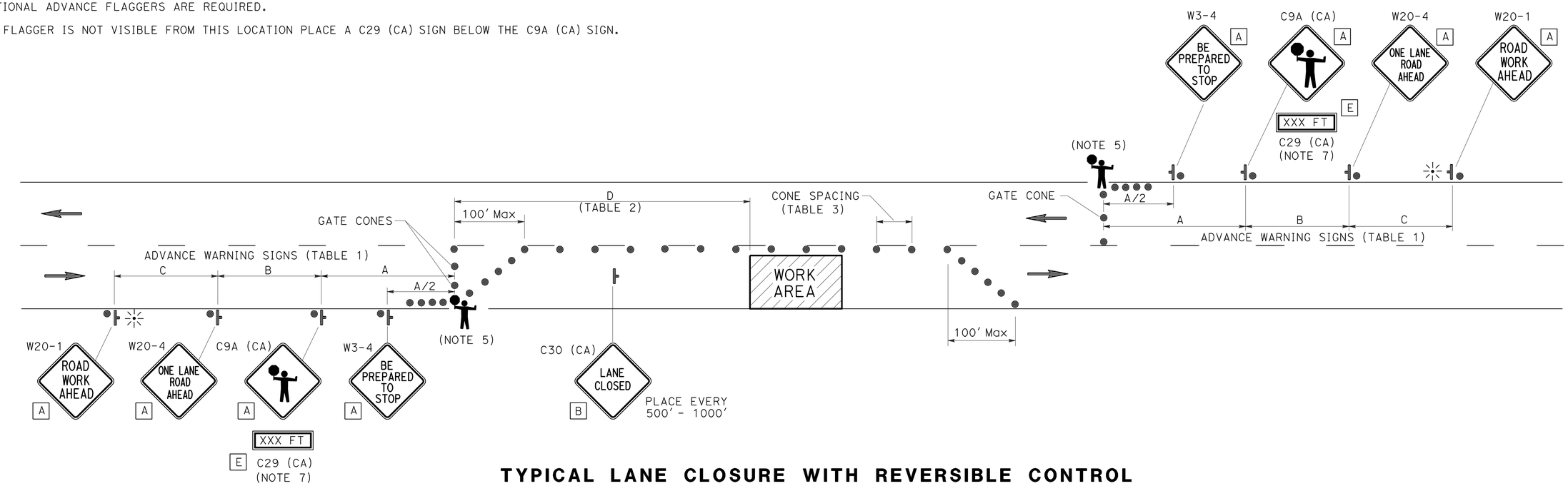

TYPICAL LANE CLOSURE WITH REVERSIBLE CONTROL

TABLE 1

ADVANCE WARNING SIGN SPACING

ROAD TYPE	Min A	Min B	Min C
	ft		
URBAN (25 mph OR LESS)	100	100	100
URBAN (30 mph TO 40 mph)	250	250	250
URBAN (MORE THAN 40 mph)	350	350	350
RURAL	500	500	500
EXPRESSWAY / FREEWAY	1000	1500	2640

TABLE 2

BUFFER SPACE

APPROACH SPEED	Min D	DOWNGRADE Min D		
		-3%*	-6%*	-9%*
mph	ft			
25 & BELOW	155	158	165	173
30	200	205	215	227
35	250	257	271	287
40	305	315	333	354
45	360	378	400	427
50	425	446	474	507
55	495	520	553	593
60	570	598	638	686
65	645	682	728	785

* USE ON SUSTAINED DOWNGRADE STEEPER THAN -3 PERCENT AND LONGER THAN 1 MILE.

TABLE 3

Max CONE SPACING

POSTED SPEED	TAPER	TANGENT	CONFLICT*
mph	ft		
20	20	40	10
25	25	50	12
30	30	60	15
35	35	70	17
40	40	80	20
45	45	90	22
50	50	100	25
55	55	110	27
60	60	120	30
65	65	130	32

* USE WHERE THERE IS A CONFLICT BETWEEN EXISTING PAVEMENT MARKINGS AND CHANNELIZERS.

TRAFFIC HANDLING PLAN

NO SCALE

TH-1

APPROVED FOR TRAFFIC HANDLING WORK ONLY

REVISED BY | DATE REVISED

SHERI M. RODRIGUEZ | TROY A. ARSENEAU

CALCULATED-DESIGNED BY | CHECKED BY

FUNCTIONAL SUPERVISOR: RICHARD MULLEN

STATE OF CALIFORNIA - DEPARTMENT OF TRANSPORTATION
Caltrans® TRAFFIC OPERATIONS

P:\PROJ\01\0E370\drafting\sheets\01140000040md001.dgn

LAST REVISION 03-05-15 | DATE PLOTTED => 14-APR-2015 | TIME PLOTTED => 12:41

M

Maint	MAINTENANCE
Max	MAXIMUM
MB	METAL BEAM
MBB	METAL BEAM BARRIER
MBGR	METAL BEAM GUARD RAILING
Med	MEDIAN
MGS	MIDWEST GUARDRAIL SYSTEM
MH	MANHOLE
Min	MINIMUM
Misc	MISCELLANEOUS
Misc I & S	MISCELLANEOUS IRON AND STEEL
Mkr	MARKER
Mod	MODIFIED, MODIFY
Mon	MONUMENT
MP	METAL PLATE
MPGR	METAL PLATE GUARD RAILING
MR	MOVEMENT RATING
MSE	MECHANICALLY STABILIZED EMBANKMENT
Mt	MOUNTAIN, MOUNT
Mtl	MATERIAL
MVP	MAINTENANCE VEHICLE PULLOUT

N

N	NORTH
NB	NORTHBOUND
No.	NUMBER (MUST HAVE PERIOD)
Nos.	NUMBERS (MUST HAVE PERIOD)
NPS	NOMINAL PIPE SIZE
NS	NEAR SIDE
NSP	NEW STANDARD PLAN
NTS	NOT TO SCALE

O

Oblr	OBLITERATE
OC	OVERCROSSING
OD	OUTSIDE DIAMETER
OF	OUTSIDE FACE
OG	ORIGINAL GROUND
OGAC	OPEN GRADED ASPHALT CONCRETE
OGFC	OPEN GRADED FRICTION COURSE
OH	OVERHEAD
OHWM	ORDINARY HIGH WATER MARK
O-O	OUT TO OUT
Opp	OPPOSITE
OSD	OVERSIDE DRAIN

P

P	PAGE
PAP	PERFORATED ALUMINUM PIPE
PB	PULL BOX
PC	POINT OF CURVATURE, PRECAST
PCC	POINT OF COMPOUND CURVE, PORTLAND CEMENT CONCRETE
PCMS	PORTABLE CHANGEABLE MESSAGE SIGN
PCP	PERFORATED CONCRETE PIPE, PRESTRESSED CONCRETE PIPE
PCVC	POINT OF COMPOUND VERTICAL CURVE
PEC	PERMIT TO ENTER AND CONSTRUCT
Ped	PEDESTRIAN
Ped OC	PEDESTRIAN OVERCROSSING
Ped UC	PEDESTRIAN UNDERCROSSING
Perm Mtl	PERMEABLE MATERIAL

P continued

PG	PROFILE GRADE
PI	POINT OF INTERSECTION
PJP	PARTIAL JOINT PENETRATION
Pkwy	PARKWAY
ℙ,PL	PLATE
P/L	PROPERTY LINE
PM	POST MILE, TIME FROM NOON TO MIDNIGHT
PN	PAVING NOTCH
POC	POINT OF HORIZONTAL CURVE
POT	POINT OF TANGENT
POVC	POINT OF VERTICAL CURVE
PP	PIPE PILE, PLASTIC PIPE, POWER POLE
PPL	PREFORMED PERMEABLE LINER
PPP	PERFORATED PLASTIC PIPE
PRC	POINT OF REVERSE CURVE
PRF	PAVEMENT REINFORCING FABRIC
PRVC	POINT OF REVERSE VERTICAL CURVE
PS&E	PLANS, SPECIFICATIONS AND ESTIMATES
PS, P/S	PRESTRESSED
PSP	PERFORATED STEEL PIPE
PT	POINT OF TANGENCY
PVC	POLYVINYL CHLORIDE
Pvmt	PAVEMENT

Q

Qty	QUANTITY

R

R	RADIUS
R & D	REMOVE AND DISPOSE
R & S	REMOVE AND SALVAGE
R/C	RATE OF CHANGE
RCA	REINFORCED CONCRETE ARCH
RCB	REINFORCED CONCRETE BOX
RCP	REINFORCED CONCRETE PIPE
RCPA	REINFORCED CONCRETE PIPE ARCH
Rd	ROAD
Reinf	REINFORCED, REINFORCEMENT, REINFORCING
Rel	RELOCATE
Repl	REPLACEMENT
Ret	RETAINING
Rev	REVISED, REVISION
Rdwy	ROADWAY
RHMA	RUBBERIZED HOT MIX ASPHALT
Riv	RIVER
RM	ROAD-MIXED
RP	RADIUS POINT, REFERENCE POINT
RR	RAILROAD
RSP	ROCK SLOPE PROTECTION, REVISED STANDARD PLAN
Rt	RIGHT
Rte	ROUTE
RW	REDWOOD, RETAINING WALL
R/W	RIGHT OF WAY
Rwy	RAILWAY

S

S	SOUTH, SUPPLEMENT
SAE	STRUCTURE APPROACH EMBANKMENT
Salv	SALVAGE
SAPP	STRUCTURAL ALUMINUM PLATE PIPE
SB	SOUTHBOUND
SC	SAND CUSHION
SCSP	SLOTTED CORRUGATED STEEL PIPE
SD	STORM DRAIN
Sec	SECOND, SECTION
Sep	SEPARATION
SG	SUBGRADE
Shld	SHOULDER
Sht	SHEET
Sim	SIMILAR
₤	STATION LINE
SM	SELECTED MATERIAL
Spec	SPECIAL, SPECIFICATIONS
SPP	SLOTTED PLASTIC PIPE
SS	SLOPE STAKE
SSBM	STRAP AND SADDLE BRACKET METHOD
SSD	STRUCTURAL SECTION DRAIN
SSPA	STRUCTURAL STEEL PLATE ARCH
SSPP	STRUCTURAL STEEL PLATE PIPE
SSPPA	STRUCTURAL STEEL PLATE PIPE ARCH
SSRP	STEEL SPIRAL RIB PIPE
St	STREET
Sta	STATION
STBB	SINGLE THRIE BEAM BARRIER
Std	STANDARD
Str	STRUCTURE
Surf	SURFACING
SW	SIDEWALK, SOUND WALL
Swr	SEWER
Sym	SYMMETRICAL
S4S	SURFACE 4 SIDES

T

T	SEMI-TANGENT
Tan	TANGENT
TBB	THRIE BEAM BARRIER
Tbr	TIMBER
TC	TOP OF CURB
TCB	TRAFFIC CONTROL BOX
TCE	TEMPORARY CONSTRUCTION EASEMENT
Tel	TELEPHONE
Temp	TEMPORARY
TG	TOP OF GRADE
Tot	TOTAL
TP	TELEPHONE POLE
TPB	TREATED PERMEABLE BASE
TPM	TREATED PERMEABLE MATERIAL
Trans	TRANSITION

T continued

TS	TRANSVERSE, TRAFFIC SIGNAL, TUBULAR STEEL
Typ	TYPICAL

U

UC	UNDERCROSSING
UD	UNDERDRAIN
UG	UNDERGROUND
UON	UNLESS OTHERWISE NOTED
UP	UNDERPASS

V

V	VALVE, DESIGN SPEED
Var	VARIABLE, VARIES
VC	VERTICAL CURVE
VCP	VITRIFIED CLAY PIPE
Vert	VERTICAL
Via	VIADUCT
Vol	VOLUME

W

W	WEST, WIDTH
WB	WESTBOUND
WH	WEEP HOLE
WM	WIRE MESH
WS	WATER SURFACE
WSP	WELDED STEEL PIPE
Wt	WEIGHT
WV	WATER VALVE
WW	WINGWALL
WWLOL	WINGWALL LAYOUT LINE

X

X Sec	CROSS SECTION
Xing	CROSSING

Y

Yr	YEAR
Yrs	YEARS

Dist	COUNTY	ROUTE	POST MILES TOTAL PROJECT	SHEET No.	TOTAL SHEETS
01	Men	1	85.3 / 104.7	12	16

Grace M. Tsushima
REGISTERED CIVIL ENGINEER

July 19, 2013
PLANS APPROVAL DATE

REGISTERED PROFESSIONAL ENGINEER
Grace M. Tsushima
No. C49814
Exp. 9-30-14
CIVIL
STATE OF CALIFORNIA

THE STATE OF CALIFORNIA OR ITS OFFICERS OR AGENTS SHALL NOT BE RESPONSIBLE FOR THE ACCURACY OR COMPLETENESS OF SCANNED COPIES OF THIS PLAN SHEET.

TO ACCOMPANY PLANS DATED 4-13-15

UNIT OF MEASUREMENT SYMBOLS:

Some of the symbols used in the project plan quantity tables and in the Bid Item List are:

TABLE A

SYMBOL USED	DEFINITIONS
ACRE	ACRE
CF	CUBIC FOOT
CY	CUBIC YARD
EA	EACH
GAL	GALLON
LB	POUND
LF	LINEAR FOOT
SQFT	SQUARE FOOT
SQYD	SQUARE YARD
STA	100 FEET
TAB	TABLET
TON	2,000 POUNDS

Some of the symbols used in the plans other than in the project plan quantity tables are:

TABLE B

SYMBOL USED	DEFINITIONS
ksi	KIPS PER SQUARE INCH
ksf	KIPS PER SQUARE FOOT
psi	POUNDS PER SQUARE INCH
psf	POUNDS PER SQUARE FOOT
lb/ft^3, pcf	POUNDS PER CUBIC FOOT
tsf	TONS PER SQUARE FOOT
mph, MPH *	MILES PER HOUR
ø	NOMINAL DIAMETER
oz	OUNCE
lb	POUND
kip	1,000 POUNDS
cal	CALORIE
ft	FOOT OR FEET
gal	GALLON

* For use on a sign panel only

STATE OF CALIFORNIA
DEPARTMENT OF TRANSPORTATION

ABBREVIATIONS (SHEET 2 OF 2)

NO SCALE

RSP A10B DATED JULY 19, 2013 SUPERSEDES STANDARD PLAN A10B DATED MAY 20, 2011 - PAGE 2 OF THE STANDARD PLANS BOOK DATED 2010.

REVISED STANDARD PLAN RSP A10B

2010 REVISED STANDARD PLAN RSP A10B

P:\PROJ\01\0E370\drafting\sheets\va001.dgn

6-7-13

Dist	COUNTY	ROUTE	POST MILES TOTAL PROJECT	SHEET No.	TOTAL SHEETS
01	Men	1	85.3 / 104.7	13	16

Randell D. Hiatt
REGISTERED CIVIL ENGINEER

July 19, 2013
PLANS APPROVAL DATE

REGISTERED PROFESSIONAL ENGINEER
Randell D. Hiatt
No. C50200
Exp. 6-30-15
CIVIL
STATE OF CALIFORNIA

THE STATE OF CALIFORNIA OR ITS OFFICERS OR AGENTS SHALL NOT BE RESPONSIBLE FOR THE ACCURACY OR COMPLETENESS OF SCANNED COPIES OF THIS PLAN SHEET.

TO ACCOMPANY PLANS DATED 4-13-15

2010 REVISED STANDARD PLAN RSP A77L3

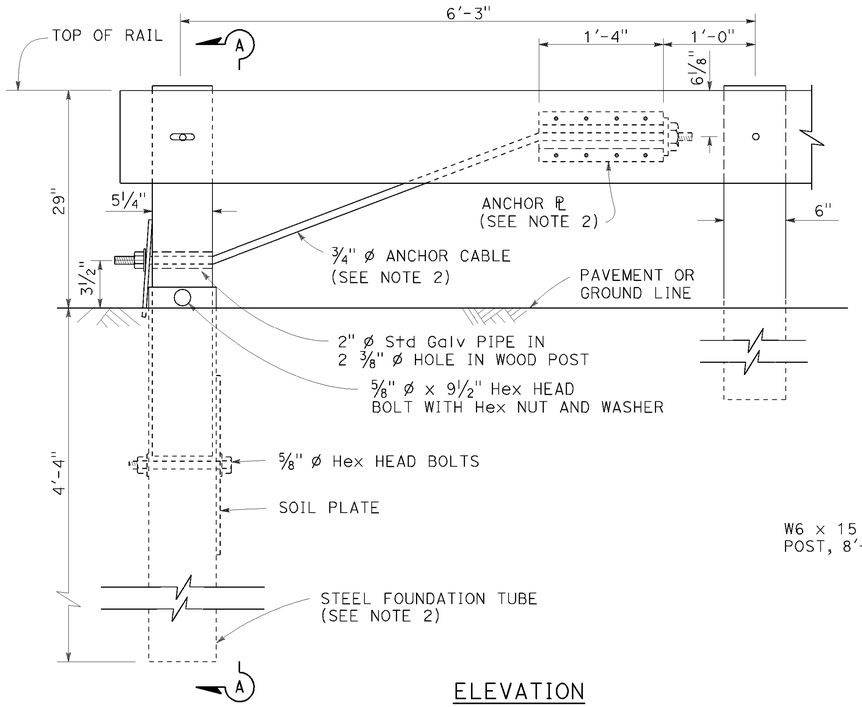

ELEVATION
END ANCHOR
ASSEMBLY (TYPE SFT)

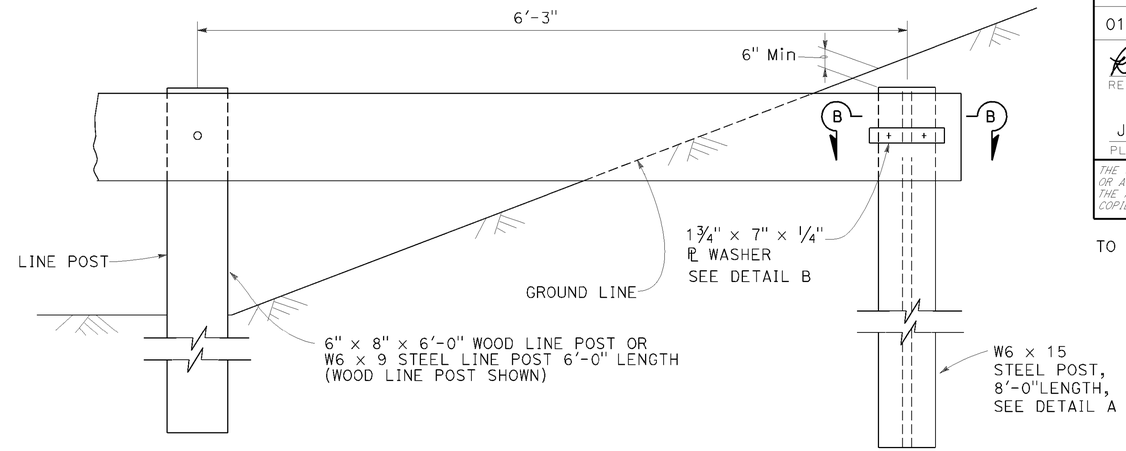

BURIED POST END ANCHOR

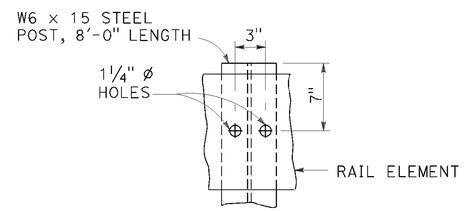

DETAIL A

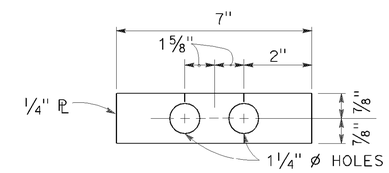

DETAIL B

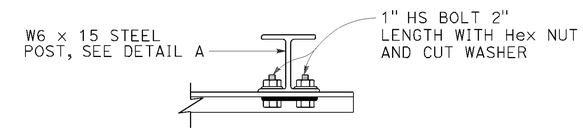

SECTION B-B

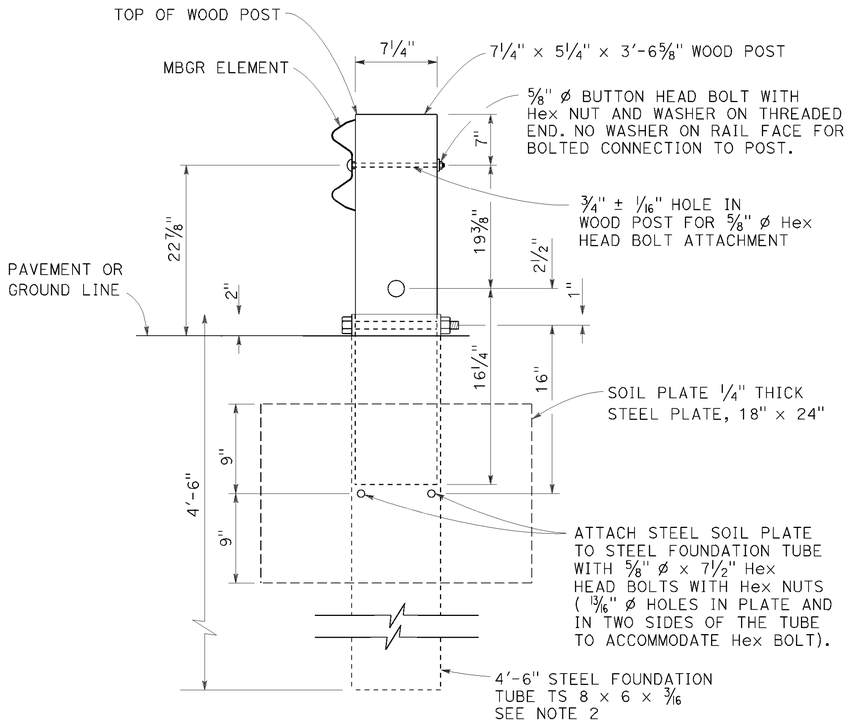

SECTION A-A

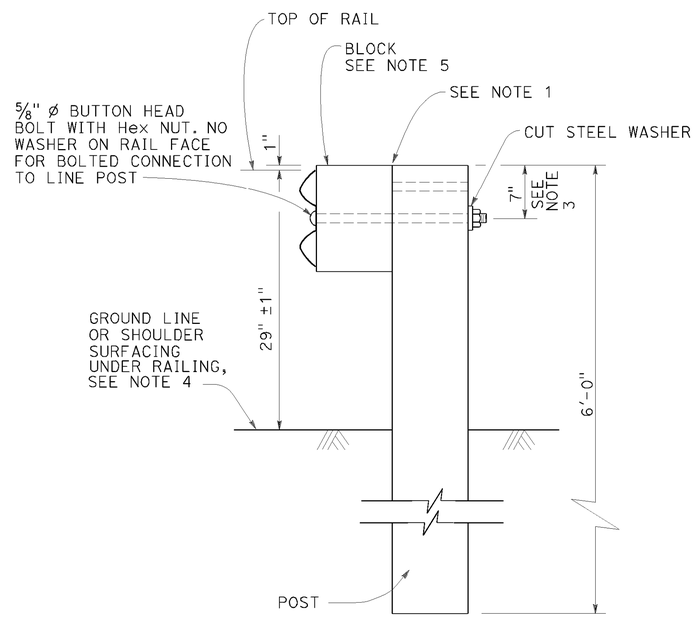

TYPICAL LINE
POST INSTALLATION

NOTES:

1. For wood post and wood block, toenail with 2-16d Galv nails in top of block. For steel post and notched wood or plastic block, notched face of block faces steel post.
2. A 6'-0" Length steel foundation tube, TS 8 x 6 x 3/16, without a soil plate, may be furnished and installed in place of the 4'-6" length steel foundation tube and soil plate shown, Minimum embadment of the 6'-0" length tube shall be 5'-9". A 5/8" ø Hex head bolt and nut shall be installed in the hole in the 6'-0" length tube to keep the wood post from dropping into the tube.
3. To connect railing to 27" terminal system end treatment, transition the top of railing height at a ratio of 120:1 to terminal system end treatment height plus one 12'-6" standard railing section at the transitioned height for a horizontal connection to the end treatment.
4. Install posts in soil.
5. See Revised Standard Plans RSP A77N1 and RSP A77N2 for details.
6. Holes excavation in the slope to construct the buried post end anchor shall be backfilled with selected earth, placed in layers approximately 1'-0" thick. Each layer shall be moistened and thoroughly compacted.

STATE OF CALIFORNIA
DEPARTMENT OF TRANSPORTATION

METAL BEAM GUARD RAILING RECONSTRUCT INSTALLATION

NO SCALE

RSP A77L3 DATED JULY 19, 2013 SUPPLEMENTS THE STANDARD PLANS BOOK DATED 2010.

REVISED STANDARD PLAN RSP A77L3

P:\PROJ\01\0E370\drafting\sheets\va002.dgn

7-16-13

TO ACCOMPANY PLANS DATED 4-13-15

Dist	COUNTY	ROUTE	POST MILES TOTAL PROJECT	SHEET No.	TOTAL SHEETS
01	Men	1	85.3 / 104.7	14	16

REGISTERED CIVIL ENGINEER

October 19, 2012
PLANS APPROVAL DATE

REGISTERED PROFESSIONAL ENGINEER Glenn DeCou No. C34547 Exp. 9-30-13 CIVIL STATE OF CALIFORNIA

THE STATE OF CALIFORNIA OR ITS OFFICERS OR AGENTS SHALL NOT BE RESPONSIBLE FOR THE ACCURACY OR COMPLETENESS OF SCANNED COPIES OF THIS PLAN SHEET.

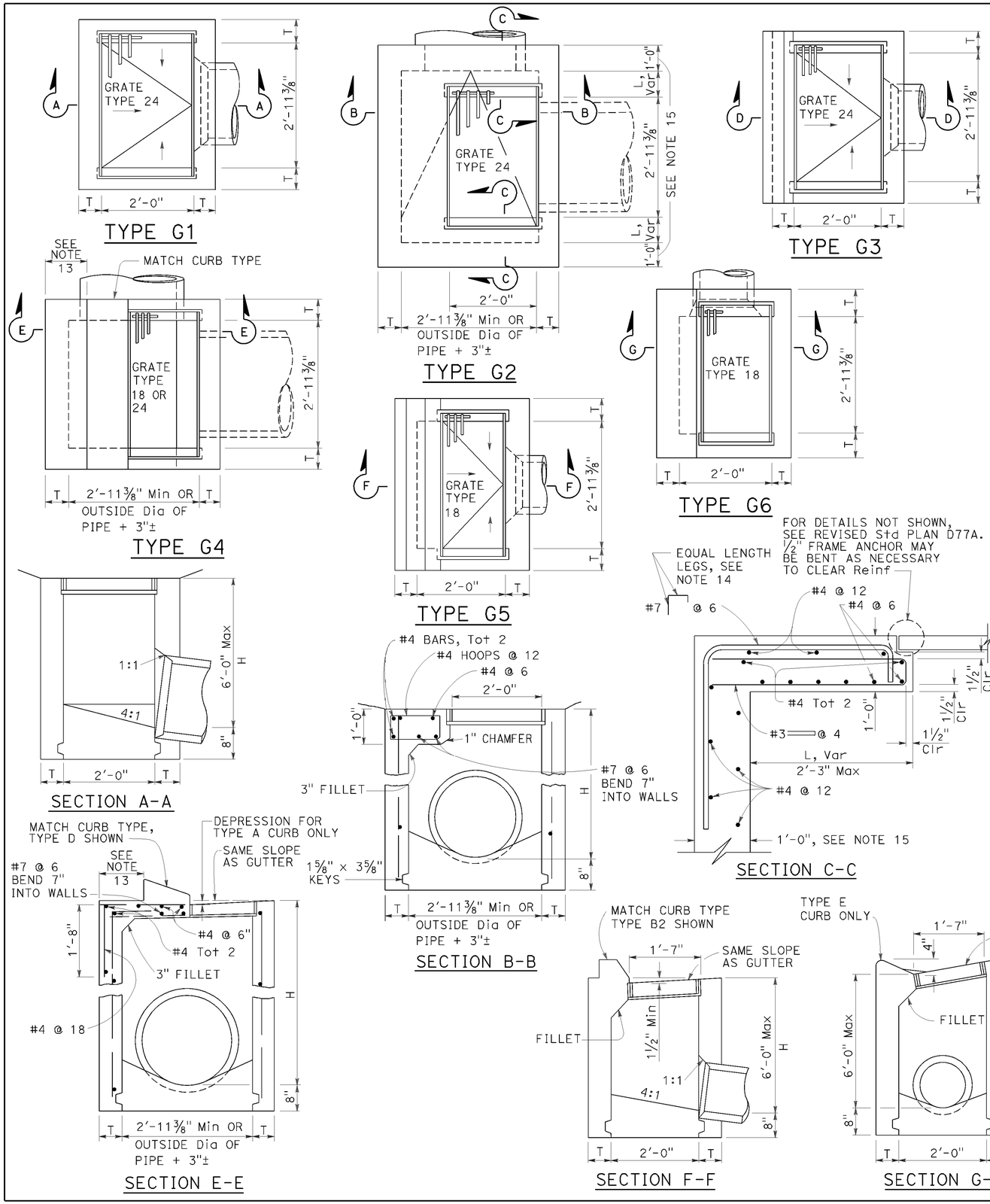

NOTES:

1. "H" is the difference in elevation between the outlet pipe flow line and the normal gutter grade line undepressed.
2. For "T" wall thickness, see Table A below.
3. Wall reinforcing not required when "H" is 8'-0" or less and the unsupported width or length is 7'-0" or less. Walls exceeding these limits shall be reinforced with #4 bars @ 1'-6" ± centers placed 1½" clear to inside of box unless otherwise shown.
4. Inlet bottom reinforcing not required. See Standard Plan D74C for alternative reinforced bottom and alternative half round bottom.
5. Steps-None required where "H" is less than 2'-6". Where "H" is 2'-6" or more, install steps with lowest rung 1'-0" above the floor and highest rung not more than 6" below top of inlet. The distance between steps shall not exceed 1'-0" and shall be uniform throughout the length of the wall. Place steps in the wall without an opening. Steps inserts may be substituted for the bar steps. Step inserts shall comply with State Industrial Safety requirements. See Standard Plan D74C for step details.
6. Details shown apply to both metal and concrete pipe.
7. Pipe(s) can be placed in any wall.
8. Curb section shall match adjacent curb.
9. Basin floors shall have wood trowel finish and a minimum slope of 12:3 from all directions toward outlet pipe.
10. Set inlet so that grate bars are parallel to direction of principal surface flow.
11. See Revised Standard Plans D77A and D77B for grate and frame details and weights of miscellaneous iron and steel.
12. See Standard Plan D78A for gutter depression details.
13. This dimenison will vary with different grates, curbs types, box width and wall thickness.
14. Bar may be rotated as necessary to clear opening. Where "L" is 6" or less, bar may be omitted.
15. Where "L" is 6" or less, wall thickness shall be as shown in Table A.
16. Cast-in-place inlets to be formed around all pipes/stubs intersecting the inlet, and concrete poured in one continuous operation. Precast inlets shall have mortared connections conforming to details for Type GCP Inlet shown on Standard Plan D75B. See Standard Specifications for mortar composition.

TABLE A

CONCRETE QUANTITIES				
TYPE	H=3'-0" TO 8'-0" (T=6")		H=8'-1" TO 20'-0" (T=8")	
	H=3'-0" (CY)	ADDITIONAL PCC PER FOOT (CY)	H=8'-1" (CY)	ADDITIONAL PCC PER FOOT (CY)
G-1	0.95	0.220	See Note A	SEE NOTE A
G-2*	1.31	0.255	3.50	0.357
G-3	1.03	0.220	See Note A	SEE NOTE A
G-4* (TYPE 24)	1.27	0.255	3.48	0.357
G-4* (TYPE 18)	1.30	0.255	3.50	0.357
G-5	1.02	0.220	SEE NOTE A	SEE NOTE A
G-6	1.04	0.220	SEE NOTE A	SEE NOTE A

TABLE BASED ON 8" FLOOR SLAB. NO DEDUCTIONS ARE TO BE MADE TO THESE QUANTITIES BECAUSE OF PIPE OPENINGS, DIFFERENT FLOOR ALTERNATIVES OR DIFFERENT CURB TYPES. * QUANTITIES FOR TYPE G-2 AND G-4 INLETS BASED ON THE MINIMUM INTERIOR DIMENSIONS.

NOTE A:

Maximum allowable height 6'-0".

STATE OF CALIFORNIA
DEPARTMENT OF TRANSPORTATION

DRAINAGE INLETS

NO SCALE

RSP D73 DATED OCTOBER 19, 2012 SUPERSEDES STANDARD PLAN D73 DATED MAY 20, 2011 - PAGE 156 OF THE STANDARD PLANS BOOK DATED 2010.

REVISED STANDARD PLAN RSP D73

2010 REVISED STANDARD PLAN RSP D73

P:\PROJ\01\0E370\drafting\sheets\va003.dgn

7-19-12

Dist	COUNTY	ROUTE	POST MILES TOTAL PROJECT	SHEET No.	TOTAL SHEETS
01	Men	1	85.3 / 104.7	15	16

Raymond Don Tsztoo
REGISTERED CIVIL ENGINEER

April 19, 2013
PLANS APPROVAL DATE

REGISTERED PROFESSIONAL ENGINEER Raymond Don Tsztoo No. C37332 Exp. 6-30-14 CIVIL STATE OF CALIFORNIA

THE STATE OF CALIFORNIA OR ITS OFFICERS OR AGENTS SHALL NOT BE RESPONSIBLE FOR THE ACCURACY OR COMPLETENESS OF SCANNED COPIES OF THIS PLAN SHEET.

TO ACCOMPANY PLANS DATED 4-13-15

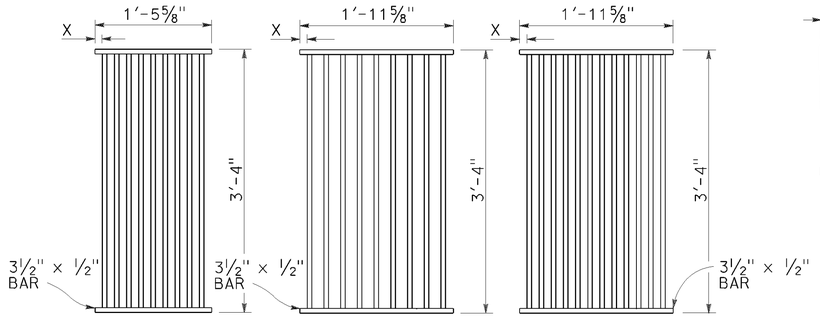

TYPE 18-9

1⅜" Clear spacing. Use within the roadbed on highways where bicycles and pedestrians are excluded.

TYPE 24-9

2" Clear spacing. Use in locations off the roadbed on all types of highways.

TYPE 24-12

1⅜" Clear spacing. Use within the roadbed on highways where bicycles and pedestrians are excluded.

RECTANGULAR GRATE DETAILS

(See table below)

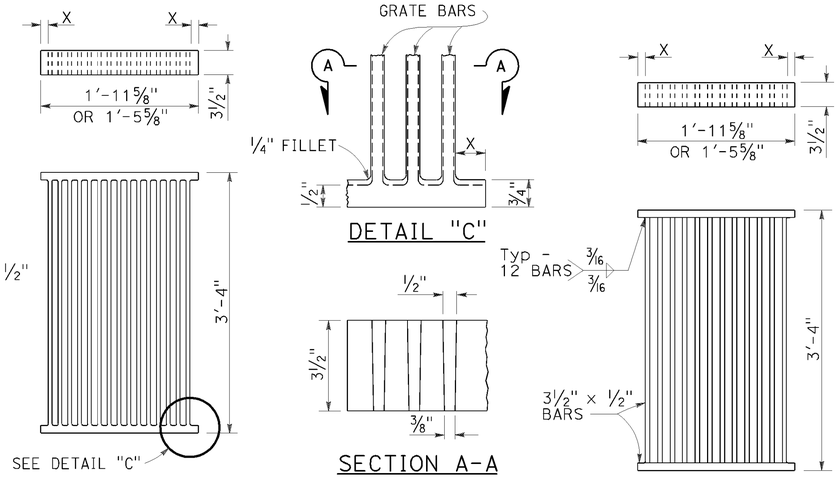

ALTERNATIVE CAST DUCTILE IRON GRATE OR CAST CARBON STEEL GRATE

ALTERNATIVE WELDED GRATE

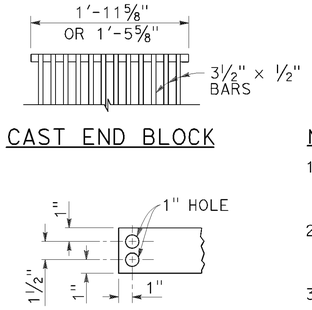

CAST END BLOCK

END OF BAR

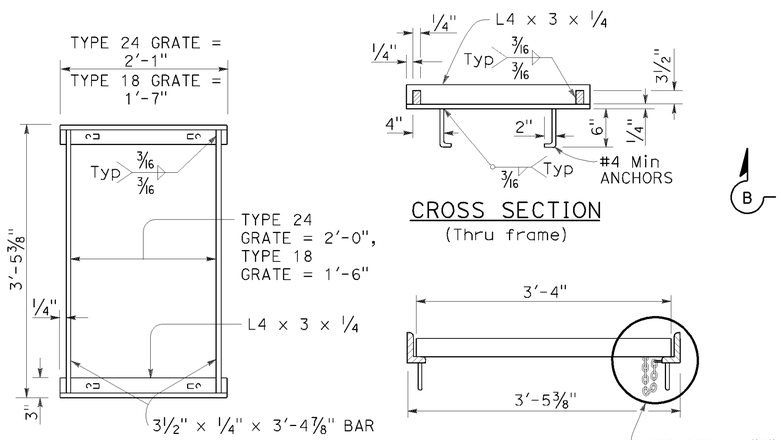

TYPICAL FRAME

CROSS SECTION
(Thru frame)

LONGITUDINAL SECTION
(Thru frame and grate)

RECTANGULAR FRAME DETAILS

(For all rectangular grates)

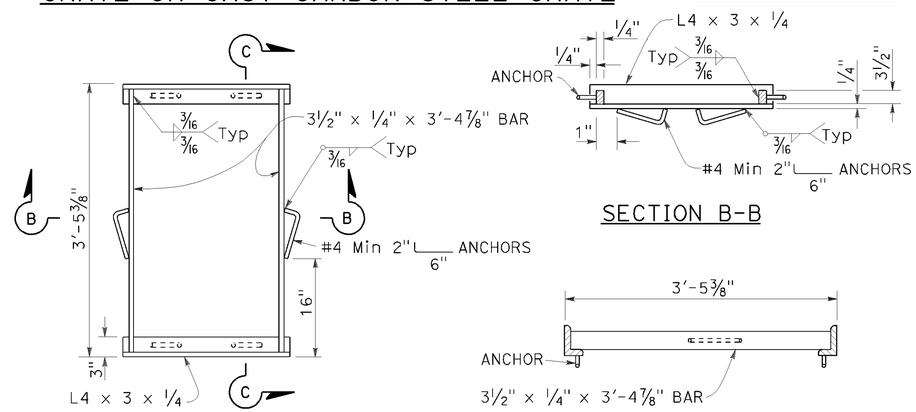

TYPICAL FRAME

ALTERNATIVE ANCHOR FOR RECTANGULAR FRAME

(For details not shown, See Rectangular Frame Details)

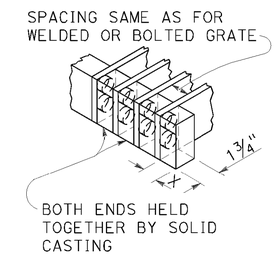

ALTERNATIVE CAST DUCTILE IRON OR CAST CARBON STEEL END BLOCK GRATE

NOTES:

1. Grate type numbers refer to approximate width of grate in inches and number of bars, respectively.
2. Contractor has the option of using cast ductile iron, cast carbon steel, welded, bolted, or cast end block grate.
3. Rounded top of bars optional on all grates.
4. Pipe inlets with a grate shall be placed so that bars parallel direction of principle surface flow.
5. Complete joint penetration butt welds may be substituted for the fillet welds on all anchors.
6. Standard square, hexagon, round or equivalent headed anchors may be substituted for the right angle hooks on the anchors shown on this plan.
7. Grate and frame weights are based on welded grates (weights of face angles, steps, protection bars, etc. are not included).
8. Connect chain to grate and frame only at locations shown on the plans. When chain is required, do not use cast ductile iron grates.

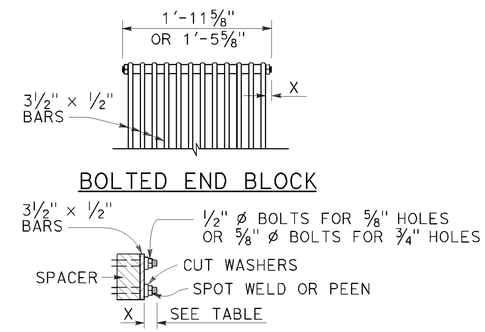

ALTERNATIVE BOLTED GRATE

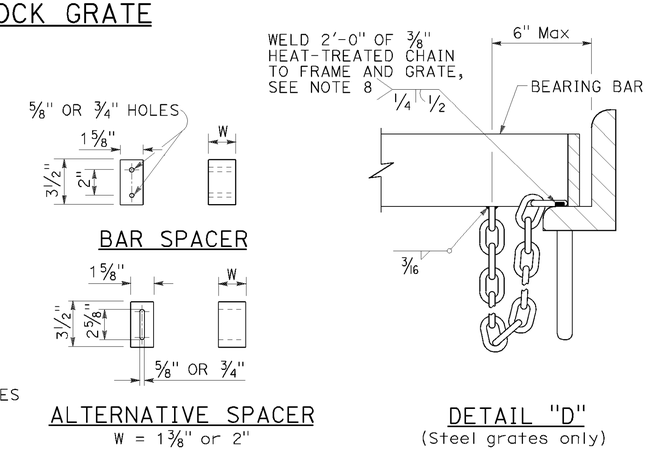

GRATE BAR SPACING TABLE

TYPE	No. OF BARS	CLEAR BAR SPACING	X
18-9	9	1⅜"	1 1/16"
24-9	9	2"	1 9/16"
24-12	12	1⅜"	1¼"

INLET TYPE	COVER TYPE	WEIGHT LB
OS	PLATE	174
OL-7	PLATE	170
OL-10	PLATE	170
OL-14	PLATE	170
OL-21	PLATE	170
OCP	PLATE	112
OCPI	PLATE	112
OCPI	REDWOOD	42
OMP	PLATE	177
OMPI	PLATE	177

INLET TYPE	GRATE TYPE	No. OF GRATES	WEIGHT LB
GDO	24-12	2	634
GOL-7	24-12	1	326
GOL-10	24-12	1	326
GO,G1,G2,G3,G4 (TYPE 24)	24-9	1	263
	24-12	1	326
G4 (TYPE 18),G5,G6	18-9	1	249
GT1	18-9	2	498
GT2	18-9	2	498
GT3	24-12	2	652
GT4	24-12	2	652
TRASH RACK			22
GRATE CHAIN			3

BASIS FOR Misc IRON & STEEL FINAL PAY WEIGHTS FOR DRAINAGE INLETS

(See Note 7)

STATE OF CALIFORNIA
DEPARTMENT OF TRANSPORTATION

GRATE DETAILS No. 1

NO SCALE

RSP D77A DATED APRIL 19, 2013 SUPERSEDES RSP D77A DATED JULY 20, 2012 AND STANDARD PLAN D77A DATED MAY 20, 2011 - PAGE 164 OF THE STANDARD PLANS BOOK DATED 2010.

REVISED STANDARD PLAN RSP D77A

2010 REVISED STANDARD PLAN RSP D77A

P:\PROJ\01\0E370\drafting\sheets\vd004.dgn

4-4-13

Dist	COUNTY	ROUTE	POST MILES TOTAL PROJECT	SHEET No.	TOTAL SHEETS
01	Men	1	85.3 / 104.7	16	16

Raymond Don Tsztoo
REGISTERED CIVIL ENGINEER

April 19, 2013
PLANS APPROVAL DATE

REGISTERED PROFESSIONAL ENGINEER Raymond Don Tsztoo No. C37332 Exp. 6-30-14 CIVIL STATE OF CALIFORNIA

THE STATE OF CALIFORNIA OR ITS OFFICERS OR AGENTS SHALL NOT BE RESPONSIBLE FOR THE ACCURACY OR COMPLETENESS OF SCANNED COPIES OF THIS PLAN SHEET.

TO ACCOMPANY PLANS DATED 4-13-15

2010 REVISED STANDARD PLAN RSP D77B

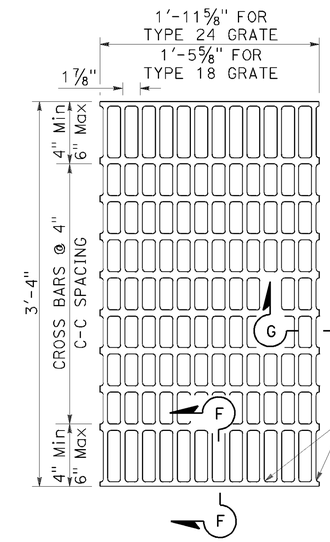

NOTES:

Bearing bars to be 3½" × ¼" bars on 1⅞" centers.

⅜"± ø Cross bars may be fillet welded, resistance welded or electroforged to bearing bars.

Weight of Type 24 grate = 141 LBS.

Weight of Type 18 grate = 107 LBS. (Type 24 grate shown).

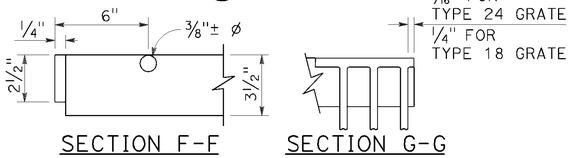

SECTION F-F SECTION G-G

TYPE 18-10 AND 24-13 GRATE

(Welded Steel)

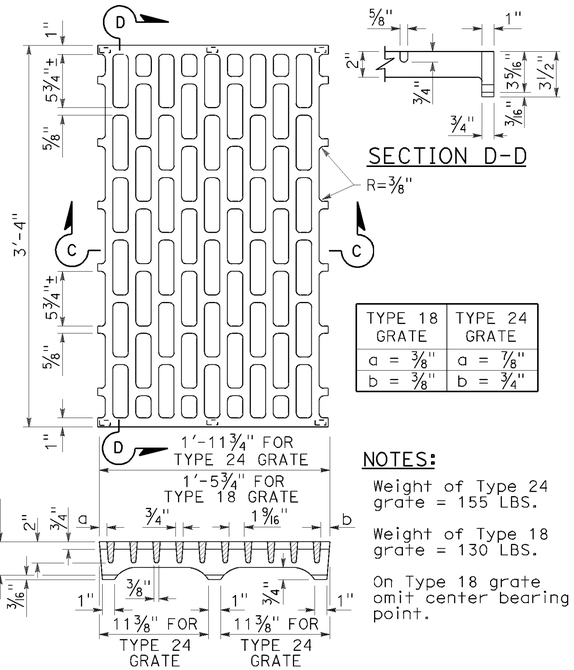

SECTION D-D

TYPE 18 GRATE	TYPE 24 GRATE
a = ⅜"	a = ⅞"
b = ⅜"	b = ¾"

NOTES:

Weight of Type 24 grate = 155 LBS.

Weight of Type 18 grate = 130 LBS.

On Type 18 grate omit center bearing point.

SECTION C-C

TYPE 18-8C AND 24-10C GRATE

(Cast ductile iron)

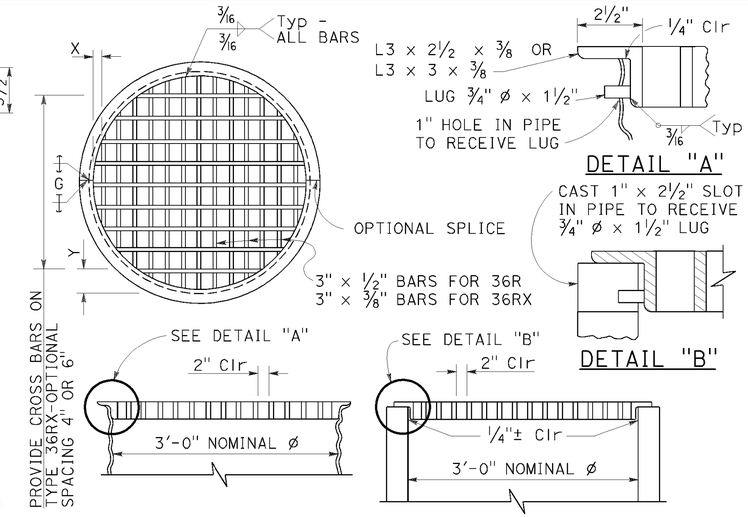

DETAIL "A"

DETAIL "B"

TYPE 36R AND 36RX GRATE DETAILS

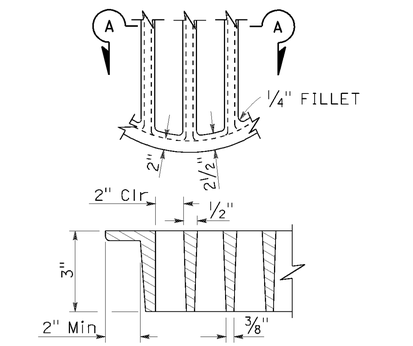

SECTION A-A

ALTERNATIVE CAST DUCTILE IRON GRATE OR CAST CARBON STEEL GRATE TYPE 36R AND 36RX

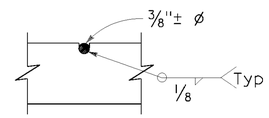

⅜"± ø Cross bars may be fillet welded, resistance welded or electroforged to bearing bars.

CROSS BAR DETAIL TYPE 36RX GRATE (WELDED STEEL)

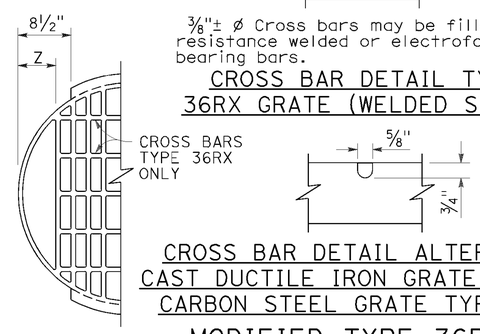

CROSS BAR DETAIL ALTERNATIVE CAST DUCTILE IRON GRATE OR CAST CARBON STEEL GRATE TYPE 36RX

MODIFIED TYPE 36R AND 36RX GRATE FOR ODI INLET

BASIS FOR Misc IRON AND STEEL FINAL PAY WEIGHTS FOR DRAINAGE INLETS

INLET TYPE	GRATE TYPE	No. OF GRATES	WEIGHT LB
GDO (SEE NOTE 4)	24-10C	2	391
	24-10S	2	456
	24-12X	2	473
	24-13	2	374
GO,GOL,G1,G2, G3,G4 (TYPE 24)	24-10C	1	202
	24-10S	1	229
	24-12X	1	239
	24-13	1	188
G4 (TYPE 18) G5,G6	18-8S	1	187
	18-9X	1	187
	18-10	1	149
GT1,GT2	18-8S	2	374
	18-9X	2	374
	18-10	2	298
GT3,GT4	24-10C	2	404
	24-10S	2	458
	24-12X	2	478
	24-13	2	376
ODI	36RX (Mod)	1	196
GMP,GCP,GCPI	36RX	1	215
ODI	36R (Mod)	1	220
GMP,GCP,GCPI	36R	1	236
TRASH RACK			22
GRATE CHAIN			3

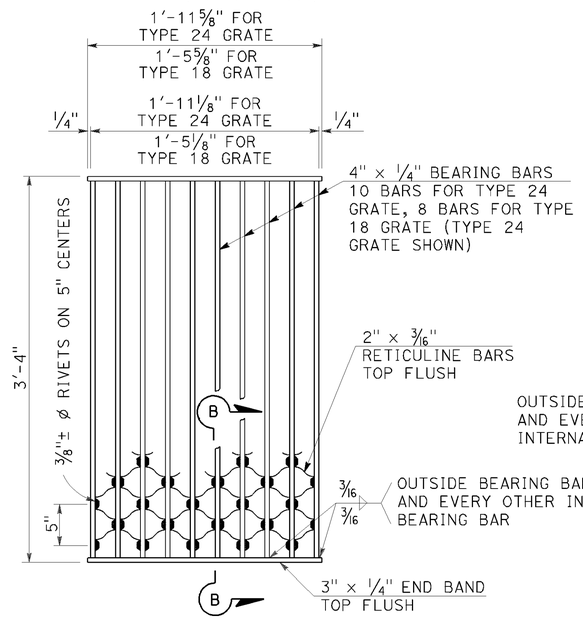

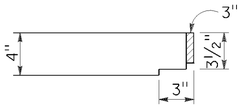

NOTES:

Weight of Type 24 grate = 182 LBS.
Weight of Type 18 grate = 145 LBS.

SECTION B-B

TYPE 18-8S AND 24-10S GRATE

(Welded Steel) Reticuline type

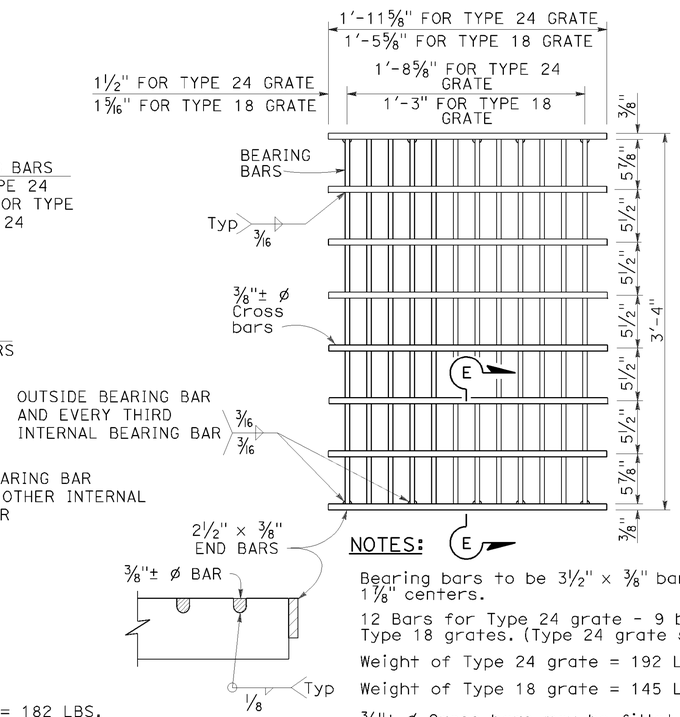

NOTES:

Bearing bars to be 3½" × ⅜" bars on 1⅞" centers.

12 Bars for Type 24 grate - 9 bars for Type 18 grates. (Type 24 grate shown).

Weight of Type 24 grate = 192 LBS.

Weight of Type 18 grate = 145 LBS.

⅜"± ø Cross bars may be fillet welded, resistance welded or electroforged to bearing bars.

SECTION E-E

TYPE 18-9X AND 24-12X GRATE

(Welded Steel)

NOTES:

1. When alternative grates are allowed - Final pay based on alternative with the lesser weight.
2. Use frame shown on Standard Plan D74A, D74B or RSP D77A as appropriate.
3. When Type 24-10S, 24-12X or 24-13 grates are used with GDO Inlets, a ¼" × 3½" × 3'-4⅞" steel bar shall be welded across the center of inlet frame to separate the individual grates.
4. See Revised Standard Plan RSP D77A for connecting chain to welded grate and frame. When chain is required, do not use cast ductile iron grate.

GRATE BAR SPACING TABLE

TYPE	No. OF BARS	CLEAR BAR SPACING	X	Y 4" SPACING	Y 6" SPACING	Z
36R	13	2"	2⅛"	–	–	–
36RX (STEEL)	15	2"	9/16"	3¾"	5¾"	–
36RX (CAST)	13	2"	2⅛"	3¾"	5¾"	–
36R Mod	12	2"	2⅛"	–	–	5"
36RX Mod (STEEL)	13	2"	9/16"	3¾"	5¾"	5 11/16"
36RX Mod (CAST)	12	2"	2⅛"	3¾"	5¾"	5"

STATE OF CALIFORNIA
DEPARTMENT OF TRANSPORTATION

GRATE DETAILS No. 2

NO SCALE

RSP D77B DATED APRIL 19, 2013 SUPERSEDES RSP D77B DATED JULY 20, 2012 AND STANDARD PLAN D77B DATED MAY 20, 2011 - PAGE 165 OF THE STANDARD PLANS BOOK DATED 2010.

REVISED STANDARD PLAN RSP D77B

P:\PROJ\01\0E370\drafting\sheets\va005.dgn

4-4-13