Dist	COUNTY	ROUTE	POST MILES TOTAL PROJECT	SHEET No.	TOTAL SHEETS
01	Men	101	99.4/R100.4	1	35

NH-Q101(208)E

STATE OF CALIFORNIA
DEPARTMENT OF TRANSPORTATION

PROJECT PLANS FOR CONSTRUCTION ON
STATE HIGHWAY

IN MENDOCINO COUNTY
NEAR LEGGETT
0.7 MILE SOUTH OF RED MOUNTAIN CREEK
TO RED MOUNTAIN CREEK

TO BE SUPPLEMENTED BY STANDARD PLANS DATED MAY 2006

INDEX OF PLANS

SHEET No.	DESCRIPTION
1	TITLE AND LOCATION MAP
2-3	TYPICAL CROSS SECTIONS
4-14	LAYOUTS
15	CONSTRUCTION DETAILS
16-17	DRAINAGE PROFILES, DETAILS AND QUANTITIES
18	CONSTRUCTION AREA SIGNS
19-20	SUMMARY OF QUANTITIES
21-30	REVISED AND NEW STANDARD PLANS

STRUCTURE PLANS

31-35	CONFUSION HILL DECOMMISSION

THE STANDARD PLANS LIST APPLICABLE TO THIS CONTRACT IS INCLUDED IN THE NOTICE TO BIDDERS AND SPECIAL PROVISIONS BOOK.

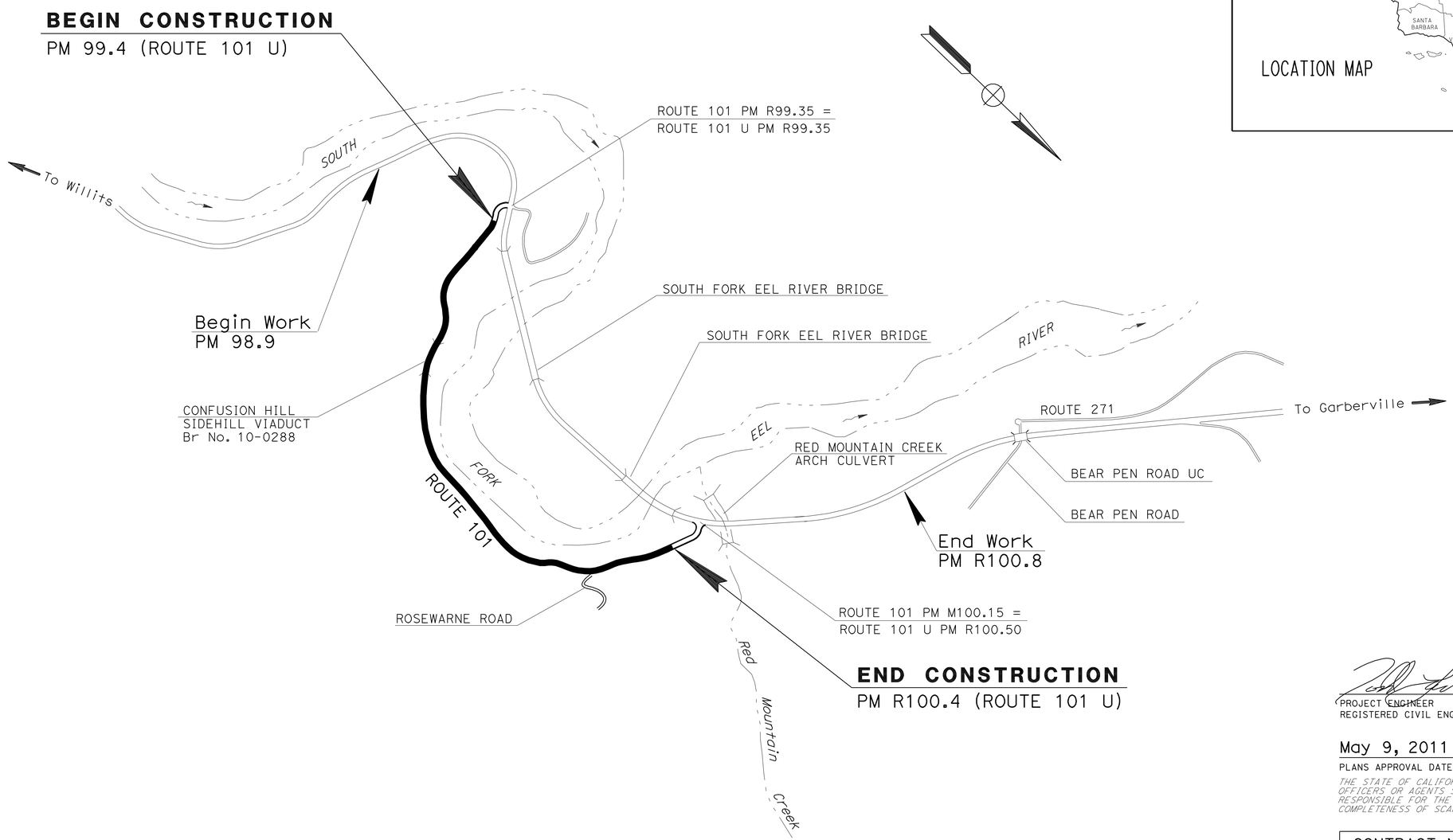

NO SCALE

THE CONTRACTOR SHALL POSSESS THE CLASS (OR CLASSES) OF LICENSE AS SPECIFIED IN THE "NOTICE TO BIDDERS."

PROJECT MANAGER: STEVEN BLAIR

DESIGN ENGINEER: L.R. ASHLEY

2-9-11
PROJECT ENGINEER DATE
REGISTERED CIVIL ENGINEER

REGISTERED PROFESSIONAL ENGINEER
T. LARK
No. 52481
Exp. 12/31/12
CIVIL
STATE OF CALIFORNIA

May 9, 2011
PLANS APPROVAL DATE

THE STATE OF CALIFORNIA OR ITS OFFICERS OR AGENTS SHALL NOT BE RESPONSIBLE FOR THE ACCURACY OR COMPLETENESS OF SCANNED COPIES OF THIS PLAN SHEET.

CONTRACT No.	01-397544
PROJECT ID	0100000148

LAST REVISION 01-14-11
DATE PLOTTED => 15-JUN-2011
TIME PLOTTED => 05:57

Dist	COUNTY	ROUTE	POST MILES TOTAL PROJECT	SHEET No.	TOTAL SHEETS
01	Men	101	99.4/R100.4	2	35

REGISTERED CIVIL ENGINEER 2-9-11 DATE

5-9-11
PLANS APPROVAL DATE

REGISTERED PROFESSIONAL ENGINEER T. LARK No. 52481 Exp. 12/31/12 CIVIL STATE OF CALIFORNIA

THE STATE OF CALIFORNIA OR ITS OFFICERS OR AGENTS SHALL NOT BE RESPONSIBLE FOR THE ACCURACY OR COMPLETENESS OF SCANNED COPIES OF THIS PLAN SHEET.

NOTE:

DIMENSIONS OF THE PAVEMENT STRUCTURES (STRUCTURAL SECTIONS) ARE SUBJECT TO TOLERANCES SPECIFIED IN THE STANDARD SPECIFICATIONS.

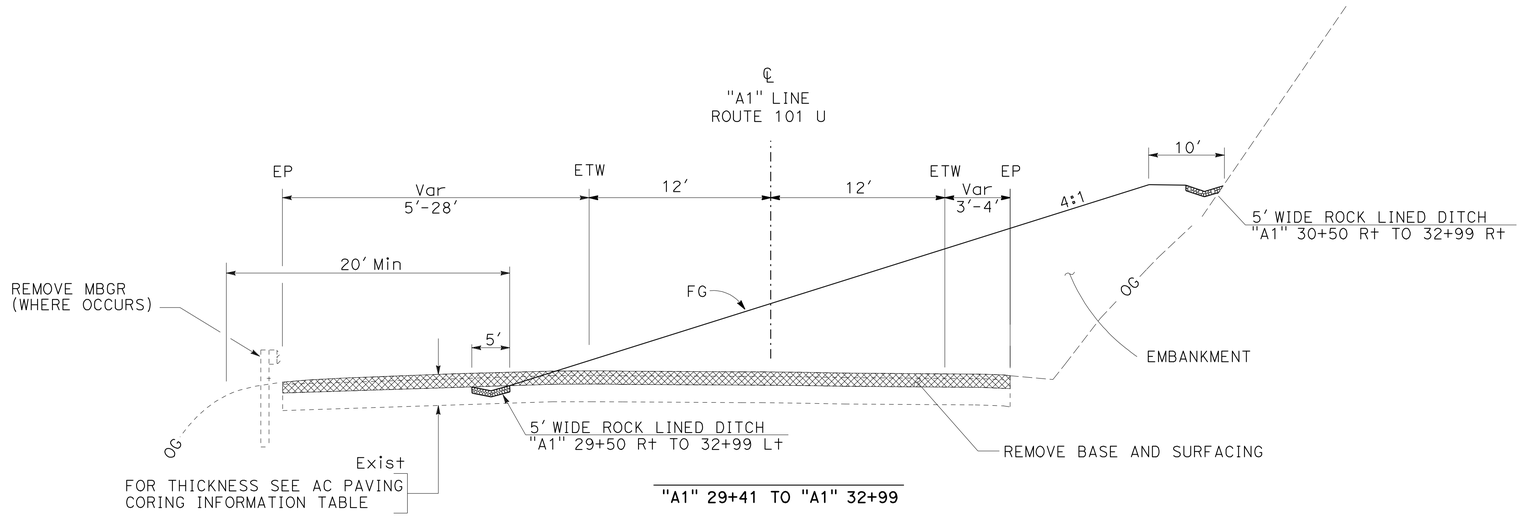

"A1" 29+41 TO "A1" 32+99

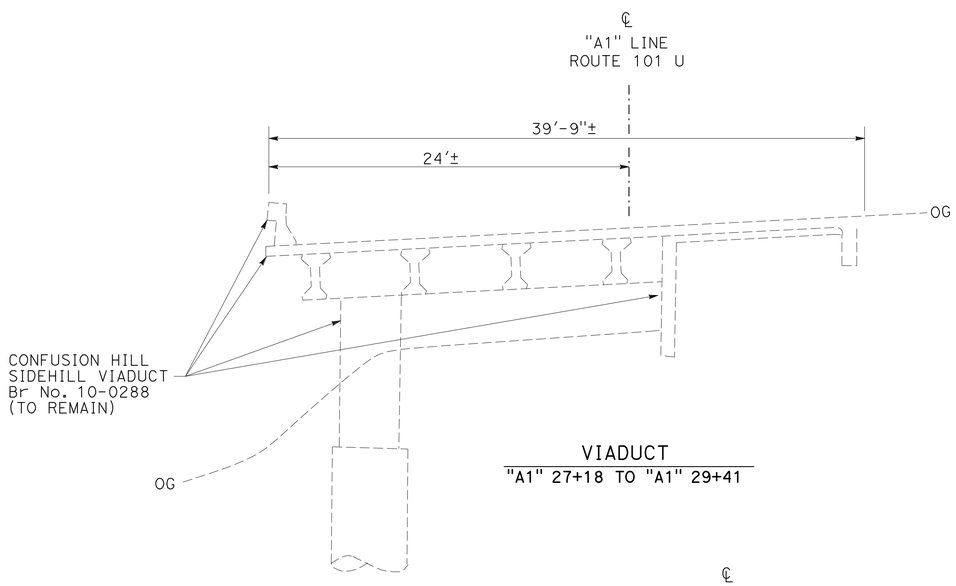

VIADUCT
"A1" 27+18 TO "A1" 29+41

ASPHALT CONCRETE PAVING CORING INFORMATION

CORE NUMBER	LOCATION		THICKNESS OGAC	THICKNESS ASPHALT CONCRETE	THICKNESS CEMENT TREATED BASE	REMARKS
	Sta	L+/R+	FT	FT	FT	
1	"A1" 27+13±	6.2' R+		0.73		
2	"A1" 27+13±	6.0' L+		0.81		
3	"A1" 30+14±	5.1' L+		0.94		
4	"A1" 30+51±	21.0' L+		1.02		

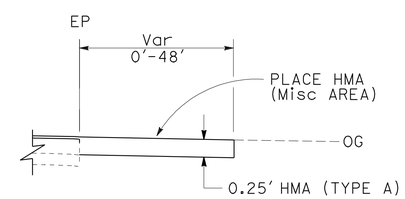

CUL-DE-SAC
"A1" 16+20 TO "A1" 17+35
"A1" 56+00 TO "A1" 56+82

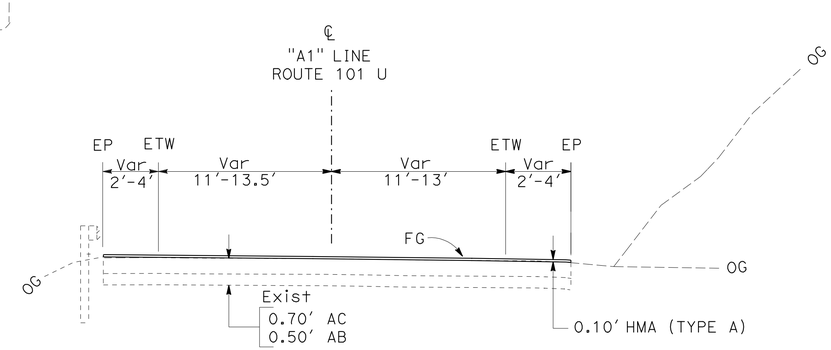

"A1" 14+00 TO "A1" 26+10

TYPICAL CROSS SECTIONS X-1

NO SCALE

STATE OF CALIFORNIA - DEPARTMENT OF TRANSPORTATION
Caltrans® DESIGN

FUNCTIONAL SUPERVISOR: L.R. ASHLEY
CALCULATED-DESIGNED BY: TODD LARK
CHECKED BY: MARK SOBOTA
REVISED BY / DATE REVISED

LAST REVISION 01-14-11
DATE PLOTTED => 04-MAY-2011
TIME PLOTTED => 13:36

Dist	COUNTY	ROUTE	POST MILES TOTAL PROJECT	SHEET No.	TOTAL SHEETS
01	Men	101	99.4/R100.4	3	35

REGISTERED CIVIL ENGINEER 2-9-11 DATE

5-9-11
PLANS APPROVAL DATE

REGISTERED PROFESSIONAL ENGINEER T. LARK No. 52481 Exp. 12/31/12 CIVIL STATE OF CALIFORNIA

THE STATE OF CALIFORNIA OR ITS OFFICERS OR AGENTS SHALL NOT BE RESPONSIBLE FOR THE ACCURACY OR COMPLETENESS OF SCANNED COPIES OF THIS PLAN SHEET.

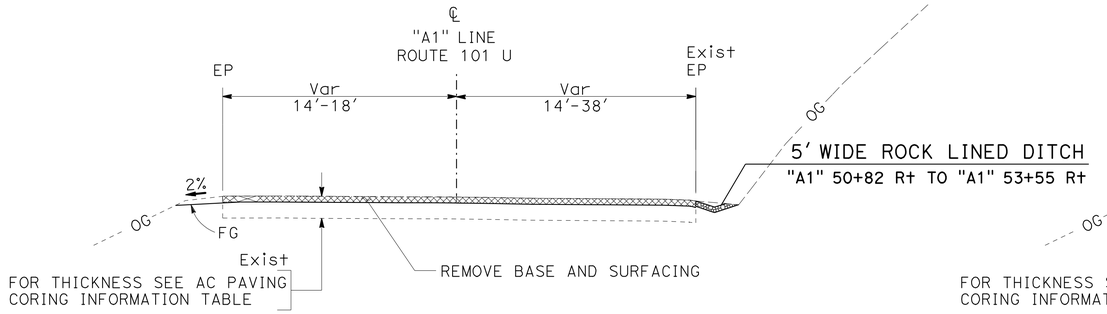

"A1" 34+88 TO "A1" 35+95
"A1" 38+50 TO "A1" 40+68
"A1" 42+25 TO "A1" 45+08
"A1" 48+04 TO "A1" 55+00

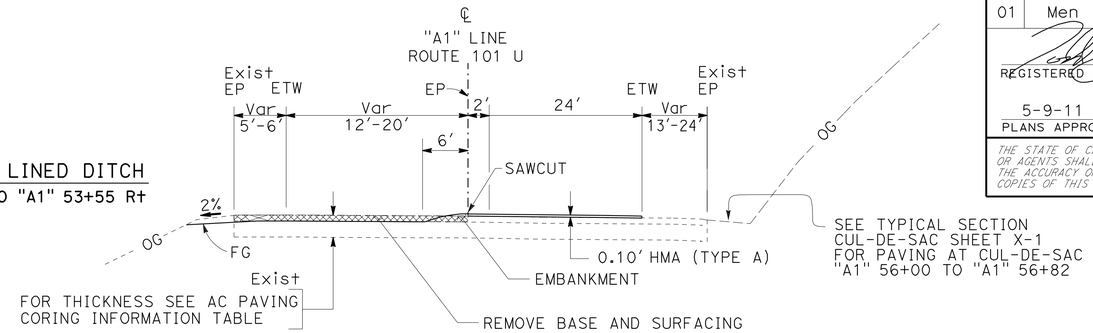

"A1" 55+00 TO "A1" 62+50

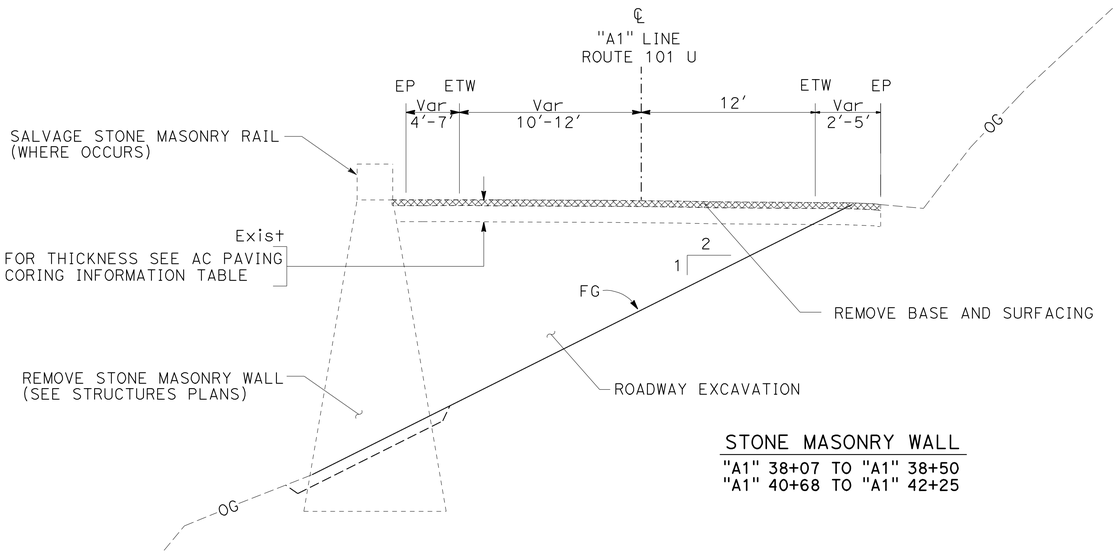

STONE MASONRY WALL

"A1" 38+07 TO "A1" 38+50
"A1" 40+68 TO "A1" 42+25

ASPHALT CONCRETE PAVING CORING INFORMATION

CORE NUMBER	LOCATION		THICKNESS OGAC	THICKNESS ASPHALT CONCRETE	THICKNESS CEMENT TREATED BASE	REMARKS
	Sta	Lt/Rt	FT	FT	FT	
5	"A1" 31+67±	21.0' Lt		1.79		
6	"A1" 33+04±	5.0' Rt		2.54+		AC CONTINUED BEYOND 2.54' DEPTH
7	"A1" 33+04±	6.2' Lt		2.38		GEOTEXTILE @ 0.88' DEPTH
8	"A1" 33+94±	6.0' Rt		2.44		GEOTEXTILE @ 1.02' DEPTH
9	"A1" 37+11±	6.5' Lt		2.23		GEOTEXTILE @ 1.17' DEPTH
10	"A1" 39+48±	22.0' Lt		0.90		
11	"A1" 42+60±	6.0' Rt		1.46		
12	"A1" 45+92±	6.0' Lt		1.46		GEOTEXTILE @ 0.54' DEPTH
13	"A1" 50+73±	5.5' Rt		1.46		
14	"A1" 54+64±	17.0' Rt	0.06	1.00	0.29	
15	"A1" 57+28±	7.5' Lt	0.06	0.80	0.50	
16	"A1" 61+34±	11.0' Lt	0.04	0.92	0.58	

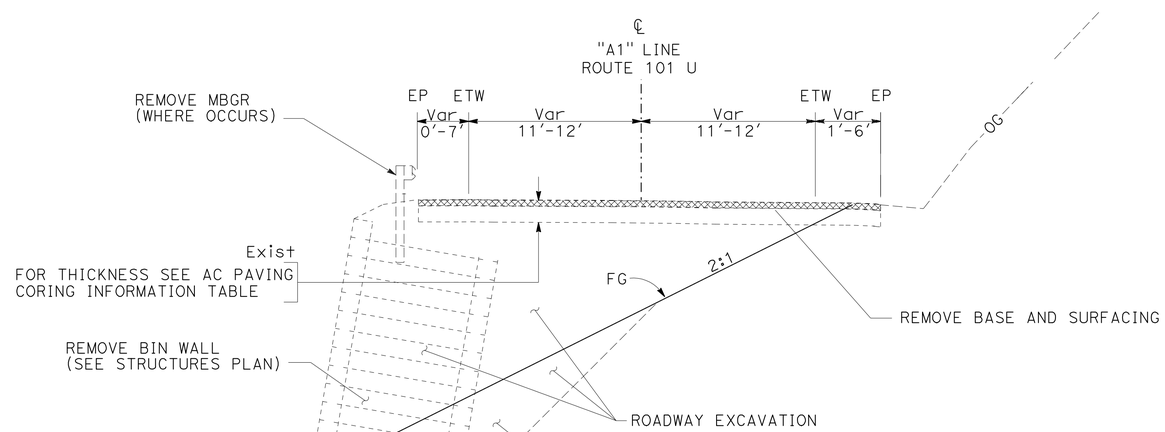

METAL BIN WALL

"A1" 32+99 TO "A1" 34+88
"A1" 35+95 TO "A1" 38+07
"A1" 45+08 TO "A1" 48+04

TYPICAL CROSS SECTIONS X-2

NO SCALE

STATE OF CALIFORNIA - DEPARTMENT OF TRANSPORTATION
Caltrans® DESIGN

FUNCTIONAL SUPERVISOR: L.R. ASHLEY
CALCULATED-DESIGNED BY: TODD LARK
CHECKED BY: MARK SOBOTA
REVISED BY
DATE REVISED

LAST REVISION 01-14-11
DATE PLOTTED => 04-MAY-2011
TIME PLOTTED => 13:48

Dist	COUNTY	ROUTE	POST MILES TOTAL PROJECT	SHEET No.	TOTAL SHEETS
01	Men	101	99.4/R100.4	4	35

REGISTERED CIVIL ENGINEER 2-9-11 DATE

5-9-11
PLANS APPROVAL DATE

REGISTERED PROFESSIONAL ENGINEER T. LARK No. 52481 Exp. 12/31/12 CIVIL STATE OF CALIFORNIA

THE STATE OF CALIFORNIA OR ITS OFFICERS OR AGENTS SHALL NOT BE RESPONSIBLE FOR THE ACCURACY OR COMPLETENESS OF SCANNED COPIES OF THIS PLAN SHEET.

NOTE:

FOR ACCURATE RIGHT OF WAY DATA, CONTACT RIGHT OF WAY ENGINEERING AT THE DISTRICT OFFICE.

CURVE DATA

CURVE No.	Sta "A1" LINE		BEARING R	DISTANCE FT	DELTA	NORTHING	EASTING
	11+20.90	BEGIN				2465662.17	6066361.90
1	11+58.42	BC	S 21°40′46.9″ E	37.52		2465627.31	6066375.76
	12+50.60	EC	65.62	92.18	80°29′28.1″	2465587.41	6066450.57
2	13+54.33	BC	N 77°49′48.1″ E	103.73		2465609.28	6066551.97
	13+80.75	EC	100.00	26.42	15°08′19.7″	2465611.39	6066578.23

LEGEND:

- SURVEY CONTROL POINT
- PAVEMENT CORE AND NUMBER (SEE TYPICAL CROSS SECTIONS)
- ROADSIDE SIGN
- PLACE HMA (Misc AREA)
- DRAINAGE SYSTEM
- DRAINAGE UNIT
- RETAINING WALLS
- \\\\ FR \\\\ FIBER ROLL

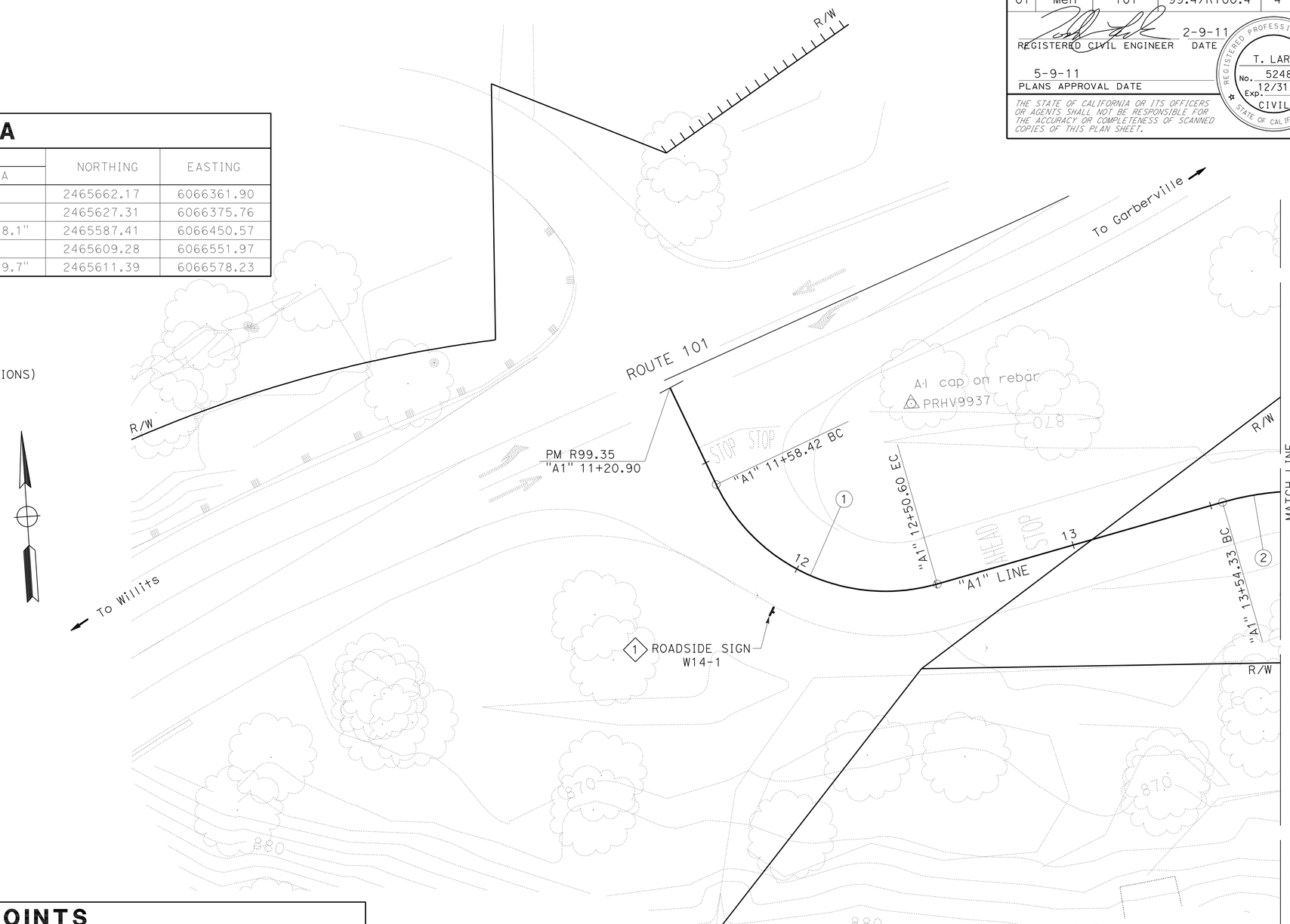

CONTROL POINTS

Sta	OFFSET	ELEVATION	NORTHING	EASTING	POINT NAME	DESCRIPTION
12+59.22	63.17′ Lt	869.02	2465650.98	6066445.69	PRHV9937	Al cap on rebar
16+51.66	19.08′ Lt	867.66	2465616.41	6066849.77	PRHV21	
21+80.40	21.82′ Rt	850.58	2465577.45	6067381.80	PRHV107	B CAP T BAR
26+09.32	36.81′ Lt	828.54	2465873.90	6067711.43	SUHV106	100D
31+01.15	64.25′ Lt	800.18	2466142.83	6068064.85	PRHV9973	Al cap on rebar
49+24.09	17.54′ Lt	700.85	2467805.52	6068570.79	SUHV9997	PC99.97L Al cap on rebar
54+90.98	39.56′ Rt	673.95	2468361.98	6068701.96	PRHV10018	Al cap on rebar

LAYOUT

SCALE: 1" = 20′

L-1

STATION	
CY	Exc
	Emb

STATE OF CALIFORNIA - DEPARTMENT OF TRANSPORTATION
Caltrans
DESIGN

FUNCTIONAL SUPERVISOR: L.R. ASHLEY
CALCULATED-DESIGNED BY: TODD LARK
CHECKED BY: MARK SOBOTA
REVISED BY
DATE REVISED

LAST REVISION 01-14-11
DATE PLOTTED => 04-MAY-2011
TIME PLOTTED => 13:37

Dist	COUNTY	ROUTE	POST MILES TOTAL PROJECT	SHEET No.	TOTAL SHEETS
01	Men	101	99.4/R100.4	5	35

REGISTERED CIVIL ENGINEER 2-9-11 DATE

5-9-11
PLANS APPROVAL DATE

REGISTERED PROFESSIONAL ENGINEER T. LARK No. 52481 Exp. 12/31/12 CIVIL STATE OF CALIFORNIA

THE STATE OF CALIFORNIA OR ITS OFFICERS OR AGENTS SHALL NOT BE RESPONSIBLE FOR THE ACCURACY OR COMPLETENESS OF SCANNED COPIES OF THIS PLAN SHEET.

NOTE:

FOR ACCURATE RIGHT OF WAY DATA, CONTACT RIGHT OF WAY ENGINEERING AT THE DISTRICT OFFICE.

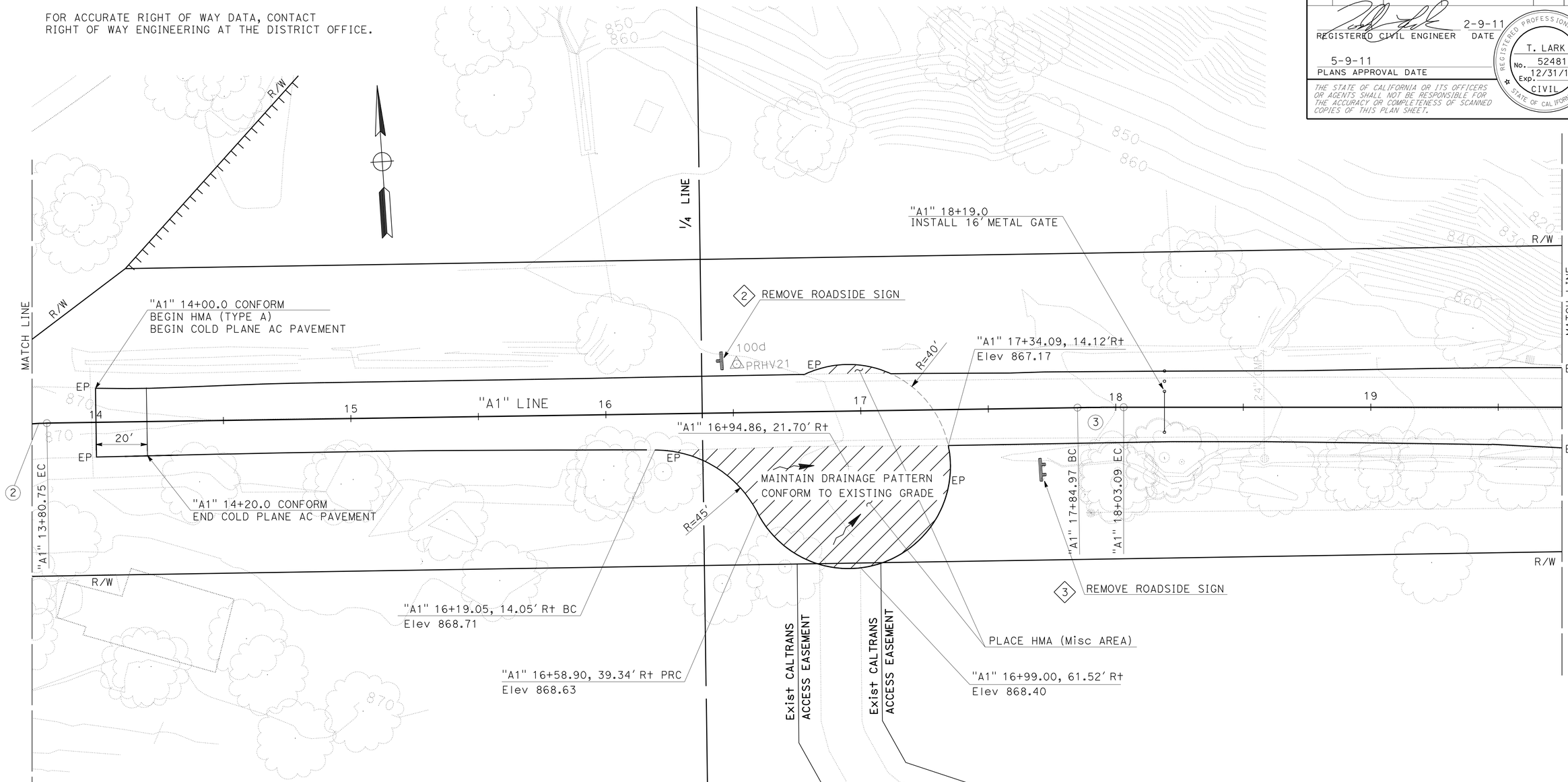

CURVE DATA

CURVE No.	Sta "A1" LINE		BEARING R	DISTANCE FT	DELTA	NORTHING	EASTING
2	13+54.33	BC	N 77°49'48.1" E	103.73		2465609.28	6066551.97
	13+80.75	EC	100.00	26.42	15°08'19.7"	2465611.39	6066578.23
3	17+84.97	BC	S 87°01'53.3" E	404.22		2465590.46	6066981.91
	18+03.09	EC	1194.31	18.12	0°52'09.5"	2465589.38	6067000.00
4	20+28.65	BC	S 86°09'58.7" E	225.56		2465574.30	6067225.05

LAYOUT

SCALE: 1" = 20'

L-2

STATION	
CY	Exc
	Emb

STATE OF CALIFORNIA - DEPARTMENT OF TRANSPORTATION

Caltrans DESIGN

FUNCTIONAL SUPERVISOR L.R. ASHLEY

CALCULATED-DESIGNED BY TODD LARK

CHECKED BY MARK SOBOTA

REVISED BY

DATE REVISED

LAST REVISION DATE PLOTTED => 04-MAY-2011 TIME PLOTTED => 13:51

01-14-11

Dist	COUNTY	ROUTE	POST MILES TOTAL PROJECT	SHEET No.	TOTAL SHEETS
01	Men	101	99.4/R100.4	6	35

REGISTERED CIVIL ENGINEER 2-9-11 DATE

5-9-11
PLANS APPROVAL DATE

REGISTERED PROFESSIONAL ENGINEER T. LARK No. 52481 Exp. 12/31/12 CIVIL STATE OF CALIFORNIA

THE STATE OF CALIFORNIA OR ITS OFFICERS OR AGENTS SHALL NOT BE RESPONSIBLE FOR THE ACCURACY OR COMPLETENESS OF SCANNED COPIES OF THIS PLAN SHEET.

NOTE:

FOR ACCURATE RIGHT OF WAY DATA, CONTACT RIGHT OF WAY ENGINEERING AT THE DISTRICT OFFICE.

CURVE DATA

CURVE No.	Sta "A1" LINE		BEARING R	DISTANCE FT	DELTA	NORTHING	EASTING
4	20+28.65	BC	S 86°09'58.7" E	225.56		2465574.30	6067225.05
	23+33.51	EC	340.00	304.86	51°22'27.7"	2465684.02	6067498.62
5	23+79.95	BC	N 42°27'33.1" E	46.44		2465718.28	6067529.97
	26+51.45	EC	425.00	271.50	36°36'04.2"	2465848.66	6067762.87

LAYOUT

SCALE: 1" = 20'

L-3

STATION	
CY	Exc
	Emb

REVISED BY | DATE REVISED

TODD LARK | MARK SOBOTA

CALCULATED-DESIGNED BY | CHECKED BY

FUNCTIONAL SUPERVISOR: L.R. ASHLEY

STATE OF CALIFORNIA - DEPARTMENT OF TRANSPORTATION

Caltrans® DESIGN

S:\01_397541\139754ea003.dgn

LAST REVISION 01-14-11 | DATE PLOTTED => 04-MAY-2011 | TIME PLOTTED => 13:37

Dist	COUNTY	ROUTE	POST MILES TOTAL PROJECT	SHEET No.	TOTAL SHEETS
01	Men	101	99.4/R100.4	7	35

REGISTERED CIVIL ENGINEER 2-9-11 DATE

5-9-11
PLANS APPROVAL DATE

REGISTERED PROFESSIONAL ENGINEER T. LARK No. 52481 Exp. 12/31/12 CIVIL STATE OF CALIFORNIA

THE STATE OF CALIFORNIA OR ITS OFFICERS OR AGENTS SHALL NOT BE RESPONSIBLE FOR THE ACCURACY OR COMPLETENESS OF SCANNED COPIES OF THIS PLAN SHEET.

NOTE:

FOR ACCURATE RIGHT OF WAY DATA, CONTACT RIGHT OF WAY ENGINEERING AT THE DISTRICT OFFICE.

CURVE DATA

CURVE No.	Sta "A1" LINE		BEARING R	DISTANCE FT	DELTA	NORTHING	EASTING
5	23+79.95	BC	N 42°27'33.1" E	46.44		2465718.28	6067529.97
	26+51.45	EC	425.00	271.50	36°36'04.2"	2465848.66	6067762.87
6	27+10.22	BC	N 79°03'38.3" E	58.77		2465859.81	6067820.57
	29+10.22	EC	315.00	200.00	36°22'45.0"	2465955.54	6067992.36
7	29+31.80	BC	N 42°40'53.3" E	21.58		2465971.41	6068006.99
	29+49.66	EC	300.08	17.86	3°24'38.9"	2465984.89	6068018.71
8	32+92.37	BC	N 39°16'11.2" E	342.71		2466250.21	6068235.63

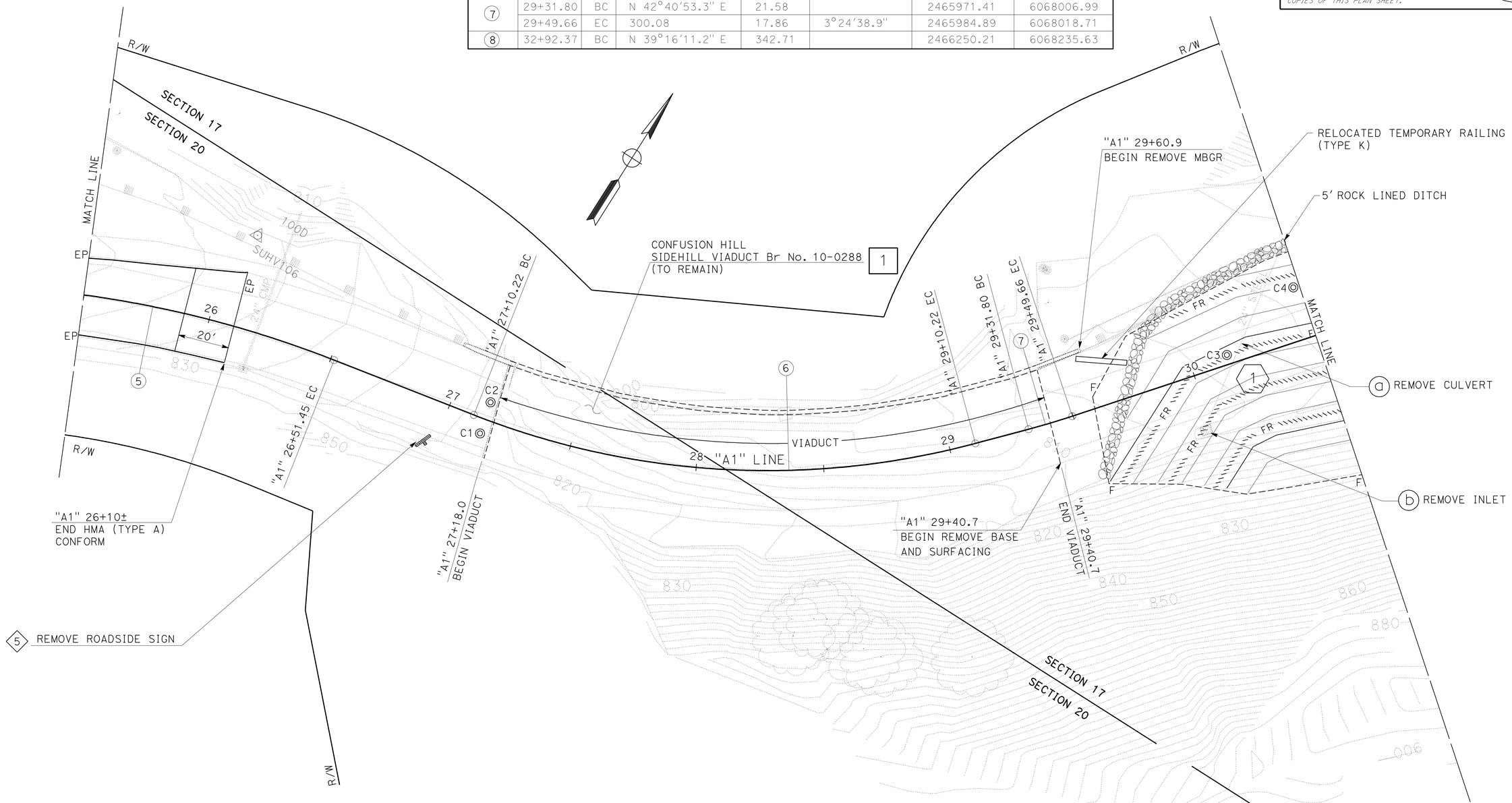

LAYOUT
SCALE: 1" = 20'

L-4

STATION		26	27	28	29	30	31
CY	Exc						
	Emb						

1,500

STATE OF CALIFORNIA - DEPARTMENT OF TRANSPORTATION
Caltrans® DESIGN

FUNCTIONAL SUPERVISOR: L.R. ASHLEY
CALCULATED-DESIGNED BY: TODD LARK
CHECKED BY: MARK SOBOTA
REVISED BY
DATE REVISED

LAST REVISION 01-14-11
DATE PLOTTED => 04-MAY-2011
TIME PLOTTED => 13:37

Dist	COUNTY	ROUTE	POST MILES TOTAL PROJECT	SHEET No.	TOTAL SHEETS
01	Men	101	99.4/R100.4	8	35

REGISTERED CIVIL ENGINEER 2-9-11 DATE

5-9-11
PLANS APPROVAL DATE

REGISTERED PROFESSIONAL ENGINEER T. LARK No. 52481 Exp. 12/31/12 CIVIL STATE OF CALIFORNIA

THE STATE OF CALIFORNIA OR ITS OFFICERS OR AGENTS SHALL NOT BE RESPONSIBLE FOR THE ACCURACY OR COMPLETENESS OF SCANNED COPIES OF THIS PLAN SHEET.

NOTE:

FOR ACCURATE RIGHT OF WAY DATA, CONTACT RIGHT OF WAY ENGINEERING AT THE DISTRICT OFFICE.

CURVE DATA

CURVE No.	S+a "A1" LINE		BEARING R	DISTANCE FT	DELTA	NORTHING	EASTING
8	32+92.37	BC	N 39°16'11.2" E	342.71		2466250.21	6068235.63
	33+92.03	EC	450.00	99.66	12°41'20.0"	2466333.69	6068289.69
9	34+56.77	BC	N 26°34'50.9" E	64.74		2466391.58	6068318.66
	34+61.94	EC	299.12	5.17	0°59'22.2"	2466396.18	6068321.01
10	35+97.71	BC	N 27°34'02.6" E	135.77		2466516.54	6068383.84
	39+19.18	EC	1100.00	321.47	16°44'40.7"	2466819.06	6068489.16

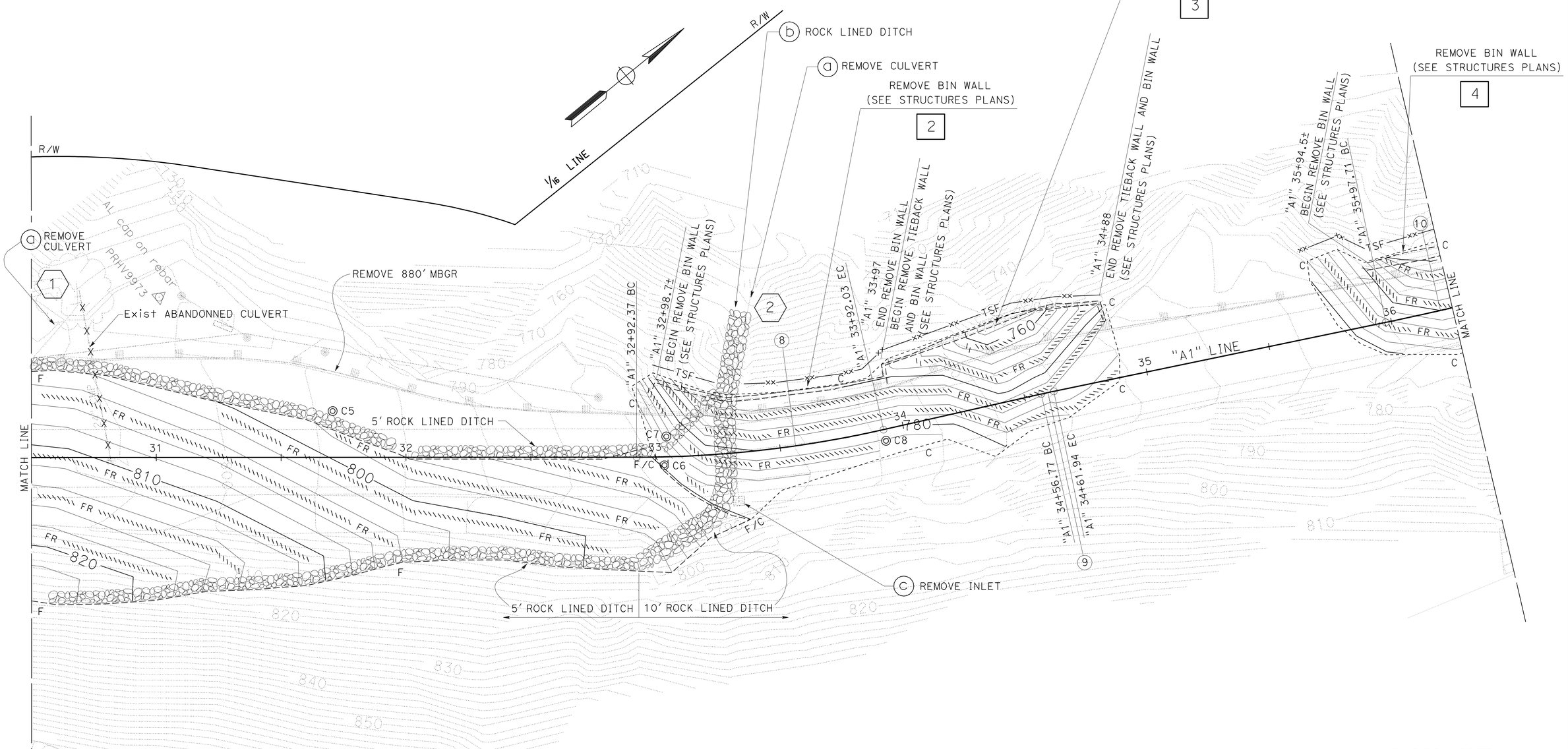

LAYOUT

SCALE: 1" = 20'

L-5

STATION		31	32	33	34	35	36
CY	Exc				1,680		350
	Emb		4,500		480		110

STATE OF CALIFORNIA - DEPARTMENT OF TRANSPORTATION

Caltrans DESIGN

FUNCTIONAL SUPERVISOR: L.R. ASHLEY

CALCULATED-DESIGNED BY: TODD LARK

CHECKED BY: MARK SOBOTA

REVISED BY / DATE REVISED

LAST REVISION 01-14-11

DATE PLOTTED => 06-MAY-2011
TIME PLOTTED => 14:52

Dist	COUNTY	ROUTE	POST MILES TOTAL PROJECT	SHEET No.	TOTAL SHEETS
01	Men	101	99.4/R100.4	9	35

REGISTERED CIVIL ENGINEER 2-9-11 DATE

5-9-11
PLANS APPROVAL DATE

REGISTERED PROFESSIONAL ENGINEER T. LARK No. 52481 Exp. 12/31/12 CIVIL STATE OF CALIFORNIA

THE STATE OF CALIFORNIA OR ITS OFFICERS OR AGENTS SHALL NOT BE RESPONSIBLE FOR THE ACCURACY OR COMPLETENESS OF SCANNED COPIES OF THIS PLAN SHEET.

NOTE:

FOR ACCURATE RIGHT OF WAY DATA, CONTACT RIGHT OF WAY ENGINEERING AT THE DISTRICT OFFICE.

CURVE DATA

CURVE No.	Sta "A1" LINE		BEARING R	DISTANCE FT	DELTA	NORTHING	EASTING
10	35+97.71	BC	N 27°34'02.6" E	135.77		2466516.54	6068383.84
	39+19.18	EC	1100.00	321.47	16°44'40.7"	2466819.06	6068489.16
11	40+18.41	BC	N 10°49'22.0" E	99.23		2466916.52	6068507.79
	42+07.29	EC	420.00	188.88	25°45'57.9"	2467103.69	6068501.06

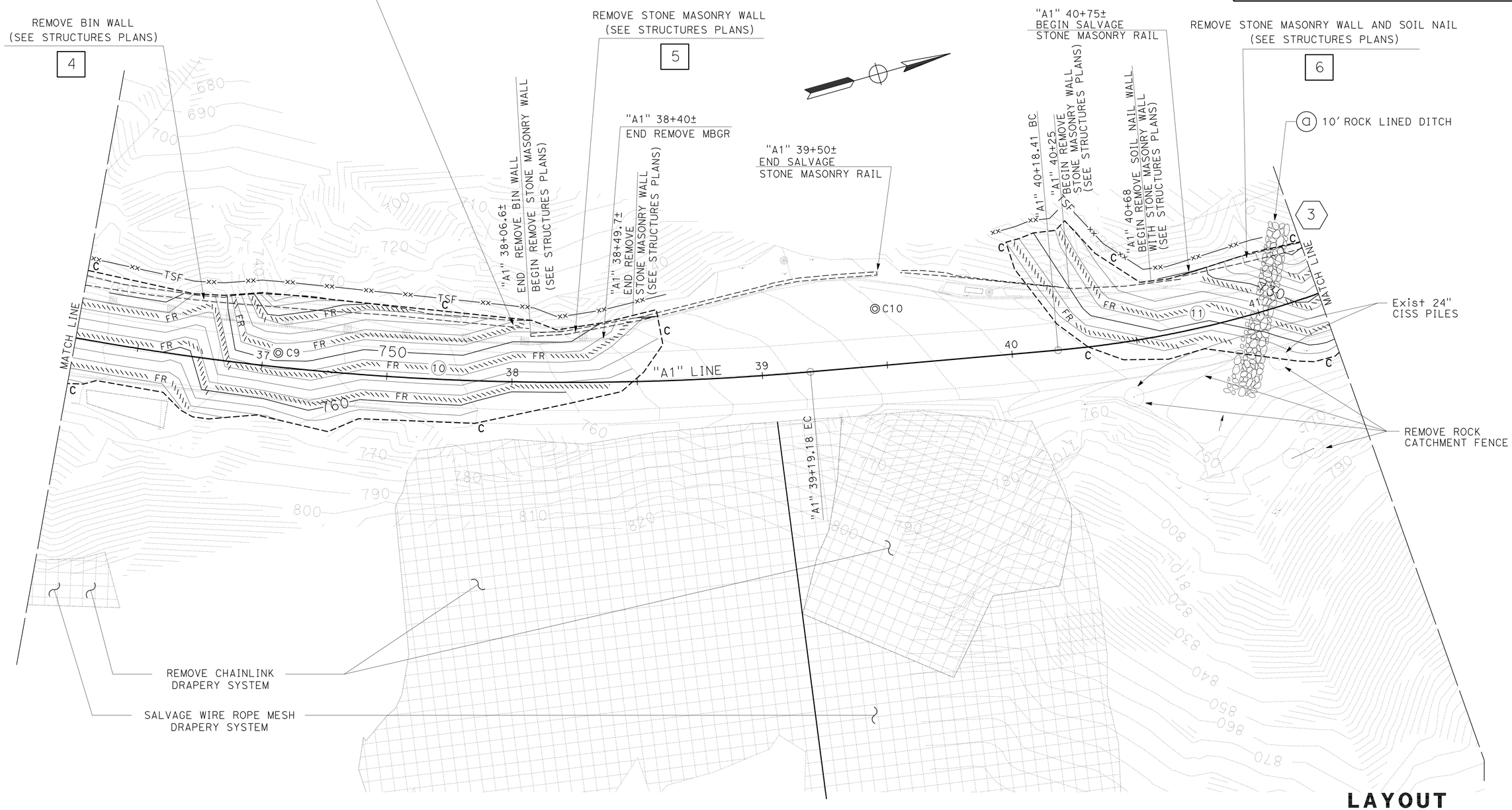

LAYOUT

SCALE: 1" = 20'

L-6

STATION		37	38	39	40	41
CY	Exc	2,780			500	
	Emb	420				

STATE OF CALIFORNIA - DEPARTMENT OF TRANSPORTATION
Caltrans
DESIGN

FUNCTIONAL SUPERVISOR: L.R. ASHLEY
CALCULATED-DESIGNED BY: TODD LARK
CHECKED BY: MARK SOBOTA
REVISED BY
DATE REVISED

LAST REVISION 01-14-11
DATE PLOTTED => 04-MAY-2011
TIME PLOTTED => 13:37

Dist	COUNTY	ROUTE	POST MILES TOTAL PROJECT	SHEET No.	TOTAL SHEETS
01	Men	101	99.4/R100.4	10	35

REGISTERED CIVIL ENGINEER 2-9-11 DATE

5-9-11
PLANS APPROVAL DATE

REGISTERED PROFESSIONAL ENGINEER T. LARK No. 52481 Exp. 12/31/12 CIVIL STATE OF CALIFORNIA

THE STATE OF CALIFORNIA OR ITS OFFICERS OR AGENTS SHALL NOT BE RESPONSIBLE FOR THE ACCURACY OR COMPLETENESS OF SCANNED COPIES OF THIS PLAN SHEET.

NOTE:

FOR ACCURATE RIGHT OF WAY DATA, CONTACT RIGHT OF WAY ENGINEERING AT THE DISTRICT OFFICE.

CURVE DATA

CURVE No.	Sta "A1" LINE		BEARING R	DISTANCE FT	DELTA	NORTHING	EASTING
11	40+18.41	BC	N 10°49'22.0" E	99.23		2466916.52	6068507.79
	42+07.29	EC	420.00	188.88	25°45'57.9"	2467103.69	6068501.06
12	42+50.31	BC	N 14°56'36.4" W	43.02		2467145.25	6068489.97
	44+43.89	EC	560.00	193.58	19°48'21.7"	2467337.12	6068473.04
13	45+43.40	BC	N 4°51'45.5" E	99.51		2467436.28	6068481.48
	46+76.64	EC	500.00	133.24	15°16'05.8"	2467565.98	6068510.23

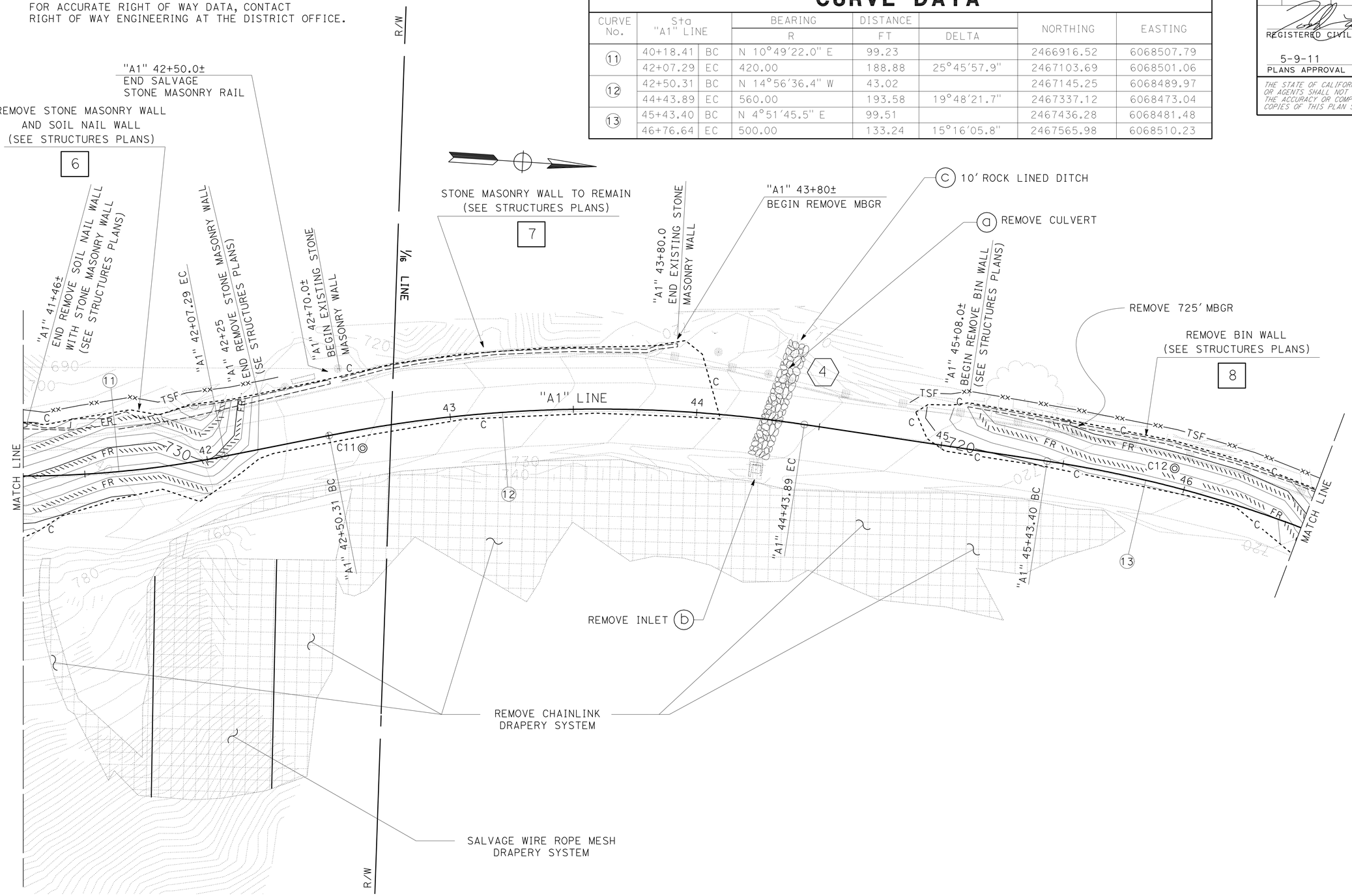

LAYOUT
SCALE: 1" = 20'

L-7

STATION		42	43	44	45	46
CY	Exc	910			430	
	Emb				170	

STATE OF CALIFORNIA - DEPARTMENT OF TRANSPORTATION
Caltrans
DESIGN

FUNCTIONAL SUPERVISOR: L.R. ASHLEY
CALCULATED-DESIGNED BY: TODD LARK
CHECKED BY: MARK SOBOTA
REVISED BY
DATE REVISED

LAST REVISION 01-14-11
DATE PLOTTED => 04-MAY-2011
TIME PLOTTED => 13:37

Dist	COUNTY	ROUTE	POST MILES TOTAL PROJECT	SHEET No.	TOTAL SHEETS
01	Men	101	99.4/R100.4	11	35

REGISTERED CIVIL ENGINEER 2-9-11 DATE

5-9-11
PLANS APPROVAL DATE

REGISTERED PROFESSIONAL ENGINEER T. LARK No. 52481 Exp. 12/31/12 CIVIL STATE OF CALIFORNIA

THE STATE OF CALIFORNIA OR ITS OFFICERS OR AGENTS SHALL NOT BE RESPONSIBLE FOR THE ACCURACY OR COMPLETENESS OF SCANNED COPIES OF THIS PLAN SHEET.

NOTE:

FOR ACCURATE RIGHT OF WAY DATA, CONTACT RIGHT OF WAY ENGINEERING AT THE DISTRICT OFFICE.

CURVE DATA

CURVE No.	Sta "A1" LINE		BEARING R	DISTANCE FT	DELTA	NORTHING	EASTING
13	45+43.40	BC	N 4°51'45.5" E	99.51		2467436.28	6068481.48
	46+76.64	EC	500.00	133.24	15°16'05.8"	2467565.98	6068510.23
14	47+43.41	BC	N 20°07'51.5" E	66.77		2467628.67	6068533.21
	49+08.92	EC	2000.00	165.51	4°44'29.3"	2467786.25	6068583.68
15	49+77.30	BC	N 15°23'22.0" E	68.38		2467852.17	6068601.82
	50+01.51	EC	500.00	24.21	2°46'27.8"	2467875.35	6068608.81
16	51+00.66	BC	N 18°09'49.8" E	99.15		2467969.56	6068639.72
	52+57.60	EC	800.00	156.94	11°14'24.5"	2468122.51	6068673.75

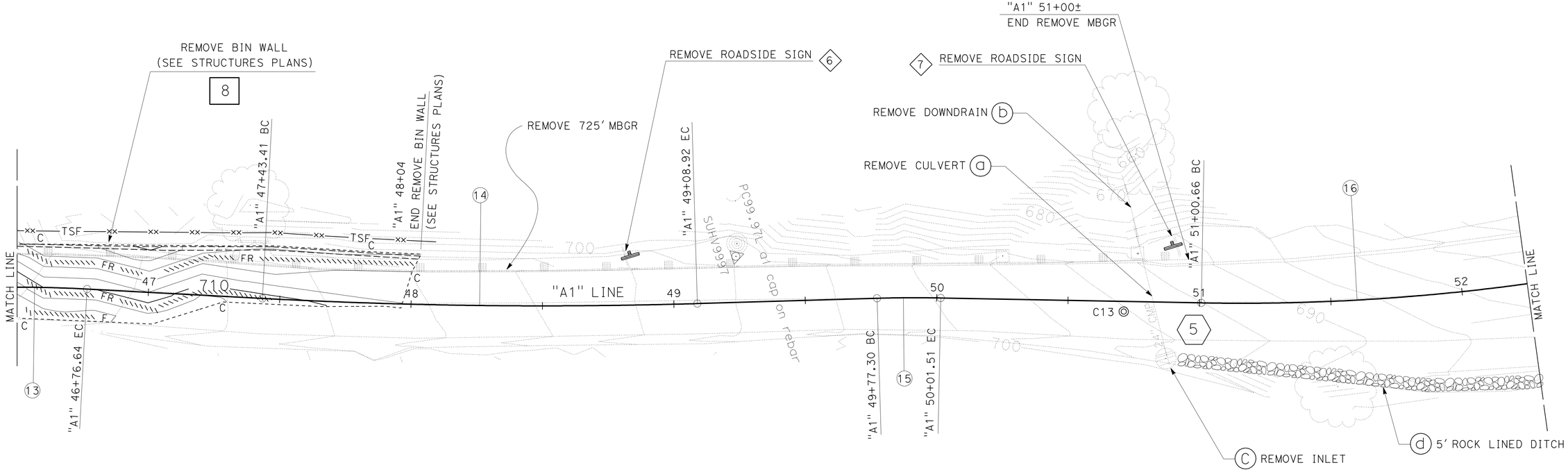

LAYOUT

SCALE: 1" = 20'

L-8

STATION		47	48	49	50	51	52
CY	Exc	570					
	Emb	190					

STATE OF CALIFORNIA - DEPARTMENT OF TRANSPORTATION
Caltrans DESIGN

FUNCTIONAL SUPERVISOR: L.R. ASHLEY
CALCULATED-DESIGNED BY: TODD LARK
CHECKED BY: MARK SOBOTA
REVISED BY
DATE REVISED

LAST REVISION 01-14-11
DATE PLOTTED => 04-MAY-2011
TIME PLOTTED => 13:37

Dist	COUNTY	ROUTE	POST MILES TOTAL PROJECT	SHEET No.	TOTAL SHEETS
01	Men	101	99.4/R100.4	12	35

REGISTERED CIVIL ENGINEER DATE 2-9-11

5-9-11
PLANS APPROVAL DATE

REGISTERED PROFESSIONAL ENGINEER T. LARK No. 52481 Exp. 12/31/12 CIVIL STATE OF CALIFORNIA

THE STATE OF CALIFORNIA OR ITS OFFICERS OR AGENTS SHALL NOT BE RESPONSIBLE FOR THE ACCURACY OR COMPLETENESS OF SCANNED COPIES OF THIS PLAN SHEET.

NOTE:

FOR ACCURATE RIGHT OF WAY DATA, CONTACT
RIGHT OF WAY ENGINEERING AT THE DISTRICT OFFICE.

CURVE DATA

CURVE No.	Sta "A1" LINE		BEARING R	DISTANCE FT	DELTA	NORTHING	EASTING
16	51+00.66	BC	N 18°09′49.8″ E	99.15		2467969.56	6068639.72
	52+57.60	EC	800.00	156.94	11°14′24.5″	2468122.51	6068673.75
17	52+64.96	BC	N 6°55′24.8″ E	7.36		2468129.82	6068674.64
	54+67.68	EC	650.00	202.72	17°52′09.7″	2468331.59	6068667.55
18	55+11.72	BC	N 10°56′44.4″ W	44.04		2468374.83	6068659.19
	58+45.59	EC	800.00	333.87	23°54′43.0″	2468680.16	6068530.20

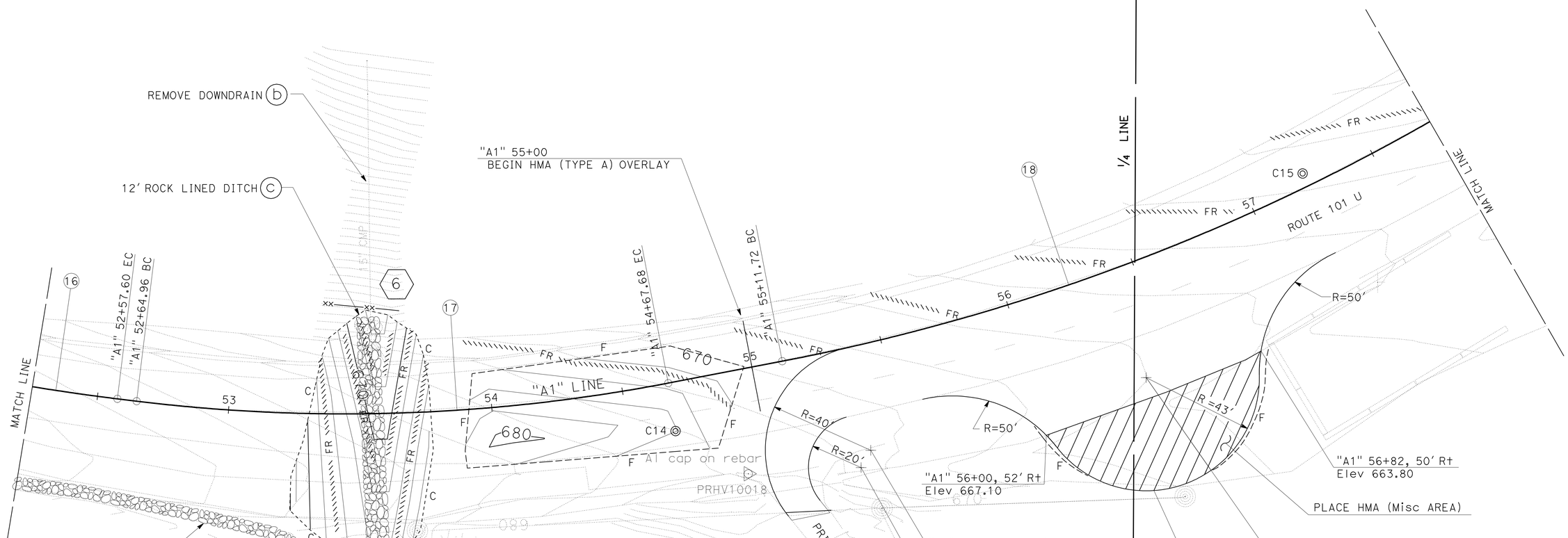

LAYOUT

SCALE: 1" = 20′

L-9

STATION		53	54	55	56
CY	Exc	200			
	Emb		200		

STATE OF CALIFORNIA - DEPARTMENT OF TRANSPORTATION
Caltrans DESIGN

FUNCTIONAL SUPERVISOR: L.R. ASHLEY
CALCULATED-DESIGNED BY: TODD LARK
CHECKED BY: MARK SOBOTA
REVISED BY / DATE REVISED

LAST REVISION 01-14-11 DATE PLOTTED => 04-MAY-2011 TIME PLOTTED => 13:37

BORDER LAST REVISED 7/2/2010 | USERNAME => trstrk DGN FILE => 139754ea009.dgn | RELATIVE BORDER SCALE IS IN INCHES 0 1 2 3 | UNIT 0313 | PROJECT NUMBER & PHASE 01000001481

Dist	COUNTY	ROUTE	POST MILES TOTAL PROJECT	SHEET No.	TOTAL SHEETS
01	Men	101	99.4/R100.4	13	35

REGISTERED CIVIL ENGINEER 2-9-11 DATE

5-9-11
PLANS APPROVAL DATE

REGISTERED PROFESSIONAL ENGINEER T. LARK No. 52481 Exp. 12/31/12 CIVIL STATE OF CALIFORNIA

THE STATE OF CALIFORNIA OR ITS OFFICERS OR AGENTS SHALL NOT BE RESPONSIBLE FOR THE ACCURACY OR COMPLETENESS OF SCANNED COPIES OF THIS PLAN SHEET.

NOTE:

FOR ACCURATE RIGHT OF WAY DATA, CONTACT RIGHT OF WAY ENGINEERING AT THE DISTRICT OFFICE.

CURVE DATA

CURVE No.	Sta "A1" LINE		BEARING R	DISTANCE FT	DELTA	NORTHING	EASTING
18	55+11.72	BC	N 10°56'44.4" W	44.04		2468374.83	6068659.19
	58+45.60	EC	800.00	333.87	23°54'43.0"	2468680.16	6068530.20
19	58+70.16	BC	N 34°51'27.0" W	24.56		2468700.31	6068516.17
	60+44.46	PCC	800.00	174.30	12°29'00.9"	2468831.40	6068401.82
20	62+35.75	EC	1020.30	191.30	10°44'32.7"	2468947.12	6068249.84
	66+96.96	BC	N 58°12'25.3" W	461.21		2469190.10	6067857.85

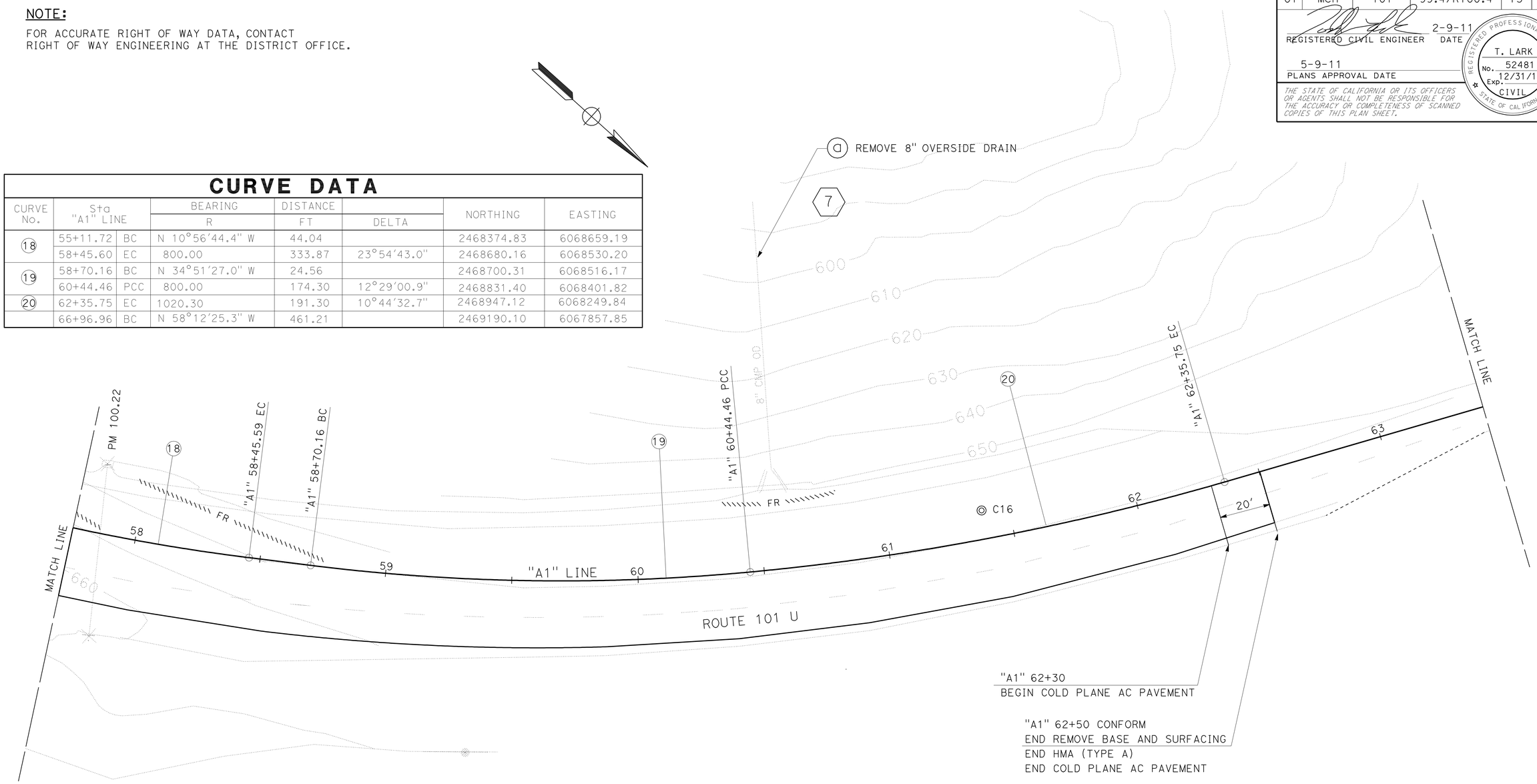

LAYOUT
SCALE: 1" = 20'

L-10

STATION		
CY	Exc	
	Emb	

STATE OF CALIFORNIA - DEPARTMENT OF TRANSPORTATION
Caltrans
DESIGN

FUNCTIONAL SUPERVISOR: L.R. ASHLEY
CALCULATED-DESIGNED BY: TODD LARK
CHECKED BY: MARK SOBOTA
REVISED BY
DATE REVISED

LAST REVISION DATE PLOTTED => 04-MAY-2011
TIME PLOTTED => 13:56
01-14-11

Dist	COUNTY	ROUTE	POST MILES TOTAL PROJECT	SHEET No.	TOTAL SHEETS
01	Men	101	99.4/R100.4	14	35

REGISTERED CIVIL ENGINEER 2-9-11 DATE

5-9-11
PLANS APPROVAL DATE

REGISTERED PROFESSIONAL ENGINEER T. LARK No. 52481 Exp. 12/31/12 CIVIL STATE OF CALIFORNIA

THE STATE OF CALIFORNIA OR ITS OFFICERS OR AGENTS SHALL NOT BE RESPONSIBLE FOR THE ACCURACY OR COMPLETENESS OF SCANNED COPIES OF THIS PLAN SHEET.

NOTE:

FOR ACCURATE RIGHT OF WAY DATA, CONTACT
RIGHT OF WAY ENGINEERING AT THE DISTRICT OFFICE.

CURVE DATA

CURVE No.	Sta "A1" LINE		BEARING R	DISTANCE FT	DELTA	NORTHING	EASTING
21	66+96.96	BC	N 58°12'25.3" W	461.21		2469190.10	6067857.85
	68+05.04	EC	98.42	108.08	62°55'03.7"	2469193.73	6067755.18
	68+56.59	PI	N 60°33'57.2" E	51.56		2469168.40	6067710.27

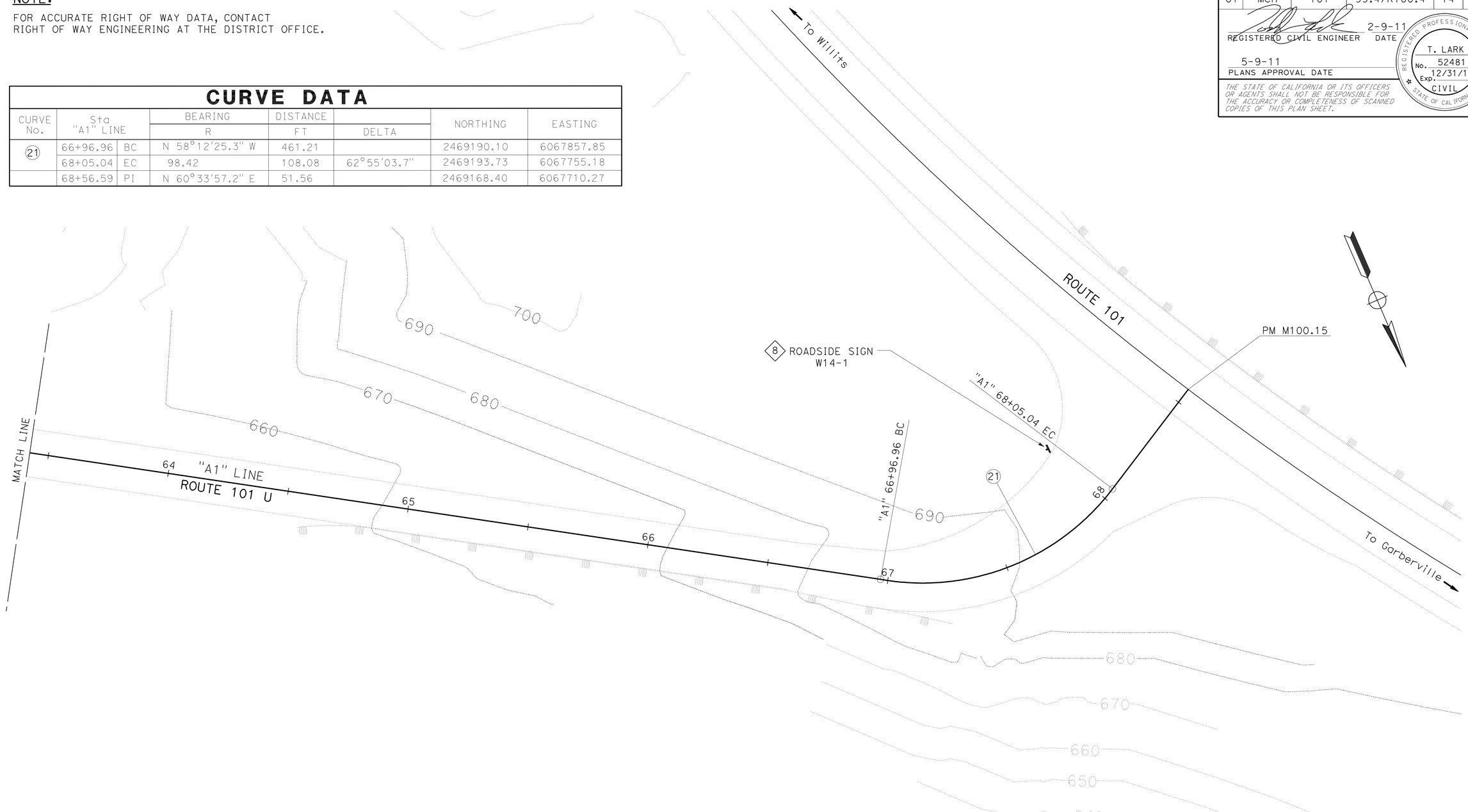

LAYOUT

SCALE: 1" = 20'

L-11

STATION	
CY Exc	
CY Emb	

STATE OF CALIFORNIA - DEPARTMENT OF TRANSPORTATION
Caltrans DESIGN

FUNCTIONAL SUPERVISOR: L.R. ASHLEY
CALCULATED-DESIGNED BY: TODD LARK
CHECKED BY: MARK SOBOTA
REVISED BY
DATE REVISED

LAST REVISION 01-14-11
DATE PLOTTED => 04-MAY-2011
TIME PLOTTED => 13:37

Dist	COUNTY	ROUTE	POST MILES TOTAL PROJECT	SHEET No.	TOTAL SHEETS
01	Men	101	99.4/R100.4	15	35

REGISTERED CIVIL ENGINEER 2-9-11 DATE

5-9-11
PLANS APPROVAL DATE

REGISTERED PROFESSIONAL ENGINEER T. LARK No. 52481 Exp. 12/31/12 CIVIL STATE OF CALIFORNIA

THE STATE OF CALIFORNIA OR ITS OFFICERS OR AGENTS SHALL NOT BE RESPONSIBLE FOR THE ACCURACY OR COMPLETENESS OF SCANNED COPIES OF THIS PLAN SHEET.

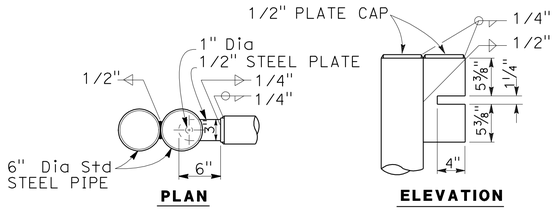

DETAIL "A"

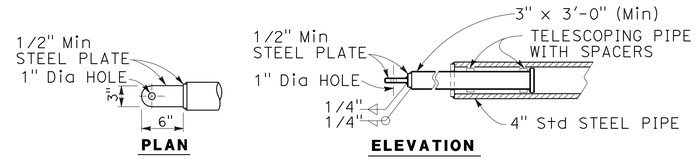

DETAIL "B"

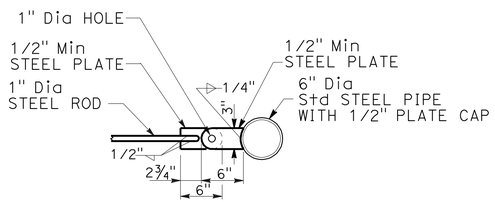

DETAIL "C"

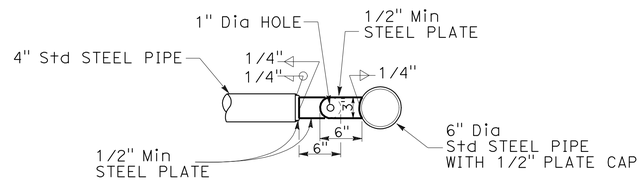

DETAIL "D"

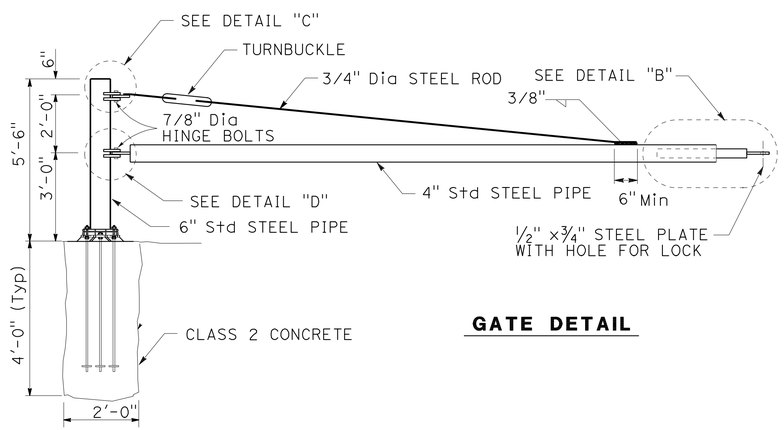

GATE DETAIL

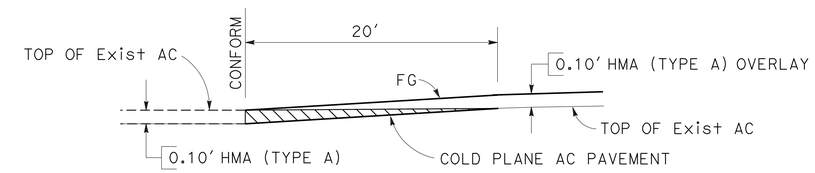

PAVING CONFORM

"A1" 14+00 TO "A1" 14+20
"A1" 62+30 TO "A1" 62+50

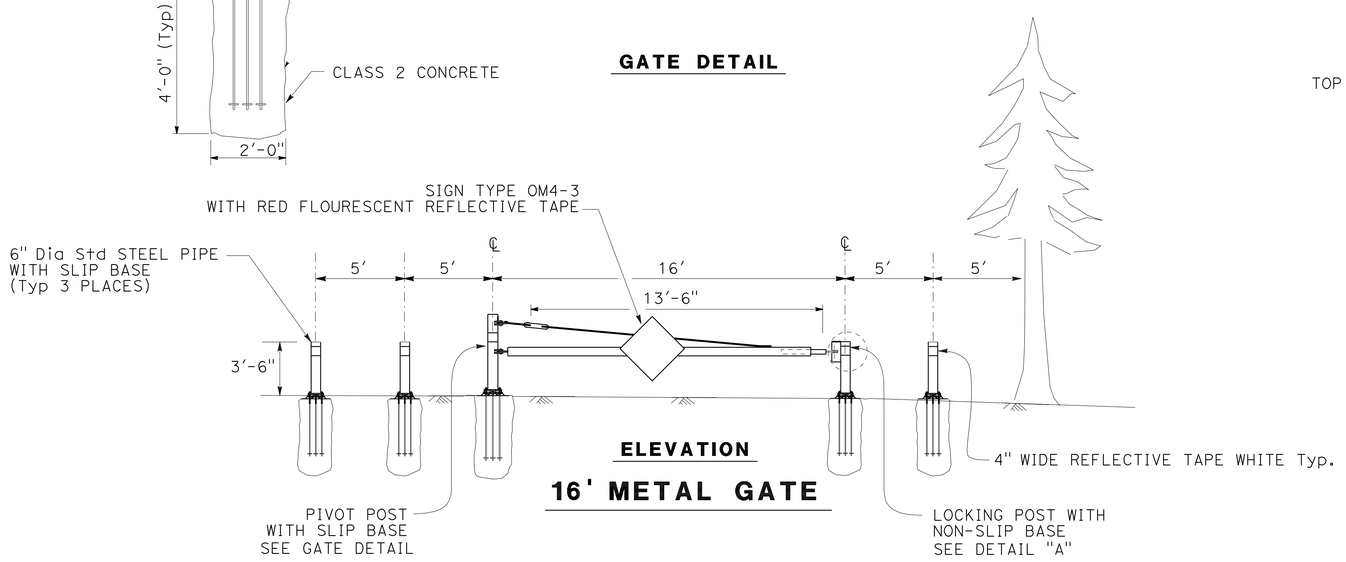

ELEVATION

16' METAL GATE

CONSTRUCTION DETAILS

NO SCALE

C-1

STATE OF CALIFORNIA - DEPARTMENT OF TRANSPORTATION
Caltrans
DESIGN

FUNCTIONAL SUPERVISOR: L.R. ASHLEY
CALCULATED-DESIGNED BY: TODD LARK
CHECKED BY: MARK SOBOTA
REVISED BY
DATE REVISED

LAST REVISION 01-14-11
DATE PLOTTED => 04-MAY-2011
TIME PLOTTED => 13:37

Dist	COUNTY	ROUTE	POST MILES TOTAL PROJECT	SHEET No.	TOTAL SHEETS
01	Men	101	99.4/R100.4	16	35

REGISTERED CIVIL ENGINEER 2-9-11 DATE

5-9-11
PLANS APPROVAL DATE

REGISTERED PROFESSIONAL ENGINEER T. LARK No. 52481 Exp. 12/31/12 CIVIL STATE OF CALIFORNIA

THE STATE OF CALIFORNIA OR ITS OFFICERS OR AGENTS SHALL NOT BE RESPONSIBLE FOR THE ACCURACY OR COMPLETENESS OF SCANNED COPIES OF THIS PLAN SHEET.

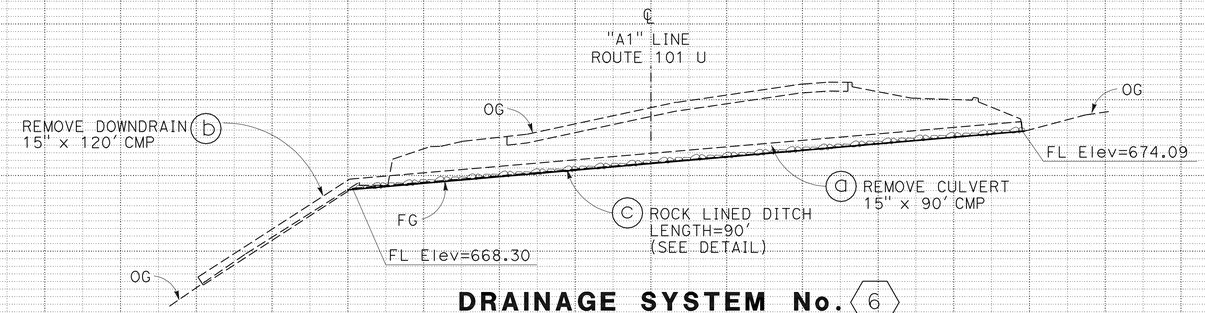

DRAINAGE SYSTEM No. (6)

"A1" 53+55
SCALE: 1"=10'

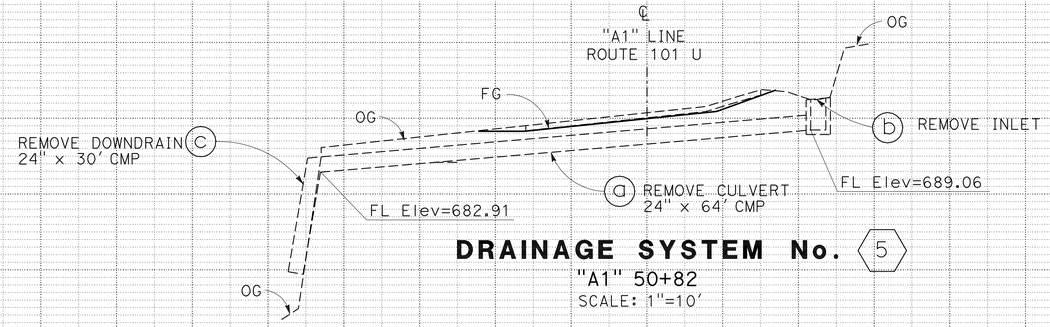

DRAINAGE SYSTEM No. (5)

"A1" 50+82
SCALE: 1"=10'

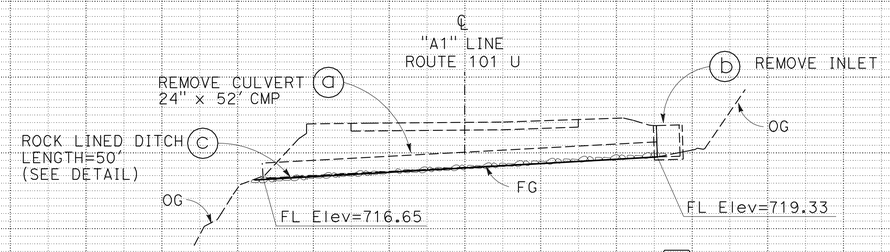

DRAINAGE SYSTEM No. (4)

"A1" 44+30
SCALE: 1"=10'

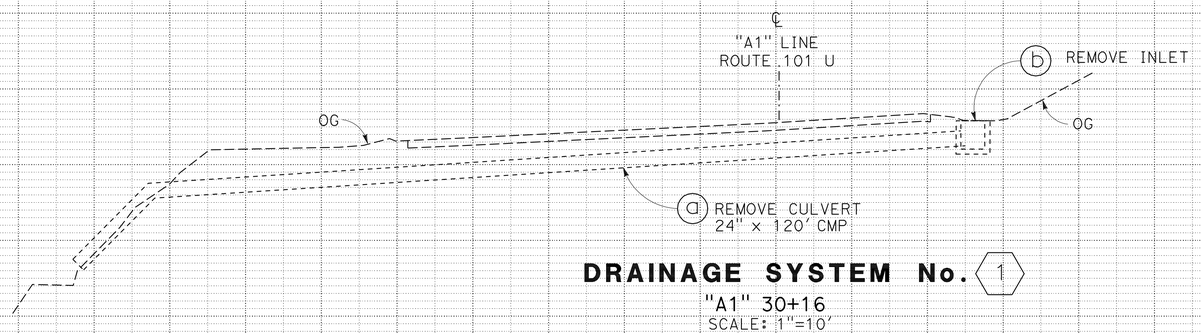

DRAINAGE SYSTEM No. (1)

"A1" 30+16
SCALE: 1"=10'

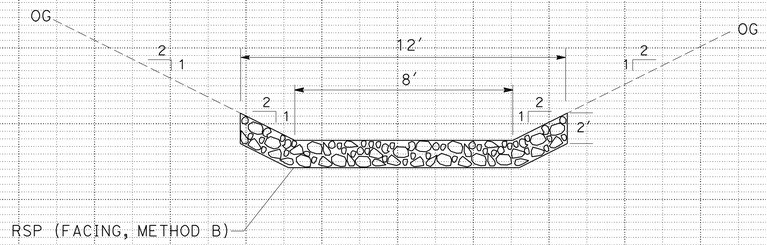

12' ROCK LINED DITCH

DRAINAGE SYSTEM No. (6)

NO SCALE

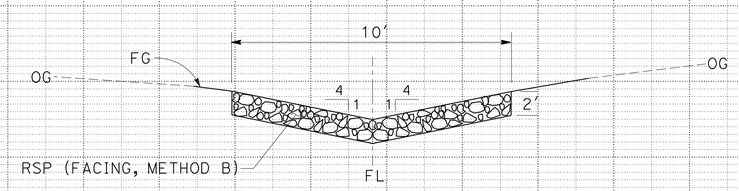

10' ROCK LINED DITCH

DRAINAGE SYSTEM No. (2) (3) (4)

NO SCALE

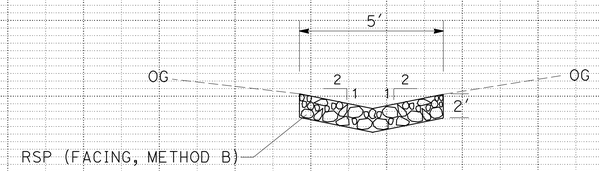

5' ROCK LINED DITCH

DRAINAGE SYSTEM No. (2) (5)

NO SCALE

DRAINAGE PROFILES AND DETAILS

DP-1

SCALE AS NOTED

REVISED BY | DATE REVISED
TODD LARK | MARK SOBOTA
CALCULATED-DESIGNED BY | CHECKED BY
FUNCTIONAL SUPERVISOR: L.R. ASHLEY

STATE OF CALIFORNIA - DEPARTMENT OF TRANSPORTATION
Caltrans® DESIGN

V:\Project\Plans\PSEWorking\d1\01-397541-rdw\139754ib001.dgn

LAST REVISION 01-14-11 | DATE PLOTTED => 04-MAY-2011 | TIME PLOTTED => 12:44

Dist	COUNTY	ROUTE	POST MILES TOTAL PROJECT	SHEET No.	TOTAL SHEETS
01	Men	101	99.4/R100.4	17	35

REGISTERED CIVIL ENGINEER 2-9-11 DATE

5-9-11
PLANS APPROVAL DATE

REGISTERED PROFESSIONAL ENGINEER
T. LARK
No. 52481
Exp. 12/31/12
CIVIL
STATE OF CALIFORNIA

THE STATE OF CALIFORNIA OR ITS OFFICERS OR AGENTS SHALL NOT BE RESPONSIBLE FOR THE ACCURACY OR COMPLETENESS OF SCANNED COPIES OF THIS PLAN SHEET.

DRAINAGE QUANTITIES

LAYOUT SHEET No.	SYSTEM NUMBER ⬡	DRAINAGE UNIT ○	REMOVE INLET	REMOVE DOWNDRAIN	REMOVE CULVERT	ROCK SLOPE PROTECTION (FACING, METHOD B)	REMARKS	SYSTEM NUMBER ⬡	DRAINAGE UNIT ○
			EA	EA	EA	CY			
L-4	1	a			1			1	a
		b	1						b
L-5	2	a			1			2	a
		b				340	ROCK LINED DITCHES 5′ & 10′ WIDE		b
		c	1						c
L-6	3	a				60	ROCK LINED DITCH 10′ WIDE	3	a
L-7	4	a			1			4	a
		b	1						b
		c				40	ROCK LINED DITCH 10′ WIDE		c
L-8	5	a			1			5	a
		b	1						b
		c		1					c
		d				100	ROCK LINED DITCH 5′ WIDE		d
L-9	6	a			1			6	a
		b		1					b
		c				70	ROCK LINED DITCH 12′ WIDE		c
L-10	7	a		1				7	a
TOTAL			4	3	5	610			

DRAINAGE QUANTITIES
DQ-1

STATE OF CALIFORNIA - DEPARTMENT OF TRANSPORTATION
Caltrans® DESIGN

FUNCTIONAL SUPERVISOR: L.R. ASHLEY
CALCULATED-DESIGNED BY: TODD LARK
CHECKED BY: MARK SOBOTA
REVISED BY
DATE REVISED

LAST REVISION 01-14-11
DATE PLOTTED => 04-MAY-2011
TIME PLOTTED => 12:44

Dist	COUNTY	ROUTE	POST MILES TOTAL PROJECT	SHEET No.	TOTAL SHEETS
01	Men	101	99.4/R100.4	18	35

REGISTERED CIVIL ENGINEER 2-9-11 DATE

5-9-11
PLANS APPROVAL DATE

REGISTERED PROFESSIONAL ENGINEER T. LARK No. 52481 Exp. 12/31/12 CIVIL STATE OF CALIFORNIA

THE STATE OF CALIFORNIA OR ITS OFFICERS OR AGENTS SHALL NOT BE RESPONSIBLE FOR THE ACCURACY OR COMPLETENESS OF SCANNED COPIES OF THIS PLAN SHEET.

STATIONARY MOUNTED CONSTRUCTION AREA SIGNS

○	SIGN CODE	SIGN MESSAGE	PANEL SIZE (INCHES)	No. OF POSTS AND SIZE	No. OF SIGNS	REMARKS
A	W20-1	ROAD WORK AHEAD	48"X48"	1-6"x6"	2	
B	C44(CA)	TRUCKS ENTERING EXITING	48"X48"	1-6"x6"	4	
	W23-1	SLOW TRAFFIC AHEAD	48"X24"			
C	G20-2	END ROAD WORK	36"X18"	1-4"x4"	2	
D	W11-1	(BICYCLE SYMBOL)	30"X30"	1-4"x6"	2	
	W16-1	SHARE THE ROAD	18"X24"			
E	R11-2	ROAD CLOSED	48"X30"		2	MOUNT TO TYPE III BARRICADE

TYPE III BARRICADE

LOCATION (STATION)	TYPE III BARRICADE
	EA
"A1" 18+00	3
"A1" 55+00	3
TOTAL	6

NOTES:

1. EXACT SIGN LOCATIONS TO BE DETERMINED BY THE ENGINEER.
2. EXISTING UTILITY FACILITIES HAVE NOT BEEN PLOTTED ON THESE PLANS.

LEGEND:

I‡ = TYPE III BARRICADE W/SIGN

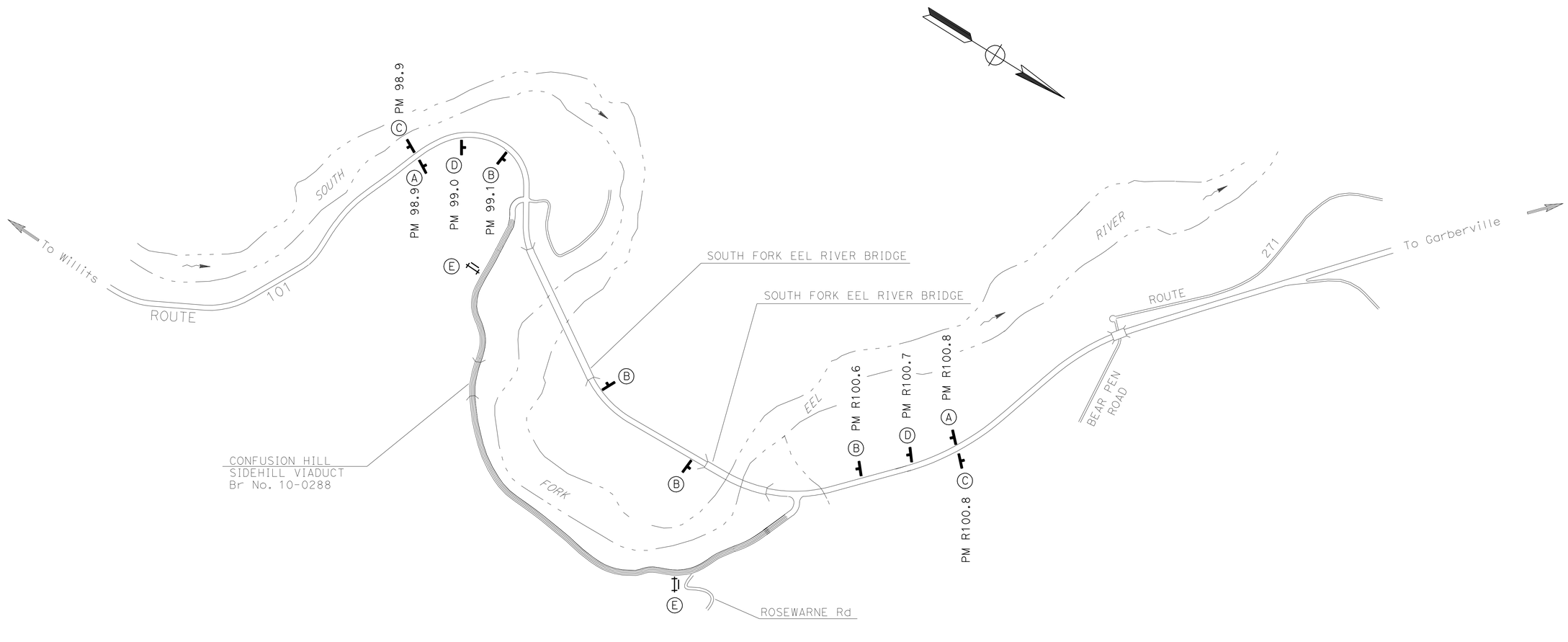

THIS PLAN ACCURATE FOR CONSTRUCTION AREA SIGN WORK ONLY

NO SCALE

CONSTRUCTION AREA SIGNS
CS-1

STATE OF CALIFORNIA - DEPARTMENT OF TRANSPORTATION
Caltrans® DESIGN

FUNCTIONAL SUPERVISOR: L.R. ASHLEY
CALCULATED-DESIGNED BY: TODD LARK
CHECKED BY: MARK SOBOTA
REVISED BY
DATE REVISED

LAST REVISION 01-14-11
DATE PLOTTED => 06-MAY-2011
TIME PLOTTED => 14:53

Dist	COUNTY	ROUTE	POST MILES TOTAL PROJECT	SHEET No.	TOTAL SHEETS
01	Men	101	99.4/R100.4	19	35

REGISTERED CIVIL ENGINEER 2-9-11 DATE

5-9-11
PLANS APPROVAL DATE

REGISTERED PROFESSIONAL ENGINEER T. LARK No. 52481 Exp. 12/31/12 CIVIL STATE OF CALIFORNIA

THE STATE OF CALIFORNIA OR ITS OFFICERS OR AGENTS SHALL NOT BE RESPONSIBLE FOR THE ACCURACY OR COMPLETENESS OF SCANNED COPIES OF THIS PLAN SHEET.

ROADWAY

LOCATION FROM	LOCATION TO	COLD PLANE AC PAVEMENT	HMA (TYPE A)	TACK COAT	PLACE HMA (Misc AREA)	REMOVE BASE AND SURFACING	ROADWAY EXCAVATION	(N) EMBANKMENT	16' METAL GATE	REMARKS
		SQYD	TON	TON	SQYD	CY	CY	CY	EA	
"A1" 14+00	"A1" 26+10	60	290	1.4	380					HMA OVERLAY
"A1" 18+19									1	
"A1" 29+50	"A1" 33+00					900		5850		
"A1" 33+00	"A1" 48+00					3060	7220	1370		
"A1" 48+00	"A1" 55+00					1120	200	200		
"A1" 55+00	"A1" 62+50	60	220	1.1	540	500		40		HMA OVERLAY
	TOTAL	120	510	2.5	920	5580	7420	7460	1	

(N) NOT A SEPARATE PAY ITEM. FOR INFORMATION ONLY.

DRAPERY SYSTEM

LOCATION FROM	LOCATION TO	FROM	TO	REMOVE CHAINLINK DRAPERY SYSTEM	SALVAGE WIRE ROPE MESH DRAPERY SYSTEM	REMOVE ROCK CATCHMENT FENCE	REMARKS
FROM	TO			SQYD	SQYD	LF	
"A1" 36+20	"A1" 36+60	80' R+	105' R+	180	180		
"A1" 37+50	"A1" 38+90	22' R+	185' R+	4100			
"A1" 38+90	"A1" 39+10	22' R+	185' R+	1170	1170		
"A1" 39+10	"A1" 40+25	100' R+	400' R+	4550	4550		
"A1" 40+25	"A1" 40+90	335' R+	400' R+	500	500		
"A1" 40+45	"A1" 41+02	20' R+	20' R+			60	REMOVE 24" DIA CISS
"A1" 40+95	"A1" 41+05	60' R+	60' R+			10	
"A1" 41+30	"A1" 41+40	30' R+	130' R+	200			
"A1" 41+80	"A1" 42+20	20' R+	50' R+	360	360		
"A1" 41+80	"A1" 42+50	20' R+	135' R+	1460			
"A1" 42+50	"A1" 45+50	18' R+	70' R+	4000			
			TOTAL	16,520	6760	70	

BARRIER AND RAILING

LOCATION FROM	LOCATION TO	L+/R+	REMOVE MBGR	SALVAGE CONCRETE BARRIER (TYPE K)	SALVAGE STONE MASONRY RAIL
FROM	TO	L+/R+	LF	LF	LF
"A1" 27+60	"A1" 29+20	R+		160	
"A1" 29+60	"A1" 38+40	R+	880		
"A1" 31+00	"A1" 32+60	R+		160	
"A1" 35+50	"A1" 37+50	R+		200	
"A1" 38+00	"A1" 39+50	L+			150
"A1" 39+60	"A1" 41+80	L+		220	
"A1" 39+80	"A1" 41+20	R+		140	
"A1" 40+75	"A1" 42+50	L+			175
"A1" 43+80	"A1" 51+00	R+	725		
TOTAL			1605	880	325

ROADSIDE SIGNS

SIGN NUMBER	LOCATION (STATION)	L+/R+	REMOVE ROADSIDE SIGN	ROADSIDE SIGN-ONE POST	REMARKS
			EA		
1	"A1" 12+00	R+		1	W14-1 "DEAD END"
2	"A1" 16+46	L+	1		
3	"A1" 17+71	R+	1		
4	"A1" 24+10	L+	1		
5	"A1" 26+95	R+	1		
6	"A1" 48+82	L+	1		
7	"A1" 50+95	L+	1		
8	"A1" 67+80	L+		1	W14-1 "DEAD END"
		TOTAL	6	2	

SUMMARY OF QUANTITIES
Q-1

STATE OF CALIFORNIA - DEPARTMENT OF TRANSPORTATION
Caltrans® DESIGN

FUNCTIONAL SUPERVISOR: L.R. ASHLEY
CALCULATED-DESIGNED BY: TODD LARK
CHECKED BY: MARK SOBOTA
REVISED BY
DATE REVISED

LAST REVISION 01-14-11
DATE PLOTTED => 04-MAY-2011
TIME PLOTTED => 12:44

Dist	COUNTY	ROUTE	POST MILES TOTAL PROJECT	SHEET No.	TOTAL SHEETS
01	Men	101	99.4/R100.4	20	35

REGISTERED CIVIL ENGINEER 2-9-11 DATE

5-9-11
PLANS APPROVAL DATE

REGISTERED PROFESSIONAL ENGINEER
T. LARK
No. 52481
Exp. 12/31/12
CIVIL
STATE OF CALIFORNIA

THE STATE OF CALIFORNIA OR ITS OFFICERS OR AGENTS SHALL NOT BE RESPONSIBLE FOR THE ACCURACY OR COMPLETENESS OF SCANNED COPIES OF THIS PLAN SHEET.

EROSION CONTROL

LOCATION				(N) STRAW	(N) FIBER	(N) STABILIZING EMULSION	(N) PURE LIVE SEED	EROSION CONTROL (COMPOST BLANKET)	EROSION CONTROL (HYDROSEED)
FROM	TO	FROM	TO	TON	LB	LB	LB	CY	ACRE
"A1" 29+40	"A1" 32+90	55' L+	75' R+	1.6	1920	48	25.9	108	0.80
"A1" 32+90	"A1" 34+90	40' L+	55' R+	0.7	816	20	11.0	46	0.34
"A1" 34+90	"A1" 35+70	25' L+	25' R+	0.2	216	5	2.9	12	0.09
"A1" 35+70	"A1" 39+00	35' L+	30' R+	0.7	888	22	12.0	50	0.37
"A1" 39+00	"A1" 40+05	40' L+	35' R+	0.2	288	7	3.9	16	0.12
"A1" 40+05	"A1" 42+85	60' L+	20' R+	0.7	816	20	11.0	46	0.34
"A1" 42+85	"A1" 44+75	35' L+	30' R+	0.5	552	14	7.5	31	0.23
"A1" 44+75	"A1" 48+10	30' L+	25' R+	0.6	720	18	9.7	41	0.30
"A1" 48+10	"A1" 53+20	30' L+	30' R+	0.9	1104	28	14.9	61	0.46
"A1" 53+20	"A1" 55+00	45' L+	60' R+	0.6	768	19	10.4	43	0.32
"A1" 55+00	"A1" 62+50	60' L+	0	1.6	1920	48	25.9	108	0.80
			TOTAL	8.3	10,008	249	135.1	562	4.17

(N) NOT A SEPARATE PAY ITEM. FOR INFORMATION ONLY.

FIBER ROLLS AND TEMPORARY EROSION CONTROL

LOCATION		TEMPORARY REINFORCED SILT FENCE	FIBER ROLL	TEMPORARY DRAINAGE INLET PROTECTION	TEMPORARY COVER	TEMPORARY CHECK DAM
FROM	TO	LF	LF	EA	SQYD	LF
"A1" 18+56				1		
"A1" 22+50				1		
"A1" 23+88				1		
"A1" 26+00	"A1" 55+00				10,000	
"A1" 26+00	"A1" 55+00					500
"A1" 26+16				1		
"A1" 29+50	"A1" 33+00		1200	1		
"A1" 33+00	"A1" 35+00	170	810			
"A1" 35+80	"A1" 39+00	300	1160			
"A1" 40+00	"A1" 42+80	250	1000			
"A1" 44+16				1		
"A1" 44+80	"A1" 48+00	330	900			
"A1" 50+80				1		
"A1" 53+30	"A1" 53+80		300			
"A1" 53+80	"A1" 62+00		500			
TOTAL		1050	5870	7	10,000	500

SUMMARY OF QUANTITIES
Q-2

STATE OF CALIFORNIA - DEPARTMENT OF TRANSPORTATION
Caltrans
DESIGN

FUNCTIONAL SUPERVISOR: L.R. ASHLEY
CALCULATED-DESIGNED BY: TODD LARK
CHECKED BY: MARK SOBOTA
REVISED BY
DATE REVISED

LAST REVISION 01-14-11
DATE PLOTTED => 04-MAY-2011
TIME PLOTTED => 14:19

DIST	COUNTY	ROUTE	POST MILES TOTAL PROJECT	SHEET NO.	TOTAL SHEETS
01	Men	101	99.4/R100.4	21	35

LICENSED LANDSCAPE ARCHITECT

April 3, 2009
PLANS APPROVAL DATE

The State of California or its officers or agents shall not be responsible for the accuracy or completeness of electronic copies of this plan sheet.

LICENSED LANDSCAPE ARCHITECT — Gregory A. Balzer — 02-28-11 — 03-04-09 — STATE OF CALIFORNIA

To accompany plans dated 5-9-11

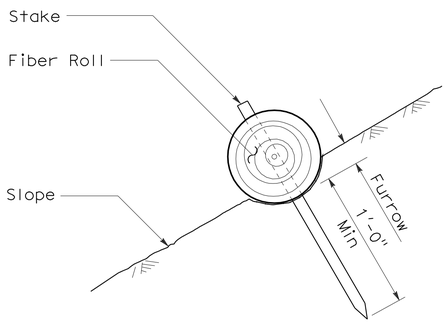

SECTION

FIBER ROLL (TYPE 1)

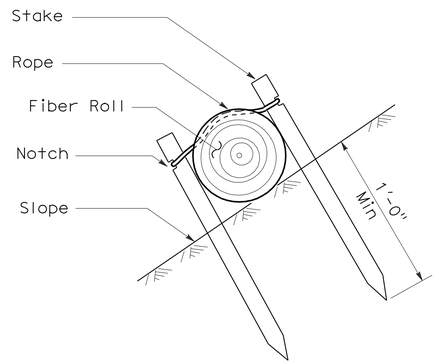

SECTION

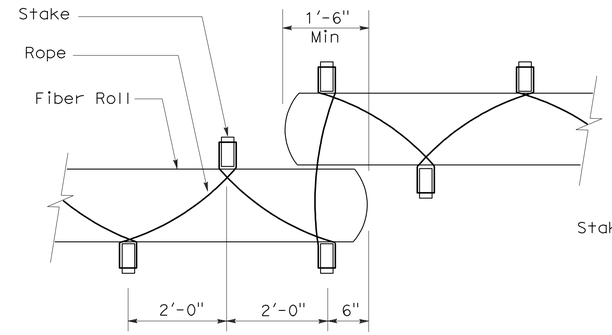

PLAN

FIBER ROLL (TYPE 2)

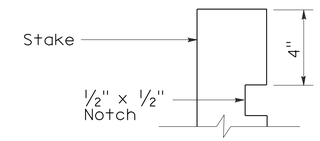

ELEVATION

STAKE NOTCH DETAIL

NOTES:

1. Fiber roll spacing varies depending upon slope inclination.
2. Installations shown in the perspectives are for slope inclination of 10:1 and steeper.

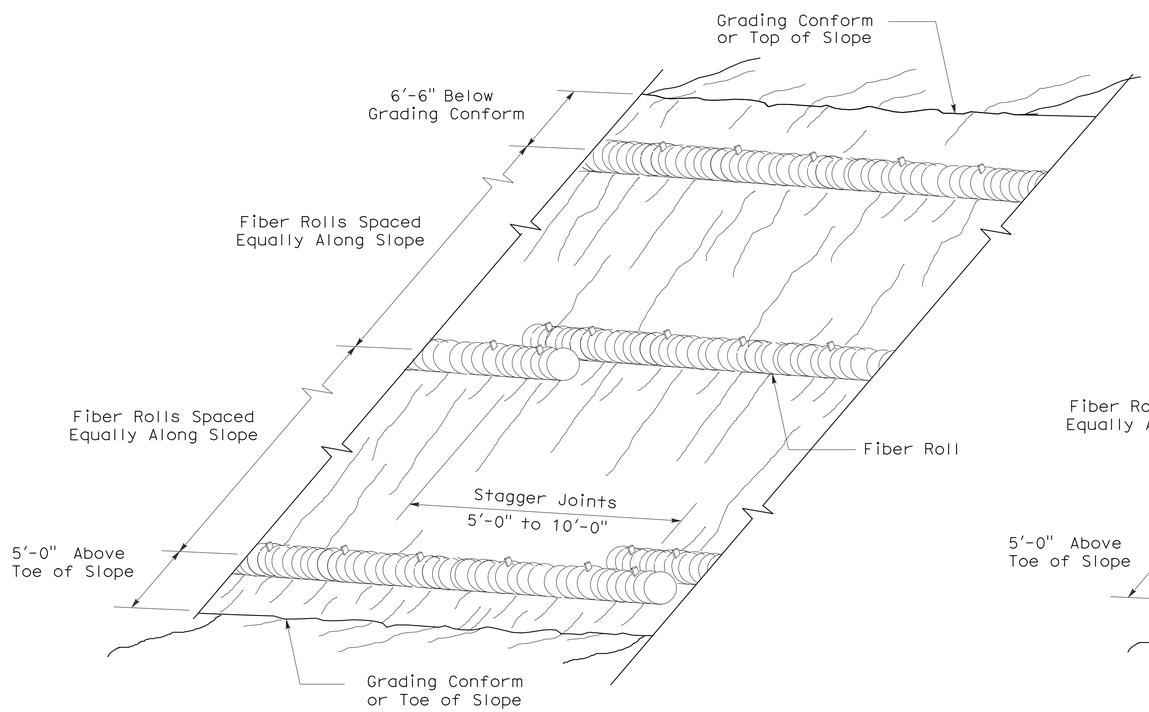

PERSPECTIVE

FIBER ROLL (TYPE 1)

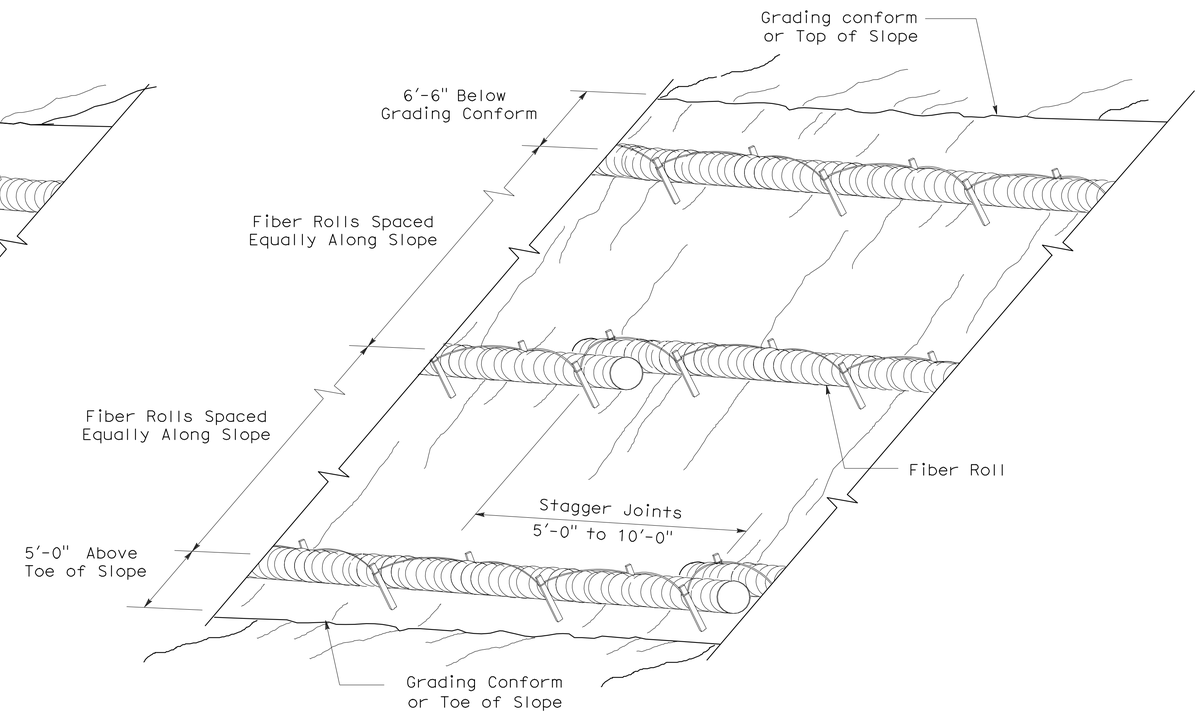

PERSPECTIVE

FIBER ROLL (TYPE 2)

STATE OF CALIFORNIA
DEPARTMENT OF TRANSPORTATION

EROSION CONTROL DETAILS (FIBER ROLL)

NO SCALE

RNSP H51 DATED APRIL 3, 2009 SUPERSEDES NSP H51 DATED DECEMBER 1, 2006 THAT SUPPLEMENTS THE STANDARD PLANS BOOK DATED MAY 2006.

REVISED NEW STANDARD PLAN RNSP H51

2006 REVISED NEW STANDARD PLAN RNSP H51

3-4-09

DIST	COUNTY	ROUTE	POST MILES TOTAL PROJECT	SHEET NO.	TOTAL SHEETS
01	Men	101	99.4/R100.4	22	35

LICENSED LANDSCAPE ARCHITECT

April 3, 2009
PLANS APPROVAL DATE

The State of California or its officers or agents shall not be responsible for the accuracy or completeness of electronic copies of this plan sheet.

LICENSED LANDSCAPE ARCHITECT — Gregory A. Balzer — 02-28-11 Renewal Date — 03-04-09 Date — STATE OF CALIFORNIA

To accompany plans dated 5-9-11

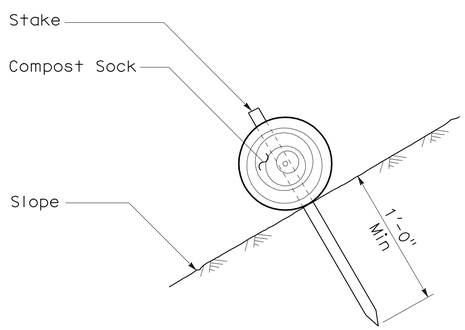

SECTION

COMPOST SOCK (TYPE 1)

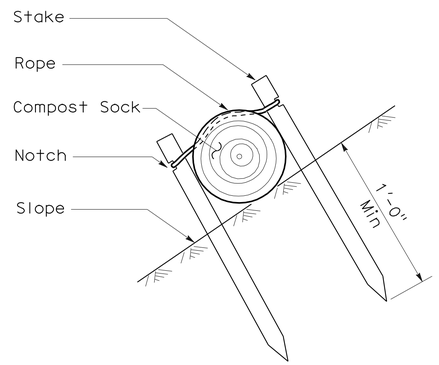

SECTION

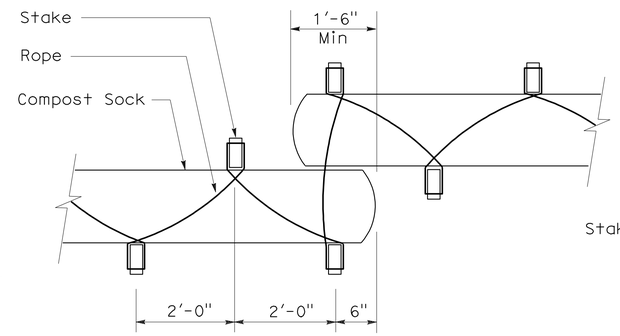

PLAN

COMPOST SOCK (TYPE 2)

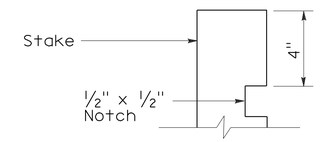

ELEVATION

STAKE NOTCH DETAIL

NOTE:

Compost sock spacing varies depending upon slope inclination.

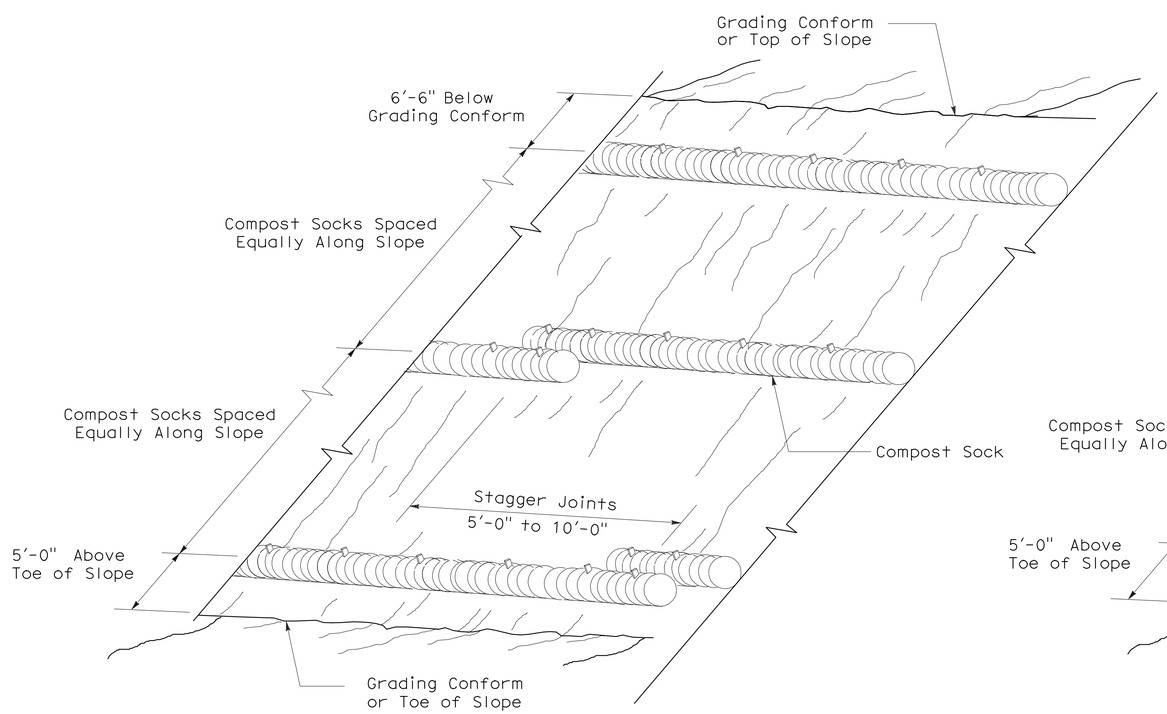

PERSPECTIVE

COMPOST SOCK (TYPE 1)

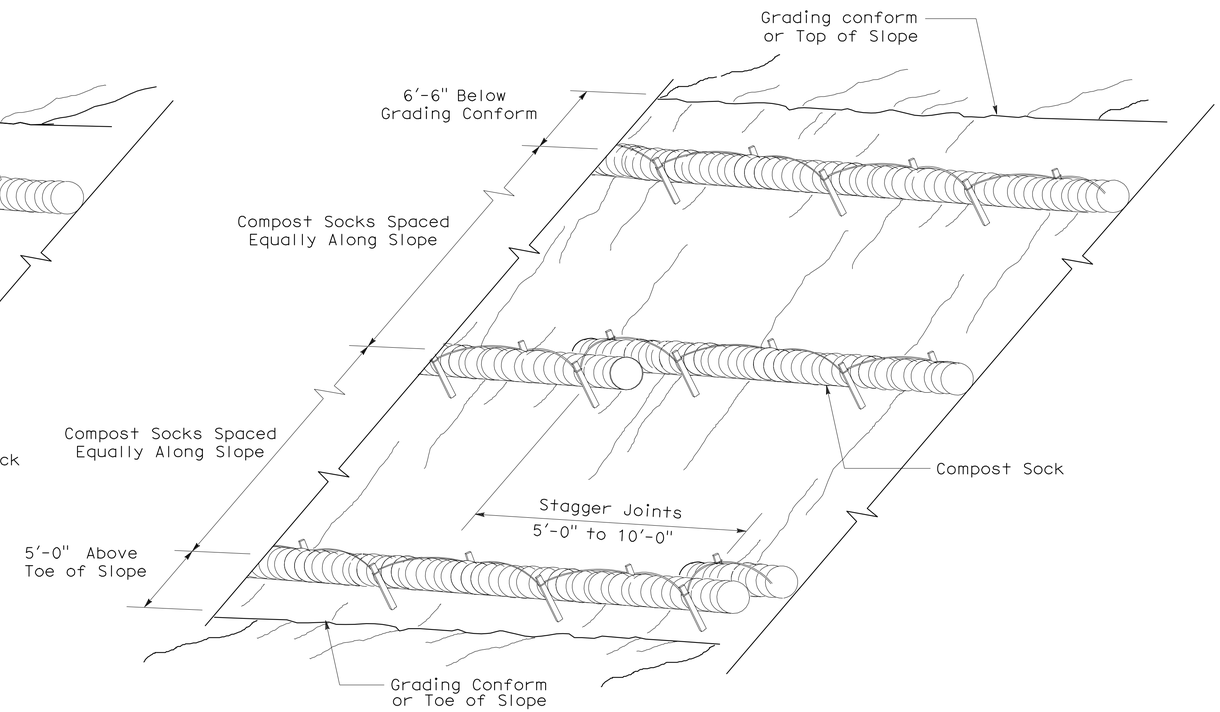

PERSPECTIVE

COMPOST SOCK (TYPE 2)

STATE OF CALIFORNIA
DEPARTMENT OF TRANSPORTATION

EROSION CONTROL DETAILS (COMPOST SOCK)

NO SCALE

NSP H52 DATED APRIL 3, 2009 SUPPLEMENTS
THE STANDARD PLANS BOOK DATED MAY 2006.

NEW STANDARD PLAN NSP H52

2006 NEW STANDARD PLAN NSP H52

3-3-09

DIST	COUNTY	ROUTE	POST MILES TOTAL PROJECT	SHEET NO.	TOTAL SHEETS
01	Men	101	99.4/R100.4	23	35

Randell D. Hiatt
REGISTERED CIVIL ENGINEER

June 6, 2008
PLANS APPROVAL DATE

REGISTERED PROFESSIONAL ENGINEER
Randell D. Hiatt
No. C50200
Exp. 6-30-09
CIVIL
STATE OF CALIFORNIA

The State of California or its officers or agents shall not be responsible for the accuracy or completeness of electronic copies of this plan sheet.

To accompany plans dated 5-9-11

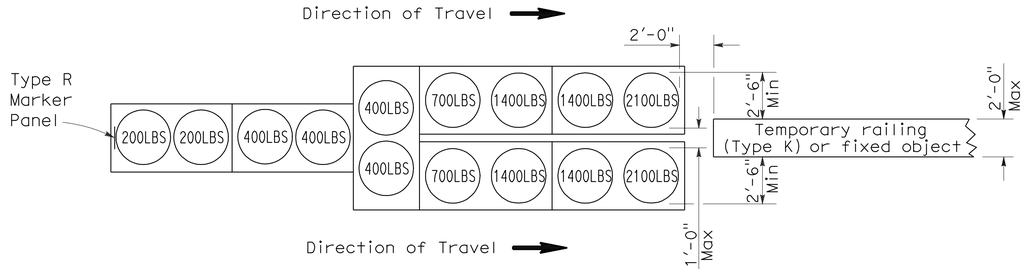

ARRAY 'TU14'

Approach speed 45 mph or more

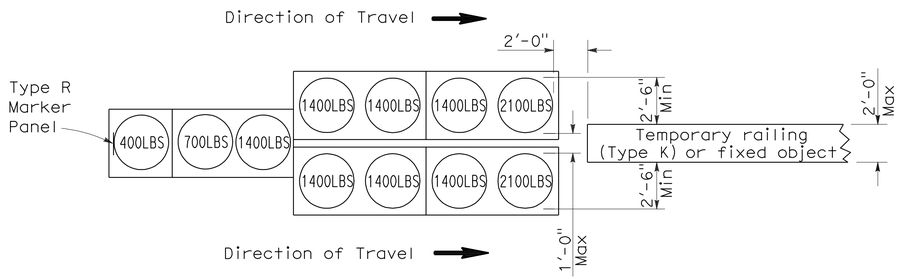

ARRAY 'TU11'

Approach speed less than 45 mph

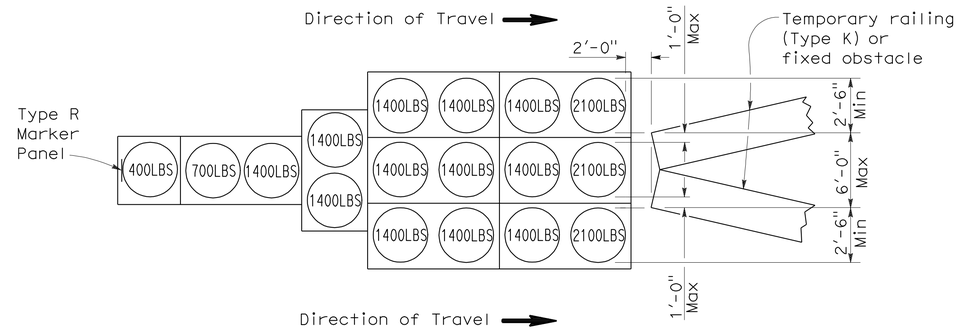

ARRAY 'TU17'

Approach speed less than 45 mph

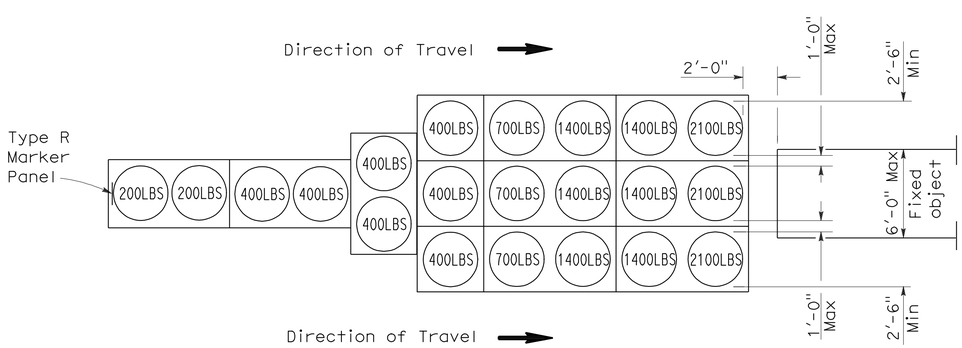

ARRAY 'TU21'

Approach speed 45 mph or more

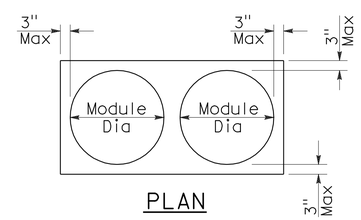

PLAN

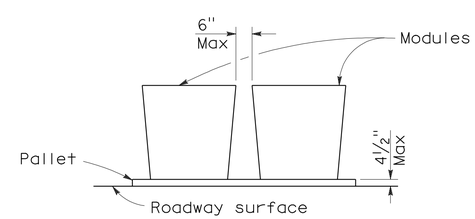

ELEVATION

CRASH CUSHION PALLET DETAIL

See Note 7

NOTES:

1. (XXX) Indicates sand filled module location and weight of sand in pounds for each module. Module spacing is based on the greater diameter of the module.
2. All sand weights are nominal.
3. Temporary crash cushion arrays shall not encroach on the traveled way.
4. Place the top of Type R marker panel 1" below the module lid.
5. Refer to Standard Plan A73B for marker details.
6. Approach speeds indicated conform to NCHRP 350 Report criteria.
7. Use of pallets is optional.

STATE OF CALIFORNIA
DEPARTMENT OF TRANSPORTATION

TEMPORARY CRASH CUSHION, SAND FILLED (UNIDIRECTIONAL)

NO SCALE

RSP T1A DATED JUNE 6, 2008 SUPERSEDES STANDARD PLAN T1A
DATED MAY 1, 2006 - PAGE 211 OF THE STANDARD PLANS BOOK DATED MAY 2006.

REVISED STANDARD PLAN RSP T1A

2006 REVISED STANDARD PLAN RSP T1A

DIST	COUNTY	ROUTE	POST MILES TOTAL PROJECT	SHEET NO.	TOTAL SHEETS
01	Men	101	99.4/R100.4	24	35

Randell D. Hiatt
REGISTERED CIVIL ENGINEER

June 6, 2008
PLANS APPROVAL DATE

REGISTERED PROFESSIONAL ENGINEER
Randell D. Hiatt
No. C50200
Exp. 6-30-09
CIVIL
STATE OF CALIFORNIA

The State of California or its officers or agents shall not be responsible for the accuracy or completeness of electronic copies of this plan sheet.

To accompany plans dated 5-9-11

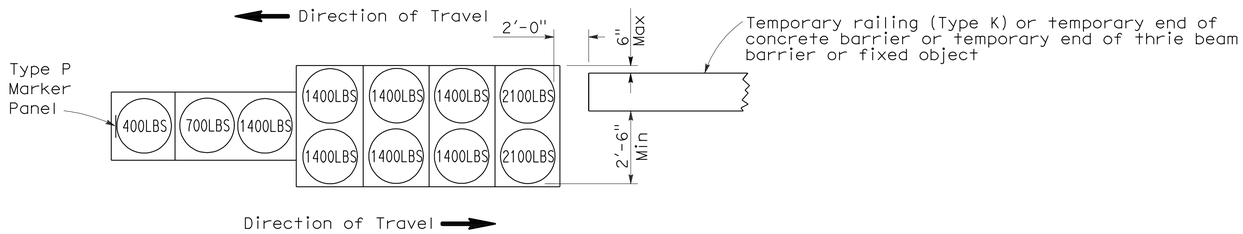

ARRAY 'TB11'

Approach speed less than 45 mph

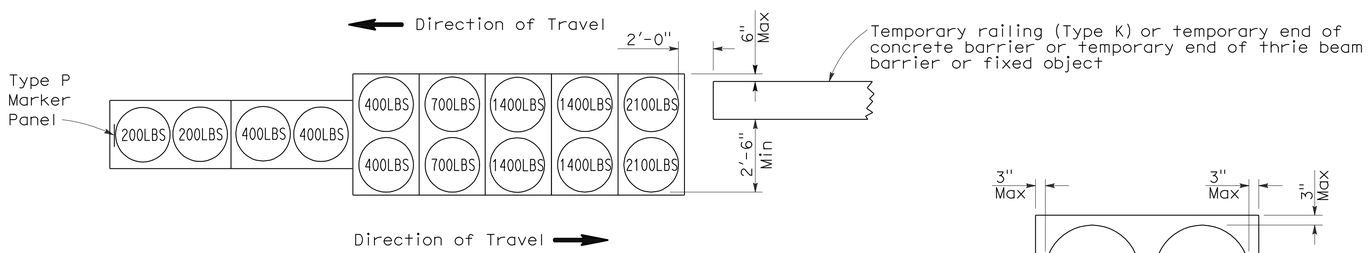

ARRAY 'TB14'

Approach speed 45 mph or more

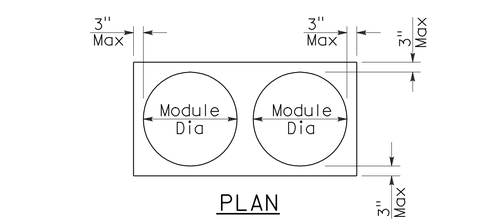

PLAN

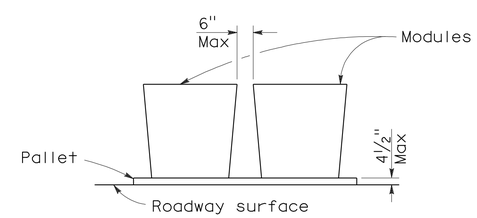

ELEVATION

CRASH CUSHION PALLET DETAIL

See Note 7

NOTES:

1. (XXX) Indicates sand filled module location and weight of sand in pounds for each module. Module spacing is based on the greater diameter of the module.
2. All sand weights are nominal.
3. Temporary crash cushion arrays shall not encroach on the traveled way.
4. Place the Type P marker panel so that the bottom of the panel rests upon the pallet.
5. Refer to Standard Plan A73B for marker details.
6. Approach speeds indicated conform to NCHRP 350 Report criteria.
7. Use of pallets is optional.

STATE OF CALIFORNIA
DEPARTMENT OF TRANSPORTATION

TEMPORARY CRASH CUSHION, SAND FILLED (BIDIRECTIONAL)

NO SCALE

RSP T1B DATED JUNE 6, 2008 SUPERSEDES STANDARD PLAN T1B
DATED MAY 1, 2006 - PAGE 212 OF THE STANDARD PLANS BOOK DATED MAY 2006.

REVISED STANDARD PLAN RSP T1B

2006 REVISED STANDARD PLAN RSP T1B

5-15-08

DIST	COUNTY	ROUTE	POST MILES TOTAL PROJECT	SHEET NO.	TOTAL SHEETS
01	Men	101	99.4/R100.4	25	35

Randell D. Hiatt
REGISTERED CIVIL ENGINEER

June 6, 2008
PLANS APPROVAL DATE

REGISTERED PROFESSIONAL ENGINEER
Randell D. Hiatt
No. C50200
Exp. 6-30-09
CIVIL
STATE OF CALIFORNIA

The State of California or its officers or agents shall not be responsible for the accuracy or completeness of electronic copies of this plan sheet.

To accompany plans dated 5-9-11

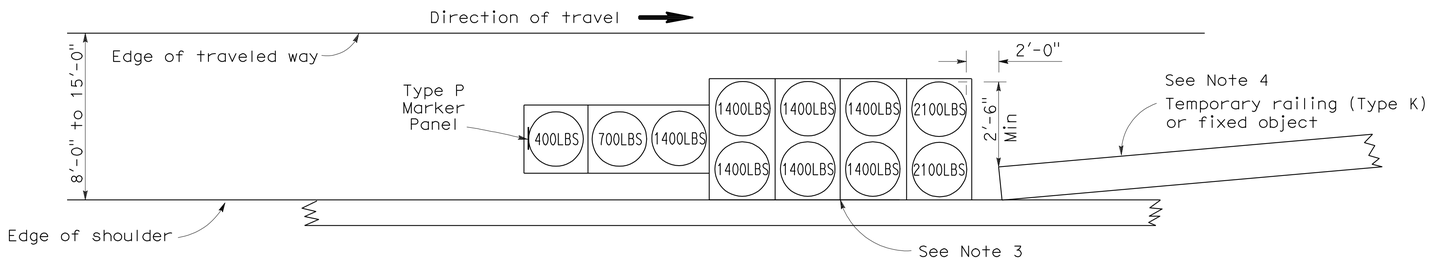

ARRAY 'TS11'

Approach speed less than 45 mph
See Note 9

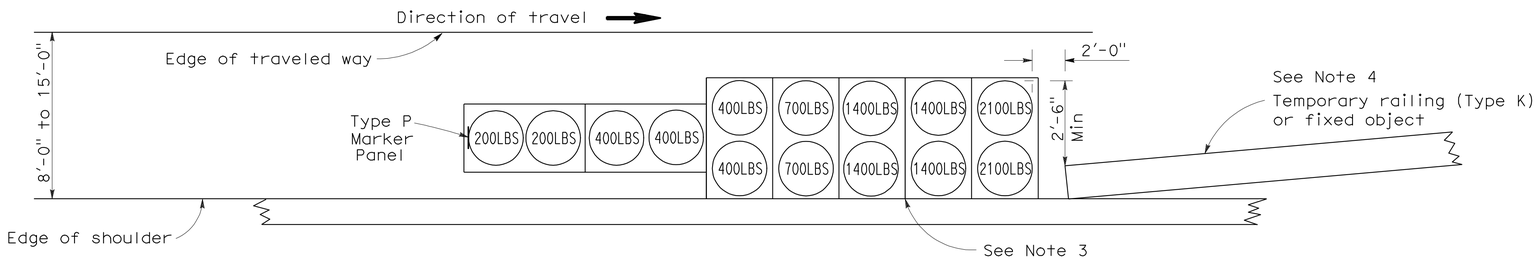

ARRAY 'TS14'

Approach speed 45 mph or more
See Note 9

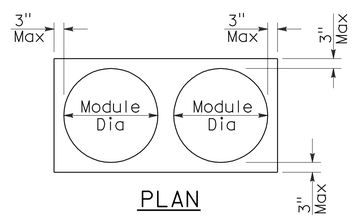

PLAN

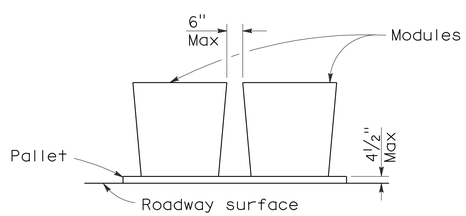

ELEVATION

CRASH CUSHION PALLET DETAIL

See Note 11

NOTES:

1. (XXX) Indicates sand filled module location and weight of sand in pounds for each module. Module spacing is based on the greater diameter of the module.
2. All sand weights are nominal.
3. The temporary crash cushion arrays shown on this plan shall be used only in locations where there will be traffic on one side of the temporary crash cushion array.
4. If the fixed object or approach end of the temporary railing is less than 15'-0" from the edge of traveled way, a temporary crash cushion is required in a construction or work zone.
5. Temporary crash cushion arrays shall not encroach on the traveled way.
6. Arrays for median shoulders shall conform to details shown on this plan for outside shoulders.
7. Place the Type P marker panel so that the bottom of the panel rests upon the pallet and faces traffic.
8. Refer to Standard Plan A73B for marker details.
9. For shoulder widths less than 8'-0", appropriate approved crash cushion protection, other than sand filled modules, shall be provided at fixed objects and at approach ends of temporary railing. The specific type of crash cushion shall be as shown on the project plans or as specified in the Special Provisions, or if not shown on the project plans or specified in the Special Provisions, shall be as approved by the Engineer.
10. Approach speeds indicated conform to NCHRP 350 Report criteria.
11. Use of pallets is optional.

STATE OF CALIFORNIA
DEPARTMENT OF TRANSPORTATION

TEMPORARY CRASH CUSHION, SAND FILLED (SHOULDER INSTALLATIONS)

NO SCALE

RSP T2 DATED JUNE 6, 2008 SUPERSEDES STANDARD PLAN T2
DATED MAY 1, 2006 - PAGE 213 OF THE STANDARD PLANS BOOK DATED MAY 2006.

REVISED STANDARD PLAN RSP T2

2006 REVISED STANDARD PLAN RSP T2

DIST	COUNTY	ROUTE	POST MILES TOTAL PROJECT	SHEET NO.	TOTAL SHEETS
01	Men	101	99.4/R100.4	26	35

Robert B Schott
LICENSED LANDSCAPE ARCHITECT

April 3, 2009
PLANS APPROVAL DATE

LICENSED LANDSCAPE ARCHITECT
Robert B. Schott 3025
Robert B Schott
Signature
11-30-10
Renewal Date
2-25-09
Date
STATE OF CALIFORNIA

The State of California or its officers or agents shall not be responsible for the accuracy or completeness of electronic copies of this plan sheet.

To accompany plans dated 5-9-11

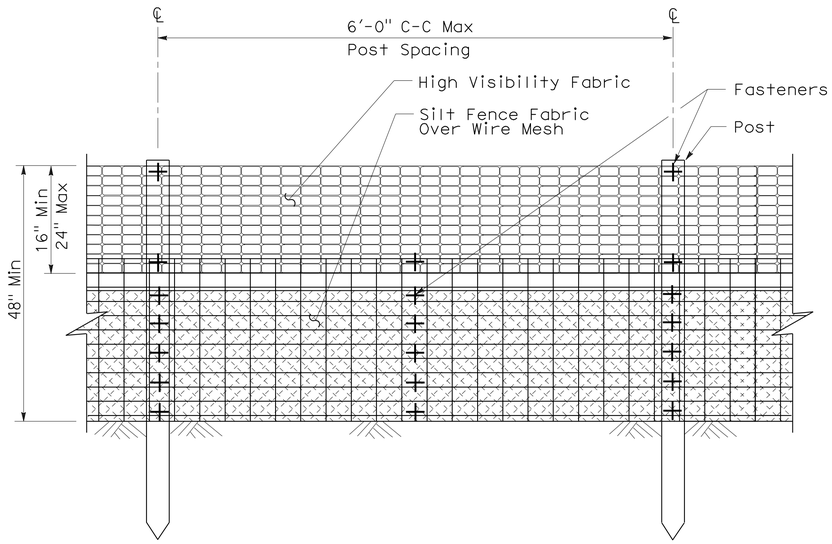

ELEVATION

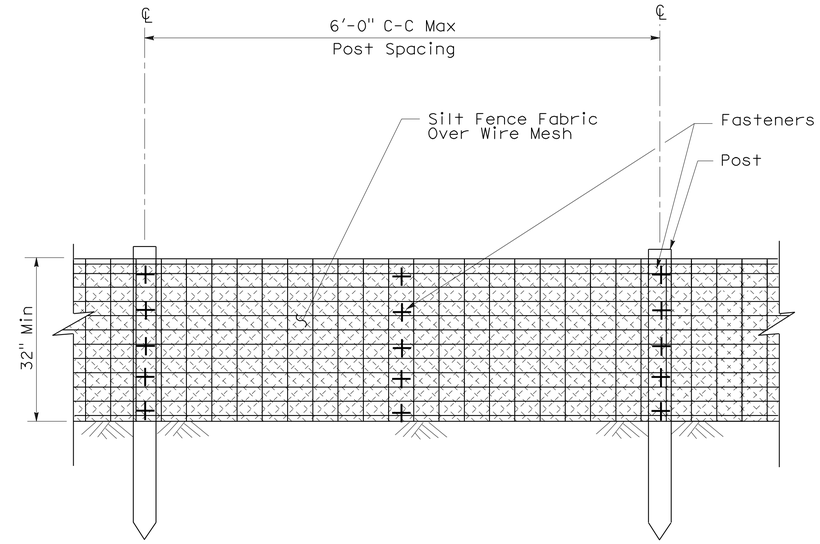

ELEVATION

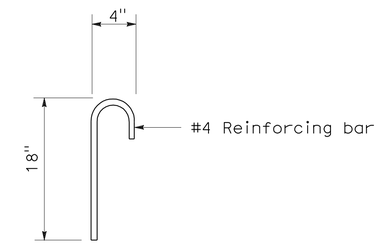

ANCHOR

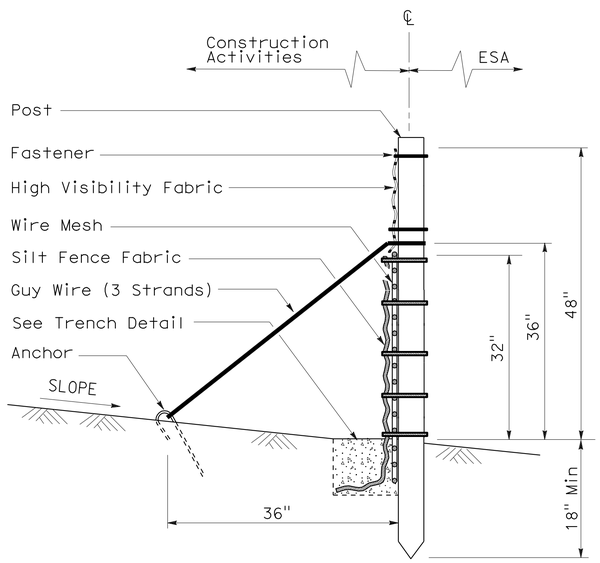

SECTION

TEMPORARY REINFORCED SILT FENCE (TYPE 1)

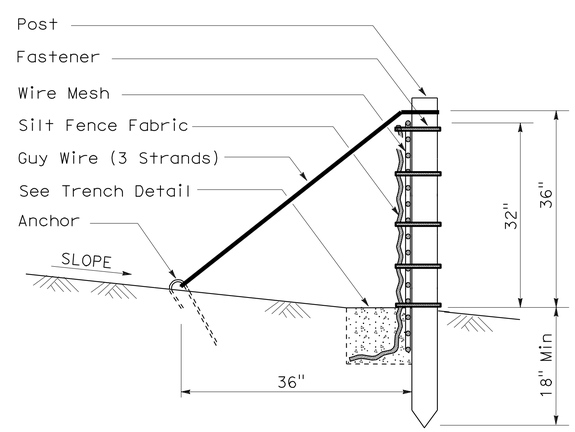

SECTION

TEMPORARY REINFORCED SILT FENCE (TYPE 2)

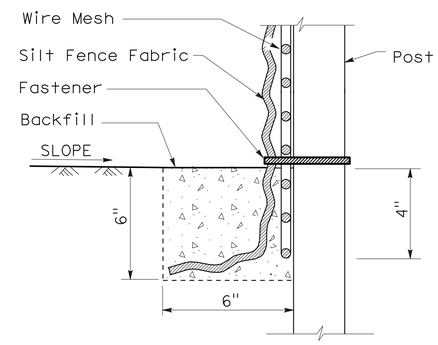

SECTION

TRENCH DETAIL

STATE OF CALIFORNIA
DEPARTMENT OF TRANSPORTATION

TEMPORARY WATER POLLUTION CONTROL DETAILS (TEMPORARY REINFORCED SILT FENCE)

NO SCALE

NSP T60 DATED APRIL 3, 2009 SUPPLEMENTS
THE STANDARD PLANS BOOK DATED MAY 2006.

NEW STANDARD PLAN NSP T60

2006 NEW STANDARD PLAN NSP T60

1-7-09

DIST	COUNTY	ROUTE	POST MILES TOTAL PROJECT	SHEET NO.	TOTAL SHEETS
01	Men	101	99.4/R100.4	27	35

LICENSED LANDSCAPE ARCHITECT

August 15, 2008
PLANS Approval DATE

LICENSED LANDSCAPE ARCHITECT Robert B. Schott 3625 Signature 11-04-08 Renewal Date 08-11-08 Date STATE OF CALIFORNIA

The State of California or its officers or agents shall not be responsible for the accuracy or completeness of electronic copies of this plan sheet.

To accompany plans dated 5-9-11

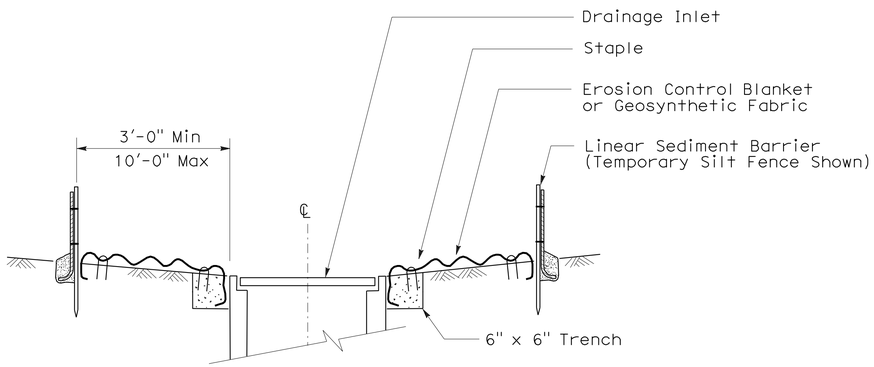

SECTION A-A

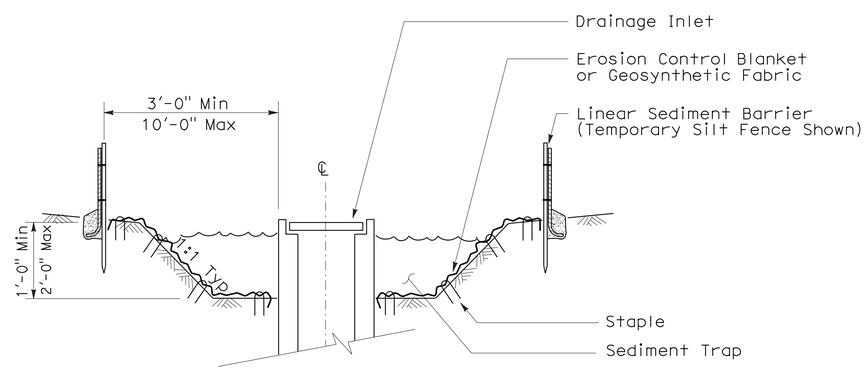

SECTION B-B

NOTES:

1. See Standard Plan T51 for Temporary Silt Fence.
2. Dimensions may vary to fit field conditions.

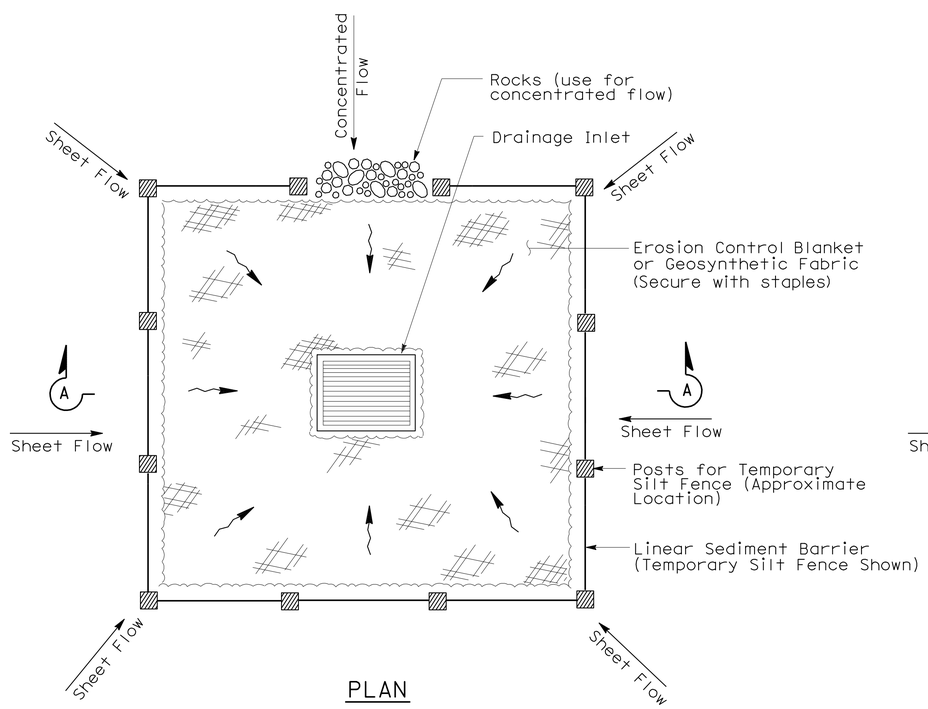

PLAN

TEMPORARY DRAINAGE INLET PROTECTION (TYPE 1)

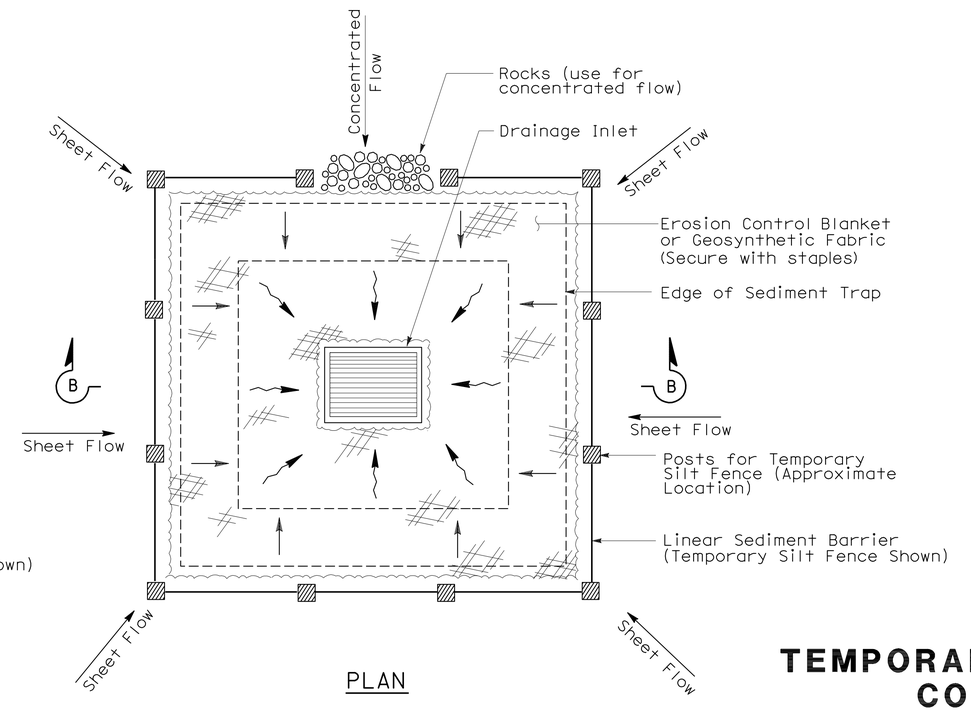

PLAN

TEMPORARY DRAINAGE INLET PROTECTION (TYPE 2) (EXCAVATED SEDIMENT TRAP)

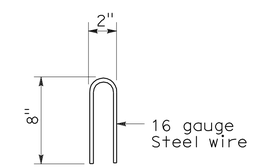

STAPLE DETAIL

STATE OF CALIFORNIA
DEPARTMENT OF TRANSPORTATION

TEMPORARY WATER POLLUTION CONTROL DETAILS (TEMPORARY DRAINAGE INLET PROTECTION)

NO SCALE

NSP T61 DATED AUGUST 15, 2008 SUPPLEMENTS THE STANDARD PLANS BOOK DATED MAY 2006.

NEW STANDARD PLAN NSP T61

2006 NEW STANDARD PLAN NSP T61

7-11-08

DIST	COUNTY	ROUTE	POST MILES TOTAL PROJECT	SHEET NO.	TOTAL SHEETS
01	Men	101	99.4/R100.4	28	35

LICENSED LANDSCAPE ARCHITECT

August 15, 2008
PLANS APPROVAL DATE

LICENSED LANDSCAPE ARCHITECT Robert B. Schott 3625 Signature 11-04-08 Renewal Date 08-11-08 Date STATE OF CALIFORNIA

The State of California or its officers or agents shall not be responsible for the accuracy or completeness of electronic copies of this plan sheet.

To accompany plans dated 5-9-11

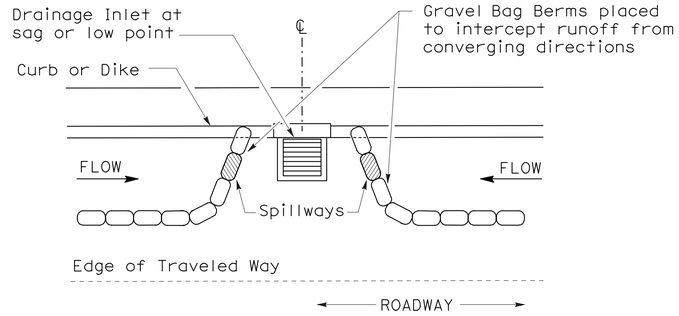

PLAN

CONFIGURATION FOR SAG POINT INLET (GRAVEL BAG BERM)

GRAVEL BAG BERM (TYPE 3A) SPACING TABLE

SLOPE OF ROADWAY (PERCENT)	1 to 3.9	4 to 5.9	6 to 7.9	8 to 10	10+
INTERVAL BETWEEN BERM	100′	75′	50′	25′	12′

For slope of less than 1%, install barriers only if erosion/sediment is prevalent

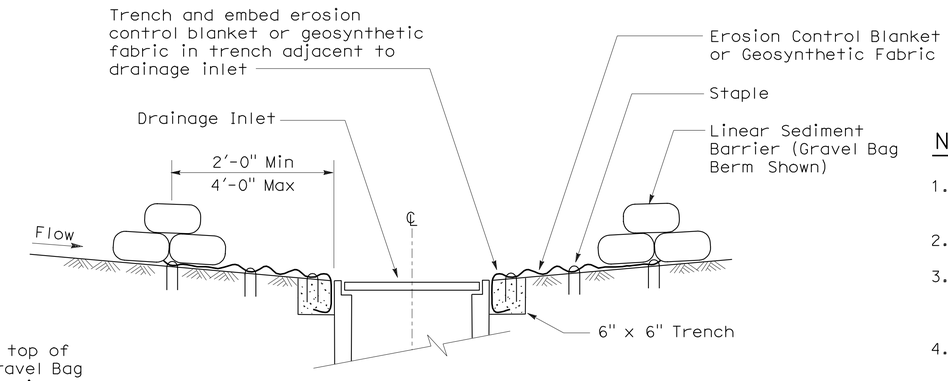

SECTION A-A

NOTES:

1. Place safety cones adjacent to drainage inlet protection.
2. Dimensions may vary to fit field conditions.
3. Install a minimum of 3 gravel bag berms upstream of each drainage inlet to be protected.
4. Position erosion control blanket or geosynthetic fabric at edge of concrete apron and secure in trench.
5. Erosion control blanket or geosynthetic fabric is not required if the area adjacent to the drainage inlet is vegetated or paved.

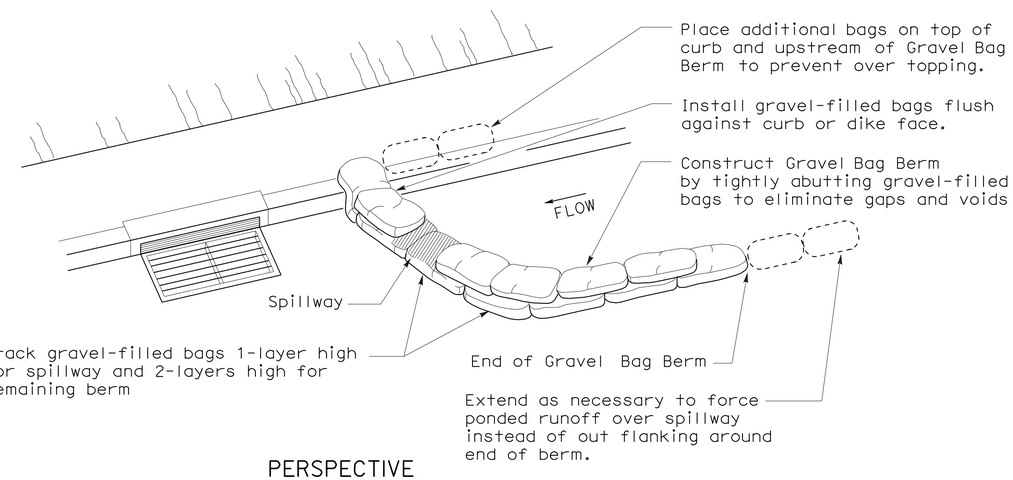

PERSPECTIVE

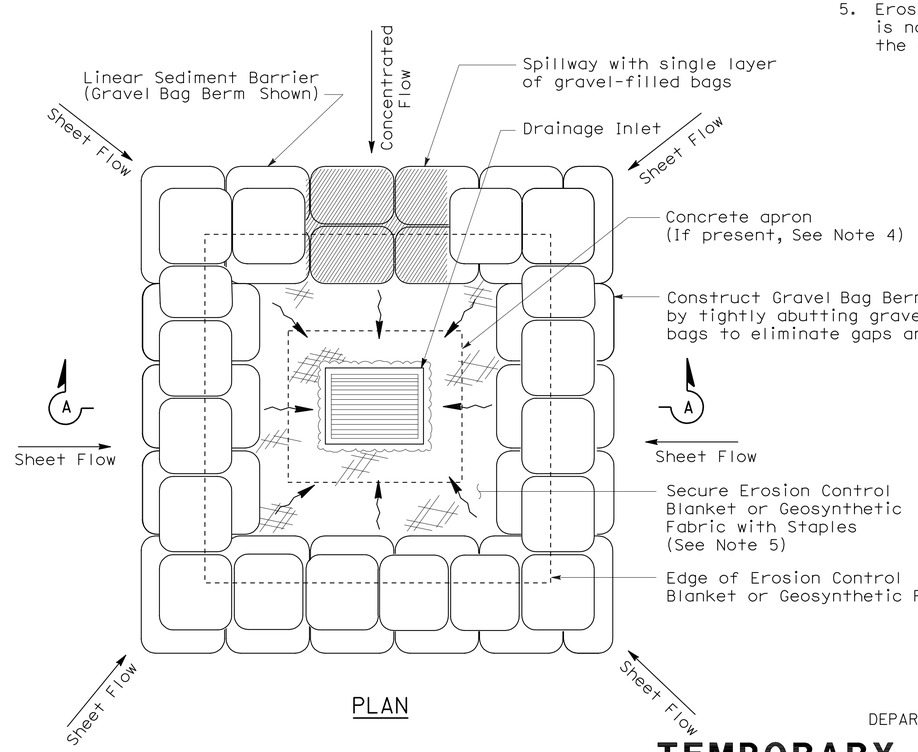

PLAN

TEMPORARY DRAINAGE INLET PROTECTION (TYPE 3B)

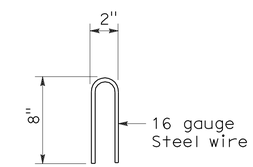

STAPLE DETAIL

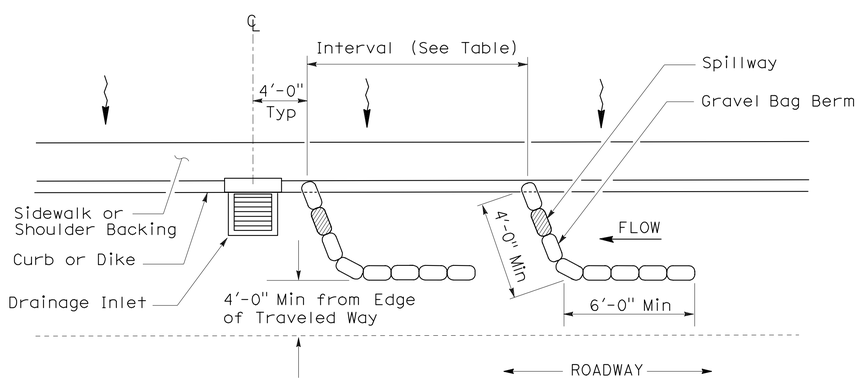

PLAN

TEMPORARY DRAINAGE INLET PROTECTION (TYPE 3A) (GRAVEL BAG BERM)

STATE OF CALIFORNIA
DEPARTMENT OF TRANSPORTATION

TEMPORARY WATER POLLUTION CONTROL DETAILS (TEMPORARY DRAINAGE INLET PROTECTION)

NO SCALE

NSP T62 DATED AUGUST 15, 2008 SUPPLEMENTS THE STANDARD PLANS BOOK DATED MAY 2006.

NEW STANDARD PLAN NSP T62

2006 NEW STANDARD PLAN NSP T62

7-11-08

DIST	COUNTY	ROUTE	POST MILES TOTAL PROJECT	SHEET NO.	TOTAL SHEETS
01	Men	101	99.4/R100.4	29	35

LICENSED LANDSCAPE ARCHITECT

August 15, 2008
PLANS APPROVAL DATE

The State of California or its officers or agents shall not be responsible for the accuracy or completeness of electronic copies of this plan sheet.

LICENSED LANDSCAPE ARCHITECT — Robert B. Schott — Signature — 11-04-08 Renewal Date — 08-11-08 Date — STATE OF CALIFORNIA

To accompany plans dated 5-9-11

FLEXIBLE SEDIMENT BARRIER SPACING TABLE

SLOPE OF ROADWAY (PERCENT)	0 to 0.9	1 to 1.9	2 to 2.9	3 to 4	5+
INTERVAL BETWEEN BARRIERS	50′	35′	30′	25′	20′
ANGLE FROM FACE OF CURB	70°	70°	70°	45°	45°
SUGGESTED BARRIER LENGTH	6′	6′	6′	6′	6′

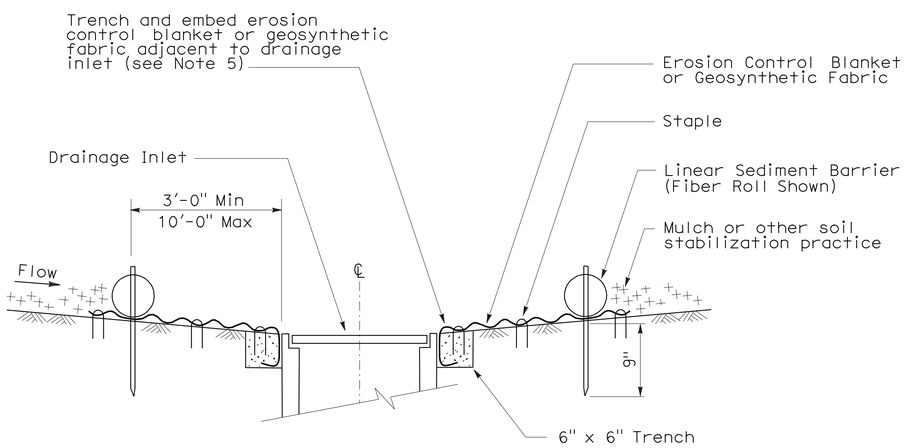

SECTION A-A

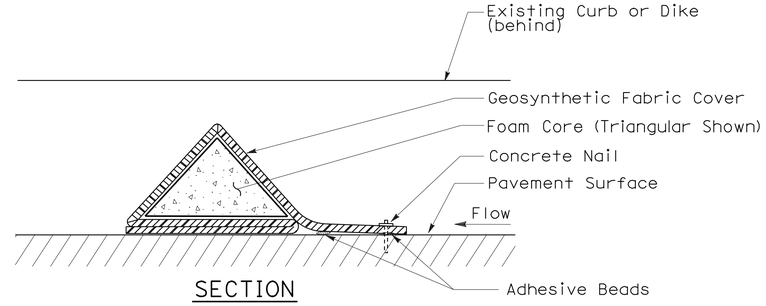

SECTION

FLEXIBLE SEDIMENT BARRIER DETAIL (FOAM BARRIER SHOWN)

NOTES:

1. See Standard Plan T51 for Temporary Silt Fence.
2. Dimensions may vary to fit field conditions.
3. Install a minimum of 3 flexible sediment barriers upstream of each drainage inlet to be protected.
4. Position erosion control blanket or geosynthetic fabric at edge of concrete apron and secure in trench.
5. Erosion control blanket or geosynthetic fabric is not required if the area adjacent to the drainage inlet is vegetated.

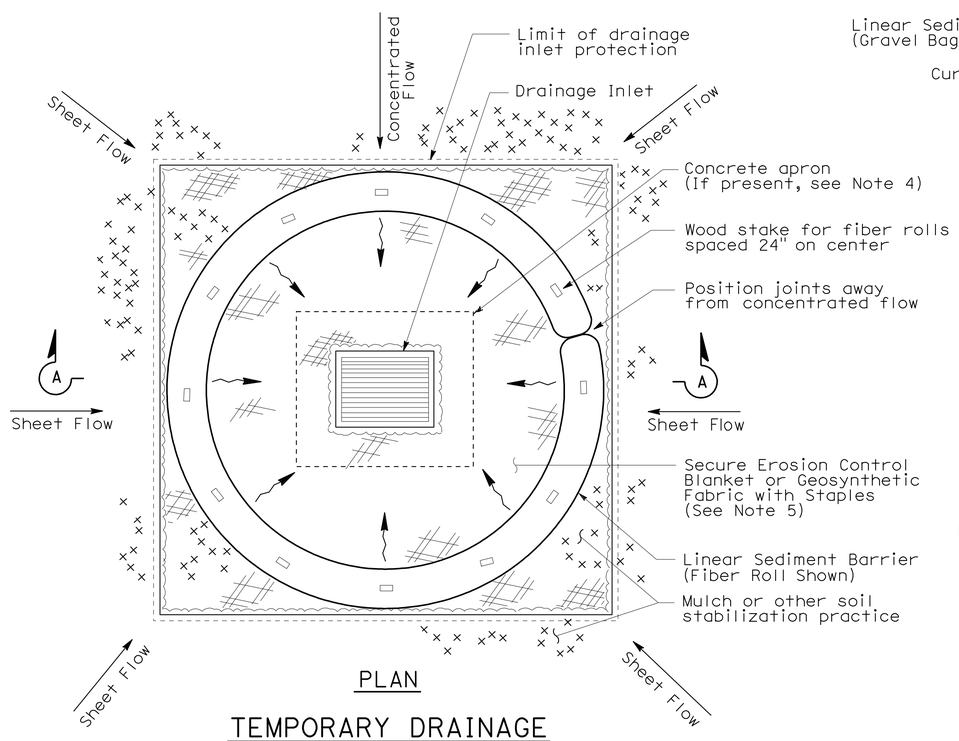

PLAN

TEMPORARY DRAINAGE INLET PROTECTION (TYPE 4A)

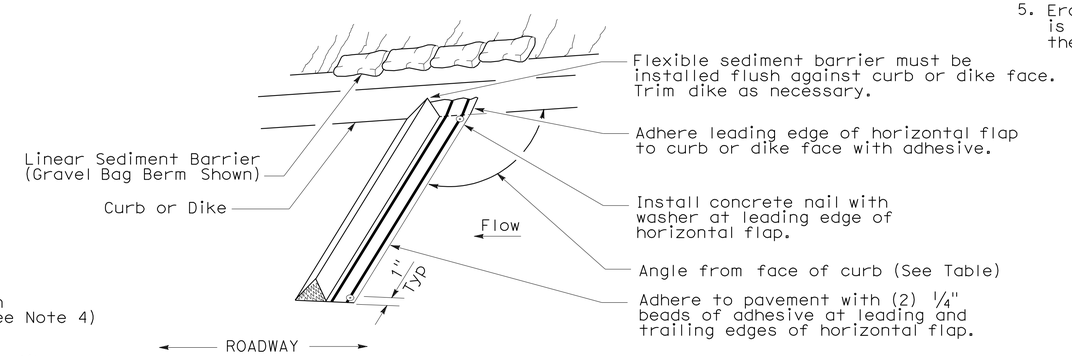

PERSPECTIVE

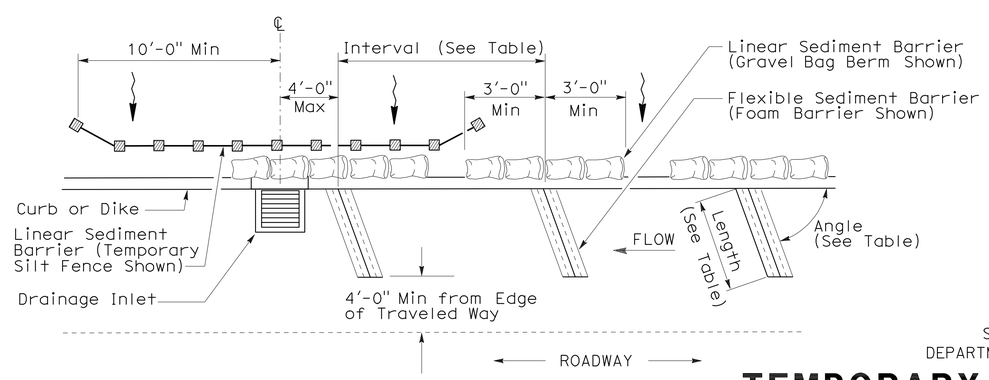

PLAN

TEMPORARY DRAINAGE INLET PROTECTION (TYPE 4B) FLEXIBLE SEDIMENT BARRIER

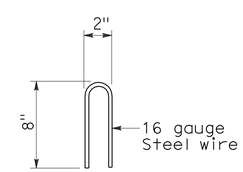

STAPLE DETAIL

STATE OF CALIFORNIA
DEPARTMENT OF TRANSPORTATION

TEMPORARY WATER POLLUTION CONTROL DETAILS (TEMPORARY DRAINAGE INLET PROTECTION)

NO SCALE

NSP T63 DATED AUGUST 15, 2008 SUPPLEMENTS THE STANDARD PLANS BOOK DATED MAY 2006.

NEW STANDARD PLAN NSP T63

2006 NEW STANDARD PLAN NSP T63

7-11-08

DIST	COUNTY	ROUTE	POST MILES TOTAL PROJECT	SHEET NO.	TOTAL SHEETS
01	Men	101	99.4/R100.4	30	35

LICENSED LANDSCAPE ARCHITECT

August 15, 2008
PLANS APPROVAL DATE

LICENSED LANDSCAPE ARCHITECT
Robert B. Schott 3625
Signature
11-04-08
Renewal Date
08-11-08
Date
STATE OF CALIFORNIA

The State of California or its officers or agents shall not be responsible for the accuracy or completeness of electronic copies of this plan sheet.

To accompany plans dated 5-9-11

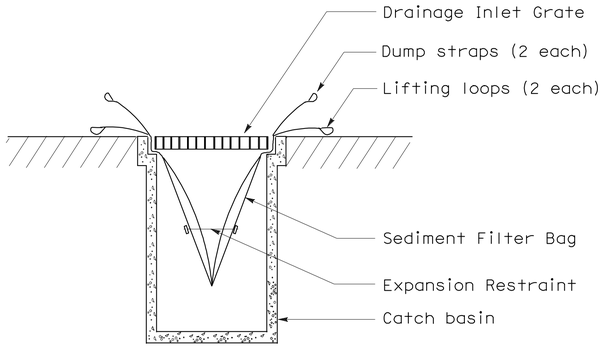

SECTION B-B

SEDIMENT FILTER BAG DETAIL

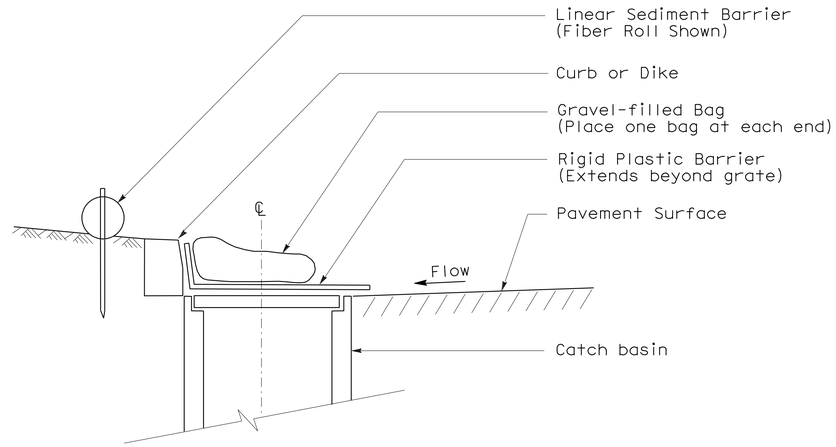

SECTION

TEMPORARY DRAINAGE INLET PROTECTION (TYPE 6A) (CATCH BASIN WITH GRATE)

NOTES:

1. See Standard Plan T51 for Temporary Silt Fence.
2. Dimensions may vary to fit field conditions.

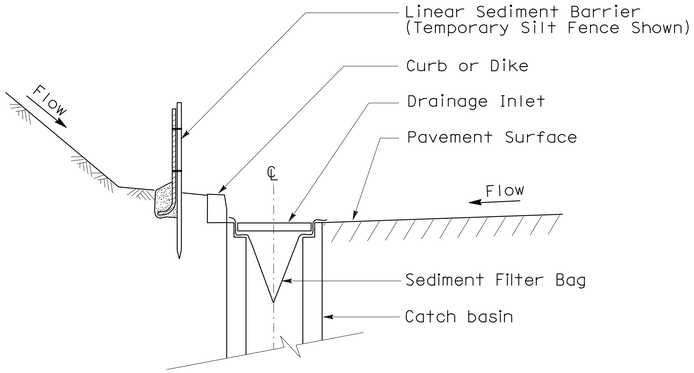

SECTION A-A

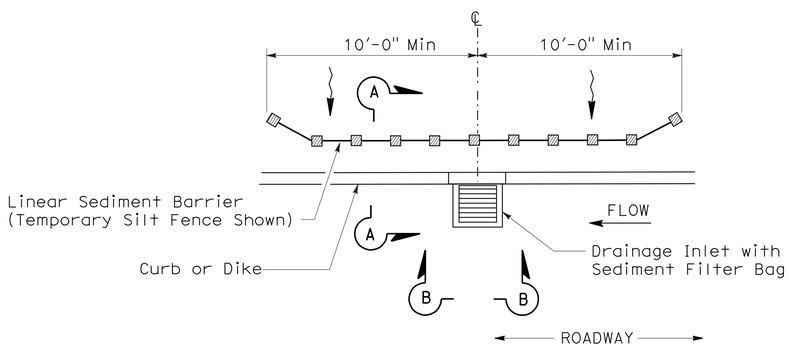

PLAN

TEMPORARY DRAINAGE INLET PROTECTION (TYPE 5) (SEDIMENT FILTER BAG)

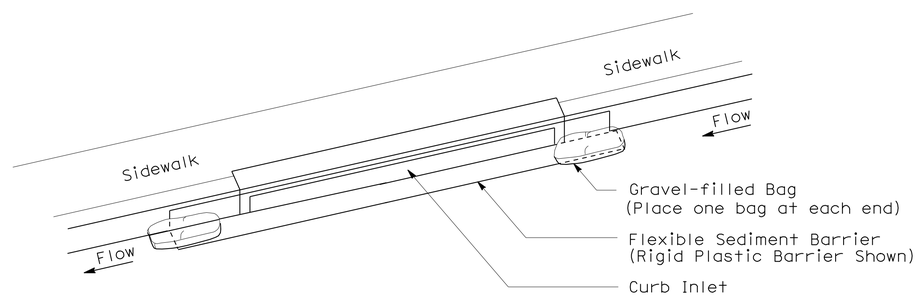

PERSPECTIVE

TEMPORARY DRAINAGE INLET PROTECTION (TYPE 6B) (CURB INLET WITHOUT GRATE)

STATE OF CALIFORNIA
DEPARTMENT OF TRANSPORTATION

TEMPORARY WATER POLLUTION CONTROL DETAILS (TEMPORARY DRAINAGE INLET PROTECTION)

NO SCALE

NSP T64 DATED AUGUST 15, 2008 SUPPLEMENTS
THE STANDARD PLANS BOOK DATED MAY 2006.

NEW STANDARD PLAN NSP T64

2006 NEW STANDARD PLAN NSP T64

DIST	COUNTY	ROUTE	POST MILES TOTAL PROJECT	SHEET No	TOTAL SHEETS
01	Men	101	99.4/R100.4	31	35

REGISTERED CIVIL ENGINEER 01-12-11 DATE

5-9-11
PLANS APPROVAL DATE

REGISTERED PROFESSIONAL ENGINEER Jeff Sims No. C46471 Exp. 6-30-11 CIVIL STATE OF CALIFORNIA

The State of California or its officers or agents shall not be responsible for the accuracy or completeness of electronic copies of this plan sheet.

QUANTITIES

TYPE E METAL BIN WALL	LOCATION 2	QUANTITIES
RETAINING WALL REMOVAL, LOCATION 2		LUMP SUM
STEEL SOLDIER PILE TIEBACK WALL AND TYPE E METAL BIN WALL	LOCATION 3	QUANTITIES
RETAINING WALL REMOVAL, LOCATION 3		LUMP SUM
TYPE E METAL BIN WALL	LOCATION 4	QUANTITIES
RETAINING WALL REMOVAL, LOCATION 4		LUMP SUM
STONE MASONRY WALL	LOCATION 5	QUANTITIES
RETAINING WALL REMOVAL, LOCATION 5		LUMP SUM
STONE MASONRY WALL AND SOIL NAIL WALL	LOCATION 6	QUANTITIES
RETAINING WALL REMOVAL, LOCATION 6		LUMP SUM
TYPE A AND B METAL BIN WALL	LOCATION 8	QUANTITIES
RETAINING WALL REMOVAL, LOCATION 8		LUMP SUM

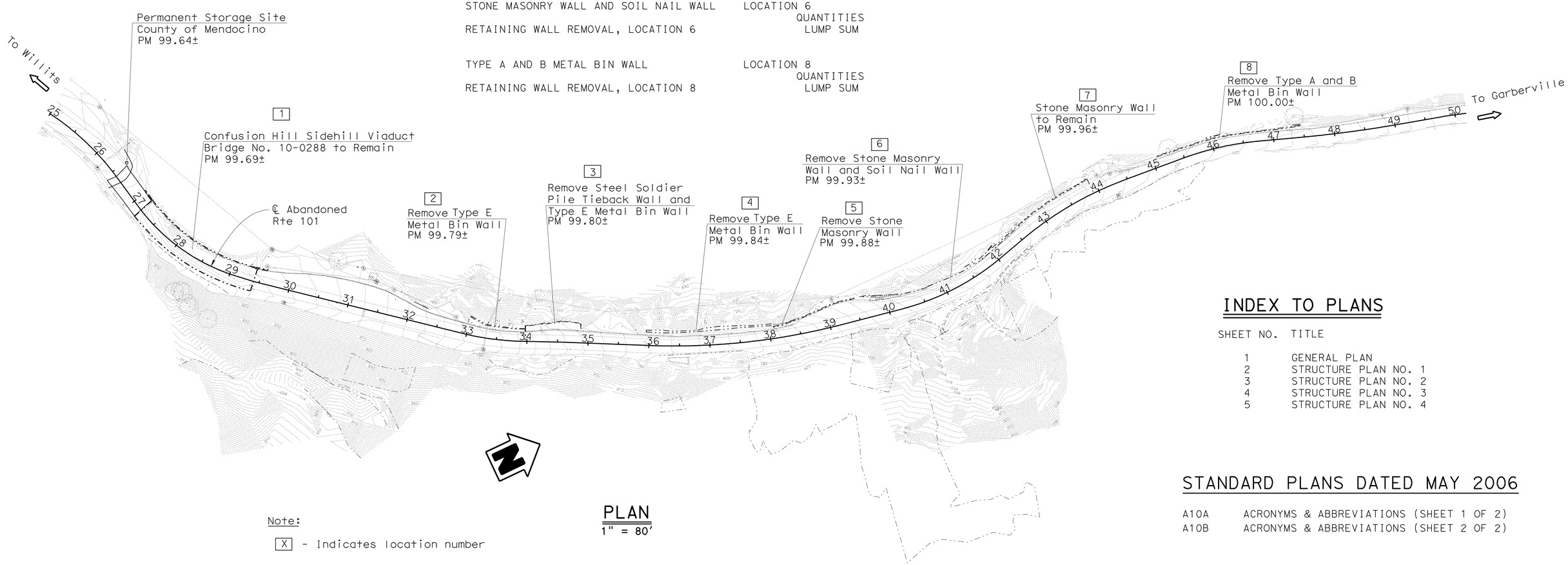

Note:

X - Indicates location number

PLAN
1" = 80'

INDEX TO PLANS

SHEET NO.	TITLE
1	GENERAL PLAN
2	STRUCTURE PLAN NO. 1
3	STRUCTURE PLAN NO. 2
4	STRUCTURE PLAN NO. 3
5	STRUCTURE PLAN NO. 4

STANDARD PLANS DATED MAY 2006

A10A	ACRONYMS & ABBREVIATIONS (SHEET 1 OF 2)
A10B	ACRONYMS & ABBREVIATIONS (SHEET 2 OF 2)

Jeff Sims, DESIGN ENGINEER	DESIGN	BY Jeff Sims	CHECKED Greg Thornton		
	DETAILS	BY Jinrong Zhou	CHECKED Greg Thornton	LAYOUT BY Jeff Sims	CHECKED Greg Thornton
	QUANTITIES	BY Mark Simonsen	CHECKED Greg Thornton	SPECIFICATIONS BY Mary Kopsa	PLANS AND SPECS COMPARED Mary Kopsa

ORIGINAL SCALE IN INCHES FOR REDUCED PLANS 0 1 2 3

STATE OF CALIFORNIA
DEPARTMENT OF TRANSPORTATION

DIVISION OF ENGINEERING SERVICES
STRUCTURE DESIGN
DESIGN BRANCH 1

CU 01
EA 397541

BRIDGE NO. Various
POST MILE Various

CONFUSION HILL DECOMMISSION
GENERAL PLAN

DISREGARD PRINTS BEARING EARLIER REVISION DATES

REVISION DATES: 03/26/09 04/13/09 04/16/09 11/05/09 05/25/10 7/28/10 8/19/10 8/25/10 01/12/11

SHEET 1 OF 5

STRUCTURES DESIGN GENERAL PLAN SHEET (ENGLISH) (REV.07-24-06)

FILE => various-a-gp.dgn

USERNAME => trcarrol DATE PLOTTED => 04-MAY-2011 TIME PLOTTED => 12:45

DIST	COUNTY	ROUTE	POST MILES TOTAL PROJECT	SHEET No	TOTAL SHEETS
01	Men	101	99.4/R100.4	32	35

REGISTERED CIVIL ENGINEER 01-12-11 DATE

5-9-11
PLANS APPROVAL DATE

REGISTERED PROFESSIONAL ENGINEER Jeff Sims No. C46471 Exp. 6-30-11 CIVIL STATE OF CALIFORNIA

The State of California or its officers or agents shall not be responsible for the accuracy or completeness of electronic copies of this plan sheet.

Notes:

The metal bin wall is continuous from [2] to [3]

* For limits and quantities of roadway excavation located within and below the metal bin wall, and between the metal bin wall and steel soldier pile wall, see "Road Plans".

** Grind smooth all cut metal surfaces that are to remain

-·-·- - Indicates existing structure

[X] - Indicates location number

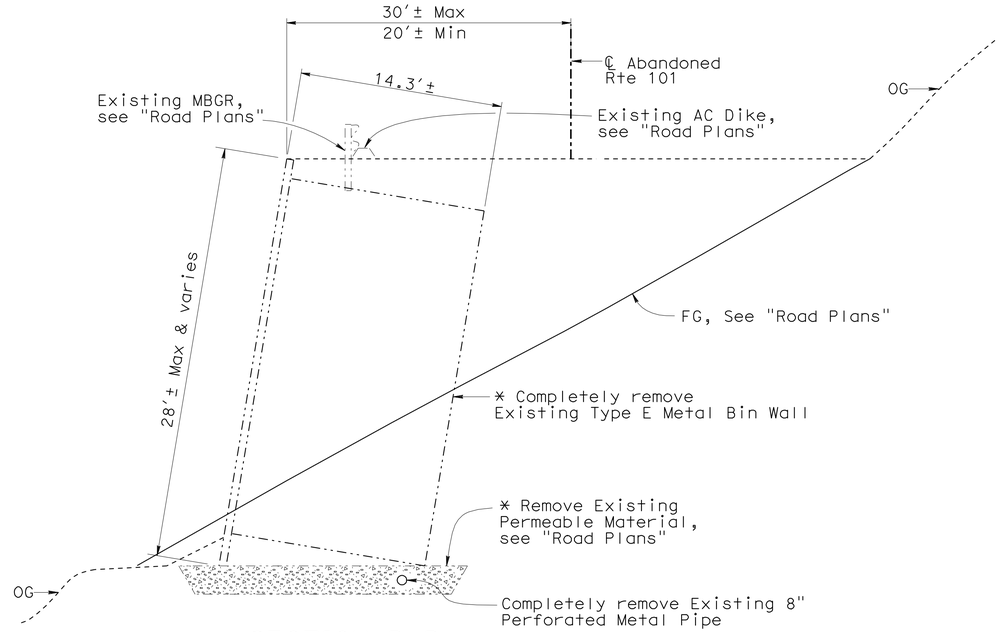

SECTION B-B

3/16" = 1'-0"

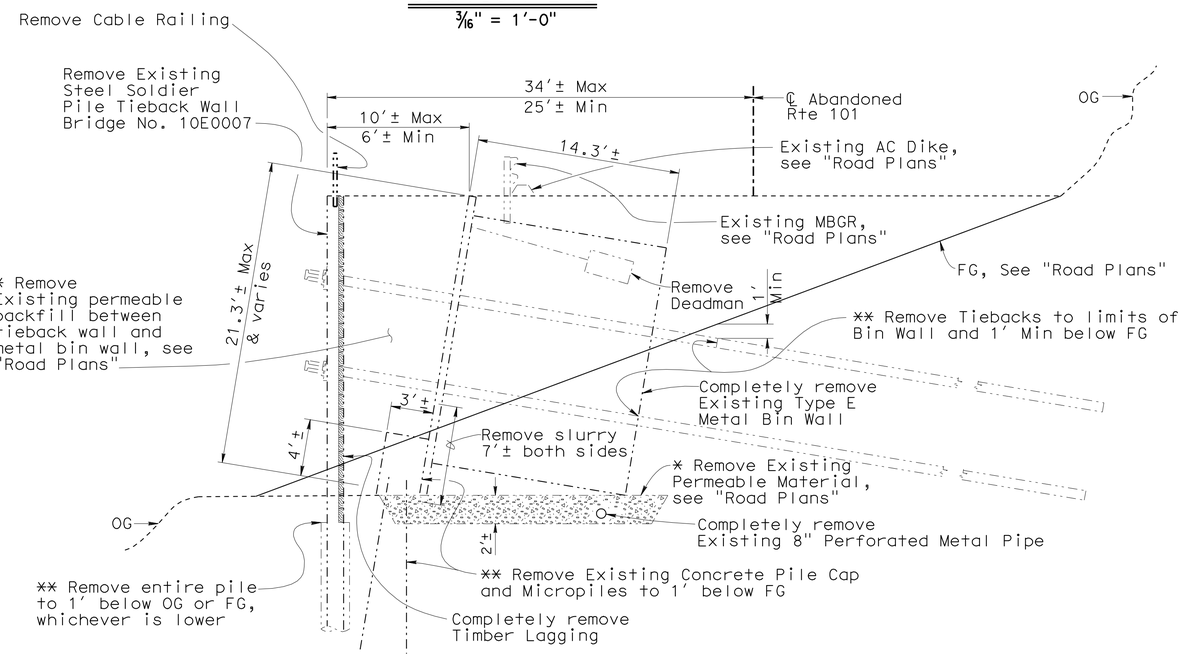

SECTION C-C

3/16" = 1'-0"

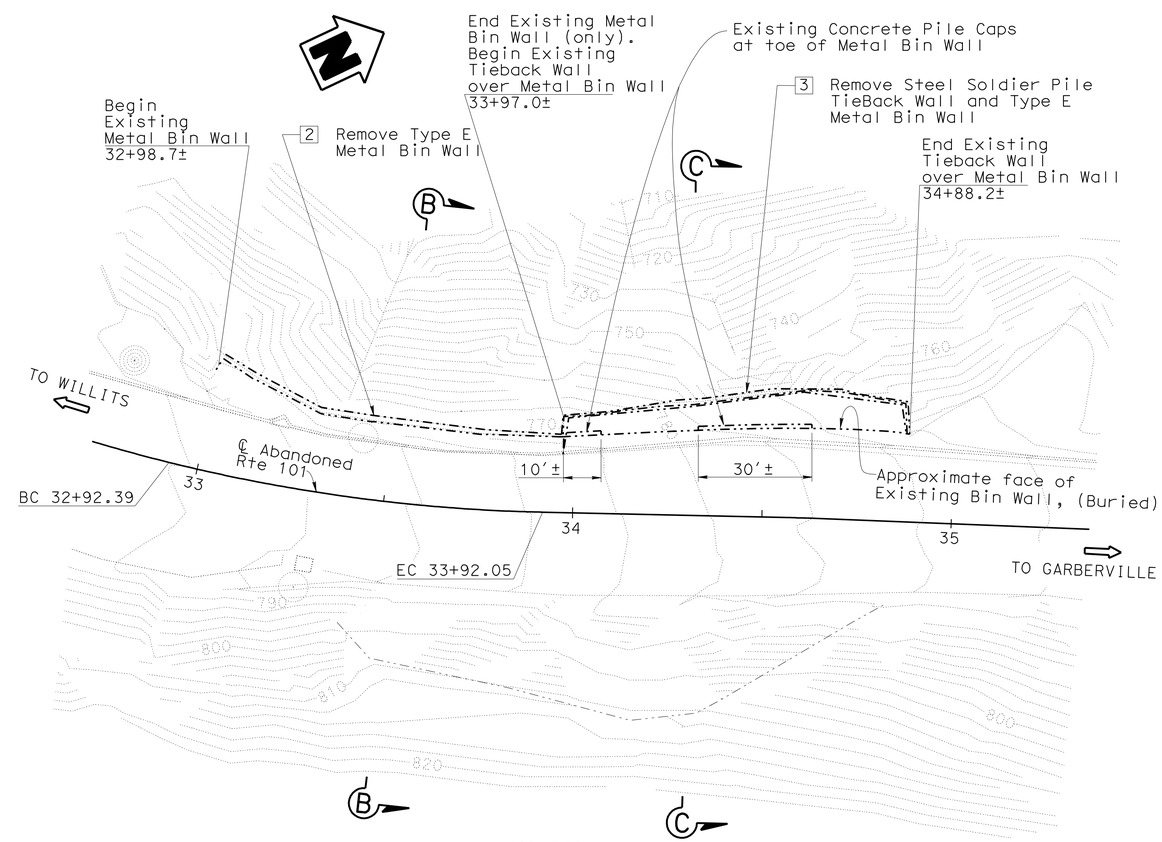

PLAN

1" = 20'

[2] Remove Type E Metal Bin Wall
[3] Remove Steel Soldier Pile Tieback Wall & Type E Metal Bin Wall

DESIGN	BY Jeff Sims	CHECKED Greg Thornton	
DETAILS	BY J.Zhou / B.Huddleston	CHECKED Greg Thornton	
QUANTITIES	BY Mark Simonsen	CHECKED Greg Thornton	

STATE OF CALIFORNIA
DEPARTMENT OF TRANSPORTATION

DIVISION OF ENGINEERING SERVICES
STRUCTURE DESIGN
DESIGN BRANCH 1

BRIDGE NO. 10E0007
POST MILE 99.7

CONFUSION HILL DECOMMISSION
STRUCTURE PLAN NO. 1

STRUCTURES DESIGN DETAIL SHEET (ENGLISH) (REV. 10/25/05)

ORIGINAL SCALE IN INCHES FOR REDUCED PLANS 0 1 2 3

CU 01
EA 397541

DISREGARD PRINTS BEARING EARLIER REVISION DATES

REVISION DATES: 04/02/09 4/14/09 4/13/09 04/16/09 10/26/09 05/26/10 7/28/10 8/19/10 8/25/10 01/12/11

SHEET 2 OF 5

FILE => various-c-sp01.dgn

USERNAME => s135318 DATE PLOTTED => 04-MAY-2011 TIME PLOTTED => 12:24

DIST	COUNTY	ROUTE	POST MILES TOTAL PROJECT	SHEET No	TOTAL SHEETS
01	Men	101	99.4/R100.4	33	35

REGISTERED CIVIL ENGINEER 01-12-11 DATE

5-9-11
PLANS APPROVAL DATE

REGISTERED PROFESSIONAL ENGINEER Jeff Sims No. C46471 Exp. 6-30-11 CIVIL STATE OF CALIFORNIA

The State of California or its officers or agents shall not be responsible for the accuracy or completeness of electronic copies of this plan sheet.

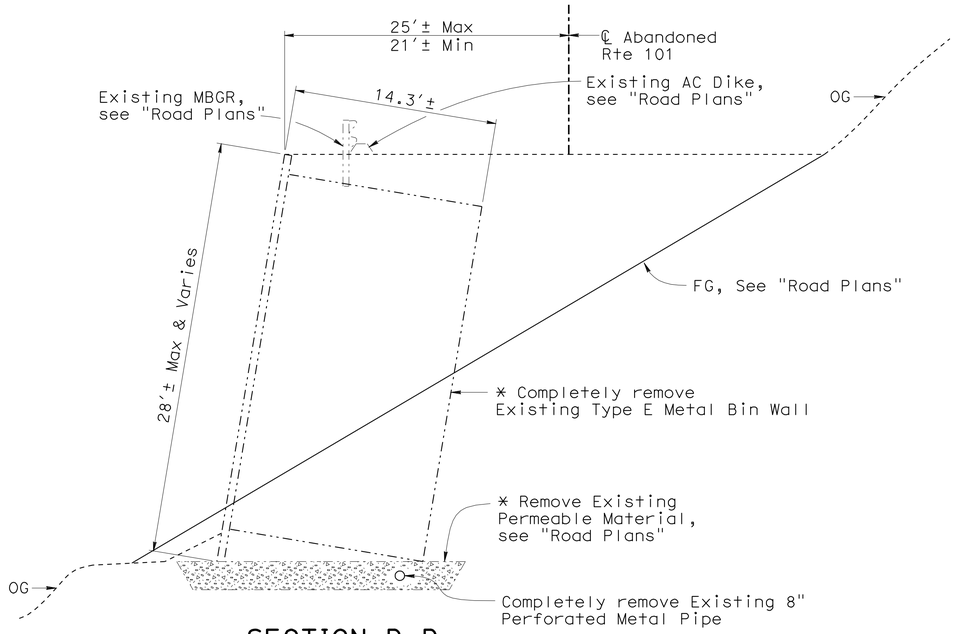

SECTION D-D

3/16" = 1'-0"

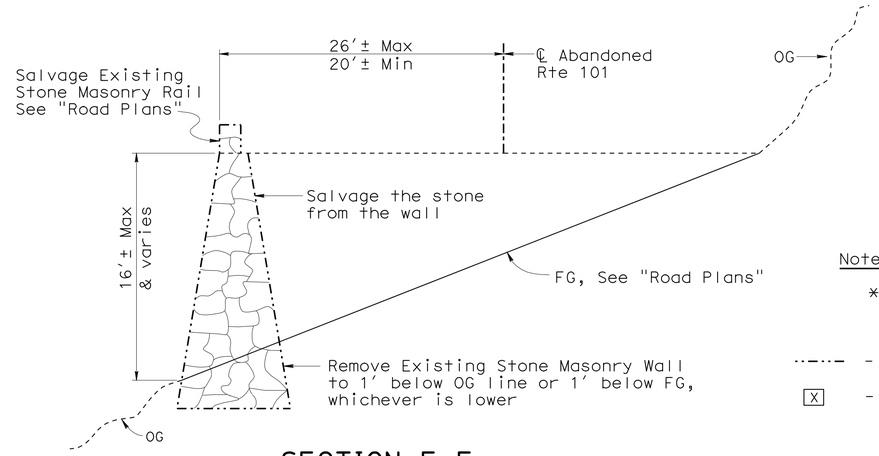

SECTION E-E

3/16" = 1'-0"

Notes:

* For limits and quantities of roadway excavation located within and below the metal bin wall, see "Road Plans"

-·-·- Indicates existing structure

[X] Indicates location number

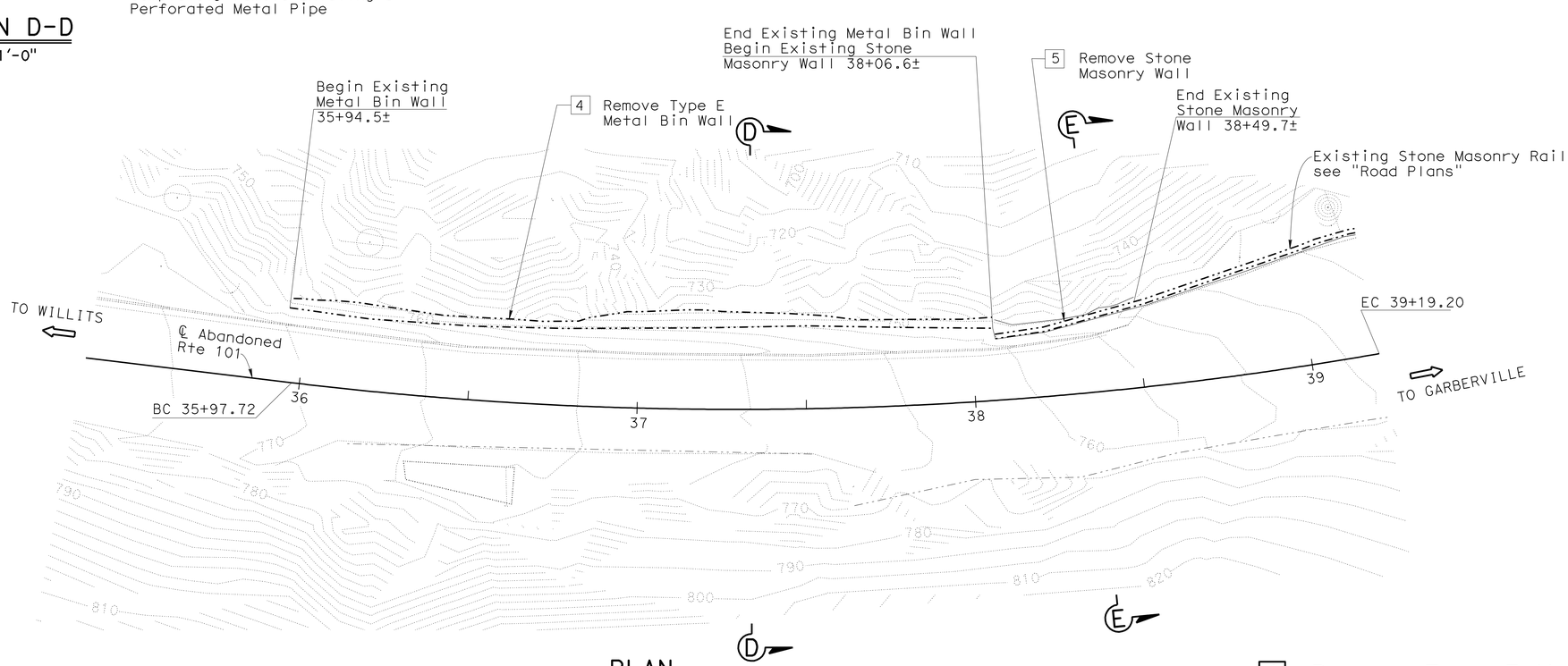

PLAN

1" = 20'

4 Remove Type E Metal Bin Wall
5 Remove Stone Masonry Wall

DESIGN	BY Jeff Sims	CHECKED Greg Thornton	
DETAILS	BY B.Huddleston / J.Zhou	CHECKED Greg Thornton	
QUANTITIES	BY Mark Simonsen	CHECKED Greg Thornton	

STATE OF CALIFORNIA
DEPARTMENT OF TRANSPORTATION

DIVISION OF ENGINEERING SERVICES
STRUCTURE DESIGN
DESIGN BRANCH 1

BRIDGE NO.
POST MILE 99.8

CONFUSION HILL DECOMMISSION
STRUCTURE PLAN NO. 2

STRUCTURES DESIGN DETAIL SHEET (ENGLISH) (REV. 10/25/05)

ORIGINAL SCALE IN INCHES FOR REDUCED PLANS 0 1 2 3

CU 01
EA 397541

DISREGARD PRINTS BEARING EARLIER REVISION DATES

REVISION DATES: 4/6/09 4/13/09 4/16/09 10/30/09 11/30/09 2/26/10 5/25/10 7/28/10 8/19/10 01/12/11

SHEET 3 OF 5

FILE => various-c-sp02.dgn

USERNAME => trmnguye DATE PLOTTED => 06-MAY-2011 TIME PLOTTED => 14:54

DIST	COUNTY	ROUTE	POST MILES TOTAL PROJECT	SHEET No	TOTAL SHEETS
01	Men	101	99.4/R100.4	34	35

REGISTERED CIVIL ENGINEER 01-12-11 DATE

5-9-11
PLANS APPROVAL DATE

REGISTERED PROFESSIONAL ENGINEER Jeff Sims No. C46471 Exp. 6-30-11 CIVIL STATE OF CALIFORNIA

The State of California or its officers or agents shall not be responsible for the accuracy or completeness of electronic copies of this plan sheet.

Notes:

** Soil Nails are CTS/TITAN IBO 40/20 hollow bars

-·-·- Indicates existing structure

[X] - Indicates location number

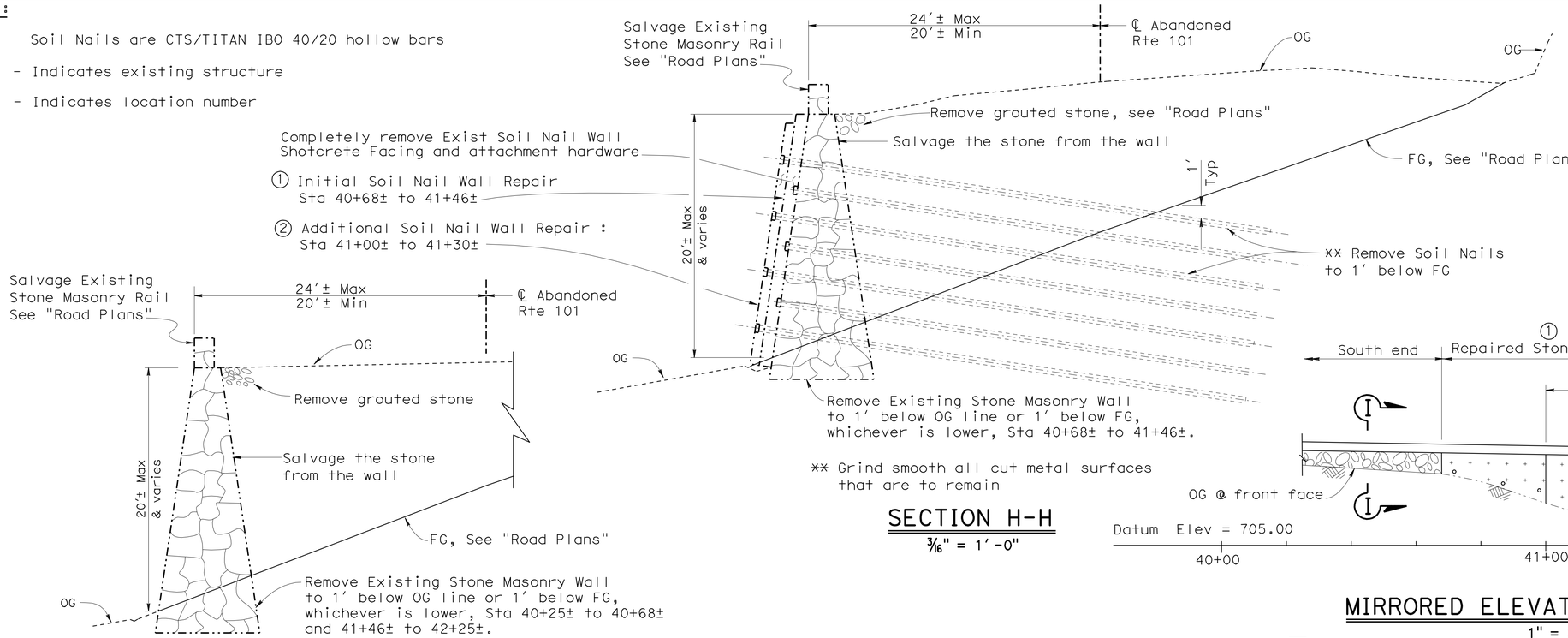

SECTION H-H
3/16" = 1'-0"

SECTION I-I
3/16" = 1'-0"

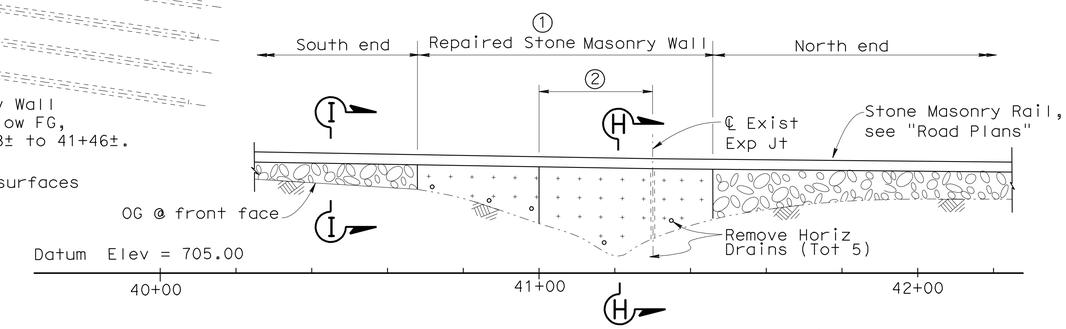

MIRRORED ELEVATION (DEVELOPED)
1" = 20'

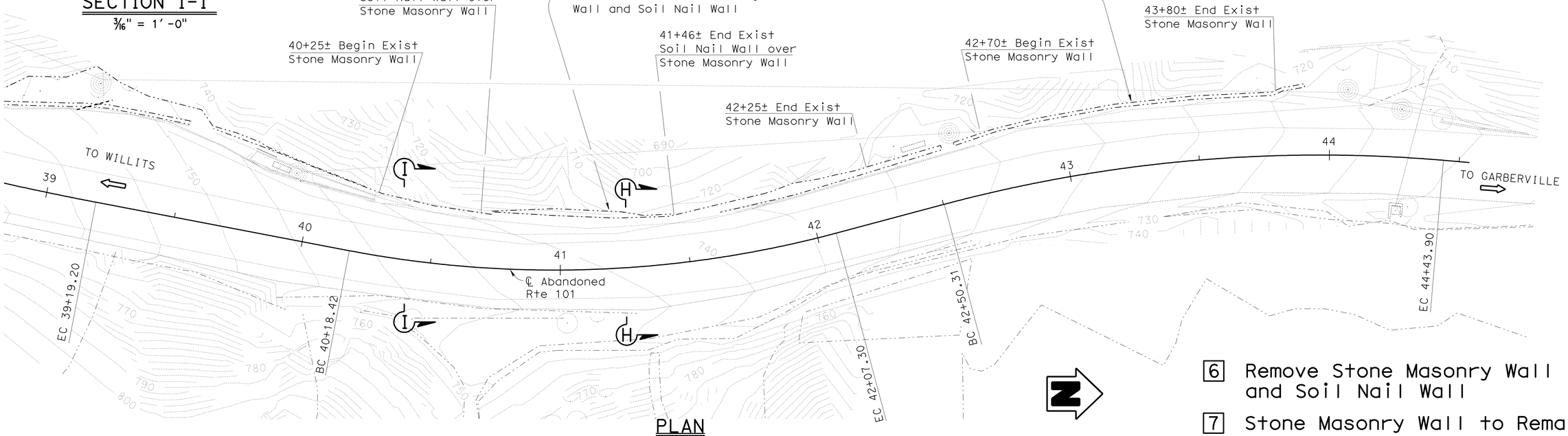

PLAN
1" = 20'

6 Remove Stone Masonry Wall and Soil Nail Wall

7 Stone Masonry Wall to Remain

DESIGN	BY Jeff Sims	CHECKED Greg Thornton	
DETAILS	BY B.Huddleston / J.Zhou	CHECKED Greg Thornton	
QUANTITIES	BY Mark Simonsen	CHECKED Greg Thornton	

STATE OF CALIFORNIA DEPARTMENT OF TRANSPORTATION

DIVISION OF ENGINEERING SERVICES STRUCTURE DESIGN
DESIGN BRANCH 1

BRIDGE NO.
POST MILE 99.9

CONFUSION HILL DECOMMISSION
STRUCTURE PLAN NO. 3

STRUCTURES DESIGN DETAIL SHEET (ENGLISH) (REV. 10/25/05)

ORIGINAL SCALE IN INCHES FOR REDUCED PLANS 0 1 2 3

CU 01
EA 397541

DISREGARD PRINTS BEARING EARLIER REVISION DATES

REVISION DATES: 3/29/09 3/29/10 01/12/11 2/26/10 05/25/10 7/26/10 8/25/10 8/26/10 8/30/10

SHEET 4 OF 5

FILE => various-c-sp03.dgn

USERNAME => s135318 DATE PLOTTED => 04-MAY-2011 TIME PLOTTED => 12:24

DIST	COUNTY	ROUTE	POST MILES TOTAL PROJECT	SHEET No	TOTAL SHEETS
01	Men	101	99.4/R100.4	35	35

REGISTERED CIVIL ENGINEER 01-12-11 DATE

5-9-11
PLANS APPROVAL DATE

REGISTERED PROFESSIONAL ENGINEER Jeff Sims No. C46471 Exp. 6-30-11 CIVIL STATE OF CALIFORNIA

The State of California or its officers or agents shall not be responsible for the accuracy or completeness of electronic copies of this plan sheet.

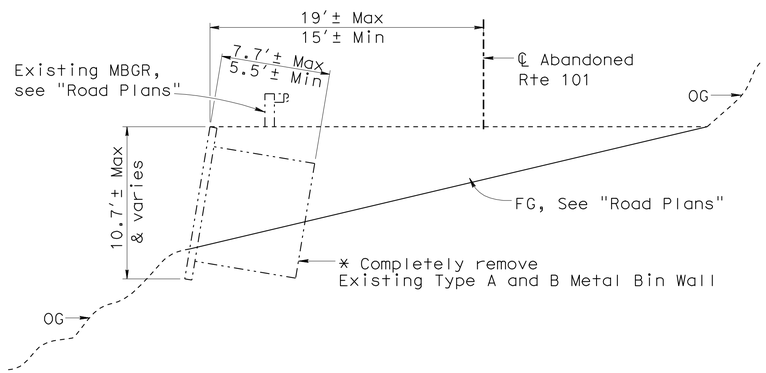

SECTION F-F

3/16" = 1′-0"

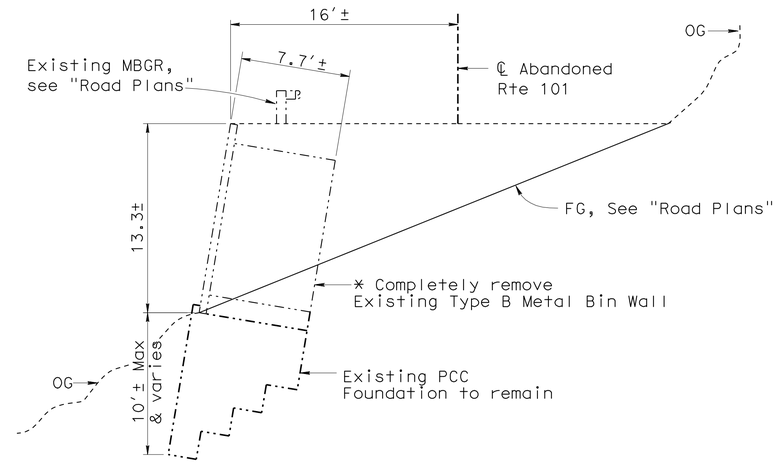

SECTION G-G

3/16" = 1′-0"

Notes:

* For limits and quantities of roadway excavation located within and below the metal bin wall, see "Road Plans"

-·-·- Indicates existing structure

[X] Indicates location number

Note 1: The wall may be buried or obscured by brush from Sta 47+46 to Sta 48+04

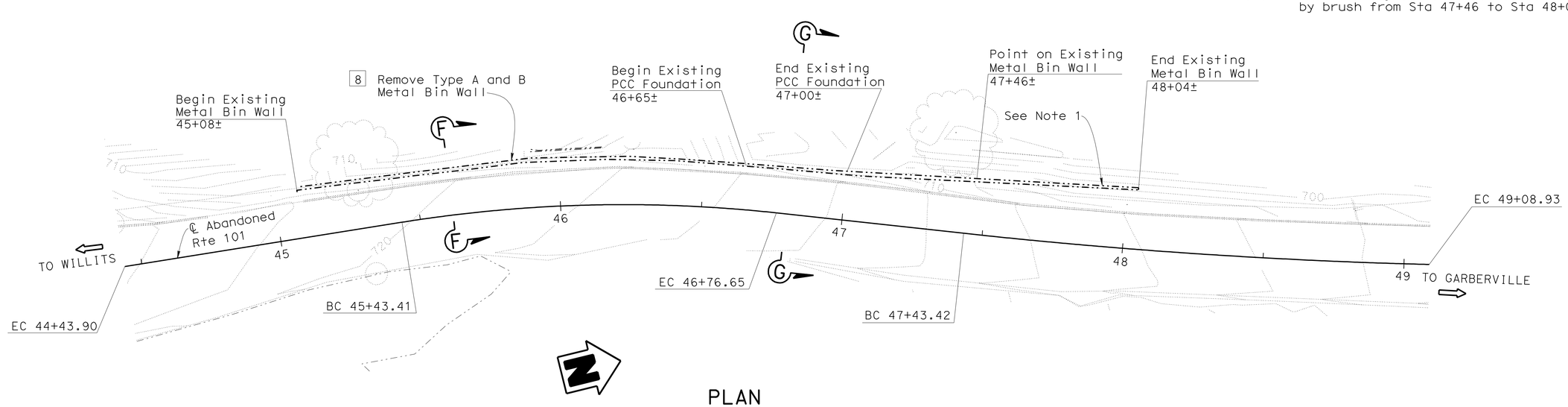

PLAN

1" = 20′

8 Remove Type A and B Metal Bin Wall

DESIGN	BY Jeff Sims	CHECKED Greg Thornton	
DETAILS	BY B.Huddleston / J.Zhou	CHECKED Greg Thornton	
QUANTITIES	BY Mark Simonsen	CHECKED Greg Thornton	

STATE OF CALIFORNIA
DEPARTMENT OF TRANSPORTATION

DIVISION OF ENGINEERING SERVICES
STRUCTURE DESIGN
DESIGN BRANCH 1

BRIDGE NO.
POST MILE 100.0

CONFUSION HILL DECOMMISSION
STRUCTURE PLAN NO. 4

STRUCTURES DESIGN DETAIL SHEET (ENGLISH) (REV. 10/25/05)

ORIGINAL SCALE IN INCHES FOR REDUCED PLANS 0 1 2 3

CU 01
EA 397541

DISREGARD PRINTS BEARING EARLIER REVISION DATES

REVISION DATES: 4/5/09 4/13/09 4/16/09 10/23/09 11/02/09 12/01/09 05/25/10 7/28/10 01/12/11

SHEET 5 OF 5

FILE => various-c-sp04.dgn

USERNAME => s135318 DATE PLOTTED => 04-MAY-2011 TIME PLOTTED => 12:24