Dist	COUNTY	ROUTE	POST MILES TOTAL PROJECT	SHEET No.	TOTAL SHEETS
01	Hum	101, 254	Var	12	28

Kemset Moore 1/11/12
REGISTERED CIVIL ENGINEER DATE

January 11, 2012
PLANS APPROVAL DATE

REGISTERED PROFESSIONAL ENGINEER Kemset K. Moore No. 64494 Exp. 6/30/13 CIVIL STATE OF CALIFORNIA

THE STATE OF CALIFORNIA OR ITS OFFICERS OR AGENTS SHALL NOT BE RESPONSIBLE FOR THE ACCURACY OR COMPLETENESS OF SCANNED COPIES OF THIS PLAN SHEET.

1

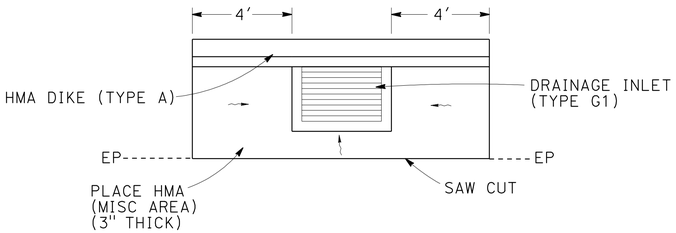

PLACE HMA (MISC AREA)

9

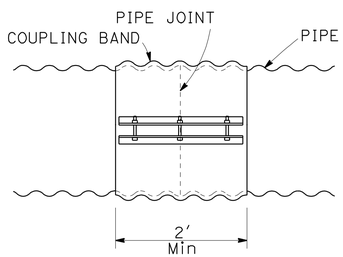

PIPE JOINT COUPLING BAND

SEE STD PLAN D87A FOR DETAILS NOT SHOWN

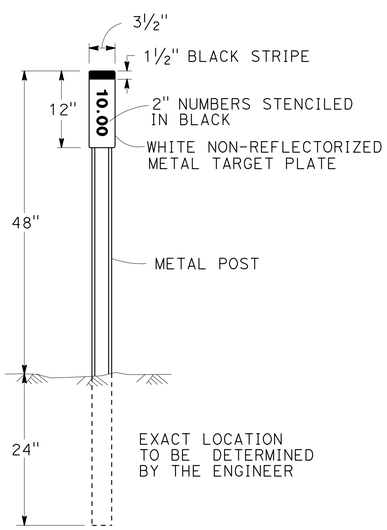

MARKER (CULVERT)

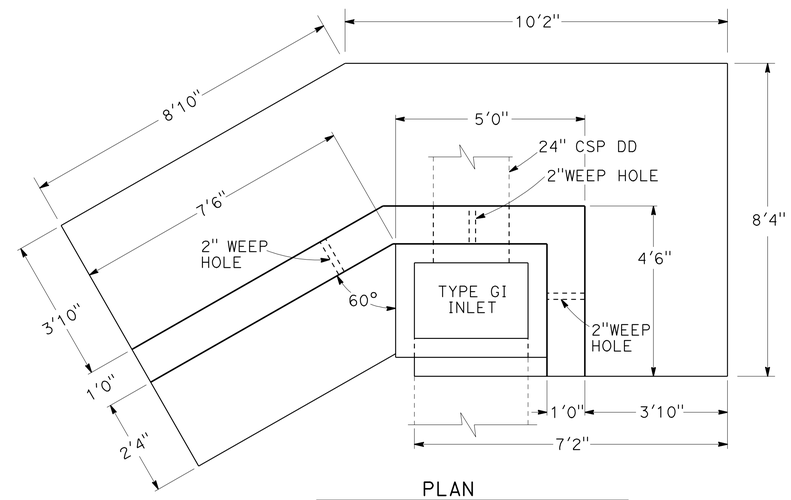

PLAN

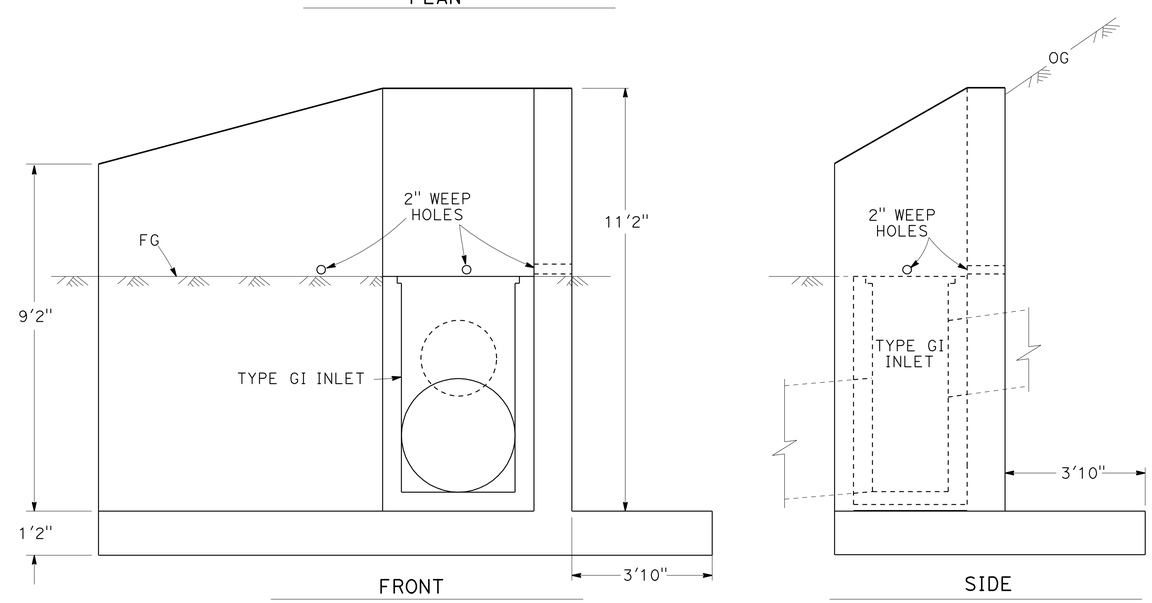

NOTES:
1. MODIFY DIMENSIONS TO FIT ACTUAL FIELD CONDITIONS.
2. FOR ADDITIONAL INFORMATION SEE STANDARD PLANS A62-B, B3-3, B6-10 (DETAIL U-12) AND D73.

RETAINING WALL TYPE 1A

1 3

1 REVISED PER ADDENDUM No.1 DATED FEBRUARY 21, 2012

DRAINAGE DETAILS DD-1

NO SCALE

STATE OF CALIFORNIA - DEPARTMENT OF TRANSPORTATION
Caltrans® DESIGN

FUNCTIONAL SUPERVISOR: Lucy Kostrzewa
CALCULATED-DESIGNED BY: Kemset Moore
CHECKED BY: Kemset Moore
REVISED BY
DATE REVISED

LAST REVISION 00-00-00
DATE PLOTTED => 21-FEB-2012
TIME PLOTTED => 11:12

Dist	COUNTY	ROUTE	POST MILES TOTAL PROJECT	SHEET No.	TOTAL SHEETS
01	Hum	101, 254	Var	14	28

Kemset Moore 1/11/12
REGISTERED CIVIL ENGINEER DATE

January 11, 2012
PLANS APPROVAL DATE

REGISTERED PROFESSIONAL ENGINEER Kemset K. Moore No. 64494 Exp. 6/30/13 CIVIL STATE OF CALIFORNIA

THE STATE OF CALIFORNIA OR ITS OFFICERS OR AGENTS SHALL NOT BE RESPONSIBLE FOR THE ACCURACY OR COMPLETENESS OF SCANNED COPIES OF THIS PLAN SHEET.

APC ALLOWABLE ALTERNATIVES

SYSTEM No.	GALVANIZED CSP 0.079" THICK	GALVANIZED CSP 0.138" THICK	GALVANIZED CSP 0.168" THICK	PLASTIC PIPE 0.050" THICK	RCP
1				X	X
3			X	X	X
5				X	X
6			X		
7		X		X	X
8				X	X
9				X	

NOTES

1. (N) NOT A SEPARATE PAY ITEM, FOR INFORMATION ONLY.
2. ALL CULVERT JOINTS SHALL BE POSITIVE.
3. THE JOINT CLASSIFICATION FOR DOWNDRAIN SHALL BE DOWNDRAIN.
4. LENGTH OF PIPES AND ANGLE OF ELBOWS SHALL BE VERIFIED IN THE FIELD BY THE CONTRACTOR.
5. FOR MINIMUM ALLOWABLE CLASS OF RCP SEE STANDARD PLAN A62D.
6. ALL PLASTIC PIPE SHALL BE SMOOTH INTERIOR WALL TYPE.

DRAINAGE QUANTITIES

ABANDON CULVERT (EA)	REMOVE FES (EA)	REMOVE INLET (EA)	REMOVE CULVERT (EA)	REMOVE DOWNDRAIN (EA)	REMOVE CONCRETE (CY)	24" ALTERNATIVE PIPE CULVERT (LF)	36" ALTERNATIVE PIPE CULVERT (LF)	30" CSP (0.138" THICK) (LF)	24" CSP DD (0.138" THICK) (LF)	30" CSP DD (0.138" THICK) (LF)	36" CSP INLET (0.138" THICK) (LF)	CONCRETE INVERT PAVING (CY)	24" ANCHOR ASSEMBLY (EA)	30" ANCHOR ASSEMBLY (EA)	36" SFES (EA)	REMOVE AC DIKE (LF)	PLACE HMA DIKE (TYPE A) (LF)	HMA (TYPE A) (TON)	IMPORTED BORROW (CY)	IMPORTED ROCKY MATERIAL (CY)	SAND BACKFILL (CY)	MINOR CONCRETE (MINOR STRUCTURE) (CY)	RSP (1/4TON, METHOD A) (CY)	MINOR CONCRETE (BACKFILL) (CY)	PLACE HMA (Misc AREA) (SQYD)	RSP FABRIC (SQYD)	CABLE RAILING (LF)	MISC IRON AND STEEL (LB)	MARKER (CULVERT) (EA)	(N) HEIGHT OF INLET "H" (LF)	(N) TYPE OF INLET	(N) TYPE OF GRATE	REMARKS	LOCATION	DRAINAGE UNIT	DRAINAGE SYSTEM NO.
			1																														36" x 22' CSP	PM 2.31	a	1
1																					10.5												36" x 40' CSP		b	
							47																												c	
															1																				d	
																							12			30							ROCK ENERGY DISSIPATOR		e	
																													2				LABEL "PM 2.31"		f	
												23.0																					54" x 396' CSP	PM R11.26	a	2
				1																													30" x 76' CSP DD		b	
										76																									c	
														3																					d	
			1																														24" x 84' CSP	PM R16.27	a	3
		1																																	b	
					1.54																												RETAINING WALL		c	
				1																													24" x 10' CSP DD		d	
							84																												e	
																						1.55						263		5.7	G1	24-9			f	
									10													11.40	1										RETAINING WALL TYPE 1A		g	
																																	45° & 55° ELBOWS		h	
																											17.2								i	
	1																		1															PM 25.60	a	4
											5.0											0.42	1					177		4.5	OMP	PLATE		b	
																			26																c	
								5																											d	
																						1.40	1										FIELD CAST		e	
												0.1																					24" x 86' CSP	PM 28.37	a	5
				1																													24" x 60' CSP DD		b	
									60																								30° ELBOW		c	
													3																						d	
				1																													12" x 62' CSP DD	PM 66.25	a	6
			1																														12" x 19' CSP		b	
						19																													c	
									62																								20° ELBOW		d	
																				36													FILL SCOUR HOLE		e	
													2																						f	
																													1				LABEL "PM 66.25"		g	
			1																														18" x 14' CSP	PM 7.2	a	7
1																					2.7												18" x 40' CSP		b	
																						0.95						239		3	G1	24-12X			c	
						46																													d	
																							10			27							ROCK ENERGY DISSIPATOR		e	
																			2																f	
																								7.5											g	
			1																														36" x 44' CSP	PM 10.1	a	8
																						1.17						239		4	G1	24-12X			b	
							48																												c	
																			5																d	
	1																												2				LABEL "PM 10.10"		e	
																																			f	
		1																																PM 12.03	a	9
																						1.55						239		5.7	G1	24-12X			b	
			1			86																													c	
																																	18" x 42' CSP		d	
1																					3.3												18" x 50' CSP		e	
																				2															f	
																		1.5							2.7										g	
																12																			h	
																	12	0.3	1			1													i	
3	2	2	6	4	1.54	151	179	5	132	76	5.0	23.1	5	3	1	12	12	1.8	33	38	16.5	18.94	22	7.5	2.7	57	17.2	1157	5	TOTAL						

1 REVISED PER ADDENDUM No.1 DATED FEBRUARY 21, 2012

DRAINAGE QUANTITIES DQ-1

STATE OF CALIFORNIA - DEPARTMENT OF TRANSPORTATION
Caltrans DESIGN

FUNCTIONAL SUPERVISOR: Lucy Kostrzewa
CALCULATED-DESIGNED BY: Kemset Moore
CHECKED BY: Kemset Moore
REVISED BY
DATE REVISED

LAST REVISION 00-00-00 | DATE PLOTTED => 21-FEB-2012 | TIME PLOTTED => 11:12