Dist	COUNTY	ROUTE	POST MILES TOTAL PROJECT	SHEET No.	TOTAL SHEETS
01	Hum	299	30.7	1	11

INDEX OF PLANS

SHEET No	DESCRIPTION
1	TITLE AND LOCATION MAP
2	TYPICAL CROSS SECTION
3	LAYOUT
4	CONSTRUCTION DETAILS
5	EROSION CONTROL QUANTITIES
6-7	DRAINAGE PLAN, PROFILE, DETAILS AND QUANTITIES
8	CONSTRUCTION AREA SIGNS
9	SUMMARY OF QUANTITIES
10	TRAFFIC CONTROL SYSTEM
11	NEW OR REVISED STANDARD PLANS

THE STANDARD PLANS LIST APPLICABLE TO THIS CONTRACT IS INCLUDED IN THE NOTICE TO BIDDERS AND SPECIAL PROVISIONS BOOK.

STATE OF CALIFORNIA

DEPARTMENT OF TRANSPORTATION

PROJECT PLANS FOR CONSTRUCTION ON

STATE HIGHWAY

IN HUMBOLDT COUNTY ABOUT 8 MILES WEST OF WILLOW CREEK AT 2.5 MILES WEST OF EAST FORK WILLOW CREEK BRIDGE

TO BE SUPPLEMENTED BY STANDARD PLANS DATED 2010

LOCATION MAP

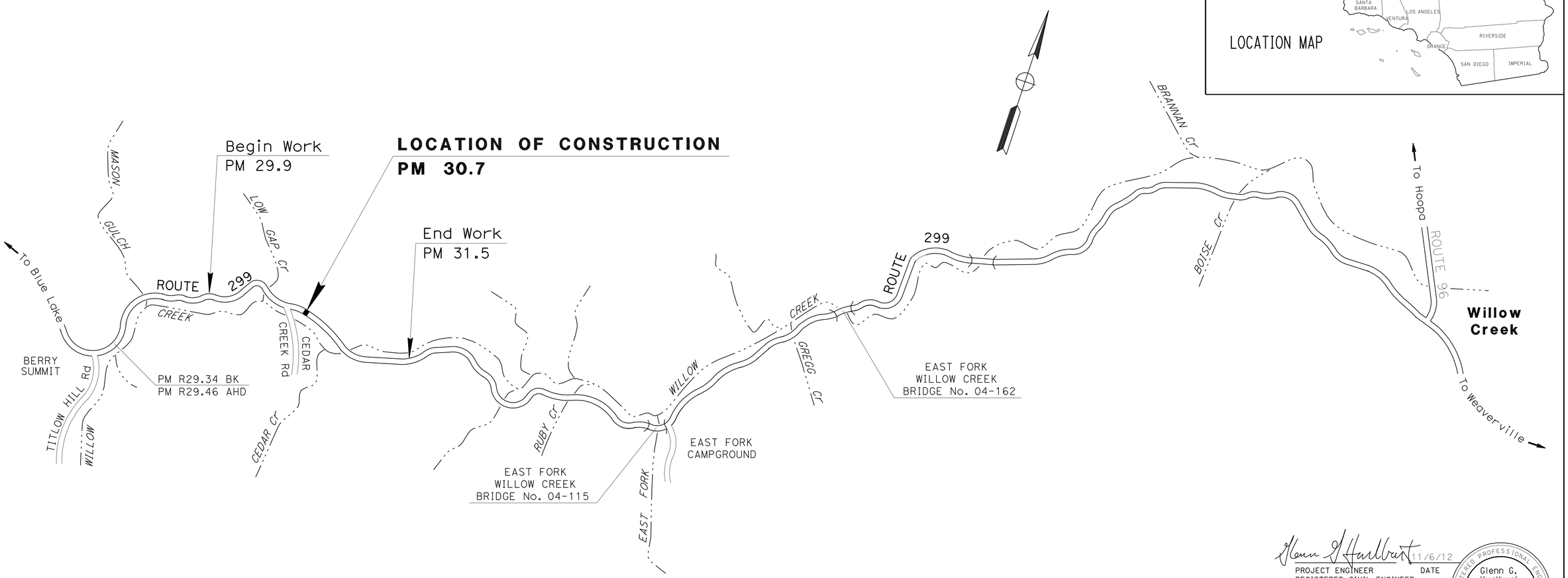

NO SCALE

THE CONTRACTOR SHALL POSSESS THE CLASS (OR CLASSES) OF LICENSE AS SPECIFIED IN THE "NOTICE TO BIDDERS."

Glenn G. Hurlburt 11/6/12
PROJECT ENGINEER DATE
REGISTERED CIVIL ENGINEER

REGISTERED PROFESSIONAL ENGINEER
Glenn G. Hurlburt
No. 68303
Exp. 9/30/13
CIVIL
STATE OF CALIFORNIA

December 7, 2012
PLANS APPROVAL DATE

THE STATE OF CALIFORNIA OR ITS OFFICERS OR AGENTS SHALL NOT BE RESPONSIBLE FOR THE ACCURACY OR COMPLETENESS OF SCANNED COPIES OF THIS PLAN SHEET.

PROJECT MANAGER: Kim Floyd
DESIGN ENGINEER: Kelly Timmons

CONTRACT No.	01-437404
PROJECT ID	0100000194

LAST REVISION 00-00-00
DATE PLOTTED => 10-APR-2013
TIME PLOTTED => 09:30

Dist	COUNTY	ROUTE	POST MILES TOTAL PROJECT	SHEET No.	TOTAL SHEETS
01	Hum	299	30.7	2	11

REGISTERED CIVIL ENGINEER — DATE 11/6/12

December 7, 2012
PLANS APPROVAL DATE

REGISTERED PROFESSIONAL ENGINEER — Glenn G. Hurlburt — No. 68303 — Exp. 9/30/13 — CIVIL — STATE OF CALIFORNIA

THE STATE OF CALIFORNIA OR ITS OFFICERS OR AGENTS SHALL NOT BE RESPONSIBLE FOR THE ACCURACY OR COMPLETENESS OF SCANNED COPIES OF THIS PLAN SHEET.

NOTES

1. FOR COMPLETE RIGHT OF WAY DATA, SEE RIGHT OF WAY RECORD MAPS AT DISTRICT OFFICE.
2. DIMENSIONS OF THE PAVEMENT STRUCTURES (STRUCTURAL SECTIONS) ARE SUBJECT TO TOLERANCES SPECIFIED IN THE STANDARD SPECIFICATIONS.
3. SUPERELEVATION AS SHOWN OR AS DIRECTED BY THE ENGINEER.
4. EXISTING UTILITY FACILITIES HAVE NOT BEEN PLOTTED ON THESE SHEETS.

DESIGN DESIGNATION (ROUTE 299)

2012 ADT = 3300 D = 60%
2028 ADT = 3620 T = 11%
V = 30
DHV = 460
ESAL = 1,980,000
TI_{20} = 9.5

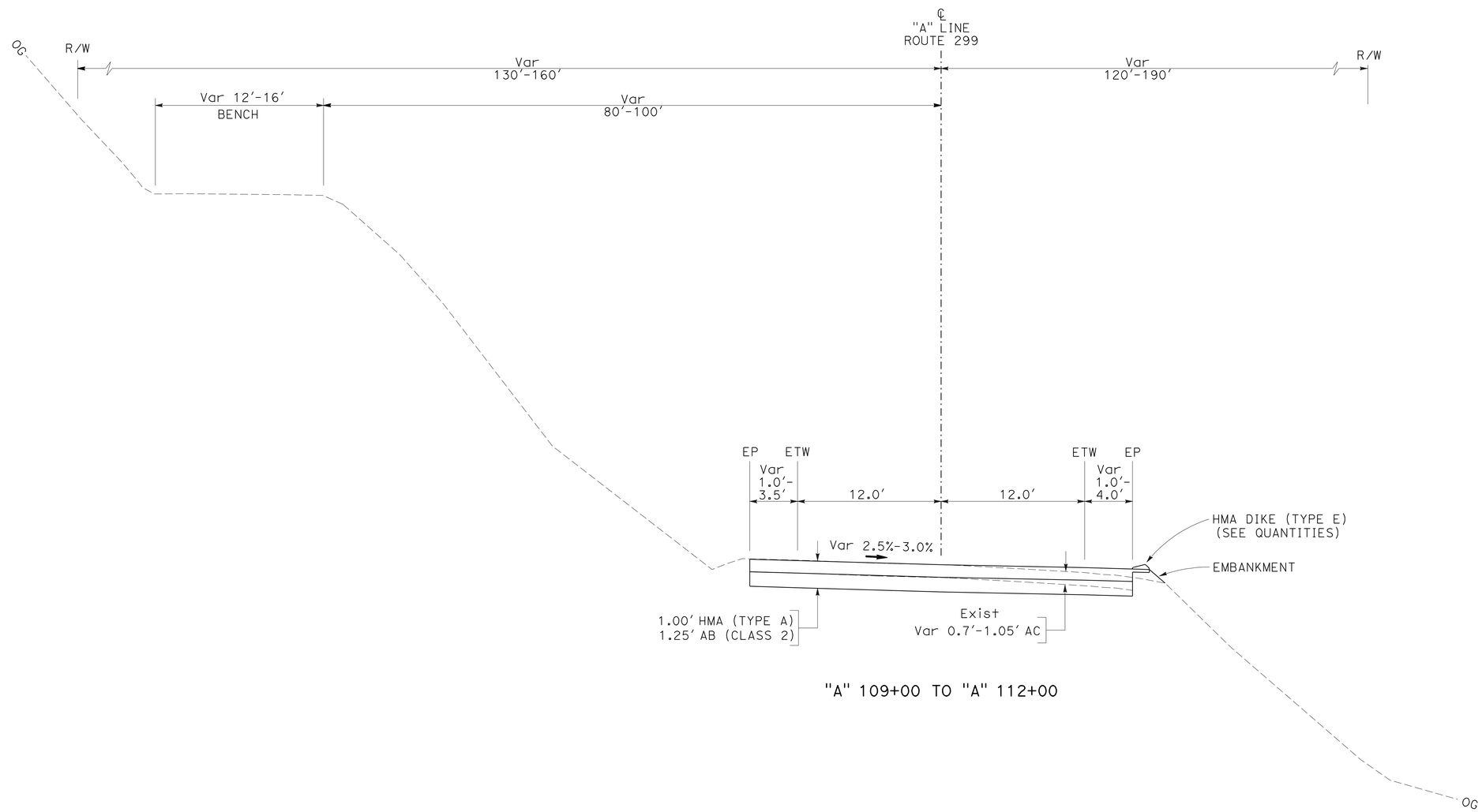

"A" 109+00 TO "A" 112+00

TYPICAL CROSS SECTIONS X-1

NO SCALE

STATE OF CALIFORNIA - DEPARTMENT OF TRANSPORTATION
Caltrans® DESIGN

FUNCTIONAL SUPERVISOR: Kelly Timmons
CALCULATED-DESIGNED BY: Glenn Hurlburt
CHECKED BY: X
REVISED BY
DATE REVISED

LAST REVISION 00-00-00 | DATE PLOTTED => 10-APR-2013 | TIME PLOTTED => 09:30

Dist	COUNTY	ROUTE	POST MILES TOTAL PROJECT	SHEET No.	TOTAL SHEETS
01	Hum	299	30.7	3	11

REGISTERED CIVIL ENGINEER 11/6/12 DATE

December 7, 2012
PLANS APPROVAL DATE

REGISTERED PROFESSIONAL ENGINEER Glenn G. Hurlburt No. 68303 Exp. 9/30/13 CIVIL STATE OF CALIFORNIA

THE STATE OF CALIFORNIA OR ITS OFFICERS OR AGENTS SHALL NOT BE RESPONSIBLE FOR THE ACCURACY OR COMPLETENESS OF SCANNED COPIES OF THIS PLAN SHEET.

NOTE

1. FOR COMPLETE RIGHT OF WAY DATA, SEE RIGHT OF WAY RECORD MAPS AT DISTRICT OFFICE.

LEGEND

- HORIZONTAL DRIAN
- RECONNECT HORIZONTAL DRIAN
- PAVEMENT DELINEATION DETAIL NUMBER
- LIMITS OF EROSION CONTROL

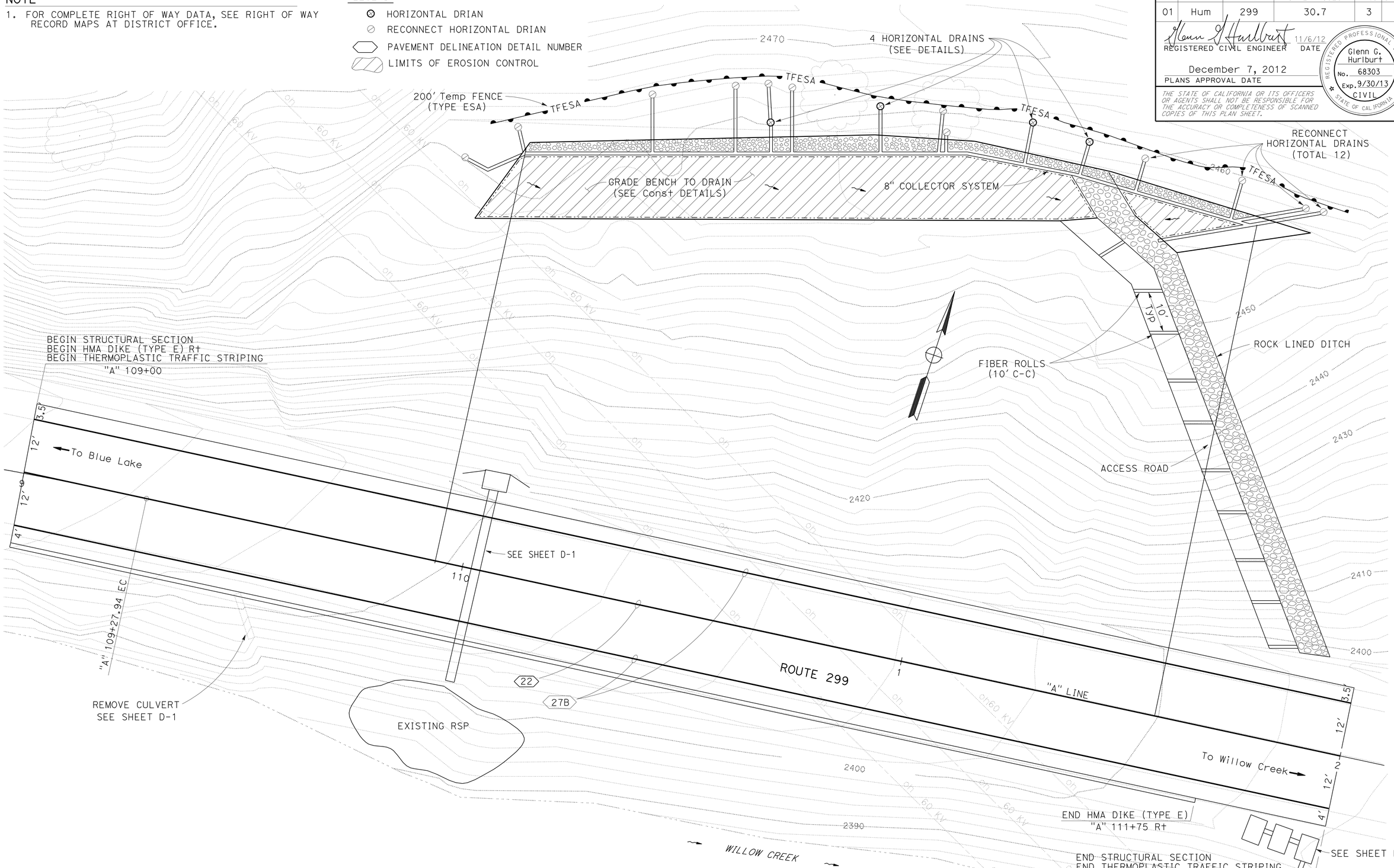

LAYOUT L-1

SCALE 1"=10'

STATE OF CALIFORNIA - DEPARTMENT OF TRANSPORTATION
Caltrans
DESIGN

FUNCTIONAL SUPERVISOR: Kelly Timmons
CALCULATED-DESIGNED BY: Glenn Hurlburt
CHECKED BY: X
REVISED BY
DATE REVISED

LAST REVISION 00-00-00
DATE PLOTTED => 10-APR-2013
TIME PLOTTED => 09:30

Dist	COUNTY	ROUTE	POST MILES TOTAL PROJECT	SHEET No.	TOTAL SHEETS
01	Hum	299	30.7	4	11

REGISTERED CIVIL ENGINEER — DATE 11/6/12

December 7, 2012
PLANS APPROVAL DATE

REGISTERED PROFESSIONAL ENGINEER — Glenn G. Hurlburt — No. 68303 — Exp. 9/30/13 — CIVIL — STATE OF CALIFORNIA

THE STATE OF CALIFORNIA OR ITS OFFICERS OR AGENTS SHALL NOT BE RESPONSIBLE FOR THE ACCURACY OR COMPLETENESS OF SCANNED COPIES OF THIS PLAN SHEET.

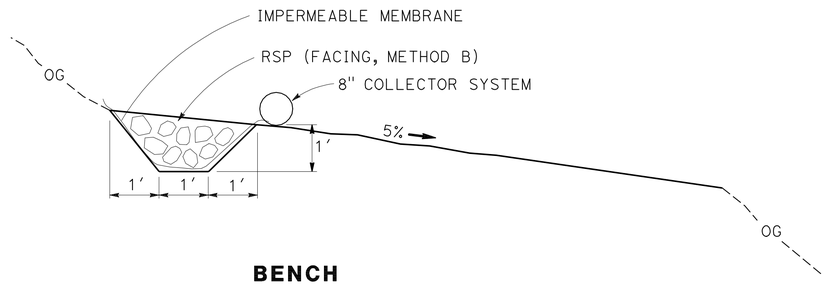

BENCH
CROSS SECTION
NO SCALE

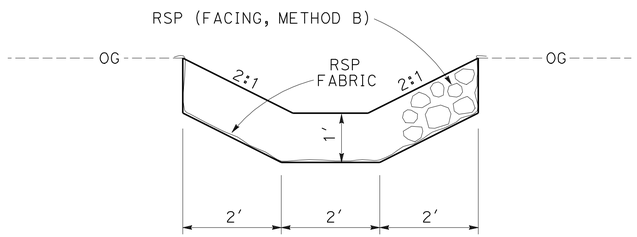

ROCK LINED DITCH
CROSS SECTION
NO SCALE

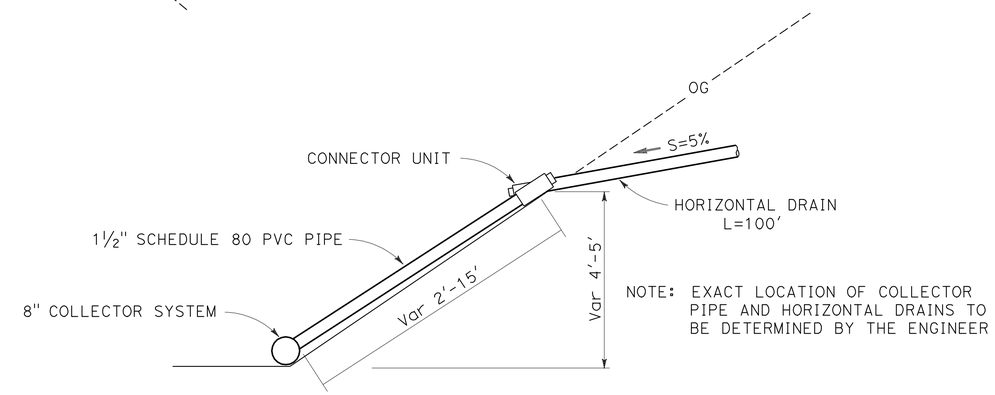

NOTE: EXACT LOCATION OF COLLECTOR PIPE AND HORIZONTAL DRAINS TO BE DETERMINED BY THE ENGINEER

TYPICAL HORIZONTAL DRAIN INSTALLATION
NO SCALE

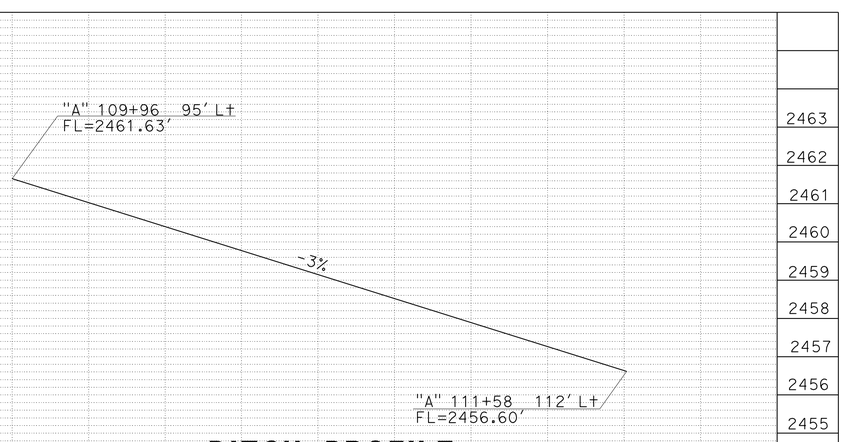

DITCH PROFILE
SCALE: 1" = 20' Horiz
1" = 2' Vert

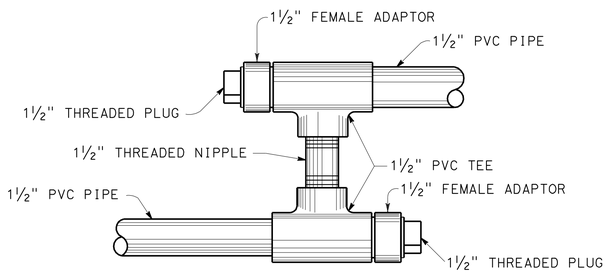

PLAN VIEW

HORIZONTAL DRAIN CONNECTOR UNIT
NO SCALE

CONSTRUCTION DETAILS
C-1

SCALE AS SHOWN

STATE OF CALIFORNIA - DEPARTMENT OF TRANSPORTATION
Caltrans
DESIGN

FUNCTIONAL SUPERVISOR: Kelly Timmons
CALCULATED-DESIGNED BY: Glenn Hurlburt
CHECKED BY: X
REVISED BY
DATE REVISED

LAST REVISION 00-00-00
DATE PLOTTED => 10-APR-2013
TIME PLOTTED => 09:31

Dist	COUNTY	ROUTE	POST MILES TOTAL PROJECT	SHEET No.	TOTAL SHEETS
01	DN	101	R4.0	5	11

Laura Lazzarotto
LICENSED LANDSCAPE ARCHITECT

December 7, 2012
PLANS APPROVAL DATE

LICENSED LANDSCAPE ARCHITECT
Laura Lazzarotto
Signature
8-31-13
Renewal Date
11/6/12
Date
STATE OF CALIFORNIA

THE STATE OF CALIFORNIA OR ITS OFFICERS OR AGENTS SHALL NOT BE RESPONSIBLE FOR THE ACCURACY OR COMPLETENESS OF SCANNED COPIES OF THIS PLAN SHEET.

SEED MIX

SEED	BOTANICAL NAME (COMMON NAME)	PERCENT GERMINATION (MINIMUM)	POUNDS PURE LIVE SEED PER ACRE (SLOPE MEASUREMENT)
MIX 1	FESTUCA IDAHOENSIS IDAHO FESCUE	80	10
	HORDEUM VULGARE VAR UC 937 COMMON BARLEY	80	20
	LOTUS PURSHIANUS (INNOCULATED) PURSHINGS LOTUS	80	2
	MELICA CALIFORNICA CALIFORNIA ONIONGRASS	80	9
	VULPIA MICROSTACHYS THREE WEEKS FESCUE	80	6

FIBER ROLLS

SEQUENCE	ITEM	MATERIAL		REMARKS
		DESCRIPTION	TYPE	
FIBER ROLLS MUST BE INSTALLED BEFORE EROSION CONTROL.	FIBER ROLLS	FIBER ROLL	TYPE B 8" TO 10" Dia	TYPE 1 FIBER ROLL INSTALLATION

EROSION CONTROL TYPE 1

SEQUENCE	ITEM	MATERIAL		APPLICATION RATE
		DESCRIPTION	TYPE	
STEP 1	COMPOST	COMPOST	MEDIUM	135 CY/ACRE
STEP 2	HYDROSEED	SEED	MIX 1	47 LB/ACRE
		FIBER	WOOD	1200 LB/ACRE
STEP 3	STRAW	STRAW	RICE	2 TONS/ACRE
STEP 4	HYDROMULCH	FIBER	WOOD	1200 LB/ACRE
		TACKIFIER	PSYLLIUM	150 LB/ACRE

EROSION CONTROL QUANTITIES

LOCATION			DESCRIPTION	FIBER ROLL	COMPOST	STRAW	HYDROSEED	HYDROMULCH
STATION	L†	R†		LF	SQFT	SQFT	SQFT	SQFT
"A1" 110+80 TO 112+00	X		EROSION CONTROL TYPE 1	300	3500	3500	3500	3500
			TOTAL	300	3500	3500	3500	3500

EROSION CONTROL QUANTITIES
ECQ-1

REVISED BY | DATE REVISED
Laura Lazzarotto | Todd Lark
CALCULATED-DESIGNED BY | CHECKED BY
SENIOR LANDSCAPE ARCHITECT
Ron Flory

STATE OF CALIFORNIA - DEPARTMENT OF TRANSPORTATION
Caltrans® LANDSCAPE ARCHITECTURE

LAST REVISION 00-00-00 | DATE PLOTTED => 10-APR-2013 | TIME PLOTTED => 09:31

Dist	COUNTY	ROUTE	POST MILES TOTAL PROJECT	SHEET No.	TOTAL SHEETS
01	Hum	299	30.7	6	11

REGISTERED CIVIL ENGINEER — DATE 11/6/12

December 7, 2012
PLANS APPROVAL DATE

REGISTERED PROFESSIONAL ENGINEER — Glenn G. Hurlburt — No. 68303 — Exp. 9/30/13 — CIVIL — STATE OF CALIFORNIA

THE STATE OF CALIFORNIA OR ITS OFFICERS OR AGENTS SHALL NOT BE RESPONSIBLE FOR THE ACCURACY OR COMPLETENESS OF SCANNED COPIES OF THIS PLAN SHEET.

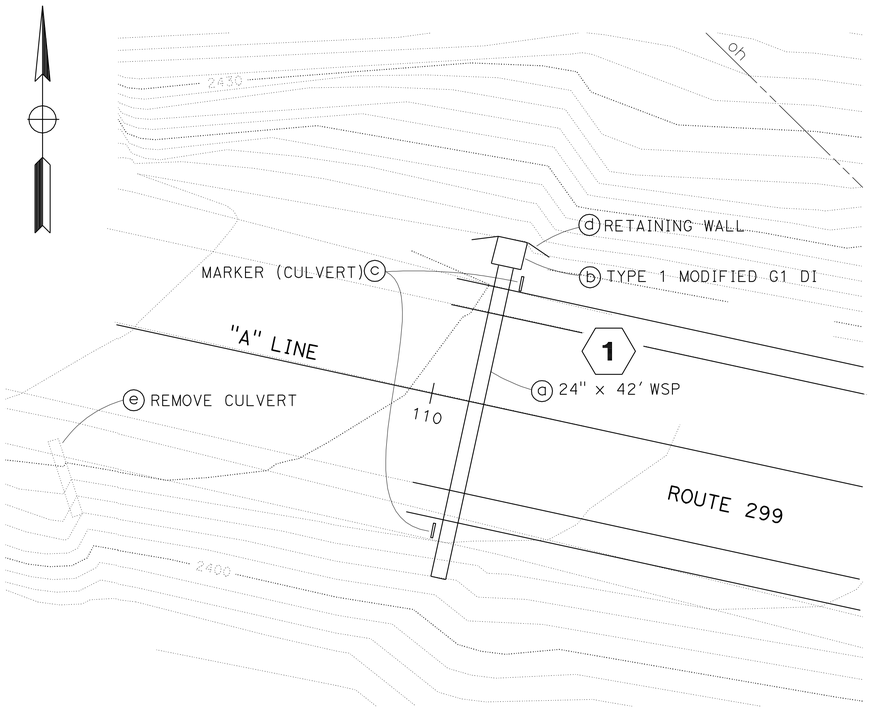

PLAN VIEW
SCALE: 1" = 10'

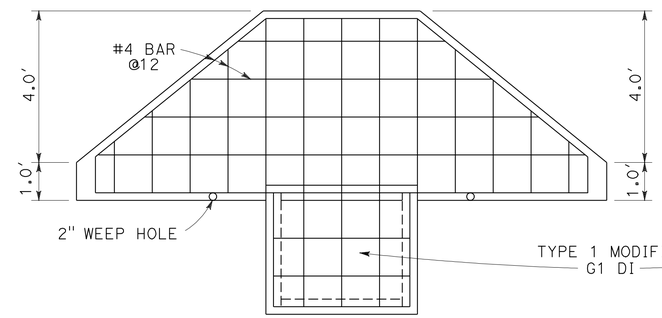

FRONT VIEW

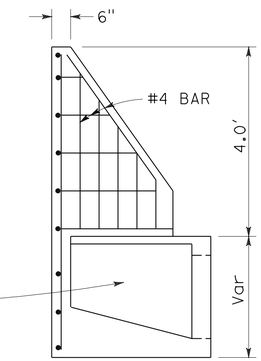

SIDE VIEW

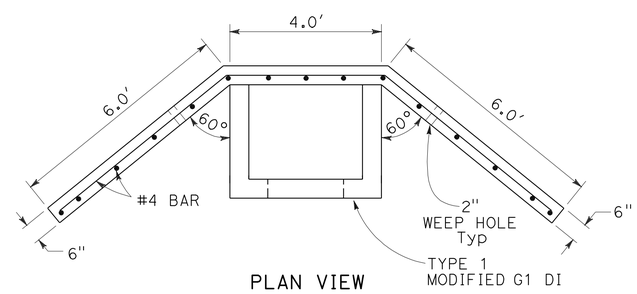

PLAN VIEW

NOTES:

1. ALL REINFORCING STEEL #4 BAR.
2. ALL VERTICAL AND HORIZONTAL BARS AT 12" SPACING.
3. MODIFY DIMENSIONS TO FIT ACTUAL FIELD CONDITIONS.
4. MINIMUM 2" CONCRETE COVER OVER REBAR.
5. FOR DETAILS NOT SHOWN SEE STD PLAN D-73.

TYPE 1 MODIFIED G1 DI AND RETAINING WALL

1 ⓑⓓ

NO SCALE

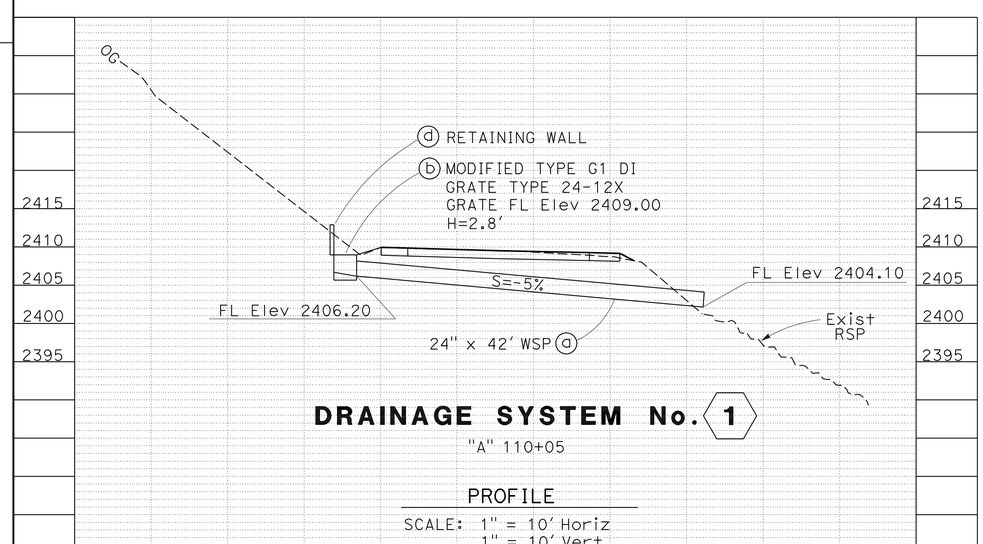

DRAINAGE SYSTEM No. 1
"A" 110+05

PROFILE
SCALE: 1" = 10' Horiz
1" = 10' Vert

THIS PLAN ACCURATE FOR DRAINAGE WORK ONLY

DRAINAGE PLAN, PROFILE AND DETAILS D-1

SCALE AS SHOWN

STATE OF CALIFORNIA - DEPARTMENT OF TRANSPORTATION
DESIGN
Caltrans

FUNCTIONAL SUPERVISOR: Kelly Timmons
CALCULATED-DESIGNED BY: Glenn Hurlburt
CHECKED BY: X
REVISED BY
DATE REVISED

LAST REVISION 00-00-00
DATE PLOTTED => 10-APR-2013
TIME PLOTTED => 09:31

Dist	COUNTY	ROUTE	POST MILES TOTAL PROJECT	SHEET No.	TOTAL SHEETS
01	Hum	299	30.7	7	11

REGISTERED CIVIL ENGINEER 11/6/12 DATE

December 7, 2012
PLANS APPROVAL DATE

REGISTERED PROFESSIONAL ENGINEER Glenn G. Hurlburt No. 68303 Exp. 9/30/13 CIVIL STATE OF CALIFORNIA

THE STATE OF CALIFORNIA OR ITS OFFICERS OR AGENTS SHALL NOT BE RESPONSIBLE FOR THE ACCURACY OR COMPLETENESS OF SCANNED COPIES OF THIS PLAN SHEET.

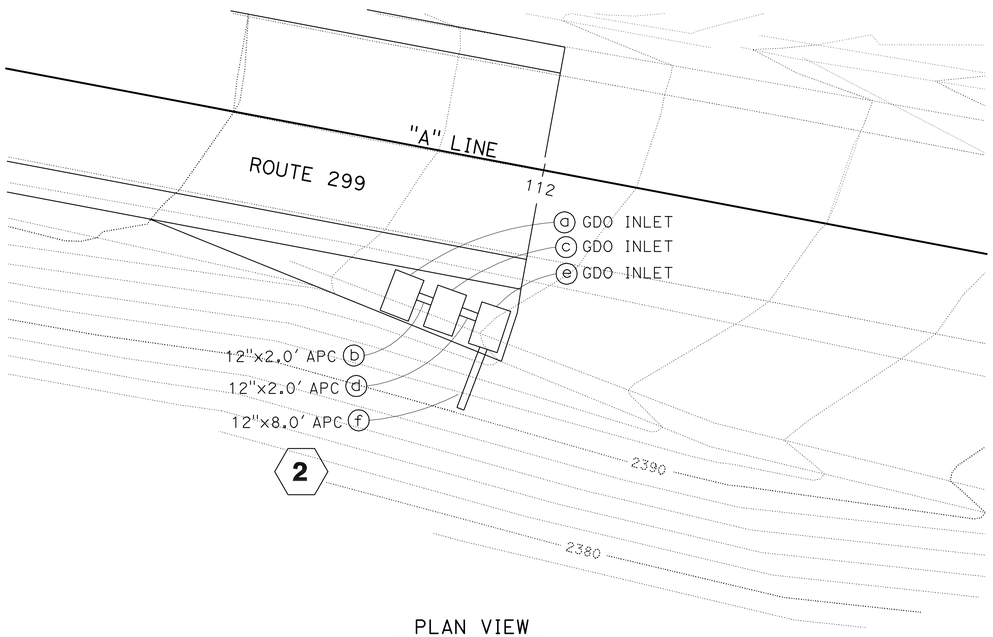

PLAN VIEW
SCALE: 1" = 10'

ALLOWABLE CULVERT ALTERNATIVES

SYSTEM No. ⬡	DRAINAGE UNIT ○	CSP .079" THICK (POLY COATED)	CSP .168" THICK	PLASTIC HDPE	WSP .250" THICK
1	a				X
2	b	X	X	X	
	d	X	X	X	
	f	X	X	X	

QUANTITIES

DRAINAGE SYSTEM No. ⬡	DRAINAGE UNIT No. ○	24" WELDED STEEL PIPE (.250" THICK) LF	MINOR CONCRETE (MINOR STRUCTURE) CY	MARKER (CULVERT) EA	Misc IRON AND STEEL, GRATE LB	REMOVE CULVERT EA	12" APC LF	HMA (Misc AREA) SQYD	REMARKS
1	a	42							
	b		0.9		239				TYPE 24-12X GRATE, H=2.8', "A" 110+05
	c			2					STENCIL PM 30.65
	d		1						
	e					1			12" X 20' CSP
2	a		1.94		473				TYPE 24-12X GRATE, H=4.0'
	b						2.0		
	c		1.94		473				TYPE 24-12X GRATE, H=4.0'
	d						2.0		
	e		1.62		473				TYPE 24-12X GRATE, H=3.0'
	f						8.0		
	g							35	
TOTAL		42	7.4	2	1658	1	12.0	35	

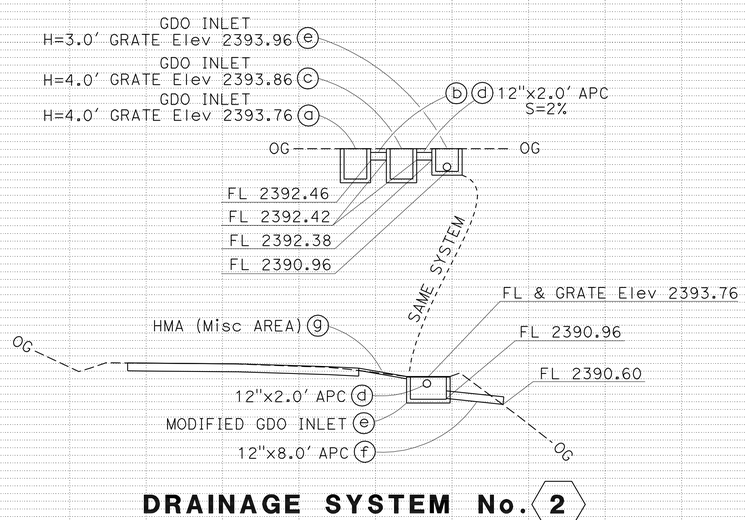

DRAINAGE SYSTEM No. 2
"A" 112+20

PROFILE
SCALE: 1" = 10' Horiz
1" = 10' Vert

DRAINAGE PLAN, PROFILE AND QUANTITIES
D-2

SCALE AS SHOWN

STATE OF CALIFORNIA - DEPARTMENT OF TRANSPORTATION
Caltrans DESIGN
FUNCTIONAL SUPERVISOR Kelly Timmons
CALCULATED-DESIGNED BY Glenn Hurlburt
CHECKED BY X
REVISED BY
DATE REVISED

LAST REVISION 00-00-00 | DATE PLOTTED => 10-APR-2013 | TIME PLOTTED => 09:31

Dist	COUNTY	ROUTE	POST MILES TOTAL PROJECT	SHEET No.	TOTAL SHEETS
01	Hum	299	30.7	8	11

REGISTERED CIVIL ENGINEER 11/6/12 DATE

December 7, 2012
PLANS APPROVAL DATE

REGISTERED PROFESSIONAL ENGINEER Glenn G. Hurlburt No. 68303 Exp. 9/30/13 CIVIL STATE OF CALIFORNIA

THE STATE OF CALIFORNIA OR ITS OFFICERS OR AGENTS SHALL NOT BE RESPONSIBLE FOR THE ACCURACY OR COMPLETENESS OF SCANNED COPIES OF THIS PLAN SHEET.

STATIONARY MOUNTED CONSTRUCTION AREA SIGNS

SIGN ◯	SIGN CODE	SIGN MESSAGE	PANEL SIZE	NUMBER OF POSTS AND SIZE	NUMBER OF SIGNS
A	C40 (CA)	TRAFFIC FINES DOUBLED IN CONSTRUCTION ZONES	108" x 42"	2 - 6" x 6"	2
B	W20-1	ROAD WORK AHEAD	48" x 48"	1 - 4" x 6"	2
C	G20-2	END ROAD WORK	36" x 18"	1 - 4" x 4"	2
D	W20-1	ROAD WORK AHEAD	36" x 36"	1 - 4" x 6"	2
E	W11-1	BICYCLE SYMBOL	36" x 36"	1 - 4" x 6"	2
	W16-1	SHARE THE ROAD	24" x 30"		2

NOTE: EXACT SIGN LOCATIONS TO BE DETERMINED BY THE ENGINEER.

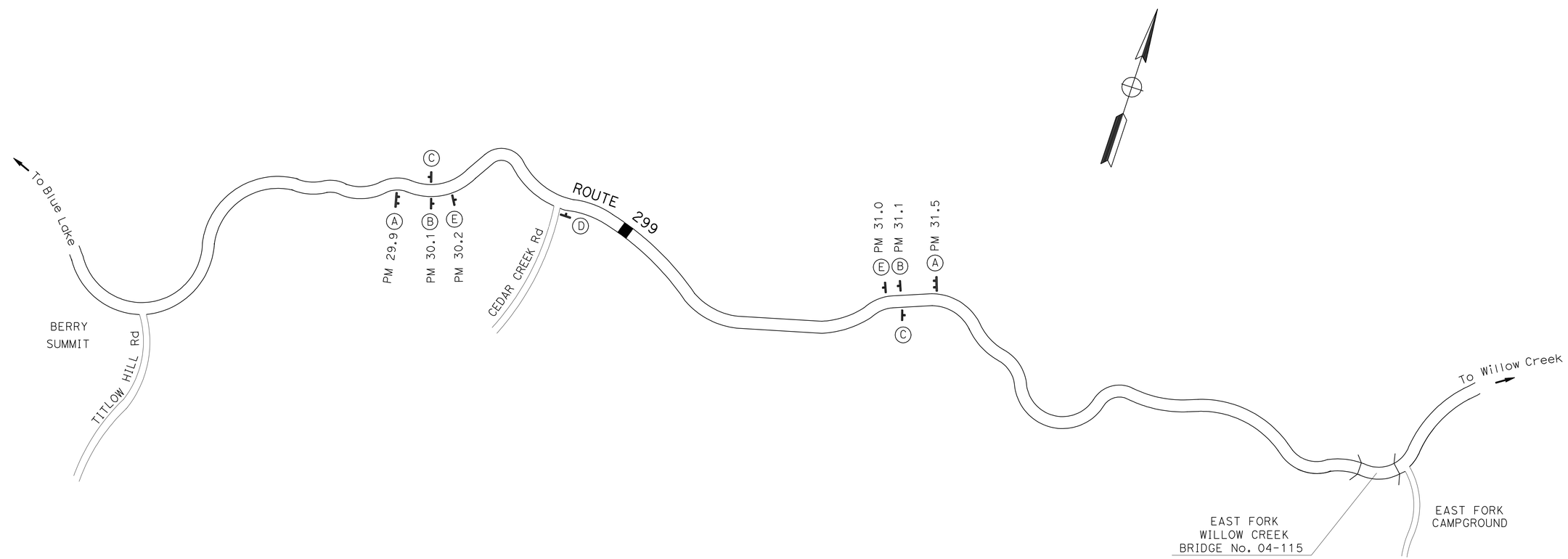

CONSTRUCTION AREA SIGNS
CS-1

NO SCALE

STATE OF CALIFORNIA - DEPARTMENT OF TRANSPORTATION
Caltrans
DESIGN

FUNCTIONAL SUPERVISOR: Kelly Timmons
CALCULATED-DESIGNED BY: Glenn Hurlburt
CHECKED BY: X
REVISED BY
DATE REVISED

LAST REVISION 00-00-00
DATE PLOTTED => 10-APR-2013
TIME PLOTTED => 09:31

Dist	COUNTY	ROUTE	POST MILES TOTAL PROJECT	SHEET No.	TOTAL SHEETS
01	Hum	299	30.7	9	11

REGISTERED CIVIL ENGINEER 11/6/12 DATE

December 7, 2012
PLANS APPROVAL DATE

REGISTERED PROFESSIONAL ENGINEER Glenn G. Hurlburt No. 68303 Exp. 9/30/13 CIVIL STATE OF CALIFORNIA

THE STATE OF CALIFORNIA OR ITS OFFICERS OR AGENTS SHALL NOT BE RESPONSIBLE FOR THE ACCURACY OR COMPLETENESS OF SCANNED COPIES OF THIS PLAN SHEET.

PAVEMENT DELINEATION

LOCATION	DETAIL NUMBER	DETAIL LENGTH	4" THERMOPLASTIC TRAFFIC STRIPE		(RETROREFLECTIVE-RECESSED) PAVEMENT MARKER TYPE D
			SOLID WHITE	SOLID YELLOW	
			LF		EA
"A" 109+00 TO 112+00	22	300		600	28
	27B	300	600		
		SUBTOTAL	600	600	
		TOTAL	1200		28

ROADWAY

LOCATION	TEMPORARY FENCE (TYPE ESA)	ROADWAY EXCAVATION	EMBANKMENT (N)	HOT MIX ASPHALT (TYPE A)	TACK COAT	HMA DIKE (TYPE E) (N)	PLACE HOT MIX ASPHALT DIKE (TYPE E)	CLASS 2 AGGREGATE BASE
STATION	LF	CY	CY	TON	TON	TON	LF	CY
"A" 109+00 TO 112+00	200	380	10	760	8	1	275	450
TOTAL	200	380	10	760	8	1	275	450

(N) NOT A SEPARATE PAY ITEM. FOR INFORMATION ONLY.

BENCH

DITCH EXCAVATION	RSP (FACING, METHOD B)	RSP FABRIC	8" APC COLLECTOR SYSTEM	DRILL HORIZONTAL DRAIN	FURNISH AND INSTALL HORIZONTAL DRAIN	IMPERMIABLE MEMBRANE	TEMPORARY FIBER ROLLS	TEMPORARY EROSION CONTROL BLANKET
CY	CY	SQYD	LF	LF	LF	SQYD	LF	SQYD
50	45	110	300	400	460	80	100	380

SUMMARY OF QUANTITIES
Q-1

REVISED BY	DATE REVISED
Glenn Hurlburt	X

CALCULATED-DESIGNED BY	CHECKED BY

FUNCTIONAL SUPERVISOR: Kelly Timmons

STATE OF CALIFORNIA - DEPARTMENT OF TRANSPORTATION
Caltrans
DESIGN

LAST REVISION 00-00-00 | DATE PLOTTED => 10-APR-2013 | TIME PLOTTED => 09:31

Dist	COUNTY	ROUTE	POST MILES TOTAL PROJECT	SHEET No.	TOTAL SHEETS
01	Hum	299	30.7	10	11

REGISTERED CIVIL ENGINEER 12-7-12 DATE

December 7, 2012
PLANS APPROVAL DATE

REGISTERED PROFESSIONAL ENGINEER Gurinderpal Bhullar No. C48815 Exp. 9-30-14 CIVIL STATE OF CALIFORNIA

THE STATE OF CALIFORNIA OR ITS OFFICERS OR AGENTS SHALL NOT BE RESPONSIBLE FOR THE ACCURACY OR COMPLETENESS OF SCANNED COPIES OF THIS PLAN SHEET.

NOTES:

Unless otherwise specified in the special provisions, all temporary warning signs shall have black legend on orange background.

California code are designated by (CA). Otherwise, Federal (MUTCD) codes are shown.

TYPICAL LANE CLOSURE WITH REVERSIBLE CONTROL

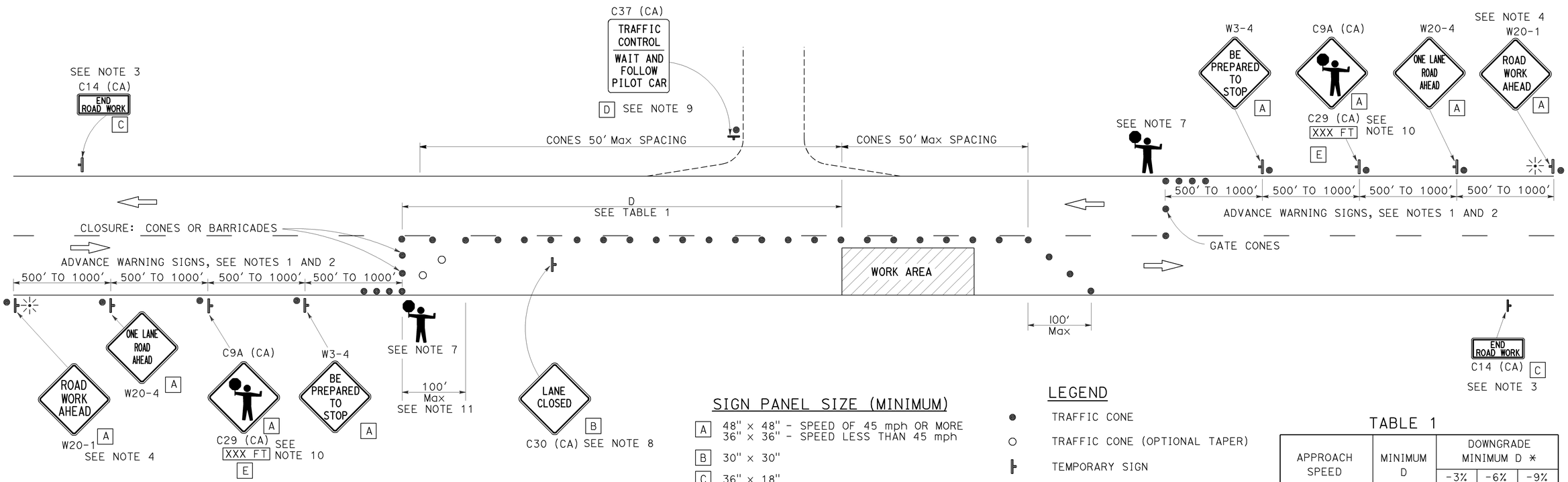

SIGN PANEL SIZE (MINIMUM)

A	48" x 48" - SPEED OF 45 mph OR MORE 36" x 36" - SPEED LESS THAN 45 mph
B	30" x 30"
C	36" x 18"
D	36" x 42"
E	36" x 9"

LEGEND

- TRAFFIC CONE
- TRAFFIC CONE (OPTIONAL TAPER)
- TEMPORARY SIGN
- PORTABLE FLASHING BEACON
- FLAGGER

TABLE 1

APPROACH SPEED	MINIMUM D	DOWNGRADE MINIMUM D *		
		-3%	-6%	-9%
mph	ft	ft	ft	ft
25 AND BELOW	155	158	165	173
30	200	205	215	227
35	250	257	271	287
40	305	315	333	354
45	360	378	400	427
50	425	446	474	507
55	495	520	553	593
60	570	598	638	686
65	645	682	728	785

* USE ON SUSTAINED DOWNGRADE STEEPER THAN -3 PERCENT AND LONGER THAN 1 MILE.

NOTES:

1. Where approach speeds are low, advance warning signs may be placed at 300' spacing, and closer in urban areas.
2. Each advance warning sign in each direction of travel shall be equipped with at least two flags for daytime closure. Each flag shall be at least 16" x 16" in size and shall be orange or fluorescent red-orange in color. Flashing beacons shall be placed at the locations indicated for lane closure during hours of darkness.
3. A C14 (CA) "END ROAD WORK" sign, as appropriate, shall be placed at the end of the lane control unless the end of work area is obvious, or ends within a larger project's limits.
4. If the W20-1 sign would follow within 2000' of a stationary W20-1 or C11 (CA) "ROAD WORK NEXT _____MILES", use a W20-4 sign for the first advance warning sign.
5. All cones used for lane closures during the hours of darkness shall be fitted with retroreflective bands (or sleeves) as specified in the specifications.
6. Portable delineators, placed at one-half the spacing indicated for traffic cones, may be used instead of cones for daytime closures only.
7. Additional advance flaggers may be required. Flagger should stand in a conspicuous place, be visible to approaching traffic as well as approaching vehicles after the first vehicle has stopped. During the hours of darkness, the flagging-station and flagger shall be illuminated and clearly visible to approaching traffic. The illumination footprint of the lighting on the ground shall be at least 20' in diameter. Place a minimum of four cones at 50' intervals in advance of flagger station as shown.
8. Place C30 (CA) "LANE CLOSED" sign at 500' to 1000' intervals throughout extended work areas. They are optional if the work area is visible from the flagger station.
9. When a pilot car is used, place a C37 (CA) "TRAFFIC CONTROL-WAIT AND FOLLOW PILOT CAR" sign at all intersections within traffic control area. Signs shall be clean and visible at all times.
10. An optional C29 (CA) sign may be placed below the C9A (CA) sign.
11. Traffic cones or barricades may be placed on the optional taper as shown, barricades shall be Type I, II, or III.

STATE OF CALIFORNIA
DEPARTMENT OF TRANSPORTATION

TRAFFIC CONTROL SYSTEM FOR LANE CLOSURE ON TWO LANE CONVENTIONAL HIGHWAYS

NO SCALE

TCS-1

STATE OF CALIFORNIA - DEPARTMENT OF TRANSPORTATION

FUNCTIONAL SUPERVISOR | CALCULATED-DESIGNED BY | CHECKED BY | REVISED BY | DATE REVISED

LAST REVISION 00-00-00 | DATE PLOTTED => 10-DEC-2012 | TIME PLOTTED => 09:45

Dist	COUNTY	ROUTE	POST MILES TOTAL PROJECT	SHEET No.	TOTAL SHEETS
01	Hum	299	30.7	11	11

REGISTERED CIVIL ENGINEER

July 20, 2012
PLANS APPROVAL DATE

Raymond Don Tsztoo
No. C37332
Exp. 6-30-14
CIVIL
STATE OF CALIFORNIA
REGISTERED PROFESSIONAL ENGINEER

THE STATE OF CALIFORNIA OR ITS OFFICERS OR AGENTS SHALL NOT BE RESPONSIBLE FOR THE ACCURACY OR COMPLETENESS OF SCANNED COPIES OF THIS PLAN SHEET.

TO ACCOMPANY PLANS DATED December 7, 2012

2010 REVISED STANDARD PLAN RSP D77B

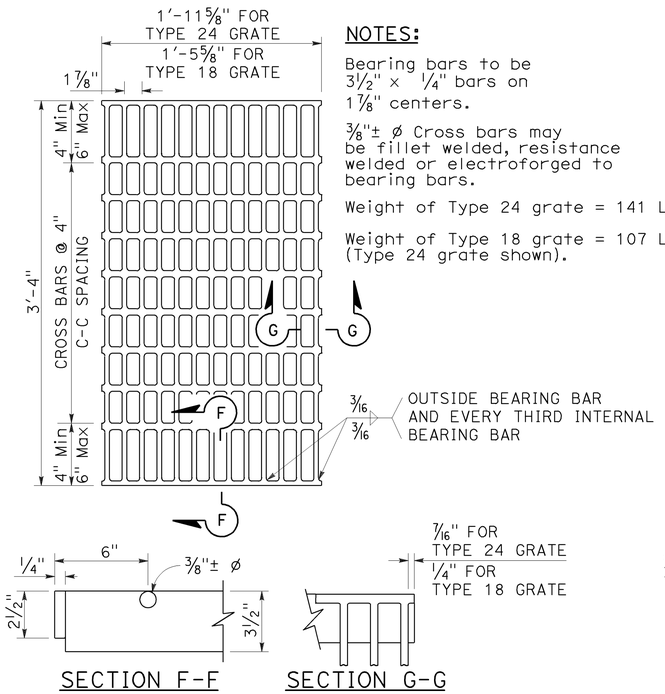

NOTES:

Bearing bars to be 3½" × ¼" bars on 1⅞" centers.

⅜"± ø Cross bars may be fillet welded, resistance welded or electroforged to bearing bars.

Weight of Type 24 grate = 141 LBS.

Weight of Type 18 grate = 107 LBS. (Type 24 grate shown).

SECTION F-F

SECTION G-G

TYPE 18-10 AND 24-13 GRATE

(Welded Steel)

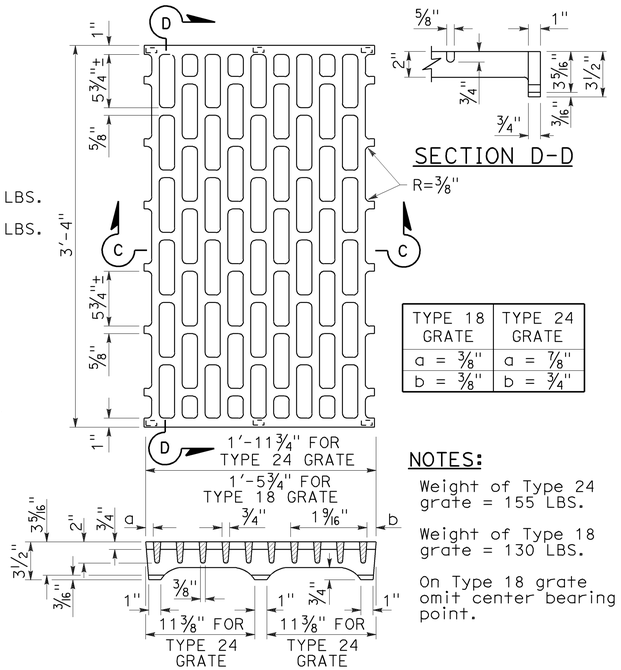

TYPE 18 GRATE	TYPE 24 GRATE
a = ⅜"	a = ⅞"
b = ⅜"	b = ¾"

NOTES:

Weight of Type 24 grate = 155 LBS.

Weight of Type 18 grate = 130 LBS.

On Type 18 grate omit center bearing point.

SECTION C-C

TYPE 18-8C AND 24-10C GRATE

(Cast ductile iron)

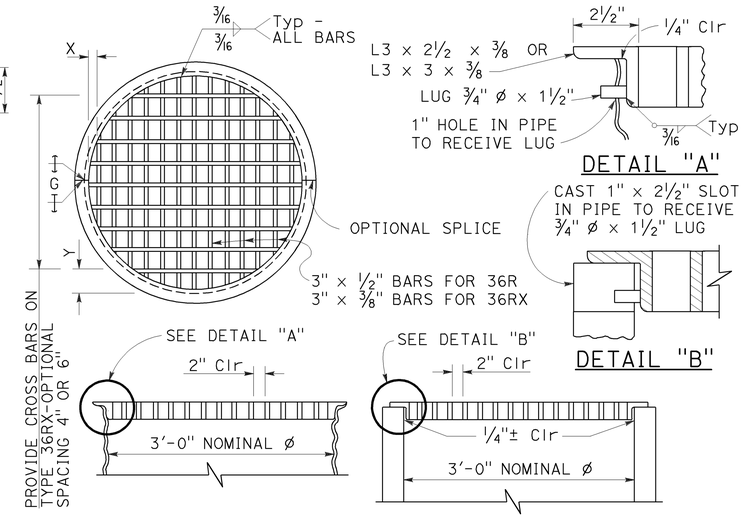

DETAIL "A"

DETAIL "B"

TYPE 36R AND 36RX GRATE DETAILS

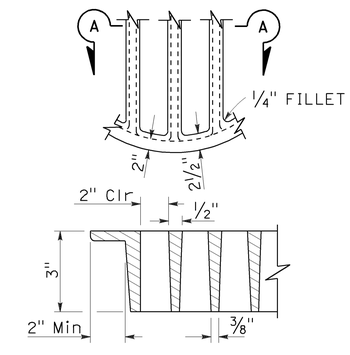

SECTION A-A

ALTERNATIVE CAST DUCTILE IRON GRATE OR CAST CARBON STEEL GRATE TYPE 36R AND 36RX

BASIS FOR Misc IRON AND STEEL FINAL PAY WEIGHTS FOR DRAINAGE INLETS

INLET TYPE	GRATE TYPE	No. OF GRATES	WEIGHT LB
GDO (SEE NOTE 4)	24-10C	2	391
	24-10S	2	456
	24-12X	2	473
	24-13	2	374
GO,GOL,G1,G2, G3,G4 (TYPE 24)	24-10C	1	202
	24-10S	1	229
	24-12X	1	239
	24-13	1	188
G4 (TYPE 18) G5,G6	18-8S	1	187
	18-9X	1	187
	18-10	1	149
GT1,GT2	18-8S	2	374
	18-9X	2	374
	18-10	2	298
GT3,GT4	24-10C	2	404
	24-10S	2	458
	24-12X	2	478
	24-13	2	376
ODI	36RX (Mod)	1	196
GMP,GCP,GCPI	36RX	1	215
ODI	36R (Mod)	1	220
GMP,GCP,GCPI	36R	1	236
TRASH RACK			22
GRATE CHAIN			3

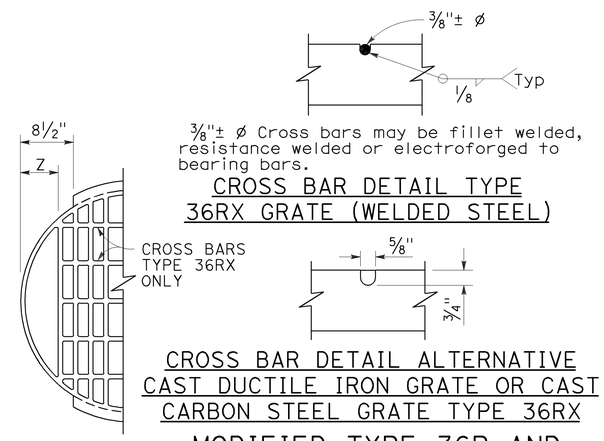

⅜"± ø Cross bars may be fillet welded, resistance welded or electroforged to bearing bars.

CROSS BAR DETAIL TYPE 36RX GRATE (WELDED STEEL)

CROSS BAR DETAIL ALTERNATIVE CAST DUCTILE IRON GRATE OR CAST CARBON STEEL GRATE TYPE 36RX

MODIFIED TYPE 36R AND 36RX GRATE FOR ODI INLET

NOTES:

1. When alternative grates are allowed - Final pay based on alternative with the lesser weight.
2. Use frame shown on Standard Plan D74A, D74B or RSP D77A as appropriate.
3. When Type 24-10S, 24-12X or 24-13 grates are used with GDO Inlets, a ¼" × 3½" × 3'-4⅞" steel bar shall be welded across the center of inlet frame to separate the individual grates.
4. See Revised Standard Plan RSP D77A for connecting chain to welded grate and frame. When chain is required, do not use cast ductile iron grate.

GRATE BAR SPACING TABLE

TYPE	No. OF BARS	CLEAR BAR SPACING	X	Y 4" SPACING	Y 6" SPACING	Z
36R	13	2"	2⅛"	-	-	-
36RX (STEEL)	15	2"	9/16"	3¾"	5¾"	-
36RX (CAST)	13	2"	2⅛"	3¾"	5¾"	-
36R Mod	12	2"	2⅛"	-	-	5"
36RX Mod (STEEL)	13	2"	9/16"	3¾"	5¾"	5 11/16"
36RX Mod (CAST)	12	2"	2⅛"	3¾"	5¾"	5"

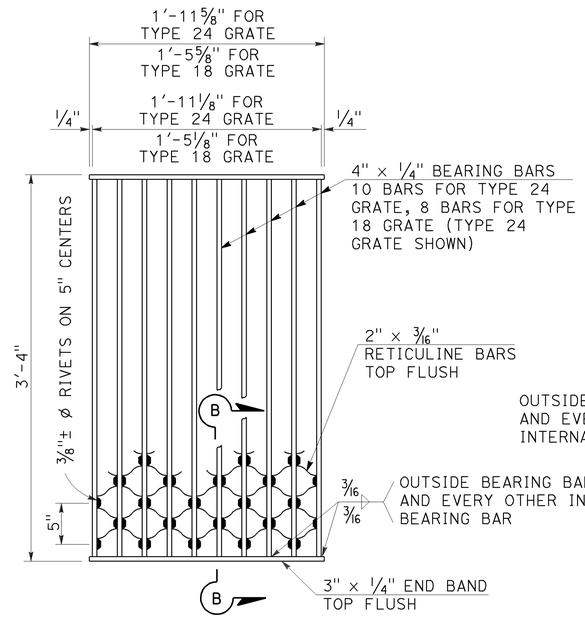

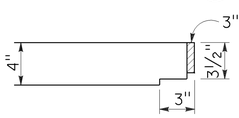

NOTES:

Weight of Type 24 grate = 182 LBS.
Weight of Type 18 grate = 145 LBS.

SECTION B-B

TYPE 18-8S AND 24-10S GRATE

(Welded Steel) Reticuline type

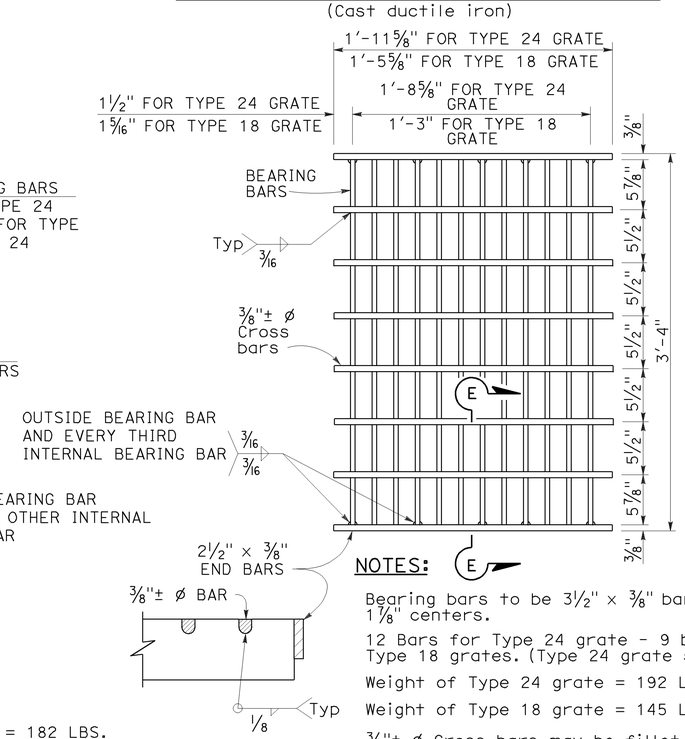

SECTION E-E

NOTES:

Bearing bars to be 3½" × ⅜" bars on 1⅞" centers.

12 Bars for Type 24 grate - 9 bars for Type 18 grates. (Type 24 grate shown).

Weight of Type 24 grate = 192 LBS.

Weight of Type 18 grate = 145 LBS.

⅜"± ø Cross bars may be fillet welded, resistance welded or electroforged to bearing bars.

TYPE 18-9X AND 24-12X GRATE

(Welded Steel)

STATE OF CALIFORNIA
DEPARTMENT OF TRANSPORTATION

BICYCLE TRAVERSABLE GRATE DETAILS

NO SCALE

RSP D77B DATED JULY 20, 2012 SUPERSEDES STANDARD PLAN D77B DATED MAY 20, 2011 - PAGE 165 OF THE STANDARD PLANS BOOK DATED 2010.

REVISED STANDARD PLAN RSP D77B

4-17-12