DIST	COUNTY	ROUTE	POST MILES TOTAL PROJECT	SHEET No	TOTAL SHEETS
01	Hum	101	T0.2/R126.0	63	72

REGISTERED CIVIL ENGINEER 3/16/09 DATE

9-21-09
PLANS APPROVAL DATE

REGISTERED PROFESSIONAL ENGINEER JOEL MAGANA No. C61500 Exp. 6/30/11 CIVIL STATE OF CALIFORNIA

The State of California or its officers or agents shall not be responsible for the accuracy or completeness of electronic copies of this plan sheet.

INDEX TO PLANS

Sheet No.	Title
1	Index to Plans
2	Type 1 Barrier (Case 1 and 2)
3	Type 2 Barrier (Case 1)
4	Type 9 Barrier (Case 1 and 2)
5	Type 25 Barrier (Case 1)
6	Type 25 Barrier (Case 2)
7	Type 25 Barrier (Case 3)
8	Type 27 Barrier (Case 1)
9	Type 27 Barrier (Case 2)
10	Type 27 Barrier (Case 3)
~~11~~	~~Big Lagoon Bridge~~

1

STANDARD PLANS DATED MAY 2006

A10A	ACRONYMS AND ABBREVIATIONS (A-L)
A10B	ACRONYMS AND ABBREVIATIONS (M-Z)
A62C	LIMITS OF PAYMENT FOR EXCAVATION AND BACKFILL - BRIDGE
RSP A77J2	METAL BEAM GUARD RAILING CONNECTIONS TO BRIDGE RAILING DETAILS
A77J3	METAL BEAM GUARD RAILING CONNECTIONS TO BRIDGE RAILING DETAILS

Standard Plan sheet number

Detail number

LEGEND

Indicates existing structure

Indicates new construction

NOTE:

See "ROADWAY PLANS" for work locations.

1 **REVISED PER ADDENDUM NO. 1 DATED APRIL 8, 2010**

	BY	CHECKED
DESIGN	N KANEPATHIPILLAI	J MAGANA
DETAILS	P C WELLS	N KANEPATHIPILLAI
QUANTITIES	J. MAGANA/P C WELLS	N K P/D SANDHU

STATE OF CALIFORNIA
DEPARTMENT OF TRANSPORTATION

DIVISION OF ENGINEERING SERVICES
STRUCTURE DESIGN
SPECIAL DESIGN BRANCH

BRIDGE NO. Varies
POST MILE Varies

INDEX TO PLANS
TRANSITION ANCHOR BLOCK DETAILS

STRUCTURES DESIGN SPECIAL DESIGN SHEET (ENGLISH) (REV. 10-25-05)

ORIGINAL SCALE IN INCHES FOR REDUCED PLANS 0 1 2 3

CU 01
EA 464001

DISREGARD PRINTS BEARING EARLIER REVISION DATES

REVISION DATES

SHEET 1 OF ~~11~~ 10

1

FILE => aitp.add

USERNAME => trlenard DATE PLOTTED => 06-APR-2010 TIME PLOTTED => 10:35

DIST	COUNTY	ROUTE	POST MILES TOTAL PROJECT	SHEET No	TOTAL SHEETS
01	Hum	101	T0.2/R126.0	64	72

REGISTERED CIVIL ENGINEER 3/16/09 DATE

9-21-09
PLANS APPROVAL DATE

REGISTERED PROFESSIONAL ENGINEER JOEL MAGANA No. C61500 Exp. 6/30/11 CIVIL STATE OF CALIFORNIA

The State of California or its officers or agents shall not be responsible for the accuracy or completeness of electronic copies of this plan sheet.

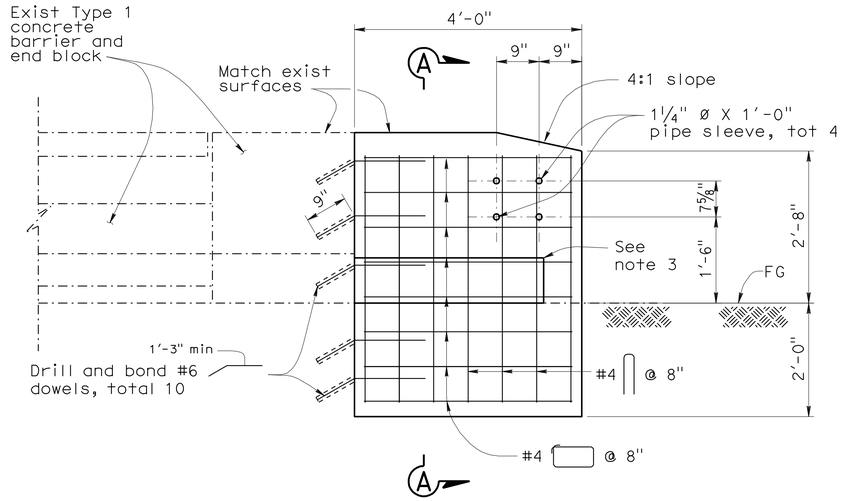

ELEVATION

¾" = 1'

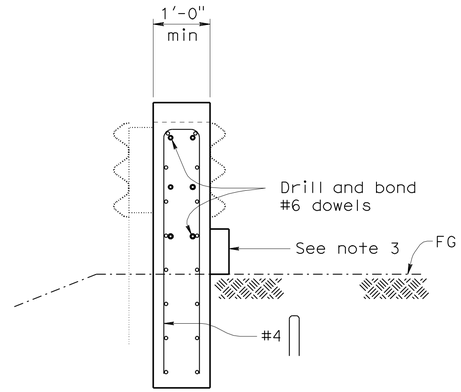

SECTION A-A

¾" = 1'

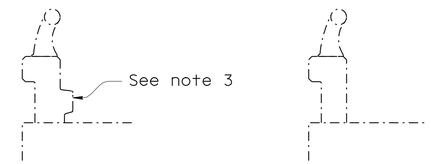

CASE 1 CASE 2

TYPICAL SECTION EXISTING TYPE 1 BARRIER RAIL

½" = 1'

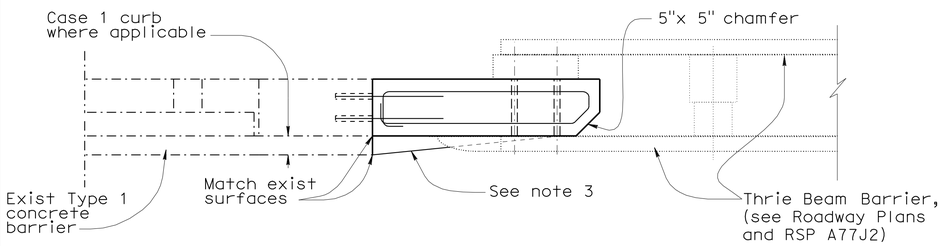

PLAN

¾" = 1'

NOTES:

1. For limits of excavation and backfill, see 2006 Standard Plans A62C, SECTION E-E.
2. See Roadway Plans for work locations.
3. If existing barrier rail is similar to Case 1, transition curb 10:1 until flush with vert face of transition block. If exist barrier rail is similar to Case 2, construct only transition block, (w/out curb transition).
4. Epoxy fill drilled holes for bolts used to fasten MBGR to existing end block, unless holes were cast using pipe sleeves.

LOCATION TABLE OF TYPE 1 BARRIER TRANSITION BLOCK APPLICATIONS

Bridge No.	Bridge Name	Post Mile	Direction	No. of Connections (WB) Leading End	No. of Connections (WB) Trailing End	Case
04-006S	Dean Creek Off-ramp(Rt)	14.31	NB	1		2
04-0192	Dimmick Road UC	19.7	NB SB	1 1		1
04-0174	French Road UC	22.44	NB SB	1 1		1
04-0175	Bear Buttes Rd UC	23.01	NB SB	1 1		1
04-0123	South Fork Eel River	27.71	NB SB	1 1		1
04-0199	Bear Creek	42.99	NB SB	1 1		2
04-0200	Barkdull Rd UC	43.32	NB SB	1 1		2
04-0206	Greenlaw Creek	45.57	NB SB	1 1		2
04-0207	Jordan Road Seperator	45.90	NB SB	1 1		2
04-0208L 04-0208R	Jordan Creek	46.18 46.19	NB SB	2 2		2
04-0205	Stafford Road UC	47.95	NB SB	1 1		2
04-0014	Eel River Bridge & OH	48.69	NB SB	1 1		2
04-0108	Rohner Creek	60.67	NB SB	1 1		1
04-0122	Orchard Avenue UC	72.03	NB SB	1 1		1
04-0067L 04-0067R	King Salmon Ave UC	72.80 72.88	NB SB	2 2		1

LEGEND

-·-·-·-·-·- Indicates existing structure

——————— Indicates new construction

1 REVISED PER ADDENDUM NO. 1 DATED APRIL 8, 2010

THE CONTRACTOR SHALL VERIFY ALL CONTROLLING FIELD DIMENSIONS BEFORE ORDERING OR FABRICATING ANY MATERIAL.

	BY	CHECKED
DESIGN	N KANEPATHIPILLAI	J MAGANA
DETAILS	P C W/B EDWARDS	N KANEPATHIPILLAI
QUANTITIES	J. MAGANA/P C WELLS	N K P/D SANDHU

STATE OF CALIFORNIA DEPARTMENT OF TRANSPORTATION

DIVISION OF ENGINEERING SERVICES STRUCTURE DESIGN SPECIAL DESIGN BRANCH

BRIDGE NO. Varies
POST MILE Varies

TYPE 1 BARRIER (CASE 1 AND CASE 2) TRANSITION ANCHOR BLOCK DETAILS

STRUCTURES DESIGN SPECIAL DESIGN SHEET (ENGLISH) (REV. 10-25-05)

ORIGINAL SCALE IN INCHES FOR REDUCED PLANS 0 1 2 3

CU 01
EA 464001

DISREGARD PRINTS BEARING EARLIER REVISION DATES

REVISION DATES: 2-25-09 2-25-09 3/3/09 3/18/09 3/16/09

SHEET 2 OF ~~11~~ 10

1

FILE => kbar01.add

USERNAME => friehard DATE PLOTTED => 06-APR-2010 TIME PLOTTED => 10:35

DIST	COUNTY	ROUTE	POST MILES TOTAL PROJECT	SHEET No	TOTAL SHEETS
01	Hum	101	T0.2/R126.0	65	72

REGISTERED CIVIL ENGINEER 3/16/09 DATE

9-21-09
PLANS APPROVAL DATE

REGISTERED PROFESSIONAL ENGINEER JOEL MAGAÑA No. C61500 Exp. 6/30/11 CIVIL STATE OF CALIFORNIA

The State of California or its officers or agents shall not be responsible for the accuracy or completeness of electronic copies of this plan sheet.

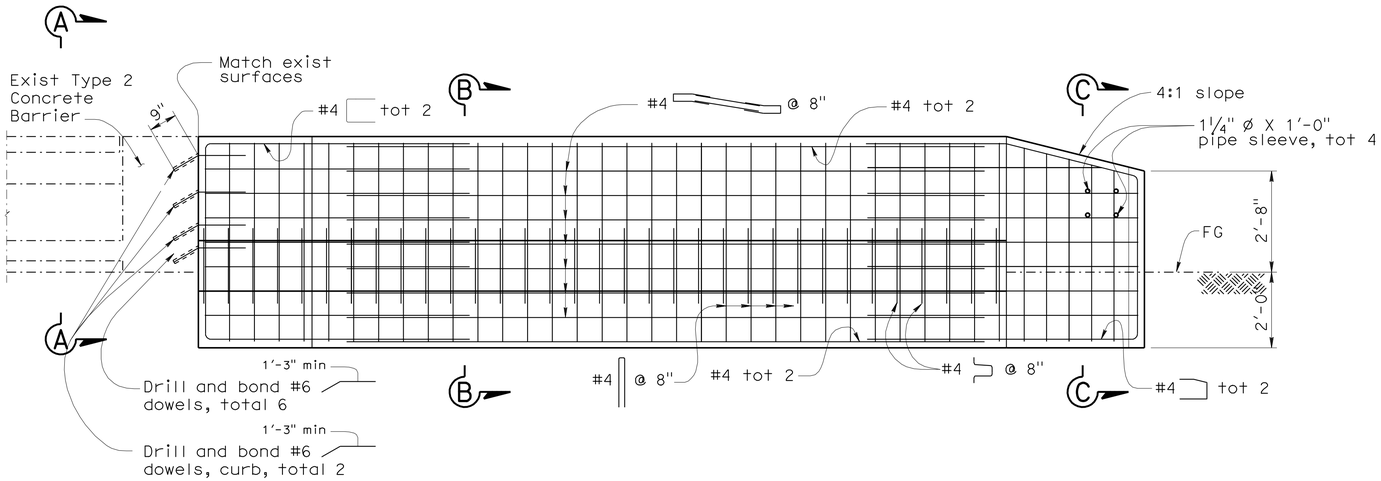

ELEVATION
no scale

LEGEND

Indicates existing structure

Indicates new construction

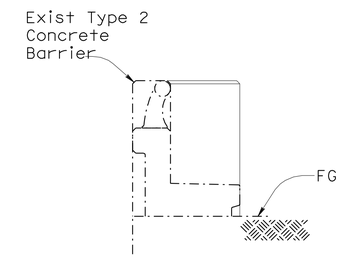

SECTION A-A
no scale

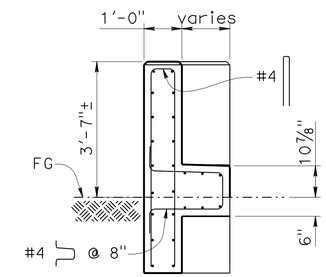

SECTION B-B
no scale

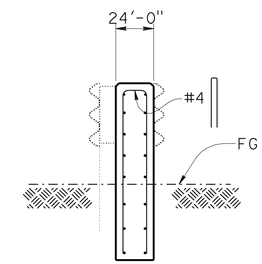

SECTION C-C
no scale

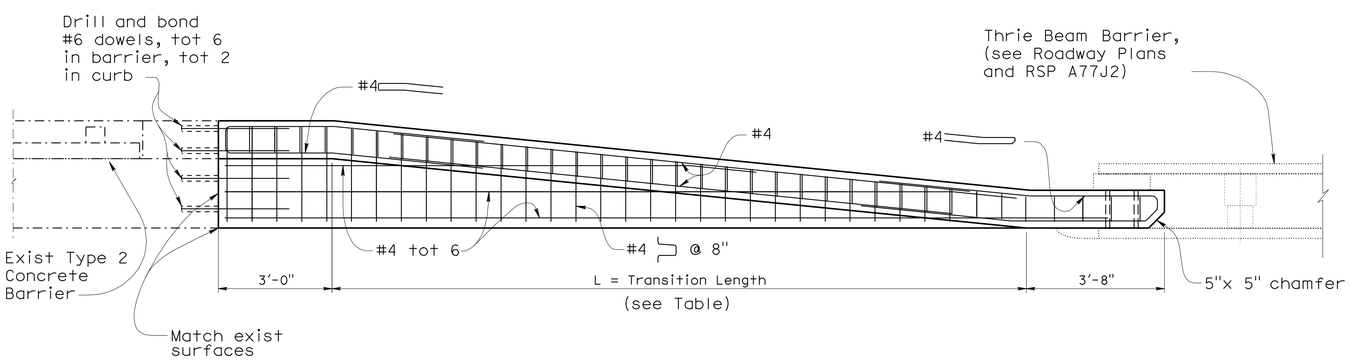

PLAN
no scale

LOCATION TABLE OF TYPE 2 BARRIER TRANSITION BLOCK APPLICATIONS

Bridge No.	Bridge Name	Post Mile	Direction	No. of Connections (WB) Leading End	No. of Connections (WB) Trailing End	L (ft)
04-0006	Dean Creek	14.31	NB SB	1 1	1	40
04-0006S	Dean Creek Off-Ramp (LT)	14.31	NB	1		20
04-0065	So. Fork Eel River Bridge B&S	17.89	NB SB	1 1		20
04-0176	Salmon Creek	23.89	NB SB	1 1	1	20
04-0072	Eagle Point Sidehill Viaduct	27.07	NB SB	1 1	1	20
04-0124	Myers flat Seperation (So.Fo. Eel River)	27.92	NB SB	1 1		40
04-0145	Fortuna OH	61.53	NB SB	1 1		40

NOTES:

1. For limits of excavation and backfill see 2006 Standard Plans A62C, Section E-E.
2. See Roadway Plans for work locations.
3. Epoxy fill drilled holes for bolts used to fasten MBGR to existing end block, unless holes were cast using pipe sleeves.

THE CONTRACTOR SHALL VERIFY ALL CONTROLLING FIELD DIMENSIONS BEFORE ORDERING OR FABRICATING ANY MATERIAL.

1 **REVISED PER ADDENDUM NO. 1 DATED APRIL 8, 2010**

	BY	CHECKED
DESIGN	N KANEPATHIPILLAI	J MAGANA
DETAILS	P C W/B EDWARDS	N KANEPATHIPILLAI
QUANTITIES	J. MAGANA/P C WELLS	N K P/D SANDHU

STATE OF CALIFORNIA
DEPARTMENT OF TRANSPORTATION

DIVISION OF ENGINEERING SERVICES
STRUCTURE DESIGN
SPECIAL DESIGN BRANCH

BRIDGE NO. Varies
POST MILE Varies

TYPE 2 BARRIER (CASE 1)
TRANSITION ANCHOR BLOCK DETAILS

STRUCTURES DESIGN SPECIAL DESIGN SHEET (ENGLISH) (REV. 10-25-05)

ORIGINAL SCALE IN INCHES FOR REDUCED PLANS 0 1 2 3

CU 01
EA 464001

DISREGARD PRINTS BEARING EARLIER REVISION DATES 3/18/09 3/16/09

REVISION DATES

SHEET 3 OF 11

1 10

FILE => kbar02.add

USERNAME => trlenard DATE PLOTTED => 06-APR-2010 TIME PLOTTED => 10:35

DIST	COUNTY	ROUTE	POST MILES TOTAL PROJECT	SHEET No	TOTAL SHEETS
01	Hum	101	T0.2/R126.0	66	72

REGISTERED CIVIL ENGINEER 3/16/09 DATE

9-21-09
PLANS APPROVAL DATE

REGISTERED PROFESSIONAL ENGINEER JOEL MAGANA No. C61500 Exp. 6/30/11 CIVIL STATE OF CALIFORNIA

The State of California or its officers or agents shall not be responsible for the accuracy or completeness of electronic copies of this plan sheet.

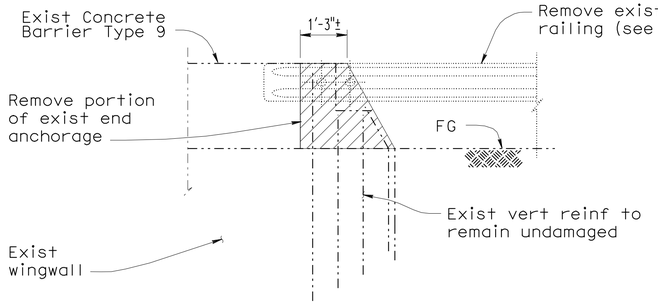

ELEVATION

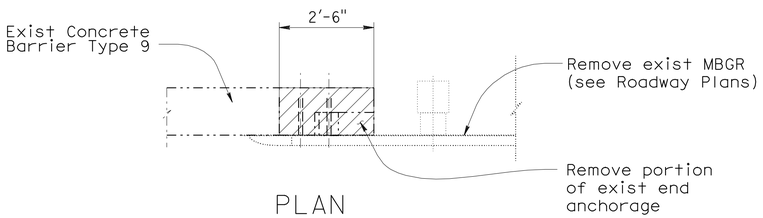

PLAN

CONCRETE REMOVAL
no scale

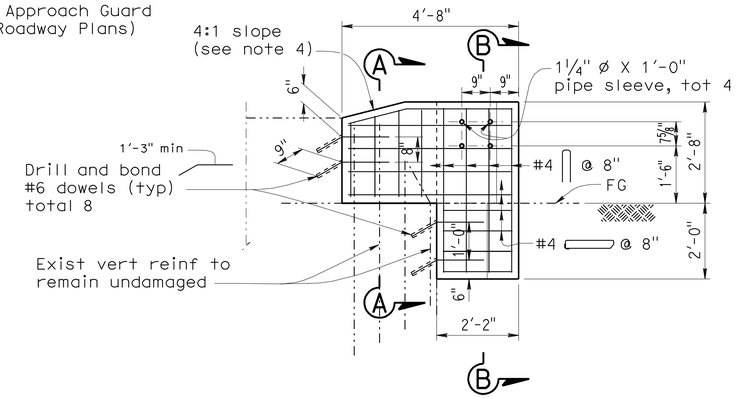

ELEVATION
no scale

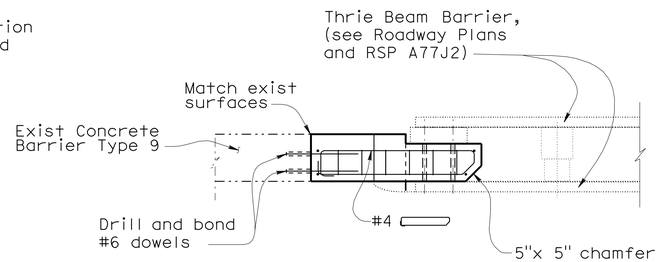

PLAN
no scale

CASE 1 (TYPE 9)

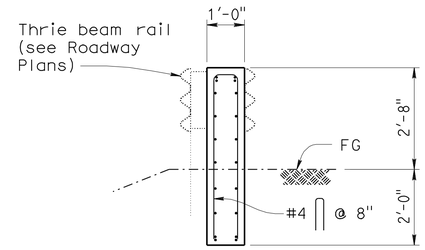

SECTION C-C
no scale

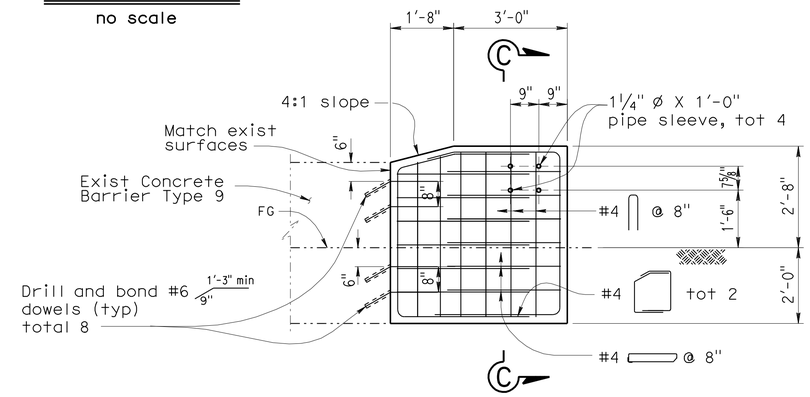

ELEVATION
no scale

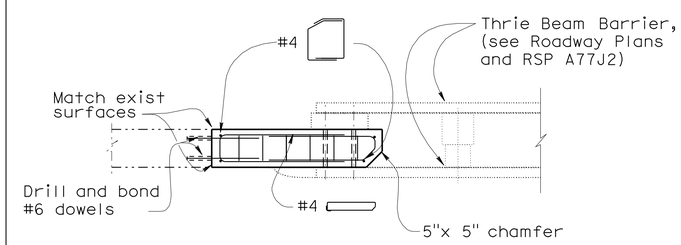

PLAN
no scale

CASE 2 (TYPE 9)

1 **REVISED PER ADDENDUM NO. 1 DATED APRIL 8, 2010**

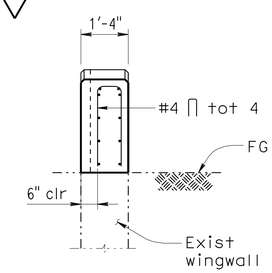

SECTION A-A
no scale

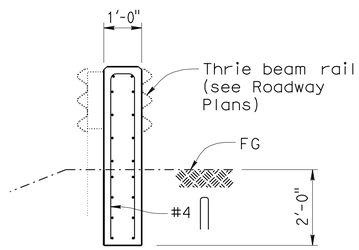

SECTION B-B
no scale

LOCATION TABLE OF TYPE 9 BARRIER TRANSITION BLOCK APPLICATIONS

Bridge No.	Bridge Name	Post Mile	Direction	No. of Connections (WB) Leading End	Trailing End
04-0216	Old US 101 UC	7.77	NB SB	1 Case 2 1 Case 2	
04-0155	South Fork Eel River Bridge	7.87	NB SB	1 Case 1 1 Case 1	
04-0212	South Fork Eel River Bridge	8.30	NB SB	1 Case 1 1 Case 1	
04-0211	Benbow UC	8.6	NB SB	1 Case 1 1 Case 1	
04-0039	East. Branch of South Fork. Eel River Bridge	8.8	NB SB	1 Case 1	1 Case 1

NOTES:

1. For limits of excavation and backfill see Standard Plans May 2006 A62C, Section E-E.
2. See Roadway Plans for work locations.
3. Epoxy fill drilled holes for bolts used to fasten MBGR to existing end block, unless holes were cast using pipe sleeves.
4. Existing barrier heights vary. Where exist barrier height is more than 2'-8", transition barrier height to 2'-8" @ 4:1 slope.

THE CONTRACTOR SHALL VERIFY ALL CONTROLLING FIELD DIMENSIONS BEFORE ORDERING OR FABRICATING ANY MATERIAL.

	BY	CHECKED
DESIGN	N KANEPATHIPILLAI	J MAGANA
DETAILS	P C W/B EDWARDS	N KANEPATHIPILLAI
QUANTITIES	J. MAGANA/P C WELLS	N K P/D SANDHU

STATE OF CALIFORNIA DEPARTMENT OF TRANSPORTATION

DIVISION OF ENGINEERING SERVICES STRUCTURE DESIGN
SPECIAL DESIGN BRANCH

BRIDGE NO. Varies
POST MILE Varies

TYPE 9 BARRIER (CASE 1 AND CASE 2) TRANSITION ANCHOR BLOCK DETAILS

STRUCTURES DESIGN SPECIAL DESIGN SHEET (ENGLISH) (REV. 10-25-05)

ORIGINAL SCALE IN INCHES FOR REDUCED PLANS 0 1 2 3

CU 01
EA 464001

DISREGARD PRINTS BEARING EARLIER REVISION DATES 3/16/09 3/16/09

REVISION DATES

SHEET 4 OF 1

FILE => kbar03.add

USERNAME => trlenard DATE PLOTTED => 06-APR-2010 TIME PLOTTED => 10:35

DIST	COUNTY	ROUTE	POST MILES TOTAL PROJECT	SHEET No	TOTAL SHEETS
01	Hum	101	T0.2/R126.0	67	72

REGISTERED CIVIL ENGINEER 3/16/09 DATE

9-21-09
PLANS APPROVAL DATE

REGISTERED PROFESSIONAL ENGINEER JOEL MAGANA No. C61500 Exp. 6/30/11 CIVIL STATE OF CALIFORNIA

The State of California or its officers or agents shall not be responsible for the accuracy or completeness of electronic copies of this plan sheet.

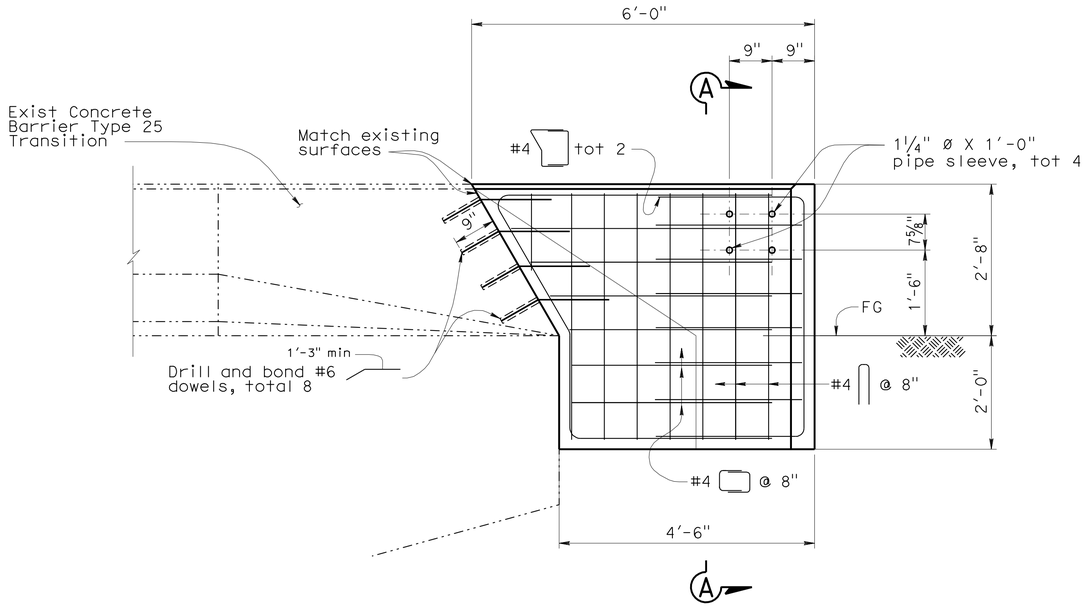

ELEVATION
no scale

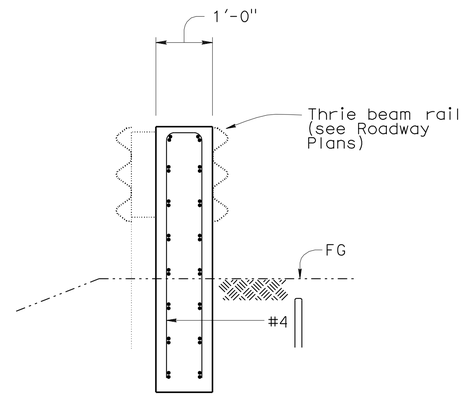

SECTION A-A
no scale

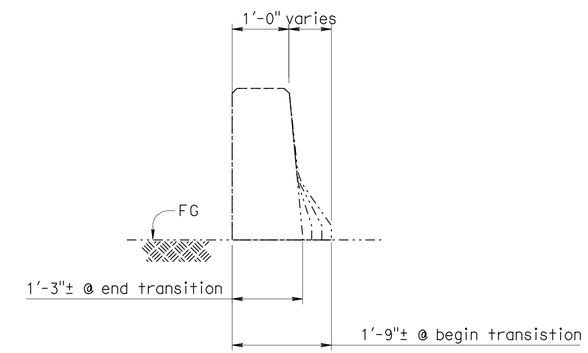

TYPICAL SECTION EXISTING CONCRETE BARRIER TYPE 25 TRANSITION
no scale

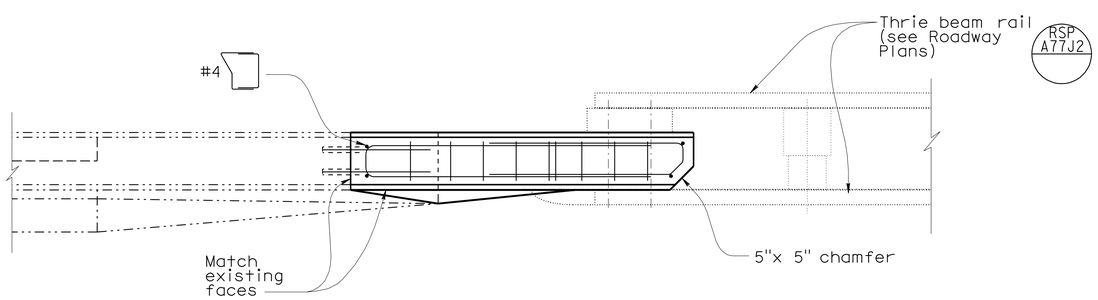

PLAN
no scale

LOCATION TABLE OF TYPE 25 BARRIER TRANSITION BLOCK (TYPE WB) APPLICATIONS

Bridge No.	Bridge Name	Post Mile	Direction	No. of Connections (WB)		Case
				Leading End	Trailing End	
04-0030	Lost Man Creek	124.71	NB SB	1 1		1

LEGEND

-·-·-·-·-·- Indicates existing structure

——————— Indicates new construction

NOTES:

1. For limits of excavation and backfill see Standard Plans May 2006 A62C, Section E-E.
2. See Roadway Plans for work locations.
3. Epoxy fill drilled holes for bolts used to fasten MBGR to existing end block, unless holes were cast using pipe sleeves.

1 **REVISED PER ADDENDUM NO. 1 DATED APRIL 8, 2010**

	BY	CHECKED
DESIGN	N KANEPATHIPILLAI	J MAGANA
DETAILS	P C W/B EDWARDS	N KANEPATHIPILLAI
QUANTITIES	J. MAGANA/P C WELLS	N K P/D SANDHU

STATE OF CALIFORNIA DEPARTMENT OF TRANSPORTATION

DIVISION OF ENGINEERING SERVICES STRUCTURE DESIGN
SPECIAL DESIGN BRANCH

BRIDGE NO. Varies
POST MILE Varies

TYPE 25 BARRIER (CASE 1) TRANSITION ANCHOR BLOCK DETAILS

STRUCTURES DESIGN SPECIAL DESIGN SHEET (ENGLISH) (REV. 10-25-05)

ORIGINAL SCALE IN INCHES FOR REDUCED PLANS 0 1 2 3

CU 01
EA 464001

DISREGARD PRINTS BEARING EARLIER REVISION DATES 3/13/09 3/16/09

REVISION DATES

SHEET 5 OF 1

1

FILE => kbar04.add

USERNAME => trlenard DATE PLOTTED => 06-APR-2010 TIME PLOTTED => 10:35

DIST	COUNTY	ROUTE	POST MILES TOTAL PROJECT	SHEET No	TOTAL SHEETS
01	Hum	101	T0.2/R126.0	68	72

REGISTERED CIVIL ENGINEER 3/16/09 DATE

9-21-09
PLANS APPROVAL DATE

REGISTERED PROFESSIONAL ENGINEER JOEL MAGANA No. C61500 Exp. 6/30/11 CIVIL STATE OF CALIFORNIA

The State of California or its officers or agents shall not be responsible for the accuracy or completeness of electronic copies of this plan sheet.

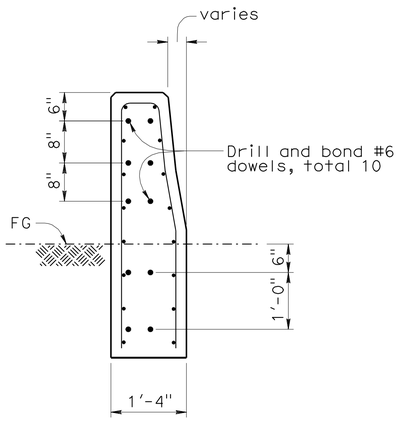

SECTION A-A
no scale

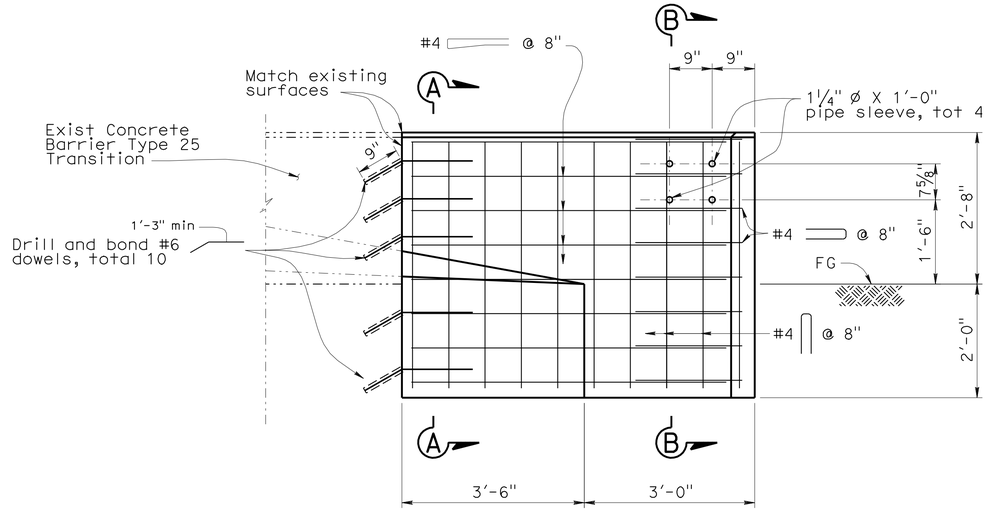

ELEVATION
no scale

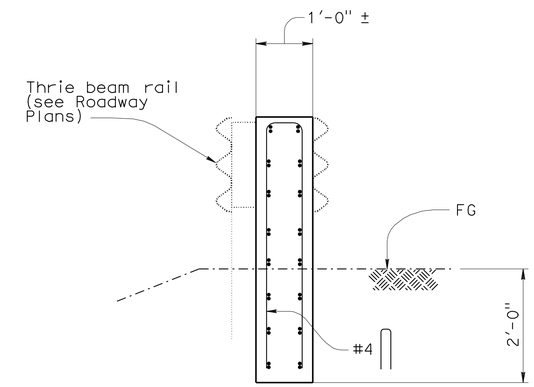

SECTION B-B
no scale

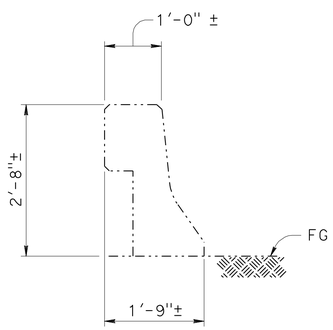

TYPICAL SECTION EXISTING CONCRETE BARRIER TYPE 25
no scale

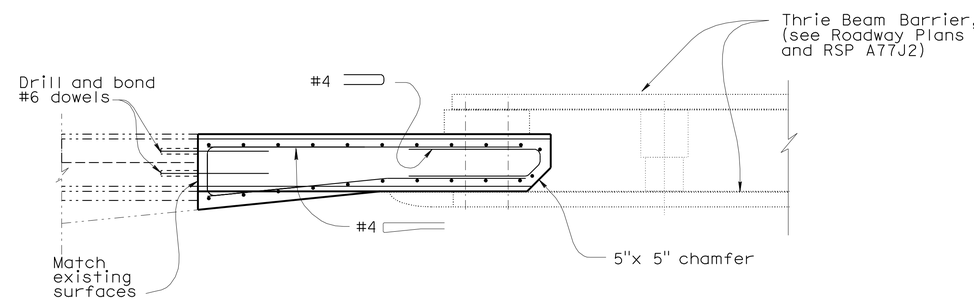

PLAN
no scale

LEGEND

-·-·-·-·-·- Indicates existing structure

——————— Indicates new construction

LOCATION TABLE OF TYPE 25 BARRIER TRANSITION BLOCK (TYPE WB) APPLICATIONS

Bridge No.	Bridge Name	Post Mile	Direction	No. of Connections (WB)		Case
				Leading End	Trailing End	
04-0241	South Fork Eel River Bridge	5.63	NB SB	1 1	 1	2

NOTES:

1. For limits of excavation and backfill see Standard Plans May 2006 A62C, Section E-E.
2. See Roadway Plans for work locations.

THE CONTRACTOR SHALL VERIFY ALL CONTROLLING FIELD DIMENSIONS BEFORE ORDERING OR FABRICATING ANY MATERIAL.

1 **REVISED PER ADDENDUM NO. 1 DATED APRIL 8, 2010**

	BY	CHECKED
DESIGN	N KANEPATHIPILLAI	J MAGANA
DETAILS	P C W/ B EDWARDS	N KANEPATHIPILLAI
QUANTITIES	J MAGANA/P WELLS	NKP/D SANDHU

STATE OF CALIFORNIA DEPARTMENT OF TRANSPORTATION

DIVISION OF ENGINEERING SERVICES STRUCTURE DESIGN
SPECIAL DESIGN BRANCH

BRIDGE NO. Varies
POST MILE Varies

TYPE 25 BARRIER (CASE 2)
TRANSITION ANCHOR BLOCK DETAILS

STRUCTURES DESIGN SPECIAL DESIGN SHEET (ENGLISH) (REV. 10-25-05)

ORIGINAL SCALE IN INCHES FOR REDUCED PLANS 0 1 2 3

CU 01
EA 464001

DISREGARD PRINTS BEARING EARLIER REVISION DATES

REVISION DATES: 3/16/09 3/16/09

SHEET 6 OF ~~11~~ 1 10

FILE => kbar05.add

USERNAME => trienard DATE PLOTTED => 06-APR-2010 TIME PLOTTED => 10:35

DIST	COUNTY	ROUTE	POST MILES TOTAL PROJECT	SHEET No	TOTAL SHEETS
01	Hum	101	T0.2/R126.0	69	72

REGISTERED CIVIL ENGINEER 3/16/09 DATE

9-21-09
PLANS APPROVAL DATE

REGISTERED PROFESSIONAL ENGINEER JOEL MAGANA No. C61500 Exp. 6/30/11 CIVIL STATE OF CALIFORNIA

The State of California or its officers or agents shall not be responsible for the accuracy or completeness of electronic copies of this plan sheet.

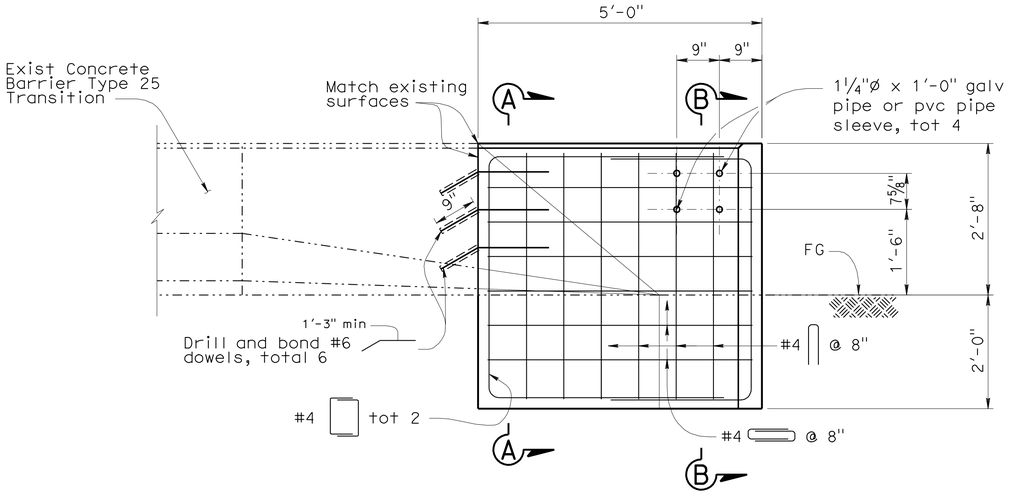

ELEVATION
no scale

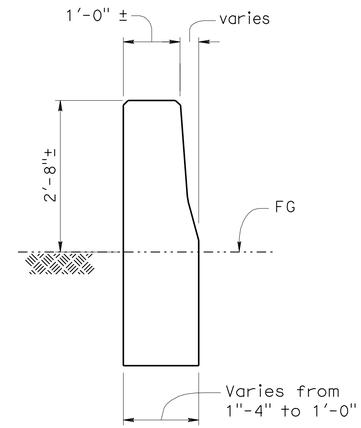

SECTION A-A
no scale

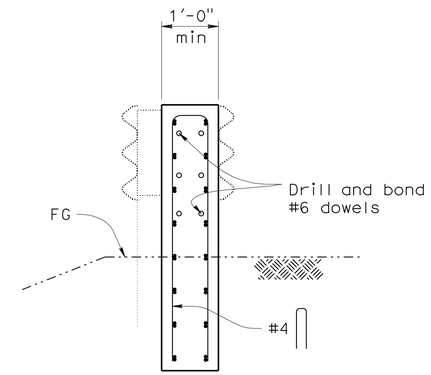

SECTION B-B
no scale

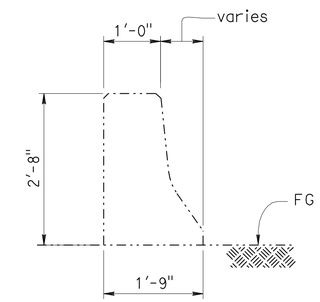

TYPICAL SECTION EXISTING CONCRETE BARRIER TYPE 25
no scale

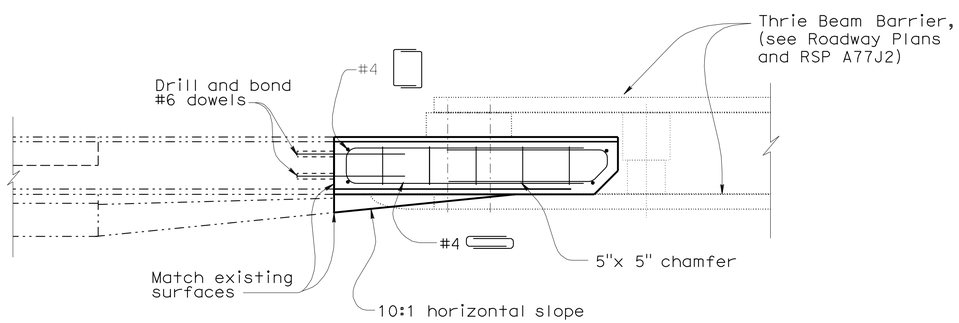

PLAN
no scale

LEGEND

-·-·-·-·-·- Indicates existing structure

——— Indicates new construction

LOCATION TABLE OF TYPE 25 BARRIER TRANSITION BLOCK (TYPE WB) APPLICATIONS

Bridge No.	Bridge Name	Post Mile	Direction	No. of Connections (WB)		Case
				Leading End	Trailing End	
04-0034	Redwood Creek Overflow	120.02	NB SB	1 1		3
04-0029	Prairie Creek	122.86	NB SB	1 1		3

NOTES:

1. For limits of excavation and backfill, see Standard Plans May 2006 A62C, SECTION E-E.
2. See roadway Plans for work locations.
3. Epoxy fill drilled holes for bolts used to fasten MBGR to existing end block, unless holes were cast using pipe sleeves.

THE CONTRACTOR SHALL VERIFY ALL CONTROLLING FIELD DIMENSIONS BEFORE ORDERING OR FABRICATING ANY MATERIAL.

1 **REVISED PER ADDENDUM NO. 1 DATED APRIL 8, 2010**

	BY	CHECKED
DESIGN	N KANEPATHIPILLAI	J MAGANA
DETAILS	P C W/B EDWARDS	N KANEPATHIPILLAI
QUANTITIES	J MAGANA/P WELLS	NKP/D SANDHU

STATE OF CALIFORNIA DEPARTMENT OF TRANSPORTATION

DIVISION OF ENGINEERING SERVICES STRUCTURE DESIGN
SPECIAL DESIGN BRANCH

BRIDGE NO. Varies
POST MILE Varies

TYPE 25 BARRIER (CASE 3) TRANSITION ANCHOR BLOCK DETAILS

STRUCTURES DESIGN SPECIAL DESIGN SHEET (ENGLISH) (REV. 10-25-05)

ORIGINAL SCALE IN INCHES FOR REDUCED PLANS 0 1 2 3

CU 01
EA 464001

DISREGARD PRINTS BEARING EARLIER REVISION DATES 3/16/09

REVISION DATES

SHEET 7 OF 1

FILE => kbar06.add

1 10

USERNAME => trlenard DATE PLOTTED => 06-APR-2010 TIME PLOTTED => 10:36

DIST	COUNTY	ROUTE	POST MILES TOTAL PROJECT	SHEET No	TOTAL SHEETS
01	Hum	101	T0.2/R126.0	70	72

REGISTERED CIVIL ENGINEER 3/16/09 DATE

9-21-09
PLANS APPROVAL DATE

The State of California or its officers or agents shall not be responsible for the accuracy or completeness of electronic copies of this plan sheet.

REGISTERED PROFESSIONAL ENGINEER JOEL MAGANA No. C61500 Exp. 6/30/11 CIVIL STATE OF CALIFORNIA

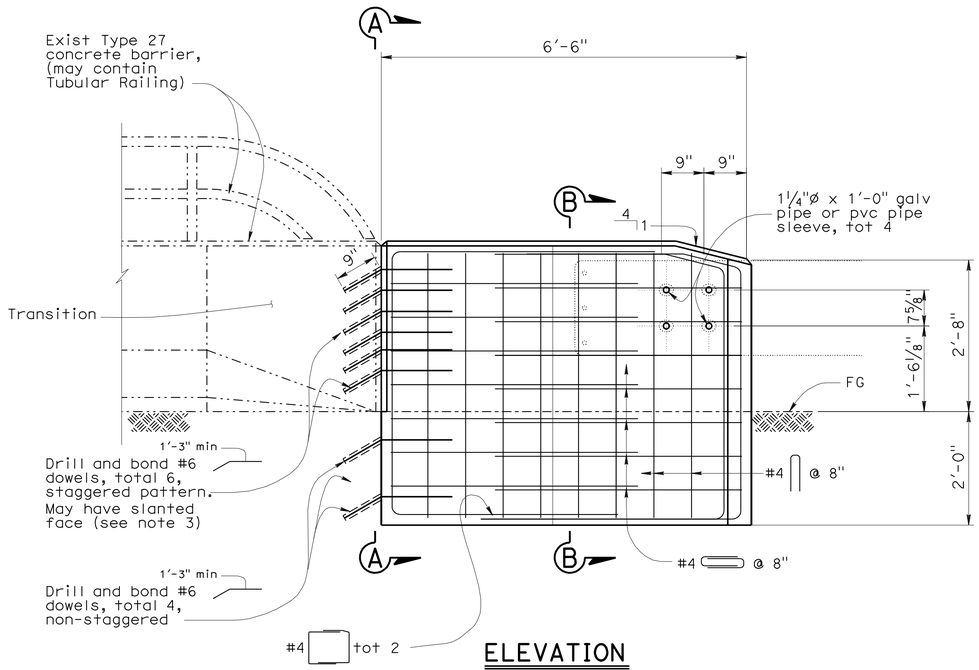

ELEVATION
no scale

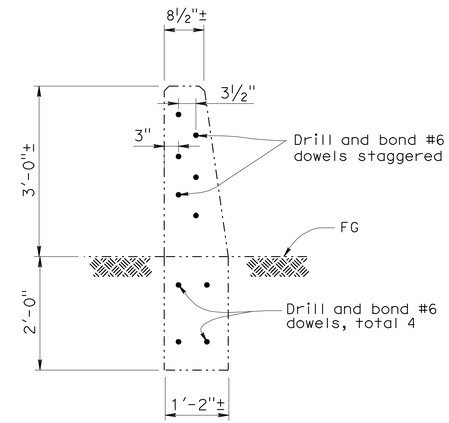

SECTION A-A
no scale

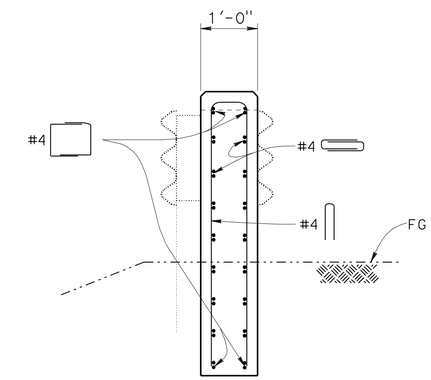

SECTION B-B
no scale

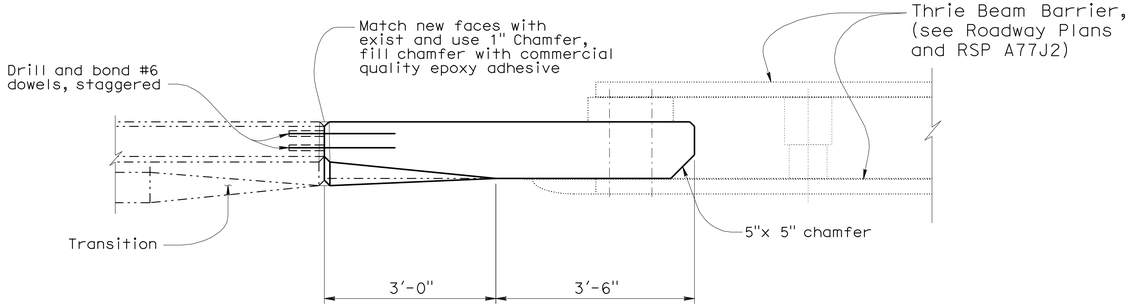

PLAN
no scale

LOCATION TABLE OF TYPE 27 (CASE 1)
BARRIER TRANSITION BLOCK APPLICATION

Bridge No.	Bridge Name	Post Mile	Direction	No. of Connections (WB)		Case
				Leading End	Trailing End	
04-0113	Finch Creek Rd UC	63.1	NB SB	1 1		1
04-0112	Palmer Blvd UC	62.23	NB SB	1 1		1

NOTES:

1. For limits of excavation and backfill see Standard Plans May 2006 A62C, Section E-E.
2. See Roadway Plans for work locations.
3. Vertical face shown. Drill and bond #6 dowels staggered pattern along slanted face where applicable.
4. Epoxy fill drilled holes for bolts used to fasten MBGR to existing end block, unless holes were cast using pipe sleeves.

LEGEND

-·-·-·-·-·- Indicates existing structure

——— Indicates new construction

THE CONTRACTOR SHALL VERIFY ALL CONTROLLING FIELD DIMENSIONS BEFORE ORDERING OR FABRICATING ANY MATERIAL.

1 **REVISED PER ADDENDUM NO. 1 DATED APRIL 8, 2010**

	BY	CHECKED
DESIGN	N KANEPATHIPILLAI	J MAGANA
DETAILS	P C W/B EDWARDS	N KANEPATHIPILLAI
QUANTITIES	J MAGANA/P WELLS	NKP/D SANDHU

STATE OF CALIFORNIA
DEPARTMENT OF TRANSPORTATION

DIVISION OF ENGINEERING SERVICES
STRUCTURE DESIGN
SPECIAL DESIGN BRANCH

BRIDGE NO. varies
POST MILE varies

TYPE 27 BARRIER (CASE 1)
TRANSITION ANCHOR BLOCK DETAILS

STRUCTURES DESIGN SPECIAL DESIGN SHEET (ENGLISH) (REV. 10-25-05)

ORIGINAL SCALE IN INCHES FOR REDUCED PLANS 0 1 2 3

CU 01
EA 464001

DISREGARD PRINTS BEARING EARLIER REVISION DATES

REVISION DATES 3/3/09 3/12/09 3/16/09

SHEET 8 OF ~~11~~

FILE => kbar07.add

1 10

USERNAME => trlenard DATE PLOTTED => 06-APR-2010 TIME PLOTTED => 10:36

DIST	COUNTY	ROUTE	POST MILES TOTAL PROJECT	SHEET No	TOTAL SHEETS
01	Hum	101	T0.2/R126.0	71	72

REGISTERED CIVIL ENGINEER 3/16/09 DATE

9-21-09
PLANS APPROVAL DATE

REGISTERED PROFESSIONAL ENGINEER JOEL MAGANA No. C61500 Exp. 6/30/11 CIVIL STATE OF CALIFORNIA

The State of California or its officers or agents shall not be responsible for the accuracy or completeness of electronic copies of this plan sheet.

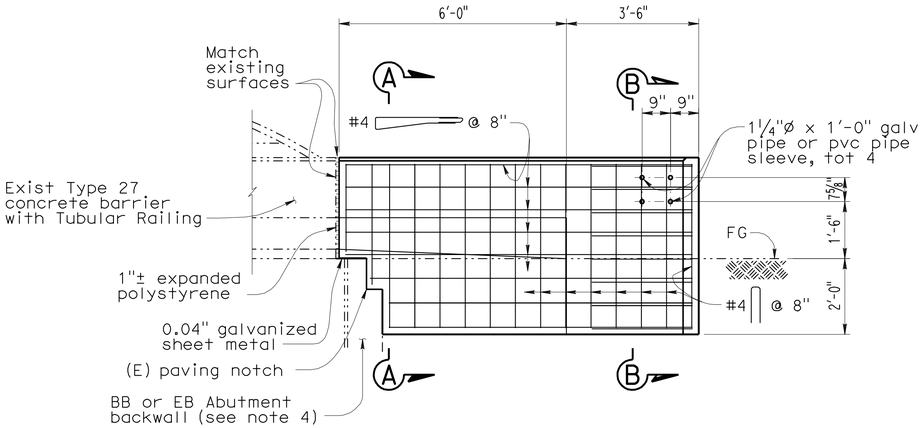

ELEVATION

no scale

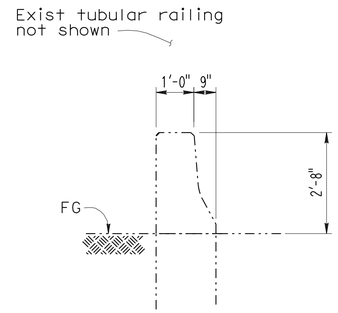

TYPICAL SECTION EXISTING CONCRETE BARRIER TYPE 27

no scale

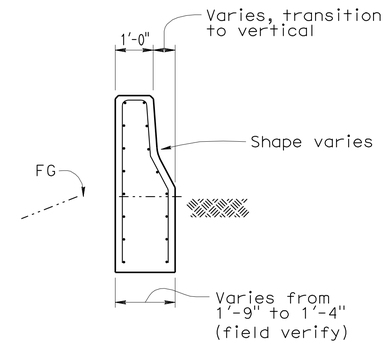

SECTION A-A

no scale

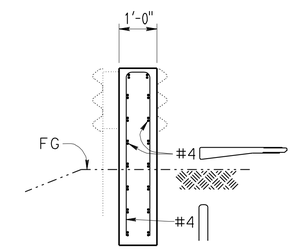

SECTION B-B

no scale

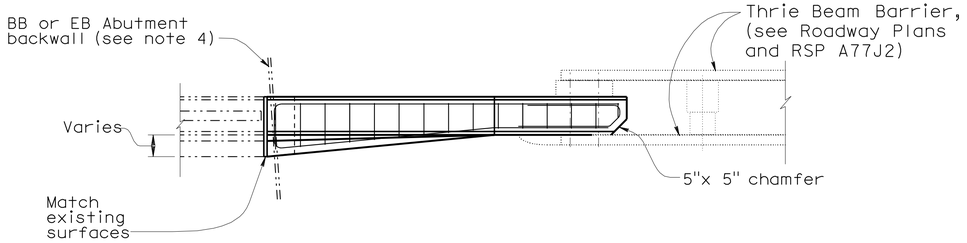

PLAN

no scale

LOCATION TABLE OF TYPE 25 BARRIER TRANSITION BLOCK (TYPE WB) APPLICATIONS

Bridge No.	Bridge Name	Post Mile	Direction	No. of Connections (WB)		Case
				Leading End	Trailing End	
04-0028	Redwood Creek Bridge	121.09	NB SB	1 1	~~1~~ ~~1~~	2

1

LEGEND

Indicates existing structure

Indicates new construction

NOTES:

1. For limits of excavation and backfill see Standard Plans A62C, Section E-E.
2. See Roadway Plans for work locations.
3. For exist barriers transitioned to slant or vertical, make new anchor block to match exist surfaces.
4. During excavation ensure no damage to abutment backwall. As-builts show Abutment backwall ends 1'-0" beyond joint seal.
5. Epoxy fill drilled holes for bolts used to fasten MBGR to existing end block, unless holes were cast using pipe sleeves.

THE CONTRACTOR SHALL VERIFY ALL CONTROLLING FIELD DIMENSIONS BEFORE ORDERING OR FABRICATING ANY MATERIAL.

1 **REVISED PER ADDENDUM NO. 1 DATED APRIL 8, 2010**

	BY	CHECKED
DESIGN	N KANEPATHIPILLAI	J MAGANA
DETAILS	P C W/B EDWARDS	N KANEPATHIPILLAI
QUANTITIES	J MAGANA/P WELLS	NKP/D SANDHU

STATE OF CALIFORNIA DEPARTMENT OF TRANSPORTATION

DIVISION OF ENGINEERING SERVICES STRUCTURE DESIGN
SPECIAL DESIGN BRANCH

BRIDGE NO. varies
POST MILE varies

TYPE 27 BARRIER (CASE 2) TRANSITION ANCHOR BLOCK DETAILS

STRUCTURES DESIGN SPECIAL DESIGN SHEET (ENGLISH) (REV. 10-25-05)

ORIGINAL SCALE IN INCHES FOR REDUCED PLANS 0 1 2 3

CU 01
EA 464001

DISREGARD PRINTS BEARING EARLIER REVISION DATES

REVISION DATES: 3/5/09 3/18/09 3/16/09

SHEET 9 OF ~~11~~ 1

FILE => kbar08.add

USERNAME => friehard DATE PLOTTED => 06-APR-2010 TIME PLOTTED => 10:36

DIST	COUNTY	ROUTE	POST MILES TOTAL PROJECT	SHEET No	TOTAL SHEETS
01	Hum	101	T0.2/R126.0	72	72

REGISTERED CIVIL ENGINEER 3/16/09 DATE

9-21-09
PLANS APPROVAL DATE

The State of California or its officers or agents shall not be responsible for the accuracy or completeness of electronic copies of this plan sheet.

REGISTERED PROFESSIONAL ENGINEER JOEL MAGANA No. C61500 Exp. 6/30/11 CIVIL STATE OF CALIFORNIA

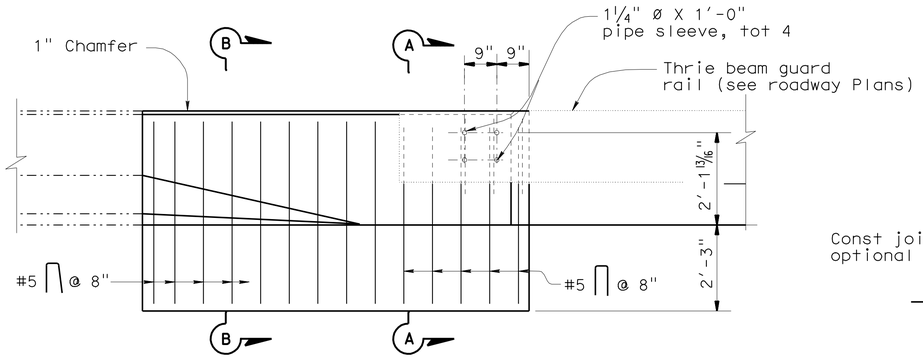

ELEVATION
No Scale

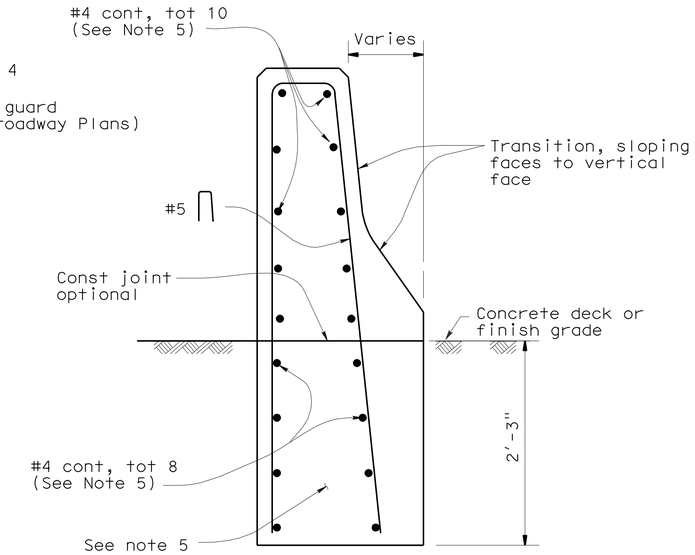

SECTION B-B
No Scale

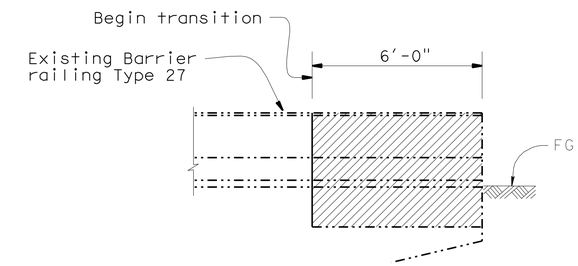

CONCRETE REMOVAL
No Scale

Notes:

1. For details not shown, see Standard Plans.
2. Dependent dimensions will be verified in the field before fabricating any end connection to conform with existing paved conditions.
3. For Thrie Beam Connection, see Standard Plans "Thrie Beam Barrier Connections To Bridge Railing"
4. All plates and bolts are galvanized.
5. Cut and remove portion of Type 27 as shown, Existing reinf to remain.
6. For limits of excavation and backfill see Standard Plans May 2006 A62C, Section E-E.
7. See Roadway Plans for work locations.

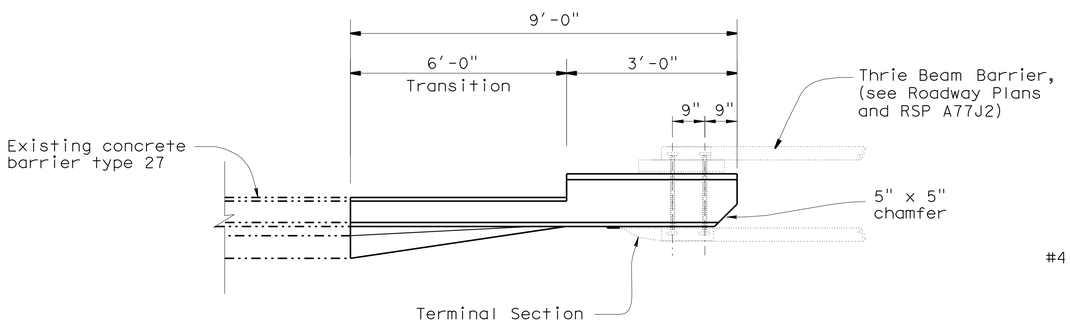

PLAN
No Scale

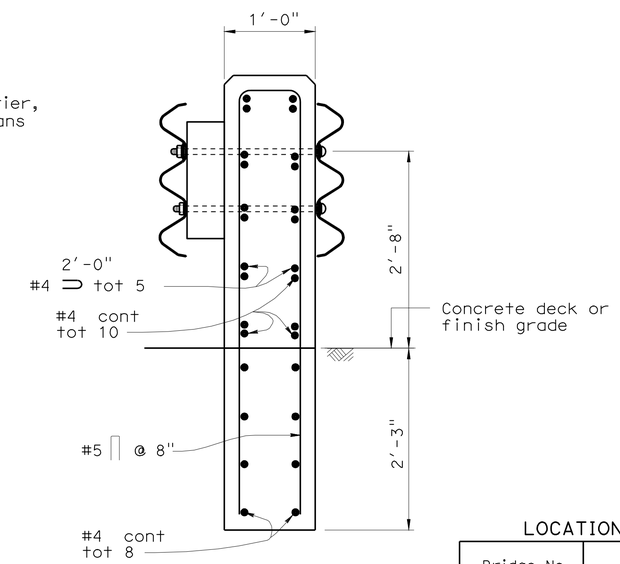

SECTION A-A
No Scale

Legend:

Indicates existing structure.

Indicates new construction.

Concrete removal.

STANDARD PLAN SHEET NO.

DETAIL NO.

LOCATION TABLE OF TYPE 27 BARRIER TRANSITION BLOCK APPLICATIONS

Bridge No.	Bridge Name	Post Mile	Direction	No. of Connections (WB) Leading End	No. of Connections (WB) Trailing End	Case
04-0071	Sruce Point OC	73.7	NB SB	1 1		3
04-0130	12th Ave OC	60.49	NB SB	1 1		3

1 **REVISED PER ADDENDUM NO. 1 DATED APRIL 8, 2010**

	BY	CHECKED
DESIGN	N KANEPATHIPILLAI	J MAGANA
DETAILS	BOB EDWARDS	N KANEPATHIPILLAI
QUANTITIES	J. MAGANA/P C WELLS	N K P/D SANDHU

STATE OF CALIFORNIA
DEPARTMENT OF TRANSPORTATION

DIVISION OF ENGINEERING SERVICES
STRUCTURE DESIGN
SPECIAL DESIGN BRANCH

BRIDGE NO. Varies
POST MILE Varies

TYPE 27 BARRIER (CASE 3)
TRANSITION ANCHOR BLOCK DETAILS

STRUCTURES DESIGN SPECIAL DESIGN SHEET (ENGLISH) (REV. 10-25-05)

ORIGINAL SCALE IN INCHES FOR REDUCED PLANS 0 1 2 3

CU 01
EA 464001

DISREGARD PRINTS BEARING EARLIER REVISION DATES 3/16/09

REVISION DATES

SHEET 10 OF ~~11~~

1 10

FILE => kbar09.add

USERNAME => friehard DATE PLOTTED => 06-APR-2010 TIME PLOTTED => 10:36