Dist	COUNTY	ROUTE	POST MILES TOTAL PROJECT	SHEET No.	TOTAL SHEETS
01	Hum	254	5.9	1	72

ACSTP-43M0(004)E

STATE OF CALIFORNIA
DEPARTMENT OF TRANSPORTATION

PROJECT PLANS FOR CONSTRUCTION ON
STATE HIGHWAY

IN HUMBOLDT COUNTY
NEAR MIRANDA
AT 0.5 MILE SOUTH OF MIRANDA POST OFFICE

TO BE SUPPLEMENTED BY STANDARD PLANS DATED MAY 2006

INDEX OF PLANS

SHEET No.	DESCRIPTION
1	TITLE AND LOCATION MAP
2	TYPICAL CROSS SECTION
3	LAYOUT
4	PROFILE AND SUPERELEVATION DIAGRAM
5	CONSTRUCTION DETAILS
6	TEMPORARY WATER POLLUTION CONTROL QUANTITIES
7	EROSION CONTROL QUANTITIES
8-12	DRAINAGE PLAN, PROFILE, DETAILS AND QUANTITIES
13	UTILITY PLAN
14	CONSTRUCTION AREA SIGN
15-22	STAGE CONSTRUCTION PLANS AND DETAILS
23-32	TRAFFIC HANDLING PLAN AND QUANTITIES
33-34	PAVEMENT DELINEATION AND SIGN PLAN AND QUANTITIES
35	SUMMARY OF QUANTITIES
36-38	TEMPORARY SIGNAL SYSTEM
39-64	REVISED AND NEW STANDARD PLANS

STRUCTURE PLANS

65-72	MEYERS WALL

THE STANDARD PLANS LIST APPLICABLE TO THIS CONTRACT IS INCLUDED IN THE NOTICE TO BIDDERS AND SPECIAL PROVISIONS BOOK.

LOCATION MAP

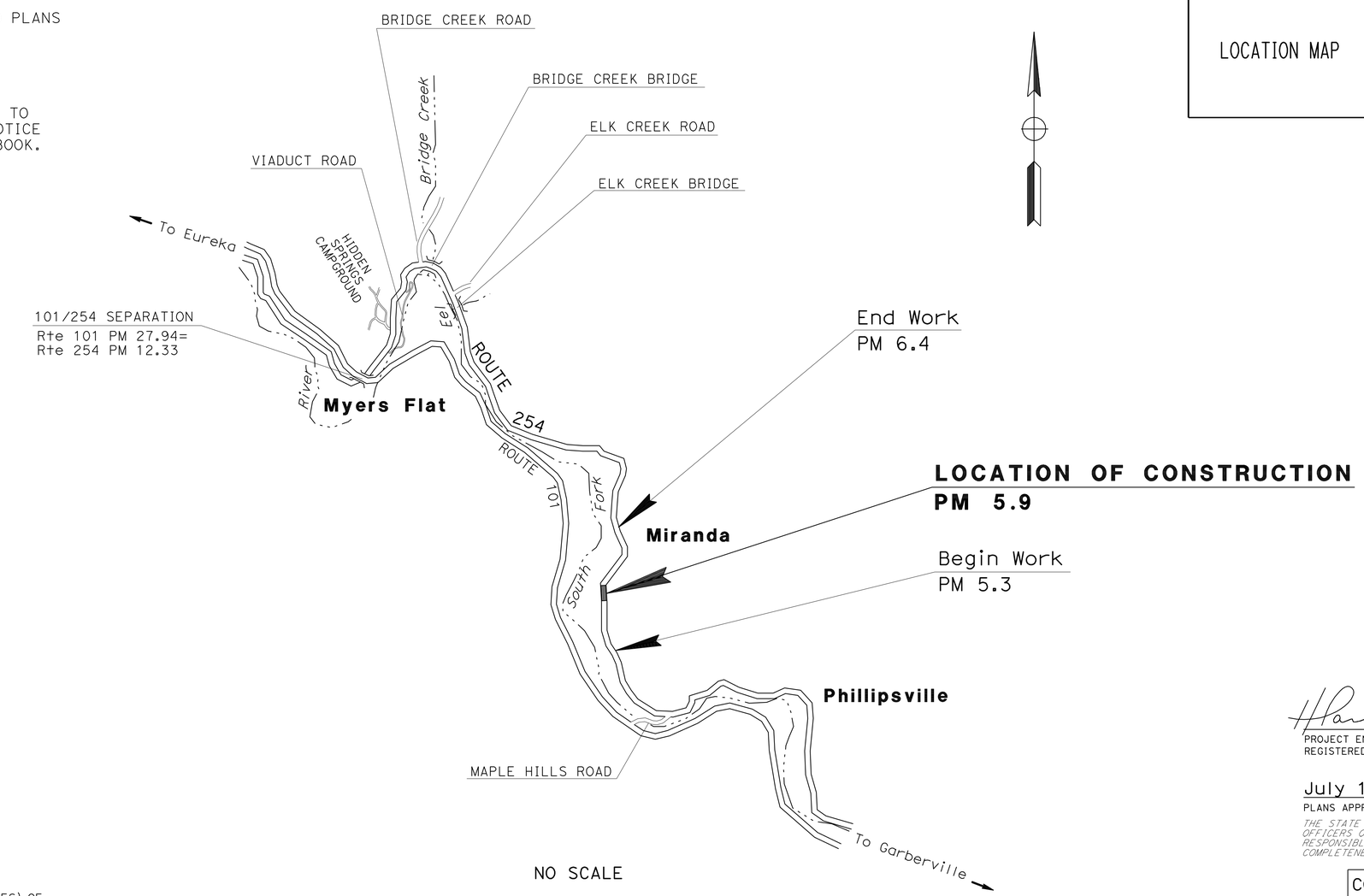

NO SCALE

THE CONTRACTOR SHALL POSSESS THE CLASS (OR CLASSES) OF LICENSE AS SPECIFIED IN THE "NOTICE TO BIDDERS."

PROJECT MANAGER: FRANK DEMLING

DESIGN ENGINEER: FERMIN BARRIGA

H Paras Jr 4-23-10
PROJECT ENGINEER DATE
REGISTERED CIVIL ENGINEER

July 19, 2010
PLANS APPROVAL DATE

REGISTERED PROFESSIONAL ENGINEER HORACIO PARAS JR No. C73255 Exp. 12-31-10 CIVIL STATE OF CALIFORNIA

THE STATE OF CALIFORNIA OR ITS OFFICERS OR AGENTS SHALL NOT BE RESPONSIBLE FOR THE ACCURACY OR COMPLETENESS OF SCANNED COPIES OF THIS PLAN SHEET.

CONTRACT No.	01-475014
PROJECT ID	0100000333

LAST REVISION 04-07-10

DATE PLOTTED => 06-SEP-2011
TIME PLOTTED => 15:44

Dist	COUNTY	ROUTE	POST MILES TOTAL PROJECT	SHEET No.	TOTAL SHEETS
01	Hum	254	5.9	2	72

REGISTERED CIVIL ENGINEER 4-23-10 DATE

7-19-10
PLANS APPROVAL DATE

REGISTERED PROFESSIONAL ENGINEER HORACIO PARAS JR No. C73255 Exp. 12-31-10 CIVIL STATE OF CALIFORNIA

THE STATE OF CALIFORNIA OR ITS OFFICERS OR AGENTS SHALL NOT BE RESPONSIBLE FOR THE ACCURACY OR COMPLETENESS OF SCANNED COPIES OF THIS PLAN SHEET.

NOTES:

1. DIMENSIONS OF THE PAVEMENT STRUCTURES (STRUCTURAL SECTIONS) ARE SUBJECT TO TOLERANCES SPECIFIED IN THE STANDARD SPECIFICATIONS.
2. SUPERELEVATION AS SHOWN OR AS DIRECTED BY THE ENGINEER. SEE SHEET PS-1.
3. SEE STRUCTURE PLANS FOR RETAINING WALL DETAILS.
4. FOR LOCATION OF MBGR, SEE SHEET L-1 AND Q-1.
5. Temp WIDENING TO BE COMPLETED FOR TEMPORARY SIGNAL SYSTEM DURING STAGE 2 CONSTRUCTION. SEE SHEET SC-2 FOR MORE DETAILS.
6. FOR UNDERDRAIN ELEVATIONS, SEE DRAINAGE PLANS.
7. FOR SAW CUT LINE LOCATION, SEE STAGE 2 CONSTRUCTION PLANS.

LEGEND

COLD PLANE AC PAVEMENT AND 0.10' HMA (TYPE A)

CLASS 1 PERMEABLE MATERIAL

DESIGN DESIGNATION

2010 ADT=1,610	D=60%
2030 ADT=1,920	T=4.0%
2010 DHV= 450	V=45 MPH
2030 DHV= 530	(COMFORTABLE)
ESAL=110,100	TI_{20}=7.0

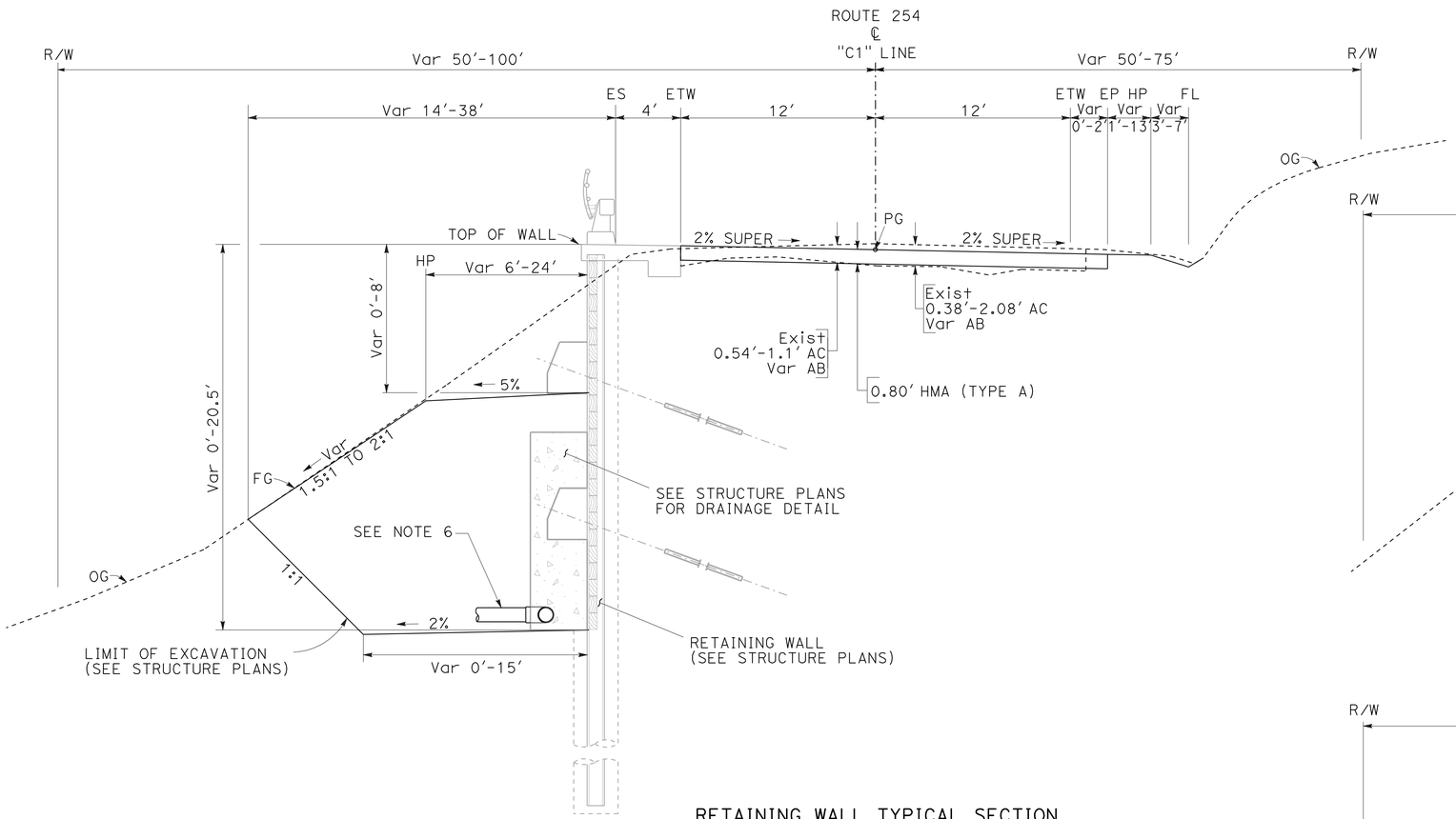

RETAINING WALL TYPICAL SECTION

Sta "C1" 201+70.00 TO Sta "C1" 204+80.00

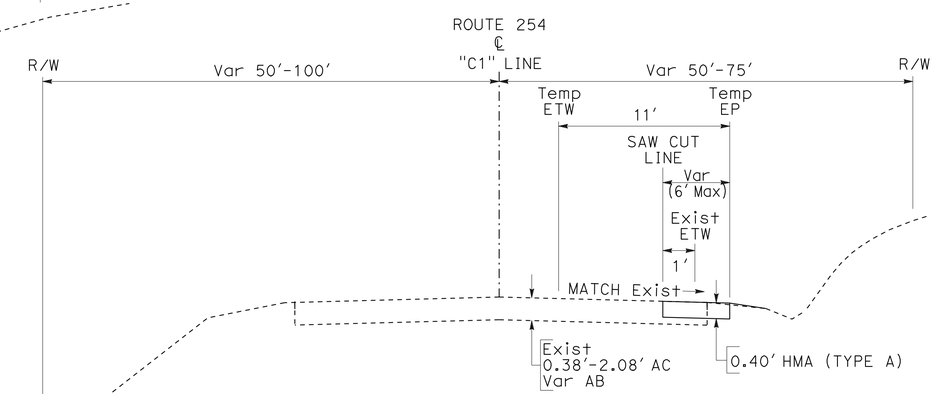

STAGE 2 Temp WIDENING TYPICAL SECTION

Sta "C1" 201+99.51 TO Sta "C1" 204+59.67
(SEE NOTE 5)

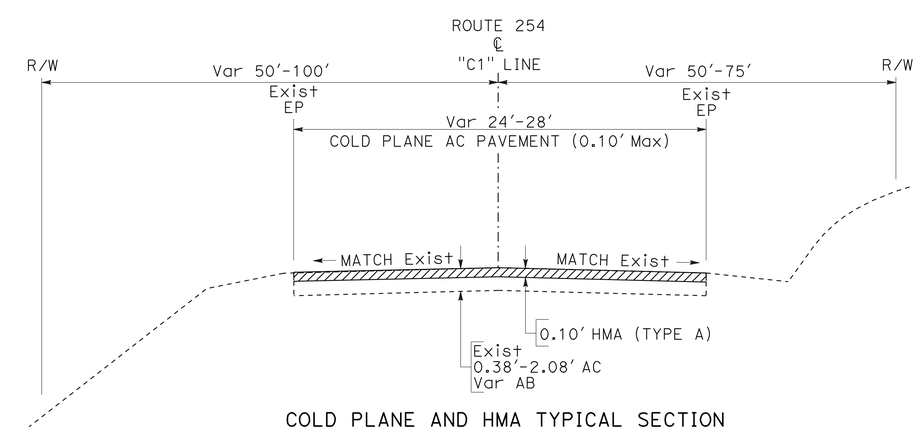

COLD PLANE AND HMA TYPICAL SECTION

Sta "C1" 204+80.00 TO Sta "C1" 205+73.00
Sta "C1" 200+54.00 TO Sta "C1" 201+70.00

TYPICAL CROSS SECTION

NO SCALE

X-1

STATE OF CALIFORNIA - DEPARTMENT OF TRANSPORTATION
NORTH REGION
PROJECT DEVELOPMENT
MARYSVILLE DESIGN-BRANCH M2

FUNCTIONAL SUPERVISOR: FERMIN BARRIGA
CALCULATED-DESIGNED BY: HORACIO PARAS JR
CHECKED BY: SHARON WOODBECK
REVISED BY
DATE REVISED

LAST REVISION 07-08-10
DATE PLOTTED => 19-JUL-2010
TIME PLOTTED => 11:01

Dist	COUNTY	ROUTE	POST MILES TOTAL PROJECT	SHEET No.	TOTAL SHEETS
01	Hum	254	5.9	3	72

REGISTERED CIVIL ENGINEER 4-23-10 DATE

7-19-10
PLANS APPROVAL DATE

REGISTERED PROFESSIONAL ENGINEER HORACIO PARAS JR No. C73255 Exp. 12-31-10 CIVIL STATE OF CALIFORNIA

THE STATE OF CALIFORNIA OR ITS OFFICERS OR AGENTS SHALL NOT BE RESPONSIBLE FOR THE ACCURACY OR COMPLETENESS OF SCANNED COPIES OF THIS PLAN SHEET.

NOTES:

1. FOR COMPLETE RIGHT OF WAY DATA, SEE RIGHT OF WAY RECORD MAPS AT DISTRICT OFFICE.
2. MBGR WITH RADIUS OF 150′ OR LESS MUST BE SHOP-BENT.
3. UTILITY RELOCATION WORK IS TO BE COMPLETED BY OTHERS.
4. FOR DRAINAGE WORK, SEE DRAINAGE PLANS.
5. FOR WEED CONTROL MAT (FIBER), SEE CONSTRUCTION DETAILS.
6. FOR TEMPORARY DRIVEWAYS, SEE SHEET SCD-1.

LEGEND

PLACE HMA (MISCELLANEOUS AREA)

COLD PLANE AC PAVEMENT (0.10′ Max) AND HMA (TYPE A)

TFESA — Temp FENCE (TYPE ESA)

ABBREVIATIONS

TCE TEMPORARY CONSTRUCTION EASEMENT

PDE PERMANENT DRAINAGE EASEMENT

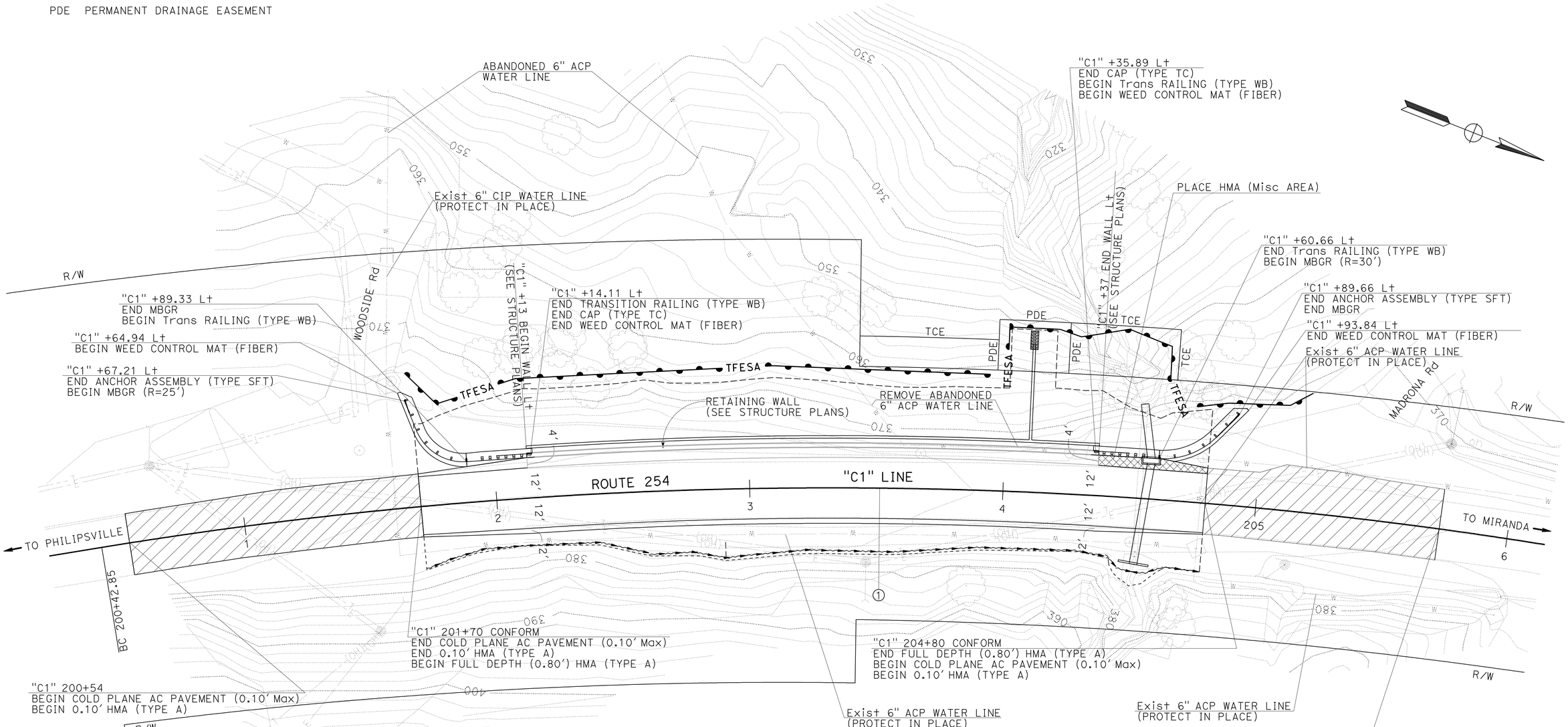

CURVE DATA

No.	R	Δ	T	L
1	1780.00	20°01′29.2"	314.26	622.11

LAYOUT

SCALE: 1" = 20′ **L-1**

STATE OF CALIFORNIA - DEPARTMENT OF TRANSPORTATION
NORTH REGION
PROJECT DEVELOPMENT
MARYSVILLE DESIGN-BRANCH M2

Caltrans

FUNCTIONAL SUPERVISOR: FERMIN BARRIGA
CALCULATED-DESIGNED BY: SHARON WOODBECK
CHECKED BY: HORACIO PARAS JR
REVISED BY
DATE REVISED

LAST REVISION DATE PLOTTED => 19-JUL-2010
07-08-10 TIME PLOTTED => 11:01

Dist	COUNTY	ROUTE	POST MILES TOTAL PROJECT	SHEET No.	TOTAL SHEETS
01	Hum	254	5.9	4	72

REGISTERED CIVIL ENGINEER 4-23-10 DATE

7-19-10
PLANS APPROVAL DATE

REGISTERED PROFESSIONAL ENGINEER HORACIO PARAS JR No. C73255 Exp. 12-31-10 CIVIL STATE OF CALIFORNIA

THE STATE OF CALIFORNIA OR ITS OFFICERS OR AGENTS SHALL NOT BE RESPONSIBLE FOR THE ACCURACY OR COMPLETENESS OF SCANNED COPIES OF THIS PLAN SHEET.

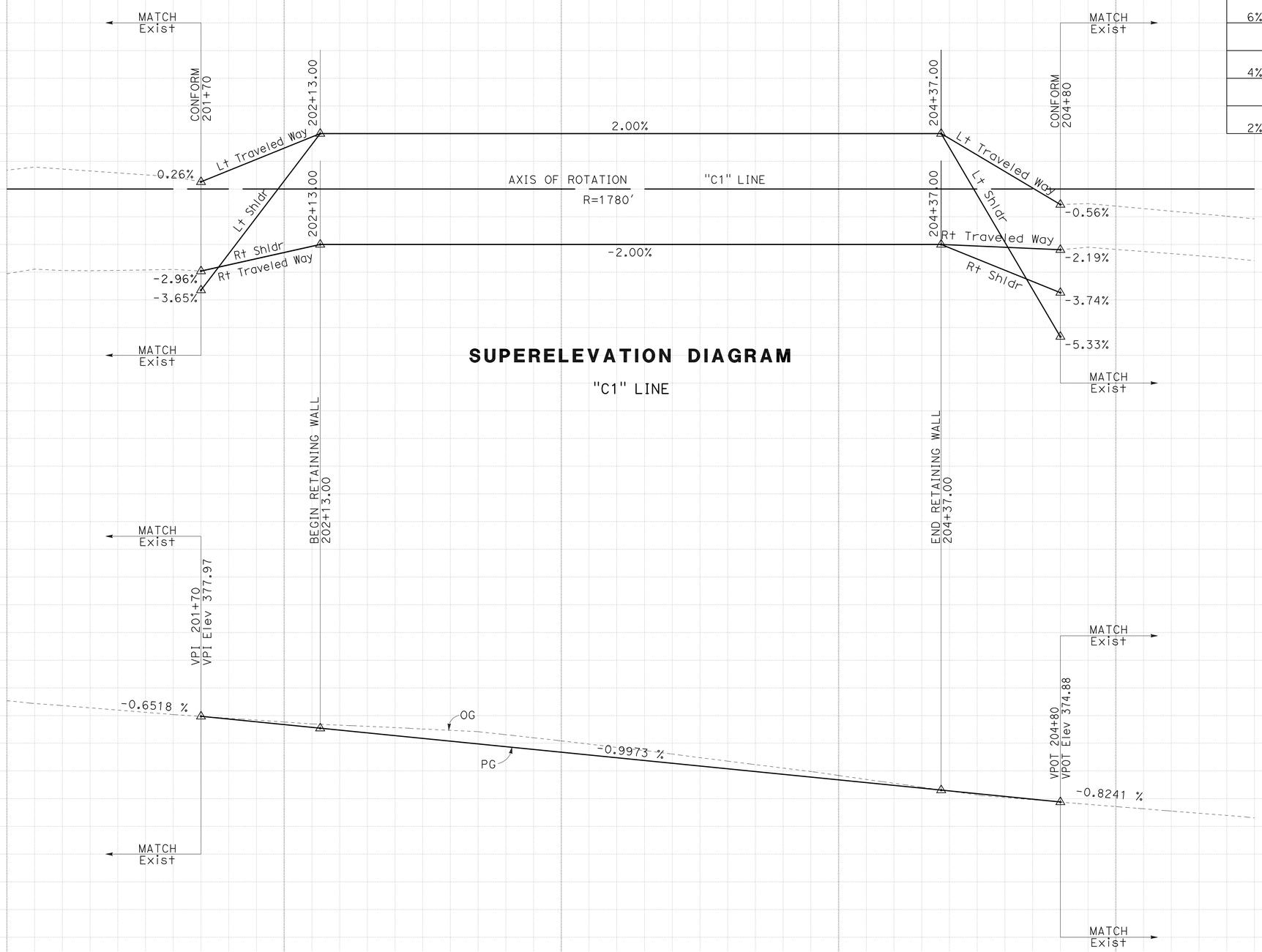

SUPERELEVATION DIAGRAM

"C1" LINE

PROFILE

"C1" LINE

PROFILE AND SUPERELEVATION DIAGRAM

SCALE: Horiz 1" = 20'
Vert 1" = 2'

PS-1

STATION		1	2	3	4	5	6	TOTAL
CY	Exc	291.7	2316.1	152.6				2760.4
	Emb	270.7	1569.1	120.0				1959.8

STATE OF CALIFORNIA - DEPARTMENT OF TRANSPORTATION
Caltrans
NORTH REGION
PROJECT DEVELOPMENT
MARYSVILLE DESIGN-BRANCH M2

FUNCTIONAL SUPERVISOR: FERMIN BARRIGA
CALCULATED-DESIGNED BY: HORACIO PARAS JR
CHECKED BY: SHARON WOODBECK
REVISED BY
DATE REVISED

LAST REVISION 03-17-10
DATE PLOTTED => 19-JUL-2010
TIME PLOTTED => 11:01

Dist	COUNTY	ROUTE	POST MILES TOTAL PROJECT	SHEET No.	TOTAL SHEETS
01	Hum	254	5.9	5	72

REGISTERED CIVIL ENGINEER 4-23-10 DATE

7-19-10
PLANS APPROVAL DATE

REGISTERED PROFESSIONAL ENGINEER HORACIO PARAS JR No. C73255 Exp. 12-31-10 CIVIL STATE OF CALIFORNIA

THE STATE OF CALIFORNIA OR ITS OFFICERS OR AGENTS SHALL NOT BE RESPONSIBLE FOR THE ACCURACY OR COMPLETENESS OF SCANNED COPIES OF THIS PLAN SHEET.

NOTES:

1. FOR LOCATIONS OF WEED CONTROL MAT (FIBER) SEE SUMMARY OF QUANTITIES SHEET Q-1.
2. POST SPACING & OTHER DIMENSIONS TO BE VERIFIED IN THE FIELD BY THE CONTRACTOR.
3. SEE Std PLAN A73C AND RSP A77C4 FOR ADDITIONAL DELINEATOR/CHANNELIZER DETAILS.

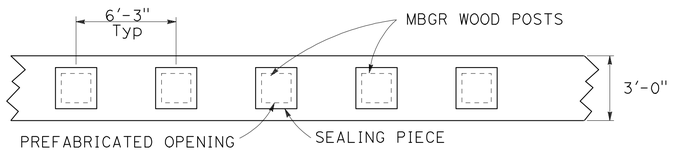

PLAN

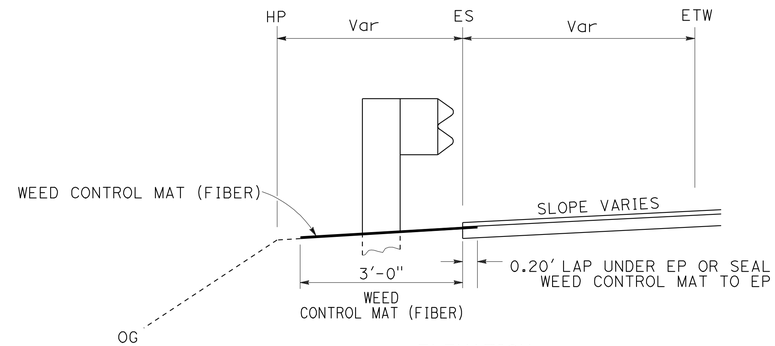

ELEVATION

WEED CONTROL MAT (FIBER)

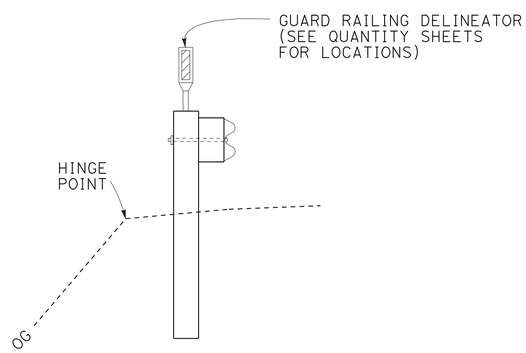

TYPICAL SECTION FROM FACE OF RAIL ELEMENT TO HINGE POINT

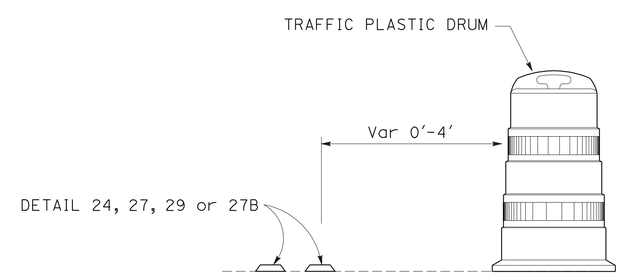

NOTE: EXACT LOCATION TO BE DETERMINED BY THE ENGINEER.

TRAFFIC PLASTIC DRUM DETAIL

CONSTRUCTION DETAILS

NO SCALE

C-1

STATE OF CALIFORNIA - DEPARTMENT OF TRANSPORTATION
Caltrans
NORTH REGION
PROJECT DEVELOPMENT
MARYSVILLE DESIGN-BRANCH M2

FUNCTIONAL SUPERVISOR: FERMIN BARRIGA
CALCULATED-DESIGNED BY: HORACIO PARAS JR
CHECKED BY: SHARON WOODBECK
REVISED BY
DATE REVISED

LAST REVISION 07-08-10
DATE PLOTTED => 19-JUL-2010
TIME PLOTTED => 11:01

Dist	COUNTY	ROUTE	POST MILES TOTAL PROJECT	SHEET No.	TOTAL SHEETS
01	Hum	254	5.9	6	72

REGISTERED CIVIL ENGINEER 4-23-10 DATE

7-19-10
PLANS APPROVAL DATE

REGISTERED PROFESSIONAL ENGINEER HORACIO PARAS JR No. C73255 Exp. 12-31-10 CIVIL STATE OF CALIFORNIA

THE STATE OF CALIFORNIA OR ITS OFFICERS OR AGENTS SHALL NOT BE RESPONSIBLE FOR THE ACCURACY OR COMPLETENESS OF SCANNED COPIES OF THIS PLAN SHEET.

TEMPORARY FIBER ROLL

STATION		LENGTH (LF)
"C1" 201+83.31	L+	14.8
"C1" 201+93.20	L+	14.9
"C1" 202+03.10	L+	15.0
"C1" 202+12.00	L+	15.0
"C1" 202+09.96 TO 204+39.94	L+	234.2
"C1" 204+36.97	L+	15.0
"C1" 204+46.1	L+	14.8
TOTAL		323.7

TEMPORARY SILT FENCE

STATION		LENGTH (LF)
"C1" 201+13 TO 204+50	L+	260
TOTAL		260

TEMPORARY CHECK DAM

STATION		LENGTH (LF)
"C1" 204+21.00 TO 204+44.39	R+	30
"C1" 204+65.92 TO 204+89.31	R+	30
TOTAL		60

18" TEMPORARY CULVERT

SHEET	STATION	LENGTH (FT)
SC-1	"C1" 204+66.60	106
	TOTAL	106

TEMPORARY FENCE (TYPE ESA)

STATION		LENGTH (LF)
"C1" 201+68.37 TO 205+18.06	L+	408
TOTAL		408

TEMPORARY DRAINAGE INLET PROTECTION

STATION		EACH
"C1" 204+57.61	L+	1
TOTAL		1

TEMPORARY WATER POLLUTION CONTROL QUANTITIES

WPCQ-1

REVISED BY | DATE REVISED
HORACIO PARAS JR | SHARON WOODBECK
CALCULATED-DESIGNED BY | CHECKED BY
FUNCTIONAL SUPERVISOR | FERMIN BARRIGA

STATE OF CALIFORNIA - DEPARTMENT OF TRANSPORTATION
Caltrans
NORTH REGION
PROJECT DEVELOPMENT
MARYSVILLE DESIGN-BRANCH M2

LAST REVISION 04-14-10 | DATE PLOTTED => 19-JUL-2010 TIME PLOTTED => 11:02

Dist	COUNTY	ROUTE	POST MILES TOTAL PROJECT	SHEET No.	TOTAL SHEETS
01	Hum	254	5.9	7	72

REGISTERED CIVIL ENGINEER 4-23-10 DATE

7-19-10
PLANS APPROVAL DATE

REGISTERED PROFESSIONAL ENGINEER HORACIO PARAS JR No. C73255 Exp. 12-31-10 CIVIL STATE OF CALIFORNIA

THE STATE OF CALIFORNIA OR ITS OFFICERS OR AGENTS SHALL NOT BE RESPONSIBLE FOR THE ACCURACY OR COMPLETENESS OF SCANNED COPIES OF THIS PLAN SHEET.

FIBER ROLLS

STATION FROM	STATION TO	L†/R†	LENGTH (LF)
"C1" 201+92.38	"C1" 202+21.93	L†	35.2
"C1" 202+01.75	"C1" 202+38.22	L†	40.5
"C1" 202+21.93		L†	11.5
"C1" 202+38.22		L†	20.9
"C1" 204+10.00		L†	13.0
"C1" 204+10.00	"C1" 204+39.51	L†	31.4
"C1" 204+31.10		L†	4.8
"C1" 204+31.10	"C1" 204+51.41	L†	21.9
		TOTAL	179.2

EROSION CONTROL

LOCATION (STATION) FROM	TO	L†/R†	STRAW (N) TON	FIBER (N) LB	PURE LIVE SEED (N) LB	STABILIZING EMULSION (N) LB	COMPOST BLANKET CY	(HYDROSEED) (ACRE) ACRE
201+50	205+00	L†	0.46	492.2	34.27	27.6	32.67	0.22
201+50	205+00	R†	0.14	149.8	10.43	8.4	10.68	0.07
		TOTAL	0.60	642.0	44.70	36.0	43.35	0.29

(N) NOT A SEPARATE PAY ITEM, FOR INFORMATION ONLY.

EROSION CONTROL QUANTITIES

ECQ-1

STATE OF CALIFORNIA - DEPARTMENT OF TRANSPORTATION
Caltrans
NORTH REGION
PROJECT DEVELOPMENT
MARYSVILLE DESIGN-BRANCH M2

FUNCTIONAL SUPERVISOR: FERMIN BARRIGA

CALCULATED-DESIGNED BY: HORACIO PARAS JR
CHECKED BY: SHARON WOODBECK

REVISED BY
DATE REVISED

LAST REVISION 12-22-09 | DATE PLOTTED => 19-JUL-2010 | TIME PLOTTED => 11:02

Dist	COUNTY	ROUTE	POST MILES TOTAL PROJECT	SHEET No.	TOTAL SHEETS
01	Hum	254	5.9	8	72

REGISTERED CIVIL ENGINEER 4-23-10 DATE

7-19-10
PLANS APPROVAL DATE

REGISTERED PROFESSIONAL ENGINEER HORACIO PARAS JR No. C73255 Exp. 12-31-10 CIVIL STATE OF CALIFORNIA

THE STATE OF CALIFORNIA OR ITS OFFICERS OR AGENTS SHALL NOT BE RESPONSIBLE FOR THE ACCURACY OR COMPLETENESS OF SCANNED COPIES OF THIS PLAN SHEET.

NOTE:

FOR COMPLETE RIGHT OF WAY DATA, SEE RIGHT OF WAY RECORD MAPS AT DISTRICT OFFICE.

LEGEND

TFESA — Temp FENCE (TYPE ESA)

ABBREVIATIONS

TCE TEMPORARY CONSTRUCTION EASEMENT
PDE PERMANENT DRAINAGE EASEMENT

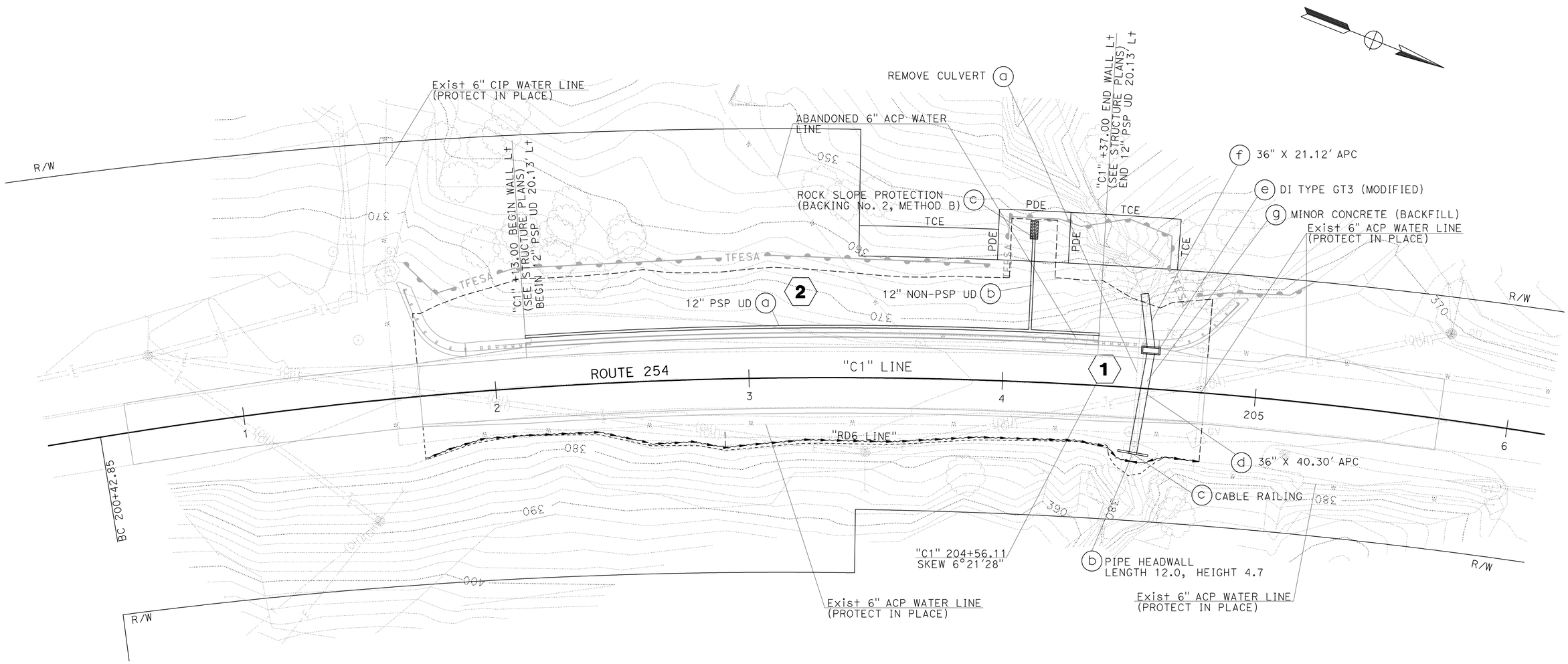

THIS PLAN ACCURATE FOR DRAINAGE WORK ONLY.

DRAINAGE PLAN

SCALE: 1" = 20' **D-1**

STATE OF CALIFORNIA - DEPARTMENT OF TRANSPORTATION
Caltrans
NORTH REGION
PROJECT DEVELOPMENT
MARYSVILLE DESIGN-BRANCH M2

FUNCTIONAL SUPERVISOR: FERMIN BARRIGA
CALCULATED-DESIGNED BY: HORACIO PARAS JR
CHECKED BY: SHARON WOODBECK
REVISED BY
DATE REVISED

LAST REVISION 04-15-10 | DATE PLOTTED => 19-JUL-2010 | TIME PLOTTED => 11:02

Dist	COUNTY	ROUTE	POST MILES TOTAL PROJECT	SHEET No.	TOTAL SHEETS
01	Hum	254	5.9	9	72

REGISTERED CIVIL ENGINEER 4-23-10 DATE

7-19-10
PLANS APPROVAL DATE

REGISTERED PROFESSIONAL ENGINEER HORACIO PARAS JR No. C73255 Exp. 12-31-10 CIVIL STATE OF CALIFORNIA

THE STATE OF CALIFORNIA OR ITS OFFICERS OR AGENTS SHALL NOT BE RESPONSIBLE FOR THE ACCURACY OR COMPLETENESS OF SCANNED COPIES OF THIS PLAN SHEET.

NOTES:

1. TRANSITION RAILING (TYPE WB) AND MBGR MUST BE LAID OUT IN CONJUNCTION WITH THE PLACEMENT OF THIS DRAINAGE SYSTEM.
2. TYPE GT3 (MODIFIED) DRAINAGE INLET WILL HAVE NO CURB AND BE FLUSH WITH FG.
3. FOR MINOR CONCRETE (BACKFILL) TYPICAL CROSS SECTION SEE DRAINAGE DETAILS.

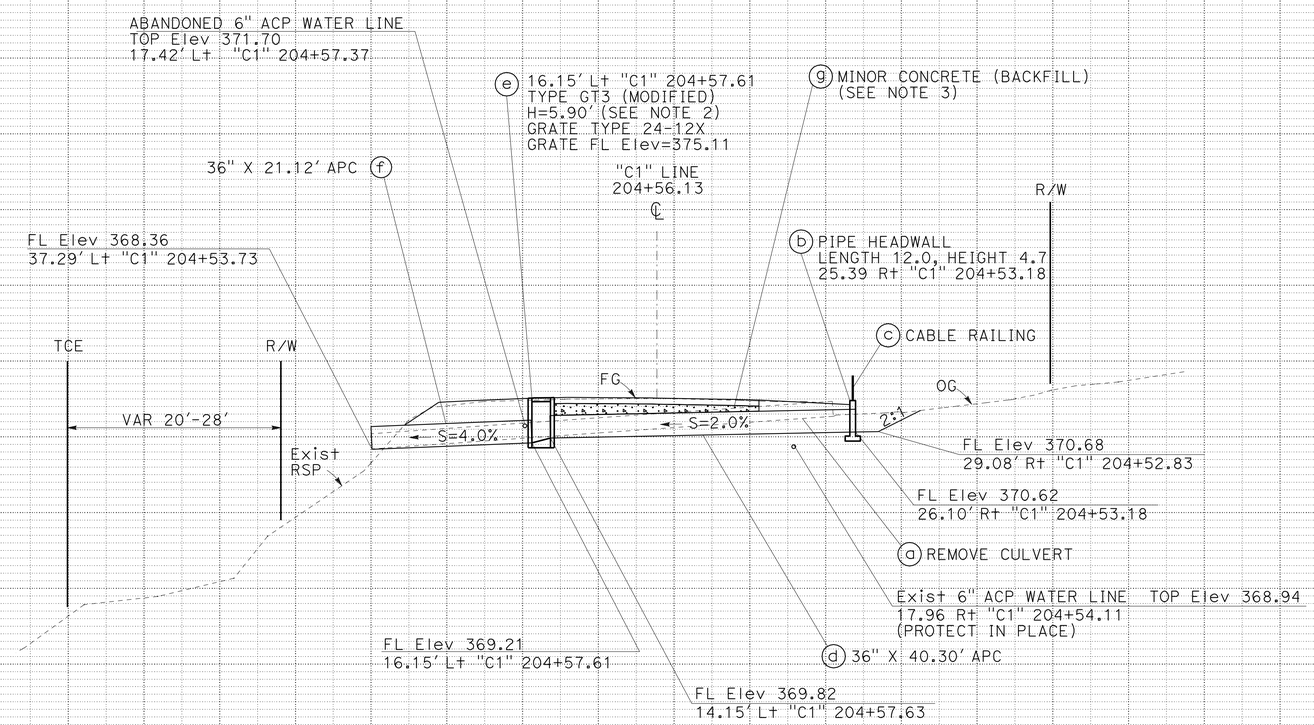

DRAINAGE SYSTEM 1

"C1" 204+56.13

SKEWED 6°21'28''

DRAINAGE PROFILE

SCALE Horiz: 1' = 10'
Vert: 1" = 10'

DP-1

REVISED BY | DATE REVISED

HORACIO PARAS JR | SHARON WOODBECK

CALCULATED-DESIGNED BY | CHECKED BY

FUNCTIONAL SUPERVISOR: FERMIN BARRIGA

STATE OF CALIFORNIA - DEPARTMENT OF TRANSPORTATION
Caltrans
NORTH REGION
PROJECT DEVELOPMENT
MARYSVILLE DESIGN-BRANCH M2

LAST REVISION | DATE PLOTTED => 19-JUL-2010 | TIME PLOTTED => 11:02
04-08-10

Dist	COUNTY	ROUTE	POST MILES TOTAL PROJECT	SHEET No.	TOTAL SHEETS
01	Hum	254	5.9	10	72

REGISTERED CIVIL ENGINEER 4-23-10 DATE

7-19-10
PLANS APPROVAL DATE

REGISTERED PROFESSIONAL ENGINEER HORACIO PARAS JR No. C73255 Exp. 12-31-10 CIVIL STATE OF CALIFORNIA

THE STATE OF CALIFORNIA OR ITS OFFICERS OR AGENTS SHALL NOT BE RESPONSIBLE FOR THE ACCURACY OR COMPLETENESS OF SCANNED COPIES OF THIS PLAN SHEET.

NOTE:

1. FOR FG DETAIL, SEE STRUCTURE PLANS.

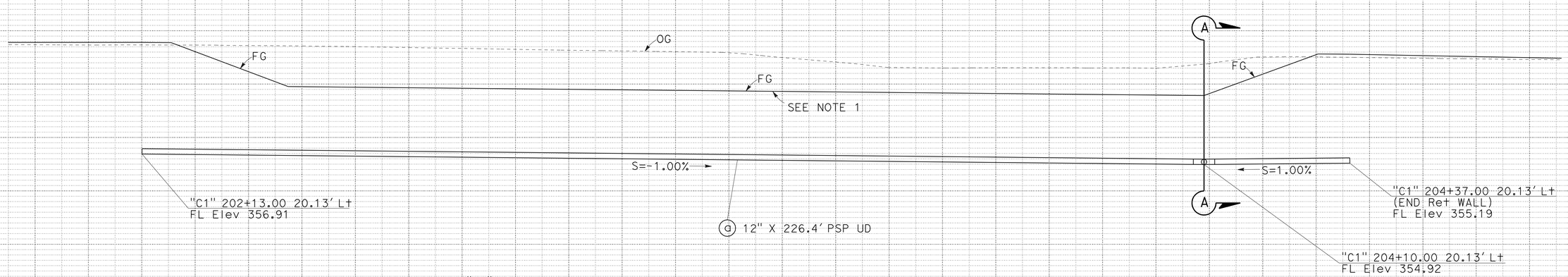

UNDERDRAIN PROFILE

"C1" 202+13.00 20.13' Lt TO "C1" 204+37.00 20.13' Lt

DRAINAGE SYSTEM 2

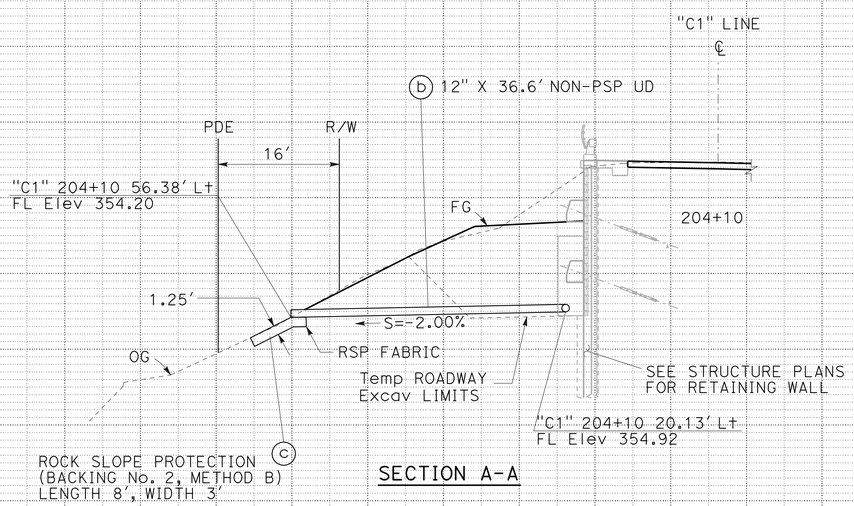

SECTION A-A

DRAINAGE PROFILE

SCALE Horiz: 1' = 10'
Vert: 1" = 10'

DP-2

STATE OF CALIFORNIA - DEPARTMENT OF TRANSPORTATION
NORTH REGION
PROJECT DEVELOPMENT
MARYSVILLE DESIGN-BRANCH M2

FUNCTIONAL SUPERVISOR: FERMIN BARRIGA
CALCULATED-DESIGNED BY: HORACIO PARAS JR
CHECKED BY: SHARON WOODBECK
REVISED BY
DATE REVISED

LAST REVISION 04-07-10
DATE PLOTTED => 19-JUL-2010
TIME PLOTTED => 11:02

Dist	COUNTY	ROUTE	POST MILES TOTAL PROJECT	SHEET No.	TOTAL SHEETS
01	Hum	254	5.9	11	72

REGISTERED CIVIL ENGINEER 4-23-10 DATE

7-19-10
PLANS APPROVAL DATE

REGISTERED PROFESSIONAL ENGINEER HORACIO PARAS JR No. C73255 Exp. 12-31-10 CIVIL STATE OF CALIFORNIA

THE STATE OF CALIFORNIA OR ITS OFFICERS OR AGENTS SHALL NOT BE RESPONSIBLE FOR THE ACCURACY OR COMPLETENESS OF SCANNED COPIES OF THIS PLAN SHEET.

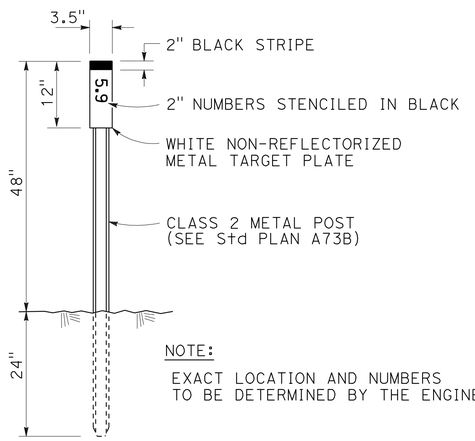

NOTE:
EXACT LOCATION AND NUMBERS TO BE DETERMINED BY THE ENGINEER.

MARKER (CULVERT)

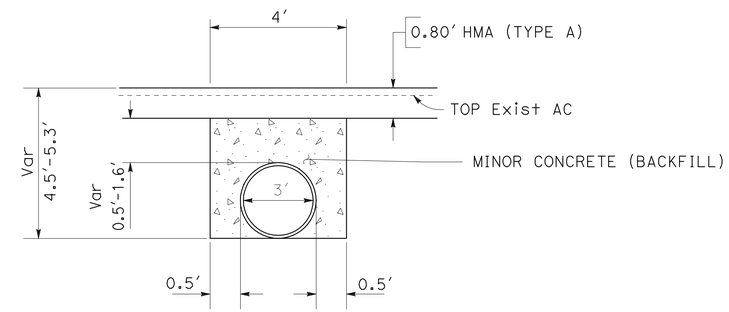

MINOR CONCRETE (BACKFILL) TYPICAL CROSS SECTION

DRAINAGE DETAILS

NO SCALE

DD-1

STATE OF CALIFORNIA - DEPARTMENT OF TRANSPORTATION
Caltrans
NORTH REGION
PROJECT DEVELOPMENT
MARYSVILLE DESIGN-BRANCH M2

FUNCTIONAL SUPERVISOR: FERMIN BARRIGA
CALCULATED-DESIGNED BY: HORACIO PARAS JR
CHECKED BY: SHARON WOODBECK
REVISED BY
DATE REVISED

LAST REVISION 04-14-10
DATE PLOTTED => 19-JUL-2010
TIME PLOTTED => 11:15

Dist	COUNTY	ROUTE	POST MILES TOTAL PROJECT	SHEET No.	TOTAL SHEETS
01	Hum	254	5.9	12	72

REGISTERED CIVIL ENGINEER 4-23-10 DATE

7-19-10
PLANS APPROVAL DATE

REGISTERED PROFESSIONAL ENGINEER HORACIO PARAS JR No. C73255 Exp. 12-31-10 CIVIL STATE OF CALIFORNIA

THE STATE OF CALIFORNIA OR ITS OFFICERS OR AGENTS SHALL NOT BE RESPONSIBLE FOR THE ACCURACY OR COMPLETENESS OF SCANNED COPIES OF THIS PLAN SHEET.

DRAINAGE QUANTITIES

PLAN SHEET No.	DRAINAGE PROFILE SHEET No.	DRAINAGE SYSTEM No.	DRAINAGE UNIT	REMOVE CULVERT	MINOR CONCRETE (MINOR STRUCTURE)	MINOR CONCRETE (BACKFILL) (N)	MISC IRON AND STEEL	36" APC	CABLE RAILING	RSP (BACKING No. 2, METHOD B)	RSP FABRIC	12" PERFORATED STEEL PIPE UNDERDRAIN	12" NON-PERFORATED STEEL PIPE UNDERDRAIN	CLASS I PERMEABLE CONCRETE (N)	REMARKS	DESCRIPTION	PLAN SHEET NoO.	DRAINAGE PROFILE SHEET No.	DRAINAGE SYSTEM No.	DRAINAGE UNIT
				LF	CY	CY	LB	LF	LF	CY	SQYD	LF	LF	CY						
D-1	DP-1	1	a	61.2											REMOVE 24" CMP (EXISTING CULVERT)		D-1	DP-1	1	a
			b		2.0		105								PIPE HEADWALL (L=12.0; H=4.7)	"C1" 204+47.17 25.06 R+ TO 204+59.17 26.41 R+				b
			c						12						CABLE RAILING	"C1" 204+47.17 26.06 R+ TO 204+59.17 27.41 R+				c
			d					40.3							36" X 40.3' APC	"C1" 204+56.13				d
			e		2.7		478								DI-TYPE GT3 (H=5.90') GRATE TYPE 24-12X	"C1" 204+57.61 16.15 L+				e
			f					21.1							36" X 21.1' APC	"C1" 204+56.00 24.82' L+ TO DI (TYPE GT3)				f
			g			14									MINOR CONCRETE (BACKFILL)					g
D-1	DP-2	2	a									226.4		354.4	12" PSP UD	"C1" 202+13.00 20.13 L+ TO 204+37.00 20.13 L+	D-1	DP-2	2	a
			b										36.6		12" NON-PSP UD	"C1" 204+10.00 20.13' L+ TO 204+10.00 56.38' L+				b
			c							1.1	5.7				RSP (BACKING No. 2, METHOD B)	"C1" 204+10.00 L+				c
TOTAL				61.2	4.7	14	583	61.4	12	1.1	5.7	226.4	36.6	354.4						

(N) - NOT A SEPARATE PAY ITEM, FOR INFORMATION ONLY.

APC ALLOWABLE PIPE MATERIAL & PROTECTION

DESIGNATION	TYPE			
	CORREGATED STEELE PIPE (GALVANIZED, POLYMERIC SHEET COATED)		PLASTIC PIPE (HIGH DENSITY POLYETHYLENE)	REINFORCED CONCRETE PIPE (TYPE IP (MS) MODIFIED OR TYPE II MODIFIED CEMENT)
	SIZE	THICKNESS	SIZE	SIZE
36" APC	36"	0.138" (10 GAGE)	36"	36"

HORACIO PARAS JR — REVISED BY
SHARON WOODBECK — DATE REVISED
CALCULATED-DESIGNED BY
CHECKED BY
FERMIN BARRIGA — FUNCTIONAL SUPERVISOR

STATE OF CALIFORNIA - DEPARTMENT OF TRANSPORTATION
Caltrans
NORTH REGION
PROJECT DEVELOPMENT
MARYSVILLE DESIGN-BRANCH M2

DRAINAGE QUANTITIES
DQ-1

LAST REVISION 07-08-10 | DATE PLOTTED => 19-JUL-2010 | TIME PLOTTED => 11:15

Dist	COUNTY	ROUTE	POST MILES TOTAL PROJECT	SHEET No.	TOTAL SHEETS
01	Hum	254	5.9	13	72

REGISTERED CIVIL ENGINEER 4-23-10 DATE

7-19-10
PLANS APPROVAL DATE

REGISTERED PROFESSIONAL ENGINEER HORACIO PARAS JR No. C73255 Exp. 12-31-10 CIVIL STATE OF CALIFORNIA

THE STATE OF CALIFORNIA OR ITS OFFICERS OR AGENTS SHALL NOT BE RESPONSIBLE FOR THE ACCURACY OR COMPLETENESS OF SCANNED COPIES OF THIS PLAN SHEET.

NOTES:

1. FOR COMPLETE RIGHT OF WAY DATA, SEE RIGHT OF WAY RECORD MAPS AT DISTRICT OFFICE.
2. UTILITY RELOCATION WORK TO BE COMPLETED BY OTHERS PRIOR TO CONSTRUCTION.

LEGEND:

- Exist UNDERGROUND WATER LINE
- Exist OVERHEAD UTILITY
- —— -E —— NEW UNDERGROUND ELECTRICAL
- —— --T —— NEW UNDERGROUND TELEPHONE
- —— -E —— NEW OVERHEAD ELECTRICAL
- —— --T —— NEW OVERHEAD TELEPHONE

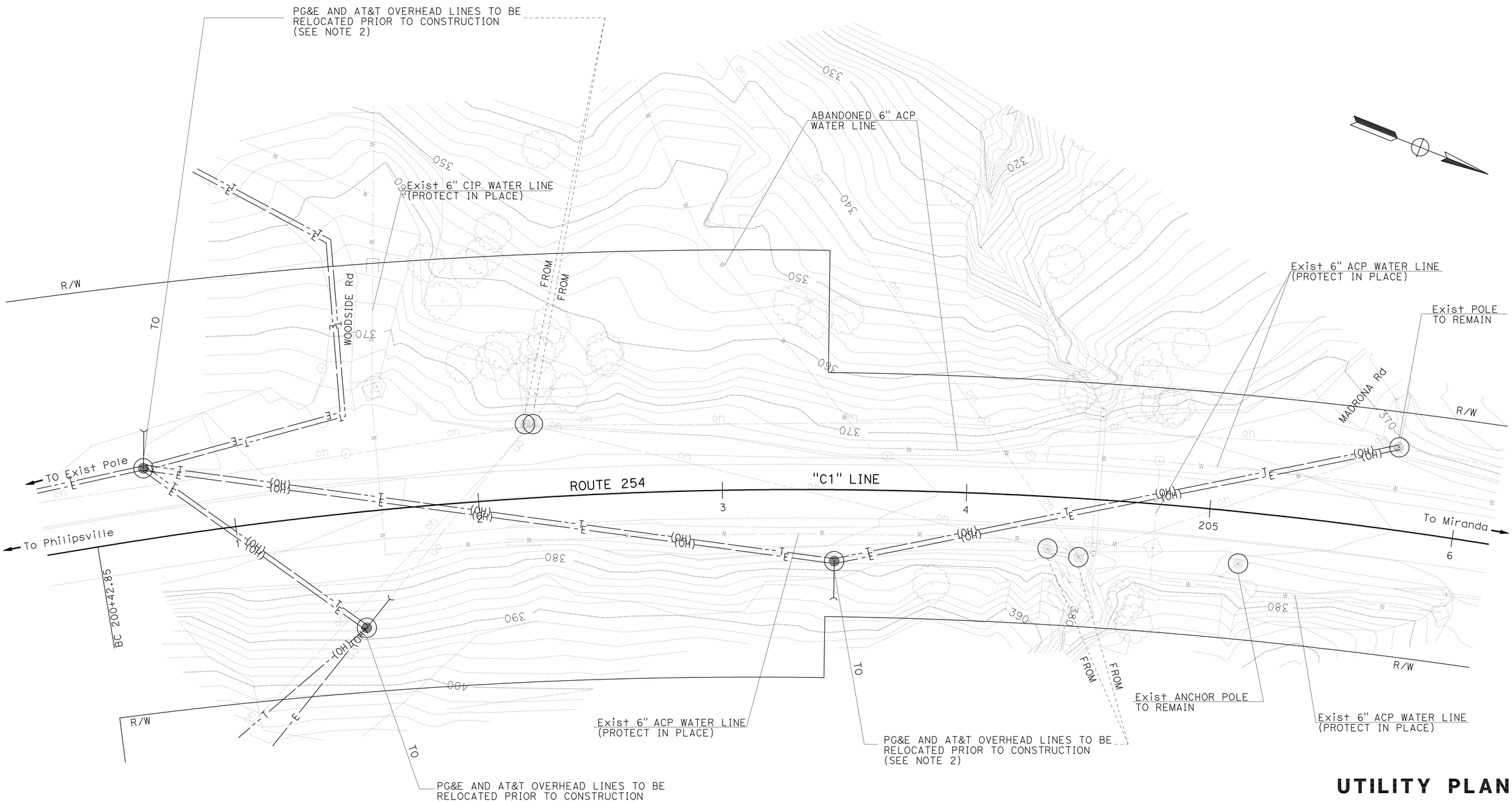

UTILITY PLAN

SCALE: 1" = 20'

U-1

STATE OF CALIFORNIA - DEPARTMENT OF TRANSPORTATION
NORTH REGION
PROJECT DEVELOPMENT
MARYSVILLE DESIGN-BRANCH M2

FUNCTIONAL SUPERVISOR: FERMIN BARRIGA

CALCULATED-DESIGNED BY: HORACIO PARAS JR
CHECKED BY: SHARON WOODBECK

REVISED BY
DATE REVISED

LAST REVISION 04-20-10 | DATE PLOTTED => 19-JUL-2010 | TIME PLOTTED => 11:15

Dist	COUNTY	ROUTE	POST MILES TOTAL PROJECT	SHEET No.	TOTAL SHEETS
01	Hum	254	5.9	14	72

REGISTERED CIVIL ENGINEER 4-23-10 DATE

7-19-10
PLANS APPROVAL DATE

REGISTERED PROFESSIONAL ENGINEER HORACIO PARAS JR No. C73255 Exp. 12-31-10 CIVIL STATE OF CALIFORNIA

THE STATE OF CALIFORNIA OR ITS OFFICERS OR AGENTS SHALL NOT BE RESPONSIBLE FOR THE ACCURACY OR COMPLETENESS OF SCANNED COPIES OF THIS PLAN SHEET.

NOTES:

1. EXACT SIGN LOCATION TO BE DETERMINED BY THE ENGINEER.
2. FOR ADDITIONAL CONSTRUCTION AREA SIGNS, SEE SHEET THQ-1 AND TRAFFIC HANDLING PLANS.
3. SIGN PANEL AND FLASHING BEACON SYSTEM TO BE INSTALLED ON WOOD POLE. SEE TEMPORARY SIGNAL SYSTEM PLANS FOR FLASHING BEACON INSTALLATION AND ILLUMINATION DETAILS.
4. ALL SIGN PANELS SHALL BE BLACK ON ORANGE AND MOUNTED ON WOOD POSTS UNLESS NOTED OTHERWISE.
5. SIGN W11-1 SHALL BE MOUNTED ABOVE SIGN W16-1 ON SAME POST INSTALLATION.

LEGEND:

SIGN-SINGLE POST

SIGN-TWO POST

FLASHING BEACON

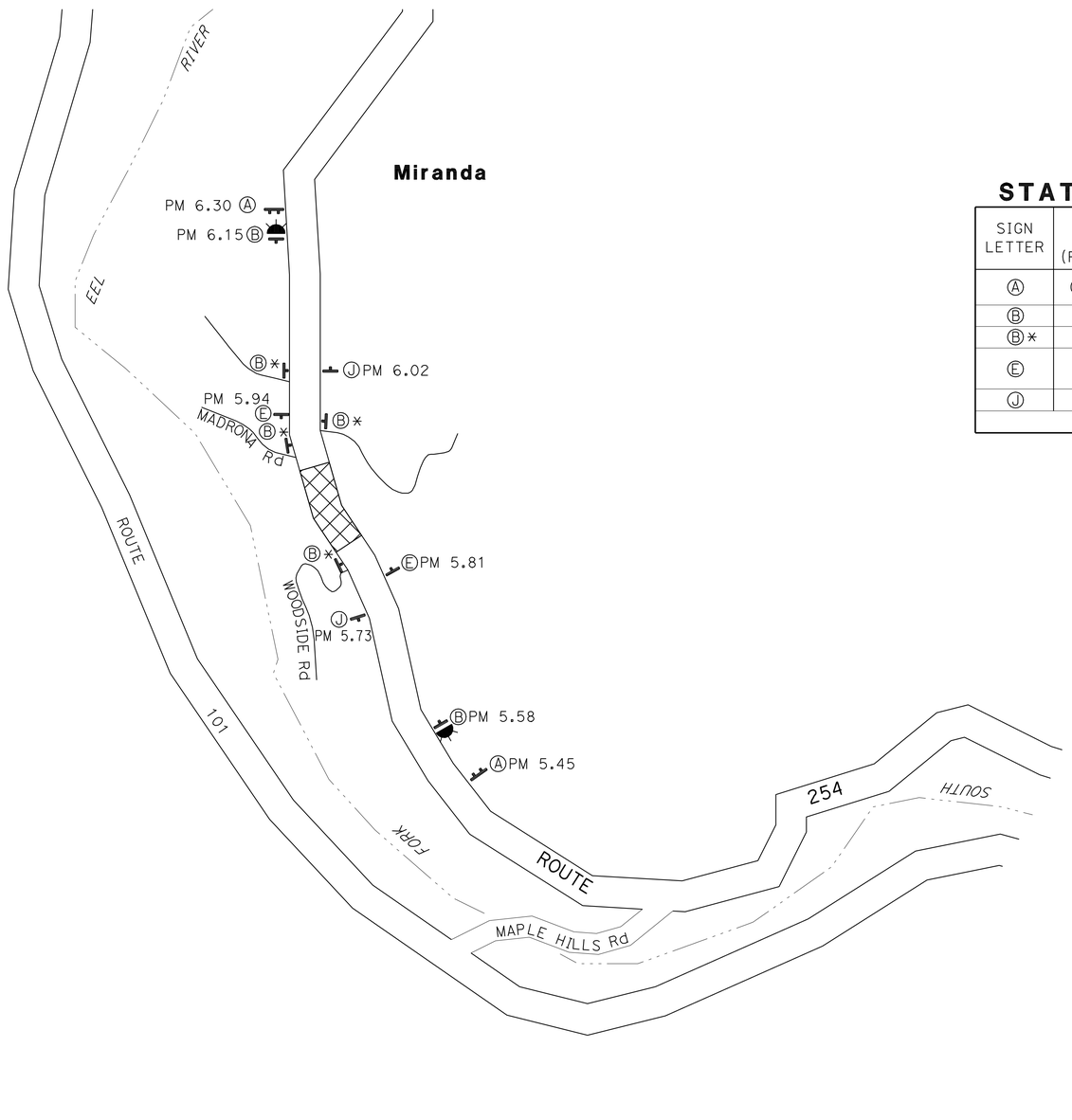

STATIONARY MOUNTED CONSTRUCTION AREA SIGNS

SIGN LETTER	SIGN CODE (FEDERAL)	PANEL SIZE	SIGN MESSAGE	No. OF POSTS AND SIZE	NUMBER OF SIGNS (EACH)	TOTAL No. OF POSTS (EACH)
Ⓐ	C40<CA>	72" x 36"	TRAFFIC FINES DOUBLED IN CONSTRUCTION ZONES	2-4" x 6"	2	4
Ⓑ	W20-1	48" x 48"	ROAD WORK AHEAD	SEE NOTE 3	2	2
Ⓑ*	W20-1	36" x 36"	ROAD WORK AHEAD	1-4" x 6"	4	2
Ⓔ	W11-1 W16-1	36" x 36" 24" x 30"	BICYCLE SYMBOL SHARE THE ROAD	1-4" x 6"	2	2
Ⓙ	G20-2	36" x 18"	END ROAD WORK	1-4" x 4"	2	2
				SUBTOTAL	12	12

THIS PLAN IS ACCURATE FOR CONSTRUCTION AREA SIGN WORK ONLY.

CONSTRUCTION AREA SIGNS

NO SCALE

CS-1

STATE OF CALIFORNIA - DEPARTMENT OF TRANSPORTATION
Caltrans
NORTH REGION
PROJECT DEVELOPMENT
MARYSVILLE DESIGN-BRANCH M2

FUNCTIONAL SUPERVISOR: FERMIN BARRIGA
CALCULATED-DESIGNED BY: HORACIO PARAS JR
CHECKED BY: SHARON WOODBECK
REVISED BY
DATE REVISED

LAST REVISION 02-16-10
DATE PLOTTED => 19-JUL-2010
TIME PLOTTED => 11:15

Dist	COUNTY	ROUTE	POST MILES TOTAL PROJECT	SHEET No.	TOTAL SHEETS
01	Hum	254	5.9	15	72

H Paras Jr 4-23-10
REGISTERED CIVIL ENGINEER DATE

7-19-10
PLANS APPROVAL DATE

REGISTERED PROFESSIONAL ENGINEER
HORACIO PARAS JR
No. C73255
Exp. 12-31-10
CIVIL
STATE OF CALIFORNIA

THE STATE OF CALIFORNIA OR ITS OFFICERS OR AGENTS SHALL NOT BE RESPONSIBLE FOR THE ACCURACY OR COMPLETENESS OF SCANNED COPIES OF THIS PLAN SHEET.

NOTES:

1. FOR COMPLETE RIGHT OF WAY DATA, SEE RIGHT OF WAY RECORD MAPS AT DISTRICT OFFICE.
2. PLACE Temp FENCE (TYPE ESA).
3. INSTALL Temp 18" CULVERT FOR DRAINAGE SYSTEM AT PM 5.9 MARKER.
4. REMOVE Exist CULVERT.
5. BEGIN INSTALLATION OF TEMPORARY SIGNAL SYSTEM. SEE TEMPORARY SIGNAL SYSTEM PLANS FOR DETAILS.

LEGEND:

TFESA — Temp FENCE (TYPE ESA)

CONSTRUCTION THIS STAGE

ABBREVIATIONS:

TCE - TEMPORARY CONSTRUCTION EASEMENT

PDE - PERMANENT DRAINAGE EASEMENT

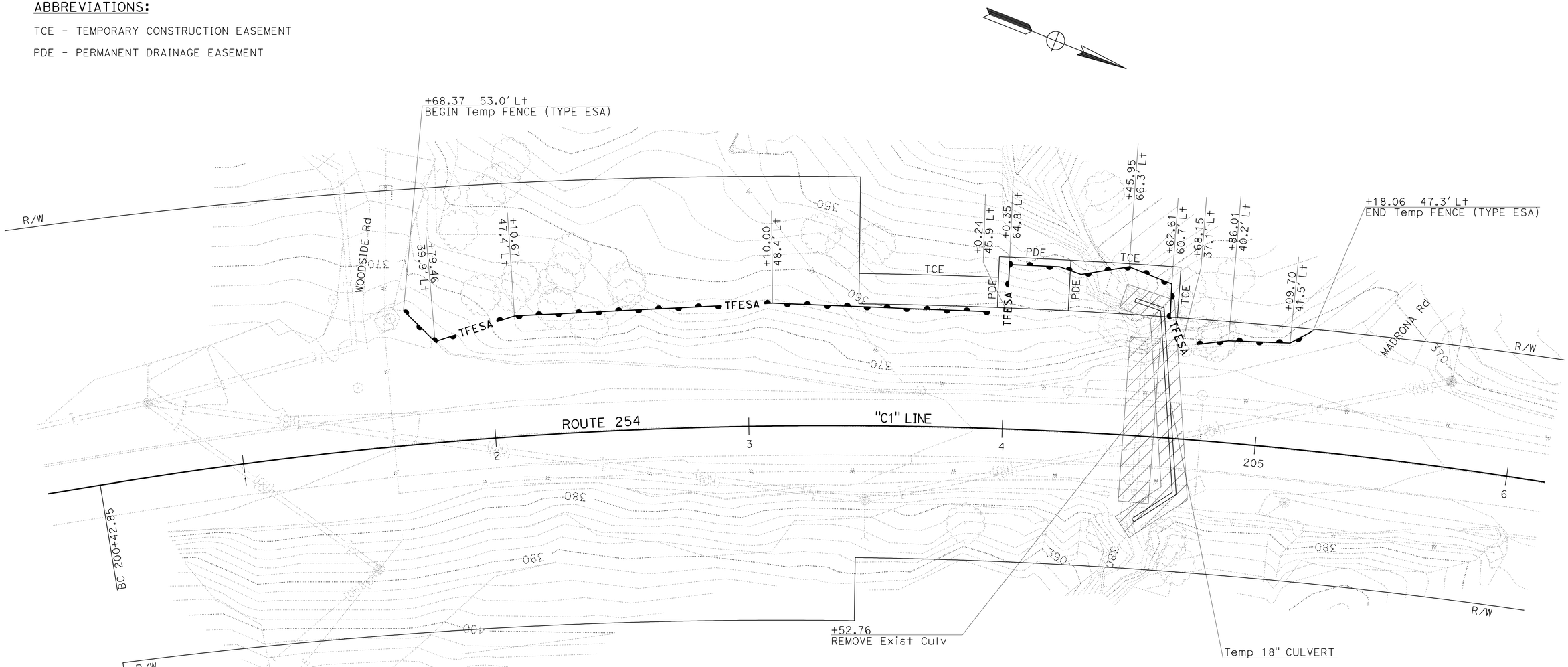

STAGE CONSTRUCTION (STAGE 1)

SCALE: 1" = 20'

SC-1

THIS PLAN ACCURATE FOR STAGE CONSTRUCTION WORK ONLY.

STATE OF CALIFORNIA - DEPARTMENT OF TRANSPORTATION
NORTH REGION
PROJECT DEVELOPMENT
MARYSVILLE DESIGN-BRANCH M2

Caltrans

FUNCTIONAL SUPERVISOR: FERMIN BARRIGA

CALCULATED-DESIGNED BY: HORACIO PARAS JR

CHECKED BY: SHARON WOODBECK

REVISED BY | DATE REVISED

LAST REVISION 04-19-10 | DATE PLOTTED => 19-JUL-2010 | TIME PLOTTED => 11:20

Dist	COUNTY	ROUTE	POST MILES TOTAL PROJECT	SHEET No.	TOTAL SHEETS
01	Hum	254	5.9	16	72

REGISTERED CIVIL ENGINEER 4-23-10 DATE

7-19-10
PLANS APPROVAL DATE

REGISTERED PROFESSIONAL ENGINEER HORACIO PARAS JR No. C73255 Exp. 12-31-10 CIVIL STATE OF CALIFORNIA

THE STATE OF CALIFORNIA OR ITS OFFICERS OR AGENTS SHALL NOT BE RESPONSIBLE FOR THE ACCURACY OR COMPLETENESS OF SCANNED COPIES OF THIS PLAN SHEET.

NOTES:

1. FOR COMPLETE RIGHT OF WAY DATA, SEE RIGHT OF WAY RECORD MAPS AT DISTRICT OFFICE.
2. UNDER Temp ONE-WAY TRAFFIC CONTROL, WIDEN NORTHBOUND LANE FOR TEMPORARY SIGNAL SYSTEM. SEE TYPICAL THIS SHEET. SAW CUT PAVEMENT, EXCAVATE FOR STRUCTURAL SECTION, AND PLACE HMA (0.40′). MATCH EXISTING CROSS SLOPE.
3. CONSTRUCT TEMPORARY DRIVEWAYS AT WOODSIDE Rd AND MADRONA Rd FOR SIGNAL LOOP DETECTORS. SEE SCD-1 FOR DRIVEWAY DETAILS.
4. COMPLETE INSTALLATION OF TEMPORARY SIGNAL SYSTEM.

LEGEND:

CONSTRUCTION THIS STAGE

TFESA — Temp FENCE (TYPE ESA)

ABBREVIATIONS:

TCE - TEMPORARY CONSTRUCTION EASEMENT
PDE - PERMANENT DRAINAGE EASEMENT

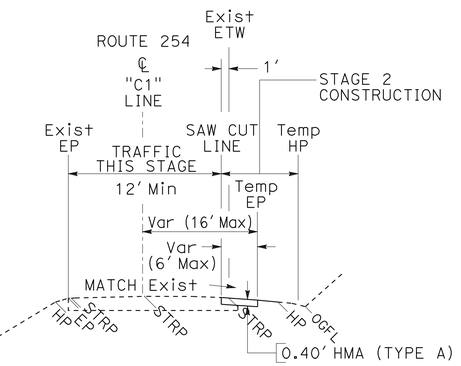

STAGE 2
TYPICAL SECTION

PM 5.9
Sta "C1" 201+76.83 TO 204+90.32

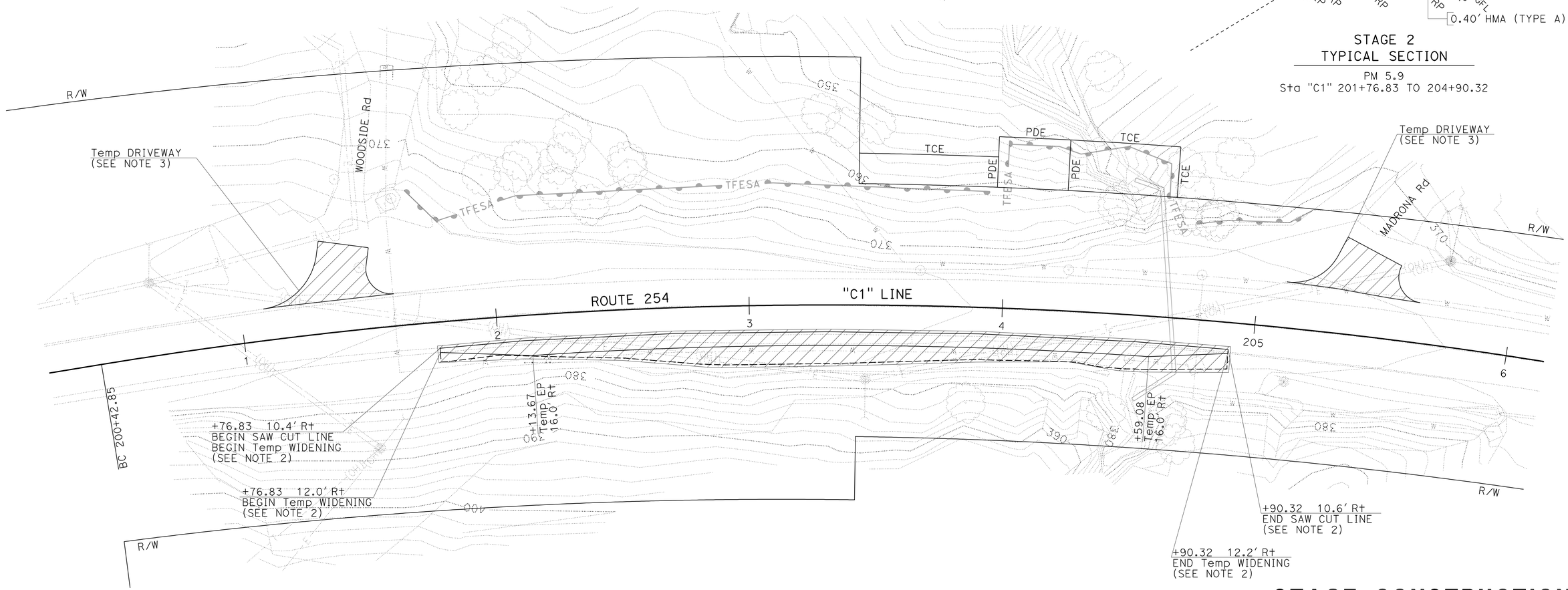

STAGE CONSTRUCTION (STAGE 2)

SCALE: 1" = 20′ **SC-2**

THIS PLAN ACCURATE FOR STAGE CONSTRUCTION WORK ONLY.

STATE OF CALIFORNIA - DEPARTMENT OF TRANSPORTATION
NORTH REGION
PROJECT DEVELOPMENT
MARYSVILLE DESIGN-BRANCH M2

FUNCTIONAL SUPERVISOR: FERMIN BARRIGA
CALCULATED-DESIGNED BY: HORACIO PARAS JR
CHECKED BY: SHARON WOODBECK
REVISED BY / DATE REVISED

LAST REVISION 07-08-10 | DATE PLOTTED => 19-JUL-2010 | TIME PLOTTED => 11:16

Dist	COUNTY	ROUTE	POST MILES TOTAL PROJECT	SHEET No.	TOTAL SHEETS
01	Hum	254	5.9	17	72

REGISTERED CIVIL ENGINEER 4-23-10 DATE

7-19-10
PLANS APPROVAL DATE

REGISTERED PROFESSIONAL ENGINEER HORACIO PARAS JR No. C73255 Exp. 12-31-10 CIVIL STATE OF CALIFORNIA

THE STATE OF CALIFORNIA OR ITS OFFICERS OR AGENTS SHALL NOT BE RESPONSIBLE FOR THE ACCURACY OR COMPLETENESS OF SCANNED COPIES OF THIS PLAN SHEET.

NOTES:

1. FOR COMPLETE RIGHT OF WAY DATA, SEE RIGHT OF WAY RECORD MAPS AT DISTRICT OFFICE.
2. PLACE Temp RAILING (TYPE-K), Temp CRASH CUSHIONS (TB-14), AND TYPE III BARRICADES. FOR PLACEMENT OF CRASH CUSHIONS SEE TRAFFIC HANDLING PLANS.
3. PLACE Temp PAVEMENT DELINEATION. SEE TRAFFIC HANDLING PLANS.
4. ACTIVATE TEMPORARY SIGNAL SYSTEM.
5. BEGIN CONSTRUCTION OF RETAINING WALL: DRILL FOR PILES, PLACE PILES, PLACE LAGGING, BEGIN EXCAVATION, AND INSTALL TIE-BACK ANCHORS. SEE STRUCTURE PLANS FOR DETAILS.

LEGEND:

CONSTRUCTION THIS STAGE

TFESA — Temp FENCE (TYPE ESA)

ABBREVIATIONS:

TCE - TEMPORARY CONSTRUCTION EASEMENT
PDE - PERMANENT DRAINAGE EASEMENT

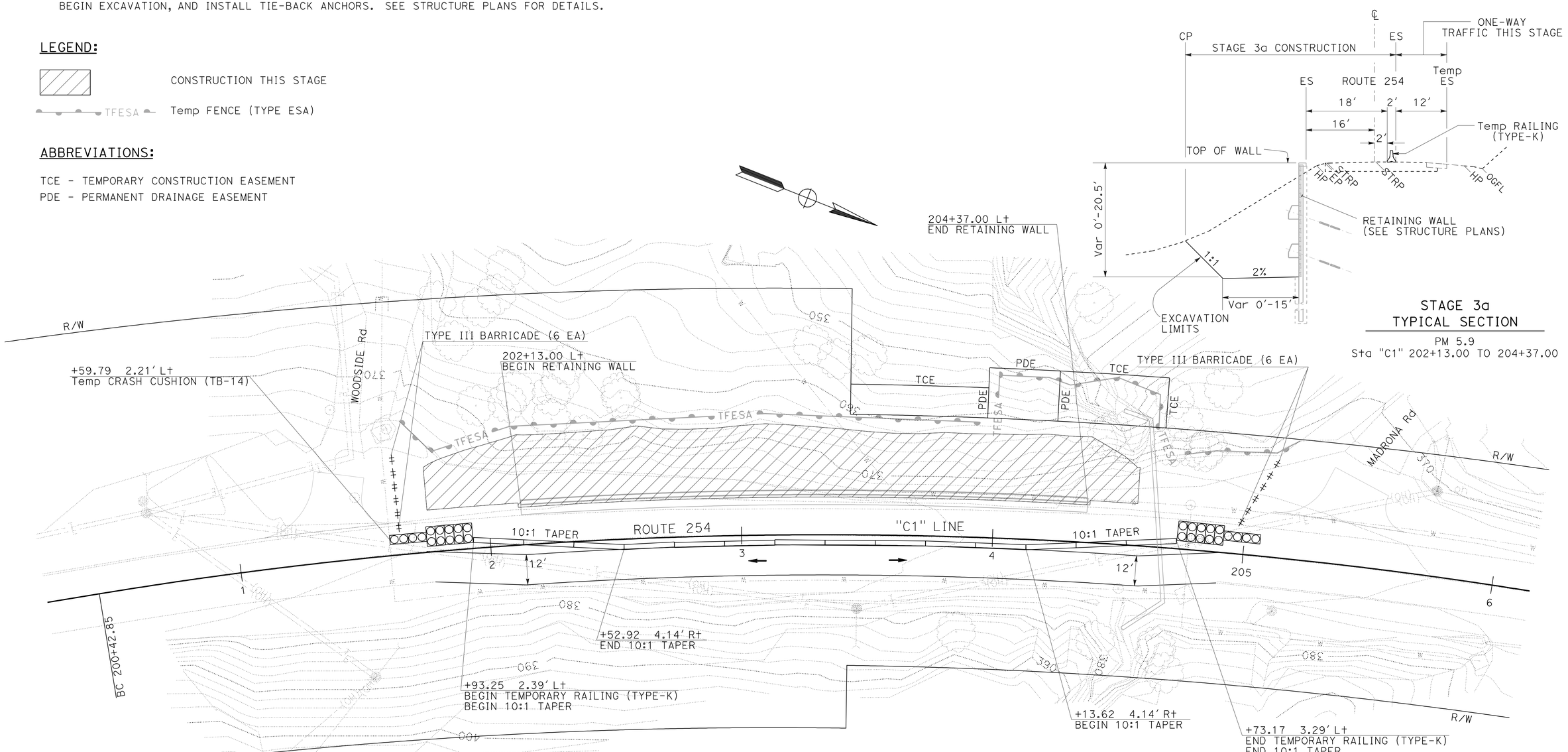

STAGE CONSTRUCTION (STAGE 3a)

SCALE: 1" = 20'

SC-3

THIS PLAN ACCURATE FOR STAGE CONSTRUCTION WORK ONLY.

STATE OF CALIFORNIA - DEPARTMENT OF TRANSPORTATION
NORTH REGION
PROJECT DEVELOPMENT
MARYSVILLE DESIGN-BRANCH M2

FUNCTIONAL SUPERVISOR: FERMIN BARRIGA
CALCULATED-DESIGNED BY: HORACIO PARAS JR
CHECKED BY: SHARON WOODBECK
REVISED BY / DATE REVISED

LAST REVISION 04-19-10
DATE PLOTTED => 19-JUL-2010
TIME PLOTTED => 11:16

Dist	COUNTY	ROUTE	POST MILES TOTAL PROJECT	SHEET No.	TOTAL SHEETS
01	Hum	254	5.9	18	72

REGISTERED CIVIL ENGINEER 4-23-10 DATE

7-19-10
PLANS APPROVAL DATE

REGISTERED PROFESSIONAL ENGINEER HORACIO PARAS JR No. C73255 Exp. 12-31-10 CIVIL STATE OF CALIFORNIA

THE STATE OF CALIFORNIA OR ITS OFFICERS OR AGENTS SHALL NOT BE RESPONSIBLE FOR THE ACCURACY OR COMPLETENESS OF SCANNED COPIES OF THIS PLAN SHEET.

NOTES:

1. FOR COMPLETE RIGHT OF WAY DATA, SEE RIGHT OF WAY RECORD MAPS AT DISTRICT OFFICE.
2. COMPLETE RETAINING WALL AND REMAINING WALL ELEMENTS. SEE STRUCTURE PLANS.
3. CONSTRUCT DRAINAGE SYSTEM 2. SEE SHEET DP-2 FOR DETAILS. PLACE STRUCTURE BACKFILL AND ROADWAY EMBANKMENT. SEE STRUCTURE PLANS FOR FG ELEVATIONS.
4. LAY OUT TRANSITION RAILING (TYPE WB) AND MBGR. MBGR MUST BE LAID OUT IN CONJUNCTION WITH THE CONSTRUCTION OF DRAINAGE SYSTEM 1.
5. CONSTRUCT DRAINAGE SYSTEM 1. SEE D-1 AND DP-1 FOR MORE INFORMATION. REMOVE Temp 18" CULVERT.

LEGEND:

CONSTRUCTION THIS STAGE

TFESA — Temp FENCE (TYPE ESA)

ABBREVIATIONS:

TCE - TEMPORARY CONSTRUCTION EASEMENT
PDE - PERMANENT DRAINAGE EASEMENT

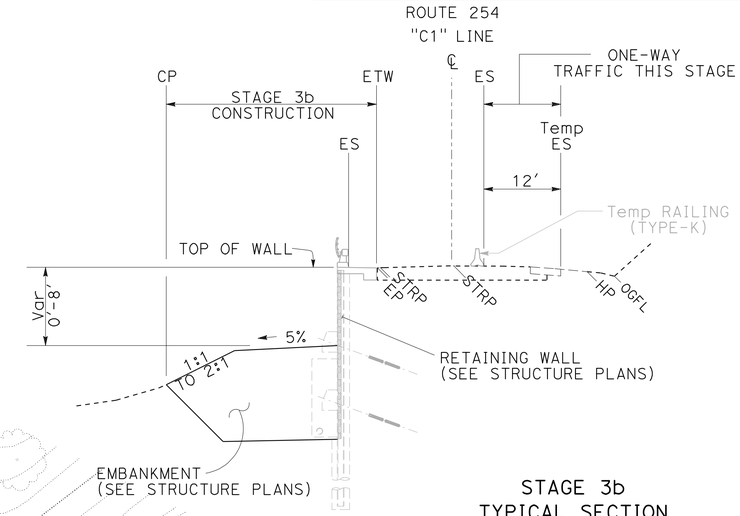

STAGE 3b TYPICAL SECTION

PM 5.9
Sta "C1" 202+13.00 TO 204+37.00

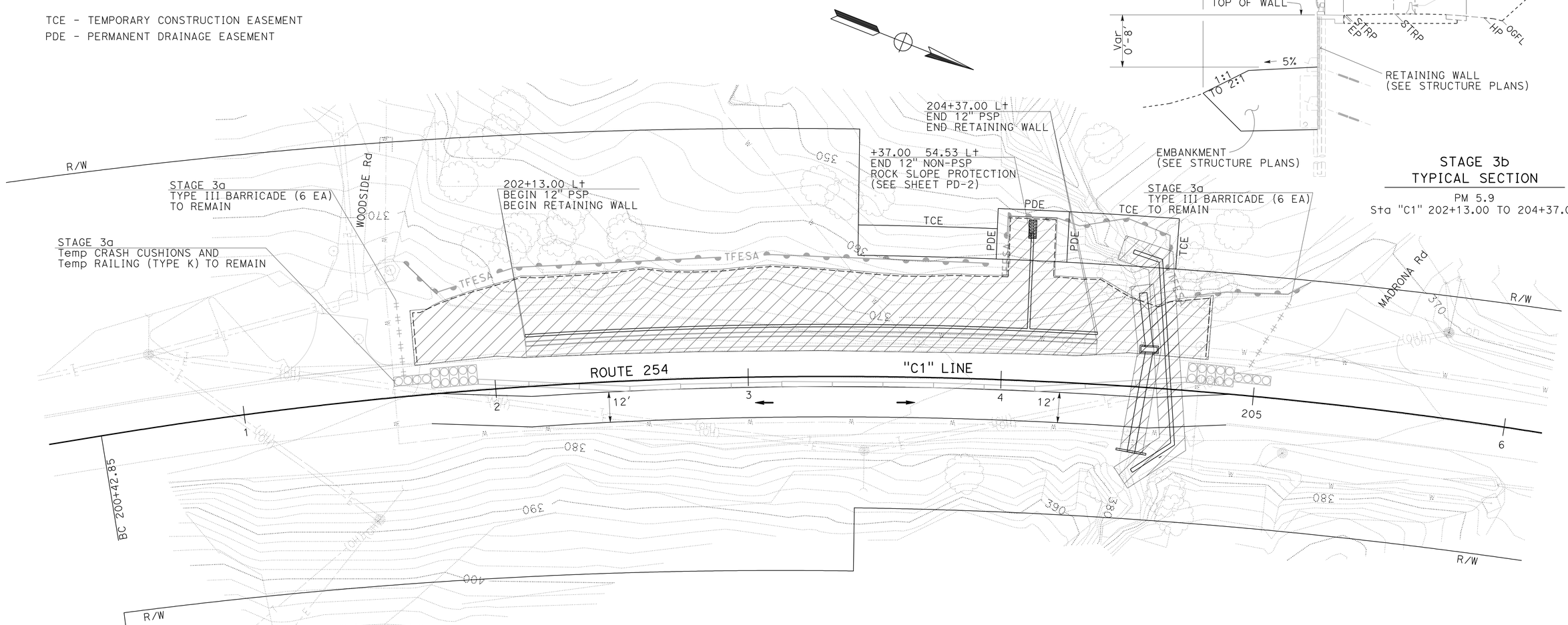

STAGE CONSTRUCTION (STAGE 3b)

SCALE: 1" = 20' **SC-4**

THIS PLAN ACCURATE FOR STAGE CONSTRUCTION WORK ONLY.

STATE OF CALIFORNIA - DEPARTMENT OF TRANSPORTATION
NORTH REGION
PROJECT DEVELOPMENT
MARYSVILLE DESIGN-BRANCH M2

FUNCTIONAL SUPERVISOR: FERMIN BARRIGA
CALCULATED-DESIGNED BY: HORACIO PARAS JR
CHECKED BY: SHARON WOODBECK
REVISED BY / DATE REVISED

LAST REVISION 07-08-10
DATE PLOTTED => 19-JUL-2010
TIME PLOTTED => 11:16

Dist	COUNTY	ROUTE	POST MILES TOTAL PROJECT	SHEET No.	TOTAL SHEETS
01	Hum	254	5.9	19	72

REGISTERED CIVIL ENGINEER 4-23-10 DATE

7-19-10
PLANS APPROVAL DATE

REGISTERED PROFESSIONAL ENGINEER HORACIO PARAS JR No. C73255 Exp. 12-31-10 CIVIL STATE OF CALIFORNIA

THE STATE OF CALIFORNIA OR ITS OFFICERS OR AGENTS SHALL NOT BE RESPONSIBLE FOR THE ACCURACY OR COMPLETENESS OF SCANNED COPIES OF THIS PLAN SHEET.

NOTES:

1. FOR COMPLETE RIGHT OF WAY DATA, SEE RIGHT OF WAY RECORD MAPS AT DISTRICT OFFICE.
2. COMPLETE ROADWAY EXCAVATION FOR SB LANE FROM 201+70.00 TO 204+80.00. PLACE HMA (0.70′) FOR SB LANE. GRADE SHOULDERS TO FG.
3. INSTALL TRANSITION RAILING (TYPE WB), MBGR, AND END ANCHOR ASSEMBLIES.
4. PLACE WEED CONTROL MAT (FIBER).

LEGEND:

CONSTRUCTION THIS STAGE

TFESA — Temp FENCE (TYPE ESA)

ABBREVIATIONS:

TCE - TEMPORARY CONSTRUCTION EASEMENT
PDE - PERMANENT DRAINAGE EASEMENT

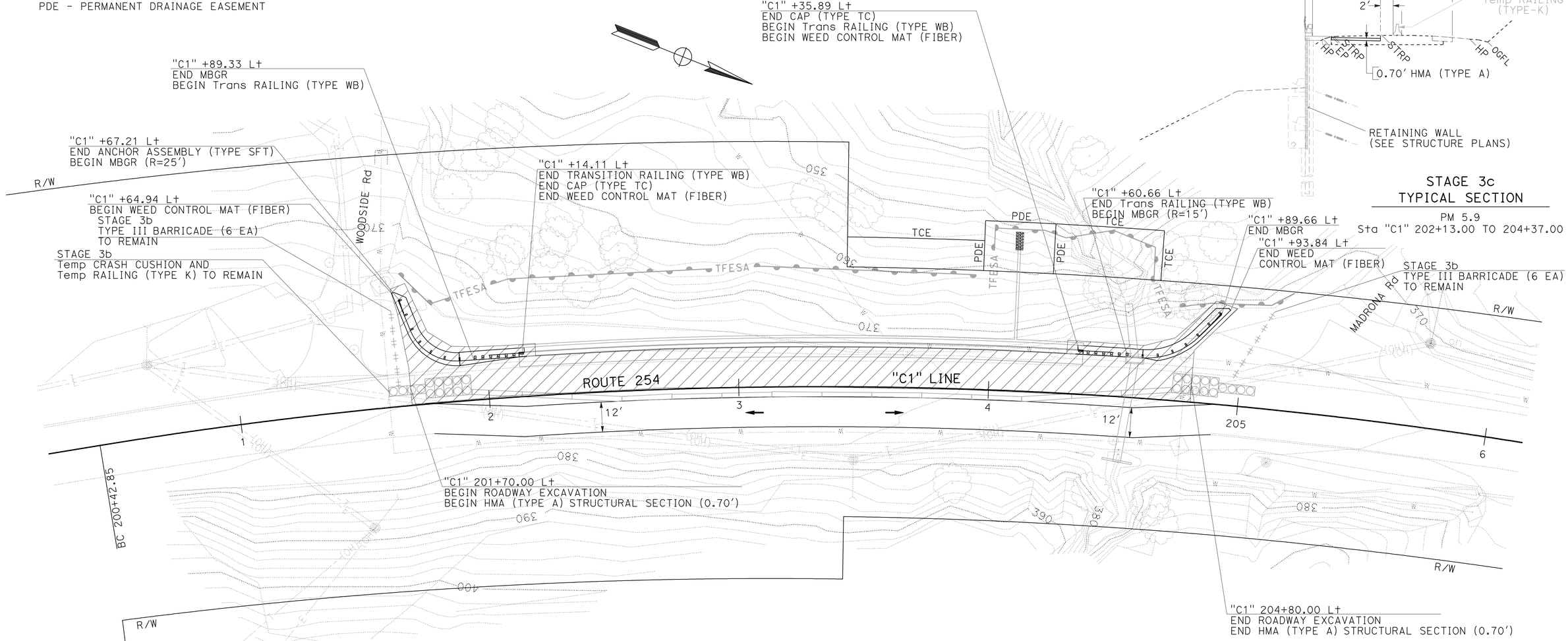

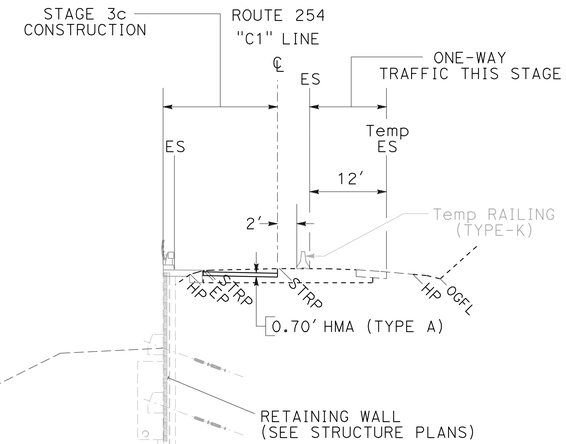

STAGE 3c TYPICAL SECTION

PM 5.9
Sta "C1" 202+13.00 TO 204+37.00

STAGE CONSTRUCTION (STAGE 3c)

SCALE: 1" = 20′ **SC-5**

THIS PLAN ACCURATE FOR STAGE CONSTRUCTION WORK ONLY.

STATE OF CALIFORNIA - DEPARTMENT OF TRANSPORTATION
NORTH REGION
PROJECT DEVELOPMENT
MARYSVILLE DESIGN-BRANCH M2

FUNCTIONAL SUPERVISOR: FERMIN BARRIGA
CALCULATED-DESIGNED BY: HORACIO PARAS JR
CHECKED BY: SHARON WOODBECK
REVISED BY / DATE REVISED

LAST REVISION 07-08-10 | DATE PLOTTED => 19-JUL-2010 | TIME PLOTTED => 11:16

Dist	COUNTY	ROUTE	POST MILES TOTAL PROJECT	SHEET No.	TOTAL SHEETS
01	Hum	254	5.9	20	72

REGISTERED CIVIL ENGINEER 4-23-10 DATE

7-19-10
PLANS APPROVAL DATE

REGISTERED PROFESSIONAL ENGINEER HORACIO PARAS JR No. C73255 Exp. 12-31-10 CIVIL STATE OF CALIFORNIA

THE STATE OF CALIFORNIA OR ITS OFFICERS OR AGENTS SHALL NOT BE RESPONSIBLE FOR THE ACCURACY OR COMPLETENESS OF SCANNED COPIES OF THIS PLAN SHEET.

NOTES:

1. FOR COMPLETE RIGHT OF WAY DATA, SEE RIGHT OF WAY RECORD MAPS AT DISTRICT OFFICE.
2. UNDER 24 HR ONE-WAY TRAFFIC CONTROL: DEACTIVATE TEMPORARY SIGNAL SYSTEM. REMOVE Temp RAILING (TYPE-K), TYPE III BARRICADES, AND ONE-WAY TRAFFIC CONTROL SIGNS. REMOVE Temp WIDENING AND Temp DRIVEWAYS. FILL EXCAVATED DRIVEWAYS TO PRE-Exist GRADE. COMPLETE ROADWAY EXCAVATION FOR NB LANE AND SHOULDER. PLACE HMA (0.70′) FOR NB LANE AND SHOULDER. GRADE SHOULDERS AND DITCHES TO FG.
3. REMOVE TEMPORARY SIGNAL SYSTEM.

LEGEND:

CONSTRUCTION THIS STAGE

TFESA — Temp FENCE (TYPE ESA)

ABBREVIATIONS:

TCE - TEMPORARY CONSTRUCTION EASEMENT
PDE - PERMANENT DRAINAGE EASEMENT

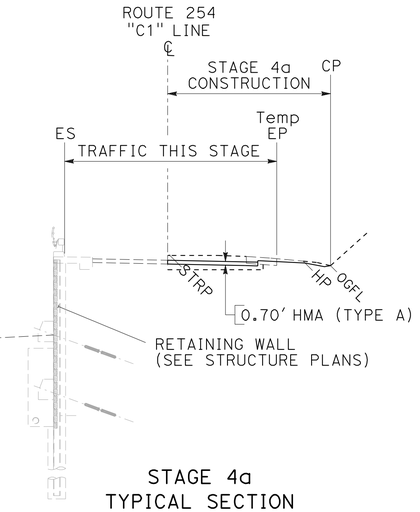

STAGE 4a
TYPICAL SECTION

PM 5.9
Sta "C1" 202+13.00 TO 204+37.00

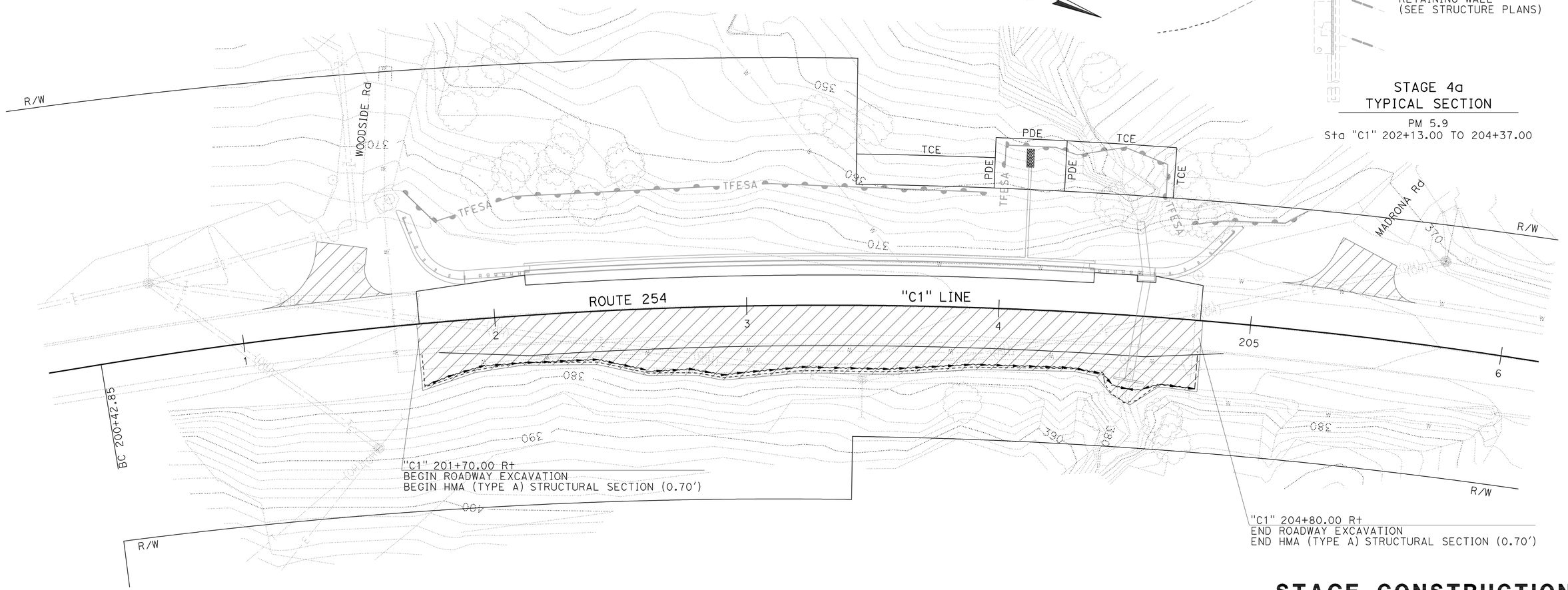

STAGE CONSTRUCTION (STAGE 4a)

SCALE: 1" = 20′ **SC-6**

THIS PLAN ACCURATE FOR STAGE CONSTRUCTION WORK ONLY.

REVISED BY | DATE REVISED
HORACIO PARAS JR | SHARON WOODBECK
CALCULATED-DESIGNED BY | CHECKED BY
FUNCTIONAL SUPERVISOR: FERMIN BARRIGA

STATE OF CALIFORNIA - DEPARTMENT OF TRANSPORTATION
Caltrans
NORTH REGION
PROJECT DEVELOPMENT
MARYSVILLE DESIGN-BRANCH M2

LAST REVISION 07-08-10 | DATE PLOTTED => 19-JUL-2010 | TIME PLOTTED => 11:16

Dist	COUNTY	ROUTE	POST MILES TOTAL PROJECT	SHEET No.	TOTAL SHEETS
01	Hum	254	5.9	21	72

REGISTERED CIVIL ENGINEER 4-23-10 DATE

7-19-10
PLANS APPROVAL DATE

REGISTERED PROFESSIONAL ENGINEER HORACIO PARAS JR No. C73255 Exp. 12-31-10 CIVIL STATE OF CALIFORNIA

THE STATE OF CALIFORNIA OR ITS OFFICERS OR AGENTS SHALL NOT BE RESPONSIBLE FOR THE ACCURACY OR COMPLETENESS OF SCANNED COPIES OF THIS PLAN SHEET.

NOTES:

1. FOR COMPLETE RIGHT OF WAY DATA, SEE RIGHT OF WAY RECORD MAPS AT DISTRICT OFFICE.
2. COLD PLANE AC PAVEMENT (0.10' Max) FROM 200+54.00 TO 201+70.00 AND 204+80.00 TO 205+73.00.
3. PLACE HMA (0.10') FROM 200+54.00 TO 205+73.00.
4. PLACE THERMOPLASTIC TRAFFIC STRIPE AND PAVEMENT MARKERS.
5. CONSTRUCT REMAINING ROADWAY ITEMS AND FINISH ROADWAY.

LEGEND

CONSTRUCTION THIS STAGE

TFESA — Temp FENCE (TYPE ESA)

ABBREVIATIONS

TCE - TEMPORARY CONSTRUCTION EASEMENT
PDE - PERMANENT DRAINAGE EASEMENT

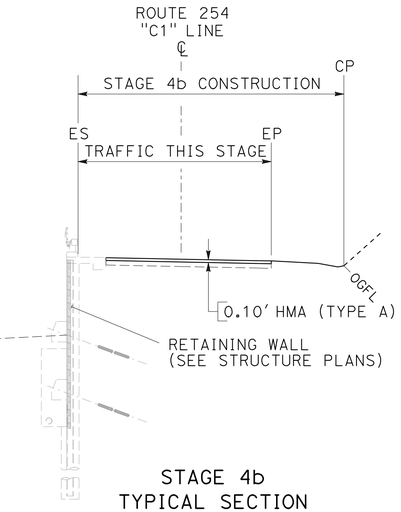

STAGE 4b
TYPICAL SECTION

PM 5.9
Sta "C1" 202+13.00 TO 204+37.00

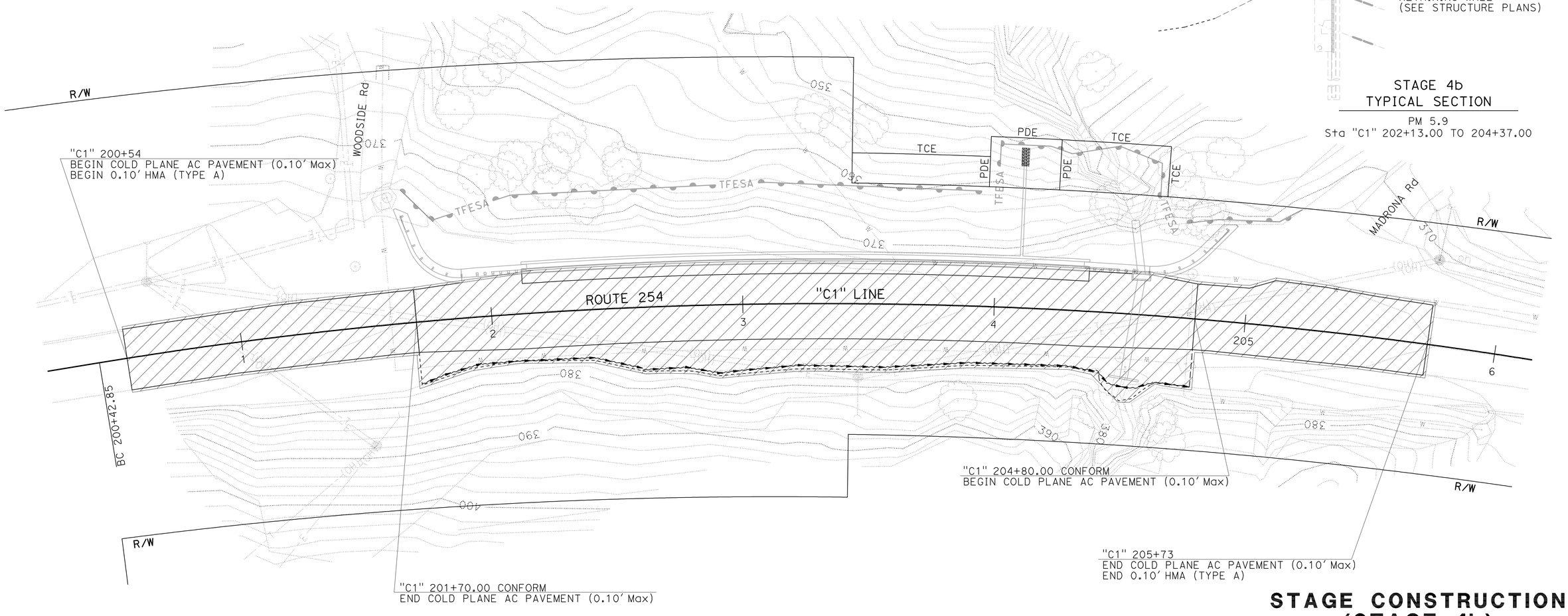

THIS PLAN ACCURATE FOR STAGE CONSTRUCTION WORK ONLY.

STAGE CONSTRUCTION (STAGE 4b)

SCALE: 1" = 20'

SC-7

STATE OF CALIFORNIA - DEPARTMENT OF TRANSPORTATION
NORTH REGION
PROJECT DEVELOPMENT
MARYSVILLE DESIGN-BRANCH M2

Caltrans

FUNCTIONAL SUPERVISOR: FERMIN BARRIGA
CALCULATED-DESIGNED BY: HORACIO PARAS JR
CHECKED BY: SHARON WOODBECK
REVISED BY
DATE REVISED

LAST REVISION 07-08-10 | DATE PLOTTED => 19-JUL-2010 | TIME PLOTTED => 10:47

Dist	COUNTY	ROUTE	POST MILES TOTAL PROJECT	SHEET No.	TOTAL SHEETS
01	Hum	254	5.9	22	72

REGISTERED CIVIL ENGINEER 4-23-10 DATE

7-19-10
PLANS APPROVAL DATE

REGISTERED PROFESSIONAL ENGINEER HORACIO PARAS JR No. C73255 Exp. 12-31-10 CIVIL STATE OF CALIFORNIA

THE STATE OF CALIFORNIA OR ITS OFFICERS OR AGENTS SHALL NOT BE RESPONSIBLE FOR THE ACCURACY OR COMPLETENESS OF SCANNED COPIES OF THIS PLAN SHEET.

NOTES:

1. FOR COMPLETE RIGHT OF WAY DATA, SEE RIGHT OF WAY RECORD MAPS AT DISTRICT OFFICE.
2. SEE SHEET SC-2 FOR STAGE CONSTRUCTION DESCRIPTION.

LEGEND

ROADWAY Excav AND HMA (0.40', TYPE A)

WOODSIDE Rd
Temp DRIVEWAY DETAIL

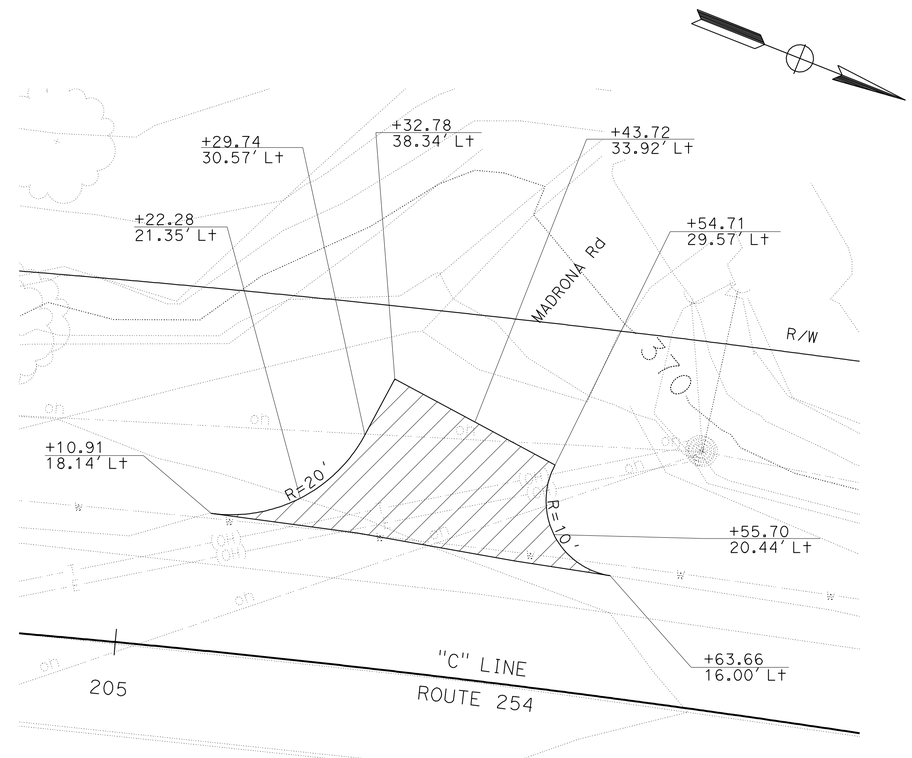

MADRONA Rd
Temp DRIVEWAY DETAIL

THIS PLAN ACCURATE FOR STAGE CONSTRUCTION WORK ONLY.

STAGE CONSTRUCTION DETAILS (STAGE 2 Temp DRIVEWAYS)

SCALE: 1" = 10'

SCD-1

STATE OF CALIFORNIA - DEPARTMENT OF TRANSPORTATION
Caltrans
NORTH REGION
PROJECT DEVELOPMENT
MARYSVILLE DESIGN-BRANCH M2

FUNCTIONAL SUPERVISOR: FERMIN BARRIGA
CALCULATED-DESIGNED BY: HORACIO PARAS JR
CHECKED BY: SHARON WOODBECK
REVISED BY
DATE REVISED

LAST REVISION 04-07-10 | DATE PLOTTED => 19-JUL-2010 | TIME PLOTTED => 10:48

Dist	COUNTY	ROUTE	POST MILES TOTAL PROJECT	SHEET No.	TOTAL SHEETS
01	Hum	254	5.9	23	72

REGISTERED CIVIL ENGINEER 4-23-10 DATE

7-19-10
PLANS APPROVAL DATE

REGISTERED PROFESSIONAL ENGINEER HORACIO PARAS JR No. C73255 Exp. 12-31-10 CIVIL STATE OF CALIFORNIA

THE STATE OF CALIFORNIA OR ITS OFFICERS OR AGENTS SHALL NOT BE RESPONSIBLE FOR THE ACCURACY OR COMPLETENESS OF SCANNED COPIES OF THIS PLAN SHEET.

NOTES:

1. FOR ADDITIONAL CONSTRUCTION AREA SIGNS, SEE SHEETS CS-1 AND THQ-1.
2. EXACT SIGN LOCATIONS TO BE DETERMINED BY THE ENGINEER.
3. SIGN PANEL TO BE INSTALLED WITH TEMPORARY FLASHING BEACON. FOR INSTALLATION AND ILLUMINATION DETAILS, SEE TEMPORARY SIGNAL SYSTEM PLANS.
4. STATIONARY MOUNTED CONSTRUCTION AREA SIGNS ARE SHOWN FOR STAGE CONSTRUCTION. TEMPORARY SIGNAL SYSTEM SHALL BE FUNCTIONAL AS SHOWN IN THESE TRAFFIC HANDLING PLANS,TEMPORARY SIGNAL SYSTEM PLANS, OR AS DIRECTED BY THE ENGINEER.
5. ALL TRAFFIC PLASTIC DRUMS SHALL BE INSTALLED ON 25′ SPACING UNLESS OTHERWISE SHOWN.

LEGEND

- SIGN-SINGLE POST
- SIGN-TWO POST
- <CA> CALIFORNIA SIGN CODE
- MUTCD MANUAL OF UNIFORM TRAFFIC CONTROL DEVICES
- TRAFFIC FLOW DIRECTION
- (X) CONSTRUCTION AREA SIGN LETTER
- (LL X) LIMIT LINE P=TPMP
- (No X) TEMPORARY TRAFFIC STRIPE DETAIL NUMBER P=PAINT
- TPMP TEMPORARY PAVEMENT MARKING (PAINT)
- END STRIPE PATTERN OR REMOVAL LIMIT
- CHANNELIZER (SURFACE MOUNTED)
- TRAFFIC PLASTIC DRUM
- FLASHING BEACON (SEE NOTE 3)

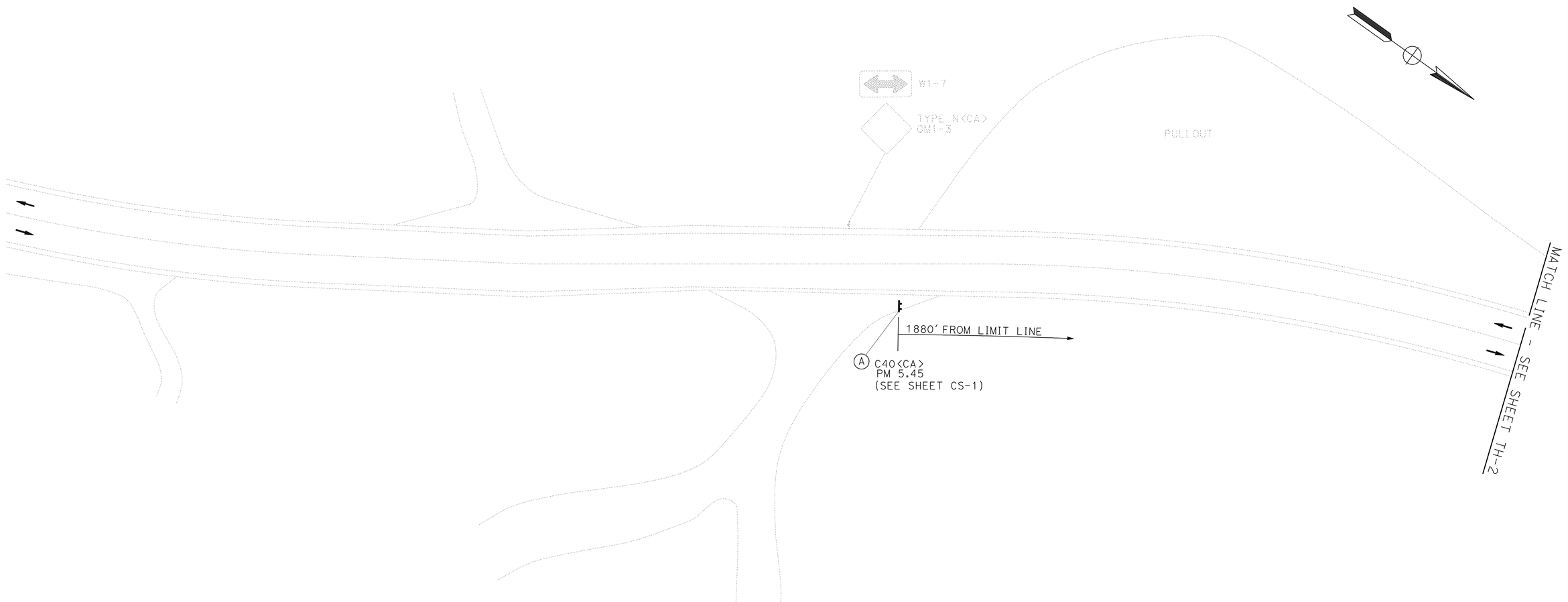

THIS PLAN IS ACCURATE FOR TRAFFIC HANDLING ONLY.

TRAFFIC HANDLING PLAN

NO SCALE

TH-1

REVISED BY | DATE REVISED

HORACIO PARAS JR | SHARON WOODBECK

CALCULATED-DESIGNED BY | CHECKED BY

FUNCTIONAL SUPERVISOR: FERMIN BARRIGA

STATE OF CALIFORNIA - DEPARTMENT OF TRANSPORTATION
Caltrans
NORTH REGION
PROJECT DEVELOPMENT
MARYSVILLE DESIGN-BRANCH M2

LAST REVISION 07-08-10 | DATE PLOTTED => 19-JUL-2010 | TIME PLOTTED => 10:52

Dist	COUNTY	ROUTE	POST MILES TOTAL PROJECT	SHEET No.	TOTAL SHEETS
01	Hum	254	5.9	24	72

H Paras Jr 4-23-10
REGISTERED CIVIL ENGINEER DATE

7-19-10
PLANS APPROVAL DATE

REGISTERED PROFESSIONAL ENGINEER
HORACIO PARAS JR
No. C73255
Exp. 12-31-10
CIVIL
STATE OF CALIFORNIA

THE STATE OF CALIFORNIA OR ITS OFFICERS OR AGENTS SHALL NOT BE RESPONSIBLE FOR THE ACCURACY OR COMPLETENESS OF SCANNED COPIES OF THIS PLAN SHEET.

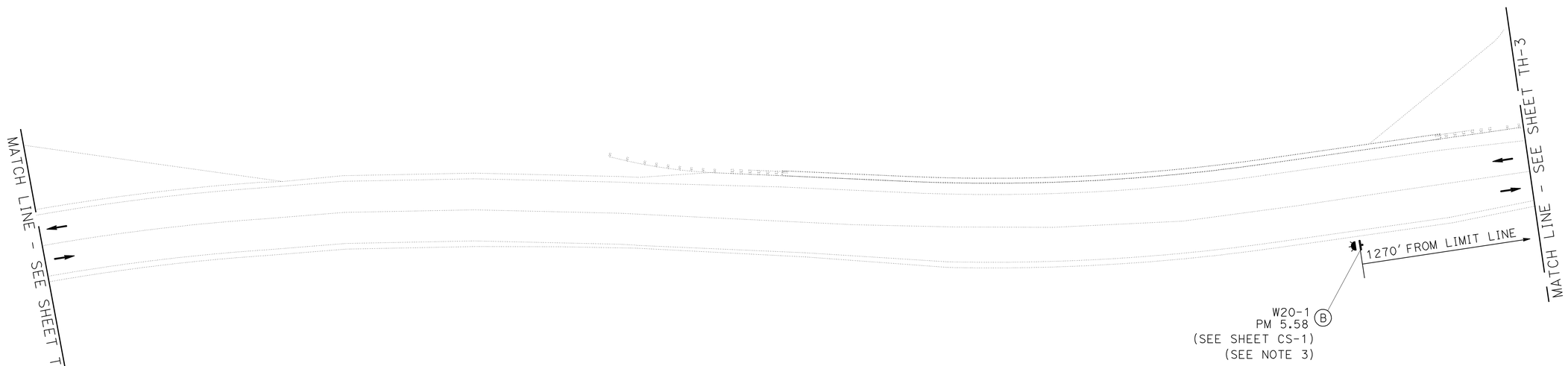

THIS PLAN ACCURATE FOR TRAFFIC HANDLING PLANS ONLY.

TRAFFIC HANDLING PLAN

NO SCALE

TH-2

STATE OF CALIFORNIA - DEPARTMENT OF TRANSPORTATION
Caltrans
NORTH REGION
PROJECT DEVELOPMENT
MARYSVILLE DESIGN-BRANCH M2

FUNCTIONAL SUPERVISOR: FERMIN BARRIGA
CALCULATED-DESIGNED BY: HORACIO PARAS JR
CHECKED BY: SHARON WOODBECK
REVISED BY
DATE REVISED

LAST REVISION 02-10-10
DATE PLOTTED => 19-JUL-2010
TIME PLOTTED => 10:48

Dist	COUNTY	ROUTE	POST MILES TOTAL PROJECT	SHEET No.	TOTAL SHEETS
01	Hum	254	5.9	25	72

REGISTERED CIVIL ENGINEER 4-23-10 DATE

7-19-10
PLANS APPROVAL DATE

REGISTERED PROFESSIONAL ENGINEER
HORACIO PARAS JR
No. C73255
Exp. 12-31-10
CIVIL
STATE OF CALIFORNIA

THE STATE OF CALIFORNIA OR ITS OFFICERS OR AGENTS SHALL NOT BE RESPONSIBLE FOR THE ACCURACY OR COMPLETENESS OF SCANNED COPIES OF THIS PLAN SHEET.

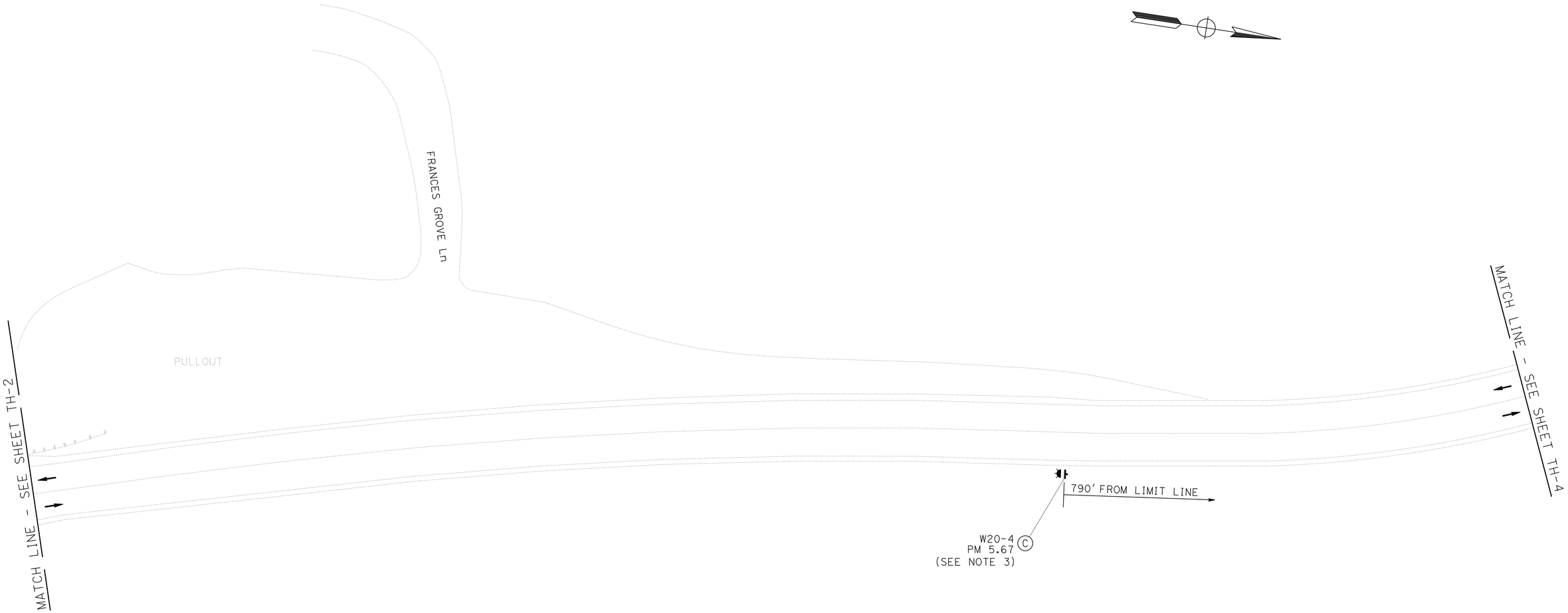

THIS PLAN ACCURATE FOR TRAFFIC HANDLING PLANS ONLY.

TRAFFIC HANDLING PLAN

NO SCALE

TH-3

STATE OF CALIFORNIA - DEPARTMENT OF TRANSPORTATION
Caltrans
NORTH REGION
PROJECT DEVELOPMENT
MARYSVILLE DESIGN-BRANCH M2

FUNCTIONAL SUPERVISOR: FERMIN BARRIGA

CALCULATED-DESIGNED BY: HORACIO PARAS JR
CHECKED BY: SHARON WOODBECK

REVISED BY
DATE REVISED

LAST REVISION 02-10-10
DATE PLOTTED => 19-JUL-2010
TIME PLOTTED => 10:48

Dist	COUNTY	ROUTE	POST MILES TOTAL PROJECT	SHEET No.	TOTAL SHEETS
01	Hum	254	5.9	26	72

REGISTERED CIVIL ENGINEER 4-23-10 DATE

7-19-10
PLANS APPROVAL DATE

REGISTERED PROFESSIONAL ENGINEER
HORACIO PARAS JR
No. C73255
Exp. 12-31-10
CIVIL
STATE OF CALIFORNIA

THE STATE OF CALIFORNIA OR ITS OFFICERS OR AGENTS SHALL NOT BE RESPONSIBLE FOR THE ACCURACY OR COMPLETENESS OF SCANNED COPIES OF THIS PLAN SHEET.

NOTE:

1. PRESERVE EXISTING DETAIL 22 A MINIMUM OF 500' BACK FROM LIMIT LINE.

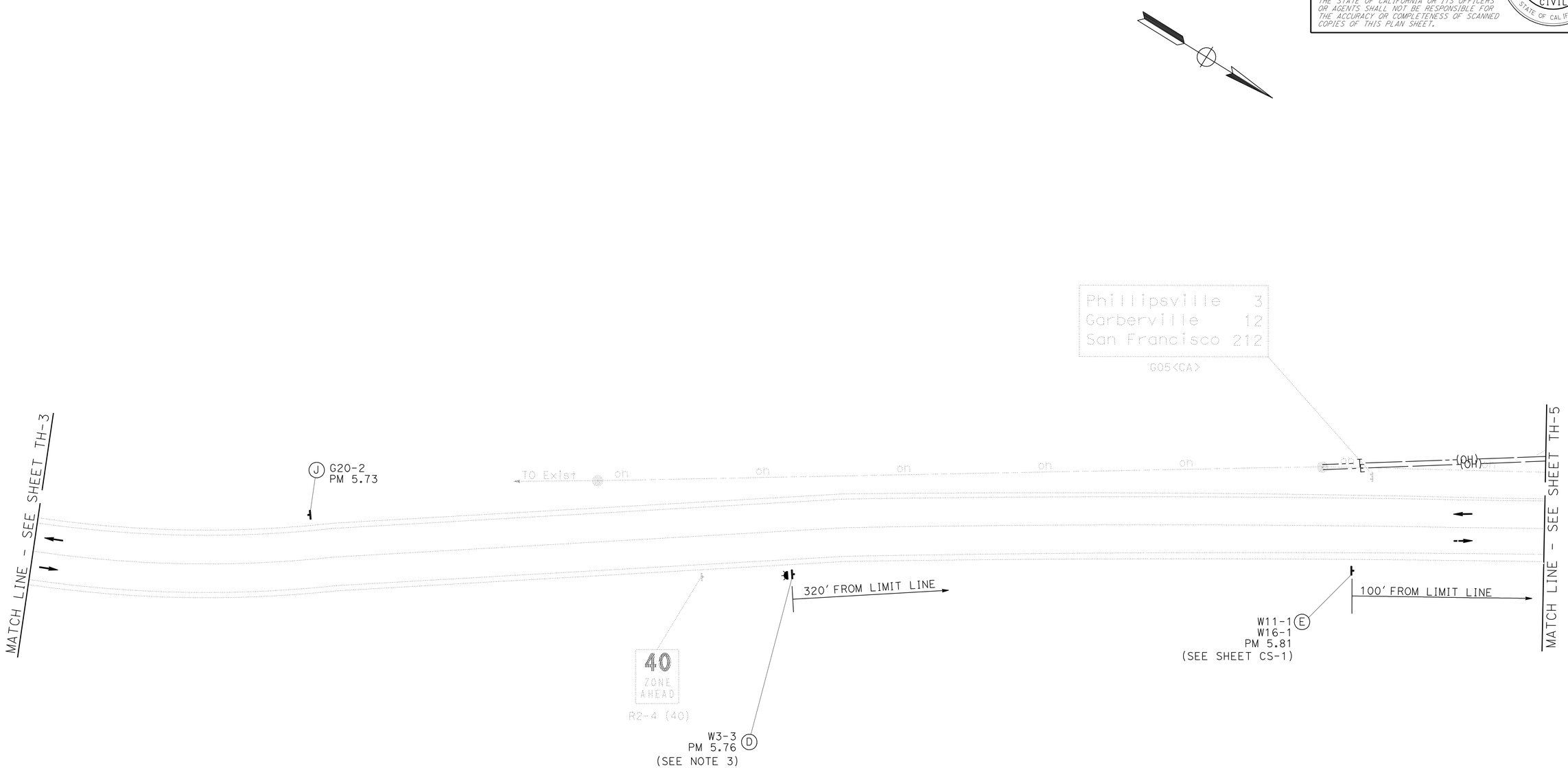

THIS PLAN ACCURATE FOR TRAFFIC HANDLING PLANS ONLY.

TRAFFIC HANDLING PLAN

NO SCALE

TH-4

STATE OF CALIFORNIA - DEPARTMENT OF TRANSPORTATION
Caltrans
NORTH REGION
PROJECT DEVELOPMENT
MARYSVILLE DESIGN-BRANCH M2

FUNCTIONAL SUPERVISOR: FERMIN BARRIGA

CALCULATED-DESIGNED BY: HORACIO PARAS JR
CHECKED BY: SHARON WOODBECK

REVISED BY
DATE REVISED

LAST REVISION 02-10-10
DATE PLOTTED => 19-JUL-2010
TIME PLOTTED => 10:48

Dist	COUNTY	ROUTE	POST MILES TOTAL PROJECT	SHEET No.	TOTAL SHEETS
01	Hum	254	5.9	27	72

REGISTERED CIVIL ENGINEER 4-23-10 DATE

7-19-10
PLANS APPROVAL DATE

REGISTERED PROFESSIONAL ENGINEER HORACIO PARAS JR No. C73255 Exp. 12-31-10 CIVIL STATE OF CALIFORNIA

THE STATE OF CALIFORNIA OR ITS OFFICERS OR AGENTS SHALL NOT BE RESPONSIBLE FOR THE ACCURACY OR COMPLETENESS OF SCANNED COPIES OF THIS PLAN SHEET.

NOTES:

1. FOR COMPLETE RIGHT OF WAY DATA, SEE RIGHT OF WAY RECORD MAPS AT DISTRICT OFFICE.
2. PRESERVE EXISTING DETAIL 22 A MINIMUM OF 500' BACK FROM LIMIT LINE.

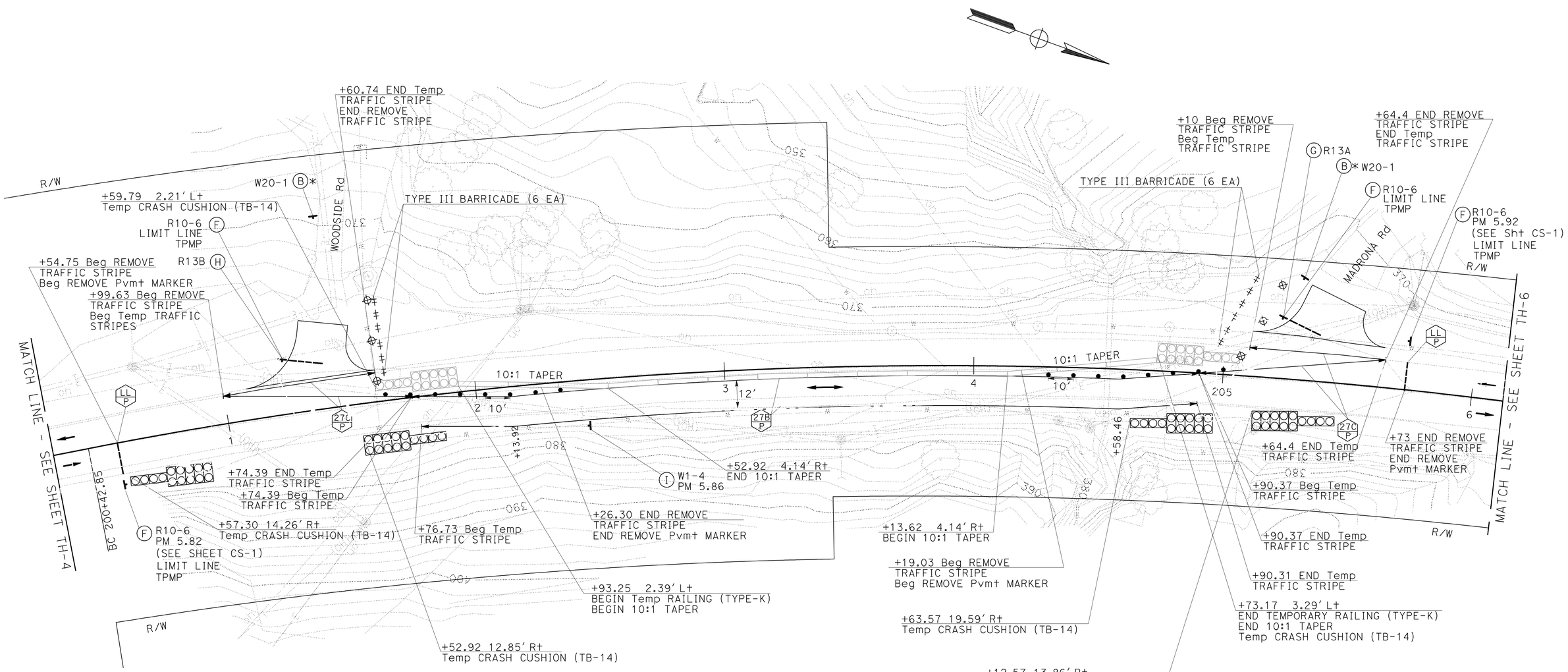

THIS PLAN ACCURATE FOR TRAFFIC HANDLING PLANS ONLY.

TRAFFIC HANDLING PLAN

NO SCALE

TH-5

STATE OF CALIFORNIA - DEPARTMENT OF TRANSPORTATION
NORTH REGION
PROJECT DEVELOPMENT
MARYSVILLE DESIGN-BRANCH M2

Caltrans

FUNCTIONAL SUPERVISOR: FERMIN BARRIGA
CALCULATED-DESIGNED BY: HORACIO PARAS JR
CHECKED BY: SHARON WOODBECK
REVISED BY
DATE REVISED

LAST REVISION 04-08-10
DATE PLOTTED => 19-JUL-2010
TIME PLOTTED => 10:48

Dist	COUNTY	ROUTE	POST MILES TOTAL PROJECT	SHEET No.	TOTAL SHEETS
01	Hum	254	5.9	28	72

REGISTERED CIVIL ENGINEER 4-23-10 DATE

7-19-10
PLANS APPROVAL DATE

REGISTERED PROFESSIONAL ENGINEER
HORACIO PARAS JR
No. C73255
Exp. 12-31-10
CIVIL
STATE OF CALIFORNIA

THE STATE OF CALIFORNIA OR ITS OFFICERS OR AGENTS SHALL NOT BE RESPONSIBLE FOR THE ACCURACY OR COMPLETENESS OF SCANNED COPIES OF THIS PLAN SHEET.

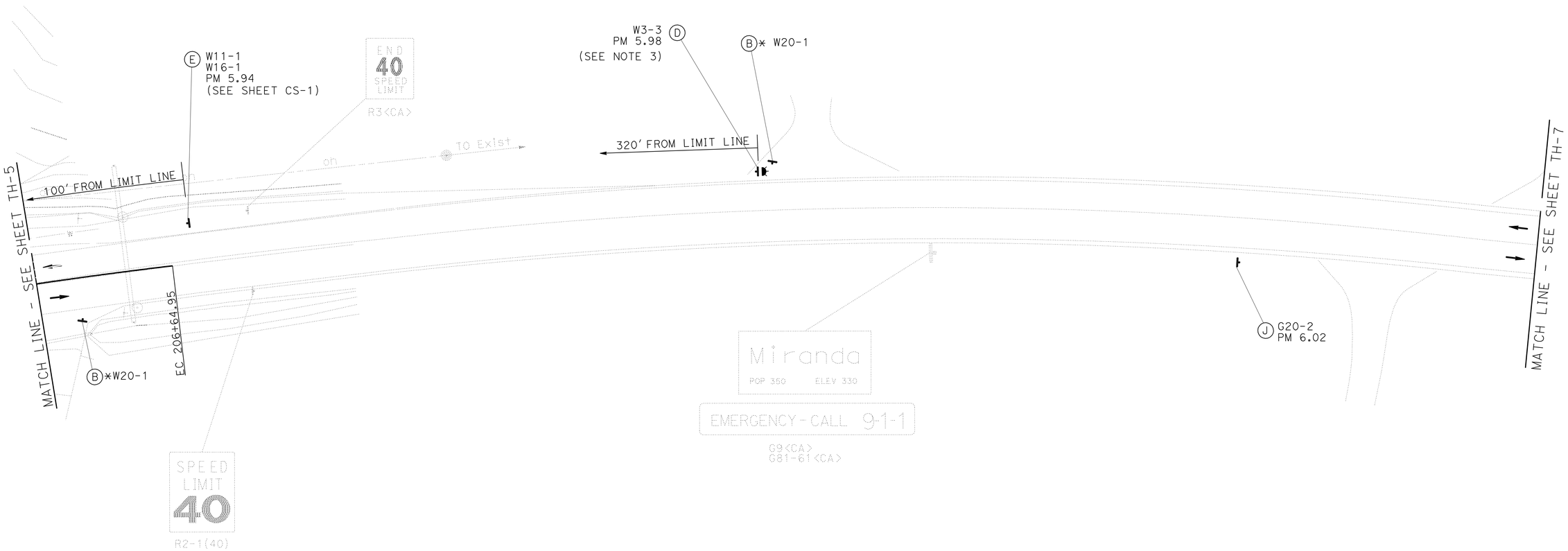

THIS PLAN ACCURATE FOR TRAFFIC HANDLING PLANS ONLY.

TRAFFIC HANDLING PLAN

NO SCALE

TH-6

STATE OF CALIFORNIA - DEPARTMENT OF TRANSPORTATION
Caltrans
NORTH REGION
PROJECT DEVELOPMENT
MARYSVILLE DESIGN-BRANCH M2

FUNCTIONAL SUPERVISOR: FERMIN BARRIGA

CALCULATED-DESIGNED BY: HORACIO PARAS JR
CHECKED BY: SHARON WOODBECK

REVISED BY
DATE REVISED

LAST REVISION 02-10-10
DATE PLOTTED => 19-JUL-2010
TIME PLOTTED => 10:48

Dist	COUNTY	ROUTE	POST MILES TOTAL PROJECT	SHEET No.	TOTAL SHEETS
01	Hum	254	5.9	29	72

H Paras Jr 4-23-10
REGISTERED CIVIL ENGINEER DATE

7-19-10
PLANS APPROVAL DATE

REGISTERED PROFESSIONAL ENGINEER
HORACIO PARAS JR
No. C73255
Exp. 12-31-10
CIVIL
STATE OF CALIFORNIA

THE STATE OF CALIFORNIA OR ITS OFFICERS OR AGENTS SHALL NOT BE RESPONSIBLE FOR THE ACCURACY OR COMPLETENESS OF SCANNED COPIES OF THIS PLAN SHEET.

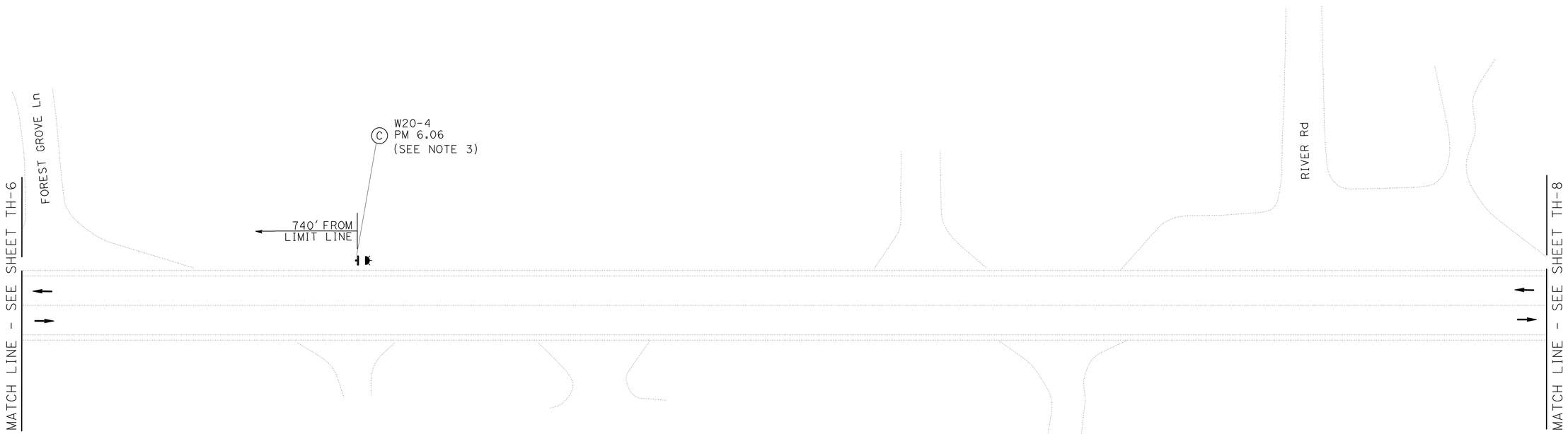

THIS PLAN ACCURATE FOR TRAFFIC HANDLING PLANS ONLY.

TRAFFIC HANDLING PLAN

NO SCALE

TH-7

STATE OF CALIFORNIA - DEPARTMENT OF TRANSPORTATION
Caltrans
NORTH REGION
PROJECT DEVELOPMENT
MARYSVILLE DESIGN-BRANCH M2

FUNCTIONAL SUPERVISOR: FERMIN BARRIGA
CALCULATED-DESIGNED BY: HORACIO PARAS JR
CHECKED BY: SHARON WOODBECK
REVISED BY
DATE REVISED

LAST REVISION 02-10-10
DATE PLOTTED => 19-JUL-2010
TIME PLOTTED => 10:48

Dist	COUNTY	ROUTE	POST MILES TOTAL PROJECT	SHEET No.	TOTAL SHEETS
01	Hum	254	5.9	30	72

REGISTERED CIVIL ENGINEER 4-23-10 DATE

7-19-10
PLANS APPROVAL DATE

REGISTERED PROFESSIONAL ENGINEER
HORACIO PARAS JR
No. C73255
Exp. 12-31-10
CIVIL
STATE OF CALIFORNIA

THE STATE OF CALIFORNIA OR ITS OFFICERS OR AGENTS SHALL NOT BE RESPONSIBLE FOR THE ACCURACY OR COMPLETENESS OF SCANNED COPIES OF THIS PLAN SHEET.

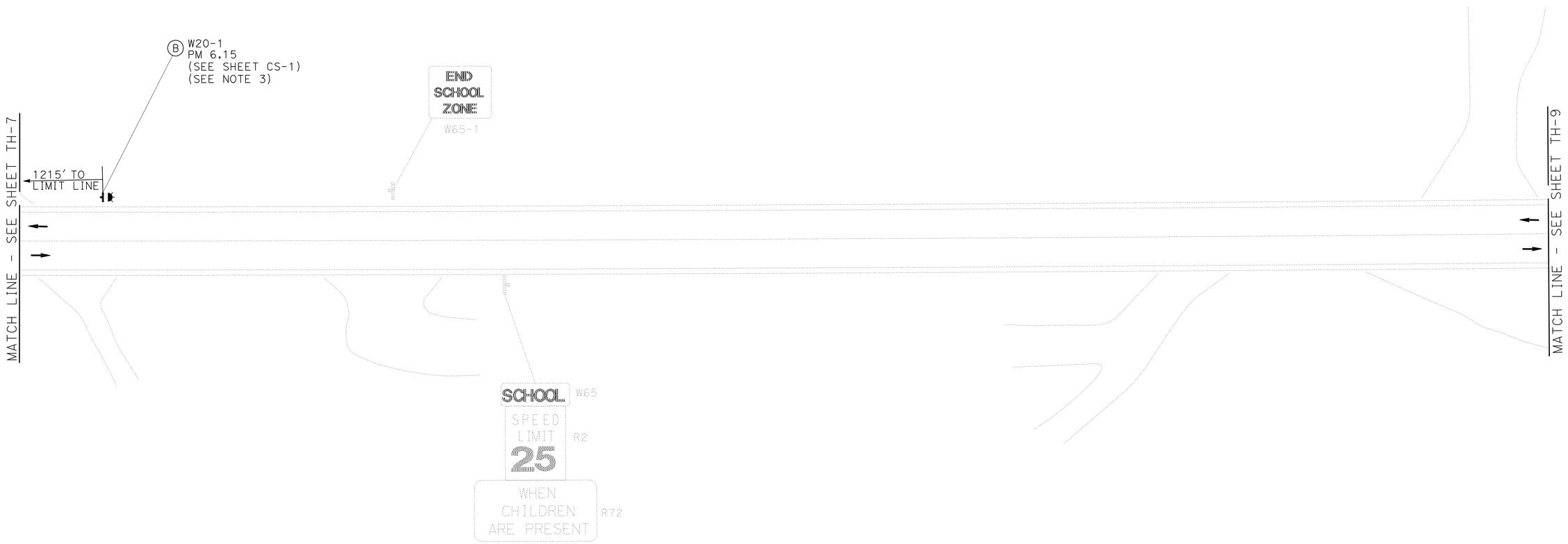

THIS PLAN ACCURATE FOR TRAFFIC HANDLING PLANS ONLY.

TRAFFIC HANDLING PLAN

NO SCALE

TH-8

STATE OF CALIFORNIA - DEPARTMENT OF TRANSPORTATION
Caltrans
NORTH REGION
PROJECT DEVELOPMENT
MARYSVILLE DESIGN-BRANCH M2

FUNCTIONAL SUPERVISOR: FERMIN BARRIGA
CALCULATED-DESIGNED BY: HORACIO PARAS JR
CHECKED BY: SHARON WOODBECK
REVISED BY
DATE REVISED

LAST REVISION 02-10-10
DATE PLOTTED => 19-JUL-2010
TIME PLOTTED => 10:48

Dist	COUNTY	ROUTE	POST MILES TOTAL PROJECT	SHEET No.	TOTAL SHEETS
01	Hum	254	5.9	31	72

REGISTERED CIVIL ENGINEER 4-23-10 DATE

7-19-10
PLANS APPROVAL DATE

REGISTERED PROFESSIONAL ENGINEER HORACIO PARAS JR No. C73255 Exp. 12-31-10 CIVIL STATE OF CALIFORNIA

THE STATE OF CALIFORNIA OR ITS OFFICERS OR AGENTS SHALL NOT BE RESPONSIBLE FOR THE ACCURACY OR COMPLETENESS OF SCANNED COPIES OF THIS PLAN SHEET.

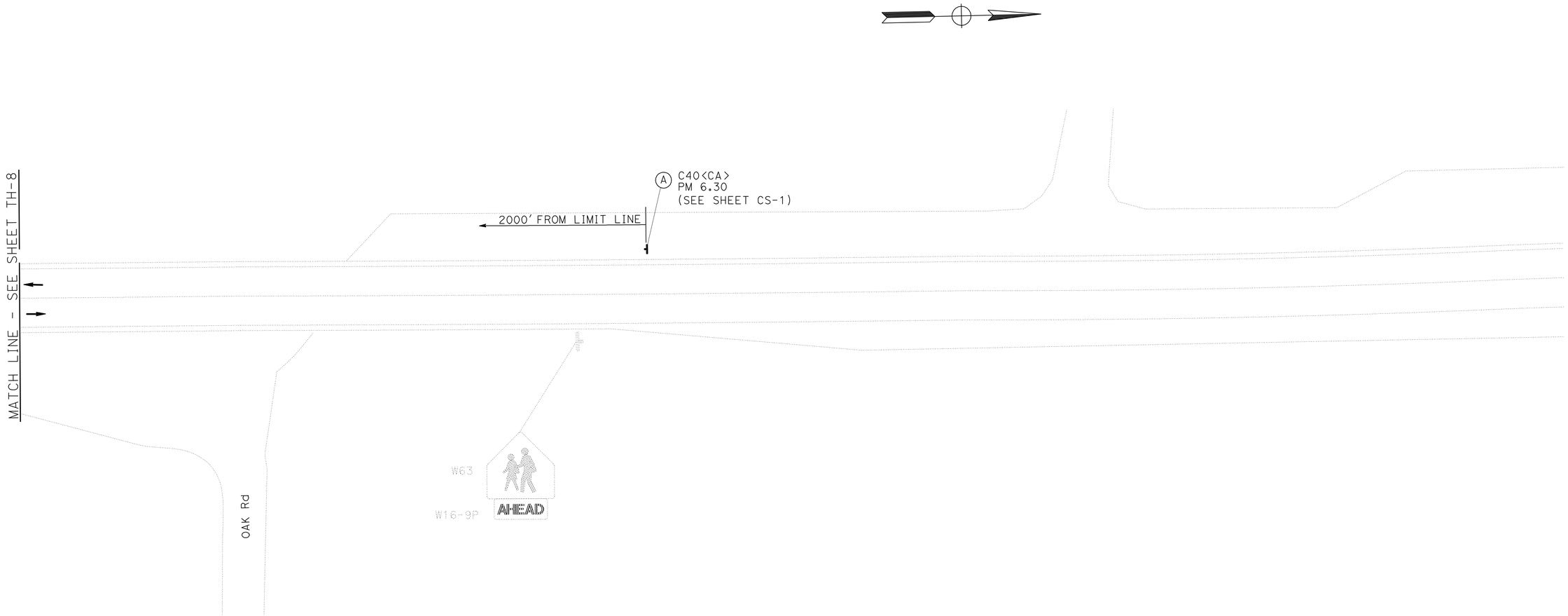

THIS PLAN ACCURATE FOR TRAFFIC HANDLING PLANS ONLY.

TRAFFIC HANDLING PLAN

NO SCALE

TH-9

REVISED BY	HORACIO PARAS JR
DATE REVISED	SHARON WOODBECK
CALCULATED-DESIGNED BY	
CHECKED BY	
FUNCTIONAL SUPERVISOR	FERMIN BARRIGA

STATE OF CALIFORNIA - DEPARTMENT OF TRANSPORTATION
Caltrans
NORTH REGION
PROJECT DEVELOPMENT
MARYSVILLE DESIGN-BRANCH M2

LAST REVISION 12-08-09 | DATE PLOTTED => 19-JUL-2010 | TIME PLOTTED => 11:02

Dist	COUNTY	ROUTE	POST MILES TOTAL PROJECT	SHEET No.	TOTAL SHEETS
01	Hum	254	5.9	32	72

REGISTERED CIVIL ENGINEER 4-23-10 DATE

7-19-10
PLANS APPROVAL DATE

REGISTERED PROFESSIONAL ENGINEER HORACIO PARAS JR No. C73255 Exp. 12-31-10 CIVIL STATE OF CALIFORNIA

THE STATE OF CALIFORNIA OR ITS OFFICERS OR AGENTS SHALL NOT BE RESPONSIBLE FOR THE ACCURACY OR COMPLETENESS OF SCANNED COPIES OF THIS PLAN SHEET.

NOTES:

1. EXACT SIGN LOCATION TO BE DETERMINED BY THE ENGINEER.
2. FOR ADDITIONAL CONSTRUCTION AREA SIGNS SEE SHEET CS-1 AND TRAFFIC HANDLING PLANS.
3. SIGN PANEL TO BE INSTALLED ON FLASHING BEACON SYSTEM WOOD POST. SEE TEMPORARY SIGNAL SYSTEM PLANS FOR FLASHING BEACON INSTALLATION DETAILS.
4. ALL SIGN PANELS SHALL BE BLACK ON ORANGE AND MOUNTED ON WOOD POSTS UNLESS NOTED OTHERWISE.
5. SIGN R10-6 SHALL BE BLACK ON WHITE. FOR ILLUMINATION AND INSTALLATION DETAILS, SEE TEMPORARY SIGNAL SYSTEM PLANS.
6. SIGN R13A(CA) AND R13B(CA) SHALL BE MOUNTED ON SAME WOOD POST AS R10-16 FOR WOODSIDE Rd AND MADRONA Rd. SEE SHEET TH-5 FOR DETAILS.

ADDITIONAL STATIONARY MOUNTED CONSTRUCTION AREA SIGNS

SIGN LETTER	SIGN CODE (FEDERAL)	SIGN CODE CALIFORNIA	PANEL SIZE	SIGN MESSAGE	No. OF POSTS AND SIZE (INCHES)	NUMBER OF SIGNS (EACH)
Ⓒ	W20-4	-	48" X 48"	ONE LANE ROAD AHEAD	SEE NOTE 3	2
Ⓓ	W3-3	-	48" X 48"	SIGNAL AHEAD SYMBOL	SEE NOTE 3	2
Ⓕ	R10-6	-	24" X 36"	STOP HERE ON RED	1-6" X 6"	4
Ⓖ	-	R13A(CA)	24" X 36"	NO RIGHT TURN (SYMBOL) ON RED	SEE NOTE 6	1
Ⓗ	-	R13B(CA)	24" X 36"	NO LEFT TURN (SYMBOL) ON RED	SEE NOTE 6	1
Ⓘ	W1-4R	-	48" X 48"	REVERSE CURVE	1-4" X 6"	1
					SUBTOTAL	11
					SUBTOTAL FROM SHEET CS-1	12
					TOTAL	23

REMOVE YELLOW THERMOPLASTIC TRAFFIC STRIPE (HAZARDOUS WASTE)

STATION FROM	STATION TO	SHEET	DESCRIPTION	LENGTH (LF)
"C1" 200+54.75	"C1" 202+26.30	TH-5	CENTERLINE	344
"C1" 204+19.03	"C1" 205+73.00	TH-5	CENTERLINE	308
			TOTAL	652

CHANNELIZER/BARRICADE

STATION FROM	STATION TO	SHEET	TYPE III BARRICADE EACH	TRAFFIC PLASTIC DRUM EACH	CHANNELIZER (SURFACE MOUNTED) EACH
"C1" 201+61.1		TH-5		3	
"C1" 201+64.2		TH-5	6		
"C1" 201+64.2	"C1" 202+34.1	TH-5			8
"C1" 204+29.7	"C1" 205+00.0	TH-5			8
"C1" 204+97.3	"C1" 205+12.0	TH-5	6		
"C1" 205+06.8	"C1" 205+21.2	TH-5		3	
		TOTAL	12	6	16

REMOVE TRAFFIC STRIPE

STATION FROM	STATION TO	SHEET	DESCRIPTION	LENGTH (LF)
"C1" 200+99.63	"C1" 201+60.74	TH-5	R+ EDGELINE	62
"C1" 205+10.00	"C1" 205+64.40	TH-5	R+ EDGELINE	55
			TOTAL	117

REMOVE PAVEMENT MARKER

STATION FROM	STATION TO	SHEET	DESCRIPTION	EACH (EA)
"C1" 200+54.75	"C1" 202+26.30	TH-5	CENTERLINE	16
"C1" 204+19.03	"C1" 205+73.00	TH-5	CENTERLINE	14
			TOTAL	30

TEMPORARY TRAFFIC STRIPE (PAINT)

STATION FROM	STATION TO	SHEET	DETAIL NUMBER	LENGTH (LF)
"C1" 201+74.39	"C1" 204+90.37	TH-5	27B	316
"C1" 201+76.73	"C1" 204+90.31	TH-5	27B	312
"C1" 200+99.63	"C1" 201+74.39	TH-5	27C	76
'C1" 201+09.00	"C1" 201+60.74	TH-5	27C	62
"C1" 204+90.37	"C1" 205+64.40	TH-5	27C	75
"C1" 205+10.00	"C1" 205+64.40	TH-5	27C	55
			TOTAL	896

TEMPORARY PAVEMENT MARKING (PAINT)

STATION FROM	STATION TO	SHEET	DESCRIPTION	QUANTITY	AREA (SQFT)
"C1" 200+54.75	"C1" 200+54.75	TH-5	LIMIT LINE	1	12.7
"C1" 201+27.28	"C1" 201+40.63	TH-5	LIMIT LINE	1	13.9
"C1" 205+25.08	"C1" 205+37.77	TH-5	LIMIT LINE	1	13.8
"C1" 205+73.00	"C1" 205+73.00	TH-5	LIMIT LINE	1	11.5
				TOTAL	51.9

TRAFFIC HANDLING QUANTITIES

THQ-1

REVISED BY | DATE REVISED
HORACIO PARAS JR | SHARON WOODBECK
CALCULATED-DESIGNED BY | CHECKED BY
FUNCTIONAL SUPERVISOR: FERMIN BARRIGA

STATE OF CALIFORNIA - DEPARTMENT OF TRANSPORTATION
Caltrans
NORTH REGION
PROJECT DEVELOPMENT
MARYSVILLE DESIGN-BRANCH M2

LAST REVISION 07-08-10 | DATE PLOTTED => 19-JUL-2010 | TIME PLOTTED => 11:02

Dist	COUNTY	ROUTE	POST MILES TOTAL PROJECT	SHEET No.	TOTAL SHEETS
01	Hum	254	5.9	33	72

REGISTERED CIVIL ENGINEER 4-23-10 DATE

7-19-10
PLANS APPROVAL DATE

REGISTERED PROFESSIONAL ENGINEER HORACIO PARAS JR No. C73255 Exp. 12-31-10 CIVIL STATE OF CALIFORNIA

THE STATE OF CALIFORNIA OR ITS OFFICERS OR AGENTS SHALL NOT BE RESPONSIBLE FOR THE ACCURACY OR COMPLETENESS OF SCANNED COPIES OF THIS PLAN SHEET.

NOTES:

1. FOR COMPLETE RIGHT OF WAY DATA, SEE RIGHT OF WAY RECORD MAPS AT DISTRICT OFFICE.
2. FOR CULVERT MARKER DETAIL, SEE SHEET DD-1.
3. FOR GUARD RAILING DELINEATOR DETAIL, SEE SHEET C-1.

LEGEND

← END STRIPE PATTERN OR REMOVAL LIMIT

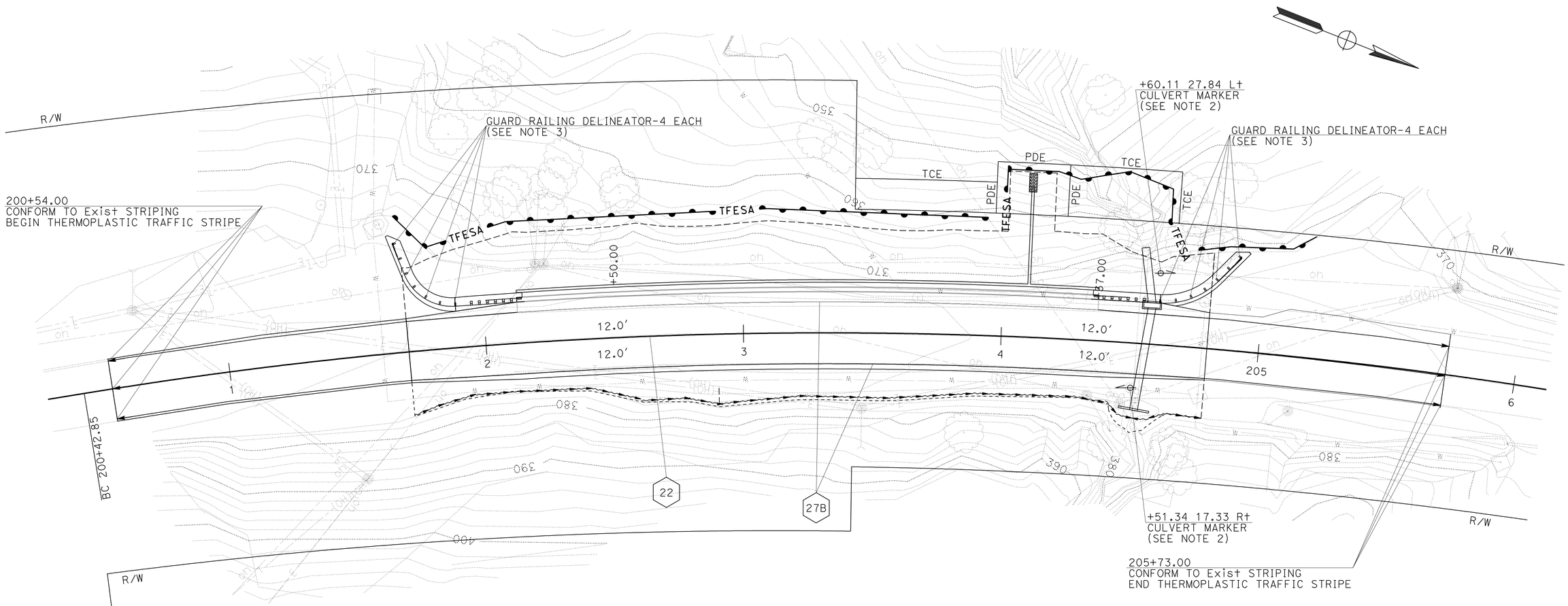

THIS PLAN IS ACCURATE FOR PAVEMENT DELINEATION WORK ONLY.

PAVEMENT DELINEATION AND SIGN PLAN

SCALE: 1" = 20'

PD-1

STATE OF CALIFORNIA - DEPARTMENT OF TRANSPORTATION
Caltrans
NORTH REGION
PROJECT DEVELOPMENT
MARYSVILLE DESIGN-BRANCH M2

FUNCTIONAL SUPERVISOR: FERMIN BARRIGA

CALCULATED-DESIGNED BY: HORACIO PARAS JR
CHECKED BY: SHARON WOODBECK

REVISED BY
DATE REVISED

LAST REVISION 04-15-10 | DATE PLOTTED => 19-JUL-2010 | TIME PLOTTED => 11:03

Dist	COUNTY	ROUTE	POST MILES TOTAL PROJECT	SHEET No.	TOTAL SHEETS
01	Hum	254	5.9	34	72

H Paras Jr 4-23-10
REGISTERED CIVIL ENGINEER DATE

7-19-10
PLANS APPROVAL DATE

REGISTERED PROFESSIONAL ENGINEER
HORACIO PARAS JR
No. C73255
Exp. 12-31-10
CIVIL
STATE OF CALIFORNIA

THE STATE OF CALIFORNIA OR ITS OFFICERS OR AGENTS SHALL NOT BE RESPONSIBLE FOR THE ACCURACY OR COMPLETENESS OF SCANNED COPIES OF THIS PLAN SHEET.

4" THERMOPLASTIC STRIPE

STATION	DETAIL NUMBER	LF
"C1" 200+54.00 TO "C1" 205+73.00	22	1,038
"C1" 200+54.00 TO "C1" 205+73.00	27B (R+)	516
"C1" 200+54.00 TO "C1" 205+73.00	27B (L+)	523
	TOTAL	2,077

PAVEMENT MARKER (RETROREFLECTIVE)

STATION	DETAIL NUMBER	TYPE D (EACH)
"C1" 200+54.00 TO "C1" 205+73.00	22	44
	TOTAL	44

MARKER (CULVERT)

STATION	L+/R+	EACH
"C1" 204+51.34	R+	1
"C1" 204+60.11	L+	1
	TOTAL	2

GUARD RAILING DELINEATOR

STATION	L+/R+	EACH
"C1" 201+67.28 TO "C1" 201+89.33	L+	4
"C1" 204+60.66 TO "C1" 204+90.38	L+	4
	TOTAL	8

PAVEMENT DELINEATION QUANTITIES

PDQ-1

REVISED BY | DATE REVISED
HORACIO PARAS JR | SHARON WOODBECK
CALCULATED-DESIGNED BY | CHECKED BY
FUNCTIONAL SUPERVISOR
FERMIN BARRIGA

STATE OF CALIFORNIA - DEPARTMENT OF TRANSPORTATION
Caltrans
NORTH REGION
PROJECT DEVELOPMENT
MARYSVILLE DESIGN-BRANCH M2

LAST REVISION 03-04-10 | DATE PLOTTED => 19-JUL-2010 | TIME PLOTTED => 11:07

Dist	COUNTY	ROUTE	POST MILES TOTAL PROJECT	SHEET No.	TOTAL SHEETS
01	Hum	254	5.9	35	72

REGISTERED CIVIL ENGINEER 4-23-10 DATE

7-19-10
PLANS APPROVAL DATE

REGISTERED PROFESSIONAL ENGINEER HORACIO PARAS JR No. C73255 Exp. 12-31-10 CIVIL STATE OF CALIFORNIA

THE STATE OF CALIFORNIA OR ITS OFFICERS OR AGENTS SHALL NOT BE RESPONSIBLE FOR THE ACCURACY OR COMPLETENESS OF SCANNED COPIES OF THIS PLAN SHEET.

TEMPORARY CRASH CUSHION

SHEET	LOCATION	TEMPORARY CRASH CUSHION MODULE ARRAY "TB14" (EA)
SC-3	"C1" 200+57.30	14
SC-3	"C1" 204+73.17	14
TH-5	"C1" 200+57.30	14
TH-5	"C1" 201+52.92	14
TH-5	"C1" 204+63.57	14
TH-5	"C1" 205+12.57	14
TOTAL		84

TEMPORARY RAILING (TYPE K)

SHEET	LENGTH (FT)
SC-3	280
TOTAL	280

COLD PLANE AC PAVEMENT

SHEET	STATION FROM	STATION TO	AREA SQYD
L-1	"C1" 200+54.00	"C1" 201+70.00	318.2
L-1	"C1" 204+80.00	"C1" 205+73.00	295.2
		TOTAL	613.4

REMOVE PIPE (N)

SHEET	DESCRIPTION	STATION FROM	STATION TO	Approx DEPTH FT	LENGTH LF
L-1	6" ACP WATER LINE	"C1" 203+41.30 40.98' Lt	"C1" 204+69.88 17.44' Lt	3 TO 6	141.2
			TOTAL		141.2

METAL BEAM GUARD RAILING

SHEET	STATION LIMITS FROM	STATION LIMITS TO	Lt/Rt	TRANSITION RAILING (TYPE WB) EACH	MBGR (WOOD POST) LF	END CAP (TYPE TC) (N) EACH	END ANCHOR ASSEMBLY (TYPE SFT) EACH	WEED CONTROL MAT (FIBER) SQYD
L-1	"C1" 201+67.21		Lt				1	
L-1	"C1" 201+67.21	"C1" 201+89.33	Lt		37.5			
L-1	"C1" 201+64.94	"C1" 202+14.11	Lt					33.3
L-1	"C1" 201+89.33	"C1" 202+14.11	Lt	1				
L-1	"C1" 202+14.11		Lt			1		
L-1	"C1" 204+35.89		Lt			1		
L-1	"C1" 204+35.89	"C1" 204+60.66	Lt	1				
L-1	"C1" 204+60.66	"C1" 204+89.66	Lt		37.5			
L-1	"C1" 204+35.89	"C1" 204+93.84	Lt					29.4
	"C1" 204+89.66		Lt				1	
			TOTAL	2	75.0	2	2	62.7

(N) - NOT A SEPARATE PAY ITEM, FOR INFORMATION ONLY.

ROADWAY QUANTITIES SUMMARY

ITEM	STATION FROM	STATION TO	Lt/Rt	HMA (TYPE A) TON	ROADWAY EXCAVATION CY	EMBANKMENT (N) CY	PLACE HMA (Misc AREA) SQYD	TACK COAT TON
Temp WIDENING (STAGE 2)	"C1" 201+76.83	"C1" 204+90.32	Rt	47.0	23.9	1.4		0.04
Temp DRIVEWAY (STAGE 2)	WOODSIDE Rd			16.3	8.2			0.01
Temp DRIVEAY (STAGE 2)	MADRONA Rd			15.2	7.6			0.01
Temp Rdwy Exc (STAGE 3a)	"C1" 201+72.92	"C1" 204+55.98	Lt		2439.0			
RW FG (STAGE 3b)	"C1" 201+72.92	"C1" 204+55.98	Lt			1955.0		
RECONSTRUCTION (STAGE 3c)	"C1" 201+70.00	"C1" 204+80.00	Lt	198.3	123.7	4.9		0.09
RECONSTRUCTION (STAGE 4a)	"C1" 201+70.00	"C1" 204+80.00	Rt	220.2	197.7			0.10
*0.10' HMA (TYPE A) (STAGE 4b)	"C1" 200+54.00	"C1" 205+73.00	Lt/Rt	110.5			17	0.16
			TOTAL	607.5	2800.1	1961.3	17	0.41

* AGGREGATE GRADATION WILL BE 3/8-INCH HMA TYPE A

SUMMARY OF QUANTITIES

Q-1

STATE OF CALIFORNIA - DEPARTMENT OF TRANSPORTATION
NORTH REGION
PROJECT DEVELOPMENT
MARYSVILLE DESIGN-BRANCH M2

Caltrans

FUNCTIONAL SUPERVISOR: FERMIN BARRIGA
CALCULATED-DESIGNED BY: HORACIO PARAS JR
CHECKED BY: SHARON WOODBECK
REVISED BY
DATE REVISED

LAST REVISION 07-08-10 | DATE PLOTTED => 19-JUL-2010 | TIME PLOTTED => 13:04

Dist	COUNTY	ROUTE	POST MILES TOTAL PROJECT	SHEET No.	TOTAL SHEETS
01	Hum	254	5.9	36	72

Brian Finck 4-23-10
REGISTERED ELECT ENGINEER DATE

7-19-10
PLANS APPROVAL DATE

REGISTERED PROFESSIONAL ENGINEER BRIAN T. FINCK No. 17756 Exp. 6-30-10 ELECT STATE OF CALIFORNIA

THE STATE OF CALIFORNIA OR ITS OFFICERS OR AGENTS SHALL NOT BE RESPONSIBLE FOR THE ACCURACY OR COMPLETENESS OF SCANNED COPIES OF THIS PLAN SHEET.

NOTE: FOR COMPLETE RIGHT OF WAY AND ACCURATE ACCESS DATA SEE RIGHT OF WAY RECORD MAPS AT DISTRICT OFFICE.

LEGEND

- CONSTRUCTION AREA SIGN
- Y FLASHING BEACON (SOLAR POWERED)
- GEN GENERATOR
- ATS AUTOMATIC TRANSFER SWITCH
- SC SIGNAL COMMON
- AUTO-TEST SWITCH
- C CONTRACTOR

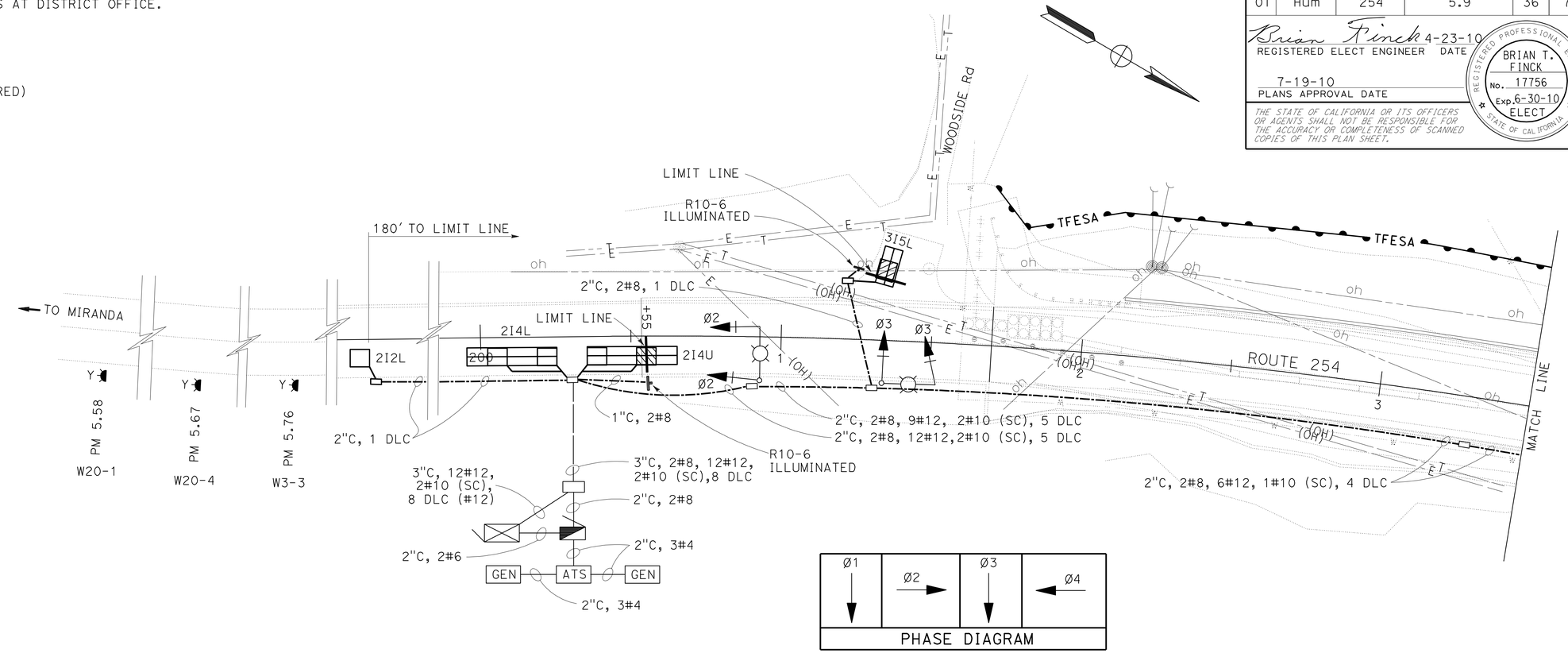

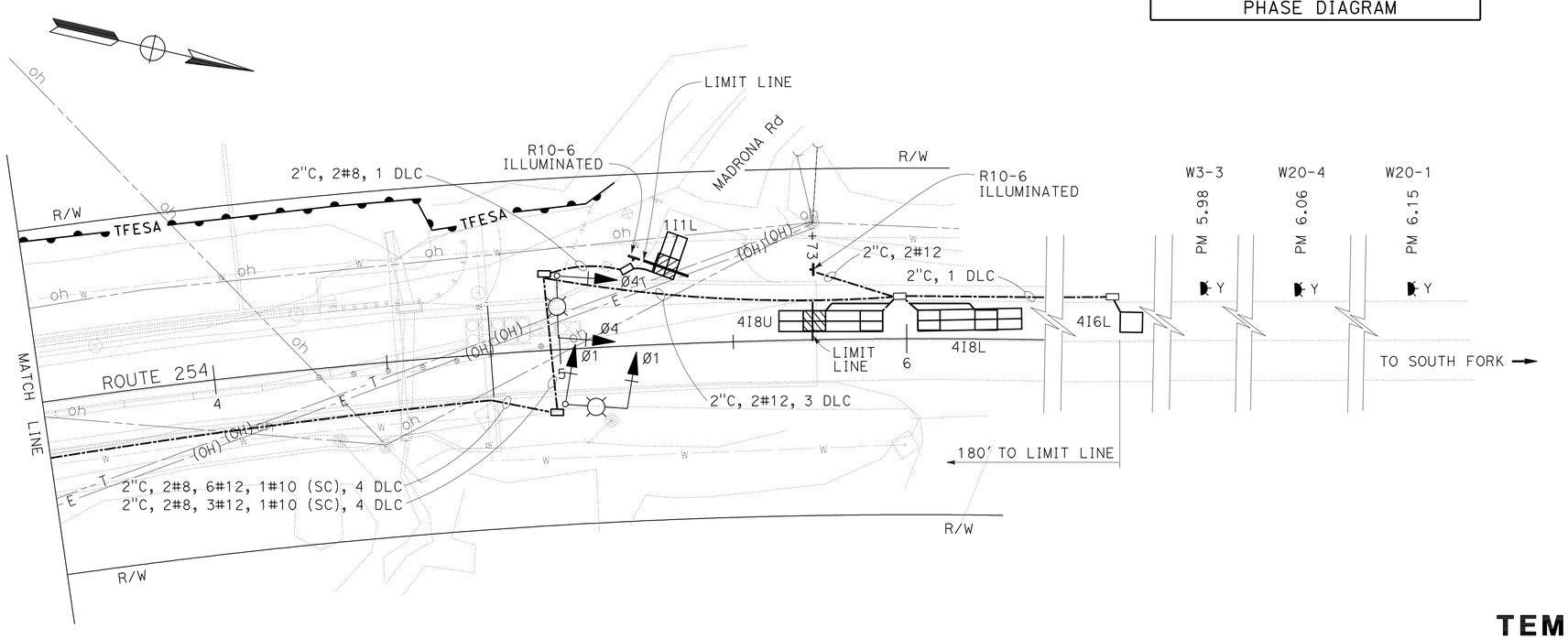

TEMPORARY SIGNAL SYSTEM

SCALE: 1" = 20'

E-1

THIS PLAN ACCURATE FOR ELECTRICAL WORK ONLY.

STATE OF CALIFORNIA - DEPARTMENT OF TRANSPORTATION
Caltrans TRAFFIC ELECTRICAL

FUNCTIONAL SUPERVISOR: TROY ARSENEAU

CALCULATED-DESIGNED BY: BRIAN FINCK
CHECKED BY
REVISED BY
DATE REVISED

LAST REVISION 00-00-00
DATE PLOTTED => 19-JUL-2010
TIME PLOTTED => 13:12

BORDER LAST REVISED 4/11/2008
RELATIVE BORDER SCALE IS IN INCHES 0 1 2 3
USERNAME => trmariak
DGN FILE => 147501ua001.dgn
CU 01365
EA 475011

Dist	COUNTY	ROUTE	POST MILES TOTAL PROJECT	SHEET No.	TOTAL SHEETS
01	Hum	254	5.9	37	72

Brian Finck 4-23-10
REGISTERED ELECT ENGINEER DATE

7-19-10
PLANS APPROVAL DATE

REGISTERED PROFESSIONAL ENGINEER BRIAN T. FINCK No. 17756 Exp. 6-30-10 ELECT STATE OF CALIFORNIA

THE STATE OF CALIFORNIA OR ITS OFFICERS OR AGENTS SHALL NOT BE RESPONSIBLE FOR THE ACCURACY OR COMPLETENESS OF SCANNED COPIES OF THIS PLAN SHEET.

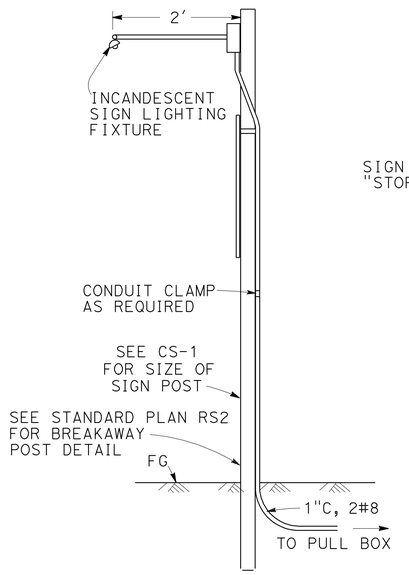

SIDE VIEW

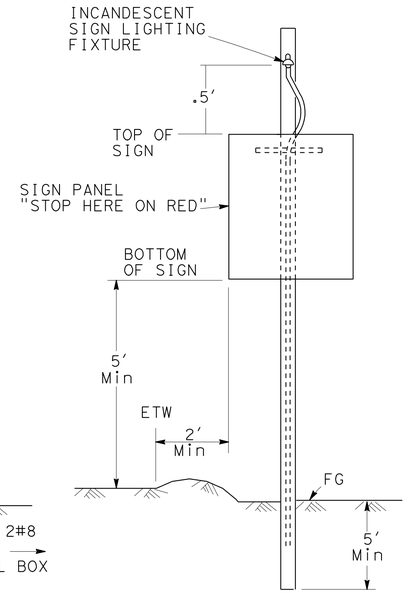

FRONT VIEW

TYPICAL SIGN ILLUMINATION

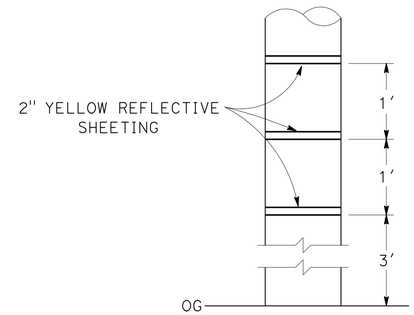

REFLECTIVE MARKING FOR WOOD POLE/POST

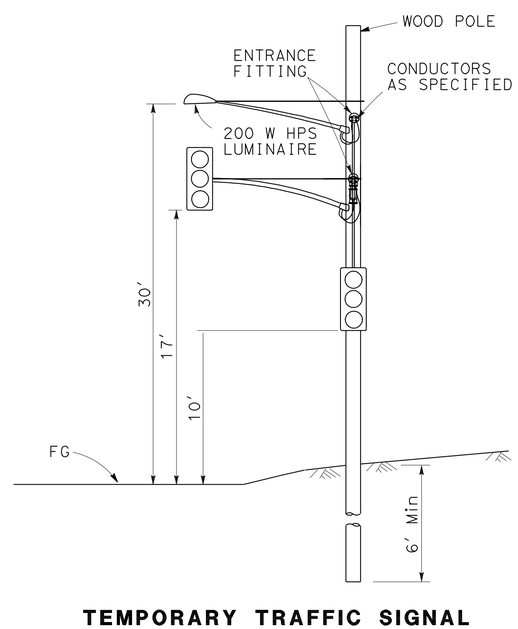

TEMPORARY TRAFFIC SIGNAL

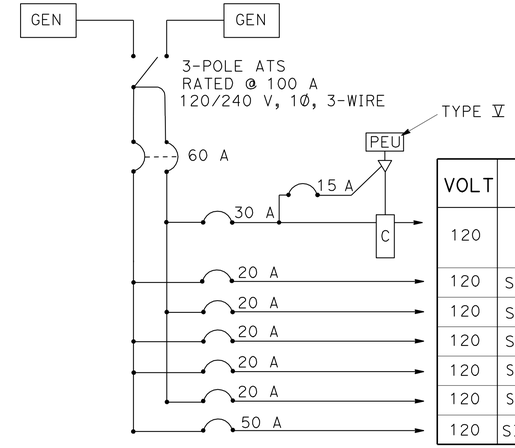

VOLT	NAMEPLATE DESCRIPTION
120	LIGHTING/ SIGN LIGHTING
120	SPARE
120	SPARE
120	SPARE
120	SPARE
120	SPARE
120	SIGNALS

SERVICE WIRING DIAGRAM

TYPE III-AF SERVICE EQUIPMENT ENCLOSURE

TEMPORARY SIGNAL SYSTEM (DETAILS)

NO SCALE

E-2

THIS PLAN ACCURATE FOR ELECTRICAL WORK ONLY.

STATE OF CALIFORNIA - DEPARTMENT OF TRANSPORTATION
Caltrans® TRAFFIC ELECTRICAL

FUNCTIONAL SUPERVISOR: TROY ARSENEAU
CALCULATED-DESIGNED BY: BRIAN FINCK
CHECKED BY
REVISED BY
DATE REVISED

LAST REVISION 00-00-00 DATE PLOTTED => 19-JUL-2010 TIME PLOTTED => 11:52

Dist	COUNTY	ROUTE	POST MILES TOTAL PROJECT	SHEET No.	TOTAL SHEETS
01	Hum	254	5.9	38	72

Brian Finck 4-23-10
REGISTERED ELECT ENGINEER DATE

7-19-10
PLANS APPROVAL DATE

REGISTERED PROFESSIONAL ENGINEER
BRIAN T. FINCK
No. 17756
Exp. 6-30-10
ELECT
STATE OF CALIFORNIA

THE STATE OF CALIFORNIA OR ITS OFFICERS OR AGENTS SHALL NOT BE RESPONSIBLE FOR THE ACCURACY OR COMPLETENESS OF SCANNED COPIES OF THIS PLAN SHEET.

L E G E N D

Ah = AMPERE HOUR

NOTES: (THIS SHEET ONLY)

1. 1-SECTION SIGNAL FACE WITH VISOR AND BACKPLATE.
2. THIS UNIT SHALL BE LOCATED IN AN UNSHADED AREA.
3. SEE TRAFFIC HANDLING PLANS.
4. WOOD POLE WITH PHOTOVOLTAIC PANELS SHALL BE LOCATED OUTSIDE THE CLEAR RECOVERY ZONE. WOOD POLE SHALL BE CLASS 5, 40′.

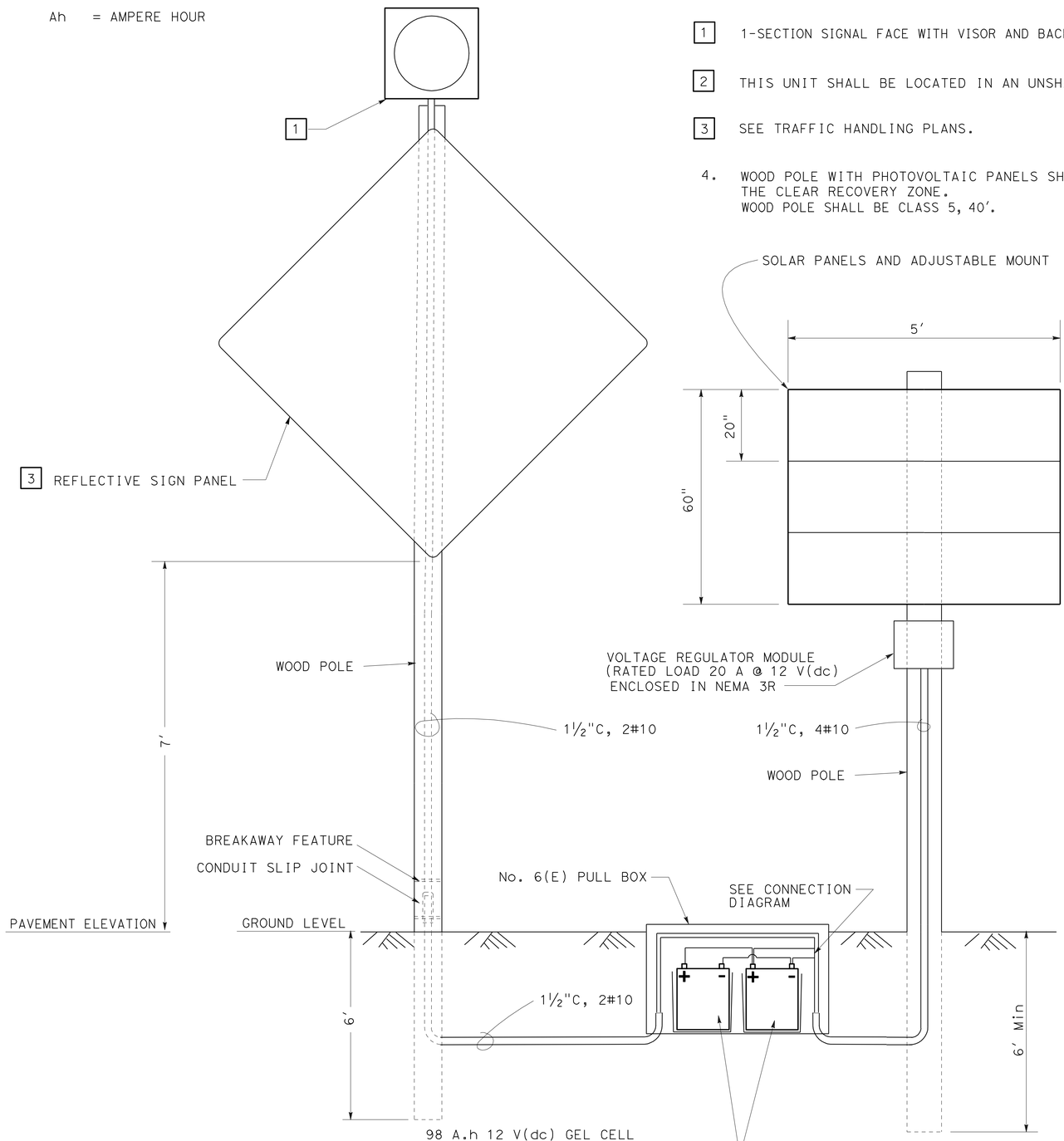

FLASHING BEACON
(SOLAR POWERED)

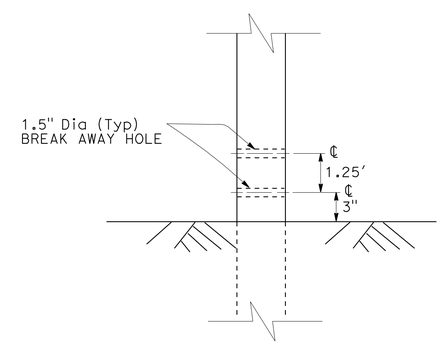

BREAK AWAY POST DETAIL

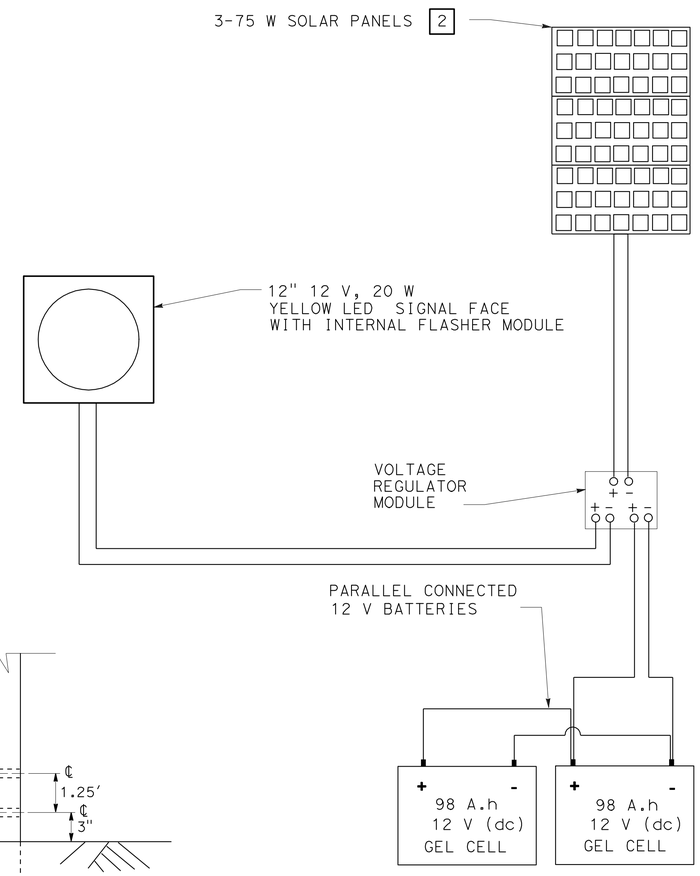

CONNECTION DIAGRAM

THIS PLAN ACCURATE FOR ELECTRICAL WORK ONLY.

TEMPORARY SIGNAL SYSTEM
(DETAILS)
NO SCALE

E-3

STATE OF CALIFORNIA - DEPARTMENT OF TRANSPORTATION
Caltrans® TRAFFIC ELECTRICAL

FUNCTIONAL SUPERVISOR: TROY ARSENEAU
CALCULATED-DESIGNED BY: BRIAN FINCK
CHECKED BY
REVISED BY
DATE REVISED

LAST REVISION 00-00-00
DATE PLOTTED => 19-JUL-2010
TIME PLOTTED => 11:52

DIST	COUNTY	ROUTE	POST MILES TOTAL PROJECT	SHEET NO.	TOTAL SHEETS
01	Hum	254	5.9	39	72

Randell D. Hiatt
REGISTERED CIVIL ENGINEER

June 6, 2008
PLANS APPROVAL DATE

REGISTERED PROFESSIONAL ENGINEER
Randell D. Hiatt
No. C50200
Exp. 6-30-09
CIVIL
STATE OF CALIFORNIA

The State of California or its officers or agents shall not be responsible for the accuracy or completeness of electronic copies of this plan sheet.

To accompany plans dated 7-19-10

NOTES:

1. When necessary to place dike in front of face of guard railing, only Type C dike may be used. For dike details, see Standard Plan A87B.
2. For standard railing post embedment, see Standard Plans A77C3.
3. Guard railing delineation to be used where shown on the Project Plans.
4. When dike or curb is placed under guard railing, the maximum height of the dike or curb shall be 4". Mountable dike should not be used. For dike and curb details, see Revised Standard Plans RSP A87A and Standard Plan A87B.
5. For details of typical distance between the face of rail and hinge point, see Standard Plan A77C3.

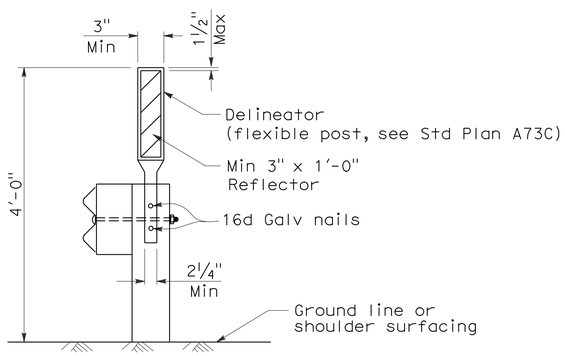

GUARD RAILING DELINEATION

See Note 3

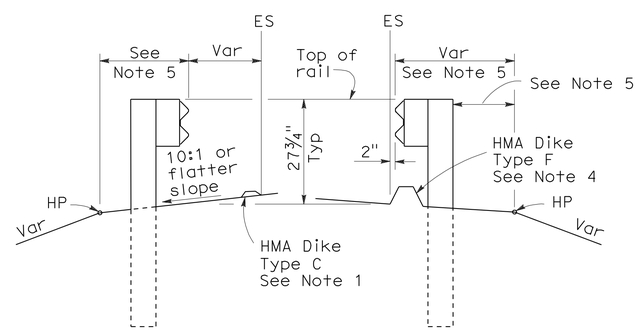

DIKE POSITIONING

See Note 1

STATE OF CALIFORNIA
DEPARTMENT OF TRANSPORTATION

METAL BEAM GUARD RAILING TYPICAL RAILING DELINEATION AND DIKE POSITIONING DETAILS

NO SCALE

RSP A77C4 DATED JUNE 6, 2008 SUPERSEDES STANDARD PLAN A77C4
DATED MAY 1, 2006 - PAGE 47 OF THE STANDARD PLANS BOOK DATED MAY 2006.

REVISED STANDARD PLAN RSP A77C4

2006 REVISED STANDARD PLAN RSP A77C4

12-10-07

DIST	COUNTY	ROUTE	POST MILES TOTAL PROJECT	SHEET NO.	TOTAL SHEETS
01	Hum	254	5.9	40	72

Randell D. Hiatt
REGISTERED CIVIL ENGINEER

June 6, 2008
PLANS APPROVAL DATE

REGISTERED PROFESSIONAL ENGINEER
Randell D. Hiatt
No. C50200
Exp. 6-30-09
CIVIL
STATE OF CALIFORNIA

The State of California or its officers or agents shall not be responsible for the accuracy or completeness of electronic copies of this plan sheet.

To accompany plans dated 7-19-10

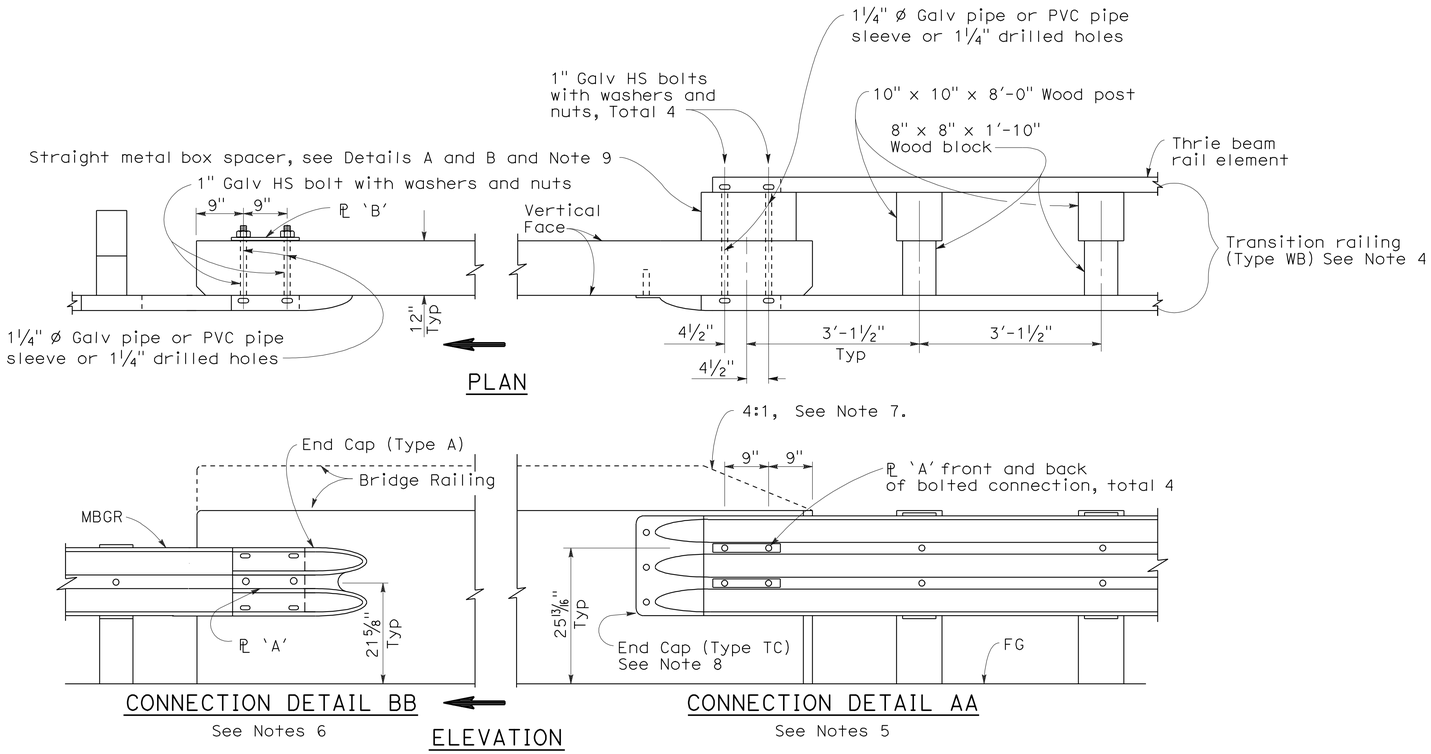

GUARD RAILING CONNECTION TO BRIDGE RAILING WITHOUT SIDEWALK

NOTES:

1. See Revised Standard Plan RSP A77J2 for additional connection details to bridges without sidewalks.
2. Additional details of posts, blocks and hardware are shown on Standard Plan A77B1, A77C1 and A77C2.
3. Direction of adjacent traffic indicated by ➡.
4. For additional details of Transition Railing (Type WB), see Standard Plan A77J4. Transition Railing (Type WB) transitions the 12 gage w-beam standard railing section of guard railing to a heavier gage nested thrie beam railing section which is connected to the concrete bridge railing.
5. For typical use of Connection Detail AA, see Layout Types 12A and 12B on Revised Standard Plan RSP A77F1, Layout Types 12C and 12D on Standard Plan A77F2, and Layout Type 12E on Revised Standard Plan RSP A77F3.
6. For typical use of Connection Detail BB, see Layout Type 12D (structure departure railing connection) on Standard Plan A77F2 and Layout Type 12DD on Standard Plan A77F5.
7. Where the height of the bridge railing exceeds the height of the thrie beam railing by more than 1" at Connection Detail AA, taper the top of the end of the bridge railing at 4:1 to match the top elevation of the thrie beam rail.
8. For details of End Cap (Type TC), see Standard Plan A77J4.
9. See Standard Plan A77J4 for additional details regarding depth dimension for straight metal box spacer.

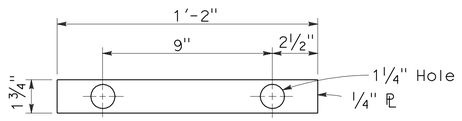

PLATE 'A'

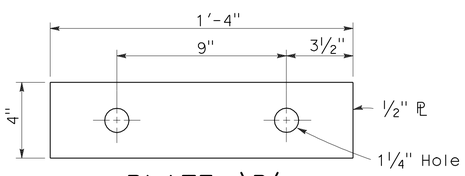

PLATE 'B'
(For backside of connection BB)

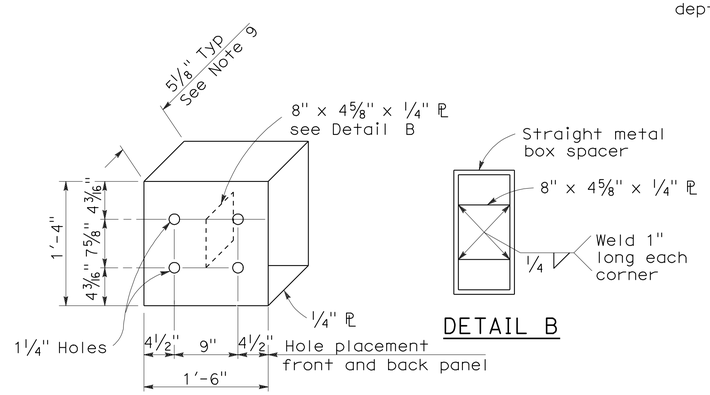

DETAIL B

DETAIL A

STRAIGHT METAL BOX SPACER

STATE OF CALIFORNIA
DEPARTMENT OF TRANSPORTATION

METAL BEAM GUARD RAILING CONNECTIONS TO BRIDGE RAILINGS WITHOUT SIDEWALKS DETAILS No.1

NO SCALE

RSP A77J1 DATED JUNE 6, 2008 SUPERSEDES STANDARD PLAN A77J1
DATED MAY 1, 2006 - PAGE 72 OF THE STANDARD PLANS BOOK DATED MAY 2006.

REVISED STANDARD PLAN RSP A77J1

2006 REVISED STANDARD PLAN RSP A77J1

DIST	COUNTY	ROUTE	POST MILES TOTAL PROJECT	SHEET NO.	TOTAL SHEETS
01	Hum	254	5.9	41	72

Randell D. Hiatt
REGISTERED CIVIL ENGINEER

June 6, 2008
PLANS APPROVAL DATE

REGISTERED PROFESSIONAL ENGINEER
Randell D. Hiatt
No. C50200
Exp. 6-30-09
CIVIL
STATE OF CALIFORNIA

The State of California or its officers or agents shall not be responsible for the accuracy or completeness of electronic copies of this plan sheet.

To accompany plans dated 7-19-10

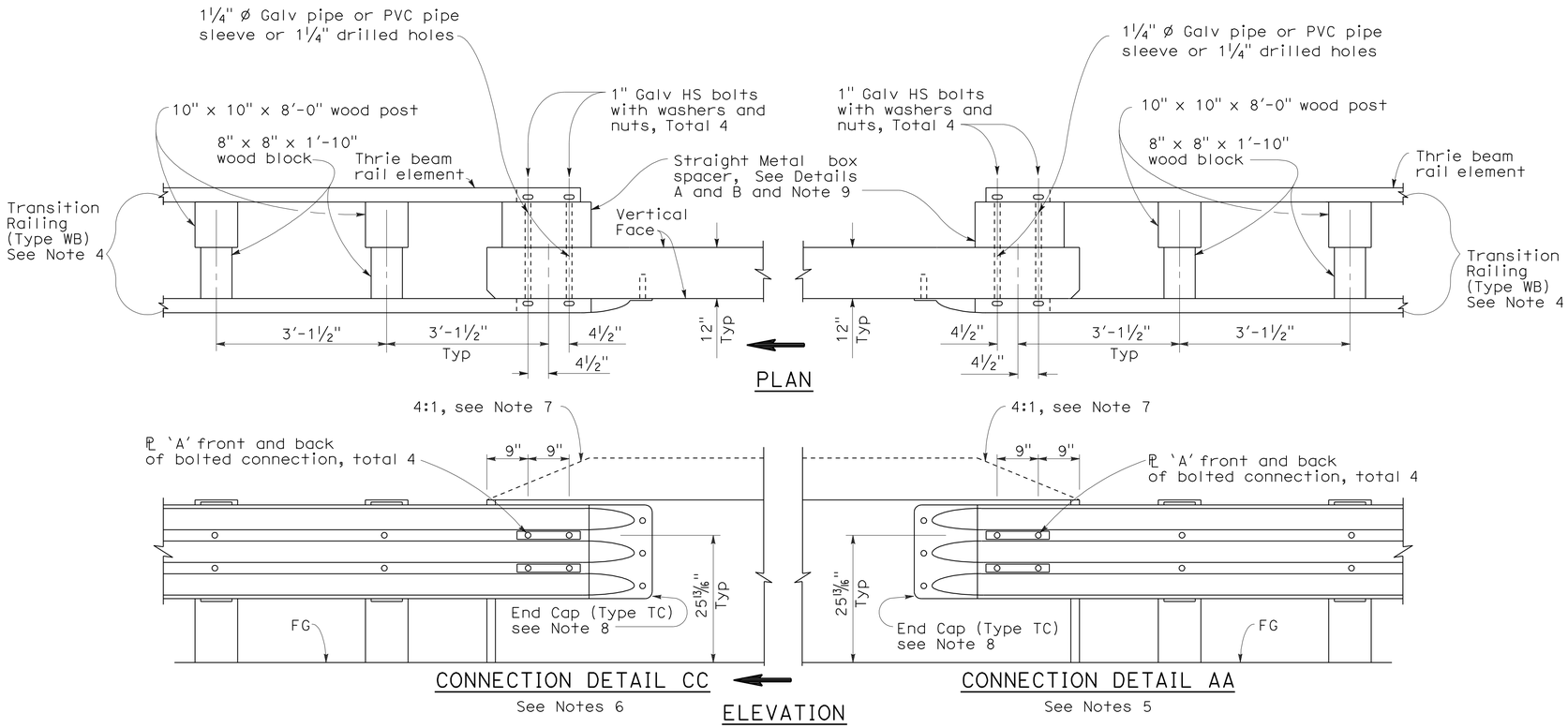

GUARD RAILING CONNECTION TO BRIDGE RAILING WITHOUT SIDEWALK

NOTES:

1. See Revised Standard Plan RSP A77J1 for additional connection details to bridges without sidewalks.
2. Additional details of posts, blocks and hardware are shown on Standard Plan A77B1, A77C1 and A77C2.
3. Direction of adjacent traffic indicated by ⟹.
4. For additional details of Transition Railing (Type WB), see Standard Plan A77J4. Transition Railing (Type WB) transitions the 12 gage w-beam standard railing section of guard railing to a heavier gage nested thrie beam railing section which is connected to the concrete bridge railing.
5. For typical use of Connection Detail AA, see Layout Types 12A and 12B on Revised Standard Plan RSP A77F1, Layout Types 12C and 12D on Standard Plan A77F2, and Layout Type 12E on Revised Standard Plan RSP A77F3.
6. For typical use of Connection Detail CC, see Layout Types 12AA and 12BB on Standard Plan A77F4 and Layout Type 12CC on Standard Plan A77F5.
7. Where the height of the bridge railing exceeds the height of the thrie beam railing by more than 1" at Connection Detail AA and connection Detail CC, taper the top of the end of the bridge railing at 4:1 to match the top elevation of the thrie beam railing.
8. For details of End Cap (Type TC), see Standard Plans A77J4.
9. See Standard Plans A77J4 for additional details regarding depth dimension for straight metal box spacer.

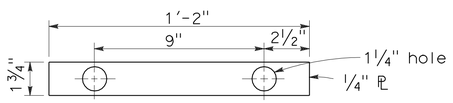

PLATE 'A'

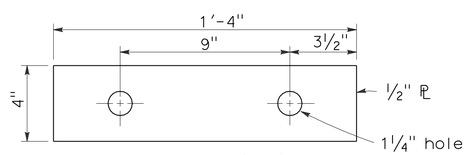

PLATE 'B'
(For backside of connection BB)

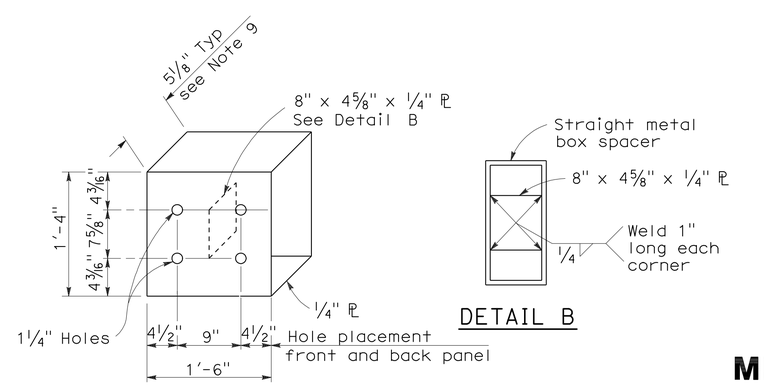

DETAIL A

DETAIL B

STRAIGHT METAL BOX SPACER

STATE OF CALIFORNIA
DEPARTMENT OF TRANSPORTATION

METAL BEAM GUARD RAILING CONNECTIONS TO BRIDGE RAILINGS WITHOUT SIDEWALKS DETAILS No.2

NO SCALE

RSP A77J2 DATED JUNE 6, 2008 SUPERSEDES STANDARD PLAN A77J2 DATED MAY 1, 2006 - PAGE 73 OF THE STANDARD PLANS BOOK DATED MAY 2006.

REVISED STANDARD PLAN RSP A77J2

2006 REVISED STANDARD PLAN RSP A77J2

12-10-07

DIST	COUNTY	ROUTE	POST MILES TOTAL PROJECT	SHEET NO.	TOTAL SHEETS
01	Hum	254	5.9	42	72

Randell D. Hiatt
REGISTERED CIVIL ENGINEER

June 5, 2009
PLANS APPROVAL DATE

REGISTERED PROFESSIONAL ENGINEER
Randell D. Hiatt
No. C50200
Exp. 6-30-09
CIVIL
STATE OF CALIFORNIA

The State of California or its officers or agents shall not be responsible for the accuracy or completeness of electronic copies of this plan sheet.

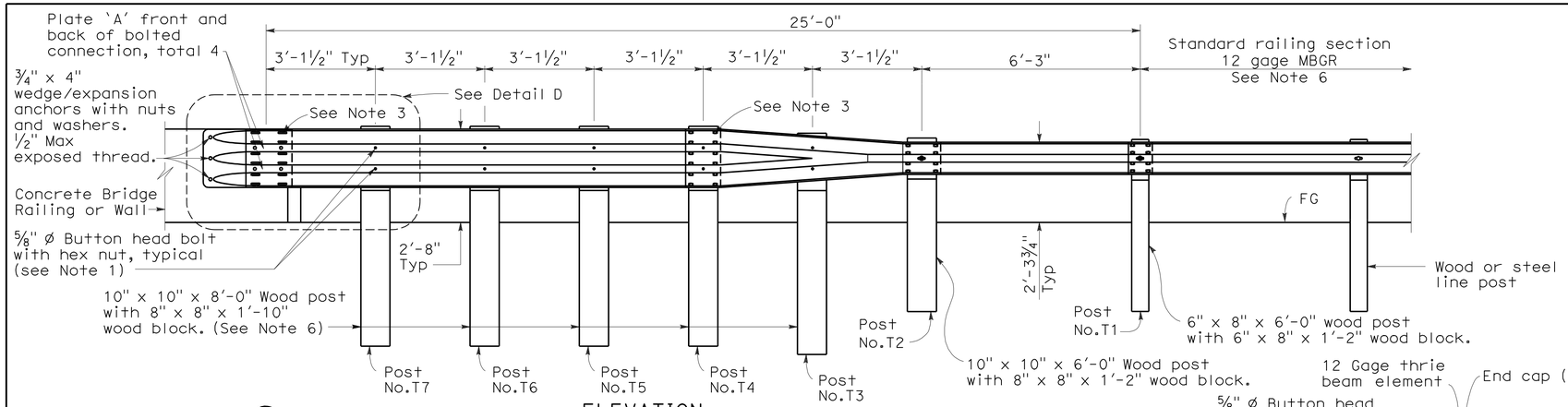

ELEVATION

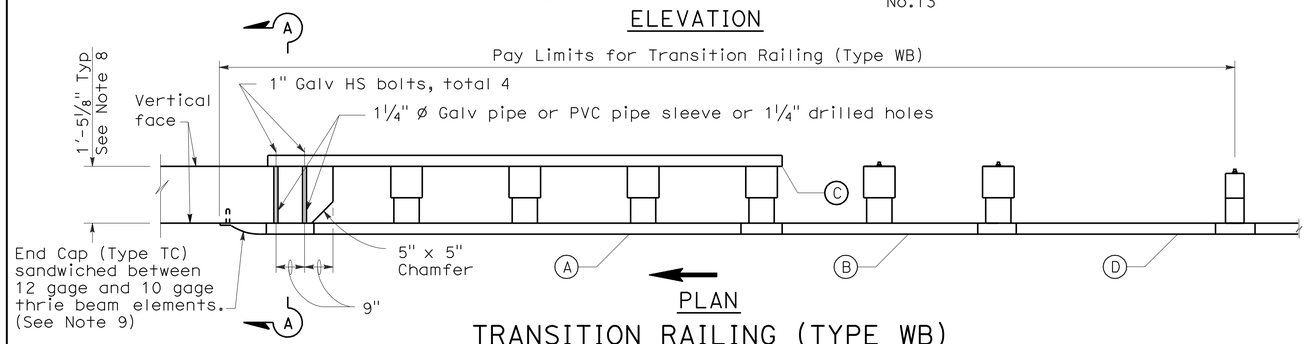

PLAN

TRANSITION RAILING (TYPE WB)

(No Blockout Attachment)

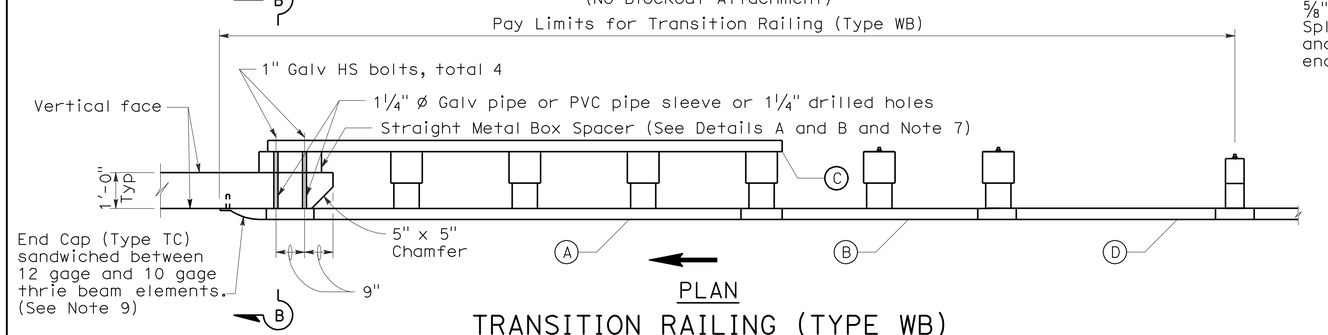

PLAN

TRANSITION RAILING (TYPE WB)

(Blockout Attachment)

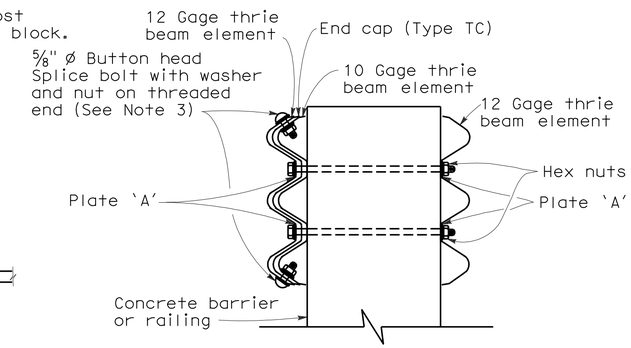

SECTION A-A

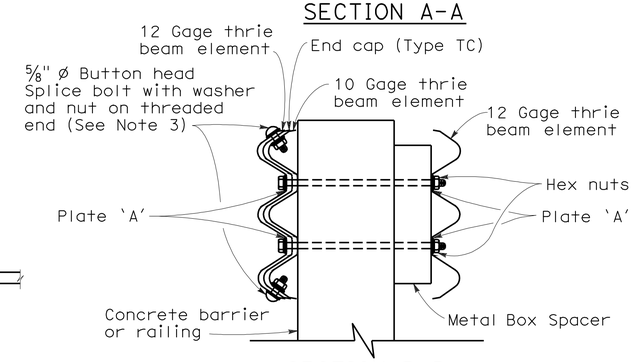

SECTION B-B

LEGEND

(A) Nested thrie beam elements (one 12 gage element nested over one 10 gage element).

(B) One 10 gage "W" beam to thrie beam element.

(C) One 12 gage thrie beam element.

(D) One 10 gage "W" beam rail element (7'-3½" length)

10 gage = 0.135" thick

12 gage = 0.108" thick

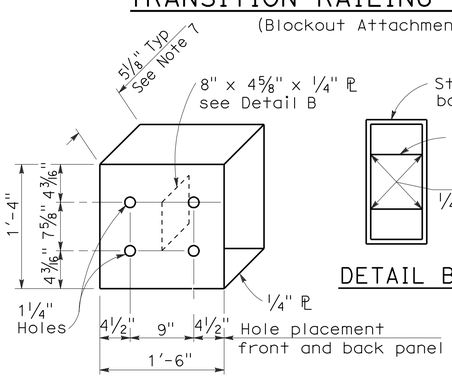

DETAIL A

STRAIGHT METAL BOX SPACER

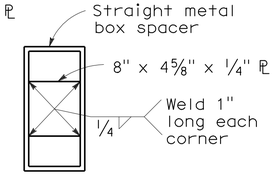

DETAIL B

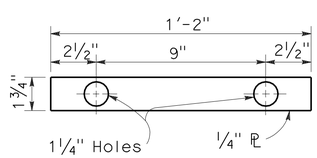

DETAIL C

PLATE 'A'

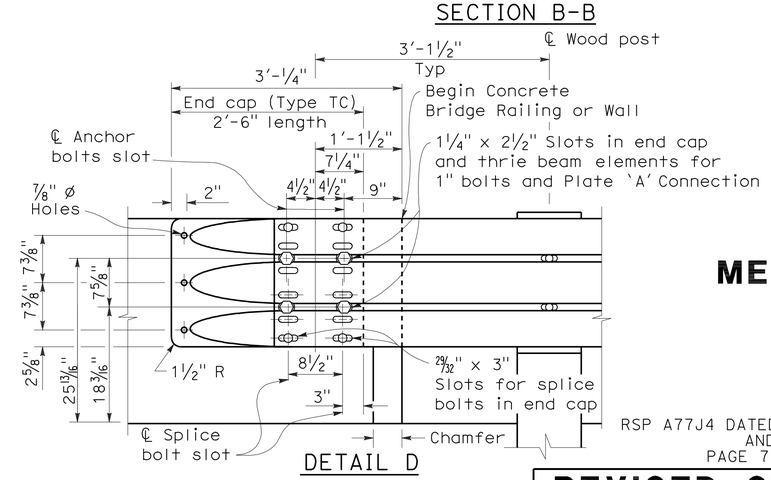

DETAIL D

NOTES:

To accompany plans dated 7-19-10

1. Use 5/8 " ø Button head bolts and hex nuts for connections to posts. No washer on rail face for bolted connections to post.
2. The nested rail elements, end cap, and 'W' beam to thrie beam element may be spliced together prior to bolting the elements to the wood post and concrete barrier or railing.
3. Exterior splice bolt holes for rail element splices at Post No.T4 and the connection to the concrete barrier or railing shall be the standard 29/32 " x 1 1/8 " slot size. Interior splice bolt holes at these locations may be increased up to 1 1/4 " ø. Only the top 2 and the bottom 2 splice bolts with washers and nuts are required for rail splices at Post No.T4 and the connection to the concrete barrier or railing.
4. Direction of adjacent traffic indicated by →.
5. The top elevation of Post Nos.T2 through T7 shall not project more than 1" above the top elevation of the rail element.
6. Typically, the railing connected to Transition Railing (Type WB) will be either standard railing section of metal beam guard railing or an approved Caltrans end treatment attached to Post No.T1.
7. The depth of the metal box spacer varies from the 5 1/8 " to 1 1/2 " and is dependent on the width of the concrete railing or wall. The combined dimension for the depth of the metal box spacer plus the width of railing or wall is typically 17 1/8 ". Where the space between the backside of the concrete railing or wall and the rear thrie beam element is less than 1 1/2 ", metal plates similar to Plate 'A' are to be used as spacers.
8. Where the width of the concrete railing or wall is greater than 17 1/8 ", wood blocks are to be used to fill the space created between the backside of Posts No.4 through No.7 and the rear thrie beam element. These wood blocks shall be 8" in width and 1'-2" in length. The dimension between the front thrie beam element and the rear thrie beam element is to match the width of the concrete railing or wall.
9. End cap may be installed over 12 gage and 10 gage thrie beam elements where transition railing is installed on the departure end of bridge railing.

STATE OF CALIFORNIA
DEPARTMENT OF TRANSPORTATION

METAL BEAM GUARD RAILING TRANSITION RAILING (TYPE WB)

NO SCALE

RSP A77J4 DATED JUNE 5, 2009 SUPERSEDES RSP A77J4 DATED JUNE 6, 2008 AND STANDARD PLAN A77J4 DATED MAY 1, 2006 - PAGE 75 OF THE STANDARD PLANS BOOK DATED MAY 2006.

REVISED STANDARD PLAN RSP A77J4

2006 REVISED STANDARD PLAN RSP A77J4

5-14-09

DIST	COUNTY	ROUTE	POST MILES TOTAL PROJECT	SHEET NO.	TOTAL SHEETS
01	Hum	254	5.9	43	72

Raymond Don Tsztoo
REGISTERED CIVIL ENGINEER

June 6, 2008
PLANS APPROVAL DATE

REGISTERED PROFESSIONAL ENGINEER
Raymond Don Tsztoo
No. C37332
Exp. 6-30-08
CIVIL
STATE OF CALIFORNIA

The State of California or its officers or agents shall not be responsible for the accuracy or completeness of electronic copies of this plan sheet.

To accompany plans dated 7-19-10

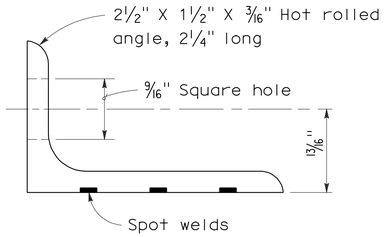

ANGLE

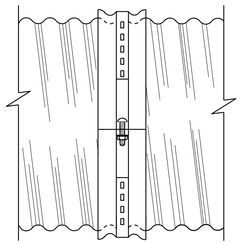

SIDE VIEW
ANGLE

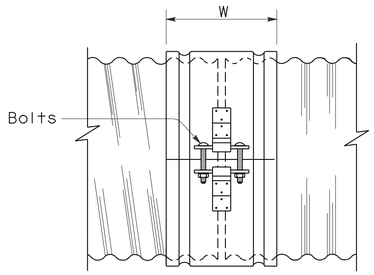

SIDE VIEW
SINGLE BAR AND STRAP

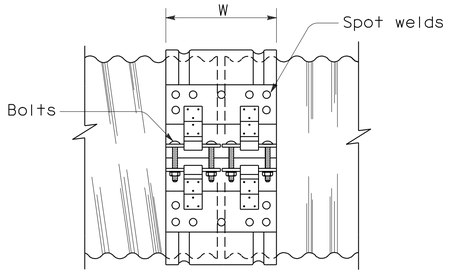

SIDE VIEW
DOUBLE BAR AND STRAP

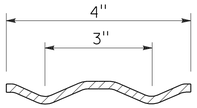

SECTION

H-4 HUGGER BAND

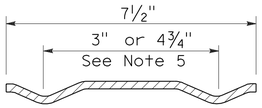

SECTION

H-7 HUGGER BAND

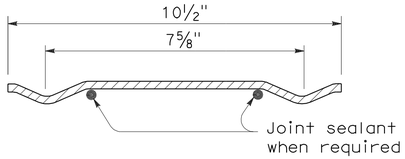

SECTION

H-10 HUGGER BAND

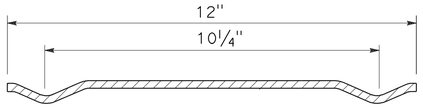

SECTION

H-12 HUGGER BAND

HUGGER COUPLING BANDS

NOTES:

1. All ferrous metal coupling band connection hardware shall be galvanized or electroplated in accordance with the Standard Specifications.
2. Dimensions and thicknesses shown are minimum.
3. Spot welds shall develop minimum required strength of strap.
4. Fillet welds of equivalent strength may be substituted for spot welds or rivets.
5. Dimension depends upon whether end condition is lips up or lips down.

STATE OF CALIFORNIA
DEPARTMENT OF TRANSPORTATION

CORRUGATED METAL PIPE COUPLING DETAILS No. 4 HUGGER COUPLING BANDS

NO SCALE

RSP D97D DATED JUNE 6, 2008 SUPERSEDES STANDARD PLAN D97D
DATED MAY 1, 2006 - PAGE 186 OF THE STANDARD PLANS BOOK DATED MAY 2006.

REVISED STANDARD PLAN RSP D97D

2006 REVISED STANDARD PLAN RSP D97D

3-24-08

DIST	COUNTY	ROUTE	POST MILES TOTAL PROJECT	SHEET NO.	TOTAL SHEETS
01	Hum	254	5.9	44	72

Raymond Don Tsztoo
REGISTERED CIVIL ENGINEER

June 6, 2008
PLANS APPROVAL DATE

REGISTERED PROFESSIONAL ENGINEER Raymond Don Tsztoo No. C37332 Exp. 6-30-08 CIVIL STATE OF CALIFORNIA

The State of California or its officers or agents shall not be responsible for the accuracy or completeness of electronic copies of this plan sheet.

ANNULAR AND HELICAL PROFILE

COUPLING TYPE	PIPE CORRUGATION	PIPE SIZE	W OR A	PIPE WALL THICKNESS CSP	PIPE WALL THICKNESS CAP	BAND THICKNESS CSP	BAND THICKNESS CAP	BAR AND STRAP (CSP ONLY) STRAP THICKNESS	BOLTS Dia	BAR Dia	BAR YIELD STRENGTH	ANGLE DIMENSIONS CSP	ANGLE DIMENSIONS CAP	BOLTS (No.- Dia) CSP	BOLTS (No.- Dia) CAP	RIVETS ANGLE TO BAND CSP	RIVETS ANGLE TO BAND CAP	SPOT WELDS ANGLE TO BAND CSP
TWO PIECE INTEGRAL FLANGE	1½′ × ¼"	6"-10"	7"	0.052"-0.079"	0.048"-0.060"	0.052"	0.060"							2-⅜"	2-⅜"			
		12"-18"	7"	0.052"-0.079"		0.064"								2-½"				
	2⅔" × ½"	12"-24"	7"	0.052"-0.079"	0.060"-0.105"	0.064"	0.060"							2-½"	2-½"			
UNIVERSAL	2⅔" × ½"	THROUGH 36"	12"	0.052"-0.138"	0.060"-0.135"	0.052"	0.060"					2" × 2" × 3/16"	2" × 2" × 3/16"	3-½"	3-½"	3-⅜"	3-⅜"	3-½"
		42"-60"	12"	0.052"-0.168"	0.075"-0.164"	0.052"	0.060"					2" × 2" × 3/16"	2" × 2" × 3/16"	3-½"	3-½"	3-⅜"	3-⅜"	5-½"
		THROUGH 72"	12"	0.052"-0.168"	0.164"	0.052"	0.105"	0.079"	½"	⅞"	32 ksi	2" × 2" × 3/16"	2" × 2" × 3/16"	3-½"	3-½"	3-⅜"	3-⅜"	5-½"
		78"-84"	16¼"	0.168"		0.079"		DOUBLE 0.079"	½"	⅞"	32 ksi							
ANNULAR	2⅔" × ½"	THROUGH 36"	7"	0.064"-0.138"	0.060"-0.135"	0.052"	0.060"	0.079"	½"	⅞"	32 ksi	2" × 2" × 3/16"	2" × 2" × 3/16"	2-½"	2-½"	3-⅜"	3-⅜"	3-½"
		42"-72"	12"	0.064"-0.168"	0.075"-0.164"	0.052"	0.105"	0.079"	½"	⅞"	32 ksi	2" × 2" × 3/16"	2" × 2" × 3/16"	3-½"	3-½"	3-⅜"	3-⅜"	5-½"
		78"-84"	12"	0.168"		0.079"		0.109"	½"	⅞"	45 ksi	2" × 2" × 3/16"		3-½"		3-⅜"		5-½"
	3" × 1"	48"-90"	14"	0.064"-0.109"		0.052"		0.079"	½"	⅞"	32 ksi	2" × 2" × 3/16"		3-½"		3-⅜"		5-½"
		96"-120"	14"	0.079"-0.109"		0.052"		0.109"	½"	⅞"	45 ksi	2" × 2" × 3/16"		3-½"		4-⅜"		
		42"-108"	14"		0.060"-0.135"		0.060"						2" × 2" × 3/16"		3-½"		3-⅜"	
HELICAL	2⅔" × ½"	THROUGH 36"	12"	0.052"-0.138"	0.060"-0.135"	0.052"	0.060"	0.079"	½"	⅞"	32 ksi	2" × 2" × 3/16"	2" × 2" × 3/16"	3-½"	3-½"	3-⅜"	3-⅜"	3-½"
		42"-72"	12"	0.052"-0.168"	0.075"-0.164"	0.052"	0.060"	0.079"	½"	⅞"	32 ksi	2" × 2" × 3/16"	2" × 2" × 3/16"	3-½"	3-½"	3-⅜"	3-⅜"	5-½"
		78"-84"	12"	0.168"		0.079"		0.109"	½"	⅞"	45 ksi	2" × 2" × 3/16"		3-½"		3-⅜"		5-½"
	3" × 1"	48"-90"	14"	0.064"-0.109"		0.052"		0.079"	½"	⅞"	32 ksi	2" × 2" × 3/16"		3-½"		3-⅜"		5-½"
		96"-120"	14"	0.079"-0.109"		0.052"		0.109"	½"	⅞"	45 ksi	2" × 2" × 3/16"		3-½"		4-⅜"		
		42"-108"	14"		0.060"-0.135"		0.060"						2" × 2" × 3/16"		3-½"		3-⅜"	
HUGGER	2⅔" × ½" REROLLED END	12"-54"	4"	0.052"-0.109"		0.052"						2½" × 1½" × 3/16"	2½" × 1½" × 3/16"	1-½"				3-½"
		60"-66"	4"	0.109"		0.064"						2½" × 1½" × 3/16"	2½" × 1½" × 3/16"	1-½"				3-½"
		36"-48"	4"	0.138"		0.064"						2½" × 1½" × 3/16"	2½" × 1½" × 3/16"	1-½"				3-½"
		THROUGH 72"	10½"	0.052"-0.168"		0.052"		0.079"	½"	⅞"	32 ksi							
		78"-84"	10½"	0.168"		0.079"		0.109"	½"	⅞"	45 ksi							
	3" × 1" REROLLED END	48"-90"	10½"	0.064"-0.109"		0.052"		0.079"	½"	⅞"	32 ksi							
		96"-120"	10½"	0.079"-0.109"		0.052"		0.109"	½"	⅞"	45 ksi							
	5" × 1" REROLLED END	48"-66"	7½"	0.064"-0.109"		0.064"		0.079"	½"	⅞"	32 ksi	2½" × 1½" × 3/16"	2½" × 1½" × 3/16"	1-½"				3-½"
		72"-90"	7½"	0.064"-0.079"		0.064"		0.079"	½"	⅞"	32 ksi	2½" × 1½" × 3/16"	2½" × 1½" × 3/16"	1-½"				3-½"
		48"-90"	7½"	0.064"-0.138"		0.064"		0.079"	½"	⅞"	32 ksi							
		48"-120"	12" SEE	0.064"-0.109"		0.064"		0.079"	½"	⅞"	32 ksi							
		48"-84"	12" NOTE	0.138"		0.064"		0.079"	½"	⅞"	32 ksi							
		90"-120"	12" 11	0.138"		0.064"		DOUBLE 0.079"	½"	⅞"	32 ksi							

SPIRAL RIB PROFILE

COUPLING TYPE	PIPE CORRUGATION	PIPE SIZE	W	PIPE WALL THICKNESS SSRP	PIPE WALL THICKNESS ASRP	BAND THICKNESS SSRP	BAND THICKNESS ASRP	BAR AND STRAP (SSRP ONLY) STRAP THICKNESS	BOLTS Dia	BAR Dia	BAR YIELD STRENGTH	ANGLE DIMENSIONS SSRP	ANGLE DIMENSIONS ASRP	BOLTS (No.- Dia) SSRP	BOLTS (No.- Dia) ASRP	RIVETS ANGLE TO BAND SSRP	RIVETS ANGLE TO BAND ASRP	SPOT WELDS ANGLE TO BAND SSRP
ANNULAR	2⅔" × ½" * REROLLED END	24"-36"	12"	0.064"-0.109"	0.060"-0.105"	0.052"	0.060"	0.079"	½"	⅞"	32 ksi	2" × 2" × 3/16"	2" × 2" × 3/16"	3-½"	3-½"	3-⅜"	3-⅜"	5-½"
		42"-60"	12"	0.064"-0.109"	0.075"-0.105"	0.052"	0.105"	0.079"	½"	⅞"	32 ksi	2" × 2" × 3/16"	2" × 2" × 3/16"	3-½"	3-½"	3-⅜"	3-⅜"	5-½"
		66"-72"	12"	0.064"-0.109"		0.052"		0.079"	½"	⅞"	32 ksi	2" × 2" × 3/16"	2" × 2" × 3/16"	3-½"	3-½"	3-⅜"	3-⅜"	5-½"
		78"-114"	12"	0.079"-0.109"		0.079"		0.109"	½"	⅞"	45 ksi	2" × 2" × 3/16"	2" × 2" × 3/16"	3-½"	3-½"	3-⅜"	3-⅜"	5-½"
HUGGER	2⅔" × ½" * REROLLED END	24"-72"	10½"	0.064"-0.109"		0.052"		0.079"	½"	⅞"	32 ksi							
		78"-84"	10½"	0.109"		0.079"		0.109"	½"	⅞"	45 ksi							

* See Note 14.

14. All profiles of Spiral Rib Pipe (¾" × ¾" ribs at 7½" pitch and ¾" × 1" ribs at 11½" pitch in both steel and aluminum and ¾" × 1" ribs at 8½" pitch in steel only) shall be manufactured with rerolled ends. Corrugation profile of the rerolled ends shall be 2⅔" × ½" annual corrugations with a minimum of two full corrugations at each end.

NOTES:

To accompany plans dated 7-19-10

1. All ferrous metal coupling band connection hardware shall be galvanized or electro-plated in accordance with the Standard Specifications.
2. For helically corrugated coupling bands, the connection angles may be oriented parallel to the pipe axis, provided connecting holes are slotted lengthwise sufficiently to allow adjustment for the helix angle.
3. Tension strap may be connected to band with either spot welds or fillet welds that develop minimum required strength of strap.
4. Use 1¼" gage line dimension on attached angle leg for rivets and spot welds.
5. Band thickness shall not be less than:
   a. 3 standard thicknesses lighter than the thickness of the pipe for Corrugated Steel Pipe.
   b. 2 standard thicknesses lighter than the thickness of the pipe and in no case lighter than 0.060" for Corrugated Aluminum Pipe.
6. Dimensions, thicknesses and strengths shown are minimum.
7. For pipe arches use same width band as for round pipe of equal periphery.
8. Fillet welds of equivalent strenght may be substituted for spot welds or rivets.
9. Spot welds shall develop minimum required strength of strap.
10. Pipe with rerolled ends having at least two 2⅔" × ½" annular corrugations at each end with or without an upturned flange may be connected with any of the annular coupling bands shown for pipe of the same diameter and wall thickness and having 2⅔" × ½" corrugations.
11. In the case of H-12 huggerbands, two piece bands are required for diameters through 96" and three piece bands are required for diameters 102" through 120".
12. Two piece bands are required for pipes greater than 42" diameter.
13. The 2¼" × 2" × 0.109" thick galvanized die-formed angle connector may be used in lieu of the 2" × 2" × 3/16" angle connector for standard joints only on pipes through 72" diameter.

STATE OF CALIFORNIA
DEPARTMENT OF TRANSPORTATION

CORRUGATED METAL PIPE COUPLING DETAILS No. 5 STANDARD JOINT

NO SCALE

RSP D97E DATED JUNE 6, 2008 SUPERSEDES STANDARD PLAN D97E
DATED MAY 1, 2006 - PAGE 187 OF THE STANDARD PLANS BOOK DATED MAY 2006.

REVISED STANDARD PLAN RSP D97E

2006 REVISED STANDARD PLAN RSP D97E

4-2-08

DIST	COUNTY	ROUTE	POST MILES TOTAL PROJECT	SHEET NO.	TOTAL SHEETS
01	Hum	254	5.9	45	72

Raymond Don Tsztoo
REGISTERED CIVIL ENGINEER

June 6, 2008
PLANS APPROVAL DATE

REGISTERED PROFESSIONAL ENGINEER Raymond Don Tsztoo No. C37332 Exp. 6-30-08 CIVIL STATE OF CALIFORNIA

The State of California or its officers or agents shall not be responsible for the accuracy or completeness of electronic copies of this plan sheet.

To accompany plans dated 7-19-10

ANNULAR AND HELICAL PROFILE

COUPLING TYPE	PIPE CORRUGATION	PIPE SIZE	W OR A	PIPE WALL THICKNESS CSP	PIPE WALL THICKNESS CAP	BAND THICKNESS CSP	BAND THICKNESS CAP	BAR AND STRAP (CSP ONLY) STRAP THICKNESS	BOLTS Dia	BAR Dia	BAR YIELD STRENGTH	ANGLE DIMENSIONS CSP	ANGLE DIMENSIONS CAP	BOLTS (No. - Dia) CSP	BOLTS (No. - Dia) CAP	RIVETS ANGLE TO BAND CSP	RIVETS ANGLE TO BAND CAP	SPOT WELDS ANGLE TO BAND CSP
TWO PIECE INTEGRAL FLANGE	1½" × ¼"	6"-10"	7"	0.064"-0.079"	0.060"	0.064"	0.060"							2-⅜"	2-⅜"			
	2⅔" × ½"	12"-24"	12"		0.060"-0.105"		0.060"								3-½"			
UNIVERSAL	2⅔" × ½"	THROUGH 36"	12"	0.064"-0.138"	0.060"-0.135"	0.064"	0.060"	0.079"	½"	⅞"	32 ksi	2" × 2" × 3/16"	2" × 2" × 3/16"	3-½"	3-½"	3-⅜"	3-⅜"	5-½"
		42"-60"	16¼"	0.064"-0.168"	0.060"-0.164"	0.064"	0.060"	DOUBLE 0.079"	½"	⅞"	32 ksi	2" × 2" × ¼"	2" × 2" × ¼"	4-½"	4-½"	5-⅜"	5-⅜"	
ANNULAR	2⅔" × ½"	THROUGH 36"	12"	0.064"-0.138"	0.060"-0.135"	0.064"	0.060"					2" × 2" × 3/16"	2" × 2" × 3/16"	3-½"	3-½"	3-⅜"	3-⅜"	5-½"
		42"-60"	12"	0.064"-0.079"		0.064"						2" × 2" × 3/16"		3-½"		3-⅜"		5-½"
		42"-60"	12"	0.109"-0.168"	0.135"-0.164"	0.064"	0.075"					2" × 2" × ¼"	2" × 2" × ¼"	3-½"	3-½"	5-⅜"	5-⅜"	
		66"-72"	24"		0.164"		0.105"						2" × 2" × ¼"		5-½"		5-½"	
		66"-84"	24"	0.109"-0.168"		0.064"						2" × 2" × ¼"		5-½"		7-⅜"		
		42"-54"	12"		0.060"-0.105"		0.060"						2" × 2" × 3/16"		3-½"		3-⅜"	
	3" × 1"	48"-60"	14"	0.064"-0.079"		0.064"						2" × 2" × 3/16"		3-½"		3-⅜"		5-½"
		48"-60"	14"	0.109"		0.064"						2" × 2" × 3/16"		3-½"		5-⅜"		
		66"-120"	25"	0.064"-0.109"		0.064"						2" × 2" × 3/16"		5-½"		9-⅜"		
		42"-60"	14"		0.060"-0.105"		0.060"						2" × 2" × 3/16"		3-½"		5-⅜"	
		42"-60"	14"		0.135"		0.075"						2" × 2" × ¼"		3-½"		5-⅜"	
		66"-96"	25"		0.060"-0.135"		0.060"						2" × 2" × ¼"		5-½"		7-⅜"	
		96"-108"	25"		0.135"		0.075"						2" × 2" × ¼"		5-½"		7-⅜"	
HELICAL	2⅔" × ½"	THROUGH 36"	12"	0.064"-0.138"	0.060"-0.135"	0.064"	0.060"					2" × 2" × 3/16"	2" × 2" × 3/16"	3-½"	3-½"	3-⅜"	3-⅜"	5-½"
		42"-54"	12"		0.060"-0.105"		0.060"						2" × 2" × 3/16"		3-½"		3-⅜"	
		42"-60"	12"	0.064"-0.079"		0.064"						2" × 2" × 3/16"		3-½"		3-⅜"		5-½"
		42"-60"	12"	0.109"-0.168"	0.135"-0.164"	0.064"	0.075"					2" × 2" × ¼"	2" × 2" × ¼"	3-½"	3-½"	5-⅜"	5-⅜"	
		66'-84"	24"	0.109"-0.168"		0.064"						2" × 2" × ¼"		5-½"		7-⅜"		
		66"-72"	24"		0.164"		0.105"						2" × 2" × ¼"		5-½"		5-⅜"	
	3" × 1"	48"-60"	14"	0.064"-0.079"		0.064"						2" × 2" × 3/16"		3-½"		3-⅜"		5-½"
		48"-60"	14"	0.109"		0.064"						2" × 2" × 3/16"		3-½"		5-⅜"		
		66"-120"	25"	0.064"-0.109"		0.064"						2" × 2" × 3/16"		5-½"		9-⅜"		
		42"-60"	14"		0.060"-0.105"		0.060"						2" × 2" × 3/16"		3-½"		5-⅜"	
		42"-60"	14"		0.135"		0.075"						2" × 2" × ¼"		3-½"		5-⅜"	
		66"-96"	25"		0.060"-0.135"		0.060"						2" × 2" × ¼"		5-½"		7-⅜"	
		96"-108"	25"		0.135"		0.075"						2" × 2" × ¼"		5-½"		7-⅜"	
HUGGER	2⅔" × ½" REROLLED END	THROUGH 48"	10½"	0.109"		0.064"		0.079"	½"	⅞"	32 ksi							
		54"- 66"	10½"	0.109"		0.064"		DOUBLE 0.079"	½"	⅞"	32 ksi							
		THROUGH 54"	10½"	0.064"-0.079"		0.064"		0.079"	½"	⅞"	32 ksi							
		THROUGH 60"	10½"	0.138"		0.079"		DOUBLE 0.079"	½"	⅞"	32 ksi							
		66"-72"	10½"	0.138"		0.109"		DOUBLE 0.079"	½"	⅞"	32 ksi							
		THROUGH 72"	10½"	0.168"		0.109"		DOUBLE 0.109"	½"	⅞"	45 ksi							
	3" × 1" REROLLED END	48"-84"	10½"	0.109"		0.079"		DOUBLE 0.079"	½"	⅞"	32 ksi							
		48"-90"	10½"	0.064"-0.079"		0.064"		DOUBLE 0.079"	½"	⅞"	32 ksi							
		96"-102"	10½"	0.079"		0.079"		DOUBLE 0.079"	½"	⅞"	32 ksi							
		90"-120"	10½"	0.109"		0.109"		DOUBLE 0.109"	½"	⅞"	45 ksi							

SPIRAL RIB PROFILE

COUPLING TYPE	PIPE CORRUGATION	PIPE SIZE	W	PIPE WALL THICKNESS SSRP	PIPE WALL THICKNESS ASRP	BAND THICKNESS SSRP	BAND THICKNESS ASRP	BAR AND STRAP (SSRP ONLY) STRAP THICKNESS	BOLTS Dia	BAR Dia	BAR YIELD STRENGTH	ANGLE DIMENSIONS SSRP	ANGLE DIMENSIONS ASRP	BOLTS (No.- Dia) SSRP	BOLTS (No.- Dia) ASRP	RIVETS ANGLE TO BAND SSRP	RIVETS ANGLE TO BAND ASRP	SPOT WELDS ANGLE TO BAND SSRP
ANNULAR	2⅔" × ½" * REROLLED END	24"-36"	12"	0.064"-0.109"	0.060"-0.105"	0.064"	0.060"	0.079"	½"	⅞"	32 ksi	2" × 2" × 3/16"	2" × 2" × 3/16"	3-½"	3-½"	3-⅜"	3-⅜"	5-½"
		42"-60"	12"	0.064"-0.079"	0.075"-0.105"	0.064"	0.075"	0.079"	½"	⅞"	32 ksi	2" × 2" × 3/16"	2" × 2" × 3/16"	3-½"	3-½"	3-⅜"	3-⅜"	5-½"
		42"-60"	12"	0.109"		0.064"		0.079"	½"	⅞"	32 ksi	2" × 2" × ¼"		3-½"		5-⅜"		
		66"-84"	24"	0.109"		0.064"		0.079"	½"	⅞"	32 ksi	2" × 2" × ¼"		5-½"		7-⅜"		
HUGGER	2⅔" × ½" * REROLLED END	24"-54"	10½"	0.064"-0.079"		0.064"		0.079"	½"	⅞"	32 ksi							
		24"-48"	10½"	0.109"		0.064"		0.079"	½"	⅞"	32 ksi							
		54"-66"	10½"	0.109"		0.064"		Double 0.079"	½"	⅞"	32 ksi							

* See Note 13.

NOTES:

1. All ferrous metal coupling band connection hardware shall be galvanized or electro-plated in accordance with the Standard Specifications.
2. For helically corrugated coupling bands, the connection angles may be oriented parallel to the pipe axis, provided connecting holes are slotted lengthwise sufficiently to allow adjustment for the helix angle.
3. Tension strap may be connected to band with either spot welds or fillet welds that develop minimum required strength of strap.
4. Use 1¼" gage line dimension on attached angle leg for rivets and spot welds.
5. Band thickness shall not be less than:
   a. 3 standard thicknesses lighter than the thickness of the pipe for Corrugated Steel Pipe.
   b. 2 standard thicknesses lighter than the thickness of the pipe and in no case lighter than 0.060" for Corrugated Aluminum Pipe.
6. Dimensions, thicknesses and strengths shown are minimum.
7. For pipe arches use same width band as for round pipe of equal periphery.
8. Fillet welds of equivalent strength may be substituted for spot welds or rivets.
9. Spot welds shall develop minimum required strength of strap.
10. Pipe with rerolled ends having at least two 2⅔" × ½" annular corrugations at each end with or without an upturned flange may be connected with any of the annular coupling bands shown for pipe of the same diameter and wall thickness and having 2⅔" × ½" corrugations.
11. In the case of H-12 huggerbands, two piece bands are required for diameters through 96" and three piece bands are required for diameters 102" through 120".
12. Two piece bands are required for pipes greater than 42" diameter.
13. All profiles of Spiral Rib Pipe (¾" × ¾" ribs at 7½" pitch and ¾" × 1" ribs at 11½" pitch in both steel and aluminum and ¾" × 1" ribs at 8½" pitch in steel only) shall be manufactured with rerolled ends. Corrugation profile of the rerolled ends shall be 2⅔" × ½" annual corrugations with a minimum of two full corrugations at each end.

STATE OF CALIFORNIA
DEPARTMENT OF TRANSPORTATION

CORRUGATED METAL PIPE COUPLING DETAILS No. 6 POSITIVE JOINT

NO SCALE

RSP D97F DATED JUNE 6, 2008 SUPERSEDES STANDARD PLAN D97F
DATED MAY 1, 2006 - PAGE 188 OF THE STANDARD PLANS BOOK DATED MAY 2006.

REVISED STANDARD PLAN RSP D97F

2006 REVISED STANDARD PLAN RSP D97F

4-2-08

DIST	COUNTY	ROUTE	POST MILES TOTAL PROJECT	SHEET NO.	TOTAL SHEETS
01	Hum	254	5.9	46	72

LICENSED LANDSCAPE ARCHITECT

April 3, 2009
PLANS APPROVAL DATE

The State of California or its officers or agents shall not be responsible for the accuracy or completeness of electronic copies of this plan sheet.

LICENSED LANDSCAPE ARCHITECT — Gregory A. Balzer — 02-28-11 Renewal Date — 03-04-09 Date — STATE OF CALIFORNIA

To accompany plans dated 7-19-10

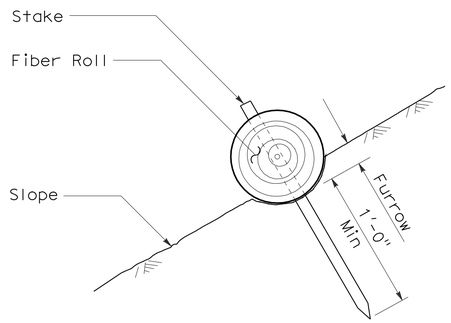

SECTION

FIBER ROLL (TYPE 1)

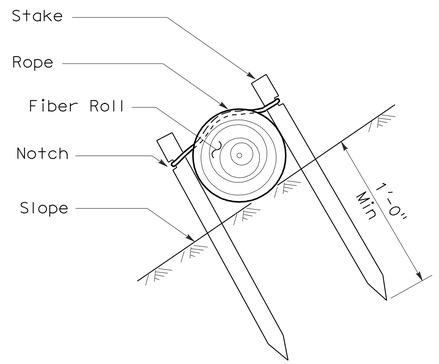

SECTION

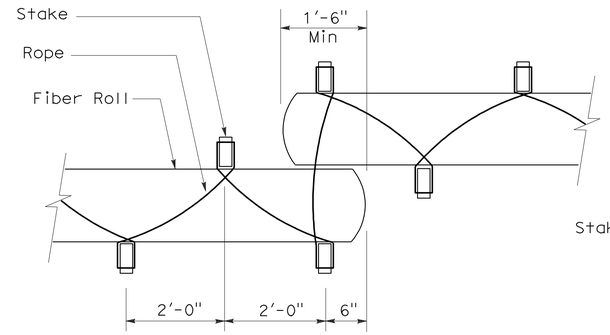

PLAN

FIBER ROLL (TYPE 2)

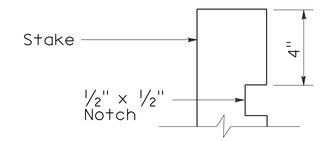

ELEVATION

STAKE NOTCH DETAIL

NOTES:

1. Fiber roll spacing varies depending upon slope inclination.
2. Installations shown in the perspectives are for slope inclination of 10:1 and steeper.

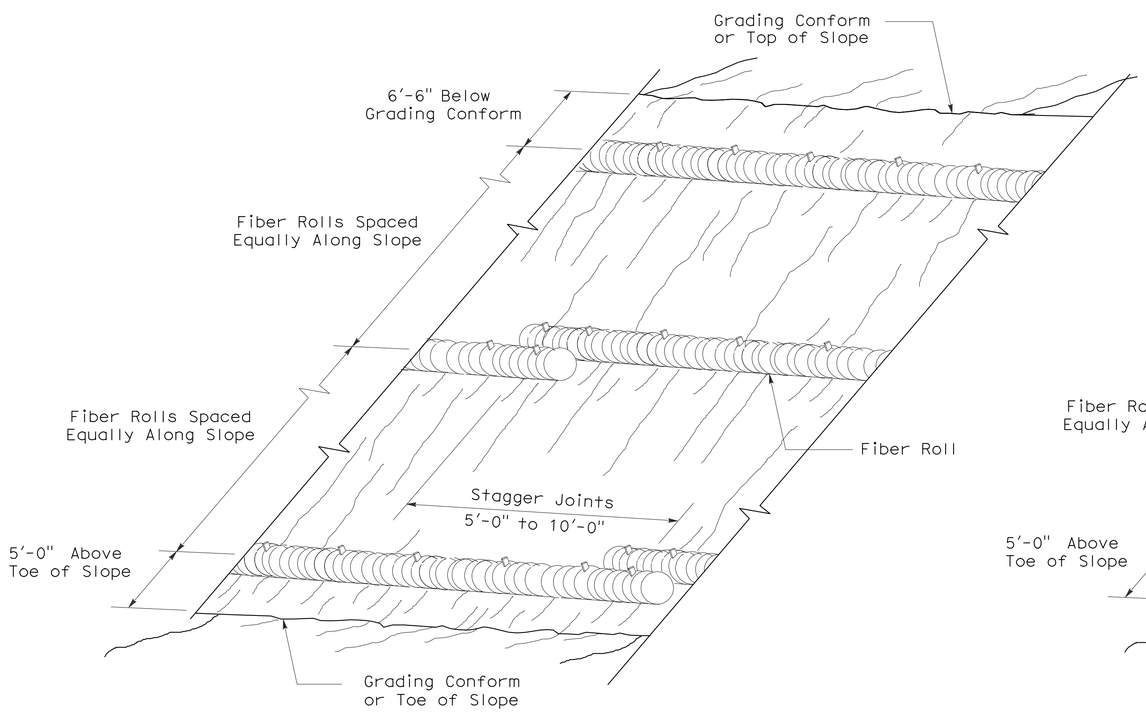

PERSPECTIVE

FIBER ROLL (TYPE 1)

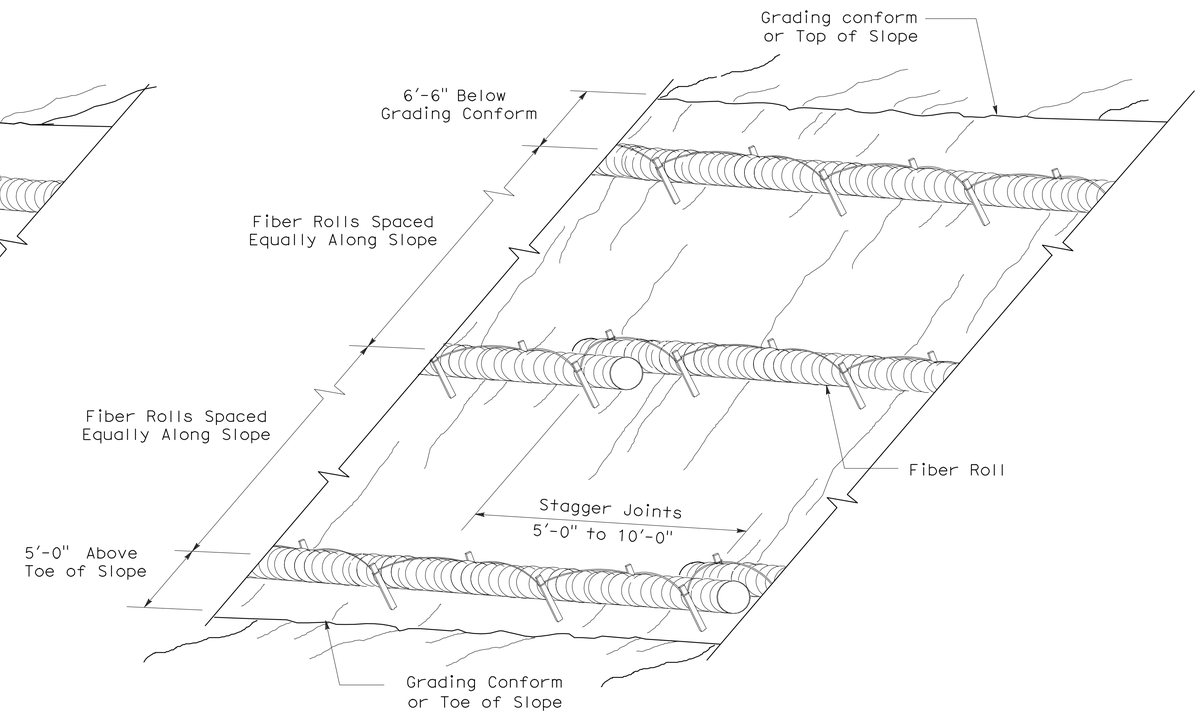

PERSPECTIVE

FIBER ROLL (TYPE 2)

STATE OF CALIFORNIA
DEPARTMENT OF TRANSPORTATION

EROSION CONTROL DETAILS (FIBER ROLL)

NO SCALE

RNSP H51 DATED APRIL 3, 2009 SUPERSEDES NSP H51 DATED DECEMBER 1, 2006 THAT SUPPLEMENTS THE STANDARD PLANS BOOK DATED MAY 2006.

REVISED NEW STANDARD PLAN RNSP H51

2006 REVISED NEW STANDARD PLAN RNSP H51

3-4-09

DIST	COUNTY	ROUTE	POST MILES TOTAL PROJECT	SHEET NO.	TOTAL SHEETS
01	Hum	254	5.9	47	72

Randell D. Hiatt
REGISTERED CIVIL ENGINEER

June 6, 2008
PLANS APPROVAL DATE

REGISTERED PROFESSIONAL ENGINEER
Randell D. Hiatt
No. C50200
Exp. 6-30-09
CIVIL
STATE OF CALIFORNIA

The State of California or its officers or agents shall not be responsible for the accuracy or completeness of electronic copies of this plan sheet.

To accompany plans dated 7-19-10

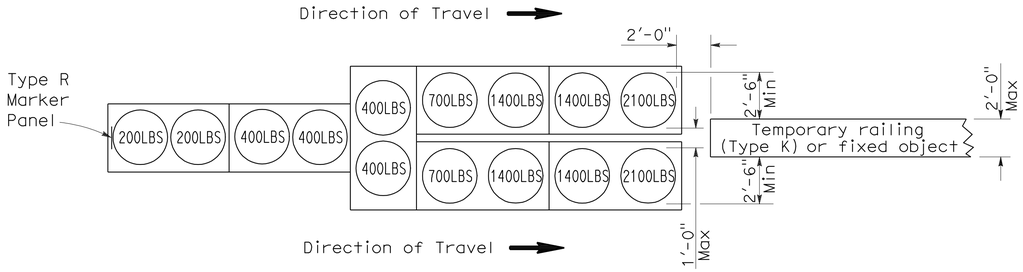

ARRAY 'TU14'

Approach speed 45 mph or more

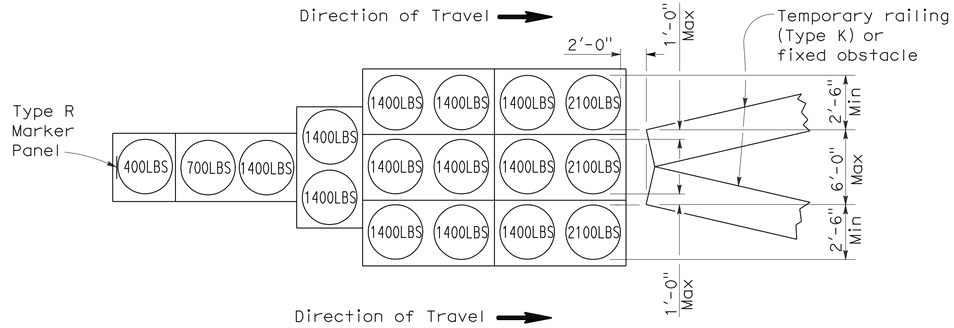

ARRAY 'TU17'

Approach speed less than 45 mph

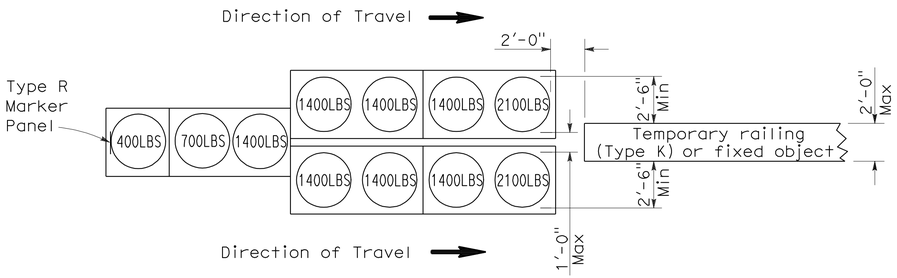

ARRAY 'TU11'

Approach speed less than 45 mph

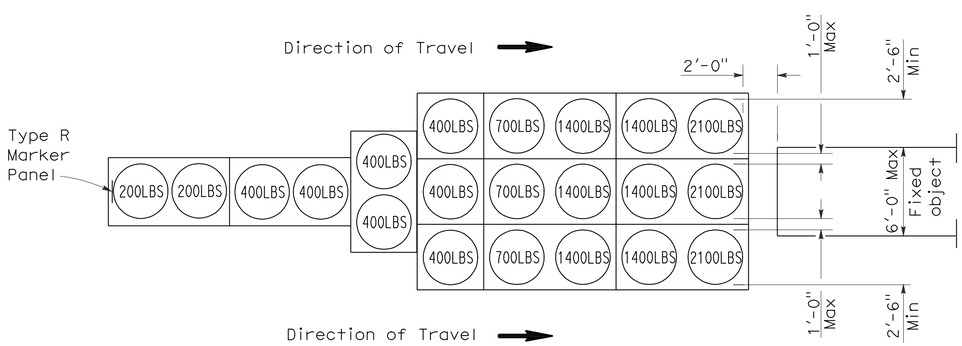

ARRAY 'TU21'

Approach speed 45 mph or more

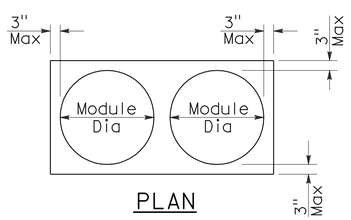

PLAN

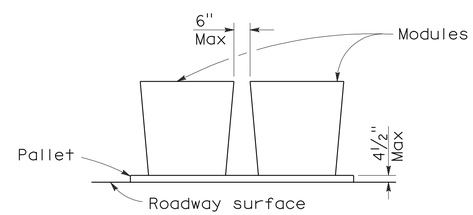

ELEVATION

CRASH CUSHION PALLET DETAIL

See Note 7

NOTES:

1. (XXX) Indicates sand filled module location and weight of sand in pounds for each module. Module spacing is based on the greater diameter of the module.
2. All sand weights are nominal.
3. Temporary crash cushion arrays shall not encroach on the traveled way.
4. Place the top of Type R marker panel 1" below the module lid.
5. Refer to Standard Plan A73B for marker details.
6. Approach speeds indicated conform to NCHRP 350 Report criteria.
7. Use of pallets is optional.

STATE OF CALIFORNIA
DEPARTMENT OF TRANSPORTATION

TEMPORARY CRASH CUSHION, SAND FILLED (UNIDIRECTIONAL)

NO SCALE

RSP T1A DATED JUNE 6, 2008 SUPERSEDES STANDARD PLAN T1A
DATED MAY 1, 2006 - PAGE 211 OF THE STANDARD PLANS BOOK DATED MAY 2006.

REVISED STANDARD PLAN RSP T1A

2006 REVISED STANDARD PLAN RSP T1A

DIST	COUNTY	ROUTE	POST MILES TOTAL PROJECT	SHEET NO.	TOTAL SHEETS
01	Hum	254	5.9	48	72

Randell D. Hiatt
REGISTERED CIVIL ENGINEER

June 6, 2008
PLANS APPROVAL DATE

REGISTERED PROFESSIONAL ENGINEER
Randell D. Hiatt
No. C50200
Exp. 6-30-09
CIVIL
STATE OF CALIFORNIA

The State of California or its officers or agents shall not be responsible for the accuracy or completeness of electronic copies of this plan sheet.

To accompany plans dated 7-19-10

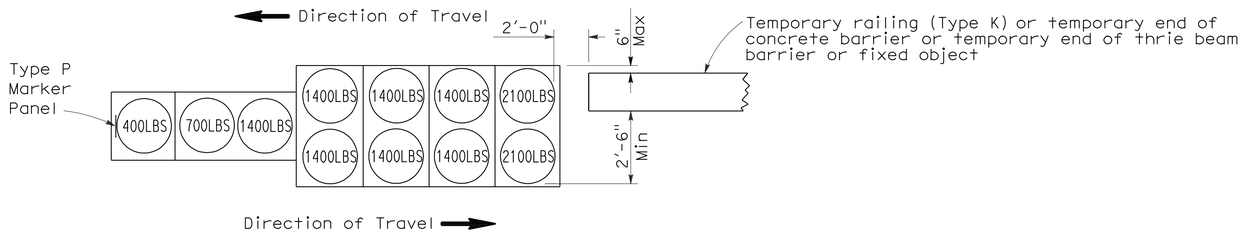

ARRAY 'TB11'

Approach speed less than 45 mph

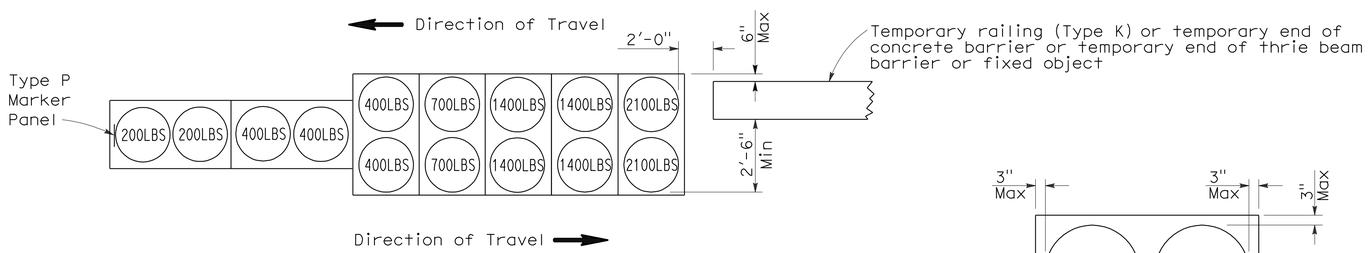

ARRAY 'TB14'

Approach speed 45 mph or more

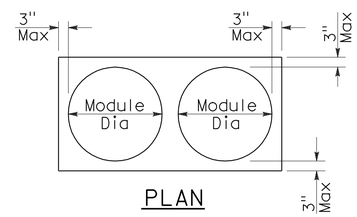

PLAN

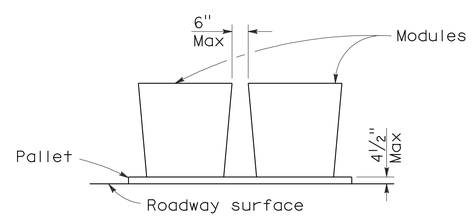

ELEVATION

CRASH CUSHION PALLET DETAIL

See Note 7

NOTES:

1. (XXX) Indicates sand filled module location and weight of sand in pounds for each module. Module spacing is based on the greater diameter of the module.
2. All sand weights are nominal.
3. Temporary crash cushion arrays shall not encroach on the traveled way.
4. Place the Type P marker panel so that the bottom of the panel rests upon the pallet.
5. Refer to Standard Plan A73B for marker details.
6. Approach speeds indicated conform to NCHRP 350 Report criteria.
7. Use of pallets is optional.

STATE OF CALIFORNIA
DEPARTMENT OF TRANSPORTATION

TEMPORARY CRASH CUSHION, SAND FILLED (BIDIRECTIONAL)

NO SCALE

RSP T1B DATED JUNE 6, 2008 SUPERSEDES STANDARD PLAN T1B
DATED MAY 1, 2006 - PAGE 212 OF THE STANDARD PLANS BOOK DATED MAY 2006.

REVISED STANDARD PLAN RSP T1B

2006 REVISED STANDARD PLAN RSP T1B

5-15-08

DIST	COUNTY	ROUTE	POST MILES TOTAL PROJECT	SHEET NO.	TOTAL SHEETS
01	Hum	254	5.9	49	72

Randell D. Hiatt
REGISTERED CIVIL ENGINEER

June 6, 2008
PLANS APPROVAL DATE

REGISTERED PROFESSIONAL ENGINEER
Randell D. Hiatt
No. C50200
Exp. 6-30-09
CIVIL
STATE OF CALIFORNIA

The State of California or its officers or agents shall not be responsible for the accuracy or completeness of electronic copies of this plan sheet.

To accompany plans dated 7-19-10

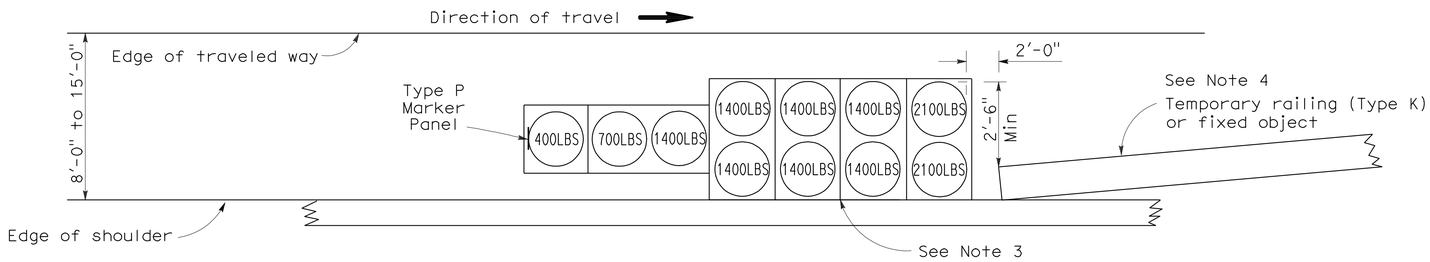

ARRAY 'TS11'

Approach speed less than 45 mph
See Note 9

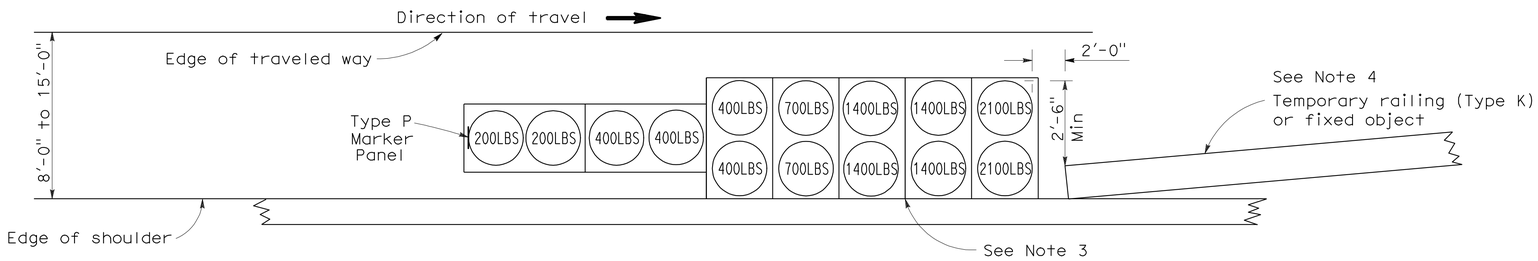

ARRAY 'TS14'

Approach speed 45 mph or more
See Note 9

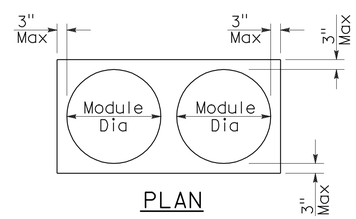

PLAN

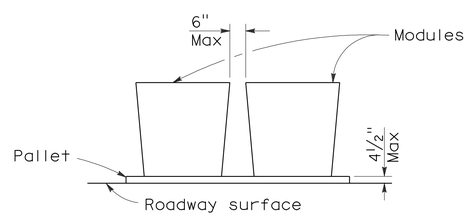

ELEVATION

CRASH CUSHION PALLET DETAIL

See Note 11

NOTES:

1. (XXX) Indicates sand filled module location and weight of sand in pounds for each module. Module spacing is based on the greater diameter of the module.
2. All sand weights are nominal.
3. The temporary crash cushion arrays shown on this plan shall be used only in locations where there will be traffic on one side of the temporary crash cushion array.
4. If the fixed object or approach end of the temporary railing is less than 15'-0" from the edge of traveled way, a temporary crash cushion is required in a construction or work zone.
5. Temporary crash cushion arrays shall not encroach on the traveled way.
6. Arrays for median shoulders shall conform to details shown on this plan for outside shoulders.
7. Place the Type P marker panel so that the bottom of the panel rests upon the pallet and faces traffic.
8. Refer to Standard Plan A73B for marker details.
9. For shoulder widths less than 8'-0", appropriate approved crash cushion protection, other than sand filled modules, shall be provided at fixed objects and at approach ends of temporary railing. The specific type of crash cushion shall be as shown on the project plans or as specified in the Special Provisions, or if not shown on the project plans or specified in the Special Provisions, shall be as approved by the Engineer.
10. Approach speeds indicated conform to NCHRP 350 Report criteria.
11. Use of pallets is optional.

STATE OF CALIFORNIA
DEPARTMENT OF TRANSPORTATION

TEMPORARY CRASH CUSHION, SAND FILLED (SHOULDER INSTALLATIONS)

NO SCALE

RSP T2 DATED JUNE 6, 2008 SUPERSEDES STANDARD PLAN T2
DATED MAY 1, 2006 - PAGE 213 OF THE STANDARD PLANS BOOK DATED MAY 2006.

REVISED STANDARD PLAN RSP T2

2006 REVISED STANDARD PLAN RSP T2

5-15-08

DIST	COUNTY	ROUTE	POST MILES TOTAL PROJECT	SHEET NO.	TOTAL SHEETS
01	Hum	254	5.9	50	72

Robert B Schott
LICENSED LANDSCAPE ARCHITECT

April 3, 2009
PLANS APPROVAL DATE

LICENSED LANDSCAPE ARCHITECT — Robert B. Schott — Signature — 11-30-10 Renewal Date — 2-25-09 Date — STATE OF CALIFORNIA

The State of California or its officers or agents shall not be responsible for the accuracy or completeness of electronic copies of this plan sheet.

To accompany plans dated 7-19-10

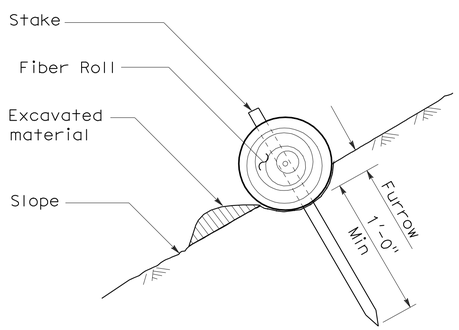

SECTION

TEMPORARY FIBER ROLL (TYPE 1)

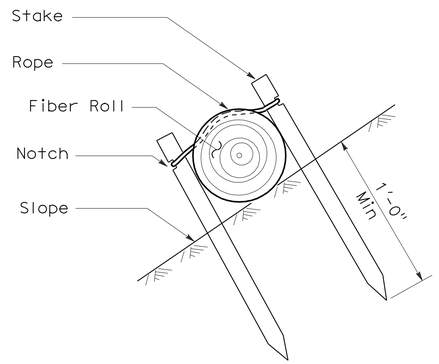

SECTION

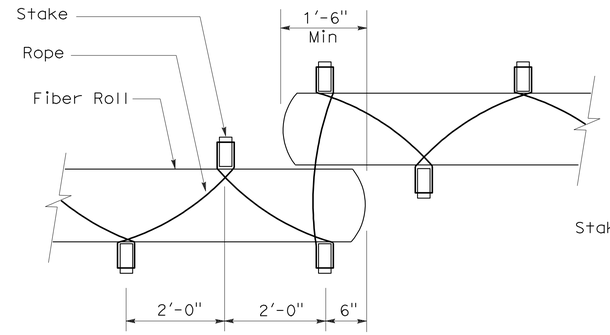

PLAN

TEMPORARY FIBER ROLL (TYPE 2)

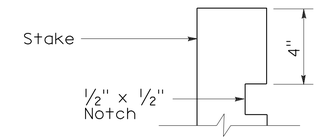

ELEVATION

STAKE NOTCH DETAIL

NOTES:

1. Temporary fiber roll spacing varies depending upon slope inclination.
2. Installations shown in the perspectives are for slope inclination of 10:1 and steeper.

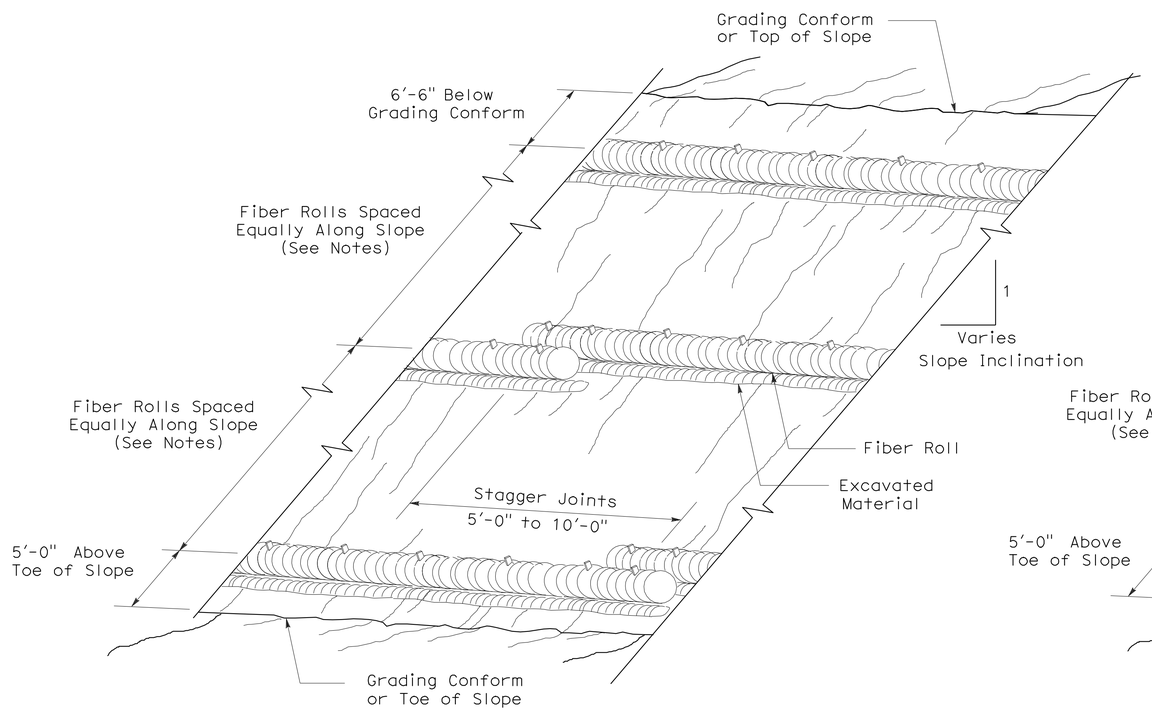

PERSPECTIVE

TEMPORARY FIBER ROLL (TYPE 1)

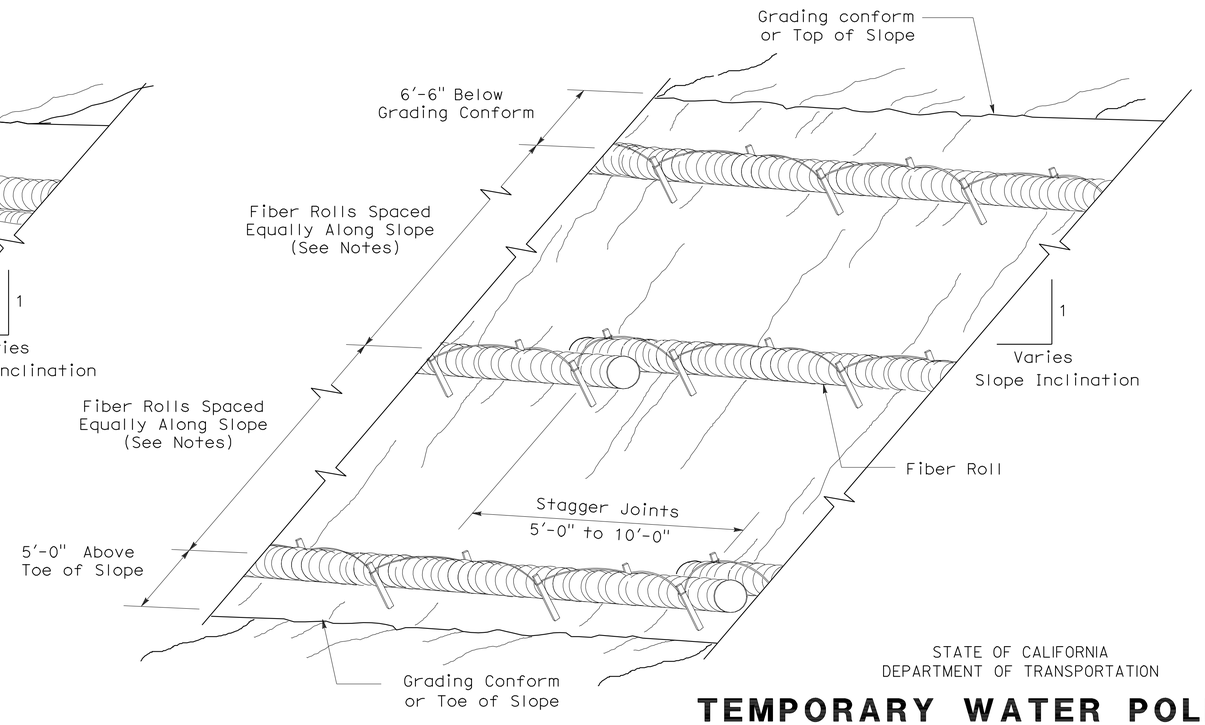

PERSPECTIVE

TEMPORARY FIBER ROLL (TYPE 2)

STATE OF CALIFORNIA
DEPARTMENT OF TRANSPORTATION

TEMPORARY WATER POLLUTION CONTROL DETAILS (TEMPORARY FIBER ROLL)

NO SCALE

RSP T56 DATED APRIL 3, 2009 SUPERSEDES STANDARD PLAN T56
DATED MAY 1, 2006 - PAGE 232 OF THE STANDARD PLANS BOOK DATED MAY 2006.

REVISED STANDARD PLAN RSP T56

2006 REVISED STANDARD PLAN RSP T56

DIST	COUNTY	ROUTE	POST MILES TOTAL PROJECT	SHEET NO.	TOTAL SHEETS
01	Hum	254	5.9	51	72

LICENSED LANDSCAPE ARCHITECT

August 15, 2008
PLANS Approval DATE

The State of California or its officers or agents shall not be responsible for the accuracy or completeness of electronic copies of this plan sheet.

LICENSED LANDSCAPE ARCHITECT Robert B. Schott 3895 Signature 11-04-08 Renewal Date 08-11-08 Date STATE OF CALIFORNIA

To accompany plans dated 7-19-10

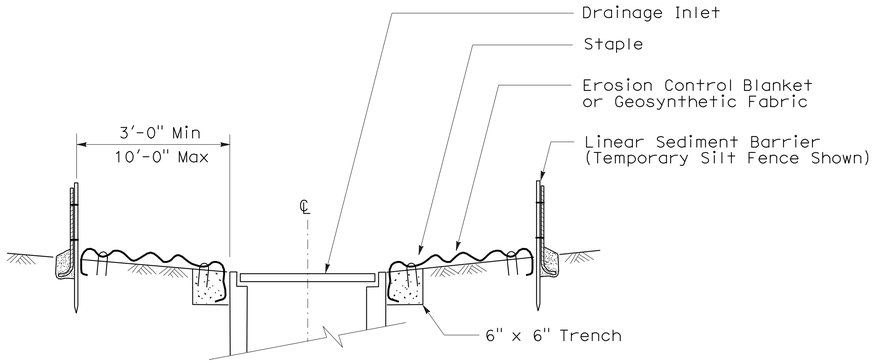

SECTION A-A

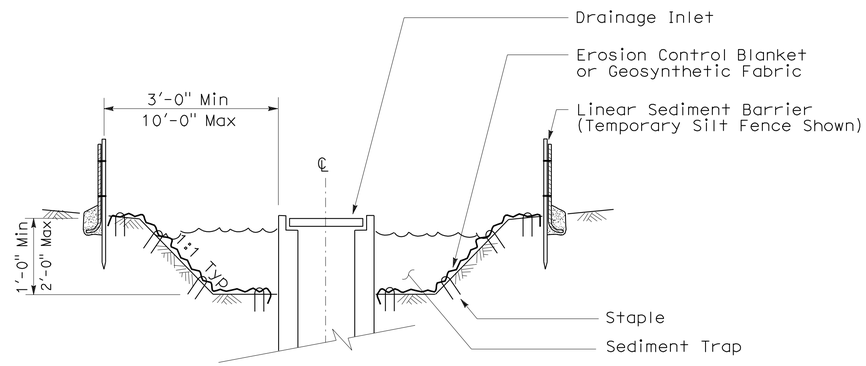

SECTION B-B

NOTES:

1. See Standard Plan T51 for Temporary Silt Fence.
2. Dimensions may vary to fit field conditions.

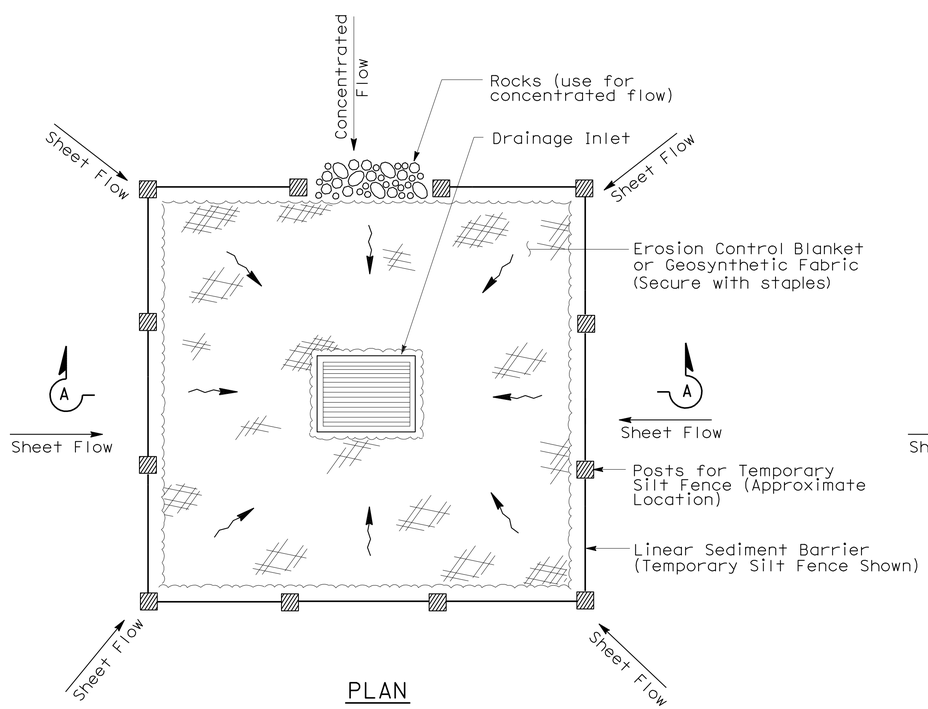

PLAN

TEMPORARY DRAINAGE INLET PROTECTION (TYPE 1)

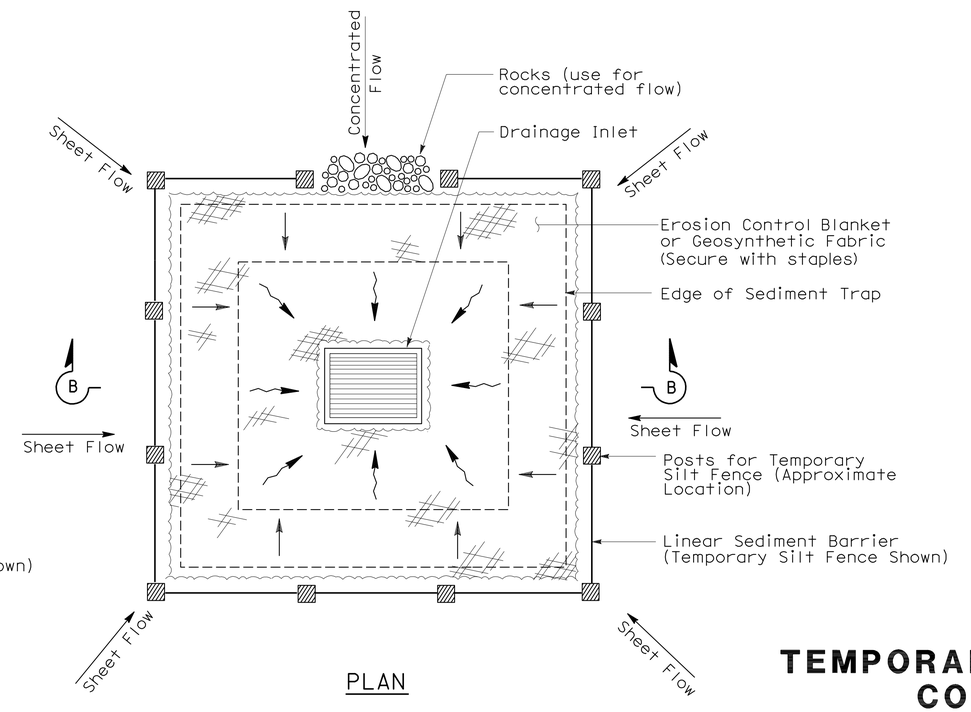

PLAN

TEMPORARY DRAINAGE INLET PROTECTION (TYPE 2) (EXCAVATED SEDIMENT TRAP)

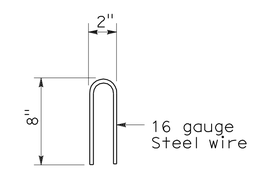

STAPLE DETAIL

STATE OF CALIFORNIA
DEPARTMENT OF TRANSPORTATION

TEMPORARY WATER POLLUTION CONTROL DETAILS (TEMPORARY DRAINAGE INLET PROTECTION)

NO SCALE

NSP T61 DATED AUGUST 15, 2008 SUPPLEMENTS THE STANDARD PLANS BOOK DATED MAY 2006.

NEW STANDARD PLAN NSP T61

2006 NEW STANDARD PLAN NSP T61

7-11-08

DIST	COUNTY	ROUTE	POST MILES TOTAL PROJECT	SHEET NO.	TOTAL SHEETS
01	Hum	254	5.9	52	72

LICENSED LANDSCAPE ARCHITECT

August 15, 2008
PLANS APPROVAL DATE

LICENSED LANDSCAPE ARCHITECT Robert B. Schott 3625 Signature 11-04-08 Renewal Date 08-11-08 Date STATE OF CALIFORNIA

The State of California or its officers or agents shall not be responsible for the accuracy or completeness of electronic copies of this plan sheet.

To accompany plans dated 7-19-10

2006 NEW STANDARD PLAN NSP T62

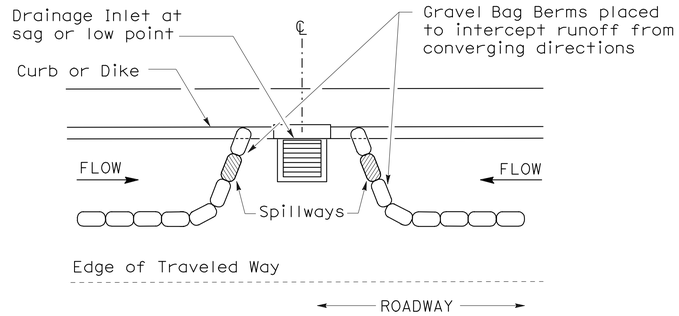

PLAN

CONFIGURATION FOR SAG POINT INLET (GRAVEL BAG BERM)

GRAVEL BAG BERM (TYPE 3A) SPACING TABLE

SLOPE OF ROADWAY (PERCENT)	1 to 3.9	4 to 5.9	6 to 7.9	8 to 10	10+
INTERVAL BETWEEN BERM	100′	75′	50′	25′	12′

For slope of less than 1%, install barriers only if erosion/sediment is prevalent

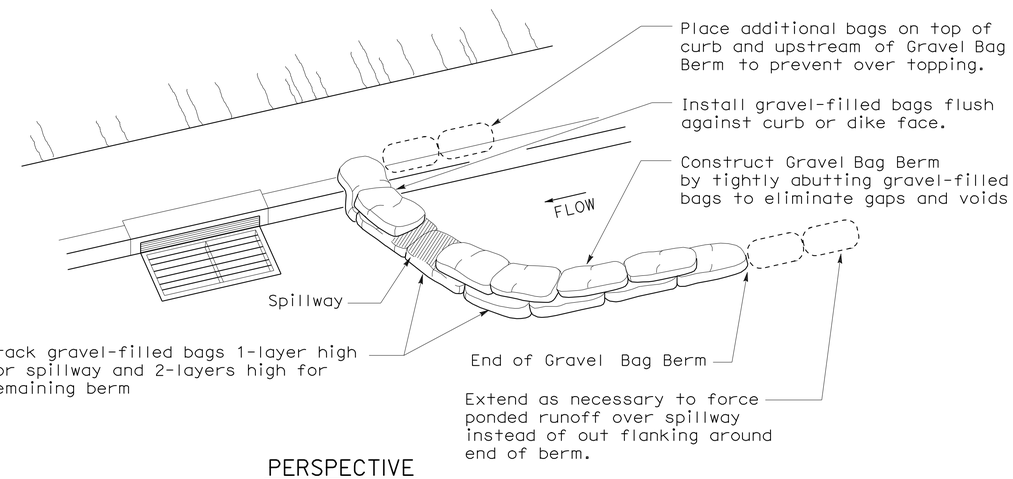

PERSPECTIVE

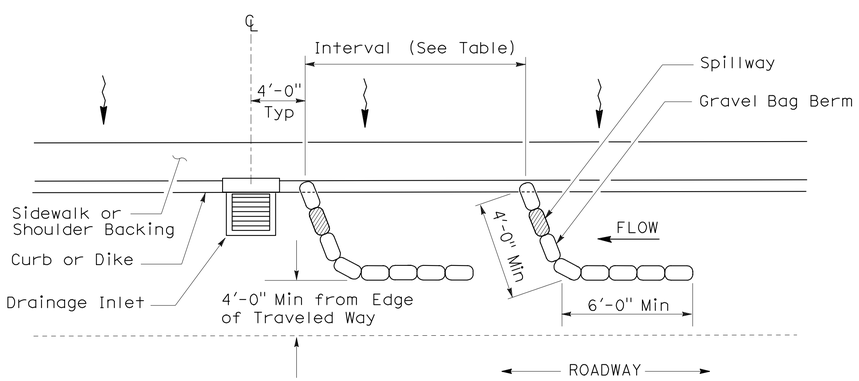

PLAN

TEMPORARY DRAINAGE INLET PROTECTION (TYPE 3A) (GRAVEL BAG BERM)

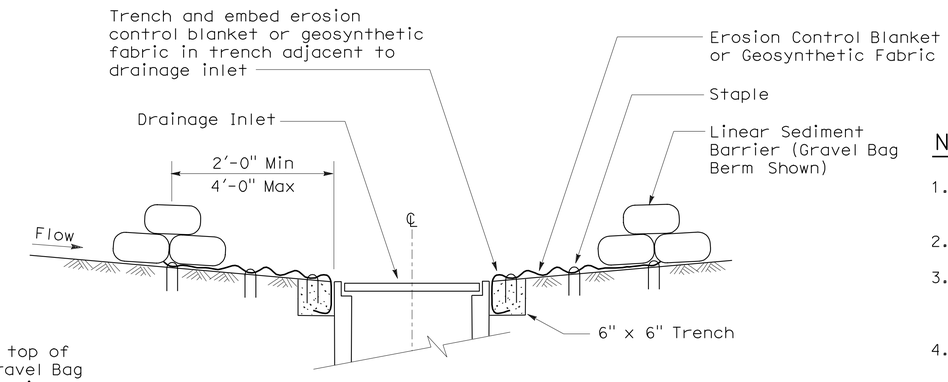

SECTION A-A

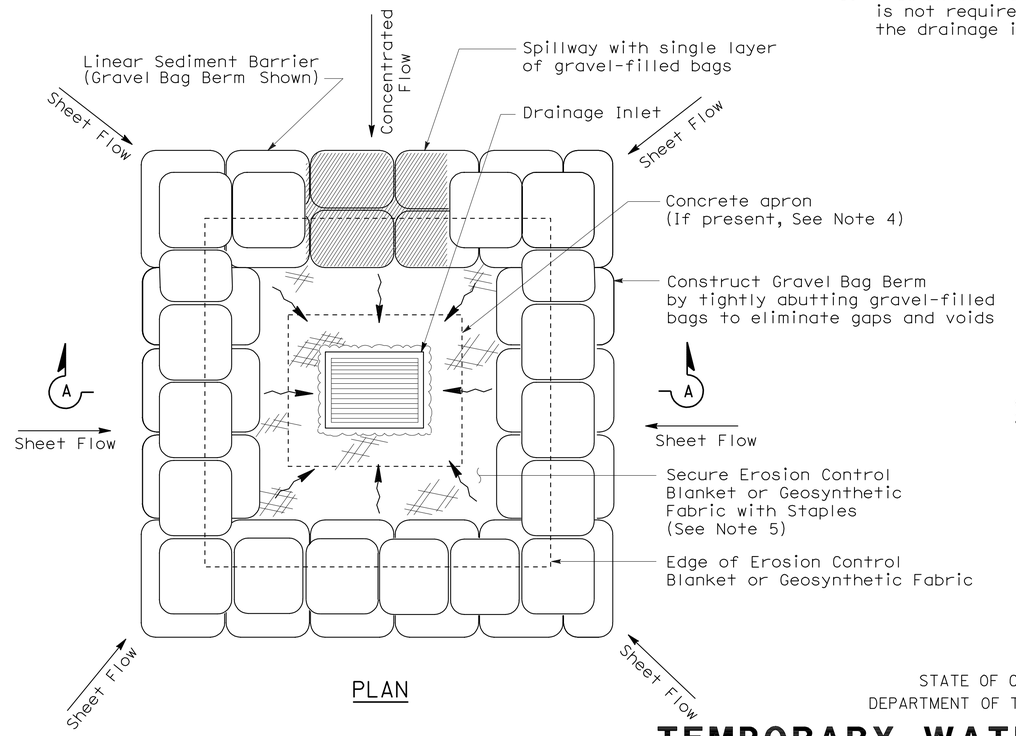

PLAN

TEMPORARY DRAINAGE INLET PROTECTION (TYPE 3B)

NOTES:

1. Place safety cones adjacent to drainage inlet protection.
2. Dimensions may vary to fit field conditions.
3. Install a minimum of 3 gravel bag berms upstream of each drainage inlet to be protected.
4. Position erosion control blanket or geosynthetic fabric at edge of concrete apron and secure in trench.
5. Erosion control blanket or geosynthetic fabric is not required if the area adjacent to the drainage inlet is vegetated or paved.

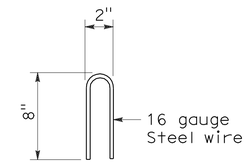

STAPLE DETAIL

STATE OF CALIFORNIA
DEPARTMENT OF TRANSPORTATION

TEMPORARY WATER POLLUTION CONTROL DETAILS (TEMPORARY DRAINAGE INLET PROTECTION)

NO SCALE

NSP T62 DATED AUGUST 15, 2008 SUPPLEMENTS THE STANDARD PLANS BOOK DATED MAY 2006.

NEW STANDARD PLAN NSP T62

7-11-08

DIST	COUNTY	ROUTE	POST MILES TOTAL PROJECT	SHEET NO.	TOTAL SHEETS
01	Hum	254	5.9	53	72

LICENSED LANDSCAPE ARCHITECT

August 15, 2008
PLANS APPROVAL DATE

The State of California or its officers or agents shall not be responsible for the accuracy or completeness of electronic copies of this plan sheet.

LICENSED LANDSCAPE ARCHITECT — Robert B. Schott — Signature — 11-04-08 Renewal Date — 08-11-08 Date — STATE OF CALIFORNIA

To accompany plans dated 7-19-10

FLEXIBLE SEDIMENT BARRIER SPACING TABLE

SLOPE OF ROADWAY (PERCENT)	0 to 0.9	1 to 1.9	2 to 2.9	3 to 4	5+
INTERVAL BETWEEN BARRIERS	50′	35′	30′	25′	20′
ANGLE FROM FACE OF CURB	70°	70°	70°	45°	45°
SUGGESTED BARRIER LENGTH	6′	6′	6′	6′	6′

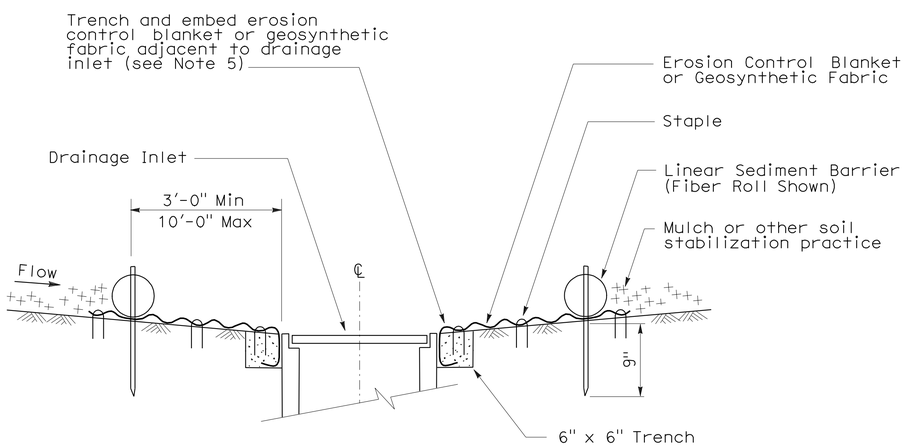

SECTION A-A

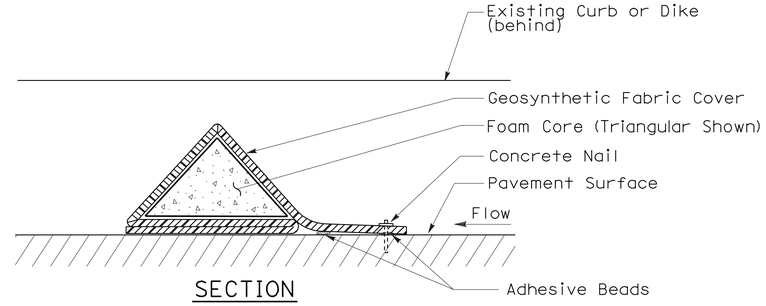

SECTION

FLEXIBLE SEDIMENT BARRIER DETAIL (FOAM BARRIER SHOWN)

NOTES:

1. See Standard Plan T51 for Temporary Silt Fence.
2. Dimensions may vary to fit field conditions.
3. Install a minimum of 3 flexible sediment barriers upstream of each drainage inlet to be protected.
4. Position erosion control blanket or geosynthetic fabric at edge of concrete apron and secure in trench.
5. Erosion control blanket or geosynthetic fabric is not required if the area adjacent to the drainage inlet is vegetated.

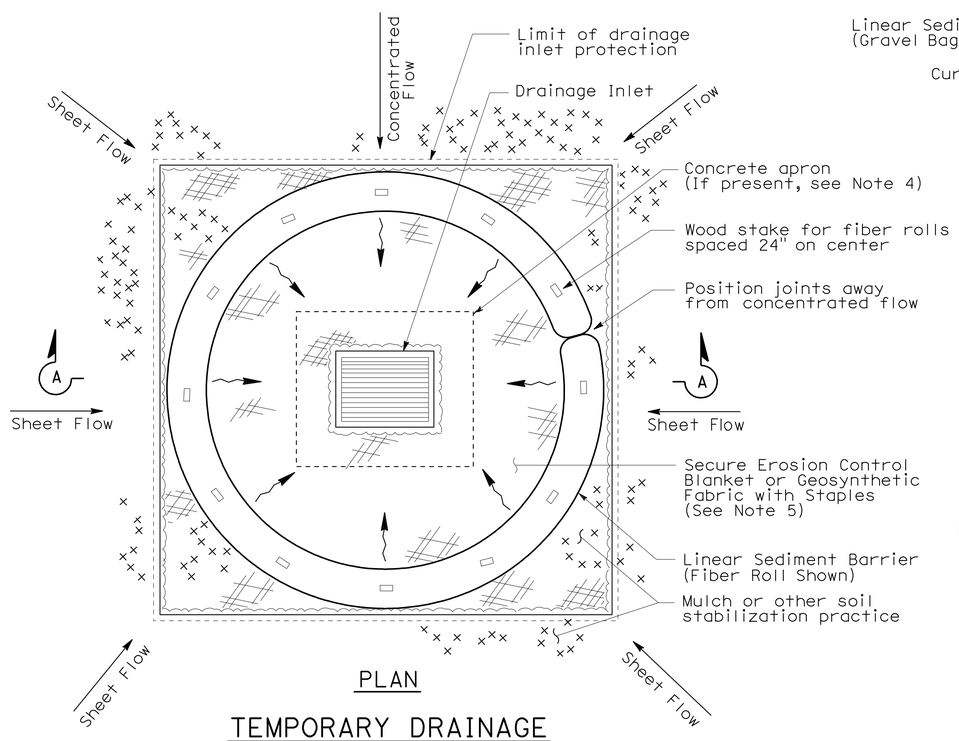

PLAN

TEMPORARY DRAINAGE INLET PROTECTION (TYPE 4A)

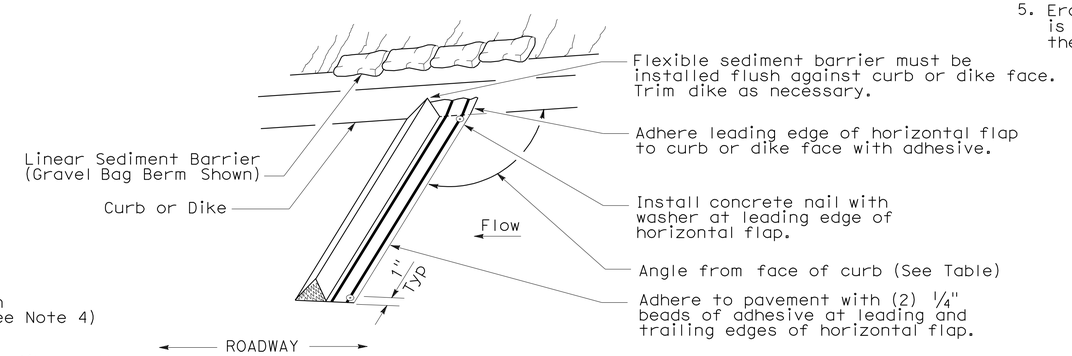

PERSPECTIVE

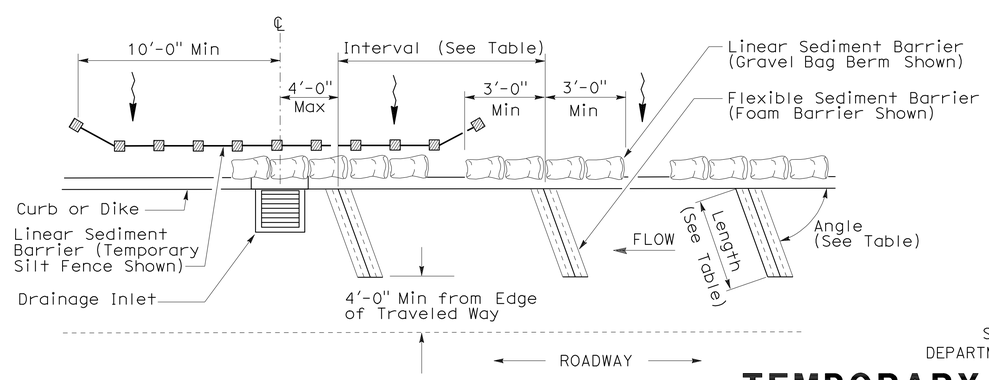

PLAN

TEMPORARY DRAINAGE INLET PROTECTION (TYPE 4B) FLEXIBLE SEDIMENT BARRIER

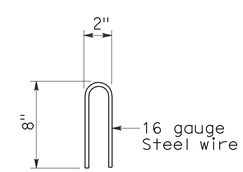

STAPLE DETAIL

STATE OF CALIFORNIA
DEPARTMENT OF TRANSPORTATION

TEMPORARY WATER POLLUTION CONTROL DETAILS (TEMPORARY DRAINAGE INLET PROTECTION)

NO SCALE

NSP T63 DATED AUGUST 15, 2008 SUPPLEMENTS THE STANDARD PLANS BOOK DATED MAY 2006.

NEW STANDARD PLAN NSP T63

2006 NEW STANDARD PLAN NSP T63

7-11-08

DIST	COUNTY	ROUTE	POST MILES TOTAL PROJECT	SHEET NO.	TOTAL SHEETS
01	Hum	254	5.9	54	72

LICENSED LANDSCAPE ARCHITECT

August 15, 2008
PLANS APPROVAL DATE

The State of California or its officers or agents shall not be responsible for the accuracy or completeness of electronic copies of this plan sheet.

LICENSED LANDSCAPE ARCHITECT
Robert B. Schott 3625
Signature
11-04-08
Renewal Date
08-11-08
Date
STATE OF CALIFORNIA

To accompany plans dated 7-19-10

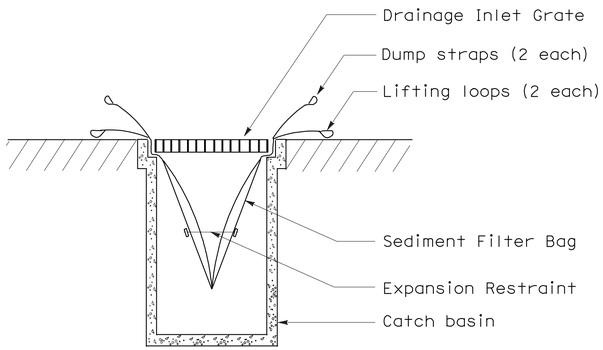

SECTION B-B

SEDIMENT FILTER BAG DETAIL

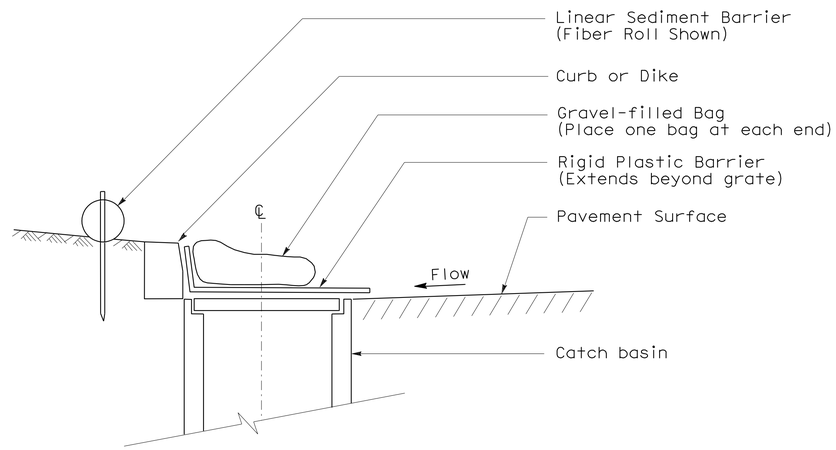

SECTION

TEMPORARY DRAINAGE INLET PROTECTION (TYPE 6A) (CATCH BASIN WITH GRATE)

NOTES:

1. See Standard Plan T51 for Temporary Silt Fence.
2. Dimensions may vary to fit field conditions.

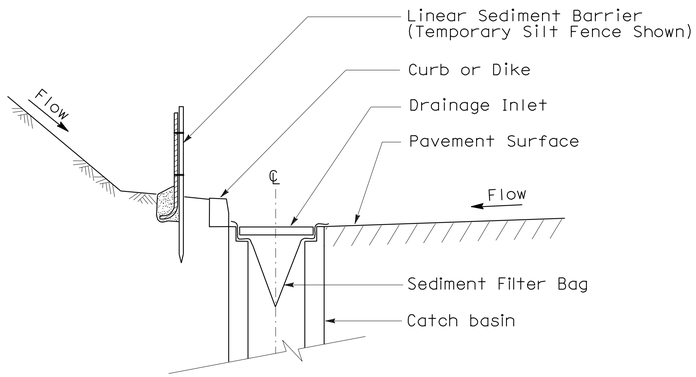

SECTION A-A

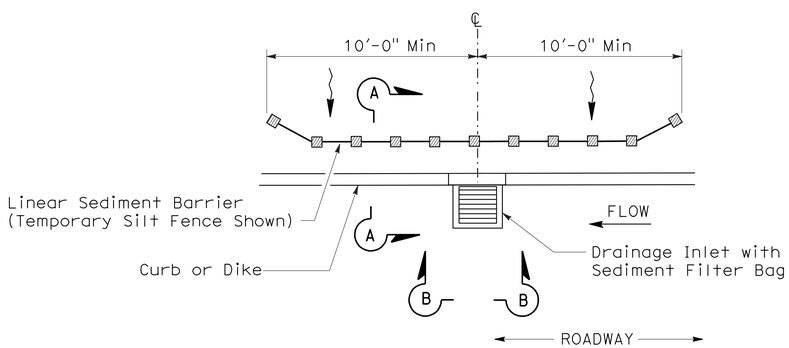

PLAN

TEMPORARY DRAINAGE INLET PROTECTION (TYPE 5) (SEDIMENT FILTER BAG)

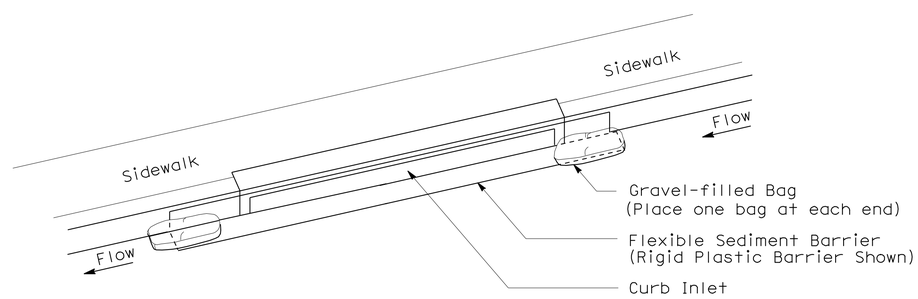

PERSPECTIVE

TEMPORARY DRAINAGE INLET PROTECTION (TYPE 6B) (CURB INLET WITHOUT GRATE)

STATE OF CALIFORNIA
DEPARTMENT OF TRANSPORTATION

TEMPORARY WATER POLLUTION CONTROL DETAILS (TEMPORARY DRAINAGE INLET PROTECTION)

NO SCALE

NSP T64 DATED AUGUST 15, 2008 SUPPLEMENTS THE STANDARD PLANS BOOK DATED MAY 2006.

NEW STANDARD PLAN NSP T64

2006 NEW STANDARD PLAN NSP T64

7-11-08

DIST	COUNTY	ROUTE	POST MILES TOTAL PROJECT	SHEET NO.	TOTAL SHEETS
01	Hum	254	5.9	55	72

LICENSED LANDSCAPE ARCHITECT

April 3, 2009
PLANS APPROVAL DATE

The State of California or its officers or agents shall not be responsible for the accuracy or completeness of electronic copies of this plan sheet.

LICENSED LANDSCAPE ARCHITECT — Robert B. Schott 3025 — Signature — 11-30-10 Renewal Date — 2-25-09 Date — STATE OF CALIFORNIA

To accompany plans dated 7-19-10

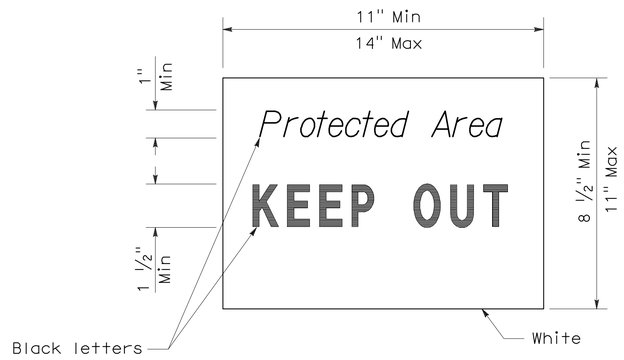

SIGN DETAIL

NOTE:

1. Temporary silt fence and temporary straw bale barrier shown for reference purposes only.

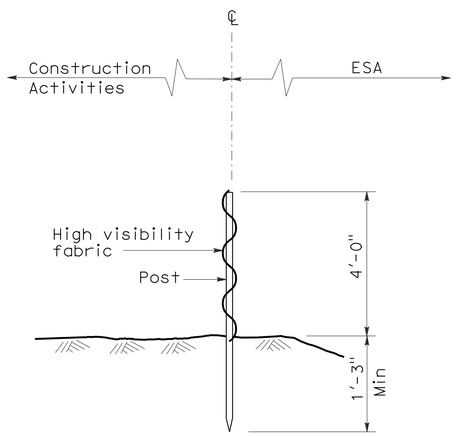

SECTION
TEMPORARY FENCE (TYPE ESA)

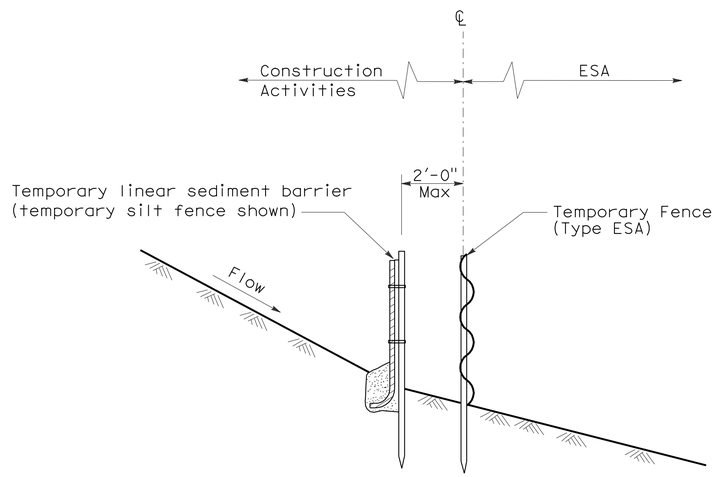

SECTION
PLACEMENT DETAIL
FOR TEMPORARY LINEAR SEDIMENT BARRIER
USED WITH TEMPORARY
FENCE (TYPE ESA)
(See Note 1)

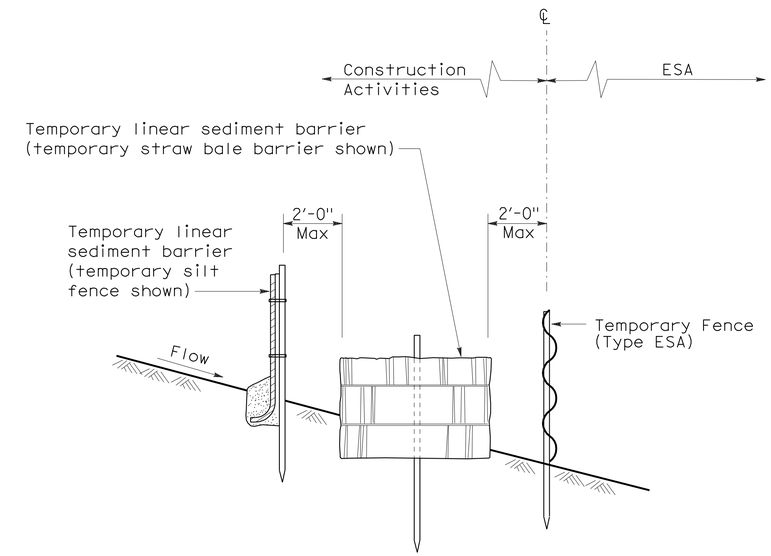

SECTION
PLACEMENT DETAIL
FOR TEMPORARY SILT FENCE
AND TEMPORARY STRAW BALE BARRIER
USED WITH TEMPORARY FENCE (TYPE ESA)
(See Note 1)

STATE OF CALIFORNIA
DEPARTMENT OF TRANSPORTATION

TEMPORARY WATER POLLUTION CONTROL DETAILS [TEMPORARY FENCE (TYPE ESA)]

NO SCALE

NSP T65 DATED APRIL 3, 2009 SUPPLEMENTS
THE STANDARD PLANS BOOK DATED MAY 2006.

NEW STANDARD PLAN NSP T65

2006 NEW STANDARD PLAN NSP T65

DIST	COUNTY	ROUTE	POST MILES TOTAL PROJECT	SHEET NO.	TOTAL SHEETS
01	Hum	254	5.9	56	72

REGISTERED CIVIL ENGINEER

January 18, 2008
PLANS APPROVAL DATE

REGISTERED PROFESSIONAL ENGINEER
Tillat Satter
No. C42892
Exp. 03-31-08
CIVIL
STATE OF CALIFORNIA

The State of California or its officers or agents shall not be responsible for the accuracy or completeness of electronic copies of this plan sheet.

To accompany plans dated 7-19-10

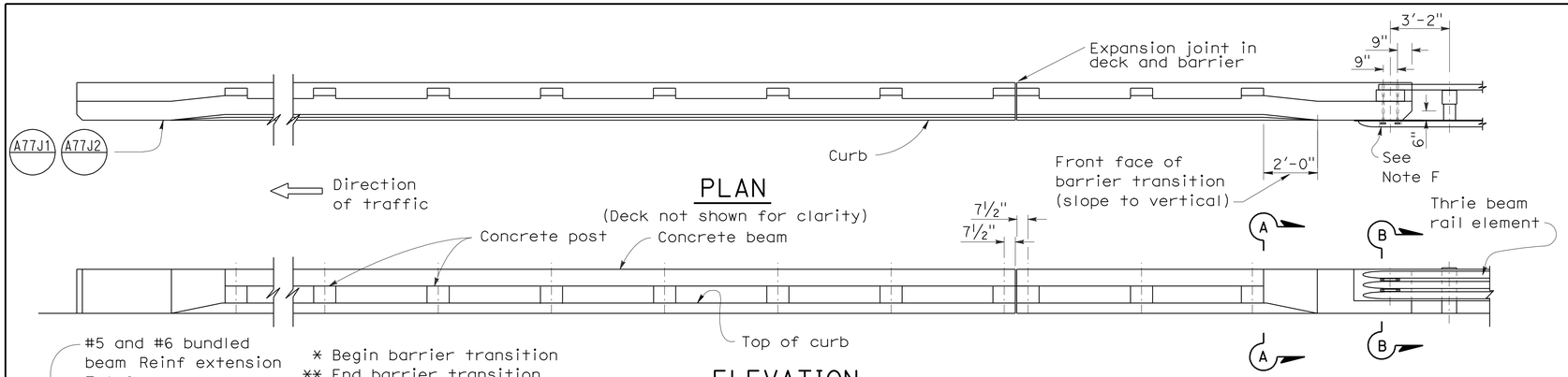

PLAN

(Deck not shown for clarity)

ELEVATION

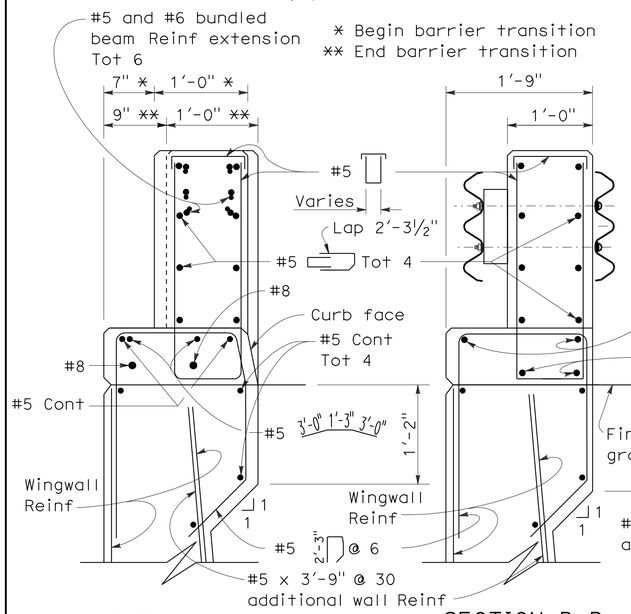

SECTION A-A

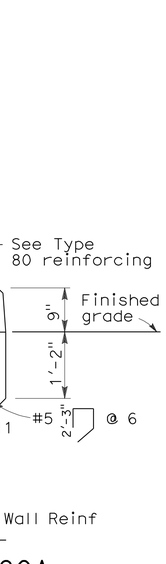

SECTION B-B

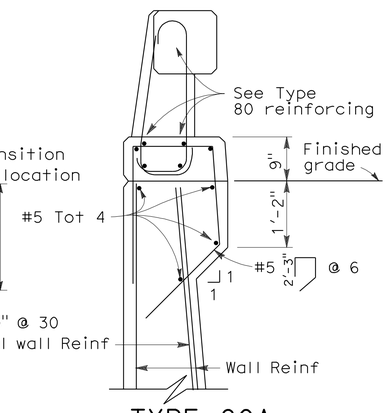

TYPE 80A

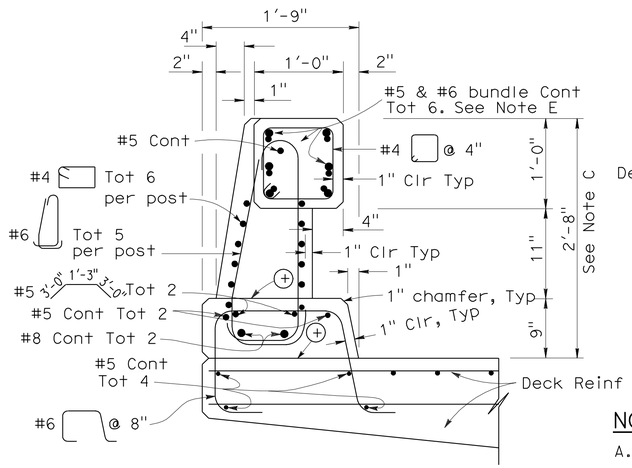

TYPE 80

⊕ Construction joint

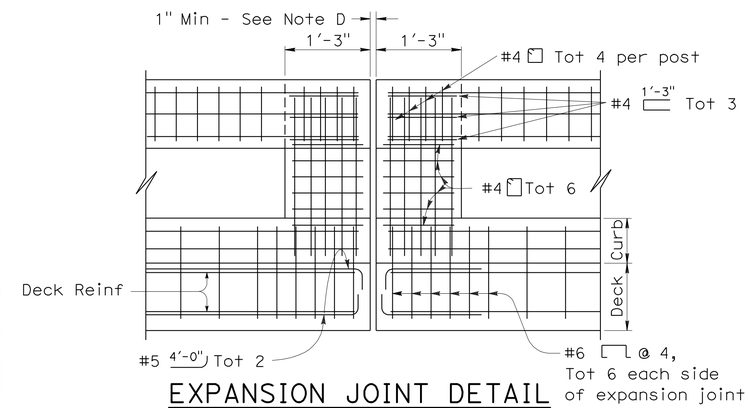

EXPANSION JOINT DETAIL

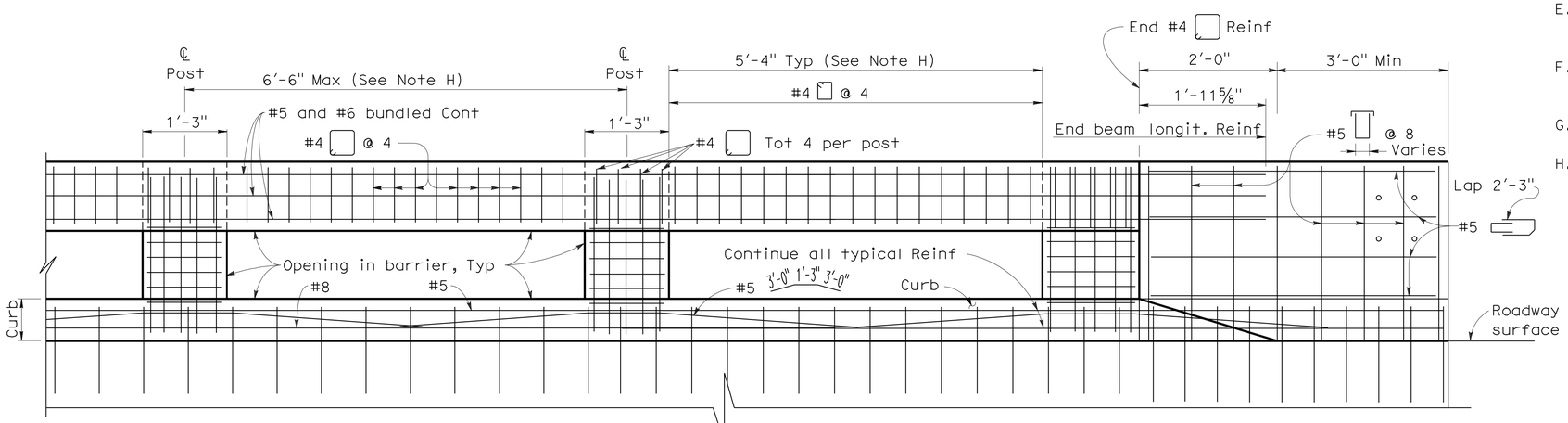

LONGITUDINAL SECTION

(Deck or wingwall reinforcing not shown)

NOTES:

A. Walls are to be backfilled before the barrier is placed.

B. Longitudinal reinforcing steel to stop at all expansion joints.

C. The front face dimensions are to be constant above the finish roadway profile, but the overall height will vary with certain thicknesses of surfacing and roadway slopes.

D. Expansion joint to match deck joint.

E. No lap splicing allowed on the longitudinal rail reinforcing. Splicing shall be staggered.

F. For typical metal railing connection details not shown, see Standard Plans A77J1 and A77J2.

G. Chain link railing is not allowed on Type 80 Barriers.

H. Post to be spaced equally, typically 6'-6" spacing. Post spacing may be reduced where location of hinges or expansion joints or the length of wingwalls will not accommodate the 6'-6" spacing. Maximum see-through availability is to be strived for, where 6'-6" post spacing can not be achieved.

STATE OF CALIFORNIA
DEPARTMENT OF TRANSPORTATION

CONCRETE BARRIER TYPE 80 (SHEET 1 OF 2)

NO SCALE

RSP B11-60 DATED JANUARY 18, 2008 SUPERSEDES STANDARD PLAN B11-60 DATED MAY 1, 2006 - PAGE 276 OF THE STANDARD PLANS BOOK DATED MAY 2006.

REVISED STANDARD PLAN RSP B11-60

2006 REVISED STANDARD PLAN RSP B11-60

10-22-07

DIST	COUNTY	ROUTE	POST MILES TOTAL PROJECT	SHEET NO.	TOTAL SHEETS
01	Hum	254	5.9	57	72

REGISTERED ELECTRICAL ENGINEER

October 5, 2007
PLANS APPROVAL DATE

REGISTERED PROFESSIONAL ENGINEER
Jeffery G. McRae
No. E14512
Exp. 6-30-08
ELECTRICAL
STATE OF CALIFORNIA

The State of California or its officers or agents shall not be responsible for the accuracy or completeness of electronic copies of this plan sheet.

To accompany plans dated 7-19-10

ELECTROLIERS

STANDARD TYPES
15, 15D
15 STRUCTURE
21, 21D STRUCTURE
30
31
32
35
36-20A

High mast light pole

Double Arm lighting standard

Existing electrolier

Electrolier foundation (Future installation)

NOTES:

1. Luminaires shall be 310 W HPS when installed on Type 21, 21D, 30, 31, 32, 35 and 36-20A Standards, unless otherwise specified. Luminaires shall be 200 W HPS when installed on other type standards or poles, unless otherwise specified.
2. Luminaires shall be the cutoff type, ANSI Type III medium cutoff lighting distribution, unless otherwise specified.
3. Variations noted adjacent to symbol on project plans.

Electrolier (see project notes or project plans)

Luminaire on wood pole

STANDARD NOTES:

- AB — Abandon. If applied to conduit, remove conductors.
- BC — Install pull box in existing conduit run.
- BP — Pedestrian barricade, type as indicated on plan.
- CB — Install conduit into existing pull box.
- CC — Connect new and existing conduit. Remove existing conductors and install conductors as indicated.
- CF — Conduit to remain for future use. Remove conductors. Install pull wire or rope.
- DH — Detector handhole.
- FA — Foundation to be abandoned.
- IS — Install sign on signal mast arm.
- NS — No slip base on standard.
- PEC — Photoelectric control.
- PEU — Photoelectric unit.
- RC — Equipment or material to be removed and become the property of the Contractor.
- RE — Remove electrolier, fuses and ballast. Tape ends of conductors.
- RL — Relocate equipment.
- RR — Remove and reuse equipment.
- RS — Remove and salvage equipment.
- SC — Splice new to existing conductors.
- SD — Service disconnect.
- SF — Standard to remain for future use. Remove luminaire, pole conductors, fuses and ballast.
- TSP — Telephone service point.

ABBREVIATIONS AND EQUIPMENT DESIGNATIONS

PROPOSED	EXISTING	
BBS	bbs	Battery backup system
BC	bc	Bolt circle
C	C	Conduit
CCTV	cctv	Closed circuit television
CKT	ckt	Circuit
CMS	cms	Changeable message sign
DLC	dlc	Loop detector lead-in cable
EMS	ems	Extinguishable message sign
EVC	evc	Emergency vehicle cable
EVD	evd	Emergency vehicle detector
FB	fb	Flashing beacon
FBCA	fbca	Flashing beacon control assembly
FBS	fbs	Flashing beacon with slip base
FO	fo	Fiber optic
G	G	Ground (Equipment Grounding Conductor)
GFCI	GFCI	Ground fault circuit interrupt
HAR	har	Highway advisory radio
HEX	hex	Hexagonal
HPS	hps	High pressure sodium
IISNS	iisns	Internally illuminated street name sign
ISL	isl	Induction sign lighting
LED	led	Light emitting diode
LMA	lma	Luminaire mast arm
LPS	lps	Low pressure sodium
LTG	ltg	Lighting
LUM	lum	Luminaire
MAT	mat	Mast arm mounting vehicle signal faces, top attachment
MAS	mas	Mast arm mounting vehicle signal faces, side attachment
MAS-4A	mas-4A	Mast arm mounting vehicle signal faces, side attachment - 4 signal section
MAS-4B	mas-4B	
MAS-4C	mas-4C	
MAS-5A	mas-5A	Mast arm mounting vehicle signal faces, side attachment - 5 signal section
MAS-5B	mas-5B	
MC	mc	Mercury contactor
M/M	m/m	Multiple to multiple transformer
MT	mt	Conduit with pull wire or rope only
MTG	mtg	Mounting
	mv	Mercury vapor lighting fixture
N	N	Neutral (Grounded Conductor)
NC	NC	Normally closed
NO	NO	Normally open
PB	pb	Pull box
PEC	pec	Photoelectric control (Type I, II, III, IV or V as shown)
PED	ped	Pedestrian
PEU	peu	Photoelectric unit
PPB	ppb	Pedestrian push button
RL		Relocated equipment
RM	rm	Ramp metering
SB	sb	Slip base
SIC	sic	Signal interconnect cable
SIG	sig	Signal
SMA	sma	Signal mast arm
SNS	sns	Street name sign
SP	sp	Service point
TDC	tdc	Telephone demarcation cabinet
TMS	tms	Traffic monitoring station
TOS	tos	Traffic Operations System
VEH	veh	Vehicle
XFMR	xfmr	Transformer
COMM	comm	Communication
RWIS	rwis	Roadway weather information system

SOFFIT AND WALL MOUNTED LUMINAIRES

Pendant, 70 W HPS unless otherwise specified.

Flush, 70 W HPS unless otherwise specified.

Wall surface, 70 W HPS unless otherwise specified.

Existing soffit or wall luminaire to remain unmodified.

Existing soffit or wall luminaire to be modified as specified.

NOTE:

Arrow indicates "street side" of luminaire.

STATE OF CALIFORNIA
DEPARTMENT OF TRANSPORTATION

ELECTRICAL SYSTEMS (SYMBOLS AND ABBREVIATIONS)

NO SCALE

RSP ES-1A DATED OCTOBER 5, 2007 SUPERSEDES STANDARD PLAN ES-1A DATED MAY 1, 2006 - PAGE 400 OF THE STANDARD PLANS BOOK DATED MAY 2006.

REVISED STANDARD PLAN RSP ES-1A

2006 REVISED STANDARD PLAN RSP ES-1A

DIST	COUNTY	ROUTE	POST MILES TOTAL PROJECT	SHEET NO.	TOTAL SHEETS
01	Hum	254	5.9	58	72

REGISTERED ELECTRICAL ENGINEER

October 5, 2007
PLANS APPROVAL DATE

REGISTERED PROFESSIONAL ENGINEER Jeffery G. McRae No. E14512 Exp. 6-30-08 ELECTRICAL STATE OF CALIFORNIA

The State of California or its officers or agents shall not be responsible for the accuracy or completeness of electronic copies of this plan sheet.

To accompany plans dated 7-19-10

CONDUIT

PROPOSED	EXISTING	
		Lighting Conduit, unless otherwise indicated or noted
		Traffic signal conduit
C	c	Communication conduit
T	t	Telephone conduit
F	f	Fire alarm conduit
FO	fo	Fiber optic conduit
		Conduit termination (RSP ES-9A C)
R	r	Conduit riser in/on structure or service pole

SERVICE EQUIPMENT

PROPOSED	EXISTING	
OH	oh	Overhead lines
U	U	Wood pole "U" indicates utility owned
		Pole guy with anchor
		Utility transformer - ground mounted
III		Service equipment enclosure type
		Service equipment enclosure door indicates front of enclosure
T	t	Telephone demarcation cabinet

POLE-MOUNTED SERVICE DESIGNATION

Type of installation

TYPE H SERVICE - 28'-10" ← Pole height above grade

ILLUMINATED OVERHEAD SIGN

PROPOSED	EXISTING	
		Overhead sign - Single post
		Overhead sign - Two post
		Overhead sign - Mounted on structure
		Overhead sign with electrolier

SIGNAL EQUIPMENT

PROPOSED	EXISTING	
		Pedestrian signal face
		Pedestrian push button post
		Pedestrian barricade
		Vehicle signal face (with backplate, 3-Section: red, yellow and green)
		Vehicle signal face with angle visors
PV	PV	Modifications of basic symbols: "L" indicates all non-arrow sections louvered "LG" indicates louvered green section only "PV" indicates 12" programmed visibility sections "8" indicates all 8" sections (only when specified)
		Type 15TS and Vehicle signal face
		Vehicle signal face with red, yellow and green left arrow sections
		Vehicle signal face with red and yellow sections and up green arrow
		Vehicle signal face (5 Section) with red, yellow and green sections and yellow and green right arrows
		Type 1 Standard and attached vehicle signal faces
		Standard with signal mast arm only and attached vehicle signal faces and internally illuminated street name sign
		Type 33 Standard, Left-turn vehicle signal face and sign
		Standard with luminaire and signal mast arms and attached vehicle signal faces
		Cantilever flashing beacon Type 9 Frame, with a sign unless otherwise specified or indicated
		Type 15-FBS Standard with two vehicle signal face sections with lens, backplate and visor with a sign
R	Y	Flashing beacon. One vehicle signal face section with lens, backplate and visor. "R" indicates red indication, "Y" indicates yellow indication
		Controller assembly. Door indicates front of cabinet

SIGNAL EQUIPMENT Cont

PROPOSED	EXISTING	
		Guard post
		Type 1 Standard with "Meter On" sign
		Emergency Vehicle detector

NOTES:

1. All signal sections shall be 12" unless shown otherwise.
2. Signal heads shall be provided with backplates unless shown otherwise.
3. Signal indication shall be LED.

STATE OF CALIFORNIA
DEPARTMENT OF TRANSPORTATION

ELECTRICAL SYSTEMS (SYMBOLS AND ABBREVIATIONS)

NO SCALE

RSP ES-1B DATED OCTOBER 5, 2007 SUPERCEDES STANDARD PLAN ES-1B DATED MAY 1, 2006 - PAGE 401 OF THE STANDARD PLANS BOOK DATED MAY 2006.

REVISED STANDARD PLAN RSP ES-1B

2006 REVISED STANDARD PLAN RSP ES-1B

7-10-07

DIST	COUNTY	ROUTE	POST MILES TOTAL PROJECT	SHEET NO.	TOTAL SHEETS
01	Hum	254	5.9	59	72

REGISTERED ELECTRICAL ENGINEER

October 5, 2007
PLANS APPROVAL DATE

The State of California or its officers or agents shall not be responsible for the accuracy or completeness of electronic copies of this plan sheet.

REGISTERED PROFESSIONAL ENGINEER
Jeffery G. McRae
No. E14512
Exp. 6-30-08
ELECTRICAL
STATE OF CALIFORNIA

To accompany plans dated 7-19-10

EQUIPMENT IDENTIFICATION

ILLUMINATED SIGN IDENTIFICATION NUMBER:

Sign No. 12345

10 ISL SCI 1.0

- Sign number - Place on post or structure
- Transformer rating (kVA)
- Lighting control type
- Number and type of fixtures

Do NOT place on standard or structure

ELECTROLIER OR EQUIPMENT IDENTIFICATION NUMBER:

12345 - 15'-0"

- Mast arm length, if shown. Do not place on standard or structure.
- Equipment number - Place on standard or structure. Existing equipment numbers are shown in parenthesis

CONDUIT AND CONDUCTOR IDENTIFICATION:

1½"C, 2#10, 15#14, 2 DLC

- Number and size of conductors and cables
- Size of conduit in inches

ø1, ø2, ø2P, etc.	Traffic phase identification for signal faces, detectors and phase diagrams
1 2 3	Project note numbers
A B C	Equipment description, installation or item numbers
1 2 3	Conduit run numbers

SIGNAL AND LIGHTING STANDARD (TYPICAL DESIGNATION):

19A - 3 - 100

- Wind velocity = 100 mph
- Case 3 arm loading
- Standard type
- Standard Plan sheet number
- Detail number or letter

MISCELLANEOUS EQUIPMENT

PROPOSED	EXISTING	
CMS	cms	Changeable message sign
		Closed circuit television camera
		Highway advisory radio pole and antenna
EMS	ems	Extinguishable message sign
M V	m v	Detection device M = Microwave sensor V = Video image sensor

WIRING DIAGRAM LEGEND

P	Pole
CB	Circuit breaker
A	Ampere
V	Volt
M	Metered
UM	Unmetered
NB	Neutral bus
GB	Ground bus
G	Equipment grounding conductor
N	Grounded conductor (Neutral)

- External conductor
- Conductor or bus
- Tie point
- Contactor coil
- Contactor, Contact NO
- Terminal blocks
- Contactor, Contact NC
- Enclosure bond
- Grounding electrode
- Circuit breaker
- Receptacle

PULL BOXES

PROPOSED EXISTING

Pull box-No. 5 unless otherwise indicated or noted.

3 9A(21)

Pull box-Additional designations or descriptions

3	= No. 3½ pull box
5	= No. 5 pull box
6	= No. 6 pull box
7	= No. 7 (Ceiling pull box)
8	= No. 8 (Pendant soffit pull box)
9	= No. 9 pull box
9A	= No. 9A pull box

(C) = Communications pull box
(E) = Pull box with extension
(S) = Sprinkler control pull box
(21) = Anchor bolts and conduit for future installation of Type 21 Standard
(T) = Traffic pull box

VEHICLE DETECTORS

5 J 9 U

- U = Upper
- L = Lower
- Slot number in input file
- Input file (I or J)
- Phase

PROPOSED EXISTING

	Type A detector loop. Outline of sawcut shown.
	Type B detector loop. Outline of sawcut shown.
	Type C detector loop. Outline of sawcut shown.
	Type D detector loop. Outline of sawcut shown.
	Type E detector loop. Outline of sawcut shown.
	Type Q detector loop. Outline of sawcut shown.
	Magnetic detector
DH dh	Detector handhole
	Microwave or video detection zone

STATE OF CALIFORNIA
DEPARTMENT OF TRANSPORTATION

ELECTRICAL SYSTEMS (SYMBOLS AND ABBREVIATIONS)

NO SCALE

RSP ES-1C DATED OCTOBER 5, 2007 SUPERCEDES STANDARD PLAN ES-1C DATED MAY 1, 2006 - PAGE 402 OF THE STANDARD PLANS BOOK DATED MAY 2006.

REVISED STANDARD PLAN RSP ES-1C

2006 REVISED STANDARD PLAN RSP ES-1C

DIST	COUNTY	ROUTE	POST MILES TOTAL PROJECT	SHEET NO.	TOTAL SHEETS
01	Hum	254	5.9	60	72

REGISTERED ELECTRICAL ENGINEER

October 5, 2007
PLANS APPROVAL DATE

REGISTERED PROFESSIONAL ENGINEER
Jeffery G. McRae
No. E14512
Exp. 6-30-08
ELECTRICAL
STATE OF CALIFORNIA

The State of California or its officers or agents shall not be responsible for the accuracy or completeness of electronic copies of this plan sheet.

To accompany plans dated 7-19-10

2006 REVISED STANDARD PLAN RSP ES-2C

NOTES-TYPE III SERVICE EQUIPMENT ENCLOSURES:

1. Service equipment enclosure and metering equipment shall meet the requirements of the service utility. The meter area shall have a sealable, lockable, weathertight cover that can be removed without the use of tools.

2. Service equipment enclosures shall be factory wired and conform to NEMA standards.

3. Dimensions of service equipment enclosures shall meet the requirements of the service utility.

4. The dead front panels on Type III service equipment enclosures shall have a continuous stainless steel or aluminum piano hinge. The panel in front of the breakers shall be secured with a latch or captive screws. No live parts shall be mounted on the dead front panel.

5. The exterior door shall have provisions for padlocking. The padlock hole shall be a minimum diameter of 7/16".

6. Enclosures housing transformers of more than one kVA shall have effective screened ventilation louver of not less than 50 square inches. Screen shall be stainless steel No. 304, with a No. 10 size mesh. Framed screen shall be secured with at least four bolts.

7. Fasteners on the exterior of the enclosure shall be vandal-resistant and shall not be removable from the exterior. Exterior screws, nuts, bolts and washers shall be stainless steel.

8. Landing lugs for incoming service conductors shall be compatible with either copper or aluminum conductors sized to suit the conductors shown on the plan. Landing lugs shall be copper or tin-plated aluminum. Neutral bus shall be rated for 125 A and be suitable for copper or aluminum conductors unless otherwise specified. The terminal shall include but not be limited to:

   a) Incoming terminals (landing lugs)
   b) Neutral lugs
   c) Solid neutral terminal strip

9. At least 6 standard single pole circuit breaker spaces, 3/4" nominal, shall be provided for branch circuits. Circuit breaker interiors shall be copper. Interiors of enclosure shall accept plug-in or cable-in/cable-out circuit breakers.

10. Control wiring shall be 600 V, 14 stranded machine tool wire. Where subject to flexing, 19 strand wire shall be used.

11. Main bus shall be rated for 125 A and shall be tin-plated copper.

12. A plastic laminated wiring diagram shall be provided with brass mounting eyelets and attached to the inside of the enclosure and the wiring diagram shall be affixed to the interior with a UL or ETL approved method.

13. An engraved phenolic nameplate on the dead front panel indicating the function of each circuit or device shall be installed with stainless steel rivets or stainless steel screws:

    a) Adjacent to the breaker or device with character size a minimum of 1/8".

    b) At the top of the exterior door panel indicating State system number, voltage level and number of phases with character size a minimum of 3/16".

14. The plan shows the approximate location of devices within the enclosure. Components may be rearranged, however, the "working" clearances within the service equipment enclosure shall be maintained.

15. In unpaved areas a raised portland cement concrete pad 2'-0" x 4" x width of foundation shall be constructed in front of new service equipment enclosure installation. Pad shall be set to elevation of foundation.

16. Foundation shall extend 2" minimum beyond edge of service equipment enclosure.

17. Internal bus, where shown, is typical only. Alternative design of proposed service equipment enclosure shall be submitted to the Engineer for approval.

18. Plug-in circuit breakers may be mounted in the vertical or horizontal position. Cable-in/cable-out circuit breakers shall be mounted in the vertical position.

19. Type III-AF and Type III-BF service equipment enclosures shall have the meter viewing windows located on the front side of the service equipment enclosures.

20. Type III-AR and Type III-BR service equipment enclosures shall be similarly constructed as Type III-AF and Type III-BF respectively, except the meter viewing windows shall be located on the back side of the service equipment enclosures.

21. Minimum clearance shall be required for front and back of service equipment enclosure per National Electrical Code, Article 110.26, "Spaces About Electric Equipment (600 Volts, Nominal, or Less)."

STATE OF CALIFORNIA
DEPARTMENT OF TRANSPORTATION

ELECTRICAL SYSTEMS (SERVICE EQUIPMENT NOTES TYPE III SERIES)

NO SCALE

RSP ES-2C DATED OCTOBER 5, 2007 SUPERCEDES STANDARD PLAN ES-2C
DATED MAY 1, 2006 - PAGE 405 OF THE STANDARD PLANS BOOK DATED MAY 2006.

REVISED STANDARD PLAN RSP ES-2C

DIST	COUNTY	ROUTE	POST MILES TOTAL PROJECT	SHEET NO.	TOTAL SHEETS
01	Hum	254	5.9	61	72

REGISTERED ELECTRICAL ENGINEER

October 5, 2007
PLANS APPROVAL DATE

REGISTERED PROFESSIONAL ENGINEER Jeffery G. McRae No. E14512 Exp. 6-30-08 ELECTRICAL STATE OF CALIFORNIA

The State of California or its officers or agents shall not be responsible for the accuracy or completeness of electronic copies of this plan sheet.

To accompany plans dated 7-19-10

2006 REVISED STANDARD PLAN RSP ES-2D

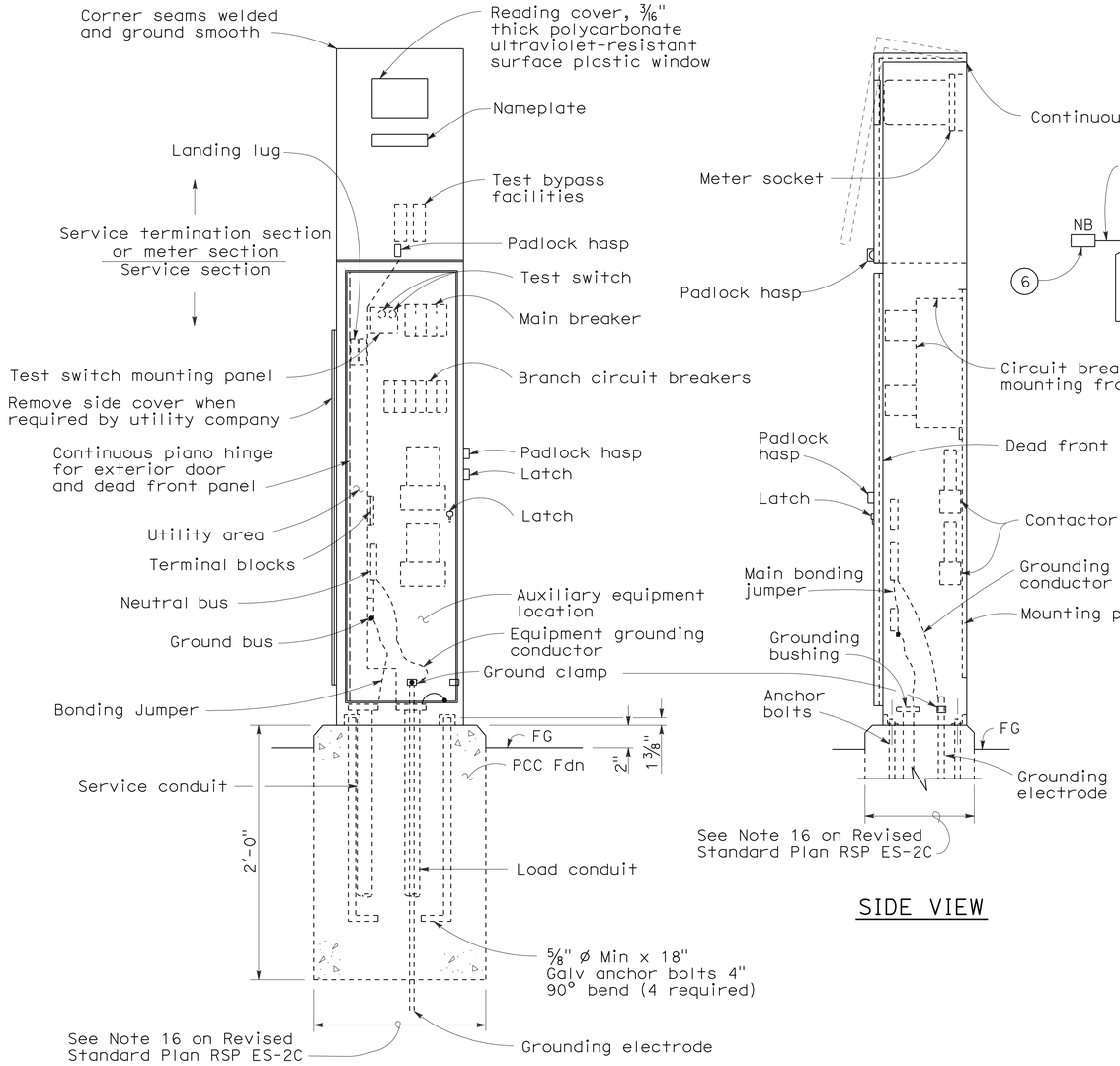

FRONT VIEW

SIDE VIEW

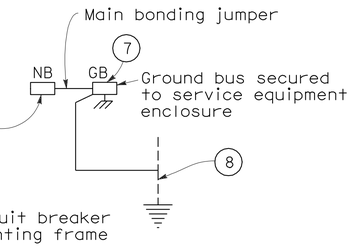

TYPE III-AF SERVICE EQUIPMENT ENCLOSURE (TYPICAL)

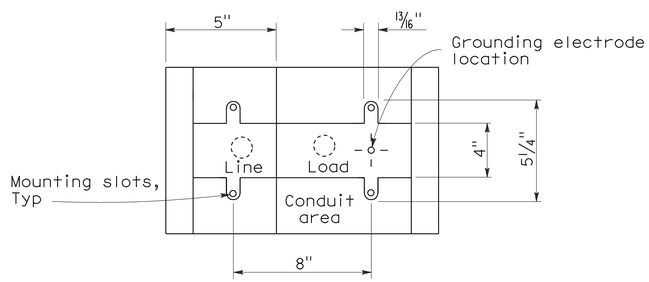

BASE FOR TYPE III-A SERVICE EQUIPMENT ENCLOSURE

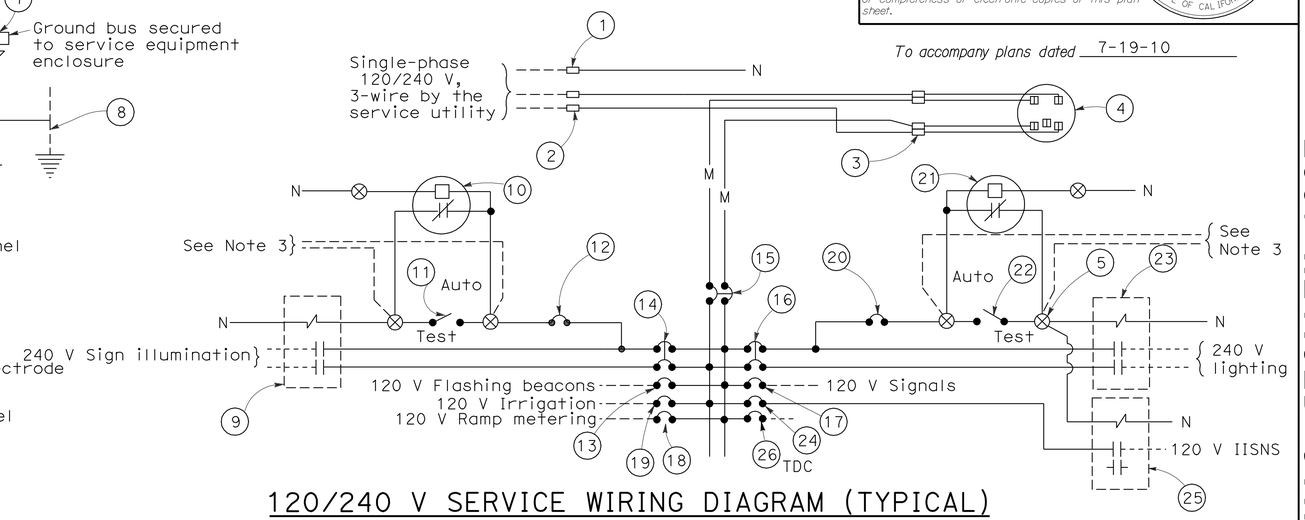

120/240 V SERVICE WIRING DIAGRAM (TYPICAL)

TYPE III-A SERVICE (120/240 V) EQUIPMENT LEGEND

ITEM No.	COMPONENT	NAME PLATE DESCRIPTION	ITEM No.	COMPONENT	NAME PLATE DESCRIPTION
1	Neutral lug		14	30 A, 240 V, 2P, CB	Sign Illumination
2	Landing lug (Note 6)		15	100 A, 240 V, 2P, CB	Main Breaker
3	Test bypass facility		16	30 A, 240 V, 2P, CB	Lighting
4	Meter socket and support		17	50 A, 120 V, 1P, CB	Signals
5	Terminal blocks		18	30 A, 120 V, 1P, CB	Ramp Metering
6	Neutral bus		19	20 A, 120 V, 1P, CB	Irrigation
7	Ground bus		20	15 A, 120 V, 1P, CB	Lighting Control
8	Grounding electrode		21	Photoelectric unit (Note 7)	
9	30 A, 2PNO Contactor	Sign Illumination	22	15 A, 1P, Test switch	Lighting Test Switch
10	Photoelectric unit (Note 7)		23	60 A, 2PNO Contactor	Lighting
11	15 A, 1P, Test switch	Sign Illumination Test Switch	24	15 A, 120 V, 1P, CB	IISNS
12	15 A, 120 V, 1P, CB	Sign Illumination Control	25	30 A, 2PNO Contactor	IISNS
13	15 A, 120 V, 1P, CB	Flashing Beacon	26	20 A, 120 V, 1P, CB	Telephone Demarcation Cabinet

NOTES: (FOR SERVICE EQUIPMENT ENCLOSURE)

1. Voltage ratings of service equipment shall conform to the service voltages indicated on the plans.
2. Unless otherwise indicated on the plans, service equipment items shall be provided for each service equipment enclosure as shown.
3. Connect to remote test switch mounted on lighting standards, sign post or structure when required.
4. Items No. 1 and 6 shall be isolated from the service equipment enclosure.
5. Meter sockets shall be 5 clip type.
6. The landing lug shall be suitable for multiple conductors.
7. Type V photoelectric control shall be used unless otherwise indicated on the plans.

STATE OF CALIFORNIA
DEPARTMENT OF TRANSPORTATION

ELECTRICAL SYSTEMS (SERVICE EQUIPMENT AND TYPICAL WIRING DIAGRAM, TYPE III-A SERIES)

NO SCALE

RSP ES-2D DATED OCTOBER 5, 2007 SUPERCEDES STANDARD PLAN ES-2D DATED MAY 1, 2006 - PAGE 406 OF THE STANDARD PLANS BOOK DATED MAY 2006.

REVISED STANDARD PLAN RSP ES-2D

DIST	COUNTY	ROUTE	POST MILES TOTAL PROJECT	SHEET NO.	TOTAL SHEETS
01	Hum	254	5.9	62	72

REGISTERED ELECTRICAL ENGINEER

June 6, 2008
PLANS APPROVAL DATE

REGISTERED PROFESSIONAL ENGINEER
Jeffery G. McRae
No. E14512
Exp. 6-30-10
ELECTRICAL
STATE OF CALIFORNIA

The State of California or its officers or agents shall not be responsible for the accuracy or completeness of electronic copies of this plan sheet.

To accompany plans dated 7-19-10

VISORS

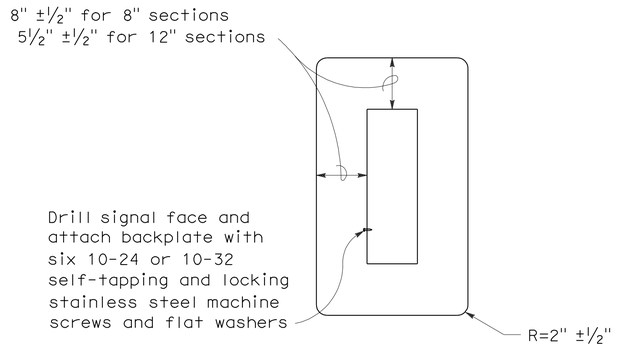

8" AND 12" SECTIONS

BACKPLATE

1/16" minimum thickness
3001-14 aluminum, or plastic when specified

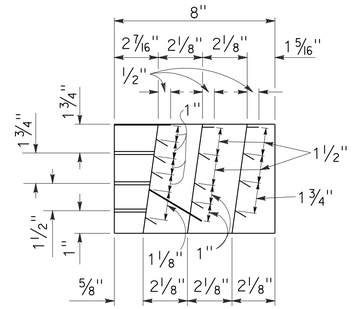

SECTION A-A

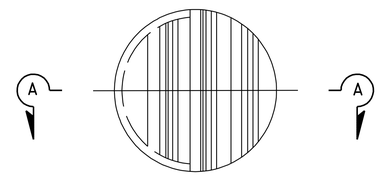

FRONT VIEW

DIRECTIONAL LOUVER

Directional louvers shall be oriented as directed by the Engineer and secured in place with one plated brass machine screw and nut.

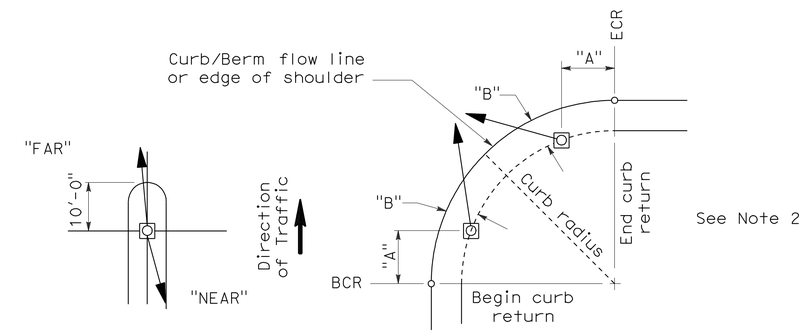

NOTES:

1. Typical signal pole placement unless dimensioned on plans.
2. For "A" and "B" dimensions, see Pole Schedule, or as directed by the Engineer.

SIGNAL STANDARD PLACEMENT DIMENSIONS AND EQUIPMENT LOCATIONS

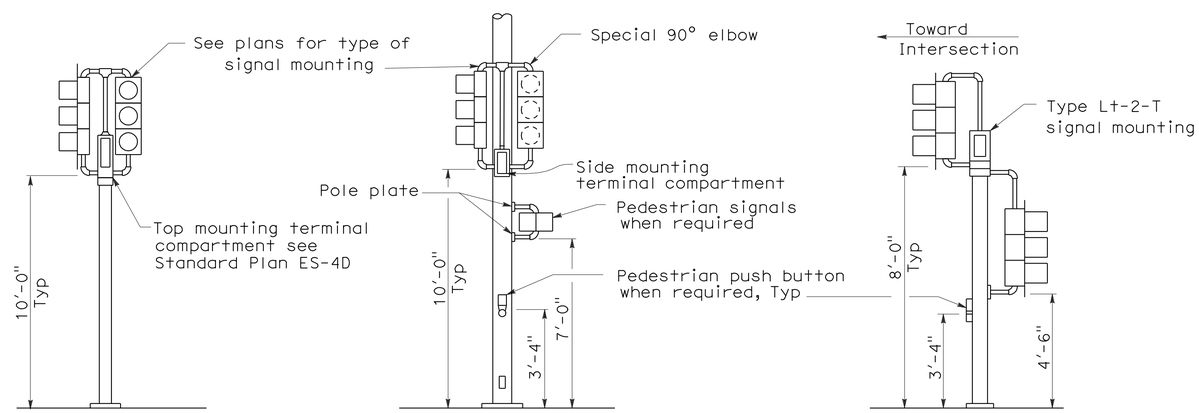

TOP MOUNTED SIGNALS (TV)

Type 1-A, 1-B, 1-C and 1-D standard as indicated on the plans

SIDE MOUNTED SIGNALS (SV AND SP)

Normally used on standards with luminaire or signal mast arm

LEFT TURN LANE SIGNAL

Type 1-A, 1-B, 1-C and 1-D standard as indicated on plans

TYPICAL SIGNAL INSTALLATIONS

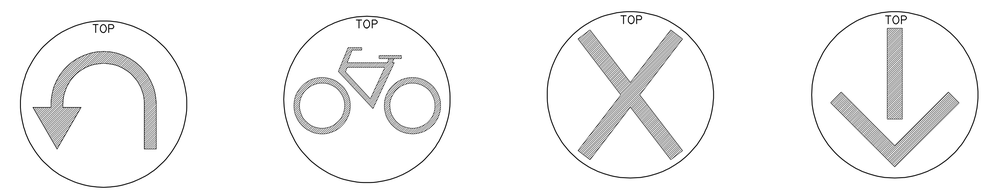

U-TURN SIGNAL FACE | BICYCLE SIGNAL FACE | LANE CONTROL SIGNAL FACE | LANE CONTROL SIGNAL FACE

STATE OF CALIFORNIA
DEPARTMENT OF TRANSPORTATION

ELECTRICAL SYSTEMS (SIGNAL HEADS AND MOUNTINGS)

NO SCALE

RSP ES-4C DATED JUNE 6, 2008 SUPERSEDES STANDARD PLAN ES-4C DATED MAY 1, 2006 - PAGE 420 OF THE STANDARD PLANS BOOK DATED MAY 2006.

REVISED STANDARD PLAN RSP ES-4C

2006 REVISED STANDARD PLAN RSP ES-4C

5-19-08

DIST	COUNTY	ROUTE	POST MILES TOTAL PROJECT	SHEET NO.	TOTAL SHEETS
01	Hum	254	5.9	63	72

REGISTERED ELECTRICAL ENGINEER

June 6, 2008
PLANS APPROVAL DATE

REGISTERED PROFESSIONAL ENGINEER Jeffery G. McRae No. E14512 Exp. 6-30-10 ELECTRICAL STATE OF CALIFORNIA

The State of California or its officers or agents shall not be responsible for the accuracy or completeness of electronic copies of this plan sheet.

To accompany plans dated 7-19-10

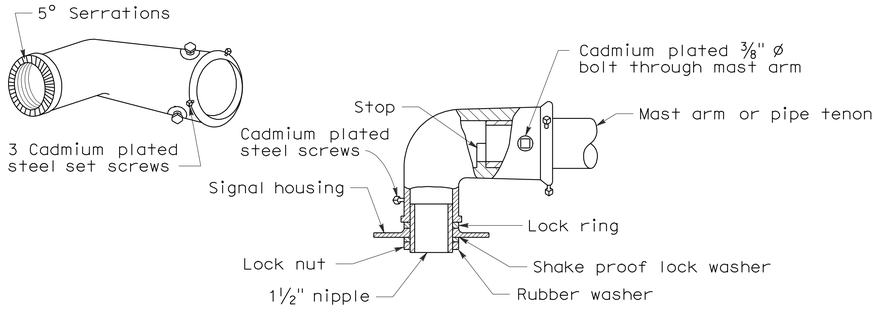

MAST ARM MOUNTING - TYPE "MAT"

For 2 NPS pipe, see Note 1.

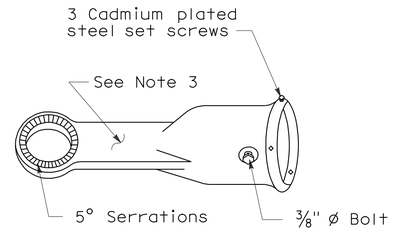

MAST ARM MOUNTING - TYPE "MAS"

For 2 NPS pipe. See Note 1.

SIGNAL SLIP FITTERS

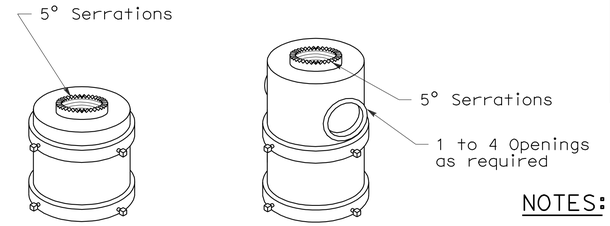

For one mounting For mulitiple mountings

TOP MOUNTINGS

For 4 NPS pipe, see Note 2.

NOTES:

1. After mast arm signal has been plumbed and secured, drill 7/16" hole through mast arm tenon in line with slip fitter hole. Place a cadmium plated 3/8" ø galvanized bolt with washer under bolt head through hole and secure with washer, nut, and locknut. Seal openings between mast arm mountings and mast arm with mastic.
2. (a) Threaded top mounted slip fitter openings shall be 1½ NPS.
   (b) Serrations in fittings shall match those on bottom of signal heads or in lock ring.
   (c) Top opening shall be offset when backplate is used.
3. Wireway shall have a cross section area of 0.95 square inch minimum. Minimum width of ½".

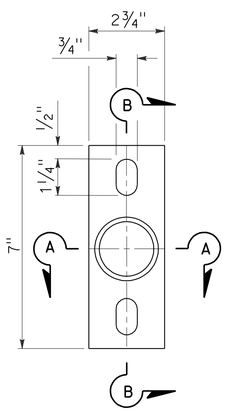

POLE PLATE

For side mountings

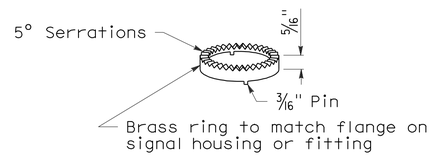

LOCK RING

Use where locking ring is not integral with signal housing or fitting.

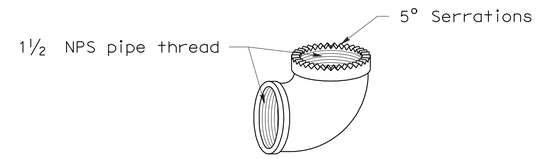

SPECIAL 90° ELBOW

One for each signal head, except those with special slip fitter mounting

MISCELLANEOUS MOUNTING HARDWARE

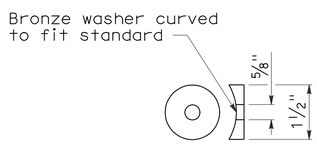

DETAIL "C"

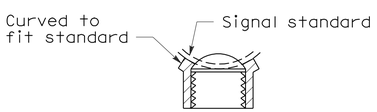

SECTION A-A

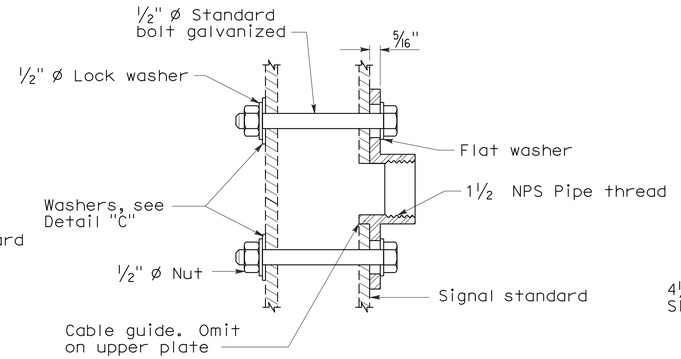

SECTION B-B

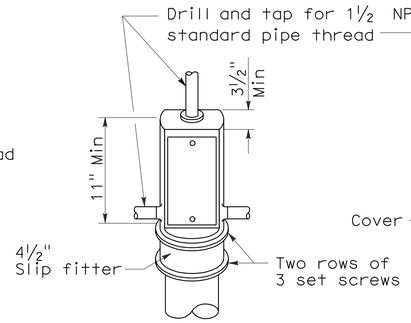

TOP MOUNTING

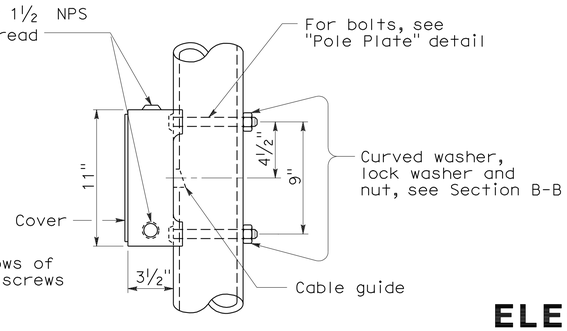

SIDE MOUNTING

TERMINAL COMPARTMENTS

STATE OF CALIFORNIA
DEPARTMENT OF TRANSPORTATION

ELECTRICAL SYSTEMS (SIGNAL HEADS AND MOUNTINGS)

NO SCALE

RSP ES-4D DATED June 6, 2008 SUPERSEDES STANDARD PLAN ES-4D
DATED MAY 1, 2006 - PAGE 421 OF THE STANDARD PLANS BOOK DATED MAY 2006.

REVISED STANDARD PLAN RSP ES-4D

2006 REVISED STANDARD PLAN RSP ES-4D

5-19-08

DIST	COUNTY	ROUTE	POST MILES TOTAL PROJECT	SHEET NO.	TOTAL SHEETS
01	Hum	254	5.9	64	72

REGISTERED ELECTRICAL ENGINEER

October 5, 2007
PLANS APPROVAL DATE

REGISTERED PROFESSIONAL ENGINEER Jeffery G. McRae No. E14512 Exp. 6-30-08 ELECTRICAL STATE OF CALIFORNIA

The State of California or its officers or agents shall not be responsible for the accuracy or completeness of electronic copies of this plan sheet.

To accompany plans dated 7-19-10

2006 REVISED STANDARD PLAN RSP ES-5A

LOOP INSTALLATION PROCEDURE

1. Loops shall be centered in lanes.
2. Saw slots in pavement for loop conductors as shown in details.
3. Distance between side of loop and a lead-in saw cut from adjacent detectors shall be 2'-0" minimum. Distance between lead-in saw cuts shall be 6" minimum.
4. Bottom of saw slot shall be smooth with no sharp edges.
5. Slots shall be washed until clean, blown out and thoroughly dried before installing loop conductors.
6. Adjacent loops on the same sensor unit channel shall be wound in opposite directions.
7. Identify and tag loop circuit pairs in the pull box with loop number, start (S) and finish (F) of conductor. Identify and tag lead-in-cable with sensor number and phase.
8. Install loop conductor in slot using a 3/16" to 1/4" thick wood paddle. Hold loop conductors with wood paddles (at the bottom of the sawed slot) during sealant placement.
9. No more than 2 twisted pairs shall be installed in one sawed slot.
10. Allow additional 5'-0" of slack length of conductor for the lead-in run to pull box.
11. The additional length of each conductor for each loop shall be twisted together into a pair (6 turns per 3'-4" minimum) before being placed in the slot and conduit leading to pull box.
12. Test each loop circuit for continuity, circuit resistance and insulation resistance at the pull box before filling slots.
13. Fill slots as shown in details.
14. Splice loop conductors to lead-in-cable. Splices shall be soldered.
15. End of lead-in-cable and Type 2 loop conductor shall be waterproofed prior to installing in conduit to prevent moisture from entering the cable.
16. Lead-in-cable shall not be spliced between the pull box and the controller cabinet terminals.
17. Test each loop circuit for continuity, circuit resistance and insulation resistance at the controller cabinet location.
18. Where loop conductors are not to be spliced to a lead-in-cable, the ends of the conductors shall be taped and waterproofed with electrical insulating coating.

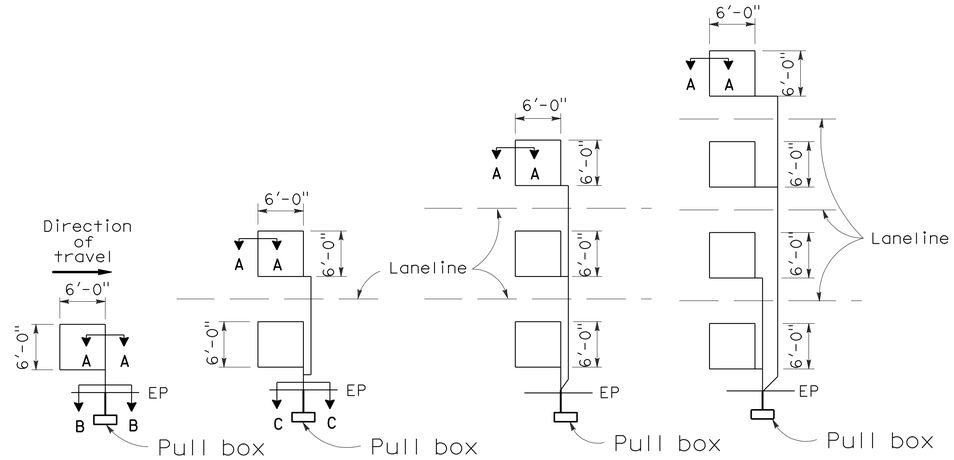

TYPE 1A INSTALLATION | TYPE 2A INSTALLATION | TYPE 3A INSTALLATION | TYPE 4A INSTALLATION

SAWCUT DETAILS

(Type A loop detector configurations illustrated)

1. 1A thru 4A = 1 Type A loop configuration in each lane.
2. 1B thru 4B = 1 Type B loop configuration in each lane.
3. 1C = 1 Type C loop configuration entering lanes as required.
4. 1D thru 4D = 1 Type D loop configuration in each lane.
5. 1E thru 4E = 1 Type E loop configuration in each lane.
6. 1Q thru 4Q = 1 Type Q loop configuration in each lane. (Use Type A, B, C, D, E or Q loop detector configurations only when specified or shown on plans)

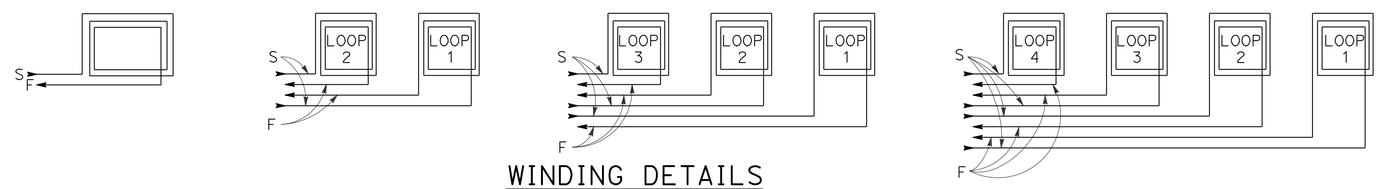

WINDING DETAILS

See Notes 6 and 7

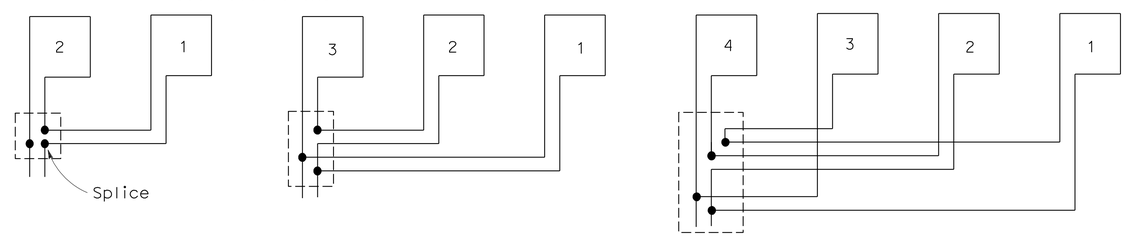

TYPICAL LOOP CONNECTIONS

(Dashed lines represent the pull box)

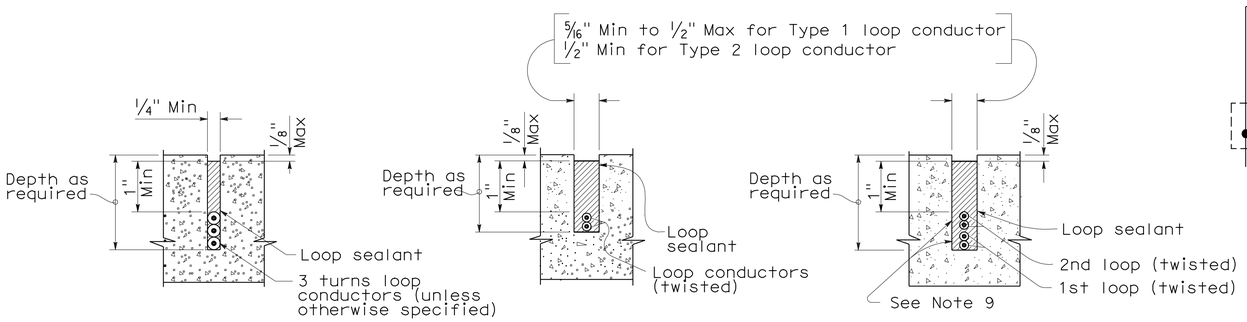

SECTION A-A | SECTION B-B | SECTION C-C

SLOT DETAILS - TYPE 1 AND TYPE 2 LOOP CONDUCTOR

STATE OF CALIFORNIA
DEPARTMENT OF TRANSPORTATION

ELECTRICAL SYSTEMS (DETECTORS)

NO SCALE

RSP ES-5A DATED OCTOBER 5, 2007 SUPERCEDES STANDARD PLAN ES-5A DATED MAY 1, 2006 - PAGE 423 OF THE STANDARD PLANS BOOK DATED MAY 2006.

REVISED STANDARD PLAN RSP ES-5A

DIST	COUNTY	ROUTE	POST MILES TOTAL PROJECT	SHEET No	TOTAL SHEETS
01	Hum	254	5.9	65	72

REGISTERED CIVIL ENGINEER 3-30-10 DATE

7-19-10
PLANS APPROVAL DATE

REGISTERED PROFESSIONAL ENGINEER G. SCHUSTER No. C 63897 Exp. 09-30-10 CIVIL STATE OF CALIFORNIA

The State of California or its officers or agents shall not be responsible for the accuracy or completeness of electronic copies of this plan sheet.

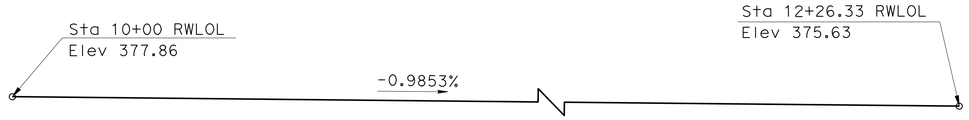

PROFILE GRADE

No Scale

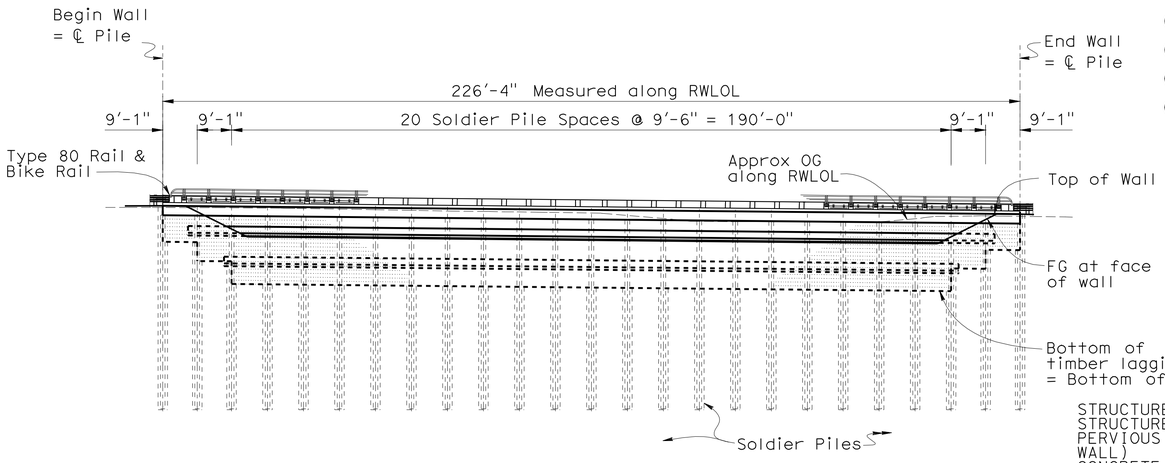

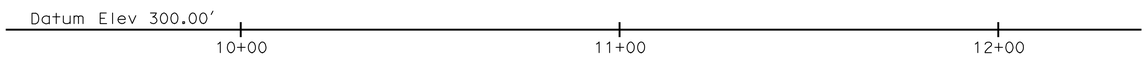

DEVELOPED MIRROR ELEVATION

1" = 20'-0"

1. Temporary Railing Type K, see Roadway Plans.
2. Barrier Slab.
3. Concrete Barrier Type 80 with Bicycle Railing.
4. 12" Underdrain (Outlet Pipe Shown), see Roadway Plans.
5. Temporary cut for Wall Construction.
6. Concrete Waler.
7. Steel Soldier Pile Cast in Drilled Hole.
8. MBGR, see Roadway Plans.
9. Existing Culvert to be removed and replaced, see Roadway Plans.
10. Timber Lagging
11. Existing unpaved driveways to remain open during construction. For location, see Roadway Plans.

QUANTITIES

STRUCTURE EXCAVATION (SOLDIER PILE WALL)	533	CY
STRUCTURE BACKFILL (SOLDIER PILE WALL)	90	CY
PERVIOUS BACKFILL MATERIAL (RETAINING WALL)	223	CY
CONCRETE BACKFILL (SOLDIER PILE WALL)	153	CY
LEAN CONCRETE BACKFILL	77	CY
STEEL SOLDIER PILE (HP 14 X 117)	1,256	LF
30" DRILLED HOLE	1,256	LF
TIEBACK ANCHOR	42	EA
STRUCTURAL CONCRETE, RETAINING WALL	93	CY
STRUCTURAL CONCRETE, BARRIER SLAB	140	CY
BAR REINFORCING STEEL (RETAINING WALL)	43,750	LB
TIMBER LAGGING	21	MFBM
CLEAN AND PAINT STEEL SOLDIER PILING	LUMP	SUM
TUBULAR BICYCLE RAILING (MODIFIED)	226	LF
CONCRETE BARRIER (TYPE 80)(MODIFIED)	226	LF

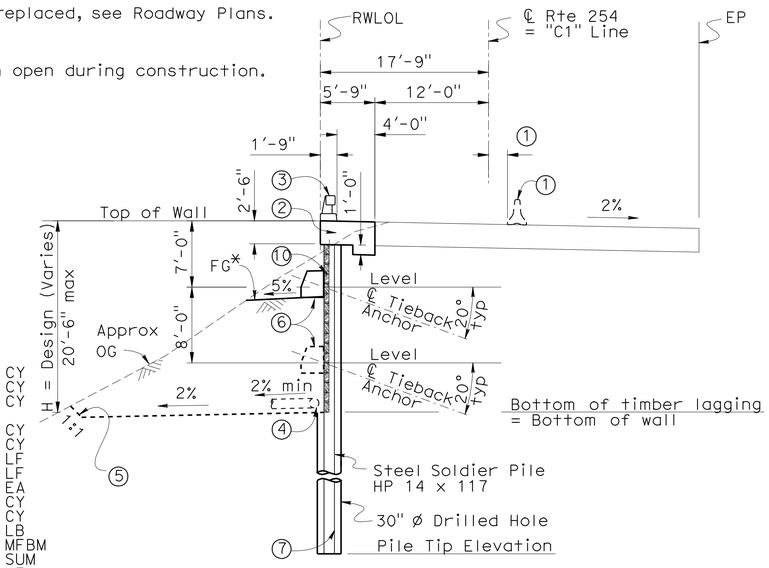

* FG is 8' max and varies from Top of Wall

TYPICAL SECTION

1/8" = 1'-0"

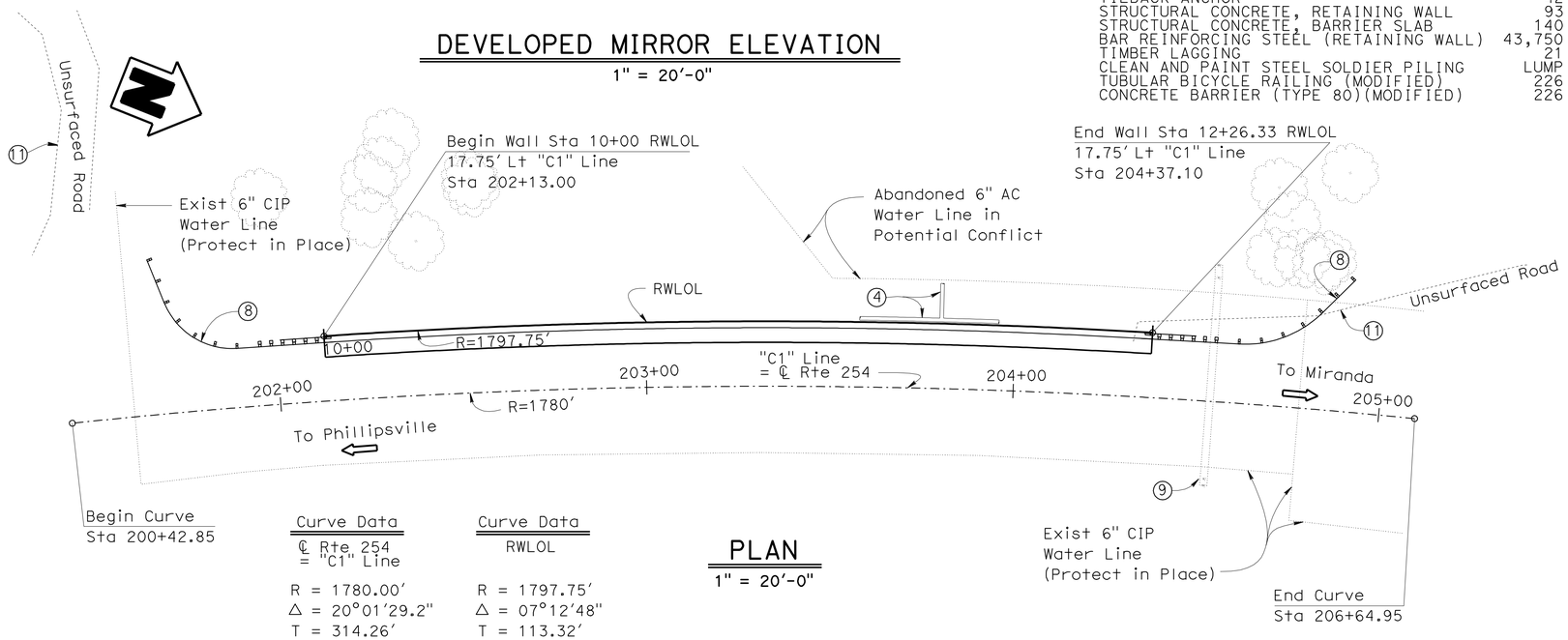

PLAN

1" = 20'-0"

Curve Data
℄ Rte 254
= "C1" Line

R = 1780.00'
Δ = 20°01'29.2"
T = 314.26'
L = 622.11'

Curve Data
RWLOL

R = 1797.75'
Δ = 07°12'48"
T = 113.32'
L = 226.33'

INDEX TO PLANS

1. GENERAL PLAN
2. STRUCTURE PLAN
3. FOUNDATION PLAN
4. TYPICAL SECTION
5. DETAILS NO. 1
6. DETAILS NO. 2
7. TIEBACK DETAILS
8. BICYCLE RAILING ON TYPE 80 BARRIER RAIL
9. LOG OF TEST BORINGS 1 OF 5
10. LOG OF TEST BORINGS 2 OF 5
11. LOG OF TEST BORINGS 3 OF 5
12. LOG OF TEST BORINGS 4 OF 5
13. LOG OF TEST BORINGS 5 OF 5

STANDARD PLANS DATED MAY 2006

RSP B11-60 CONCRETE BARRIER TYPE 80

STANDARD PLAN SHEET NO.

DETAIL NO.

x Gary Blakesley
DESIGN ENGINEER

DESIGN	BY T. Pinell	CHECKED M. Quach	SERVICE LOAD DESIGN	LIVE LOADING: 2 FEET LEVEL SURCHARGE	
DETAILS	BY A. Chen	CHECKED G. Schuster	LAYOUT	BY T. Pinell/T. Cotton	CHECKED G. Schuster
QUANTITIES	BY T. Pinell	CHECKED M. Quach	SPECIFICATIONS	BY	PLANS AND SPECS COMPARED

STATE OF CALIFORNIA
DEPARTMENT OF TRANSPORTATION

DIVISION OF ENGINEERING SERVICES
STRUCTURE DESIGN
DESIGN BRANCH 5

BRIDGE NO. 04E0026
POST MILE 5.9

MEYERS WALL
GENERAL PLAN

STRUCTURES DESIGN GENERAL PLAN SHEET (ENGLISH) (REV. 10/25/05)

ORIGINAL SCALE IN INCHES FOR REDUCED PLANS 0 1 2 3

CU 01
EA 475011

DISREGARD PRINTS BEARING EARLIER REVISION DATES

REVISION DATES: 4-21-09 6-30-09 1-15-09 11-02-09 3-26-10

SHEET 1 OF 8

FILE => 475011-a-gp.dgn

STRUCTURES DESIGN GENERAL PLAN SHEET (ENGLISH) (REV.07-24-06)

USERNAME => friehard DATE PLOTTED => 19-JUL-2010 TIME PLOTTED => 10:40

DIST	COUNTY	ROUTE	POST MILES TOTAL PROJECT	SHEET No	TOTAL SHEETS
01	Hum	254	5.9	66	72

REGISTERED CIVIL ENGINEER 3-30-10 DATE

7-19-10
PLANS APPROVAL DATE

REGISTERED PROFESSIONAL ENGINEER G. SCHUSTER No. C 63897 Exp. 09-30-10 CIVIL STATE OF CALIFORNIA

The State of California or its officers or agents shall not be responsible for the accuracy or completeness of electronic copies of this plan sheet.

GENERAL NOTES

DESIGN:

CALTRANS BRIDGE DESIGN SPECIFICATIONS-APRIL 2000 (LFD)
(1996 AASHTO with Interims and Revisions by CALTRANS)

SOIL PARAMETERS:

(For determination of design lateral earth pressures)

Soil 1 (above lagging)

ϕ = 19°
γ_m = 105 pcf
K_A = 0.51

Soil 2 (below lagging)

ϕ = 20°
γ_m = 112 pcf
K_p = 2.04
K_A = 0.49

REINFORCED CONCRETE:

f'c = 4 ksi (Concrete compressive strength at 28 days)
fy = 60 ksi (Yield strength of reinforcement)

STRUCTURAL STEEL:

Fy = 50 ksi

STRUCTURAL TIMBER:

6" x 12" Treated Douglas Fir. Grade No. 1 or better
Timber to be full sawn.

PRESTRESSING STEEL:

Strands - ASTM designation A416

T = Design Force per Tieback = 100 kip (top row)
= 75 kip (bottom row)

f_{pu} = Minimum tensile strength of prestressing steel (kip per square inch)

A_s(Min.) = Minimum cross sectional area of prestressing steel in Tieback tendon. (Square inch)

$$A_s(\text{Min.}) = \frac{1.5\ T}{0.75\ f_{pu}}$$

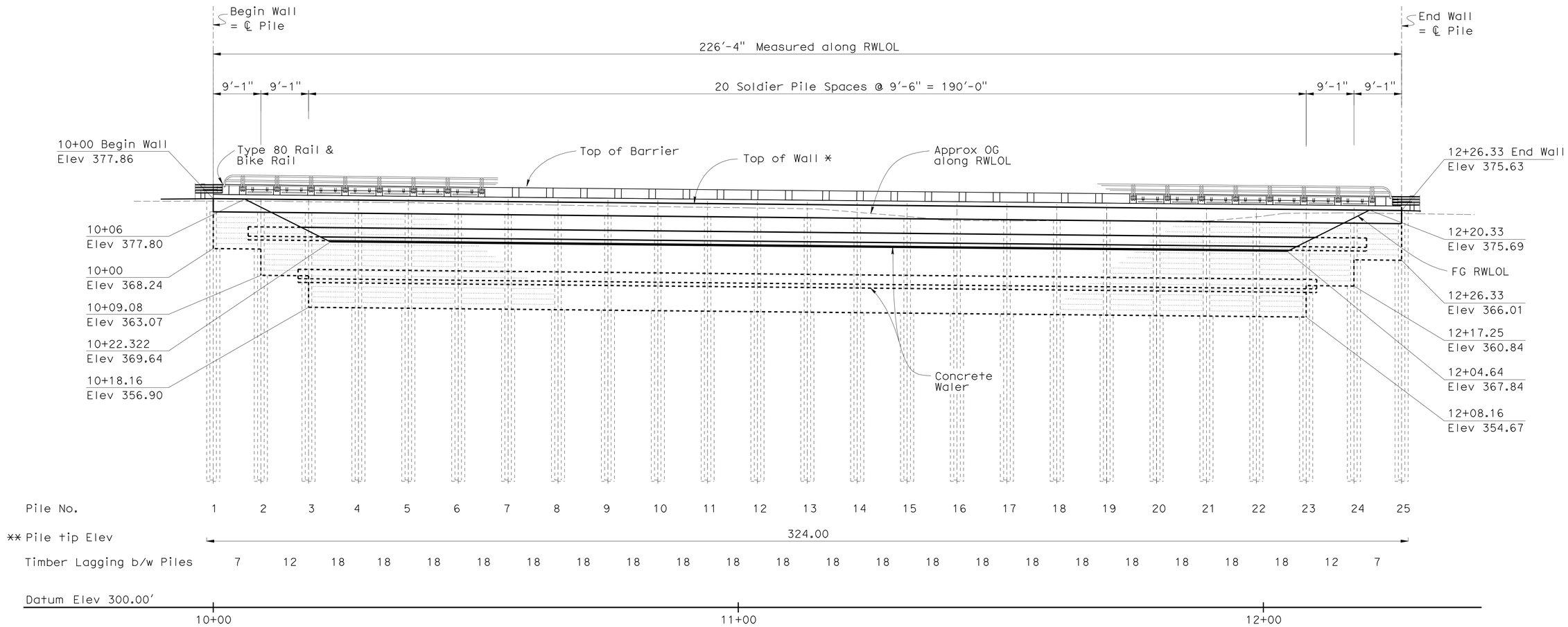

* Top of Wall Elevation along RWLOL
** Minimum 10' embedment into bedrock

DEVELOPED MIRROR ELEVATION

1" = 10'-0"

	BY	CHECKED
DESIGN	T. Pinell	M. Quach
DETAILS	A. Chen	G. Schuster
QUANTITIES	T. Pinell	M. Quach

STATE OF CALIFORNIA
DEPARTMENT OF TRANSPORTATION

DIVISION OF ENGINEERING SERVICES
STRUCTURE DESIGN
DESIGN BRANCH 5

BRIDGE NO. 04E0026
POST MILE 5.9

MEYERS WALL
STRUCTURE PLAN

STRUCTURES DESIGN DETAIL SHEET (ENGLISH) (REV. 10/25/05)

ORIGINAL SCALE IN INCHES FOR REDUCED PLANS 0 1 2 3

CU 01
EA 475011

DISREGARD PRINTS BEARING EARLIER REVISION DATES

REVISION DATES: 5-26-09 6-28-09 1-14-09 10-30-09 3-26-10

SHEET 2 OF 8

FILE => 475011-c-sp.dgn

USERNAME => friehard DATE PLOTTED => 19-JUL-2010 TIME PLOTTED => 10:40

DIST	COUNTY	ROUTE	POST MILES TOTAL PROJECT	SHEET No	TOTAL SHEETS
01	Hum	254	5.9	67	72

REGISTERED CIVIL ENGINEER 3-30-10 DATE

7-19-10
PLANS APPROVAL DATE

REGISTERED PROFESSIONAL ENGINEER G. SCHUSTER No. C 63897 Exp. 09-30-10 CIVIL STATE OF CALIFORNIA

The State of California or its officers or agents shall not be responsible for the accuracy or completeness of electronic copies of this plan sheet.

CURVE DATA

No.	R	Δ	T	L
Ⓐ	1797.75	07°12'48"	113.32	226.33
Ⓑ	1780.00	20°1'29"	314.26	622.11

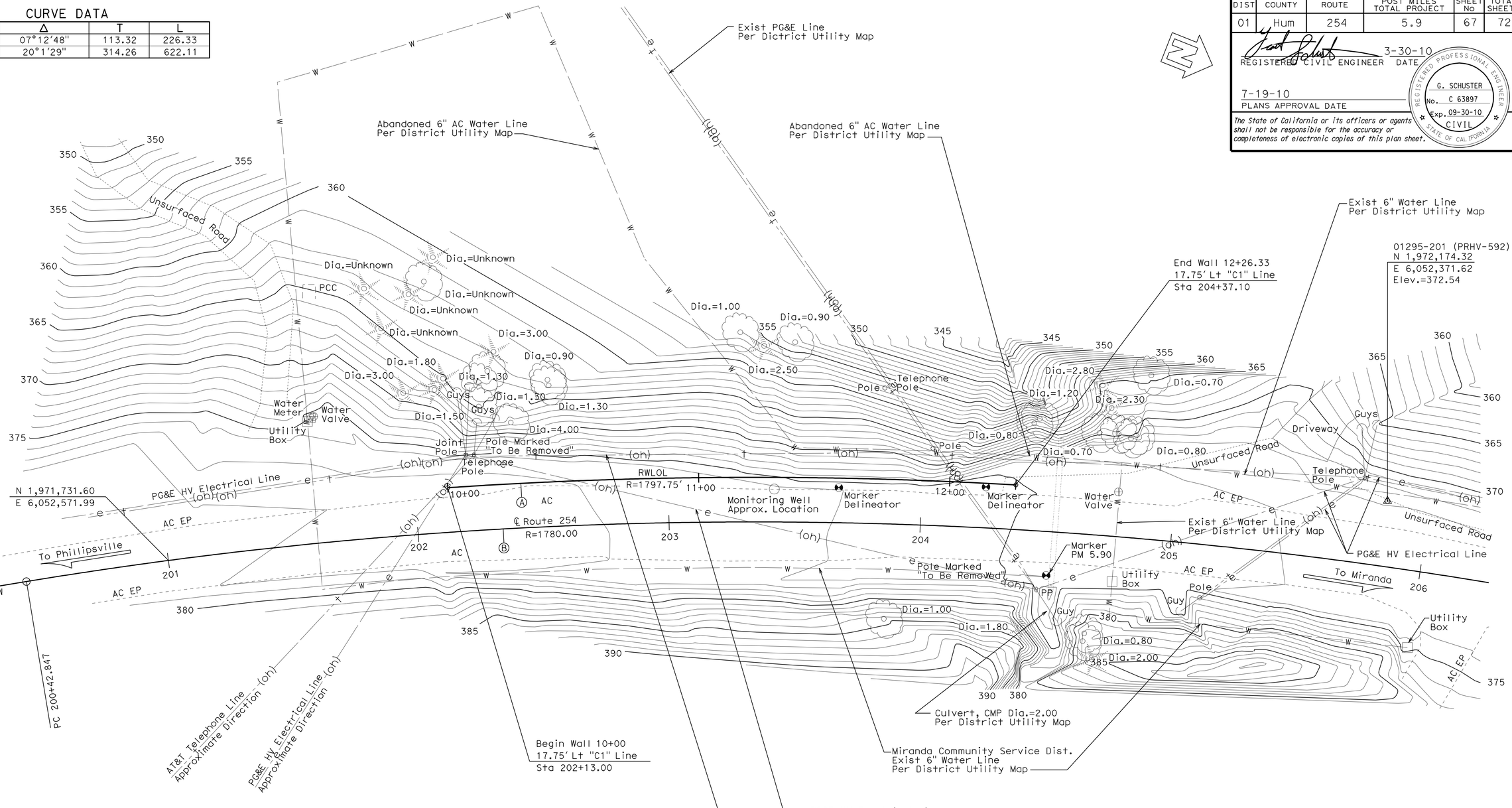

SURVEY CONTROL

01295-201 (PRHV592)
Fnd Caltrans Alum Cap
26.04 FT Lt. "C1" Line ℄ Rte 254
Sta. 205+83.23
N 1,972,174.32
E 6,052,371.62
Elev. = 372.54

HUM 254-5.98 (PRHV598) Not Shown On Plan
Fnd Caltrans Alum Cap
211.73 FT N14°43'28"W From
"C1" Line ℄ Rte 254 Sta. 206+64.95
N 1,972,465.05
E 6,052,325.83
Elev. = 372.40

PRELIMINARY INVESTIGATION SECTION

SCALE	VERT.DATUM NAVD88	PHOTOGRAMMETRY AS OF: X			
1"=20'	HORZ.DATUM NAD83 (1991.35)	SURVEYED	BY District	CHECKED	BY J. Borden 05/2009
ALIGNMENT TIES Dist.Traverse Sheet		DRAFTED	BY T.Zolnikova 05/2009	CHECKED	BY L.Lew 05/2009

DESIGN	BY T. Pinell	CHECKED M. Quach
DETAILS	BY A. Chen	CHECKED G. Schuster
QUANTITIES	BY T. Pinell	CHECKED M. Quach

STATE OF CALIFORNIA
DEPARTMENT OF TRANSPORTATION

DIVISION OF ENGINEERING SERVICES
STRUCTURE DESIGN
DESIGN BRANCH 5

BRIDGE NO. 04E0026
POST MILE 5.9

MEYERS WALL
FOUNDATION PLAN

STRUCTURES FOUNDATION PLAN SHEET (ENGLISH) (REV. 10/25/05)

ORIGINAL SCALE IN INCHES FOR REDUCED PLANS 0 1 2 3

CU 01
EA 475011

DISREGARD PRINTS BEARING EARLIER REVISION DATES

REVISION DATES 07/09/09 03/26/10

SHEET 3 OF 7

FILE => 475011-e-fdpl01.dgn

USERNAME => trienard DATE PLOTTED => 19-JUL-2010 TIME PLOTTED => 10:40

DIST	COUNTY	ROUTE	POST MILES TOTAL PROJECT	SHEET No	TOTAL SHEETS
01	Hum	254	5.9	68	72

REGISTERED CIVIL ENGINEER 3-30-10 DATE

7-19-10
PLANS APPROVAL DATE

REGISTERED PROFESSIONAL ENGINEER G. SCHUSTER No. C 63897 Exp. 09-30-10 CIVIL STATE OF CALIFORNIA

The State of California or its officers or agents shall not be responsible for the accuracy or completeness of electronic copies of this plan sheet.

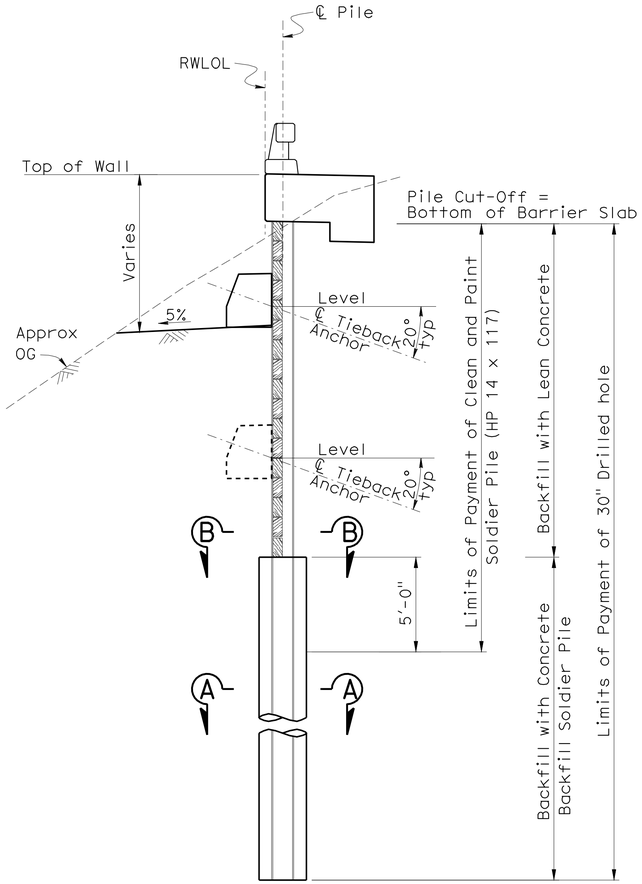

TYPICAL SECTION

¼" = 1'-0"

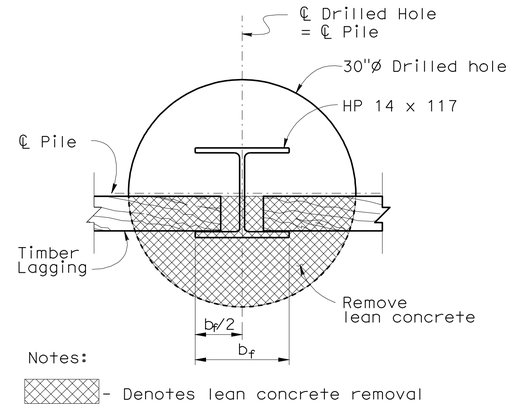

PILE SECTION B-B

1"=1'-0"

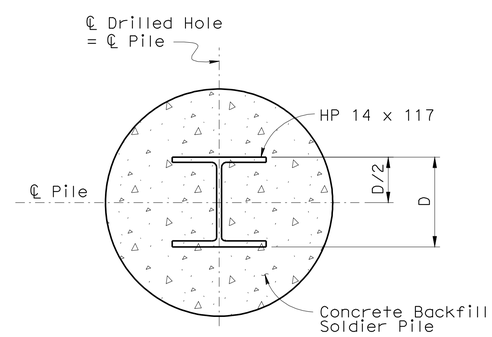

See Section B-B for Dimension not shown.

PILE SECTION A-A

1"=1'-0"
(Below Bottom of Lagging)

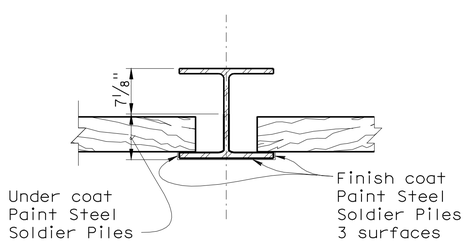

PAINTING

LIMITS OF PAYMENT

no scale

Pile Data Table			
Pile Number	Station	Cutoff Elevation (ft)	Tip Elevation (ft)
1	10+00.00	375.34	324.00
2	10+09.08	375.25	324.00
3	10+18.17	375.16	324.00
4	10+27.67	375.07	324.00
5	10+37.17	374.98	324.00
6	10+46.67	374.88	324.00
7	10+56.17	374.79	324.00
8	10+65.67	374.69	324.00
9	10+75.17	374.60	324.00
10	10+84.67	374.51	324.00
11	10+94.17	374.41	324.00
12	11+03.67	374.32	324.00
13	11+13.17	374.23	324.00
14	11+22.67	374.13	324.00
15	11+32.17	374.04	324.00
16	11+41.67	373.94	324.00
17	11+51.17	373.85	324.00
18	11+60.67	373.76	324.00
19	11+70.17	373.66	324.00
20	11+79.67	373.57	324.00
21	11+89.17	373.48	324.00
22	11+98.67	373.38	324.00
23	12+08.17	373.29	324.00
24	12+17.25	373.20	324.00
25	12+26.33	373.11	324.00

Note:
Cutoff and Tip elevations given at CL pile
Tip elevations may be altered to maintain 10' embedment into bedrock as approved by the Engineer

DESIGN	BY T. Pinell	CHECKED M. Quach	
DETAILS	BY A. Chen	CHECKED G. Schuster	
QUANTITIES	BY T. Pinell	CHECKED M. Quach	

STATE OF CALIFORNIA
DEPARTMENT OF TRANSPORTATION

DIVISION OF ENGINEERING SERVICES
STRUCTURE DESIGN
DESIGN BRANCH 5

BRIDGE NO. 04E0026
POST MILE 5.9

MEYERS WALL
TYPICAL SECTION

STRUCTURES DESIGN DETAIL SHEET (ENGLISH) (REV. 10/25/05)

ORIGINAL SCALE IN INCHES FOR REDUCED PLANS 0 1 2 3

CU 01
EA 475011

DISREGARD PRINTS BEARING EARLIER REVISION DATES

REVISION DATES: 6-30-09 7-9-09 7-14-09 11-02-09

SHEET 4 OF 8

FILE => 475011-f-ts.dgn

USERNAME => trlenard DATE PLOTTED => 19-JUL-2010 TIME PLOTTED => 10:40

DIST	COUNTY	ROUTE	POST MILES TOTAL PROJECT	SHEET No	TOTAL SHEETS
01	Hum	254	5.9	69	72

REGISTERED CIVIL ENGINEER 3-30-10 DATE

7-19-10
PLANS APPROVAL DATE

REGISTERED PROFESSIONAL ENGINEER G. SCHUSTER No. C 63897 Exp. 09-30-10 CIVIL STATE OF CALIFORNIA

The State of California or its officers or agents shall not be responsible for the accuracy or completeness of electronic copies of this plan sheet.

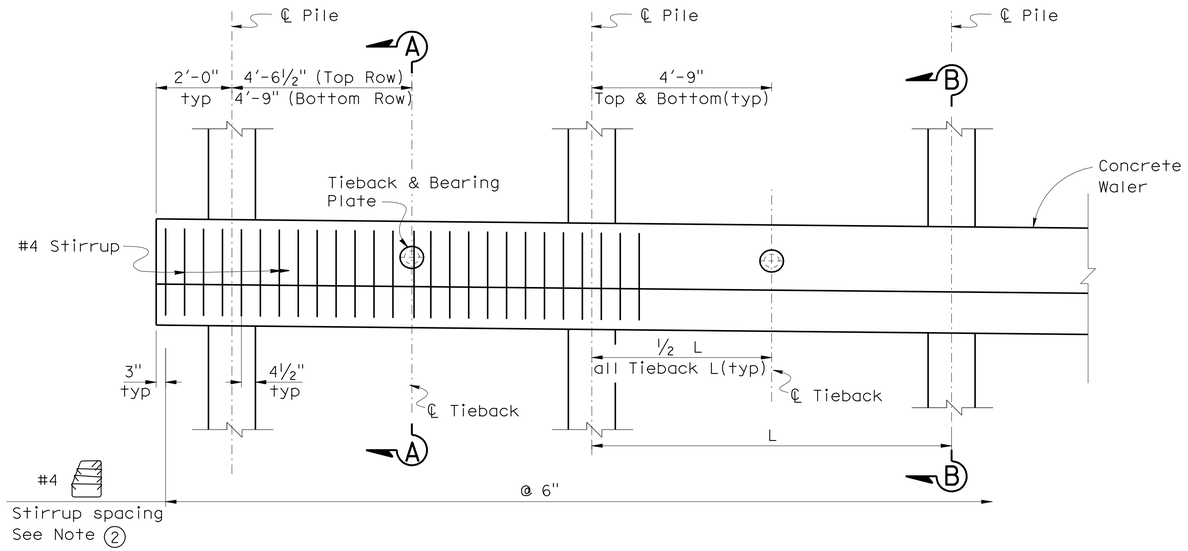

Note: Timber lagging and tie-backs not shown

PART ELEVATION

½"=1'-0"

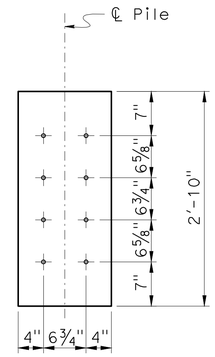

SHEAR STUD LAYOUT

No Scale

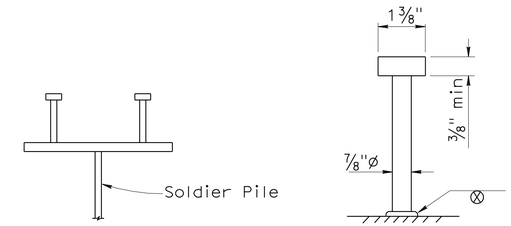

STUD CONNECTOR

No Scale

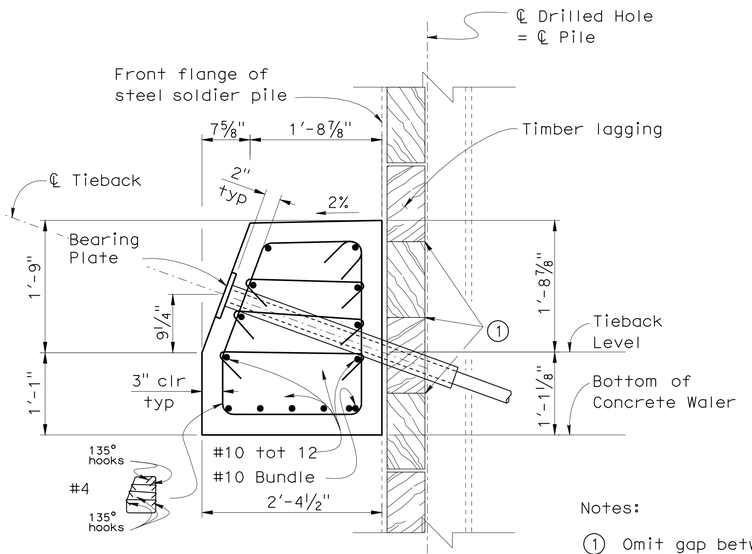

SECTION A-A

1"=1'-0"

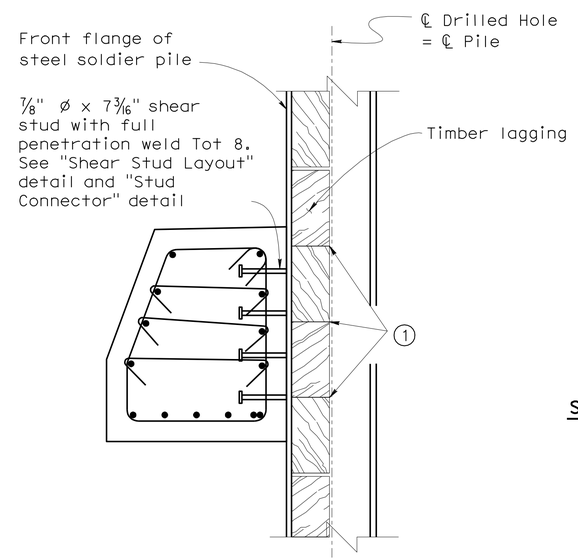

SECTION B-B

1"=1'-0"

Alternative types of shear connectors will be permitted subject to approval by the Engineer.

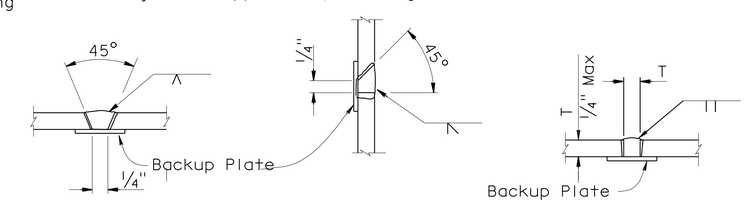

SINGLE VEE-GROOVE | SINGLE BEVEL-GROOVE | SQUARE GROOVE

PILE WELDING DETAIL-BUTT JOINTS

No Scale

Notes:

1. Single Vee-Groove and Square Groove permitted for all positions.
2. Single Bevel-Groove permitted for horizontal joints only

Notes:

1. Omit gap between lagging members at joints behind concrete waler
2. To avoid conflict with tiebacks, the stirrups can be moved and bundled with adjacent stirrup
3. For details and dimensions not shown on "Section B-B", see "Section A - A"

	BY	CHECKED
DESIGN	T. Pinell	M. Quach
DETAILS	A. Chen	G. Schuster
QUANTITIES	T. Pinell	M. Quach

STATE OF CALIFORNIA DEPARTMENT OF TRANSPORTATION

DIVISION OF ENGINEERING SERVICES STRUCTURE DESIGN DESIGN BRANCH 5

BRIDGE NO. 04E0026 POST MILE 5.9

MEYERS WALL DETAILS NO. 1

STRUCTURES DESIGN DETAIL SHEET (ENGLISH) (REV. 10/25/05)

ORIGINAL SCALE IN INCHES FOR REDUCED PLANS 0 1 2 3

CU 01 EA 475011

DISREGARD PRINTS BEARING EARLIER REVISION DATES 6-5-09 6-26-09 7-15-09

REVISION DATES

SHEET 5 OF 8

FILE => 475011-q-dt01.dgn

USERNAME => trlenard DATE PLOTTED => 19-JUL-2010 TIME PLOTTED => 10:40

DIST	COUNTY	ROUTE	POST MILES TOTAL PROJECT	SHEET No	TOTAL SHEETS
01	Hum	254	5.9	70	72

REGISTERED CIVIL ENGINEER 3-30-10 DATE

7-19-10
PLANS APPROVAL DATE

REGISTERED PROFESSIONAL ENGINEER G. SCHUSTER No. C 63897 Exp. 09-30-10 CIVIL STATE OF CALIFORNIA

The State of California or its officers or agents shall not be responsible for the accuracy or completeness of electronic copies of this plan sheet.

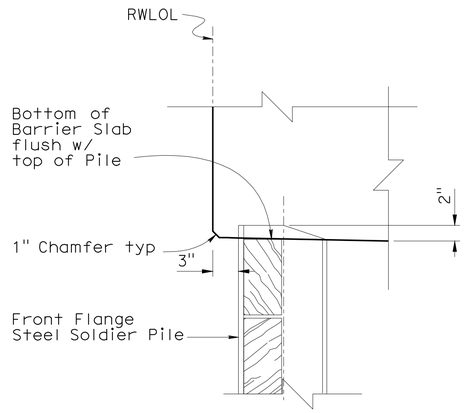

TOP OF PILE DETAIL

1"=1'-0"

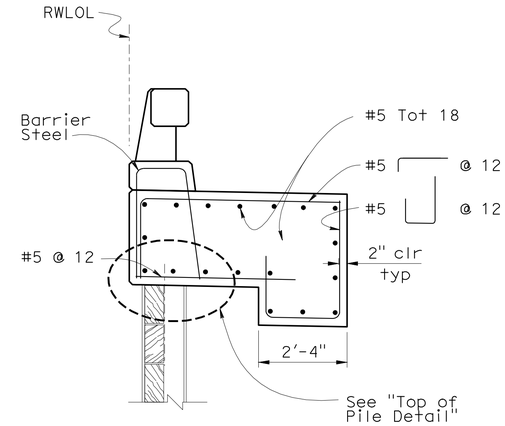

BARRIER SLAB DETAIL

½"=1'-0"

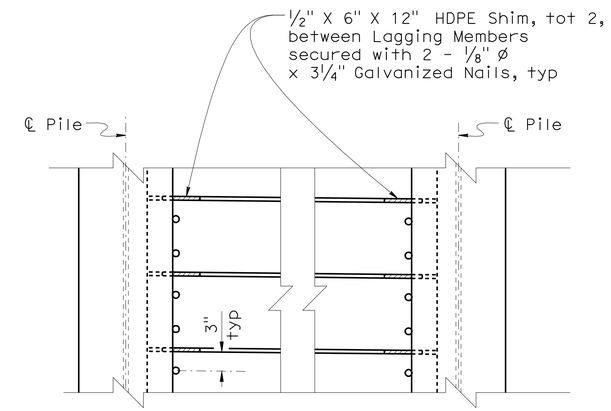

PART ELEVATION

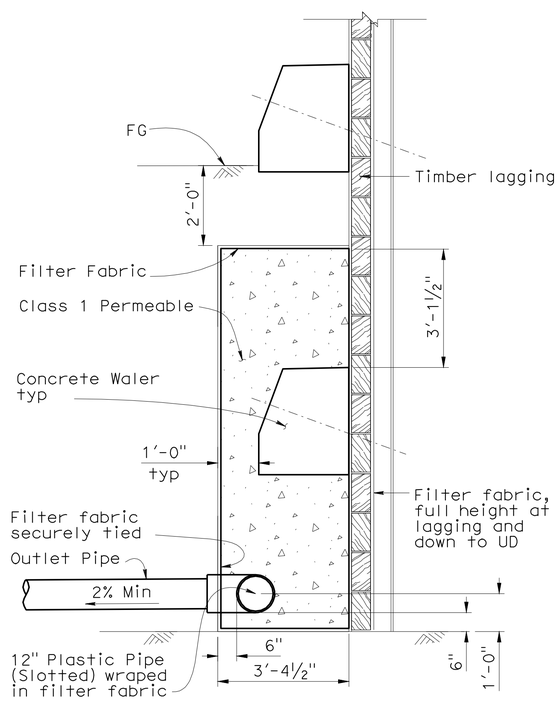

DRAINAGE DETAIL

½"=1'-0"

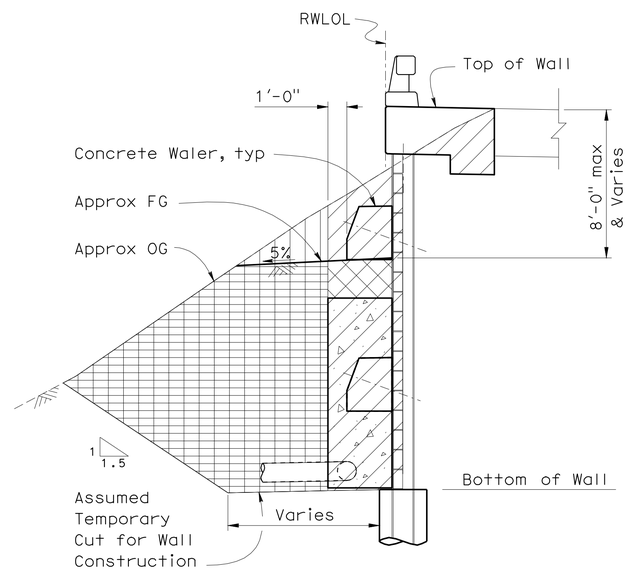

Structure Excavation, Soldier Pile Wall
Structure Backfill, Soldier Pile Wall
* See Roadway Plans
Roadway Excavation
Roadway Embankment
Drainage

LIMITS OF PAYMENT FOR EXCAVATION AND BACKFILL

¼"=1'-0"

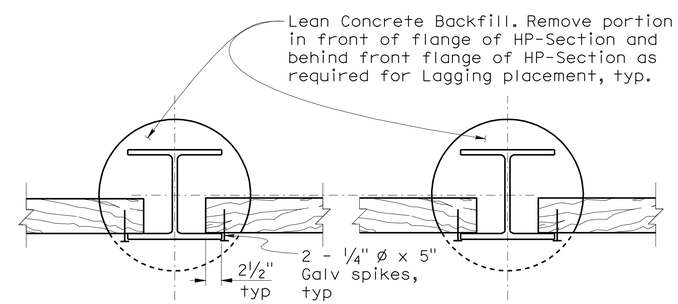

PART PLAN OF LAGGING MEMBER

Note:

No clipping of corners allowed.

LAGGING DETAILS

No Scale

DESIGN	BY T. Pinell	CHECKED M. Quach	
DETAILS	BY A. Chen	CHECKED G. Schuster	
QUANTITIES	BY T. Pinell	CHECKED M. Quach	

STATE OF CALIFORNIA DEPARTMENT OF TRANSPORTATION

DIVISION OF ENGINEERING SERVICES STRUCTURE DESIGN DESIGN BRANCH 5

BRIDGE NO. 04E0026
POST MILE 5.9

MEYERS WALL DETAILS NO. 2

STRUCTURES DESIGN DETAIL SHEET (ENGLISH) (REV. 10/25/05)

ORIGINAL SCALE IN INCHES FOR REDUCED PLANS 0 1 2 3

CU 01
EA 475011

DISREGARD PRINTS BEARING EARLIER REVISION DATES

REVISION DATES: 6-18-09 6-30-09 7-14-09 11-02-09 3-26-10

SHEET 6 OF 8

FILE => 475011-q-dt02.dgn

USERNAME => trlenard DATE PLOTTED => 19-JUL-2010 TIME PLOTTED => 10:40

DIST	COUNTY	ROUTE	POST MILES TOTAL PROJECT	SHEET No	TOTAL SHEETS
01	Hum	254	5.9	71	72

REGISTERED CIVIL ENGINEER 3-30-10 DATE

7-19-10
PLANS APPROVAL DATE

REGISTERED PROFESSIONAL ENGINEER G. SCHUSTER No. C 63897 Exp. 09-30-10 CIVIL STATE OF CALIFORNIA

The State of California or its officers or agents shall not be responsible for the accuracy or completeness of electronic copies of this plan sheet.

Notes:

1. Level of initial grouting
2. Level of secondary grouting
3. Level of initial grouting inside corrugated sheathing
4. Bonded length shall be determined by the Contractor
5. Unbonded length
   Top Row: 65′ min
   Bottom Row: 50′ min

Note A: Steel tube welded to bearing plate (Min length = 48", min thickness = ¼") Galvanize assembly after fabrication. Fill tube with grout.

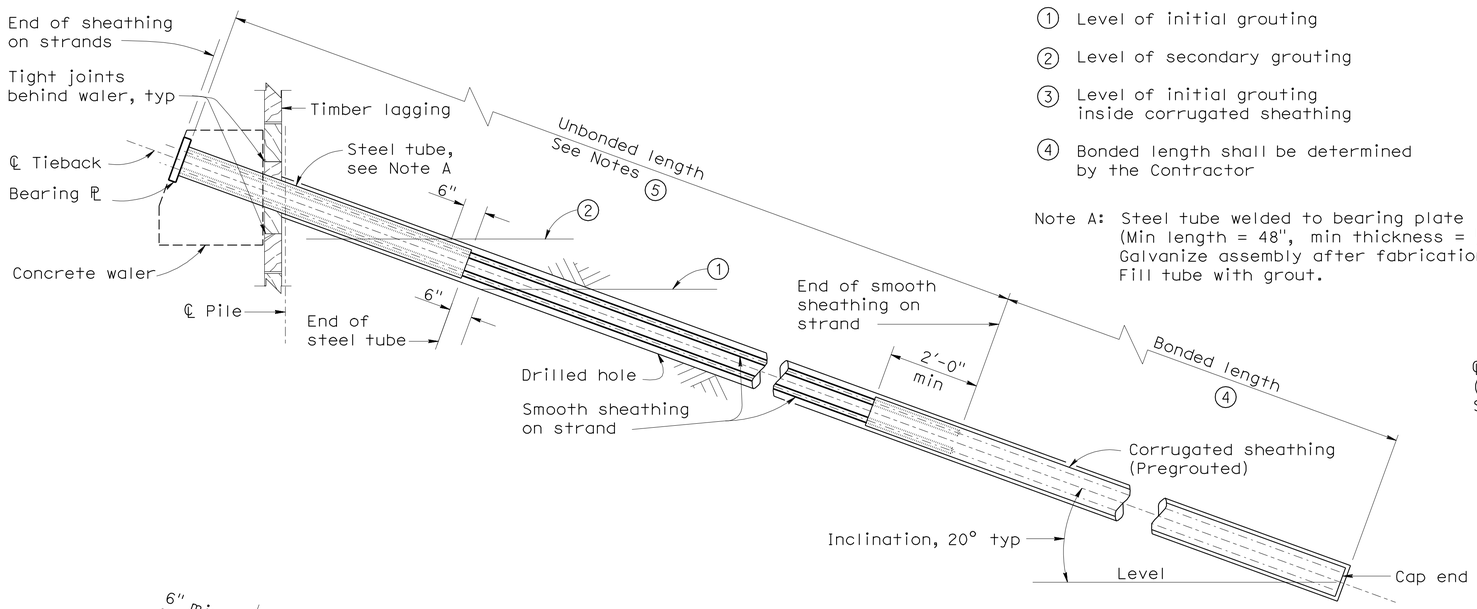

TIEBACK TENDON DETAIL (STRAND) - (Alternative A)

No Scale

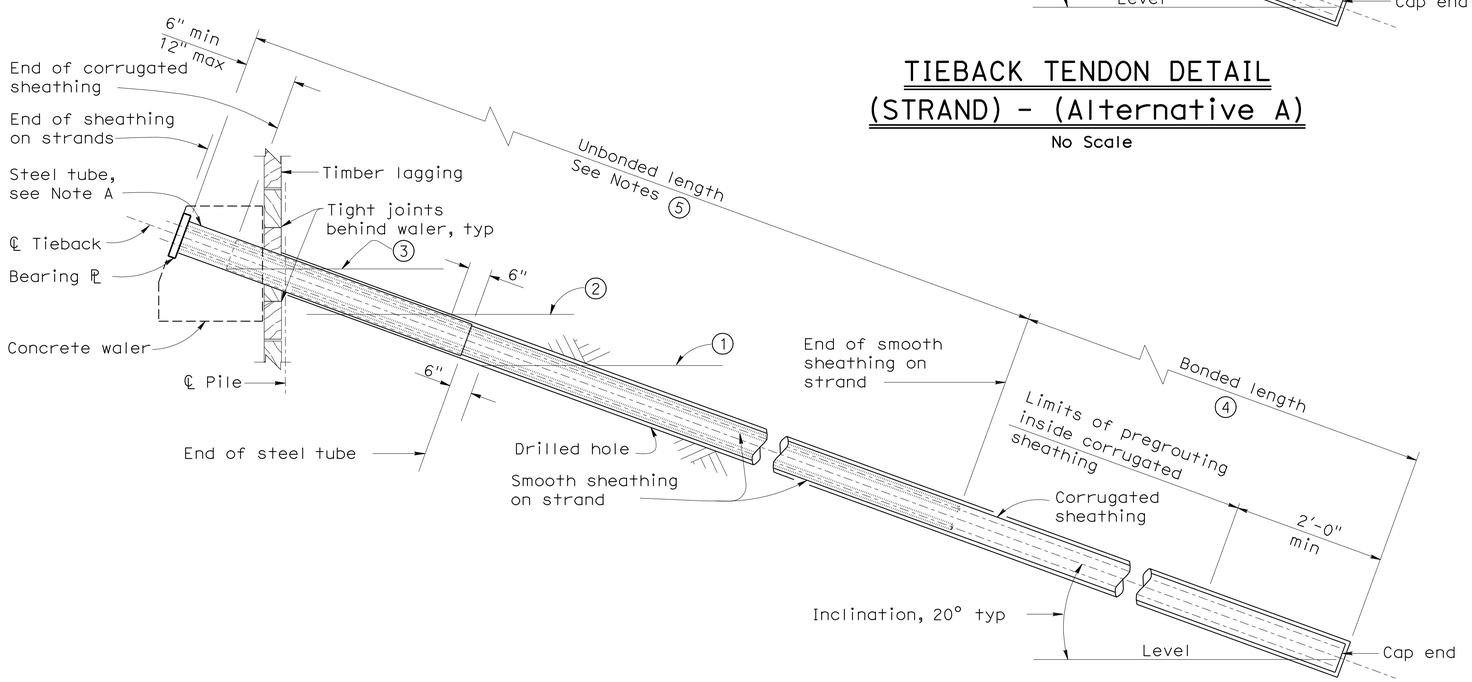

TIEBACK TENDON DETAIL (STRAND) - (Alternative B)

No Scale

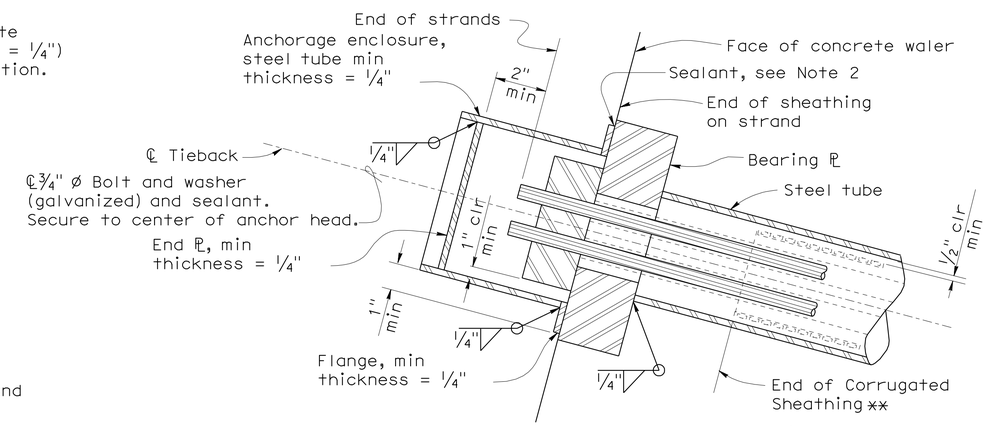

** Alternative B tendon only

ALTERNATIVE 2

No Scale

Note:

1. Anchorage enclosure shall have provisions to allow injecting grout at low end and venting at high end. Galvanize after fabrication.
2. Silicone Sealant to cover full width of flange.

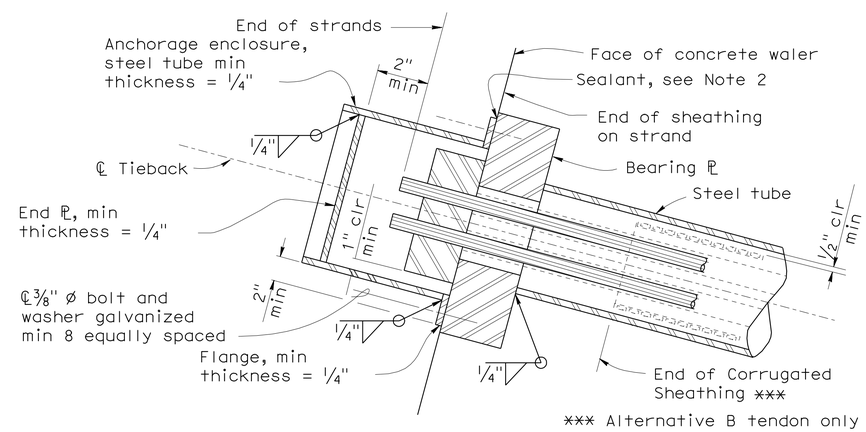

*** Alternative B tendon only

ALTERNATIVE 1

No Scale

ANCHORAGE ENCLOSURE DETAILS

No Scale

DESIGN	BY T. Pinell	CHECKED M. Quach	
DETAILS	BY A. Chen	CHECKED G. Schuster	
QUANTITIES	BY T. Pinell	CHECKED M. Quach	

STATE OF CALIFORNIA DEPARTMENT OF TRANSPORTATION

DIVISION OF ENGINEERING SERVICES STRUCTURE DESIGN DESIGN BRANCH 5

BRIDGE NO. 04E0026
POST MILE 5.9

MEYERS WALL
TIEBACK DETAILS

STRUCTURES DESIGN DETAIL SHEET (ENGLISH) (REV. 10/25/05)

ORIGINAL SCALE IN INCHES FOR REDUCED PLANS 0 1 2 3

CU 01
EA 475011

DISREGARD PRINTS BEARING EARLIER REVISION DATES 6-12-09

REVISION DATES

SHEET 7 OF 8

FILE => 475011-q-rwdt03-tieback.dgn

USERNAME => tfleonard DATE PLOTTED => 19-JUL-2010 TIME PLOTTED => 10:40

DIST	COUNTY	ROUTE	POST MILES TOTAL PROJECT	SHEET No	TOTAL SHEETS
01	Hum	254	5.9	72	72

REGISTERED CIVIL ENGINEER 3-30-10 DATE

7-19-10
PLANS APPROVAL DATE

REGISTERED PROFESSIONAL ENGINEER G. SCHUSTER No. C 63897 Exp. 09-30-10 CIVIL STATE OF CALIFORNIA

The State of California or its officers or agents shall not be responsible for the accuracy or completeness of electronic copies of this plan sheet.

NOTES:

1. Galvanize rail assembly after fabrication.
2. Post shall be normal to railing.
3. Rail tubes shall be shop bent or fabricated to fit horizontal curve when radius is less than 1'-0"
4. Tube splices shall be located in the tubes spanning deck or wall joints. Increase joint width in tubes to match expansion joint width and increase sleeve length correspondingly.
5. Top rail tube shall be continuous over not less than two posts except a short post spacing is permitted near deck or wall joints, electroliers, or other rail discontinuities as noted.
6. For 3 NPS XS pipe rails use 2.5 NPS STD pipe for inner coupling tube and for 2 NPS STD pipe use 1.5 NPS STD pipe for coupling tube railing.
7. For details and reinforcing not shown, see Standard Plans.
8. The contractor shall verify all dependent dimensions in the field before ordering or fabricating any material.
9. Contractor to provide anchor bolt layout before anchor bolts are placed.
10. Resin capsule anchorage is subject to approval of Engineer. Installation procedures shall comply with manufacturer's instructions.

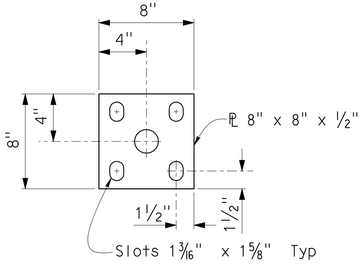

LOWER RAIL ANCHOR PLATE DETAIL
No Scale

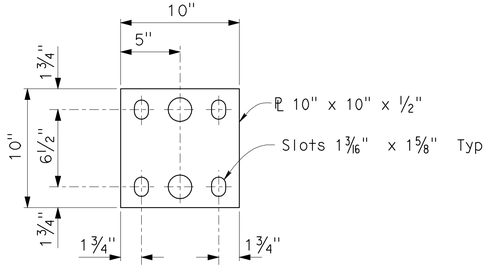

POST ANCHOR PLATE
No Scale

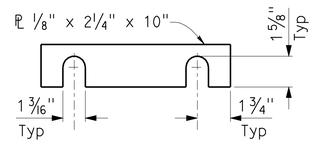

SHIM DETAIL
No Scale

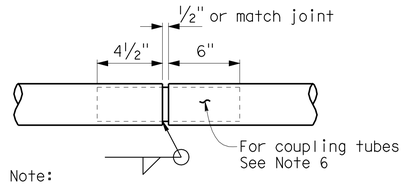

Note:
Coupling tube welded to one rail only so as to allow for expansion and contraction.

TUBE COUPLING DETAIL
No Scale

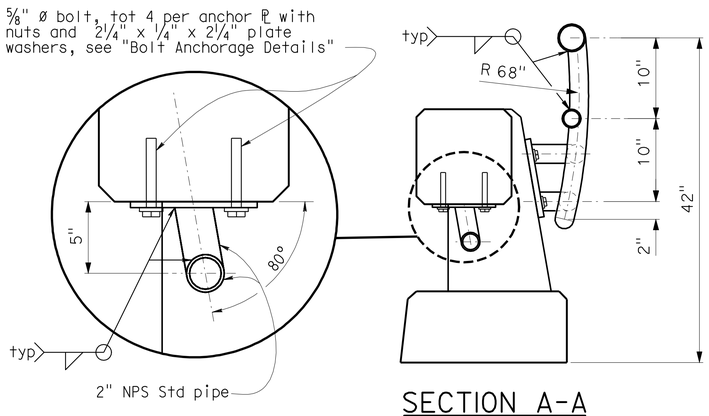

SECTION A-A
No Scale

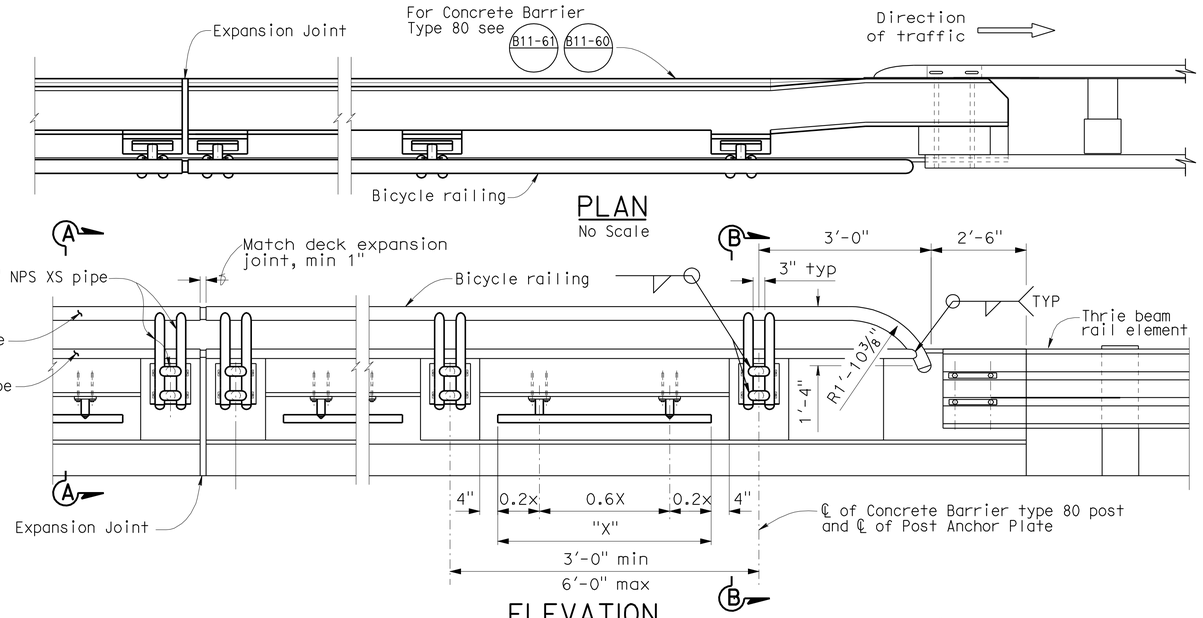

PLAN
No Scale

ELEVATION
No Scale

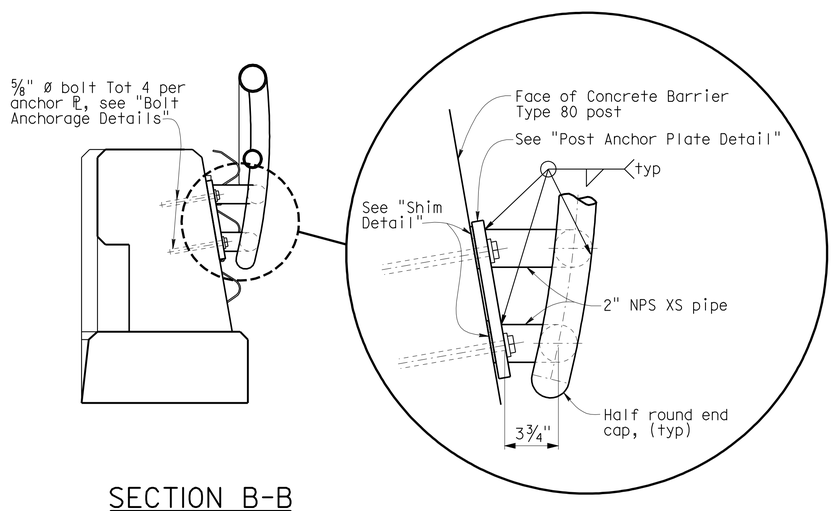

SECTION B-B
No Scale

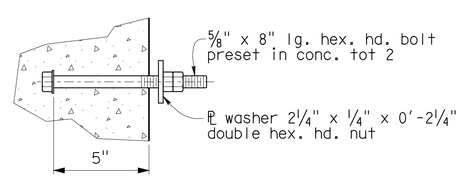

CIP ALTERNATIVE 1

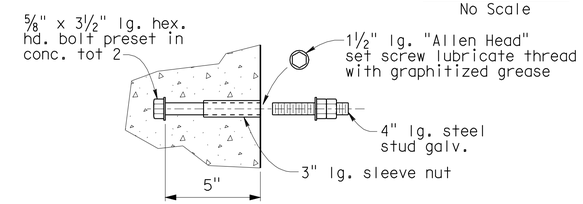

CIP ALTERNATIVE 2

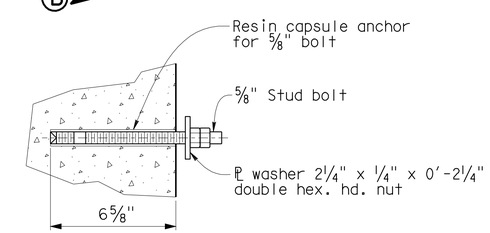

RESIN CAPSULE ALTERNATIVE
See note 10

BOLT ANCHORAGE DETAILS
No Scale
See notes 8 & 9

STANDARD DRAWING			
FILE NO. xs16-510-e	APPROVED BY Tillat Satter (RESPONSIBLE TECHNICAL SPECIALIST)	RELEASED BY Robert Lacalle (RESPONSIBLE OFFICE CHIEF)	
	APPROVAL DATE 9-15-2009	RELEASE DATE 9-15-2009	

STATE OF CALIFORNIA
DEPARTMENT OF TRANSPORTATION

DIVISION OF ENGINEERING SERVICES

BRIDGE NO. 04E0026
POST MILE 5.9

MEYERS WALL
42" HIGH TYPE 80 BICYCLE RAIL
CONCRETE BARRIER TYPE 80

DS OSD 2147A (ENGLISH STANDARD DRAWING "XS" BORDER REV. 01/11/08)

ORIGINAL SCALE IN INCHES FOR REDUCED PLANS 0 1 2 3

CU
EA

DISREGARD PRINTS BEARING EARLIER REVISION DATES

REVISION DATES (PRELIMINARY STAGE ONLY): ~~9-01-09~~ ~~9-11-09~~ 3-26-10

SHEET 8 OF 8

USERNAME => trlenard

475011-t-brdt.dgn

DATE PLOTTED => 19-JUL-2010 TIME PLOTTED => 10:40