Dist	COUNTY	ROUTE	POST MILES TOTAL PROJECT	SHEET No.	TOTAL SHEETS
01	Hum	254	11.0	1	44

ER-43M4(004)E

STATE OF CALIFORNIA

DEPARTMENT OF TRANSPORTATION

PROJECT PLANS FOR CONSTRUCTION ON

STATE HIGHWAY

IN HUMBOLDT COUNTY NEAR MYERS FLAT AT 0.2 MILE WEST OF BRIDGE CREEK BRIDGE

INDEX OF PLANS

SHEET No	DESCRIPTION
1	TITLE AND LOCATION MAP
2-3	TYPICAL CROSS SECTIONS
4-5	LAYOUTS
6-7	PROFILE AND SUPERELEVATION DIAGRAM
8	CONSTRUCTION DETAILS
9	TEMPORARY WATER POLLUTION CONTROL
10-11	EROSION CONTROL PLAN AND QUANTITIES
12-22	DRAINAGE PLANS, PROFILES, DETAILS AND QUANTITIES
23	CONSTRUCTION AREA SIGNS
24-29	STAGE CONTRUCTION AND QUANITIES
30-31	PAVEVMENT DELINEATION AND QUANTITIES
32-34	DETOUR PLAN AND QUANTITIES
35	SUMMARY OF QUANITIES
36-44	NEW AND REVISED STANDARD PLANS

THE STANDARD PLANS LIST APPLICABLE TO THIS CONTRACT IS INCLUDED IN THE NOTICE TO BIDDERS AND SPECIAL PROVISIONS BOOK.

TO BE SUPPLEMENTED BY STANDARD PLANS DATED MAY 2006

LOCATION OF CONSTRUCTION

PM 11.0

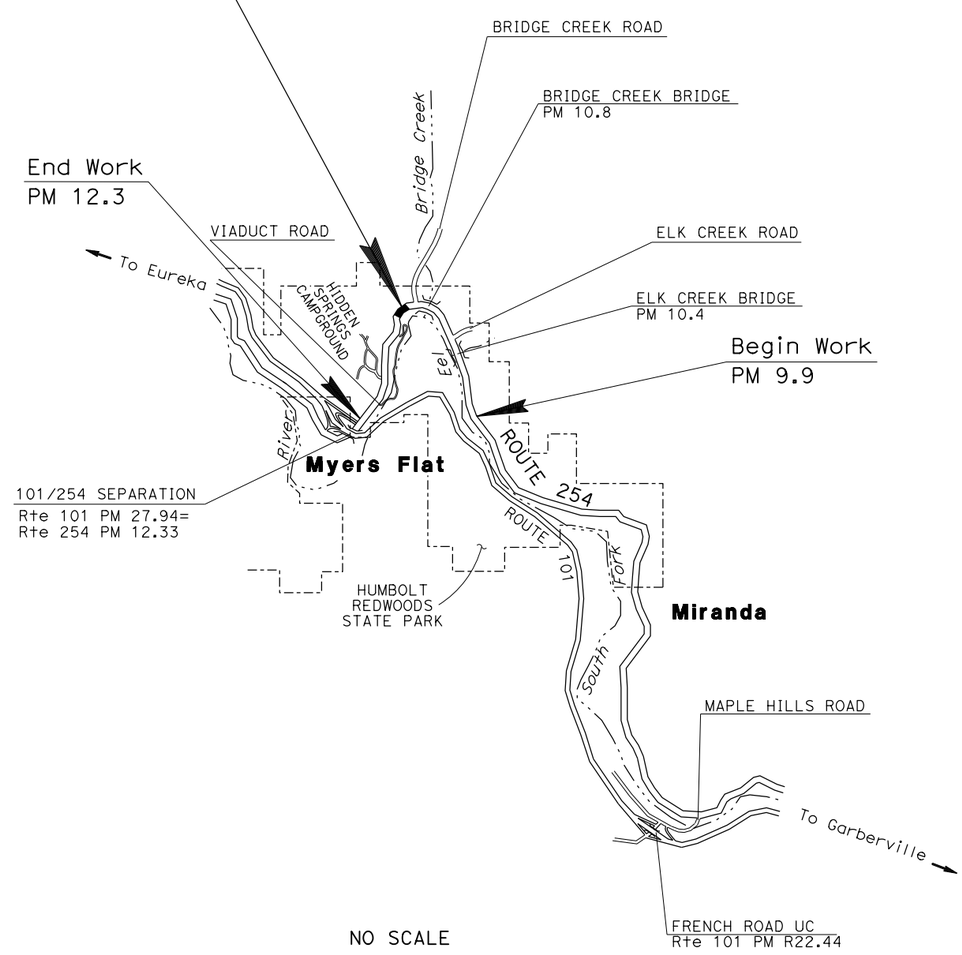

NO SCALE

THE CONTRACTOR SHALL POSSESS THE CLASS (OR CLASSES) OF LICENSE AS SPECIFIED IN THE "NOTICE TO BIDDERS."

PROJECT MANAGER: FRANK DEMLING

DESIGN ENGINEER: FERMIN BARRIGA

PROJECT ENGINEER REGISTERED CIVIL ENGINEER — DATE: 5-15-12

REGISTERED PROFESSIONAL ENGINEER — HORACIO PARAS JR — No. C73255 — Exp. 12-31-12 — CIVIL — STATE OF CALIFORNIA

MAY 21, 2012

PLANS APPROVAL DATE

THE STATE OF CALIFORNIA OR ITS OFFICERS OR AGENTS SHALL NOT BE RESPONSIBLE FOR THE ACCURACY OR COMPLETENESS OF SCANNED COPIES OF THIS PLAN SHEET.

CONTRACT No.	01-475024
PROJECT ID	0100000334

LAST REVISION 03-28-11

DATE PLOTTED => 29-AUG-2012
TIME PLOTTED => 15:04

Dist	COUNTY	ROUTE	POST MILES TOTAL PROJECT	SHEET No.	TOTAL SHEETS
01	Hum	254	11.0	2	44

REGISTERED CIVIL ENGINEER 5-15-12 DATE

5-21-12
PLANS APPROVAL DATE

REGISTERED PROFESSIONAL ENGINEER HORACIO PARAS JR No. C73255 Exp. 12-31-12 CIVIL STATE OF CALIFORNIA

THE STATE OF CALIFORNIA OR ITS OFFICERS OR AGENTS SHALL NOT BE RESPONSIBLE FOR THE ACCURACY OR COMPLETENESS OF SCANNED COPIES OF THIS PLAN SHEET.

NOTES:

1. DIMENSIONS OF THE PAVEMENT STRUCTURES (STRUCTURAL SECTIONS) ARE SUBJECT TO TOLERANCES SPECIFIED IN THE STANDARD SPECIFICATIONS.
2. SUPERELEVATIONS ARE SHOWN ON SUPERELEVATION DIAGRAMS.
3. FOR UNDERDRAIN DETAILS, SEE DRAINAGE PLANS.
4. LIMITS OF Var DEPTH COLD PLANE AC Pvmt ARE FROM "D1" 10+00.00 TO "D1" 14+75.00 AND "D1" 15+63.85 TO "D1" 16+00.00. FOR ADDITIONAL COLD PLANE AC Pvmt DETAILS SEE SHEET C-1.

ABBREVIATIONS

CP - CATCH POINT

DFL - DITCH FLOW LINE

DESIGN DESIGNATION

2011 ADT=1,730 D=60%
2031 ADT=1,900 T=3.0%
2011 DHV= 480 V=55 MPH
2031 DHV= 520 TI_{20}=7.0

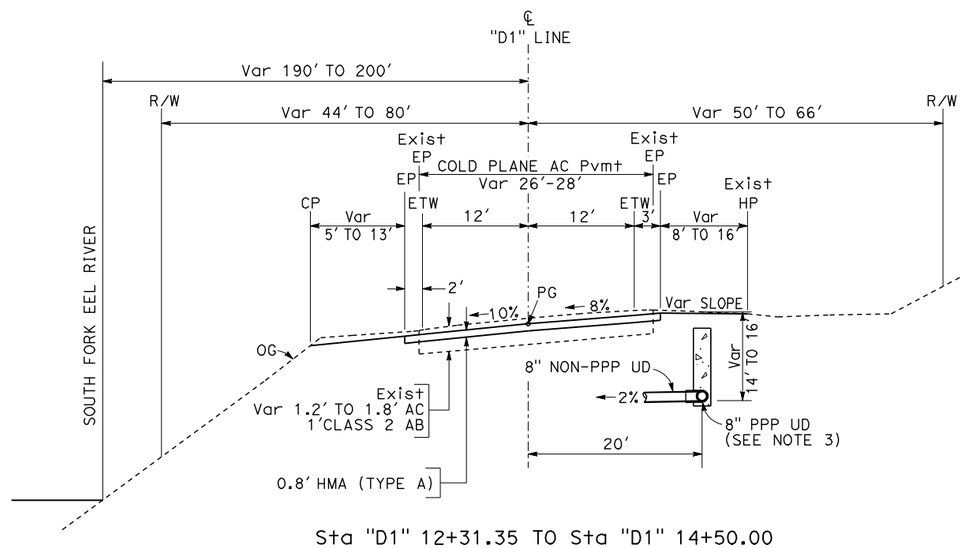

Sta "D1" 12+31.35 TO Sta "D1" 14+50.00

ROUTE 254

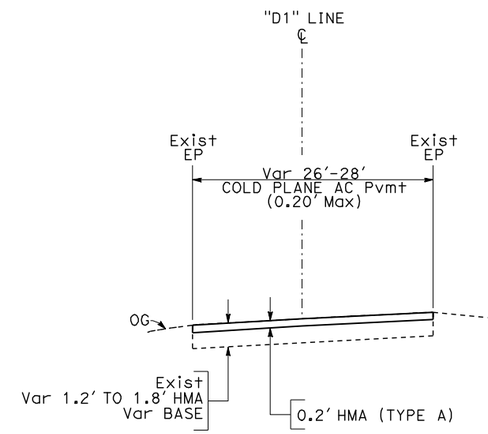

Sta "D1" 90+80.00 Sta "D1" 10+00.00
Sta "D1" 16+00.00 Sta "D1" 16+20.00

ROUTE 254

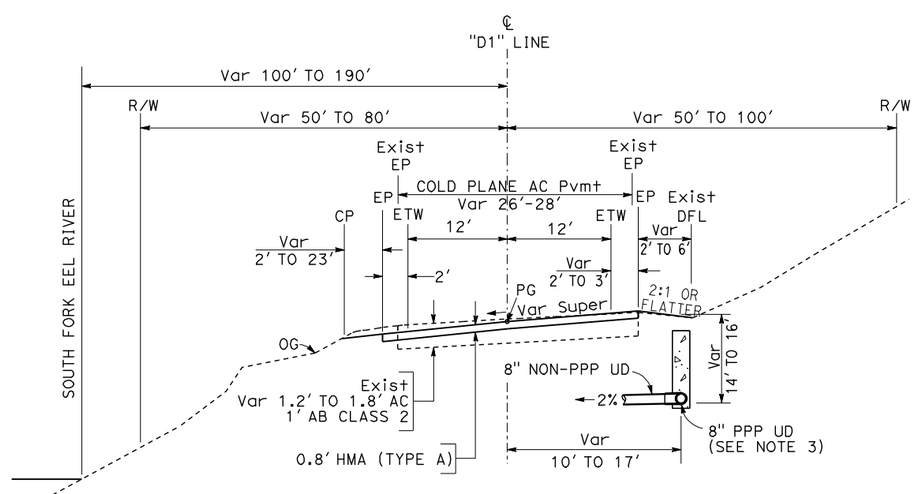

Sta "D1" 10+00.00 TO Sta "D1" 12+31.35

ROUTE 254

TYPICAL CROSS SECTIONS

NO SCALE

X-1

STATE OF CALIFORNIA - DEPARTMENT OF TRANSPORTATION
Caltrans
NORTH REGION
DIVISION OF ENGINEERING

FUNCTIONAL SUPERVISOR: FERMIN BARRIGA
CALCULATED-DESIGNED BY: HORACIO PARAS JR
CHECKED BY: FERMIN BARRIGA
REVISED BY
DATE REVISED

LAST REVISION 06-22-11
DATE PLOTTED => 19-JUL-2012
TIME PLOTTED => 14:41

Dist	COUNTY	ROUTE	POST MILES TOTAL PROJECT	SHEET No.	TOTAL SHEETS
01	Hum	254	11.0	3	44

REGISTERED CIVIL ENGINEER 5-15-12 DATE

5-21-12
PLANS APPROVAL DATE

REGISTERED PROFESSIONAL ENGINEER HORACIO PARAS JR No. C73255 Exp. 12-31-12 CIVIL STATE OF CALIFORNIA

THE STATE OF CALIFORNIA OR ITS OFFICERS OR AGENTS SHALL NOT BE RESPONSIBLE FOR THE ACCURACY OR COMPLETENESS OF SCANNED COPIES OF THIS PLAN SHEET.

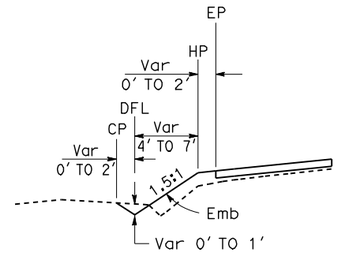

Sta "D1" 15+00 Lt TO Sta "D1" 15+25 Lt
TYPICAL DITCH SECTION

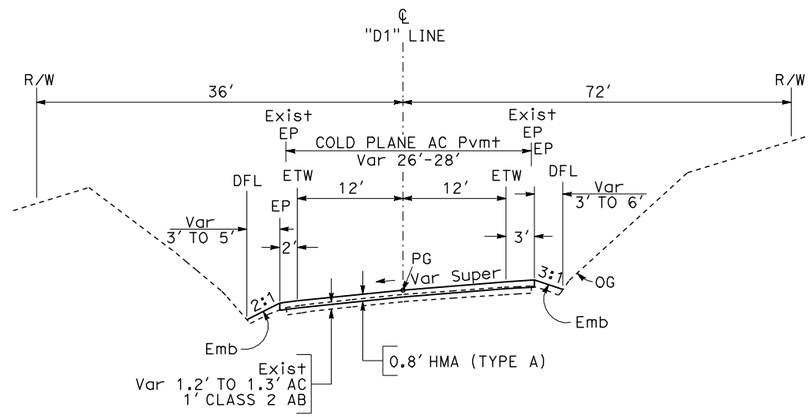

Sta "D1" 15+25.00 TO Sta "D1" 16+00.00
ROUTE 254

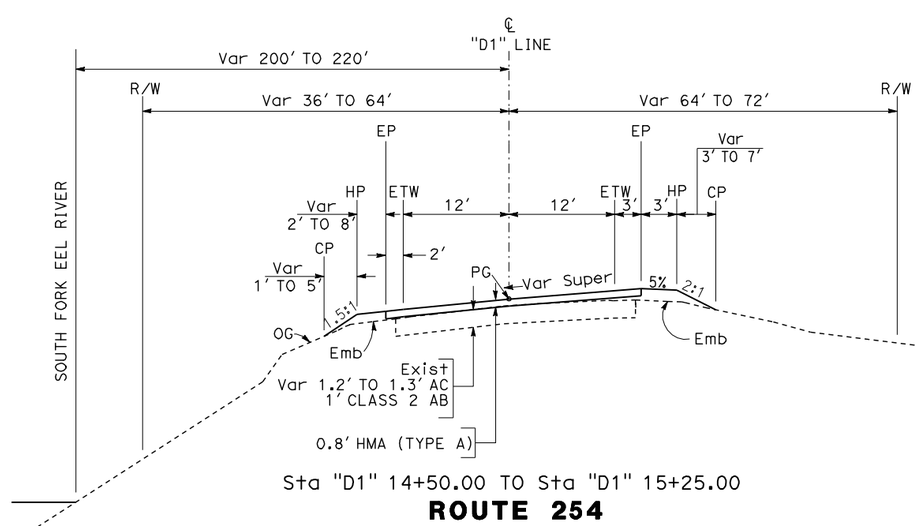

Sta "D1" 14+50.00 TO Sta "D1" 15+25.00
ROUTE 254

TYPICAL CROSS SECTIONS

NO SCALE

X-2

REVISED BY	DATE REVISED

CALCULATED-DESIGNED BY: HORACIO PARAS JR
CHECKED BY: FERMIN BARRIGA
FUNCTIONAL SUPERVISOR: FERMIN BARRIGA

STATE OF CALIFORNIA - DEPARTMENT OF TRANSPORTATION
Caltrans®
NORTH REGION
DIVISION OF ENGINEERING

LAST REVISION 06-22-11 | DATE PLOTTED => 19-JUL-2012 | TIME PLOTTED => 14:41

Dist	COUNTY	ROUTE	POST MILES TOTAL PROJECT	SHEET No.	TOTAL SHEETS
01	Hum	254	11.0	4	44

REGISTERED CIVIL ENGINEER 5-15-12 DATE

5-21-12
PLANS APPROVAL DATE

REGISTERED PROFESSIONAL ENGINEER HORACIO PARAS JR No. C73255 Exp. 12-31-12 CIVIL STATE OF CALIFORNIA

THE STATE OF CALIFORNIA OR ITS OFFICERS OR AGENTS SHALL NOT BE RESPONSIBLE FOR THE ACCURACY OR COMPLETENESS OF SCANNED COPIES OF THIS PLAN SHEET.

NOTE:

1. FOR ACCURATE RIGHT OF WAY DATA, CONTACT RIGHT OF WAY ENGINEERING AT THE DISTRICT OFFICE.
2. Exist AC Pvmt SHALL BE COLD PLANED TO THE BOTTOM OF THE PROPOSED STRUCTURAL SECTION. SEE SHEET C-1 FOR MORE DETAILS.

ABBREVIATIONS

PDE - PERMANENT DRAINAGE EASEMENT

CURVE DATA

No. ⊛	R	Δ	T	L
③	1200′	17°38′55"	186.29′	369.63′
④	800′	22°49′12"	161.45′	318.63′
⑤	500′	17°18′12"	76.08′	151.00′
⑥	660′	14°35′04"	84.46′	168.00′
⑦	700′	17°0′01"	104.62′	207.70′

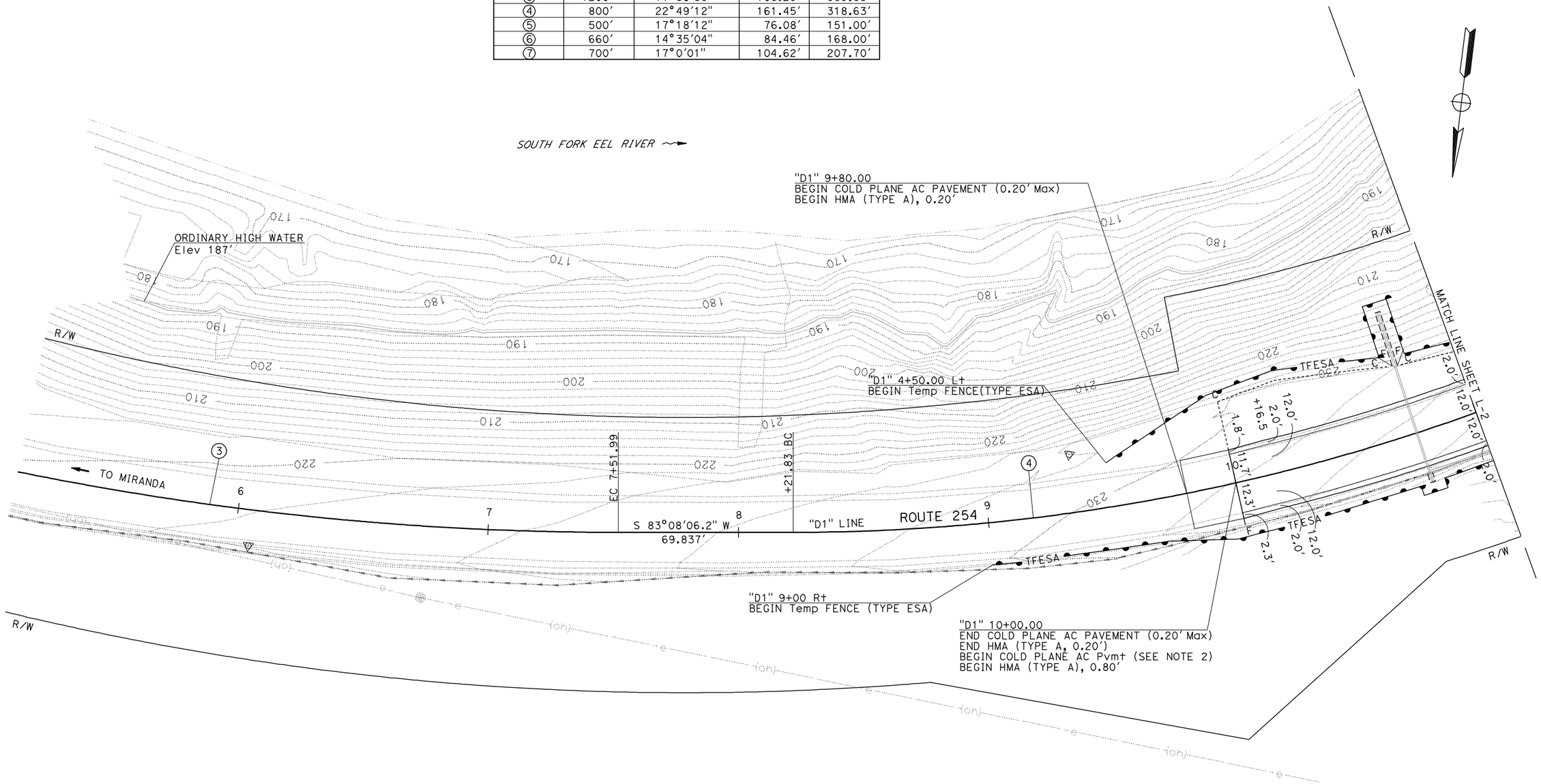

LAYOUT

SCALE: 1" = 20′ **L-1**

STATE OF CALIFORNIA - DEPARTMENT OF TRANSPORTATION
Caltrans
NORTH REGION
DIVISION OF ENGINEERING

FUNCTIONAL SUPERVISOR: FERMIN BARRIGA

CALCULATED-DESIGNED BY: HORACIO PARAS JR
CHECKED BY: FERMIN BARRIGA

REVISED BY | DATE REVISED

LAST REVISION 01-26-11 | DATE PLOTTED => 19-JUL-2012 | TIME PLOTTED => 14:41

Dist	COUNTY	ROUTE	POST MILES TOTAL PROJECT	SHEET No.	TOTAL SHEETS
01	Hum	254	11.0	5	44

REGISTERED CIVIL ENGINEER 5-15-12 DATE

5-21-12
PLANS APPROVAL DATE

REGISTERED PROFESSIONAL ENGINEER HORACIO PARAS JR No. C73255 Exp. 12-31-12 CIVIL STATE OF CALIFORNIA

THE STATE OF CALIFORNIA OR ITS OFFICERS OR AGENTS SHALL NOT BE RESPONSIBLE FOR THE ACCURACY OR COMPLETENESS OF SCANNED COPIES OF THIS PLAN SHEET.

NOTE:

1. FOR ACCURATE RIGHT OF WAY DATA, CONTACT RIGHT OF WAY ENGINEERING AT THE DISTRICT OFFICE.
2. Exist ACCESS ROAD SHALL BE DECOMISSIONED AND PREPARED FOR REVEGETATION. EXISTING SURFACE SHALL BE EXCAVATED SIX INCHES. SEE LANDSCAPE PLANS FOR MORE INFORMATION. REVEGETATION TO BE COMPLETED BY OTHERS.
3. Exist AC Pvmt SHALL BE COLD PLANED TO THE BOTTOM OF THE PROPOSED STRUCTURAL SECTION. SEE SHEET C-1 FOR MORE DETAILS.

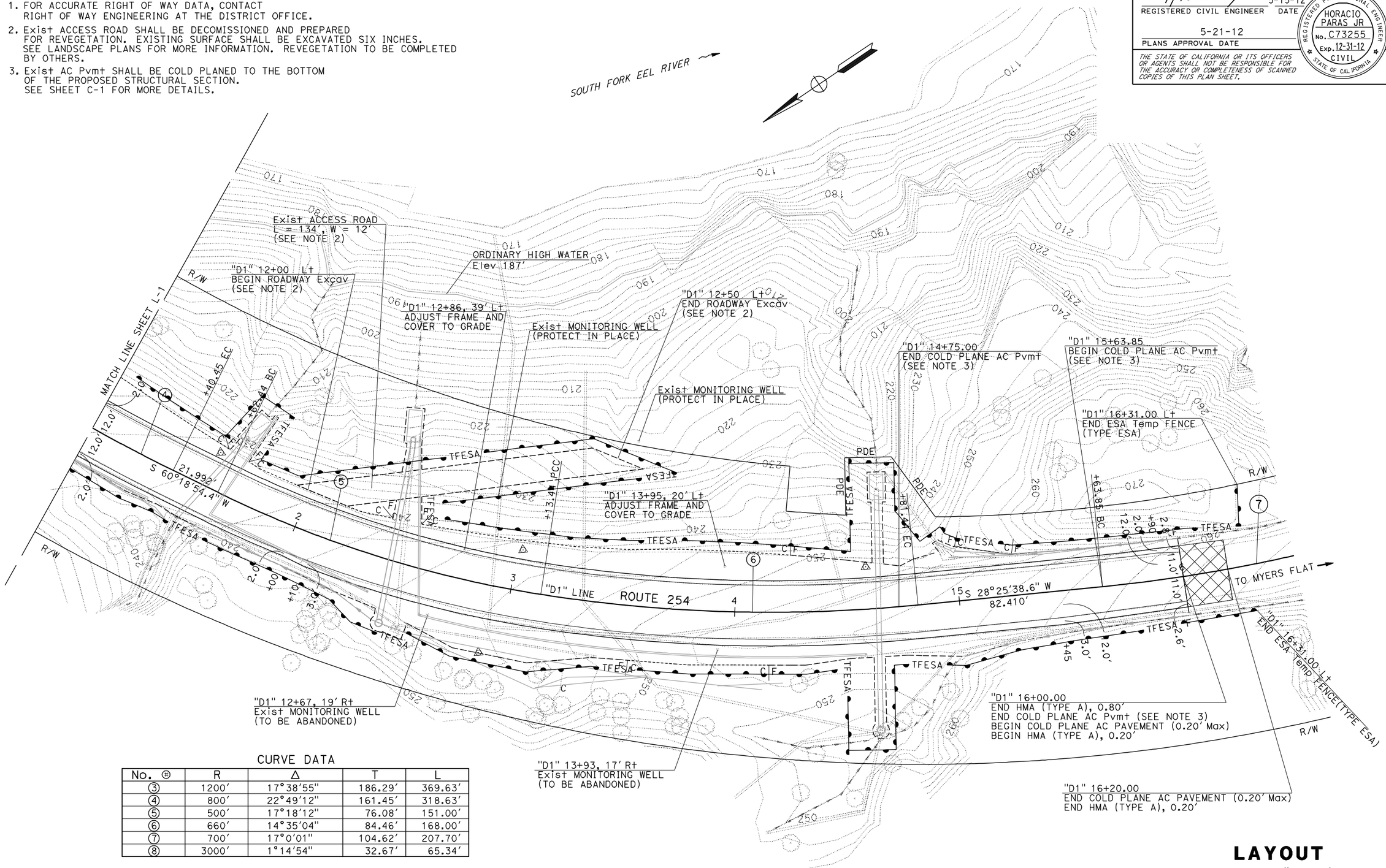

CURVE DATA

No. ⊕	R	Δ	T	L
③	1200'	17°38'55"	186.29'	369.63'
④	800'	22°49'12"	161.45'	318.63'
⑤	500'	17°18'12"	76.08'	151.00'
⑥	660'	14°35'04"	84.46'	168.00'
⑦	700'	17°0'01"	104.62'	207.70'
⑧	3000'	1°14'54"	32.67'	65.34'

LAYOUT

SCALE: 1" = 20'

L-2

STATE OF CALIFORNIA - DEPARTMENT OF TRANSPORTATION
Caltrans
NORTH REGION
DIVISION OF ENGINEERING

FUNCTIONAL SUPERVISOR: FERMIN BARRIGA
CALCULATED-DESIGNED BY: HORACIO PARAS JR
CHECKED BY: FERMIN BARRIGA
REVISED BY
DATE REVISED

LAST REVISION 02-28-11
DATE PLOTTED => 19-JUL-2012
TIME PLOTTED => 14:41

Dist	COUNTY	ROUTE	POST MILES TOTAL PROJECT	SHEET No.	TOTAL SHEETS
01	Hum	254	11.0	6	44

REGISTERED CIVIL ENGINEER 5-15-12 DATE

5-21-12
PLANS APPROVAL DATE

REGISTERED PROFESSIONAL ENGINEER HORACIO PARAS JR No. C73255 Exp. 12-31-12 CIVIL STATE OF CALIFORNIA

THE STATE OF CALIFORNIA OR ITS OFFICERS OR AGENTS SHALL NOT BE RESPONSIBLE FOR THE ACCURACY OR COMPLETENESS OF SCANNED COPIES OF THIS PLAN SHEET.

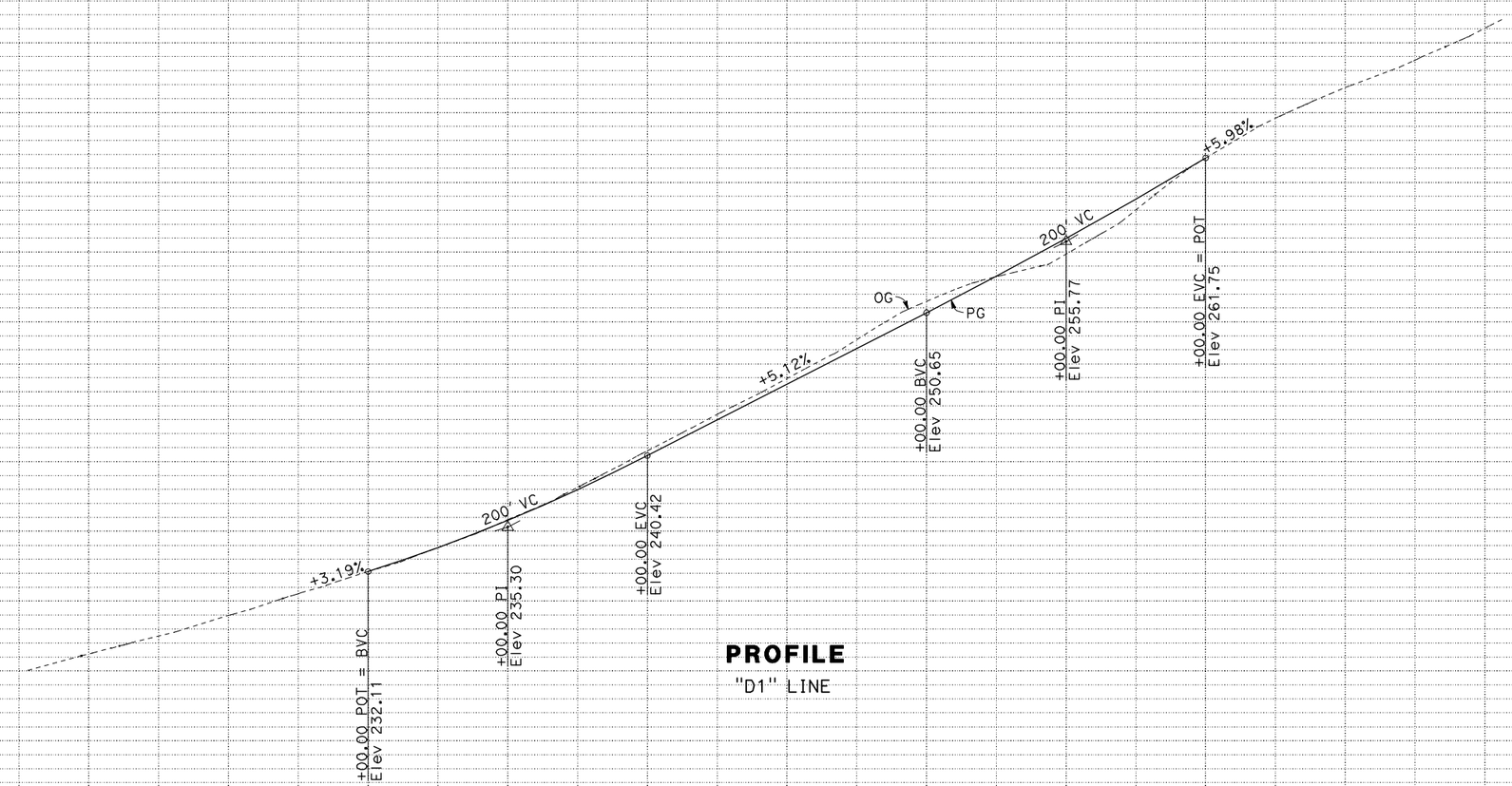

PROFILE
"D1" LINE

PROFILE
SCALE:
Vert: 1"=5'
Horiz: 1"=50'

P-1

STATION		8	9	10+00	11	12	13	14	15	16	17	18	TOTAL
CY	Exc						238.4						238.4
	Emb						89.2						89.2

STATE OF CALIFORNIA - DEPARTMENT OF TRANSPORTATION
Caltrans
NORTH REGION
DIVISION OF ENGINEERING

FUNCTIONAL SUPERVISOR: FERMIN BARRIGA
CALCULATED-DESIGNED BY: HORACIO PARAS JR
CHECKED BY: FERMIN BARRIGA
REVISED BY
DATE REVISED

LAST REVISION 01-24-11
DATE PLOTTED => 19-JUL-2012
TIME PLOTTED => 14:41

Dist	COUNTY	ROUTE	POST MILES TOTAL PROJECT	SHEET No.	TOTAL SHEETS
01	Hum	254	11.0	7	43

REGISTERED CIVIL ENGINEER 5-15-12 DATE

5-21-12
PLANS APPROVAL DATE

REGISTERED PROFESSIONAL ENGINEER HORACIO PARAS JR No. C73255 Exp. 12-31-12 CIVIL STATE OF CALIFORNIA

THE STATE OF CALIFORNIA OR ITS OFFICERS OR AGENTS SHALL NOT BE RESPONSIBLE FOR THE ACCURACY OR COMPLETENESS OF SCANNED COPIES OF THIS PLAN SHEET.

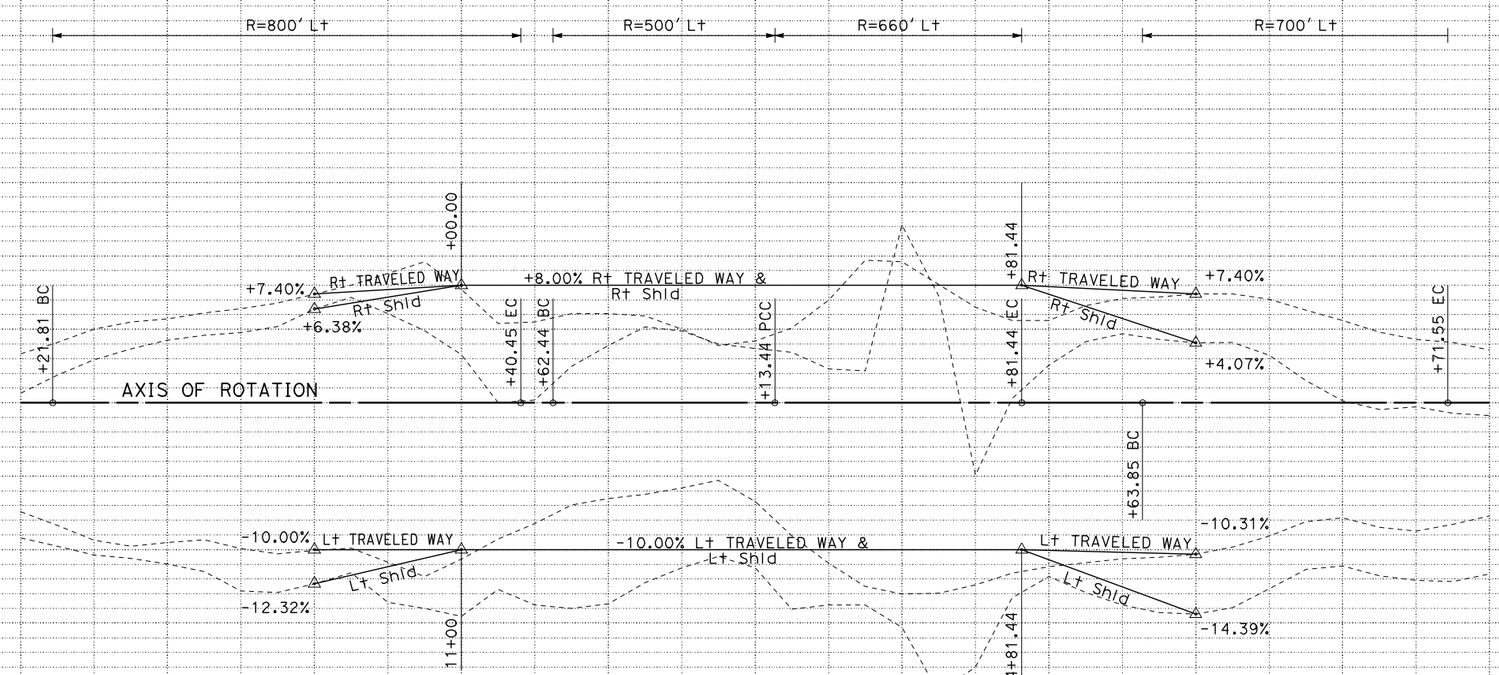

SUPERELEVATION DIAGRAM

"D1" LINE

SUPERELEVATION DIAGRAM

NO SCALE

SE-1

STATION	8	9	10+00	11	12	13	14	15	16	17	18	TOTAL
CY Exc												
CY Emb												

STATE OF CALIFORNIA - DEPARTMENT OF TRANSPORTATION
Caltrans®
NORTH REGION
DIVISION OF ENGINEERING

FUNCTIONAL SUPERVISOR: FERMIN BARRIGA

CALCULATED-DESIGNED BY: HORACIO PARAS JR
CHECKED BY: FERMIN BARRIGA

REVISED BY
DATE REVISED

LAST REVISION 01-21-11
DATE PLOTTED => 19-JUL-2012
TIME PLOTTED => 14:41

Dist	COUNTY	ROUTE	POST MILES TOTAL PROJECT	SHEET No.	TOTAL SHEETS
01	Hum	254	11.0	8	44

REGISTERED CIVIL ENGINEER 5-15-12 DATE

5-21-12
PLANS APPROVAL DATE

REGISTERED PROFESSIONAL ENGINEER HORACIO PARAS JR No. C73255 Exp. 12-31-12 CIVIL STATE OF CALIFORNIA

THE STATE OF CALIFORNIA OR ITS OFFICERS OR AGENTS SHALL NOT BE RESPONSIBLE FOR THE ACCURACY OR COMPLETENESS OF SCANNED COPIES OF THIS PLAN SHEET.

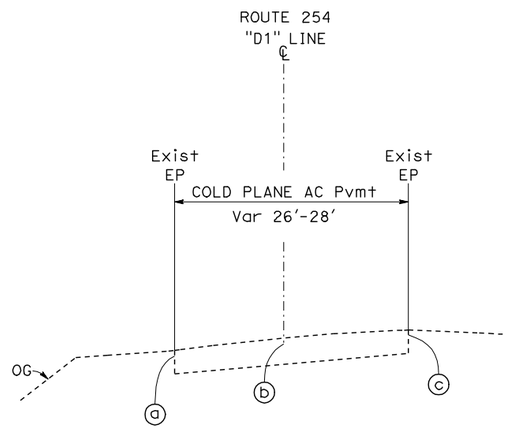

COLD PLANE AC PAVEMENT

"D1" 10+00 TO "D1" 16+00

COLD PLANE AC Pvmt

STATION "D1" LINE	MAXIMUM DEPTH (FT)		
	a	b	c
10+00	0.80	0.80	0.80
10+25	0.73	0.73	0.80
10+50	0.68	0.82	0.92
10+75	0.49	0.77	0.91
11+00	0.68	0.85	0.72
11+25	0.87	0.84	0.41
11+40.45	1.02	0.91	0.48
11+50	1.12	0.97	0.55
11+62.44	1.25	1.03	0.63
11+75	1.32	1.06	0.71
12+00	1.50	1.16	0.83
12+25	1.55	1.17	0.83
12+50	1.66	1.20	0.75
12+75	1.70	1.17	0.56
13+00	1.58	1.23	0.68
13+13.44	1.45	1.26	0.78
13+25	1.32	1.28	0.84
13+50	1.27	1.45	1.25
13+75	1.31	1.69	1.79
14+00	1.18	1.63	1.99
14+25	0.90	1.35	1.30
14+50	0.44	0.78	0.33
14+75	0.10	0.10	0.00
15+00	0.00	0.00	0.00
15+25	0.00	0.00	0.00
15+50	0.00	0.00	0.00
15+63.85	0.22	0.31	0.24
15+75	0.45	0.54	0.50
16+00	0.80	0.80	0.80

CONSTRUCTION DETAILS

NO SCALE

C-1

STATE OF CALIFORNIA - DEPARTMENT OF TRANSPORTATION
Caltrans®
NORTH REGION
DIVISION OF ENGINEERING

FUNCTIONAL SUPERVISOR: FERMIN BARRIGA
CALCULATED-DESIGNED BY: HORACIO PARAS JR
CHECKED BY: FERMIN BARRIGA
REVISED BY
DATE REVISED

LAST REVISION 06-12-12
DATE PLOTTED => 19-JUL-2012
TIME PLOTTED => 14:41

Dist	COUNTY	ROUTE	POST MILES TOTAL PROJECT	SHEET No.	TOTAL SHEETS
01	Hum	254	11.0	9	44

REGISTERED CIVIL ENGINEER 5-15-12 DATE

5-21-12
PLANS APPROVAL DATE

REGISTERED PROFESSIONAL ENGINEER HORACIO PARAS JR No. C73255 Exp. 12-31-12 CIVIL STATE OF CALIFORNIA

THE STATE OF CALIFORNIA OR ITS OFFICERS OR AGENTS SHALL NOT BE RESPONSIBLE FOR THE ACCURACY OR COMPLETENESS OF SCANNED COPIES OF THIS PLAN SHEET.

TEMPORARY FIBER ROLL

LOCATION	LENGTH (LF)
"D1"10+00.00 R† TO "D1"16+00.00 R†	586.9
PM 10.88 - TEMPORARY STOCKPILE	200.0
TOTAL	786.9

TEMPORARY DRAINAGE INLET PROTECTION

LOCATION	QUANTITY (EACH)
"D1" 12+50.00 R†	2
"D1" 14+61.35 R†	1
TOTAL	3

TEMPORARY CHECK DAM

LOCATION		L†/R†	LENGTH (LF)
FROM	TO		
"D1" 10+60	"D1" 11+45	R†	60
"D1" 11+55	"D1" 12+50	R†	100
"D1" 12+55	"D1" 13+30	R†	80
"D1" 15+15	"D1" 16+25	R†	100
"D1" 15+00	"D1" 16+20	L†	100
		TOTAL	440

TEMPORARY FENCE (TYPE ESA)

LOCATION	LENGTH (LF)
"D1" 9+50.00 TO "D1" 16+31.00 L†	1067
"D1" 9+00.00 TO "D1" 16+31.00 R†	844
TOTAL	1911

TEMPORARY HYDRAULIC MULCH (BONDED FIBER MATRIX)

LOCATION	AREA (SQYD)
"D1" 10+00.00 TO "D1" 16+00.00 R†	486.7
"D1" 10+00.00 TO "D1" 16+00.00 L†	647.1
TOTAL	1133.8

TEMPORARY WATER POLLUTION CONTROL QUANTITIES

WPCQ-1

REVISED BY | DATE REVISED

CALCULATED-DESIGNED BY: HORACIO PARAS JR
CHECKED BY: FERMIN BARRIGA

FUNCTIONAL SUPERVISOR: FERMIN BARRIGA

STATE OF CALIFORNIA - DEPARTMENT OF TRANSPORTATION
Caltrans
NORTH REGION
DIVISION OF ENGINEERING

LAST REVISION 02-08-11 | DATE PLOTTED => 19-JUL-2012 TIME PLOTTED => 14:41

Dist	COUNTY	ROUTE	POST MILES TOTAL PROJECT	SHEET No.	TOTAL SHEETS
01	Hum	254	11.0	10	44

Laura Lazzarotto
LICENSED LANDSCAPE ARCHITECT

5-21-12
PLANS APPROVAL DATE

LICENSED LANDSCAPE ARCHITECT
Name & License No.
Laura Lazzarotto
Signature
8-31-13
Renewal Date
5-16-12
Date
STATE OF CALIFORNIA

THE STATE OF CALIFORNIA OR ITS OFFICERS OR AGENTS SHALL NOT BE RESPONSIBLE FOR THE ACCURACY OR COMPLETENESS OF SCANNED COPIES OF THIS PLAN SHEET.

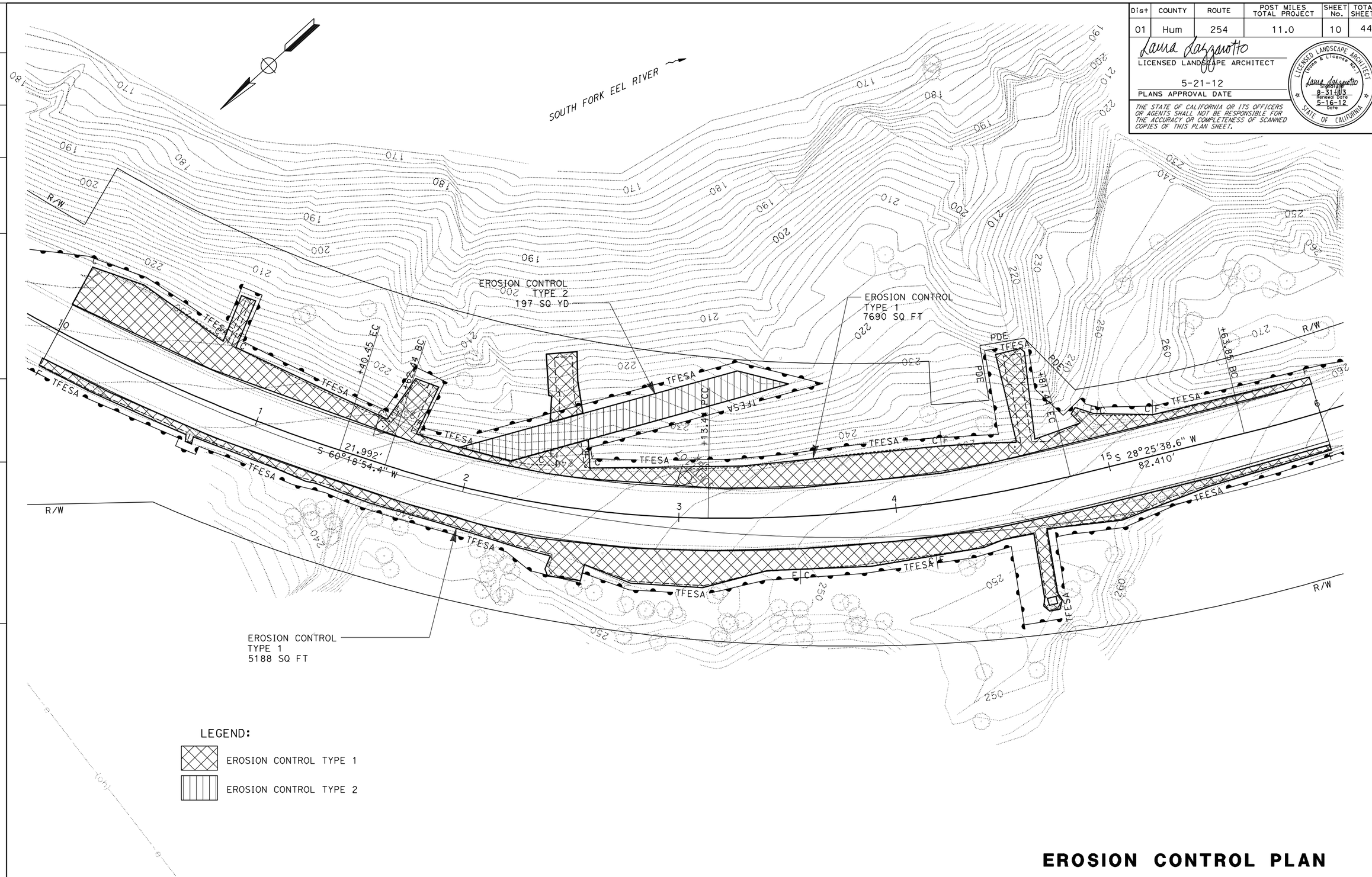

EROSION CONTROL PLAN

SCALE: 1" = 20'

EC-1

APPROVED FOR EROSION CONTROL WORK ONLY

REVISED BY	DATE REVISED

LAURA LAZZAROTTO — HORACIO PARAS
CALCULATED-DESIGNED BY — CHECKED BY
SENIOR LANDSCAPE ARCHITECT — RON FLORY

STATE OF CALIFORNIA - DEPARTMENT OF TRANSPORTATION
Caltrans
NORTH REGION
DIVISION OF ENGINEERING

LAST REVISION 00-00-00
DATE PLOTTED => 19-JUL-2012
TIME PLOTTED => 14:41

Dist	COUNTY	ROUTE	POST MILES TOTAL PROJECT	SHEET No.	TOTAL SHEETS
01	Hum	254	11.0	11	44

Laura Lazzarotto
LICENSED LANDSCAPE ARCHITECT

5-21-12
PLANS APPROVAL DATE

LICENSED LANDSCAPE ARCHITECT
Name & License No.
Laura Lazzarotto
Signature
8-31-13
Renewal Date
5-16-12
Date
STATE OF CALIFORNIA

THE STATE OF CALIFORNIA OR ITS OFFICERS OR AGENTS SHALL NOT BE RESPONSIBLE FOR THE ACCURACY OR COMPLETENESS OF SCANNED COPIES OF THIS PLAN SHEET.

FIBER ROLL

LOCATION	Lt/Rt	LENGTH LF
DRAINAGE SYSTEM 1	Lt	70
DRAINAGE SYSTEM 2	Lt	160
DRAINAGE SYSTEM 3	Lt	170
	TOTAL	400

PERMANENT EROSION CONTROL

SHEET	LOCATION (STATION) FROM	TO	Lt/Rt	DESCRIPTION	EC (COMPOST BLANKET) CY	COMPOST INCORPORATE SQYD	EROSION CONTROL (HYDROSEED) SQFT	(N) STRAW TON	(N) PURE LIVE SEED LB	(N) FIBER LB	(N) STABILIZING EMULSION LB	(N) COMPOST CY
EC-1	"D1" 10+00	"D1" 16+00	Rt	EROSION CONTROL TYPE 1	24		5188	0.36	10.5	286	15.5	24.0
	"D1" 10+00	"D1" 16+00	Lt	EROSION CONTROL TYPE 1	35.6		7690	0.53	15.5	424	23.0	35.6
	Exist ACCESS ROAD		Lt	EROSION CONTROL TYPE 2		197	1775	0.12	3.6	98	5.5	22.0
				TOTALS	59.6	197	14,653	1.01	29.6	808	44.0	81.6

(N) NOT A SEPARATE PAY ITEM. FOR INFORMATION ONLY.

EROSION CONTROL QUANTITIES

ECQ-1

REVISED BY	DATE REVISED

CALCULATED-DESIGNED BY: LAURA LAZZAROTTO
CHECKED BY: HORACIO PARAS
SENIOR LANDSCAPE ARCHITECT: RON FLORY

STATE OF CALIFORNIA - DEPARTMENT OF TRANSPORTATION
Caltrans®
NORTH REGION
DIVISION OF ENGINEERING

LAST REVISION 00-00-00
DATE PLOTTED => 19-JUL-2012
TIME PLOTTED => 14:41

Dist	COUNTY	ROUTE	POST MILES TOTAL PROJECT	SHEET No.	TOTAL SHEETS
01	Hum	254	11.0	12	44

REGISTERED CIVIL ENGINEER 5-15-12 DATE

5-21-12
PLANS APPROVAL DATE

REGISTERED PROFESSIONAL ENGINEER HORACIO PARAS JR No. C73255 Exp. 12-31-12 CIVIL STATE OF CALIFORNIA

THE STATE OF CALIFORNIA OR ITS OFFICERS OR AGENTS SHALL NOT BE RESPONSIBLE FOR THE ACCURACY OR COMPLETENESS OF SCANNED COPIES OF THIS PLAN SHEET.

NOTE:

FOR ACCURATE RIGHT OF WAY DATA, CONTACT RIGHT OF WAY ENGINEERING AT THE DISTRICT OFFICE.

ABBREVIATIONS

PDE - PERMANENT DRAINAGE EASEMENT

LEGEND

DRAINAGE SYSTEM NO. #

DRAINAGE ITEM X

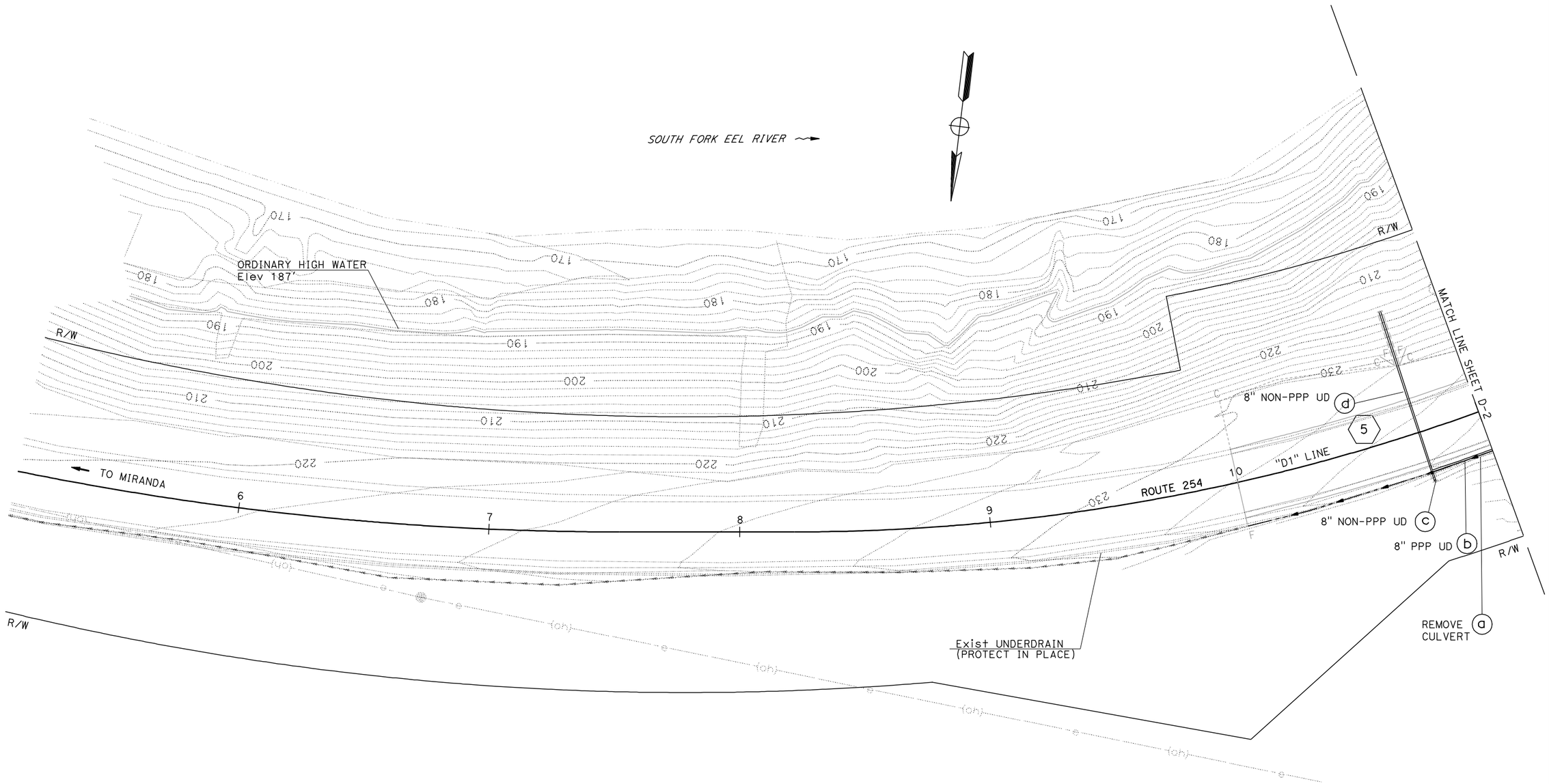

APPROVED FOR DRAINAGE WORK ONLY

DRAINAGE PLAN

SCALE: 1" = 20' **D-1**

STATE OF CALIFORNIA - DEPARTMENT OF TRANSPORTATION
Caltrans
NORTH REGION
DIVISION OF ENGINEERING

FUNCTIONAL SUPERVISOR: FERMIN BARRIGA
CALCULATED-DESIGNED BY: HORACIO PARAS JR
CHECKED BY: KEMSET MOORE
REVISED BY
DATE REVISED

LAST REVISION 04-07-11
DATE PLOTTED => 19-JUL-2012
TIME PLOTTED => 14:41

Dist	COUNTY	ROUTE	POST MILES TOTAL PROJECT	SHEET No.	TOTAL SHEETS
01	Hum	254	11.0	13	44

REGISTERED CIVIL ENGINEER 5-15-12 DATE

5-21-12
PLANS APPROVAL DATE

REGISTERED PROFESSIONAL ENGINEER HORACIO PARAS JR No. C73255 Exp. 12-31-12 CIVIL STATE OF CALIFORNIA

THE STATE OF CALIFORNIA OR ITS OFFICERS OR AGENTS SHALL NOT BE RESPONSIBLE FOR THE ACCURACY OR COMPLETENESS OF SCANNED COPIES OF THIS PLAN SHEET.

NOTE:

1. FOR ACCURATE RIGHT OF WAY DATA, CONTACT RIGHT OF WAY ENGINEERING AT THE DISTRICT OFFICE.
2. EXISTING PMP UD SHALL BE INSTALLED THROUGH THE Conc PIPE INLET (Mod TYPE GCP) SIDEWALL. FOR ADDITIONAL INFORMATION, SEE SHEET DP-3.

LEGEND

DRAINAGE SYSTEM NO. #

DRAINAGE ITEM X

ABBREVIATIONS

PDE - PERMANENT DRAINAGE EASEMENT

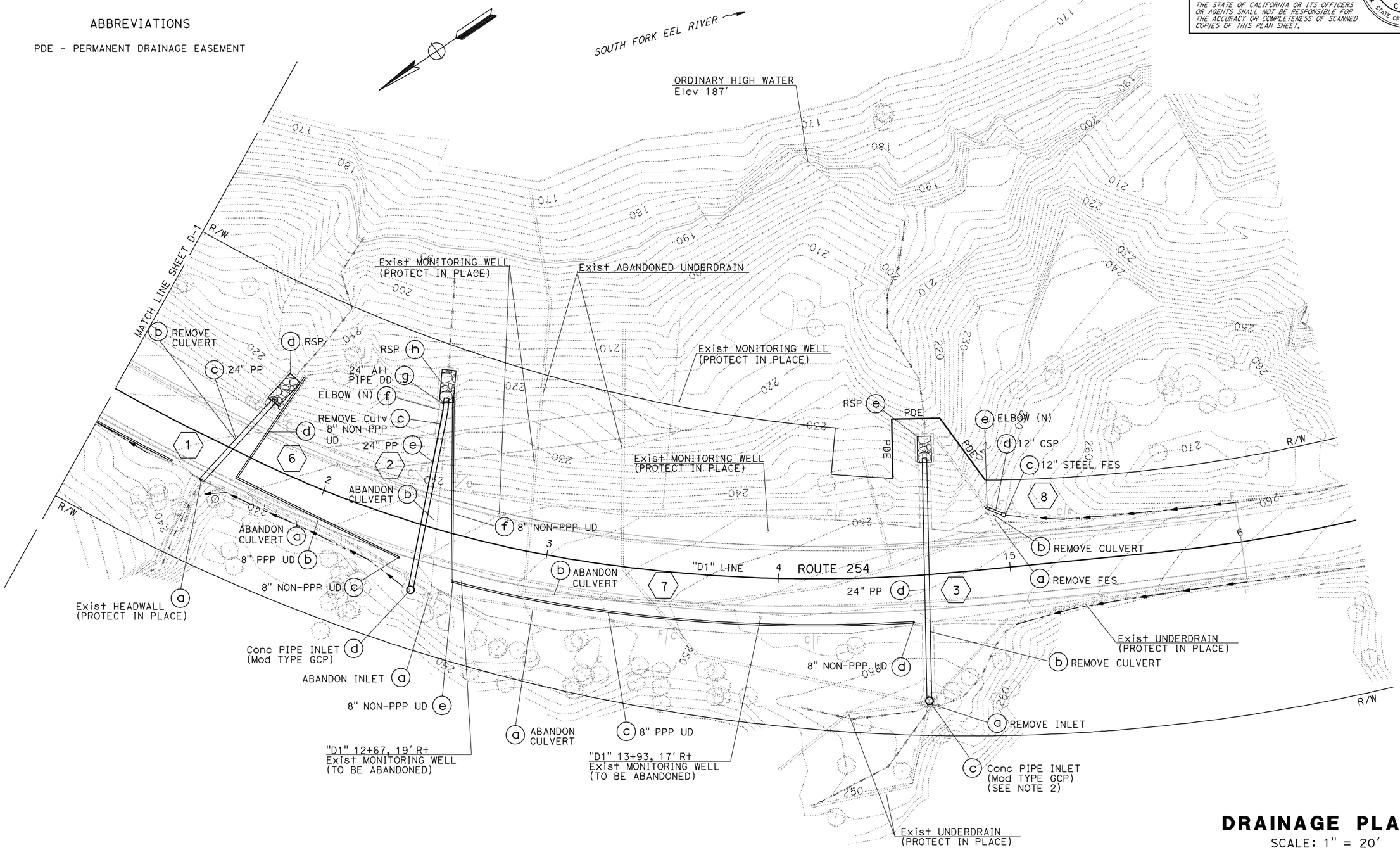

APPROVED FOR DRAINAGE WORK ONLY

DRAINAGE PLAN

SCALE: 1" = 20'

D-2

REVISED BY	DATE REVISED

CALCULATED-DESIGNED BY	HORACIO PARAS JR
CHECKED BY	KEMSET MOORE
FUNCTIONAL SUPERVISOR	FERMIN BARRIGA

STATE OF CALIFORNIA - DEPARTMENT OF TRANSPORTATION
Caltrans
NORTH REGION
DIVISION OF ENGINEERING

LAST REVISION 04-07-11 | DATE PLOTTED => 19-JUL-2012 | TIME PLOTTED => 14:41

Dist	COUNTY	ROUTE	POST MILES TOTAL PROJECT	SHEET No.	TOTAL SHEETS
01	Hum	254	11.0	14	44

REGISTERED CIVIL ENGINEER 5-15-12 DATE

5-21-12
PLANS APPROVAL DATE

REGISTERED PROFESSIONAL ENGINEER HORACIO PARAS JR No. C73255 Exp. 12-31-12 CIVIL STATE OF CALIFORNIA

THE STATE OF CALIFORNIA OR ITS OFFICERS OR AGENTS SHALL NOT BE RESPONSIBLE FOR THE ACCURACY OR COMPLETENESS OF SCANNED COPIES OF THIS PLAN SHEET.

NOTE:

FOR ACCURATE RIGHT OF WAY DATA, CONTACT RIGHT OF WAY ENGINEERING AT THE DISTRICT OFFICE.

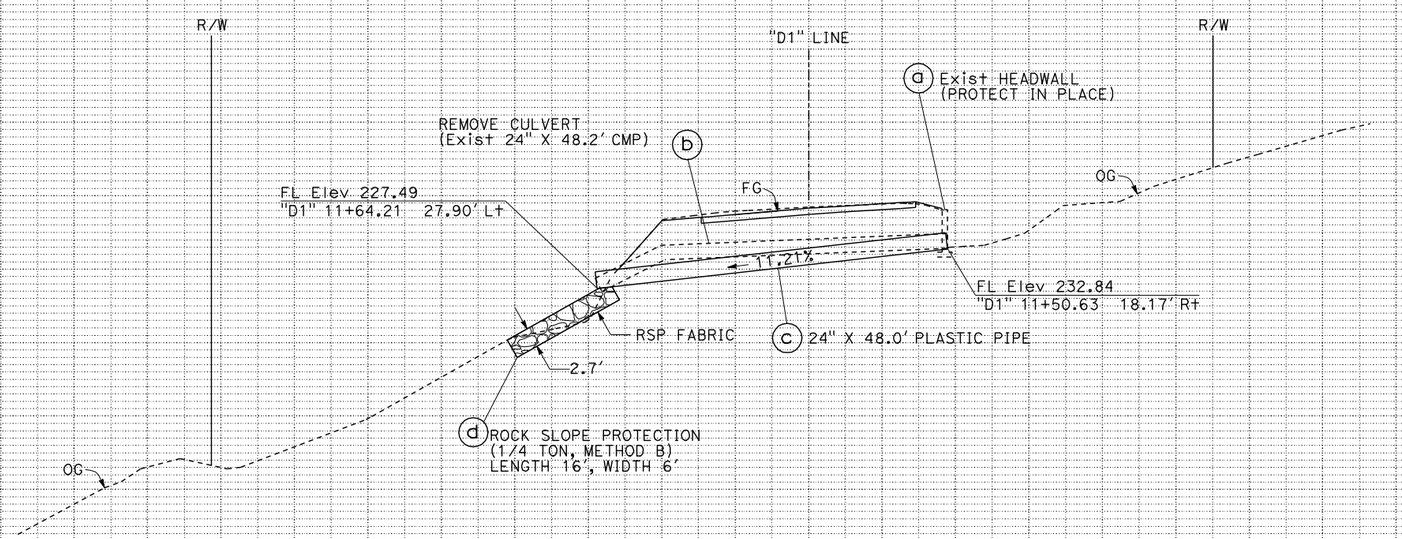

DRAINAGE SYSTEM No. 1

"D1" 11+55.81

SKEW 15°54'59.5"

DRAINAGE PROFILES

SCALE:
Horiz: 1'=10'
Vert: 1"=10'

DP-1

STATE OF CALIFORNIA - DEPARTMENT OF TRANSPORTATION
Caltrans®
NORTH REGION
DIVISION OF ENGINEERING

FUNCTIONAL SUPERVISOR: FERMIN BARRIGA

CALCULATED-DESIGNED BY: HORACIO PARAS JR
CHECKED BY: KEMSET MOORE

REVISED BY
DATE REVISED

LAST REVISION 04-07-11
DATE PLOTTED => 19-JUL-2012
TIME PLOTTED => 14:41

Dist	COUNTY	ROUTE	POST MILES TOTAL PROJECT	SHEET No.	TOTAL SHEETS
01	Hum	254	11.0	15	44

REGISTERED CIVIL ENGINEER — DATE 5-15-12

5-21-12
PLANS APPROVAL DATE

REGISTERED PROFESSIONAL ENGINEER HORACIO PARAS JR No. C73255 Exp. 12-31-12 CIVIL STATE OF CALIFORNIA

THE STATE OF CALIFORNIA OR ITS OFFICERS OR AGENTS SHALL NOT BE RESPONSIBLE FOR THE ACCURACY OR COMPLETENESS OF SCANNED COPIES OF THIS PLAN SHEET.

NOTE:
1. FOR ACCURATE RIGHT OF WAY DATA, CONTACT RIGHT OF WAY ENGINEERING AT THE DISTRICT OFFICE.
2. FOR ADDITIONAL INFORMATION ON Conc PIPE INLET (TYPE GCP Mod), SEE DRAINAGE DETAIL SHEET DD-1.
3. SEE DRAINAGE SYSTEM 6 FOR REMOVAL QUANTITIES OF Exist 8"PMP UD.

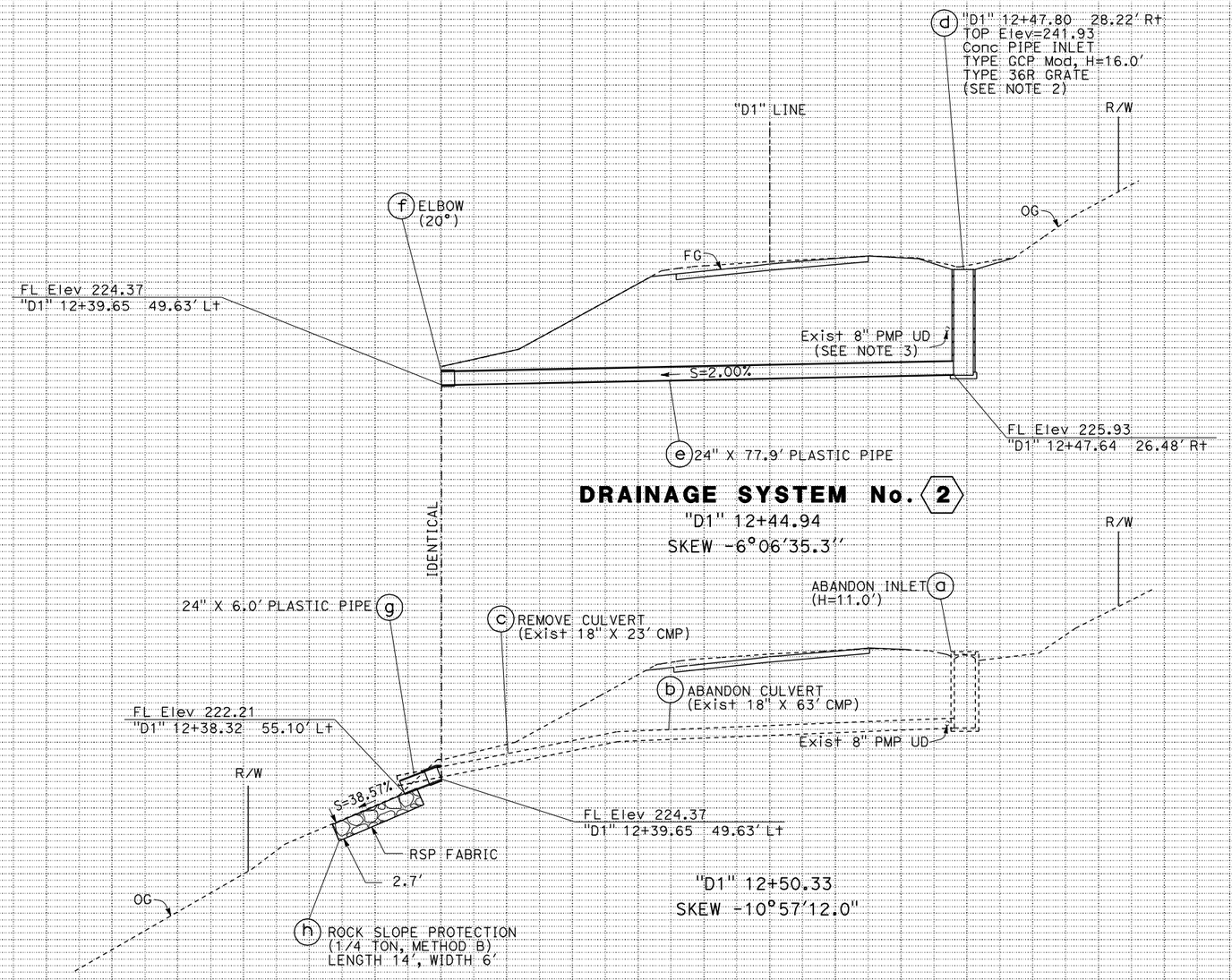

DRAINAGE PROFILES

SCALE:
Horiz: 1'=10'
Vert: 1"=10'

DP-2

STATE OF CALIFORNIA - DEPARTMENT OF TRANSPORTATION
Caltrans® NORTH REGION DIVISION OF ENGINEERING

FUNCTIONAL SUPERVISOR: FERMIN BARRIGA

CALCULATED-DESIGNED BY: HORACIO PARAS JR
CHECKED BY: KEMSET MOORE

REVISED BY / DATE REVISED

LAST REVISION 07-07-11 | DATE PLOTTED => 19-JUL-2012 | TIME PLOTTED => 14:41

Dist	COUNTY	ROUTE	POST MILES TOTAL PROJECT	SHEET No.	TOTAL SHEETS
01	Hum	254	11.0	16	44

REGISTERED CIVIL ENGINEER 5-15-12 DATE

5-21-12
PLANS APPROVAL DATE

REGISTERED PROFESSIONAL ENGINEER HORACIO PARAS JR No. C73255 Exp. 12-31-12 CIVIL STATE OF CALIFORNIA

THE STATE OF CALIFORNIA OR ITS OFFICERS OR AGENTS SHALL NOT BE RESPONSIBLE FOR THE ACCURACY OR COMPLETENESS OF SCANNED COPIES OF THIS PLAN SHEET.

NOTE:

1. FOR ACCURATE RIGHT OF WAY DATA, CONTACT RIGHT OF WAY ENGINEERING AT THE DISTRICT OFFICE.
2. EXISTING PMP UD SHALL BE INSTALLED THROUGH THE Conc PIPE INLET (TYPE GCP Mod) SIDEWALL. FOR ADDITIONAL INFORMATION, SEE DRAINAGE DETAIL SHEET DD-1.
3. EXISTING PMP UD SHOWN FOR ILLUSTRATIVE PURPOSES ONLY. EXACT LOCATION TO BE DETERMINED BY THE ENGINEER.

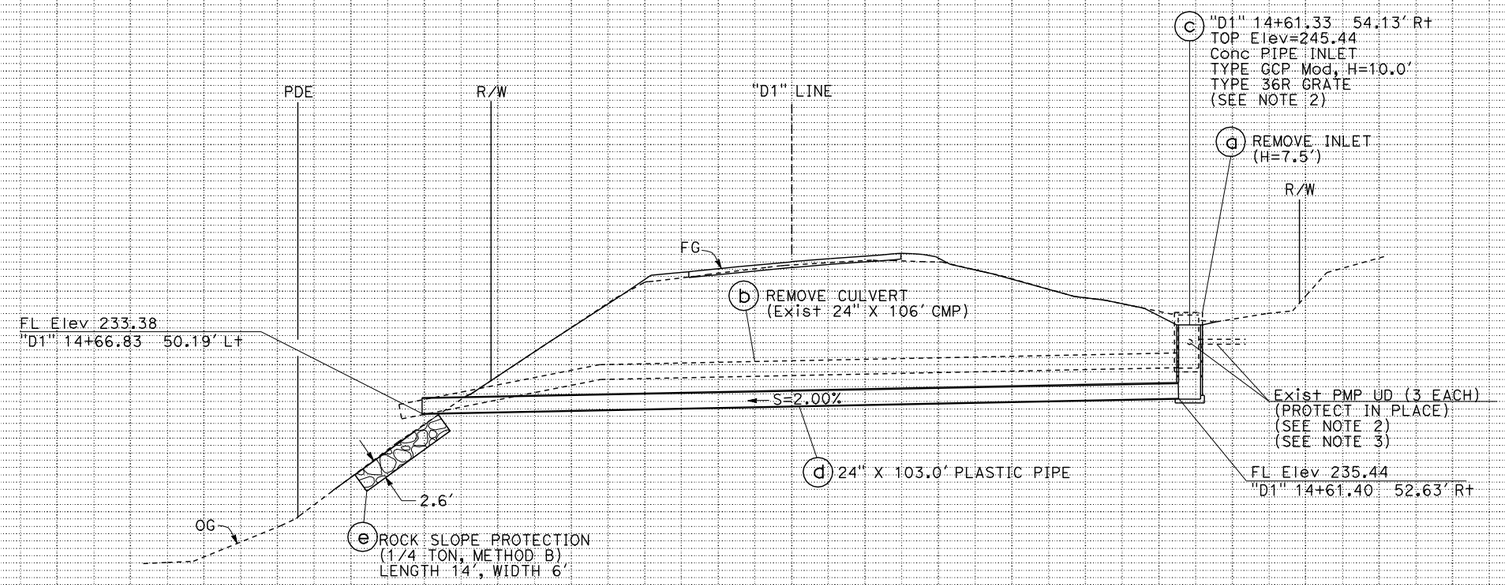

DRAINAGE SYSTEM No. 3

"D1" 14+63.96

SKEW 3°01'36.3"

DRAINAGE PROFILES

SCALE:
Horiz: 1'=10'
Vert: 1"=10'

DP-3

REVISED BY	DATE REVISED
HORACIO PARAS JR	KEMSET MOORE

CALCULATED-DESIGNED BY	CHECKED BY

FUNCTIONAL SUPERVISOR: FERMIN BARRIGA

STATE OF CALIFORNIA - DEPARTMENT OF TRANSPORTATION
Caltrans
NORTH REGION
DIVISION OF ENGINEERING

LAST REVISION 04-07-11 | DATE PLOTTED => 19-JUL-2012 | TIME PLOTTED => 14:41

Dist	COUNTY	ROUTE	POST MILES TOTAL PROJECT	SHEET No.	TOTAL SHEETS
01	Hum	254	11.0	17	44

REGISTERED CIVIL ENGINEER 5-15-12 DATE

5-21-12
PLANS APPROVAL DATE

REGISTERED PROFESSIONAL ENGINEER HORACIO PARAS JR No. C73255 Exp. 12-31-12 CIVIL STATE OF CALIFORNIA

THE STATE OF CALIFORNIA OR ITS OFFICERS OR AGENTS SHALL NOT BE RESPONSIBLE FOR THE ACCURACY OR COMPLETENESS OF SCANNED COPIES OF THIS PLAN SHEET.

NOTE:

1. FOR ACCURATE RIGHT OF WAY DATA, CONTACT RIGHT OF WAY ENGINEERING AT THE DISTRICT OFFICE.
2. EXISTING UNDERDRAIN SHOWN FOR ILLUSTRATIVE PURPOSES ONLY. EXACT LOCATION TO BE DETERMINED IN THE FIELD.
3. PPP UD TO BE BACKFILLED WITH FILTER FABRIC AND PERMEABLE METERIAL OR AS DIRECTED BY THE ENGINEER. SEE DRAINAGE DETAILS FOR MORE INFORMATION.

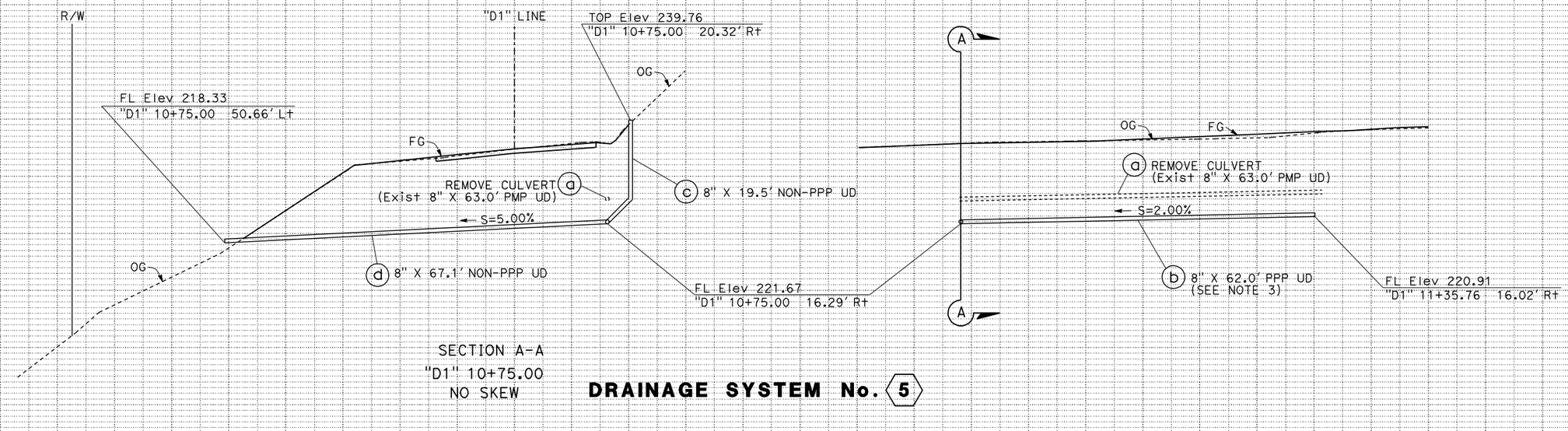

SECTION A-A
"D1" 10+75.00
NO SKEW

DRAINAGE SYSTEM No. 5

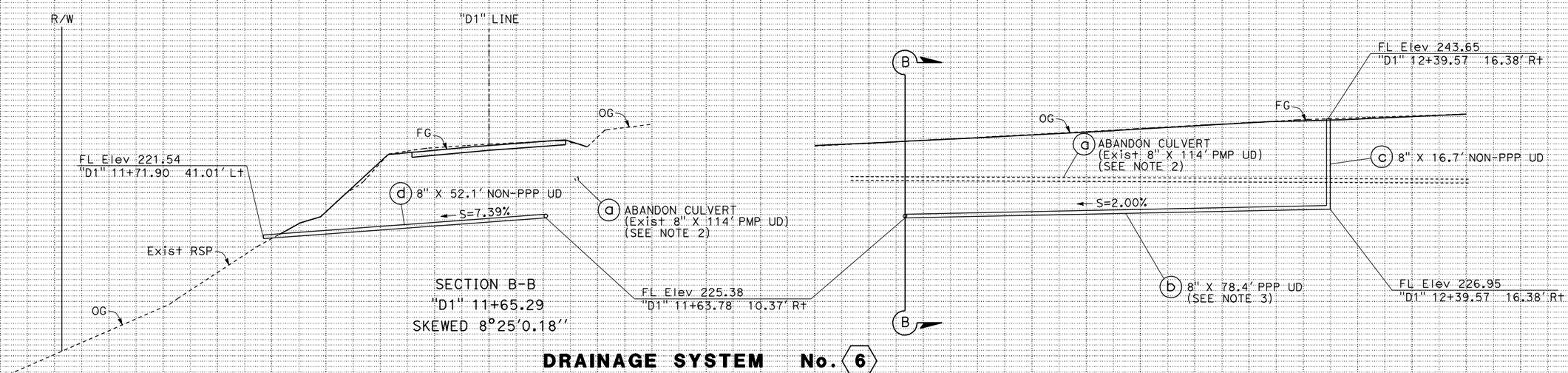

SECTION B-B
"D1" 11+65.29
SKEWED 8°25'0.18''

DRAINAGE SYSTEM No. 6

DRAINAGE PROFILES

SCALE:
Horiz: 1'=10'
Vert: 1"=10'

DP-4

STATE OF CALIFORNIA - DEPARTMENT OF TRANSPORTATION
Caltrans®
NORTH REGION
DIVISION OF ENGINEERING

FUNCTIONAL SUPERVISOR: FERMIN BARRIGA

CALCULATED-DESIGNED BY: HORACIO PARAS JR
CHECKED BY: FERMIN BARRIGA

REVISED BY | DATE REVISED

LAST REVISION 07-08-11
DATE PLOTTED => 19-JUL-2012
TIME PLOTTED => 14:41

Dist	COUNTY	ROUTE	POST MILES TOTAL PROJECT	SHEET No.	TOTAL SHEETS
01	Hum	254	11.0	18	44

REGISTERED CIVIL ENGINEER 5-15-12 DATE

5-21-12
PLANS APPROVAL DATE

REGISTERED PROFESSIONAL ENGINEER HORACIO PARAS JR No. C73255 Exp. 12-31-12 CIVIL STATE OF CALIFORNIA

THE STATE OF CALIFORNIA OR ITS OFFICERS OR AGENTS SHALL NOT BE RESPONSIBLE FOR THE ACCURACY OR COMPLETENESS OF SCANNED COPIES OF THIS PLAN SHEET.

NOTE:

1. FOR ACCURATE RIGHT OF WAY DATA, CONTACT RIGHT OF WAY ENGINEERING AT THE DISTRICT OFFICE.
2. NON-PSP UD TO OUTLET OVER RSP OF DRAINAGE SYSTEM 2. SEE SHEET DP-2 FOR DETAILS.
3. EXISTING UNDERDRAIN SHOWN FOR ILLUSTRATIVE PURPOSES ONLY. EXACT LOCATION TO BE DETERMINED IN THE FIELD.
4. PPP UD TO BE BACKFILLED WITH FILTER FABRIC AND PERMEABLE MATERIAL OR AS DIRECTED BY THE ENGINEER. SEE DRAINAGE DETAILS FOR MORE INFORMATION.

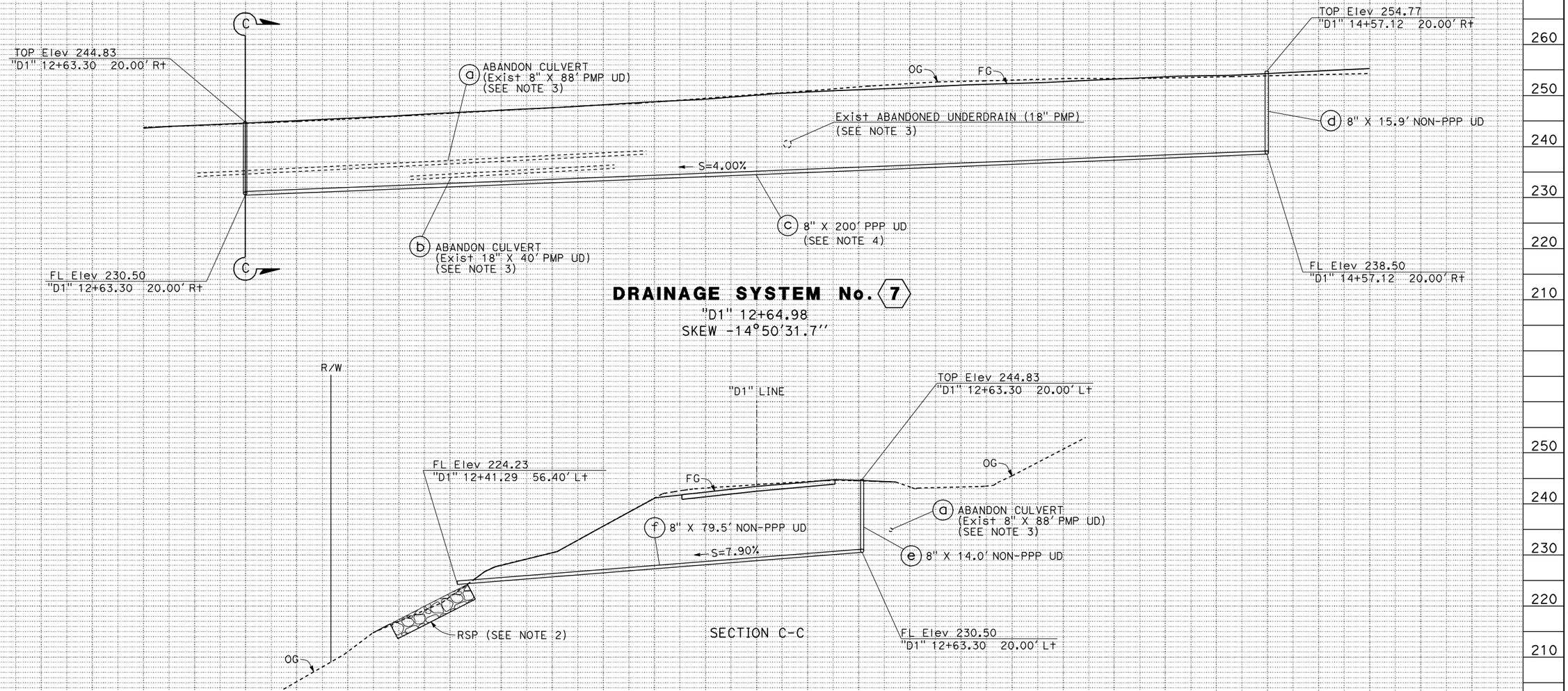

DRAINAGE PROFILES

SCALE:
Horiz: 1'=10'
Vert: 1"=10'

DP-5

REVISED BY	DATE REVISED
HORACIO PARAS JR	FERMIN BARRIGA
CALCULATED-DESIGNED BY	CHECKED BY
FUNCTIONAL SUPERVISOR	FERMIN BARRIGA

STATE OF CALIFORNIA - DEPARTMENT OF TRANSPORTATION
Caltrans®
NORTH REGION DIVISION OF ENGINEERING

LAST REVISION 07-08-11 | DATE PLOTTED => 19-JUL-2012 TIME PLOTTED => 14:41

Dist	COUNTY	ROUTE	POST MILES TOTAL PROJECT	SHEET No.	TOTAL SHEETS
01	Hum	254	11.0	19	44

REGISTERED CIVIL ENGINEER 5-15-12 DATE

5-21-12
PLANS APPROVAL DATE

THE STATE OF CALIFORNIA OR ITS OFFICERS OR AGENTS SHALL NOT BE RESPONSIBLE FOR THE ACCURACY OR COMPLETENESS OF SCANNED COPIES OF THIS PLAN SHEET.

REGISTERED PROFESSIONAL ENGINEER HORACIO PARAS JR No. C73255 Exp. 12-31-12 CIVIL STATE OF CALIFORNIA

NOTES:

1. FOR COMPLETE RIGHT OF WAY DATA, SEE RIGHT OF WAY RECORD MAPS AT DISTRICT OFFICE.
2. EXISTING UNDERDRAIN SHOWN FOR ILLUSTRATIVE PURPOSES ONLY.

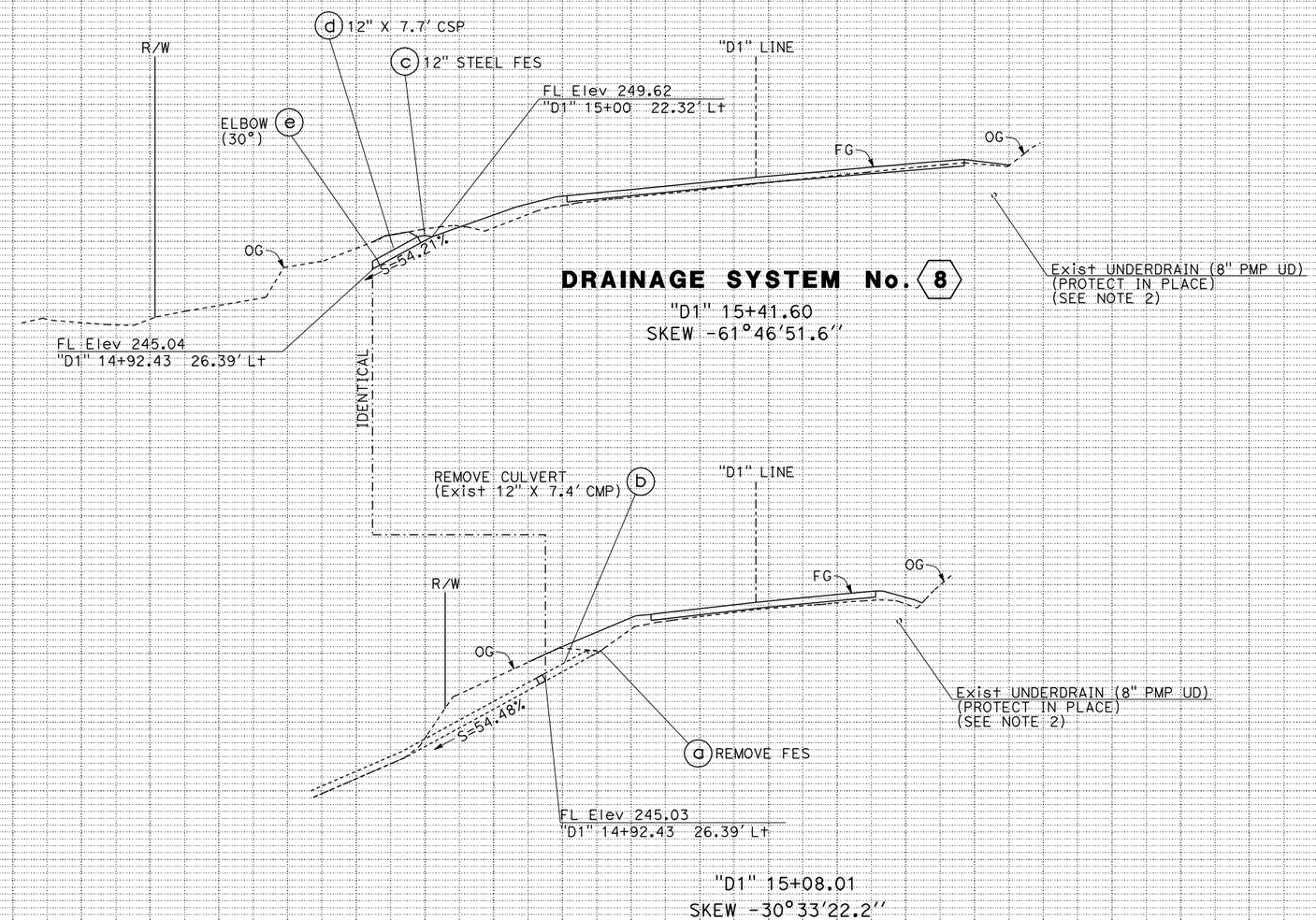

DRAINAGE SYSTEM No. 8

"D1" 15+41.60
SKEW -61°46'51.6''

DRAINAGE PROFILES

SCALE:
Horiz: 1'=10'
Vert: 1"=10'

DP-6

STATE OF CALIFORNIA - DEPARTMENT OF TRANSPORTATION
NORTH REGION
DIVISION OF ENGINEERING
Caltrans

FUNCTIONAL SUPERVISOR: FERMIN BARRIGA
CALCULATED-DESIGNED BY: HORACIO PARAS JR
CHECKED BY: KEMSET MOORE
REVISED BY / DATE REVISED

LAST REVISION 04-07-11
DATE PLOTTED => 19-JUL-2012
TIME PLOTTED => 14:41

Dist	COUNTY	ROUTE	POST MILES TOTAL PROJECT	SHEET No.	TOTAL SHEETS
01	Hum	254	11.0	20	44

REGISTERED CIVIL ENGINEER 5-15-12 DATE

5-21-12
PLANS APPROVAL DATE

REGISTERED PROFESSIONAL ENGINEER HORACIO PARAS JR No. C73255 Exp. 12-31-12 CIVIL STATE OF CALIFORNIA

THE STATE OF CALIFORNIA OR ITS OFFICERS OR AGENTS SHALL NOT BE RESPONSIBLE FOR THE ACCURACY OR COMPLETENESS OF SCANNED COPIES OF THIS PLAN SHEET.

NOTES:

1. 2" DIAMETER OPENINGS SHALL BE SPACED 2'-0" ON CENTER VERTICALLY BEGINNING 1'-0" ABOVE THE 24" PLASTIC PIPE AND ENDING 3'-4" FROM THE STEEL GRATE.
2. EIGHT 2" DIAMETER OPENINGS, EVENLY SPACED, SHALL BE INSTALLED IN ONE VERTICAL PLANE PER VERTICAL SPACING.
3. EXISTING PMP UD SHALL PENETRATE AND CANTILEVER BEYOND THE Conc PIPE INLET (TYPE GCP Mod) SIDE WALL.
4. FOR CONCRETE PIPE INLET DESIGN HEIGHT, SEE DRAINAGE PROFILES.
5. FOR UNDERDRAIN LOCATIONS, SEE DRAINAGE PLANS.

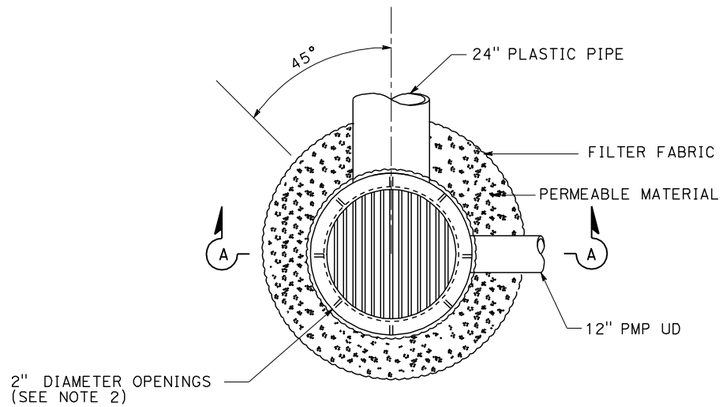

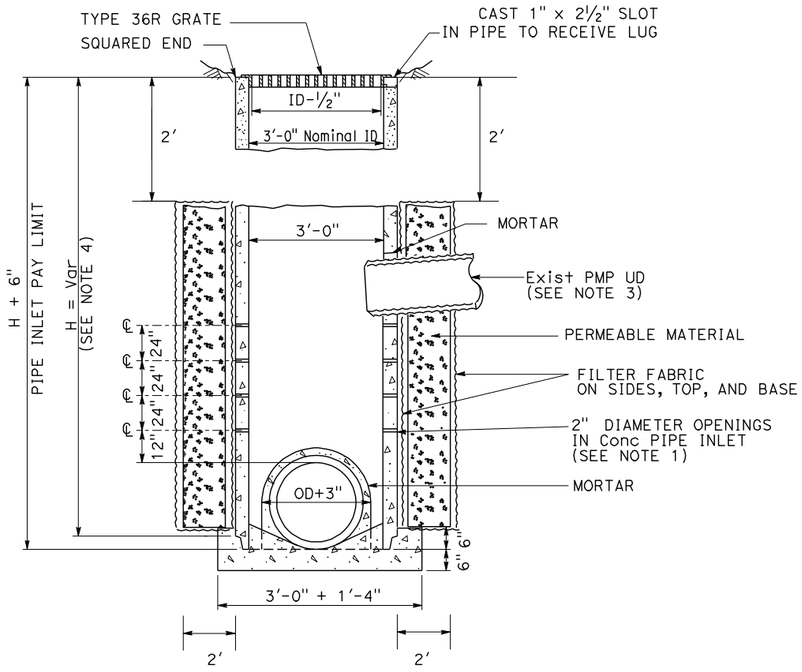

SECTION A-A

TYPE GCP MODIFIED DETAIL

Conc PIPE INLET WITH GRATE

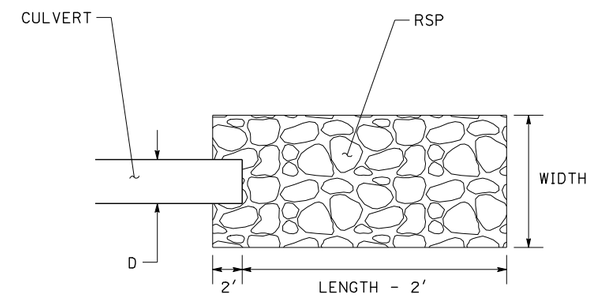

PLAN VIEW

RSP ENERGY DISSIPATOR DETAIL

ABBREVIATIONS

PMP - PERFORATED METAL PIPE

DRAINAGE DETAILS

NO SCALE

DD-1

STATE OF CALIFORNIA - DEPARTMENT OF TRANSPORTATION
Caltrans® NORTH REGION DIVISION OF ENGINEERING

FUNCTIONAL SUPERVISOR: FERMIN BARRIGA

CALCULATED-DESIGNED BY: HORACIO PARAS JR
CHECKED BY: KEMSET MOORE

REVISED BY / DATE REVISED

LAST REVISION 04-07-11 | DATE PLOTTED => 19-JUL-2012 | TIME PLOTTED => 14:41

Dist	COUNTY	ROUTE	POST MILES TOTAL PROJECT	SHEET No.	TOTAL SHEETS
01	Hum	254	11.0	21	44

REGISTERED CIVIL ENGINEER 5-15-12 DATE

5-21-12
PLANS APPROVAL DATE

REGISTERED PROFESSIONAL ENGINEER HORACIO PARAS JR No. C73255 Exp. 12-31-12 CIVIL STATE OF CALIFORNIA

THE STATE OF CALIFORNIA OR ITS OFFICERS OR AGENTS SHALL NOT BE RESPONSIBLE FOR THE ACCURACY OR COMPLETENESS OF SCANNED COPIES OF THIS PLAN SHEET.

NOTES:

1. AT THE OPTION OF THE CONTRACTOR, UNDERDRAIN WIDTH MAY BE INCREASED TO 24".

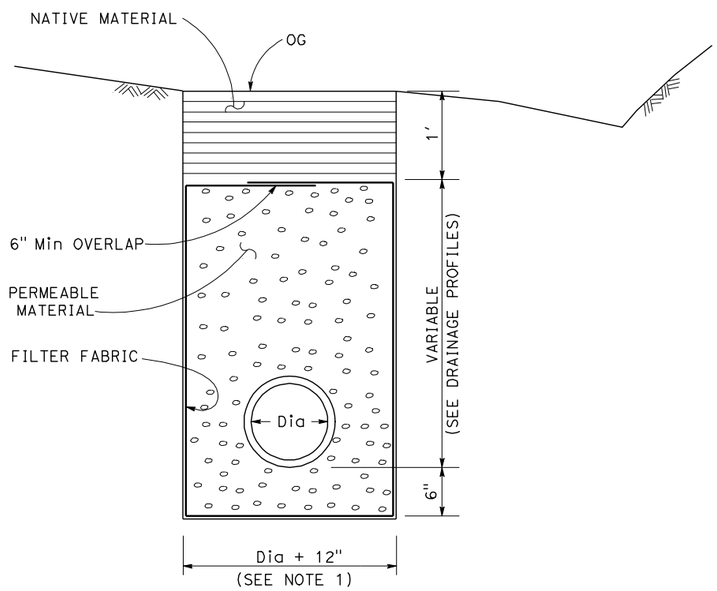

DETAIL 1

(OUTSIDE PAVED AREA IN SHOULDER OR NEAR CUT SLOPE)

DRAINAGE SYSTEM NO.

5 7

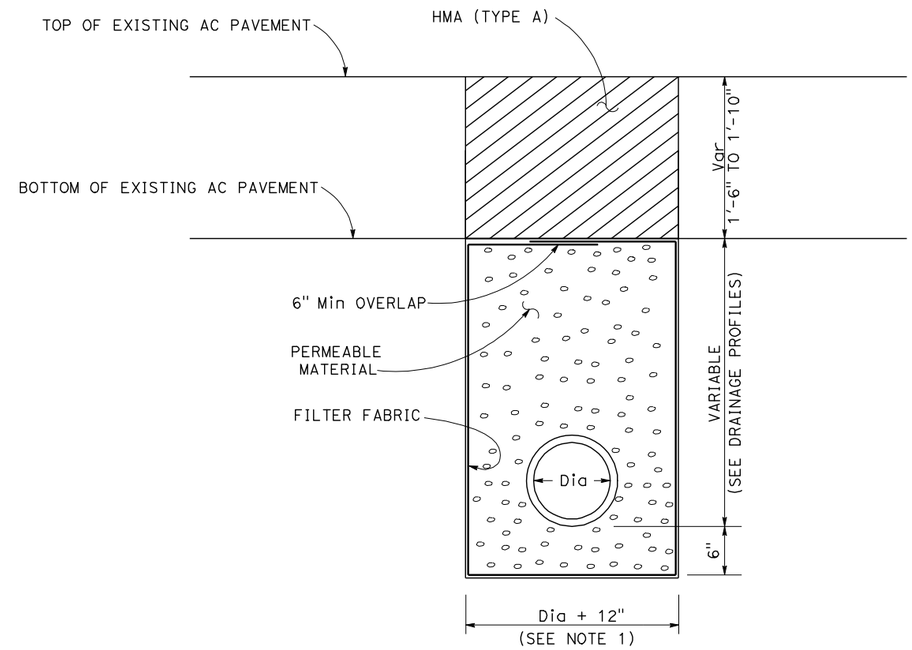

DETAIL 2

(INSIDE PAVED AREA UNDER TRAVELED WAY AND SHOULDER)

DRAINAGE SYSTEM NO.

6

UNDERDRAIN DETAIL

STATE OF CALIFORNIA - DEPARTMENT OF TRANSPORTATION
Caltrans
NORTH REGION
DIVISION OF ENGINEERING

FUNCTIONAL SUPERVISOR: FERMIN BARRIGA
CALCULATED-DESIGNED BY: HORACIO PARAS JR
CHECKED BY: KEMSET MOORE
REVISED BY
DATE REVISED

DRAINAGE DETAILS

NO SCALE

DD-2

LAST REVISION 04-07-11
DATE PLOTTED => 19-JUL-2012
TIME PLOTTED => 14:41

Dist	COUNTY	ROUTE	POST MILES TOTAL PROJECT	SHEET No.	TOTAL SHEETS
01	Hum	254	11.0	22	44

REGISTERED CIVIL ENGINEER 5-15-12 DATE

5-21-12
PLANS APPROVAL DATE

REGISTERED PROFESSIONAL ENGINEER HORACIO PARAS JR No. C73255 Exp. 12-31-12 CIVIL STATE OF CALIFORNIA

THE STATE OF CALIFORNIA OR ITS OFFICERS OR AGENTS SHALL NOT BE RESPONSIBLE FOR THE ACCURACY OR COMPLETENESS OF SCANNED COPIES OF THIS PLAN SHEET.

NOTES:

1. 24" PLASTIC PIPE SHALL BE TYPE S.

DRAINAGE QUANTITIES

PLAN SHEET NO.	DRAINAGE PROFILE SHEET NO.	DRAINAGE SYSTEM NO.	DRAINAGE UNIT	REMOVE FLARED END SECTION	REMOVE INLET	ABANDON INLET	ABANDON CULVERT	SAND BACKFILL	REMOVE CULVERT	12" STEEL FLARED END SECTION	36" PRECAST CONCRETE PIPE INLET	12" CORRUGATED STEEL PIPE	24" PLASTIC PIPE	(N) ELBOW	8" PPP UD	8" NON-PPP UD	ROCK SLOPE PROTECTION (1/4 TON, METHOD B) (CY)	ROCK SLOPE PROTECTION FABRIC (CLASS 8)	MISCELLANEOUS IRON AND STEEL	REMARKS	DESCRIPTION	PLAN SHEET NO.	DRAINAGE PROFILE SHEET NO.	DRAINAGE SYSTEM NO.	DRAINAGE UNIT
				EA	EA	EA	LF	CY	LF	EA	LF	LF	LF	EA	LF	LF	CY	SQYD	LB						
D-2	DP-1	1	a																	Exist HW PROTECT IN PLACE	"D1" 11+50.63 18.17' Rt	D-2	DP-1	1	a
			b						48.2											REMOVE Exist 24" X 48.2 CMP	"D1" 11+50.63 18.17' Rt TO 11+64.21 27.90' Lt				b
			c										48.0							24" X 48.0' PLASTIC PIPE, S=11.21%	"D1" 11+50.63 18.17' Rt TO 11+64.21 27.90' Lt				c
			d														9.6	23.9		RSP (1/4 TON, METHOD B)	"D1" 11+64.21 Lt				d
D-2	DP-2	2	a			1														ABANDON INLET (H=11.0')	"D1" 12+55.21 28.98' Lt	D-2	DP-2	2	a
			b				63.0	4.0												ABANDON Exist 18" X 63.0' CMP	"D1" 12+55.63 28.97' Rt TO 12+42.72 32.75' Lt				b
			c						23.0											REMOVE Exist 18" X 23.0' CMP	"D1" 12+42.72 32.75' Lt TO 12+38.14 55.83' Lt				c
			d								16.5								236.0	Conc PIPE INLET, TYPE GCP Mod, H=16.0', TYPE 36R GRATE	"D1" 12+47.80 28.22' Rt				d
			e										77.9							24" X 77.9' PLASTIC PIPE, S=2.00%	"D1" 12+47.64 26.48' Rt TO 12+39.65 49.63' Lt				e
			f											1						ELBOW (20°)					f
			g																	24" X 6.0' PLASTIC PIPE, S=38.57%	"D1" 12+39.65 49.63' Lt TO 12+38.32 55.10' Lt				g
			h										6.0				8.4	21.3		RSP (1/4 TON, METHOD B)	"D1" 12+38.32 Lt				h
D-2	DP-3	3	a		1															REMOVE INLET, H = 7.50'	"D1" 14+61.37 53.97 Lt	D-2	DP-3	3	a
			b						103.0											REMOVE Exist 24" X 106.0' CMP	"D1" 14+61.33 52.63' Rt TO 14+67.02 53.20' Lt				b
			c								10.5								236.0	Conc PIPE INLET, TYPE GCP Mod, H=10.0', TYPE 36R GRATE	"D1" 14+61.33 54.13' Rt				c
			d										103.0							24" X 103.0' PLASTIC PIPE, S=2.00%	"D1" 14+61.33 52.63' Rt TO 14+67.02 53.20' Lt				d
			e														8.1			RSP (1/4 TON, METHOD B)	"D1" 14+67.02 Lt				e
		4																		DRAINAGE SYSTEM No. 4 DELETED				4	
D-1	DP-4	5	a							63.0										REMOVE Exist 8" X 63.0' PMP UD	"D1" 10+75.00 16.29' Rt TO 11+38.00 16.02' Rt	D-1	DP-4	5	a
			b												62.0					8" X 62.0' PPP UD, S=2.00%	"D1" 10+75.00 16.29' Rt TO 11+35.76 16.02' Rt				b
			c													19.5				8" X 19.5' NON-PPP UD; UD RISER	"D1" 10+75.00 20.32' Rt				c
			d													67.1				8" X 67.1' NON-PPP UD, S=5.00%	"D1" 10+75.00 16.29' Rt TO 10+75.00 50.66' Lt				d
D-2	DP-4	6	a				114.0	1.5												ABANDON Exist 8" X 114' PMP UD	"D1" 11+52.00 16.00' Rt TO 12+55.00 27.00' Rt	D-1	DP-4	6	a
			b												78.4					8" X 78.4' PPP UD, S=2.00%	"D1" 11+63.78 10.37' Rt TO 12+39.57 16.38' Rt				b
			c													16.7				8" X 16.7' NON-PPP UD; UD RISER	"D1" 12+39.57 16.38' Rt				c
			d													52.1				8" X 52.1' NON-PPP UD, S=7.39%	"D1" 11+63.78 10.37' Rt TO 11+71.90 41.01' Lt				d
D-2	DP-5	7	a				88.0	1.2												ABANDON Exist 8" X 88' PMP UD	"D1" 12+55.63 28.97' Rt TO 13+41.13 23.73' Rt	D-2	DP-5	7	a
			b				40.0	2.6												ABANDON Exist 18" X 40' PMP UD	"D1" 12+96.00 17.60' Rt TO 13+33.10 14.00' Rt				b
			c												200.0					8" X 200.0' PPP UD, S=2.00%	"D1" 12+63.30 20.00' Rt TO 14+57.12 20.00' Rt				c
			d													15.9				8" X 15.9' NON-PPP UD; UD RISER	"D1" 14+57.12 20.00' Rt				d
			e													14.0				8" X 14.0' NON-PPP UD; UD RISER	"D1" 12+63.30 20.00' Rt				e
			f													79.5				8" X 79.5' NON-PPP UD, S=7.90%	"D1" 12+63.30 20.00' Rt TO 12+41.29 56.40' Lt				f
D-2	DP-6	8	a	1																REMOVE FES	"D1" 14+97.07 19.07' Lt	D-2	DP-6	8	a
			b						7.4											REMOVE PORTION OF Exist 12" X 7.4' CMP	"D1" 14+95.49 21.20' LT TO 14+92.36 26.51' Lt				b
			c							1										12" STEEL FES	"D1" 15+00.00 22.34' Lt				c
			d									7.7								12" X 7.7' CSP, S=28.46%	"D1" 14+68.46 23.15' Lt TO 14+92.43 26.39' Lt				d
			e											1						ELBOW (30°)	"D1" 14+62.43 26.39' Lt				e
		TOTAL		1	1	1	305.0	9.0	244.6	1	27.0	7.7	234.9	2	340.4	264.8	26.1	45.2	472.0						

(N) - NOT A SEPARATE PAY ITEM, FOR INFORMATION ONLY

DRAINAGE QUANTITIES

DQ-1

REVISED BY	
DATE REVISED	
HORACIO PARAS JR	
KEMSET MOORE	
CALCULATED-DESIGNED BY	
CHECKED BY	
FUNCTIONAL SUPERVISOR	FERMIN BARRIGA

STATE OF CALIFORNIA - DEPARTMENT OF TRANSPORTATION
Caltrans®
NORTH REGION
DIVISION OF ENGINEERING

LAST REVISION 07-08-11
DATE PLOTTED => 19-JUL-2012
TIME PLOTTED => 14:41

Dist	COUNTY	ROUTE	POST MILES TOTAL PROJECT	SHEET No.	TOTAL SHEETS
01	Hum	254	11.0	23	44

REGISTERED CIVIL ENGINEER 5-15-12 DATE

5-21-12
PLANS APPROVAL DATE

REGISTERED PROFESSIONAL ENGINEER HORACIO PARAS JR No. C73255 Exp. 12-31-12 CIVIL STATE OF CALIFORNIA

THE STATE OF CALIFORNIA OR ITS OFFICERS OR AGENTS SHALL NOT BE RESPONSIBLE FOR THE ACCURACY OR COMPLETENESS OF SCANNED COPIES OF THIS PLAN SHEET.

NOTES:
1. EXACT SIGN LOCATION TO BE DETERMINED BY THE ENGINEER.
2. ALL SIGN PANELS SHALL BE BLACK ON ORANGE EXCEPT SIGN C40<CA>.
3. ALL SIGN PANELS SHALL BE MOUNTED ON WOOD POSTS UNLESS NOTED OTHERWISE.
4. SIGN W11-1 SHALL BE MOUNTED ABOVE SIGN W16-1 ON SAME POST INSTALLATION.
5. FOR ADDITIONAL CONSTRUCTION AREA SIGNS, SEE SHEETS DE-1 AND DEQ-1.

LEGEND

SIGN-SINGLE POST

SIGN-TWO POST

STATIONARY MOUNTED CONSTRUCTION AREA SIGNS

SIGN LETTER	SIGN CODE	PANEL SIZE (INCHES)	SIGN MESSAGE	No. OF POSTS AND SIZE (INCHES)	NUMBER OF SIGNS (EACH)
Ⓐ	C40<CA>	72 X 36	TRAFFIC FINES DOUBLED IN CONSTRUCTION ZONES	2-4X6	2
Ⓑ	W20-1	36 X 36	ROAD WORK AHEAD	1-4X6	2
Ⓒ	W11-1 W16-1	36 X 36 24 X 30	BICYCLE SYMBOL SHARE THE ROAD	1-4X6	2
Ⓓ	G20-2	36 X 18	END ROAD WORK	1-4X4	2
				SUBTOTAL THIS SHEET	8
				SUBTOTAL FROM DEQ-1	34
				TOTAL	42

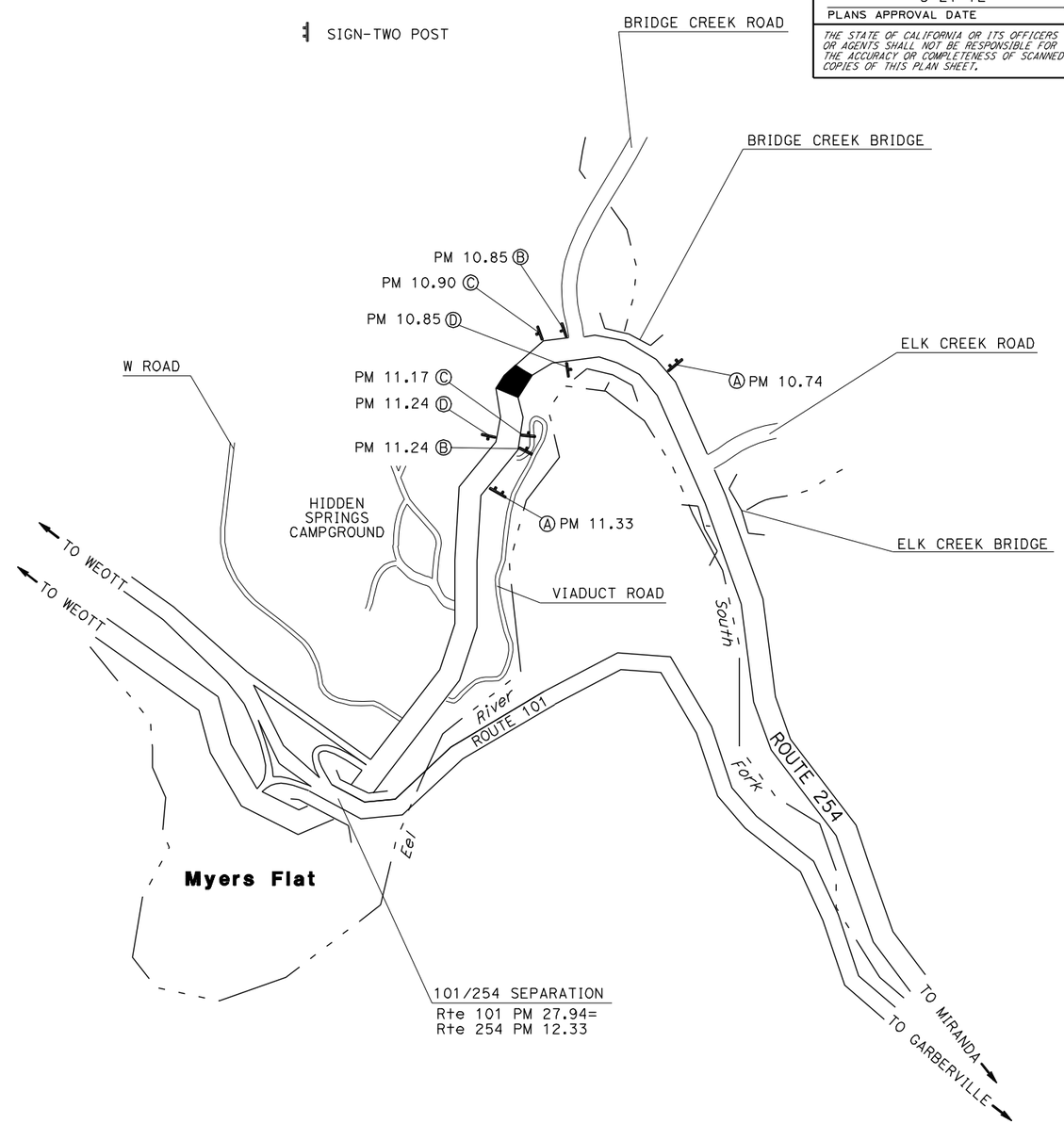

CONSTRUCTION AREA SIGNS

NO SCALE

CS-1

APPROVED FOR CONSTRUCTION AREA SIGN WORK ONLY

REVISED BY | DATE REVISED
HORACIO PARAS JR | FERMIN BARRIGA
CALCULATED-DESIGNED BY | CHECKED BY
FUNCTIONAL SUPERVISOR | FERMIN BARRIGA
STATE OF CALIFORNIA - DEPARTMENT OF TRANSPORTATION
Caltrans
NORTH REGION
DIVISION OF ENGINEERING

LAST REVISION 02-08-11 | DATE PLOTTED => 19-JUL-2012 | TIME PLOTTED => 14:41

Dist	COUNTY	ROUTE	POST MILES TOTAL PROJECT	SHEET No.	TOTAL SHEETS
01	Hum	254	11.0	24	44

REGISTERED CIVIL ENGINEER — DATE 5-15-12

PLANS APPROVAL DATE 5-21-12

REGISTERED PROFESSIONAL ENGINEER HORACIO PARAS JR No. C73255 Exp. 12-31-12 CIVIL STATE OF CALIFORNIA

THE STATE OF CALIFORNIA OR ITS OFFICERS OR AGENTS SHALL NOT BE RESPONSIBLE FOR THE ACCURACY OR COMPLETENESS OF SCANNED COPIES OF THIS PLAN SHEET.

NOTE:

1. FOR ACCURATE RIGHT OF WAY DATA, CONTACT RIGHT OF WAY ENGINEERING AT THE DISTRICT OFFICE.
2. STAGE 1 CONSTRUCTION: (UNDER ONE-WAY TRAFFIC CONTROL)
   A) INSTALL CONSTRUCTION AREA SIGNS INCLUDING SIGNS FOR DETOUR. SEE SHEET CS-1 AND DE-1. DETOUR SIGNS SHALL BE COVERED WHAEN THE DETOUR IS NOT IN OPERATION.
   B) PLACE Temp FENCE (TYPE ESA).
   C) INSTALL DRAINAGE SYSTEMS 1, 2, 3, 5, 6, AND 7. SEE DRAINAGE PLANS AND DRAINAGE PROFILES FOR MORE INFORMATION.

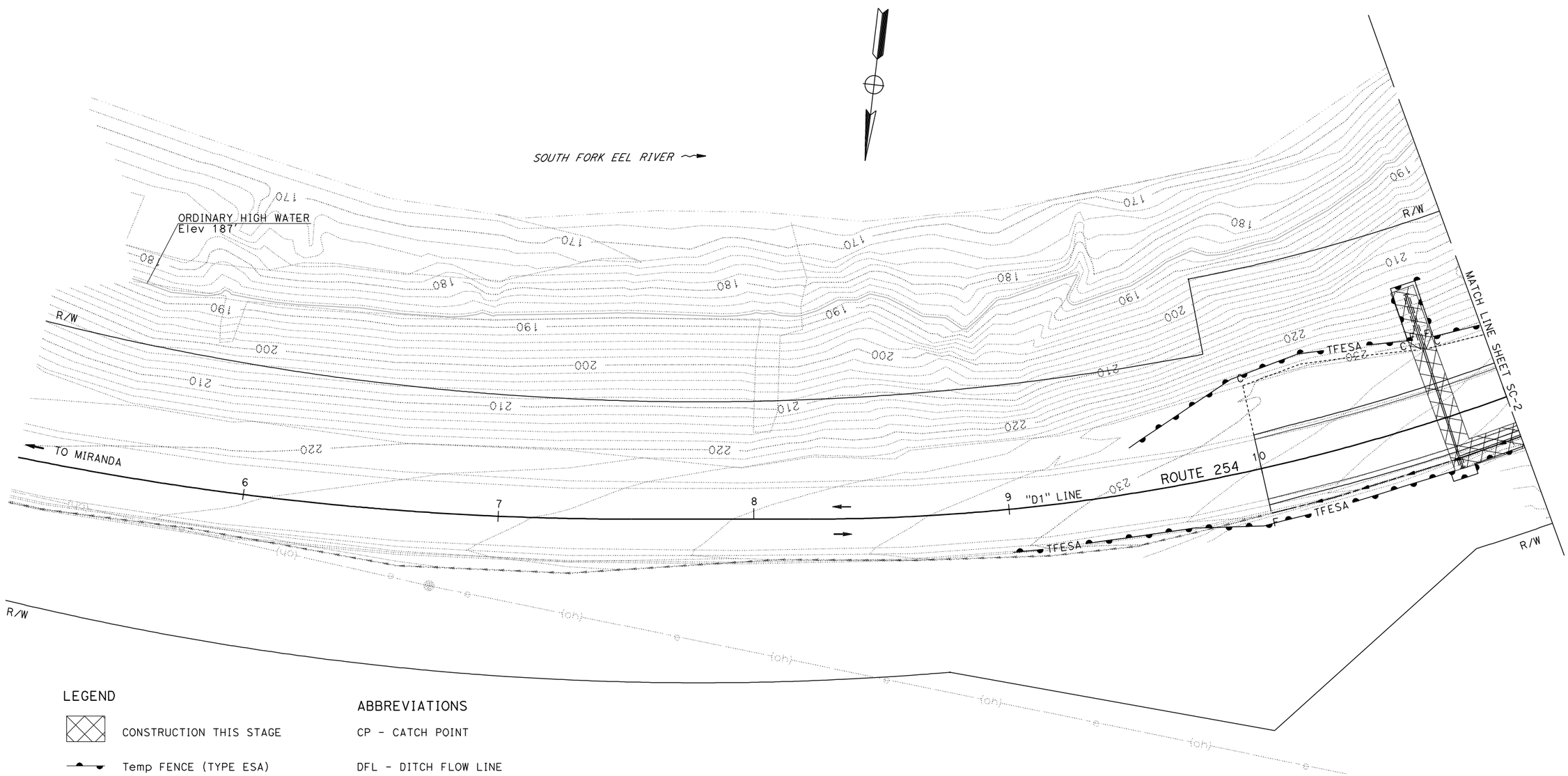

LEGEND

- CONSTRUCTION THIS STAGE
- Temp FENCE (TYPE ESA)
- DIRECTION OF TRAFFIC

ABBREVIATIONS

CP - CATCH POINT

DFL - DITCH FLOW LINE

PDE - PERMANENT DRAINAGE EASEMENT

STAGE 1

STAGE CONSTRUCTION

SCALE: 1" = 20'

SC-1

APPROVED FOR STAGE CONSTRUCTION WORK ONLY

STATE OF CALIFORNIA - DEPARTMENT OF TRANSPORTATION
Caltrans
NORTH REGION
DIVISION OF ENGINEERING

FUNCTIONAL SUPERVISOR: FERMIN BARRIGA

CALCULATED-DESIGNED BY: HORACIO PARAS JR

CHECKED BY: FERMIN BARRIGA

REVISED BY / DATE REVISED

LAST REVISION 01-26-11

DATE PLOTTED => 19-JUL-2012
TIME PLOTTED => 14:41

Dist	COUNTY	ROUTE	POST MILES TOTAL PROJECT	SHEET No.	TOTAL SHEETS
01	Hum	254	11.0	25	44

REGISTERED CIVIL ENGINEER 5-15-12 DATE

5-21-12
PLANS APPROVAL DATE

REGISTERED PROFESSIONAL ENGINEER HORACIO PARAS JR No. C73255 Exp. 12-31-12 CIVIL STATE OF CALIFORNIA

THE STATE OF CALIFORNIA OR ITS OFFICERS OR AGENTS SHALL NOT BE RESPONSIBLE FOR THE ACCURACY OR COMPLETENESS OF SCANNED COPIES OF THIS PLAN SHEET.

NOTE:

FOR ACCURATE RIGHT OF WAY DATA, CONTACT RIGHT OF WAY ENGINEERING AT THE DISTRICT OFFICE.

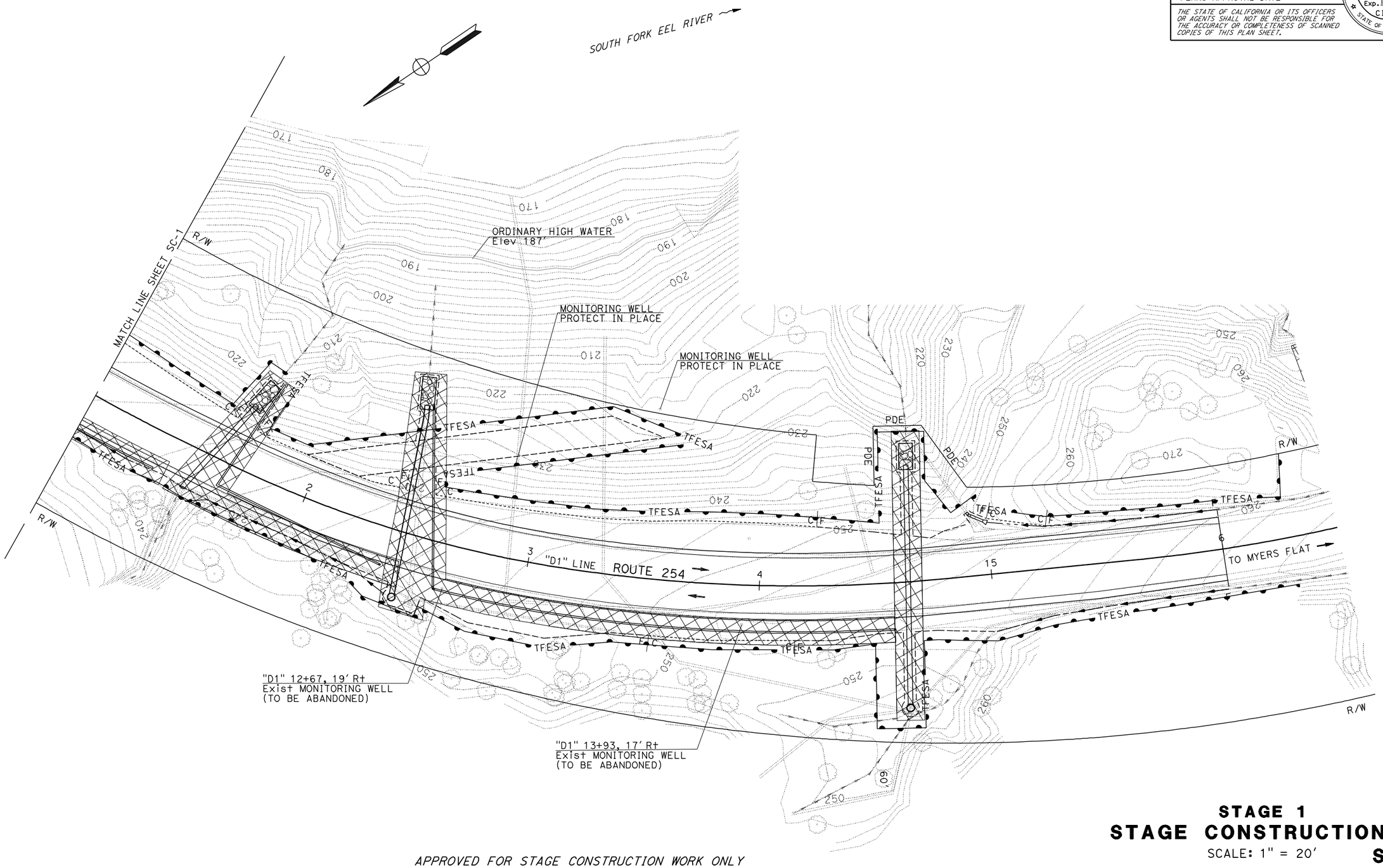

APPROVED FOR STAGE CONSTRUCTION WORK ONLY

STAGE 1
STAGE CONSTRUCTION
SCALE: 1" = 20'

SC-2

STATE OF CALIFORNIA - DEPARTMENT OF TRANSPORTATION
Caltrans®
NORTH REGION
DIVISION OF ENGINEERING

FUNCTIONAL SUPERVISOR: FERMIN BARRIGA
CALCULATED-DESIGNED BY: HORACIO PARAS JR
CHECKED BY: FERMIN BARRIGA
REVISED BY
DATE REVISED

LAST REVISION 01-26-11
DATE PLOTTED => 19-JUL-2012
TIME PLOTTED => 14:42

Dist	COUNTY	ROUTE	POST MILES TOTAL PROJECT	SHEET No.	TOTAL SHEETS
01	Hum	254	11.0	26	44

REGISTERED CIVIL ENGINEER 5-15-12 DATE

5-21-12
PLANS APPROVAL DATE

REGISTERED PROFESSIONAL ENGINEER HORACIO PARAS JR No. C73255 Exp. 12-31-12 CIVIL STATE OF CALIFORNIA

THE STATE OF CALIFORNIA OR ITS OFFICERS OR AGENTS SHALL NOT BE RESPONSIBLE FOR THE ACCURACY OR COMPLETENESS OF SCANNED COPIES OF THIS PLAN SHEET.

NOTE:

1. FOR ACCURATE RIGHT OF WAY DATA, CONTACT RIGHT OF WAY ENGINEERING AT THE DISTRICT OFFICE.
2. STAGE 2 CONSTRUCTION:
   A) INSTALL TYPE III BARRICADES AT "D1" 6+48 AND "D1" 19+48 OR AS DIRECTED BY THE ENGINEER. ACTIVATE DETOUR AND BEGIN ROAD CLOSURE.
   B) COMPLETE COLD PLANE AC Pvmt, ROADWAY EXCAVATION, AND EMBANKMENT FROM "D1" 10+00.00 TO "D1" 16+00.00. PREPARE Exist ACCESS ROAD FOR REVEGETATION. SEE LANDSCAPE PLANS FOR MORE DETAILS. REVEGETATION TO BE COMPLETED BY OTHERS. FOR ADDITIONAL COLD PLANE AC Pvmt DETAILS SEE SHEET C-1.
   C) INSTALL DRAINAGE SYSTEM 8.
   D) ADJUST FRAME AND COVER TO GRADE FOR SPECIFIED MONITORING WELLS. SEE SHEET SC-4.
   E) PLACE HMA (TYPE A, 0.80') FROM "D1" 10+00 TO "D1" 16+00.
   F) COLD PLANE AC PAVEMENT (0.20' Max) FROM "D1" 9+80 TO "D1" 10+00 AND FROM "D1" 16+00 TO "D1" 16+20.
   G) PLACE HMA (TYPE A, 0.20') FROM "D1" 9+80 TO "D1" 10+00 AND FROM "D1" 16+00 TO "D1" 16+20.
   H) PLACE FINAL SIGNING AND STRIPING. SEE PAVEMENT DELINEATION PLANS FOR MORE INFORMATION.
   I) REMOVE TYPE III BARRICADES, REMOVE DETOUR, AND RE-OPEN ROADWAY.
2. Exist ACCESS ROAD SHALL BE DECOMISSIONED AND PREPARED FOR REVEGETATION. REMOVE EXISTING GRAVEL SURFACE TO A DEPTH OF SIX INCHES. SEE LANDSCAPE PLANS FOR MORE INFORMATION. REVEGETATION TO BE COMPLETED BY OTHERS.

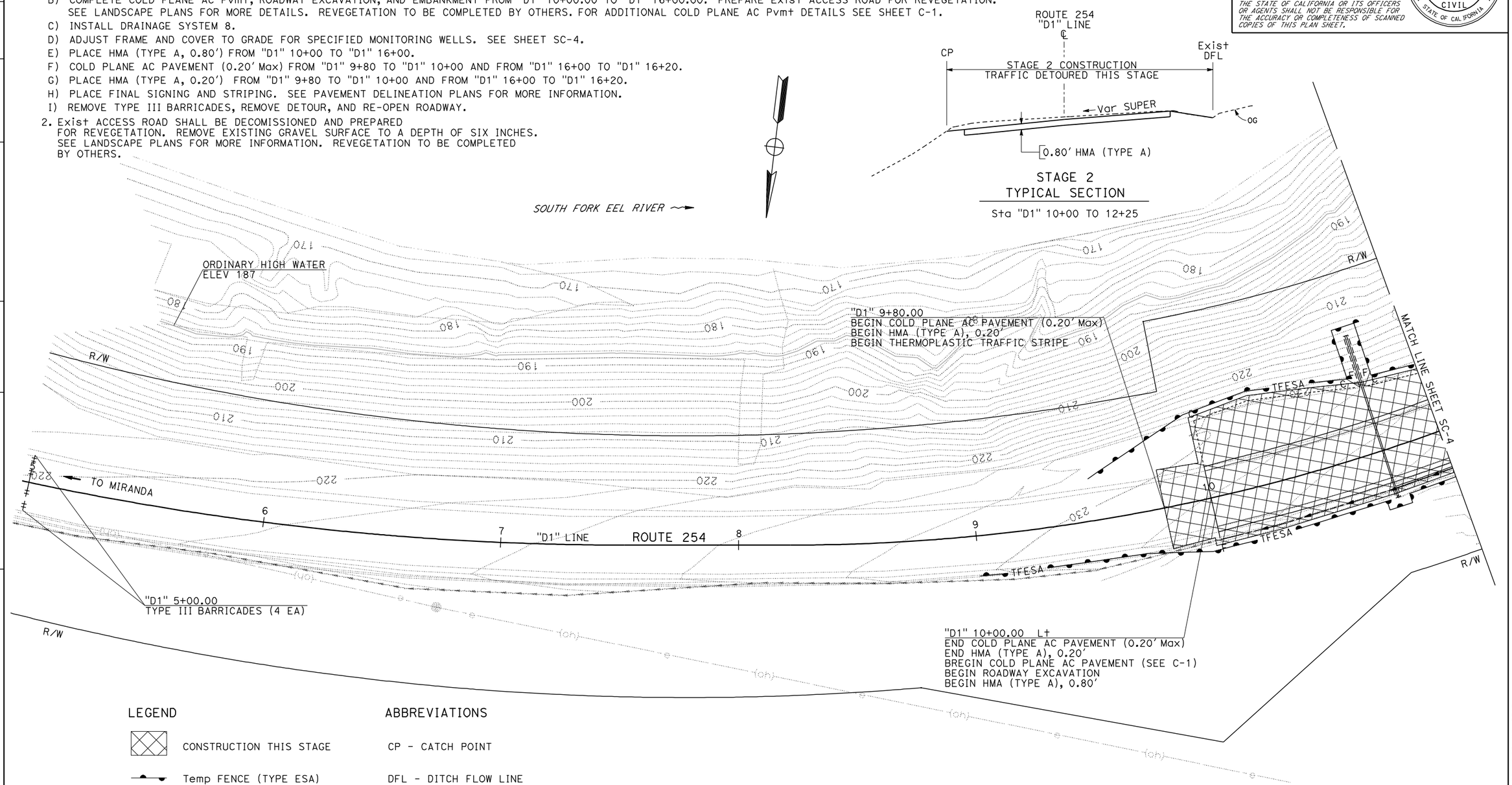

LEGEND

- CONSTRUCTION THIS STAGE
- Temp FENCE (TYPE ESA)
- DIRECTION OF TRAFFIC

ABBREVIATIONS

CP - CATCH POINT
DFL - DITCH FLOW LINE
PDE - PERMANENT DRAINAGE EASEMENT

APPROVED FOR STAGE CONSTRUCTION WORK ONLY

STAGE 2
STAGE CONSTRUCTION

SCALE: 1" = 20'

SC-3

STATE OF CALIFORNIA - DEPARTMENT OF TRANSPORTATION
Caltrans®
NORTH REGION
DIVISION OF ENGINEERING

FUNCTIONAL SUPERVISOR: FERMIN BARRIGA
CALCULATED-DESIGNED BY: HORACIO PARAS JR
CHECKED BY: FERMIN BARRIGA
REVISED BY
DATE REVISED

LAST REVISION 01-28-11
DATE PLOTTED => 19-JUL-2012
TIME PLOTTED => 14:42

Dist	COUNTY	ROUTE	POST MILES TOTAL PROJECT	SHEET No.	TOTAL SHEETS
01	Hum	254	11.0	27	44

REGISTERED CIVIL ENGINEER — DATE 5-15-12

PLANS APPROVAL DATE 5-21-12

REGISTERED PROFESSIONAL ENGINEER HORACIO PARAS JR No. C73255 Exp. 12-31-12 CIVIL STATE OF CALIFORNIA

THE STATE OF CALIFORNIA OR ITS OFFICERS OR AGENTS SHALL NOT BE RESPONSIBLE FOR THE ACCURACY OR COMPLETENESS OF SCANNED COPIES OF THIS PLAN SHEET.

NOTE:

1. FOR ACCURATE RIGHT OF WAY DATA, CONTACT RIGHT OF WAY ENGINEERING AT THE DISTRICT OFFICE.

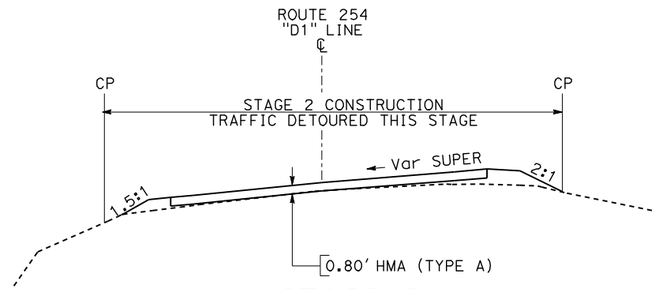

STAGE 2
TYPICAL SECTION
Sta "D1" 14+50 TO 15+00

STAGE 2
TYPICAL DITCH SECTION
Sta "D1" 15+00 Lt TO 15+25 Lt

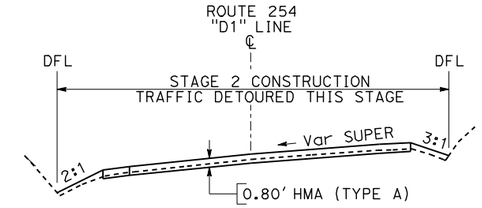

STAGE 2
TYPICAL SECTION
Sta "D1" 15+25 TO 16+00

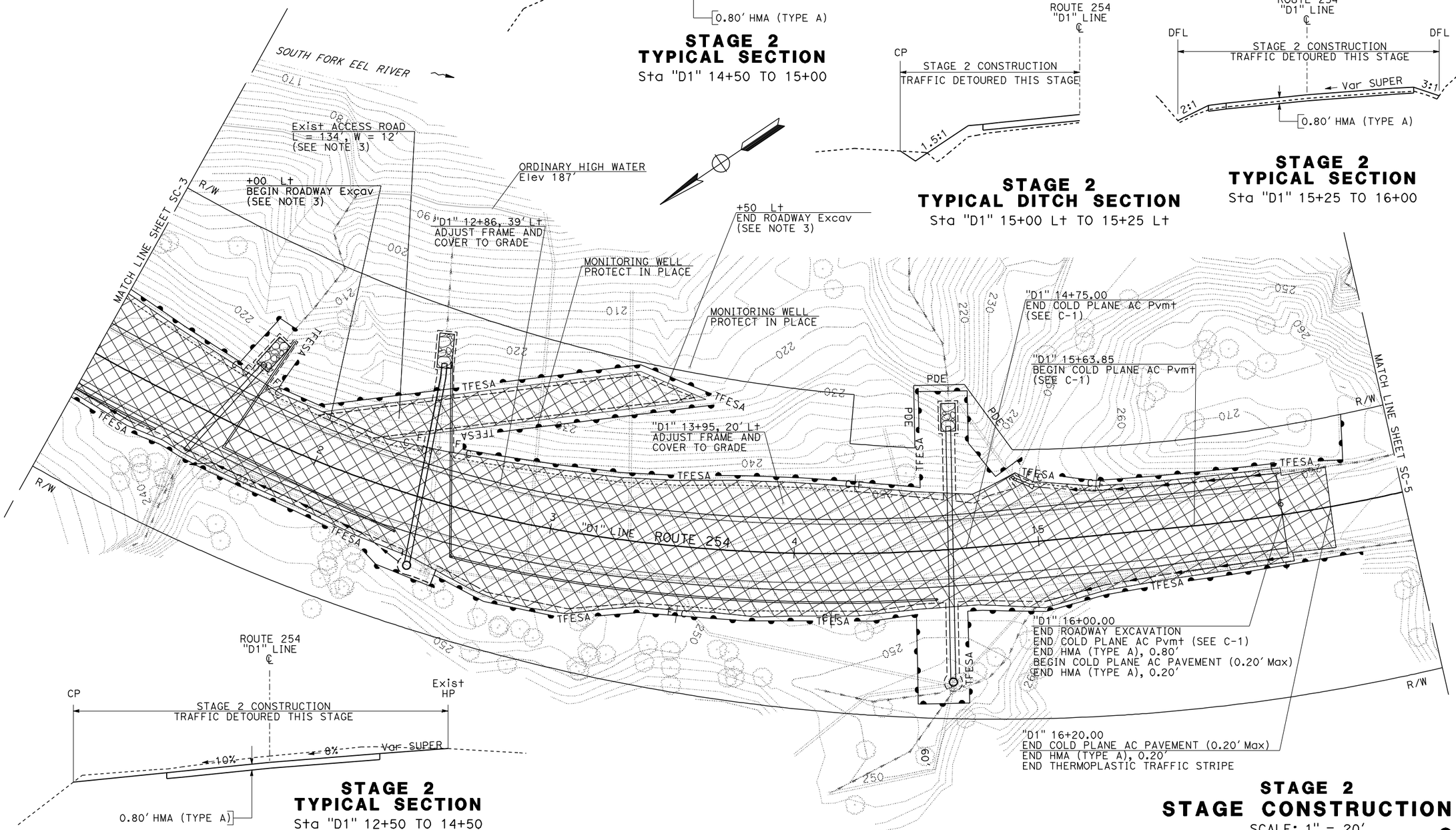

STAGE 2
TYPICAL SECTION
Sta "D1" 12+50 TO 14+50

STAGE 2
STAGE CONSTRUCTION
SCALE: 1" = 20'

SC-4

APPROVED FOR STAGE CONSTRUCTION WORK ONLY

STATE OF CALIFORNIA - DEPARTMENT OF TRANSPORTATION
Caltrans®
NORTH REGION
DIVISION OF ENGINEERING

FUNCTIONAL SUPERVISOR: FERMIN BARRIGA

CALCULATED-DESIGNED BY: HORACIO PARAS JR
CHECKED BY: FERMIN BARRIGA

REVISED BY | DATE REVISED

LAST REVISION 01-26-11
DATE PLOTTED => 19-JUL-2012
TIME PLOTTED => 14:42

Dist	COUNTY	ROUTE	POST MILES TOTAL PROJECT	SHEET No.	TOTAL SHEETS
01	Hum	254	11.0	28	44

REGISTERED CIVIL ENGINEER 5-15-12 DATE

5-21-12
PLANS APPROVAL DATE

REGISTERED PROFESSIONAL ENGINEER HORACIO PARAS JR No. C73255 Exp. 12-31-12 CIVIL STATE OF CALIFORNIA

THE STATE OF CALIFORNIA OR ITS OFFICERS OR AGENTS SHALL NOT BE RESPONSIBLE FOR THE ACCURACY OR COMPLETENESS OF SCANNED COPIES OF THIS PLAN SHEET.

NOTE:

FOR ACCURATE RIGHT OF WAY DATA, CONTACT RIGHT OF WAY ENGINEERING AT THE DISTRICT OFFICE.

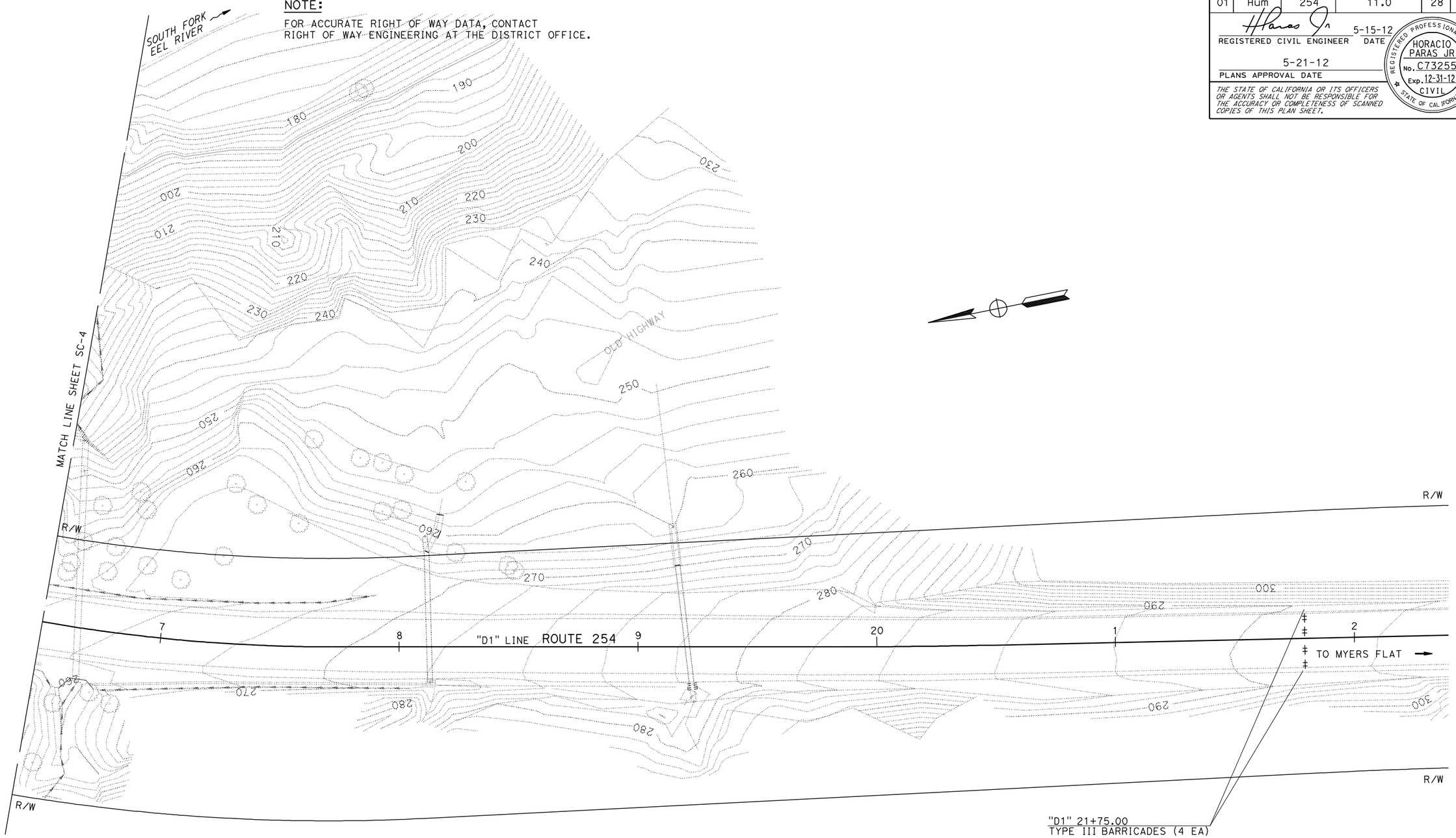

APPROVED FOR STAGE CONSTRUCTION WORK ONLY

STAGE 2
STAGE CONSTRUCTION

SCALE: 1" = 20'

SC-5

REVISED BY	HORACIO PARAS JR
DATE REVISED	FERMIN BARRIGA
CALCULATED-DESIGNED BY	HORACIO PARAS JR
CHECKED BY	FERMIN BARRIGA
FUNCTIONAL SUPERVISOR	FERMIN BARRIGA

STATE OF CALIFORNIA - DEPARTMENT OF TRANSPORTATION
Caltrans®
NORTH REGION
DIVISION OF ENGINEERING

LAST REVISION 01-27-11
DATE PLOTTED => 19-JUL-2012
TIME PLOTTED => 14:42

Dist	COUNTY	ROUTE	POST MILES TOTAL PROJECT	SHEET No.	TOTAL SHEETS
01	Hum	254	11.0	29	44

REGISTERED CIVIL ENGINEER 5-15-12 DATE

5-21-12
PLANS APPROVAL DATE

REGISTERED PROFESSIONAL ENGINEER HORACIO PARAS JR No. C73255 Exp. 12-31-12 CIVIL STATE OF CALIFORNIA

THE STATE OF CALIFORNIA OR ITS OFFICERS OR AGENTS SHALL NOT BE RESPONSIBLE FOR THE ACCURACY OR COMPLETENESS OF SCANNED COPIES OF THIS PLAN SHEET.

NOTES:

1. FOR EXACT LOCATION OF TYPE III BARRICADES SEE SHEETS SC-3 AND SC-5.

TYPE III BARRICADE

LOCATION	PLAN SHEET	QUANTITY (EACH)
"D1" 5+00	SC-3	4
"D1" 21+75	SC-5	4
SUBTOTAL FROM DEQ-1		3
TOTAL		11

STAGE CONSTRUCTION QUANTITIES

SCQ-1

STATE OF CALIFORNIA - DEPARTMENT OF TRANSPORTATION
Caltrans®
NORTH REGION
DIVISION OF ENGINEERING

FUNCTIONAL SUPERVISOR: FERMIN BARRIGA

CALCULATED-DESIGNED BY: HORACIO PARAS JR
CHECKED BY: FERMIN BARRIGA

REVISED BY
DATE REVISED

LAST REVISION 01-27-11
DATE PLOTTED => 19-JUL-2012
TIME PLOTTED => 14:42

Dist	COUNTY	ROUTE	POST MILES TOTAL PROJECT	SHEET No.	TOTAL SHEETS
01	Hum	254	11.0	30	44

REGISTERED CIVIL ENGINEER 5-15-12 DATE

5-21-12
PLANS APPROVAL DATE

REGISTERED PROFESSIONAL ENGINEER HORACIO PARAS JR No. C73255 Exp. 12-31-12 CIVIL STATE OF CALIFORNIA

THE STATE OF CALIFORNIA OR ITS OFFICERS OR AGENTS SHALL NOT BE RESPONSIBLE FOR THE ACCURACY OR COMPLETENESS OF SCANNED COPIES OF THIS PLAN SHEET.

NOTES:
1. EXACT SIGN LOCATION TO BE DETERMINED BY THE ENGINEER.
2. ALL DETOUR SIGNS SHALL BE COVERED WHEN DETOUR IS NOT IN OPERATION.
3. ALL DETOUR SIGNS SHALL BE BLACK ON ORANGE UNLESS OTHERWISE NOTED.
4. FOR ADDITIONAL STATIONARY MOUNTED CONSTRUCTION AREA SIGNS SEE CONSTRUCTION AREA SIGN PLANS.
5. PCMS FACING SOUTH BOUND TRAFFIC ALONG ROUTE 101 SHALL READ:

RTE 254 CLOSED AHEAD	USE EXIT 650 AHEAD	WATCH FOR BIKES
FRAME 1	FRAME 2	FRAME 3

6. PCMS FACING NORTH BOUND TRAFFIC ALONG ROUTE 101 SHALL READ:

RTE 254 CLOSED AHEAD	USE EXIT 656 AHEAD	WATCH FOR BIKES
FRAME 1	FRAME 2	FRAME 3

7. PCMS SHALL READ AS SHOWN OR AS DIRECTED BY THE ENGINEER.

LEGEND

SIGN-SINGLE POST

SIGN-PORTABLE CHANGABLE MESSAGE SIGN

‡ TYPE III BARRICADE MOUNTED SIGN

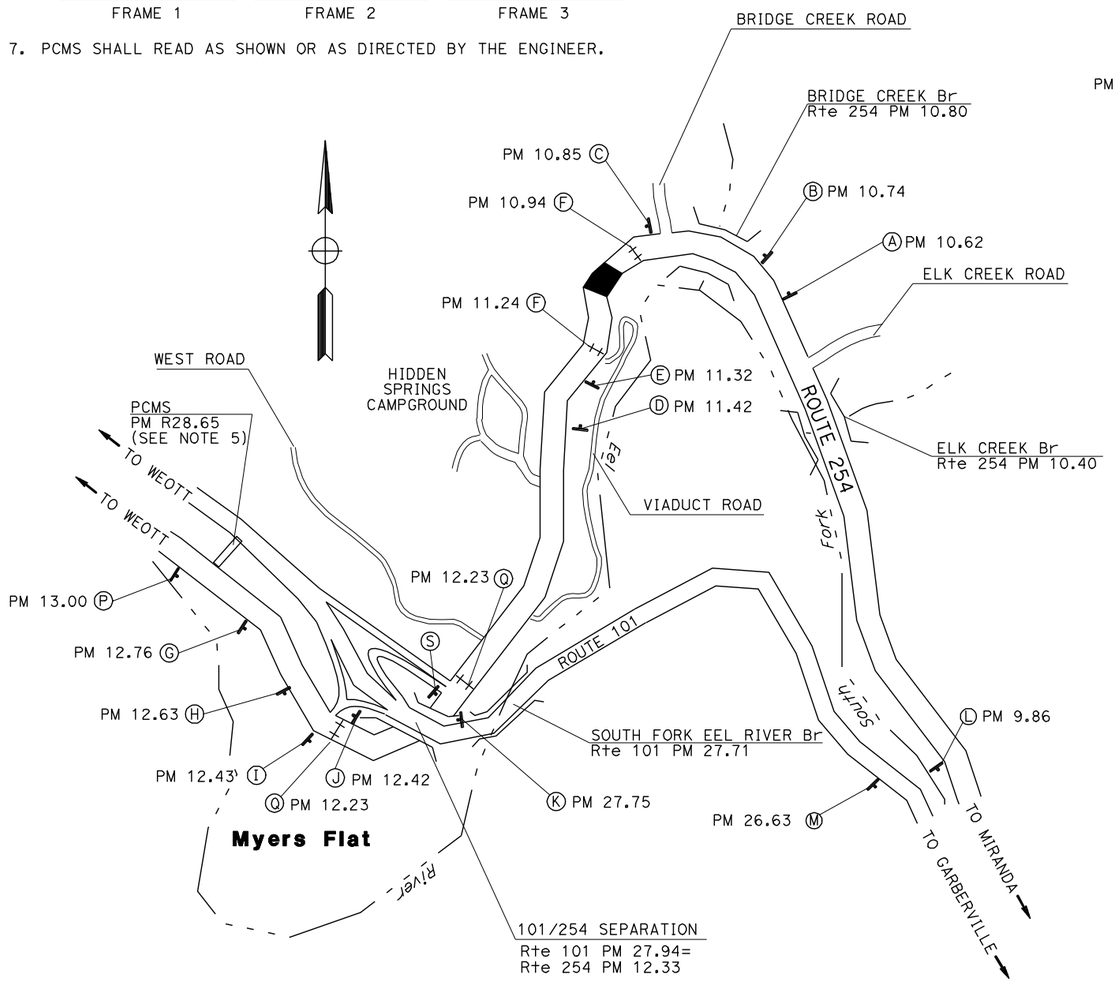

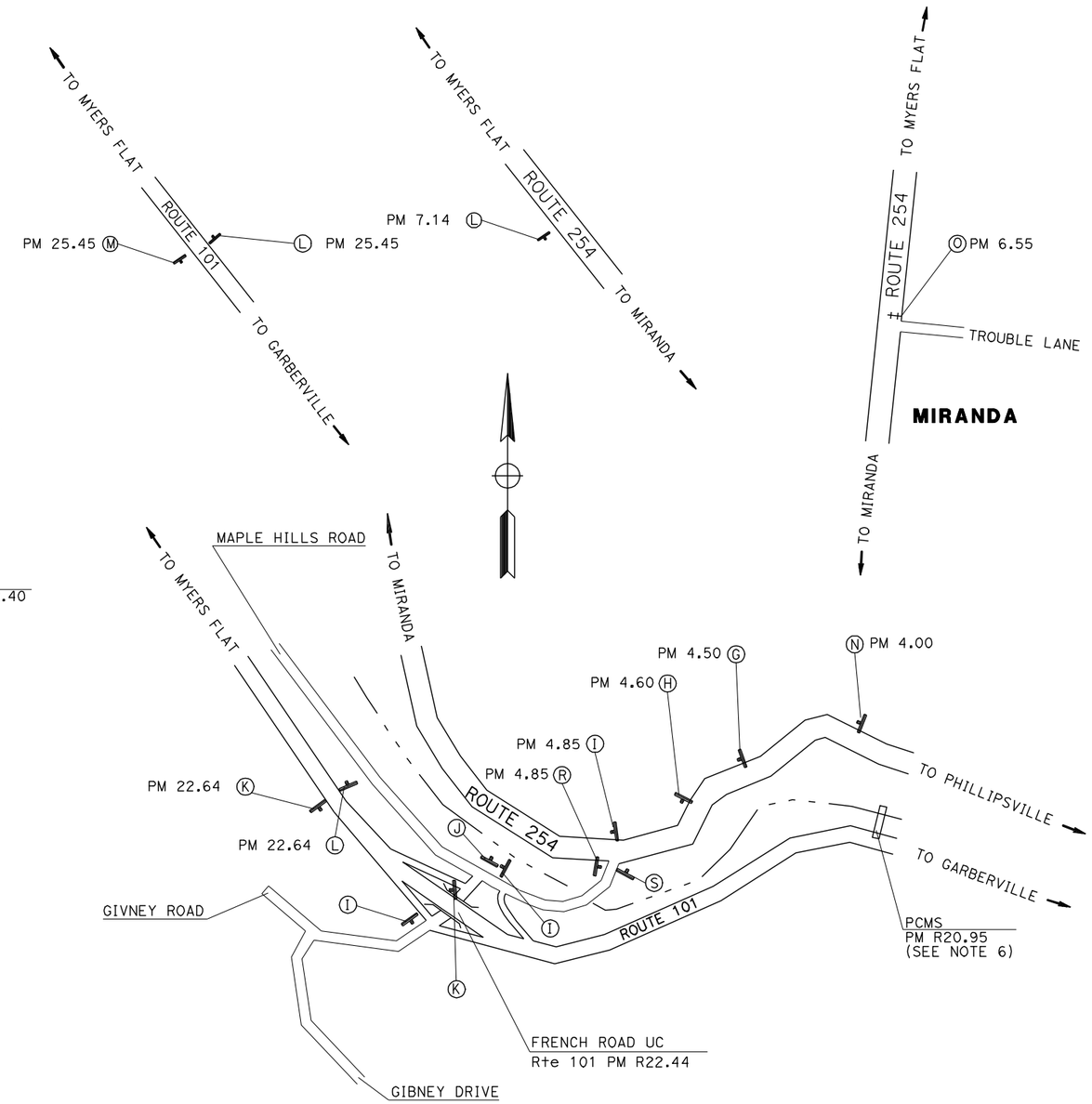

APPROVED FOR DETOUR CONSTRUCTION WORK ONLY

DETOUR PLAN

NO SCALE

DE-1

REVISED BY	DATE REVISED
HORACIO PARAS JR	FERMIN BARRIGA
CALCULATED-DESIGNED BY	CHECKED BY
FUNCTIONAL SUPERVISOR	FERMIN BARRIGA

STATE OF CALIFORNIA - DEPARTMENT OF TRANSPORTATION
Caltrans
NORTH REGION
DIVISION OF ENGINEERING

LAST REVISION 04-05-11 | DATE PLOTTED => 19-JUL-2012 TIME PLOTTED => 14:42

Dist	COUNTY	ROUTE	POST MILES TOTAL PROJECT	SHEET No.	TOTAL SHEETS
01	Hum	254	11.0	31	44

REGISTERED CIVIL ENGINEER 5-15-12 DATE

5-21-12
PLANS APPROVAL DATE

REGISTERED PROFESSIONAL ENGINEER HORACIO PARAS JR No. C73255 Exp. 12-31-12 CIVIL STATE OF CALIFORNIA

THE STATE OF CALIFORNIA OR ITS OFFICERS OR AGENTS SHALL NOT BE RESPONSIBLE FOR THE ACCURACY OR COMPLETENESS OF SCANNED COPIES OF THIS PLAN SHEET.

NOTES:
1. FOR DETOUR SIGN LOCATIONS SEE SHEET DE-1.
2. EXACT SIGN LOCATION TO BE DETERMINED BY THE ENGINEER.
3. ALL DETOUR SIGNS SHALL BE BLACK ON ORANGE UNLESS OTHERWISE NOTED.
4. ALL DETOUR SIGNS SHALL BE COVERED WHEN DETOUR IS NOT IN OPERATION.
5. SIGN R11-2 SHALL BE MOUNTED ON TYPE III BARRICADES AS SHOWN ON DE-1, SC-3, AND SC-5.
6. SIGNS R11-3a (5) AND R11-3a (2) SHALL BE MOUNTED ON TYPE III BARRICADES AS SHOWN ON DE-1.
7. FOR ADDITIONAL CONSTRUCTION AREA SIGNS, SEE SHEET CS-1.
8. FOR ADDITIONAL TYPE III BARRICADES, SEE SHEET SCQ-1.

SP-1 60"X54"

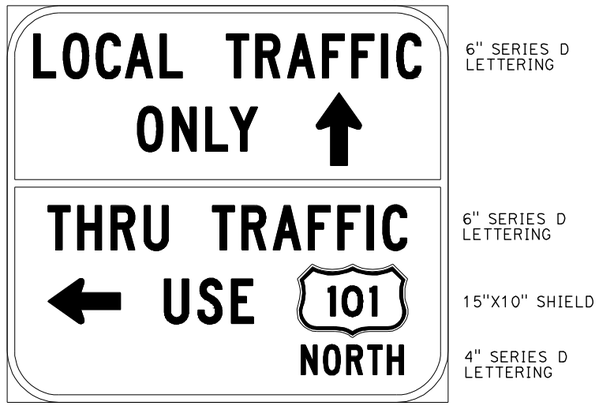

RETROREFLECTIVE ORANAGE BACKGROUND
WITH BLACK LEGEND AND BORDERS

1" BORDER WITH 6" RADIUS
6" UC 1L ARROW - 90°
6" UC 1L ARROW - 180°

DETAIL R

ADDITIONAL TYPE III BARRICADES

LOCATION	PLAN SHEET	QUANTITY (EACH)
PM 6.55	DE-1	1
PM 12.23	DE-1	1
PM 12.43	DE-1	1
	SUBTOTAL	3

ADDITIONAL STATIONARY MOUNTED CONSTRUCTION AREA SIGNS

SIGN LETTER	SIGN CODE	PANEL SIZE (INCHES)	SIGN MESSAGE	No. OF POSTS AND SIZE (INCHES)	NUMBER OF SIGNS (EACH)
Ⓐ	W20-3 (1400)	36 X 36	ROAD CLOSED 1400 FT	1-4X6	1
Ⓑ	W20-3 (900)	36 X 36	ROAD CLOSED 900 FT	1-4X6	1
Ⓒ	W20-3 (300)	36 X 36	ROAD CLOSED 300 FT	1-4X6	1
Ⓓ	W20-3 (1000)	36 X 36	ROAD CLOSED 1000 FT	1-4X6	1
Ⓔ	W20-3 (500)	36 X 36	ROAD CLOSED 500 FT	1-4X6	1
Ⓕ	R11-2	48 X 30	ROAD CLOSED	SEE NOTE 5	2
Ⓖ	W20-2 (1500)	36 X 36	DETOUR 1500 FT	1-4X6	2
Ⓗ	M4-8 G28-1(CA) M5-1	24 X 12 15 X 11 21 X 15	DETOUR 254 ⇦	1-4X6	2
Ⓘ	M4-8 G28-1(CA) M6-1	24 X 12 15 X 11 21 X 15	DETOUR 254 ⇦	1-4X6	3
Ⓙ	M4-8 G28-1(CA) M6-1	24 X 12 15 X 11 21 X 15	DETOUR 254 ⇨	1-4X6	3
Ⓚ	M4-8 G28-1(CA) M6-2	24 X 12 15 X 11 21 X 15	DETOUR 254 ⇗	1-4X6	3
Ⓛ	M4-8 G28-1(CA) M3-1	24 X 12 15 X 11 24 X 12	DETOUR 254 NORTH	1-4X6	4
Ⓜ	M4-8 G28-1(CA) M3-1	24 X 12 15 X 11 24 X 12	DETOUR 254 SOUTH	1-4X6	2
Ⓝ	R11-3a (7)	60 X 30	ROAD CLOSED 7 MILES AHEAD LOCAL TRAFFIC ONLY	1-4X6	1
Ⓞ	R11-3a (5)	60 X 30	ROAD CLOSED 5 MILES AHEAD LOCAL TRAFFIC ONLY	SEE NOTE 6	1
Ⓟ	R11-3a (2)	60 X 30	ROAD CLOSED 2 MILES AHEAD LOCAL TRAFFIC ONLY	1-4X6	1
Ⓠ	R11-3a (1)	60 X 30	ROAD CLOSED 1 MILE AHEAD LOCAL TRAFFIC ONLY	SEE NOTE 6	2
Ⓡ	SP-1	60 X 54	SEE DETAIL R THIS SHEET	2-4X6	1
Ⓢ	M4-8a	24 X 18	END DETOUR	1-4X6	2
				SUBTOTAL	34

DETOUR QUANTITIES
DEQ-1

STATE OF CALIFORNIA - DEPARTMENT OF TRANSPORTATION
Caltrans® NORTH REGION DIVISION OF ENGINEERING

FUNCTIONAL SUPERVISOR FERMIN BARRIGA
CALCULATED-DESIGNED BY HORACIO PARAS JR
CHECKED BY FERMIN BARRIGA
REVISED BY
DATE REVISED

LAST REVISION 04-07-11
DATE PLOTTED => 19-JUL-2012
TIME PLOTTED => 14:42

Dist	COUNTY	ROUTE	POST MILES TOTAL PROJECT	SHEET No.	TOTAL SHEETS
01	Hum	254	11.0	32	44

REGISTERED CIVIL ENGINEER 5-15-12 DATE

5-21-12
PLANS APPROVAL DATE

REGISTERED PROFESSIONAL ENGINEER HORACIO PARAS JR No. C73255 Exp. 12-31-12 CIVIL STATE OF CALIFORNIA

THE STATE OF CALIFORNIA OR ITS OFFICERS OR AGENTS SHALL NOT BE RESPONSIBLE FOR THE ACCURACY OR COMPLETENESS OF SCANNED COPIES OF THIS PLAN SHEET.

NOTES:
1. FOR COMPLETE RIGHT OF WAY DATA, SEE RIGHT OF WAY RECORD MAPS AT DISTRICT OFFICE.
2. EXACT SIGN LOCATION TO BE DETERMINED BY THE ENGINEER.
3. FOR MARKER (CULVERT) DETAIL, SEE SHEET PDQ-1.

LEGEND

- END STRIPE PATTERN OR REMOVAL LIMIT
- (X) STRIPE DETAIL NUMBER
- MARKER (CULVERT)
- UNDERDRAIN MARKER

CURVE DATA

No. ⊕	R	Δ	T	L
③	1200′	17°38′55"	186.29′	369.63′
④	800′	22°49′12"	161.45′	318.63′
⑤	500′	17°18′12"	76.08′	151.00′
⑥	660′	14°35′04"	84.46′	168.00′
⑦	700′	17°0′01"	104.62′	207.70′
⑧	3000′	1°14′54"	32.67′	65.34′

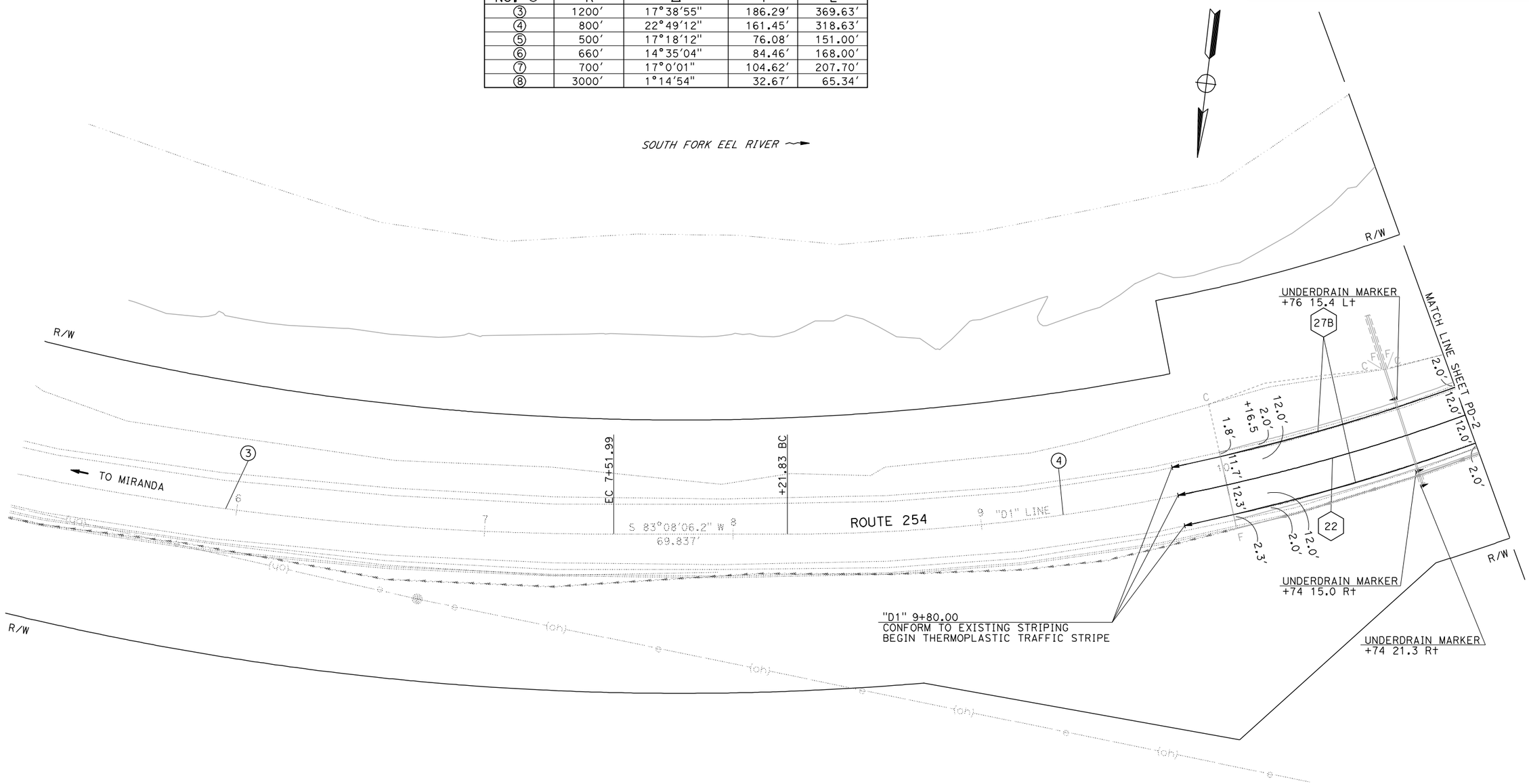

PAVEMENT DELINEATION PLAN

SCALE: 1" = 20′

PD-1

APPROVED FOR PAVEMENT DELINEATION WORK ONLY

STATE OF CALIFORNIA - DEPARTMENT OF TRANSPORTATION
Caltrans
NORTH REGION
DIVISION OF ENGINEERING

FUNCTIONAL SUPERVISOR: FERMIN BARRIGA

CALCULATED-DESIGNED BY: HORACIO PARAS JR
CHECKED BY: FERMIN BARRIGA

REVISED BY
DATE REVISED

LAST REVISION 01-31-11
DATE PLOTTED => 19-JUL-2012
TIME PLOTTED => 14:42

Dist	COUNTY	ROUTE	POST MILES TOTAL PROJECT	SHEET No.	TOTAL SHEETS
01	Hum	254	11.0	33	44

REGISTERED CIVIL ENGINEER 5-15-12 DATE

5-21-12
PLANS APPROVAL DATE

REGISTERED PROFESSIONAL ENGINEER HORACIO PARAS JR No. C73255 Exp. 12-31-12 CIVIL STATE OF CALIFORNIA

THE STATE OF CALIFORNIA OR ITS OFFICERS OR AGENTS SHALL NOT BE RESPONSIBLE FOR THE ACCURACY OR COMPLETENESS OF SCANNED COPIES OF THIS PLAN SHEET.

LEGEND

- END STRIPE PATTERN OR REMOVAL LIMIT
- X STRIPE DETAIL NUMBER
- MARKER (CULVERT)
- UNDERDRAIN MARKER

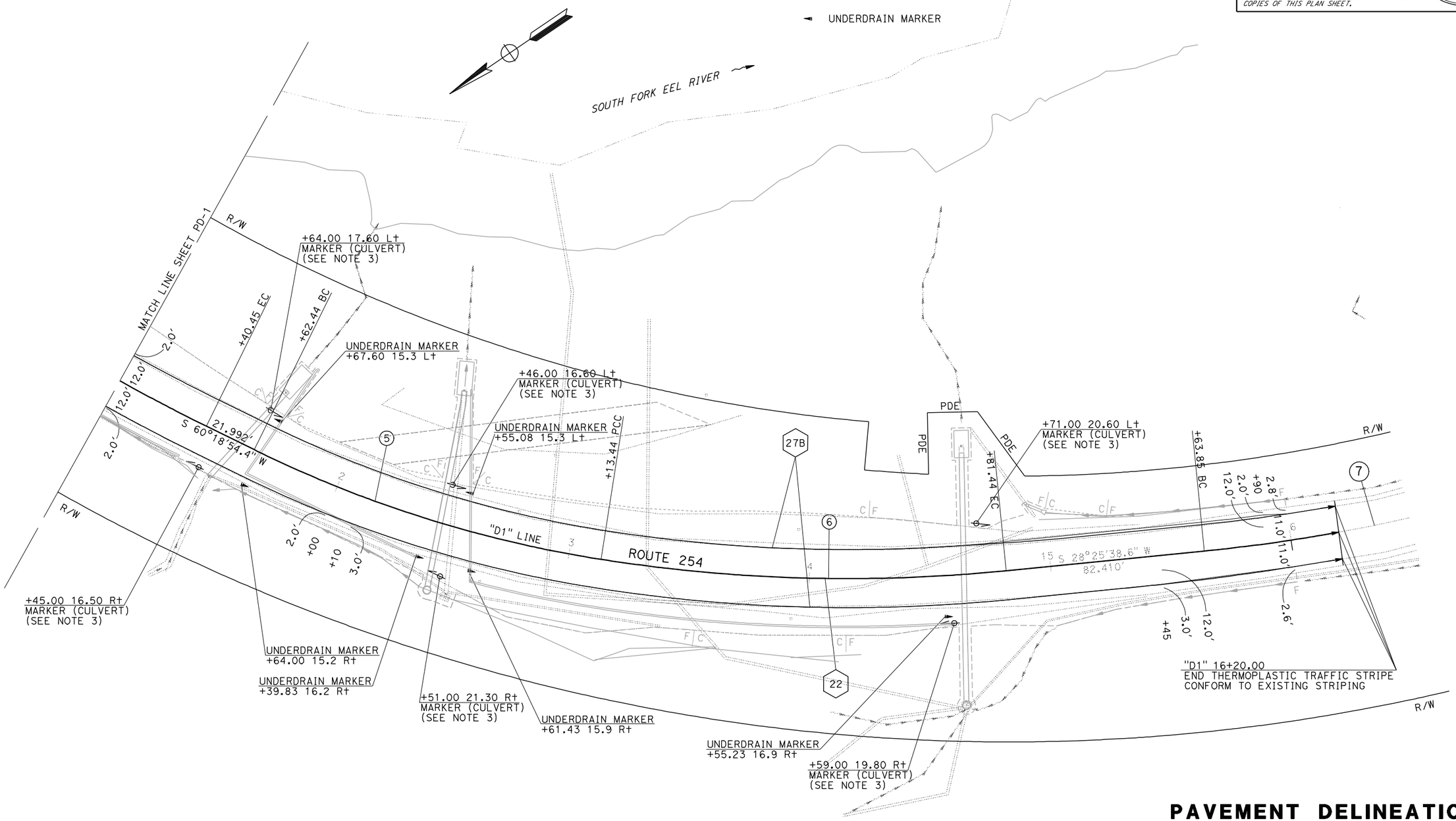

PAVEMENT DELINEATION PLAN

SCALE: 1" = 20'

PD-2

APPROVED FOR PAVEMENT DELINEATION WORK ONLY

STATE OF CALIFORNIA - DEPARTMENT OF TRANSPORTATION
Caltrans
NORTH REGION
DIVISION OF ENGINEERING

FUNCTIONAL SUPERVISOR: FERMIN BARRIGA

CALCULATED-DESIGNED BY: HORACIO PARAS JR
CHECKED BY: FERMIN BARRIGA

REVISED BY
DATE REVISED

LAST REVISION 01-31-11
DATE PLOTTED => 19-JUL-2012
TIME PLOTTED => 14:42

Dist	COUNTY	ROUTE	POST MILES TOTAL PROJECT	SHEET No.	TOTAL SHEETS
01	Hum	254	11.0	34	44

REGISTERED CIVIL ENGINEER 5-15-12 DATE

5-21-12
PLANS APPROVAL DATE

REGISTERED PROFESSIONAL ENGINEER HORACIO PARAS JR No. C73255 Exp. 12-31-12 CIVIL STATE OF CALIFORNIA

THE STATE OF CALIFORNIA OR ITS OFFICERS OR AGENTS SHALL NOT BE RESPONSIBLE FOR THE ACCURACY OR COMPLETENESS OF SCANNED COPIES OF THIS PLAN SHEET.

4" THERMOPLASTIC TRAFFIC STRIPE

STATION	DETAIL NUMBER	LENGTH (LF)
"D1" 9+80.00 L+ TO "D1" 16+20.00 L+	27B	630.7
"D1" 9+80.00 TO "D1" 16+20.00	22	1,280.0
"D1" 9+80.00 R+ TO "D1" 16+20.00 R+	27B	649.3
	TOTAL	2,560.0

PAVEMENT MARKER (RETROFLECTIVE)

STATION	DETAIL NUMBER	Q+y (EACH)	MARKER
"D1" 9+80.00 TO "D1" 16+20.00	22	54	TYPE D
	TOTAL	54	

MARKER (CULVERT)

STATION	DRAINAGE SYSTEM NUMBER	CULVERT POST MILE	Q+y (EACH)
"D1" 11+45.00 R+	1	11.03	1
"D1" 11+64.00 L+	1	11.03	1
"D1" 12+51.00 R+	2	11.05	1
"D1" 12+46.00 L+	2	11.05	1
"D1" 14+59.00 R+	3	11.09	1
"D1" 14+71.00 L+	3	11.09	1
		TOTAL	6

UNDERDRAIN MARKER

STATION	PLAN SHEET	Q+y (EACH)
"D1" 10+74.00 15.1′ R+	PD-1	1
"D1" 10+74.00 21.3′ R+	PD-1	1
"D1" 10+76.00 15.4′ L+	PD-1	1
"D1" 11+64.00 15.2′ R+	PD-2	1
"D1" 11+67.60 15.3′ L+	PD-2	1
"D1" 12+39.83 16.2′ R+	PD-2	1
"D1" 12+55.08 15.3′ L+	PD-2	1
"D1" 12+61.43 15.9′ R+	PD-2	1
"D1" 14+55.23 16.9′ R+	PD-2	1
	TOTAL	9

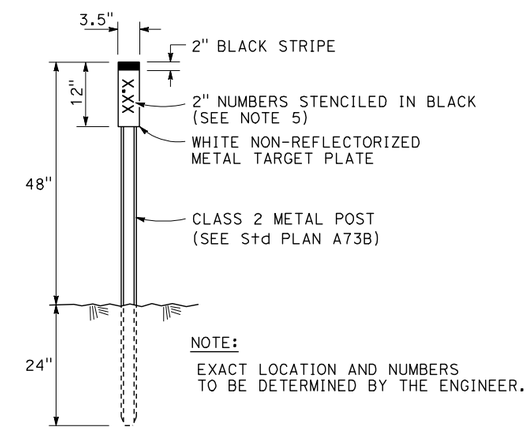

NOTE:
EXACT LOCATION AND NUMBERS TO BE DETERMINED BY THE ENGINEER.

MARKER (CULVERT) DETAIL

PAVEMENT DELINEATION QUANTITIES

PDQ-1

REVISED BY | DATE REVISED
HORACIO PARAS JR | FERMIN BARRIGA
CALCULATED-DESIGNED BY | CHECKED BY
FUNCTIONAL SUPERVISOR: FERMIN BARRIGA
STATE OF CALIFORNIA - DEPARTMENT OF TRANSPORTATION
Caltrans® NORTH REGION DIVISION OF ENGINEERING

LAST REVISION 02-08-11 | DATE PLOTTED => 19-JUL-2012 | TIME PLOTTED => 14:42

Dist	COUNTY	ROUTE	POST MILES TOTAL PROJECT	SHEET No.	TOTAL SHEETS
01	Hum	254	11.0	35	44

REGISTERED CIVIL ENGINEER 5-15-12 DATE

5-21-12
PLANS APPROVAL DATE

REGISTERED PROFESSIONAL ENGINEER HORACIO PARAS JR No. C73255 Exp. 12-31-12 CIVIL STATE OF CALIFORNIA

THE STATE OF CALIFORNIA OR ITS OFFICERS OR AGENTS SHALL NOT BE RESPONSIBLE FOR THE ACCURACY OR COMPLETENESS OF SCANNED COPIES OF THIS PLAN SHEET.

ROADWAY QUANTITIES SUMMARY

ITEM	STATION FROM	STATION TO	L+/R+	HMA (TYPE A) TON	TACK COAT TON	ROADWAY EXCAVATION CY	(N) EMBANKMENT CY	COLD PLANE AC PAVEMENT SQYD
CONFORM	"D1" 9+80	"D1" 10+00	L+/R+	8.7	0.01			62.2
ROADWAY RECONSTRUCTION	"D1" 10+00	"D1" 16+00	L+/R+	1172.5	0.88	238.4	89.2	1569.6
CONFORM	"D1" 16+00	"D1" 16+20	L+/R+	8.5	0.01			60.4
DECOMMISSION Exist ACCESS ROAD	"D1" 12+00	"D1" 13+50	L+			29.4		
			TOTAL	1,189.7	0.90	267.8	89.2	1692.2

(N) - NOT A SEPARATE PAY ITEM, FOR INFORMATION ONLY

ADJUST FRAME AND COVER TO GRADE

ITEM	STATION	L+/R+	QUANTITY (EACH)
MONITORING WELL	"D1" 12+86	39' L+	1
MONITORING WELL	"D1" 13+95	20' L+	1
		TOTAL	2

SUMMARY OF QUANTITIES
Q-1

HORACIO PARAS JR — REVISED BY
FERMIN BARRIGA — DATE REVISED
CALCULATED-DESIGNED BY
CHECKED BY
FUNCTIONAL SUPERVISOR
FERMIN BARRIGA

STATE OF CALIFORNIA - DEPARTMENT OF TRANSPORTATION
Caltrans
NORTH REGION
DIVISION OF ENGINEERING

LAST REVISION 02-09-12
DATE PLOTTED => 19-JUL-2012
TIME PLOTTED => 14:42

DIST	COUNTY	ROUTE	POST MILES TOTAL PROJECT	SHEET NO.	TOTAL SHEETS
01	Hum	254	11.0	36	44

REGISTERED CIVIL ENGINEER

January 18, 2008
PLANS APPROVAL DATE

REGISTERED PROFESSIONAL ENGINEER Raymond Don Tsztoo No. C37332 Exp. 6-30-08 CIVIL STATE OF CALIFORNIA

The State of California or its officers or agents shall not be responsible for the accuracy or completeness of electronic copies of this plan sheet.

To accompany plans dated 5-21-12

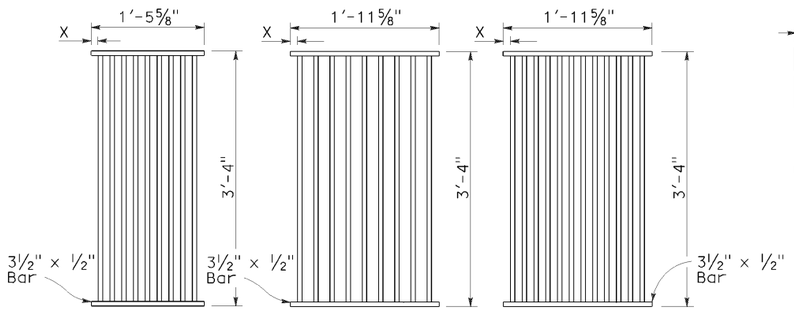

TYPE 18-9

1⅜" Clear spacing. Use within the roadbed on highways where bicycles and pedestrians are excluded.

TYPE 24-9

2" Clear spacing. Use in locations off the roadbed on all types of highways.

TYPE 24-12

1⅜" Clear spacing. Use within the roadbed on highways where bicycles and pedestrians are excluded.

RECTANGULAR GRATE DETAILS

(See table below)

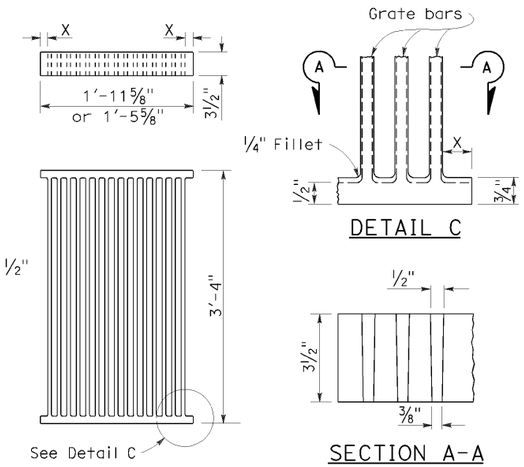

DETAIL C

SECTION A-A

ALTERNATIVE CAST NODULAR IRON GRATE OR CAST STEEL GRATE

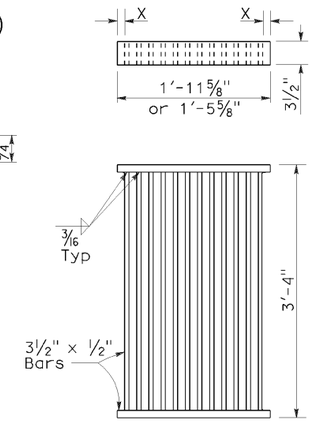

ALTERNATIVE WELDED GRATE

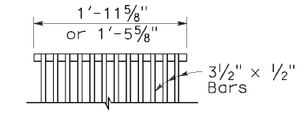

CAST END BLOCK

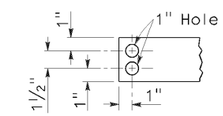

END OF BAR

NOTES:

1. Grate type numbers refer to approximate width of grate in inches and number of bars, respectively.
2. Contractor has the option of using cast nodular iron, cast steel, welded, bolted, or cast end block grate.
3. See Special Provisions for requirements pertaining to galvanizing or asphalt dipping of grates and frames.
4. Rounded top of bars optional on all grates.
5. Pipe inlets with a grate shall be placed so that bars parallel direction of principle surface flow.
6. Full penetration butt welds may be substituted for the fillet welds on all anchors.
7. Standard square, hexagon, round or equivalent headed anchors may be substituted for the right angle hooks on the anchors shown on this plan.
8. Grate and frame weights are based on welded grates (weights of face angles, steps, protection bars, etc. are not included).

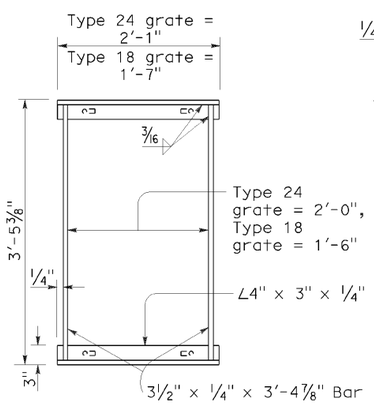

TYPICAL FRAME

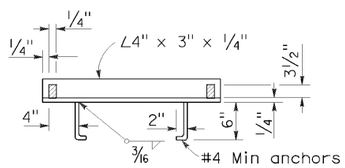

CROSS SECTION

(Thru frame)

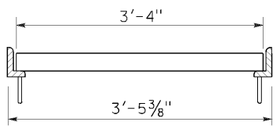

LONGITUDINAL SECTION

(Thru frame and grate)

RECTANGULAR FRAME DETAILS

(For all rectangular grates)

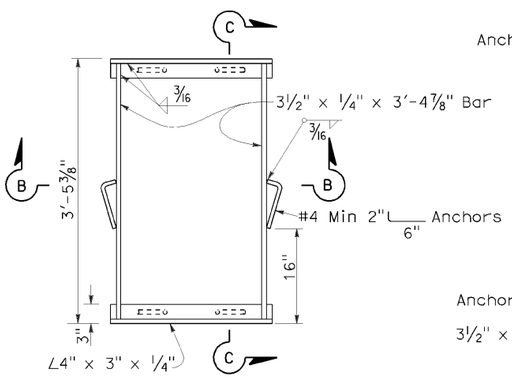

TYPICAL FRAME

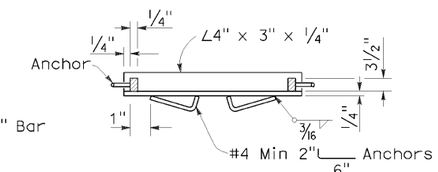

SECTION B-B

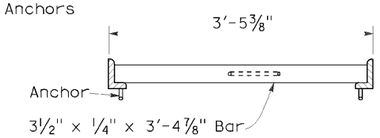

SECTION C-C

ALTERNATIVE ANCHOR FOR RECTANGULAR FRAME

(For details not shown, See Rectangular Frame Details)

ALTERNATIVE CAST NODULAR IRON OR CAST STEEL END BLOCK GRATE

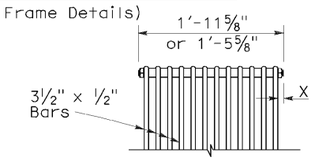

BOLTED END BLOCK

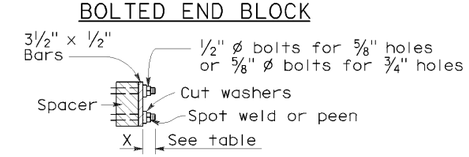

BOLTING DETAIL

ALTERNATIVE BOLTED GRATE

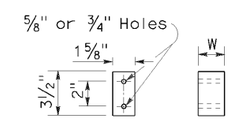

BAR SPACER

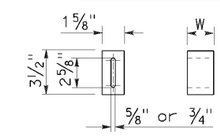

ALTERNATIVE SPACER

W = 1⅜" or 2"

GRATE BAR SPACING TABLE

TYPE	No. OF BARS	CLEAR BAR SPACING	X
18-9	9	1⅜"	1 1/16"
24-9	9	2"	1 9/16"
24-12	12	1⅜"	1¼"

INLET TYPE	COVER TYPE	WEIGHT LB
OS	PLATE	174
OL-7	PLATE	170
OL-10	PLATE	170
OL-14	PLATE	170
OL-21	PLATE	170
OCP	PLATE	112
OCPI	PLATE	112
OCPI	REDWOOD	42
OMP	PLATE	177
OMPI	PLATE	177

INLET TYPE	GRATE TYPE	No. OF GRATES	WEIGHT LB
GDO	24-12	2	634
GOL-7	24-12	1	326
GOL-10	24-12	1	326
GO,G1,G2,G3,G4 (TYPE 24)	24-9	1	263
	24-12	1	326
G4 (TYPE 18),G5,G6	18-9	1	249
GT1	18-9	2	498
GT2	18-9	2	498
GT3	24-12	2	652
GT4	24-12	2	652
TRASH RACK			22

BASIS FOR MISC IRON & STEEL FINAL PAY WEIGHTS FOR DRAINAGE INLETS

(See General Notes, No 8)

STATE OF CALIFORNIA
DEPARTMENT OF TRANSPORTATION

GRATE DETAILS

NO SCALE

RSP D77A DATED JANUARY 18, 2008 SUPERSEDES STANDARD PLAN D77A DATED MAY 1, 2006 - PAGE 155 OF THE STANDARD PLANS BOOK DATED MAY 2006.

REVISED STANDARD PLAN RSP D77A

2006 REVISED STANDARD PLAN RSP D77A

12-14-07

DIST	COUNTY	ROUTE	POST MILES TOTAL PROJECT	SHEET NO.	TOTAL SHEETS
01	Hum	254	11.0	37	44

LICENSED LANDSCAPE ARCHITECT

April 3, 2009
PLANS APPROVAL DATE

LICENSED LANDSCAPE ARCHITECT
Gregory A. Baltzer 2576
02-28-11
Renewal Date
03-04-09
Date
STATE OF CALIFORNIA

The State of California or its officers or agents shall not be responsible for the accuracy or completeness of electronic copies of this plan sheet.

To accompany plans dated 5-21-12

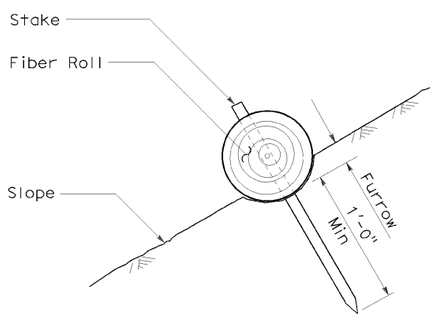

SECTION

FIBER ROLL (TYPE 1)

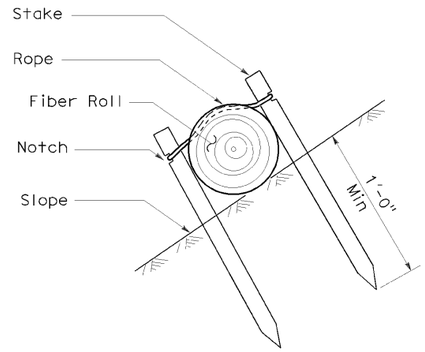

SECTION

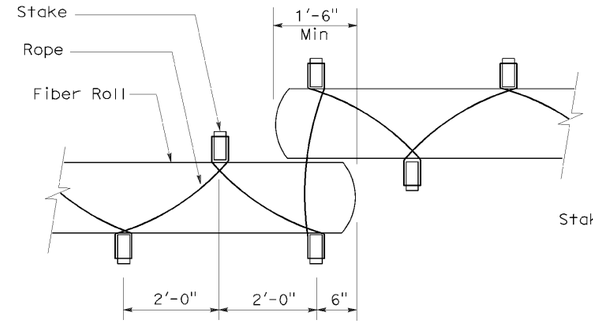

PLAN

FIBER ROLL (TYPE 2)

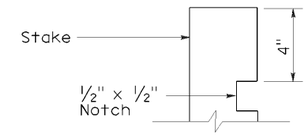

ELEVATION

STAKE NOTCH DETAIL

NOTES:

1. Fiber roll spacing varies depending upon slope inclination.
2. Installations shown in the perspectives are for slope inclination of 10:1 and steeper.

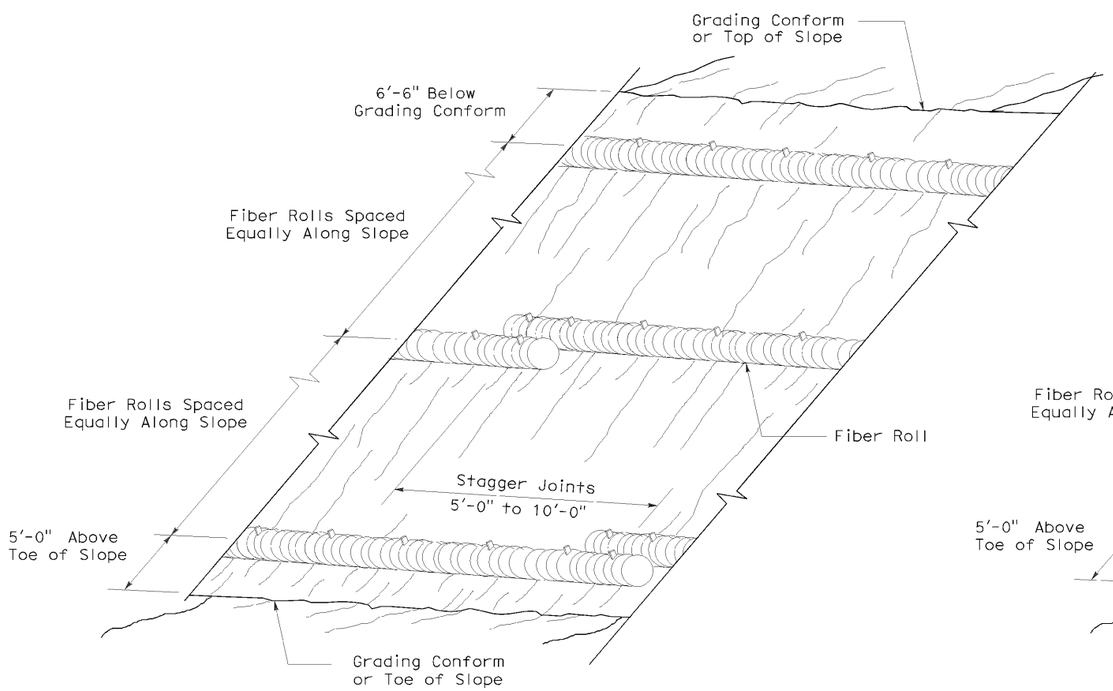

PERSPECTIVE

FIBER ROLL (TYPE 1)

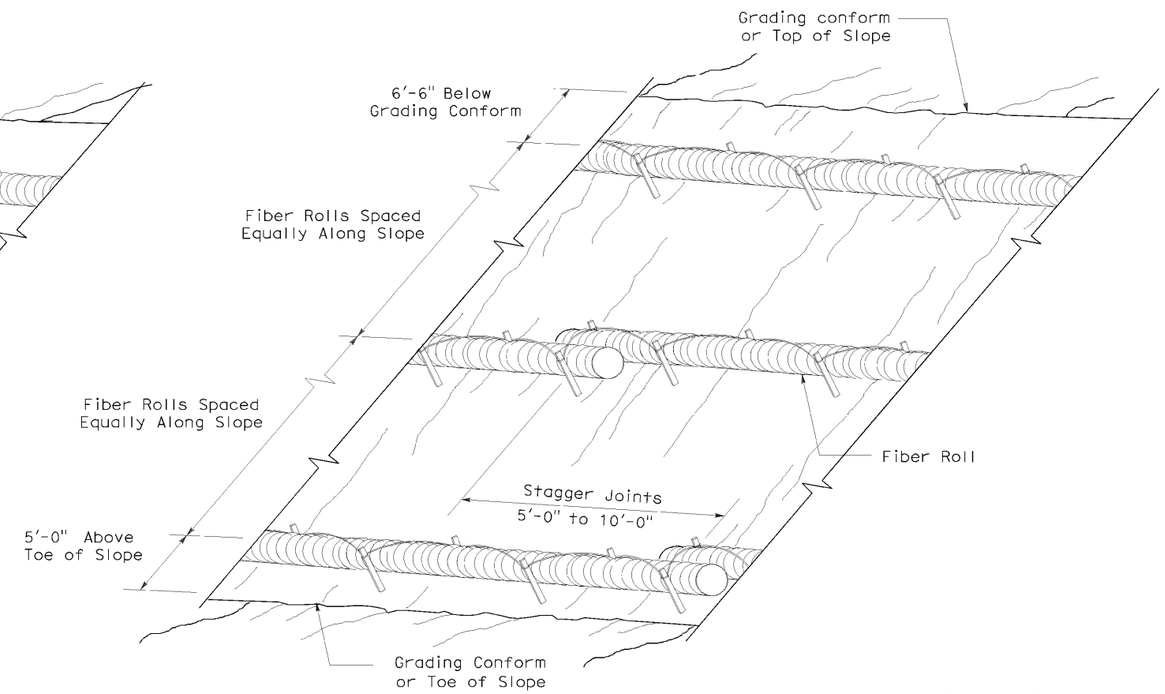

PERSPECTIVE

FIBER ROLL (TYPE 2)

STATE OF CALIFORNIA
DEPARTMENT OF TRANSPORTATION

EROSION CONTROL DETAILS (FIBER ROLL)

NO SCALE

RNSP H51 DATED APRIL 3, 2009 SUPERSEDES NSP H51 DATED DECEMBER 1, 2006 THAT SUPPLEMENTS THE STANDARD PLANS BOOK DATED MAY 2006.

REVISED NEW STANDARD PLAN RNSP H51

2006 REVISED NEW STANDARD PLAN RNSP H51

DIST	COUNTY	ROUTE	POST MILES TOTAL PROJECT	SHEET NO.	TOTAL SHEETS
01	Hum	254	11.0	38	44

Randell D. Hiatt
REGISTERED CIVIL ENGINEER

June 6, 2008
PLANS APPROVAL DATE

REGISTERED PROFESSIONAL ENGINEER Randell D. Hiatt No. C50200 Exp. 6-30-09 CIVIL STATE OF CALIFORNIA

The State of California or its officers or agents shall not be responsible for the accuracy or completeness of electronic copies of this plan sheet.

To accompany plans dated 5-21-12

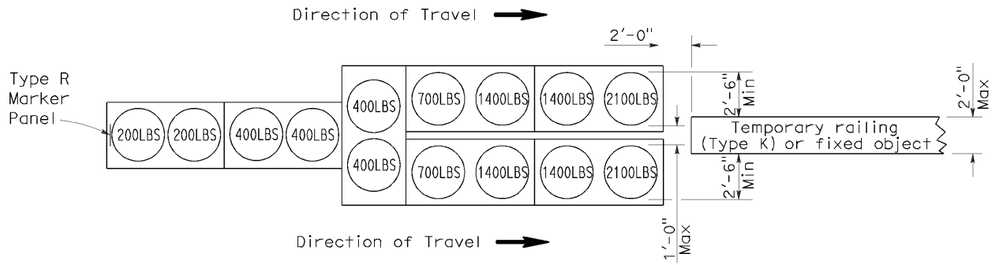

ARRAY 'TU14'

Approach speed 45 mph or more

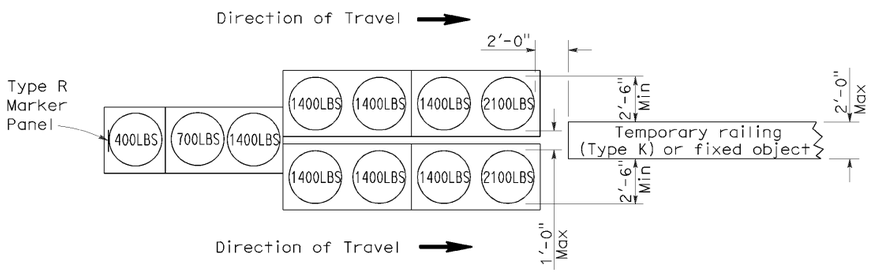

ARRAY 'TU11'

Approach speed less than 45 mph

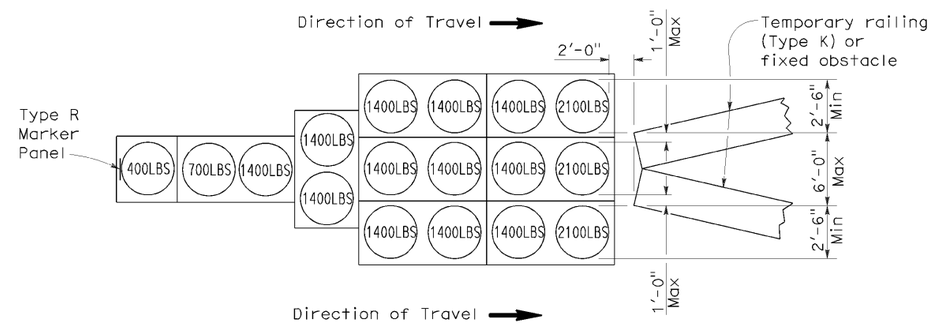

ARRAY 'TU17'

Approach speed less than 45 mph

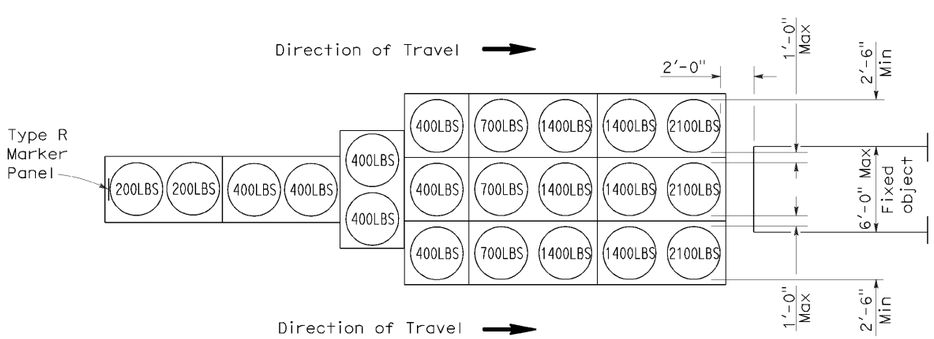

ARRAY 'TU21'

Approach speed 45 mph or more

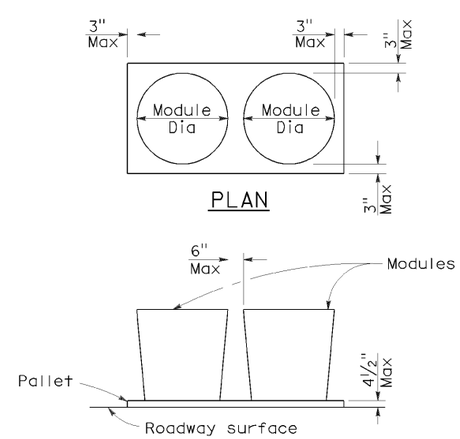

ELEVATION

CRASH CUSHION PALLET DETAIL

See Note 7

NOTES:

1. (XXX) Indicates sand filled module location and weight of sand in pounds for each module. Module spacing is based on the greater diameter of the module.
2. All sand weights are nominal.
3. Temporary crash cushion arrays shall not encroach on the traveled way.
4. Place the top of Type R marker panel 1" below the module lid.
5. Refer to Standard Plan A73B for marker details.
6. Approach speeds indicated conform to NCHRP 350 Report criteria.
7. Use of pallets is optional.

STATE OF CALIFORNIA
DEPARTMENT OF TRANSPORTATION

TEMPORARY CRASH CUSHION, SAND FILLED (UNIDIRECTIONAL)

NO SCALE

RSP T1A DATED JUNE 6, 2008 SUPERSEDES STANDARD PLAN T1A
DATED MAY 1, 2006 - PAGE 211 OF THE STANDARD PLANS BOOK DATED MAY 2006.

REVISED STANDARD PLAN RSP T1A

2006 REVISED STANDARD PLAN RSP T1A

5-15-08

DIST	COUNTY	ROUTE	POST MILES TOTAL PROJECT	SHEET NO.	TOTAL SHEETS
01	Hum	254	11.0	39	44

Randell D. Hiatt
REGISTERED CIVIL ENGINEER

June 6, 2008
PLANS APPROVAL DATE

REGISTERED PROFESSIONAL ENGINEER
Randell D. Hiatt
No. C50200
Exp. 6-30-09
CIVIL
STATE OF CALIFORNIA

The State of California or its officers or agents shall not be responsible for the accuracy or completeness of electronic copies of this plan sheet.

To accompany plans dated 5-21-12

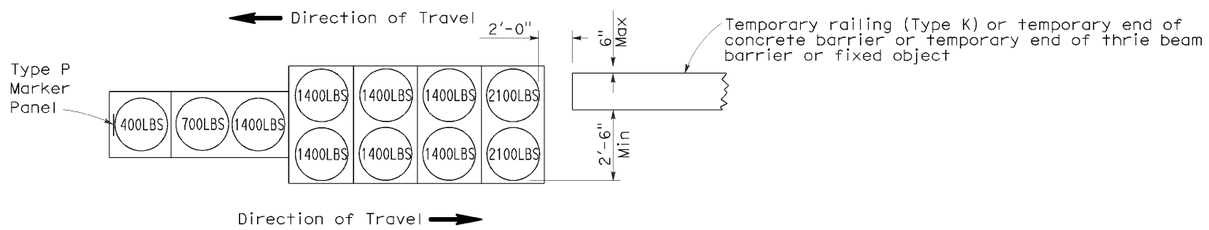

ARRAY 'TB11'

Approach speed less than 45 mph

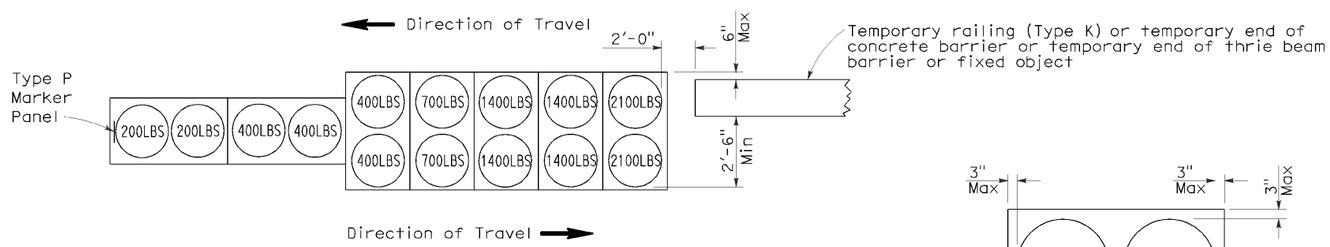

ARRAY 'TB14'

Approach speed 45 mph or more

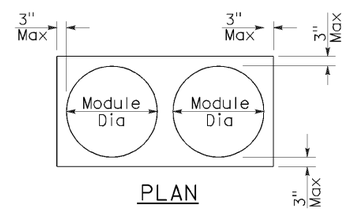

PLAN

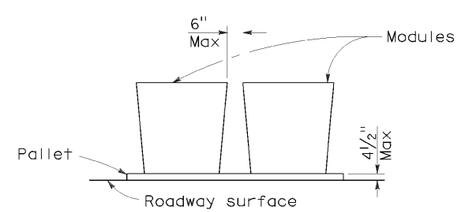

ELEVATION

CRASH CUSHION PALLET DETAIL

See Note 7

NOTES:

1. (XXX) Indicates sand filled module location and weight of sand in pounds for each module. Module spacing is based on the greater diameter of the module.
2. All sand weights are nominal.
3. Temporary crash cushion arrays shall not encroach on the traveled way.
4. Place the Type P marker panel so that the bottom of the panel rests upon the pallet.
5. Refer to Standard Plan A73B for marker details.
6. Approach speeds indicated conform to NCHRP 350 Report criteria.
7. Use of pallets is optional.

STATE OF CALIFORNIA
DEPARTMENT OF TRANSPORTATION

TEMPORARY CRASH CUSHION, SAND FILLED (BIDIRECTIONAL)

NO SCALE

RSP T1B DATED JUNE 6, 2008 SUPERSEDES STANDARD PLAN T1B
DATED MAY 1, 2006 - PAGE 212 OF THE STANDARD PLANS BOOK DATED MAY 2006.

REVISED STANDARD PLAN RSP T1B

2006 REVISED STANDARD PLAN RSP T1B

5-15-08

DIST	COUNTY	ROUTE	POST MILES TOTAL PROJECT	SHEET NO.	TOTAL SHEETS
01	Hum	254	11.0	40	44

Randell D. Hiatt
REGISTERED CIVIL ENGINEER

June 6, 2008
PLANS APPROVAL DATE

REGISTERED PROFESSIONAL ENGINEER
Randell D. Hiatt
No. C50200
Exp. 6-30-09
CIVIL
STATE OF CALIFORNIA

The State of California or its officers or agents shall not be responsible for the accuracy or completeness of electronic copies of this plan sheet.

To accompany plans dated 5-21-12

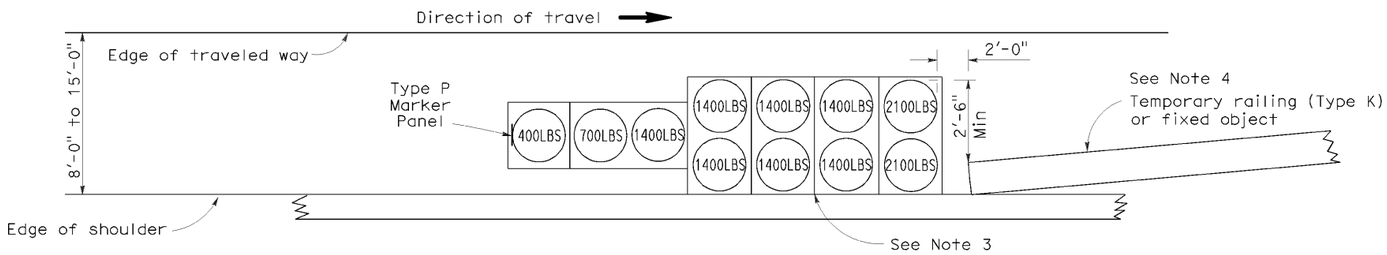

ARRAY 'TS11'

Approach speed less than 45 mph
See Note 9

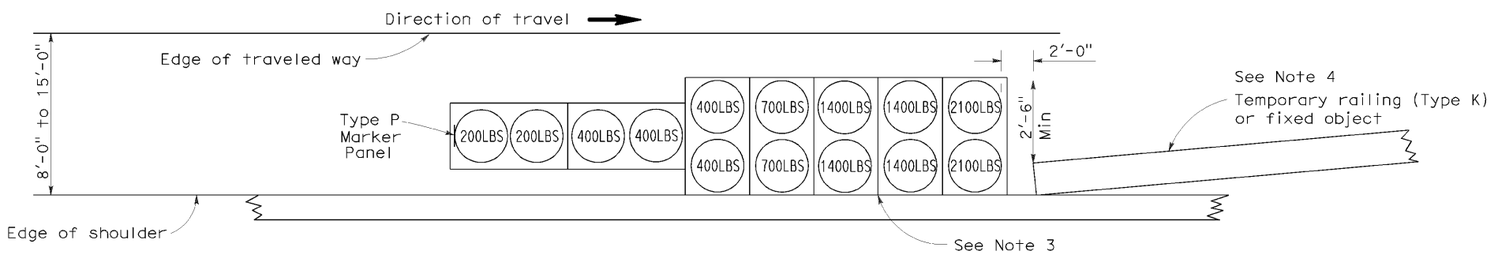

ARRAY 'TS14'

Approach speed 45 mph or more
See Note 9

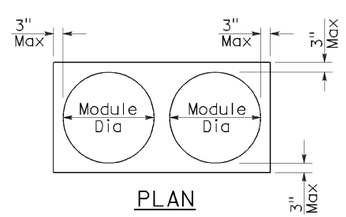

PLAN

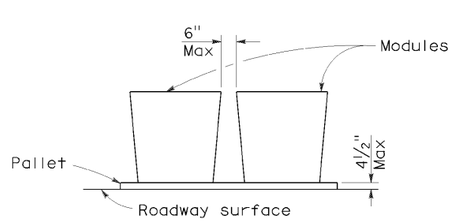

ELEVATION

CRASH CUSHION PALLET DETAIL

See Note 11

NOTES:

1. (XXX) Indicates sand filled module location and weight of sand in pounds for each module. Module spacing is based on the greater diameter of the module.
2. All sand weights are nominal.
3. The temporary crash cushion arrays shown on this plan shall be used only in locations where there will be traffic on one side of the temporary crash cushion array.
4. If the fixed object or approach end of the temporary railing is less than 15'-0" from the edge of traveled way, a temporary crash cushion is required in a construction or work zone.
5. Temporary crash cushion arrays shall not encroach on the traveled way.
6. Arrays for median shoulders shall conform to details shown on this plan for outside shoulders.
7. Place the Type P marker panel so that the bottom of the panel rests upon the pallet and faces traffic.
8. Refer to Standard Plan A73B for marker details.
9. For shoulder widths less than 8'-0", appropriate approved crash cushion protection, other than sand filled modules, shall be provided at fixed objects and at approach ends of temporary railing. The specific type of crash cushion shall be as shown on the project plans or as specified in the Special Provisions, or if not shown on the project plans or specified in the Special Provisions, shall be as approved by the Engineer.
10. Approach speeds indicated conform to NCHRP 350 Report criteria.
11. Use of pallets is optional.

STATE OF CALIFORNIA
DEPARTMENT OF TRANSPORTATION

TEMPORARY CRASH CUSHION, SAND FILLED (SHOULDER INSTALLATIONS)

NO SCALE

RSP T2 DATED JUNE 6, 2008 SUPERSEDES STANDARD PLAN T2
DATED MAY 1, 2006 - PAGE 213 OF THE STANDARD PLANS BOOK DATED MAY 2006.

REVISED STANDARD PLAN RSP T2

2006 REVISED STANDARD PLAN RSP T2

5-15-08

Dist	COUNTY	ROUTE	POST MILES TOTAL PROJECT	SHEET No.	TOTAL SHEETS
01	Hum	254	11.0	41	44

Randell D. Hiatt
REGISTERED CIVIL ENGINEER

May 20, 2011
PLANS APPROVAL DATE

REGISTERED PROFESSIONAL ENGINEER
Randell D. Hiatt
No. C50200
Exp. 6-30-11
CIVIL
STATE OF CALIFORNIA

The State of California or its officers or agents shall not be responsible for the accuracy or completeness of electronic copies of this plan sheet.

To accompany plans dated 5-21-12

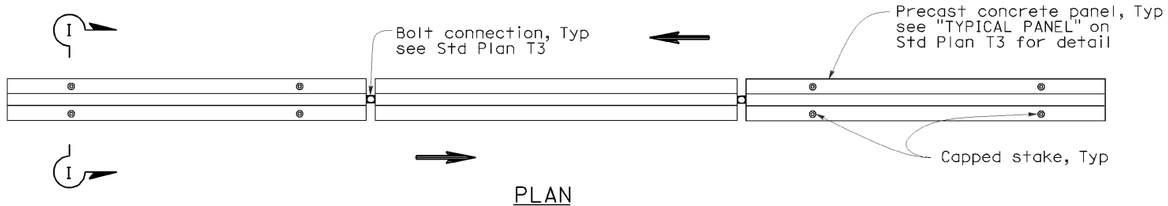

PLAN

RAILING STAKING CONFIGURATION FOR TWO-WAY TRAFFIC

See Note 1

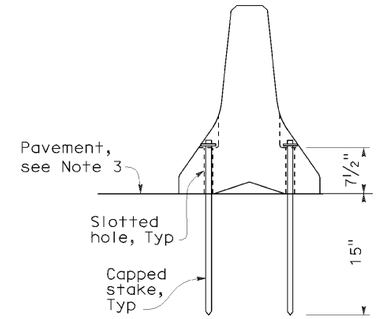

SECTION I-I

NOTES:

1. Where Type K Temporary Railing is placed as a temporary or long term barrier in two-way traffic on highways with less than 24" from the edge of traveled way, use four capped stakes per every other panel with end panels staked.
2. Where Type K Temporary Railing is placed 3" to 24" from the edge of an excavation on highways, use two capped stakes per panel along the traffic side.
3. Staked Type K Temporary Railing must be supported by at least 4" thick concrete, hot mix asphalt or existing asphalt concrete pavement.
4. The minimum yield strength for the washer must be 60,000 psi.
5. Direction of adjacent traffic indicated by ⟶.

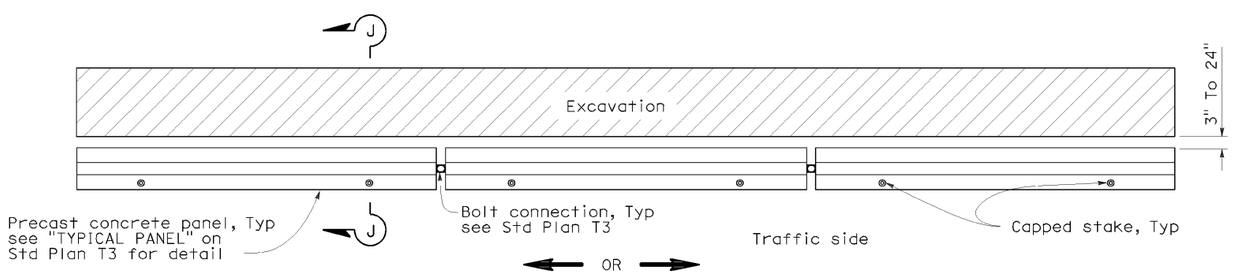

PLAN

RAILING STAKING CONFIGURATION ADJACENT TO AN EXCAVATION

See Note 2

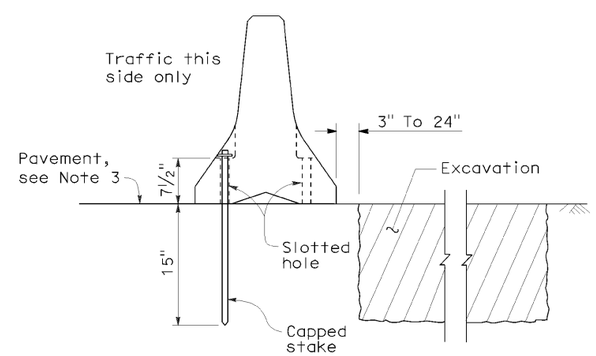

SECTION J-J

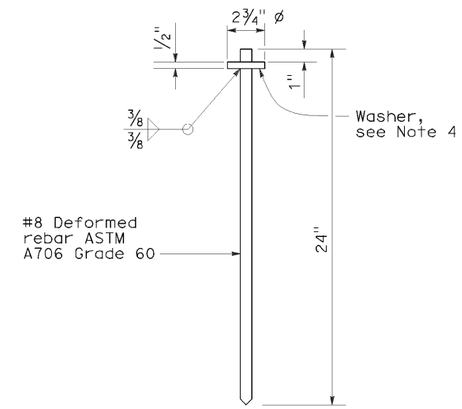

CAPPED STAKE DETAIL

STATE OF CALIFORNIA
DEPARTMENT OF TRANSPORTATION

TEMPORARY RAILING (TYPE K)

NO SCALE

NSP T3A DATED MAY 20, 2011 SUPPLEMENTS
THE STANDARD PLANS BOOK DATED MAY 2006.

NEW STANDARD PLAN NSP T3A

2006 NEW STANDARD PLAN NSP T3A

DIST	COUNTY	ROUTE	POST MILES TOTAL PROJECT	SHEET NO.	TOTAL SHEETS
01	Hum	254	11.0	42	44

LICENSED LANDSCAPE ARCHITECT

April 3, 2009
PLANS APPROVAL DATE

LICENSED LANDSCAPE ARCHITECT Robert B. Schott 3383 STATE OF CALIFORNIA
11-30-10 Renewal Date
2-25-09 Date

The State of California or its officers or agents shall not be responsible for the accuracy or completeness of electronic copies of this plan sheet.

To accompany plans dated 5-21-12

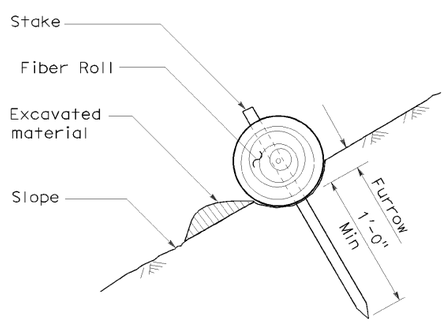

SECTION

TEMPORARY FIBER ROLL (TYPE 1)

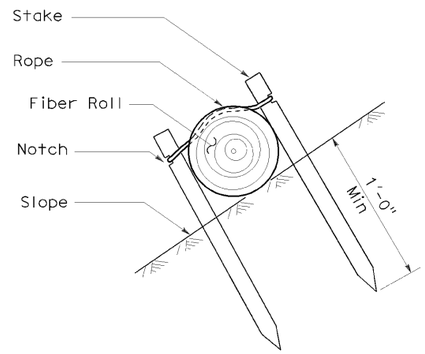

SECTION

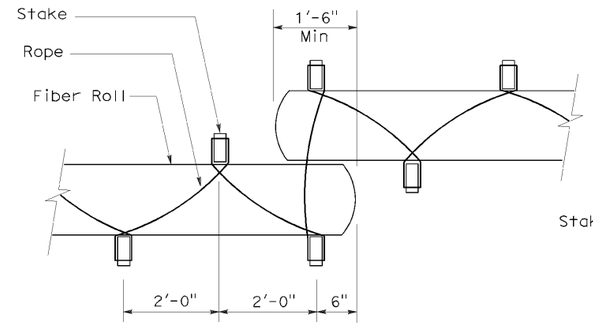

PLAN

TEMPORARY FIBER ROLL (TYPE 2)

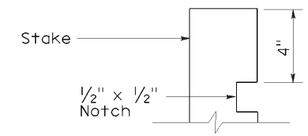

ELEVATION

STAKE NOTCH DETAIL

NOTES:

1. Temporary fiber roll spacing varies depending upon slope inclination.
2. Installations shown in the perspectives are for slope inclination of 10:1 and steeper.

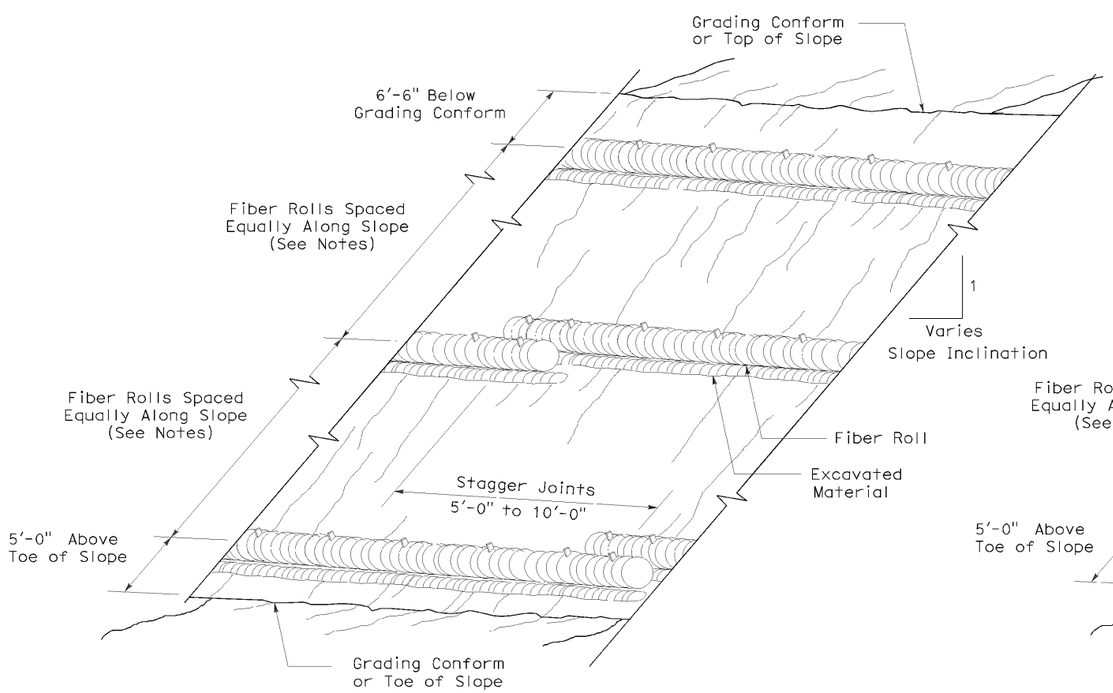

PERSPECTIVE

TEMPORARY FIBER ROLL (TYPE 1)

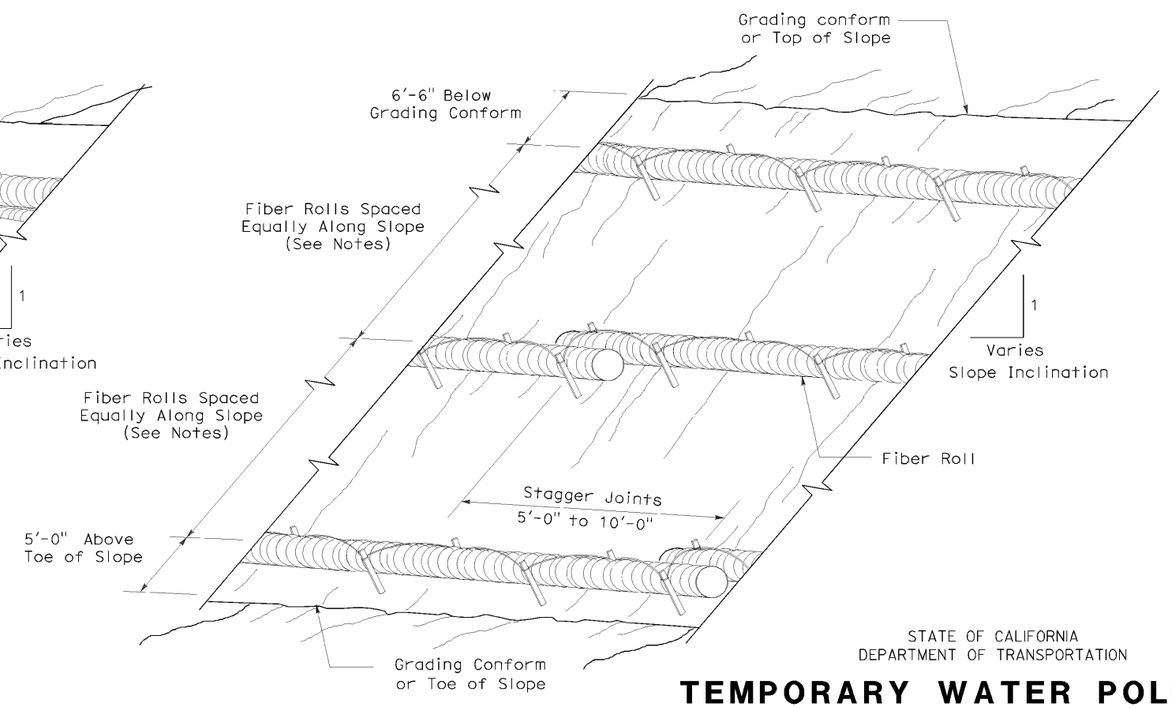

PERSPECTIVE

TEMPORARY FIBER ROLL (TYPE 2)

STATE OF CALIFORNIA
DEPARTMENT OF TRANSPORTATION

TEMPORARY WATER POLLUTION CONTROL DETAILS (TEMPORARY FIBER ROLL)

NO SCALE

RSP T56 DATED APRIL 3, 2009 SUPERSEDES STANDARD PLAN T56
DATED MAY 1, 2006 - PAGE 232 OF THE STANDARD PLANS BOOK DATED MAY 2006.

REVISED STANDARD PLAN RSP T56

2006 REVISED STANDARD PLAN RSP T56

2-23-09

DIST	COUNTY	ROUTE	POST MILES TOTAL PROJECT	SHEET NO.	TOTAL SHEETS
01	Hum	254	11.0	43	44

LICENSED LANDSCAPE ARCHITECT

August 15, 2008
PLANS APPROVAL DATE

LICENSED LANDSCAPE ARCHITECT — Robert B. Schott 3682 — Signature — Renewal Date 11-04-08 — Date 08-11-08 — STATE OF CALIFORNIA

The State of California or its officers or agents shall not be responsible for the accuracy or completeness of electronic copies of this plan sheet.

To accompany plans dated 5-21-12

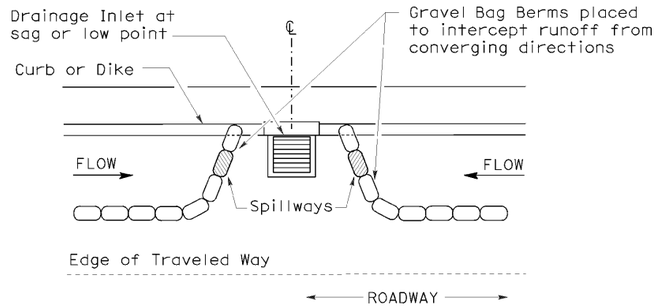

PLAN

CONFIGURATION FOR SAG POINT INLET (GRAVEL BAG BERM)

GRAVEL BAG BERM (TYPE 3A) SPACING TABLE

SLOPE OF ROADWAY (PERCENT)	1 to 3.9	4 to 5.9	6 to 7.9	8 to 10	10+
INTERVAL BETWEEN BERM	100′	75′	50′	25′	12′

For slope of less than 1%, install barriers only if erosion/sediment is prevalent

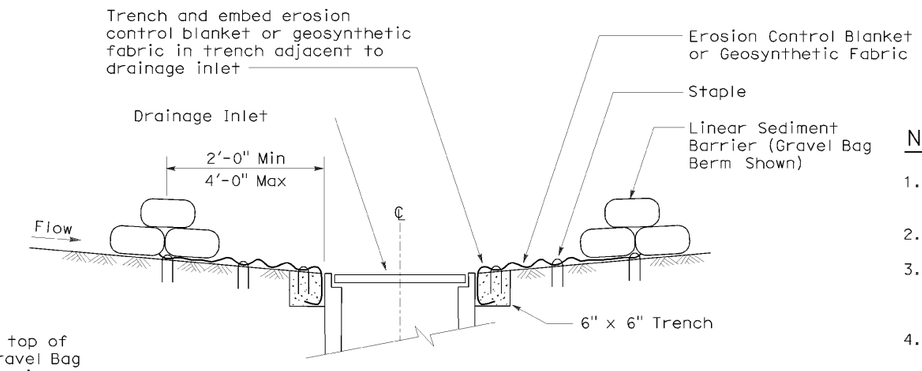

SECTION A-A

NOTES:

1. Place safety cones adjacent to drainage inlet protection.
2. Dimensions may vary to fit field conditions.
3. Install a minimum of 3 gravel bag berms upstream of each drainage inlet to be protected.
4. Position erosion control blanket or geosynthetic fabric at edge of concrete apron and secure in trench.
5. Erosion control blanket or geosynthetic fabric is not required if the area adjacent to the drainage inlet is vegetated or paved.

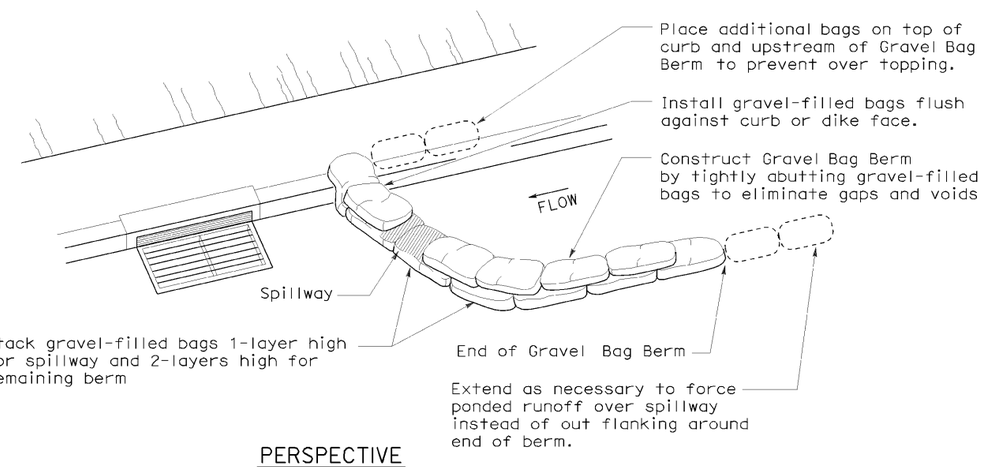

PERSPECTIVE

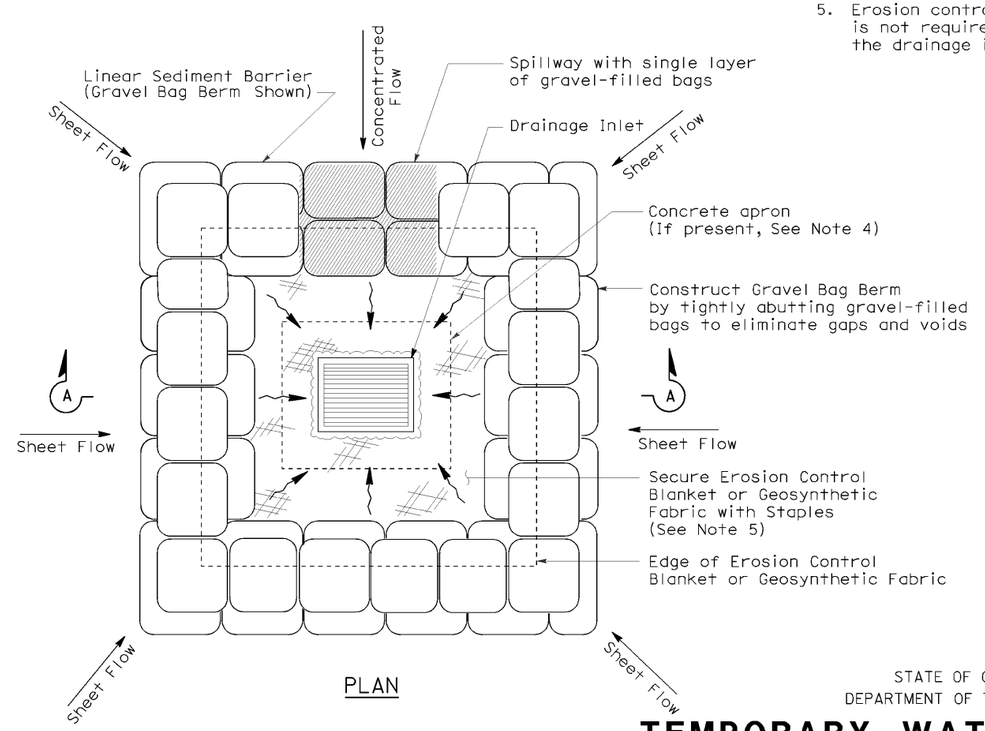

PLAN

TEMPORARY DRAINAGE INLET PROTECTION (TYPE 3B)

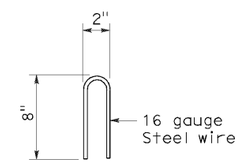

STAPLE DETAIL

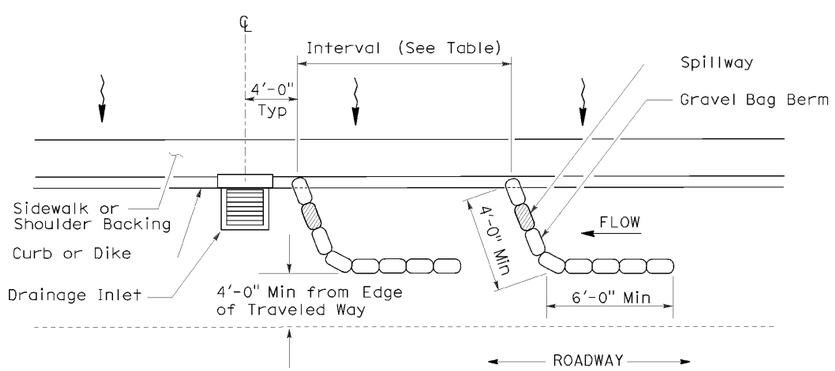

PLAN

TEMPORARY DRAINAGE INLET PROTECTION (TYPE 3A) (GRAVEL BAG BERM)

STATE OF CALIFORNIA
DEPARTMENT OF TRANSPORTATION

TEMPORARY WATER POLLUTION CONTROL DETAILS (TEMPORARY DRAINAGE INLET PROTECTION)

NO SCALE

NSP T62 DATED AUGUST 15, 2008 SUPPLEMENTS THE STANDARD PLANS BOOK DATED MAY 2006.

NEW STANDARD PLAN NSP T62

2006 NEW STANDARD PLAN NSP T62

7-11-08

DIST	COUNTY	ROUTE	POST MILES TOTAL PROJECT	SHEET NO.	TOTAL SHEETS
01	Hum	254	11.0	44	44

LICENSED LANDSCAPE ARCHITECT

April 3, 2009
PLANS APPROVAL DATE

LICENSED LANDSCAPE ARCHITECT — Robert B. Schott 3383 — Signature — 11-30-10 Renewal Date — 2-25-09 Date — STATE OF CALIFORNIA

The State of California or its officers or agents shall not be responsible for the accuracy or completeness of electronic copies of this plan sheet.

To accompany plans dated 5-21-12

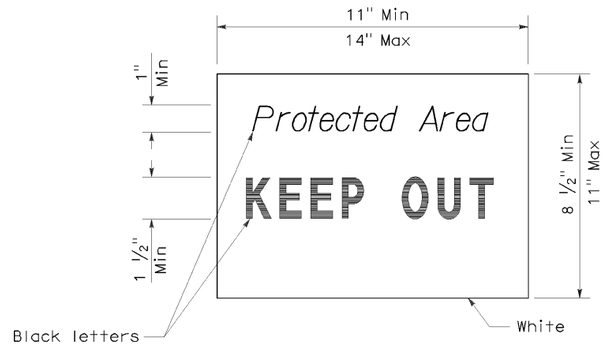

SIGN DETAIL

NOTE:

1. Temporary silt fence and temporary straw bale barrier shown for reference purposes only.

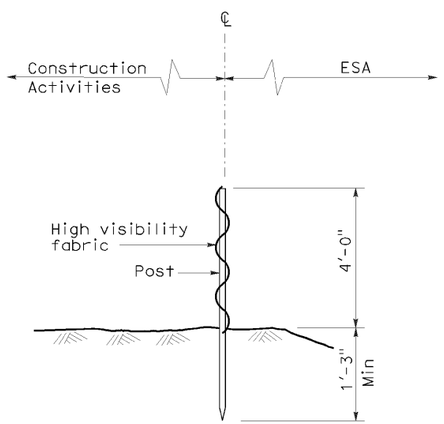

SECTION
TEMPORARY FENCE (TYPE ESA)

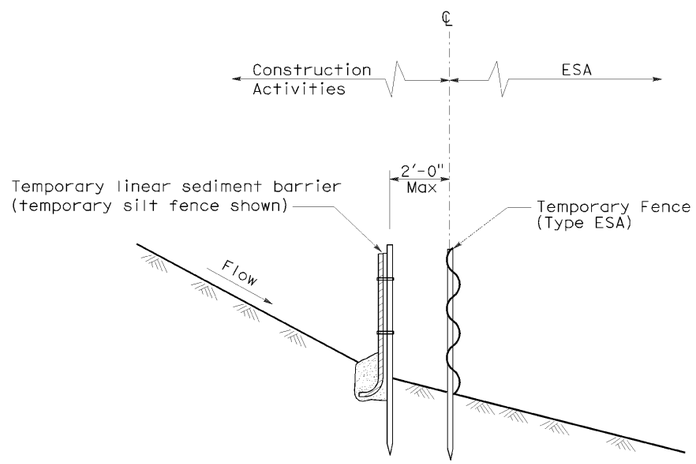

SECTION
PLACEMENT DETAIL
FOR TEMPORARY LINEAR SEDIMENT BARRIER
USED WITH TEMPORARY
FENCE (TYPE ESA)
(See Note 1)

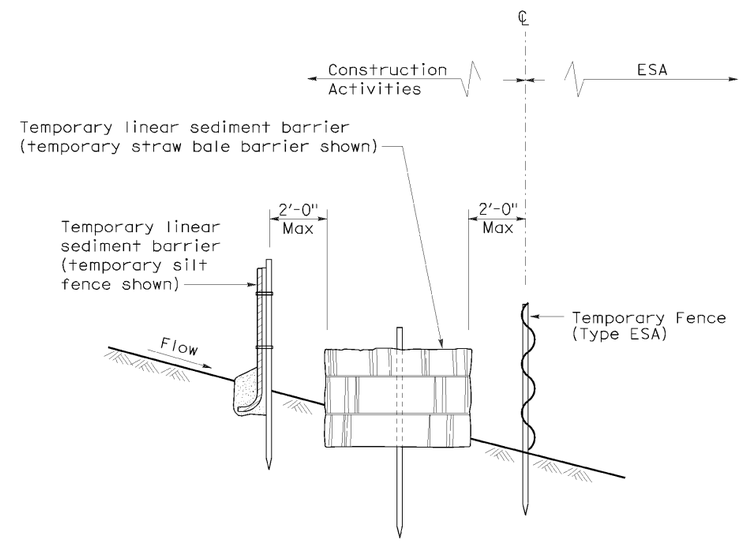

SECTION
PLACEMENT DETAIL
FOR TEMPORARY SILT FENCE
AND TEMPORARY STRAW BALE BARRIER
USED WITH TEMPORARY FENCE (TYPE ESA)
(See Note 1)

STATE OF CALIFORNIA
DEPARTMENT OF TRANSPORTATION

TEMPORARY WATER POLLUTION CONTROL DETAILS [TEMPORARY FENCE (TYPE ESA)]

NO SCALE

NSP T65 DATED APRIL 3, 2009 SUPPLEMENTS
THE STANDARD PLANS BOOK DATED MAY 2006.

NEW STANDARD PLAN NSP T65

2006 NEW STANDARD PLAN NSP T65

1-7-09