| Dist | COUNTY | ROUTE | POST MILES TOTAL PROJECT | SHEET No. | TOTAL SHEETS |
|---|---|---|---|---|---|
| 02 | Sis | 3 | R47.7/R48.5 | 1 | 37 |

STATE OF CALIFORNIA

# DEPARTMENT OF TRANSPORTATION

## PROJECT PLANS FOR CONSTRUCTION ON

# STATE HIGHWAY

## IN SISKIYOU COUNTY IN YREKA FROM 0.1 MILE SOUTH OF JASPER PLACE TO 0.5 MILE NORTH OF JUNIPER DRIVE

TO BE SUPPLEMENTED BY STANDARD PLANS DATED MAY 2006

INDEX OF PLANS


| SHEET No. | DESCRIPTION |
|---|---|
| 1 | TITLE SHEET AND LOCATION MAP |
| 2 | TYPICAL CROSS SECTIONS |
| 3-4 | LAYOUT |
| 5 | SUPERELEVATION DIAGRAM |
| 6-9 | CONSTRUCTION DETAILS |
| 10-12 | UTILITY PLANS |
| 13 | CONSTRUCTION AREA SIGNS |
| 14-16 | PAVEMENT DELINEATION AND SIGN PLANS |
| 17 | SUMMARY OF QUANTITIES |
| 18-20 | ELECTRICAL |
| 21-37 | REVISED STANDARD PLANS |

LOCATION MAP

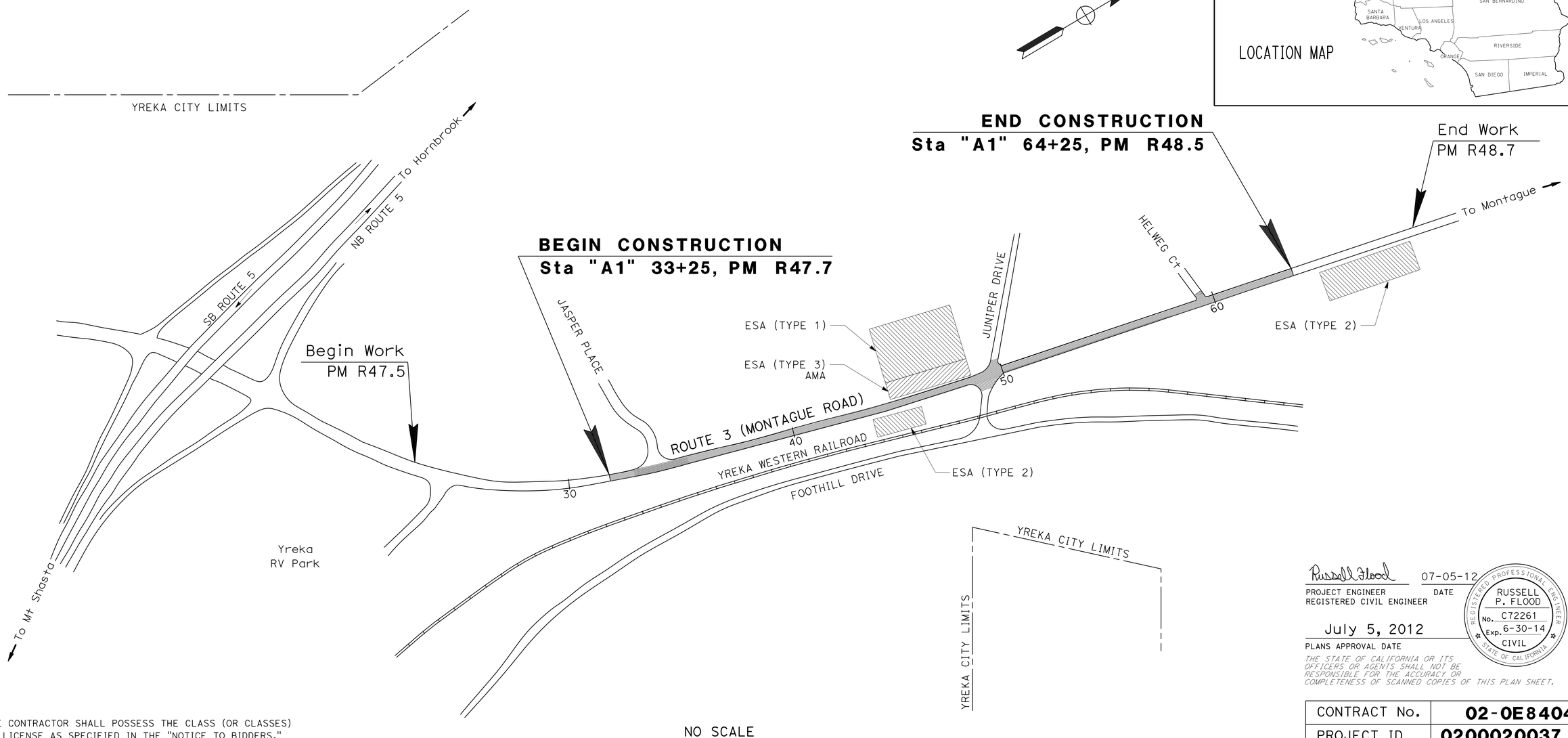


THE CONTRACTOR SHALL POSSESS THE CLASS (OR CLASSES) OF LICENSE AS SPECIFIED IN THE "NOTICE TO BIDDERS."

NO SCALE

Russell Flood 07-05-12
PROJECT ENGINEER DATE
REGISTERED CIVIL ENGINEER

July 5, 2012
PLANS APPROVAL DATE

REGISTERED PROFESSIONAL ENGINEER
RUSSELL P. FLOOD
No. C72261
Exp. 6-30-14
CIVIL
STATE OF CALIFORNIA

*THE STATE OF CALIFORNIA OR ITS OFFICERS OR AGENTS SHALL NOT BE RESPONSIBLE FOR THE ACCURACY OR COMPLETENESS OF SCANNED COPIES OF THIS PLAN SHEET.*

| CONTRACT No. | 02-0E8404 |
|---|---|
| PROJECT ID | 0200020037 |

PROJECT MANAGER DEREK WILLIS
DESIGN ENGINEER STEVE TOPAL

P:\proj2\02\0E840_plans\pse\20e840ab001.dgn

LAST REVISION 07-05-12
DATE PLOTTED => 18-JUL-2012
TIME PLOTTED => 10:58

| Dist | COUNTY | ROUTE | POST MILES TOTAL PROJECT | SHEET No. | TOTAL SHEETS |
|---|---|---|---|---|---|
| 02 | Sis | 3 | R47.7/R48.5 | 2 | 37 |

Russell Flood 07-05-12
REGISTERED CIVIL ENGINEER DATE

07-05-12
PLANS APPROVAL DATE

REGISTERED PROFESSIONAL ENGINEER
RUSSELL P. FLOOD
No. C72261
Exp. 06-30-14
CIVIL
STATE OF CALIFORNIA

*THE STATE OF CALIFORNIA OR ITS OFFICERS OR AGENTS SHALL NOT BE RESPONSIBLE FOR THE ACCURACY OR COMPLETENESS OF SCANNED COPIES OF THIS PLAN SHEET.*

## NOTES:

1. DIMENSIONS OF THE PAVEMENT STRUCTURES (STRUCTURAL SECTIONS) ARE SUBJECT TO TOLERANCES SPECIFIED IN THE STANDARD SPECIFICATIONS.
2. SUPERELEVATIONS ARE SHOWN ON THE SUPERELEVATION DIAGRAM.

## DESIGN DESIGNATION

| | | | |
|---|---|---|---|
| ADT (2013) | 3650 | D | 51% |
| ADT (2033) | 4450 | T | 7% |
| DHV | 480 | V | 55 MPH |
| ESAL | 1,635,840 | TI(20) | 9.5 |

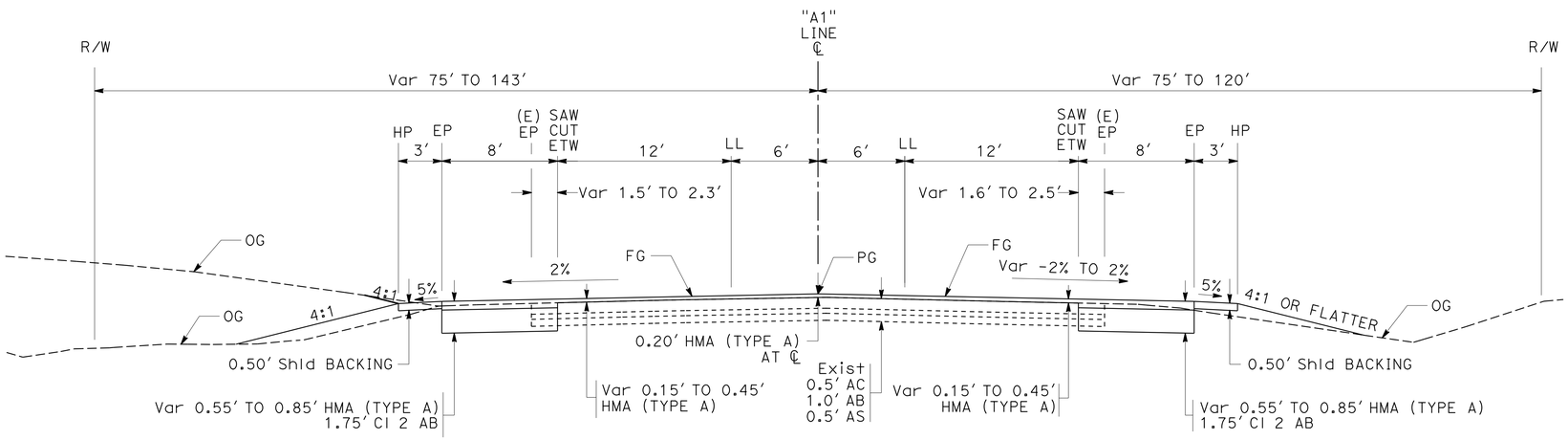


**ROUTE 3**

"A1" 44+00 TO 62+25

# TYPICAL CROSS SECTIONS

NO SCALE

**X-1**

| REVISED BY | DATE REVISED |
|---|---|
| GINNY SEIBERT | RUSSELL FLOOD |
| CALCULATED-DESIGNED BY | CHECKED BY |
| FUNCTIONAL SUPERVISOR | STEVE TOPAL |

STATE OF CALIFORNIA - DEPARTMENT OF TRANSPORTATION
Caltrans
**DESIGN**

P:\proj2\02\0E840_plans\pse\20e840ca001.dgn

LAST REVISION 01-10-12 | DATE PLOTTED => 18-JUL-2012 | TIME PLOTTED => 10:58

| Dist | COUNTY | ROUTE | POST MILES TOTAL PROJECT | SHEET No. | TOTAL SHEETS |
|---|---|---|---|---|---|
| 02 | Sis | 3 | R47.7/R48.5 | 3 | 37 |

Russell Flood 07-05-12
REGISTERED CIVIL ENGINEER DATE

07-05-12
PLANS APPROVAL DATE

REGISTERED PROFESSIONAL ENGINEER RUSSELL P. FLOOD No. C72261 Exp. 06-30-14 CIVIL STATE OF CALIFORNIA

*THE STATE OF CALIFORNIA OR ITS OFFICERS OR AGENTS SHALL NOT BE RESPONSIBLE FOR THE ACCURACY OR COMPLETENESS OF SCANNED COPIES OF THIS PLAN SHEET.*

## NOTES:

1. FOR ACCURATE RIGHT OF WAY DATA, CONTACT RIGHT OF WAY ENGINEERING AT THE DISTRICT OFFICE.
2. ESA (TYPE 3) AMA IS FROM 18′ L+ OF CENTERLINE TO RIGHT OF WAY.

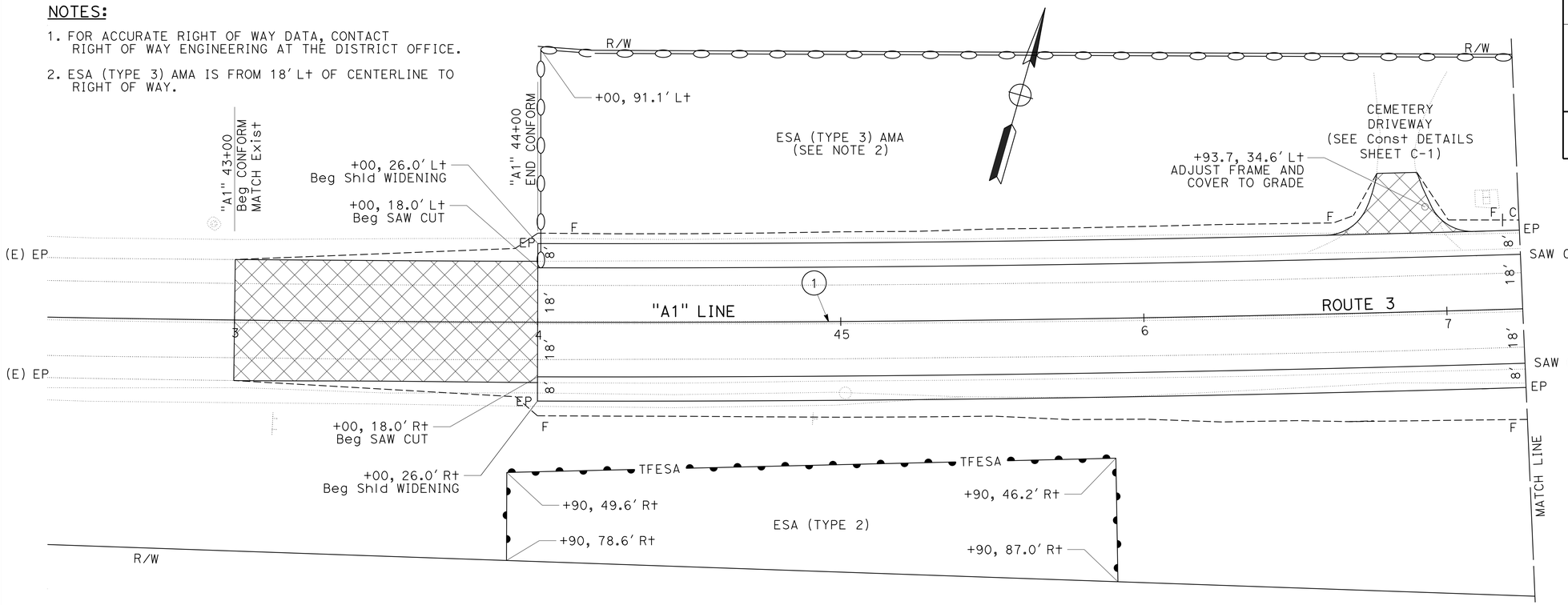


## LEGEND:

- HMA CONFORM (SEE Const+ DETAIL)
- CPACP (SEE Const+ DETAILS)
- TFESA — TEMPORARY FENCE (TYPE ESA)
- DRAINAGE SYSTEM No.
- DRAINAGE UNIT
- FLOW DIRECTION
- ESA (TYPE 3) AMA

## ABBREVIATIONS:

| | |
|---|---|
| CPACP | COLD PLANE ASPHALT CONCRETE PAVEMENT |
| ESA | ENVIRONMENTALLY SENSITIVE AREA |
| AMA | ARCHAEOLOGICAL MONITORING AREA |

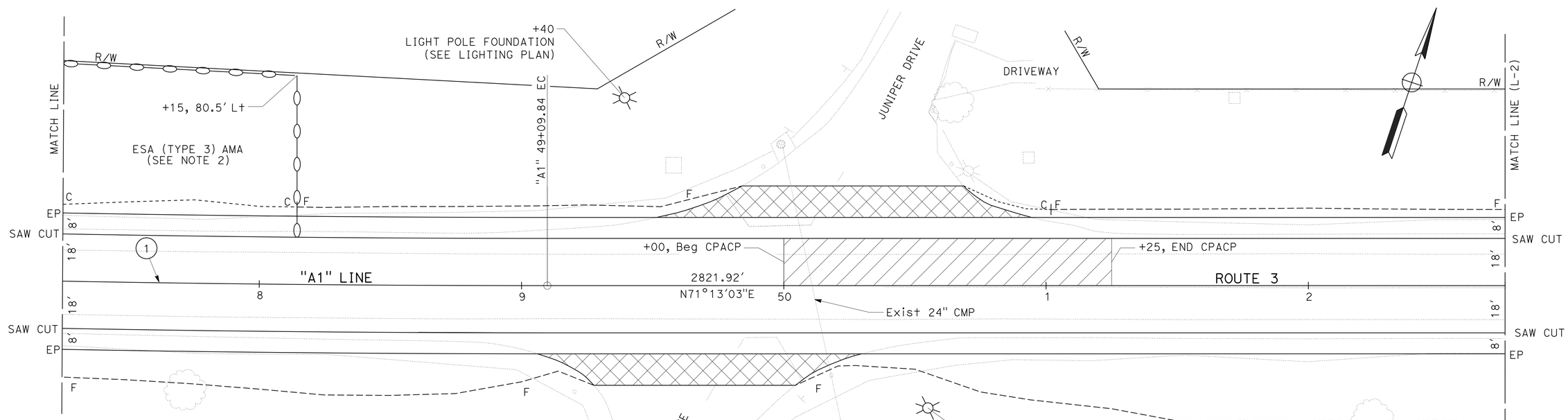


## CURVE DATA

| No. ⊕ | R | Δ | T | L |
|---|---|---|---|---|
| 1 | 10000′ | 5°1′00" | 438.08′ | 875.59′ |

# LAYOUT

SCALE: 1" = 20′

**L-1**

REVISED BY | DATE REVISED
GINNY SEIBERT | RUSSELL FLOOD
CALCULATED-DESIGNED BY | CHECKED BY
FUNCTIONAL SUPERVISOR | STEVE TOPAL

STATE OF CALIFORNIA - DEPARTMENT OF TRANSPORTATION
Caltrans® DESIGN

P:\proj2\02\0E840_plans\pse\20e840ea001.dgn

LAST REVISION | DATE PLOTTED => 18-JUL-2012
03-21-12 | TIME PLOTTED => 10:58

| Dist | COUNTY | ROUTE | POST MILES TOTAL PROJECT | SHEET No. | TOTAL SHEETS |
|---|---|---|---|---|---|
| 02 | Sis | 3 | R47.7/R48.5 | 4 | 37 |

Russell Flood 07-05-12
REGISTERED CIVIL ENGINEER DATE

07-05-12
PLANS APPROVAL DATE

REGISTERED PROFESSIONAL ENGINEER RUSSELL P. FLOOD No. C72261 Exp. 06-30-14 CIVIL STATE OF CALIFORNIA

*THE STATE OF CALIFORNIA OR ITS OFFICERS OR AGENTS SHALL NOT BE RESPONSIBLE FOR THE ACCURACY OR COMPLETENESS OF SCANNED COPIES OF THIS PLAN SHEET.*

NOTE:

1. FOR ACCURATE RIGHT OF WAY DATA, CONTACT RIGHT OF WAY ENGINEERING AT THE DISTRICT OFFICE.

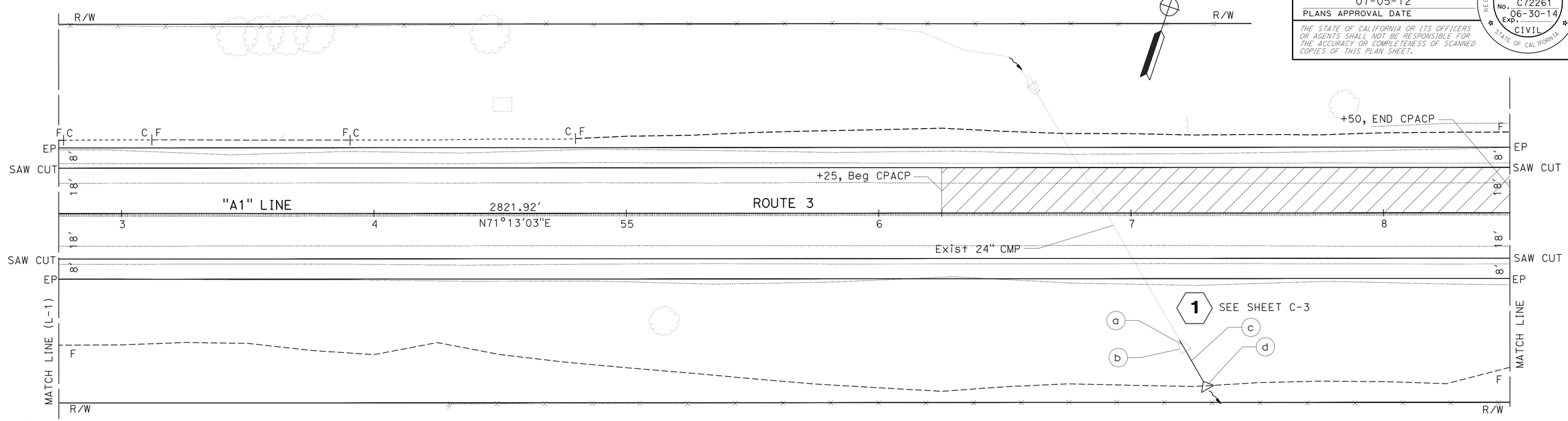


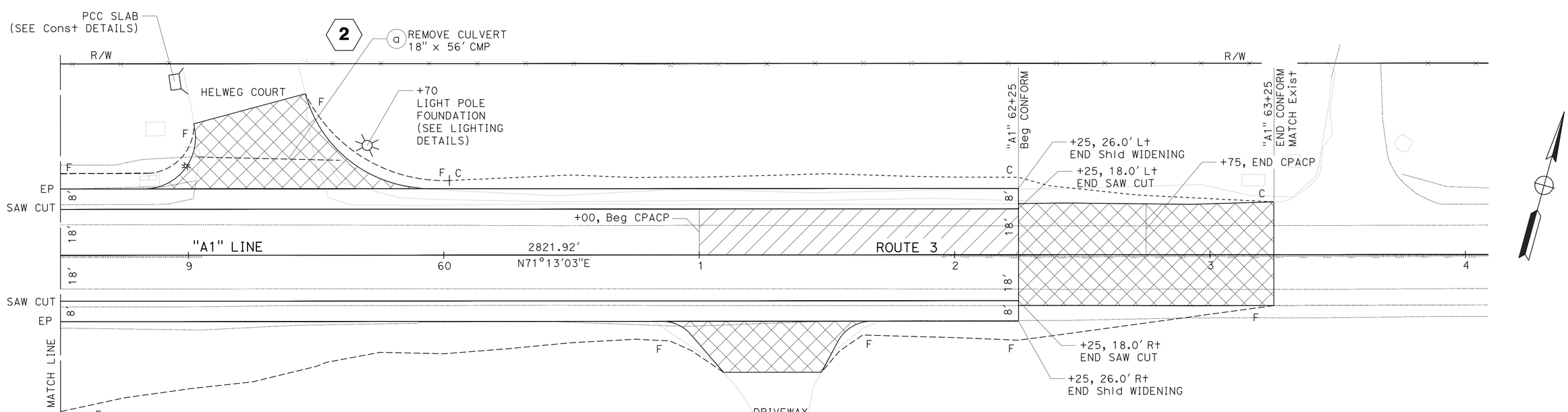


# LAYOUT

SCALE: 1" = 20'

L-2

REVISED BY | DATE REVISED
GINNY SEIBERT | RUSSELL FLOOD
CALCULATED-DESIGNED BY | CHECKED BY
FUNCTIONAL SUPERVISOR | STEVE TOPAL

STATE OF CALIFORNIA - DEPARTMENT OF TRANSPORTATION
Caltrans® DESIGN

P:\proj2\02\0E840_plans\pse\20e840ea002.dgn

LAST REVISION 03-05-12 | DATE PLOTTED => 18-JUL-2012 | TIME PLOTTED => 10:58

| Dist | COUNTY | ROUTE | POST MILES TOTAL PROJECT | SHEET No. | TOTAL SHEETS |
|---|---|---|---|---|---|
| 02 | Sis | 3 | R47.7/R48.5 | 5 | 37 |

Russell Flood 07-05-12
REGISTERED CIVIL ENGINEER DATE

07-05-12
PLANS APPROVAL DATE

REGISTERED PROFESSIONAL ENGINEER RUSSELL P. FLOOD No. C72261 Exp. 06-30-14 CIVIL STATE OF CALIFORNIA

*THE STATE OF CALIFORNIA OR ITS OFFICERS OR AGENTS SHALL NOT BE RESPONSIBLE FOR THE ACCURACY OR COMPLETENESS OF SCANNED COPIES OF THIS PLAN SHEET.*

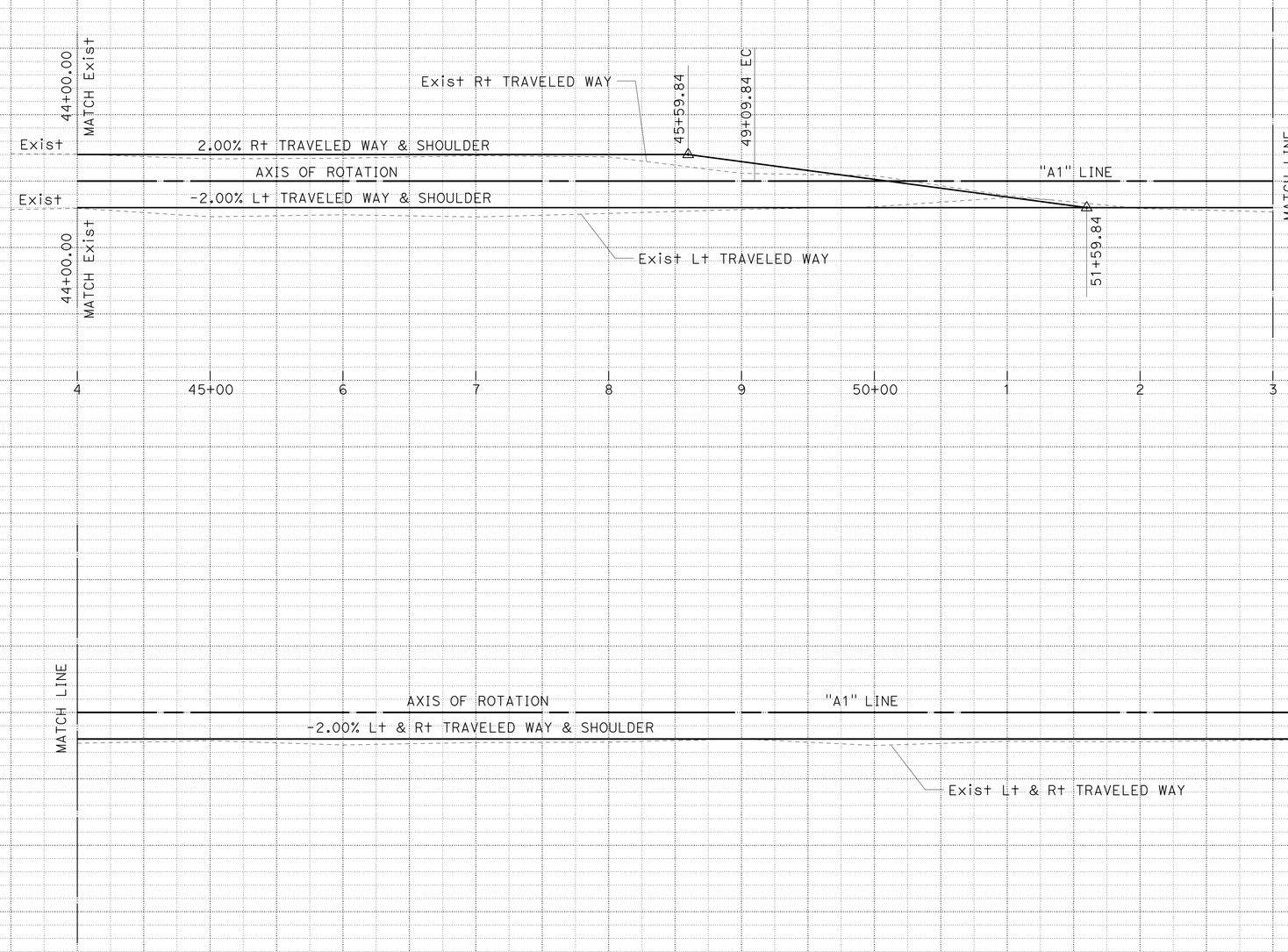


## SUPERELEVATION DIAGRAM

SCALE: 1" = 10' Horiz

**SE-1**

REVISED BY | DATE REVISED

RUSSELL FLOOD | GINNY SEIBERT

CALCULATED-DESIGNED BY | CHECKED BY

FUNCTIONAL SUPERVISOR: STEVE TOPAL

STATE OF CALIFORNIA - DEPARTMENT OF TRANSPORTATION
Caltrans
DESIGN

P:\proj2\02\0E840_plans\pse\20e840fc001.dgn

LAST REVISION DATE PLOTTED => 18-JUL-2012
03-21-12 TIME PLOTTED => 10:58

BORDER LAST REVISED 7/2/2010 | USERNAME => s115152 | DGN FILE => 20e840fc001.dgn | RELATIVE BORDER SCALE IS IN INCHES 0 1 2 3 | UNIT 0319 | PROJECT NUMBER & PHASE 02000200371

| Dist | COUNTY | ROUTE | POST MILES TOTAL PROJECT | SHEET No. | TOTAL SHEETS |
|---|---|---|---|---|---|
| 02 | Sis | 3 | R47.7/R48.5 | 6 | 37 |

Russell Flood 07-05-12
REGISTERED CIVIL ENGINEER DATE

07-05-12
PLANS APPROVAL DATE

REGISTERED PROFESSIONAL ENGINEER RUSSELL P. FLOOD No. C72261 Exp. 06-30-14 CIVIL STATE OF CALIFORNIA

*THE STATE OF CALIFORNIA OR ITS OFFICERS OR AGENTS SHALL NOT BE RESPONSIBLE FOR THE ACCURACY OR COMPLETENESS OF SCANNED COPIES OF THIS PLAN SHEET.*

NOTE:

1. RADIUS POINTS ARE USED TO LOCATE EP FOR PAVED DRIVEWAYS.
2. CONFORM TO Exist EP AT ROAD CONNECTIONS.

## CONNECTION CONFORMS

| DESCRIPTION | LOCATION "A1" LINE | CONFORM AREA | WIDTH 1 | WIDTH 2 | LENGTH |
|---|---|---|---|---|---|
| | | SQYD | LF | LF | LF |
| CEMETERY DRIVEWAY | 46+85, Lt | 27 | 47 | 22 | 20 |
| JUNIPER DRIVE | 49+66, Rt | 127 | 124 | 78 | 12 |
| JUNIPER DRIVE | 50+25, Lt | 144 | 145 | 85 | 12 |
| DRIVEWAY | 61+25, Rt | 131 | 85 | 40 | 20 |

## ABBREVIATIONS:

CPACP COLD PLANE ASPHALT CONCRETE PAVEMENT
USPS UNITED STATES POSTAL SERVICE

## LEGEND:

CPACP
DRAINAGE SYSTEM No.
DRAINAGE UNIT
FLOW DIRECTION
TFESA TEMPORARY FENCE (TYPE ESA)

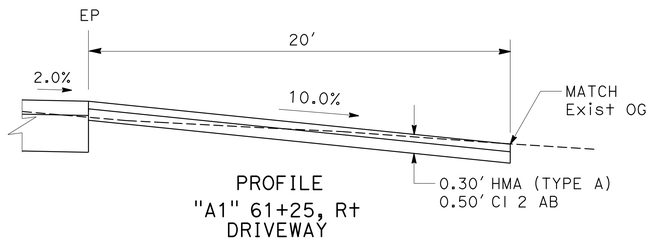


PROFILE
"A1" 61+25, Rt
DRIVEWAY

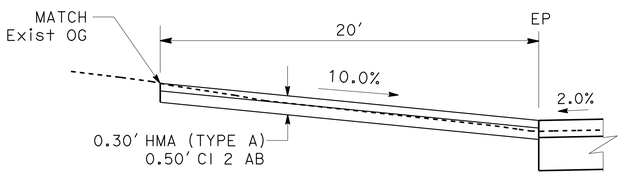


PROFILE
"A1" 46+85, Lt
CEMETERY DRIVEWAY

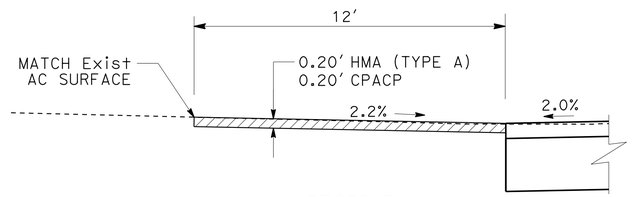


PROFILE
"A1" 50+25, Lt
JUNIPER DRIVE

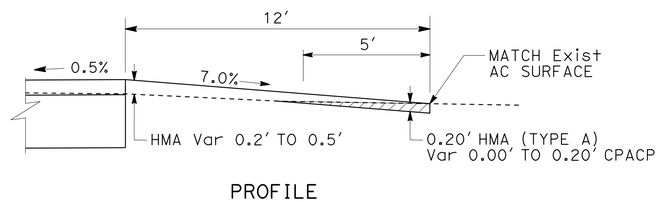


PROFILE
"A1" 49+66, Rt
JUNIPER DRIVE

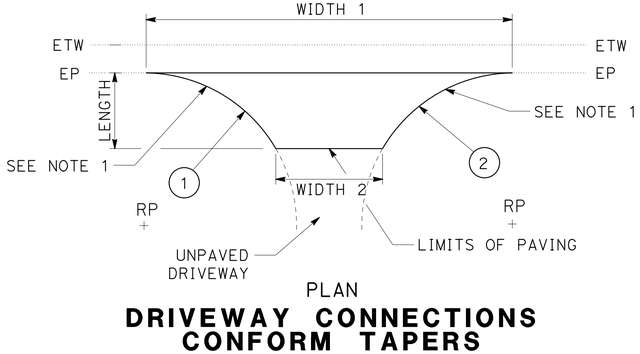


PLAN

## DRIVEWAY CONNECTIONS CONFORM TAPERS

## DRIVEWAY RADIUS POINTS

| DESCRIPTION | LOCATION "A1" LINE | RADIUS POINT | RADIUS | "A1" Sta, OFFSET |
|---|---|---|---|---|
| CEMETERY DRIVEWAY | 46+85, Lt | 1 | 15' | 46+60.4, 41.0' Lt |
| | | 2 | 15' | 47+09.0, 41.0' Lt |
| DRIVEWAY | 61+25, Rt | 1 | 15' | 60+85.4, 41.0' Rt |
| | | 2 | 15' | 61+67.5, 41.0' Rt |

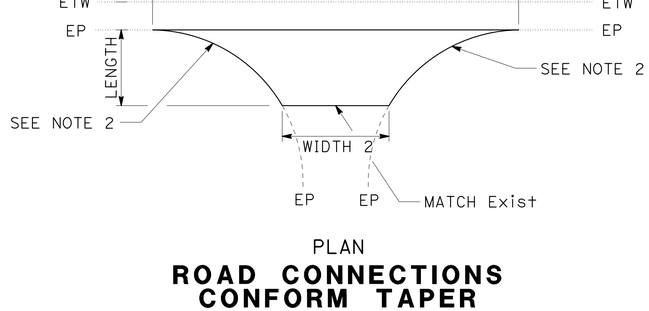


PLAN

## ROAD CONNECTIONS CONFORM TAPER

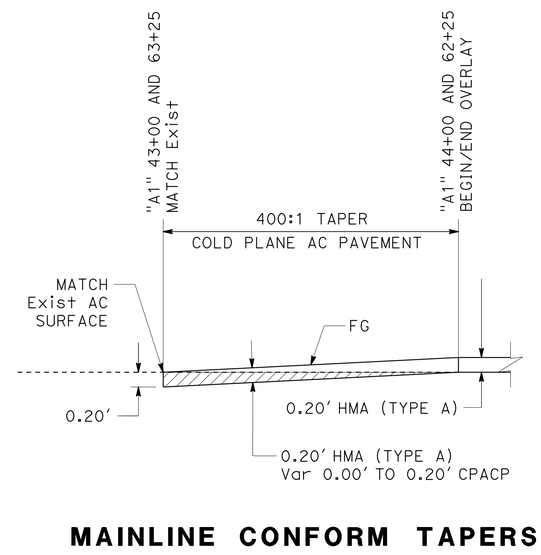


## MAINLINE CONFORM TAPERS

"A1" 43+00 TO 44+00
"A1" 62+25 TO 63+25

# CONSTRUCTION DETAILS

NO SCALE

C-1

REVISED BY | DATE REVISED
GINNY SEIBERT | RUSSELL FLOOD
CALCULATED-DESIGNED BY | CHECKED BY
FUNCTIONAL SUPERVISOR | STEVE TOPAL
STATE OF CALIFORNIA - DEPARTMENT OF TRANSPORTATION
DESIGN
Caltrans
P:\proj2\02\0E840_plans\pse\20e840ga001.dgn

LAST REVISION 01-13-12 | DATE PLOTTED => 18-JUL-2012 | TIME PLOTTED => 10:58

| Dist | COUNTY | ROUTE | POST MILES TOTAL PROJECT | SHEET No. | TOTAL SHEETS |
|---|---|---|---|---|---|
| 02 | Sis | 3 | R47.7/R48.5 | 7 | 37 |

Russell Flood 07-05-12
REGISTERED CIVIL ENGINEER DATE

07-05-12
PLANS APPROVAL DATE

REGISTERED PROFESSIONAL ENGINEER RUSSELL P. FLOOD No. C72261 Exp. 06-30-14 CIVIL STATE OF CALIFORNIA

*THE STATE OF CALIFORNIA OR ITS OFFICERS OR AGENTS SHALL NOT BE RESPONSIBLE FOR THE ACCURACY OR COMPLETENESS OF SCANNED COPIES OF THIS PLAN SHEET.*

**NOTE:**

1. UNITED STATES POST OFFICE LOCKABLE GANG MAILBOX TO BE RELOCATED TO PCC SLAB BY OTHERS.

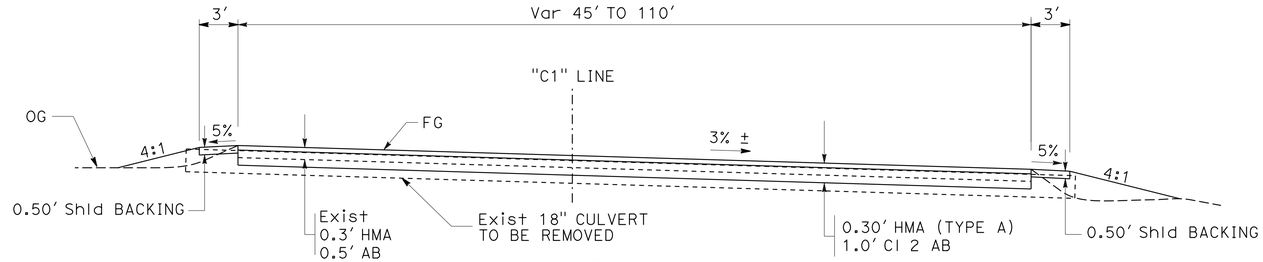


SECTION B-B

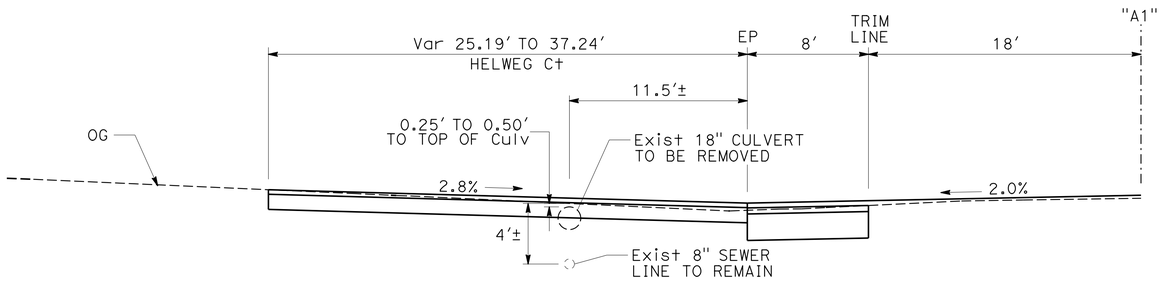


SECTION A-A

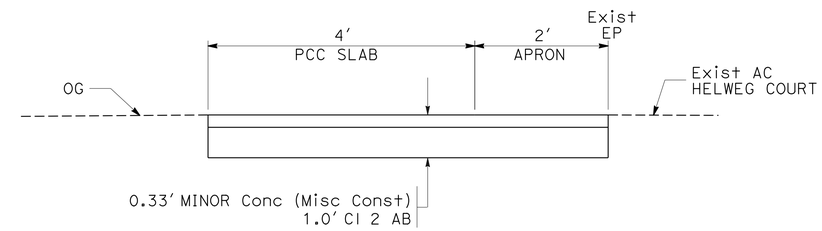


SECTION C-C

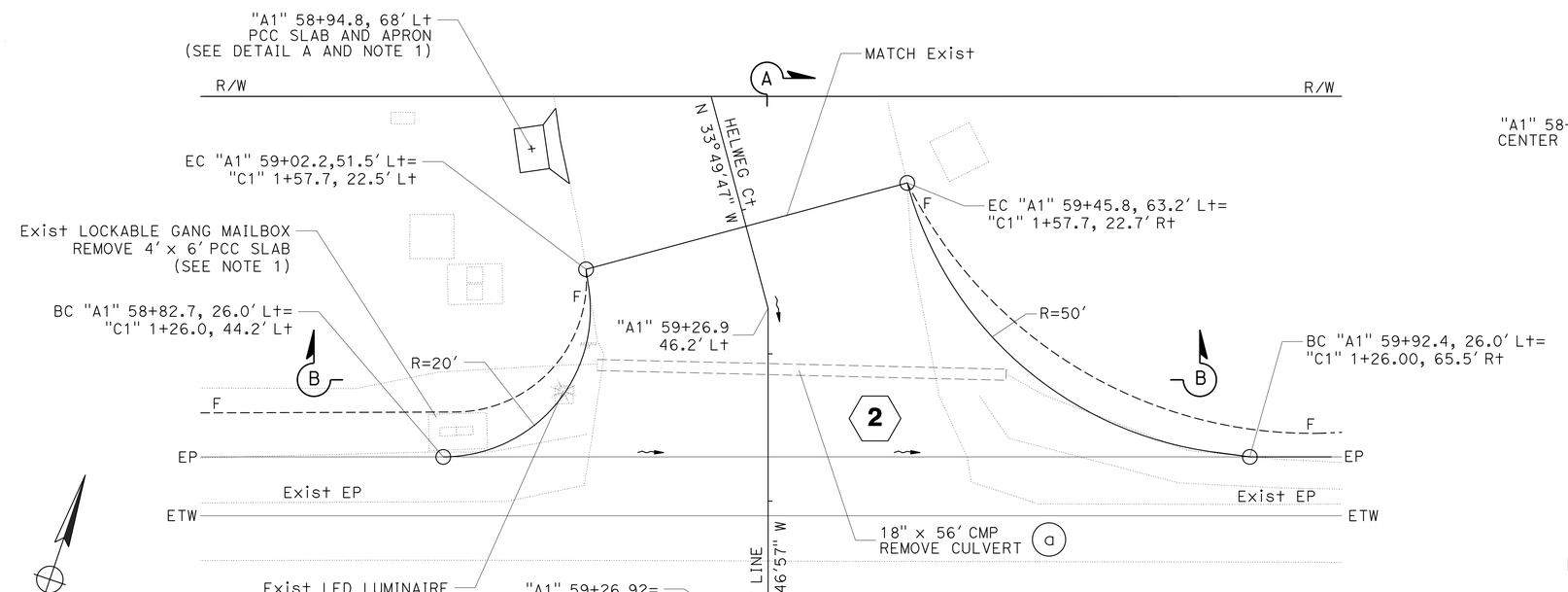


PLAN

**HELWEG COURT**

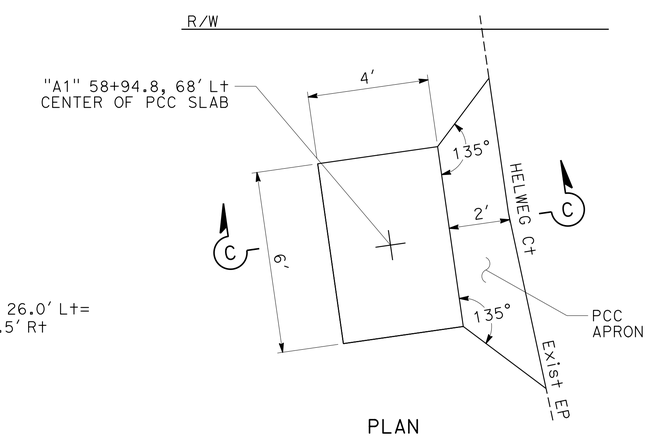


PLAN

**DETAIL A**

**PCC SLAB AT HELWEG COURT**

FOR RELOCATION OF USPS LOCKABLE GANG MAILBOXES

**CONSTRUCTION DETAILS**

NO SCALE

**C-2**

REVISED BY | DATE REVISED
LORI EWENS | RUSSELL FLOOD
CALCULATED-DESIGNED BY | CHECKED BY
FUNCTIONAL SUPERVISOR: STEVE TOPAL

STATE OF CALIFORNIA - DEPARTMENT OF TRANSPORTATION
Caltrans® DESIGN

P:\proj2\02\0E840_plans\pse\20e840ga002.dgn

LAST REVISION 03-14-12 | DATE PLOTTED => 18-JUL-2012 | TIME PLOTTED => 10:58

| Dist | COUNTY | ROUTE | POST MILES TOTAL PROJECT | SHEET No. | TOTAL SHEETS |
|---|---|---|---|---|---|
| 02 | Sis | 3 | R47.7/R48.5 | 8 | 37 |

Russell Flood 07-05-12
REGISTERED CIVIL ENGINEER DATE

07-05-12
PLANS APPROVAL DATE

REGISTERED PROFESSIONAL ENGINEER RUSSELL P. FLOOD No. C72261 Exp. 06-30-14 CIVIL STATE OF CALIFORNIA

*THE STATE OF CALIFORNIA OR ITS OFFICERS OR AGENTS SHALL NOT BE RESPONSIBLE FOR THE ACCURACY OR COMPLETENESS OF SCANNED COPIES OF THIS PLAN SHEET.*

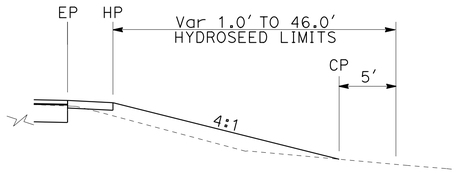


TYPICAL
## EROSION CONTROL (HYDROSEED)
Sta "A1" 43+00 TO 63+25

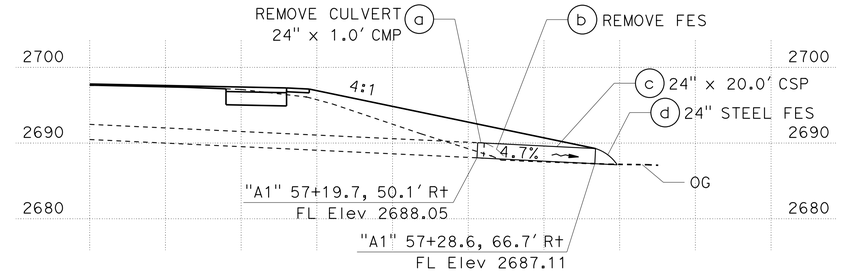


PROFILE

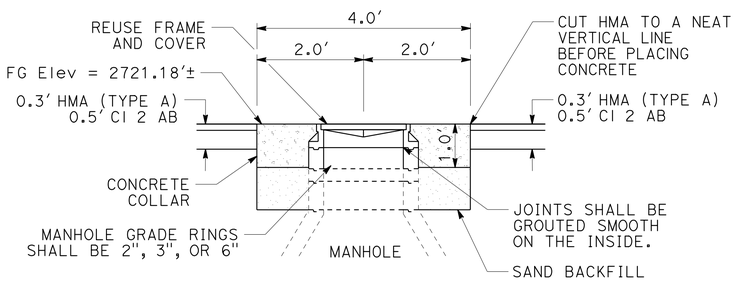


## ADJUST FRAME AND COVER TO GRADE
Sta "A1" 46+93.7

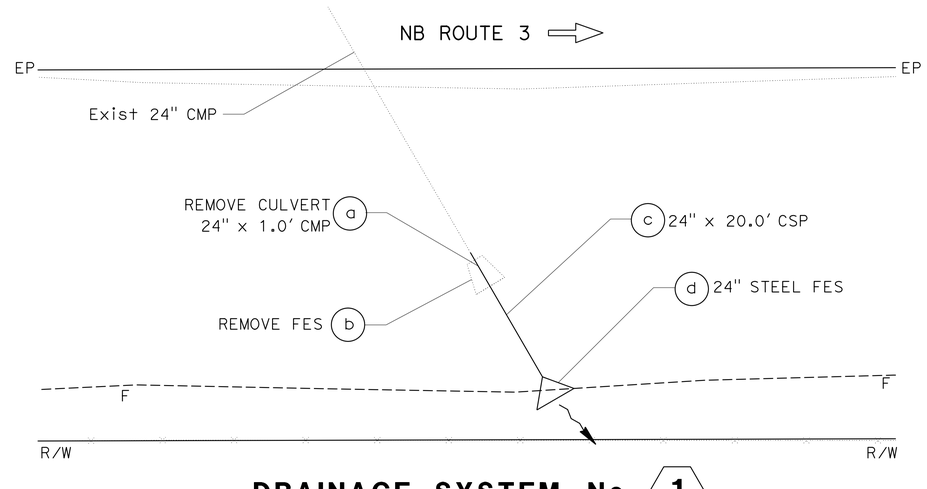


## DRAINAGE SYSTEM No. 1
Sta "A1" 57+25

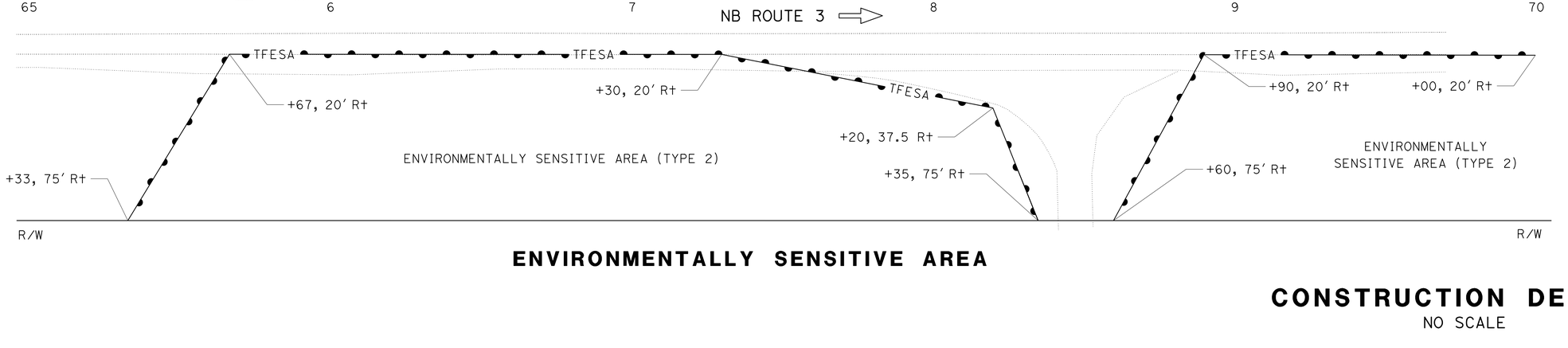


## ENVIRONMENTALLY SENSITIVE AREA

# CONSTRUCTION DETAILS
NO SCALE

C-3

REVISED BY | DATE REVISED
GINNY SEIBERT | RUSSELL FLOOD
CALCULATED-DESIGNED BY | CHECKED BY
FUNCTIONAL SUPERVISOR
STEVE TOPAL

STATE OF CALIFORNIA - DEPARTMENT OF TRANSPORTATION
Caltrans
DESIGN

P:\proj2\02\0E840_plans\pse\20e840ga003.dgn

LAST REVISION 03-14-12 | DATE PLOTTED => 18-JUL-2012 | TIME PLOTTED => 10:58

| Dist | COUNTY | ROUTE | POST MILES TOTAL PROJECT | SHEET No. | TOTAL SHEETS |
|---|---|---|---|---|---|
| 02 | Sis | 3 | R47.7/R48.5 | 9 | 37 |

Russell Flood 07-05-12
REGISTERED CIVIL ENGINEER DATE

07-05-12
PLANS APPROVAL DATE

REGISTERED PROFESSIONAL ENGINEER
RUSSELL P. FLOOD
No. C72261
Exp. 06-30-14
CIVIL
STATE OF CALIFORNIA

*THE STATE OF CALIFORNIA OR ITS OFFICERS OR AGENTS SHALL NOT BE RESPONSIBLE FOR THE ACCURACY OR COMPLETENESS OF SCANNED COPIES OF THIS PLAN SHEET.*

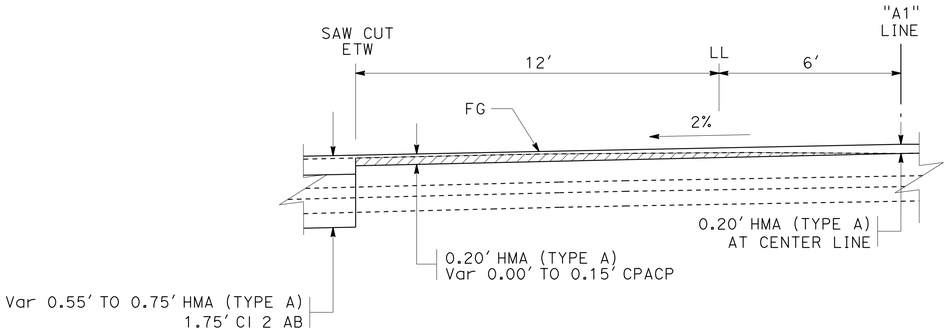


TYPICAL SECTION

**ROUTE 3**

"A1" 50+00 TO 51+25

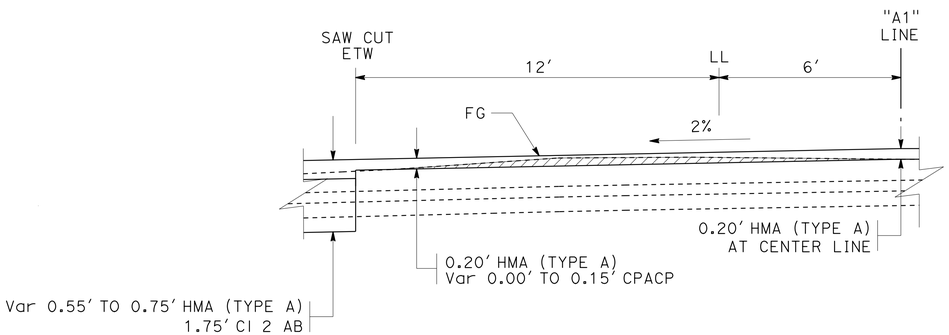


TYPICAL SECTION

**ROUTE 3**

"A1" 56+25 TO 58+50
"A1" 61+00 TO 62+25

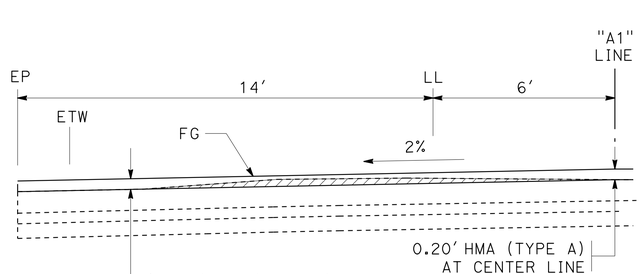


TYPICAL SECTION

**ROUTE 3**

"A1" 62+25 TO 62+75

## CPACP TAPER LENGTH

| BEGIN TAPER | | END TAPER | |
|---|---|---|---|
| STATION | LENGTH | STATION | LENGTH |
| "A1" 50+00 TO 50+25 | 50.0′ | "A1" 50+75 TO 51+25 | 50.0′ |
| "A1" 56+25 TO 56+75 | 50.0′ | "A1" 57+50 TO 58+50 | 100.0′ |
| "A1" 61+00 TO 61+50 | 50.0′ | "A1" 62+25 TO 62+75 | 50.0′ |

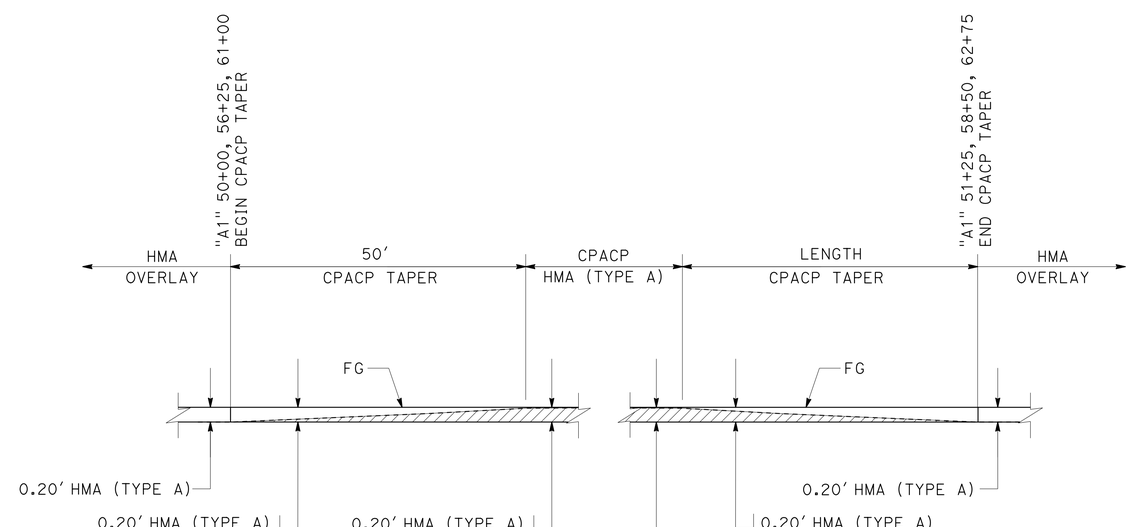


PROFILE

**BEGIN/END CPACP AREAS**

"A1" 50+00 TO 51+25
"A1" 56+25 TO 58+50
"A1" 61+00 TO 62+75

# CONSTRUCTION DETAILS

NO SCALE

**C-4**

REVISED BY | DATE REVISED
GINNY SEIBERT | RUSSELL FLOOD
CALCULATED-DESIGNED BY | CHECKED BY
FUNCTIONAL SUPERVISOR
STEVE TOPAL

STATE OF CALIFORNIA - DEPARTMENT OF TRANSPORTATION
Caltrans
DESIGN

P:\proj2\02\0E840_plans\pse\20e840ga004.dgn

LAST REVISION 03-14-12 | DATE PLOTTED => 18-JUL-2012 | TIME PLOTTED => 10:58

| Dist | COUNTY | ROUTE | POST MILES TOTAL PROJECT | SHEET No. | TOTAL SHEETS |
|---|---|---|---|---|---|
| 02 | Sis | 3 | R47.7/R48.5 | 10 | 37 |

Russell Flood 07-05-12
REGISTERED CIVIL ENGINEER DATE

07-05-12
PLANS APPROVAL DATE

REGISTERED PROFESSIONAL ENGINEER RUSSELL P. FLOOD No. C72261 Exp. 06-30-14 CIVIL STATE OF CALIFORNIA

*THE STATE OF CALIFORNIA OR ITS OFFICERS OR AGENTS SHALL NOT BE RESPONSIBLE FOR THE ACCURACY OR COMPLETENESS OF SCANNED COPIES OF THIS PLAN SHEET.*

## NOTES:

1. NO EXCAVATION, STRIPING ONLY FROM "A1" STATION 33+25 TO 43+00.
2. FOR ACCURATE RIGHT OF WAY DATA, CONTACT RIGHT OF WAY ENGINEERING AT THE DISTRICT OFFICE.

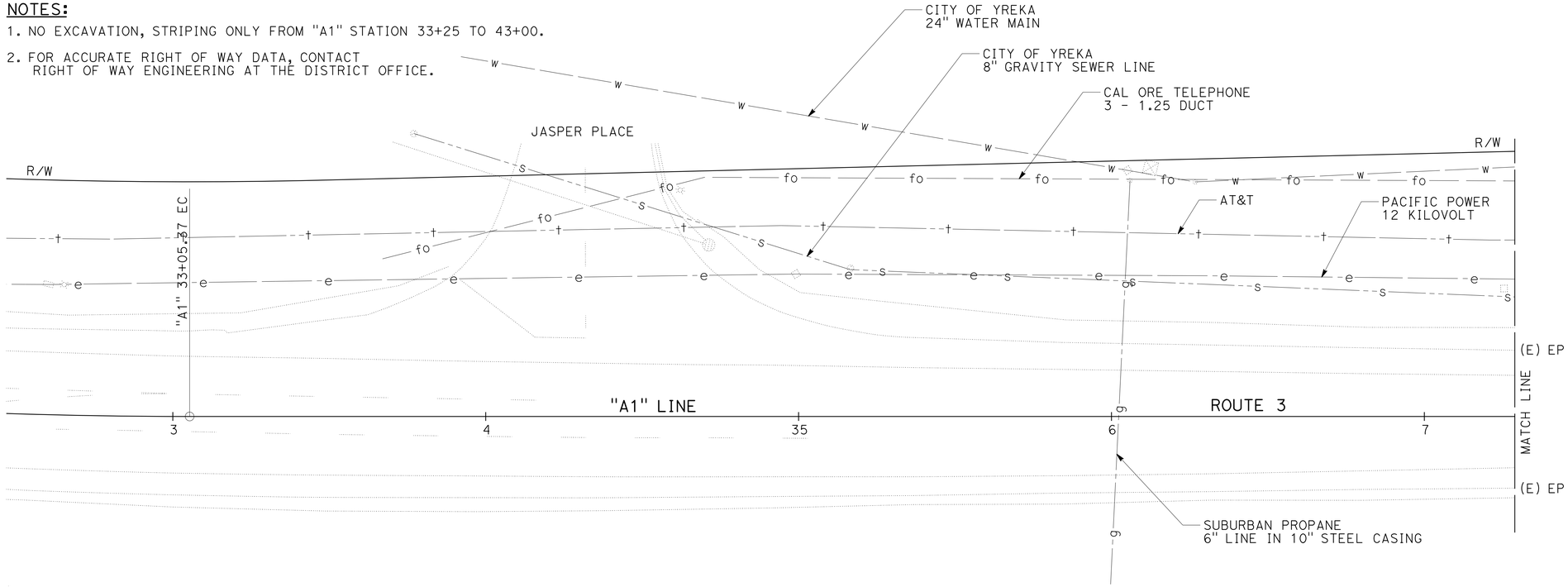


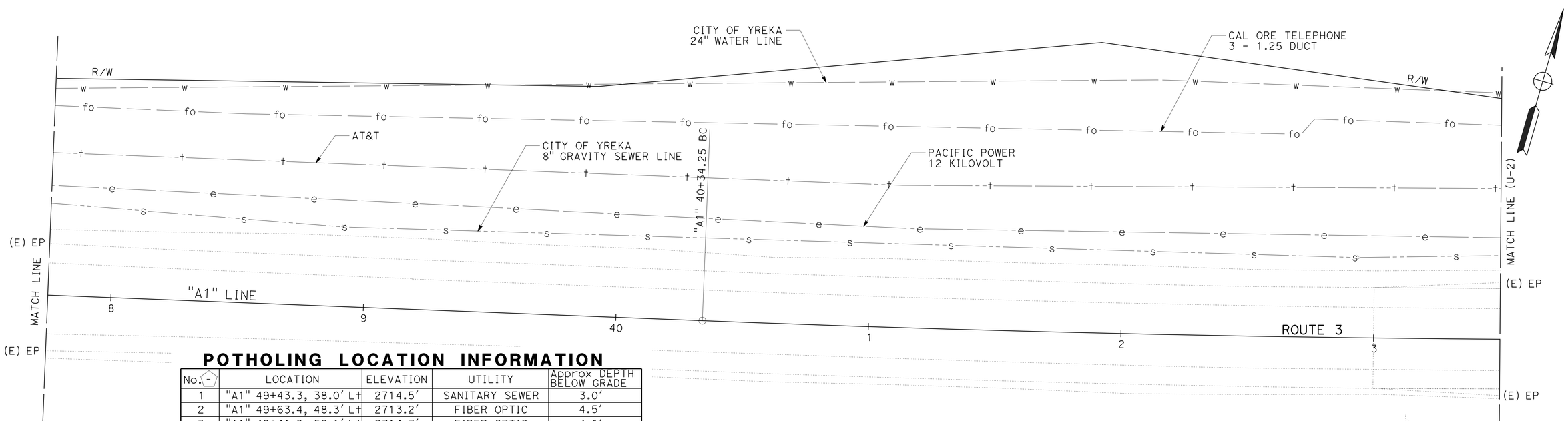


## POTHOLING LOCATION INFORMATION

| No. | LOCATION | ELEVATION | UTILITY | Approx DEPTH BELOW GRADE |
|---|---|---|---|---|
| 1 | "A1" 49+43.3, 38.0' L+ | 2714.5' | SANITARY SEWER | 3.0' |
| 2 | "A1" 49+63.4, 48.3' L+ | 2713.2' | FIBER OPTIC | 4.5' |
| 3 | "A1" 49+41.9, 52.1' L+ | 2714.7' | FIBER OPTIC | 4.0' |
| 4 | "A1" 49+42.1, 45.3' L+ | 2715.0' | TELEPHONE CABLE | 3.0' |
| 5 | "A1" 49+42.9, 37.4' L+ | 2713.6' | ELECTRICAL CABLE | 4.0' |
| 6 | "A1" 50+92.7, 55.0' L+ | 2712.2' | TELEPHONE CABLE | 3.0' |
| 7 | "A1" 50+92.9, 36.8' L+ | 2710.9' | ELECTRICAL CABLE | 4.0' |
| 8 | "A1" 50+92.7, 37.0' L+ | 2711.8' | SANITARY SEWER | 3.0' |

*APPROVED FOR UTILITY WORK ONLY*

# UTILITY PLAN

SCALE: 1" = 20'

**U-1**

REVISED BY | DATE REVISED
RUSSELL FLOOD | GINNY SEIBERT
CALCULATED-DESIGNED BY | CHECKED BY
FUNCTIONAL SUPERVISOR | STEVE TOPAL

STATE OF CALIFORNIA - DEPARTMENT OF TRANSPORTATION
Caltrans
DESIGN

P:\proj2\02\0E840_plans\pse\20e840ka001.dgn

LAST REVISION | DATE PLOTTED => 18-JUL-2012
03-27-12 | TIME PLOTTED => 10:58

| Dist | COUNTY | ROUTE | POST MILES TOTAL PROJECT | SHEET No. | TOTAL SHEETS |
|---|---|---|---|---|---|
| 02 | Sis | 3 | R47.7/R48.5 | 11 | 37 |

Russell Flood 07-05-12
REGISTERED CIVIL ENGINEER DATE

07-05-12
PLANS APPROVAL DATE

REGISTERED PROFESSIONAL ENGINEER RUSSELL P. FLOOD No. C72261 Exp. 06-30-14 CIVIL STATE OF CALIFORNIA

*THE STATE OF CALIFORNIA OR ITS OFFICERS OR AGENTS SHALL NOT BE RESPONSIBLE FOR THE ACCURACY OR COMPLETENESS OF SCANNED COPIES OF THIS PLAN SHEET.*

**NOTE:**

1. FOR ACCURATE RIGHT OF WAY DATA, CONTACT RIGHT OF WAY ENGINEERING AT THE DISTRICT OFFICE.

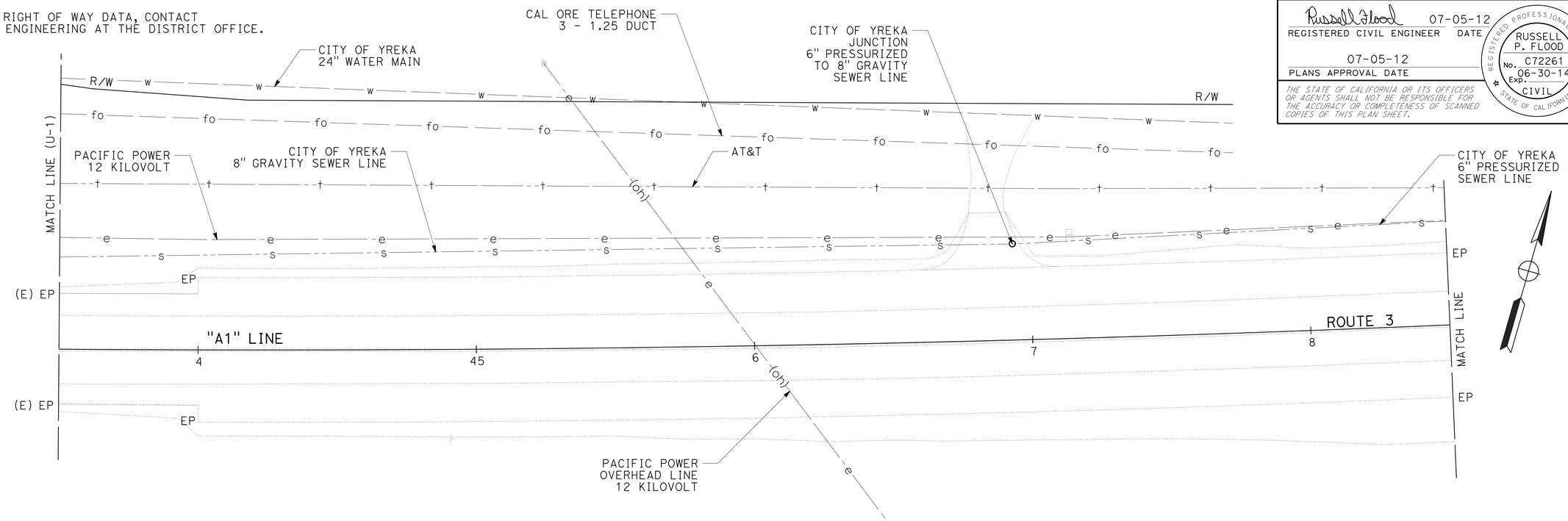


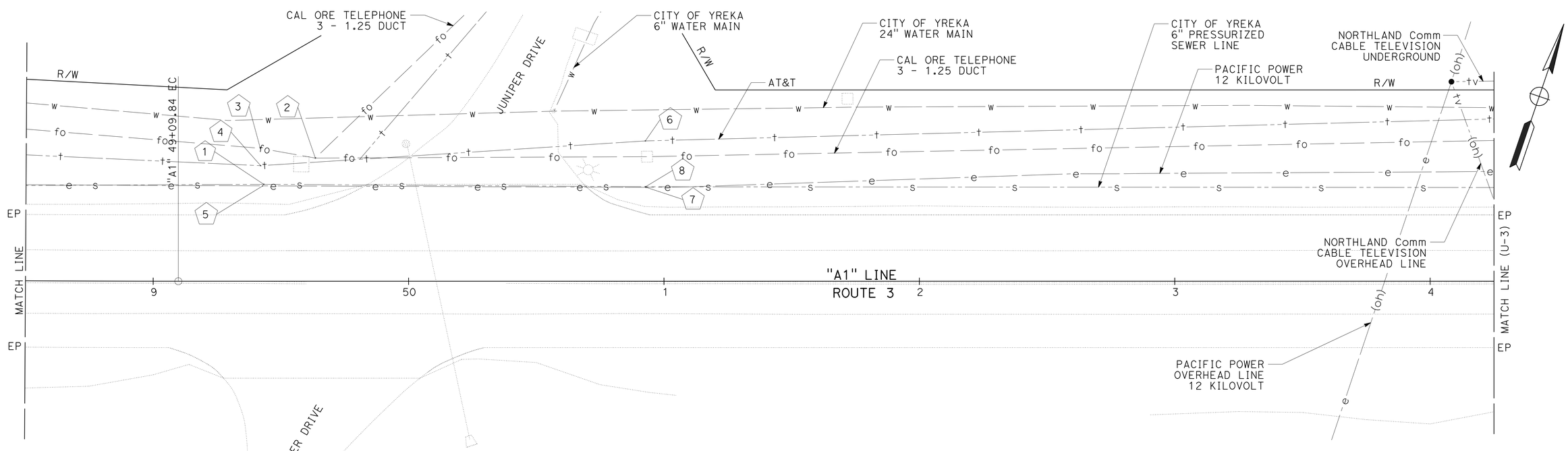


# UTILITY PLAN

SCALE: 1" = 20'

**U-2**

*APPROVED FOR UTILITY WORK ONLY*

| REVISED BY | DATE REVISED |
|---|---|
| RUSSELL FLOOD | GINNY SEIBERT |
| CALCULATED-DESIGNED BY | CHECKED BY |
| FUNCTIONAL SUPERVISOR | STEVE TOPAL |

STATE OF CALIFORNIA - DEPARTMENT OF TRANSPORTATION
Caltrans
DESIGN

P:\proj2\02\0E840_plans\pse\20e840ka002.dgn

LAST REVISION 03-27-12 | DATE PLOTTED => 18-JUL-2012 | TIME PLOTTED => 10:58

BORDER LAST REVISED 7/2/2010 | USERNAME => s115152 | DGN FILE => 20e840ka002.dgn | RELATIVE BORDER SCALE IS IN INCHES 0 1 2 3 | UNIT 0319 | PROJECT NUMBER & PHASE 02000200371

| Dist | COUNTY | ROUTE | POST MILES TOTAL PROJECT | SHEET No. | TOTAL SHEETS |
|---|---|---|---|---|---|
| 02 | Sis | 3 | R47.7/R48.5 | 12 | 37 |

Russell Flood 07-05-12
REGISTERED CIVIL ENGINEER DATE

07-05-12
PLANS APPROVAL DATE

REGISTERED PROFESSIONAL ENGINEER
RUSSELL P. FLOOD
No. C72261
Exp. 06-30-14
CIVIL
STATE OF CALIFORNIA

*THE STATE OF CALIFORNIA OR ITS OFFICERS OR AGENTS SHALL NOT BE RESPONSIBLE FOR THE ACCURACY OR COMPLETENESS OF SCANNED COPIES OF THIS PLAN SHEET.*

## NOTES:

1. FOR ACCURATE RIGHT OF WAY DATA, CONTACT RIGHT OF WAY ENGINEERING AT THE DISTRICT OFFICE.
2. VISUALLY VERIFIED DEPTH IN UTILITY VAULT.

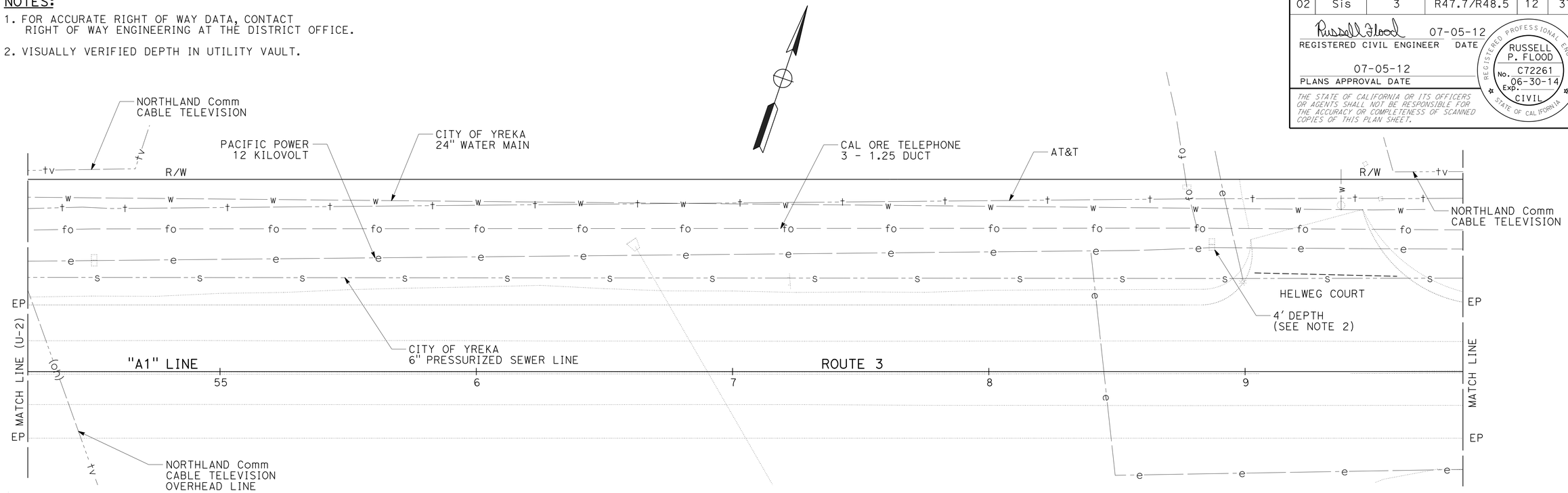


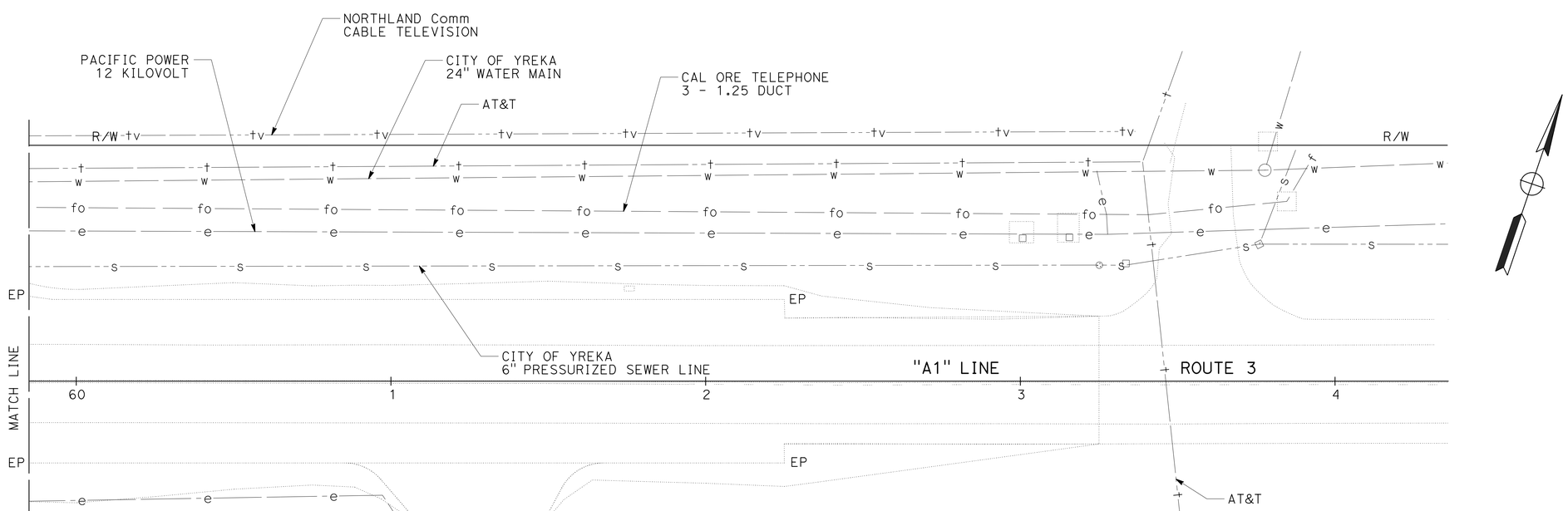


*APPROVED FOR UTILITY WORK ONLY*

# UTILITY PLAN
SCALE: 1" = 20'

**U-3**

| REVISED BY | DATE REVISED |
|---|---|
| RUSSELL FLOOD | GINNY SEIBERT |
| CALCULATED-DESIGNED BY | CHECKED BY |
| FUNCTIONAL SUPERVISOR | STEVE TOPAL |

STATE OF CALIFORNIA - DEPARTMENT OF TRANSPORTATION
Caltrans
DESIGN

P:\proj2\02\0E840_plans\pse\20e840ka003.dgn

LAST REVISION 01-13-12 | DATE PLOTTED => 18-JUL-2012 | TIME PLOTTED => 10:58

| Dist | COUNTY | ROUTE | POST MILES TOTAL PROJECT | SHEET No. | TOTAL SHEETS |
|---|---|---|---|---|---|
| 02 | Sis | 3 | R47.7/R48.5 | 13 | 37 |

Russell Flood 07-05-12
REGISTERED CIVIL ENGINEER DATE

07-05-12
PLANS APPROVAL DATE

REGISTERED PROFESSIONAL ENGINEER RUSSELL P. FLOOD No. C72261 Exp. 06-30-14 CIVIL STATE OF CALIFORNIA

*THE STATE OF CALIFORNIA OR ITS OFFICERS OR AGENTS SHALL NOT BE RESPONSIBLE FOR THE ACCURACY OR COMPLETENESS OF SCANNED COPIES OF THIS PLAN SHEET.*

NOTES:

1. EXACT SIGN LOCATIONS TO BE DETERMINED BY THE ENGINEER.
2. SIGNS SHOWN WITH (CA) INDICATE CALIFORNIA SIGN CODES, OTHERWISE FEDERAL SIGN CODES ARE SHOWN.

LEGEND

- DIRECTION OF TRAVEL
- SIGN (1 POST)
- PORTABLE CHANGEABLE MESSAGE SIGN (PCMS)

## CONSTRUCTION AREA SIGNS (STATIONARY MOUNTED)

| TYPE | CODE | PANEL SIZE | SIGN MESSAGE | NUMBER AND SIZE OF POSTS | No. OF SIGNS |
|---|---|---|---|---|---|
| (A) | W20-1<br>C23B(CA) | 36" x 36"<br>36" x 18" | ROAD WORK AHEAD<br>INTERSECTION IMPROVEMENTS | 1-4" x 6" | 2 |
| (B) | W20-1 | 36" x 36" | ROAD WORK AHEAD | 1-4" x 4" | 3 |
| (C) | G20-2 | 36" x 18" | END ROAD WORK | 1-4" x 4" | 5 |

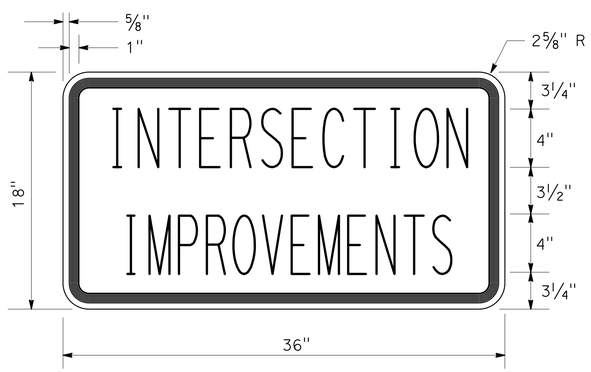


## C23B(CA) SIGN PANEL DETAIL

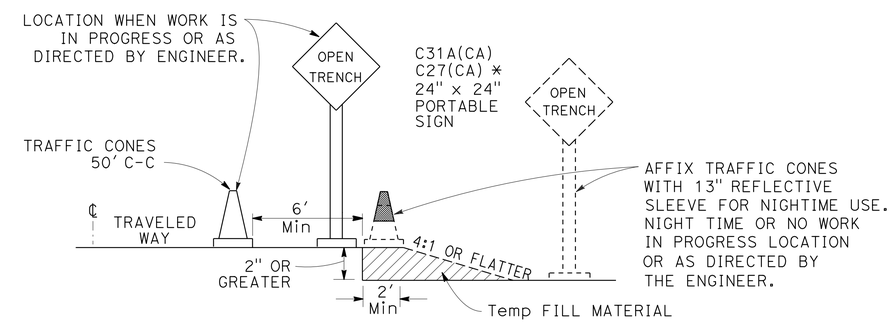


## OPEN TRENCH SIGNING AND MARKING

* PLACE AT 250' INTERVALS THROUGH THE OPEN TRENCH AREA-ALTERNATE C27(CA) (OPEN TRENCH) AND C31A(CA) (NO SHOULDER) SIGNS

## ROAD CONNECTIONS*

| STATION | NAME |
|---|---|
| "A1" 34+32 | JASPER PLACE |
| "A1" 49+66 | JUNIPER DRIVE (R+) |
| "A1" 50+26 | JUNIPER DRIVE (L+) |

* ROAD CONNECTIONS REQUIRING TYPE (B) & (C) CONSTRUCTION AREA SIGNS

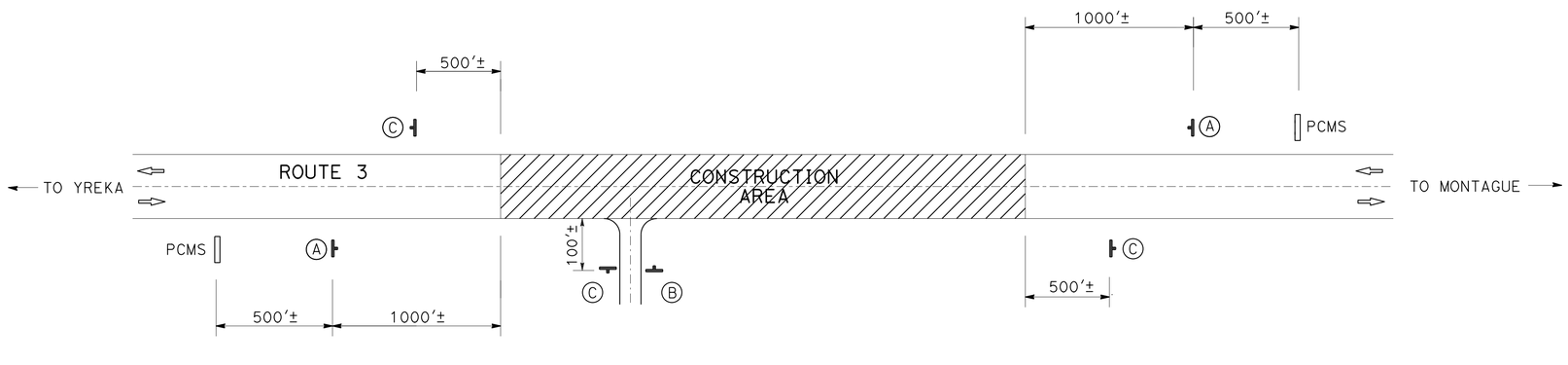


## CONSTRUCTION AREA SIGNS

# CONSTRUCTION AREA SIGNS

NO SCALE

CS-1

REVISED BY | DATE REVISED
RUSSELL FLOOD | GINNY SEIBERT
CALCULATED-DESIGNED BY | CHECKED BY
FUNCTIONAL SUPERVISOR: STEVE TOPAL
STATE OF CALIFORNIA - DEPARTMENT OF TRANSPORTATION
Caltrans DESIGN
P:\proj2\02\0E840_plans\pse\20e8401a001.dgn

LAST REVISION 03-05-12 | DATE PLOTTED => 18-JUL-2012 | TIME PLOTTED => 10:58

| Dist | COUNTY | ROUTE | POST MILES TOTAL PROJECT | SHEET No. | TOTAL SHEETS |
|---|---|---|---|---|---|
| 02 | Sis | 3 | R47.7/R48.5 | 14 | 37 |

Russell Flood 07-05-12
REGISTERED CIVIL ENGINEER DATE

07-05-12
PLANS APPROVAL DATE

REGISTERED PROFESSIONAL ENGINEER RUSSELL P. FLOOD No. C72261 Exp. 06-30-14 CIVIL STATE OF CALIFORNIA

*THE STATE OF CALIFORNIA OR ITS OFFICERS OR AGENTS SHALL NOT BE RESPONSIBLE FOR THE ACCURACY OR COMPLETENESS OF SCANNED COPIES OF THIS PLAN SHEET.*

**NOTE:**

1. EXACT SIGN LOCATIONS TO BE DETERMINED BY THE ENGINEER.

**LEGEND:**

- 1-1 ROADSIDE SIGN
- 1-1 PAVEMENT DELINEATION STRIPE DETAIL No.
- TYPE III ARROW
- WOOD SIGN (1-POST)
- WOOD SIGN (2-POST)
- BEGIN/END STRIPE
- STRIPE CHANGE LOCATION
- DELINEATOR (TYPE E)
- DELINEATOR (TYPE F)
- L-1 OBJECT MARKER (TYPE L)
- C MARKER (CULVERT)
- MILEPOST MARKER

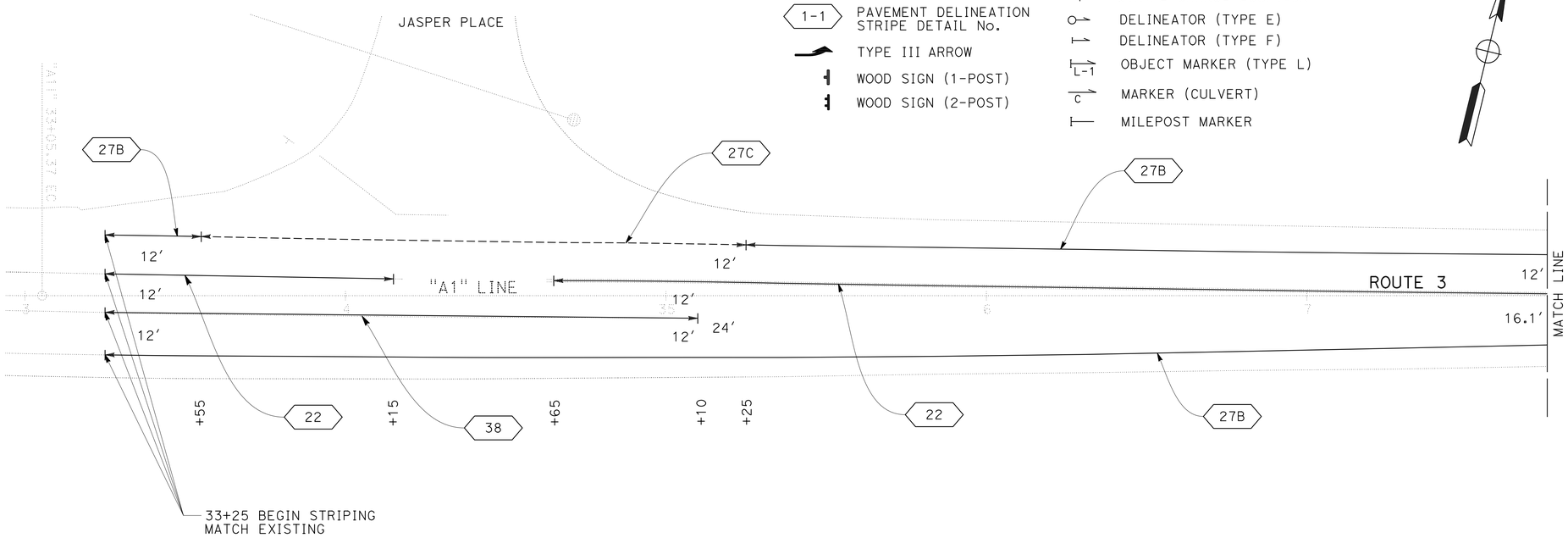


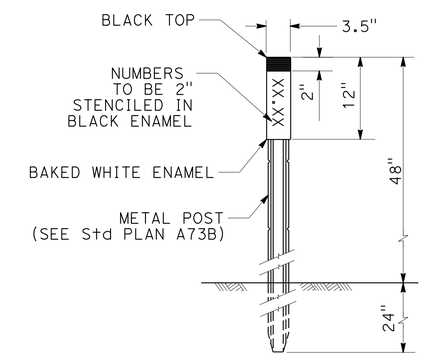


**MARKER (CULVERT)**

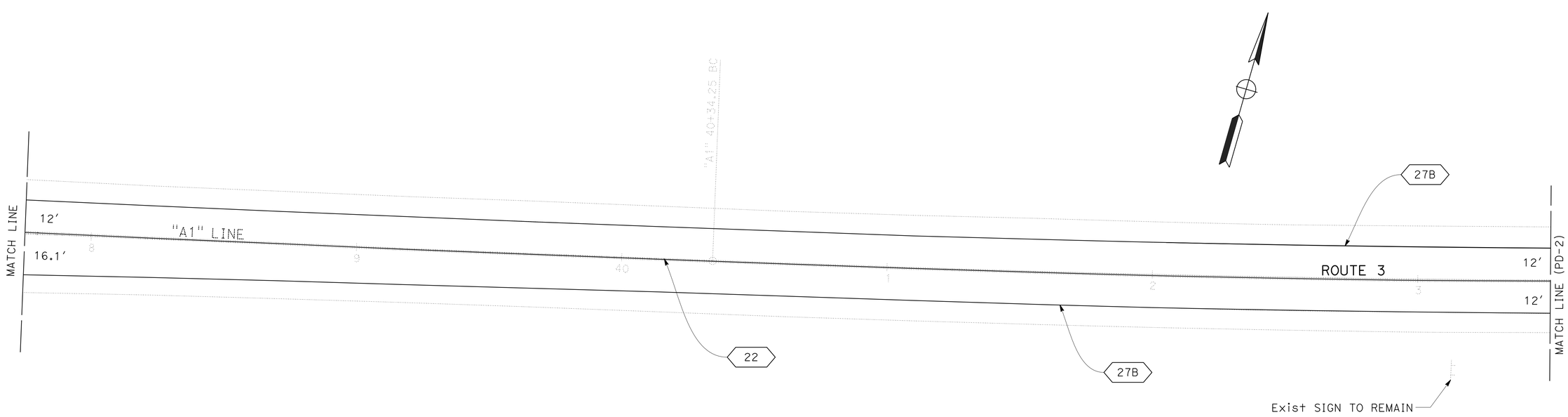


# PAVEMENT DELINEATION AND SIGN PLAN

SCALE: 1" = 20'

**PD-1**

*APPROVED FOR PAVEMENT DELINEATION AND SIGN WORK ONLY*

REVISED BY | DATE REVISED
RUSSELL FLOOD | GINNY SEIBERT
CALCULATED-DESIGNED BY | CHECKED BY
FUNCTIONAL SUPERVISOR | STEVE TOPAL

STATE OF CALIFORNIA - DEPARTMENT OF TRANSPORTATION
Caltrans
DESIGN

P:\proj2\02\0E840_plans\pse\20e840na001.dgn

LAST REVISION 03-27-12 | DATE PLOTTED => 18-JUL-2012 | TIME PLOTTED => 10:58

| Dist | COUNTY | ROUTE | POST MILES TOTAL PROJECT | SHEET No. | TOTAL SHEETS |
|---|---|---|---|---|---|
| 02 | Sis | 3 | R47.7/R48.5 | 15 | 37 |

Russell Flood 07-05-12
REGISTERED CIVIL ENGINEER DATE

07-05-12
PLANS APPROVAL DATE

REGISTERED PROFESSIONAL ENGINEER
RUSSELL P. FLOOD
No. C72261
Exp. 06-30-14
CIVIL
STATE OF CALIFORNIA

*THE STATE OF CALIFORNIA OR ITS OFFICERS OR AGENTS SHALL NOT BE RESPONSIBLE FOR THE ACCURACY OR COMPLETENESS OF SCANNED COPIES OF THIS PLAN SHEET.*

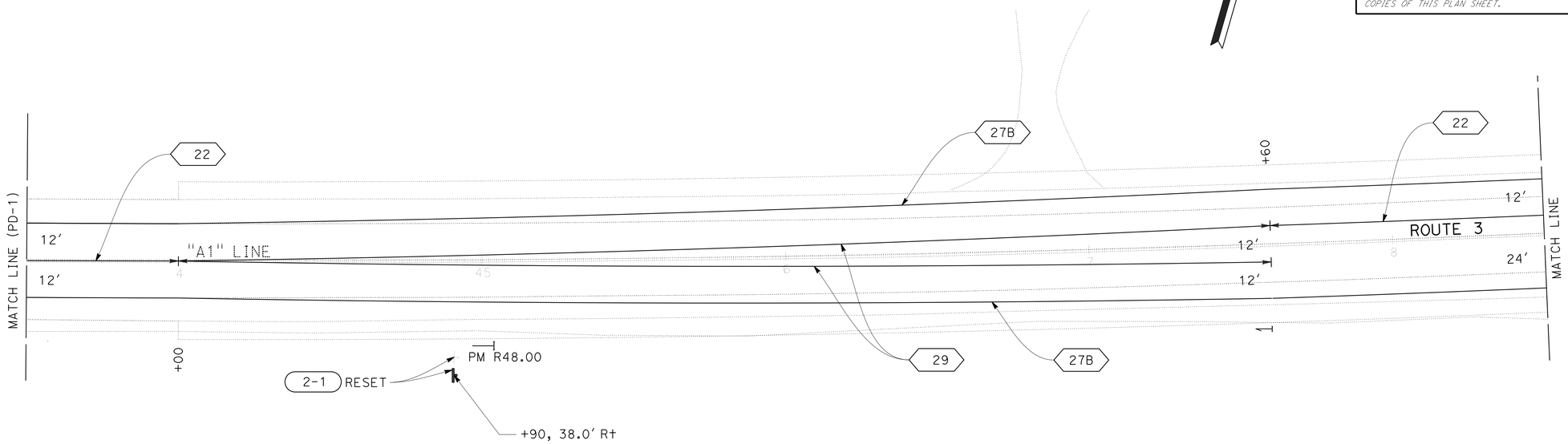


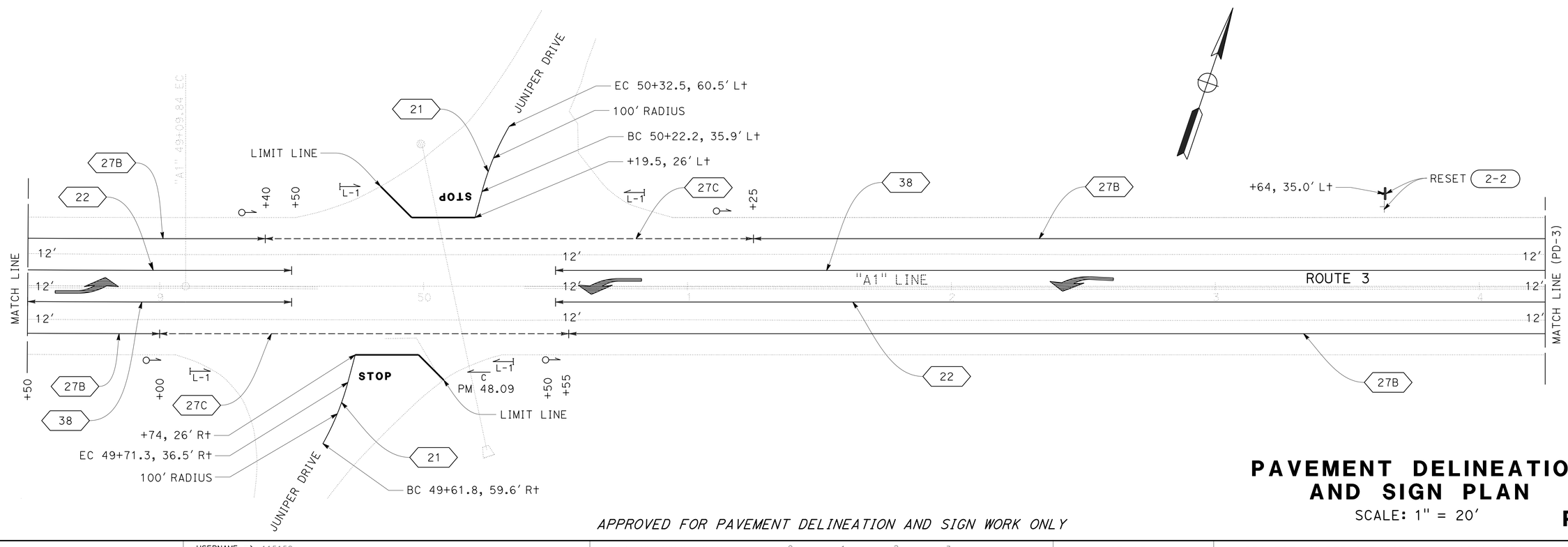


*APPROVED FOR PAVEMENT DELINEATION AND SIGN WORK ONLY*

# PAVEMENT DELINEATION AND SIGN PLAN

SCALE: 1" = 20′

**PD-2**

| CALCULATED-DESIGNED BY | RUSSELL FLOOD | REVISED BY | FUNCTIONAL SUPERVISOR | STATE OF CALIFORNIA - DEPARTMENT OF TRANSPORTATION |
|---|---|---|---|---|
| CHECKED BY | GINNY SEIBERT | DATE REVISED | STEVE TOPAL | DESIGN |

Caltrans

P:\proj2\02\0E840_plans\pse\20e840na002.dgn

LAST REVISION 03-27-12 | DATE PLOTTED => 18-JUL-2012 | TIME PLOTTED => 10:58

| Dist | COUNTY | ROUTE | POST MILES TOTAL PROJECT | SHEET No. | TOTAL SHEETS |
|---|---|---|---|---|---|
| 02 | Sis | 3 | R47.7/R48.5 | 16 | 37 |

Russell Flood 07-05-12
REGISTERED CIVIL ENGINEER DATE

07-05-12
PLANS APPROVAL DATE

REGISTERED PROFESSIONAL ENGINEER
RUSSELL P. FLOOD
No. C72261
Exp. 06-30-14
CIVIL
STATE OF CALIFORNIA

*THE STATE OF CALIFORNIA OR ITS OFFICERS OR AGENTS SHALL NOT BE RESPONSIBLE FOR THE ACCURACY OR COMPLETENESS OF SCANNED COPIES OF THIS PLAN SHEET.*

**NOTE:**

1. THE POSTMILE MARKER SHALL BE WHITE (NON-REFLECTIVE) TARGET PLATE WITH BLACK SERIES D NUMERALS AND LETTERS.

**LEGEND:**

⇨ DIRECTION OF TRAFFIC

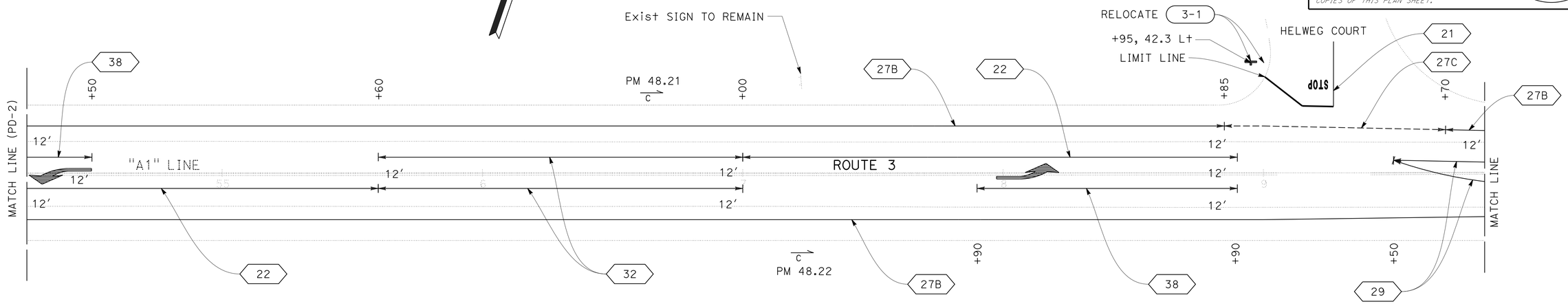


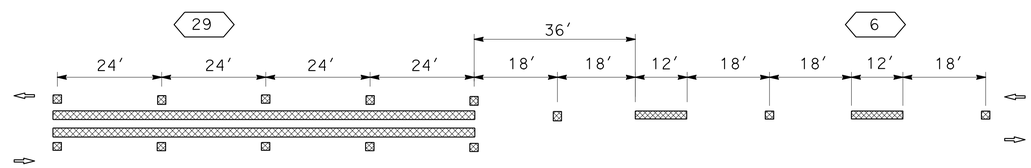


**STRIPE TRANSITION DETAIL**
Sta "A1" 62+25
NO SCALE

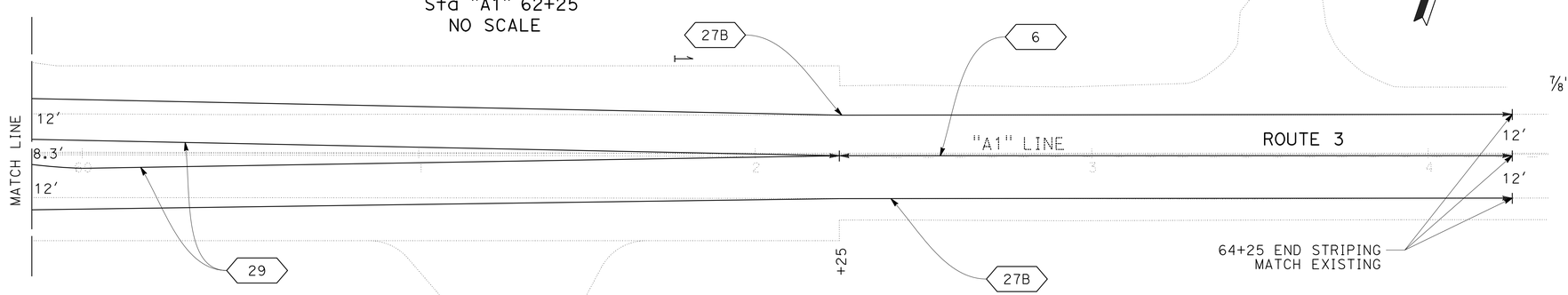


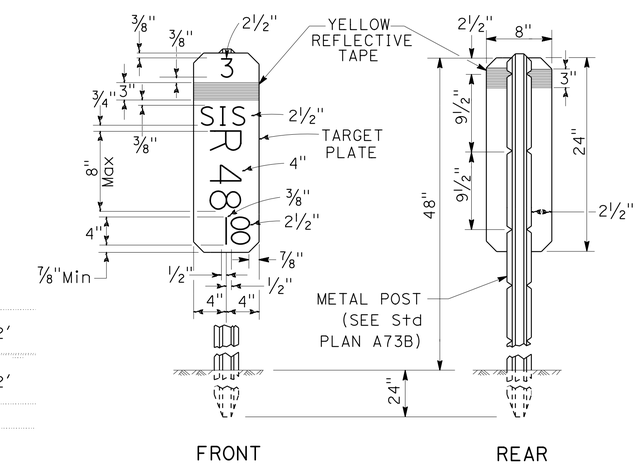


**POST MILE MARKER DETAIL**

# PAVEMENT DELINEATION AND SIGN PLAN

SCALE: 1" = 20′

**PD-3**

*APPROVED FOR PAVEMENT DELINEATION AND SIGN WORK ONLY*

REVISED BY | DATE REVISED
RUSSELL FLOOD | GINNY SEIBERT
CALCULATED-DESIGNED BY | CHECKED BY
FUNCTIONAL SUPERVISOR | STEVE TOPAL
STATE OF CALIFORNIA - DEPARTMENT OF TRANSPORTATION
Caltrans® DESIGN

P:\proj2\02\0E840_plans\pse\20e840na003.dgn

LAST REVISION 01-13-12 | DATE PLOTTED => 18-JUL-2012 | TIME PLOTTED => 10:58

| Dist | COUNTY | ROUTE | POST MILES TOTAL PROJECT | SHEET No. | TOTAL SHEETS |
|---|---|---|---|---|---|
| 02 | Sis | 3 | R47.7/R48.5 | 17 | 37 |

Russell Flood 07-05-12
REGISTERED CIVIL ENGINEER DATE

07-05-12
PLANS APPROVAL DATE

REGISTERED PROFESSIONAL ENGINEER RUSSELL P. FLOOD No. C72261 Exp. 06-30-14 CIVIL STATE OF CALIFORNIA

*THE STATE OF CALIFORNIA OR ITS OFFICERS OR AGENTS SHALL NOT BE RESPONSIBLE FOR THE ACCURACY OR COMPLETENESS OF SCANNED COPIES OF THIS PLAN SHEET.*

NOTE:

1. (N) - NOT A SEPARATE PAY ITEM, FOR INFORMATION ONLY

ABBREVIATIONS:

USPS UNITED STATES POSTAL SERVICE
AMA ARCHAEOLOGICAL MONITORING AREA

## ADJUST FRAME AND COVER TO GRADE

| LOCATION | ADJUST FRAME AND COVER TO GRADE |
|---|---|
| | EA |
| "A1" 46+93.7, 34.6′ L+ | 1 |

## TEMPORARY DRAINAGE INLET PROTECTION

| LOCATION | TEMPORARY DRAINAGE INLET PROTECTION |
|---|---|
| | EA |
| "A1" 50+00, L+ | 1 |

## ENVIRONMENTALLY SENSITIVE AREAS

| ESA | STATION "A1" LINE | NORTHBOUND | SOUTHBOUND | TEMPORARY FENCE (TYPE ESA) | SHEET |
|---|---|---|---|---|---|
| | | | | LF | |
| TYPE 1 | 44+00 TO 48+15 | | X | | TITLE |
| TYPE 2 | 43+90 TO 45+90 | X | | 270 | L-1 |
| TYPE 2 | 65+33 TO 68+35 | X | | 360 | C-3 |
| TYPE 2 | 68+60 TO 70+00 | X | | 170 | C-3 |
| TYPE 3 (AMA) | 44+00 TO 48+15 | | X | | L-1 |
| | | | TOTAL | 800 | |

## DRAINAGE QUANTITIES

| DRAINAGE SYSTEM No. (⬡) | DRAINAGE UNIT (◯) | REMOVE FLARED END SECTION | REMOVE CULVERT | 24" CORRUGATED STEEL PIPE (.109" THICK) | 24" STEEL FLARED END SECTION | DESCRIPTION | STATION "A1" LINE |
|---|---|---|---|---|---|---|---|
| | | EA | LF | LF | EA | | |
| 1 | a | | 1.0 | | | REMOVE 24" x 1.0′ CMP | 57+25 |
| | b | 1 | | | | REMOVE FES | |
| | c | | | 20.0 | | 24" x 20.0′ CSP | |
| | d | | | | 1 | 24" FES | |
| 2 | a | | 56.0 | | | REMOVE 18" x 56.0′ CMP | 59+27 |
| TOTAL | | 1 | 57.0 | 20.0 | 1 | | |

## EROSION CONTROL

| | EROSION CONTROL (HYDROSEED) |
|---|---|
| | ACRE |
| TOTAL | 1 |

## REMOVE CONCRETE

| STATION "A1" LINE | SQYD | Approx DEPTH | SHEET |
|---|---|---|---|
| 58+85 | 2.7 | 0.3′-0.5′ | C-2 |

## CONFORMS

| STATION "A1" LINE | NORTHBOUND | SOUTHBOUND | CONFORM AREA (N) | COLD PLANE ASPHALT CONCRETE PAVEMENT * | ROADWAY EXCAVATION * | EMBANKMENT * | SHOULDER BACKING * | CLASS 2 AGGREGATE BASE * | HOT MIX ASPHALT (TYPE A) * | TACK COAT * | MINOR CONCRETE (Misc Const) | DESCRIPTION |
|---|---|---|---|---|---|---|---|---|---|---|---|---|
| | | | SQYD | SQYD | CY | CY | TON | CY | TON | TON | CY | |
| 43+00 TO 44+00 | X | X | 443 | 443 | | | | | 64 | 0.2 | | MAINLINE CONFORM |
| "A1" 46+85 | | X | 49 | | 13 | 1 | 4 | 8 | 11 | | | CEMETERY DRIVEWAY |
| "A1" 49+66 | X | | 42 | 42 | | | 6 | | 34 | 0.1 | | JUNIPER DRIVE |
| "A1" 50+26 | | X | 144 | 144 | | | 7 | | 26 | 0.1 | | JUNIPER DRIVE |
| "A1" 59+27 | | X | 213 | | 92 | 91 | 7 | 71 | 46 | | | HELWEG COURT |
| "A1" 58+92 | | X | | | 1 | | | 1 | | | 0.3 | USPS MAIL BOX PAD |
| | | | | | 1 | | | 1 | | | 0.2 | PCC APRON |
| "A1" 61+15 | x | | 118 | | 32 | 4 | 5 | 20 | 26 | | | DRIVEWAY |
| 62+25 TO 63+25 | X | X | 444 | 444 | | | | | 64 | 0.2 | | MAINLINE CONFORM |
| TOTAL | | | | 1073 | 139 | 96 | 29 | 101 | 271 | 0.6 | 0.5 | |

* TOTALS INCLUDED IN ROADWAY QUANTITIES TABLE

## ROADWAY QUANTITIES

| STATION "A1" LINE | COLD PLANE ASPHALT CONCRETE PAVEMENT | ROADWAY EXCAVATION | EMBANKMENT (N) | SHOULDER BACKING | CLASS 2 AGGREGATE BASE | HOT MIX ASPHALT (TYPE A) | TACK COAT |
|---|---|---|---|---|---|---|---|
| | SQYD | CY | CY | TON | CY | TON | TON |
| 44+00 TO 62+25 | 1050 | 2193 | 1032 | 354 | 1893 | 2746 | 3.6 |
| FROM CONFORMS | 1073 | 139 | 96 | 29 | 101 | 271 | 0.6 |
| TOTAL | 2123 | 2332 | 1128 | 383 | 1994 | 3017 | 4.2 |

## THERMOPLASTIC PAVEMENT MARKING

| SHEET No. | DESCRIPTION | STATION "A1" LINE | REMOVE | PLACE | | REMARKS |
|---|---|---|---|---|---|---|
| | | | SQFT | EA | SQFT | |
| PD-2 | | 48+75 | | 1 | 42 | TYPE III (L) ARROW |
| | JUNIPER DRIVE (R+) | 49+66 | 8 | 1 | 38 | LIMIT LINE |
| | JUNIPER DRIVE (R+) | 49+66 | 22 | 1 | 22 | STOP |
| | JUNIPER DRIVE (L+) | 50+26 | | 1 | 41 | LIMIT LINE |
| | JUNIPER DRIVE (L+) | 50+26 | 22 | 1 | 22 | STOP |
| | | 50+75 | | 1 | 42 | TYPE III (L) ARROW |
| | | 52+60 | | 1 | 42 | TYPE III (L) ARROW |
| PD-3 | | 54+50 | | 1 | 42 | TYPE III (L) ARROW |
| | | 58+00 | | 1 | 42 | TYPE III (L) ARROW |
| | HELWEG COURT | 59+27 | | 1 | 30 | LIMIT LINE |
| | HELWEG COURT | 59+27 | | 1 | 22 | STOP |
| | TOTAL | | 52 | | 385 | |

## ROADSIDE SIGNS

| SIGN No. (#-#) | SIGN CODE | RESET ROADSIDE SIGN (ONE POST) | RELOCATE ROADSIDE SIGN-ONE POST |
|---|---|---|---|
| | | EA | EA |
| 2-1 | W2-1 | 1 | |
| 2-2 | W2-1 | 1 | |
| 3-1 | R1-1 | | 1 |
| | TOTAL | 2 | 1 |

## DELINEATORS AND MARKERS

| SHEET No. | STATION "A1" LINE | REMOVE MARKER | REMOVE DELINEATOR | DELINEATOR (CLASS 2) TYPE E | DELINEATOR (CLASS 2) TYPE F | MARKER (CULVERT) | MILEPOST MARKER | OBJECT MARKER (TYPE L-1) |
|---|---|---|---|---|---|---|---|---|
| | | EA | EA | EA | EA | EA | EA | EA |
| PD-2 | 43+50 TO 54+25 | 5 | 3 | 4 | 1 | 1 | 1 | 4 |
| PD-3 | 54+25 TO 64+25 | 1 | 1 | | 1 | 2 | | |
| | SUBTOTAL | | | 4 | 2 | | | |
| | TOTAL | 6 | 4 | 6 | | 3 | 1 | 4 |

## TRAFFIC STRIPES AND PAVEMENT MARKERS

| SHEET No. | STATION "A1" LINE | THERMOPLASTIC TRAFFIC STRIPE (SPRAYABLE) DETAIL 6 | DETAIL 21 | DETAIL 22 | DETAIL 27B | DETAIL 27C | DETAIL 29 | DETAIL 32 | DETAIL 38 | PAVEMENT MARKER (RETROREFLECTIVE-RECESSED) TYPE D | TYPE G |
|---|---|---|---|---|---|---|---|---|---|---|---|
| | | LF | LF | LF | LF | LF | LF | LF | LF | EA | EA |
| PD-1 | 33+25 TO 43+50 | | | 975 | 1880 | 170 | | | 185 | 84 | 9 |
| PD-2 | 43+50 TO 54+25 | | 73 | 615 | 1810 | 340 | 720 | | 475 | 85 | 21 |
| PD-3 | 54+25 TO 64+25 | 200 | 25 | 325 | 1915 | 85 | 551 | 280 | 120 | 78 | 7 |
| | SUBTOTAL | 200 | 98 | 1915 | 5605 | 595 | 1271 | 280 | 780 | 247 | 37 |
| | TOTAL | 10,744 | | | | | | | | 284 | |

# SUMMARY OF QUANTITIES

Q-1

| REVISED BY | DATE REVISED |
|---|---|
| | |

RUSSELL FLOOD — GINNY SEIBERT — CALCULATED-DESIGNED BY — CHECKED BY

FUNCTIONAL SUPERVISOR: STEVE TOPAL

STATE OF CALIFORNIA - DEPARTMENT OF TRANSPORTATION — DESIGN

P:\proj2\02\0E840_plans\pse\20e840pa001.dgn

LAST REVISION 03-27-12 — DATE PLOTTED => 18-JUL-2012 — TIME PLOTTED => 10:58

| Dist | COUNTY | ROUTE | POST MILES TOTAL PROJECT | SHEET No. | TOTAL SHEETS |
|---|---|---|---|---|---|
| 02 | Sis | 3 | R47.7/R48.5 | 18 | 37 |

ART 07-02-12
REGISTERED ELECTRICAL ENGINEER DATE

07-05-12
PLANS APPROVAL DATE

REGISTERED PROFESSIONAL ENGINEER A.P. ROBLES No. E15293 Exp. 3-31-13 ELECTRICAL STATE OF CALIFORNIA

*THE STATE OF CALIFORNIA OR ITS OFFICERS OR AGENTS SHALL NOT BE RESPONSIBLE FOR THE ACCURACY OR COMPLETENESS OF SCANNED COPIES OF THIS PLAN SHEET.*

## NOTE:

1. FOR ACCURATE RIGHT OF WAY DATA, CONTACT RIGHT OF WAY ENGINEERING AT THE DISTRICT OFFICE.

## NOTES (THIS SHEET):

1. EXISTING PACIFIC POWER TRANSFORMER.
2. STOP TRENCHING 2' FROM TRANSFORMER AND CONTACT PACIFIC POWER FOR COORDINATION ENTERING THE TRANSFORMER ENCLOSURE.
3. 3"C, 90°, 36" FIBERGLASS SWEEP PER PACIFIC POWER REQUIREMENTS.
5. 3"C, MT, IN 36" DEEP BY 12" WIDE TRENCH.
6. AB Exist DIRECT BURIAL CONDUCTORS.
7. 1½"C, 2#8, 1#8G.
8. 2"C, 2#8, 1#8G.
9. 2"C, 4#8, 1#8G.

## LEGEND

AXLE SENSOR

UTILITY EASEMENT

## ABBREVIATIONS:

| | |
|---|---|
| STC | SCREENED TRANSMISSION CABLE |
| TCE | TEMPORARY CONSTRUCTION EASEMENT |

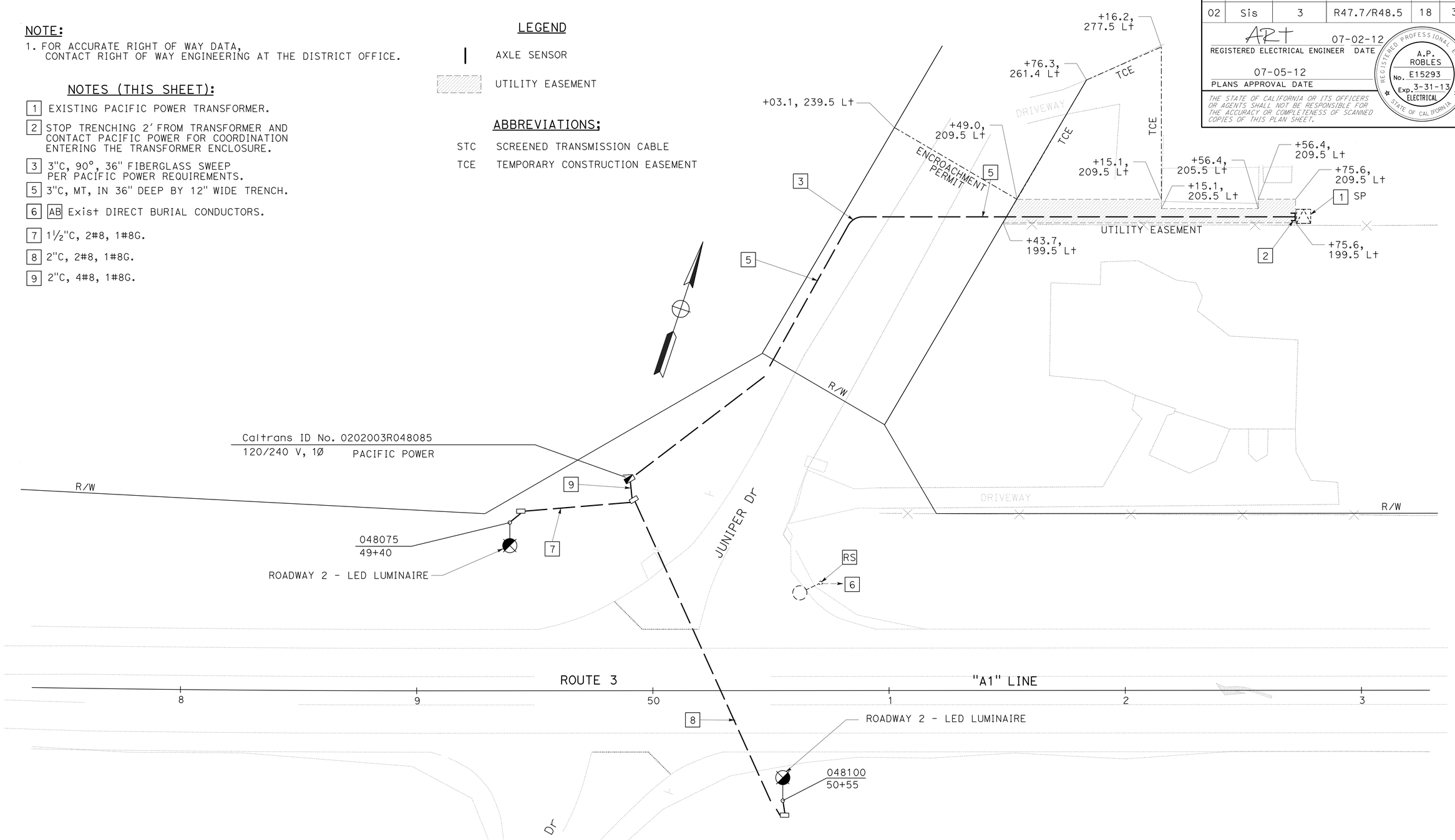


# LIGHTING

SCALE: 1" = 20'

**E-1**

*APPROVED FOR ELECTRICAL WORK ONLY*

| | |
|---|---|
| REVISED BY | |
| DATE REVISED | |
| ARTURO ROBLES | |
| JIM HANNIGAN | |
| CALCULATED-DESIGNED BY | |
| CHECKED BY | |
| FUNCTIONAL SUPERVISOR | ROB STINGER |

STATE OF CALIFORNIA - DEPARTMENT OF TRANSPORTATION
Caltrans ELECTRICAL DESIGN

P:\proj2\02\0E840_plans\pse\20e840ua001.dgn

LAST REVISION 07-02-12 | DATE PLOTTED => 18-JUL-2012 | TIME PLOTTED => 10:58

| Dist | COUNTY | ROUTE | POST MILES TOTAL PROJECT | SHEET No. | TOTAL SHEETS |
|---|---|---|---|---|---|
| 02 | Sis | 3 | R47.7/R48.5 | 19 | 37 |

ART 07-02-12
REGISTERED ELECTRICAL ENGINEER DATE

07-05-12
PLANS APPROVAL DATE

REGISTERED PROFESSIONAL ENGINEER A.P. ROBLES No. E15293 Exp. 3-31-13 ELECTRICAL STATE OF CALIFORNIA

*THE STATE OF CALIFORNIA OR ITS OFFICERS OR AGENTS SHALL NOT BE RESPONSIBLE FOR THE ACCURACY OR COMPLETENESS OF SCANNED COPIES OF THIS PLAN SHEET.*

## NOTE:

1. FOR ACCURATE RIGHT OF WAY DATA, CONTACT RIGHT OF WAY ENGINEERING AT THE DISTRICT OFFICE.

## NOTES (THIS SHEET):

1 INSTALL 1" CONDUIT INTO EXISTING TRANSFORMER ENCLOSURE PER PACIFIC POWER REQUIREMENTS.

2 INSTALL PULL BOX PER PACIFIC POWER REQUIREMENTS. INSTALL 240 V FUSED DISCONNECT SPLICE CONNECTOR. FUSES WILL BE PROVIDED BY THE CITY OF YREKA.

3 COIL 10' OF CABLES IN THE CABINET.

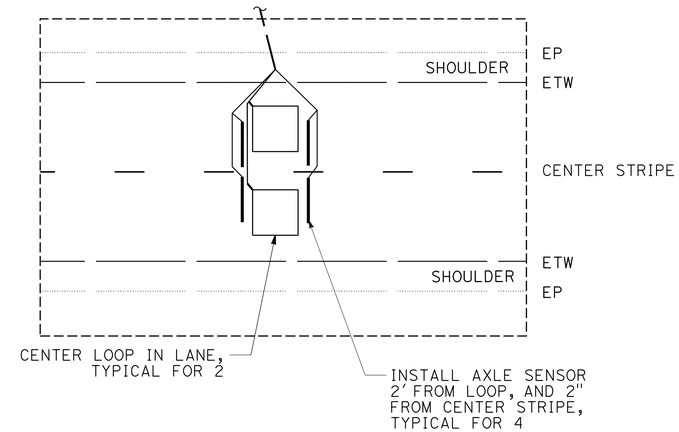


## AXLE SENSOR ARRAY INSTALLATION

NO SCALE

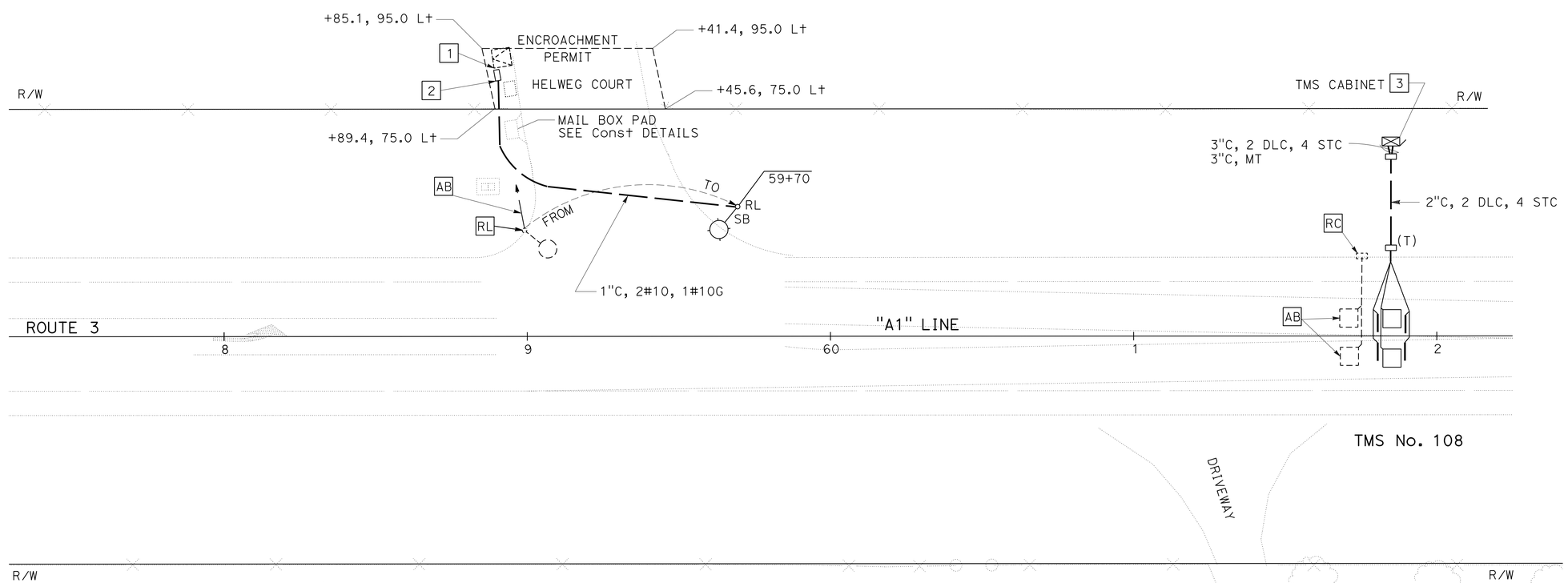


## TRAFFIC MONITORING STATION LIGHTING

SCALE: 1" = 20'

**E-2**

*APPROVED FOR ELECTRICAL WORK ONLY*

STATE OF CALIFORNIA - DEPARTMENT OF TRANSPORTATION
Caltrans® ELECTRICAL DESIGN

FUNCTIONAL SUPERVISOR: ROB STINGER
CALCULATED-DESIGNED BY: ARTURO ROBLES
CHECKED BY: JIM HANNIGAN
REVISED BY / DATE REVISED

P:\proj2\02\0E840_plans\pse\20e840ua002.dgn

LAST REVISION 07-02-12 | DATE PLOTTED => 18-JUL-2012 | TIME PLOTTED => 10:58

BORDER LAST REVISED 7/2/2010 | USERNAME => s115152 | DGN FILE => 20e840ua002.dgn | RELATIVE BORDER SCALE IS IN INCHES 0 1 2 3 | UNIT 0147 | PROJECT NUMBER & PHASE 02000200371

| Dist | COUNTY | ROUTE | POST MILES TOTAL PROJECT | SHEET No. | TOTAL SHEETS |
|---|---|---|---|---|---|
| 02 | Sis | 3 | R47.7/R48.5 | 20 | 37 |

ART 07-02-12
REGISTERED ELECTRICAL ENGINEER DATE

07-05-12
PLANS APPROVAL DATE

REGISTERED PROFESSIONAL ENGINEER A.P. ROBLES No. E15293 Exp. 3-31-13 ELECTRICAL STATE OF CALIFORNIA

*THE STATE OF CALIFORNIA OR ITS OFFICERS OR AGENTS SHALL NOT BE RESPONSIBLE FOR THE ACCURACY OR COMPLETENESS OF SCANNED COPIES OF THIS PLAN SHEET.*

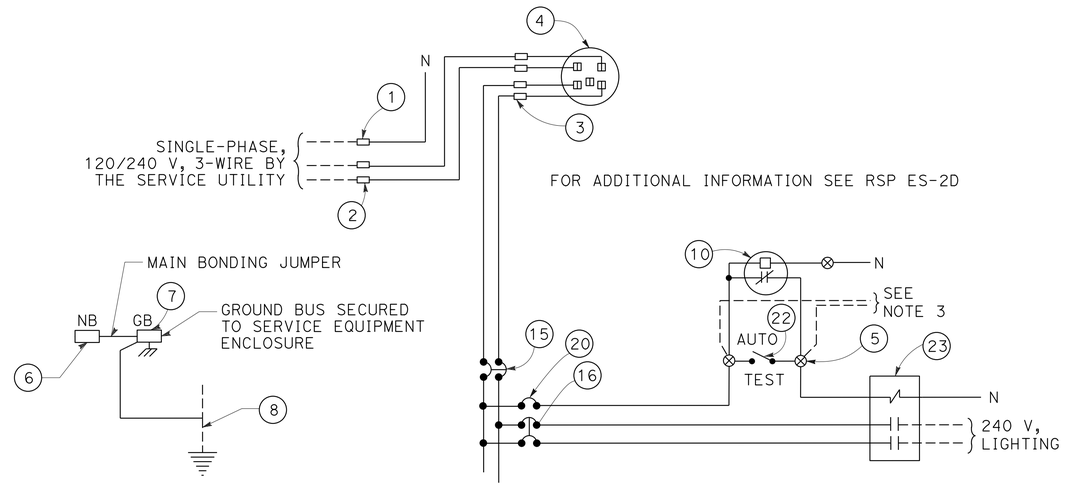


## 120/240 V SERVICE WIRING DIAGRAM

Caltrans ID No. 0202003R048085

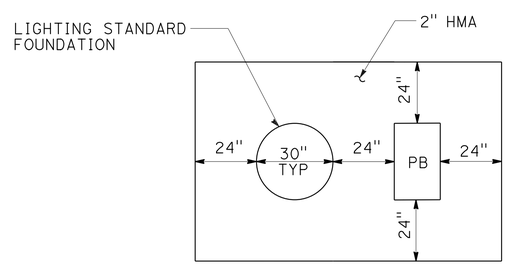


NOTE: APPLIES TO ALL INSTALLATIONS
IN UNPAVED AREAS

## PULL BOX AND LIGHT STANDARD PAVING

*APPROVED FOR ELECTRICAL WORK ONLY*

# LIGHTING
## (DETAILS)

NO SCALE

**E-3**

REVISED BY | DATE REVISED
ARTURO ROBLES | JIM HANNIGAN
CALCULATED-DESIGNED BY | CHECKED BY
FUNCTIONAL SUPERVISOR | ROB STINGER

STATE OF CALIFORNIA - DEPARTMENT OF TRANSPORTATION
Caltrans ELECTRICAL DESIGN

P:\proj2\02\0E840_plans\pse\20e840ua003.dgn

LAST REVISION 07-02-12 | DATE PLOTTED => 18-JUL-2012 | TIME PLOTTED => 10:58

| DIST | COUNTY | ROUTE | POST MILES TOTAL PROJECT | SHEET NO. | TOTAL SHEETS |
|---|---|---|---|---|---|
| 02 | Sis | 3 | R47.7/R48.5 | 21 | 37 |

Randell D. Hiatt
REGISTERED CIVIL ENGINEER

June 6, 2008
PLANS APPROVAL DATE

REGISTERED PROFESSIONAL ENGINEER
Randell D. Hiatt
No. C50200
Exp. 6-30-09
CIVIL
STATE OF CALIFORNIA

*The State of California or its officers or agents shall not be responsible for the accuracy or completeness of electronic copies of this plan sheet.*

*To accompany plans dated* 07-05-12

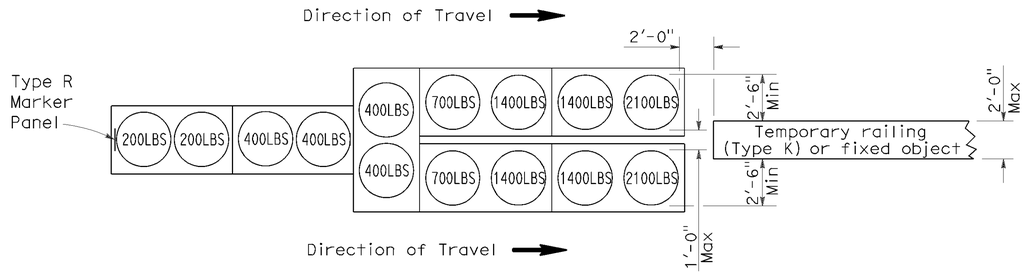


## ARRAY 'TU14'

Approach speed 45 mph or more

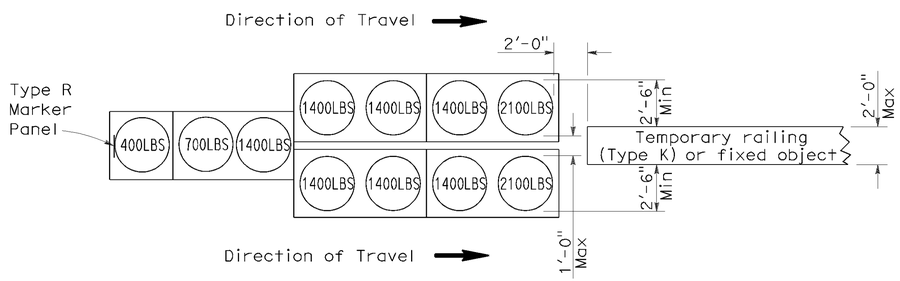


## ARRAY 'TU11'

Approach speed less than 45 mph

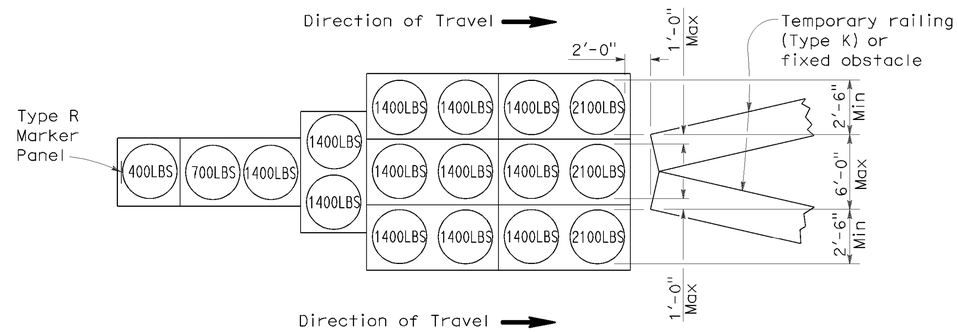


## ARRAY 'TU17'

Approach speed less than 45 mph

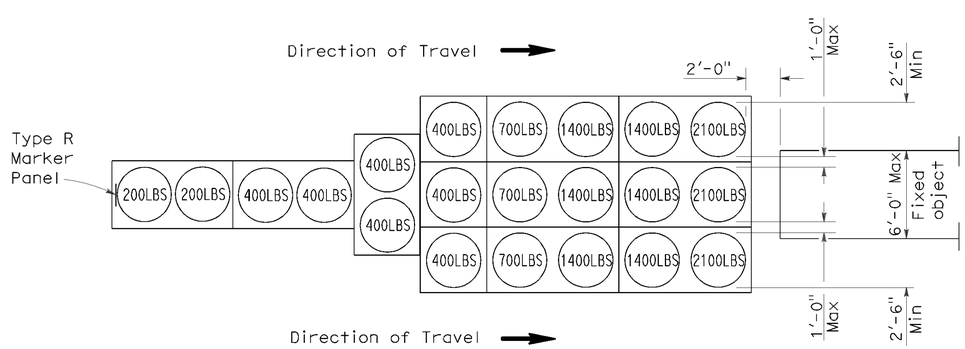


## ARRAY 'TU21'

Approach speed 45 mph or more

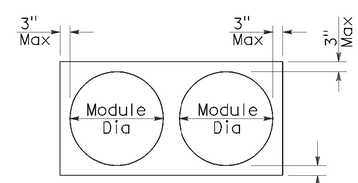


PLAN

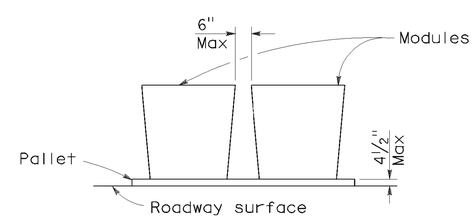


ELEVATION

## CRASH CUSHION PALLET DETAIL

See Note 7

## NOTES:

1. (XXX) Indicates sand filled module location and weight of sand in pounds for each module. Module spacing is based on the greater diameter of the module.
2. All sand weights are nominal.
3. Temporary crash cushion arrays shall not encroach on the traveled way.
4. Place the top of Type R marker panel 1" below the module lid.
5. Refer to Standard Plan A73B for marker details.
6. Approach speeds indicated conform to NCHRP 350 Report criteria.
7. Use of pallets is optional.

STATE OF CALIFORNIA
DEPARTMENT OF TRANSPORTATION

# TEMPORARY CRASH CUSHION, SAND FILLED (UNIDIRECTIONAL)

NO SCALE

RSP T1A DATED JUNE 6, 2008 SUPERSEDES STANDARD PLAN T1A
DATED MAY 1, 2006 - PAGE 211 OF THE STANDARD PLANS BOOK DATED MAY 2006.

**REVISED STANDARD PLAN RSP T1A**

**2006 REVISED STANDARD PLAN RSP T1A**

5-15-08

| DIST | COUNTY | ROUTE | POST MILES TOTAL PROJECT | SHEET NO. | TOTAL SHEETS |
|---|---|---|---|---|---|
| 02 | Sis | 3 | R47.7/R48.5 | 22 | 37 |

Randell D. Hiatt
REGISTERED CIVIL ENGINEER

June 6, 2008
PLANS APPROVAL DATE

REGISTERED PROFESSIONAL ENGINEER
Randell D. Hiatt
No. C50200
Exp. 6-30-09
CIVIL
STATE OF CALIFORNIA

*The State of California or its officers or agents shall not be responsible for the accuracy or completeness of electronic copies of this plan sheet.*

*To accompany plans dated* 07-05-12

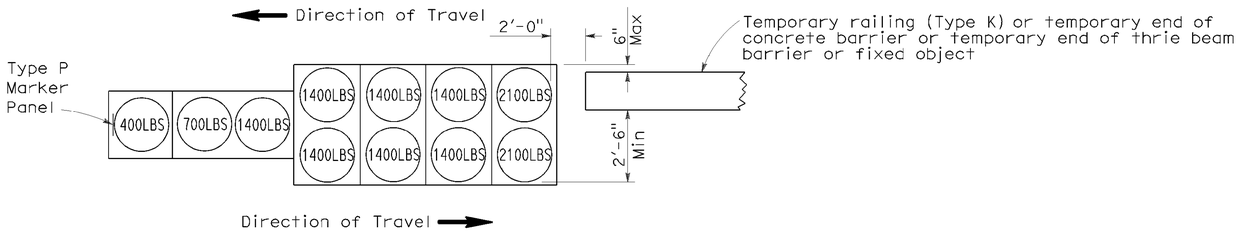


ARRAY 'TB11'

Approach speed less than 45 mph

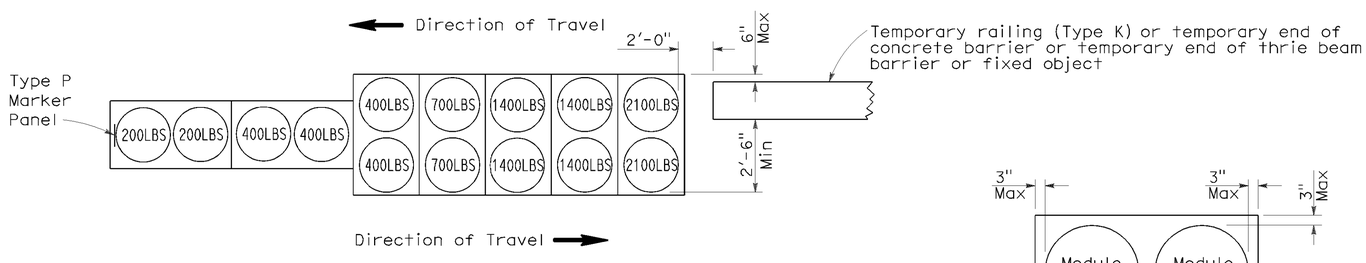


ARRAY 'TB14'

Approach speed 45 mph or more

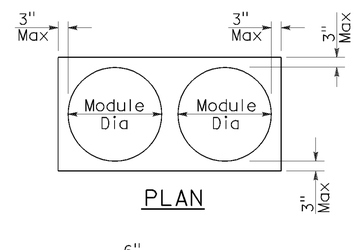


PLAN

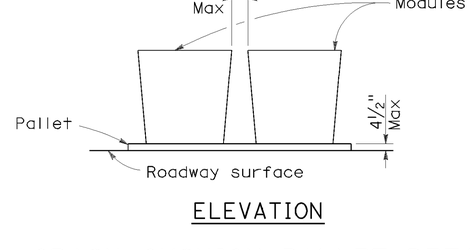


ELEVATION

CRASH CUSHION PALLET DETAIL

See Note 7

NOTES:

1. (XXX) Indicates sand filled module location and weight of sand in pounds for each module. Module spacing is based on the greater diameter of the module.
2. All sand weights are nominal.
3. Temporary crash cushion arrays shall not encroach on the traveled way.
4. Place the Type P marker panel so that the bottom of the panel rests upon the pallet.
5. Refer to Standard Plan A73B for marker details.
6. Approach speeds indicated conform to NCHRP 350 Report criteria.
7. Use of pallets is optional.

STATE OF CALIFORNIA
DEPARTMENT OF TRANSPORTATION

# TEMPORARY CRASH CUSHION, SAND FILLED (BIDIRECTIONAL)

NO SCALE

RSP T1B DATED JUNE 6, 2008 SUPERSEDES STANDARD PLAN T1B
DATED MAY 1, 2006 - PAGE 212 OF THE STANDARD PLANS BOOK DATED MAY 2006.

**REVISED STANDARD PLAN RSP T1B**

**2006 REVISED STANDARD PLAN RSP T1B**

P:\proj2\02\0E840_plans\pse\20e840va002.dgn
USERNAME => s115152
DGN FILE => 20e840va002.dgn
DATE PLOTTED => 18-JUL-2012
TIME PLOTTED => 10:58
5-15-08

| DIST | COUNTY | ROUTE | POST MILES TOTAL PROJECT | SHEET NO. | TOTAL SHEETS |
|---|---|---|---|---|---|
| 02 | Sis | 3 | R47.7/R48.5 | 23 | 37 |

Randell D. Hiatt
REGISTERED CIVIL ENGINEER

June 6, 2008
PLANS APPROVAL DATE

REGISTERED PROFESSIONAL ENGINEER
Randell D. Hiatt
No. C50200
Exp. 6-30-09
CIVIL
STATE OF CALIFORNIA

*The State of California or its officers or agents shall not be responsible for the accuracy or completeness of electronic copies of this plan sheet.*

*To accompany plans dated* 07-05-12

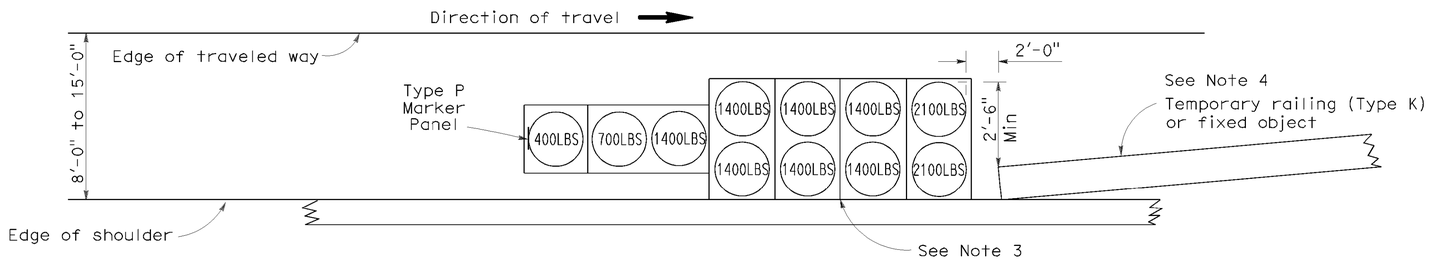


## ARRAY 'TS11'

Approach speed less than 45 mph
See Note 9

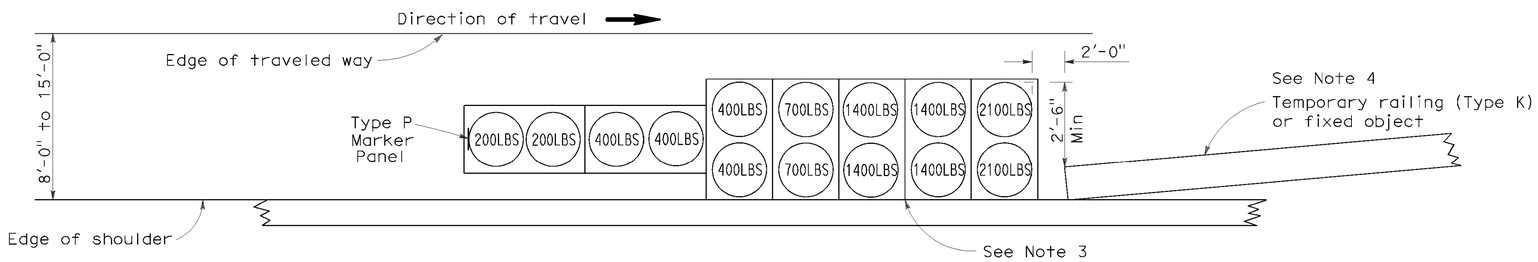


## ARRAY 'TS14'

Approach speed 45 mph or more
See Note 9

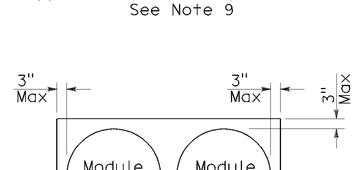


PLAN

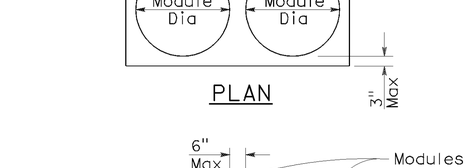


ELEVATION

## CRASH CUSHION PALLET DETAIL

See Note 11

## NOTES:

1. (XXX) Indicates sand filled module location and weight of sand in pounds for each module. Module spacing is based on the greater diameter of the module.
2. All sand weights are nominal.
3. The temporary crash cushion arrays shown on this plan shall be used only in locations where there will be traffic on one side of the temporary crash cushion array.
4. If the fixed object or approach end of the temporary railing is less than 15'-0" from the edge of traveled way, a temporary crash cushion is required in a construction or work zone.
5. Temporary crash cushion arrays shall not encroach on the traveled way.
6. Arrays for median shoulders shall conform to details shown on this plan for outside shoulders.
7. Place the Type P marker panel so that the bottom of the panel rests upon the pallet and faces traffic.
8. Refer to Standard Plan A73B for marker details.
9. For shoulder widths less than 8'-0", appropriate approved crash cushion protection, other than sand filled modules, shall be provided at fixed objects and at approach ends of temporary railing. The specific type of crash cushion shall be as shown on the project plans or as specified in the Special Provisions, or if not shown on the project plans or specified in the Special Provisions, shall be as approved by the Engineer.
10. Approach speeds indicated conform to NCHRP 350 Report criteria.
11. Use of pallets is optional.

STATE OF CALIFORNIA
DEPARTMENT OF TRANSPORTATION

# TEMPORARY CRASH CUSHION, SAND FILLED (SHOULDER INSTALLATIONS)

NO SCALE

RSP T2 DATED JUNE 6, 2008 SUPERSEDES STANDARD PLAN T2
DATED MAY 1, 2006 - PAGE 213 OF THE STANDARD PLANS BOOK DATED MAY 2006.

**REVISED STANDARD PLAN RSP T2**

**2006 REVISED STANDARD PLAN RSP T2**

| Dist | COUNTY | ROUTE | POST MILES TOTAL PROJECT | SHEET No. | TOTAL SHEETS |
|---|---|---|---|---|---|
| 02 | Sis | 3 | R47.7/R48.5 | 24 | 37 |

Randell D. Hiatt
REGISTERED CIVIL ENGINEER

May 20, 2011
PLANS APPROVAL DATE

REGISTERED PROFESSIONAL ENGINEER
Randell D. Hiatt
No. C50200
Exp. 6-30-11
CIVIL
STATE OF CALIFORNIA

*The State of California or its officers or agents shall not be responsible for the accuracy or completeness of electronic copies of this plan sheet.*

*To accompany plans dated* 07-05-12

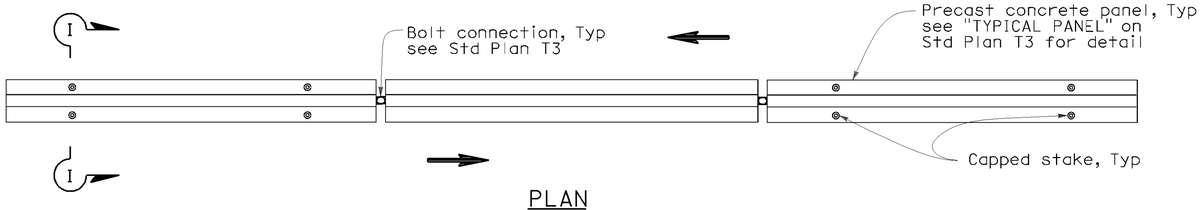


PLAN

## RAILING STAKING CONFIGURATION FOR TWO-WAY TRAFFIC

See Note 1

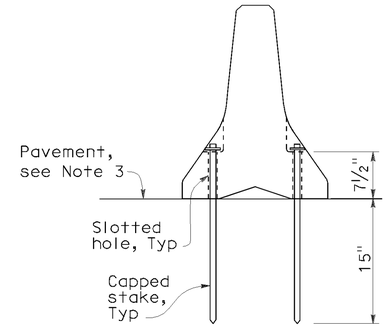


SECTION I-I

## NOTES:

1. Where Type K Temporary Railing is placed as a temporary or long term barrier in two-way traffic on highways with less than 24" from the edge of traveled way, use four capped stakes per every other panel with end panels staked.
2. Where Type K Temporary Railing is placed 3" to 24" from the edge of an excavation on highways, use two capped stakes per panel along the traffic side.
3. Staked Type K Temporary Railing must be supported by at least 4" thick concrete, hot mix asphalt or existing asphalt concrete pavement.
4. The minimum yield strength for the washer must be 60,000 psi.
5. Direction of adjacent traffic indicated by ⟹.

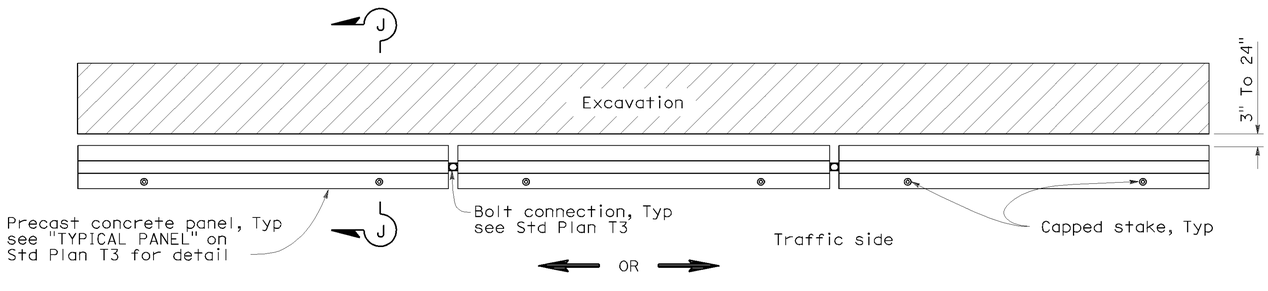


PLAN

## RAILING STAKING CONFIGURATION ADJACENT TO AN EXCAVATION

See Note 2

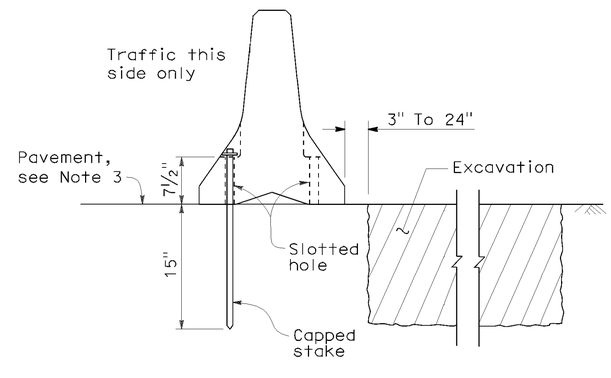


SECTION J-J

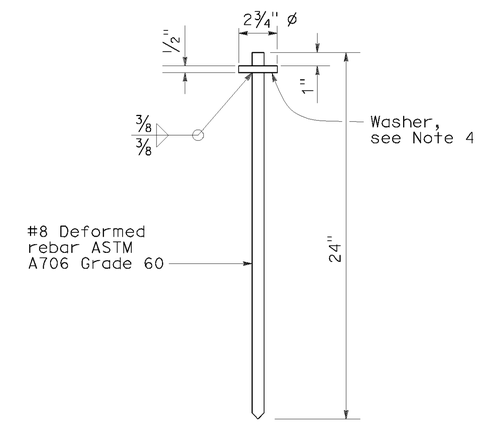


CAPPED STAKE DETAIL

STATE OF CALIFORNIA
DEPARTMENT OF TRANSPORTATION

# TEMPORARY RAILING (TYPE K)

NO SCALE

NSP T3A DATED MAY 20, 2011 SUPPLEMENTS
THE STANDARD PLANS BOOK DATED MAY 2006.

**NEW STANDARD PLAN NSP T3A**

**2006 NEW STANDARD PLAN NSP T3A**


P:\proj2\02\0E840_plans\pse\20e840va004.dgn
USERNAME => s115152
DGN FILE => 20e840va004.dgn
DATE PLOTTED => 18-JUL-2012
TIME PLOTTED => 10:58
8-31-10

| DIST | COUNTY | ROUTE | POST MILES TOTAL PROJECT | SHEET NO. | TOTAL SHEETS |
|---|---|---|---|---|---|
| 02 | Sis | 3 | R47.7/R48.5 | 25 | 37 |

LICENSED LANDSCAPE ARCHITECT

August 15, 2008
PLANS APPROVAL DATE

*The State of California or its officers or agents shall not be responsible for the accuracy or completeness of electronic copies of this plan sheet.*

LICENSED LANDSCAPE ARCHITECT — Robert B. Schott — Signature — 11-04-08 Renewal Date — 08-11-08 Date — STATE OF CALIFORNIA

*To accompany plans dated* 07-05-12

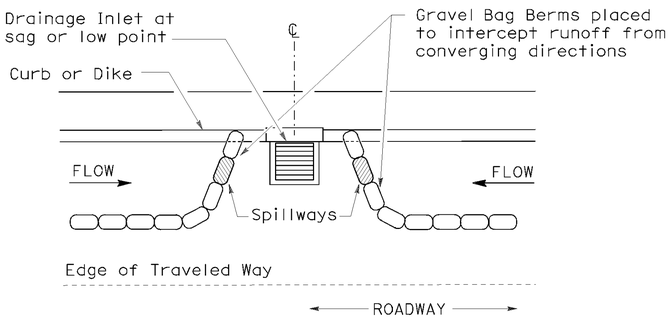


PLAN

## CONFIGURATION FOR SAG POINT INLET (GRAVEL BAG BERM)

## GRAVEL BAG BERM (TYPE 3A) SPACING TABLE

| SLOPE OF ROADWAY (PERCENT) | 1 to 3.9 | 4 to 5.9 | 6 to 7.9 | 8 to 10 | 10+ |
|---|---|---|---|---|---|
| INTERVAL BETWEEN BERM | 100′ | 75′ | 50′ | 25′ | 12′ |

For slope of less than 1%, install barriers only if erosion/sediment is prevalent

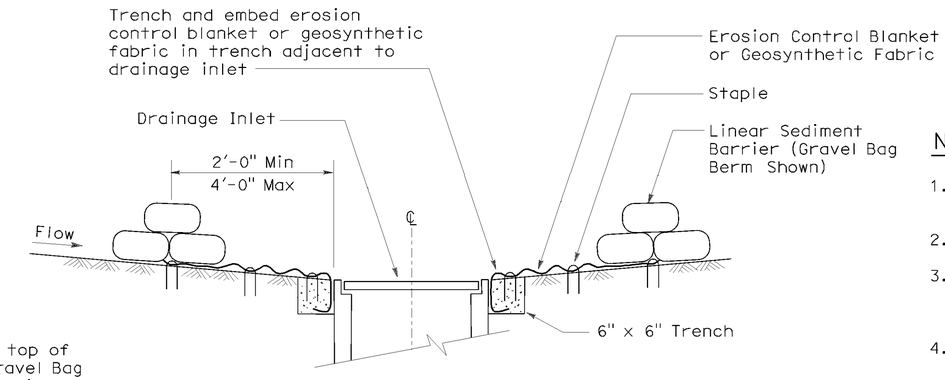


SECTION A-A

## NOTES:

1. Place safety cones adjacent to drainage inlet protection.
2. Dimensions may vary to fit field conditions.
3. Install a minimum of 3 gravel bag berms upstream of each drainage inlet to be protected.
4. Position erosion control blanket or geosynthetic fabric at edge of concrete apron and secure in trench.
5. Erosion control blanket or geosynthetic fabric is not required if the area adjacent to the drainage inlet is vegetated or paved.

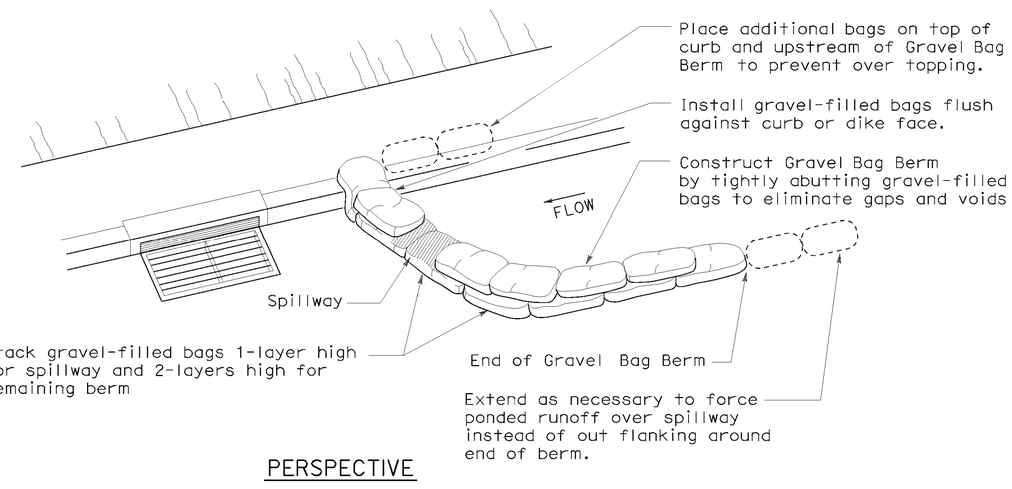


PERSPECTIVE

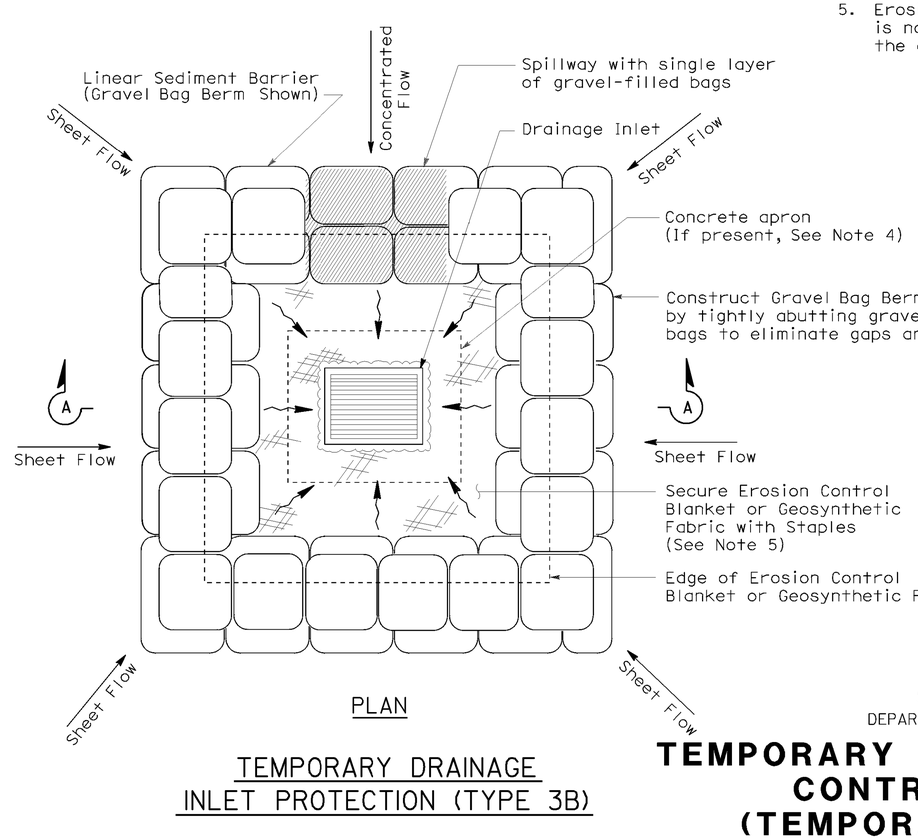


PLAN

## TEMPORARY DRAINAGE INLET PROTECTION (TYPE 3B)

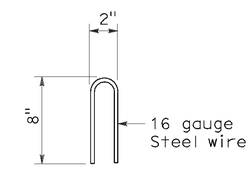


STAPLE DETAIL

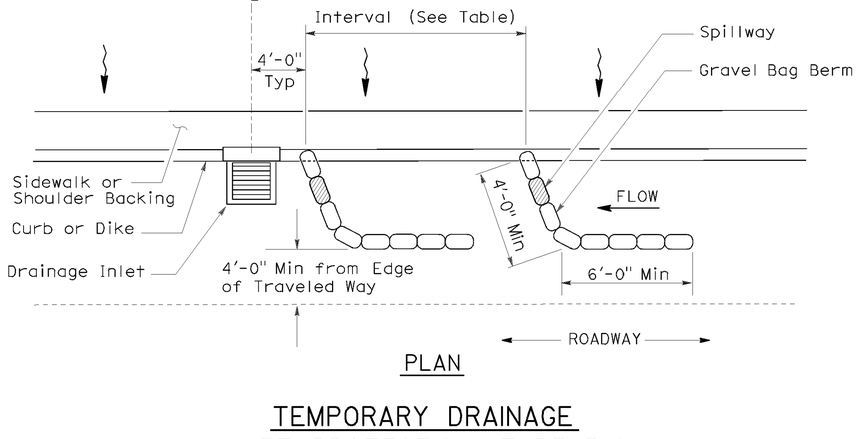


PLAN

## TEMPORARY DRAINAGE INLET PROTECTION (TYPE 3A) (GRAVEL BAG BERM)

STATE OF CALIFORNIA
DEPARTMENT OF TRANSPORTATION

# TEMPORARY WATER POLLUTION CONTROL DETAILS (TEMPORARY DRAINAGE INLET PROTECTION)

NO SCALE

NSP T62 DATED AUGUST 15, 2008 SUPPLEMENTS THE STANDARD PLANS BOOK DATED MAY 2006.

**NEW STANDARD PLAN NSP T62**

**2006 NEW STANDARD PLAN NSP T62**

P:\proj2\02\0E840_plans\pse\20e840va005.dgn
USERNAME => s115152
DGN FILE => 20e840va005.dgn
DATE PLOTTED => 18-JUL-2012
TIME PLOTTED => 10:58
7-11-08

| DIST | COUNTY | ROUTE | POST MILES TOTAL PROJECT | SHEET NO. | TOTAL SHEETS |
|---|---|---|---|---|---|
| 02 | Sis | 3 | R47.7/R48.5 | 26 | 37 |

LICENSED LANDSCAPE ARCHITECT

August 15, 2008
PLANS APPROVAL DATE

*The State of California or its officers or agents shall not be responsible for the accuracy or completeness of electronic copies of this plan sheet.*

LICENSED LANDSCAPE ARCHITECT — Robert B. Schott — Signature — 11-04-08 Renewal Date — 08-11-08 Date — STATE OF CALIFORNIA

*To accompany plans dated* 07-05-12

## FLEXIBLE SEDIMENT BARRIER SPACING TABLE

| SLOPE OF ROADWAY (PERCENT) | 0 to 0.9 | 1 to 1.9 | 2 to 2.9 | 3 to 4 | 5+ |
|---|---|---|---|---|---|
| INTERVAL BETWEEN BARRIERS | 50′ | 35′ | 30′ | 25′ | 20′ |
| ANGLE FROM FACE OF CURB | 70° | 70° | 70° | 45° | 45° |
| SUGGESTED BARRIER LENGTH | 6′ | 6′ | 6′ | 6′ | 6′ |

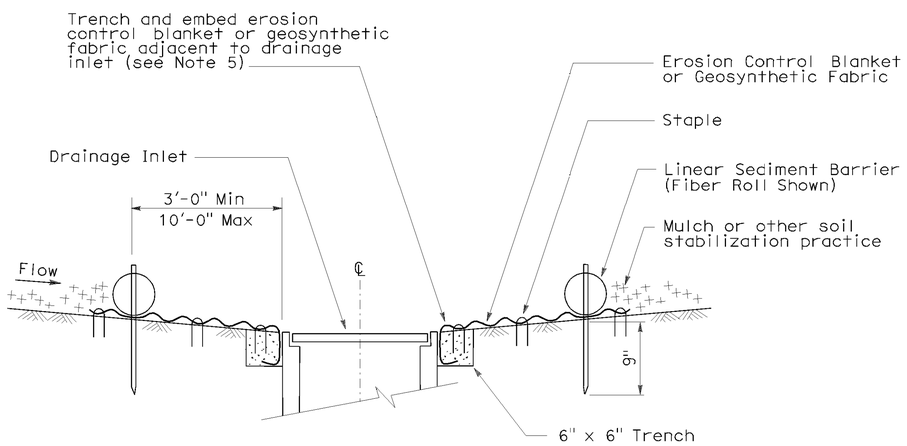


SECTION A-A

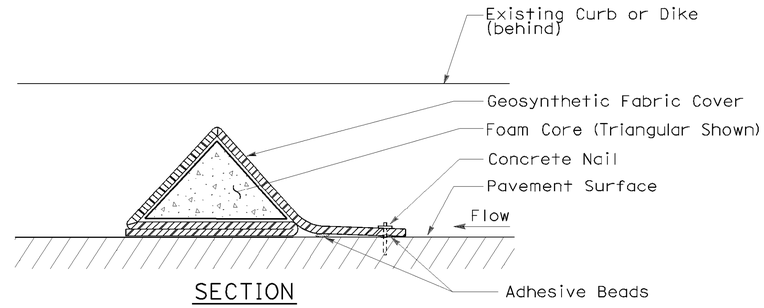


SECTION

## FLEXIBLE SEDIMENT BARRIER DETAIL (FOAM BARRIER SHOWN)

## NOTES:

1. See Standard Plan T51 for Temporary Silt Fence.
2. Dimensions may vary to fit field conditions.
3. Install a minimum of 3 flexible sediment barriers upstream of each drainage inlet to be protected.
4. Position erosion control blanket or geosynthetic fabric at edge of concrete apron and secure in trench.
5. Erosion control blanket or geosynthetic fabric is not required if the area adjacent to the drainage inlet is vegetated.

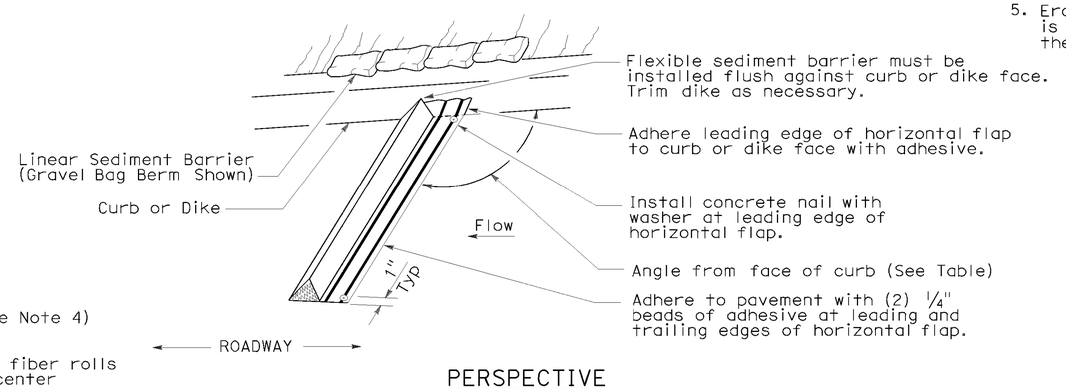


PERSPECTIVE

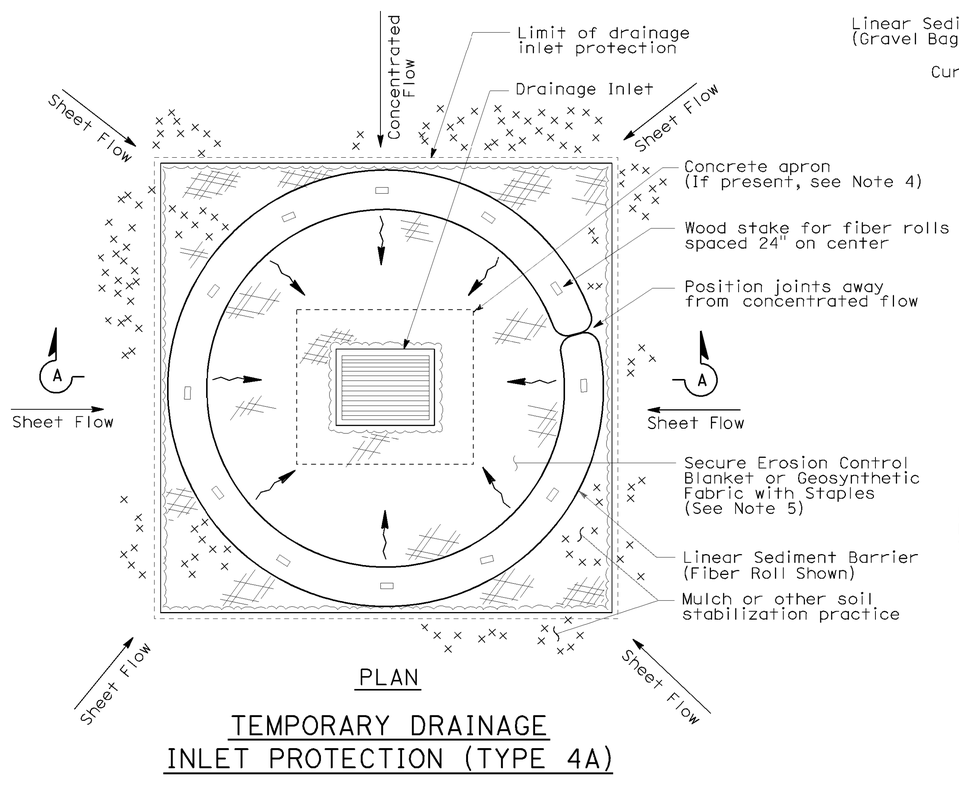


PLAN

## TEMPORARY DRAINAGE INLET PROTECTION (TYPE 4A)

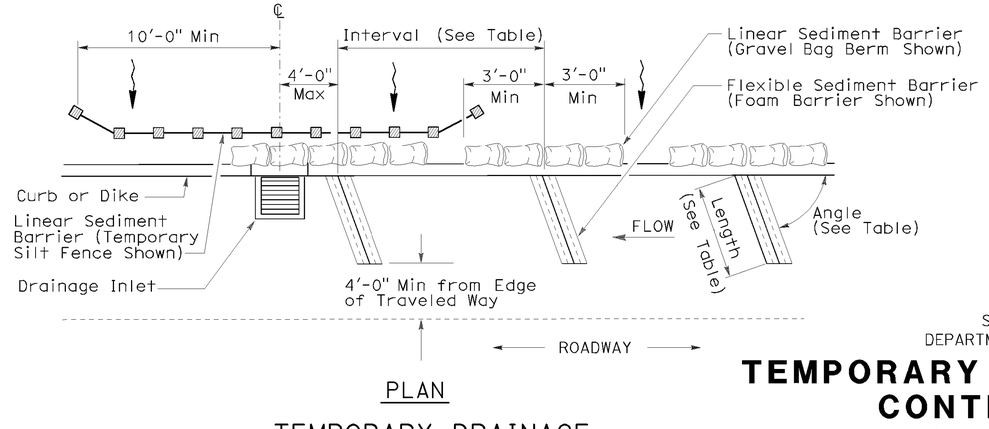


PLAN

## TEMPORARY DRAINAGE INLET PROTECTION (TYPE 4B) FLEXIBLE SEDIMENT BARRIER

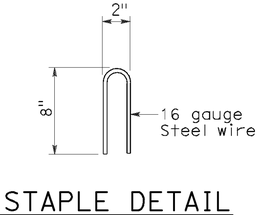


STAPLE DETAIL

STATE OF CALIFORNIA
DEPARTMENT OF TRANSPORTATION

# TEMPORARY WATER POLLUTION CONTROL DETAILS (TEMPORARY DRAINAGE INLET PROTECTION)

NO SCALE

NSP T63 DATED AUGUST 15, 2008 SUPPLEMENTS THE STANDARD PLANS BOOK DATED MAY 2006.

**NEW STANDARD PLAN NSP T63**

**2006 NEW STANDARD PLAN NSP T63**


P:\proj2\02\0E840_plans\pse\20e840va006.dgn
USERNAME => s115152
DGN FILE => 20e840va006.dgn
DATE PLOTTED => 18-JUL-2012
TIME PLOTTED => 10:59
7-11-03

| DIST | COUNTY | ROUTE | POST MILES TOTAL PROJECT | SHEET NO. | TOTAL SHEETS |
|---|---|---|---|---|---|
| 02 | Sis | 3 | R47.7/R48.5 | 27 | 37 |

LICENSED LANDSCAPE ARCHITECT

August 15, 2008
PLANS APPROVAL DATE

*The State of California or its officers or agents shall not be responsible for the accuracy or completeness of electronic copies of this plan sheet.*

LICENSED LANDSCAPE ARCHITECT — Robert B. Schott — Signature — 11-04-08 Renewal Date — 08-11-08 Date — STATE OF CALIFORNIA

*To accompany plans dated* 07-05-12

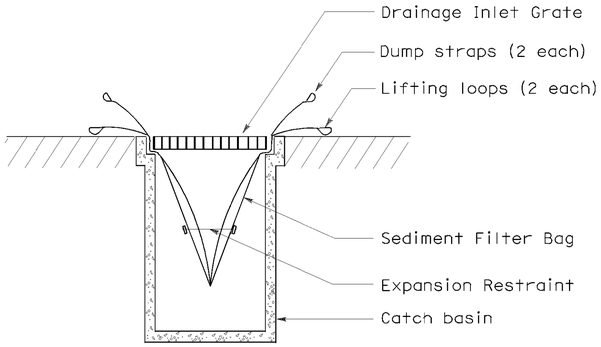


SECTION B-B

## SEDIMENT FILTER BAG DETAIL

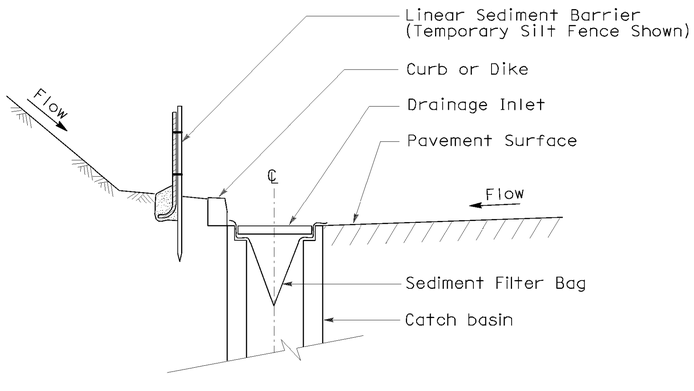


SECTION A-A

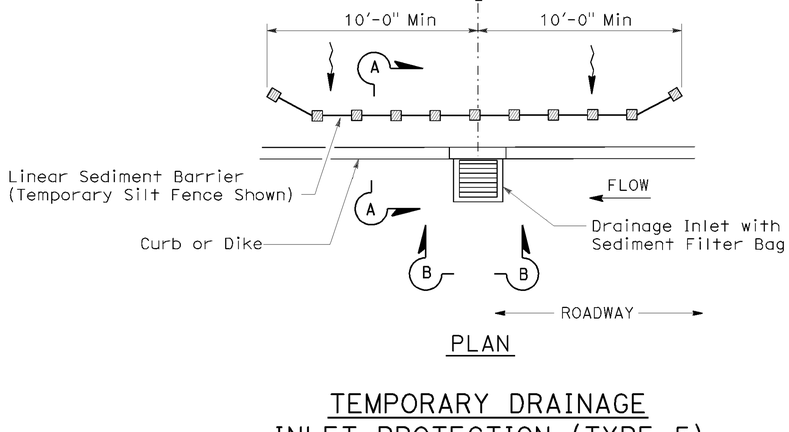


PLAN

## TEMPORARY DRAINAGE INLET PROTECTION (TYPE 5) (SEDIMENT FILTER BAG)

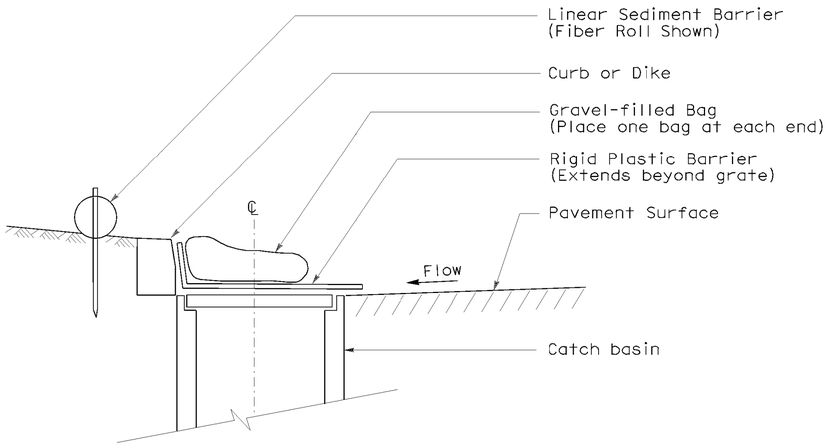


SECTION

## TEMPORARY DRAINAGE INLET PROTECTION (TYPE 6A) (CATCH BASIN WITH GRATE)

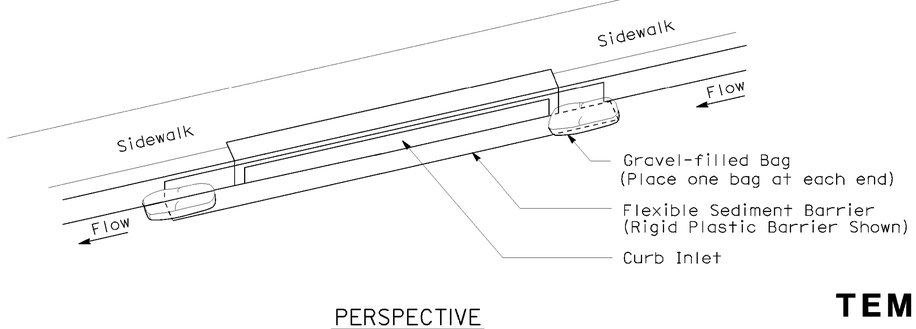


PERSPECTIVE

## TEMPORARY DRAINAGE INLET PROTECTION (TYPE 6B) (CURB INLET WITHOUT GRATE)

NOTES:

1. See Standard Plan T51 for Temporary Silt Fence.
2. Dimensions may vary to fit field conditions.

STATE OF CALIFORNIA
DEPARTMENT OF TRANSPORTATION

# TEMPORARY WATER POLLUTION CONTROL DETAILS (TEMPORARY DRAINAGE INLET PROTECTION)

NO SCALE

NSP T64 DATED AUGUST 15, 2008 SUPPLEMENTS
THE STANDARD PLANS BOOK DATED MAY 2006.

**NEW STANDARD PLAN NSP T64**

**2006 NEW STANDARD PLAN NSP T64**

P:\proj2\02\0E840_plans\pse\20e840va007.dgn
USERNAME => s115152
DGN FILE => 20e840va007.dgn
DATE PLOTTED => 18-JUL-2012
TIME PLOTTED => 10:59
7-11-08

| DIST | COUNTY | ROUTE | POST MILES TOTAL PROJECT | SHEET NO. | TOTAL SHEETS |
|---|---|---|---|---|---|
| 02 | Sis | 3 | R47.7/R48.5 | 28 | 37 |

LICENSED LANDSCAPE ARCHITECT

April 3, 2009
PLANS APPROVAL DATE

LICENSED LANDSCAPE ARCHITECT — Robert B. Schott — 3855 — Signature — 11-30-10 Renewal Date — 2-25-09 Date — STATE OF CALIFORNIA

*The State of California or its officers or agents shall not be responsible for the accuracy or completeness of electronic copies of this plan sheet.*

*To accompany plans dated* 07-05-12

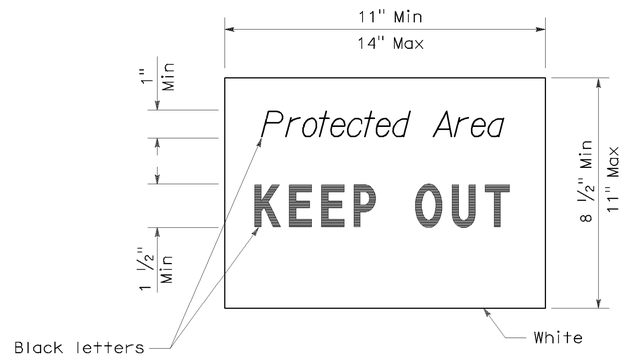


SIGN DETAIL

NOTE:

1. Temporary silt fence and temporary straw bale barrier shown for reference purposes only.

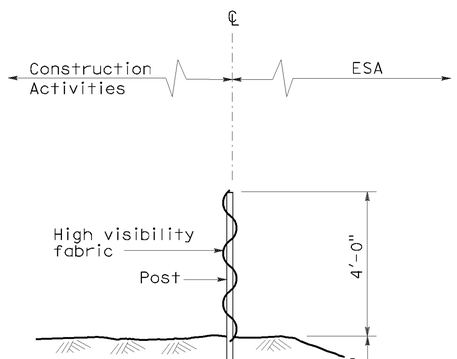


SECTION
TEMPORARY FENCE (TYPE ESA)

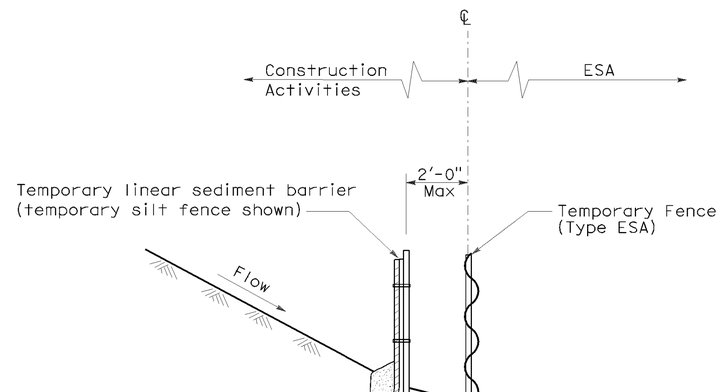


SECTION
PLACEMENT DETAIL
FOR TEMPORARY LINEAR SEDIMENT BARRIER
USED WITH TEMPORARY
FENCE (TYPE ESA)
(See Note 1 )

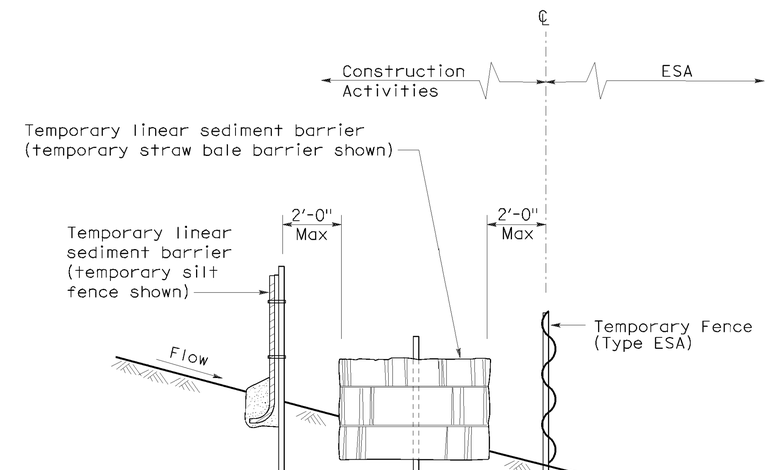


SECTION
PLACEMENT DETAIL
FOR TEMPORARY SILT FENCE
AND TEMPORARY STRAW BALE BARRIER
USED WITH TEMPORARY FENCE (TYPE ESA)
(See Note 1 )

STATE OF CALIFORNIA
DEPARTMENT OF TRANSPORTATION

# TEMPORARY WATER POLLUTION CONTROL DETAILS [TEMPORARY FENCE (TYPE ESA)]

NO SCALE

NSP T65 DATED APRIL 3, 2009 SUPPLEMENTS
THE STANDARD PLANS BOOK DATED MAY 2006.

**NEW STANDARD PLAN NSP T65**

**2006 NEW STANDARD PLAN NSP T65**

P:\proj2\02\0E840_plans\pse\20e840va008.dgn

USERNAME => s115152
DGN FILE => 20e840va008.dgn

DATE PLOTTED => 18-JUL-2012
TIME PLOTTED => 10:59

1-7-09

| DIST | COUNTY | ROUTE | POST MILES TOTAL PROJECT | SHEET NO. | TOTAL SHEETS |
|---|---|---|---|---|---|
| 02 | Sis | 3 | R47.7/R48.5 | 29 | 37 |

REGISTERED ELECTRICAL ENGINEER

October 5, 2007
PLANS APPROVAL DATE

REGISTERED PROFESSIONAL ENGINEER Jeffery G. McRae No. E14512 Exp. 6-30-08 ELECTRICAL STATE OF CALIFORNIA

*The State of California or its officers or agents shall not be responsible for the accuracy or completeness of electronic copies of this plan sheet.*

*To accompany plans dated* 07-05-12

## ELECTROLIERS

| STANDARD TYPES |
|---|
| 15, 15D |
| 15 STRUCTURE |
| 21, 21D STRUCTURE |
| 30 |
| 31 |
| 32 |
| 35 |
| 36-20A |

High mast light pole

Double Arm lighting standard

Existing electrolier

Electrolier foundation (Future installation)

### NOTES:

1. Luminaires shall be 310 W HPS when installed on Type 21, 21D, 30, 31, 32, 35 and 36-20A Standards, unless otherwise specified. Luminaires shall be 200 W HPS when installed on other type standards or poles, unless otherwise specified.
2. Luminaires shall be the cutoff type, ANSI Type Ⅲ medium cutoff lighting distribution, unless otherwise specified.
3. Variations noted adjacent to symbol on project plans.

Electrolier (see project notes or project plans)

Luminaire on wood pole

## STANDARD NOTES:

- AB Abandon. If applied to conduit, remove conductors.
- BC Install pull box in existing conduit run.
- BP Pedestrian barricade, type as indicated on plan.
- CB Install conduit into existing pull box.
- CC Connect new and existing conduit. Remove existing conductors and install conductors as indicated.
- CF Conduit to remain for future use. Remove conductors. Install pull wire or rope.
- DH Detector handhole.
- FA Foundation to be abandoned.
- IS Install sign on signal mast arm.
- NS No slip base on standard.
- PEC Photoelectric control.
- PEU Photoelectric unit.
- RC Equipment or material to be removed and become the property of the Contractor.
- RE Remove electrolier, fuses and ballast. Tape ends of conductors.
- RL Relocate equipment.
- RR Remove and reuse equipment.
- RS Remove and salvage equipment.
- SC Splice new to existing conductors.
- SD Service disconnect.
- SF Standard to remain for future use. Remove luminaire, pole conductors, fuses and ballast.
- TSP Telephone service point.

## ABBREVIATIONS AND EQUIPMENT DESIGNATIONS

| PROPOSED | EXISTING | |
|---|---|---|
| BBS | bbs | Battery backup system |
| BC | bc | Bolt circle |
| C | C | Conduit |
| CCTV | cctv | Closed circuit television |
| CKT | ckt | Circuit |
| CMS | cms | Changeable message sign |
| DLC | dlc | Loop detector lead-in cable |
| EMS | ems | Extinguishable message sign |
| EVC | evc | Emergency vehicle cable |
| EVD | evd | Emergency vehicle detector |
| FB | fb | Flashing beacon |
| FBCA | fbca | Flashing beacon control assembly |
| FBS | fbs | Flashing beacon with slip base |
| FO | fo | Fiber optic |
| G | G | Ground (Equipment Grounding Conductor) |
| GFCI | GFCI | Ground fault circuit interrupt |
| HAR | har | Highway advisory radio |
| HEX | hex | Hexagonal |
| HPS | hps | High pressure sodium |
| IISNS | iisns | Internally illuminated street name sign |
| ISL | isl | Induction sign lighting |
| LED | led | Light emitting diode |
| LMA | lma | Luminaire mast arm |
| LPS | lps | Low pressure sodium |
| LTG | ltg | Lighting |
| LUM | lum | Luminaire |
| MAT | mat | Mast arm mounting vehicle signal faces, top attachment |
| MAS | mas | Mast arm mounting vehicle signal faces, side attachment |
| MAS-4A | mas-4A | Mast arm mounting vehicle signal faces, side attachment - 4 signal section |
| MAS-4B | mas-4B | |
| MAS-4C | mas-4C | |
| MAS-5A | mas-5A | Mast arm mounting vehicle signal faces, side attachment - 5 signal section |
| MAS-5B | mas-5B | |
| MC | mc | Mercury contactor |
| M/M | m/m | Multiple to multiple transformer |
| MT | mt | Conduit with pull wire or rope only |
| MTG | mtg | Mounting |
| | mv | Mercury vapor lighting fixture |
| N | N | Neutral (Grounded Conductor) |
| NC | NC | Normally closed |
| NO | NO | Normally open |
| PB | pb | Pull box |
| PEC | pec | Photoelectric control (Type Ⅰ, Ⅱ, Ⅲ, Ⅳ or Ⅴ as shown) |
| PED | ped | Pedestrian |
| PEU | peu | Photoelectric unit |
| PPB | ppb | Pedestrian push button |
| RL | | Relocated equipment |
| RM | rm | Ramp metering |
| SB | sb | Slip base |
| SIC | sic | Signal interconnect cable |
| SIG | sig | Signal |
| SMA | sma | Signal mast arm |
| SNS | sns | Street name sign |
| SP | sp | Service point |
| TDC | tdc | Telephone demarcation cabinet |
| TMS | tms | Traffic monitoring station |
| TOS | tos | Traffic Operations System |
| VEH | veh | Vehicle |
| XFMR | xfmr | Transformer |
| COMM | comm | Communication |
| RWIS | rwis | Roadway weather information system |

## SOFFIT AND WALL MOUNTED LUMINAIRES

Pendant, 70 W HPS unless otherwise specified.

Flush, 70 W HPS unless otherwise specified.

Wall surface, 70 W HPS unless otherwise specified.

Existing soffit or wall luminaire to remain unmodified.

Existing soffit or wall luminaire to be modified as specified.

### NOTE:

Arrow indicates "street side" of luminaire.

STATE OF CALIFORNIA
DEPARTMENT OF TRANSPORTATION

# ELECTRICAL SYSTEMS (SYMBOLS AND ABBREVIATIONS)

NO SCALE

RSP ES-1A DATED OCTOBER 5, 2007 SUPERSEDES STANDARD PLAN ES-1A DATED MAY 1, 2006 - PAGE 400 OF THE STANDARD PLANS BOOK DATED MAY 2006.

**REVISED STANDARD PLAN RSP ES-1A**

**2006 REVISED STANDARD PLAN RSP ES-1A**

P:\proj2\02\0E840_plans\pse\20e840va009.dgn

USERNAME => s115152
DGN FILE => 20e840va009.dgn

DATE PLOTTED => 18-JUL-2012
TIME PLOTTED => 10:59

7-10-07

| DIST | COUNTY | ROUTE | POST MILES TOTAL PROJECT | SHEET NO. | TOTAL SHEETS |
|---|---|---|---|---|---|
| 02 | Sis | 3 | R47.7/R48.5 | 30 | 37 |

REGISTERED ELECTRICAL ENGINEER

October 5, 2007
PLANS APPROVAL DATE

REGISTERED PROFESSIONAL ENGINEER Jeffery G. McRae No. E14512 Exp. 6-30-08 ELECTRICAL STATE OF CALIFORNIA

*The State of California or its officers or agents shall not be responsible for the accuracy or completeness of electronic copies of this plan sheet.*

*To accompany plans dated* 07-05-12

## CONDUIT

| PROPOSED | EXISTING | |
|---|---|---|
| | | Lighting Conduit, unless otherwise indicated or noted |
| | | Traffic signal conduit |
| C | c | Communication conduit |
| T | t | Telephone conduit |
| F | f | Fire alarm conduit |
| FO | fo | Fiber optic conduit |
| | | Conduit termination (RSP ES-9A C) |
| R | r | Conduit riser in/on structure or service pole |

## SERVICE EQUIPMENT

| PROPOSED | EXISTING | |
|---|---|---|
| OH | oh | Overhead lines |
| U | U | Wood pole "U" indicates utility owned |
| | | Pole guy with anchor |
| | | Utility transformer - ground mounted |
| III | | Service equipment enclosure type |
| | | Service equipment enclosure door indicates front of enclosure |
| T | t | Telephone demarcation cabinet |

## POLE-MOUNTED SERVICE DESIGNATION

Type of installation

TYPE H SERVICE - 28'-10" ← Pole height above grade

## ILLUMINATED OVERHEAD SIGN

| PROPOSED | EXISTING | |
|---|---|---|
| | | Overhead sign - Single post |
| | | Overhead sign - Two post |
| | | Overhead sign - Mounted on structure |
| | | Overhead sign with electrolier |

## SIGNAL EQUIPMENT

| PROPOSED | EXISTING | |
|---|---|---|
| | | Pedestrian signal face |
| | | Pedestrian push button post |
| | | Pedestrian barricade |
| | | Vehicle signal face (with backplate, 3-Section: red, yellow and green) |
| | | Vehicle signal face with angle visors |
| PV | PV | Modifications of basic symbols: "L" indicates all non-arrow sections louvered "LG" indicates louvered green section only "PV" indicates 12" programmed visibility sections "8" indicates all 8" sections (only when specified) |
| | | Type 15TS and Vehicle signal face |
| | | Vehicle signal face with red, yellow and green left arrow sections |
| | | Vehicle signal face with red and yellow sections and up green arrow |
| | | Vehicle signal face (5 Section) with red, yellow and green sections and yellow and green right arrows |
| | | Type 1 Standard and attached vehicle signal faces |
| | | Standard with signal mast arm only and attached vehicle signal faces and internally illuminated street name sign |
| | | Type 33 Standard, Left-turn vehicle signal face and sign |
| | | Standard with luminaire and signal mast arms and attached vehicle signal faces |
| | | Cantilever flashing beacon Type 9 Frame, with a sign unless otherwise specified or indicated |
| | | Type 15-FBS Standard with two vehicle signal face sections with lens, backplate and visor with a sign |
| R | Y | Flashing beacon. One vehicle signal face section with lens, backplate and visor. "R" indicates red indication, "Y" indicates yellow indication |
| | | Controller assembly. Door indicates front of cabinet |

## SIGNAL EQUIPMENT Cont

| PROPOSED | EXISTING | |
|---|---|---|
| | | Guard post |
| | | Type 1 Standard with "Meter On" sign |
| | | Emergency Vehicle detector |

## NOTES:

1. All signal sections shall be 12" unless shown otherwise.
2. Signal heads shall be provided with backplates unless shown otherwise.
3. Signal indication shall be LED.

STATE OF CALIFORNIA
DEPARTMENT OF TRANSPORTATION

# ELECTRICAL SYSTEMS (SYMBOLS AND ABBREVIATIONS)

NO SCALE

RSP ES-1B DATED OCTOBER 5, 2007 SUPERCEDES STANDARD PLAN ES-1B DATED MAY 1, 2006 - PAGE 401 OF THE STANDARD PLANS BOOK DATED MAY 2006.

**REVISED STANDARD PLAN RSP ES-1B**

**2006 REVISED STANDARD PLAN RSP ES-1B**

| DIST | COUNTY | ROUTE | POST MILES TOTAL PROJECT | SHEET NO. | TOTAL SHEETS |
|---|---|---|---|---|---|
| 02 | Sis | 3 | R47.7/R48.5 | 31 | 37 |

REGISTERED ELECTRICAL ENGINEER

October 5, 2007
PLANS APPROVAL DATE

REGISTERED PROFESSIONAL ENGINEER Jeffery G. McRae No. E14512 Exp. 6-30-08 ELECTRICAL STATE OF CALIFORNIA

*The State of California or its officers or agents shall not be responsible for the accuracy or completeness of electronic copies of this plan sheet.*

*To accompany plans dated* 07-05-12

# EQUIPMENT IDENTIFICATION

## ILLUMINATED SIGN IDENTIFICATION NUMBER:

Sign No. 12345

10 ISL SCI 1.0

- Sign number - Place on post or structure
- Transformer rating (kVA)
- Lighting control type
- Number and type of fixtures

Do NOT place on standard or structure

## ELECTROLIER OR EQUIPMENT IDENTIFICATION NUMBER:

12345 - 15'-0"

- Mast arm length, if shown. Do not place on standard or structure.
- Equipment number - Place on standard or structure. Existing equipment numbers are shown in parenthesis

## CONDUIT AND CONDUCTOR IDENTIFICATION:

1½"C, 2#10, 15#14, 2 DLC

- Number and size of conductors and cables
- Size of conduit in inches

| | |
|---|---|
| Ø1, Ø2, Ø2P, etc. | Traffic phase identification for signal faces, detectors and phase diagrams |
| 1 2 3 | Project note numbers |
| A B C | Equipment description, installation or item numbers |
| 1 2 3 | Conduit run numbers |

## SIGNAL AND LIGHTING STANDARD (TYPICAL DESIGNATION):

19A - 3 - 100

- Wind velocity = 100 mph
- Case 3 arm loading
- Standard type
- Standard Plan sheet number
- Detail number or letter

## MISCELLANEOUS EQUIPMENT

| PROPOSED | EXISTING | |
|---|---|---|
| CMS | cms | Changeable message sign |
| | | Closed circuit television camera |
| | | Highway advisory radio pole and antenna |
| EMS | ems | Extinguishable message sign |
| M V | m v | Detection device<br>M = Microwave sensor<br>V = Video image sensor |

# WIRING DIAGRAM LEGEND

| | |
|---|---|
| P | Pole |
| CB | Circuit breaker |
| A | Ampere |
| V | Volt |
| M | Metered |
| UM | Unmetered |
| NB | Neutral bus |
| GB | Ground bus |
| G | Equipment grounding conductor |
| N | Grounded conductor (Neutral) |

- External conductor
- Conductor or bus
- Tie point
- Contactor coil
- Contactor, Contact NO
- Terminal blocks
- Contactor, Contact NC
- Enclosure bond
- Grounding electrode
- Circuit breaker
- Receptacle

# PULL BOXES

| PROPOSED | EXISTING | |
|---|---|---|
| | | Pull box-No. 5 unless otherwise indicated or noted. |
| 3 | 9A(21) | Pull box-Additional designations or descriptions |

3 = No. 3½ pull box
5 = No. 5 pull box
6 = No. 6 pull box
7 = No. 7 (Ceiling pull box)
8 = No. 8 (Pendant soffit pull box)
9 = No. 9 pull box
9A = No. 9A pull box

(C) = Communications pull box
(E) = Pull box with extension
(S) = Sprinkler control pull box
(21) = Anchor bolts and conduit for future installation of Type 21 Standard
(T) = Traffic pull box

# VEHICLE DETECTORS

5 J 9 U

- Vehicle detector designation
- U = Upper
  L = Lower
- Slot number in input file
- Input file (I or J)
- Phase

| PROPOSED | EXISTING | |
|---|---|---|
| | | Type A detector loop. Outline of sawcut shown. |
| | | Type B detector loop. Outline of sawcut shown. |
| | | Type C detector loop. Outline of sawcut shown. |
| | | Type D detector loop. Outline of sawcut shown. |
| | | Type E detector loop. Outline of sawcut shown. |
| | | Type Q detector loop. Outline of sawcut shown. |
| | | Magnetic detector |
| DH | dh | Detector handhole |
| | | Microwave or video detection zone |

STATE OF CALIFORNIA
DEPARTMENT OF TRANSPORTATION

# ELECTRICAL SYSTEMS (SYMBOLS AND ABBREVIATIONS)

NO SCALE

RSP ES-1C DATED OCTOBER 5, 2007 SUPERCEDES STANDARD PLAN ES-1C DATED MAY 1, 2006 - PAGE 402 OF THE STANDARD PLANS BOOK DATED MAY 2006.

**REVISED STANDARD PLAN RSP ES-1C**

**2006 REVISED STANDARD PLAN RSP ES-1C**

P:\proj2\02\0E840_plans\pse\20e840va011.dgn

USERNAME => s115152
DGN FILE => 20e840va011.dgn

DATE PLOTTED => 18-JUL-2012
TIME PLOTTED => 10:59

7-10-07

| DIST | COUNTY | ROUTE | POST MILES TOTAL PROJECT | SHEET NO. | TOTAL SHEETS |
|---|---|---|---|---|---|
| 02 | Sis | 3 | R47.7/R48.5 | 32 | 37 |

REGISTERED ELECTRICAL ENGINEER

October 5, 2007
PLANS APPROVAL DATE

REGISTERED PROFESSIONAL ENGINEER Jeffery G. McRae No. E14512 Exp. 6-30-08 ELECTRICAL STATE OF CALIFORNIA

*The State of California or its officers or agents shall not be responsible for the accuracy or completeness of electronic copies of this plan sheet.*

*To accompany plans dated* 07-05-12

2006 REVISED STANDARD PLAN RSP ES-2C

## NOTES-TYPE III SERVICE EQUIPMENT ENCLOSURES:

1. Service equipment enclosure and metering equipment shall meet the requirements of the service utility. The meter area shall have a sealable, lockable, weathertight cover that can be removed without the use of tools.

2. Service equipment enclosures shall be factory wired and conform to NEMA standards.

3. Dimensions of service equipment enclosures shall meet the requirements of the service utility.

4. The dead front panels on Type III service equipment enclosures shall have a continuous stainless steel or aluminum piano hinge. The panel in front of the breakers shall be secured with a latch or captive screws. No live parts shall be mounted on the dead front panel.

5. The exterior door shall have provisions for padlocking. The padlock hole shall be a minimum diameter of 7/16".

6. Enclosures housing transformers of more than one kVA shall have effective screened ventilation louver of not less than 50 square inches. Screen shall be stainless steel No. 304, with a No. 10 size mesh. Framed screen shall be secured with at least four bolts.

7. Fasteners on the exterior of the enclosure shall be vandal-resistant and shall not be removable from the exterior. Exterior screws, nuts, bolts and washers shall be stainless steel.

8. Landing lugs for incoming service conductors shall be compatible with either copper or aluminum conductors sized to suit the conductors shown on the plan. Landing lugs shall be copper or tin-plated aluminum. Neutral bus shall be rated for 125 A and be suitable for copper or aluminum conductors unless otherwise specified. The terminal shall include but not be limited to:

   a) Incoming terminals (landing lugs)
   b) Neutral lugs
   c) Solid neutral terminal strip

9. At least 6 standard single pole circuit breaker spaces, 3/4" nominal, shall be provided for branch circuits. Circuit breaker interiors shall be copper. Interiors of enclosure shall accept plug-in or cable-in/cable-out circuit breakers.

10. Control wiring shall be 600 V, 14 stranded machine tool wire. Where subject to flexing, 19 strand wire shall be used.

11. Main bus shall be rated for 125 A and shall be tin-plated copper.

12. A plastic laminated wiring diagram shall be provided with brass mounting eyelets and attached to the inside of the enclosure and the wiring diagram shall be affixed to the interior with a UL or ETL approved method.

13. An engraved phenolic nameplate on the dead front panel indicating the function of each circuit or device shall be installed with stainless steel rivets or stainless steel screws:

    a) Adjacent to the breaker or device with character size a minimum of 1/8".

    b) At the top of the exterior door panel indicating State system number, voltage level and number of phases with character size a minimum of 3/16".

14. The plan shows the approximate location of devices within the enclosure. Components may be rearranged, however, the "working" clearances within the service equipment enclosure shall be maintained.

15. In unpaved areas a raised portland cement concrete pad 2'-0" x 4" x width of foundation shall be constructed in front of new service equipment enclosure installation. Pad shall be set to elevation of foundation.

16. Foundation shall extend 2" minimum beyond edge of service equipment enclosure.

17. Internal bus, where shown, is typical only. Alternative design of proposed service equipment enclosure shall be submitted to the Engineer for approval.

18. Plug-in circuit breakers may be mounted in the vertical or horizontal position. Cable-in/cable-out circuit breakers shall be mounted in the vertical position.

19. Type III-AF and Type III-BF service equipment enclosures shall have the meter viewing windows located on the front side of the service equipment enclosures.

20. Type III-AR and Type III-BR service equipment enclosures shall be similarly constructed as Type III-AF and Type III-BF respectively, except the meter viewing windows shall be located on the back side of the service equipment enclosures.

21. Minimum clearance shall be required for front and back of service equipment enclosure per National Electrical Code, Article 110.26, "Spaces About Electric Equipment (600 Volts, Nominal, or Less)."

STATE OF CALIFORNIA
DEPARTMENT OF TRANSPORTATION

# ELECTRICAL SYSTEMS (SERVICE EQUIPMENT NOTES TYPE III SERIES)

NO SCALE

RSP ES-2C DATED OCTOBER 5, 2007 SUPERCEDES STANDARD PLAN ES-2C DATED MAY 1, 2006 - PAGE 405 OF THE STANDARD PLANS BOOK DATED MAY 2006.

**REVISED STANDARD PLAN RSP ES-2C**

| DIST | COUNTY | ROUTE | POST MILES TOTAL PROJECT | SHEET NO. | TOTAL SHEETS |
|---|---|---|---|---|---|
| 02 | Sis | 3 | R47.7/R48.5 | 33 | 37 |

REGISTERED ELECTRICAL ENGINEER

October 5, 2007
PLANS APPROVAL DATE

REGISTERED PROFESSIONAL ENGINEER Jeffery G. McRae No. E14512 Exp. 6-30-08 ELECTRICAL STATE OF CALIFORNIA

*The State of California or its officers or agents shall not be responsible for the accuracy or completeness of electronic copies of this plan sheet.*

To accompany plans dated 07-05-12

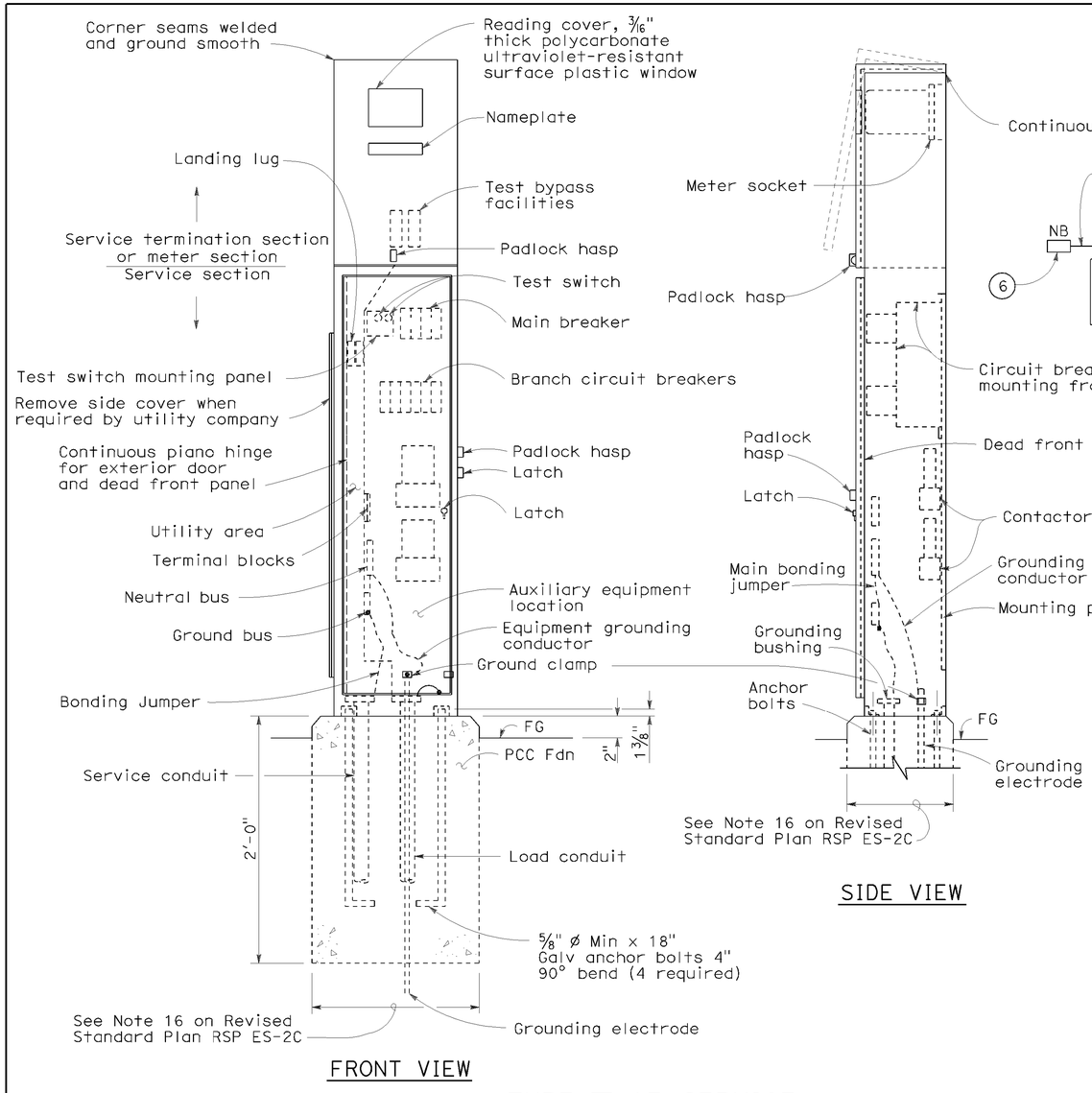


## TYPE III-AF SERVICE EQUIPMENT ENCLOSURE (TYPICAL)

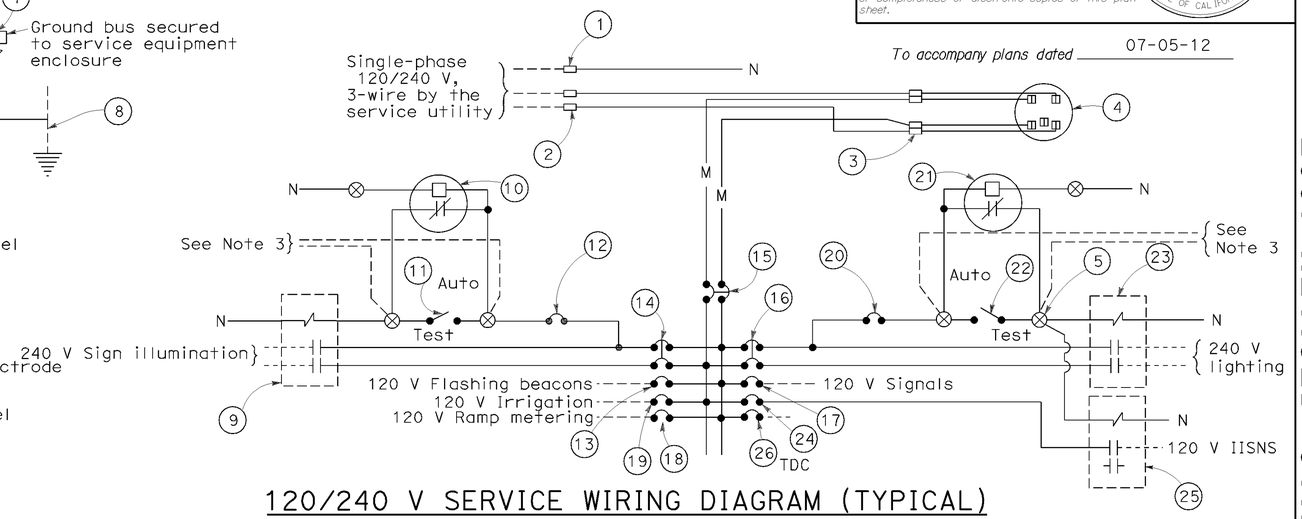


## 120/240 V SERVICE WIRING DIAGRAM (TYPICAL)

TYPE III-A SERVICE (120/240 V) EQUIPMENT LEGEND

| ITEM No. | COMPONENT | NAME PLATE DESCRIPTION | ITEM No. | COMPONENT | NAME PLATE DESCRIPTION |
|---|---|---|---|---|---|
| 1 | Neutral lug | | 14 | 30 A, 240 V, 2P, CB | Sign Illumination |
| 2 | Landing lug (Note 6) | | 15 | 100 A, 240 V, 2P, CB | Main Breaker |
| 3 | Test bypass facility | | 16 | 30 A, 240 V, 2P, CB | Lighting |
| 4 | Meter socket and support | | 17 | 50 A, 120 V, 1P, CB | Signals |
| 5 | Terminal blocks | | 18 | 30 A, 120 V, 1P, CB | Ramp Metering |
| 6 | Neutral bus | | 19 | 20 A, 120 V, 1P, CB | Irrigation |
| 7 | Ground bus | | 20 | 15 A, 120 V, 1P, CB | Lighting Control |
| 8 | Grounding electrode | | 21 | Photoelectric unit (Note 7) | |
| 9 | 30 A, 2PNO Contactor | Sign Illumination | 22 | 15 A, 1P, Test switch | Lighting Test Switch |
| 10 | Photoelectric unit (Note 7) | | 23 | 60 A, 2PNO Contactor | Lighting |
| 11 | 15 A, 1P, Test switch | Sign Illumination Test Switch | 24 | 15 A, 120 V, 1P, CB | IISNS |
| 12 | 15 A, 120 V, 1P, CB | Sign Illumination Control | 25 | 30 A, 2PNO Contactor | IISNS |
| 13 | 15 A, 120 V, 1P, CB | Flashing Beacon | 26 | 20 A, 120 V, 1P, CB | Telephone Demarcation Cabinet |

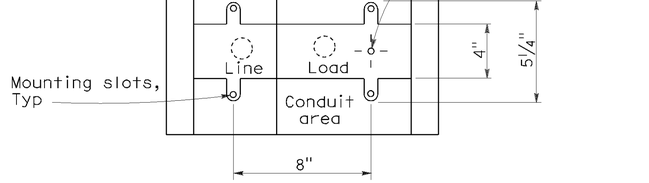


## BASE FOR TYPE III-A SERVICE EQUIPMENT ENCLOSURE

NOTES: (FOR SERVICE EQUIPMENT ENCLOSURE)

1. Voltage ratings of service equipment shall conform to the service voltages indicated on the plans.
2. Unless otherwise indicated on the plans, service equipment items shall be provided for each service equipment enclosure as shown.
3. Connect to remote test switch mounted on lighting standards, sign post or structure when required.
4. Items No. 1 and 6 shall be isolated from the service equipment enclosure.
5. Meter sockets shall be 5 clip type.
6. The landing lug shall be suitable for multiple conductors.
7. Type V photoelectric control shall be used unless otherwise indicated on the plans.

STATE OF CALIFORNIA
DEPARTMENT OF TRANSPORTATION

# ELECTRICAL SYSTEMS (SERVICE EQUIPMENT AND TYPICAL WIRING DIAGRAM, TYPE III-A SERIES)

NO SCALE

RSP ES-2D DATED OCTOBER 5, 2007 SUPERCEDES STANDARD PLAN ES-2D DATED MAY 1, 2006 - PAGE 406 OF THE STANDARD PLANS BOOK DATED MAY 2006.

**REVISED STANDARD PLAN RSP ES-2D**

2006 REVISED STANDARD PLAN RSP ES-2D

P:\proj2\02\0E840_plans\pse\20e840va013.dgn

USERNAME => s115152
DGN FILE => 20e840va013.dgn

DATE PLOTTED => 18-JUL-2012
TIME PLOTTED => 10:59

7-10-07

| DIST | COUNTY | ROUTE | POST MILES TOTAL PROJECT | SHEET NO. | TOTAL SHEETS |
|---|---|---|---|---|---|
| 02 | Sis | 3 | R47.7/R48.5 | 34 | 37 |

REGISTERED ELECTRICAL ENGINEER

October 5, 2007
PLANS APPROVAL DATE

REGISTERED PROFESSIONAL ENGINEER Jeffery G. McRae No. E14512 Exp. 6-30-08 ELECTRICAL STATE OF CALIFORNIA

*The State of California or its officers or agents shall not be responsible for the accuracy or completeness of electronic copies of this plan sheet.*

*To accompany plans dated* 07-05-12

# LOOP INSTALLATION PROCEDURE

1. Loops shall be centered in lanes.
2. Saw slots in pavement for loop conductors as shown in details.
3. Distance between side of loop and a lead-in saw cut from adjacent detectors shall be 2'-0" minimum. Distance between lead-in saw cuts shall be 6" minimum.
4. Bottom of saw slot shall be smooth with no sharp edges.
5. Slots shall be washed until clean, blown out and thoroughly dried before installing loop conductors.
6. Adjacent loops on the same sensor unit channel shall be wound in opposite directions.
7. Identify and tag loop circuit pairs in the pull box with loop number, start (S) and finish (F) of conductor. Identify and tag lead-in-cable with sensor number and phase.
8. Install loop conductor in slot using a 3/16" to 1/4" thick wood paddle. Hold loop conductors with wood paddles (at the bottom of the sawed slot) during sealant placement.
9. No more than 2 twisted pairs shall be installed in one sawed slot.
10. Allow additional 5'-0" of slack length of conductor for the lead-in run to pull box.
11. The additional length of each conductor for each loop shall be twisted together into a pair (6 turns per 3'-4" minimum) before being placed in the slot and conduit leading to pull box.
12. Test each loop circuit for continuity, circuit resistance and insulation resistance at the pull box before filling slots.
13. Fill slots as shown in details.
14. Splice loop conductors to lead-in-cable. Splices shall be soldered.
15. End of lead-in-cable and Type 2 loop conductor shall be waterproofed prior to installing in conduit to prevent moisture from entering the cable.
16. Lead-in-cable shall not be spliced between the pull box and the controller cabinet terminals.
17. Test each loop circuit for continuity, circuit resistance and insulation resistance at the controller cabinet location.
18. Where loop conductors are not to be spliced to a lead-in-cable, the ends of the conductors shall be taped and waterproofed with electrical insulating coating.

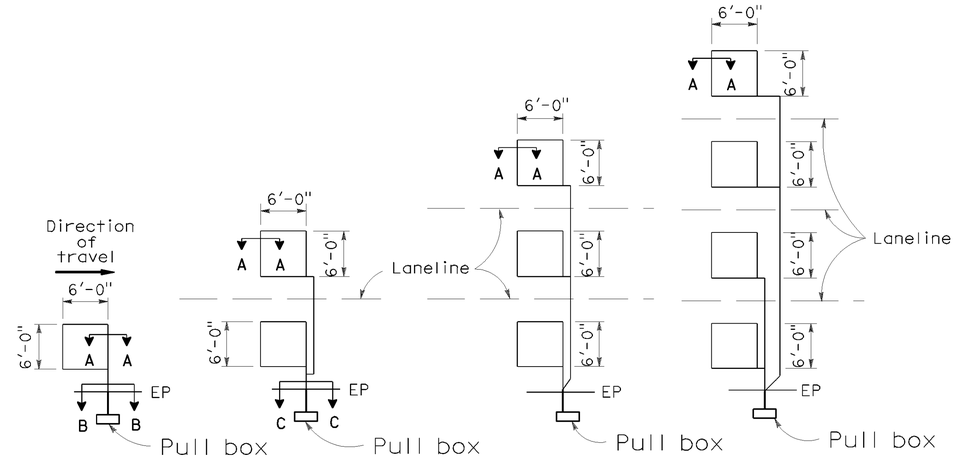


TYPE 1A INSTALLATION | TYPE 2A INSTALLATION | TYPE 3A INSTALLATION | TYPE 4A INSTALLATION

## SAWCUT DETAILS

(Type A loop detector configurations illustrated)

1. 1A thru 4A = 1 Type A loop configuration in each lane.
2. 1B thru 4B = 1 Type B loop configuration in each lane.
3. 1C = 1 Type C loop configuration entering lanes as required.
4. 1D thru 4D = 1 Type D loop configuration in each lane.
5. 1E thru 4E = 1 Type E loop configuration in each lane.
6. 1Q thru 4Q = 1 Type Q loop configuration in each lane. (Use Type A, B, C, D, E or Q loop detector configurations only when specified or shown on plans)

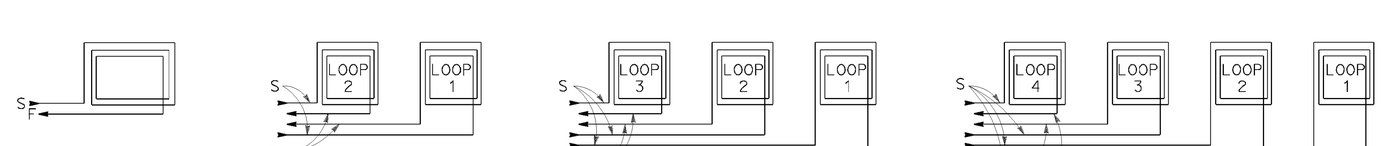


## WINDING DETAILS

See Notes 6 and 7

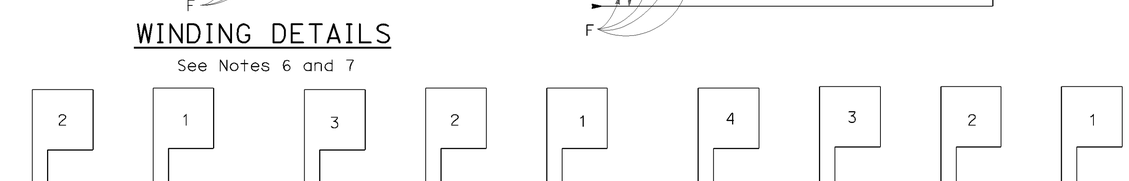


## TYPICAL LOOP CONNECTIONS

(Dashed lines represent the pull box)

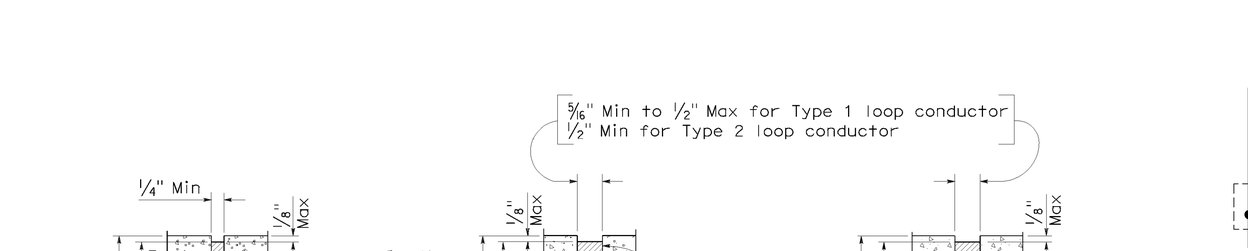


SECTION A-A | SECTION B-B | SECTION C-C

## SLOT DETAILS - TYPE 1 AND TYPE 2 LOOP CONDUCTOR

STATE OF CALIFORNIA
DEPARTMENT OF TRANSPORTATION

# ELECTRICAL SYSTEMS (DETECTORS)

NO SCALE

RSP ES-5A DATED OCTOBER 5, 2007 SUPERCEDES STANDARD PLAN ES-5A DATED MAY 1, 2006 - PAGE 423 OF THE STANDARD PLANS BOOK DATED MAY 2006.

**REVISED STANDARD PLAN RSP ES-5A**

**2006 REVISED STANDARD PLAN RSP ES-5A**

P:\proj2\02\0E840_plans\pse\20e840va014.dgn

USERNAME => s115152
DGN FILE => 20e840va014.dgn

DATE PLOTTED => 18-JUL-2012
TIME PLOTTED => 10:59

8-17-07

| DIST | COUNTY | ROUTE | POST MILES TOTAL PROJECT | SHEET NO. | TOTAL SHEETS |
|---|---|---|---|---|---|
| 02 | Sis | 3 | R47.7/R48.5 | 35 | 37 |

REGISTERED ELECTRICAL ENGINEER

January 20, 2012
PLANS APPROVAL DATE

REGISTERED PROFESSIONAL ENGINEER Jeffery G. McRae No. E14512 Exp. 6-30-12 ELECTRICAL STATE OF CALIFORNIA

*The State of California or its officers or agents shall not be responsible for the accuracy or completeness of electronic copies of this plan sheet.*

*To accompany plans dated* 07-05-12

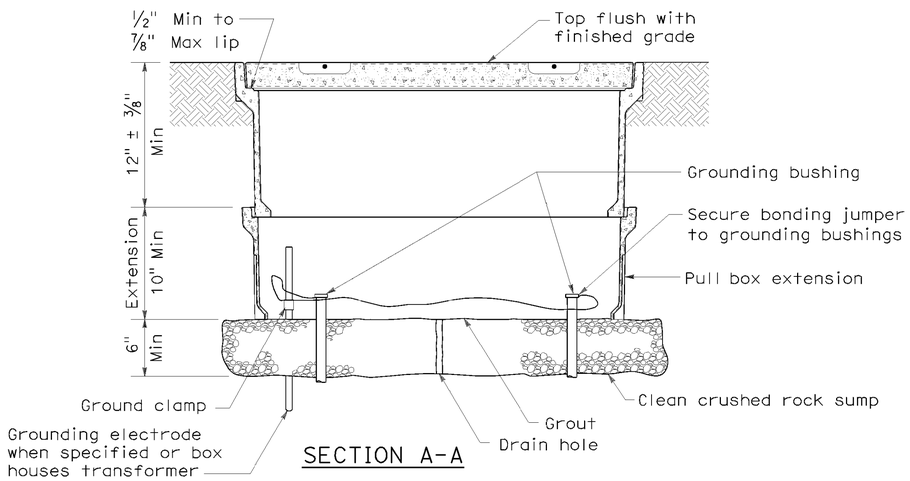


SECTION A-A

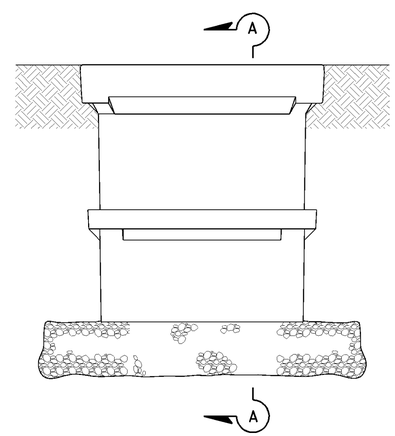


SIDE VIEW

## INSTALLATION DETAILS

### DETAIL A

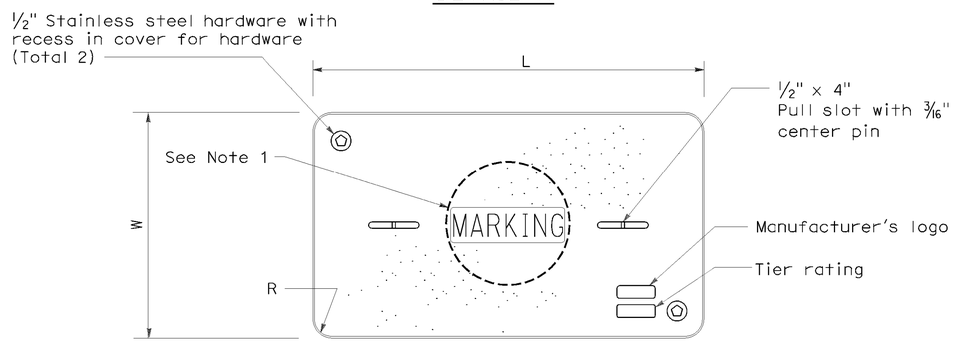


COVER TOP VIEW

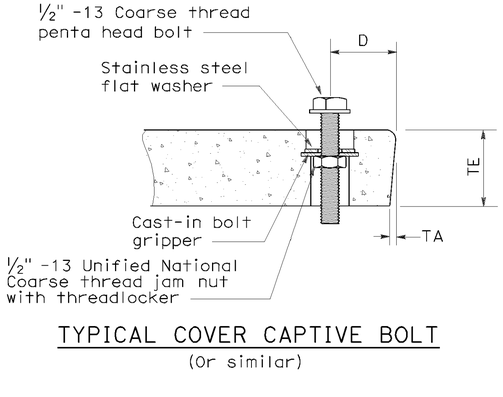


TYPICAL COVER CAPTIVE BOLT

(Or similar)

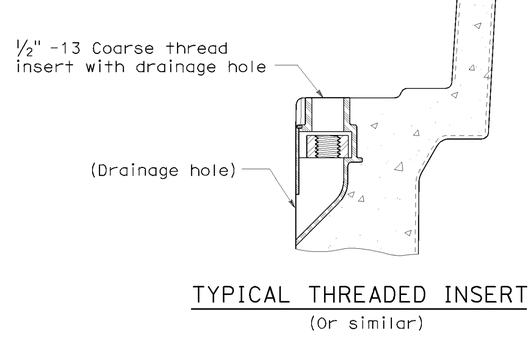


TYPICAL THREADED INSERT

(Or similar)

| DIMENSION TABLE | | | | | | | | | | |
|---|---|---|---|---|---|---|---|---|---|---|
| PULL BOX | PULL BOX | | | COVER | | | | | | |
| | Minimum Depth Box | Minimum Depth Extension | Maximum Weight | L | W | R | TE | TA | D | Maximum Weight |
| No. 3½ | 12" | N/A | 40 lb | 1' - 3⅜" | 10⅛" | 1⅜" | 2" | ⅛" | 1¾" | 30 lb |
| No. 5 | 12" | 10" | 55 lb | 1' - 11¼" | 1' - 1¾" | 1⅜" | 2" | ⅛" | 1¾" | 60 lb |
| No. 6 | 12" | 10" | 70 lb | 2' - 6½" | 1' - 5½" | 1⅜" | 2" | ⅛" | 2" | 85 lb |

## NOTES ON PULL BOXES:

1. Pull box covers must be marked as follows: "SERVICE" Service circuits between service point and service disconnect; "SPRINKLER-CONTROL" sprinkler control circuits, 50 V or less; "CALTRANS" on all pull boxes, except pull boxes marked "SPRINKLER-CONTROL"; and "TELEPHONE" Telephone service;
   - A) No. 3½ pull box.
     - 1) "SIGNAL" - Traffic signal circuits with or without street or sign lighting circuits.
     - 2) "ST LIGHTING" - Street or sign lighting circuits where voltage is under 600 V.
   - B) No. 5, 6, 9 or 9A pull box.
     - 1) "TRAFFIC SIGNAL" - Traffic signal circuits with or without street or sign lighting circuits.
     - 2) "STREET LIGHTING" - Street or sign lighting circuits where voltage is under 600 V.
     - 3) "STREET LIGHTING-HIGH VOLTAGE" - Street or sign lighting circuits where voltage is above 600 V.
     - 4) "IRRIGATION" - Circuits to irrigation controller 120 V or more.
     - 5) "RAMP METER" - Ramp meter circuits.
     - 6) "COUNT STATION" - Count or speed monitor circuits.
     - 7) "COMMUNICATIONS" - Communication circuits.
     - 8) "TOS COMMUNICATIONS" - TOS communication line.
     - 9) "TOS POWER" -TOS power.
     - 10) "TDC POWER" - Telephone demarcation cabinet power.
     - 11) "CCTV" - Closed circuit television circuits.
     - 12) "TMS" - Traffic monitoring station circuits.
     - 13) "CMS" - Changeable message sign circuits.
     - 14) "HAR" - Highway advisory radio circuits.
2. The nominal dimensions of the opening in which the cover sets must be the same as the cover dimensions (L and W) plus ⅛" or greater.
3. Covers and boxes must be interchangeable with California Standard. When interchanged with a standard, the top surfaces must be flush within ⅛". Top outside radius of covers and pull boxes must have a ⅛" radius.
4. Pull box extension may be another pull box as long as the bottom edge of the pull box can fit into the cover opening.

STATE OF CALIFORNIA
DEPARTMENT OF TRANSPORTATION

# ELECTRICAL SYSTEMS (PULL BOX)

NO SCALE

NSP ES-8A DATED JANUARY 20, 2012 SUPPLEMENTS THE STANDARD PLANS BOOK DATED MAY 2006.

**NEW STANDARD PLAN NSP ES-8A**

**2006 NEW STANDARD PLAN NSP ES-8A**

P:\proj2\02\0E840_plans\pse\20e840va015.dgn
USERNAME => s115152
DGN FILE => 20e840va015.dgn
DATE PLOTTED => 18-JUL-2012
TIME PLOTTED => 10:59

| DIST | COUNTY | ROUTE | POST MILES TOTAL PROJECT | SHEET NO. | TOTAL SHEETS |
|---|---|---|---|---|---|
| 02 | Sis | 3 | R47.7/R48.5 | 36 | 37 |

REGISTERED ELECTRICAL ENGINEER

January 20, 2012
PLANS APPROVAL DATE

REGISTERED PROFESSIONAL ENGINEER
Jeffery G. McRae
No. E14512
Exp. 6-30-12
ELECTRICAL
STATE OF CALIFORNIA

*The State of California or its officers or agents shall not be responsible for the accuracy or completeness of electronic copies of this plan sheet.*

*To accompany plans dated* 07-05-12

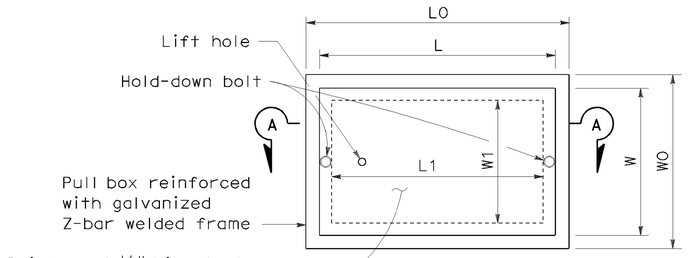


TOP VIEW

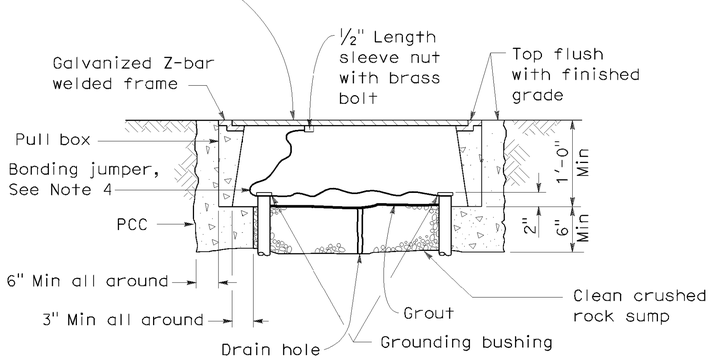


SECTION A-A

## No. 3½(T), No. 5(T) AND No. 6(T) TRAFFIC PULL BOX

## NOTES ON PULL BOXES:

1. Traffic pull box shall be provided with steel cover and special concrete footing. Steel cover shall have embossed non-skid pattern.
2. Steel reinforcing shall be as regularly used in the standard products of the respective manufacturer.
3. Pull box covers must be marked as follows: "SERVICE" Service circuits between service point and service disconnect; "SPRINKLER-CONTROL" Sprinkler control circuits, 50 V or less; "CALTRANS" On all pull boxes, except pull boxes marked "SPRINKLER-CONTROL"; and "TELEPHONE" Telephone service.
   A) No. 3½(T) pull box.
      1) "SIGNAL" - Traffic signal circuits with or without street or sign lighting circuits.
      2) "ST LIGHTING" - Street or sign lighting circuits where voltage is under 600 V.
   B) No. 5(T) or 6(T) pull box.
      1) "TRAFFIC SIGNAL" - Traffic signal circuits with or without street or sign lighting circuits.
      2) "STREET LIGHTING" - Street or sign lighting circuits where voltage is under 600 V.
      3) "STREET LIGHTING-HIGH VOLTAGE" - Street or sign lighting circuits where voltage is above 600 V.
      4) "IRRIGATION" - Circuits to irrigation controller 120 V or more.
      5) "RAMP METER" - Ramp meter circuits.
      6) "COUNT STATION" - Count or speed monitor circuits.
      7) "COMMUNICATION" - Communication circuits.
      8) "TOS COMMUNICATIONS" - TOS communications line.
      9) "TOS POWER" - TOS power.
      10) "TDC POWER" - Telephone demarcation cabinet power.
      11) "CCTV" - Closed circuit television circuits.
      12) "TMS" - Traffic monitoring station circuits.
      13) "CMS" - Changeable message sign circuits.
      14) "HAR" - Highway advisory radio circuits.
4. Bonding jumper for metal covers shall be 3' long, minimum.
5. The nominal dimensions of the opening in which the cover sets must be the same as the cover dimensions except the length and width dimensions shall be ⅛" greater.
6. Covers and boxes must be interchangeable with California standard male and female gages. When interchanged with a standard male or female gage, the top surfaces must be flush within ⅛".

### DIMENSION TABLE

| PULL BOX | BOX | | | | | | COVER | | | | |
|---|---|---|---|---|---|---|---|---|---|---|---|
| | Minimum * Thickness | Minimum Depth Box and Extension | WO | LO | L1 | W1 | L ** | W ** | R | Edge Thickness | Edge Taper |
| No. 3½(T) | 1½" | 1'-0" | 1'-5"± 1" | 1'-8⅞"± | 1'-2½"± | 10⅝"± 1" | 1'-8"± | 1'-1¾"± | 0" | ½" | None |
| No. 5(T) | 1¾" | 1'-0" | 1'-11½"± 1" | 2'-5½"± | 1'-7"± | 1'-1"± 1" | 2'-3"± | 1'-4"± | 0" | ½" | None |
| No. 6(T) | 2" | 1'-0" | 2'-6"± 1" | 2'-11½"± | 1'-11½"± | 1'-5"± 1" | 2'-9"± | 1'-8"± | 0" | ½" | None |

* Excluding conduit web ** Top dimension

STATE OF CALIFORNIA
DEPARTMENT OF TRANSPORTATION

# ELECTRICAL SYSTEMS (TRAFFIC RATED PULL BOX)

NO SCALE

NSP ES-8B DATED JANUARY 20, 2012 SUPPLEMENTS THE STANDARD PLANS BOOK DATED MAY 2006.

**NEW STANDARD PLAN NSP ES-8B**

**2006 NEW STANDARD PLAN NSP ES-8B**

| DIST | COUNTY | ROUTE | POST MILES TOTAL PROJECT | SHEET NO. | TOTAL SHEETS |
|---|---|---|---|---|---|
| 02 | Sis | 3 | R47.7/R48.5 | 37 | 37 |

REGISTERED CIVIL ENGINEER

October 5, 2007
PLANS APPROVAL DATE

REGISTERED PROFESSIONAL ENGINEER Stanley P. Johnson No. C57793 Exp. 3-31-08 CIVIL STATE OF CALIFORNIA

*The State of California or its officers or agents shall not be responsible for the accuracy or completeness of electronic copies of this plan sheet.*

*To accompany plans dated* 07-05-12

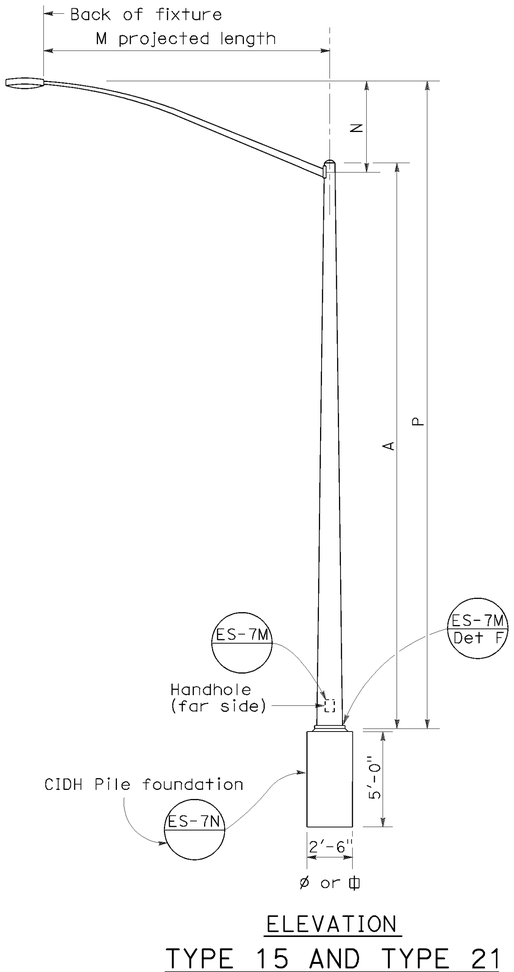


ELEVATION
TYPE 15 AND TYPE 21

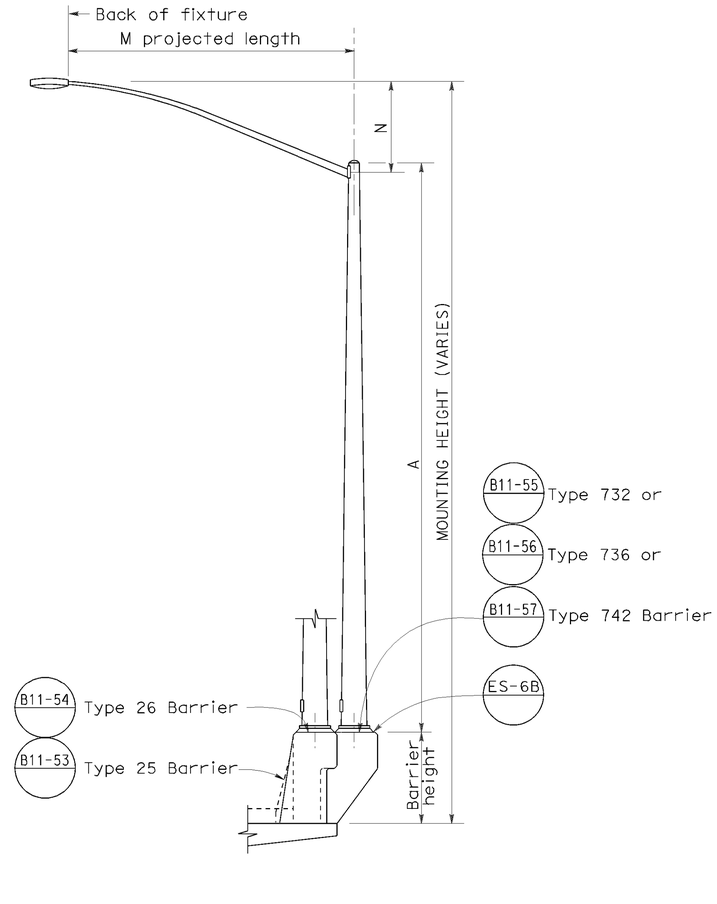


ELEVATION
TYPE 15 AND TYPE 21 BARRIER RAIL MOUNTED

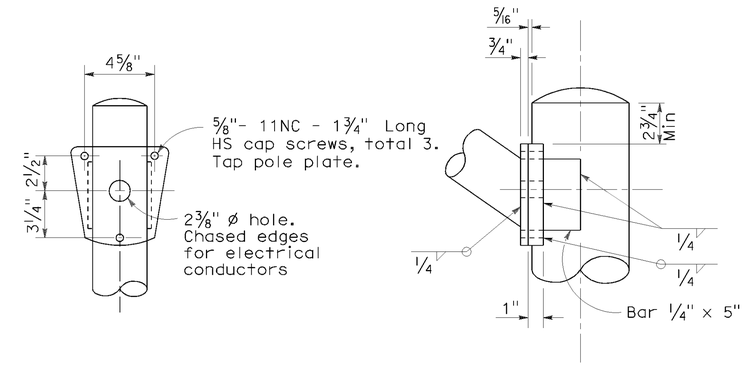


DETAIL R
LUMINAIRE ARM CONNECTION

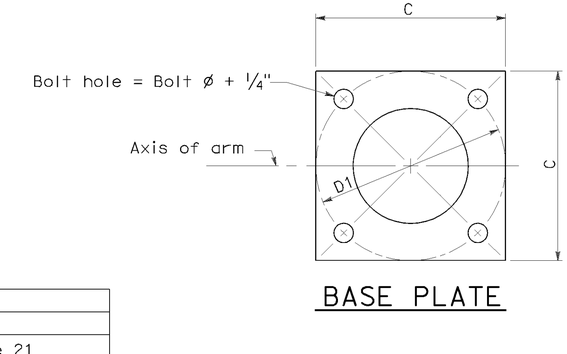


BASE PLATE

| POLE TYPE | POLE DATA | | | | BASE PLATE DATA | | | | LUMINAIRE ARM |
|---|---|---|---|---|---|---|---|---|---|
| | A Height | Min OD Base | Min OD Top | Wall Thickness | C | D1 Bolt Circle | Thick-ness | Anchor Bolts Size | |
| 15 | 30' | 8" | 3 7/8" | 0.1196" | 1'-0" | 1'-0" | 1" | 1" ø x 3'-0" x 4"* | 6' - 15' [12'] |
| 21 | 35' | 8 5/8" | 3 7/8" | 0.1196" | 1'-0" | 1'-0" | 1" | 1 1/4"ø x 3'-0" x 4"* | 6' - 15' [12'] |

* For barrier rail bolts, see Standard Plan ES-6B.

| LUMINAIRE ARM DATA | | | | | |
|---|---|---|---|---|---|
| M Projected Length | N Rise | Min OD At Pole | Nominal Thickness | P Type 15 | P Type 21 |
| 6'-0" | 2'-0"± | 3 1/4" | 0.1196" | 31'-6"± | 36'-6"± |
| 8'-0" | 2'-6"± | 3 1/2" | 0.1196" | 32'-0"± | 37'-0"± |
| 10'-0" | 3'-3"± | 3 7/8" | 0.1196" | 32'-9"± | 37'-9"± |
| 12'-0" | 4'-3"± | 3 7/8" | 0.1196" | 33'-9"± | 38'-9"± |
| 15'-0" | 4'-9"± | 4 1/4" | 0.1196" | 34'-3"± | 39'-3"± |

## NOTES:

1. ☐ Indicates arm length to be used unless otherwise noted on the plans.
2. For Type 15-SB, use Type 15 standard with Type 30 slip base plate details, see Standard Plan ES-6F.
3. For additional notes, see Standard Plan ES-7M and ES-7N.

STATE OF CALIFORNIA
DEPARTMENT OF TRANSPORTATION

# ELECTRICAL SYSTEMS (LIGHTING STANDARD TYPES 15 AND 21)

NO SCALE

RSP ES-6A DATED OCTOBER 5, 2007 SUPERCEDES STANDARD PLAN ES-6A DATED MAY 1, 2006 - PAGE 427 OF THE STANDARD PLANS BOOK DATED MAY 2006.

**REVISED STANDARD PLAN RSP ES-6A**

**2006 REVISED STANDARD PLAN RSP ES-6A**

P:\proj2\02\0E840_plans\pse\20e840va017.dgn

USERNAME => s115152
DGN FILE => 20e840va017.dgn

DATE PLOTTED => 18-JUL-2012
TIME PLOTTED => 11:00

7-10-07