FOR CONTRACT NO.: 02-1E4404

INFORMATION HANDOUT

MATERIALS INFORMATION

BATTERY BACKUP SYSTEM HANDOUTS

USER'S MANUALS FOR RADIO MODEMS

ROUTE: 02-Sha-273-14.9/R15.7

Dist	COUNTY	LOCATION CODE	POST MILES TOTAL PROJECT	SHEET No.	TOTAL SHEETS

REGISTERED ~~CIVIL ENGINEER~~ 12-20-07 DATE

PLANS APPROVAL DATE

Theresa A. Gabriel No. E15129 Exp. 6-30-10 ELECT — REGISTERED PROFESSIONAL ENGINEER — STATE OF CALIFORNIA

THE STATE OF CALIFORNIA OR ITS OFFICERS OR AGENTS SHALL NOT BE RESPONSIBLE FOR THE ACCURACY OR COMPLETENESS OF SCANNED COPIES OF THIS PLAN SHEET.

LEGEND: (THIS SHEET ONLY)

PTS = POWER TRANSFER SWITCH
UPS = UNINTERRUPTIBLE POWER SUPPLY
UPSC = UNINTERRUPTIBLE POWER SUPPLY CONTROLLER
UPSM = UPS MODE
BP = BYPASS
MBPS = MANUAL BYPASS SWITCH
AC+ = UNGROUNDED CONDUCTOR
AC- = GROUNDED CONDUCTOR
C = COMMON
Grn = GREEN
Blk = BLACK
Wht = WHITE
SF = STATE-FURNISHED
Batt = BATTERY
Temp = TEMPERATURE
TB = TERMINAL BOARD
Cntl = CONTROL
Gnd = GROUND

NOTES: (THIS SHEET ONLY)

1. TYPE B REFERS TO THE BBS EQUIPMENT FROM MANUFACTURER B.
2. CASE-1 REFERS TO THE SITUATION WHEN THE ENTIRE BBS EQUIPMENT INCLUDING THE BATTERIES ARE INSTALLED IN THE BBS CABINET.
3. THE LOCATION OF THE 2"C NIPPLE WILL BE DETERMINED BY THE ENGINEER IN THE FIELD.
4. THE CONTRACTOR SHALL FURNISH AND INSTALL A NEMA-1 ENCLOSURE WITH 30 A, 1P, 120/240 VOLTS RATED CIRCUIT BREAKER MANUFACTURED PER UL STANDARD 489.
5. A TEMPERATURE PROBE SHALL BE ATTACHED TO THE BATTERY BY TAPE OR ATTACHED TO THE NEGATIVE TERMINAL OF THE BATTERY.
6. THE ELECTRICAL POWER FOR THE COOLING FAN FOR THE BBS CABINET SHALL BE TAPPED FROM THE BOTTOM OF THE TB IN THE 332 CABINET.
7. THE CONTRACTOR SHALL PROVIDE A 9-WIRE WIRING HARNESS OR BUNDLED 9 MULTICOLOR CONDUCTORS, #18 AWG WIRES FROM THE RELAY ON THE INVERTER/CHARGER UNIT TO THE CONTROLLER. THE ENDS OF THE CONDUCTORS SHALL BE INSULATED WITH TAPE AND A SIX-FOOT COIL ON EACH END.

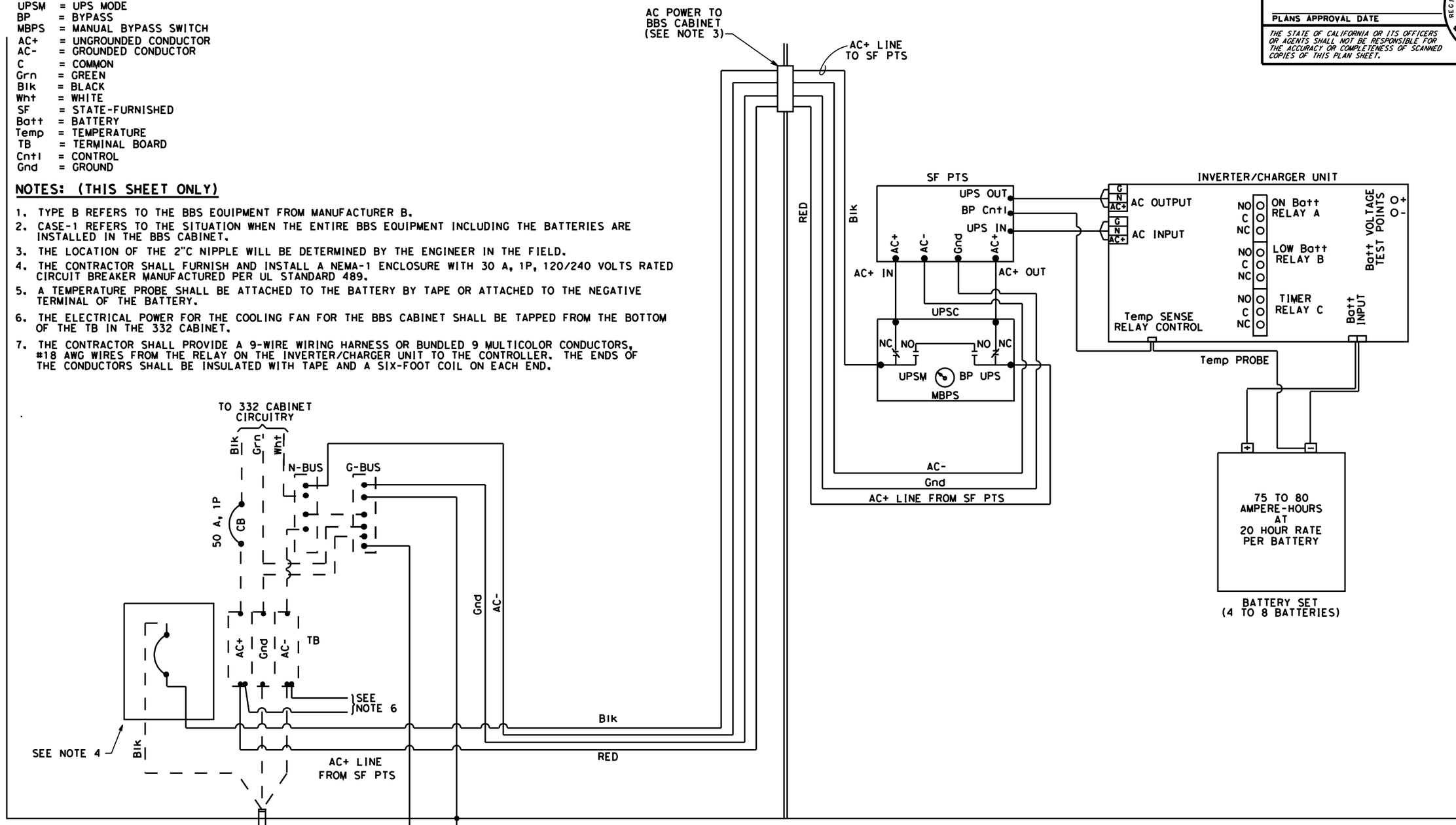

BBS DETAILS

NO SCALE

1 of 3

STATE OF CALIFORNIA - DEPARTMENT OF TRANSPORTATION

FUNCTIONAL SUPERVISOR

CALCULATED-DESIGNED BY | CHECKED BY

REVISED BY | DATE REVISED

LAST REVISION 2-2-09 | DATE PLOTTED => $DATE | TIME PLOTTED => $TIME

Dist	COUNTY	LOCATION CODE	POST MILES TOTAL PROJECT	SHEET No.	TOTAL SHEETS

Theresa Gabriel 12-20-07
REGISTERED CIVIL ENGINEER DATE

PLANS APPROVAL DATE

REGISTERED PROFESSIONAL ENGINEER Theresa A. Gabriel No. E15129 Exp. 6-30-10 ELECT STATE OF CALIFORNIA

THE STATE OF CALIFORNIA OR ITS OFFICERS OR AGENTS SHALL NOT BE RESPONSIBLE FOR THE ACCURACY OR COMPLETENESS OF SCANNED COPIES OF THIS PLAN SHEET.

LEGEND: (THIS SHEET ONLY)

PTS = POWER TRANSFER SWITCH
UPS = UNINTERRUPTIBLE POWER SUPPLY
UPSC = UNINTERRUPTIBLE POWER SUPPLY CONTROLLER
UPSM = UPS MODE
BP = BYPASS
MBPS = MANUAL BYPASS SWITCH
AC+ = UNGROUNDED CONDUCTOR
AC- = GROUNDED CONDUCTOR
C = COMMON
Grn = GREEN
Blk = BLACK
Wht = WHITE
SF = STATE-FURNISHED
TB = TERMINAL BOARD
Cntl = CONTROL
Gnd = GROUND
Temp = TEMPERATURE
Batt = BATTERY

NOTES: (THIS SHEET ONLY)

1. TYPE A REFERS TO THE BBS EQUIPMENT FROM MANUFACTURER A.
2. CASE-1 REFERS TO THE SITUATION WHEN THE ENTIRE BBS EQUIPMENT INCLUDING THE BATTERIES ARE INSTALLED IN THE BBS CABINET.
3. THE LOCATION OF THE 2"C NIPPLE WILL BE DETERMINED BY THE ENGINEER IN THE FIELD.
4. THE CONTRACTOR SHALL FURNISH AND INSTALL A NEMA-1 ENCLOSURE WITH 30 A, 1P, 120/240 VOLTS RATED CIRCUIT BREAKER MANUFACTURED PER UL STANDARD 489.
5. A TEMPERATURE PROBE SHALL BE ATTACHED TO THE BATTERY BY TAPE OR ATTACHED TO THE NEGATIVE TERMINAL OF THE BATTERY.
6. THE ELECTRICAL POWER FOR THE COOLING FAN FOR THE BBS CABINET SHALL BE TAPPED FROM THE BOTTOM OF THE TB IN THE 332 CABINET.
7. THE CONTRACTOR SHALL PROVIDE A 9-WIRE WIRING HARNESS OR BUNDLED 9 MULTICOLOR CONDUCTORS, #18 AWG WIRES FROM THE RELAY ON THE INVERTER/CHARGER UNIT TO THE CONTROLLER. THE ENDS OF THE CONDUCTORS SHALL BE INSULATED WITH TAPE AND A SIX-FOOT COIL ON EACH END.

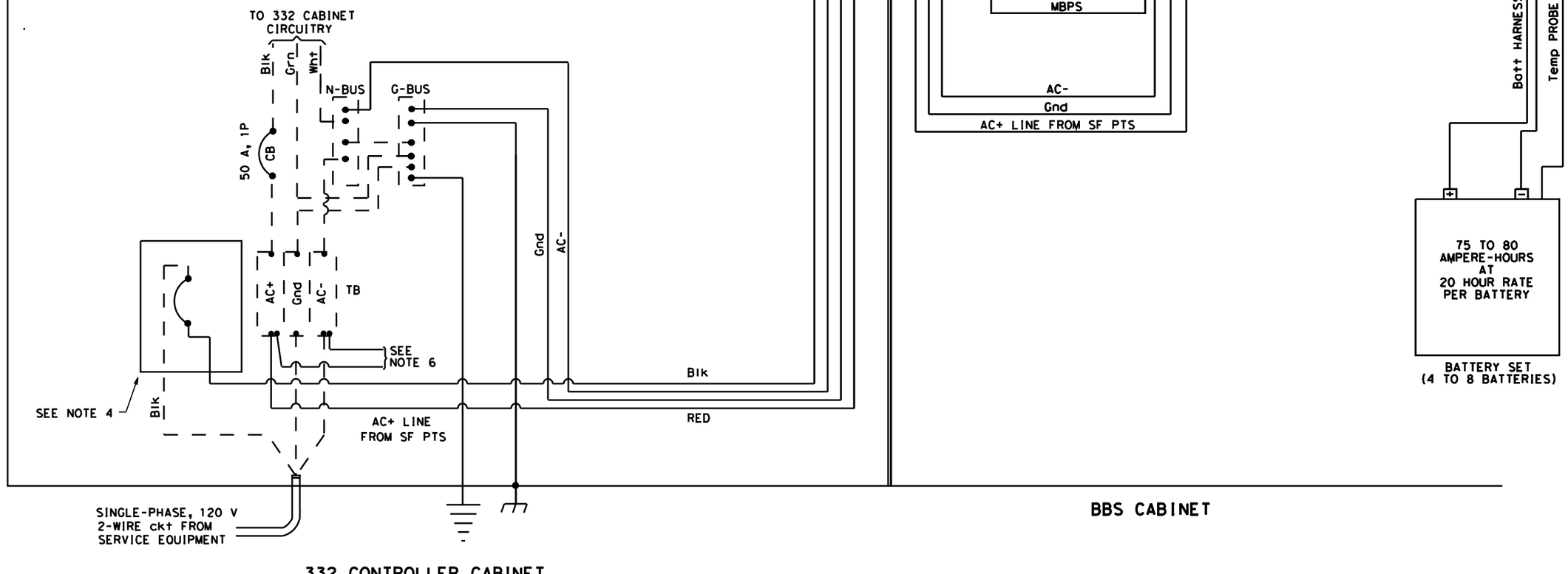

BBS DETAILS

NO SCALE **2 of 3**

REVISED BY | DATE REVISED | CALCULATED-DESIGNED BY | CHECKED BY | FUNCTIONAL SUPERVISOR

STATE OF CALIFORNIA - DEPARTMENT OF TRANSPORTATION

LAST REVISION 04-02-09 | DATE PLOTTED => $DATE | TIME PLOTTED => $TIME

Dist	COUNTY	LOCATION CODE	POST MILES TOTAL PROJECT	SHEET No.	TOTAL SHEETS

Theresa Gabriel 12-20-07
REGISTERED CIVIL ENGINEER DATE

PLANS APPROVAL DATE

REGISTERED PROFESSIONAL ENGINEER Theresa A. Gabriel No. E15129 Exp. 6-30-10 ELECT STATE OF CALIFORNIA

THE STATE OF CALIFORNIA OR ITS OFFICERS OR AGENTS SHALL NOT BE RESPONSIBLE FOR THE ACCURACY OR COMPLETENESS OF SCANNED COPIES OF THIS PLAN SHEET.

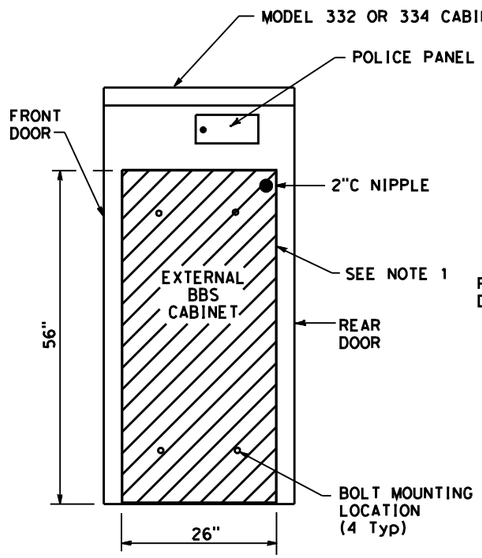

SIDE VIEW

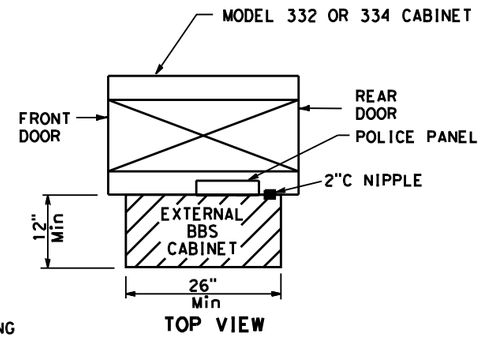

TOP VIEW

EXTERNAL BBS CABINET MOUNTED TO THE MODEL 332 OR 334 CABINET

NOTE: (THIS SHEET ONLY)

1. THE EXTERNAL BBS CABINET SHALL BE MOUNTED TO THE MODEL 332 OR 334 CABINET WITH FOUR 18-8 STAINLESS STEEL HEX HEAD, FULLY-THREADED, ⅜"-16 X 1" BOLTS; TWO WASHERS PER BOLT, DESIGNED FOR ⅜" BOLTS AND ARE 18-8 STAINLESS STEEL, 1" OUTSIDE DIAMETER, ROUND, AND FLAT; AND ONE K-LOCK NUT PER BOLT THAT IS 18-8 STAINLESS STEEL AND A HEX-NUT. THE ENGINEER WILL HAVE TO APPROVE THE BOLT MOUNTING LOCATION PRIOR TO INSTALLATION.
2. THE ANCHOR BOLTS SHALL BE ¾" Dia X 15" WITH A 2"-90° BEND. THE CABINET MANUFACTURER'S SPECIFICATION SHALL DETERMINE THE LOCATION OF THE ANCHOR BOLTS IN THE FOUNDATION. THE ENGINEER WILL HAVE TO APPROVE THE ANCHOR BOLTS AND ITS LOCATION IN THE FOUNDATION PRIOR TO CONSTRUCTION.
3. THE CONTRACTOR SHALL VERIFY THE DIMENSIONS OF THE BBS CABINET PRIOR TO CONSTRUCTING THE FOUNDATION OF THE MODIFIED PORTION OF THE Std MODEL 332 AND 334 CABINET FOUNDATION. THE ENGINEER WILL HAVE TO APPROVE ANY NECESSARY DEVIATIONS PRIOR TO CONSTRUCTION.
4. ALL DIMENSIONS ARE NOMINAL.

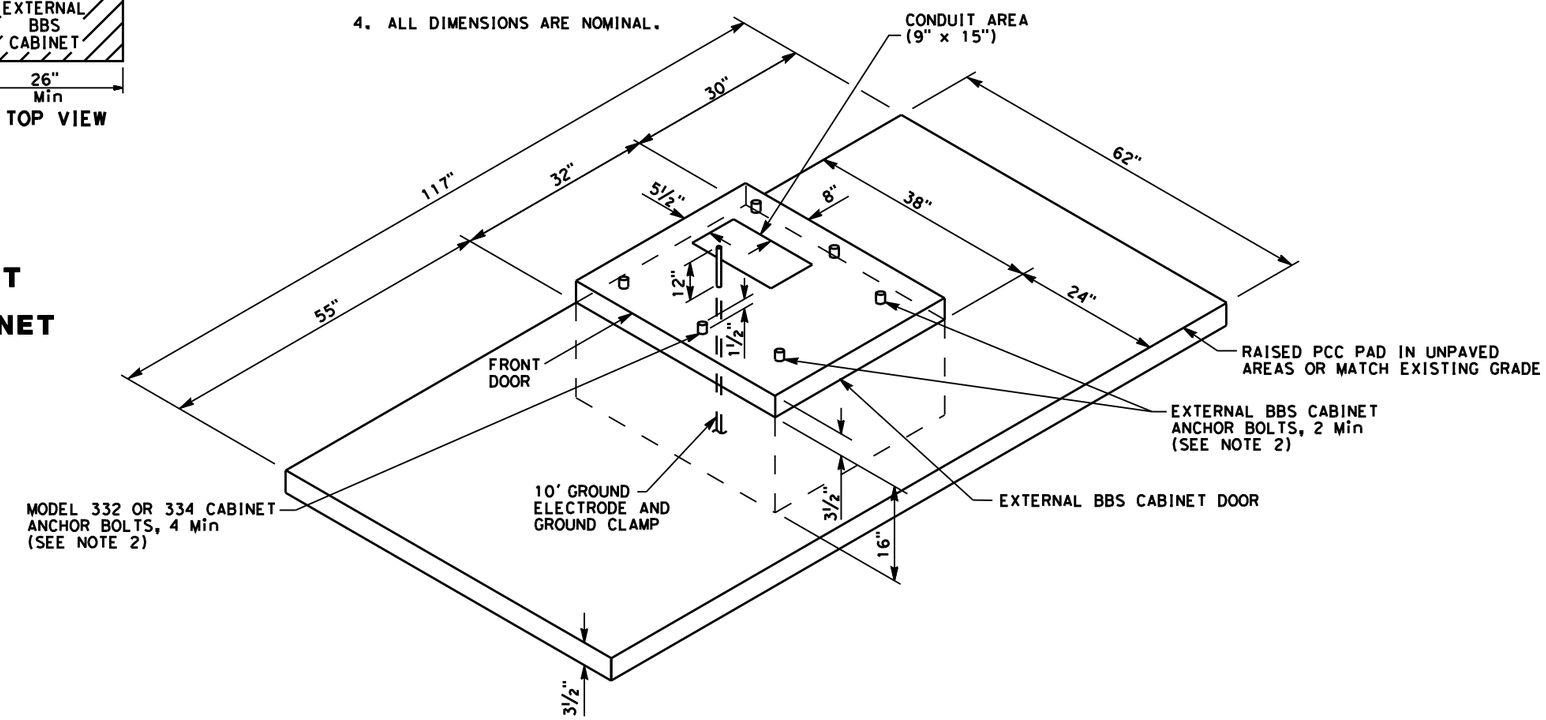

MODIFIED MODEL 332 AND 334 CABINET FOUNDATION DETAIL FOR BATTERY BACKUP SYSTEM (BBS)

(FOR DIMENSIONS AND DETAILS NOT SHOWN AND ADDITIONAL NOTES, SEE SHEET ES-3C OF THE STANDARD PLANS FOR MODEL 332 AND 334 CABINETS)

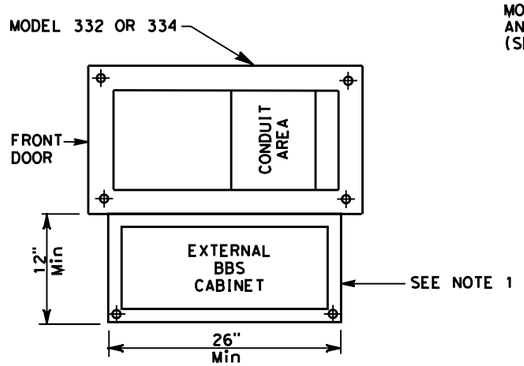

BASE PLAN FOR BBS MOUNTED TO THE MODEL 332 OR 334 CABINET

(FOR DIMENSIONS AND DETAILS NOT SHOWN, SEE SHEET A6-1 TO A6-4, CABINET HOUSING DETAILS OF THE TRANSPORTATION ELECTRICAL EQUIPMENT SPECIFICATION (TEES))

THIS PLAN IS ACCURATE FOR ELECTRICAL WORK ONLY.

BBS DETAILS

NO SCALE **3 of 3**

REVISED BY | DATE REVISED | CALCULATED-DESIGNED BY | CHECKED BY | FUNCTIONAL SUPERVISOR

STATE OF CALIFORNIA - DEPARTMENT OF TRANSPORTATION

LAST REVISION 2-2-09 | DATE PLOTTED => $DATE | TIME PLOTTED => $TIME

GÍNA™

USER'S MANUAL

Models : 5000N/5000NV/7000N/7000NV

GRE™

General Information

Introduction

This document is the User's Manual for the GINA transceiver.

NOTE: Read this manual completely before you try to use any GINA product.

GINA Models

GINA 5000N / 5000NV

Model 5000N is a standard GINA transceiver. Model 5000NV has an additional voice handset for audio communication. GINA 5000N receives and transmits data in the ISM band of 902 to 928 MHz in half duplex mode. The 5000N has a standard RS-232 serial data interface that can be driven asynchronously at rates from 1200 through 19.2 Kbps (Optional 38.4 Kbps). GINA 5000N is autobauding and does not require any speed adjustments between it and the DTE device. It automatically synchronizes on any speed to 19.2 Kbps (Optional 38.4 Kbps). GINA 5000N is designed to replace a RS-232 cable connected to a distant device. It is plug and play transparent link to any device with a RS-2332 serial interface. There are no special setups required. GINA 5000N is a highly secure spread spectrum radio. It does not packetize or perform any error correction and is transparent. GINA 5000N being completely transparent allows any custom communication protocol to be used. Synchronous units at 19.2 Kbps are available as an option.

GINA 7000N / 7000NV

Model 7000N is a standard GINA transceiver. Model 7000NV has an additional voice handset for audio communication. GINA 7000N receives and transmits data in the ISM band of 2.404 - 2.478 GHz in half-duplex mode. GINA 7000N utilizes a standard RS-232 serial data interface that can be driven asynchronously at rates from 1.2 through 19.2 Kbps (Optional 38.4 Kbps). GINA does not require any synchronization between it and the DTE device. It automatically synchronizes on any speed to 19.2 Kbps (Optional 38.4 Kbps). GINA 7000N will transmit at the same speed as your asynchronous RS-232 device. GINA 7000N is designed to replace a RS-232 cable connected to a distant device. It is a plug and play transparent link to any device with a RS-232 serial interface. There are no special setups required.

©1999 GRE America, Inc. All rights reserved. This material is the property of GRE America, Inc. Copying or reproducing this material is strictly prohibited. All violators shall be prosecuted to the fullest extent of the law.

System Requirements

For all GINA models, the only system requirement is an EIA232 (RS-232) peripheral or a personal computer (PC). When using a PC, any communications software package such as BitCom©, Procomm©, Crosstalk©, Windows 95/98© Hyper Terminal or any compatible communications package can be used.

What is GINA?

As shown in Figure 1-1, GINA is a high frequency data radio using spread spectrum technology. GINA receives and transmits data in the ISM band of 902-928 MHz or 2.404 - 2.478 GHz. GINA has standard data interfaces that can be driven at rates from 9.6 to 38.4 Kbps (Kilobits Per Second) depending on the model.

GINA is a plug and play transparent link. There are no special setups required. GINA is a highly secure spread spectrum radio. GINA being transparent allows most custom communication protocols to be used.

Figure 1-1. The GINA Transceiver

Spread Spectrum Technology

GINA uses spread spectrum technology, a technique originally developed by the U.S. military during World War II, to prevent the jamming of communications signals. Spread spectrum technology uses a narrow bandwidth radio frequency and spreads it over a wider portion of the bandwidth. Since the signal is spread out over the band, it renders narrow band jammers virtually ineffective. Additionally, the spread spectrum band can be used with low probability of interception, which is an ideal method of communication since it is 'radio silent' to a conventional receiver.

©1999 GRE America, Inc. All rights reserved. This material is the property of GRE America, Inc. Copying or reproducing this material is strictly prohibited. All violators shall be prosecuted to the fullest extent of the law.

Advantages of Spread Spectrum Technology

Spread spectrum technology has many advantages. Among them are:

- **System flexibility.** Additions can be made easily.
- **Interference immunity.** Spread spectrum radios are immune to noise.
- **Error-free communication.** Automatic error detection is built into some models.
- **Cost.** Spread spectrum technology is inexpensive compared to an equivalent hard-wired installation.
- **Data throughput.** Spread spectrum technology is a transparent, real-time, point-to-point, and point-to-multipoint wireless network.
- **Multi-channel.** Spread spectrum radios have multiple channels that can be dynamically changed with software. It allows for repeaters, redundant base stations, and overlapping antenna cells. A great advantage is in the dynamic control of radio signal 'peaks' and 'valleys.'

A typical spread spectrum radio signal is shown in Figure 1-2.

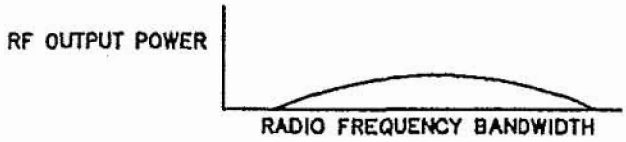

Figure 1-2. Spread Spectrum Radio Signal

A typical narrow band signal is shown in Figure 1-3.

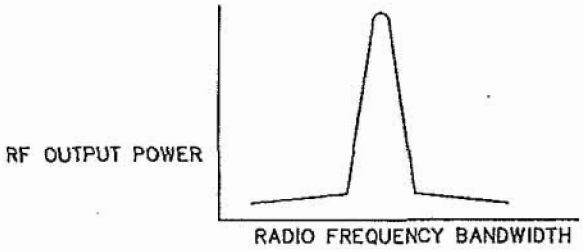

Figure 1-3. Narrow Band Radio Signal

Definitions of Terms

©1999 GRE America, Inc. All rights reserved. This material is the property of GRE America, Inc. Copying or reproducing this material is strictly prohibited. All violators shall be prosecuted to the fullest extent of the law.

DATA INTERFACE — The asynchronous interface port provided for connectivity is a EIA-232 (RS232) standard.

DIRECT SEQUENCE — Direct sequence is a technique that takes a narrow-band signal and spreads it over a broader portion of the radio frequency band.

KEY-UP TIME — The time that a radio requires when switching from transmit to receive and vice-versa. There is no key-up time required due to an internal buffer. Except for Models 5000N and 7000N, data can be received and transmitted through the RS-232 port simultaneously in a full duplex mode using TDD (time division duplex).

NOTE: Key-up time and spreading code length are interrelated. In a direct sequenced technique, the spread sequence system must (in real time) attempt to match its despreading code with the incoming radio signal in order to determine the validity of the data. The longer the spreading code, the longer the receiver must search before it can determine that a valid data signal is being transmitted.

SYNCHRONIZATION — Applied each time that the radio switches between transmit and receive, synchronization produces direct overhead on each transmitted message, thereby reducing radio efficiency. In applications involving very long, constant messages (such as a large file transfer), synchronization time becomes less of a deciding factor.

MULTIPATH — Radio signals may take several paths to reach the intended receiver. The receiver must sort out the main path from all the 'ghost' images. The longer the spreading factor and/or the faster the raw data rate, the more difficult (and eventually impossible) it is to sort out the signals, resulting in a loss of robust communication.

NUMBER OF CHANNELS — The number of channels varies per GINA model. Models 5000N, 5000NV have 21 channels provided in the 902 - 928 MHz frequance range. Models 7000N, 7000NV have 37 channels provided in the 2.404 - 2.478 GHz frequency range. Note that the channels are overlapping and, depending on the unit separation, only one channel may be used.

PROCESSING GAIN MEASUREMENTS — Since processing gain is a function of the RF bandwidth of the transmitted signal compared to the bit rate of the data, the theoretical calculation is:

$$\frac{10\text{Log(Spreading Code Rate)} \times \text{(Main Lobe Factor)}}{\text{RF Data Rate}}$$

NOTE: Assuming that the RF main lobe of [sin x/]2 for direct sequence is 0.88 (main lobe factor) times the bandwidth spreading code clock rate.

©1999 GRE America, Inc. All rights reserved. This material is the property of GRE America, Inc. Copying or reproducing this material is strictly prohibited. All violators shall be prosecuted to the fullest extent of the law.
7/99 (rev. 5)

RANGE — The communication distance between GINA's may vary according to environment and application. (Robustness and range are almost interchangeable terms; robustness and range vary according to the antenna system used.)

RAW DATA RATE — Response time of data transmission/reception. The raw data rate is factory set to 128 Kbps.

ROBUSTNESS — GRE America, Inc. believes that an RF link should be 'as good as wire.' Robustness is closely related to range. Variables for robustness and range include:

- Transmitter Output Power
- Receiver Sensitivity
- Spreading Code Length
- Raw Data Rate
- Antenna Configuration

NOTE: Spreading Code Length, Raw Data Rate, Robustness, and Multipath are interrelated; all terms are defined in this section.

SPREADING CODE LENGTH — A shorter spreading code length results in better performance in measurable areas such as cost, actual data throughput, size, range, and robustness.

A longer spreading code length reduces the possibility of unintended signal interruption and/or regulatory implications. GRE America has taken all the above criteria and used a spreading code length of 127 chip with four different codes selectable by channel.

SYSTEM RESPONSE TIME — Raw data rate, reflected by transmission response time. The minimum response time is 12 msec.

FCC Requirements

The FCC has allocated the frequencies between 902 – 928 MHz and 2.404 and 2.478 GHz for use with spread spectrum technology and does not require the end user to obtain an FCC license to operate a GINA transceiver.

NOTE: Professional installers who replace GRE-provided whip antennas with one not approved by GRE America, must obey FCC regulations concerning effective radiated power in the U.S. or the effective rules in the destination country relating to ERP. For detail specifications, refer to FCC Rules Part 15.247.

©1999 GRE America, Inc. All rights reserved. This material is the property of GRE America, Inc. Copying or reproducing this material is strictly prohibited. All violators shall be prosecuted to the fullest extent of the law.

FCC Statement

This equipment has been tested and found to comply with the limits for a Class B digital device, pursuant to Part 15 of the FCC Rules. These limits are designed to provide reasonable protection against harmful interference in a residential installation. This equipment generates, uses, and can radiate radio frequency energy and, if not installed and used in accordance with the instructions, may cause harmful interference to radio communications. However, there is no guarantee that interference will not occur in a particular installation. If this equipment does cause harmful interference to radio or television reception (which can be determined by turning the equipment off and on) the user is encouraged to try to correct the interference by one or more of the following measures:

- Re-orient or relocate the transceivers.
- Increase the separation between equipment and transceivers.
- Connect the equipment into a different outlet or circuit different from the one where the receiver is connected.
- Consult a dealer or an experienced radio technician for help.

Shielded cables and I/O cords must be used for this equipment to comply with relevant FCC regulations.

Changes or modifications not expressly approved in writing by GRE America, Inc. may void the user's authority to operate this equipment.

Customer Support

If you need answers to technical questions or require information about product updates, please contact GRE America's Technical Support Team at:

Tel: (650) 591-1400
Fax: (650) 591-2001
(800) 233-5973 (outside California)
Between 8:00 A.M. and 5:00 PM, Pacific Time
Email : support@greamerica.com

Product Returns

If, after speaking to a technical support person, it is determined that your GINA unit requires servicing, call GRE and request a RMA number for repair and return units. Write the RMA number on the outside of the shipping box for reference.

NOTE: Units returned **without** an RMA number **will not** be accepted.

©1999 GRE America, Inc. All rights reserved. This material is the property of GRE America, Inc. Copying or reproducing this material is strictly prohibited. All violators shall be prosecuted to the fullest extent of the law.
7/99 (rev. 5)

For further information, please write us at:

GRE America, Inc.
425 Harbor Boulevard
Belmont, CA USA 94002
Attn: Customer Support

Safety Considerations

For your safety, here are some things that you should do and not do:

DO read this manual completely before using GINA.

DO follow all instructions carefully.

DO use the same caution with GINA as you would use with any electrical appliance.

DO NOT try to use GINA for purposes for which it was not intended.

DO NOT locate GINA in an area that does not have adequate ventilation for cooling.

DO NOT use a 'universal' battery adapter with GINA. Only use the adapter supplied with the unit.

©1999 GRE America, Inc. All rights reserved. This material is the property of GRE America, Inc. Copying or reproducing this material is strictly prohibited. All violators shall be prosecuted to the fullest extent of the law.

GINA Models 5000N, 5000NV, 7000N, & 7000NV

Overview

Models 5000N and 7000N are standard GINA transceivers. Models 5000NV and 7000NV have an additional voice handset for audio communication. GINA 5000N receives and transmits data in the ISM band of 902 to 928 MHz in half-duplex mode. GINA 7000N receives and transmits data in the ISM band of 2.404 - 2.478 GHz in half-duplex mode. GINA models 5000N and 7000N have a standard RS-232 serial data interface that can be driven asynchronously at rates from 1200 through 19.2 Kbps (Optional 38.4 Kbps). GINA 5000N/7000N does not require any synchronization between it and the DTE device. It automatically synchronizes on any speed to 19.2 Kbps (Optional 38.4 Kbps). GINA 5000N/7000N will transmit at the same speed as your asynchronous RS-232 device. GINA 5000N/7000N is designed to replace an RS-232 cable connected to a distant device. It is a plug-and-play transparent link to any device with a RS-232 serial interface. There are no special setups required. GINA 5000N/7000N is a highly secure spread spectrum radio. It does not packetize or perform error correction and is data transparent. GINA 5000N/7000N being transparent allows custom communication protocol to be used. Synchronous units with data rates to 19.2 Kbps are available as an option.

Operation

This section contains operating instructions for the GINA transceiver, including controls and indicators, timing considerations, DTE requirements, channel selection, and voice operation (Models 5000NV and 7000NV only).

©1999 GRE America, Inc. All rights reserved. This material is the property of GRE America, Inc. Copying or reproducing this material is strictly prohibited. All violators shall be prosecuted to the fullest extent of the law.

Controls and Indicators

Front Panel

As shown in Figures 2-1 and 2-2, operating indicators and a voice handset jack (Models 5000NV and 7000NV only) are located on the front panel, and consist of:

1. **PWR LED** (Light Emitting Diode). This LED is lit when power is applied to the transceiver.

2. **TX LED.** Indicates that a signal is being transmitted by GINA.

3. **RD LED.** Indicates that a signal is being received by GINA.

4. **Voice Handset Jack.** Standard RJ-11 telephone jack for the GINA handset (Models 5000NV and 7000NV only).

NOTE: GINA only operates with the handset supplied with the unit. Do not attempt to use a standard telephone handset.

Figure 2-1. GINA Transceiver Front Panel

Figure 2-1. GINA Transceiver Front Panel

©1999 GRE America, Inc. All rights reserved. This material is the property of GRE America, Inc. Copying or reproducing this material is strictly prohibited. All violators shall be prosecuted to the fullest extent of the law.
7/99 (rev. 5)

Rear Panel

As shown in Figure 2-2, the rear panel contains a power switch and three connectors, as follows:

1. The GINA antenna jack (non-standard SMA type). Rear Panel
2. ON/OFF toggle switch. Controls power to the transceiver.
3. RS-232 connector. Standard 9-pin DIN type connector for the data interface to a PC or DTE equipment.
4. 12 VDC. Power connector for the GINA AC to DC power converter.
5. Receiver Signal Strength Indicator test Ports.

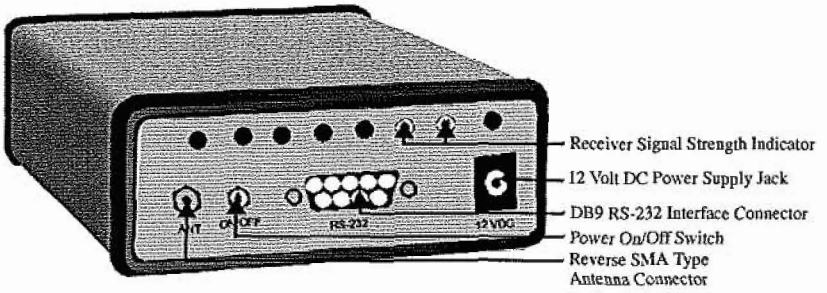

Figure 2-2. GINA Transceiver Rear Panel

Timing Considerations

GINA 5000N/7000N does not provide nor require an external clock signal. It is capable of synchronizing on any bit rate between 1200 through 19.2 Kbps (Optional 38.4 Kbps). The transceiver transmits and receives at the same speed as the connected asynchronous RS-232 port. No packetizing or error correction is provided; your communications software package or peripheral must provide these functions. Refer to your software/ equipment manual for details.

GINA contains a delay board that compensates for the time the sending unit needs to acquire the receiving unit (approximately 12 milliseconds at 9600 baud).

©1999 GRE America, Inc. All rights reserved. This material is the property of GRE America, Inc. Copying or reproducing this material is strictly prohibited. All violators shall be prosecuted to the fullest extent of the law.

GINA is a half-duplex radio and cannot transmit and receive at the same time. If GINA is transmitting, your peripheral must wait until all data is received before transmitting. A CTS (Clear To Send) signal is provided when it is clear to send data back to GINA. CTS is always high in this model. If your peripheral ignores the CTS and transmits before a valid CTS, the data will be corrupted.

Since transmission has priority, if GINA is receiving data and the controlling peripheral begins transmitting, GINA immediately switches to transmit and the incoming data will be lost. The CTS output to the RS-232 port is low when data is being received. After all data is received, the CTS line is high indicating that the radio (GINA) is ready to transmit.
Refer to Figure 2-3.

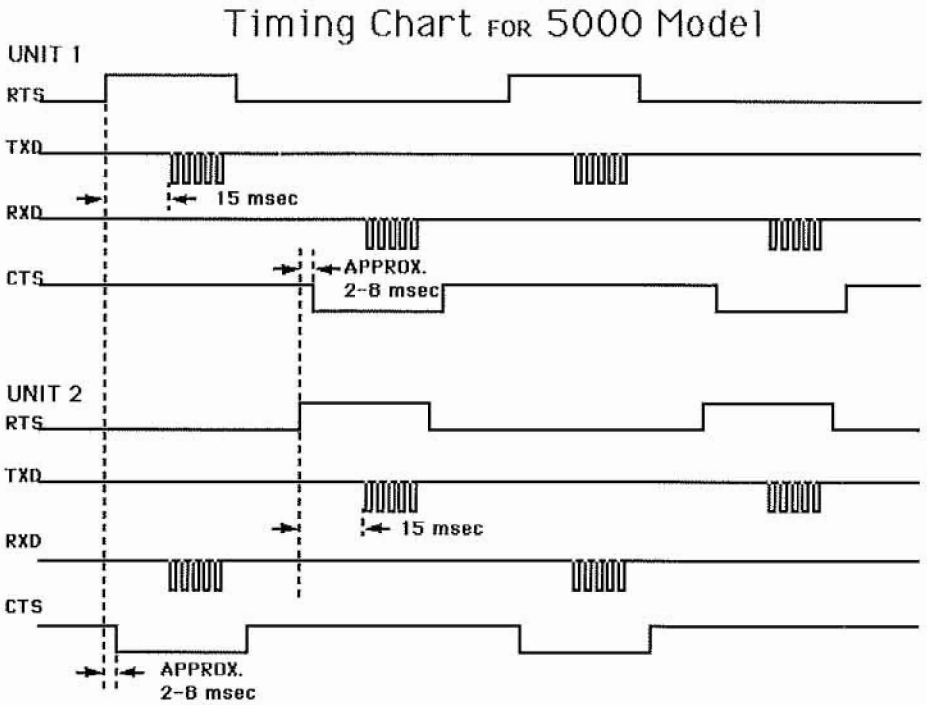

Figure 2-3. GINA Transmission Timing Chart

RTS = GINA turns on and transmits a PN Carrier (This is an internal RTS with no relationship with the RS-232 pin 7 RTS).
TXD = Transmit data
RXD = Receiving data
CTS = Clear to send

©1999 GRE America, Inc. All rights reserved. This material is the property of GRE America, Inc. Copying or reproducing this material is strictly prohibited. All violators shall be prosecuted to the fullest extent of the law.
7/99 (rev. 5)

Channel Selection

The GINA transceiver can operate on 21 different channels (GINA model 5000NV) or 37 channels (GINA model 7000NV). The channel is factory set at 11. When communicating with another transceiver, both units must be set to the same channel. Depending on the time of day and local atmospheric conditions, the channel number selected can affect the range of the unit. If you are experiencing marginal reception conditions, try changing the channel until maximum performance is reached. Channel 11 usually produces satisfactory results.

NOTE: If two systems (operating on different channels) are operating in close proximity and are interfering with each other change the channel. If the problem continues, a filter must be used. Contact GRE America, Inc.

Changing Channel Settings

There are either 21 (Model 5000NV) or 37 (Model 7000NV) different channels available for use with GINA. The channel used is determined by the settings of a 10-pin dip switch mounted on the GINA top circuit board. The CODE column shows the switch settings for each code. GINA is shipped with a default setting of channel 11 (1010011111). To change this setting, change the switch positions to the desired channel.

CAUTION: Make sure that the GINA power switch is OFF and that all cables are disconnected before changing channel settings.

There are two configurations on the GINA transceiver case. The procedures for changing switch settings are determined by the case configuration.

©1999 GRE America, Inc. All rights reserved. This material is the property of GRE America, Inc. Copying or reproducing this material is strictly prohibited. All violators shall be prosecuted to the fullest extent of the law.

GINA Case With Switch Cutout

If you have a GINA transceiver with a switch cutout as shown in Figure 2-5:

1. Make sure all cables are disconnected.

2. Remove the label covering the switch cutout to get access to the channel switch.

3. Use a small pointed object and set each switch to the desired position.

   NOTE: On the dip switch, UP (away from switch numbers) is equal to zero. DOWN (towards switch numbers) is equal to one.

4. Replace the switch cutout label.

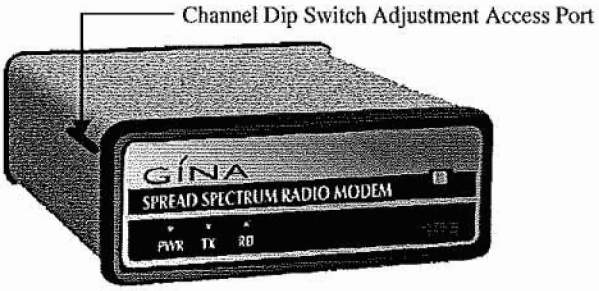

Figure 2-5. Transceiver Cases with Switch Cutout

"Refer to Channel Code Switch Setting table on Sections 2-7 & 2-8 "

©1999 GRE America, Inc. All rights reserved. This material is the property of GRE America, Inc. Copying or reproducing this material is strictly prohibited. All violators shall be prosecuted to the fullest extent of the law.
7/99 (rev. 5)

CHANNEL CODE SWITCH SETTINGS FOR GINA MODELS 5000N AND 5000NV			
CHANNEL	FREQUENCY (MHz)	DIP SWITCH SETTING	PN CODE
1	905.055	1010001100	1
2	906.055	1010100010	2
3	907.055	1010011010	3
4	908.055	1010110110	4
5	909.055	1010000001	2
6	910.055	1010101001	3
7	911.055	1010010101	4
8	912.055	1010111101	1
9	913.055	1010001011	3
10	914.055	1010100111	4
11	915.055	1010011111	1
12	916.055	1011110000	2
13	917.055	1011000100	3
14	918.055	1011101100	1
15	919.055	1011010010	2
16	920.055	1011111010	3
17	921.055	1011001110	1
18	922.055	1011100001	2
19	923.055	1011011001	3
20	924.055	1011110101	4
21	925.055	1011000011	1

©1999 GRE America, Inc. All rights reserved. This material is the property of GRE America, Inc. Copying or reproducing this material is strictly prohibited. All violators shall be prosecuted to the fullest extent of the law.

CHANNEL CODE SWITCH SETTINGS FOR GINA MODELS 7000N AND 7000NV			
CHANNEL	FREQUENCY (GHz)	DIP SWITCH SETTING	PN CODE
1	2.404	1000100000	1
2	2.406	1000101000	2
3	2.408	1000100100	3
4	2.410	1000110100	3
5	2.412	1000100010	1
6	2.414	1000101010	2
7	2.416	1000100110	3
8	2.418	1000101110	4
9	2.420	1000111110	4
10	2.422	1000101001	2
11	2.424	1000100101	3
12	2.426	1000101101	4
13	2.428	1000100011	1
14	2.430	1000101011	2
15	2.433	1000100111	3
16	2.435	1000101111	4
17	2.437	1001100000	1
18	2.439	1001101000	2
19	2.441	1001100100	3
20	2.443	1001110100	3
21	2.445	1001100010	1
22	2.447	1001101010	2
23	2.449	1001100110	1
24	2.451	1001101110	4

©1999 GRE America, Inc. All rights reserved. This material is the property of GRE America, Inc. Copying or reproducing this material is strictly prohibited. All violators shall be prosecuted to the fullest extent of the law.
7/99 (rev. 5)

CHANNEL CODE SWITCH SETTINGS FOR GINA MODELS 7000N AND 7000NV			
25	2.453	1001111110	4
26	2.455	1001101001	2
27	2.457	1001100101	3
28	2.59	1001101101	4
29	2.461	1001100011	1
30	2.463	1001101011	2
31	2.465	1001100111	3
32	2.467	1001101111	4
33	2.469	1010100000	1
34	2.471	1010101000	2
35	2.473	1010100100	3
36	2.475	1010110100	3
37	2.478	1010100010	1

©1999 GRE America, Inc. All rights reserved. This material is the property of GRE America, Inc. Copying or reproducing this material is strictly prohibited. All violators shall be prosecuted to the fullest extent of the law.

Voice Operation (Models 5000NV and 7000NV Only)

NOTE: GINA only operates with the handset supplied with the unit. Do not attempt to use a standard telephone handset.

On Models 5000NV and 7000NV, GINA is provided with a PTT (press-to-talk), release-to-listen handset that connects to the RJ-22 jack on the front panel. This allows a remote user to communicate with the main station. Tonal quality is adequate for communication (325 to 4000 Hz) but not telephone 'toll grade.' Some distortion may be noted depending on operating environment.

Using the handset is not complicated, but since GINA operates in half-duplex mode (only one person may speak at a time, as opposed to a standard telephone, which is full duplex, allowing both stations to speak simultaneously), we recommend military protocol: To speak, press the PTT switch. When you are finished speaking and expect a reply, say "over" and release the PTT button. When you are finished speaking and do not expect a reply, say "out."

NOTE: The voice feature on GINA Models 5000NV and 7000NV is especially useful during installation.

Below is an illustration showing a point-to-multipoint data polling application.

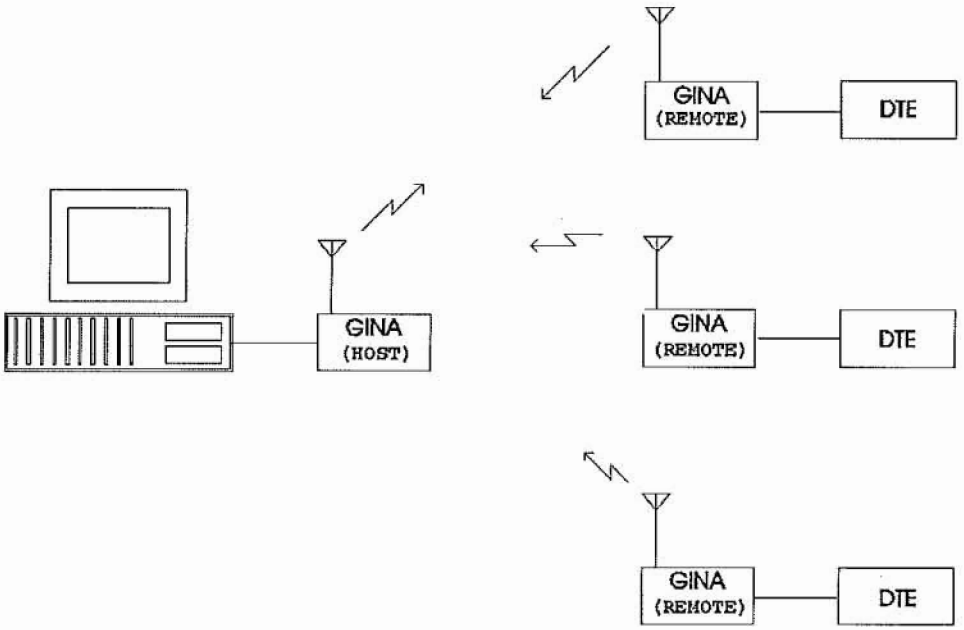

Figure 3-7. Point-to-Multipoint Setup

©1999 GRE America, Inc. All rights reserved. This material is the property of GRE America, Inc. Copying or reproducing this material is strictly prohibited. All violators shall be prosecuted to the fullest extent of the law.
7/99 (rev. 5)

5000N/5000NV SPECIFICATIONS	
Adjacent Channel Rejection	-40dB = 4MHz
Baud Rate Asynchronous	1.2 to 19.2 Kbps Half Duplex - RS-232 (DB9F
Baud Rate Async. Option	38.4 Kbps Half Duplex - RS-232 (DB9F)
Channels	21 Selectable by dip switch
Control	CTS high
Data Format	Any Data Format
Dimensions	(1.52"H) x (4.17"W) x (5.0"D) (38.6mm) x (105.9mm) x (127mm)
Dynamic Range	-100 dBm ~ -30 dBm
Frequency Range	905-928 MHz
Indicators	PWR, TxD, RxD
Modulation	Bi-Phase Shift Keying (BPSK)
PN	7 Stage (127 Chip)
PN Rate	2 Mhz
Operating Mode	Point-to-Multipoint
Operating Temperature	-20 to +60 Degrees C
Extended Temperature Option	-34 to +74 Degrees C
PN Codes	4 PN Codes Pre-determined sequence varies within each channel
Power Consumption	10 Watt Maximum
Power Requirements	10.5 to 13.8 VDC
Radio Technique	Spread Spectrum (Direct Sequence)
Range Nominal	800+ feet
Range Indoor	500 to 1500+ feet
Range Outdoor	12+ Miles - Direct Line-of-Site FCC Compliant
Relative Humidity	0-90% Non-Condensing
Transmission Delay	20 mSec
Voice Option Interface	RJ22

©1999 GRE America, Inc. All rights reserved. This material is the property of GRE America, Inc. Copying or reproducing this material is strictly prohibited. All violators shall be prosecuted to the fullest extent of the law.

5000N/5000NV SPECIFICATIONS	
Weight	16 oz.
TRANSMITTER	
Carrier Frequency Stability	15KHz
Power Consumption	700mA @ 12 VDC
Spurious Output	FCC Part 15, meets 15.245 & 15.247
Output Power	725 mW (28.6 dBm)
RECEIVER	
Bit Error Rate	10 -6 @ -92 dBm
Local Oscillator Stability	15 KHz
Sensitivity Threshold	-100 dBm
Stand-by Power	325mA @ 12VDC
Signal Acquisition Time	12 mSec
Spurious Rejection	-50 dBm

©1999 GRE America, Inc. All rights reserved. This material is the property of GRE America, Inc. Copying or reproducing this material is strictly prohibited. All violators shall be prosecuted to the fullest extent of the law.

7000N/7000NV SPECIFICATIONS	
Adjacent Channel Rejection	-40dB = 4MHz
Baud Rate Asynchronous	1.2 to 19.2 Kbps Half Duplex TDD - RS-232 (DB9F)
Baud Rate Async. Option	38.4 Kbps Half Duplex - RS-232 (DB9F
Channels	37 Selectable by dip switch
Control	CTS high
Data Format	Any data format
Dimensions	(1.52"H) x (4.17"W) x (5.0"D) (38.6mm) x (105.9mm) x (127mm)
Dynamic Range	-100 dBm ~ -30 dBm
Frequency Range	2.404 to 2.478 GHz
Indicators	PWR, TxD, RxD
Modulation	Bi-Phase Shift Keying (BPSK)
PN	7 Stage (127 Chip)
PN Rate	2 Mhz
Operating Mode	Point-to-MultiPoint
Operating Temperature	-20 to +60 Degrees C
Extended Temperature Option	-34 to +74 Degrees C
PN Codes	4 PN Codes Sequence Varies within each channel
Power Consumption	10 Watt Maximum
Power Requirements	10.5 to 13.8 VDC
Radio Technique	Spread Spectrum Direct Sequence
Range Nominal	800+ feet
Range Indoor	500 to 1500+ feet
Range Outdoor	12+ Miles - Direct Line-of-Site FCC Compliant
Relative Humidity	0-90% Non-Condensing
System Gain	119 dB
Transmission Delay	20 mSec

©1999 GRE America, Inc. All rights reserved. This material is the property of GRE America, Inc. Copying or reproducing this material is strictly prohibited. All violators shall be prosecuted to the fullest extent of the law.

7000N/7000NV SPECIFICATIONS	
Voice Option Interface	RJ22
Weight	16 oz.
TRANSMITTER	
Carrier Frequency Stability	25 KHz
Power Consumption	750mA @ 12 VDC
Spurious Output	FCC Part 15, meets 15.245 & 15.247
Output Power	500 mW
RECEIVER	
Bit Error Rate	10-6 @ -90 dBm
Local Oscillator Stability	25 KHz
Sensitivity Threshold	-100 dBm
Stand-by Power	400mA @ 12 VDC
Signal Acquisition Time	12 mSec
Spurious Rejection	-50 dBm

©1999 GRE America, Inc. All rights reserved. This material is the property of GRE America, Inc. Copying or reproducing this material is strictly prohibited. All violators shall be prosecuted to the fullest extent of the law.
7/99 (rev. 5)

Appendix A: RS-232 Configuration Data

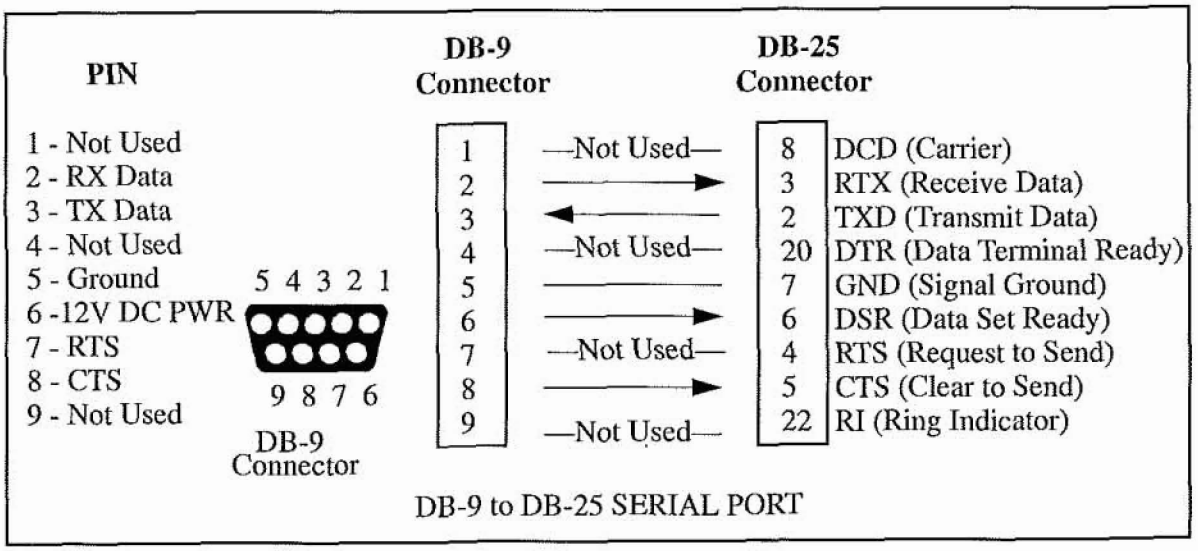

RS-232 Interface

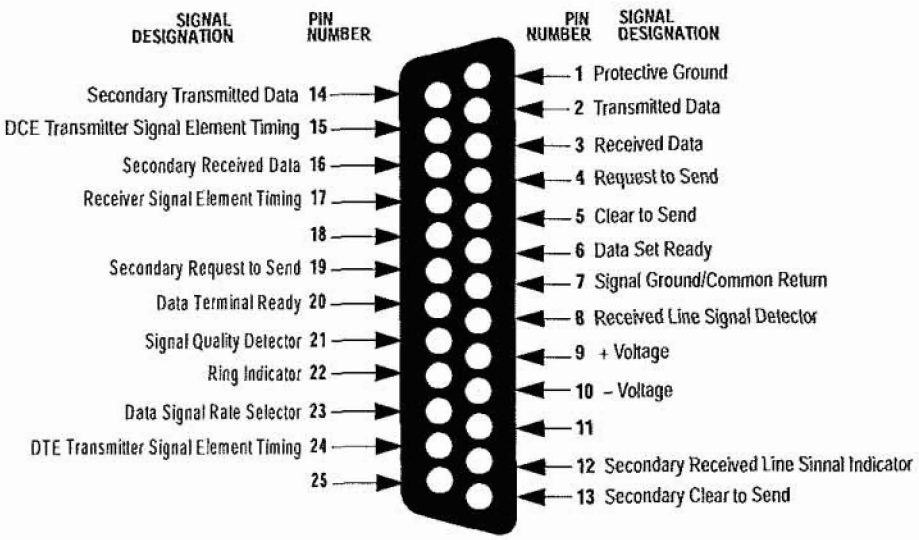

©1999 GRE America, Inc. All rights reserved. This material is the property of GRE America, Inc. Copying or reproducing this material is strictly prohibited. All violators shall be prosecuted to the fullest extent of the law.
7/99 (rev. 5)

Appendix B: Using an External Antenna with GINA

Introduction

This appendix contains information for users who wish to install an outside antenna to improve the transmission/reception range of GINA. GRE America recommends that a professional electrical contractor with experience in antenna installation be used to install the antenna. Users who wish to install their own antenna should follow the instructions below.

CAUTION: Section 810 of the National Electrical Code, ANSI/NFPA No. 70-1994 contains the minimum legal requirements for the installation and protection of outside antennas. Consult your local building or fire department; additional requirements may exist for your location.

NOTE: For additional information regarding outside protection, GRE recommends that you contact Polyphaser and refer to their application notes.

Antenna

Select an antenna suitable for the frequency range of your GINA. If a high gain antenna is going to be used, you must obey the FCC Part 15.247 regulation. The regulation states any professional installer may change to a different antenna and must meet the 6dBi system gain requirements.

GRE offers many optional high gain antennas that are certified with FCC. Each contains our non-standard SMA connector. Three antennas are:

1. 13 dBi Directional Yagi Antenna with a 10 ft. cable.
2. 3 dBd Omnidirectional Antenna with a 10 ft. cable.
3. 3 dBd Patch Antenna with 3 ft. cable.

Contact a GRE sale representative for more details.

Mast/Tower

Generally, the higher the antenna is mounted the greater the improvement in range. Fifteen to twenty feet is adequate for most locations. For longer distances, height may need to be increased.

©1999 GRE America, Inc. All rights reserved. This material is the property of GRE America, Inc. Copying or reproducing this material is strictly prohibited. All violators shall be prosecuted to the fullest extent of the law.

Grounding

Make sure that the antenna system is grounded to protect against voltage surges, built up static charges, and lightning strikes:

Use No. 10 AWG (5.3 mm) copper or No. 8 AWG (8.4 mm) aluminum wire or larger as a ground wire.

Secure antenna lead-in and ground wires with insulated standoff insulators spaced 4-6 ft.(1.2 - 1.7 m) apart.

Mount the antenna discharge unit as close as possible to where the lead-in enters the building.

©1999 GRE America, Inc. All rights reserved. This material is the property of GRE America, Inc. Copying or reproducing this material is strictly prohibited. All violators shall be prosecuted to the fullest extent of the law.
7/99 (rev. 5)

Warranty

Introduction

This section contains user information about GRE's limited warranty.

Limited Warranty

General

GRE America, Inc. warrants all parts of each new product to be of sound design, good material and workmanship, and will repair or exchange any parts proven to be defective under normal use at no charge for a period of 12 months from the date of sale to the end user.

Defects will be corrected by GRE America. There will be no charge for labor for a period of 12 months from the date of original sale, except as provided below. Overtime premiums and/or expedited handling and shipping costs must be paid by the owner.

Warranty Limitations

This warranty does not apply to equipment or parts that have been subject to accident, abuse, incorrect service, alterations, service by non-authorized service personnel, misuse, or on units upon which the warranty seal has been removed, altered, or mutilated.

A copy of the warranty certificate or purchase receipt must be supplied to GRE America when requesting service.

Equipment must be sent to GRE America at the owner's expense and will be returned via surface carrier at no cost to the owner.

This warranty is strictly limited to the terms indicated herein, and no other warranties or remedies thereunder, express or implied, shall be binding on GRE America.

©1999 GRE America, Inc. All rights reserved. This material is the property of GRE America, Inc. Copying or reproducing this material is strictly prohibited. All violators shall be prosecuted to the fullest extent of the law.