Dist	COUNTY	ROUTE	POST MILES TOTAL PROJECT	SHEET No.	TOTAL SHEETS
02	Teh	36	91.5	1	14

ACBHSTP-P036(095)E

STATE OF CALIFORNIA
DEPARTMENT OF TRANSPORTATION

PROJECT PLANS FOR CONSTRUCTION ON
STATE HIGHWAY
IN TEHAMA COUNTY ABOUT 8 MILES EAST OF MINERAL AT MILL CREEK BRIDGE

TO BE SUPPLEMENTED BY STANDARD PLANS DATED MAY 2010

INDEX OF PLANS

SHEET No.	DESCRIPTION
1	TITLE SHEET
2	LAYOUT
3-7	CONSTRUCTION DETAILS
8-9	EROSION CONTROL PLANS AND QUANTITIES
10	CONSTRUCTION AREA SIGNS
11	SUMMARY OF QUANTITIES
STRUCTURE PLANS	
12-14	MILL CREEK BRIDGE (SCOUR MITIGATION)

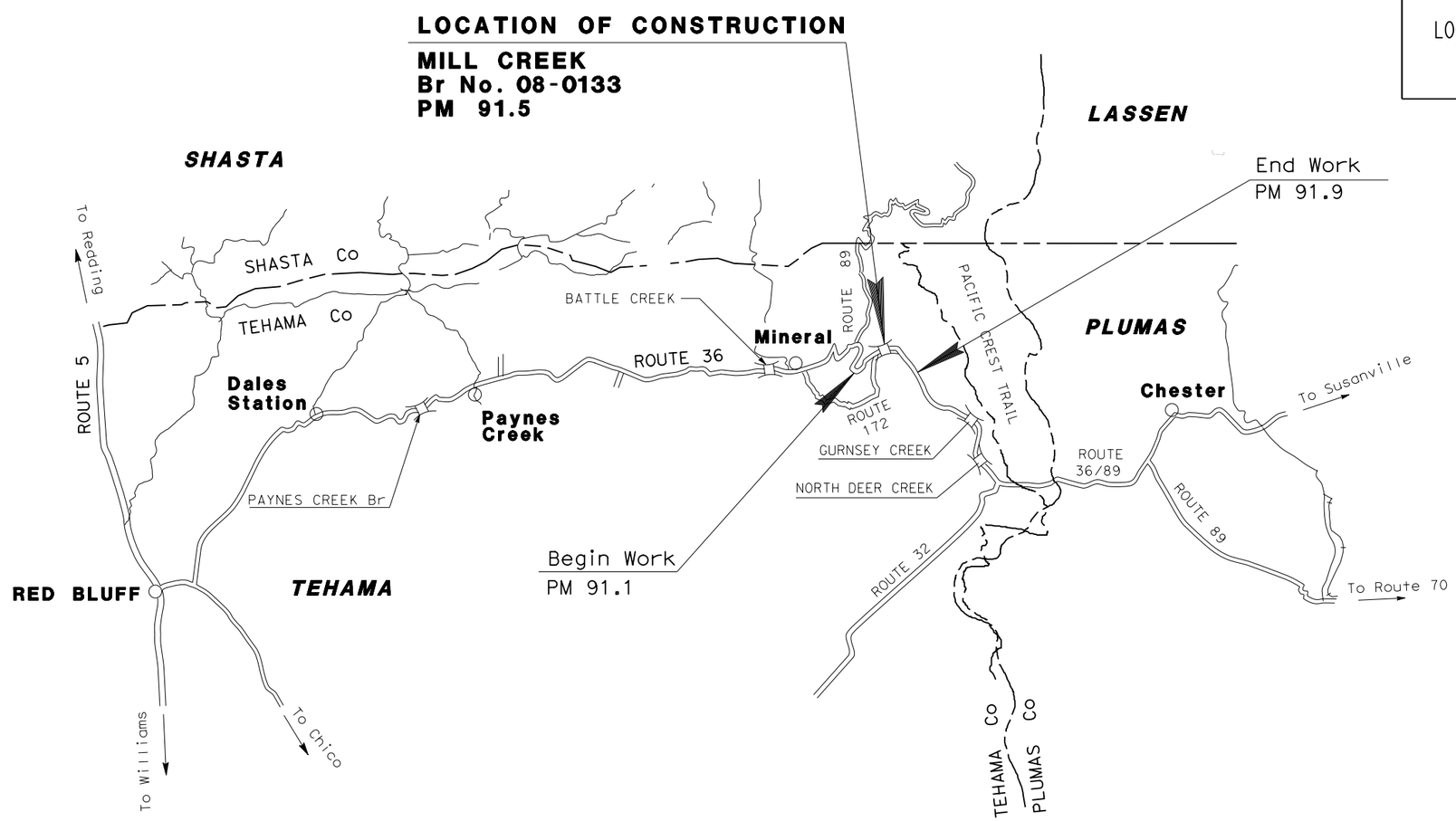

NO SCALE

THE STANDARD PLANS LIST APPLICABLE TO THIS CONTRACT IS INCLUDED IN THE NOTICE TO BIDDERS AND SPECIAL PROVISIONS BOOK.

THE CONTRACTOR SHALL POSSESS THE CLASS (OR CLASSES) OF LICENSE AS SPECIFIED IN THE "NOTICE TO BIDDERS."

PROJECT MANAGER: ERIC ORR
DESIGN ENGINEER: STEVE THORNE

A Mark Loader 10-29-12
PROJECT ENGINEER REGISTERED CIVIL ENGINEER — DATE

October 29, 2012
PLANS APPROVAL DATE

REGISTERED PROFESSIONAL ENGINEER — A. MARK LOADER — No. C55825 — Exp. 12-31-12 — CIVIL — STATE OF CALIFORNIA

THE STATE OF CALIFORNIA OR ITS OFFICERS OR AGENTS SHALL NOT BE RESPONSIBLE FOR THE ACCURACY OR COMPLETENESS OF SCANNED COPIES OF THIS PLAN SHEET.

CONTRACT No.	02-2C2254
PROJECT ID	0200020139

LAST REVISION 10-29-12 — DATE PLOTTED => 18-DEC-2012 — TIME PLOTTED => 11:30

P:\proj1\02\2c225_plans\pse\22c225ab001.dgn

Dist	COUNTY	ROUTE	POST MILES TOTAL PROJECT	SHEET No.	TOTAL SHEETS
02	Teh	36	91.5	2	14

A Mark Loader 10-29-12
REGISTERED CIVIL ENGINEER DATE

10-29-12
PLANS APPROVAL DATE

REGISTERED PROFESSIONAL ENGINEER A. MARK LOADER No. C55825 Exp. 12-31-12 CIVIL STATE OF CALIFORNIA

THE STATE OF CALIFORNIA OR ITS OFFICERS OR AGENTS SHALL NOT BE RESPONSIBLE FOR THE ACCURACY OR COMPLETENESS OF SCANNED COPIES OF THIS PLAN SHEET.

NOTES:

1. FOR ACCURATE RIGHT OF WAY DATA, CONTACT RIGHT OF WAY ENGINEERING AT THE DISTRICT OFFICE.
2. FOR CONCRETE BARRIER (TRANSITION ANCHOR BLOCK) DETAILS, SEE SHEET C-2.
3. FOR COLD PLANE AC PAVEMENT AND ROADWAY EXCAVATION DETAILS, SEE SHEET C-1.
4. FOR TEMPORARY FENCE (TYPE ESA) LOCATIONS, SEE SHEET C-5.
5. FOR BIRD DETERRENT LOCATIONS, SEE SHEET C-5.
6. FOR IN-STREAM HABITAT ENHANCEMENT STRUCTURE DETAILS, SEE SHEET C-5.

LEGEND:

- ROCK SLOPE PROTECTION (RSP)
- COLD PLANE AC PAVEMENT HMA (TYPE A)
- OBJECT MARKER (TYPE L-1)
- EXISTING ROADSIDE SIGN (1-WOOD POST)
- EXISTING SIGN TO REMAIN
- # PAVEMENT DELINEATION STRIPE DETAIL No.

ABBREVIATIONS:

Dr Ease DRAINAGE EASEMENT

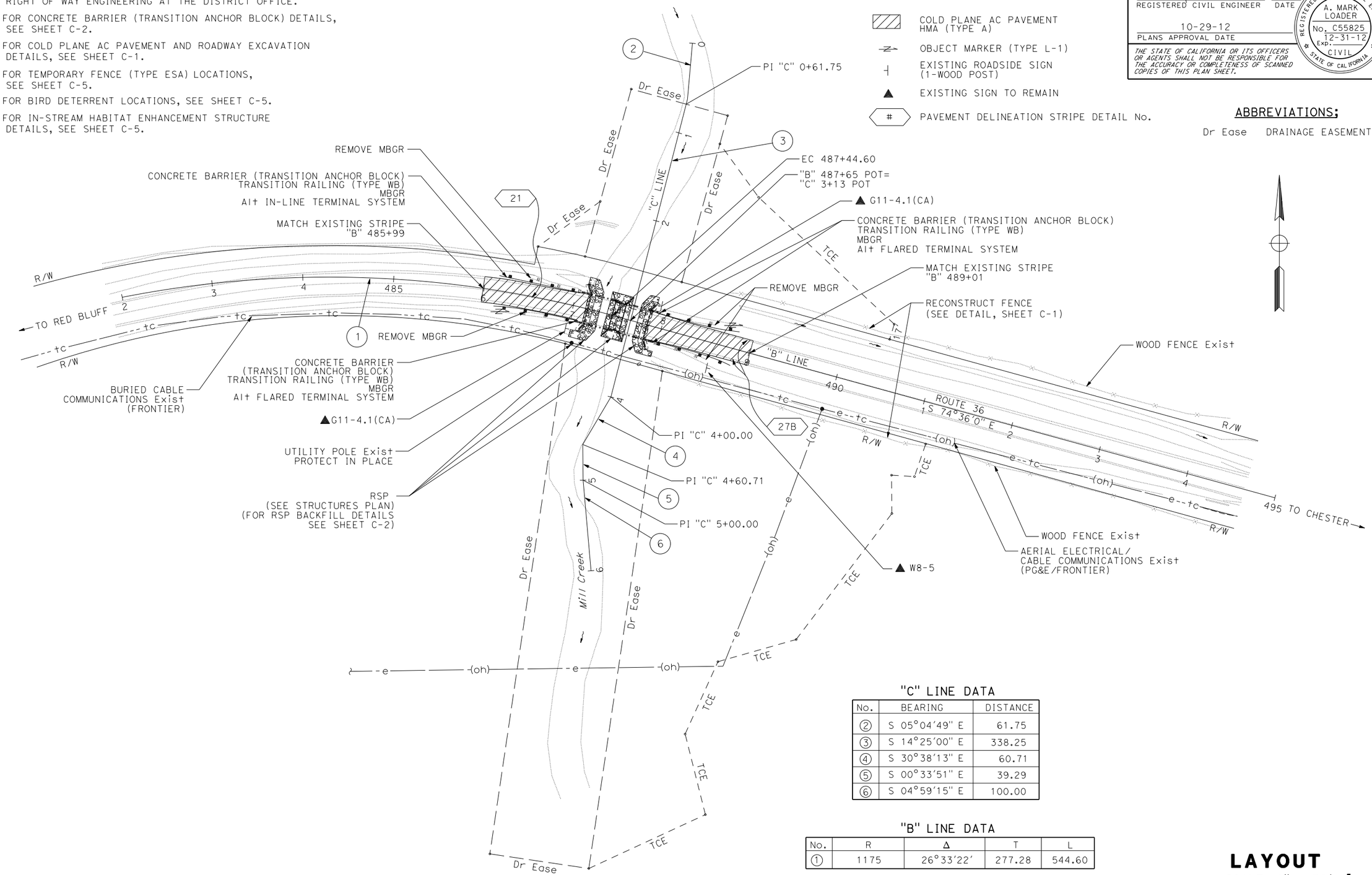

"C" LINE DATA

No.	BEARING	DISTANCE
2	S 05°04'49" E	61.75
3	S 14°25'00" E	338.25
4	S 30°38'13" E	60.71
5	S 00°33'51" E	39.29
6	S 04°59'15" E	100.00

"B" LINE DATA

No.	R	Δ	T	L
1	1175	26°33'22'	277.28	544.60

LAYOUT

SCALE: 1" = 50' **L-1**

REVISED BY	DATE REVISED
MARK LOADER	ALEX PETERSON
CALCULATED-DESIGNED BY	CHECKED BY
FUNCTIONAL SUPERVISOR	STEVE THORNE

STATE OF CALIFORNIA - DEPARTMENT OF TRANSPORTATION
Caltrans® HYDRAULIC DESIGN

P:\proj1\02\2c225_plans\pse\22c225ea001.dgn

LAST REVISION 10-29-12 | DATE PLOTTED => 18-DEC-2012 TIME PLOTTED => 11:30

Dist	COUNTY	ROUTE	POST MILES TOTAL PROJECT	SHEET No.	TOTAL SHEETS
02	Teh	36	91.5	3	14

A Mark Loader 10-29-12
REGISTERED CIVIL ENGINEER DATE

10-29-12
PLANS APPROVAL DATE

REGISTERED PROFESSIONAL ENGINEER A. MARK LOADER No. C55825 Exp. 12-31-12 CIVIL STATE OF CALIFORNIA

THE STATE OF CALIFORNIA OR ITS OFFICERS OR AGENTS SHALL NOT BE RESPONSIBLE FOR THE ACCURACY OR COMPLETENESS OF SCANNED COPIES OF THIS PLAN SHEET.

NOTES:

1. DIMENSIONS OF THE PAVEMENT STRUCTURES (STRUCTURAL SECTIONS) ARE SUBJECT TO TOLERANCES SPECIFIED IN THE STANDARD SPECIFICATIONS.
2. SUPERELEVATION AND CROSS SLOPE TO MATCH EXISTING OR AS DIRECTED BY THE ENGINEER.
3. COLD PLANE FULL WIDTH OF PAVED ROADWAY.
4. SEE STRUCTURES GENERAL PLANS FOR DETAILS NOT SHOWN.
5. EXISTING UTILITY FACILITIES ARE NOT SHOWN ON THIS PLAN.
6. EXISTING BRIDGE JOINTS ARE NOT SHOWN ON THIS PLAN.
7. PLACING OF POLYESTER OVERLAY MUST BE COMPLETE BEFORE CONSTRUCTION OF HMA PAVEMENT CONFORM.

LEGEND

HOT MIX ASPHALT (TYPE A)

ROADWAY EXCAVATION

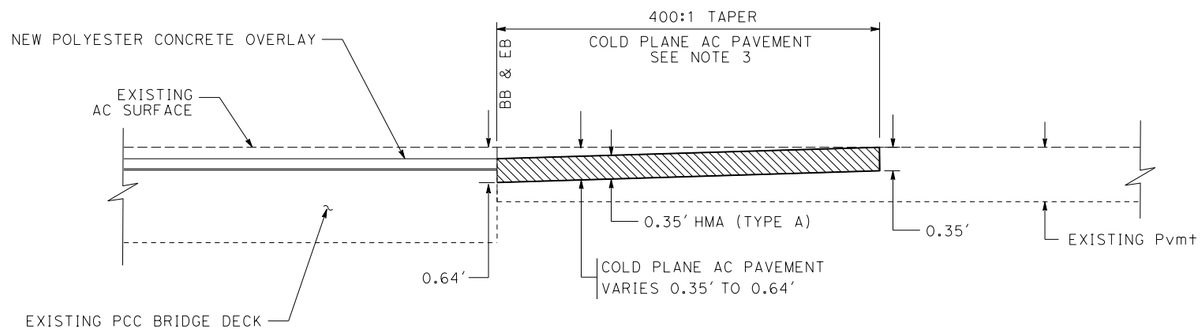

PROFILE

HMA PAVEMENT CONFORM (TYPICAL)

MILL CREEK, Br No. 08-0133

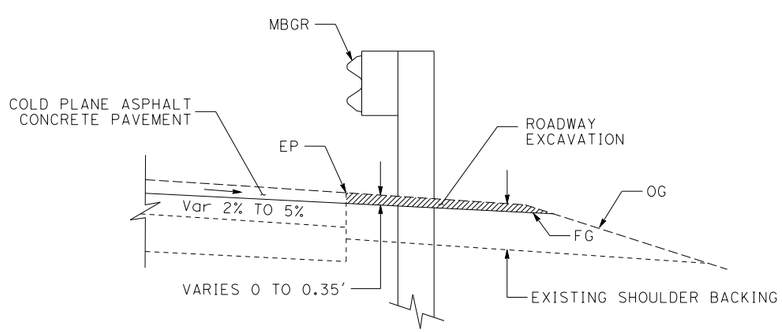

ROADWAY EXCAVATION (TYPICAL)

"B" 486+00 TO 487+16 Lt, Rt
"B" 487+84 TO 489+00 Lt, Rt

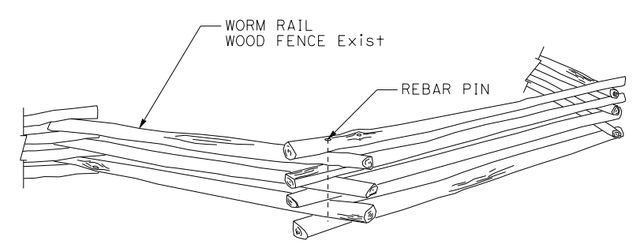

RECONSTRUCT FENCE DETAIL

APPROVED FOR CONSTRUCTION DETAIL WORK ONLY

CONSTRUCTION DETAILS

NO SCALE

C-1

REVISED BY	DATE REVISED
ALEX PETERSON	MARK LOADER
CALCULATED-DESIGNED BY	CHECKED BY
FUNCTIONAL SUPERVISOR	STEVE THORNE

STATE OF CALIFORNIA - DEPARTMENT OF TRANSPORTATION
Caltrans® **HYDRAULIC DESIGN**

P:\proj1\02\2c225_plans\pse\22c225ga001.dgn

LAST REVISION 10-29-12 | DATE PLOTTED => 18-DEC-2012 | TIME PLOTTED => 11:30

Dist	COUNTY	ROUTE	POST MILES TOTAL PROJECT	SHEET No.	TOTAL SHEETS
02	Teh	36	91.5	4	14

A Mark Loader 10-29-12
REGISTERED CIVIL ENGINEER DATE

10-29-12
PLANS APPROVAL DATE

REGISTERED PROFESSIONAL ENGINEER A. MARK LOADER No. C55825 Exp. 12-31-12 CIVIL STATE OF CALIFORNIA

THE STATE OF CALIFORNIA OR ITS OFFICERS OR AGENTS SHALL NOT BE RESPONSIBLE FOR THE ACCURACY OR COMPLETENESS OF SCANNED COPIES OF THIS PLAN SHEET.

LEGEND:

- INDICATES EXISTING STRUCTURE
- INDICATES NEW STRUCTURE
- NATIVE STREAMBED MATERIAL

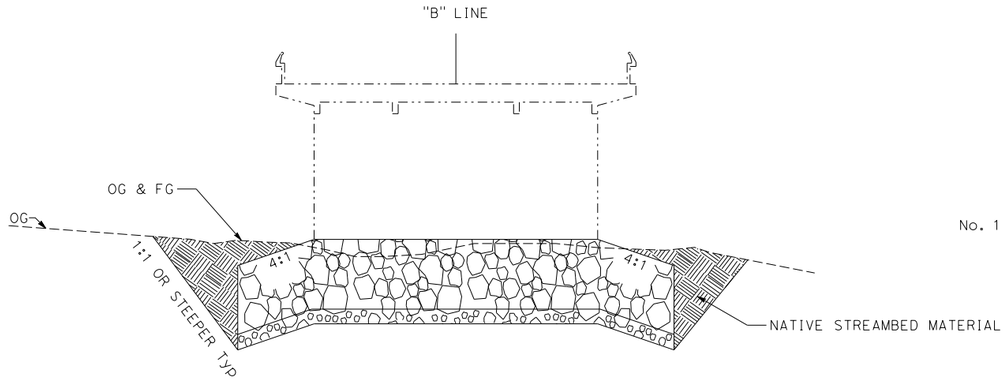

RSP BACKFILL DETAIL

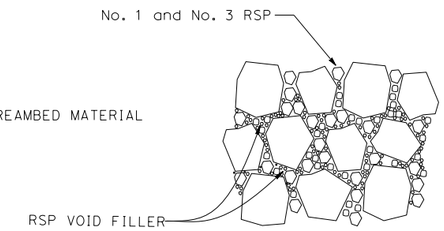

RSP DETAIL

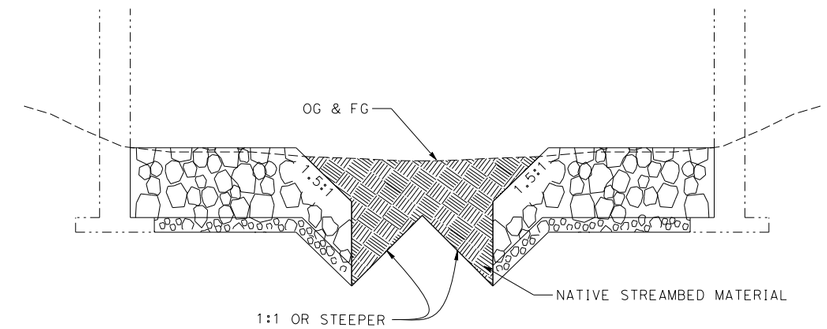

RSP BACKFILL DETAIL

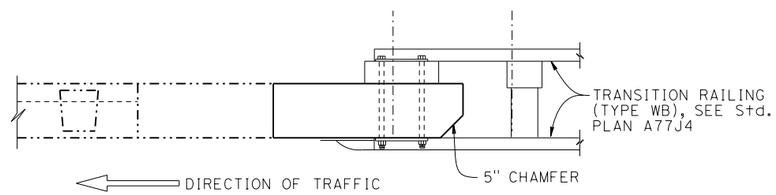

PLAN

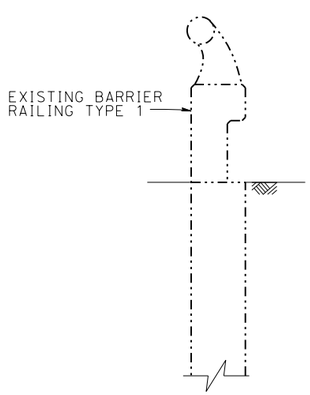

SECTION A-A

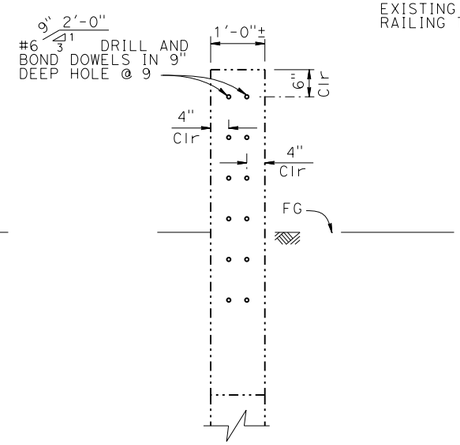

SECTION B-B

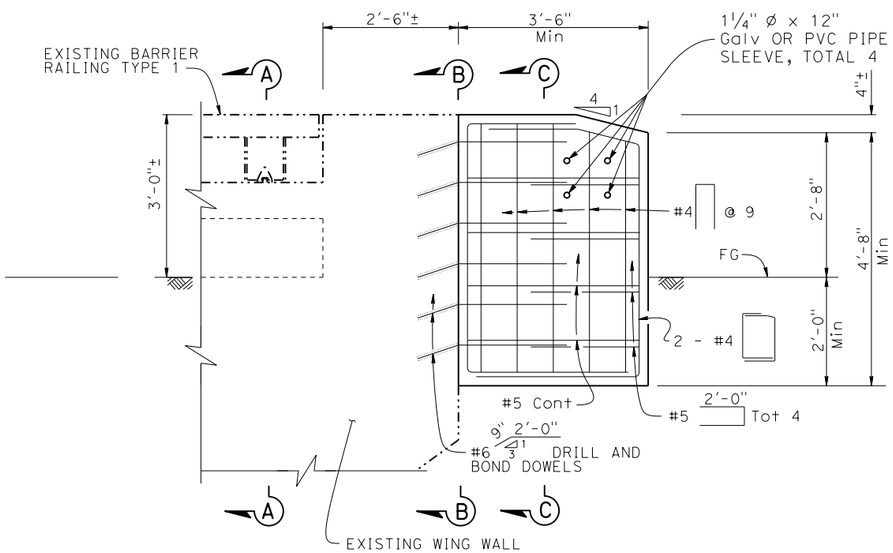

ELEVATION

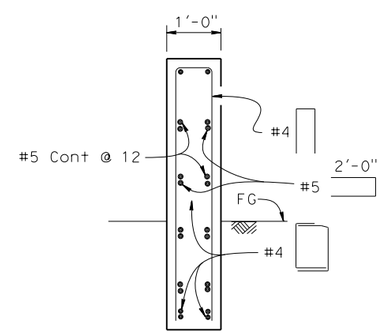

NOTE:
DRILL AND BOND DOWELS NOT SHOWN.

SECTION C-C

CONCRETE BARRIER (TRANSITION ANCHOR BLOCK)

TRANSITION ANCHOR BLOCK TYPE 1

APPROVED FOR CONSTRUCTION DETAIL WORK ONLY

CONSTRUCTION DETAILS

NO SCALE

C-2

REVISED BY	DATE REVISED
ALEX PETERSON	STEVE THORNE

CALCULATED-DESIGNED BY / CHECKED BY

FUNCTIONAL SUPERVISOR: STEVE THORNE

STATE OF CALIFORNIA - DEPARTMENT OF TRANSPORTATION
Caltrans® HYDRAULIC DESIGN

P:\proj1\02\2c225_plans\pse\22c225ga002.dgn

LAST REVISION 10-29-12 | DATE PLOTTED => 18-DEC-2012 | TIME PLOTTED => 11:30

Dist	COUNTY	ROUTE	POST MILES TOTAL PROJECT	SHEET No.	TOTAL SHEETS
02	Teh	36	91.5	5	14

A Mark Loader 10-29-12
REGISTERED CIVIL ENGINEER DATE

10-29-12
PLANS APPROVAL DATE

REGISTERED PROFESSIONAL ENGINEER A. MARK LOADER No. C55825 Exp. 12-31-12 CIVIL STATE OF CALIFORNIA

THE STATE OF CALIFORNIA OR ITS OFFICERS OR AGENTS SHALL NOT BE RESPONSIBLE FOR THE ACCURACY OR COMPLETENESS OF SCANNED COPIES OF THIS PLAN SHEET.

NOTES:

1. FOR ACCURATE RIGHT OF WAY DATA, CONTACT RIGHT OF WAY ENGINEERING AT THE DISTRICT OFFICE.
2. FOR MILL CREEK TEMPORARY CLEAR WATER DIVERSION PROFILE AND DETAILS, SEE SHEET C-4.
3. FOR TEMPORARY STREAM CROSSING DETAILS, SEE SHEET C-4.
4. ADDITIONAL MATERIAL TO BE DETERMINED BY CONTRACTOR

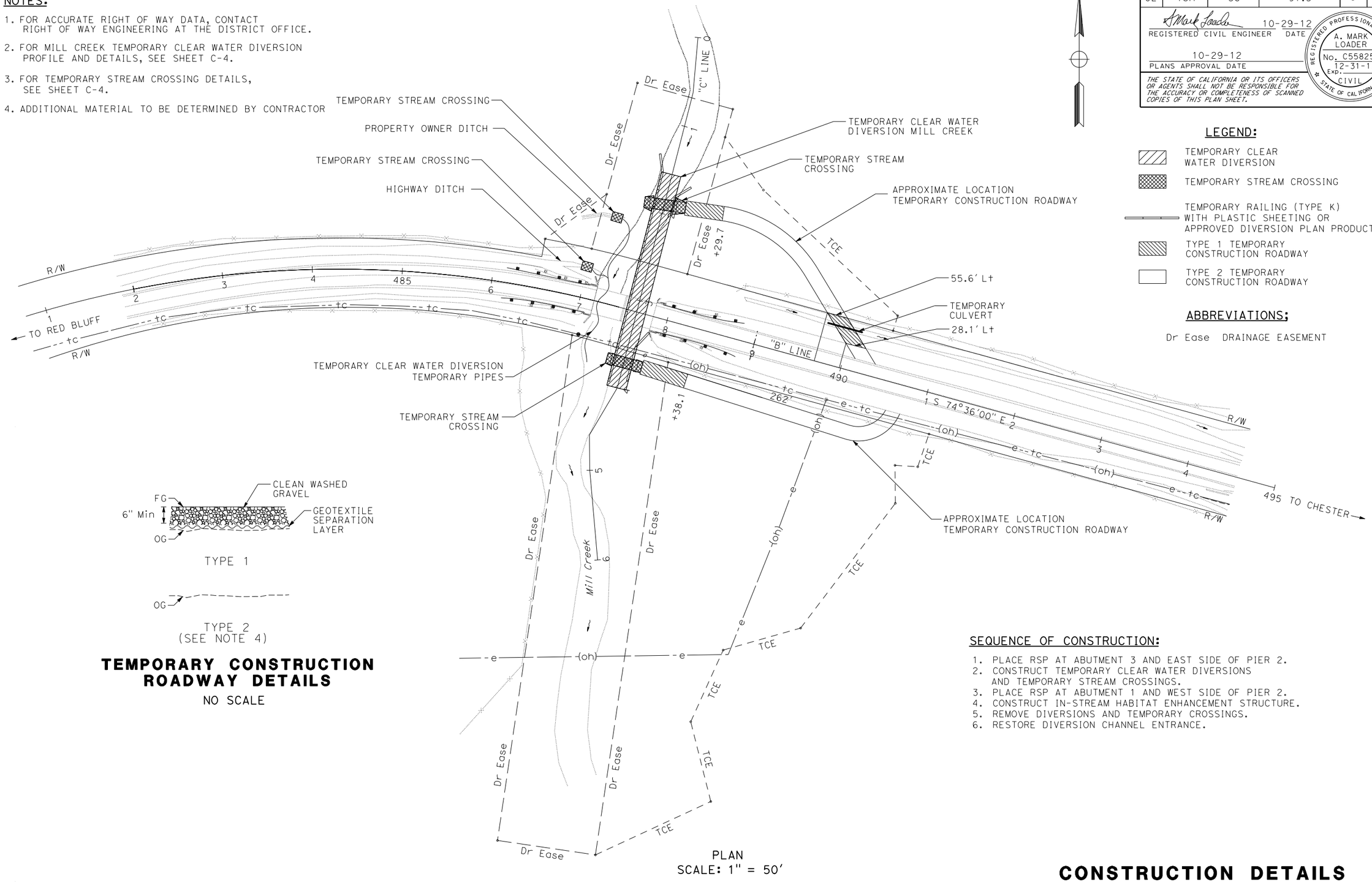

PLAN
SCALE: 1" = 50'

TEMPORARY CONSTRUCTION ROADWAY DETAILS

NO SCALE

LEGEND:

- TEMPORARY CLEAR WATER DIVERSION
- TEMPORARY STREAM CROSSING
- TEMPORARY RAILING (TYPE K) WITH PLASTIC SHEETING OR APPROVED DIVERSION PLAN PRODUCT
- TYPE 1 TEMPORARY CONSTRUCTION ROADWAY
- TYPE 2 TEMPORARY CONSTRUCTION ROADWAY

ABBREVIATIONS;

Dr Ease DRAINAGE EASEMENT

SEQUENCE OF CONSTRUCTION:

1. PLACE RSP AT ABUTMENT 3 AND EAST SIDE OF PIER 2.
2. CONSTRUCT TEMPORARY CLEAR WATER DIVERSIONS AND TEMPORARY STREAM CROSSINGS.
3. PLACE RSP AT ABUTMENT 1 AND WEST SIDE OF PIER 2.
4. CONSTRUCT IN-STREAM HABITAT ENHANCEMENT STRUCTURE.
5. REMOVE DIVERSIONS AND TEMPORARY CROSSINGS.
6. RESTORE DIVERSION CHANNEL ENTRANCE.

APPROVED FOR CONSTRUCTION DETAIL WORK ONLY

CONSTRUCTION DETAILS

SCALE: AS SHOWN

C-3

REVISED BY	DATE REVISED
MARK LOADER	ALEX PETERSON
CALCULATED-DESIGNED BY	CHECKED BY
FUNCTIONAL SUPERVISOR	STEVE THORNE

STATE OF CALIFORNIA - DEPARTMENT OF TRANSPORTATION
Caltrans® HYDRAULIC DESIGN

P:\proj\02\2c225_plans\pse\22c225ga003.dgn

LAST REVISION 10-29-12 | DATE PLOTTED => 18-DEC-2012 | TIME PLOTTED => 11:30

Dist	COUNTY	ROUTE	POST MILES TOTAL PROJECT	SHEET No.	TOTAL SHEETS
02	Teh	36	91.5	6	14

A Mark Loader 10-29-12
REGISTERED CIVIL ENGINEER DATE

10-29-12
PLANS APPROVAL DATE

REGISTERED PROFESSIONAL ENGINEER A. MARK LOADER No. C55825 Exp. 12-31-12 CIVIL STATE OF CALIFORNIA

THE STATE OF CALIFORNIA OR ITS OFFICERS OR AGENTS SHALL NOT BE RESPONSIBLE FOR THE ACCURACY OR COMPLETENESS OF SCANNED COPIES OF THIS PLAN SHEET.

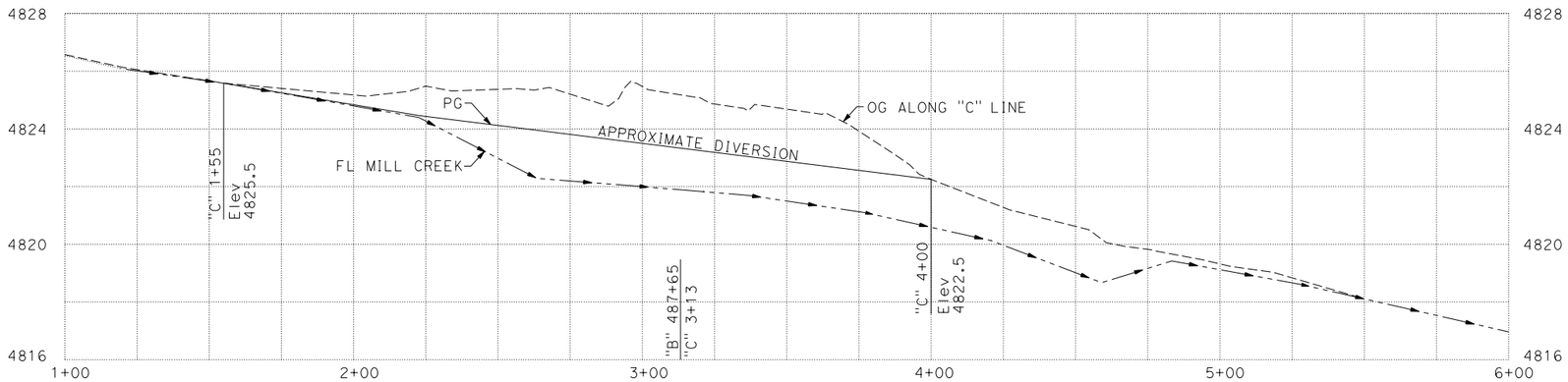

"C" LINE PROFILE

SCALE: 1" = 50' Horiz
1" = 5' Vert

NOTES:

1. FIELD VERIFY ALL MEASUREMENTS AND ELEVATIONS.
2. (N) - NOT A SEPARATE PAY ITEM, FOR INFORMATION ONLY.

TEMPORARY CLEAR WATER DIVERSION AND TEMPORARY STREAM CROSSING QUANTITIES

APPROXIMATE STATION	(N) EXCAVATION	(N) Temp RAILING (TYPE K)	(N) CLEAN WASHED GRAVEL	(N) PLASTIC SHEETING	(N) TEMPORARY PIPES	(N) TEMPORARY BRIDGE	(N) NATIVE STREAMBED MATERIAL
	CY	LF	CY	SQYD	LF	LS	LS
"C" 1+55 TO 4+00	180	360		400		2	
STREAM CROSSING ABUTMENTS, "C" 1+55 TO 4+00			44				
RESTORE DIVERSION CHANNEL, "C" 1+55 TO 4+00							180
PROPERTY OWNER DITCH, "B" 487+05, 34' Lt					180	1	
HIGHWAY DITCH, "B" 487+25, 96' Lt					20	1	
TOTAL	180	360	44	400	200	4	180

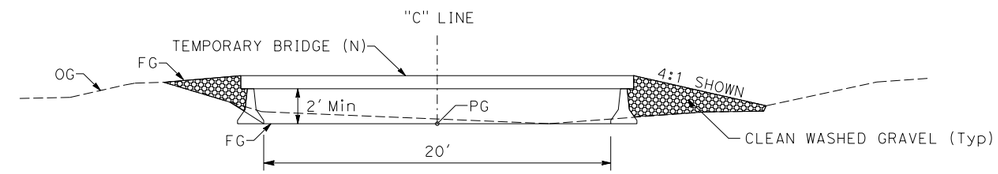

ONE 20' OPENING OPTION

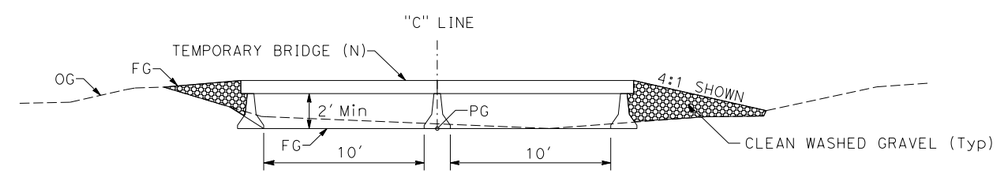

TWO 10' OPENINGS OPTION

TYPICAL SECTION

MILL CREEK DIVERSION CHANNEL TEMPORARY STREAM CROSSING

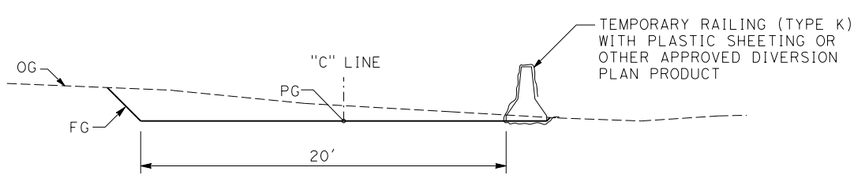

TYPICAL SECTION

TEMPORARY MILL CREEK CLEAR WATER DIVERSION

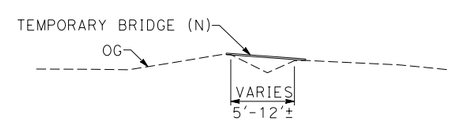

TYPICAL SECTION

PROPERTY OWNER DITCH AND HIGHWAY DITCH TEMPORARY STREAM CROSSING

APPROVED FOR CONSTRUCTION DETAIL WORK ONLY

CONSTRUCTION DETAILS

NO SCALE

C-4

REVISED BY | DATE REVISED
MARK LOADER | ALEX PETERSON
CALCULATED-DESIGNED BY | CHECKED BY
FUNCTIONAL SUPERVISOR | STEVE THORNE
STATE OF CALIFORNIA - DEPARTMENT OF TRANSPORTATION
Caltrans® HYDRAULIC DESIGN

P:\proj1\02\2c225_plans\pse\22c225ga004.dgn

LAST REVISION 10-29-12 | DATE PLOTTED => 18-DEC-2012 | TIME PLOTTED => 11:30

Dist	COUNTY	ROUTE	POST MILES TOTAL PROJECT	SHEET No.	TOTAL SHEETS
02	Teh	36	91.5	7	14

A. Mark Loader 10-29-12
REGISTERED CIVIL ENGINEER DATE

10-29-12
PLANS APPROVAL DATE

REGISTERED PROFESSIONAL ENGINEER A. MARK LOADER No. C55825 Exp. 12-31-12 CIVIL STATE OF CALIFORNIA

THE STATE OF CALIFORNIA OR ITS OFFICERS OR AGENTS SHALL NOT BE RESPONSIBLE FOR THE ACCURACY OR COMPLETENESS OF SCANNED COPIES OF THIS PLAN SHEET.

NOTE:

1. FOR ACCURATE RIGHT OF WAY DATA, CONTACT RIGHT OF WAY ENGINEERING AT THE DISTRICT OFFICE.

LEGEND:

RIPARIAN AREA
TFESA — TEMPORARY FENCE (TYPE ESA)
BIRD DETERRENT AREA

ABBREVIATIONS:

TFESA TEMPORARY FENCE (TYPE ESA)

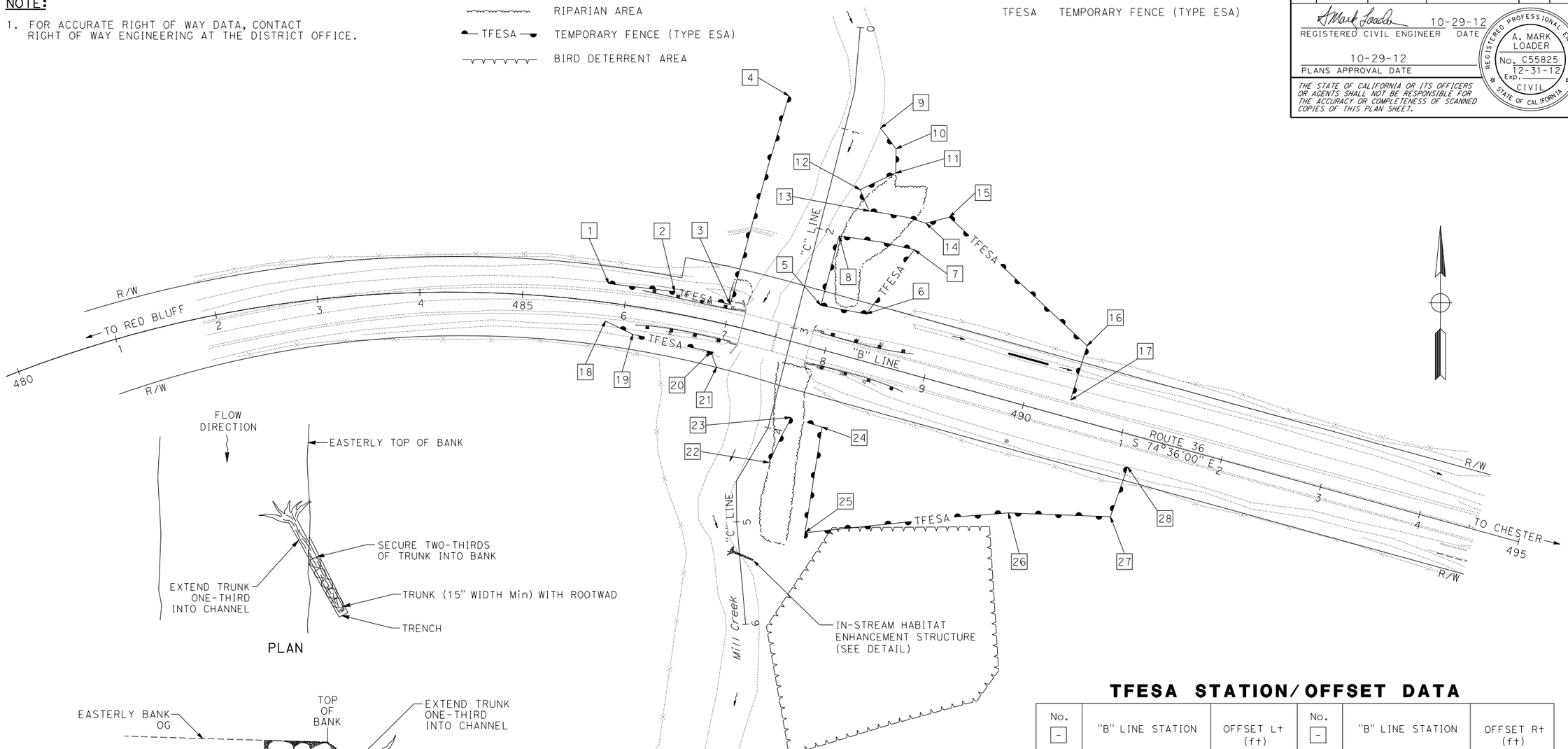

PLAN

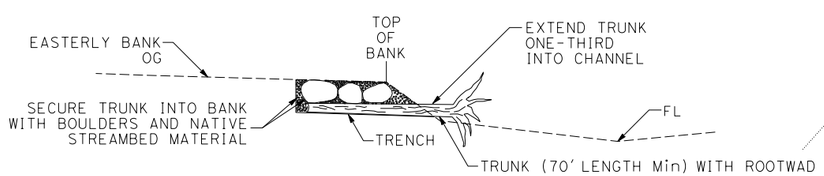

TYPICAL SECTION
(LOOKING DOWNSTREAM)

IN-STREAM HABITAT ENHANCEMENT STRUCTURE DETAIL

NO SCALE

NOTE:
1. FINAL LOCATION AND ORIENTATION TO BE DETERMINED BY ENGINEER AND CALIFORNIA DEPARTMENT OF FISH AND GAME.

TFESA STATION/OFFSET DATA

No.	"B" LINE STATION	OFFSET Lt (ft)	No.	"B" LINE STATION	OFFSET Rt (ft)
1	485+82	19	18	485+83	18
2	486+45	21	19	486+12	27
3	487+00	20	20	486+92	29
4	487+08	243	21	487+01	43
5	487+84	41	22	487+76	120
6	488+29	45	23	487+85	72
7	488+58	118	24	488+17	72
8	487+84	111	25	488+28	176
9	487+95	223	26	490+14	104
10	488+15	207	27	491+11	82
11	488+20	185	28	491+14	31
12	487+91	160			
13	488+05	142			
14	488+62	145			
15	488+82	157			
16	490+45	72			
17	490+43	17			

APPROVED FOR CONSTRUCTION DETAIL WORK ONLY

CONSTRUCTION DETAILS

SCALE: 1" = 50'

C-5

REVISED BY	DATE REVISED
MARK LOADER	ALEX PETERSON
CALCULATED-DESIGNED BY	CHECKED BY
FUNCTIONAL SUPERVISOR	STEVE THORNE

STATE OF CALIFORNIA - DEPARTMENT OF TRANSPORTATION
Caltrans® HYDRAULIC DESIGN

P:\proj\02\2c225_plans\pse\22c225ga005.dgn

LAST REVISION 10-29-12
DATE PLOTTED => 18-DEC-2012
TIME PLOTTED => 11:30

Dist	COUNTY	ROUTE	POST MILES TOTAL PROJECT	SHEET No.	TOTAL SHEETS
02	Teh	36	91.5	8	14

LICENSED LANDSCAPE ARCHITECT

10-29-12
PLANS APPROVAL DATE

LICENSED LANDSCAPE ARCHITECT J. PATRICK SULLIVAN #3125 STATE OF CALIFORNIA
Signature 07/31/14 Renewal Date 08/21/12 Date

THE STATE OF CALIFORNIA OR ITS OFFICERS OR AGENTS SHALL NOT BE RESPONSIBLE FOR THE ACCURACY OR COMPLETENESS OF SCANNED COPIES OF THIS PLAN SHEET.

NOTE:

1. FOR ACCURATE RIGHT OF WAY DATA, CONTACT RIGHT OF WAY ENGINEERING AT THE DISTRICT OFFICE.

LEGEND

HYDROSEED

ABBREVIATIONS;

Dr Ease DRAINAGE EASEMENT

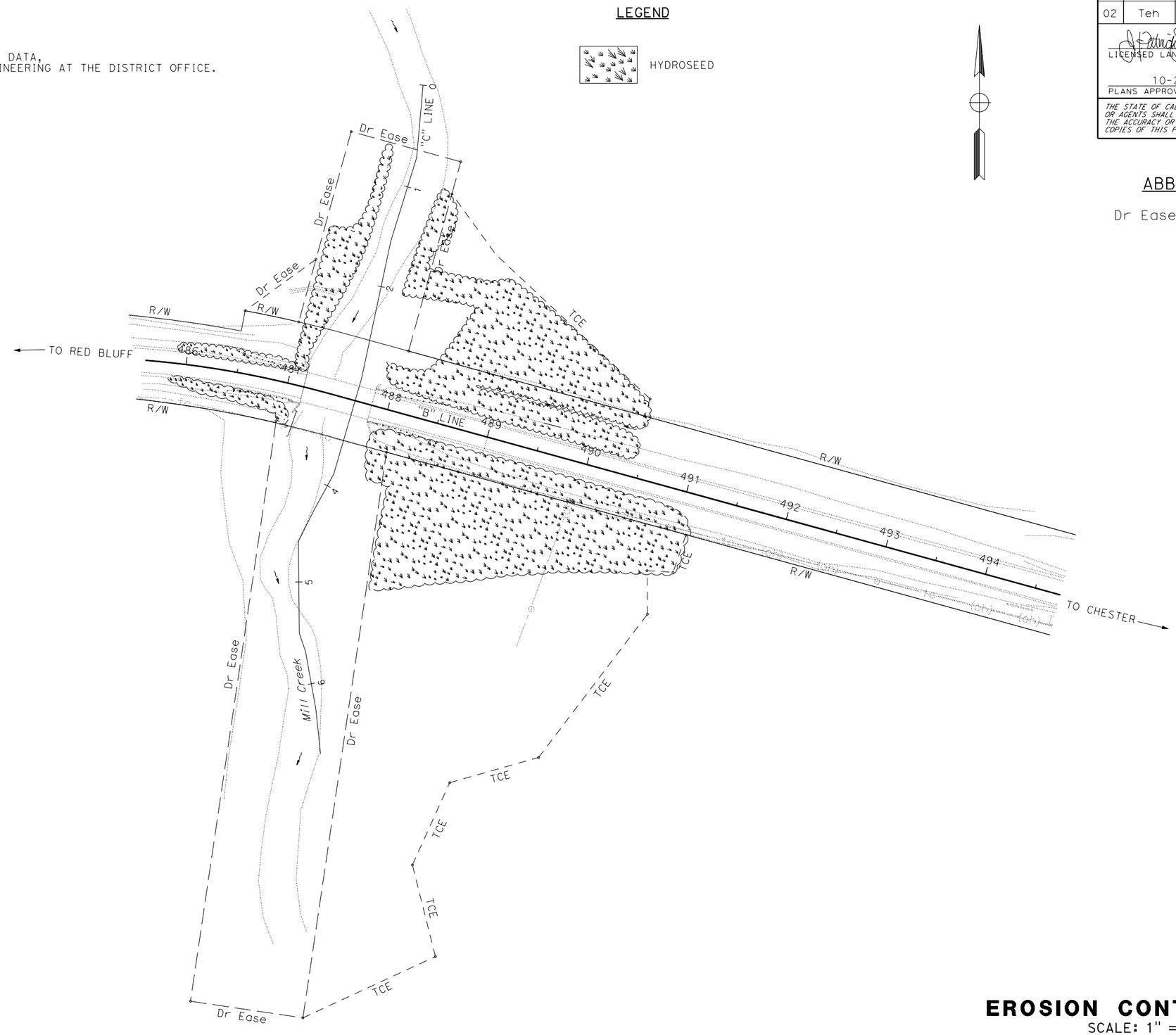

EROSION CONTROL PLAN

SCALE: 1" = 50'

EC-1

APPROVED FOR LANDSCAPE WORK ONLY

REVISED BY	J. PATRICK SULLIVAN
DATE REVISED	RON FLORY
CALCULATED-DESIGNED BY	SENIOR LANDSCAPE ARCHITECT
CHECKED BY	RON FLORY

STATE OF CALIFORNIA - DEPARTMENT OF TRANSPORTATION
Caltrans® LANDSCAPE ARCHITECTURE

P:\proj1\02\2c225_plans\pse\22c225ge001.dgn

LAST REVISION 08-20-12 | DATE PLOTTED => 18-DEC-2012 | TIME PLOTTED => 11:30

Dist	COUNTY	ROUTE	POST MILES TOTAL PROJECT	SHEET No.	TOTAL SHEETS
02	Teh	36	91.5	9	14

LICENSED LANDSCAPE ARCHITECT

10-29-12
PLANS APPROVAL DATE

LICENSED LANDSCAPE ARCHITECT J. PATRICK SULLIVAN #3125 Signature 07/31/14 Renewal Date 08/21/12 Date STATE OF CALIFORNIA

THE STATE OF CALIFORNIA OR ITS OFFICERS OR AGENTS SHALL NOT BE RESPONSIBLE FOR THE ACCURACY OR COMPLETENESS OF SCANNED COPIES OF THIS PLAN SHEET.

NOTE:

1. (N) - NOT A SEPARATE PAY ITEM, FOR INFORMATION ONLY

HYDROSEED SEQUENCE/APPLICATION RATES (N)

SEQUENCE	ITEM	MATERIAL DESCRIPTION	MATERIAL TYPE	APPLICATION RATE (N)
STEP 1	HYDROSEED APPLICATION	PURE LIVE SEED	MIX	67 LB/ACRE
		FIBER	ALTERNATE	2000 LB/ACRE
		SLOW RELEASE FERTILIZER	GRANULAR 15-15-15	150 LB/ACRE
STEP 2	HYDROSEED APPLICATION	COMPOST	WOOD PRODUCT	1.2 CY/ ACRE
		FIBER	ALTERNATE	1500 LB/ACRE
		TACKIFIER	PSYLLIUM	150 LB/ACRE

SEED MIX (N)

BOTANICAL NAME (COMMON NAME)	PERCENT GERMINATION (MINIMUM)	POUNDS PURE LIVE SEED PER ACRE (N) (SLOPE MEASUREMENT)
ACHILLEA MILLEFOLIUM (COMMON YARROW)	60	2
ELYMUS GLAUCUS (CALIFORNIA WILD RYE)	80	15
ELYMUS ELYMOIDES (SQUIRRELTAIL)	60	5
FESTUCA IDAHOENSIS (WESTERN FESCUE)	60	15
LASTHENIA CALIFORNICA (DWARF GOLDFIELDS)	50	2
LAYIA PLATYGLOSS (TIDY TIPS)	70	6
LOTUS PURSHIANUS (PURSHING)	70	2
VULPIA MICROSTACHYS (SMALL FESCUE)	80	20

EROSION CONTROL TOTALS

MATERIAL DESCRIPTION	MATERIAL TYPE	TOTALS	
PURE LIVE SEED	MIX	123 LB (N)	HYDROSEED
FIBER	ALTERNATE	6370 LB (N)	
SLOW RELEASE FERTILIZER	GRANULAR 15-15-15	275 LB (N)	
COMPOST	WOOD PRODUCT	2.2 CY (N)	
TACKIFIER	PSYLLIUM	275 LB (N)	
FROM "B" LINE STA 485+70 TO 491+15 Lt/Rt		TOTAL SQFT	72,660

APPROVED FOR LANDSCAPE WORK ONLY

EROSION CONTROL QUANTITIES

ECQ-1

REVISED BY	DATE REVISED
J. PATRICK SULLIVAN	RON FLORY
CALCULATED-DESIGNED BY	CHECKED BY
SENIOR LANDSCAPE ARCHITECT	RON FLORY

STATE OF CALIFORNIA - DEPARTMENT OF TRANSPORTATION
Caltrans® LANDSCAPE ARCHITECTURE

P:\proj1\02\2c225_plans\pse\22c225gh001.dgn

LAST REVISION 10-29-12 | DATE PLOTTED => 18-DEC-2012 | TIME PLOTTED => 11:30

Dist	COUNTY	ROUTE	POST MILES TOTAL PROJECT	SHEET No.	TOTAL SHEETS
02	Teh	36	91.5	10	14

A. Mark Loader 10-29-12
REGISTERED CIVIL ENGINEER DATE

10-29-12
PLANS APPROVAL DATE

REGISTERED PROFESSIONAL ENGINEER A. MARK LOADER No. C55825 Exp. 12-31-12 CIVIL STATE OF CALIFORNIA

THE STATE OF CALIFORNIA OR ITS OFFICERS OR AGENTS SHALL NOT BE RESPONSIBLE FOR THE ACCURACY OR COMPLETENESS OF SCANNED COPIES OF THIS PLAN SHEET.

NOTES:

1. EXACT LOCATION OF ALL SIGNS TO BE DETERMINED BY THE ENGINEER.
2. CALIFORNIA CODES ARE DESIGNATED BY (CA), OTHERWISE FEDERAL CODES ARE SHOWN.
3. EXISTING UTILITY FACILITIES HAVE NOT BEEN PLOTTED ON THESE PLANS.
4. ALL SIGNS SHALL BE BLACK ON ORANGE.

LEGEND:

ONE POST STATIONARY MOUNTED SIGN

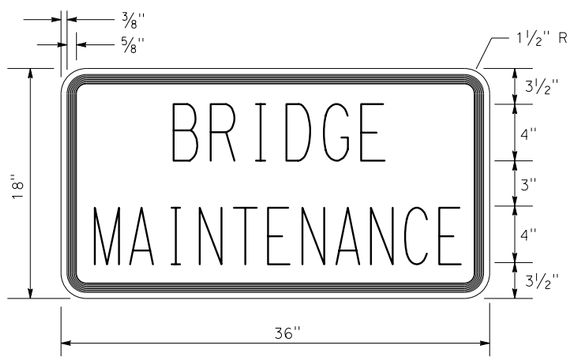

C23B(CA) SIGN PANEL DETAIL

CONSTRUCTION AREA SIGNS (STATIONARY MOUNTED)

SIGN No.	TYPE	PANEL SIZE INCHES	SIGN MESSAGE	No. OF POSTS AND SIZE	No. OF SIGNS
A	W20-1 C23B(CA)	48" x 48" 36" x 18"	ROAD WORK AHEAD BRIDGE MAINTENANCE	1 - 4" x 6"	2
B	G20-2	36" x 18"	END ROAD WORK	1 - 4" x 4"	2

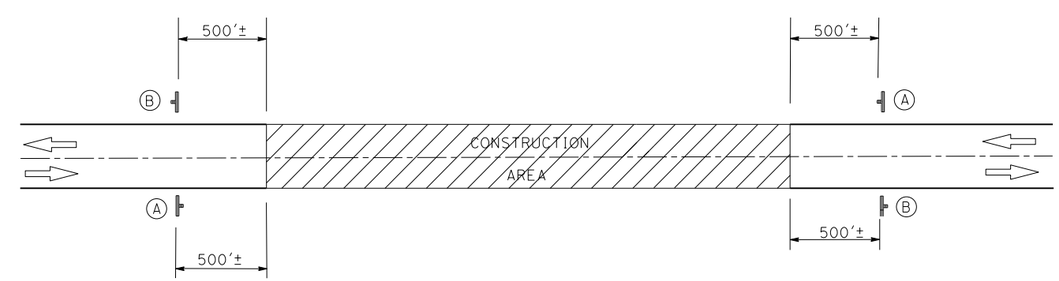

CONSTRUCTION AREA SIGNS

CONSTRUCTION AREA SIGNS

NO SCALE

CS-1

REVISED BY | DATE REVISED
ALEX PETERSON | MARK LOADER
CALCULATED-DESIGNED BY | CHECKED BY
FUNCTIONAL SUPERVISOR | STEVE THORNE

STATE OF CALIFORNIA - DEPARTMENT OF TRANSPORTATION
Caltrans® HYDRAULIC DESIGN

P:\proj\02\2c225_plans\pse\22c2251a001.dgn

LAST REVISION 10-29-12 | DATE PLOTTED => 18-DEC-2012 | TIME PLOTTED => 11:30

Dist	COUNTY	ROUTE	POST MILES TOTAL PROJECT	SHEET No.	TOTAL SHEETS
02	Teh	36	91.5	11	14

A Mark Loader 10-29-12
REGISTERED CIVIL ENGINEER DATE

10-29-12
PLANS APPROVAL DATE

REGISTERED PROFESSIONAL ENGINEER
A. MARK LOADER
No. C55825
Exp. 12-31-12
CIVIL
STATE OF CALIFORNIA

THE STATE OF CALIFORNIA OR ITS OFFICERS OR AGENTS SHALL NOT BE RESPONSIBLE FOR THE ACCURACY OR COMPLETENESS OF SCANNED COPIES OF THIS PLAN SHEET.

TEMPORARY WATER POLLUTION CONTROL QUANTITIES

ITEM	UNIT	QUANTITY
TEMPORARY FENCE (TYPE ESA)	LF	1100
TEMPORARY CONSTRUCTION ENTRANCE	EA	2
TEMPORARY FIBER ROLL	LF	300
TEMPORARY SILT FENCE	LF	150
RAIN EVENT ACTION PLAN	EA	5
STORM WATER ANNUAL REPORT	EA	1
STORM WATER SAMPLING AND ANALYSIS DAY	EA	3
WATER QUALITY SAMPLING AND ANALYSIS DAY	EA	4
WATER QUALITY MONITORING REPORT	EA	2

MBGR QUANTITIES

Co	Rte	PM	BRIDGE No.	BRIDGE NAME	BRIDGE APPROACH QUADRANT		REMOVE MBGR	MBGR	TRANSITION RAILING (TYPE-WB)	CONCRETE BARRIER (TRANSITION ANCHOR BLOCK)	ALTERNATIVE		OBJECT MARKER (TYPE L-1)
											IN-LINE TERMINAL SYSTEM	FLARED TERMINAL SYSTEM	
							LF	LF	EA	LF	EA	EA	EA
Teh	36	91.5	08-0133	MILL CREEK	BB	Lt	62.5	50.0	1	3.5	1		
						Rt	62.5	37.5	1	3.5		1	1
					EB	Lt	62.5	37.5	1	3.5		1	1
						Rt	62.5	37.5	1	3.5		1	
						TOTAL	250	163	4	14.0	1	3	2

ROADWAY QUANTITIES

Loc	Co	Rte	PM	BRIDGE No.	BRIDGE NAME	BRIDGE APPROACH AND DEPARTURE PAVEMENT		THERMOPLASTIC TRAFFIC STRIPE (SPRAYABLE)		TACK COAT	12" Temp CULVERT	ROADWAY EXCAVATION	RECONSTRUCT FENCE
						COLD PLANE AC PAVEMENT	HMA (TYPE A)	DETAIL 21	DETAIL 27B				
						SQYD	TON	LF	LF	TON	LF	CY	LF
1	Teh	36	91.5	08-0133	MILL CREEK	760	180	320	640	0.30	40	5.0	100
					TOTAL	760	180	960		0.30	40	5.0	100

SUMMARY OF QUANTITIES
Q-1

REVISED BY	DATE REVISED
ALEX PETERSON	MARK LOADER
CALCULATED-DESIGNED BY	CHECKED BY
FUNCTIONAL SUPERVISOR	STEVE THORNE

STATE OF CALIFORNIA - DEPARTMENT OF TRANSPORTATION
Caltrans® HYDRAULIC DESIGN

P:\proj1\02\22c225_plans\pse\22c225pa001.dgn

LAST REVISION 10-29-12 | DATE PLOTTED => 18-DEC-2012 | TIME PLOTTED => 11:30

DIST	COUNTY	ROUTE	POST MILES TOTAL PROJECT	SHEET No	TOTAL SHEETS
02	Teh	36	91.5	12	14

REGISTERED CIVIL ENGINEER 9-24-12 DATE

10-29-12
PLANS APPROVAL DATE

REGISTERED PROFESSIONAL ENGINEER Jose M Aquino III No. 58386 Exp. 12-31-12 CIVIL STATE OF CALIFORNIA

The State of California or its officers or agents shall not be responsible for the accuracy or completeness of electronic copies of this plan sheet.

To get to the Caltrans web site, go to: http://www.dot.ca.gov

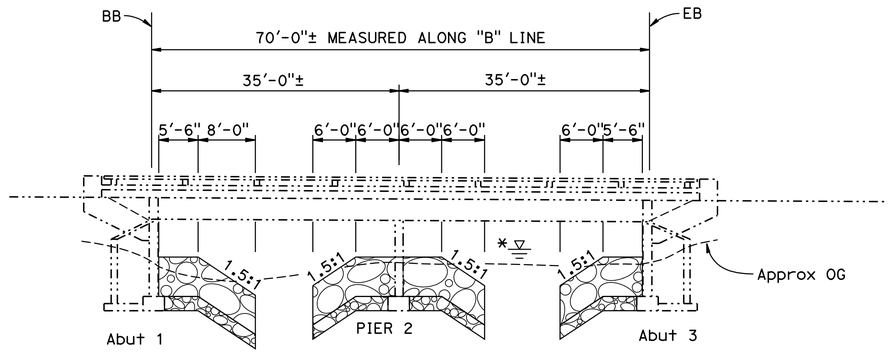

* For "HYDROLOGIC SUMMARY" see "FOUNDATION PLAN" sheet

DATUM Elev 4800.0'

487+00 488+00

ELEVATION

1" = 10'

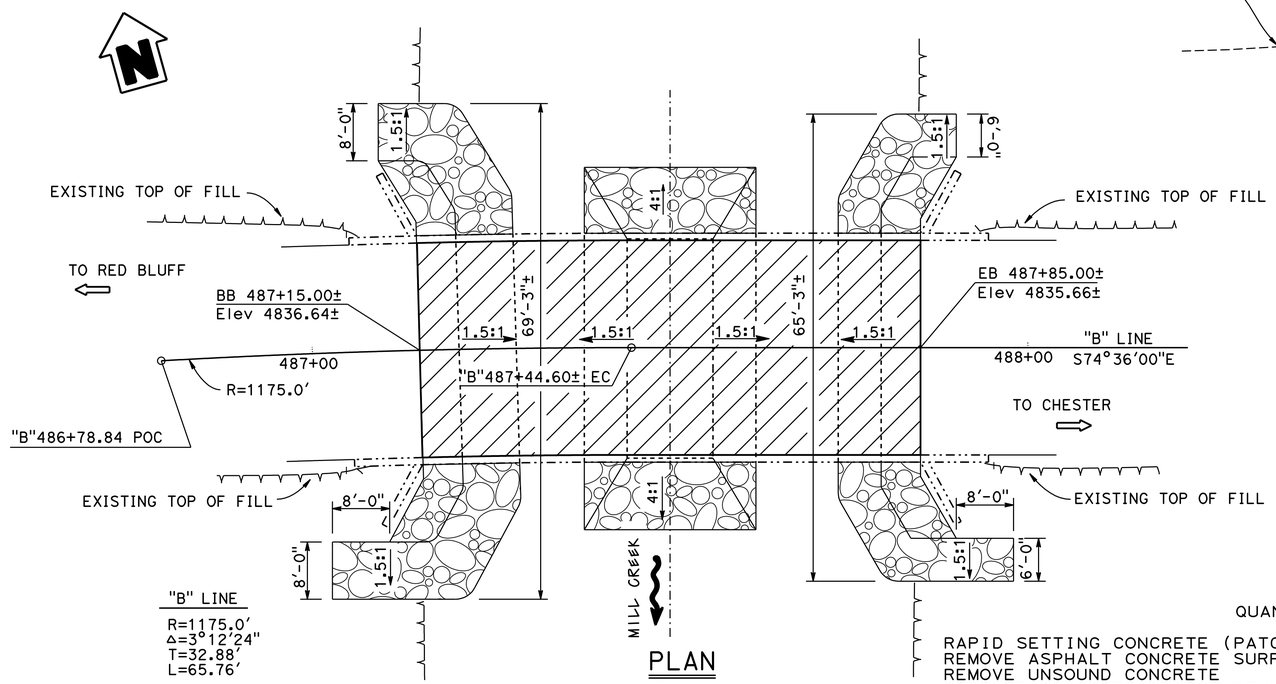

PLAN

1" = 10'

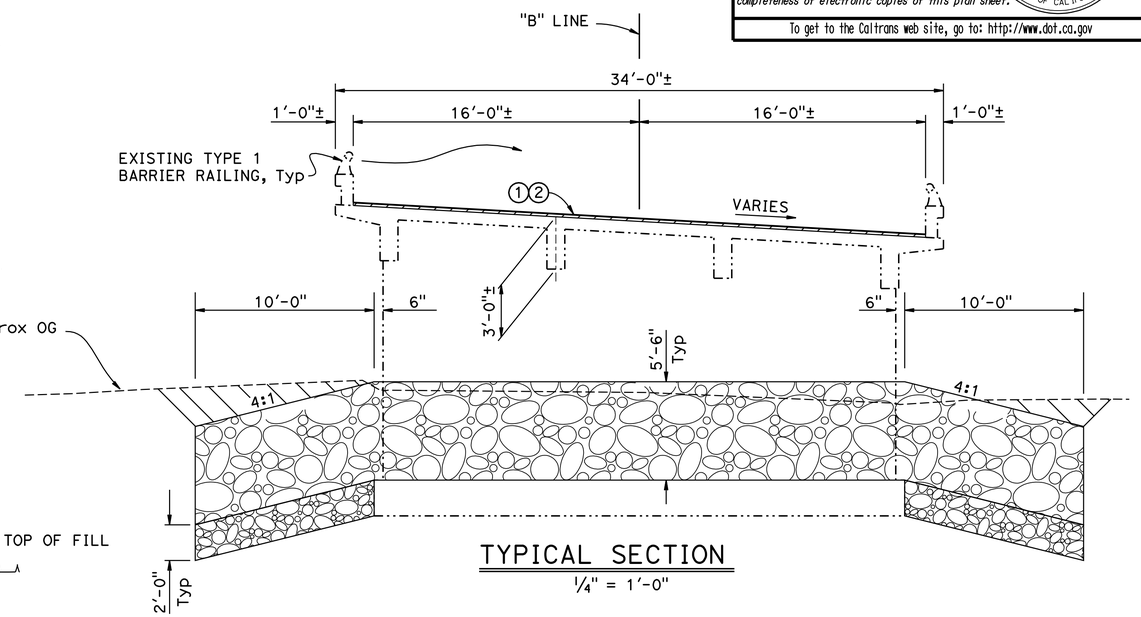

TYPICAL SECTION

¼" = 1'-0"

LEGEND:

- Indicates Existing Structure
- (1) Remove Existing 3"± AC surfacing
- (2) ¾" Min Polyester Concrete Overlay
- Indicates limits of remove existing AC surfacing & remove unsound concrete, rapid setting concrete patching, prepare bridge deck and polyester concrete overlay
- Indicates RSP (2 Ton Method A)
- Indicates equal parts mix of RSP #1 & RSP #3 (method B)
- Indicates backfill, see "ROAD PLANS"

QUANTITIES

RAPID SETTING CONCRETE (PATCH)	11	CF
REMOVE ASPHALT CONCRETE SURFACING	2,240	SQFT
REMOVE UNSOUND CONCRETE	11	CF
PREPARE CONCRETE BRIDGE DECK SURFACE	2,240	SQFT
FURNISH POLYESTER CONCRETE OVERLAY	168	CF
PLACE POLYESTER CONCRETE OVERLAY	2,240	SQFT
ROCK SLOPE PROTECTION (2T, METHOD A)	650	CY
ROCK SLOPE PROTECTION (NO. 3, METHOD B) (CY)	115	CY
ROCK SLOPE PROTECTION (NO. 1, METHOD B) (CY)	115	CY

NOTE:
THE CONTRACTOR SHALL VERIFY ALL CONTROLLING FIELD DIMENSIONS BEFORE ORDERING OR FABRICATING ANY MATERIAL.

Joseph Downing
DESIGN ENGINEER

	BY	CHECKED			
DESIGN	Juan Jauregui	Nael Alie	LOAD FACTOR DESIGN	LIVE LOADING: N/A	
DETAILS	J Chlubna & J Reid	Nael Alie	LAYOUT: Joey Aquino		Nael Alie
QUANTITIES	Juan Jauregui	Joey Aquino	SPECIFICATIONS: Tina Chen		PLANS AND SPECS COMPARED: Tina Chen

STATE OF CALIFORNIA
DEPARTMENT OF TRANSPORTATION

DIVISION OF ENGINEERING SERVICES
STRUCTURE DESIGN
DESIGN BRANCH 3

BRIDGE NO. 08-0133
POST MILE 91.46

MILL CREEK BRIDGE (SCOUR MITIGATION)
GENERAL PLAN

ORIGINAL SCALE IN INCHES FOR REDUCED PLANS 0 1 2 3

UNIT: 3578
PROJECT NUMBER & PHASE: 02000201391
CONTRACT NO.: 02-2C2251

DISREGARD PRINTS BEARING EARLIER REVISION DATES

REVISION DATES				SHEET	OF
6-14-12	7-23-12	9-6-12	10-9-12	1	3

USERNAME => s1129963 DATE PLOTTED => 24-OCT-2012 TIME PLOTTED => 11:25

STRUCTURES DESIGN GENERAL PLAN SHEET (ENGLISH) (REV.07-24-06)

FILE => 08-0133-g-gp01.dgn

DIST	COUNTY	ROUTE	POST MILES TOTAL PROJECT	SHEET No	TOTAL SHEETS
02	Teh	36	91.5	13	14

REGISTERED CIVIL ENGINEER 9-24-12 DATE

10-29-12
PLANS APPROVAL DATE

REGISTERED PROFESSIONAL ENGINEER
Jose M Aquino III
No. 58386
Exp. 12-31-12
CIVIL
STATE OF CALIFORNIA

The State of California or its officers or agents shall not be responsible for the accuracy or completeness of electronic copies of this plan sheet.

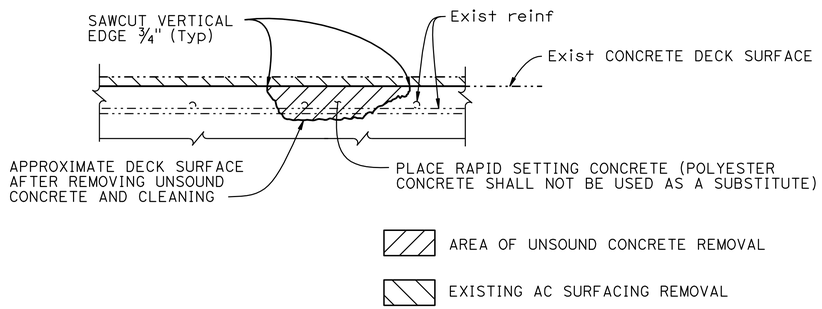

DECK REPAIR DETAIL (PRIOR TO POLYESTER CONCRETE OVERLAY)

No Scale

LOCATIONS TO BE DETERMINED BY THE ENGINEER. REINFORCEMENT MAY BE ENCOUNTERED DURING DECK CONCRETE REMOVAL

BRIDGE DECK REPAIR TABLE

TOTAL DECK AREA ft^2	APPROXIMATE AREA DAMAGED (%)	APPROXIMATE DEPTH (in)	REMOVE UNSOUND CONCRETE ft^3	RAPID SETTING CONCRETE PATCH ft^3
2,240	2	3	11	11

INDEX TO PLANS

SHEET NO.	TITLE
1	GENERAL PLAN
2	INDEX TO PLANS
3	FOUNDATION PLAN

STANDARD PLANS DATED 2010

A10A	ACRONYMS AND ABBREVIATIONS (SHEET 1 OF 2)
A10B	ACRONYMS AND ABBREVIATIONS (SHEET 2 OF 2)
A10C	LINES AND SYMBOLS (SHEET 1 OF 3)
A10D	LINES AND SYMBOLS (SHEET 2 OF 3)
A10E	LINES AND SYMBOLS (SHEET 3 OF 3)

NOTE:
THE CONTRACTOR SHALL VERIFY ALL CONTROLLING FIELD DIMENSIONS BEFORE ORDERING OR FABRICATING ANY MATERIAL.

	BY	CHECKED
DESIGN	Juan Jauregui	Nael Alie
DETAILS	Jay Reid	Nael Alie
QUANTITIES	Juan Jauregui	Joey Aquino

STATE OF CALIFORNIA
DEPARTMENT OF TRANSPORTATION

DIVISION OF ENGINEERING SERVICES
STRUCTURE DESIGN
DESIGN BRANCH 3

BRIDGE NO. 08-0133
POST MILE 91.46

MILL CREEK BRIDGE (SCOUR MITIGATION)
INDEX TO PLANS

STRUCTURES DESIGN DETAIL SHEET (ENGLISH) (REV. 10/25/05)

ORIGINAL SCALE IN INCHES FOR REDUCED PLANS 0 1 2 3

UNIT: 3578
PROJECT NUMBER & PHASE: 02000201391
CONTRACT NO.: 02-2C2251

DISREGARD PRINTS BEARING EARLIER REVISION DATES

REVISION DATES				SHEET	OF
6-14-12	7-23-12	9-6-12		2	3

FILE => 08-0133-a-itp.dgn

USERNAME => s112963 DATE PLOTTED => 24-OCT-2012 TIME PLOTTED => 11:26

DIST	COUNTY	ROUTE	POST MILES TOTAL PROJECT	SHEET No	TOTAL SHEETS
02	Teh	36	91.5	14	14

REGISTERED CIVIL ENGINEER 9-24-12 DATE

10-29-12
PLANS APPROVAL DATE

REGISTERED PROFESSIONAL ENGINEER Jose M Aquino III No. 58386 Exp. 12-31-12 CIVIL STATE OF CALIFORNIA

The State of California or its officers or agents shall not be responsible for the accuracy or completeness of electronic copies of this plan sheet.

To get to the Caltrans web site, go to: http://www.dot.ca.gov

CURVE DATA

No.	R	Δ	T	L
(A)	900.00	11°49′28"	93.20	185.74
(B)	1175.00	3°12′24"	32.89	65.76

Bridge Location

① - 15.82 Lt "B" Line, Sta 487+15.09, Elev= 4837.81 ±
② - 15.98 Rt "B" Line, Sta 487+14.99, Elev= 4835.85 ±
③ - 16.00 Lt "B" Line, Sta 487+84.96, Elev= 4836.40 ±
④ - 15.75 Rt "B" Line, Sta 487+84.90, Elev= 4835.30 ±

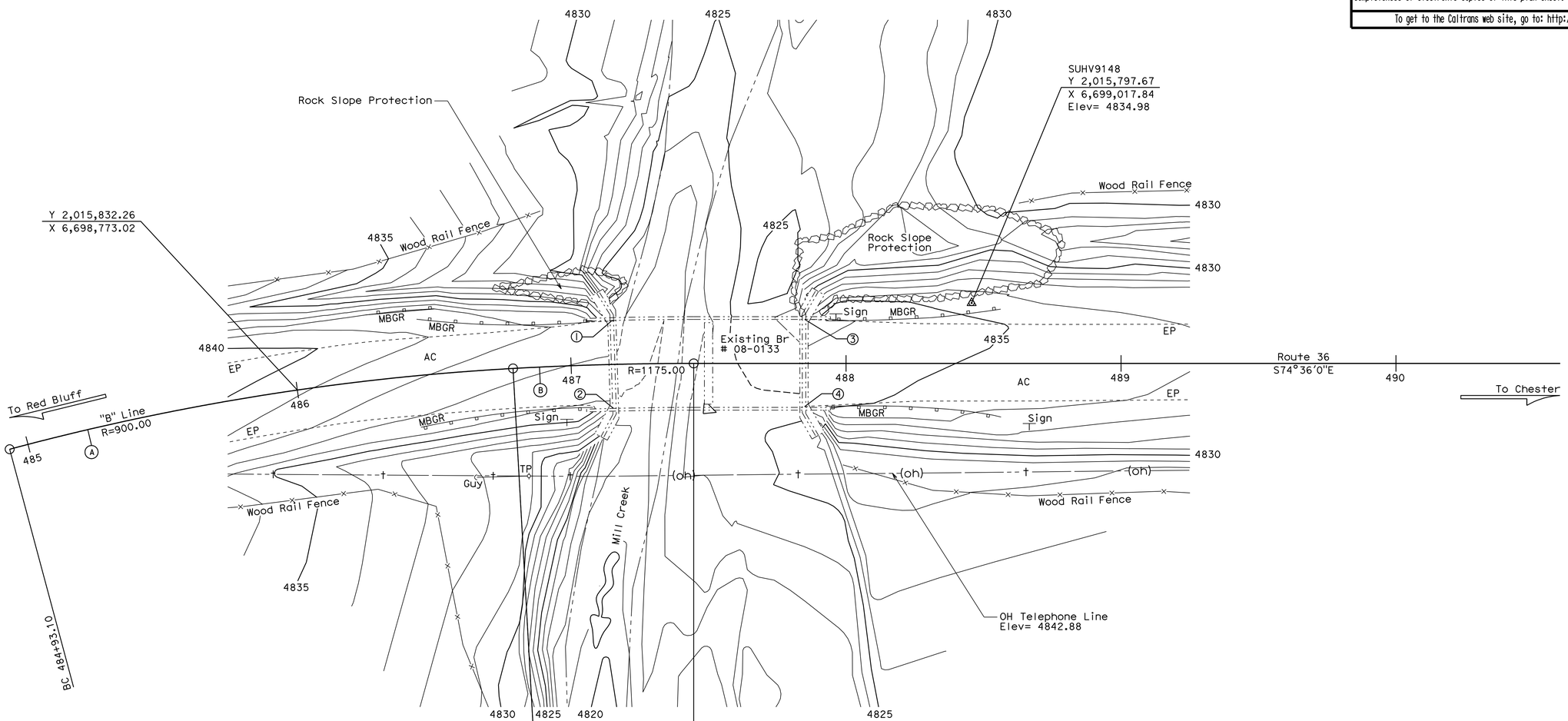

SURVEY CONTROL

SUHV9148
Description Not Known
21.97 Ft Lt "B" Line, Rte 36
Sta 478+45.67
N 2,015,797.67
E 6,699,017.84
Elev= 4834.98

SUHV9158 (Not Shown On Plan)
Description Not Known
39.87 Ft Rt "B" Line, Rte 36
Sta 483+16.49
N 2,015,613.02
E 6,699,455.33
Elev= 4825.67

HYDROLOGIC / HYDRAULIC DATA SUMMARY

DRAINAGE AREA: 20 SQUARE MILES

	DESIGN FLOOD	BASE FLOOD
FREQUENCY (YEARS)	50	100
DISCHARGE (CUBIC FEET PER SECOND)	2900	4000
WATER SURFACE ELEV. (FEET)	4828.5	4829.3

FLOOD PLAIN DATA ARE BASED UPON INFORMATION AVAILABLE WHEN THE PLANS WERE PREPARED AND ARE SHOWN TO MEET FEDERAL REQUIREMENTS. THE ACCURACY OF SAID INFORMATION IS NOT WARRANTED BY THE STATE AND INTERESTED OR AFFECTED PARTIES SHOULD MAKE THEIR OWN INVESTIGATIONS.

PRELIMINARY INVESTIGATION SECTION

SCALE	VERT.DATUM Not Provided	PHOTOGRAMMETRY AS OF: X			
1"=20'	HORZ.DATUM Not Provided	SURVEYED	BY District	CHECKED	BY J.Pallares 01/2010
ALIGNMENT TIES Dist. Traverse Sheet		DRAFTED	BY J.Martinez 01/2010	CHECKED	BY J.Pallares 01/2010

	BY	CHECKED
DESIGN	Juan Jauregui	Nael Alie
DETAILS	Jay Reid	Nael Alie
QUANTITIES	Juan Jauregui	Joey Aquino

STATE OF CALIFORNIA DEPARTMENT OF TRANSPORTATION

DIVISION OF ENGINEERING SERVICES STRUCTURE DESIGN DESIGN BRANCH 3

BRIDGE NO. 08-0133
POST MILE 91.46

MILL CREEK BRIDGE (SCOUR MITIGATION)
FOUNDATION PLAN

STRUCTURES FOUNDATION PLAN SHEET (ENGLISH) (REV. 10/25/05)

ORIGINAL SCALE IN INCHES FOR REDUCED PLANS 0 1 2 3

UNIT: 3578
PROJECT NUMBER & PHASE: 02000201391 CONTRACT NO.: 02-2C2251

DISREGARD PRINTS BEARING EARLIER REVISION DATES

REVISION DATES				SHEET	OF
6-14-12				3	3

FILE => 08-0133-e-fp101.dgn

USERNAME => s112963 DATE PLOTTED => 24-OCT-2012 TIME PLOTTED => 11:26