Dist	COUNTY	ROUTE	POST MILES TOTAL PROJECT	SHEET No.	TOTAL SHEETS
02	Sha	5	R44.0/58.0	3	142

REGISTERED CIVIL ENGINEER 08-23-10 DATE

06-01-10
PLANS APPROVAL DATE

REGISTERED PROFESSIONAL ENGINEER BYRON H. STANLEY No. C60161 Exp. 6-30-10 CIVIL STATE OF CALIFORNIA

THE STATE OF CALIFORNIA OR ITS OFFICERS OR AGENTS SHALL NOT BE RESPONSIBLE FOR THE ACCURACY OR COMPLETENESS OF SCANNED COPIES OF THIS PLAN SHEET.

NOTES:
1. SLOPE MEDIAN AWAY FROM BARRIER IN TANGENT SECTIONS.
2. EXISTING UTILITY FACILITIES HAVE NOT BEEN POSITIVELY IDENTIFIED.
3. COLD PLANE Exist AC TO PCC.

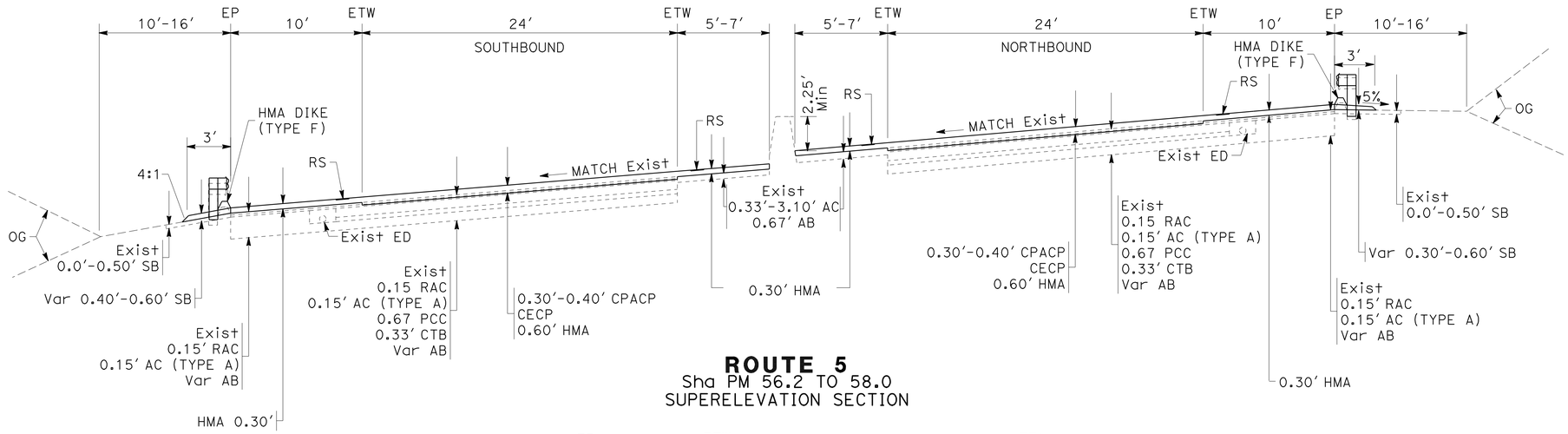

ROUTE 5
Sha PM 56.2 TO 58.0
SUPERELEVATION SECTION

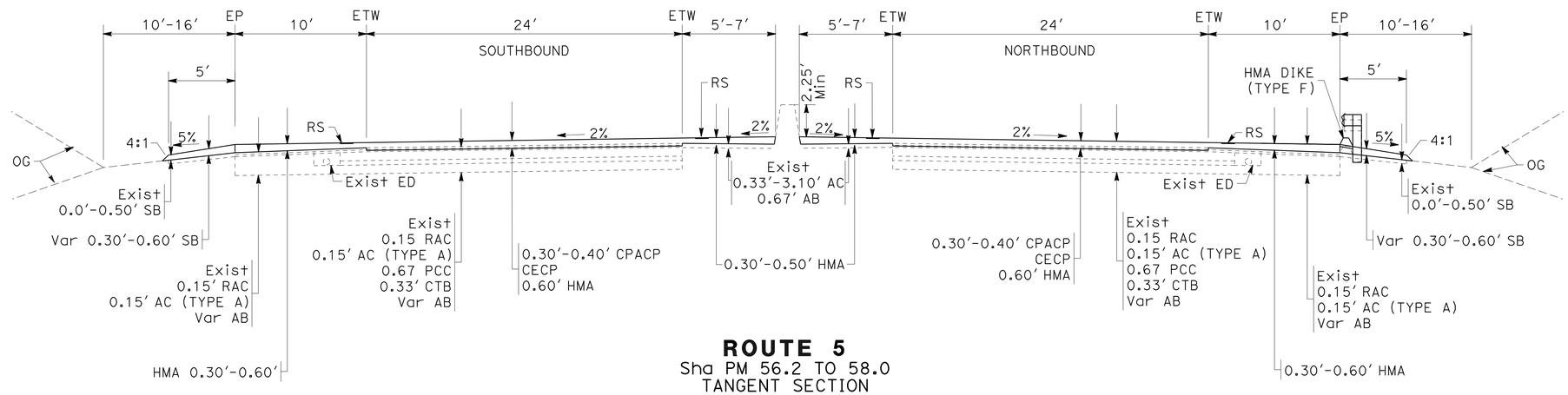

ROUTE 5
Sha PM 56.2 TO 58.0
TANGENT SECTION

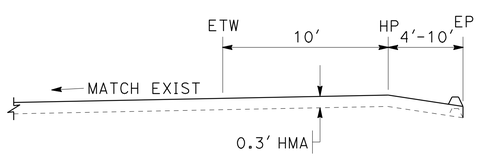

SUPERELEVATION SECTION

1

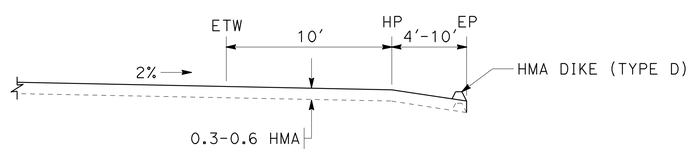

TANGENT SECTION

ROUTE 5
NORTHBOUND: PM 56.82-56.88, 56.89-57.04, 57.53-57.69
SOUTHBOUND: PM 56.23-56.27, 56.44-56.56, 56.62-56.79

1 **REVISED PER ADDENDA NO. 1 DATED SEPTEMBER 28, 2010**

TYPICAL CROSS SECTIONS

NO SCALE

X-2

REVISED BY | DATE REVISED
ANDREW STECKLEIN | BYRON STANLEY
CALCULATED-DESIGNED BY | CHECKED BY
FUNCTIONAL SUPERVISOR: STEVE TOPAL
STATE OF CALIFORNIA - DEPARTMENT OF TRANSPORTATION
Caltrans DESIGN

LAST REVISION 08-23-10 | DATE PLOTTED => 27-SEP-2010 | TIME PLOTTED => 15:05

p:\proj1\02\2c450_plans\contract_plans\ADDENDUM 08-23-10\22c450ca002.dgn

Dist	COUNTY	ROUTE	POST MILES TOTAL PROJECT	SHEET No.	TOTAL SHEETS
02	Sha	5	R44.0/58.0	40	142

REGISTERED CIVIL ENGINEER 08-23-10 DATE

06-01-10
PLANS APPROVAL DATE

REGISTERED PROFESSIONAL ENGINEER
BYRON H. STANLEY
No. C60161
Exp. 6-30-10
CIVIL
STATE OF CALIFORNIA

THE STATE OF CALIFORNIA OR ITS OFFICERS OR AGENTS SHALL NOT BE RESPONSIBLE FOR THE ACCURACY OR COMPLETENESS OF SCANNED COPIES OF THIS PLAN SHEET.

1

NOTES:

1. EXACT LOCATION AND POSITION OF CONSTRUCTION AREA SIGNS TO BE DETERMINED BY THE ENGINEER.
2. SEE QUANTITIES FOR STRIPE TYPES.
3. SEE STAGE 2 PLANS FOR WORK NEAR BRIDGES.
4. TEMPORARY STRIPES TO BE PLACED IN FINAL STRIPE LOCATION.

LEGEND

- CHANNELIZERS (SURFACE MOUNT) 50′ C-C (Typ)
- TEMPORARY RAILING (TYPE K) IN PLAN VIEW
- TEMPORARY RAILING (TYPE K) IN SECTIONAL VIEW
- STAGE CONSTRUCTION
- DIRECTION OF TRAVEL
- PORTABLE FLASHING BEACONS
- FLASHING ARROW SIGN
- TRAFFIC CONE
- CHANNELIZER (SURFACE MOUNTED)

ABBREVIATIONS

P	OBJECT MARKER (TYPE P)
LL	LANE LINE
CB	CONCRETE BARRIER
TTS	TEMPORARY TRAFFIC STRIPE
TS	FINAL TS (TRAFFIC STRIPE) REMOVE

STAGE 1A WORK ITEMS:

1. IMPLEMENT T10 LANE CLOSURE
2. FLUSH EDGE DRAINS (PRIOR TO COLD PLANE)
3. CPACP OUTSIDE SHOULDER
4. PLACE HMA OUTSIDE SHOULDER
5. PLACE BLACK STRIPE ON EDGELINE
6. REMOVE T10 LANE CLOSURE

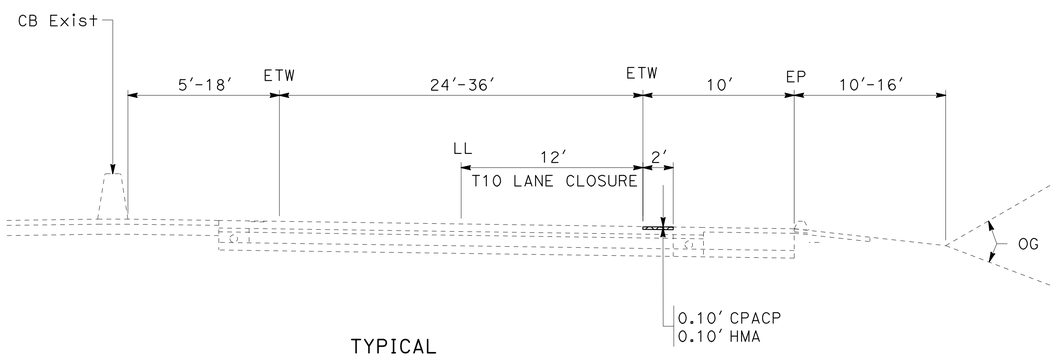

TYPICAL
PM R44.0 TO 56.2

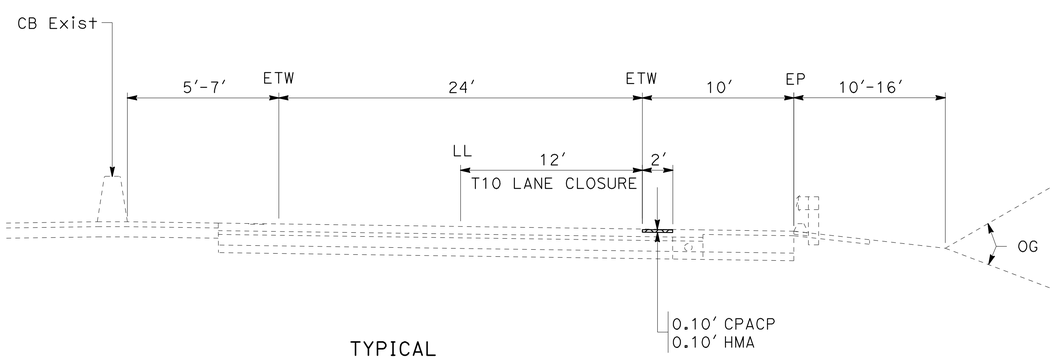

TYPICAL
PM 56.2 TO 58.0

COLD PLANE AC AND PLACE HMA

1 **REVISED PER ADDENDA No. 1 DATED SEPTEMBER 28, 2010**

STAGE 1A

STAGE CONSTRUCTION AND TRAFFIC HANDLING

NO SCALE

SC-1

STATE OF CALIFORNIA - DEPARTMENT OF TRANSPORTATION
Caltrans
DESIGN

FUNCTIONAL SUPERVISOR: STEVE TOPAL
CALCULATED-DESIGNED BY: ANDREW STECKLEIN
CHECKED BY: BYRON STANLEY
REVISED BY
DATE REVISED

p:\proj1\02\2c450_plans\contract_plans\ADDENDUM 08-23-10\22c450ma001.dgn

LAST REVISION 08-23-10 | DATE PLOTTED => 27-SEP-2010 | TIME PLOTTED => 15:05

Dist	COUNTY	ROUTE	POST MILES TOTAL PROJECT	SHEET No.	TOTAL SHEETS
02	Sha	5	R44.0/58.0	41	142

REGISTERED CIVIL ENGINEER 08-23-10 DATE

06-01-10
PLANS APPROVAL DATE

REGISTERED PROFESSIONAL ENGINEER BYRON H. STANLEY No. C60161 Exp. 6-30-10 CIVIL STATE OF CALIFORNIA

THE STATE OF CALIFORNIA OR ITS OFFICERS OR AGENTS SHALL NOT BE RESPONSIBLE FOR THE ACCURACY OR COMPLETENESS OF SCANNED COPIES OF THIS PLAN SHEET.

1

NOTES:

1. USE SURFACE MOUNTED CHANNELIZER ON RIGHT SIDE IN ABSENCE OF MBGR.
2. TEMPORARY TRAFFIC STRIPE TO BE PLACED IN FINAL STRIPE LOCATION.
3. TRAFFIC HANDLING SIGNS FOR STAGE CONSTRUCTION ARE TO BE MOUNTED ON A TYPE III BARRICADE.
4. MEDIAN SIGNS NOT NEEDED WHERE MEDIAN WIDTH IS LESS THAN 8′.

STAGE 1B WORK ITEMS:

1. IMPLEMENT STAGE 1B TRAFFIC HANDLING MEASURES
2. CPACP AND PLACE HMA INSIDE SHOULDER, #1 LANE AND #2 LANE WHERE TRUCK CLIMBING LANE EXISTS
3. CRACK EXISTING CONCRETE PAVEMENT (PM 56.2-58.0)
4. REMOVE STAGE 1B TRAFFIC HANDLING MEASURES

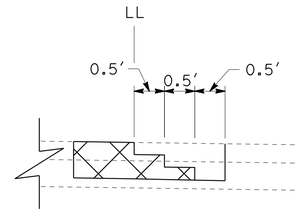

DETAIL A
STAGGER HMA LIFTS

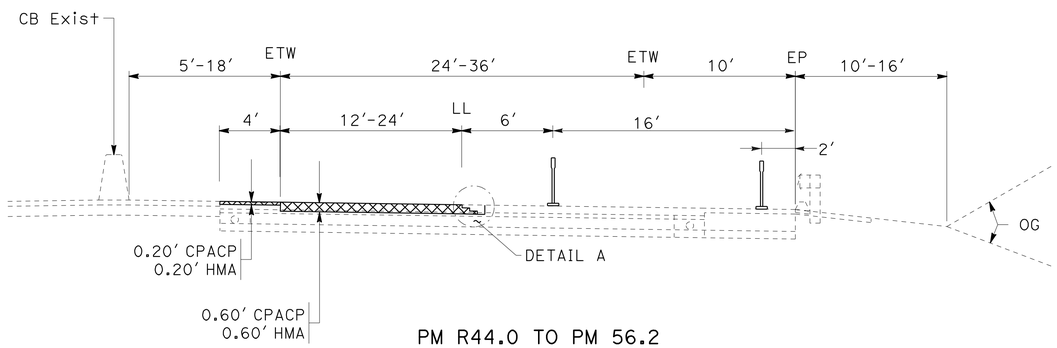

PM R44.0 TO PM 56.2
TYPICAL

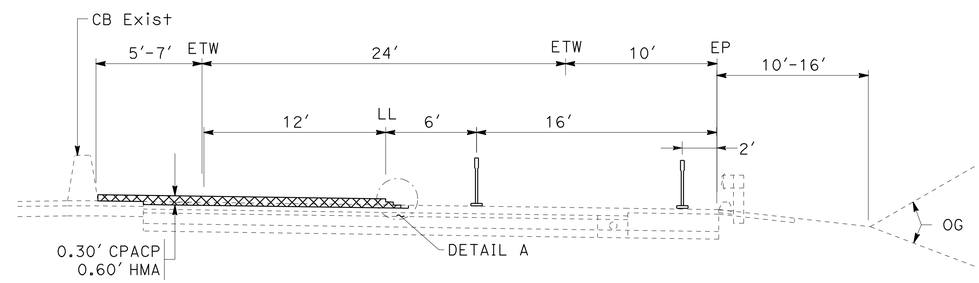

PM 56.2 TO 58.0
TYPICAL

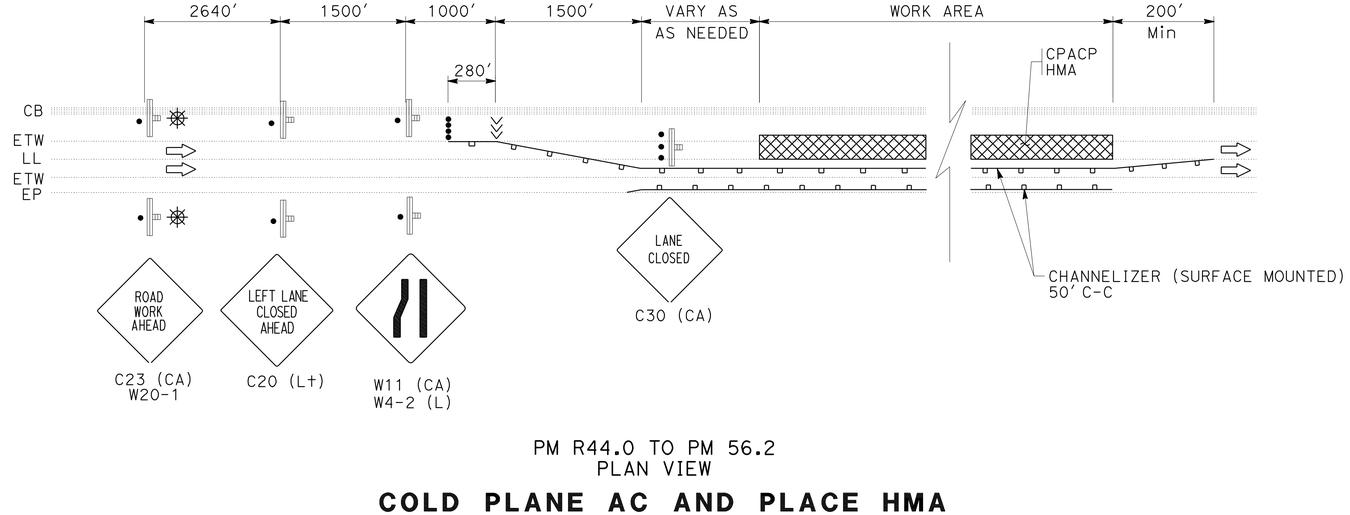

PM R44.0 TO PM 56.2
PLAN VIEW

COLD PLANE AC AND PLACE HMA

1 **REVISED PER ADDENDA No. 1 DATED SEPTEMBER 28, 2010**

STAGE 1B
STAGE CONSTRUCTION AND TRAFFIC HANDLING
NO SCALE **SC-2**

REVISED BY | DATE REVISED
ANDREW STECKLEIN | BYRON STANLEY
CALCULATED-DESIGNED BY | CHECKED BY
FUNCTIONAL SUPERVISOR: STEVE TOPAL
STATE OF CALIFORNIA - DEPARTMENT OF TRANSPORTATION
Caltrans DESIGN
p:\proj1\02\2c450_plans\contract_plans\ADDENDUM 08-23-10\22c450ma002.dgn

LAST REVISION 08-23-10 | DATE PLOTTED => 27-SEP-2010 | TIME PLOTTED => 15:05

Dist	COUNTY	ROUTE	POST MILES TOTAL PROJECT	SHEET No.	TOTAL SHEETS
02	Sha	5	R44.0/58.0	42	142

REGISTERED CIVIL ENGINEER 08-23-10 DATE

06-01-10
PLANS APPROVAL DATE

REGISTERED PROFESSIONAL ENGINEER BYRON H. STANLEY No. C60161 Exp. 6-30-10 CIVIL STATE OF CALIFORNIA

THE STATE OF CALIFORNIA OR ITS OFFICERS OR AGENTS SHALL NOT BE RESPONSIBLE FOR THE ACCURACY OR COMPLETENESS OF SCANNED COPIES OF THIS PLAN SHEET.

1

NOTES:

1. USE SURFACE MOUNTED CHANNELIZER ON RIGHT SIDE IN ABSENCE OF MBGR.
2. TEMPORARY TRAFFIC STRIPE TO BE PLACED IN FINAL STRIPE LOCATION.
3. TRAFFIC HANDLING SIGNS FOR STAGE CONSTRUCTION ARE TO BE MOUNTED ON A TYPE III BARRICADE.
4. MEDIAN SIGNS NOT NEEDED WHERE MEDIAN WIDTH IS LESS THAN 8'.

STAGE 1C WORK ITEMS:

1. IMPLEMENT STAGE 1C TRAFFIC HANDLING MEASURES
2. CPACP, CRACK EXISTING CONCRETE PAVEMENT AND PLACE HMA ON #2 LANE OR TRUCK CLIMBING LANE AND ON SIDE SHOULDER
3. REMOVE AND REPLACE HMA DIKE AND MBGR
4. PLACE TRAFFIC STRIPES
5. REMOVE STAGE 1C TRAFFIC HANDLING MEASURES
6. CONSTRUCTION AREA SIGNS ARE TO BE MOUNTED ON A TYPE III BARRICADE

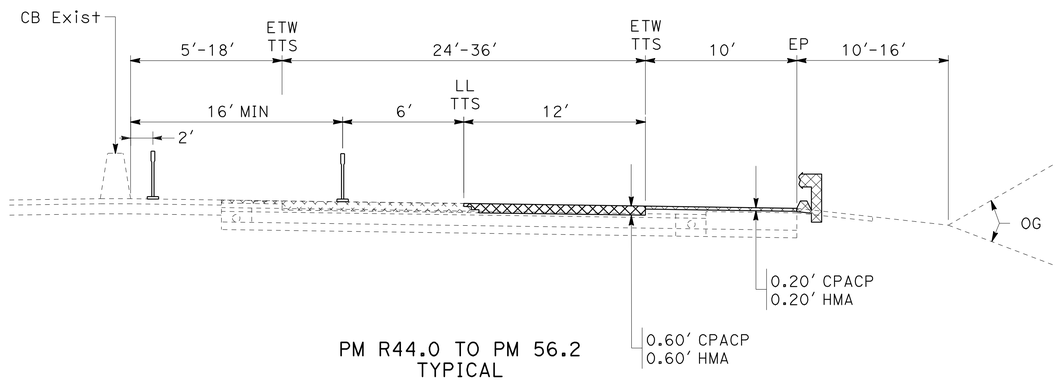

PM R44.0 TO PM 56.2
TYPICAL

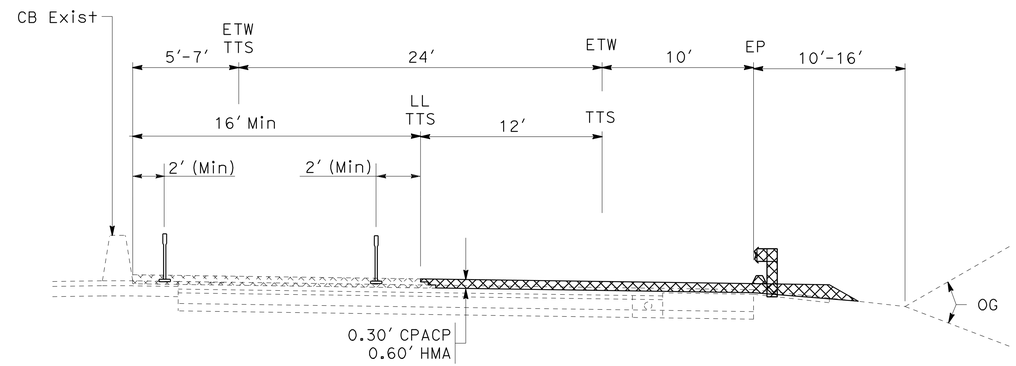

PM 56.2 TO 58.0
TYPICAL

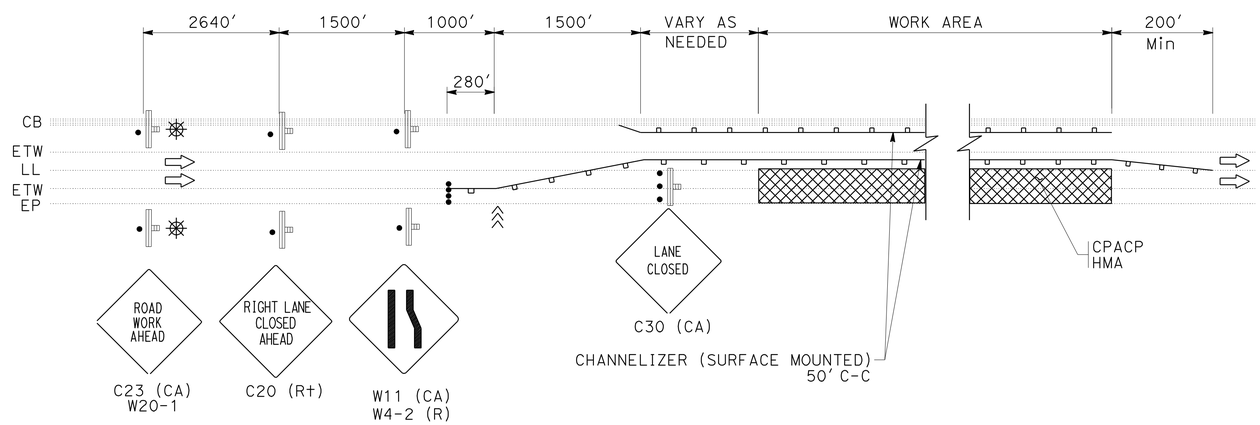

PLAN VIEW

COLD PLANE AC AND PLACE HMA

1 **REVISED PER ADDENDA No. 1 DATED SEPTEMBER 28, 2010**

STAGE 1C
STAGE CONSTRUCTION AND TRAFFIC HANDLING

NO SCALE

SC-3

REVISED BY | DATE REVISED
BYRON STANLEY
CALCULATED-DESIGNED BY | CHECKED BY
FUNCTIONAL SUPERVISOR: STEVE TOPAL

STATE OF CALIFORNIA - DEPARTMENT OF TRANSPORTATION
Caltrans
DESIGN

p:\proj1\02\2c450_plans\contract_plans\ADDENDUM 08-23-10\22c450ma003.dgn

LAST REVISION | DATE PLOTTED => 27-SEP-2010 | TIME PLOTTED => 15:05
08-23-10

BORDER LAST REVISED 4/11/2008 | RELATIVE BORDER SCALE IS IN INCHES 0 1 2 3 | USERNAME => s115152 | DGN FILE => 22c450ma003.dgn | CU 03 247 | EA 2C4501

Dist	COUNTY	ROUTE	POST MILES TOTAL PROJECT	SHEET No.	TOTAL SHEETS
02	Sha	5	R44.0/58.0	43	142

REGISTERED CIVIL ENGINEER 08-23-10 DATE

06-01-10
PLANS APPROVAL DATE

REGISTERED PROFESSIONAL ENGINEER BYRON H. STANLEY No. C60161 Exp. 6-30-10 CIVIL STATE OF CALIFORNIA

THE STATE OF CALIFORNIA OR ITS OFFICERS OR AGENTS SHALL NOT BE RESPONSIBLE FOR THE ACCURACY OR COMPLETENESS OF SCANNED COPIES OF THIS PLAN SHEET.

NOTES:

1. EXACT LOCATION AND POSITION OF CONSTRUCTION AREA SIGNS TO BE DETERMINED BY THE ENGINEER.
2. USE MIRROR IMAGE OF THIS PLAN FOR WORK ON SB ROUTE 5.
3. REPLACE REMOVED RUMBLE STRIP AFTER CONSTRUCTION.
4. THIS TRAFFIC HANDLING PLAN ALSO FOR BRIDGE JOINT REPAIR. 1

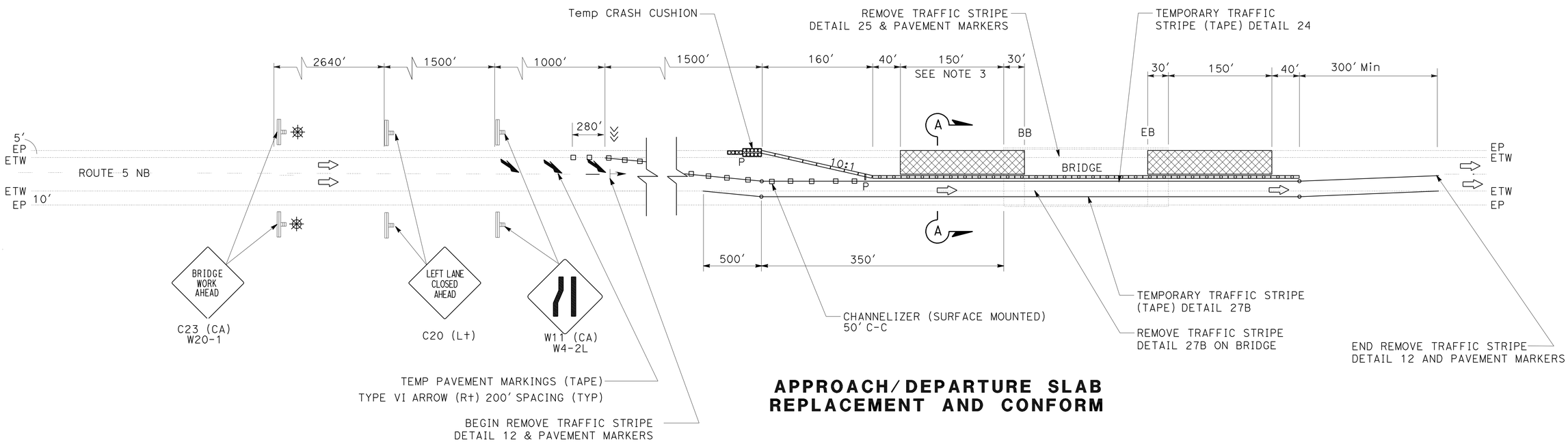

APPROACH/DEPARTURE SLAB REPLACEMENT AND CONFORM

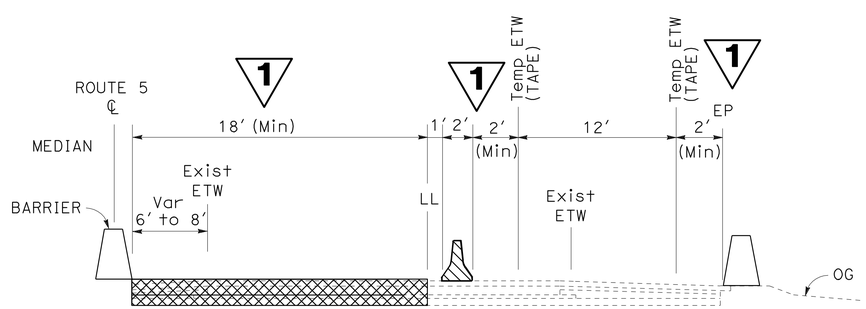

SECTION A-A

1 REVISED PER ADDENDA No. 1 DATED SEPTEMBER 28, 2010

STAGE 2A
STAGE CONSTRUCTION AND TRAFFIC HANDLING
NO SCALE

SC-4

REVISED BY	DATE REVISED
WILL LESLIE	BYRON STANLEY
CALCULATED-DESIGNED BY	CHECKED BY
FUNCTIONAL SUPERVISOR	STEVE TOPAL

STATE OF CALIFORNIA - DEPARTMENT OF TRANSPORTATION
Caltrans
DESIGN

p:\proj\02\2c450_plans\contract_plans\ADDENDUM 08-23-10\22c450ma004.dgn

LAST REVISION 08-23-10
DATE PLOTTED => 27-SEP-2010
TIME PLOTTED => 15:05

Dist	COUNTY	ROUTE	POST MILES TOTAL PROJECT	SHEET No.	TOTAL SHEETS
02	Sha	5	R44.0/58.0	44	142

REGISTERED CIVIL ENGINEER 08-23-10 DATE

06-01-10
PLANS APPROVAL DATE

REGISTERED PROFESSIONAL ENGINEER BYRON H. STANLEY No. C60161 Exp. 6-30-10 CIVIL STATE OF CALIFORNIA

THE STATE OF CALIFORNIA OR ITS OFFICERS OR AGENTS SHALL NOT BE RESPONSIBLE FOR THE ACCURACY OR COMPLETENESS OF SCANNED COPIES OF THIS PLAN SHEET.

NOTES:

1. EXACT LOCATION AND POSITION OF CONSTRUCTION AREA SIGNS TO BE DETERMINED BY THE ENGINEER.
2. USE MIRROR IMAGE OF THIS PLAN FOR WORK ON SB ROUTE 5.
3. REPLACE REMOVED RUMBLE STRIP AFTER CONSTRUCTION.
4. AT END OF STAGE 2B, PLACE Temp STRIPE IN FINAL STRIPING LOCATION.
5. THIS TRAFFIC HANDLING PLAN ALSO FOR BRIDGE JOINT REPAIR. 1

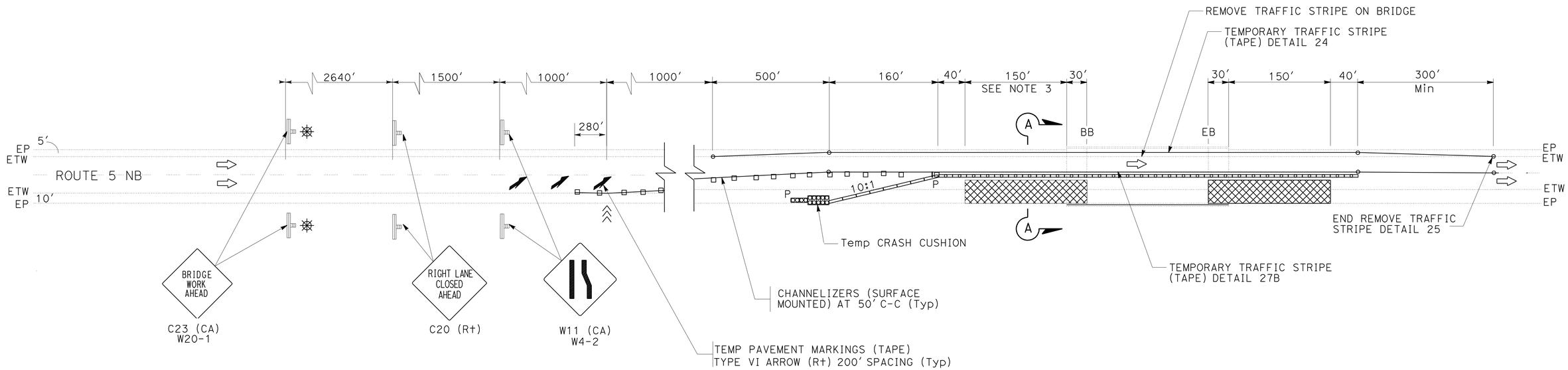

APPROACH/DEPARTURE SLAB REPLACEMENT AND CONFORM

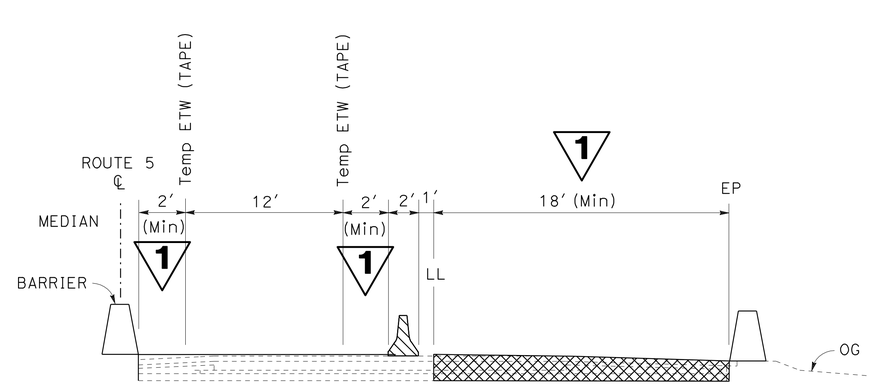

SECTION A-A

1 REVISED PER ADDENDA No. 1 DATED SEPTEMBER 28, 2010

STAGE 2B
STAGE CONSTRUCTION AND TRAFFIC HANDLING

NO SCALE

SC-5

REVISED BY | DATE REVISED
WILL LESLIE | BYRON STANLEY
CALCULATED-DESIGNED BY | CHECKED BY
FUNCTIONAL SUPERVISOR
STEVE TOPAL

STATE OF CALIFORNIA - DEPARTMENT OF TRANSPORTATION
Caltrans
DESIGN

p:\proj1\02\2c450_plans\contract_plans\ADDENDUM 08-23-10\22c450ma005.dgn

LAST REVISION 08-23-10 | DATE PLOTTED => 27-SEP-2010 | TIME PLOTTED => 15:06

Dist	COUNTY	ROUTE	POST MILES TOTAL PROJECT	SHEET No.	TOTAL SHEETS
02	Sha	5	R44.0/58.0	46	142

REGISTERED CIVIL ENGINEER 08-23-10 DATE

06-01-10
PLANS APPROVAL DATE

REGISTERED PROFESSIONAL ENGINEER BYRON H. STANLEY No. C60161 Exp. 6-30-10 CIVIL STATE OF CALIFORNIA

THE STATE OF CALIFORNIA OR ITS OFFICERS OR AGENTS SHALL NOT BE RESPONSIBLE FOR THE ACCURACY OR COMPLETENESS OF SCANNED COPIES OF THIS PLAN SHEET.

1

NOTES:
1. SEE ALSO SUMMARY OF QUANTITIES AND PAVEMENT DELINEATION QUANTITIES.
2. EXACT SIGN LOCATIONS TO BE DETERMINED BY THE ENGINEER.
3. PORTABLE SIGNS TO BE MOUNTED ON TYPE III BARICADES.
4. (N) - NOT A SEPARATE PAY ITEM, FOR INFORMATION ONLY.

STAGE CONSTRUCTION QUANTITIES

LOCATION		TEMPORARY TRAFFIC STRIPE (TAPE)	TEMPORARY PAVEMENT MARKING (TAPE)	CHANNELIZERS (SUFACE MOUNTED)	TEMPORARY RAILING (TYPE K)	TEMPORARY CRASH CUSHION	REMOVE YELLOW THERMOPLASTIC TRAFFIC STRIPE (HAZARDOUS WASTE)	REMOVE THERMOPLASTIC TRAFFIC STRIPE	REMOVE PAVEMENT MARKER	(N) OBJECT MARKER (TYPE P)
STAGE 2A		LF	SQFT	EA	LF	EA	LF	LF	EA	EA
DOG CREEK BRIDGE	Br No. 06-0027 R+	4173	130	35	1287.5	14	3453	2768	95	2
DOG CREEK BRIDGE	Br No. 06-0027 L+	4173	130	35	1287.5	14	3453	2768	95	2
SLATE CREEK BRIDGE	Br No. 06-0028 R+	3750	130	35	1087.5	14	1515	2504	87	2
SLATE CREEK BRIDGE	Br No. 06-0028 L+	3750	130	35	1087.5	14	1515	2504	87	2
SACRAMENTO RIVER BRIDGE	Br No. 06-0192 R+	4701	130	35	1562.5	14	3981	3098	107	2
SACRAMENTO RIVER BRIDGE	Br No. 06-0192 L+	4701	130	35	1562.5	14	3981	3098	107	2
SACRAMENTO RIVER BRIDGE	Br No. 06-0193 R+	4278	130	35	1350.0	14	3558	2834	98	2
SACRAMENTO RIVER BRIDGE	Br No. 06-0193 L+	4278	130	35	1350.0	14	3558	2834	98	2
FRONTAGE ROAD UC	Br No. 06-0194 R+	3117	130	35	762.5	14	2397	2108	73	2
FRONTAGE ROAD UC	Br No. 06-0194 L+	3117	130	35	762.5	14	2397	2108	73	2
SIMS ROAD UC	Br No. 06-0111 R+	3311	130	35	862.5	14	1146	2192	71	2
SIMS ROAD UC	Br No. 06-0111 L+	3311	130	35	862.5	14	1146	2192	71	2
STAGE 2B										
DOG CREEK BRIDGE	Br No. 06-0027 R+	4173	130	35	1287.5	14				2
DOG CREEK BRIDGE	Br No. 06-0027 L+	4173	130	35	1287.5	14				2
SLATE CREEK BRIDGE	Br No. 06-0028 R+	3750	130	35	1087.5	14				2
SLATE CREEK BRIDGE	Br No. 06-0028 L+	3750	130	35	1087.5	14				2
SACRAMENTO RIVER BRIDGE	Br No. 06-0192 R+	4701	130	35	1562.5	14				2
SACRAMENTO RIVER BRIDGE	Br No. 06-0192 L+	4701	130	35	1562.5	14				2
SACRAMENTO RIVER BRIDGE	Br No. 06-0193 R+	4278	130	35	1350.0	14				2
SACRAMENTO RIVER BRIDGE	Br No. 06-0193 L+	4278	130	35	1350.0	14				2
FRONTAGE ROAD UC	Br No. 06-0194 R+	3117	130	35	762.5	14				2
FRONTAGE ROAD UC	Br No. 06-0194 L+	3117	130	35	762.5	14				2
SIMS ROAD UC	Br No. 06-0111 R+	3311	130	35	862.5	14				2
SIMS ROAD UC	Br No. 06-0111 L+	3311	130	35	862.5	14				2
MAINLINE STAGE 1B & 1C				13,218						
TOTAL		93,320	3120	14,057	27,650	336	32,100	31,008	1062	48

STAGE CONSTRUCTION SIGNS

STAGE	CODE	PANEL SIZE (In)	SIGN MESSAGE	No. OF SIGNS	No. AND SIZE OF POSTS	TYPE OF MOUNT
1	C23 (CA) W20-1	48 x 48	ROAD WORK AHEAD	2	TYPE III BARRICADE	PORTABLE
	C20 (R+)	48 x 48	RIGHT LANE CLOSED AHEAD	2	TYPE III BARRICADE	PORTABLE
	C20 (L+)	48 x 48	LEFT LANE CLOSED AHEAD	2	TYPE III BARRICADE	PORTABLE
	W11 (CA) W4-2R	48 x 48		2	TYPE III BARRICADE	PORTABLE
	W11 (CA) W4-2L	48 x 48		2	TYPE III BARRICADE	PORTABLE
	C30 (CA)	48 x 48	LANE CLOSED	1	TYPE III BARRICADE	PORTABLE
2	C23 (CA) W20-1	48 x 48	ROAD WORK AHEAD	2	TYPE III BARRICADE	PORTABLE
	C20 (R+)	48 x 48	RIGHT LANE CLOSED AHEAD	2	TYPE III BARRICADE	PORTABLE
	C20 (L+)	48 x 48	LEFT LANE CLOSED AHEAD	2	TYPE III BARRICADE	PORTABLE
	W11 (CA) W4-2R	48 x 48		2	TYPE III BARRICADE	PORTABLE
	W11 (CA) W4-2L	48 x 48		2	TYPE III BARRICADE	PORTABLE

* THE No. OF SIGNS SHOWN ARE PER CLOSURE.

TEMPORARY TRAFFIC STRIPE (PAINT)

LOCATION	STAGE	LF
MAINLINE (BLACK)	1A	141,715
MAINLINE	1C	141,715
MAINLINE	1C	283,430
TOTAL		566,860

CHANNELIZERS (SURFACE MOUNTED) MAINLINE

LOCATION	STAGE	EACH
MAINLINE NB	1B	3066
MAINLINE SB	1B	3484
MAINLINE NB	1C	3334
MAINLINE SB	1C	3334
TOTAL		13,218

1 REVISED PER ADDENDA No. 1 DATED SEPTEMBER 28, 2010

STAGE CONSTRUCTION QUANTITIES

SCQ-1

REVISED BY | DATE REVISED
RUSSELL FLOOD | BYRON STANLEY
CALCULATED-DESIGNED BY | CHECKED BY
FUNCTIONAL SUPERVISOR
STEVE TOPAL

STATE OF CALIFORNIA - DEPARTMENT OF TRANSPORTATION
Caltrans
DESIGN

p:\proj\02\2c450_plans\contract_plans\ADDENDUM 08-23-10\22c450mc001.dgn

LAST REVISION 08-23-10 | DATE PLOTTED => 27-SEP-2010 | TIME PLOTTED => 15:06

Dist	COUNTY	ROUTE	POST MILES TOTAL PROJECT	SHEET No.	TOTAL SHEETS
02	Sha	5	R44.0/58.0	72	142

REGISTERED CIVIL ENGINEER 08-23-10 DATE

06-01-10
PLANS APPROVAL DATE

REGISTERED PROFESSIONAL ENGINEER BYRON H. STANLEY No. C60161 Exp. 6-30-10 CIVIL STATE OF CALIFORNIA

THE STATE OF CALIFORNIA OR ITS OFFICERS OR AGENTS SHALL NOT BE RESPONSIBLE FOR THE ACCURACY OR COMPLETENESS OF SCANNED COPIES OF THIS PLAN SHEET.

NOTE:
1. EXISTING UTILITY FACILITIES HAVE NOT BEEN POSITIVELY LOCATED.

ABBREVIATIONS

ITS INTELLIGENT TRANSPORTATION SYSTEMS

RAMPS ROADWAY QUANTITIES

DESCRIPTION		PM	RAMP LENGTH (N)	COLD PLANE ASPHALT CONCRETE PAVEMENT	HOT MIX ASPHALT	TACK COAT
				SQYD	TON	TON
VOLLMERS Rd	NB OFF	R45.66	1000	2770	400	1.3
	SB ON	R45.88	559	1790	260	0.8
	NB ON	R45.91	445	1450	210	0.7
	SB OFF	R46.19	1162	3215	465	1.5
La MOINE Rd	SB ON	R48.96	930	2685	385	1.3
	NB OFF	R49.18	1290	3505	505	1.6
	SB OFF	R49.32	1011	2865	415	1.3
	NB ON	R49.38	1405	3505	505	1.6
POLLARD FLAT	SB ON	R50.55	1414	3920	565	1.8
	NB OFF	R50.58	1235	3815	550	1.8
	NB ON	R50.91	576	1705	245	0.8
	SB OFF	R50.91	960	3020	435	1.4
GIBSON Rd	NB OFF	53.31	1204	4400	635	2.1
	NB ON	53.46	1176	2920	420	1.4
	SB ON	53.46	1128	3675	530	1.7
	SB OFF	53.50	1018	2955	425	1.4
SIMS Rd	NB OFF	57.21	1011	2375	375	1.2
	SB OFF	57.33	496	1565	265	0.8
	SB ON	57.52	358	1240	220	0.7
	NB ON	57.61	685	1535	260	0.8
		TOTAL		54,910	8070	26.0

1

ROADWAY QUANTITIES

MAINLINE POSTMILE LIMITS	COLD PLANE ASPHALT CONCRETE PAVEMENT						ROADWAY EXCAVATION		IMPORTED MATERIAL (SHOULDER BACKING)	SUBGRADE ENHANCEMENT GEOTEXTILE	CLASS 2 AGGREGATE BASE		HOT MIX ASPHALT						SHOULDER RUMBLE STRIP (HMA, GROUND-IN INDENTATIONS)		TACK COAT		CRACK EXISTING CONCRETE PAVEMENT		ASPHALTIC EMULSION (FOG SEAL COAT)	
	NORTHBOUND			SOUTHBOUND									NORTHBOUND			SOUTHBOUND										
	MEDIAN Shld	LANES/ TAPERS	OUTSIDE Shld	MEDIAN Shld	LANES/ TAPERS	OUTSIDE Shld	NB	SB			NB	SB	MEDIAN Shld	LANES/ TAPERS	OUTSIDE Shld	MEDIAN Shld	LANES/ TAPERS	OUTSIDE Shld	NB	SB	NB	SB	NB	SB	NB	SB
PM-PM	SQYD	SQYD	SQYD	SQYD	SQYD	SQYD	CY	CY	TON	SQYD	CY	CY	TON	TON	TON	TON	TON	TON	STA	STA	TON	TON	SQYD	SQYD	TON	TON
R44.0/R44.5	1175	5350	2695	1175	7040	3855	1675	290		1690	1030	130	170	3225	865	170	3040	895	52.8	52.8	8.2	8.9			1.5	1.5
R44.5/R45.0	1175	5210	4045	1175	7040	2100	1530	505		1830	985	230	170	3240	765	170	3040	895	52.8	52.8	8.9	8.5			1.6	1.6
R45.0/45.5	730	4365	2550	730	4365	1600		230				105	105	1885	365	105	1885	505	32.7	32.7	5.4	5.3			1.1	1.1
45.5/R46.0	800	6165	1780	800	5030	2315							115	2665	255	115	2540	335	35.9	49.6	6.7	6.0			1.4	1.2
R46.0/R46.5	1175	7355	2775	1175	7720	4070							170	3175	400	170	3335	585	52.8	52.8	8.4	9.4			1.3	2.0
R46.5/R47.0	1175	7040	3115	1175	7040	3485							170	3040	450	170	3040	500	52.8	52.8	8.3	8.5			1.8	1.4
R47.0/R47.5	1175	3520	4030	1175	7040	2530	2640	445		3520	1760	200	170	3420	580	170	3040	890	52.8	52.8	8.7	8.6			1.5	1.8
R47.5/R48.0	1175	7040	3475	1175	7040	2570		20				10	170	3040	500	170	3040	395	52.8	52.8	8.5	8.1			1.6	1.7
R48.0/R48.5	1175	3520	2375	1175	7040	2965	2640			3520	1760		170	3420	340	170	3040	425	52.8	52.8	8.0	8.2			1.6	1.4
R48.5/R49.0	960	5775	2095	960	6615	2425							140	2495	300	140	2860	350	43.3	43.3	6.6	7.5			1.3	1.2
R49.0/R49.5	1175	12,065	2855	1175	7740	4300							170	5210	410	170	3345	620	52.8	52.8	12.7	9.5			1.2	1.2
R49.5/R50.0	1175	10,695	2730	1175	7040	2630							170	4620	395	170	3040	380	52.8	52.8	11.4	8.1			1.2	1.2
R50.0/R50.5	1175	9915	3085	1175	7535	1185	710	570	80		325	260	170	4280	1280	170	3255	1065	52.8	52.8	10.9	8.6			1.5	1.5
R50.5/R51.0	1175	8855	2440	1175	7980	3000							170	3825	350	170	3445	430	52.8	52.8	9.6	9.1			1.4	1.4
R51.0/R51.5	1175	7390	2845	1175	7690	2825							170	3195	410	170	3320	405	52.8	52.8	8.5	8.7			1.6	1.6
R51.5/R52.0	750	4505	1835	750	4505	2090							110	1945	265	110	1945	300	33.8	33.8	5.2	5.4			1.0	1.0
R52.0/R52.5	845	5070	2230	845	4785	2180	85				40		120	2190	455	120	2070	315	38.0	35.9	6.1	5.7			1.4	0.8
R52.5/53.0	400	2395	450	400	2885	795	130				60		55	1035	270	55	1245	115	18.0	18.0	2.7	3.1			0.5	0.5
53.0/53.5	1175	8615	3815	1175	8115	3385							170	3720	550	170	3505	490	52.8	52.8	10.0	9.4			1.6	1.6
53.5/R54.0	1175	7980	4215	1175	7820	3270							170	3450	605	170	3380	470	52.8	52.8	9.7	9.1			1.6	1.6
R54.0/R54.5	1175	7040	3125	1175	7040	3610	2640				1760		170	3040	450	170	3040	520	52.8	52.8	8.3	8.5			1.5	1.5
R54.5/R55.0	1175	3520	2940	1175	7040	3745				3520			170	3420	425	170	3040	540	52.8	52.8	8.2	8.6			1.5	1.5
R55.0/R55.5	1175	7040	3160	1175	7040	1795		885		1180		590	170	3040	455	170	3040	895	52.8	52.8	8.3	8.2			1.5	1.5
R55.5/R56.0	1175	7040	2790	1175	7040	3530							170	3040	400	170	3040	510	52.8	52.8	8.1	8.5			1.6	1.6
R56.0/56.5	1800	7040	1370	1800	7040	1505			145				640	3040	800	640	3040	805	52.8	52.8	10.6	10.6	4930	4930	0.4	0.4
56.5/57.0	2125	7040	585	2125	7040	585		65	240			30	920	3040	715	920	3040	835	52.8	52.8	10.3	10.4	8215	8215		
57.0/57.5	1715	7510	445	1715	6990	445	1545	1495	240		1030	995	990	3740	955	990	3475	945	50.7	50.7	11.0	10.4	7885	7885		
57.5/58.0	2405	7040	585	2405	7720	585			240				1040	3040	755	1040	3335	775	52.8	52.8	10.7	11.4	8215	8215		
SUBTOTAL	33,680	186,095	70,435	33,680	189,015	69,375							7,295	88,475	14,765	7,295	82,460	16,190								
DIRECTIONAL TOTAL	290,210			292,070			13,595	4,505			8,750	2,550	110,535			105,945			1,361.2	1,372.8	240.0	232.3	29,245	29,245	34.2	33.8
FROM RAMPS	54,910												8,070								26.0					
FROM DIKE (Q-2)													1,924													
FROM WALKWAY (Q-2)											75															
FROM Misc AREA (Q-2)													323													
REMOVE RUMBLE STRIP	27,500												1860													
TOTAL	664,690						18,100		945	15,260	11,375		228,657						2,734.0		498.3		58,490		68.0	

1 REVISED PER ADDENDA No. 1 DATED SEPTEMBER 28, 2010

SUMMARY OF QUANTITIES Q-1

REVISED BY | DATE REVISED
RUSSELL FLOOD | BYRON STANLEY
CALCULATED-DESIGNED BY | CHECKED BY
FUNCTIONAL SUPERVISOR: STEVE TOPAL

STATE OF CALIFORNIA - DEPARTMENT OF TRANSPORTATION
Caltrans
DESIGN

p:\proj\02\2c450_plans\contract_plans\ADDENDUM 08-23-10\22c450pa001.dgn

LAST REVISION 08-23-10 | DATE PLOTTED => 27-SEP-2010 | TIME PLOTTED => 15:06

Dist	COUNTY	ROUTE	POST MILES TOTAL PROJECT	SHEET No.	TOTAL SHEETS
02	Sha	5	R44.0/58.0	73	142

REGISTERED CIVIL ENGINEER 08-23-10 DATE

06-01-10
PLANS APPROVAL DATE

REGISTERED PROFESSIONAL ENGINEER BYRON H. STANLEY No. C60161 Exp. 6-30-10 CIVIL STATE OF CALIFORNIA

THE STATE OF CALIFORNIA OR ITS OFFICERS OR AGENTS SHALL NOT BE RESPONSIBLE FOR THE ACCURACY OR COMPLETENESS OF SCANNED COPIES OF THIS PLAN SHEET.

NOTE:

1. FLUSH EXISTING EDGE DRAINS ON OUTSIDE SHOULDERS AND RAMPS ONLY.
2. * INCLUDED IN ROADWAY QUANTITIES TABLE
3. ** INCLUDED IN MBGR QUANTITIES TABLE

PLACE HOT MIX ASPHALT DIKE

DIRECTION	MAINLINE POSTMILE LIMITS	TYPE A	TYPE D	TYPE F	HOT MIX ASPHALT *
	PM-PM	LF	LF	LF	TON
NORTHBOUND	R44.00/R44.06		348		22
	R44.07/R44.14			340	5
	R44.17/R44.23		306		19
	R44.36/R44.44		372		23
	R44.45/R44.63			950	14
	R44.69/R44.73		266		17
	R44.88/R45.01		634		40
	R45.04/R45.11		370		23
	R45.12/R45.25			644	9
	45.44/R44.50			319	5
	R45.99/R46.12			688	10
	R46.55/R46.70			802	11
	R46.92/R47.22			1584	23
	R47.50/R47.76		1320		83
	R47.83/R47.89			316	5
	R48.38/R48.54			845	12
	R48.92/R49.14			1152	16
	R51.73/R51.79			293	4
	R51.98/R52.10		637		40
	R52.25/R52.28			154	2
	52.81/52.82			60	1
	52.91/53.06			779	11
	53.44/R53.76			1713	24
	R53.83/R53.89			330	5
	R54.43/R54.69			1385	20
	R54.91/R55.06			796	11
	R55.54/R55.90			1917	27
	56.36/56.42			326	5
	56.51/56.72			1129	16
	57.12/57.17			262	4
	57.44/57.52			416	6
	57.81/57.86			264	4
SOUTHBOUND	R44.12/R44.24		630		40
	R44.36/R44.50		769		49
	R44.59/R44.75		863		55
	R44.89/R45.15		1398		89
	R45.72/R45.89		880		56
	R45.99/R46.03			211	3
	R47.26/R47.55		1456		92
	R47.58/R47.68		530		34
	R48.96/R49.31		1860		118
	R51.99/R52.07		426		27
	R52.24/R52.26			107	2
	52.97/53.01			210	3
	R55.02/R55.13		575		36
	R55.55/R55.67			629	9
	R55.84/R56.11		1431		91
	56.22/56.37		763		48
	56.43/56.55		640		40
	56.62/56.79		891		56
	56.80/56.93		693		44
	56.93/56.97		175		11
	56.97/57.08		583		37
	57.16/57.18		124		8
SUBTOTAL			18,940	18,621	1465
FROM DIKE ON RAMPS TABLE			6711	776	435
FROM DQ-4		803.5			24
TOTAL		803.5	25,651	19,397	1,924

REMOVE AC DIKE

DIRECTION	MAINLINE POSTMILE LIMITS	LF
	PM-PM	
NORTHBOUND	R44.00/R44.06	348
	R44.07/R44.14	340
	R44.17/R44.23	306
	R44.36/R44.44	372
	R44.45/R44.63	950
	R44.69/R44.73	266
	R44.88/R45.01	634
	R45.04/R45.11	370
	R45.12/R45.25	644
	45.44/R44.50	319
	R45.99/R46.12	688
	R46.55/R46.70	802
	R46.92/R47.22	1584
	R47.50/R47.76	1320
	R47.83/R47.89	316
	R48.38/R48.54	845
	R48.92/R49.14	1152
	R51.73/R51.79	293
	R51.98/R52.10	637
	R52.25/R52.28	154
	52.81/52.82	60
	52.91/53.06	779
	53.44/R53.76	1713
	R53.83/R53.89	330
	R54.43/R54.69	1385
	R54.91/R55.06	796
	R55.54/R55.90	1917
	56.36/56.42	326
	56.51/56.72	1129
	57.12/57.17	262
	57.44/57.52	416
	57.81/57.86	264
SOUTHBOUND	R44.12/R44.24	630
	R44.36/R44.50	769
	R44.59/R44.75	863
	R44.89/R45.15	1398
	R45.72/R45.89	880
	R45.99/R46.03	211
	R47.26/R47.55	1456
	R47.58/R47.68	530
	R48.96/R49.31	1860
	R51.99/R52.07	426
	R52.24/R52.26	107
	52.97/53.01	210
	R55.02/R55.13	575
	R55.55/R55.67	629
	R55.84/R56.11	1431
	56.22/56.37	763
	56.43/56.55	640
	56.62/56.79	891
	56.80/56.93	693
	56.93/56.97	175
	56.97/57.08	583
	57.16/57.18	124
SUBTOTAL		37,561
FROM DIKE ON RAMPS TABLE		7487
TOTAL		45,048

EDGE DRAIN QUANTITIES

	MAINLINE AND RAMPS	FLUSH EXISTING EDGE DRAIN (SEE NOTE 1)	3" PLASTIC PIPE (EDGE DRAIN)	CLEANOUT ASSEMBLY (EDGE DRAIN)	PAVEMENT MARKER (NON-REFLECTIVE -RECESSED)
					TYPE A
		LF	LF	EA	EA
TOTAL		147,840	14,784	95	740

1

PLACE HMA (Misc AREA)

DESCRIPTION		HOT MIX ASPHALT *
	SQYD	TON
TRANSITION RAILING (TYPE WB)	300.0	72
FROM DQ-4	1,044.6	251
TOTAL	1,344.6	323

DIKES ON RAMPS

DESCRIPTION		RIGHT	LEFT	HMA DIKE TYPE D	HMA DIKE TYPE F	REMOVE AC DIKE	HMA *
				LF	LF	LF	TON
VOLLMERS Rd	NB OFF	X		1000		1000	63
	NB ON	X		360		360	23
	SB OFF		X	715		715	45
	SB OFF	X		474		474	30
	SB ON		X	228		228	14
La MOINE Rd	NB ON	X		522		522	33
GIBSON Rd	NB OFF	X		1280		1280	81
	NB ON	X		250		250	16
	SB OFF	X		977		977	62
	SB ON	X		905		905	57
SIMS Rd	NB OFF	X			316	316	4
	SB OFF	X			460	460	7
			TOTAL	6,711	776	7487	435

EROSION CONTROL

	EROSION CONTROL (HYDROSEED)
	ACRE
TOTAL	0.9

ITS WALKWAY QUANTITIES

		REMOVE CONCRETE (Misc)	IMPORTED BORROW	CLASS 2 AGGREGATE BASE (*)	MINOR CONCRETE (MINOR Str) (**)	MINOR CONCRETE (Misc Const)	VEGETATION CONTROL (MINOR Conc)	PIPE HANDRAILING (POST TYPE)
		CY	CY	CY	CY	CY	SQYD	LF
PM	LINE	-	-	-	-	-	-	-
R45.95	"V1"	2.2		12	3.5	2.8		25
	"V2"						15	
R50.81	"P1"		80	25	4	15.1		
	"P2"			4		0.7		
53.32	"G1"			10		2.8		
	"G2"			4		0.7		
57.41	"S1"	3.5		10		2.8	15	
57.89	"S2"			10		2.3		
	TOTAL	5.7	80	75	7.5	27.2	30	25

WATER POLLUTION CONTROL

	TEMPORARY FIBER ROLL	TEMPORARY SILT FENCE
	LF	LF
TOTAL	1,000	1,000

1 **REVISED PER ADDENDA No. 1 DATED SEPTEMBER 28, 2010**

SUMMARY OF QUANTITIES

Q-2

R. WEBER	04-27-10	REVISED BY	DATE REVISED
RUSSELL FLOOD	BYRON STANLEY	CALCULATED-DESIGNED BY	CHECKED BY
FUNCTIONAL SUPERVISOR	STEVE TOPAL		

STATE OF CALIFORNIA - DEPARTMENT OF TRANSPORTATION
Caltrans DESIGN

p:\proj\02\2c450_plans\contract_plans\ADDENDUM 08-23-10\22c450pa002.dgn

LAST REVISION DATE PLOTTED => 27-SEP-2010
08-23-10 TIME PLOTTED => 15:06

DIST	COUNTY	ROUTE	POST MILES TOTAL PROJECT	SHEET No	TOTAL SHEETS
02	Sha	5	R44.0/58.0	134	142

REGISTERED CIVIL ENGINEER — DATE 4-30-10

June 1, 2010
PLANS APPROVAL DATE

REGISTERED PROFESSIONAL ENGINEER — Jose M Aquino III — No. 58386 — Exp. 12-31-10 — CIVIL — STATE OF CALIFORNIA

The State of California or its officers or agents shall not be responsible for the accuracy or completeness of electronic copies of this plan sheet.

NOTES: (APPLIES TO THIS SHEET ONLY)

1

- Indicates limits of unsound concrete removal, rapid set concrete patch, prepare bridge deck for polyester concrete overlay, & place ¾" min depth polyester concrete overlay
- Indicates limits of existing polymer chip seal removal
- Indicates limits of existing approach removal and Structure Approach Type R(30D) placement
- Indicates Joint seal replacement See "JOINT SEAL TABLE" on "JOINT SEAL DETAILS" sheet

NOTES: (APPLY TO ALL SHEETS)

Indicates existing

THE CONTRACTOR SHALL VERIFY ALL CONTROLLING FIELD DIMENSIONS BEFORE ORDERING OR FABRICATING ANY MATERIAL

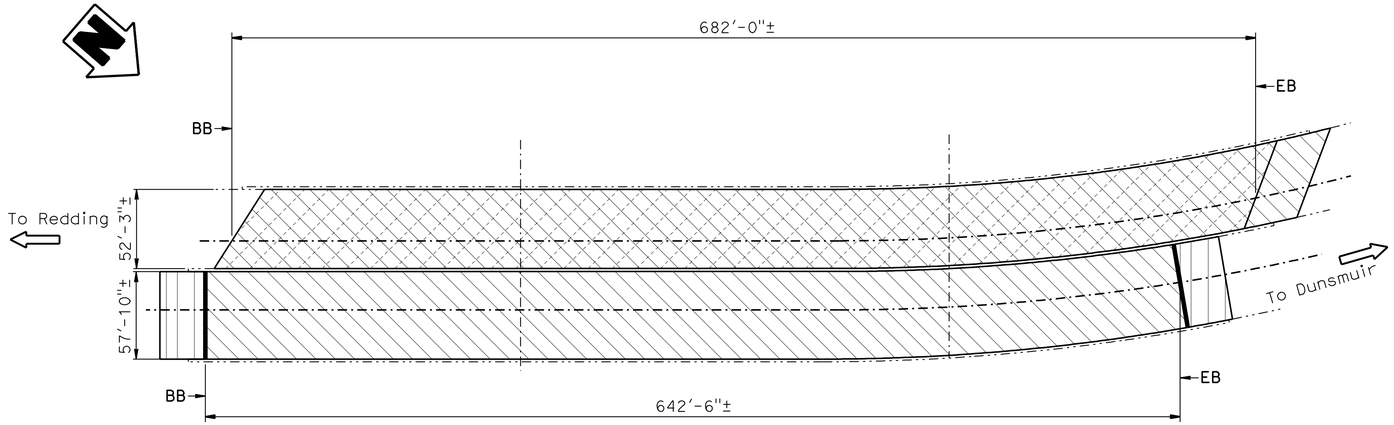

DOG CREEK BRIDGE

Br. No. 06-0027, PM 45.54
1" = 50'

1

DOG CREEK BRIDGE (06-0027)
QUANTITIES

REMOVE CHIP SEAL	35,635	SQFT
REMOVE UNSOUND CONCRETE	372	CF
PREPARE CONCRETE BRIDGE DECK SURFACE	74,345	SQFT
AGGREGATE BASE (APPROACH SLAB)	13	CY
STRUCTURAL CONCRETE, APPROACH SLAB (TYPE R)	129	CY
PAVING NOTCH EXTENSION	87	CF
RAPID SETTING CONCRETE (PATCH)	372	CF
FURNISH POLYESTER CONCRETE OVERLAY	4,647	CF
PLACE POLYESTER CONCRETE OVERLAY	74,345	SQFT
JOINT SEAL (MR 1")	118	LF
REMOVE CONCRETE DECK SURFACE	1,543	SQFT

GENERAL NOTES
LOAD FACTOR DESIGN

REINFORCED CONCRETE:
fy = 60,000 psi
f'c = 3,600 psi

1

INDEX TO PLANS

SHEET No.	TITLE
1	GENERAL PLAN No. 1
2	GENERAL PLAN No. 2
3	GENERAL PLAN No. 3
4	GENERAL PLAN No. 4
5	GENERAL PLAN No. 5
6	JOINT SEAL DETAILS
7	JOINT SEAL ASSEMBLY DETAILS
8	OVERHANG DETAILS
9	STRUCTURE APPROACH TYPE R (30S)
10	STRUCTURE APPROACH TYPE R (30D)
11	STRUCTURE APPROACH DETAILS

STANDARD PLANS DATED MAY 2006

SHEET No.	TITLE
A10A	ACRONYMS AND ABBREVIATIONS (SHEET 1 OF 2)
A10B	ACRONYMS AND ABBREVIATIONS (SHEET 2 OF 2)
A10C	SYMBOLS (SHEET 1 OF 2)
A10D	SYMBOLS (SHEET 2 OF 2)
RSP B6-21	JOINT SEALS (MAXIMUM MOVEMENT RATING = 2")

STANDARD PLAN SHEET NO.

DETAIL NO.

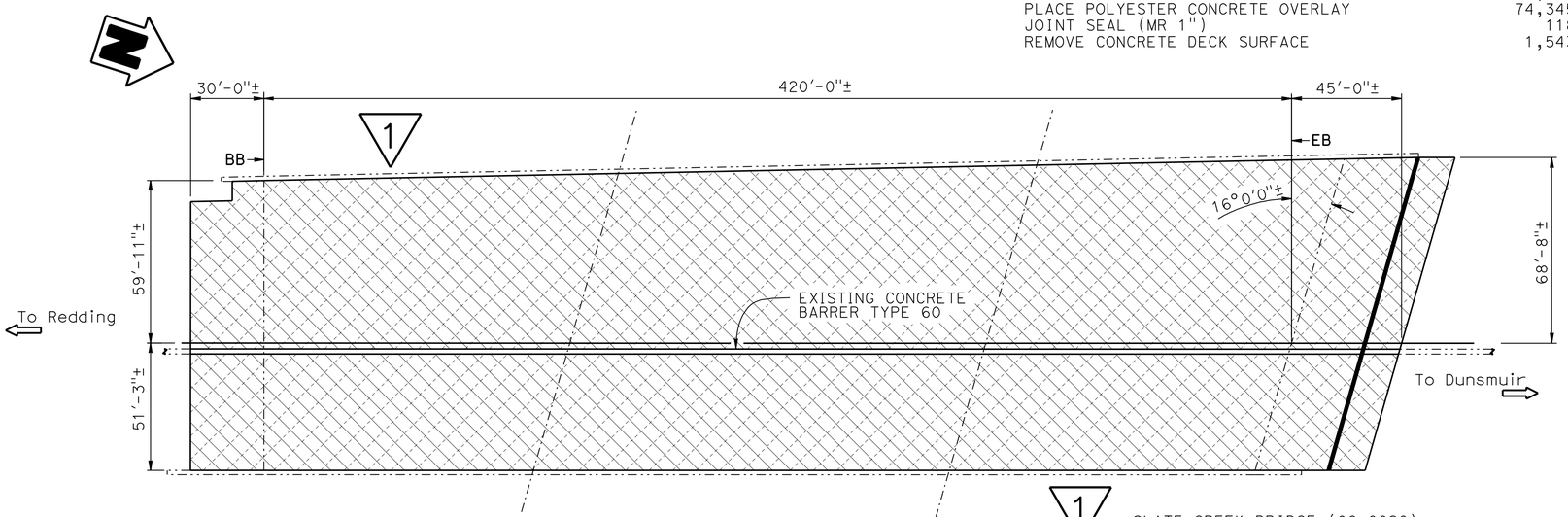

1

SLATE CREEK BRIDGE (06-0028)
QUANTITIES

REMOVE CHIP SEAL	56,038	SQFT
REMOVE UNSOUND CONCRETE	280	CF
PREPARE CONCRETE BRIDGE DECK SURFACE	56,038	SQFT
CLEAN EXPANSION JOINT	117	LF
RAPID SETTING CONCRETE (PATCH)	280	CF
FURNISH POLYESTER CONCRETE OVERLAY	3,503	CF
PLACE POLYESTER CONCRETE OVERLAY	56,038	SQFT
JOINT SEAL (MR 1")	117	LF
REMOVE CONCRETE DECK SURFACE	3,850	SQFT

SLATE CREEK BRIDGE

Br. No. 06-0028, PM 48.83
1" = 30'

NOTE:
THE CONTRACTOR SHALL VERIFY ALL CONTROLLING FIELD DIMENSIONS BEFORE ORDERING OR FABRICATING ANY MATERIAL.

1

REVISED PER ADDENDUM No. 1
DATED SEPTEMBER 28, 2010

Joseph E Downing
DESIGN ENGINEER

	BY	CHECKED			
DESIGN	Joey Aquino	Lewis Shen	LOAD FACTOR DESIGN		
DETAILS	S Motalebi / J Reid	Lewis Shen	LAYOUT	Joey Aquino	Jay Reid
QUANTITIES	Joey Aquino	Lewis Shen	SPECIFICATIONS	Iwa Huang	Iwa Huang (PLANS AND SPECS COMPARED)

STATE OF CALIFORNIA
DEPARTMENT OF TRANSPORTATION

DIVISION OF ENGINEERING SERVICES
STRUCTURE DESIGN
DESIGN BRANCH 3

BRIDGE NO. Various
POST MILE Various

DECK REHABILITATION
ROUTE 5 BRIDGES
GENERAL PLAN NO. 1

ORIGINAL SCALE IN INCHES FOR REDUCED PLANS 0 1 2 3

CU 03204
EA 2C4501

DISREGARD PRINTS BEARING EARLIER REVISION DATES

REVISION DATES: 12/24/09 | 2-16-10 | 3-3-10 | 4-15-10 | 4-21-10 | 4-22-10 | 5-20-10 | 5-25-10 | 9-8-10 | 9-23-10

SHEET 1 OF 11

STRUCTURES DESIGN GENERAL PLAN SHEET (ENGLISH) (REV.07-24-06)

FILE => 02-2c4501-a-gp01.dgn

USERNAME => s136693 DATE PLOTTED => 27-SEP-2010 TIME PLOTTED => 12:24

DIST	COUNTY	ROUTE	POST MILES TOTAL PROJECT	SHEET No	TOTAL SHEETS
02	Sha	5	R44.0/58.0	136	142

REGISTERED CIVIL ENGINEER 4-30-10 DATE

June 1, 2010
PLANS APPROVAL DATE

REGISTERED PROFESSIONAL ENGINEER Jose M Aguino III No. 58386 Exp. 12-31-10 CIVIL STATE OF CALIFORNIA

The State of California or its officers or agents shall not be responsible for the accuracy or completeness of electronic copies of this plan sheet.

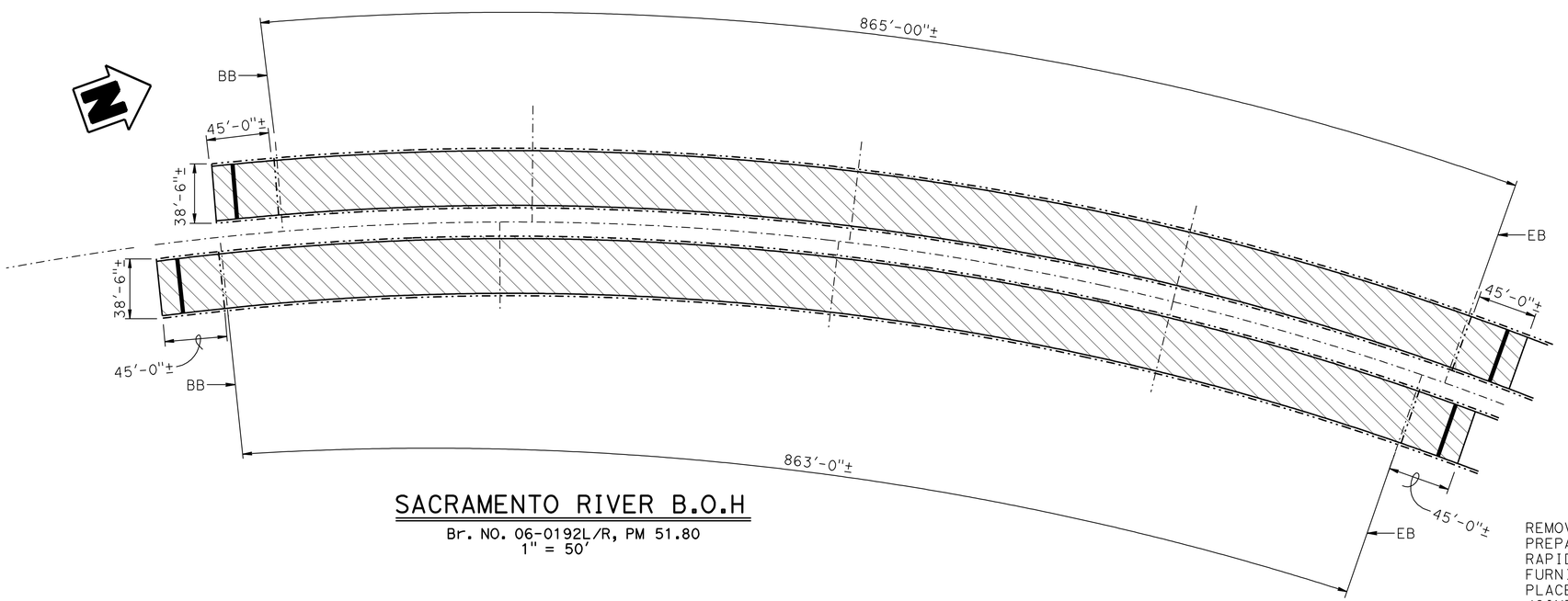

SACRAMENTO RIVER B.O.H

Br. NO. 06-0192L/R, PM 51.80
1" = 50'

NOTES: (APPLIES TO THIS SHEET ONLY)

1

Indicates limits of unsound concrete removal, rapid set concrete patch, prepare bridge deck for polyester concrete overlay, & place ¾" min depth polyester concrete overlay

Indicates Joint seal replacement See "JOINT SEAL TABLE" on "JOINT SEAL DETAILS" sheet

1

SACRAMENTO RIVER B.O.H. (06-0192L/R)
QUANTITIES

REMOVE UNSOUND CONCRETE	367	CF
PREPARE CONCRETE BRIDGE DECK SURFACE	73,458	SQFT
RAPID SETTING CONCRETE (PATCH)	367	CF
FURNISH POLYESTER CONCRETE OVERLAY	4,591	CF
PLACE POLYESTER CONCRETE OVERLAY	73,458	SQFT
JOINT SEAL (MR 1")	158	LF
CLEAN EXPANSION JOINT	158	LF
REMOVE CONCRETE DECK SURFACE	3,850	SQFT

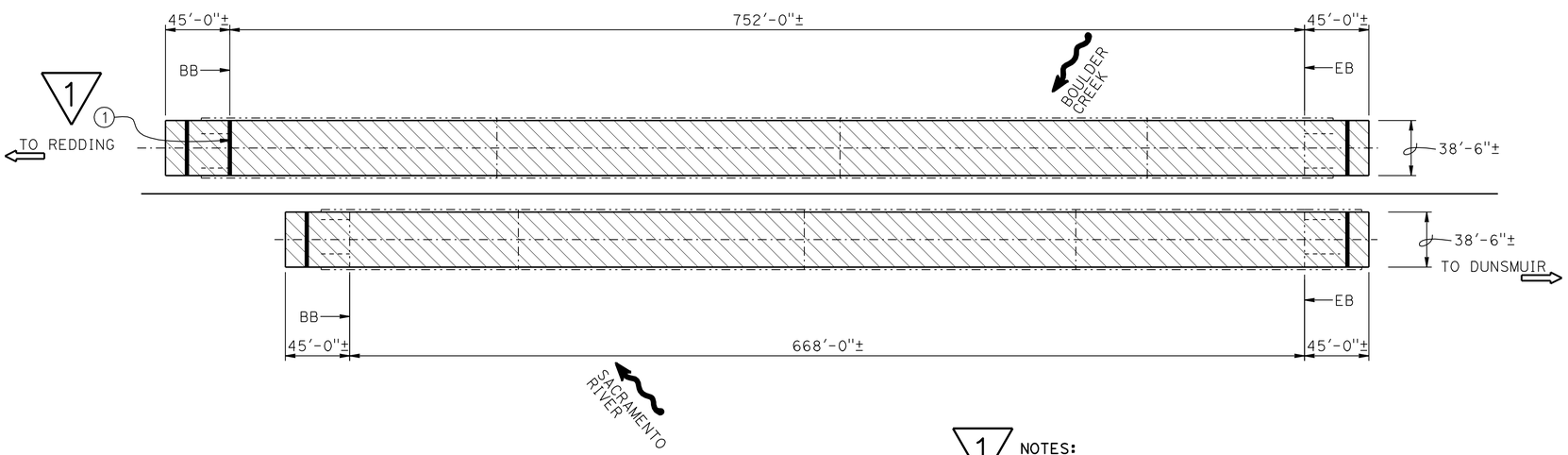

1 REVISED PER ADDENDUM No. 1 DATED SEPTEMBER 28, 2010

SACRAMENTO RIVER BRIDGE B.O.H.

Br. NO. 06-193L/R, PM 52.11
1" = 50'

1

NOTES:

1. Remove and replace existing joint seal assembly at Abutment 1, see "JOINT SEAL ASSEMBLY DETAILS" & "OVERHANG DETAILS" sheets

1

SACRAMENTO RIVER BRIDGE B.O.H (06-193L/R)
QUANTITIES

BRIDGE REMOVAL (PORTION) (LOCATION A)	1	LS
REMOVE UNSOUND CONCRETE	308	CF
PREPARE CONCRETE BRIDGE DECK SURFACE	61,600	SQFT
RAPID SETTING CONCRETE (PATCH)	308	CF
FURNISH POLYESTER CONCRETE OVERLAY	3,850	CF
PLACE POLYESTER CONCRETE OVERLAY	61,600	SQFT
JOINT SEAL (MR 1")	158	LF
CLEAN EXPANSION JOINT	197 ~~158~~	LF
JOINT SEAL ASSEMBLY	39	LF
REMOVE CONCRETE DECK SURFACE	3,850	SQFT

NOTE:
THE CONTRACTOR SHALL VERIFY ALL CONTROLLING FIELD DIMENSIONS BEFORE ORDERING OR FABRICATING ANY MATERIAL.

Joseph E Downing
DESIGN ENGINEER

	BY	CHECKED	LOAD FACTOR DESIGN		
DESIGN	Joey Aquino	Lewis Shen			
DETAILS	S Motalebi / J Reid	Lewis Shen	LAYOUT	Joey Aquino	Jay Reid
QUANTITIES	Joey Aquino	Lewis Shen	SPECIFICATIONS	Iwn Huang	Iwn Huang (PLANS AND SPECS COMPARED)

STATE OF CALIFORNIA
DEPARTMENT OF TRANSPORTATION

DIVISION OF ENGINEERING SERVICES
STRUCTURE DESIGN
DESIGN BRANCH 3

BRIDGE NO. Various
POST MILE Various

DECK REHABILITATION
ROUTE 5 BRIDGES
GENERAL PLAN NO. 3

ORIGINAL SCALE IN INCHES FOR REDUCED PLANS 0 1 2 3

CU 03204
EA 2C4501

DISREGARD PRINTS BEARING EARLIER REVISION DATES

REVISION DATES: 12/24/09 | 2-16-10 | 4-15-10 | 4-21-10 | 4-22-10 | 5-20-10 | 5-25-10 | 9-8-10 | 9-23-10

SHEET 3 OF 11

STRUCTURES DESIGN GENERAL PLAN SHEET (ENGLISH) (REV.07-24-06)

FILE => 02-2c4501-a-gp03.dgn

USERNAME => s136693 DATE PLOTTED => 27-SEP-2010 TIME PLOTTED => 12:24

DIST	COUNTY	ROUTE	POST MILES TOTAL PROJECT	SHEET No	TOTAL SHEETS
02	Sha	5	R44.0/58.0	137	142

REGISTERED CIVIL ENGINEER — DATE 4-30-10

June 1, 2010
PLANS APPROVAL DATE

The State of California or its officers or agents shall not be responsible for the accuracy or completeness of electronic copies of this plan sheet.

REGISTERED PROFESSIONAL ENGINEER — Jose M Aquino III — No. 58386 — Exp. 12-31-10 — CIVIL — STATE OF CALIFORNIA

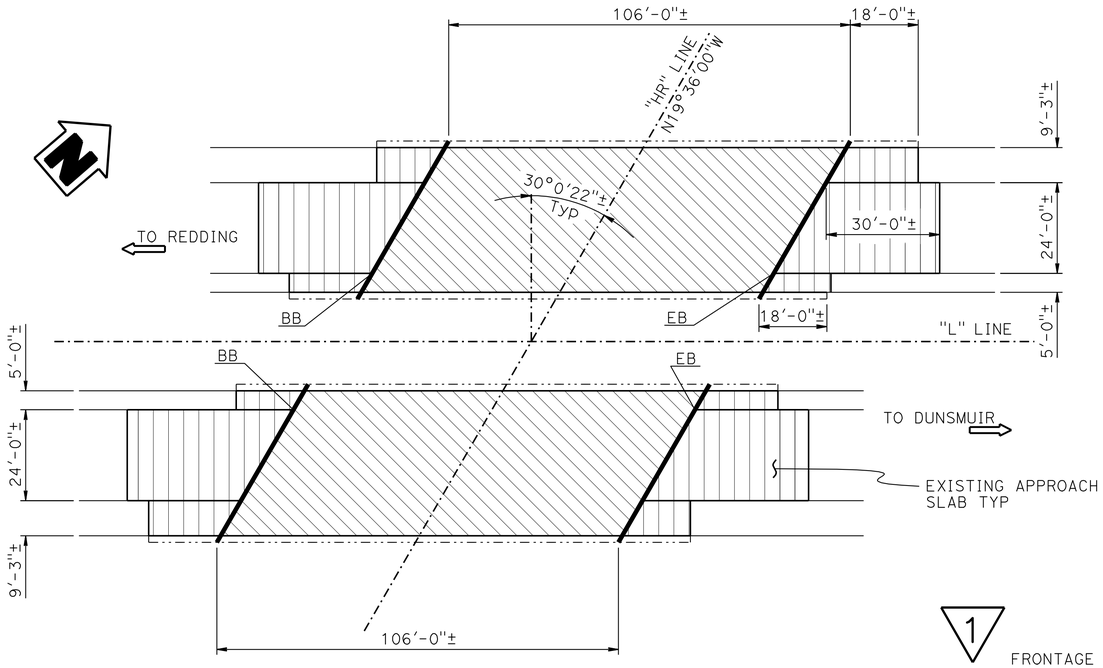

FRONTAGE ROAD UC

Br. NO. 06-0194L/R, PM 52.84
1" = 20'

1

FRONTAGE ROAD UC NO. 06-0194L/R
QUANTITIES

PREPARE CONCRETE BRIDGE DECK SURFACE	8109	SQFT
FURNISH POLYESTER CONCRETE OVERLAY	507	CF
PLACE POLYESTER CONCRETE OVERLAY	8109	SQFT
REMOVE UNSOUND CONCRETE	41	CF
AGGREGATE BASE (APPROACH SLAB)	17	CY
STRUCTURAL CONCRETE, APPROACH SLAB (TYPE R)	172	CY
RAPID SETTING CONCRETE (PATCH)	41	CF
CLEAN EXPANSION JOINT	180	LF
JOINT SEAL (MR 1½")	180	LF

NOTES: (APPLIES TO THIS SHEET ONLY)

1

Indicates limits of unsound concrete removal, rapid set concrete patch, prepare bridge deck for polyester concrete overlay, & place ¾" min depth polyester concrete overlay

Indicates limits of unsound concrete removal, rapid set concrete patch, prepare bridge deck for polymer chip seal & place polymer chip seal deck overlay

Indicates limits of existing approach removal and Structure Approach Type R(30D) placement

Indicates Joint seal replacement See "JOINT SEAL TABLE" on "JOINT SEAL DETAILS" sheet

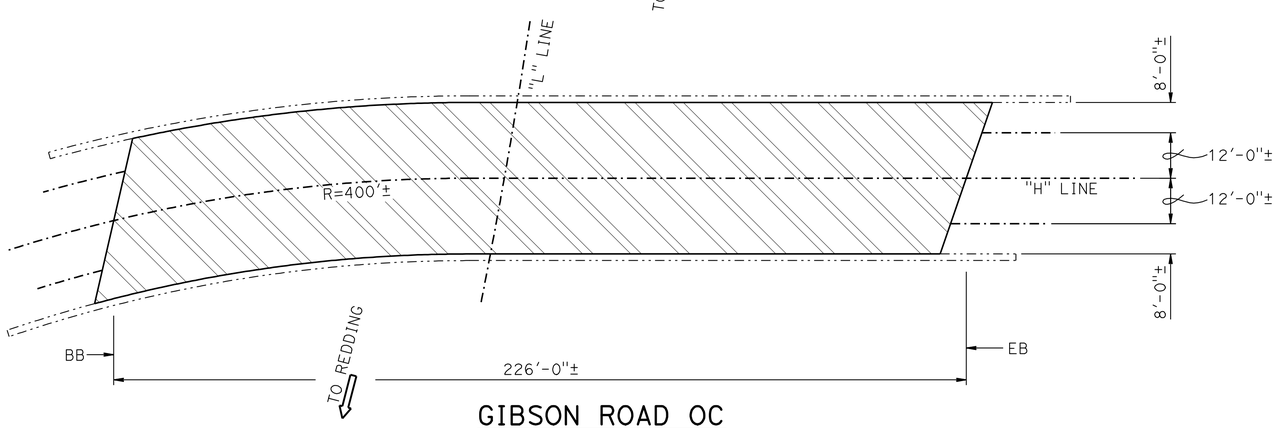

GIBSON ROAD OC

Br. NO. 06-0179, PM 53.30
1" = 20'

GIBSON ROAD OC (06-0179)
QUANTITIES

REMOVE UNSOUND CONCRETE	45	CF
PREPARE CONCRETE BRIDGE DECK SURFACE	9,040	SQFT
RAPID SETTING CONCRETE (PATCH)	45	CF
MULTILAYER POLYMER CHIP SEAL	9,040	SQFT

NOTE:
THE CONTRACTOR SHALL VERIFY ALL CONTROLLING FIELD DIMENSIONS BEFORE ORDERING OR FABRICATING ANY MATERIAL.

1 REVISED PER ADDENDUM No. 1 DATED SEPTEMBER 28, 2010

Joseph E Downing
DESIGN ENGINEER

	BY	CHECKED			
DESIGN	Joey Aquino	Lewis Shen	LOAD FACTOR DESIGN		
DETAILS	S Motalebi / J Reid	Lewis Shen	LAYOUT	Joey Aquino	Jay Reid
QUANTITIES	Joey Aquino	Lewis Shen	SPECIFICATIONS	Iwa Huang	PLANS AND SPECS COMPARED Iwa Huang

STATE OF CALIFORNIA
DEPARTMENT OF TRANSPORTATION

DIVISION OF ENGINEERING SERVICES
STRUCTURE DESIGN
DESIGN BRANCH 3

BRIDGE NO. Various
POST MILE Various

DECK REHABILITATION
ROUTE 5 BRIDGES
GENERAL PLAN NO. 4

ORIGINAL SCALE IN INCHES FOR REDUCED PLANS 0 1 2 3

CU 03204
EA 2C4501

DISREGARD PRINTS BEARING EARLIER REVISION DATES

REVISION DATES: 12/24/09 | 2-16-10 | 4-15-10 | 4-21-10 | 4-22-10 | 5-20-10 | 5-25-10 | 9-8-10 | 9-23-10

SHEET 4 OF 11

USERNAME => s136693 DATE PLOTTED => 27-SEP-2010 TIME PLOTTED => 12:24

FILE => 02-2c4501-a-gp04.dgn

DIST	COUNTY	ROUTE	POST MILES TOTAL PROJECT	SHEET No	TOTAL SHEETS
02	Sha	5	R44.0/58.0	139	142

REGISTERED CIVIL ENGINEER 4-30-10 DATE

June 1, 2010
PLANS APPROVAL DATE

REGISTERED PROFESSIONAL ENGINEER Jose M Aquino III No. 58386 Exp. 12-31-10 CIVIL STATE OF CALIFORNIA

The State of California or its officers or agents shall not be responsible for the accuracy or completeness of electronic copies of this plan sheet.

LEGEND:

PN = Paving Notch
BW = Back Wall
SS = Sleeper Slab

1 * See "JOINT SEAL ASSEMBLY TABLE" on "JOINT SEAL ASSEMBLY DETAILS" sheet

JOINT SEAL TABLE

BRIDGE NUMBER	BRIDGE NAME	LOCATION	MINIMUM "MR" (in) ±	REPLACE (YES/NO)	APPROXIMATE LENGTH (ft) ±	EXISTING WATERSTOP (YES/NO)	Approx DEPTH TO CLEAN Exp JOINT
06-0027L	DOG CREEK BR	Abut 1 PN	4"	NO	N/A	N/A	N/A
		Abut 4 PN	4"	NO	N/A	N/A	N/A
06-0027R	DOG CREEK BR	Abut 1 PN	1"	YES	59′	NO	N/A
		Abut 8 PN	1"	YES	59′	NO	N/A
06-0028	SLATE CREEK	Abut 1 PN	2 1/2"	NO	N/A	N/A	N/A
		Abut 4 PN	2 1/2"	NO	N/A	N/A	N/A
		Abut 4 SS	1"	YES	116.75′	YES	6"
06-0180	LAMOINE RD OC	Abut 1 PN	1 1/2"	YES	49.25′	YES	8"
		Abut 3 PN	2"	YES	49.25′	YES	8"
06-0176	POLARD FLATS	Abut 1 PN	1 1/2"	NO	N/A	N/A	N/A
		Abut 3 PN	1 1/2"	NO	N/A	N/A	N/A
06-0192L	SACRAMENTO RIVER BOH	Abut 1 SS	1"	YES	38.5′	YES	6"
		Abut 1 BW	3"	NO	N/A	N/A	N/A
		Abut 5 BW	9"	NO	N/A	N/A	N/A
		Abut 5 SS	1"	YES	38.5′	YES	6"
06-0192R	SACRAMENTO RIVER BOH	Abut 1 SS	1"	YES	38.5′	YES	6"
		Abut 1 BW	3"	NO	N/A	N/A	N/A
		Abut 5 BW	9"	NO	N/A	N/A	N/A
		Abut 5 SS	1"	YES	38.5′	YES	6"
06-0193L	SACRAMENTO RIVER BOH	Abut 1 SS	1"	YES	38.5′	YES	6"
		Abut 1 BW	~~6"~~ 9"	~~NO~~ YES	~~N/A~~ *	~~N/A~~ *	~~N/A~~ *
		Abut 5 BW	~~6"~~ 3"	NO	N/A	N/A	N/A
		Abut 5 SS	1"	YES	38.5′	YES	6"
06-0193R	SACRAMENTO RIVER BOH	Abut 1 SS	1"	YES	38.5′	YES	6"
		Abut 1 BW	6"	NO	N/A	N/A	N/A
		Abut 5 BW	6"	NO	N/A	N/A	N/A
		Abut 5 SS	1"	YES	38.5′	YES	6"
06-0194L	FRONTAGE ROAD UC	Abut 1 BW	1 1/2"	YES	45.17′	NO	N/A
		Abut 2 BW	1 1/2"	YES	45.17′	NO	N/A
06-0194R	FRONTAGE ROAD UC	Abut 1 BW	1 1/2"	YES	45.17′	NO	N/A
		Abut 2 BW	1 1/2"	YES	45.17′	NO	N/A
06-0179	GIBSON ROAD OC	Abut 1	2"	NO	N/A	N/A	N/A
		Abut 3	2"	NO	N/A	N/A	N/A
06-0111	SIMS ROAD UC	Abut 1	2"	YES	85.4′	NO	N/A
		Abut 3	2"	YES	85.4′	NO	N/A

1

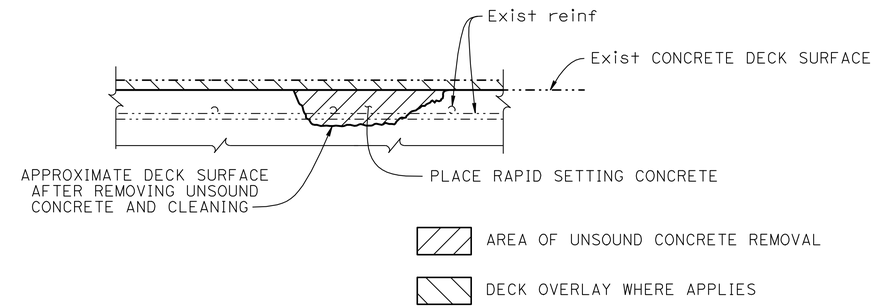

DECK REPAIR DETAIL

No Scale

LOCATIONS TO BE DETERMINED BY THE ENGINEER. REINFORCEMENT MAY BE ENCOUNTERED DURING DECK CONCRETE REMOVAL

BRIDGE DECK REPAIR TABLE

BRIDGE NO.	APPROXIMATE AREA DAMAGED (%) PER BRIDGE	APPROXIMATE DEPTH (in)	REMOVE UNSOUND CONCRETE ft^3	RAPID SETTING CONCRETE PATCH ft^3
06-0027L/R	2	3	372	372
06-0028	2	3	280	280
06-0180	2	3	50	50
06-0176	2	3	38	38
06-0192L/R	2	3	367	367
06-0193L/R	2	3	308	308
06-0194L/R	2	3	41	41
06-0179	2	3	45	45
06-0111	2	3	48	48

1

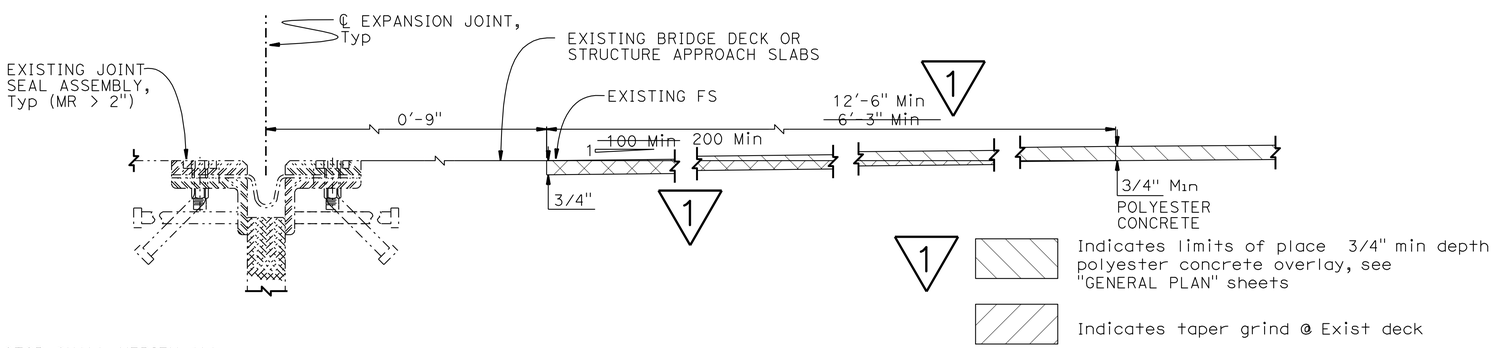

NOTE:
THE CONTRACTOR SHALL VERIFY ALL CONTROLLING FIELD DIMENSIONS BEFORE ORDERING OR FABRICATING ANY MATERIAL.

GRINDING DETAIL @ JOINT SEAL ASSEMBLY (MR > 2") LOCATIONS

3" = 1′-0"

1 REVISED PER ADDENDUM No. 1 DATED SEPTEMBER 28, 2010

	BY	CHECKED
DESIGN	Joey Aquino	Lewis Shen
DETAILS	S Motalebi / J Reid	Lewis Shen
QUANTITIES	Joey Aquino	Lewis Shen

STATE OF CALIFORNIA
DEPARTMENT OF TRANSPORTATION

DIVISION OF ENGINEERING SERVICES
STRUCTURE DESIGN
DESIGN BRANCH 3

BRIDGE NO. Various
POST MILE Various

DECK REHABILITATION
ROUTE 5 BRIDGES
JOINT SEAL DETAILS

STRUCTURES DESIGN DETAIL SHEET (ENGLISH) (REV. 10/25/05)

ORIGINAL SCALE IN INCHES FOR REDUCED PLANS 0 1 2 3

CU 03204
EA 2C4501

DISREGARD PRINTS BEARING EARLIER REVISION DATES

REVISION DATES: 8-31-10 9-14-10 9-23-10 ~~7-16-10~~ ~~3-4-10~~ ~~4-16-10~~ ~~4-22-10~~ ~~5-20-10~~ ~~5-26-10~~

SHEET 6 OF 11

FILE => 02-2c4501-q-jntdt01.dgn

USERNAME => s136693 DATE PLOTTED => 27-SEP-2010 TIME PLOTTED => 12:25

DIST	COUNTY	ROUTE	POST MILES TOTAL PROJECT	SHEET No	TOTAL SHEETS
02	Sha	5	R44.0/58.0	139A	142

REGISTERED CIVIL ENGINEER 4-30-10 DATE

June 1, 2010
PLANS APPROVAL DATE

REGISTERED PROFESSIONAL ENGINEER Jose M Aquino III No. 58386 Exp. 12-31-10 CIVIL STATE OF CALIFORNIA

The State of California or its officers or agents shall not be responsible for the accuracy or completeness of electronic copies of this plan sheet.

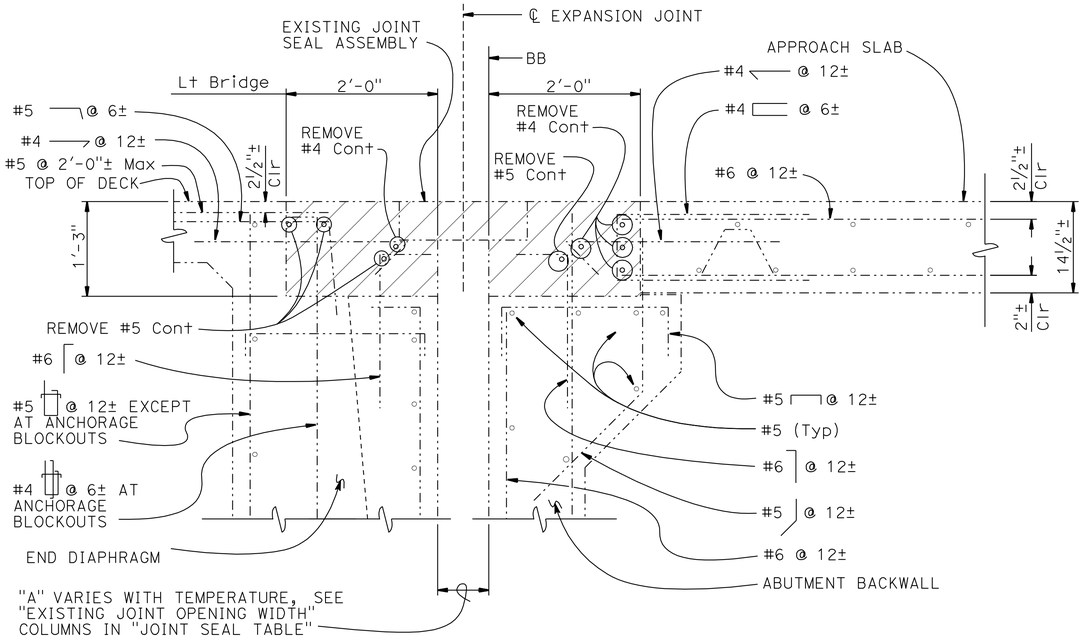

EXISTING

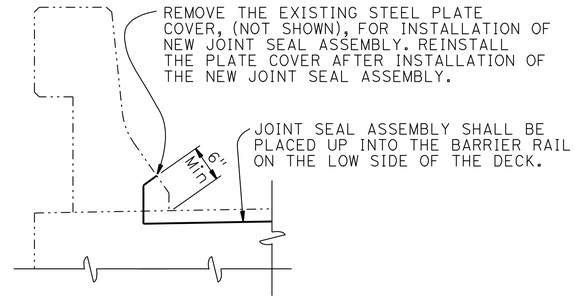

JOINT SEAL ASSEMBLY PLACEMENT AT CONCRETE BARRIER

NO SCALE

JOINT SEAL ASSEMBLY TABLE											
BR NO.	LOCATION		JOINT SEAL TYPE	MIN "MR" (In)	APPROX LENGTH (Ft)	SKEW	EXISTING JOINT OPENING WIDTH "A"			EXISTING WATERSTOP	APPROX DEPTH OF CLEANING EXP JOINT (Ft)
							Summer	Spring/ Fall	Winter		
06-0193 L	Abut 1	BW	JSA	9	39	0	4"±	6"±	8"±	No	10

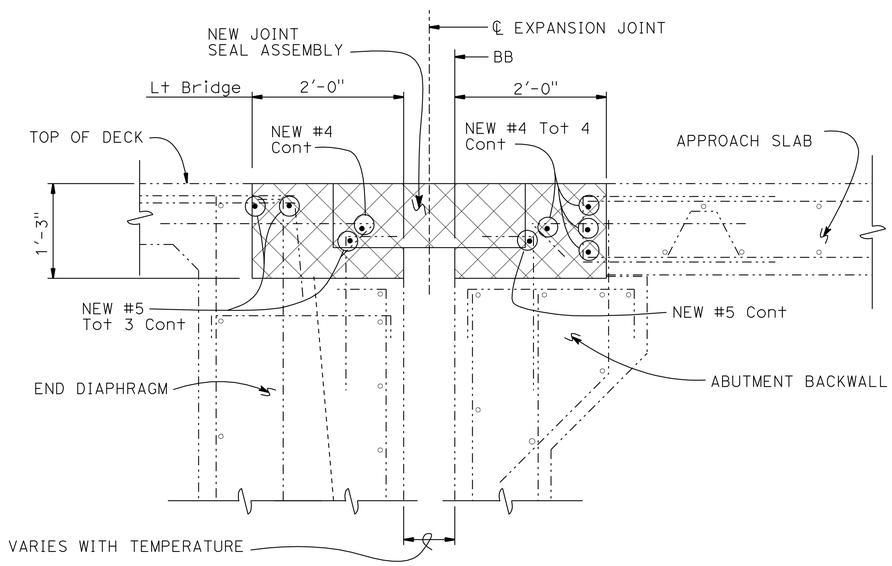

RECONSTRUCTION

JOINT SEAL ASSEMBLY SECTION

NO SCALE

LEGEND:

BW = Backwall joint
JSA = Joint Seal Assembly

NOTES: (Notes apply to this sheet only)

Indicates existing structure.

Remove existing concrete, and existing joint seal assembly All existing reinforcement bars are to remain, including deck overhang and barrier reinforcing except as noted.

Install new steel joint seal assembly and reinforcement bars and place Portland Cement Concrete. Full bearing of the new joint seal assemblies on concrete is required.

For deck overhang, concrete removal and reconstruction limits similar.

NOTE:
THE CONTRACTOR SHALL VERIFY ALL CONTROLLING FIELD DIMENSIONS BEFORE ORDERING OR FABRICATING ANY MATERIAL.

1 ADD PER ADDENDUM No. 1 DATED SEPTEMBER 28, 2010

	BY	CHECKED
DESIGN	Joey Aquino	Lewis Shen
DETAILS	Jay Reid	Lewis Shen
QUANTITIES	Joey Aquino	Lewis Shen

STATE OF CALIFORNIA
DEPARTMENT OF TRANSPORTATION

DIVISION OF ENGINEERING SERVICES
STRUCTURE DESIGN
DESIGN BRANCH 3

BRIDGE NO. Various
POST MILE Various

DECK REHABILITATION
ROUTE 5 BRIDGES
JOINT SEAL ASSEMBLY DETAILS

STRUCTURES DESIGN DETAIL SHEET (ENGLISH) (REV. 10/25/05)

ORIGINAL SCALE IN INCHES FOR REDUCED PLANS 0 1 2 3

CU 03204
EA 2C4501

DISREGARD PRINTS BEARING EARLIER REVISION DATES

REVISION DATES: 9-1-10 9-8-10 9-23-10

SHEET 7 OF 11

FILE => 02-2c4501-q-jntdt02.dgn

USERNAME => s136693 DATE PLOTTED => 27-SEP-2010 TIME PLOTTED => 14:00

DIST	COUNTY	ROUTE	POST MILES TOTAL PROJECT	SHEET No	TOTAL SHEETS
02	Sha	5	R44.0/58.0	139B	142

REGISTERED CIVIL ENGINEER 4-30-10 DATE

June 1, 2010
PLANS APPROVAL DATE

The State of California or its officers or agents shall not be responsible for the accuracy or completeness of electronic copies of this plan sheet.

REGISTERED PROFESSIONAL ENGINEER
Jose M Aquino III
No. 58386
Exp. 12-31-10
CIVIL
STATE OF CALIFORNIA

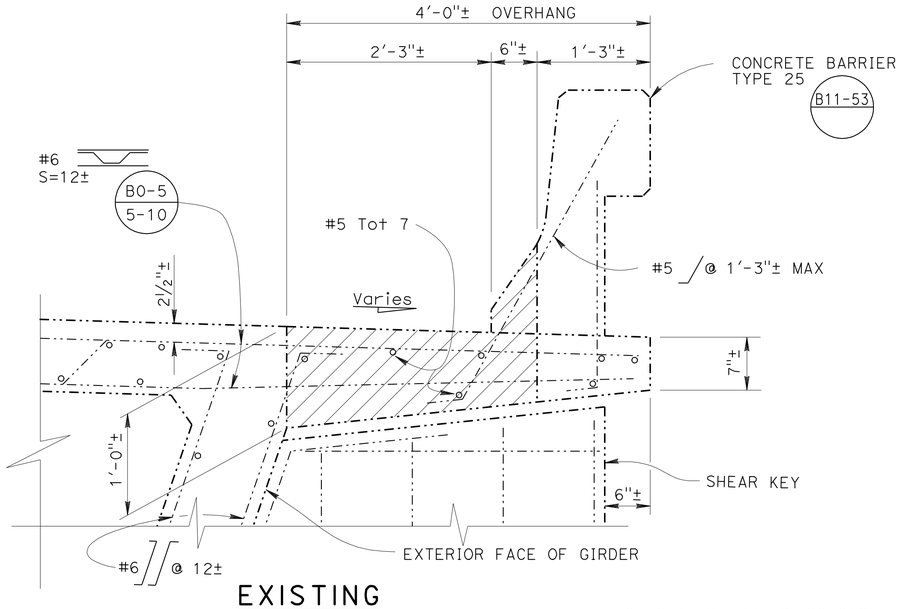

EXISTING

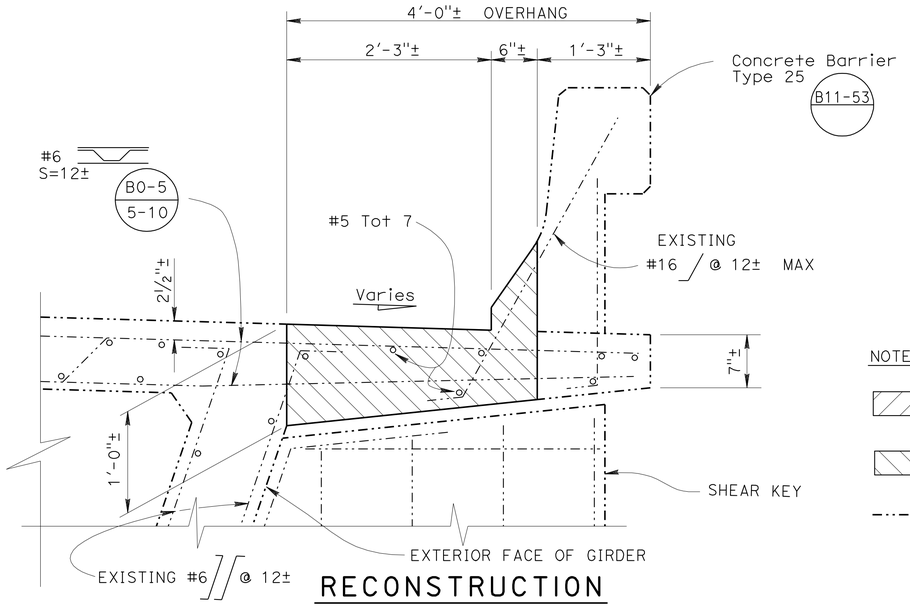

RECONSTRUCTION

LOW SIDE OF BR NO. 06-0193L SHOWN

PARTIAL ABUTMENT ELEVATION (OUTSIDE OVERHANG LOW SIDE)

NO SCALE

NOTES:

Remove existing concrete and joint seal assembly. All existing concrete barrier and deck reinforcement bars to remain.

Install new joint seal assembly and place Portland Cement Concrete.

Indicates existing structure & reinforcement

For details not shown, see "JOINT SEAL ASSEMBLY DETAILS" sheet.

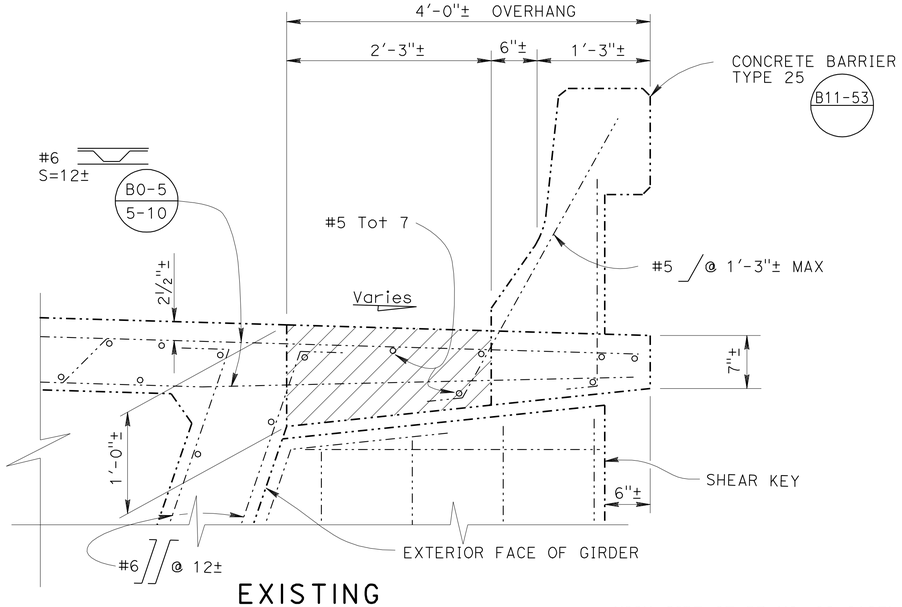

EXISTING

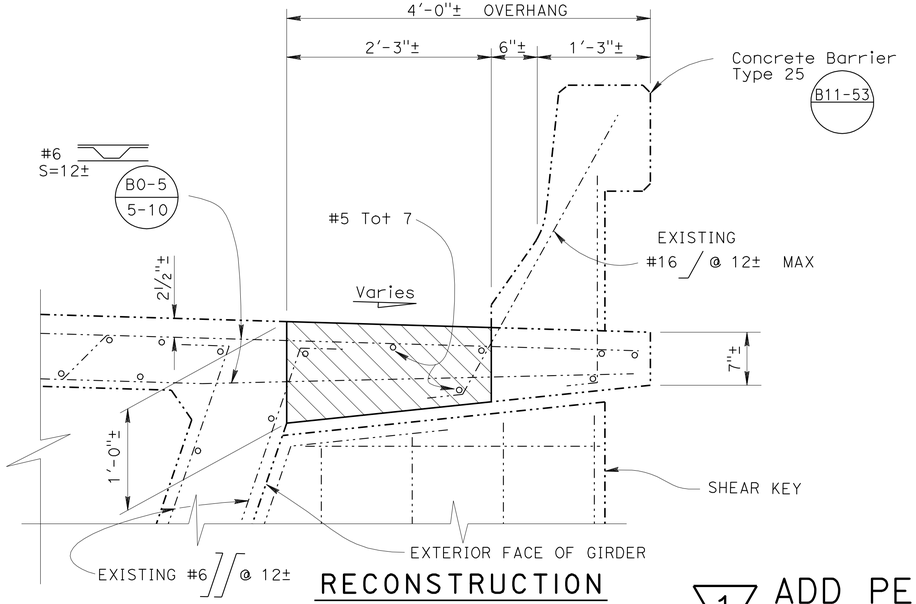

RECONSTRUCTION

HIGH SIDE OF BR NO. 06-0193L SHOWN

PARTIAL ABUTMENT ELEVATION (OUTSIDE OVERHANG HIGH SIDE)

NO SCALE

1 ADD PER ADDENDUM No. 1 DATED SEPTEMBER 28, 2010

	BY	CHECKED
DESIGN	Joey Aquino	Lewis Shen
DETAILS	Jay Reid	Lewis Shen
QUANTITIES	Joey Aquino	Lewis Shen

STATE OF CALIFORNIA
DEPARTMENT OF TRANSPORTATION

DIVISION OF ENGINEERING SERVICES
STRUCTURE DESIGN
DESIGN BRANCH 3

BRIDGE NO. Various
POST MILE Various

DECK REHABILITATION
ROUTE 5 BRIDGES
OVERHANG DETAILS

STRUCTURES DESIGN DETAIL SHEET (ENGLISH) (REV. 10/25/05)

ORIGINAL SCALE IN INCHES FOR REDUCED PLANS 0 1 2 3

CU 03204
EA 2C4501

DISREGARD PRINTS BEARING EARLIER REVISION DATES

REVISION DATES: 9-2-10 9-8-10 9-23-10

SHEET 8 OF 11

FILE => 02-2c4501-q-jntdt03.dgn

USERNAME => s136693 DATE PLOTTED => 27-SEP-2010 TIME PLOTTED => 14:00