Dist	COUNTY	ROUTE	POST MILES TOTAL PROJECT	SHEET No.	TOTAL SHEETS
02	Sha	5	R44.0/58.0	1	142

ACIM-005-8(341)E

STATE OF CALIFORNIA
DEPARTMENT OF TRANSPORTATION

PROJECT PLANS FOR CONSTRUCTION ON
STATE HIGHWAY

IN SHASTA COUNTY NEAR LAKEHEAD
FROM 1.5 MILES SOUTH OF DOG CREEK BRIDGE
TO 0.6 MILE NORTH OF SIMS ROAD UNDERCROSSING

TO BE SUPPLEMENTED BY STANDARD PLANS DATED MAY 2006

INDEX OF SHEETS

SHEET No.	DESCRIPTION
1	TITLE
2-3	CROSS SECTIONS
4-19	CONSTRUCTION DETAILS
20-33	DRAINAGE DETAILS
34-37	DRAINAGE QUANTITIES
38-39	CONSTRUCTION AREA SIGNS
40-45	STAGE CONSTRCTION AND TRAFFIC HANDLING PLANS
46	STAGE CONSTRUCTION QUANTITIES
47-52	DETOUR PLANS
53-54	PAVEMENT DELINEATION DETAILS
55	PAVEMENT DELINEATION QUANTITIES
56-69	SIGN DETAILS
70-71	SIGN QUANTITIES
72-74	SUMMARY OF QUANITIES
75-97	ELECTRICAL PLANS
98-133	REVISED AND NEW STANDARD PLANS

STRUCTURES

134-142	BRIDGE PLANS

THE STANDARD PLANS LIST APPLICABLE TO THIS CONTRACT IS INCLUDED IN THE NOTICE TO BIDDERS AND SPECIAL PROVISIONS BOOK.

LOCATION MAP

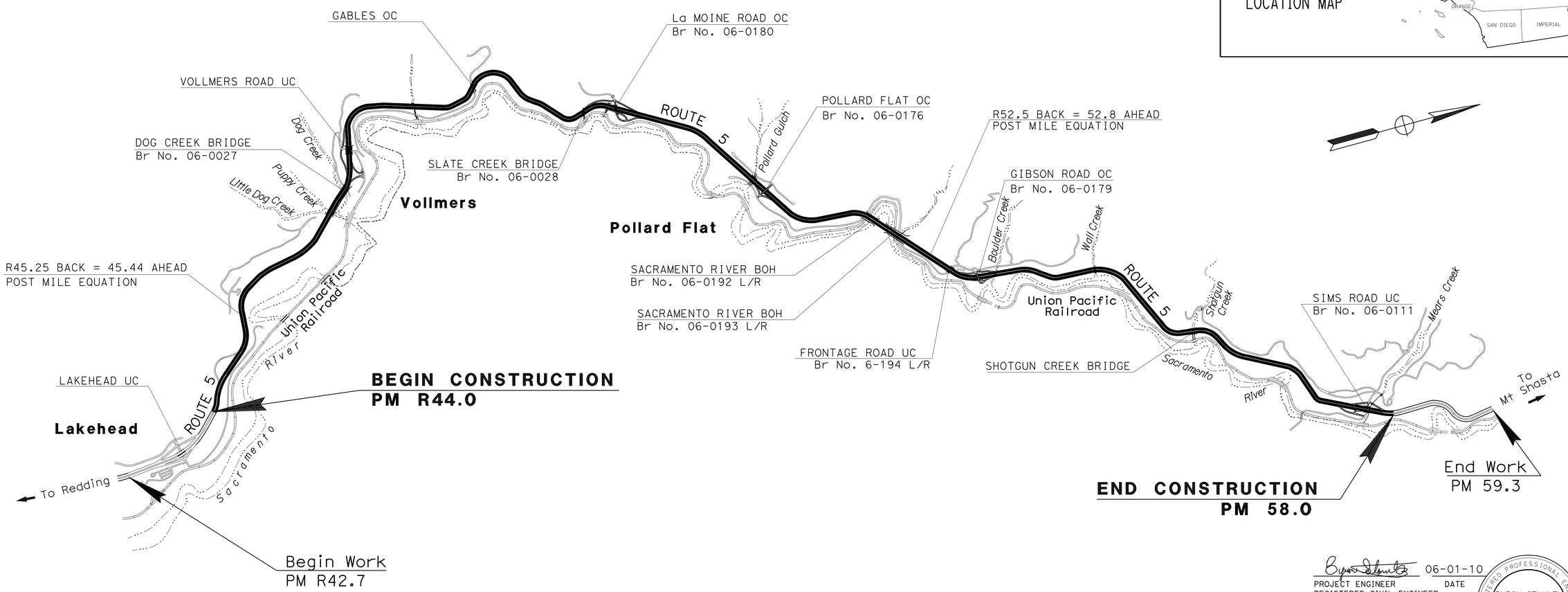

NO SCALE

PROJECT MANAGER CARL ANDERSON

DESIGN ENGINEER STEVE TOPAL

THE CONTRACTOR SHALL POSSESS THE CLASS (OR CLASSES) OF LICENSE AS SPECIFIED IN THE "NOTICE TO BIDDERS."

06-01-10
PROJECT ENGINEER DATE
REGISTERED CIVIL ENGINEER

REGISTERED PROFESSIONAL ENGINEER
BYRON STANLEY
No. C60161
Exp. 06-30-12
CIVIL
STATE OF CALIFORNIA

JUNE 1, 2010
PLANS APPROVAL DATE

THE STATE OF CALIFORNIA OR ITS OFFICERS OR AGENTS SHALL NOT BE RESPONSIBLE FOR THE ACCURACY OR COMPLETENESS OF SCANNED COPIES OF THIS PLAN SHEET.

LAST REVISION 05-31-10
DATE PLOTTED => 14-JUL-2010
TIME PLOTTED => 15:11

CONTRACT No. 02-2C4504

Dist	COUNTY	ROUTE	POST MILES TOTAL PROJECT	SHEET No.	TOTAL SHEETS
02	Sha	5	R44.0/58.0	2	142

REGISTERED CIVIL ENGINEER 06-01-10 DATE

06-01-10
PLANS APPROVAL DATE

REGISTERED PROFESSIONAL ENGINEER BYRON H. STANLEY No. C60161 Exp. 6-30-10 CIVIL STATE OF CALIFORNIA

THE STATE OF CALIFORNIA OR ITS OFFICERS OR AGENTS SHALL NOT BE RESPONSIBLE FOR THE ACCURACY OR COMPLETENESS OF SCANNED COPIES OF THIS PLAN SHEET.

NOTES:
1. DIMENSIONS OF THE PAVEMENT STRUCTURES (STRUCTURAL SECTIONS) ARE SUBJECT TO TOLERANCES SPECIFIED IN THE STANDARD SPECIFICATIONS.
2. SUPERELEVATIONS AS SHOWN OR AS DETERMINED BY THE ENGINEER.
3. SEE QUANTITY TABLE FOR REMOVAL AND PLACEMENT OF MBGR AND HMA DIKE.
4. SEE CONSTRUCTION DETAILS FOR WORK NEAR SIMS BRIDGE.
5. EXISTING UTILITY FACILITIES HAVE NOT BEEN POSITIVELY IDENTIFIED.

DESIGN DESIGNATION

ADT (2007)	18,000
ADT (2041)	38,200
DHV (2041)	4,600
D (2007)	56%
T (2007)	30%
TI20	14.5
V 65 mph	

ABBREVIATIONS

CPACP	COLD PLANE ASPHALT CONCRETE PAVEMENT
RS	SHOULDER RUMBLE STRIP (HMA, GROUND-IN INDENTATIONS)
SB	IMPORTED MATERIAL (SHOULDER BACKING)
GL	GUTTER LIP
UM	UNSUITABLE MATERIAL
AE	ASPHALT EMULSION (FOG SEAL COAT)
PRM	PAVEMENT REINFORCEMENT MESH
SEG	SUBGRADE ENHANCEMENT GEOTEXTILE
CECP	CRACK Exist CONCRETE PAVEMENT
RAC	RUBBERIZED AC

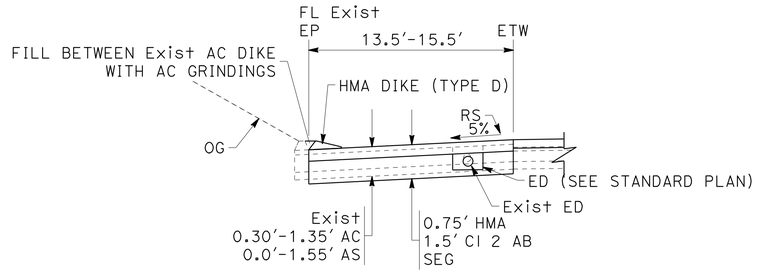

SHOULDER REPAIR
SB PM R55.00-R55.20

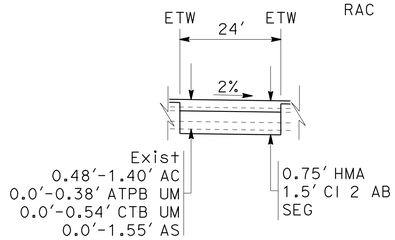

DETAIL B-WHERE UM EXISTS
PM R44.38-R44.63 PM R47.13-R47.38
PM R48.18-R48.43 PM R54.53-R54.78
* OR AS DIRECTED BY ENGINEER

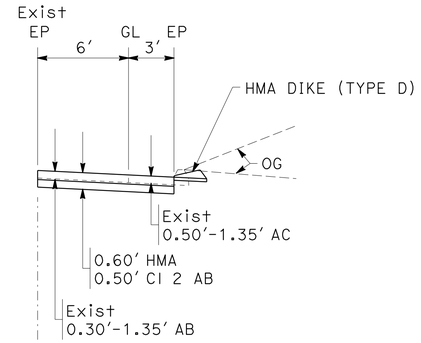

SHOULDER EXTENSION
PM R44.00 TO R44.06, PM R44.35 TO R44.44
PM R44.17 TO R44.23, PM R44.68 TO R44.74
PM R44.88 TO R44.90

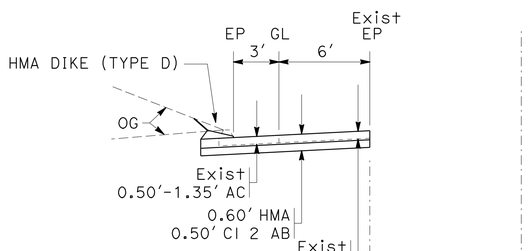

SHOULDER EXTENSION
PM R44.35 TO R44.63, PM R44.87 TO R45.12
PM R47.27 TO R47.51

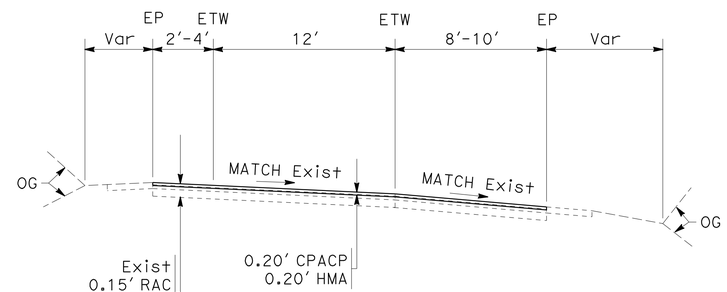

RAMP OVERLAY

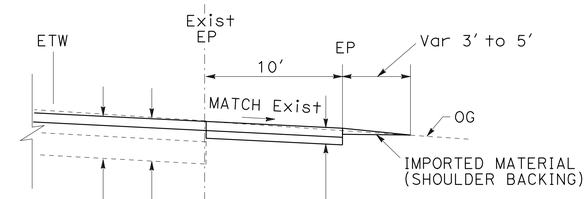

POLLARD FLAT CHAIN UP AREA SHOULDER EXTENTION
NB PM R50.00 TO R50.33

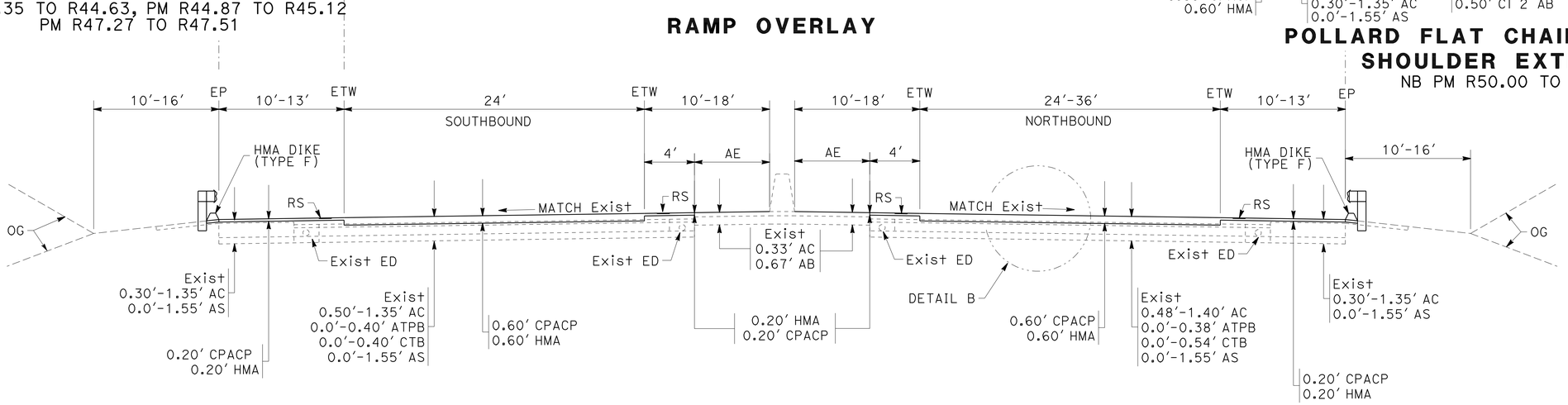

ROUTE 5 MAINLINE OVERLAY
Sha PM R44.0 TO PM 56.2

TYPICAL CROSS SECTIONS
NO SCALE

X-1

REVISED BY | DATE REVISED
ANDREW STECKLEIN | BYRON STANLEY
CALCULATED-DESIGNED BY | CHECKED BY
FUNCTIONAL SUPERVISOR: STEVE TOPAL
STATE OF CALIFORNIA - DEPARTMENT OF TRANSPORTATION
Caltrans® DESIGN

P:\proj1\02\2c450_plans\pse\22c450ca001.dgn

LAST REVISION 03-18-09 | DATE PLOTTED => 02-JUN-2010 | TIME PLOTTED => 15:31

Dist	COUNTY	ROUTE	POST MILES TOTAL PROJECT	SHEET No.	TOTAL SHEETS
02	Sha	5	R44.0/58.0	3	142

REGISTERED CIVIL ENGINEER 06-01-10 DATE

06-01-10
PLANS APPROVAL DATE

REGISTERED PROFESSIONAL ENGINEER BYRON H. STANLEY No. C60161 Exp. 6-30-10 CIVIL STATE OF CALIFORNIA

THE STATE OF CALIFORNIA OR ITS OFFICERS OR AGENTS SHALL NOT BE RESPONSIBLE FOR THE ACCURACY OR COMPLETENESS OF SCANNED COPIES OF THIS PLAN SHEET.

NOTES:
1. SLOPE MEDIAN AWAY FROM BARRIER IN TANGENT SECTIONS.
2. EXISTING UTILITY FACILITIES HAVE NOT BEEN POSITIVELY IDENTIFIED.
3. COLD PLANE Exist AC TO PCC.

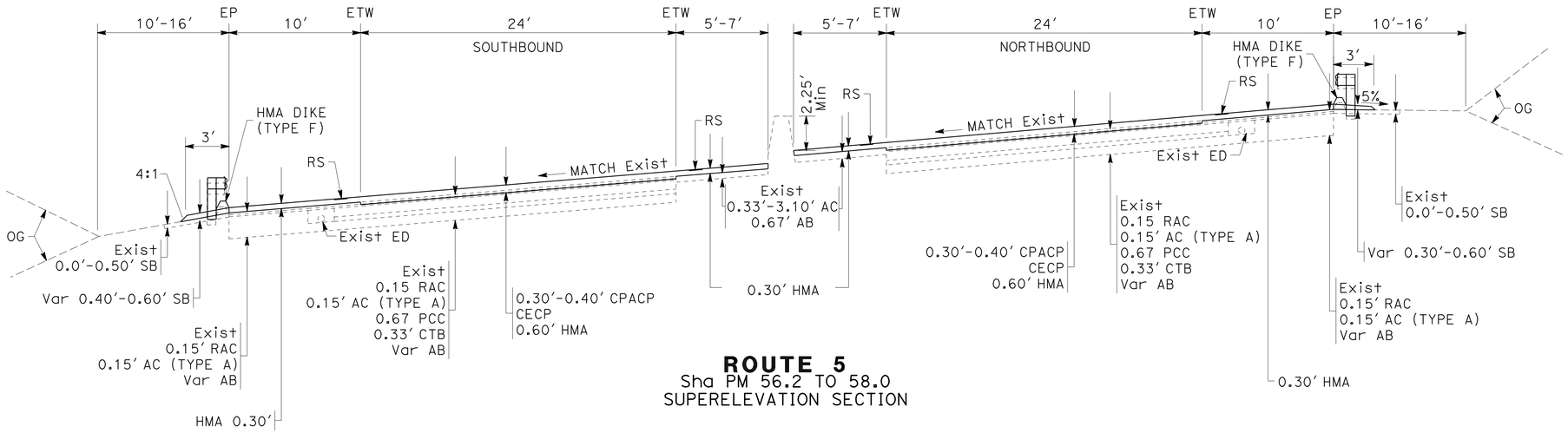

ROUTE 5
Sha PM 56.2 TO 58.0
SUPERELEVATION SECTION

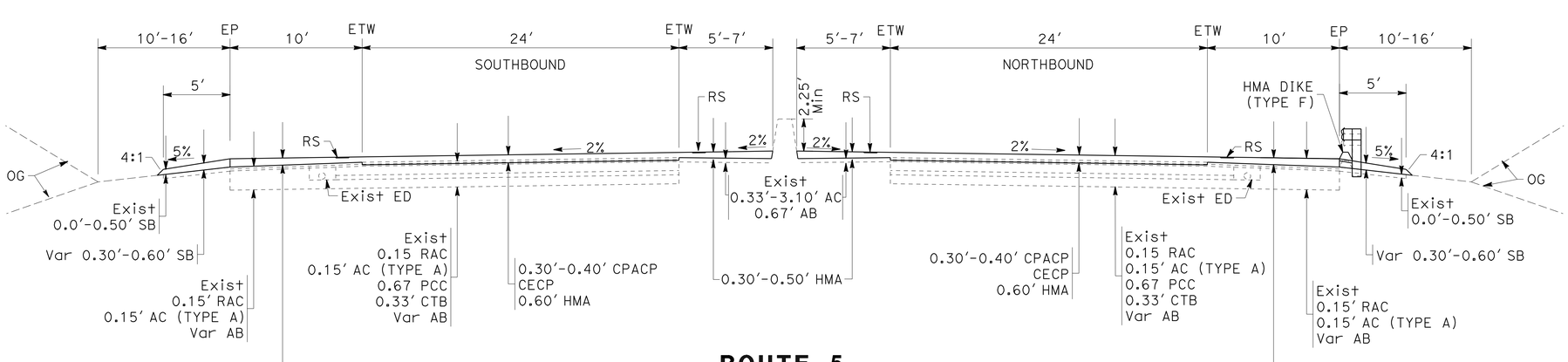

ROUTE 5
Sha PM 56.2 TO 58.0
TANGENT SECTION

TYPICAL CROSS SECTIONS

NO SCALE **X-2**

REVISED BY	DATE REVISED
ANDREW STECKLEIN	BYRON STANLEY
CALCULATED-DESIGNED BY	CHECKED BY
FUNCTIONAL SUPERVISOR	STEVE TOPAL

STATE OF CALIFORNIA - DEPARTMENT OF TRANSPORTATION
Caltrans
DESIGN

P:\proj\02\2c450_plans\pse\22c450ca002.dgn

LAST REVISION DATE PLOTTED => 02-JUN-2010
03-18-09 TIME PLOTTED => 15:31

Dist	COUNTY	ROUTE	POST MILES TOTAL PROJECT	SHEET No.	TOTAL SHEETS
02	Sha	5	R44.0/58.0	4	142

REGISTERED CIVIL ENGINEER 06-01-10 DATE

06-01-10
PLANS APPROVAL DATE

REGISTERED PROFESSIONAL ENGINEER BYRON H. STANLEY No. C60161 Exp. 6-30-10 CIVIL STATE OF CALIFORNIA

THE STATE OF CALIFORNIA OR ITS OFFICERS OR AGENTS SHALL NOT BE RESPONSIBLE FOR THE ACCURACY OR COMPLETENESS OF SCANNED COPIES OF THIS PLAN SHEET.

NOTES:

1. EXISTING UTILITY FACILITIES HAVE NOT BEEN POSITIVELY LOCATED.
2. FOR RUMBLE STRIP DETAILS NOT SHOWN, SEE STANDARD PLAN A40B.
3. RUMBLE STRIPS SHALL BE INSTALLED ON BOTH INSIDE AND OUTSIDE SHOULDERS, EXCEPT RAMPS, ACROSS EXISTING BRIDGE STRUCTURES AND UNDERCROSSING.

ABBREVIATIONS

CPACP	COLD PLANE ASPHALT CONCRETE PAVEMENT
LL	LANE LINE
RP	RADIUS POINT
CECP	CRACK Exist CONCRETE PAVEMENT
TCE	TEMPORARY CONSTRUCTION EASEMENT

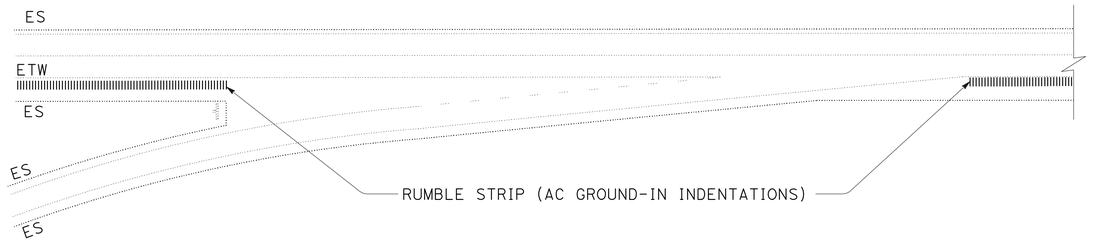

RUMBLE STRIP ENTRANCE AND EXIT RAMP GORE DETAIL

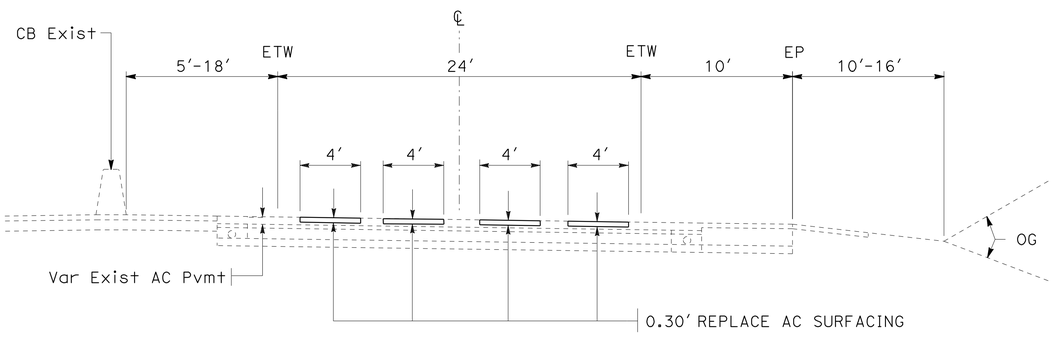

REPLACE AC SURFACING

(TYPICAL BOTH DIRECTIONS)

REPLACE AC SURFACING LOCATIONS OR AS DIRECTED BY THE ENGINEER

DIRECTION	POSTMILE LIMITS	(N) APPROXIMATE NUMBER OF DIGOUTS	(N) AVERAGE LENGTH	(N) WIDTH	(N) DEPTH	REPLACE ASPHALT CONCRETE SURFACING *
NORTHBOUND	PM-PM		LF	LF	LF	CY
	R44.00-R45.00	6	105	4	0.3	28
	R45.00-R46.00	5	92	4	0.3	20
	R46.00-R47.00	4	86	4	0.3	15
	R47.00-R48.00	7	106	4	0.3	33
	R48.00-R49.00	5	96	4	0.3	21
	R49.00-R50.00	3	101	4	0.3	13
	R50.00-R51.00	5	88	4	0.3	20
	R51.00-R52.00	4	120	4	0.3	21
	R52.00-53.00	4	110	4	0.3	20
	53.00-R54.00	5	98	4	0.3	22
	R54.00-R55.00	6	82	4	0.3	22
	R55.00-R56.00	6	95	4	0.3	25
	R56.00-57.00	6	110	4	0.3	29
	57.00-58.00	4	104	4	0.3	18
SOUTHBOUND	R44.00-R45.00	7	88	4	0.3	27
	R45.00-R46.00	7	112	4	0.3	35
	R46.00-R47.00	5	90	4	0.3	20
	R47.00-R48.00	7	99	4	0.3	31
	R48.00-R49.00	6	113	4	0.3	30
	R49.00-R50.00	5	102	4	0.3	23
	R50.00-R51.00	5	97	4	0.3	22
	R51.00-R52.00	5	97	4	0.3	22
	R52.00-53.00	6	115	4	0.3	31
	53.00-R54.00	7	87	4	0.3	27
	R54.00-R55.00	4	102	4	0.3	18
	R55.00-R56.00	5	100	4	0.3	22
	R56.00-57.00	7	95	4	0.3	30
	57.00-58.00	5	114	4	0.3	25
	TOTALS	151				671

* QUANTITIES ARE INCLUDED ON QUANTITY SHEETS

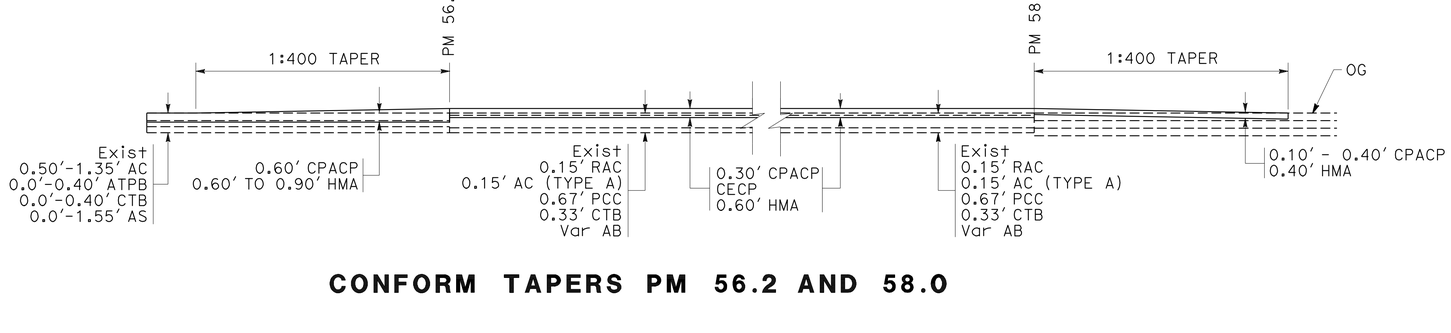

CONFORM TAPERS PM 56.2 AND 58.0

CONSTRUCTION DETAILS

NO SCALE

C-1

REVISED BY | DATE REVISED
ERIC COVINGTON | BYRON STANLEY
CALCULATED-DESIGNED BY | CHECKED BY
FUNCTIONAL SUPERVISOR: STEVE TOPAL
STATE OF CALIFORNIA - DEPARTMENT OF TRANSPORTATION
Caltrans DESIGN
P:\proj\02\2c450_plans\pse\22c450ga001.dgn

LAST REVISION DATE PLOTTED => 02-JUN-2010
03-18-09 TIME PLOTTED => 15:31

BORDER LAST REVISED 4/11/2008 | RELATIVE BORDER SCALE IS IN INCHES 0 1 2 3 | USERNAME => s123119 | DGN FILE => 22c450ga001.dgn | CU 03 247 | EA 2C4501

Dist	COUNTY	ROUTE	POST MILES TOTAL PROJECT	SHEET No.	TOTAL SHEETS
02	Sha	5	R44.0/58.0	5	142

REGISTERED CIVIL ENGINEER 06-01-10 DATE

06-01-10
PLANS APPROVAL DATE

REGISTERED PROFESSIONAL ENGINEER BYRON H. STANLEY No. C60161 Exp. 6-30-10 CIVIL STATE OF CALIFORNIA

THE STATE OF CALIFORNIA OR ITS OFFICERS OR AGENTS SHALL NOT BE RESPONSIBLE FOR THE ACCURACY OR COMPLETENESS OF SCANNED COPIES OF THIS PLAN SHEET.

NOTES:

1. EXISTING UTILITY FACILITIES HAVE NOT BEEN POSITIVELY LOCATED.
2. PERPETUATE EXISTING GORE DRAINAGE WHERE APPLICABLE.
3. FOR TRAFFIC MONITORING STATION LOCATIONS, SEE ELECTRICAL PLANS.

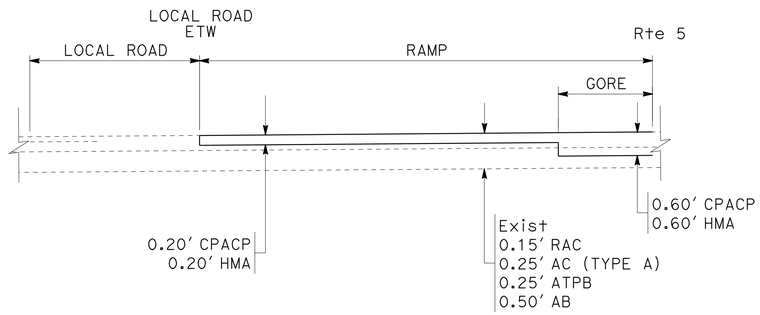

PROFILE VIEW

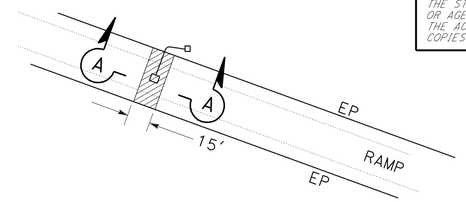

SECTION A-A

TRAFFIC MONITORING STATIONS IN RAMPS

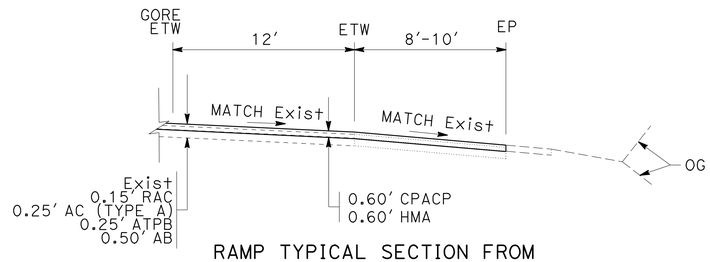

RAMP TYPICAL SECTION FROM MAINLINE THROUGH GORE NOSE

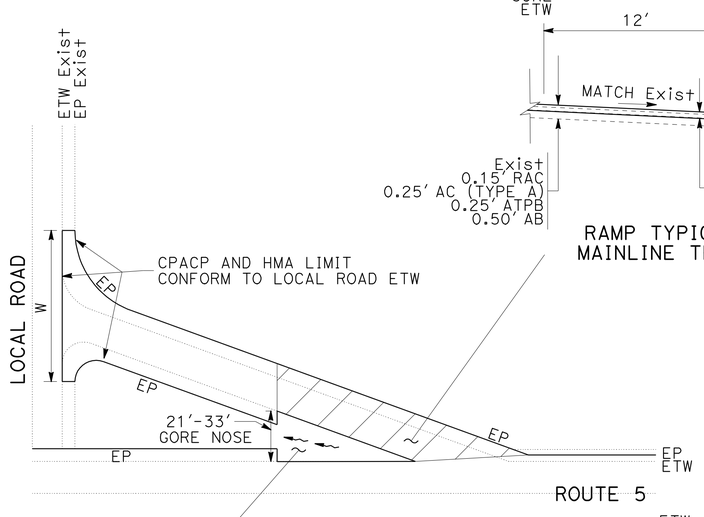

MEDIAN

PLAN VIEW

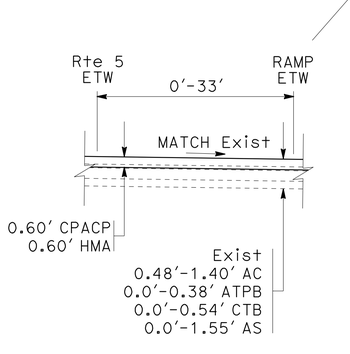

GORE TYPICAL SECTION

RAMP CONFORM WIDTHS TO LOCAL ROADS

DESCRIPTION		PM	W (FT)
VOLLMERS Rd	NB OFF	R45.66	92
	SB ON	R45.88	126
	NB ON	R45.91	116
	SB OFF	R46.19	105
La MOINE Rd	SB ON	R48.96	112
	NB OFF	R49.18	40
	SB OFF	R49.32	118
	NB ON	R49.38	40
POLLARD FLAT OC	SB ON	R50.55	130
	NB OFF	R50.58	145
	NB ON	R50.91	141
	SB OFF	R50.91	127
GIBSON Rd	NB OFF	53.31	40
	NB ON	53.46	40
	SB ON	53.46	110
	SB OFF	53.50	106
SIMS Rd	NB OFF	57.21	122
	SB OFF	57.33	135
	SB ON	57.52	105
	NB ON	57.61	122

RAMP CONFORM TO LOCAL ROAD

VOLLMERS Rd PM R45.8
La MOINE Rd SB PM R49.0
POLLARD FLAT PM R50.7
GIBSON Rd SB PM 53.48

CONSTRUCTION DETAILS

NO SCALE

C-2

REVISED BY | DATE REVISED
ANDREW STECKLEIN | BYRON STANLEY
CALCULATED-DESIGNED BY | CHECKED BY
FUNCTIONAL SUPERVISOR
STEVE TOPAL
STATE OF CALIFORNIA - DEPARTMENT OF TRANSPORTATION
Caltrans
DESIGN

P:\proj1\02\2c450_plans\pse\22c450ga002.dgn

LAST REVISION 03-18-09 | DATE PLOTTED => 02-JUN-2010 | TIME PLOTTED => 15:31

Dist	COUNTY	ROUTE	POST MILES TOTAL PROJECT	SHEET No.	TOTAL SHEETS
02	Sha	5	R44.0/58.0	6	142

REGISTERED CIVIL ENGINEER 06-01-10 DATE

06-01-10
PLANS APPROVAL DATE

REGISTERED PROFESSIONAL ENGINEER BYRON H. STANLEY No. C60161 Exp. 6-30-10 CIVIL STATE OF CALIFORNIA

THE STATE OF CALIFORNIA OR ITS OFFICERS OR AGENTS SHALL NOT BE RESPONSIBLE FOR THE ACCURACY OR COMPLETENESS OF SCANNED COPIES OF THIS PLAN SHEET.

NOTES:

1. EXISTING UTILITY FACILITIES HAVE NOT BEEN POSITIVELY LOCATED.
2. PERPETUATE EXISTING GORE DRAINAGE WHERE APPLICABLE.

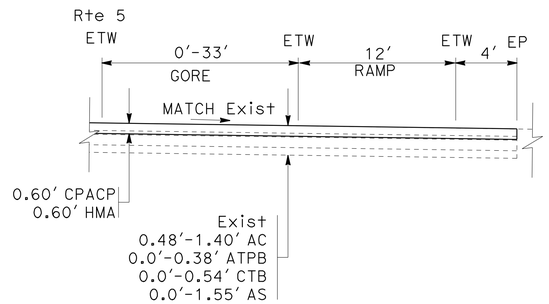

GORE TYPICAL SECTION

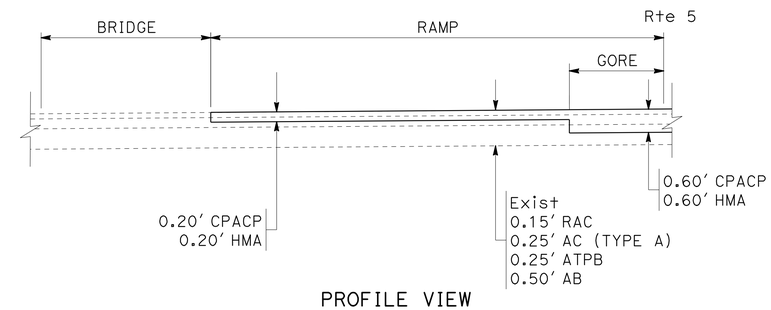

PROFILE VIEW

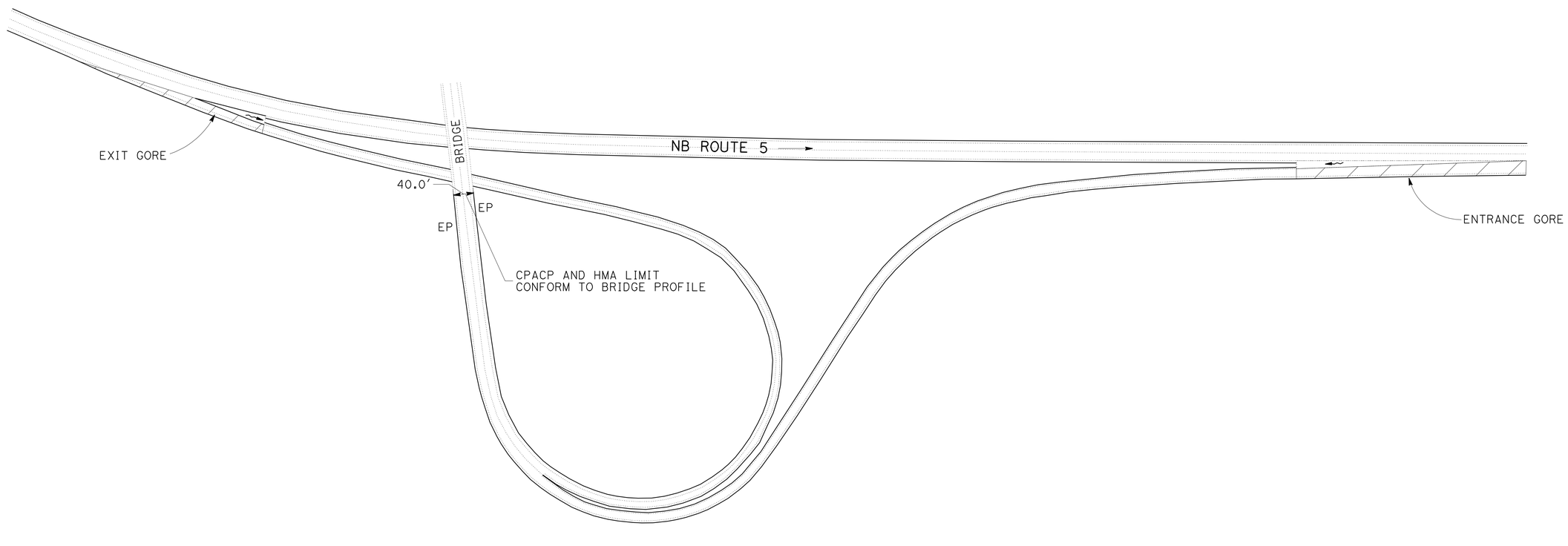

RAMP CONFORM TO LOCAL ROAD

La MOINE Rd NB PM R49.0
GIBSON Rd NB PM 53.4

CONSTRUCTION DETAILS

NO SCALE

C-3

REVISED BY | DATE REVISED
ANDREW STECKLEIN | BYRON STANLEY
CALCULATED-DESIGNED BY | CHECKED BY
FUNCTIONAL SUPERVISOR | STEVE TOPAL

STATE OF CALIFORNIA - DEPARTMENT OF TRANSPORTATION
Caltrans
DESIGN

P:\proj1\02\2c450_plans\pse\22c450ga003.dgn

LAST REVISION DATE PLOTTED => 02-JUN-2010
TIME PLOTTED => 15:31
03-18-09

Dist	COUNTY	ROUTE	POST MILES TOTAL PROJECT	SHEET No.	TOTAL SHEETS
02	Sha	5	R44.0/58.0	7	142

REGISTERED CIVIL ENGINEER 06-01-10 DATE

06-01-10
PLANS APPROVAL DATE

REGISTERED PROFESSIONAL ENGINEER BYRON H. STANLEY No. C60161 Exp. 6-30-10 CIVIL STATE OF CALIFORNIA

THE STATE OF CALIFORNIA OR ITS OFFICERS OR AGENTS SHALL NOT BE RESPONSIBLE FOR THE ACCURACY OR COMPLETENESS OF SCANNED COPIES OF THIS PLAN SHEET.

NOTES:

1. EXISTING UTILITY FACILITIES HAVE NOT BEEN POSITIVELY LOCATED.
2. PERPETUATE EXISTING GORE DRAINAGE WHERE APPLICABLE.
3. ON AND OFF RAMPS AT THE SIMS ROAD INTERCHANGE NEED TO CONFORM TO THE 0.3′ HMA OVERLAY OF THE MAINLINE. THE TYPICAL LENGTH OF THE CONFORM IS 120′

LEGEND

- FULL DEPTH RECONSTRUCT AT EXISTING GRADE
- MAINLINE FULL DEPTH CONFORM TAPER
- RAMP TYPICAL SECTION FROM MAINLINE THROUGH GORE NOSE

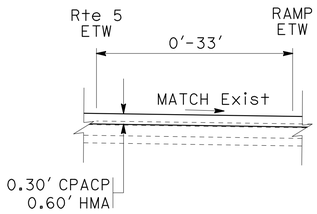

GORE TYPICAL SECTION

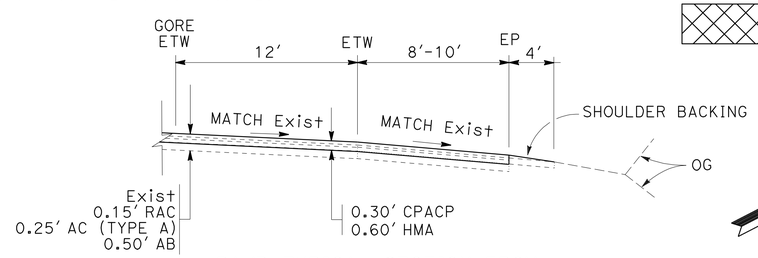

RAMP TYPICAL SECTION FROM MAINLINE THROUGH GORE NOSE

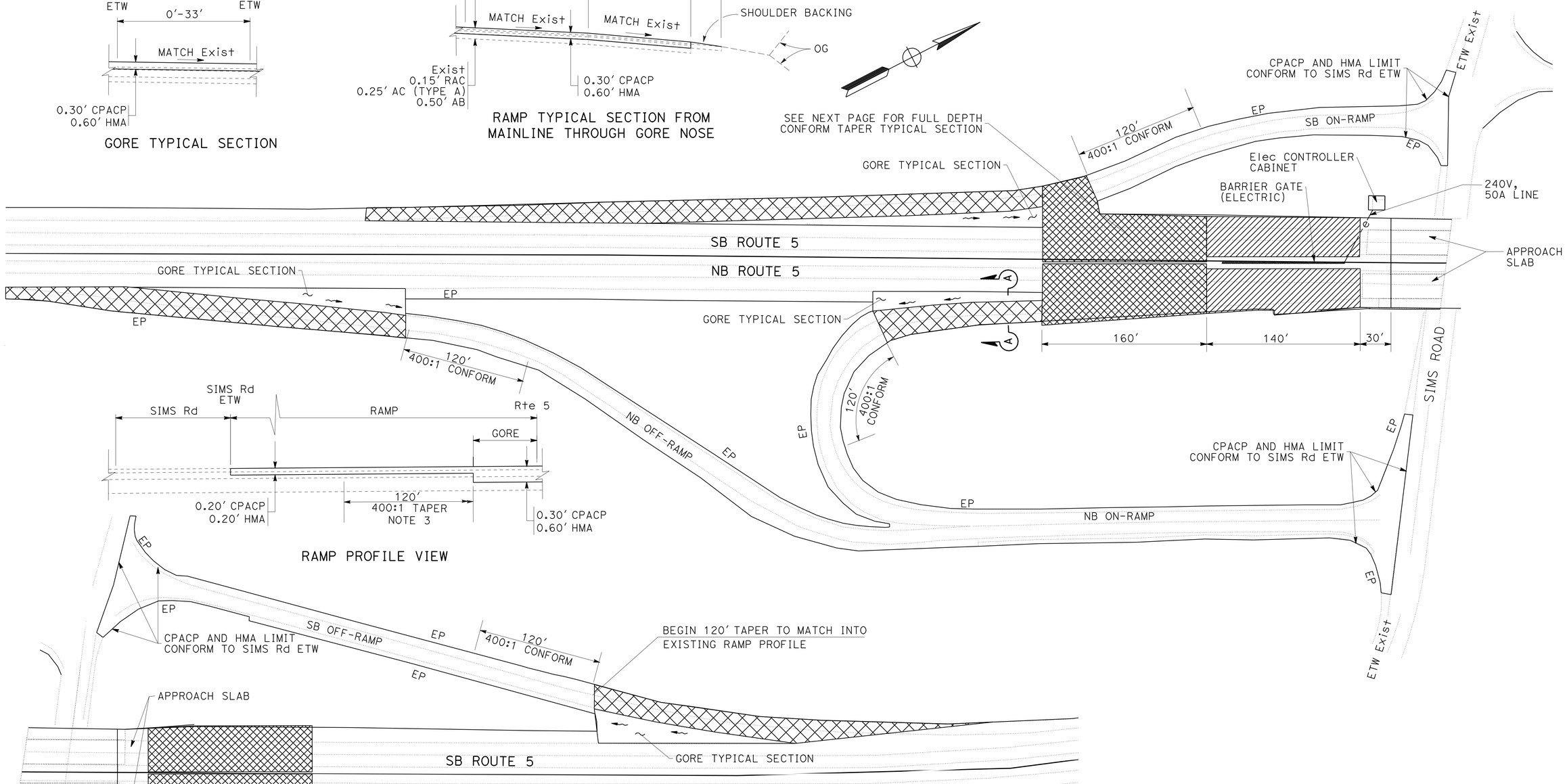

RAMP CONFORM AND MAIN LINE CONFORM TO BRIDGE APPROACH SLABS AT SIMS Rd

CONSTRUCTION DETAILS

NO SCALE

C-4

REVISED BY | DATE REVISED
ANDREW STECKLEIN | BYRON STANLEY
CALCULATED-DESIGNED BY | CHECKED BY
FUNCTIONAL SUPERVISOR | STEVE TOPAL

STATE OF CALIFORNIA - DEPARTMENT OF TRANSPORTATION
Caltrans
DESIGN

P:\proj1\02\2c450_plans\pse\22c450ga004.dgn

LAST REVISION | DATE PLOTTED => 02-JUN-2010 | TIME PLOTTED => 15:31
03-18-09

BORDER LAST REVISED 4/11/2008 | RELATIVE BORDER SCALE IS IN INCHES 0 1 2 3 | USERNAME => s123119 | DGN FILE => 22c450ga004.dgn | CU 03 247 | EA 2C4501

Dist	COUNTY	ROUTE	POST MILES TOTAL PROJECT	SHEET No.	TOTAL SHEETS
02	Sha	5	R44.0/58.0	8	142

REGISTERED CIVIL ENGINEER 06-01-10 DATE

06-01-10
PLANS APPROVAL DATE

REGISTERED PROFESSIONAL ENGINEER BYRON H. STANLEY No. C60161 Exp. 6-30-10 CIVIL STATE OF CALIFORNIA

THE STATE OF CALIFORNIA OR ITS OFFICERS OR AGENTS SHALL NOT BE RESPONSIBLE FOR THE ACCURACY OR COMPLETENESS OF SCANNED COPIES OF THIS PLAN SHEET.

NOTES:

1. EXISTING UTILITY FACILITIES HAVE NOT BEEN POSITIVELY LOCATED.
2. REFER TO STRUCTURES PLANS FOR APPROACH SLAB DETAILS.

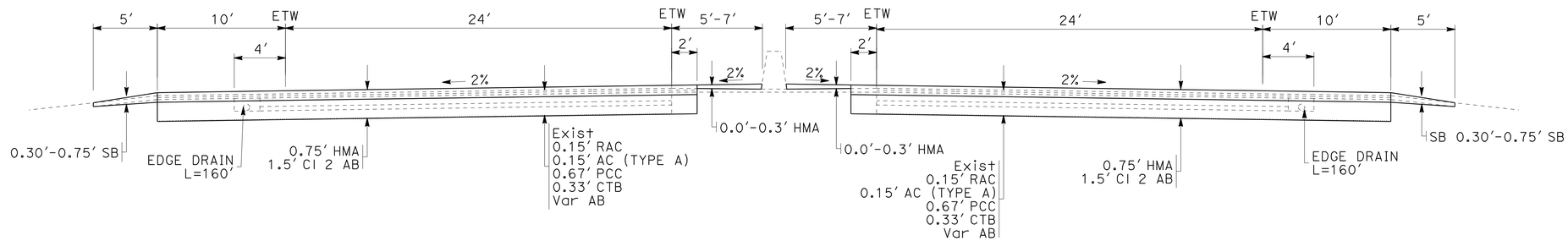

CONFORM TAPER TYPICAL SECTION

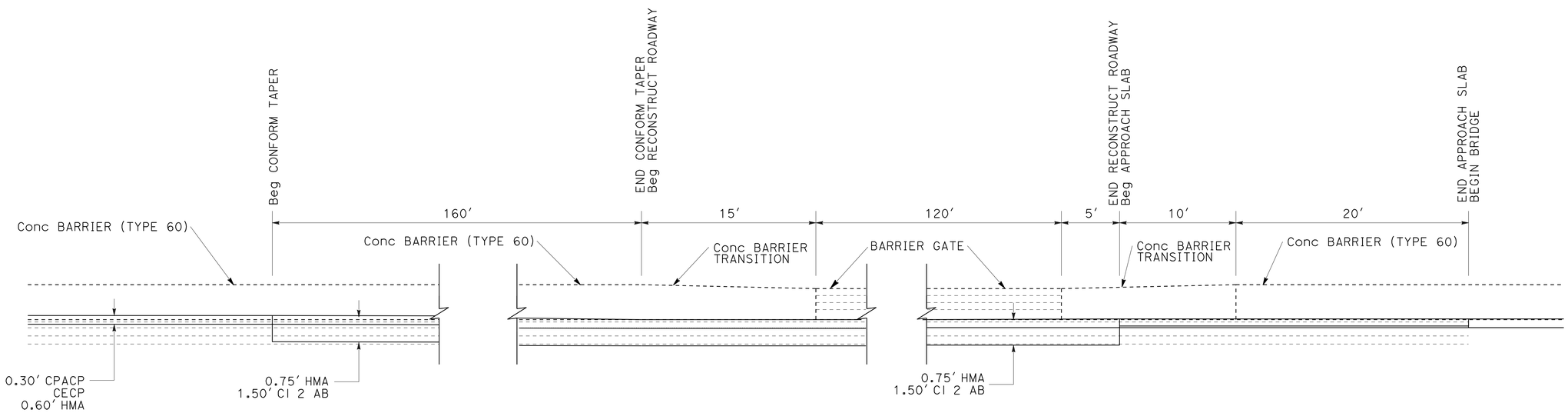

CONFORM TAPER PROFILE

APPROACH CONFORM, SIMS ROAD

CONSTRUCTION DETAILS

NO SCALE

C-5

REVISED BY	DATE REVISED

CALCULATED-DESIGNED BY	WILL LESLIE
CHECKED BY	BYRON STANLEY
FUNCTIONAL SUPERVISOR	STEVE TOPAL

STATE OF CALIFORNIA - DEPARTMENT OF TRANSPORTATION
Caltrans
DESIGN

P:\proj1\02\2c450_plans\pse\22c450ga005.dgn

LAST REVISION 03-18-09 | DATE PLOTTED => 02-JUN-2010 TIME PLOTTED => 15:31

Dist	COUNTY	ROUTE	POST MILES TOTAL PROJECT	SHEET No.	TOTAL SHEETS
02	Sha	5	R44.0/58.0	9	142

REGISTERED CIVIL ENGINEER 06-01-10 DATE

06-01-10
PLANS APPROVAL DATE

REGISTERED PROFESSIONAL ENGINEER BYRON H. STANLEY No. C60161 Exp. 6-30-10 CIVIL STATE OF CALIFORNIA

THE STATE OF CALIFORNIA OR ITS OFFICERS OR AGENTS SHALL NOT BE RESPONSIBLE FOR THE ACCURACY OR COMPLETENESS OF SCANNED COPIES OF THIS PLAN SHEET.

NOTES:

1. FOR DETAILS NOT SHOWN, SEE STANDARD PLANS, JULY 2006.
2. DEPENDENT DIMENSIONS WILL BE VERIFIED IN THE FIELD BEFORE FABRICATING ANY END CONNECTION TO CONFORM WITH EXISTING PAVED CONDITIONS.
3. WHEN END SECTION IS CALLED FOR, MODIFY TYPICAL TERMINAL SECTION TO FIT. SEE DETAIL E
4. ALL PLATES AND BOLTS ARE GALVANIZED.
5. CUT AND REMOVE PORTION OF TYPE 1, 2 AND BAGR AS REQUIRED.
6. EXTERIOR SPLICE BOLT HOLES SHALL BE THE STANDARD 7/8" X 1 1/8" SLOT SIZE FOR RAIL SPLICES AT POST #T4 AND THE CONNECTION TO THE CONCRETE BARRIER OR RAILING. INTERIOR SPLICE BOLT HOLES MAY BE INCREASED UP TO 1 1/4" DIA. WASHERS SHALL BE USED WITH SPLICE BOLTS ON BACK SIDE OF RAIL ELEMENT AT POST #T4 AND CONNECTION TO THE CONCRETE BARRIER OR RAILING.
7. TAPER THE TOP OF THE END OF THE BRIDGE RAILING AT 4:1 TO MATCH THE TOP ELEVATION OF THE THRIE BEAM RAIL ELEMENT.
8. EXISTING UTILITY FACILITIES HAVE NOT BEEN POSITIVELY LOCATED.

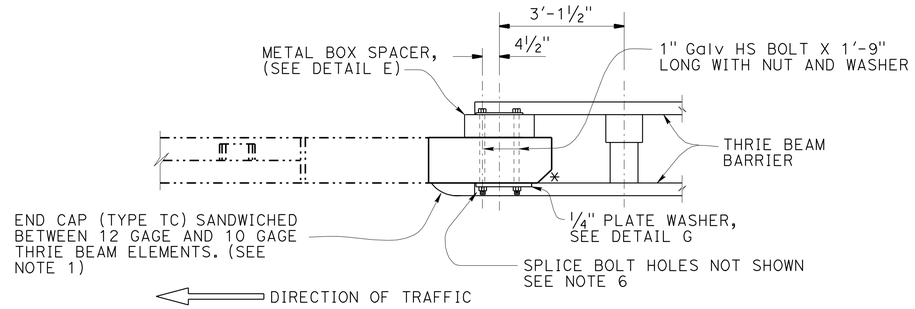

PLAN

* 5" X 5" CHAMFER

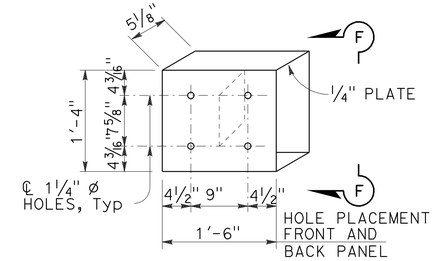

DETAIL E

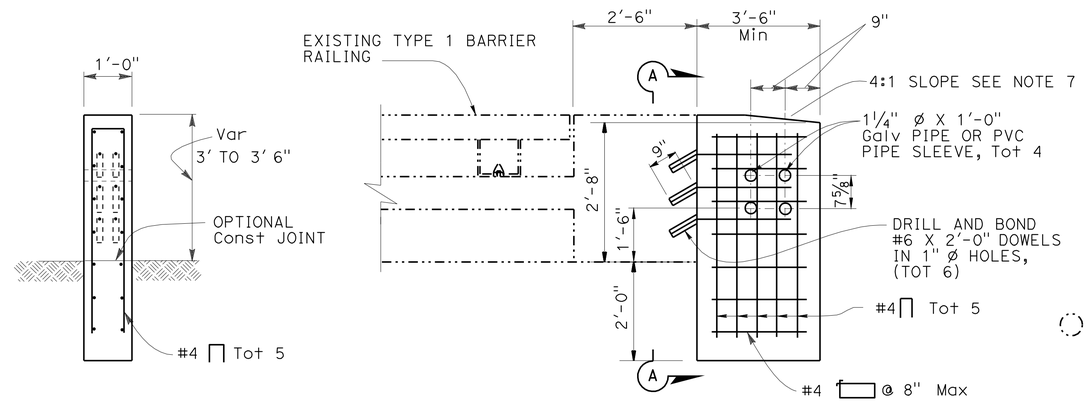

SECTION A-A

ELEVATION
TYPE 1

TYPICAL SECTION
(TYPE 1 BARRIER)

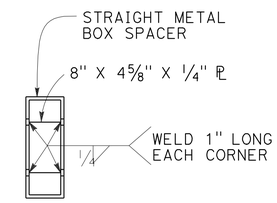

VIEW F-F

TRANSITION ANCHOR BLOCK

SIMS ROAD UC PM 57.41 AND PM 57.44

BRIDGE No. 06-0111

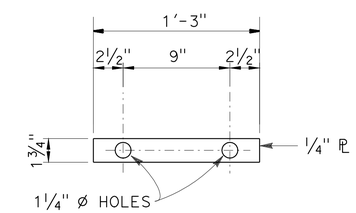

DETAIL G

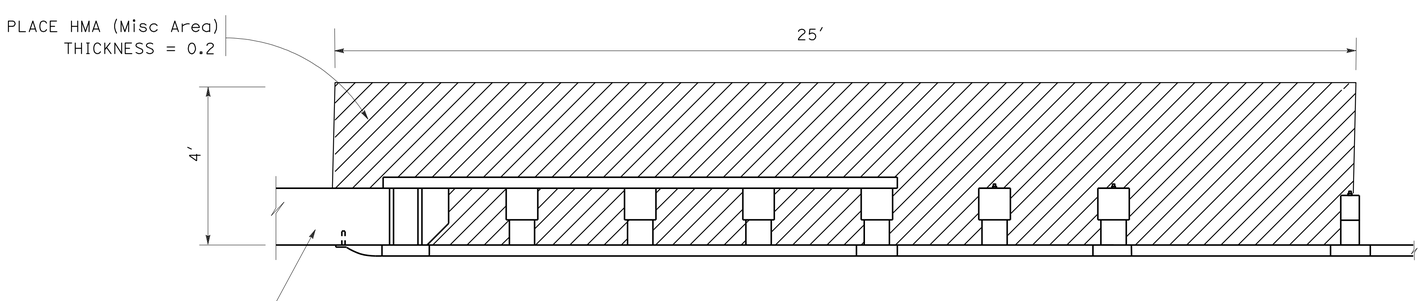

PLACE HMA AT MBGR TRANSITION (TYPE WB)

CONSTRUCTION DETAILS

NO SCALE

C-6

STATE OF CALIFORNIA - DEPARTMENT OF TRANSPORTATION
DESIGN

FUNCTIONAL SUPERVISOR: STEVE TOPAL
CALCULATED-DESIGNED BY: ERIC COVINGTON
CHECKED BY: BYRON STANLEY
REVISED BY
DATE REVISED

P:\proj1\02\2c450_plans\pse\22c450ga006.dgn

LAST REVISION 03-18-09
DATE PLOTTED => 02-JUN-2010
TIME PLOTTED => 15:31

Dist	COUNTY	ROUTE	POST MILES TOTAL PROJECT	SHEET No.	TOTAL SHEETS
02	Sha	5	R44.0/58.0	10	142

REGISTERED CIVIL ENGINEER 06-01-10 DATE

06-01-10
PLANS APPROVAL DATE

REGISTERED PROFESSIONAL ENGINEER BYRON H. STANLEY No. C60161 Exp. 6-30-10 CIVIL STATE OF CALIFORNIA

THE STATE OF CALIFORNIA OR ITS OFFICERS OR AGENTS SHALL NOT BE RESPONSIBLE FOR THE ACCURACY OR COMPLETENESS OF SCANNED COPIES OF THIS PLAN SHEET.

NOTES:

1. FOR DETAILS NOT SHOWN, SEE STANDARD PLANS.
2. DEPENDENT DIMENSIONS WILL BE VERIFIED IN THE FIELD BEFORE FABRICATING ANY END CONNECTION TO CONFORM WITH EXISTING PAVED CONDITIONS.
3. ALL PLATES AND BOLTS ARE GALVANIZED.
4. EXISTING UTILITY FACILITIES HAVE NOT BEEN POSITIVELY LOCATED.

LEGEND:

—·—·— INDICATES EXISTING STRUCTURE

——— INDICATES NEW CONSTRUCTION

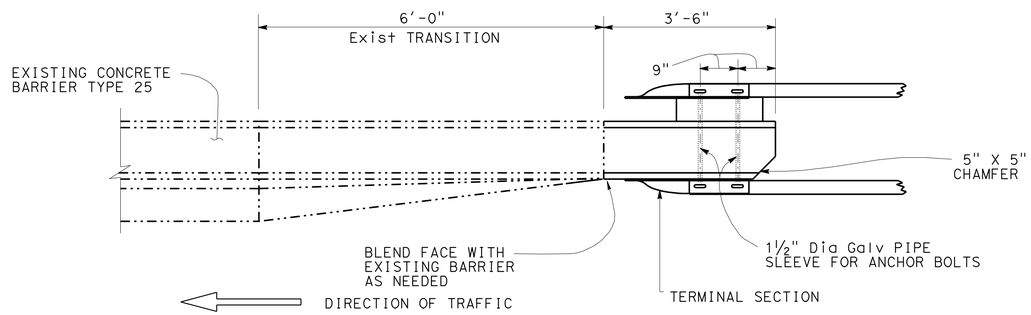

PLAN

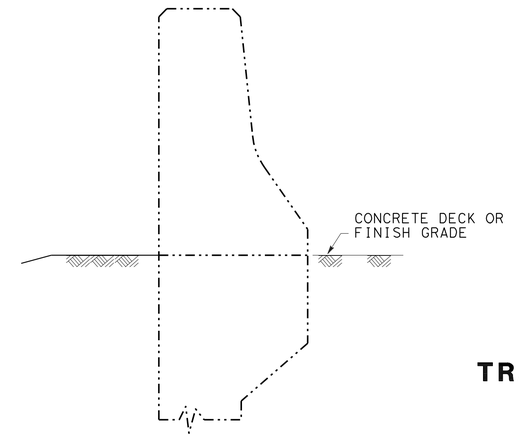

SECTION B-B

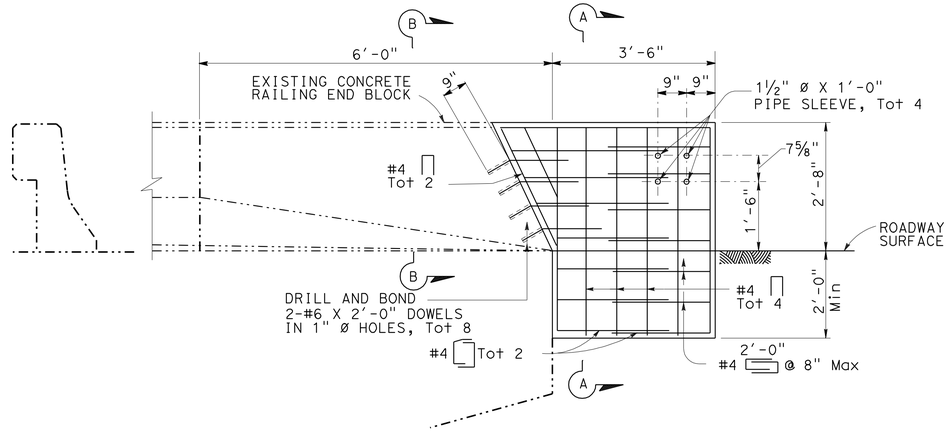

ELEVATION

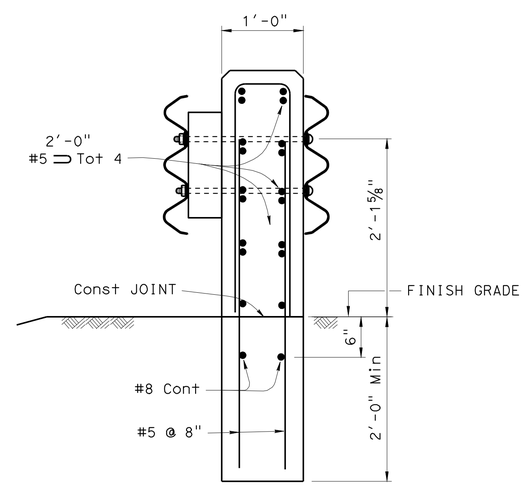

SECTION A-A

TRANSITION ANCHOR BLOCK LOCATIONS FOR THIS DETAIL

LOCATION	PM	STRUCTURE	BRIDGE APPROACH/ DEPARTURE/ QUADRANT
NORTHBOUND	45.53	DOG CEERK 06-0027	APPROACH
	R45.96	VOLMERS UC 06-0181	APPROACH
	R45.99		
	R48.84	SLATE CREEK BRIDGE 06-0028	APPROACH
	R48.93		
	R51.80	SACRAMENTO RIVER 06-0192R	APPROACH
	R52.20	SACRAMENTO RIVER 06-0193R	APPROACH
	R52.25		
	52.82	FRONTAGE UC 06-0194R	APPROACH
SOUTHBOUND	52.87	FRONTAGE UC 06-0194R	APPROACH
	R52.25	SACRAMENTO RIVER 06-0193L	APPROACH
	R51.97	SACRAMENTO RIVER 06-0192L	APPROACH
	R48.92	SLATE CREEK BRIDGE 06-0028	APPROACH
	R45.99	VOLMERS UC 06-0181	APPROACH
	45.70	DOG CEERK 06-0027	APPROACH
LOCAL ROADS	R49.15	La MOINE ROAD OC 06-0180	SOUTHWEST
			NORTHWEST
			SOUTHEAST
			NORTHEAST
	R50.81	POLARD FLAT OC 06-0176	SOUTHWEST
			NORTHWEST
			SOUTHEAST
			NORTHEAST
	53.30	GIBSON ROAD OC 06-0179	SOUTHWEST
			NORTHWEST
			SOUTHEAST
			NORTHEAST

TRANSITION ANCHOR BLOCK

CONSTRUCTION DETAILS

NO SCALE

C-7

REVISED BY | DATE REVISED
ERIC COVINGTON | BYRON STANLEY
CALCULATED-DESIGNED BY | CHECKED BY
FUNCTIONAL SUPERVISOR | STEVE TOPAL

STATE OF CALIFORNIA - DEPARTMENT OF TRANSPORTATION
Caltrans
DESIGN

P:\proj1\02\2c450_plans\pse\22c450ga007.dgn

LAST REVISION 03-18-09 | DATE PLOTTED => 02-JUN-2010 | TIME PLOTTED => 15:31

BORDER LAST REVISED 4/11/2008 | RELATIVE BORDER SCALE IS IN INCHES 0 1 2 3 | USERNAME => s123119 | DGN FILE => 22c450ga007.dgn | CU 03 247 | EA 2C4501

Dist	COUNTY	ROUTE	POST MILES TOTAL PROJECT	SHEET No.	TOTAL SHEETS
02	Sha	5	R44.0/58.0	11	142

REGISTERED CIVIL ENGINEER 06-01-10 DATE

06-01-10
PLANS APPROVAL DATE

REGISTERED PROFESSIONAL ENGINEER BYRON H. STANLEY No. C60161 Exp. 6-30-10 CIVIL STATE OF CALIFORNIA

THE STATE OF CALIFORNIA OR ITS OFFICERS OR AGENTS SHALL NOT BE RESPONSIBLE FOR THE ACCURACY OR COMPLETENESS OF SCANNED COPIES OF THIS PLAN SHEET.

NOTE:

1. EXISTING UTILITY FACILITIES HAVE NOT BEEN POSITIVELY LOCATED.

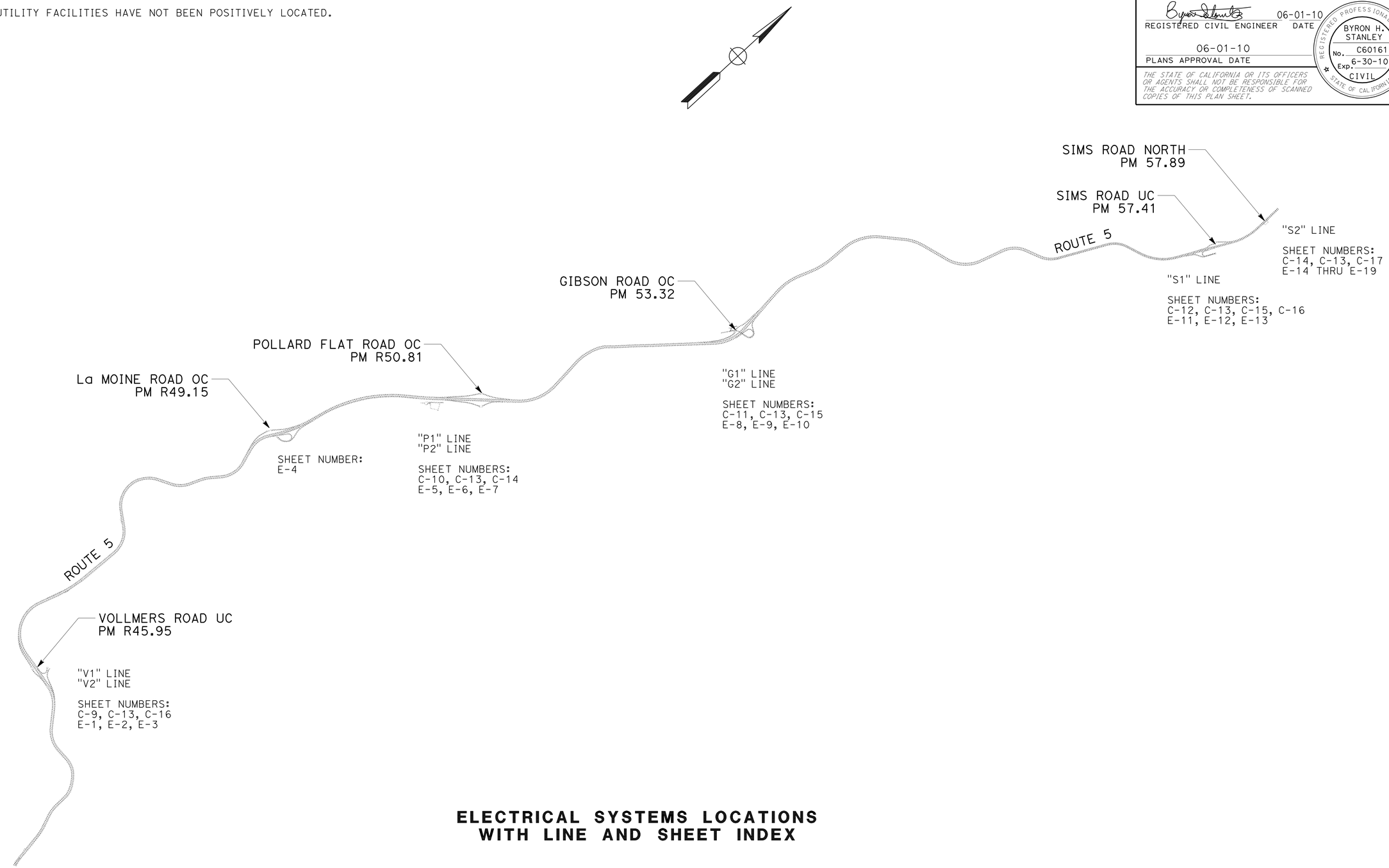

ELECTRICAL SYSTEMS LOCATIONS WITH LINE AND SHEET INDEX

CONSTRUCTION DETAILS

NO SCALE

C-8

REVISED BY	R. WEBER
DATE REVISED	04-20-10
CALCULATED-DESIGNED BY	ROBERT WEBER
CHECKED BY	BYRON STANLEY
FUNCTIONAL SUPERVISOR	STEVE TOPAL

STATE OF CALIFORNIA - DEPARTMENT OF TRANSPORTATION
Caltrans
DESIGN

P:\proj1\02\2c450_plans\pse\22c450ga008.dgn

LAST REVISION 03-18-09
DATE PLOTTED => 02-JUN-2010
TIME PLOTTED => 15:31

Dist	COUNTY	ROUTE	POST MILES TOTAL PROJECT	SHEET No.	TOTAL SHEETS
02	Sha	5	R44.0/58.0	12	142

REGISTERED CIVIL ENGINEER 06-01-10 DATE

06-01-10
PLANS APPROVAL DATE

REGISTERED PROFESSIONAL ENGINEER BYRON H. STANLEY No. C60161 Exp. 6-30-10 CIVIL STATE OF CALIFORNIA

THE STATE OF CALIFORNIA OR ITS OFFICERS OR AGENTS SHALL NOT BE RESPONSIBLE FOR THE ACCURACY OR COMPLETENESS OF SCANNED COPIES OF THIS PLAN SHEET.

NOTE:

1. EXISTING UTILITY FACILITIES HAVE NOT BEEN POSITIVELY LOCATED.

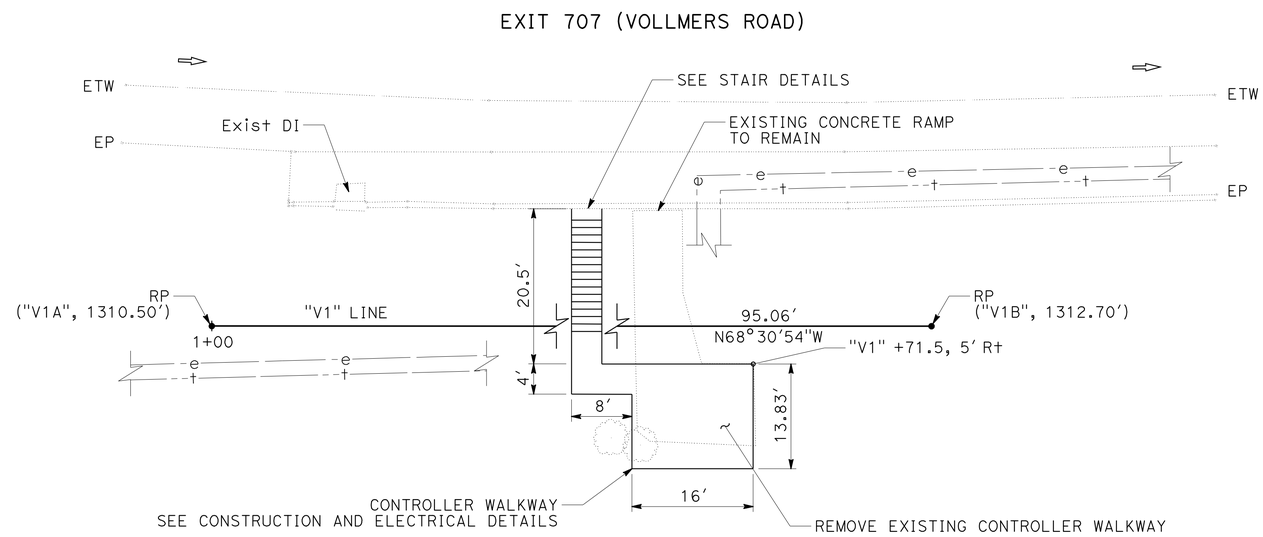

VOLLMERS ROAD
CONTROLLER WALKWAY LOCATION
PM R45.76

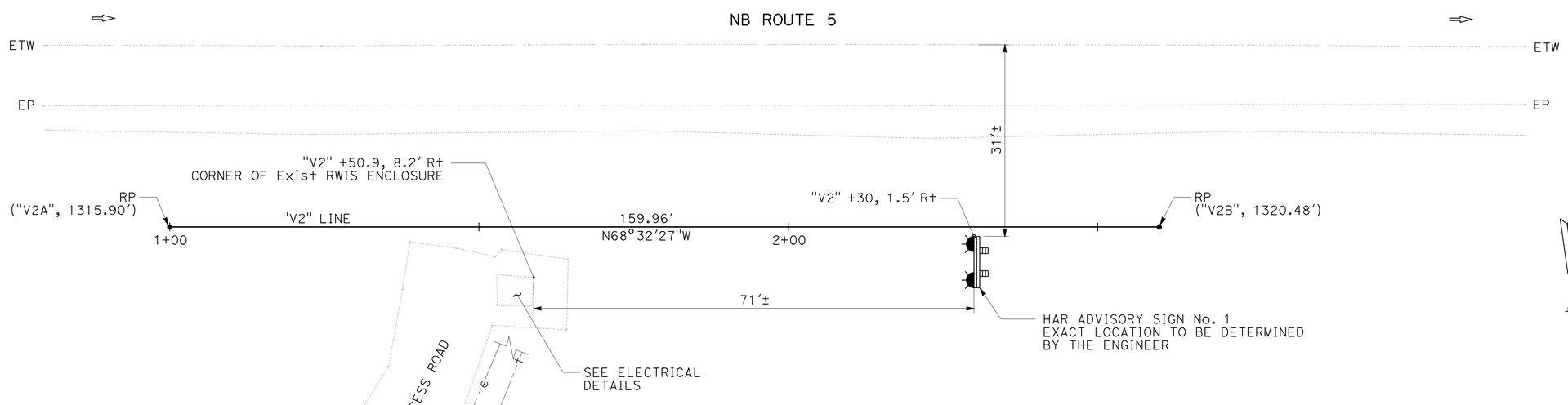

VOLLMERS ROAD
HAR ADVISORY SIGN LOCATION
PM R45.87

CONSTRUCTION DETAILS
SCALE: 1" = 10'

C-9

REVISED BY	DATE REVISED
R. WEBER	04-20-10

ROBERT WEBER — BYRON STANLEY

CALCULATED-DESIGNED BY — CHECKED BY

FUNCTIONAL SUPERVISOR: STEVE TOPAL

STATE OF CALIFORNIA - DEPARTMENT OF TRANSPORTATION
Caltrans® DESIGN

P:\proj1\02\2c450_plans\pse\22c450ga009.dgn

LAST REVISION 03-18-09 | DATE PLOTTED => 02-JUN-2010 TIME PLOTTED => 15:31

Dist	COUNTY	ROUTE	POST MILES TOTAL PROJECT	SHEET No.	TOTAL SHEETS
02	Sha	5	R44.0/58.0	13	142

REGISTERED CIVIL ENGINEER 06-01-10 DATE

06-01-10
PLANS APPROVAL DATE

REGISTERED PROFESSIONAL ENGINEER BYRON H. STANLEY No. C60161 Exp. 6-30-10 CIVIL STATE OF CALIFORNIA

THE STATE OF CALIFORNIA OR ITS OFFICERS OR AGENTS SHALL NOT BE RESPONSIBLE FOR THE ACCURACY OR COMPLETENESS OF SCANNED COPIES OF THIS PLAN SHEET.

NOTES:

1. FOR COMPLETE RIGHT OF WAY AND ACCURATE ACCESS DATA, SEE RIGHT OF WAY RECORD MAPS AT DISTRICT OFFICE.
2. EXISTING UTILITY FACILITIES HAVE NOT BEEN POSITIVELY LOCATED.

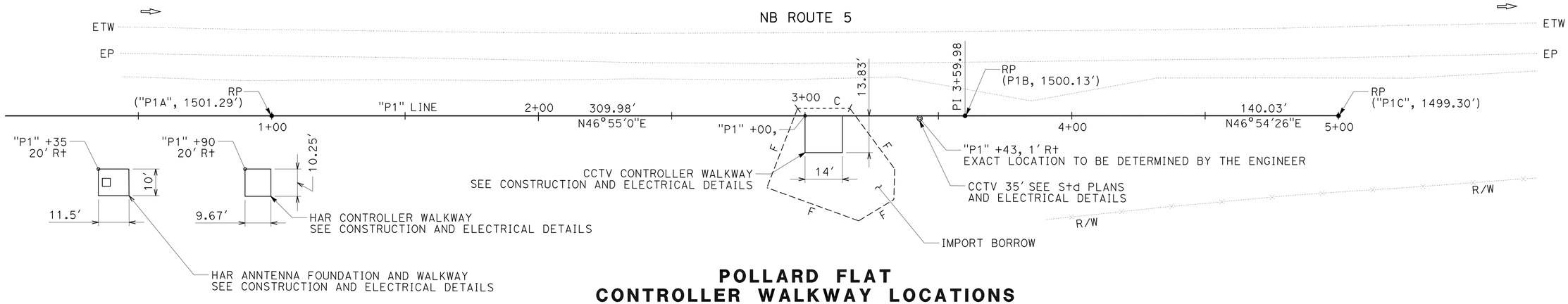

POLLARD FLAT
CONTROLLER WALKWAY LOCATIONS

PM R50.30 - R50.36

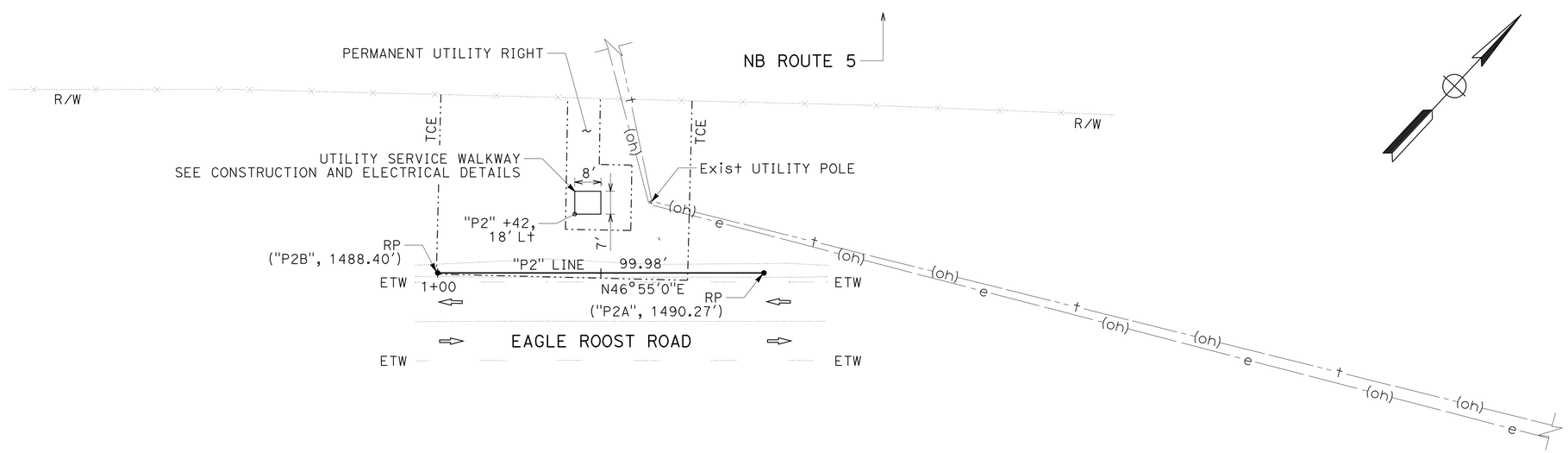

POLLARD FLAT
UTILITY SERVICE WALKWAY LOCATION

PM R50.44

CONSTRUCTION DETAILS

SCALE: 1" = 20'

C-10

REVISED BY	DATE REVISED
R. WEBER	04-20-10

CALCULATED-DESIGNED BY	CHECKED BY
ROBERT WEBER	BYRON STANLEY

FUNCTIONAL SUPERVISOR: STEVE TOPAL

STATE OF CALIFORNIA - DEPARTMENT OF TRANSPORTATION
Caltrans DESIGN

P:\proj1\02\2c450_plans\pse\22c450ga010.dgn

LAST REVISION 03-18-09 | DATE PLOTTED => 02-JUN-2010 | TIME PLOTTED => 15:31

Dist	COUNTY	ROUTE	POST MILES TOTAL PROJECT	SHEET No.	TOTAL SHEETS
02	Sha	5	R44.0/58.0	14	142

REGISTERED CIVIL ENGINEER 06-01-10 DATE

06-01-10
PLANS APPROVAL DATE

REGISTERED PROFESSIONAL ENGINEER BYRON H. STANLEY No. C60161 Exp. 6-30-10 CIVIL STATE OF CALIFORNIA

THE STATE OF CALIFORNIA OR ITS OFFICERS OR AGENTS SHALL NOT BE RESPONSIBLE FOR THE ACCURACY OR COMPLETENESS OF SCANNED COPIES OF THIS PLAN SHEET.

NOTES:

1. FOR COMPLETE RIGHT OF WAY AND ACCURATE ACCESS DATA, SEE RIGHT OF WAY RECORD MAPS AT DISTRICT OFFICE.
2. EXISTING UTILITY FACILITIES HAVE NOT BEEN POSITIVELY LOCATED.

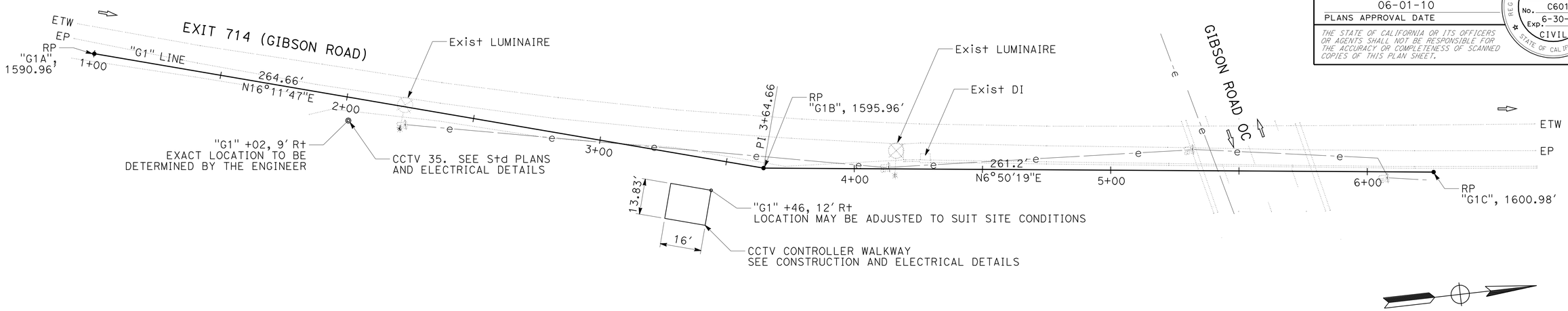

GIBSON ROAD
CONTROLLER WALKWAY LOCATION
PM 53.29

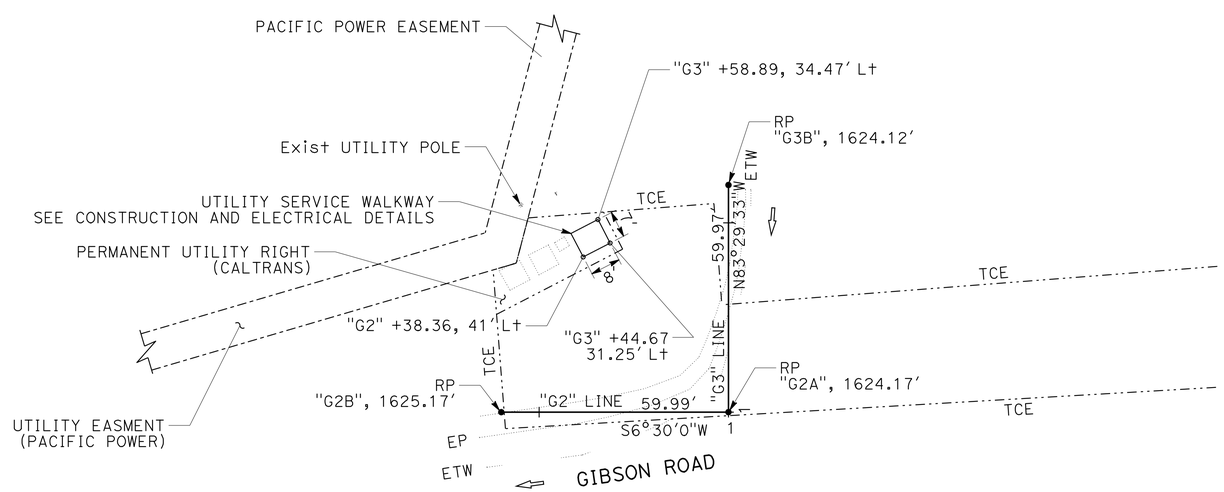

GIBSON ROAD
UTILITY SERVICE WALKWAY LOCATION
PM 53.31

CONSTRUCTION DETAILS
SCALE: 1" = 20'

C-11

R WEBER	04-20-10
REVISED BY	DATE REVISED
ROBERT WEBER	BYRON STANLEY
CALCULATED-DESIGNED BY	CHECKED BY
FUNCTIONAL SUPERVISOR	STEVE TOPAL

STATE OF CALIFORNIA - DEPARTMENT OF TRANSPORTATION
Caltrans DESIGN

P:\proj1\02\2c450_plans\pse\22c450ga011.dgn

LAST REVISION 03-18-09 | DATE PLOTTED => 02-JUN-2010 | TIME PLOTTED => 15:31

Dist	COUNTY	ROUTE	POST MILES TOTAL PROJECT	SHEET No.	TOTAL SHEETS
02	Sha	5	R44.0/58.0	15	142

REGISTERED CIVIL ENGINEER 06-01-10 DATE

06-01-10
PLANS APPROVAL DATE

REGISTERED PROFESSIONAL ENGINEER BYRON H. STANLEY No. C60161 Exp. 6-30-10 CIVIL STATE OF CALIFORNIA

THE STATE OF CALIFORNIA OR ITS OFFICERS OR AGENTS SHALL NOT BE RESPONSIBLE FOR THE ACCURACY OR COMPLETENESS OF SCANNED COPIES OF THIS PLAN SHEET.

NOTE:

1. EXISTING UTILITY FACILITIES HAVE NOT BEEN POSITIVELY LOCATED.

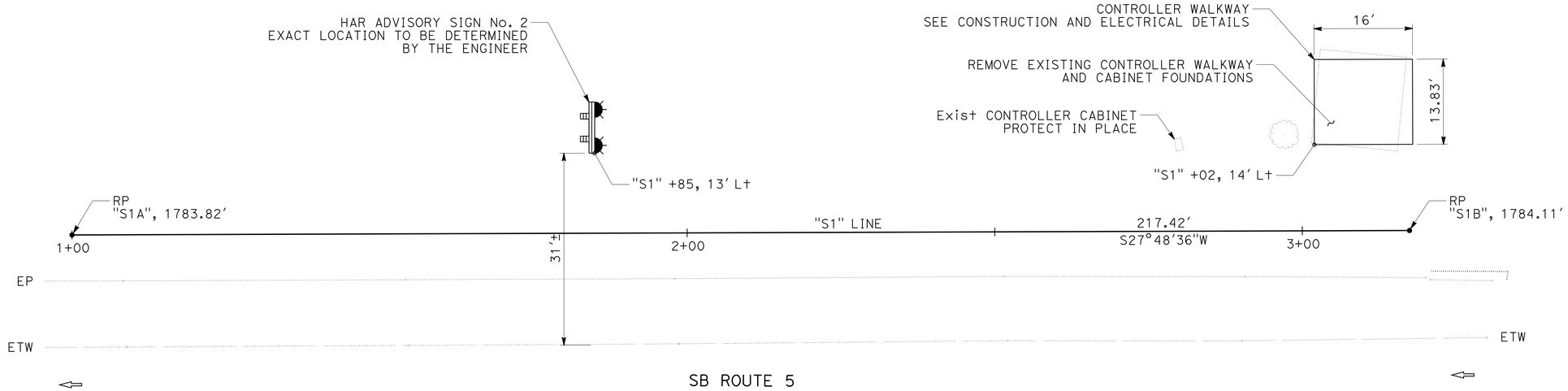

SIMS ROAD
CONTROLLER WALKWAY AND
HAR ADVISORY SIGN LOCATION

PM 57.42

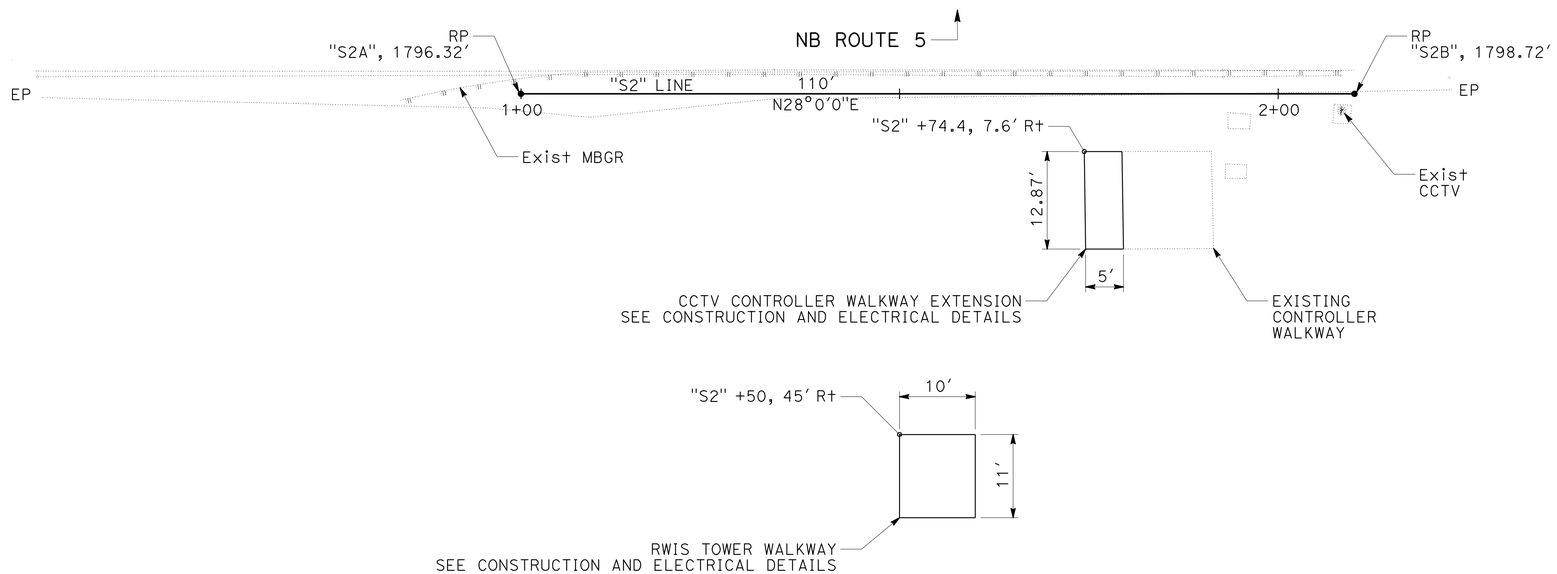

SIMS ROAD NORTH
CONTROLLER WALKWAY LOCATIONS

PM 57.87

CONSTRUCTION DETAILS

SCALE: 1" = 10'

C-12

REVISED BY	DATE REVISED
R. WEBER	04-20-10

ROBERT WEBER — BYRON STANLEY

CALCULATED-DESIGNED BY — CHECKED BY

FUNCTIONAL SUPERVISOR: STEVE TOPAL

STATE OF CALIFORNIA - DEPARTMENT OF TRANSPORTATION

Caltrans DESIGN

P:\proj1\02\2c450_plans\pse\22c450ga012.dgn

LAST REVISION 03-18-09 | DATE PLOTTED => 02-JUN-2010 | TIME PLOTTED => 15:31

Dist	COUNTY	ROUTE	POST MILES TOTAL PROJECT	SHEET No.	TOTAL SHEETS
02	Sha	5	R44.0/58.0	16	142

REGISTERED CIVIL ENGINEER 06-01-10 DATE

06-01-10
PLANS APPROVAL DATE

REGISTERED PROFESSIONAL ENGINEER BYRON H. STANLEY No. C60161 Exp. 6-30-10 CIVIL STATE OF CALIFORNIA

THE STATE OF CALIFORNIA OR ITS OFFICERS OR AGENTS SHALL NOT BE RESPONSIBLE FOR THE ACCURACY OR COMPLETENESS OF SCANNED COPIES OF THIS PLAN SHEET.

NOTES:

1. WELD HANDRAIL POST TO 6" X 8½" X ¼" STEEL PLATE. FASTEN TO CONCRETE WITH 4 EACH, ½" x 6" ANCHOR BOLTS OR WEDGE ANCHORS.
2. EXISTING UTILITY FACILITIES HAVE NOT BEEN POSITIVELY LOCATED.

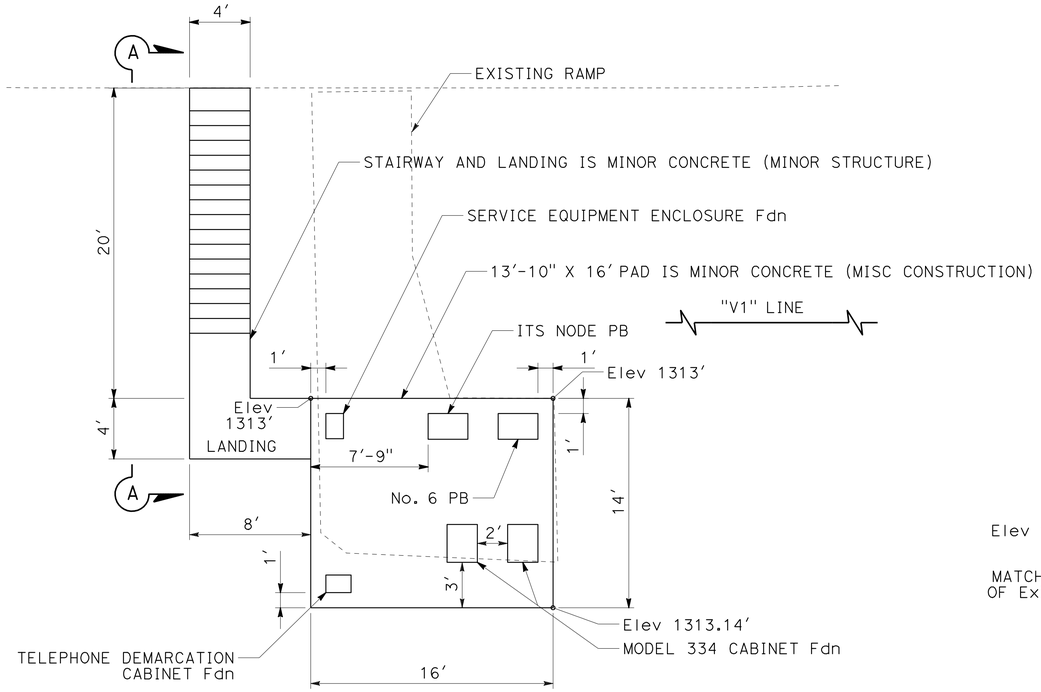

VOLLMERS ROAD WALKWAY DETAIL

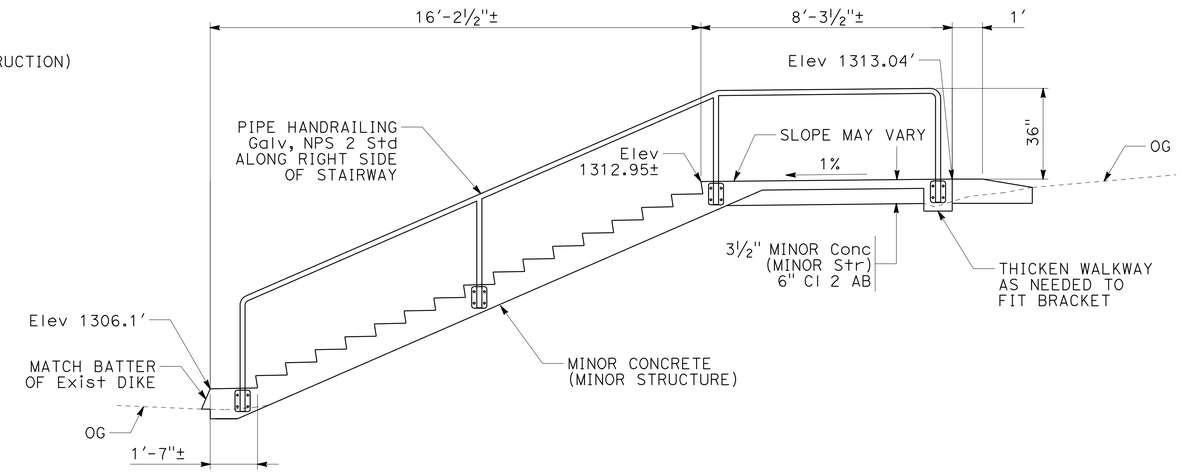

VOLLMERS ROAD STAIRWAY AND LANDING DETAIL

SECTION A-A

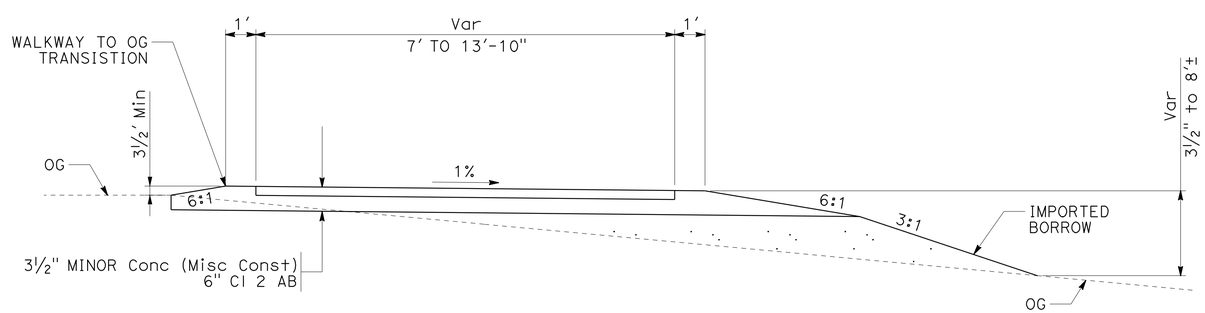

TYPICAL CROSS SECTION CONTROLLER AND UTILITY SERVICE WALKWAYS

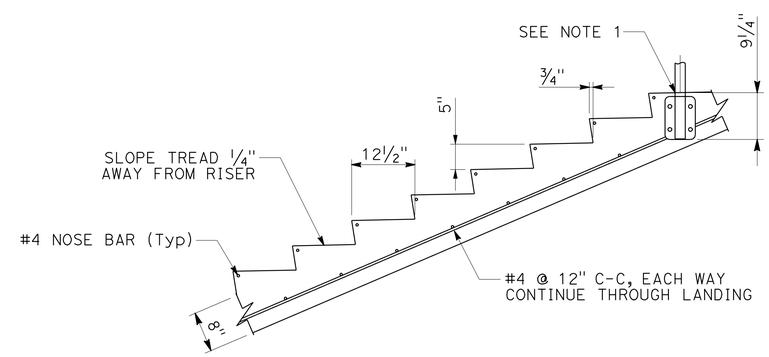

VOLLMERS ROAD STAIRWAY DETAIL

CONSTRUCTION DETAILS

NO SCALE

C-13

STATE OF CALIFORNIA - DEPARTMENT OF TRANSPORTATION
Caltrans® DESIGN

ROBERT WEBER	BYRON STANLEY
CALCULATED-DESIGNED BY	CHECKED BY
REVISED BY	R. WEBER
DATE REVISED	04-27-10
FUNCTIONAL SUPERVISOR	STEVE TOPAL

P:\proj\02\2c450_plans\pse\22c450ga013.dgn

LAST REVISION 03-18-09 | DATE PLOTTED => 02-JUN-2010 | TIME PLOTTED => 15:31

BORDER LAST REVISED 4/11/2008 | RELATIVE BORDER SCALE IS IN INCHES 0 1 2 3 | USERNAME => s123119 | DGN FILE => 22c450ga013.dgn | CU 03 247 | EA 2C4501

Dist	COUNTY	ROUTE	POST MILES TOTAL PROJECT	SHEET No.	TOTAL SHEETS
02	Sha	5	R44.0/58.0	17	142

REGISTERED CIVIL ENGINEER 06-01-10 DATE

06-01-10
PLANS APPROVAL DATE

REGISTERED PROFESSIONAL ENGINEER BYRON H. STANLEY No. C60161 Exp. 6-30-10 CIVIL STATE OF CALIFORNIA

THE STATE OF CALIFORNIA OR ITS OFFICERS OR AGENTS SHALL NOT BE RESPONSIBLE FOR THE ACCURACY OR COMPLETENESS OF SCANNED COPIES OF THIS PLAN SHEET.

NOTE:
1. EXISTING UTILITY FACILITIES HAVE NOT BEEN POSITIVELY LOCATED.

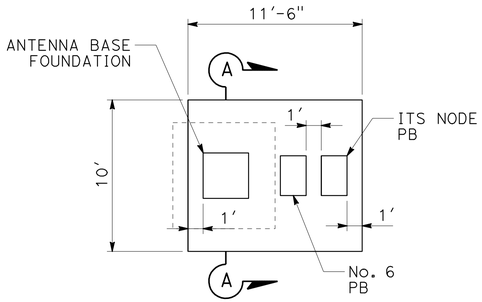

POLLARD FLAT
HAR ANTENNA WALKWAY

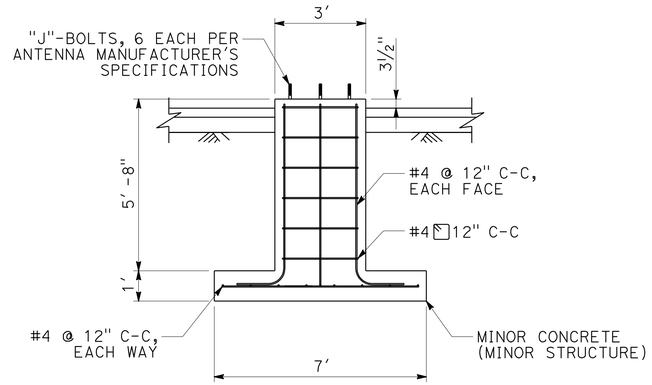

SECTION A-A

POLLARD FLAT
HAR ANTENNA FOUNDATION

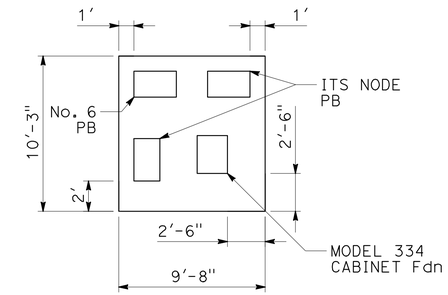

POLLARD FLAT
HAR CONTROLLER WALKWAY

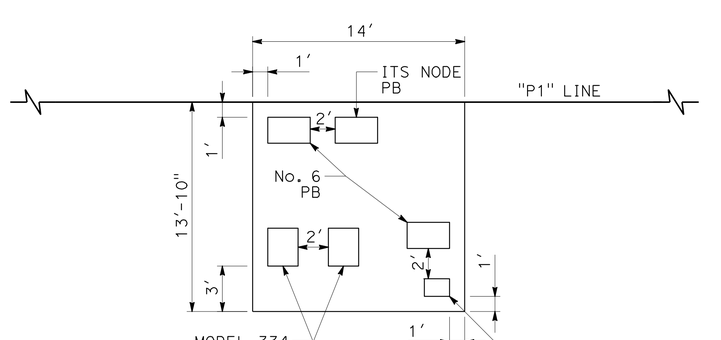

POLLARD FLAT
CCTV CONTROLLER WALKWAY

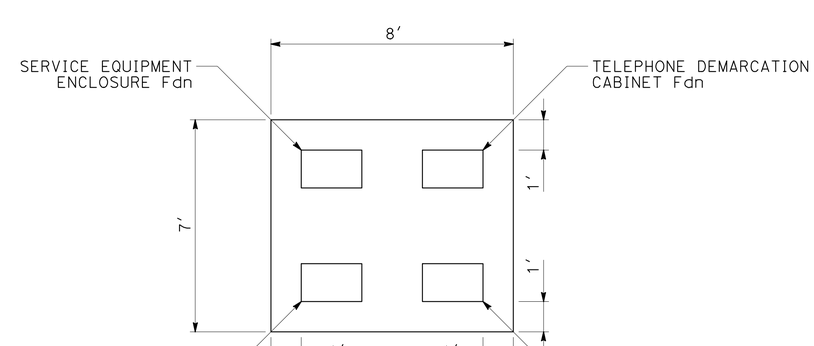

POLLARD FLAT
UTILITY SERVICE WALKWAY

CONSTRUCTION DETAILS
NO SCALE

C-14

REVISED BY	DATE REVISED
R. WEBER	04-20-10

CALCULATED-DESIGNED BY	CHECKED BY
ROBERT WEBER	BYRON STANLEY

FUNCTIONAL SUPERVISOR: STEVE TOPAL

STATE OF CALIFORNIA - DEPARTMENT OF TRANSPORTATION
Caltrans
DESIGN

P:\proj1\02\2c450_plans\pse\22c450ga014.dgn

LAST REVISION 03-18-09 | DATE PLOTTED => 02-JUN-2010 | TIME PLOTTED => 15:31

Dist	COUNTY	ROUTE	POST MILES TOTAL PROJECT	SHEET No.	TOTAL SHEETS
02	Sha	5	R44.0/58.0	18	142

REGISTERED CIVIL ENGINEER 06-01-10 DATE

06-01-10
PLANS APPROVAL DATE

REGISTERED PROFESSIONAL ENGINEER BYRON H. STANLEY No. C60161 Exp. 6-30-10 CIVIL STATE OF CALIFORNIA

THE STATE OF CALIFORNIA OR ITS OFFICERS OR AGENTS SHALL NOT BE RESPONSIBLE FOR THE ACCURACY OR COMPLETENESS OF SCANNED COPIES OF THIS PLAN SHEET.

NOTES:

1. INSTALL RWIS TOWER FOUNDATION PER MANUFACTURER'S RECOMMENDATIONS.
2. EXISTING UTILITY FACILITIES HAVE NOT BEEN POSITIVELY LOCATED.

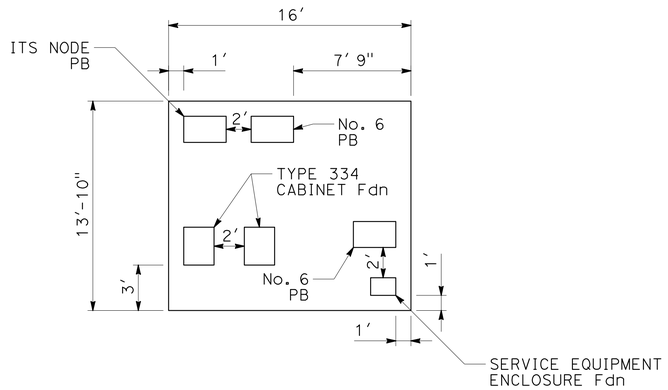

GIBSON ROAD
CCTV CONTROLLER WALKWAY

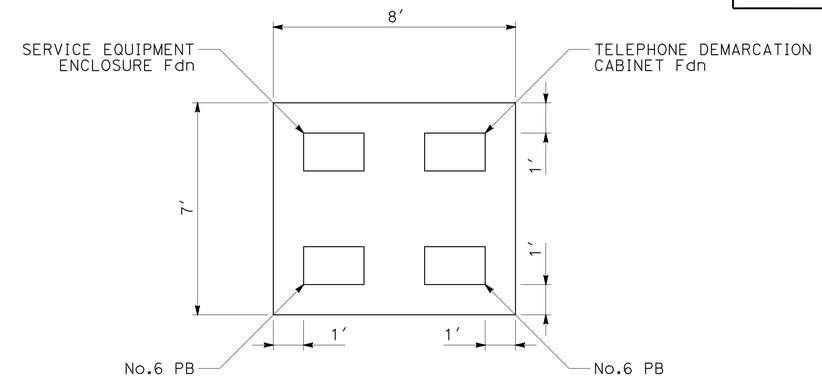

GIBSON ROAD
UTILITY SERVICE WALKWAY

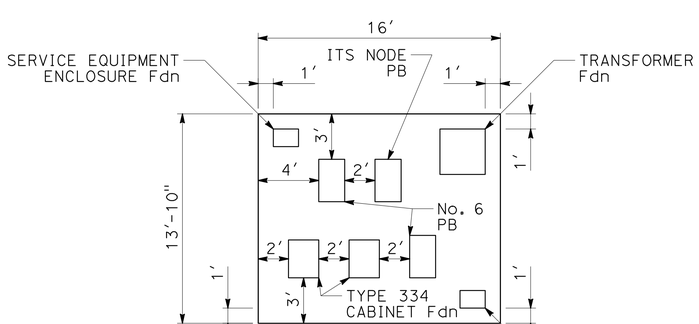

SIMS ROAD
HAR ADVISORY SIGN
CONTROLLER WALKWAY

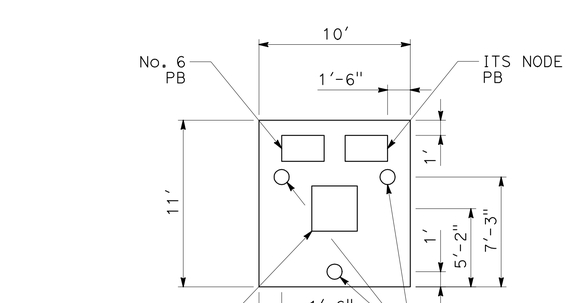

SIMS ROAD NORTH
RWIS TOWER WALKWAY

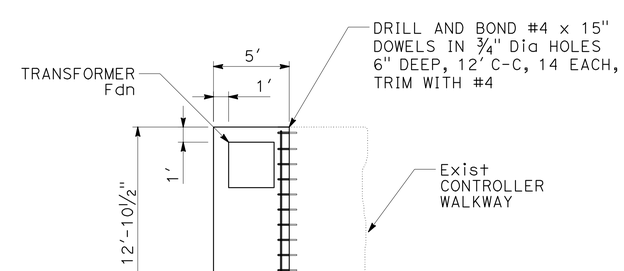

SIMS ROAD NORTH
CCTV WALKWAY EXTENSION

CONSTRUCTION DETAILS
NO SCALE

C-15

ROBERT WEBER	R. WEBER
BYRON STANLEY	04-20-10
CALCULATED-DESIGNED BY	REVISED BY
CHECKED BY	DATE REVISED
FUNCTIONAL SUPERVISOR	
STEVE TOPAL	

STATE OF CALIFORNIA - DEPARTMENT OF TRANSPORTATION
Caltrans
DESIGN

P:\proj1\02\2c450_plans\pse\22c450ga015.dgn

LAST REVISION 03-18-09 | DATE PLOTTED => 02-JUN-2010 | TIME PLOTTED => 15:31

Dist	COUNTY	ROUTE	POST MILES TOTAL PROJECT	SHEET No.	TOTAL SHEETS
02	Sha	5	R44.0/58.0	19	142

REGISTERED CIVIL ENGINEER 06-01-10 DATE

06-01-10
PLANS APPROVAL DATE

REGISTERED PROFESSIONAL ENGINEER BYRON H. STANLEY No. C60161 Exp. 6-30-10 CIVIL STATE OF CALIFORNIA

THE STATE OF CALIFORNIA OR ITS OFFICERS OR AGENTS SHALL NOT BE RESPONSIBLE FOR THE ACCURACY OR COMPLETENESS OF SCANNED COPIES OF THIS PLAN SHEET.

NOTES:

1. SEE STANDARD PLANS FOR SIGN INSTALLATION DETAILS.
2. EXISTING UTILITY FACILITIES HAVE NOT BEEN POSITIVELY LOCATED.

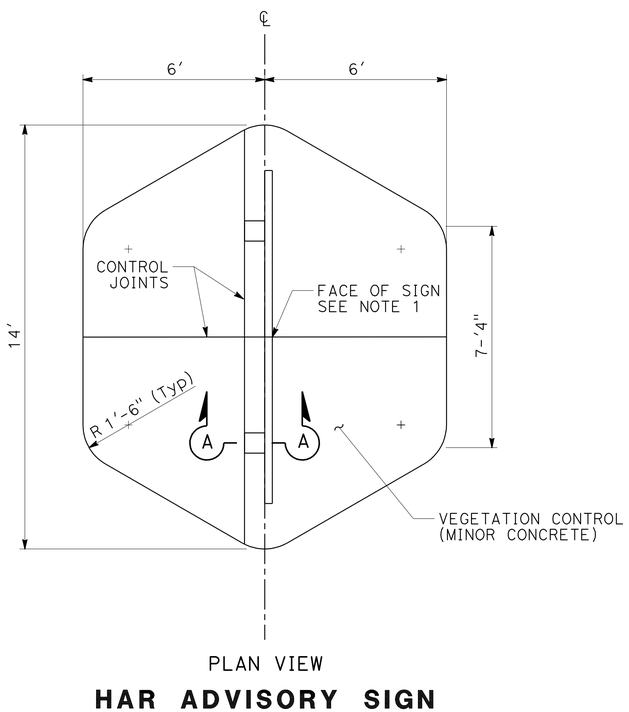

PLAN VIEW

HAR ADVISORY SIGN VEGETATION CONTROL

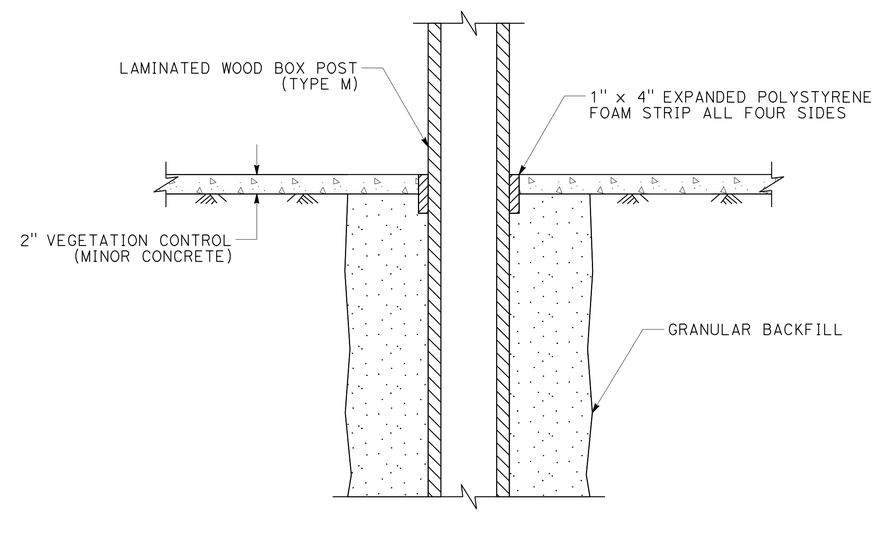

SECTION A-A

VEGETATION CONTROL PENETRATION DETAIL

CONSTRUCTION DETAILS

NO SCALE

C-16

REVISED BY	R. WEBER
DATE REVISED	04-20-10
CALCULATED-DESIGNED BY	ROBERT WEBER
CHECKED BY	BYRON STANLEY
FUNCTIONAL SUPERVISOR	STEVE TOPAL

STATE OF CALIFORNIA - DEPARTMENT OF TRANSPORTATION
Caltrans®
DESIGN

P:\proj1\02\2c450_plans\pse\22c450ga016.dgn

LAST REVISION 03-18-09 | DATE PLOTTED => 02-JUN-2010 TIME PLOTTED => 15:31

Dist	COUNTY	ROUTE	POST MILES TOTAL PROJECT	SHEET No.	TOTAL SHEETS
02	Sha	5	R44.0/58.0	20	142

REGISTERED CIVIL ENGINEER 06-01-10 DATE

06-01-10
PLANS APPROVAL DATE

REGISTERED PROFESSIONAL ENGINEER BYRON H. STANLEY No. C60161 Exp. 6-30-10 CIVIL STATE OF CALIFORNIA

THE STATE OF CALIFORNIA OR ITS OFFICERS OR AGENTS SHALL NOT BE RESPONSIBLE FOR THE ACCURACY OR COMPLETENESS OF SCANNED COPIES OF THIS PLAN SHEET.

NOTES:

1. FOR DETAILS NOT SHOWN, REFER TO STANDARD PLANS.
2. ADJUST FRAME AWAY FROM BARRIER AS NECESSARY TO FIT GRATE.
3. SEE DRAINAGE QUANTITIES FOR LOCATIONS OF APPLICABLE INLETS AND ADJUSTMENT HEIGHTS.
4. CONTRACTOR SHALL FIELD VERIFY HEIGHTS PRIOR TO ADJUSTING INLETS.

LEGEND

PCC

(x) DRAINAGE UNIT

ABBREVIATIONS

CPACP	COLD PLANE ASPHALT CONCRETE PAVEMENT
ET	ENTRANCE TAPER FOR DOWN DRAIN
HMA OD	HOT MIX ASPHALT OVERSIDE DRAIN

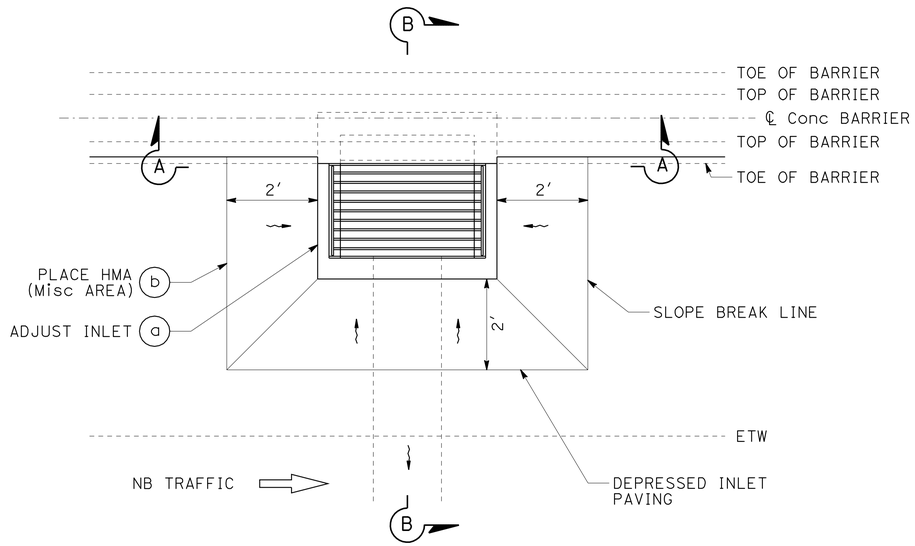

PLAN

ADJUST INLET TYPE GO DI (IN CURVE)

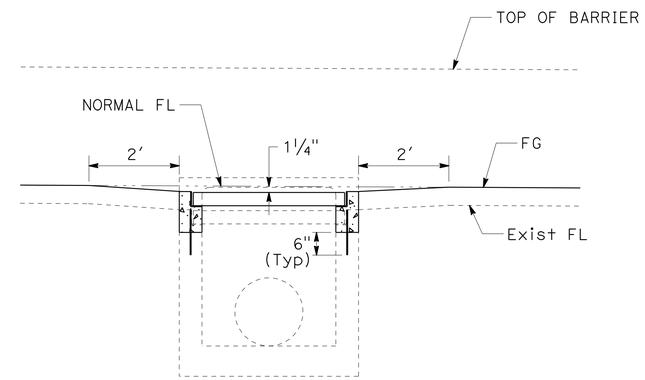

SECTION A-A

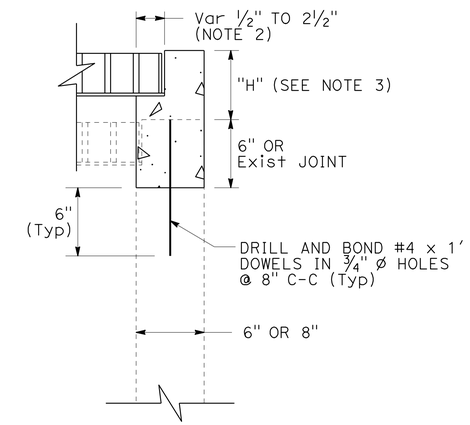

DETAIL A (Typ)

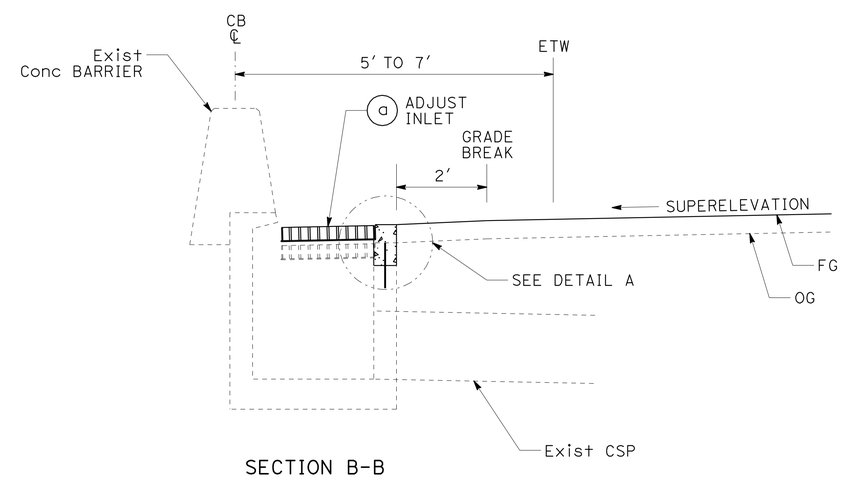

SECTION B-B

ADJUST MEDIAN INLETS (TYPE GO)

DRAINAGE DETAILS
NO SCALE
DD-1

REVISED BY | DATE REVISED
TOBY CRAWFORD | BYRON STANLEY
CALCULATED-DESIGNED BY | CHECKED BY
FUNCTIONAL SUPERVISOR | STEVE TOPAL

STATE OF CALIFORNIA - DEPARTMENT OF TRANSPORTATION
Caltrans® DESIGN

P:\proj\02\2c450_plans\pse\22c4501c001.dgn

LAST REVISION 03-18-09 | DATE PLOTTED => 02-JUN-2010 | TIME PLOTTED => 15:31

BORDER LAST REVISED 4/11/2008 | RELATIVE BORDER SCALE IS IN INCHES 0 1 2 3 | USERNAME => s123119 | DGN FILE => 22c4501c001.dgn | CU 03 247 | EA 2C4501

Dist	COUNTY	ROUTE	POST MILES TOTAL PROJECT	SHEET No.	TOTAL SHEETS
02	Sha	5	R44.0/58.0	21	142

REGISTERED CIVIL ENGINEER 06-01-10 DATE

06-01-10
PLANS APPROVAL DATE

REGISTERED PROFESSIONAL ENGINEER BYRON H. STANLEY No. C60161 Exp. 6-30-10 CIVIL STATE OF CALIFORNIA

THE STATE OF CALIFORNIA OR ITS OFFICERS OR AGENTS SHALL NOT BE RESPONSIBLE FOR THE ACCURACY OR COMPLETENESS OF SCANNED COPIES OF THIS PLAN SHEET.

NOTES:

1. FOR DETAILS NOT SHOWN, SEE STANDARD PLANS.
2. ADJUST FRAME AWAY FROM BARRIER AS REQUIRED TO FIT GRATE.
3. SEE DRAINAGE QUANTITIES FOR LOCATIONS OF APPLICABLE INLETS AND ADJUSTMENT HEIGHTS.
4. CONTRACTOR SHALL FIELD VERIFY HEIGHTS PRIOR TO ADJUSTING INLETS.

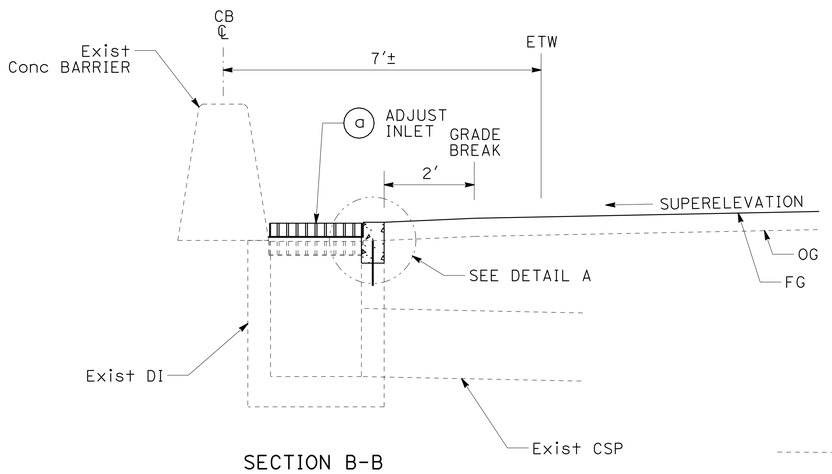

SECTION B-B

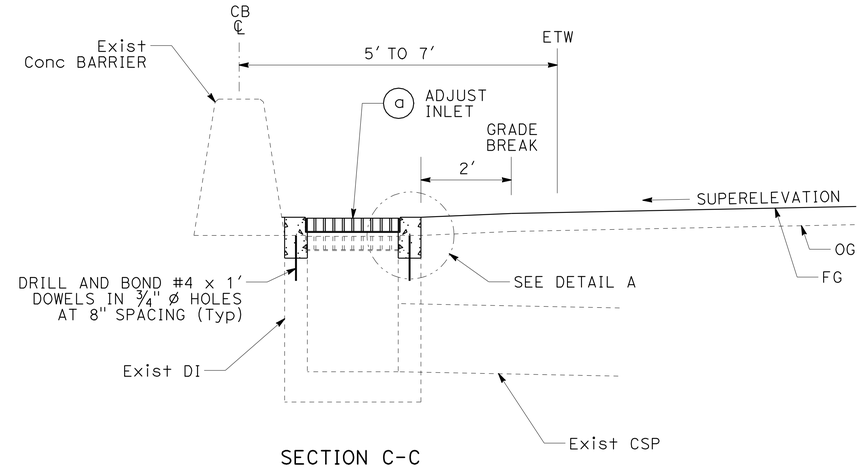

SECTION C-C

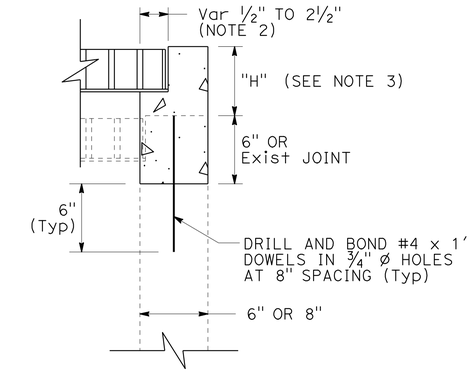

DETAIL A (Typ)

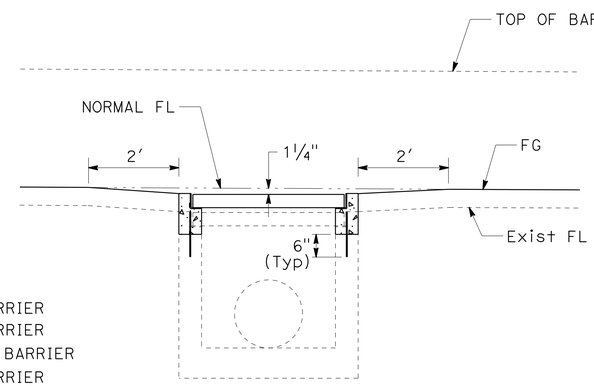

SECTION A-A

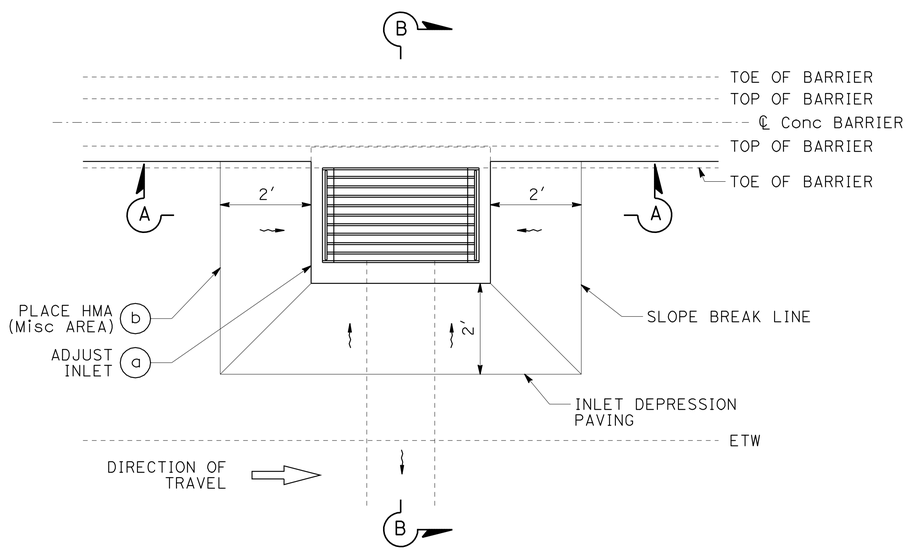

PLAN

ADJUST INLET TYPE G1 DI (CASE 1)

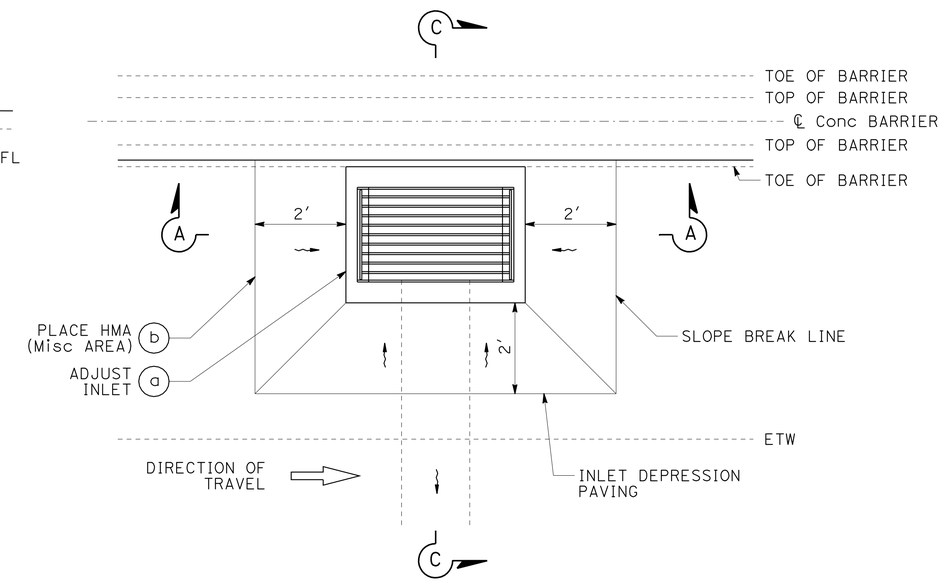

PLAN

ADJUST INLET TYPE G1 DI (CASE 2)

ADJUST MEDIAN INLETS (TYPE G1)

DRAINAGE DETAILS
NO SCALE

DD-2

REVISED BY | DATE REVISED
TOBY CRAWFORD | BYRON STANLEY
CALCULATED-DESIGNED BY | CHECKED BY
FUNCTIONAL SUPERVISOR | STEVE TOPAL

STATE OF CALIFORNIA - DEPARTMENT OF TRANSPORTATION
Caltrans
DESIGN

P:\proj1\02\2c450_plans\pse\22c4501c002.dgn

LAST REVISION 03-18-09 | DATE PLOTTED => 02-JUN-2010 | TIME PLOTTED => 15:31

Dist	COUNTY	ROUTE	POST MILES TOTAL PROJECT	SHEET No.	TOTAL SHEETS
02	Sha	5	R44.0/58.0	22	142

REGISTERED CIVIL ENGINEER 06-01-10 DATE

06-01-10
PLANS APPROVAL DATE

REGISTERED PROFESSIONAL ENGINEER BYRON H. STANLEY No. C60161 Exp. 6-30-10 CIVIL STATE OF CALIFORNIA

THE STATE OF CALIFORNIA OR ITS OFFICERS OR AGENTS SHALL NOT BE RESPONSIBLE FOR THE ACCURACY OR COMPLETENESS OF SCANNED COPIES OF THIS PLAN SHEET.

NOTES:

1. FOR DETAILS NOT SHOWN, REFER TO STANDARD PLANS.
2. SEE DRAINAGE QUANTITIES FOR LOCATIONS OF APPLICABLE INLETS AND ADJUSTMENT HEIGHTS.
3. CONTRACTOR SHALL FIELD VERIFY HEIGHTS PRIOR TO ADJUSTING INLETS.

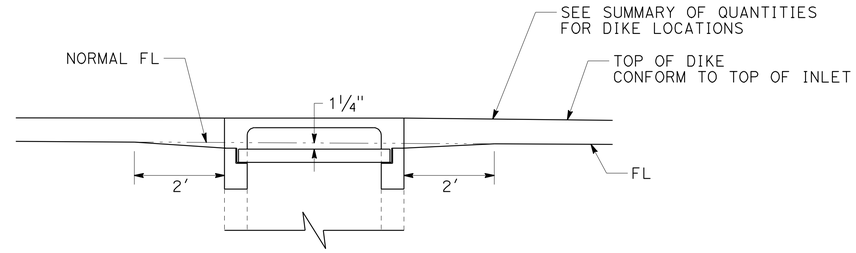

DETAIL D (INLET DEPRESSION)

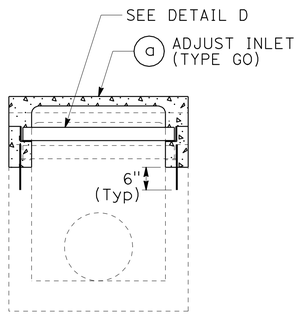

SECTION A-A

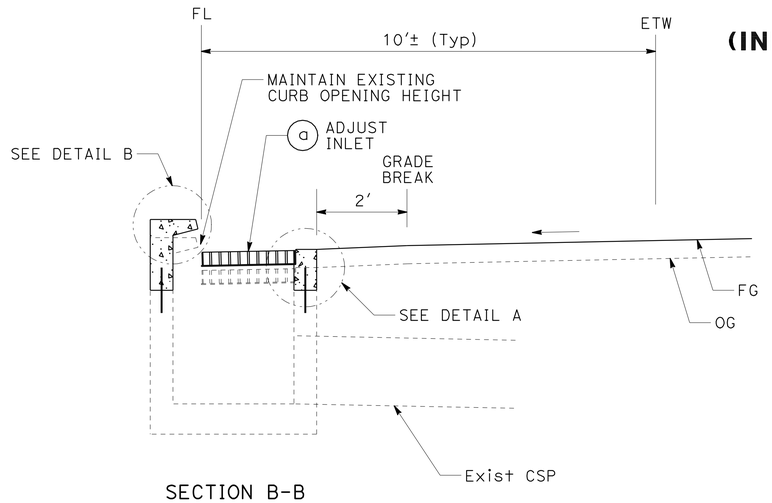

SECTION B-B

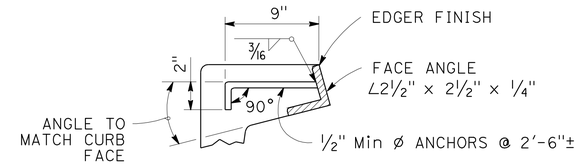

DETAIL B (FACE ANGLE ANCHOR)

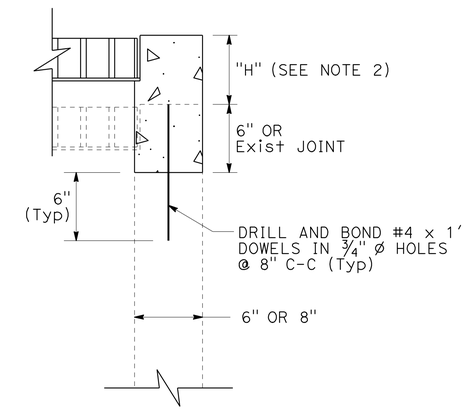

DETAIL A (Typ)

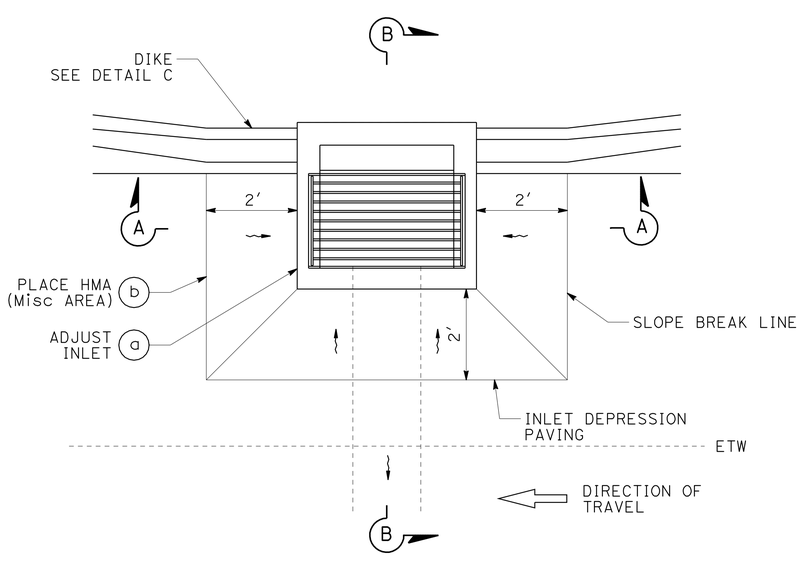

PLAN

ADJUST INLET TYPE GO DI

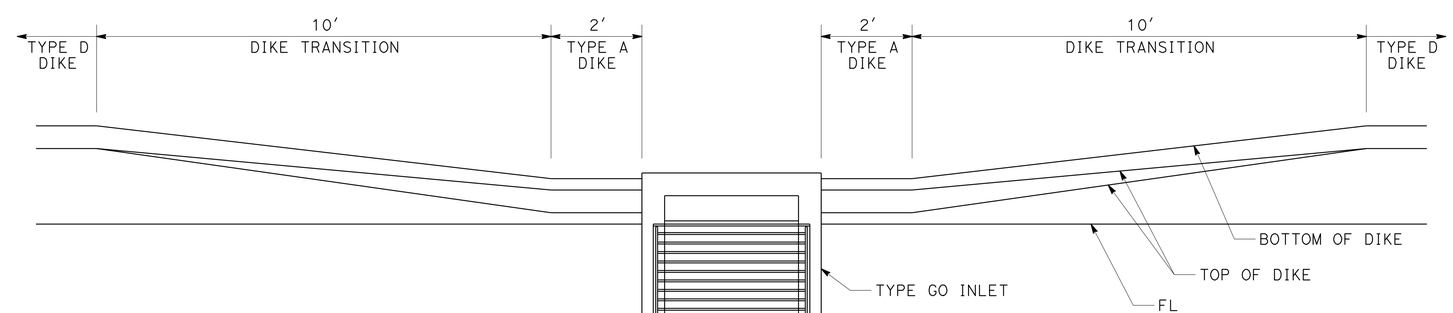

DETAIL C (DIKE TRANSITION)

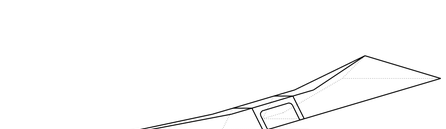

PERSPECTIVE VIEW
TYPE D TO TYPE A DIKE

ADJUST OUTSIDE SHOULDER INLETS

DRAINAGE DETAILS
NO SCALE

DD-3

REVISED BY | DATE REVISED
TOBY CRAWFORD | BYRON STANLEY
CALCULATED-DESIGNED BY | CHECKED BY
FUNCTIONAL SUPERVISOR | STEVE TOPAL

STATE OF CALIFORNIA - DEPARTMENT OF TRANSPORTATION
Caltrans
DESIGN

P:\proj1\02\2c450_plans\pse\22c450ic003.dgn

LAST REVISION 03-18-09 | DATE PLOTTED => 02-JUN-2010 | TIME PLOTTED => 15:31

Dist	COUNTY	ROUTE	POST MILES TOTAL PROJECT	SHEET No.	TOTAL SHEETS
02	Sha	5	R44.0/58.0	23	142

REGISTERED CIVIL ENGINEER 06-01-10 DATE

PLANS APPROVAL DATE 06-01-10

REGISTERED PROFESSIONAL ENGINEER BYRON H. STANLEY No. C60161 Exp. 6-30-10 CIVIL STATE OF CALIFORNIA

THE STATE OF CALIFORNIA OR ITS OFFICERS OR AGENTS SHALL NOT BE RESPONSIBLE FOR THE ACCURACY OR COMPLETENESS OF SCANNED COPIES OF THIS PLAN SHEET.

NOTES:

1. FOR DETAILS NOT SHOWN, REFER TO STANDARD PLANS.
2. SEE DRAINAGE QUANTITIES FOR LOCATIONS OF APPLICABLE INLETS AND ADJUSTMENT HEIGHTS.
3. CONTRACTOR SHALL FIELD VERIFY HEIGHTS PRIOR TO ADJUSTING INLETS.

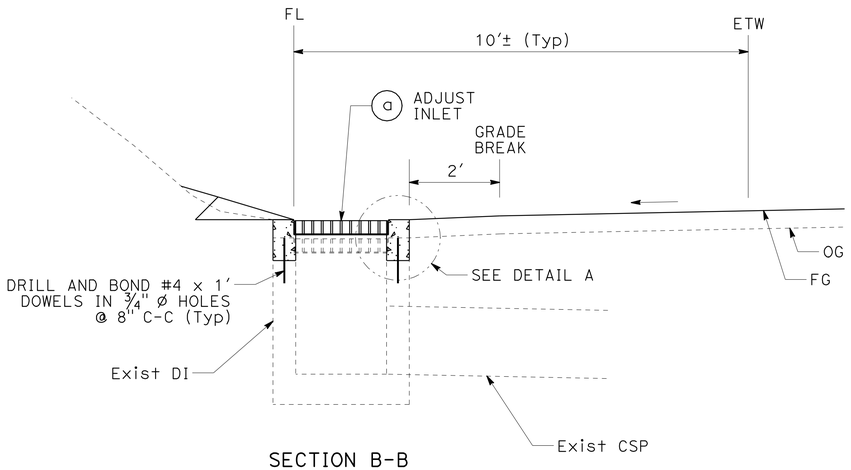

SECTION B-B

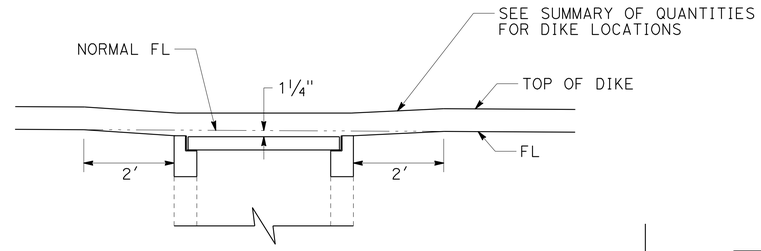

DETAIL B (INLET DEPRESSION)

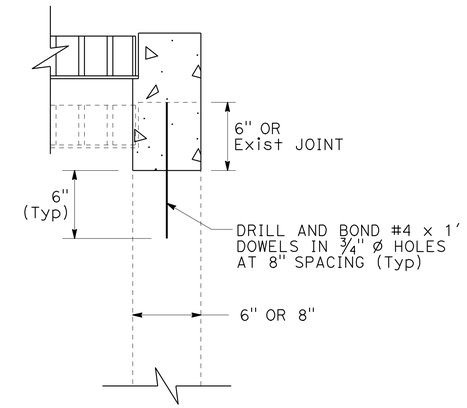

DETAIL A (Typ)

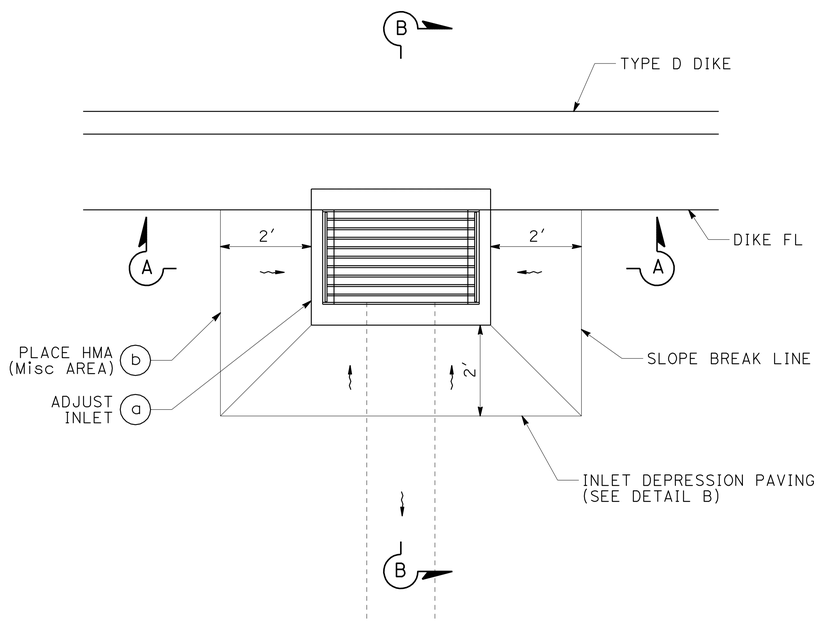

PLAN

ADJUST INLET TYPE G1 DI

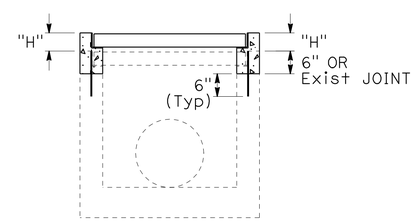

SECTION A-A (CASE 1)

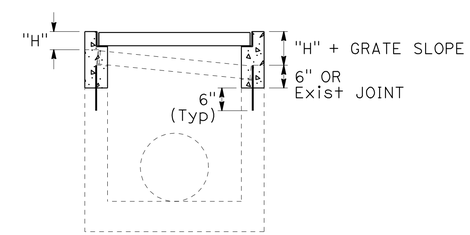

SECTION A-A (CASE 2)

ADJUST OUTSIDE SHOULDER INLETS

DRAINAGE DETAILS
NO SCALE
DD-4

REVISED BY | DATE REVISED
TOBY CRAWFORD | BYRON STANLEY
CALCULATED-DESIGNED BY | CHECKED BY
FUNCTIONAL SUPERVISOR | STEVE TOPAL
STATE OF CALIFORNIA - DEPARTMENT OF TRANSPORTATION
Caltrans
DESIGN

P:\proj1\02\2c450_plans\pse\22c4501c004.dgn

LAST REVISION | DATE PLOTTED => 02-JUN-2010 | TIME PLOTTED => 15:31
03-18-09

BORDER LAST REVISED 4/11/2008 | RELATIVE BORDER SCALE IS IN INCHES 0 1 2 3 | USERNAME => s123119 | DGN FILE => 22c4501c004.dgn | CU 03 247 | EA 2C4501

Dist	COUNTY	ROUTE	POST MILES TOTAL PROJECT	SHEET No.	TOTAL SHEETS
02	Sha	5	R44.0/58.0	24	142

REGISTERED CIVIL ENGINEER 06-01-10 DATE

06-01-10
PLANS APPROVAL DATE

REGISTERED PROFESSIONAL ENGINEER BYRON H. STANLEY No. C60161 Exp. 6-30-10 CIVIL STATE OF CALIFORNIA

THE STATE OF CALIFORNIA OR ITS OFFICERS OR AGENTS SHALL NOT BE RESPONSIBLE FOR THE ACCURACY OR COMPLETENESS OF SCANNED COPIES OF THIS PLAN SHEET.

NOTES:

1. FOR DETAILS NOT SHOWN, REFER TO Std PLAN D98B.
2. CONTRACTOR SHALL FIELD VERIFY EXTENSION HEIGHTS AND DIMENSIONS PRIOR TO FABRICATION.
3. ALIGN SLOT GRATE EXTENSION SUCH THAT NEW CROSS BAR SPACERS ARE CENTERED OVER EXISTING CROSS BAR SPACERS.
4. SLOT GRATE EXTENSIONS SHALL BE GALVANIZED.
5. THE CROSS BAR SPACER SHALL BE WELDED TO THE BEARING BARS IN SUCH A MANNER AS TO DEVELOP A MINIMUM TENSILE STRENGTH OF 12,000 LBS NORMAL TO THE LONGITUDINAL AXIS OF THE BEARING BARS.
6. THE MAXIMUM VARIANCE FROM A STRAIGHT LINE BETWEEN THE EXTREME TOP CORNERS OF THE BEARING BARS SHALL BE 1/2" IN 20'-0".
7. CONTRACTOR TO PROVIDE AN ADEQUATE METHOD OF KEEPING THE HOT MIX ASPHALT OUT OF PIPE DURING PAVING OPERATIONS.

SLOT GRATE EXTENSIONS

APPROXIMATE POST MILE	LENGTH (LF)	"H1" (FT)	"H2" (FT)
NB 56.81, MEDIAN	27	0.30	0.30
NB 56.82, MEDIAN	16	0.30	0.30
NB 57.45, MEDIAN	128	0.08	0.30
NB 57.53, MEDIAN	66	0.30	0.30
SB 56.51, MEDIAN	118	0.30	0.30
SB 56.87, Shld	300	0.30	0.30
SB 57.97, MEDIAN	30	0.30	0.30

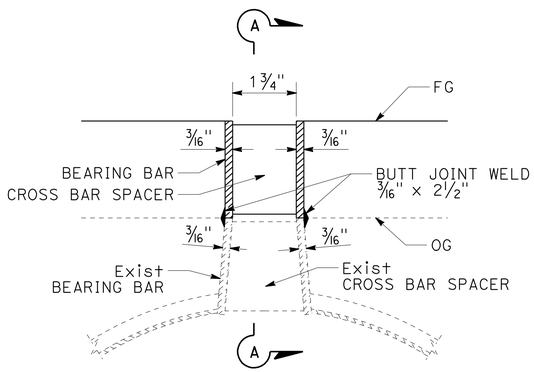

DETAIL A

SLOT GRATE EXTENSION
(SECTION VIEW)

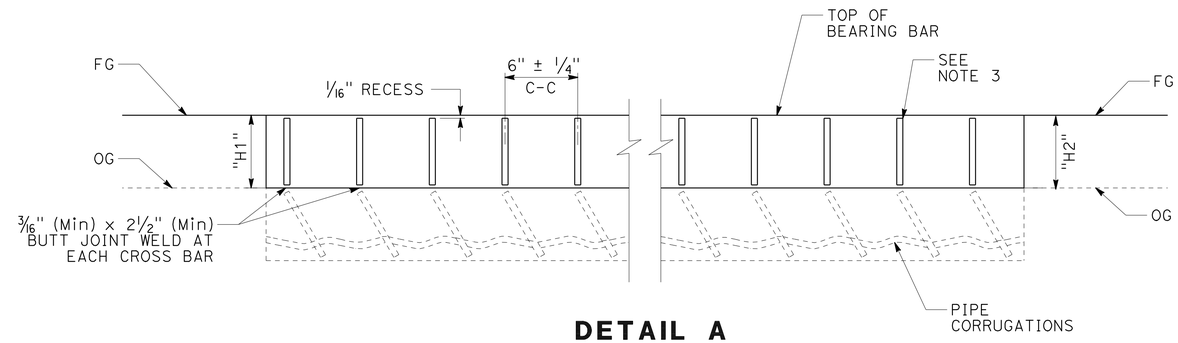

DETAIL A

SLOT GRATE EXTENSION
(LONGITUDINAL ELEVATION VIEW)

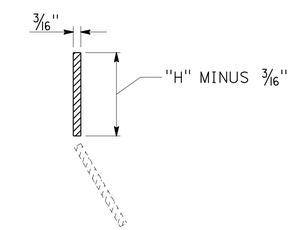

SECTION A-A
(CROSS BAR SPACERS)

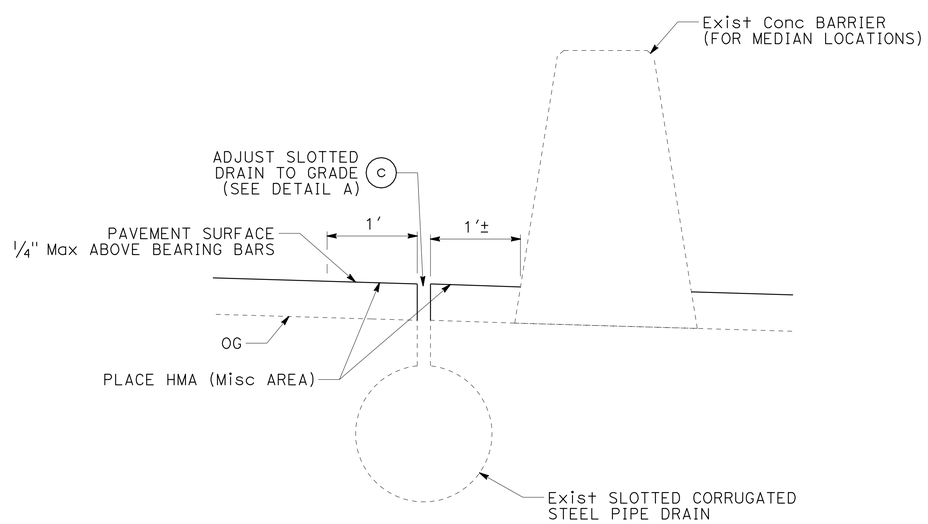

ADJUST SLOTTED DRAIN TO GRADE

DRAINAGE DETAILS

NO SCALE

DD-5

REVISED BY | DATE REVISED
TOBY CRAWFORD | BYRON STANLEY
CALCULATED-DESIGNED BY | CHECKED BY
FUNCTIONAL SUPERVISOR | STEVE TOPAL

STATE OF CALIFORNIA - DEPARTMENT OF TRANSPORTATION
Caltrans
DESIGN

P:\proj\02\2c450_plans\pse\22c450ic005.dgn

LAST REVISION | DATE PLOTTED => 02-JUN-2010 | TIME PLOTTED => 15:31
03-18-09

BORDER LAST REVISED 4/11/2008 | RELATIVE BORDER SCALE IS IN INCHES 0 1 2 3 | USERNAME => s123119 | DGN FILE => 22c450ic005.dgn | CU 03 247 | EA 2C4501

Dist	COUNTY	ROUTE	POST MILES TOTAL PROJECT	SHEET No.	TOTAL SHEETS
02	Sha	5	R44.0/58.0	25	142

REGISTERED CIVIL ENGINEER 06-01-10 DATE

06-01-10
PLANS APPROVAL DATE

REGISTERED PROFESSIONAL ENGINEER BYRON H. STANLEY No. C60161 Exp. 6-30-10 CIVIL STATE OF CALIFORNIA

THE STATE OF CALIFORNIA OR ITS OFFICERS OR AGENTS SHALL NOT BE RESPONSIBLE FOR THE ACCURACY OR COMPLETENESS OF SCANNED COPIES OF THIS PLAN SHEET.

NOTES:

1. FOR DETAILS NOT SHOWN, REFER TO STANDARD PLANS.
2. CONTRACTOR SHALL FIELD VERIFY HEIGHT PRIOR TO ADJUSTING INLET.

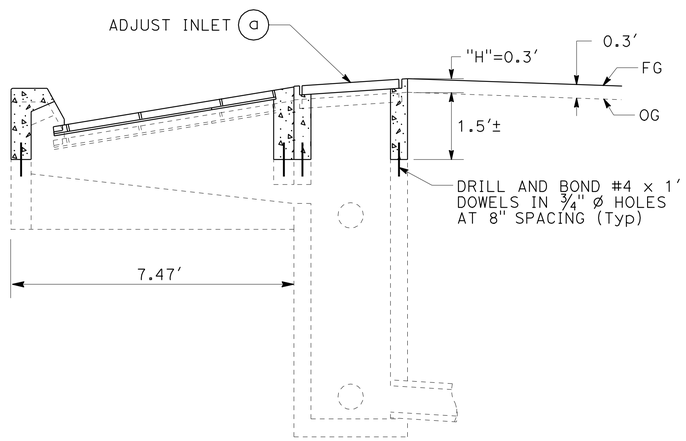

SECTION A-A

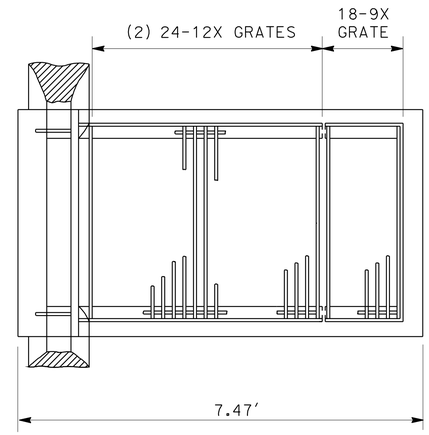

ADJUST INLET GRATE DETAIL

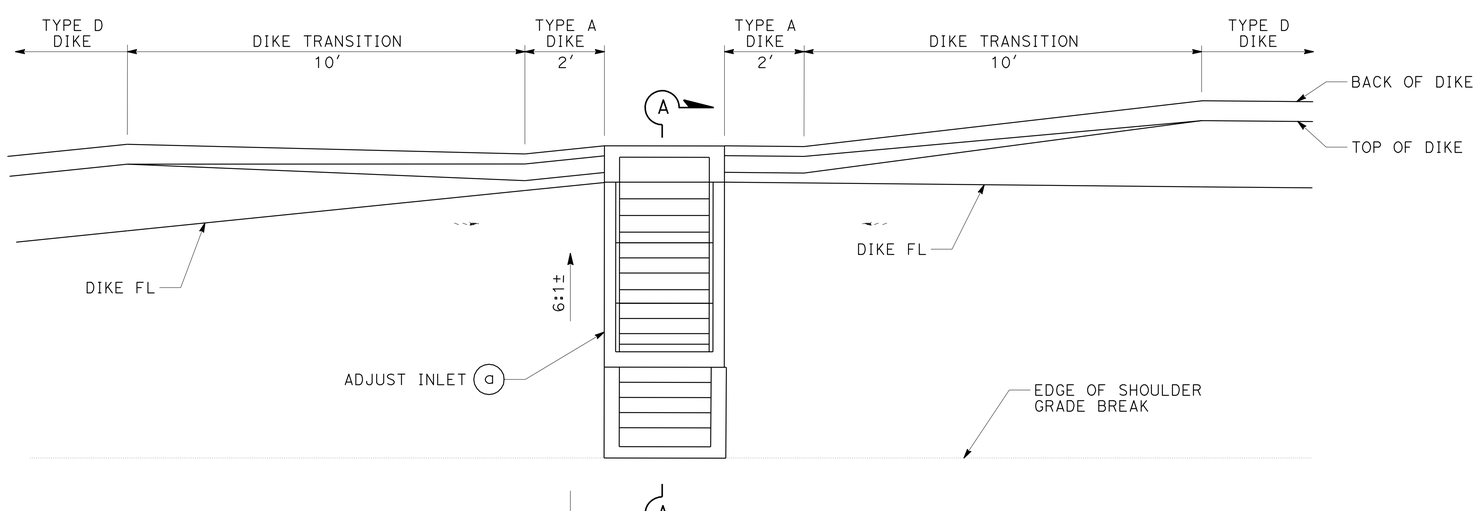

ADJUST INLET
PM 56.72 (SB SHOULDER)
(MODIFIED GDO AND G1)

DRAINAGE DETAILS

NO SCALE **DD-6**

REVISED BY	DATE REVISED

CALCULATED-DESIGNED BY	TOBY CRAWFORD
CHECKED BY	BYRON STANLEY
FUNCTIONAL SUPERVISOR	STEVE TOPAL

STATE OF CALIFORNIA - DEPARTMENT OF TRANSPORTATION
Caltrans
DESIGN

P:\proj1\02\2c450_plans\pse\22c450ic006.dgn

LAST REVISION 03-18-09 | DATE PLOTTED => 02-JUN-2010 | TIME PLOTTED => 15:31

Dist	COUNTY	ROUTE	POST MILES TOTAL PROJECT	SHEET No.	TOTAL SHEETS
02	Sha	5	R44.0/58.0	26	142

REGISTERED CIVIL ENGINEER 06-01-10 DATE

06-01-10
PLANS APPROVAL DATE

REGISTERED PROFESSIONAL ENGINEER BYRON H. STANLEY No. C60161 Exp. 6-30-10 CIVIL STATE OF CALIFORNIA

THE STATE OF CALIFORNIA OR ITS OFFICERS OR AGENTS SHALL NOT BE RESPONSIBLE FOR THE ACCURACY OR COMPLETENESS OF SCANNED COPIES OF THIS PLAN SHEET.

NOTES:

1. FOR DETAILS NOT SHOWN, REFER TO STANDARD PLANS AND SHEET DD-1.
2. CONTRACTOR SHALL FIELD VERIFY HEIGHTS PRIOR TO ADJUSTING AND CONSTRUCTING INLETS.

INLET AND PIPE DATA

ADJUST INLET		18" APC		NEW INLET	
LOCATION	"H"	"L"	SLOPE	LOCATION	"H"
PM 56.99	0.3′	150′	0.5%	PM 57.02	2.4′
PM 57.56	0.3′	150′	1.0%	PM 57.59	2.9′

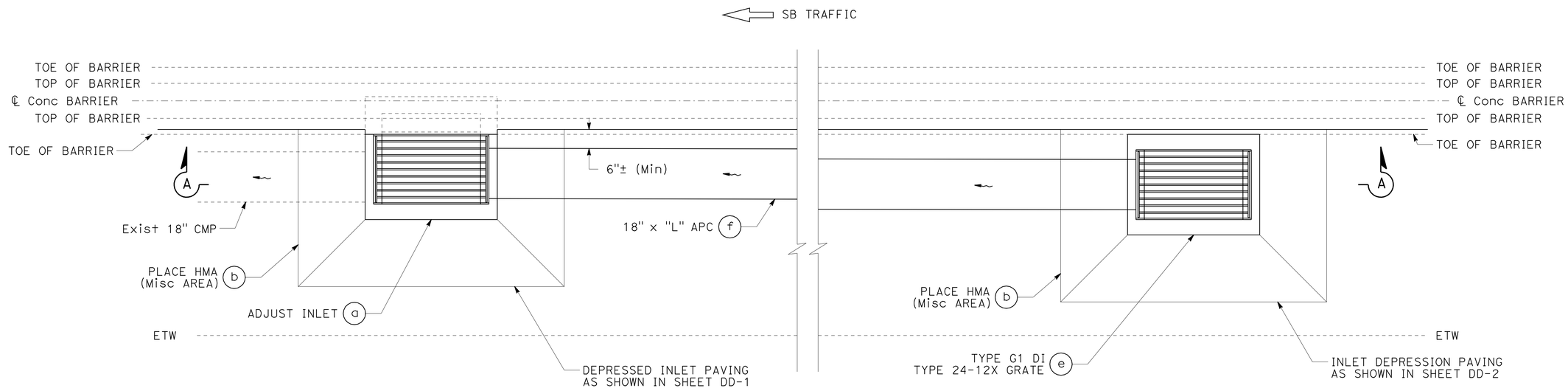

PLAN

ADJUST INLET TYPE GO DI

NB TRAFFIC

PLAN

TYPE G1 DI

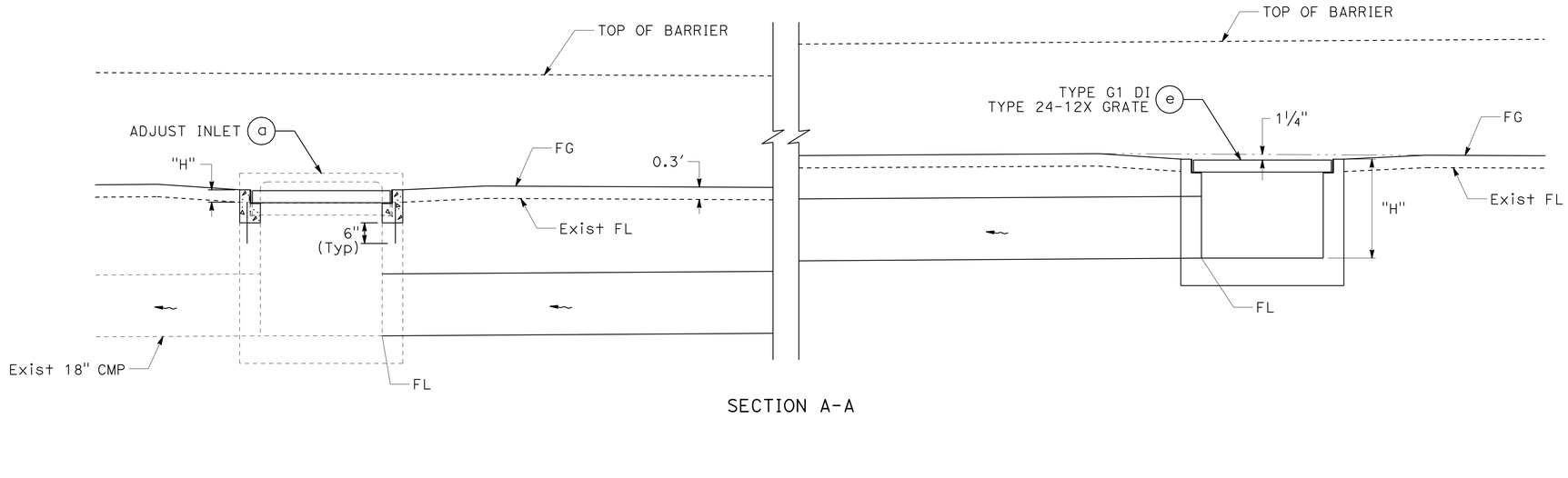

SECTION A-A

NEW MEDIAN INLETS

DRAINAGE DETAILS

NO SCALE **DD-7**

STATE OF CALIFORNIA - DEPARTMENT OF TRANSPORTATION
Caltrans® **DESIGN**

FUNCTIONAL SUPERVISOR: STEVE TOPAL
CALCULATED-DESIGNED BY: TOBY CRAWFORD
CHECKED BY: BYRON STANLEY
REVISED BY / DATE REVISED

P:\proj1\02\2c450_plans\pse\22c4501c007.dgn

LAST REVISION 03-18-09 DATE PLOTTED => 02-JUN-2010 TIME PLOTTED => 15:31

BORDER LAST REVISED 4/11/2008 RELATIVE BORDER SCALE IS IN INCHES 0 1 2 3 USERNAME => s123119 DGN FILE => 22c4501c007.dgn CU 03 247 EA 2C4501

Dist	COUNTY	ROUTE	POST MILES TOTAL PROJECT	SHEET No.	TOTAL SHEETS
02	Sha	5	R44.0/58.0	27	142

REGISTERED CIVIL ENGINEER 06-01-10 DATE

06-01-10
PLANS APPROVAL DATE

REGISTERED PROFESSIONAL ENGINEER BYRON H. STANLEY No. C60161 Exp. 6-30-10 CIVIL STATE OF CALIFORNIA

THE STATE OF CALIFORNIA OR ITS OFFICERS OR AGENTS SHALL NOT BE RESPONSIBLE FOR THE ACCURACY OR COMPLETENESS OF SCANNED COPIES OF THIS PLAN SHEET.

NOTES:

1. FOR DETAILS NOT SHOWN, REFER TO STANDARD PLANS.
2. SEE SHEET Q-2 FOR CLEANOUT ASSEMBLY (EDGE DRAIN), 3" PLASTIC PIPE (EDGE DRAIN) AND PAVEMENT MARKER (NON-REFLECTIVE-RECESSED) QUANTITIES.
3. PAVEMENT MARKER (NON-REFLECTIVE-RECESSED) TO BE TYPE A (WHITE).
4. REPLACE TYPE A PAVEMENT MARKER AT ALL EDGE DRAIN CLEANOUT LOCATIONS.
5. CLEANOUT ASSEMBLY (EDGE DRAIN) INCLUDES PULL BOX AND ALL ITEMS SHOWN ON EDGE DRAIN CLEANOUT STANDARD PLAN UP TO 10' OF LENGTH.
6. CLEANOUT ASSEMBLY (EDGE DRAIN) TO BE REPLACED ON AN AS-NEEDED BASIS.

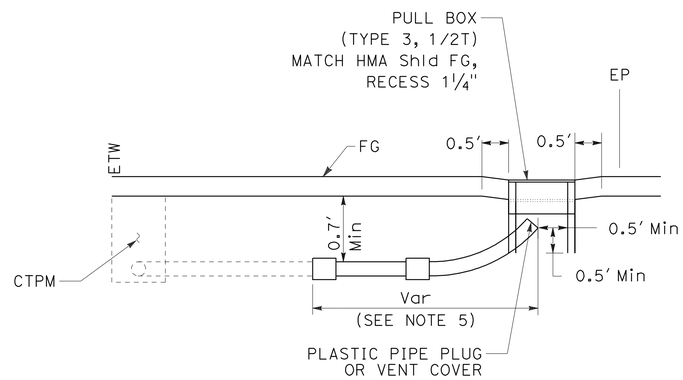

ELEVATION

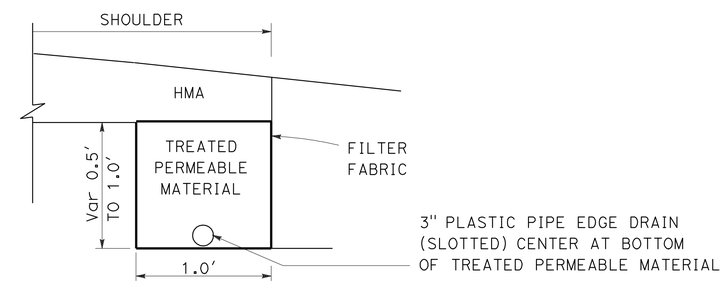

EDGE DRAIN REPLACEMENT

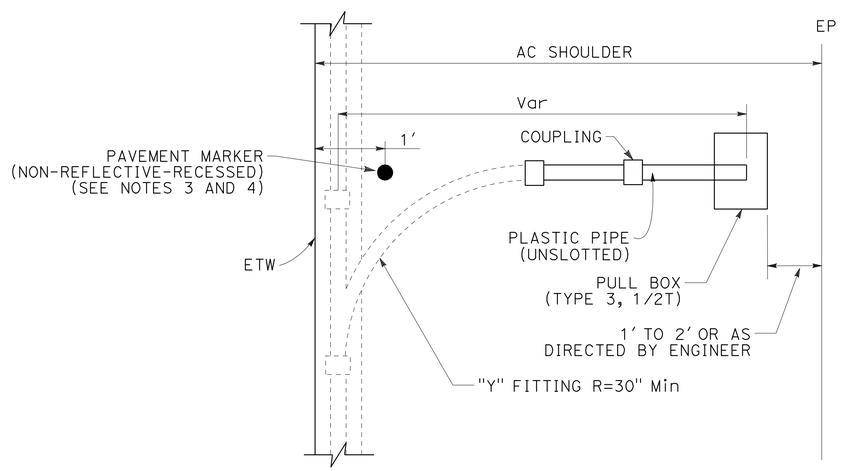

PLAN

CLEANOUT ASSEMBLY (EDGE DRAIN, Mod TYPE 2)

DRAINAGE DETAILS

NO SCALE **DD-8**

REVISED BY	DATE REVISED
TOBY CRAWFORD	BYRON STANLEY
CALCULATED-DESIGNED BY	CHECKED BY
FUNCTIONAL SUPERVISOR	STEVE TOPAL

STATE OF CALIFORNIA - DEPARTMENT OF TRANSPORTATION
Caltrans
DESIGN

P:\proj\02\2c450_plans\pse\22c4501c008.dgn

LAST REVISION 03-18-09 DATE PLOTTED => 02-JUN-2010 TIME PLOTTED => 15:31

Dist	COUNTY	ROUTE	POST MILES TOTAL PROJECT	SHEET No.	TOTAL SHEETS
02	Sha	5	R44.0/58.0	28	142

REGISTERED CIVIL ENGINEER 06-01-10 DATE

06-01-10
PLANS APPROVAL DATE

REGISTERED PROFESSIONAL ENGINEER BYRON H. STANLEY No. C60161 Exp. 6-30-10 CIVIL STATE OF CALIFORNIA

THE STATE OF CALIFORNIA OR ITS OFFICERS OR AGENTS SHALL NOT BE RESPONSIBLE FOR THE ACCURACY OR COMPLETENESS OF SCANNED COPIES OF THIS PLAN SHEET.

NOTES:

1. FOR DETAILS NOT SHOWN, REFER TO STANDARD PLANS.
2. CONTRACTOR SHALL FIELD VERIFY THE HEIGHT PRIOR TO CONSTRUCTING INLET.

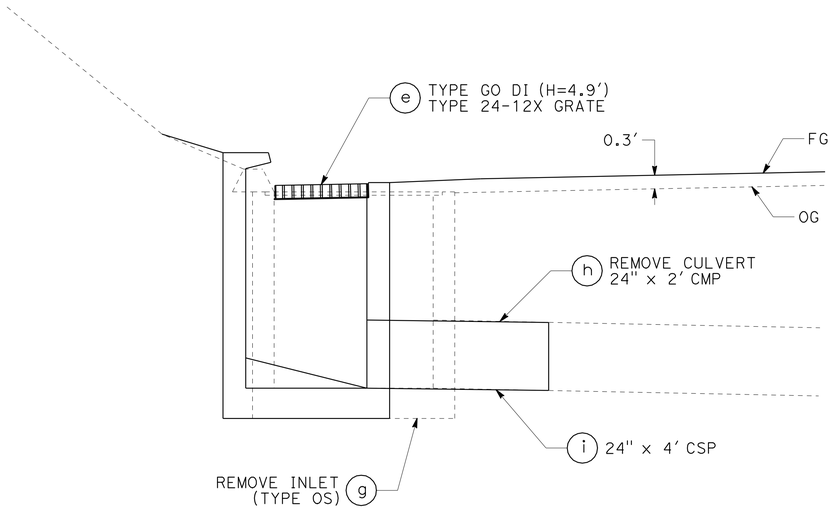

SECTION B-B

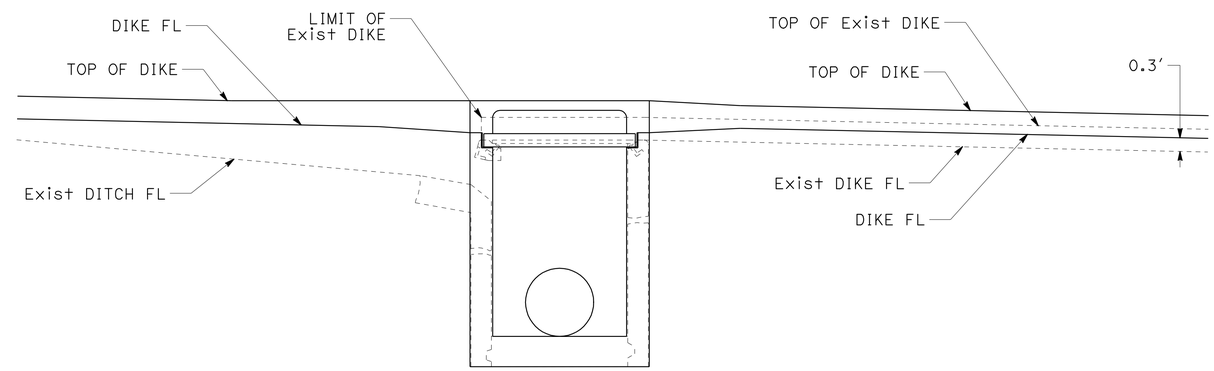

SECTION A-A

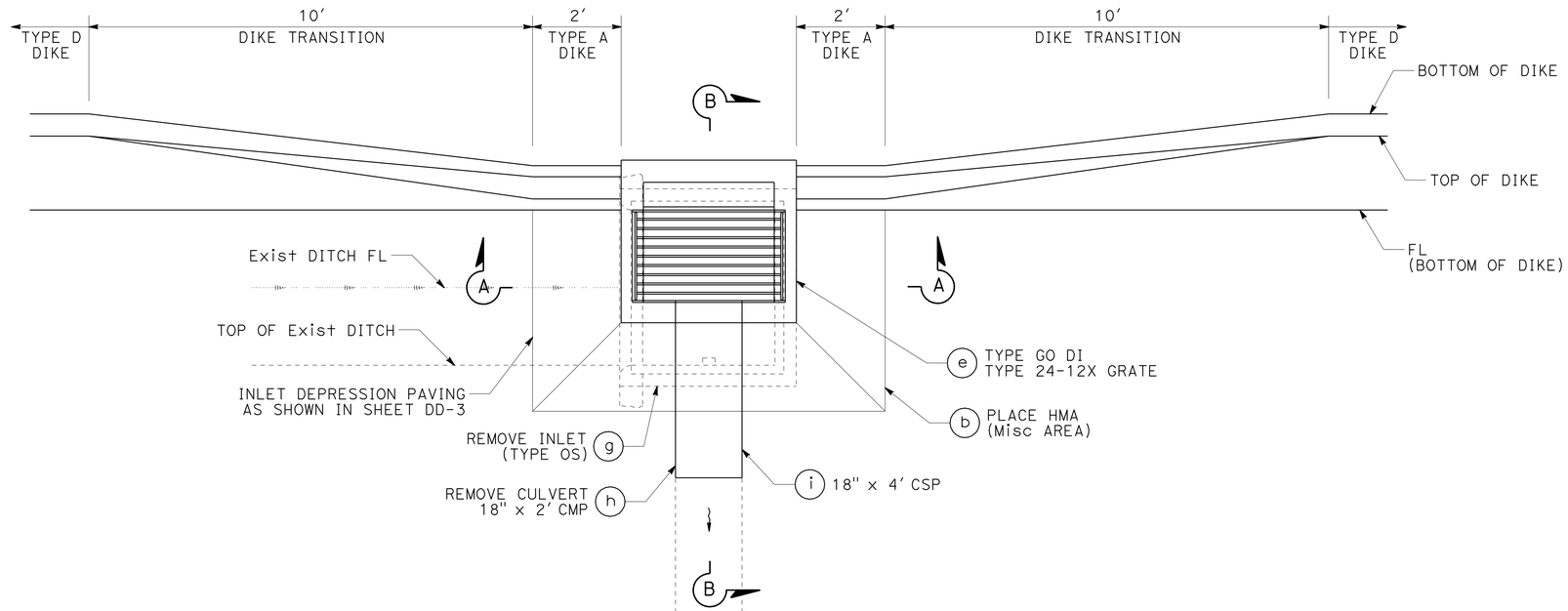

PM 56.30
TYPE GO INLET
NB SHOULDER

DRAINAGE DETAILS
NO SCALE
DD-9

REVISED BY | DATE REVISED
TOBY CRAWFORD | BYRON STANLEY
CALCULATED-DESIGNED BY | CHECKED BY
FUNCTIONAL SUPERVISOR: STEVE TOPAL
STATE OF CALIFORNIA - DEPARTMENT OF TRANSPORTATION
Caltrans
DESIGN
P:\proj1\02\2c450_plans\pse\22c450ic009.dgn

LAST REVISION | DATE PLOTTED => 02-JUN-2010 | TIME PLOTTED => 15:31
03-18-09

BORDER LAST REVISED 4/11/2008 | RELATIVE BORDER SCALE IS IN INCHES 0 1 2 3 | USERNAME => s123119 | DGN FILE => 22c450ic009.dgn | CU 03 247 | EA 2C4501

Dist	COUNTY	ROUTE	POST MILES TOTAL PROJECT	SHEET No.	TOTAL SHEETS
02	Sha	5	R44.0/58.0	29	142

REGISTERED CIVIL ENGINEER 06-01-10 DATE

06-01-10
PLANS APPROVAL DATE

REGISTERED PROFESSIONAL ENGINEER BYRON H. STANLEY No. C60161 Exp. 6-30-10 CIVIL STATE OF CALIFORNIA

THE STATE OF CALIFORNIA OR ITS OFFICERS OR AGENTS SHALL NOT BE RESPONSIBLE FOR THE ACCURACY OR COMPLETENESS OF SCANNED COPIES OF THIS PLAN SHEET.

NOTES:

1. FOR DETAILS NOT SHOWN, REFER TO STANDARD PLANS.
2. WIDTH DIMENSION IS APPROXIMATE. PAVE APRON TO EDGE OF SHOULDER, OR AS DIRECTED BY THE ENGINEER.

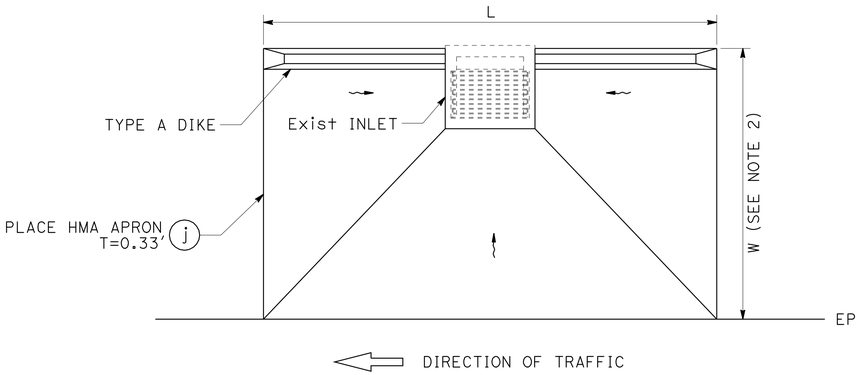

PLAN

HMA APRON RECTANGULAR GRATE INLETS (WITH CURB)

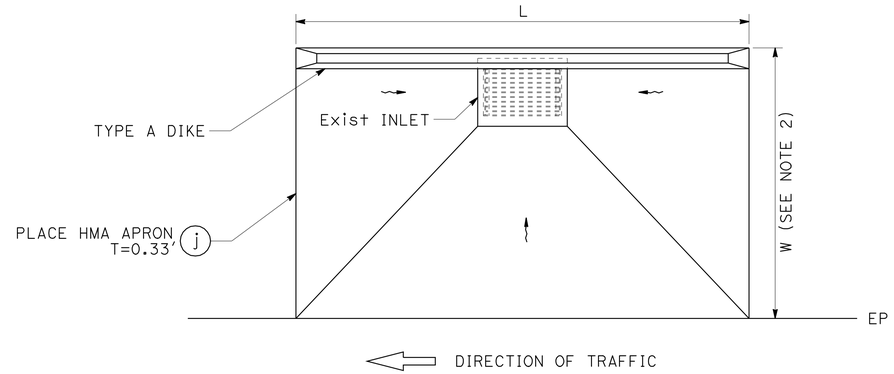

PLAN

HMA APRON RECTANGULAR GRATE INLETS (WITHOUT CURB)

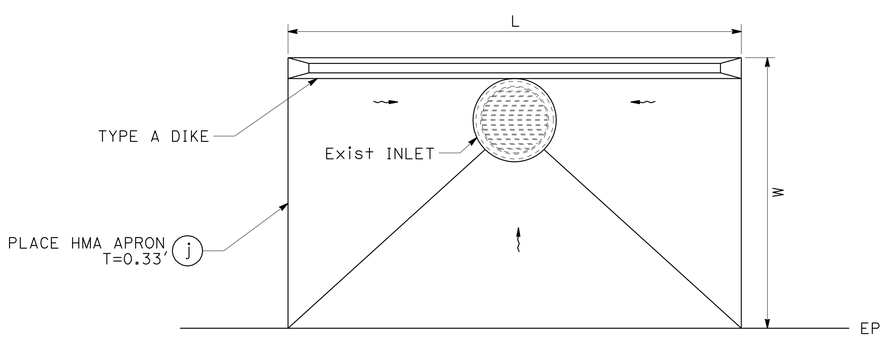

PLAN

HMA APRON CIRCULAR GRATE INLETS

HMA APRON LOCATIONS (SB)

LOCATION		INLET TYPE	"L" (FT)	"W" (FT)
POST MILE	DIRECTION			
PM R44.36	SB	GCP	20	6
PM R45.25	SB	GCP	20	6
PM R46.33	SB	GO	20	6
PM R46.63	SB	GO	20	6
PM R47.81	SB	GO	20	6
PM R48.65	SB	GO	20	6
PM R48.75	SB	GO	20	12
PM R49.83	SB	GO	20	5
PM R50.17	SB	GT3	25	12
PM R50.26	SB	GO	20	5
PM R50.32	SB	GO	15	5
PM R50.39	SB	GO	20	6
PM R50.60	SB	GO	20	6
PM R50.69	SB	GO	20	6
PM R50.75	SB	GDO	20	6
PM R50.84	SB	GO	20	6
PM R50.89	SB	GO	20	6
PM R50.94	SB	GO	20	6
PM R51.00	SB	GO	30	6
PM R51.07	SB	GO	15	6
PM R51.17	SB	GO	20	12
PM R51.23	SB	GO	20	12
PM R51.28	SB	GO	20	12
PM R51.33	SB	GO	20	12
PM R51.40	SB	GO	20	11
PM R51.68	SB	GO	30	12
PM 53.12	SB	GO	20	6
PM 53.22	SB	GO	20	6
PM 53.30	SB	GO	20	6
PM 53.36	SB	GO	20	6
PM 53.59	SB	GO	20	6
PM 53.71	SB	GO	20	6
PM R55.69	SB	GDO	30	12
PM 56.15	SB	GO	20	6
PM 56.18	SB	GO	20	6
PM 56.59	SB	GO	20	6

HMA APRON LOCATIONS (NB)

LOCATION		INLET TYPE	"L" (FT)	"W" (FT)
POST MILE	DIRECTION			
PM R50.69	NB	GO	20	6
PM R50.84	NB	GO	20	6
PM R50.89	NB	GO	20	6
PM R51.00	NB	GMP (Mod)	20	6
PM R51.28	NB	GO	20	6
PM R51.52	NB	GO	20	6
PM R51.68	NB	GO	20	6
PM R55.35	NB	GO	20	6

DRAINAGE DETAILS

NO SCALE

DD-10

REVISED BY | DATE REVISED
TOBY CRAWFORD | BYRON STANLEY
CALCULATED-DESIGNED BY | CHECKED BY
FUNCTIONAL SUPERVISOR | STEVE TOPAL

STATE OF CALIFORNIA - DEPARTMENT OF TRANSPORTATION
Caltrans
DESIGN

P:\proj1\02\2c450_plans\pse\22c450ic010.dgn

LAST REVISION 03-18-09 | DATE PLOTTED => 02-JUN-2010 | TIME PLOTTED => 15:32

BORDER LAST REVISED 4/11/2008 | RELATIVE BORDER SCALE IS IN INCHES 0 1 2 3 | USERNAME => s123119 | DGN FILE => 22c450ic010.dgn | CU 03 247 | EA 2C4501

Dist	COUNTY	ROUTE	POST MILES TOTAL PROJECT	SHEET No.	TOTAL SHEETS
02	Sha	5	R44.0/58.0	30	142

REGISTERED CIVIL ENGINEER 06-01-10 DATE

06-01-10
PLANS APPROVAL DATE

REGISTERED PROFESSIONAL ENGINEER BYRON H. STANLEY No. C60161 Exp. 6-30-10 CIVIL STATE OF CALIFORNIA

THE STATE OF CALIFORNIA OR ITS OFFICERS OR AGENTS SHALL NOT BE RESPONSIBLE FOR THE ACCURACY OR COMPLETENESS OF SCANNED COPIES OF THIS PLAN SHEET.

NOTES:

1. FOR DETAILS NOT SHOWN, REFER TO STANDARD PLANS.
2. SEE QUANTITY SHEETS FOR LOCATIONS WHERE REPLACEMENT ENTRANCE TAPERS REQUIRED.
3. POSITION MBGR POSTS TO MINIMIZE IMPACTS TO THE PAVED GUTTER FLARE.
4. REPLACE ENTRANCE TAPERS ON AN AS-NEEDED BASIS.

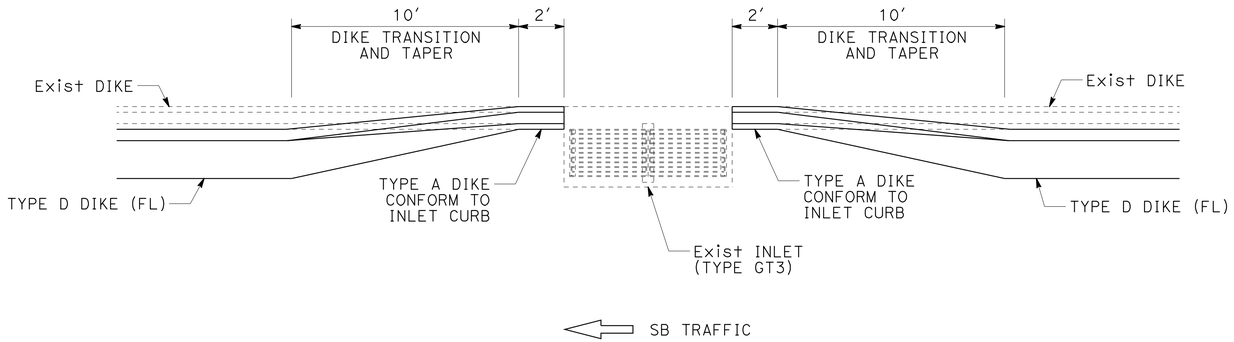

PLAN

PM R55.02 (SB) CONFORM DIKE TO EXISTING INLET

OVERSIDE AND DOWN DRAINS

LOCATION			"L1" (FT)	"L2" (FT)	"W" (FT)	"D" (FT)
POST MILE	DIRECTION	TYPE				
PM R52.27	NB	ET	3.0	10.0	3	
PM 56.36	NB	ET	3.0	10.0	3	
PM 56.51	NB	HMA OD	3.0	10.0		20
PM 56.56	NB	ET	3.0	10.0	3	
PM 56.59	NB	ET	3.0	10.0	3	
PM 56.66	NB	ET	3.0	10.0	3	
PM 56.72	NB	ET	3.0	10.0	3	
PM 57.27	NB OFFRAMP	HMA OD	3.0	10.0		4
PM 57.44	NB	ET	3.0	10.0	3	
PM 57.86	NB	HMA OD	3.0	10.0		20
PM 58.02	NB	ET	3.0	10.0	3	
PM 52.26	SB	ET	37.5	37.5	13	
PM 53.01	SB	ET	15.0	15.0	9	

NOTE: "W" DIMENSION IS APPROXIMATE.

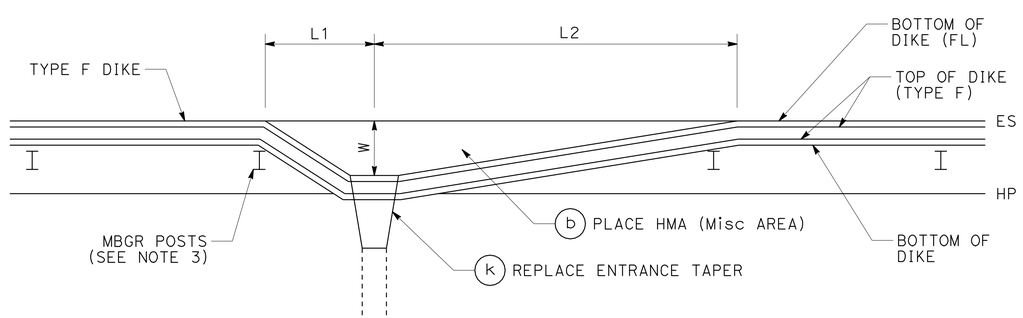

PLAN

ENTRANCE TAPERS UNDER METAL BEAM GUARD RAIL

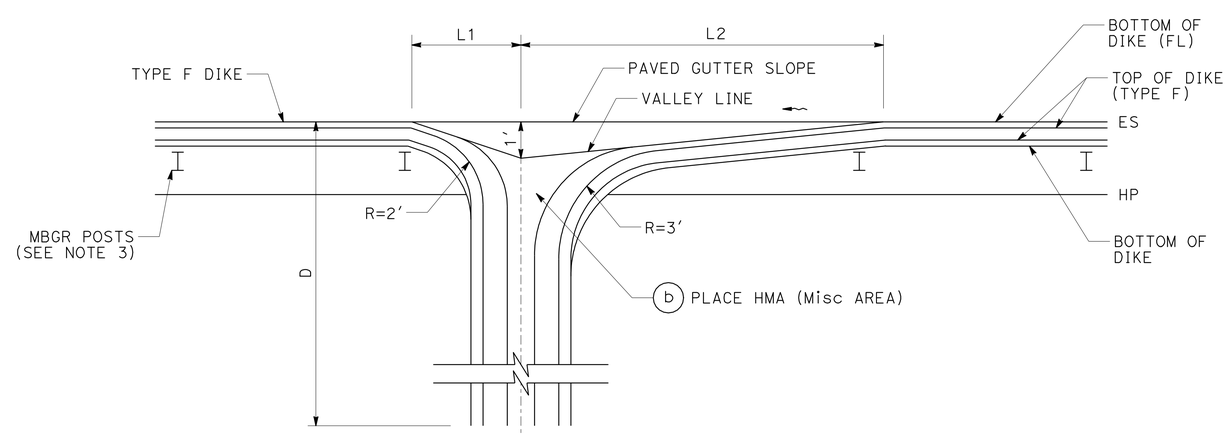

PLAN

HMA OVERSIDE DRAINS UNDER METAL BEAM GUARD RAIL

HMA DIKE DETAILS

DRAINAGE DETAILS

NO SCALE **DD-11**

REVISED BY | DATE REVISED
TOBY CRAWFORD | BYRON STANLEY
CALCULATED-DESIGNED BY | CHECKED BY
FUNCTIONAL SUPERVISOR | STEVE TOPAL

STATE OF CALIFORNIA - DEPARTMENT OF TRANSPORTATION
Caltrans
DESIGN

P:\proj1\02\2c450_plans\pse\22c450ic011.dgn

LAST REVISION 03-18-09 | DATE PLOTTED => 02-JUN-2010 | TIME PLOTTED => 15:32

Dist	COUNTY	ROUTE	POST MILES TOTAL PROJECT	SHEET No.	TOTAL SHEETS
02	Sha	5	R44.0/58.0	31	142

REGISTERED CIVIL ENGINEER 06-01-10 DATE

06-01-10
PLANS APPROVAL DATE

REGISTERED PROFESSIONAL ENGINEER BYRON H. STANLEY No. C60161 Exp. 6-30-10 CIVIL STATE OF CALIFORNIA

THE STATE OF CALIFORNIA OR ITS OFFICERS OR AGENTS SHALL NOT BE RESPONSIBLE FOR THE ACCURACY OR COMPLETENESS OF SCANNED COPIES OF THIS PLAN SHEET.

NOTES:

1. FOR DETAILS NOT SHOWN, REFER TO STANDARD PLANS.
2. CONTRACTOR SHALL FIELD VERIFY THE HEIGHT PRIOR TO CONSTRUCTING INLET.

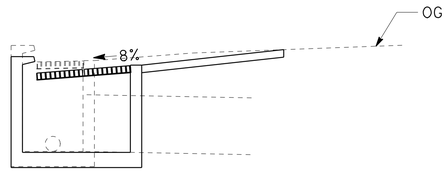

SECTION B-B

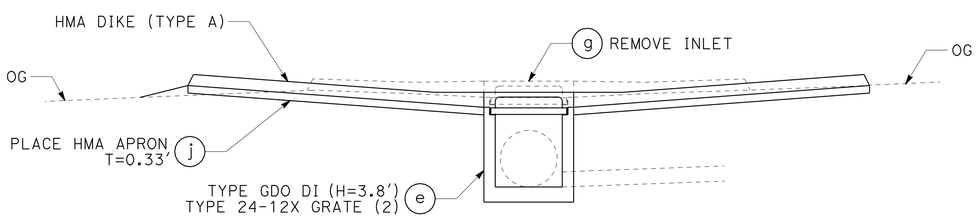

SECTION A-A

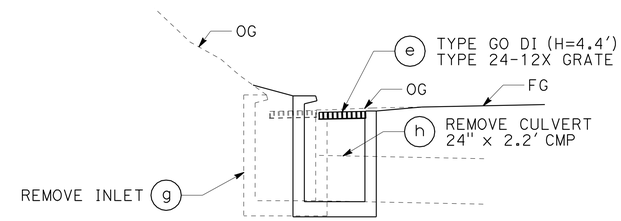

SECTION C-C

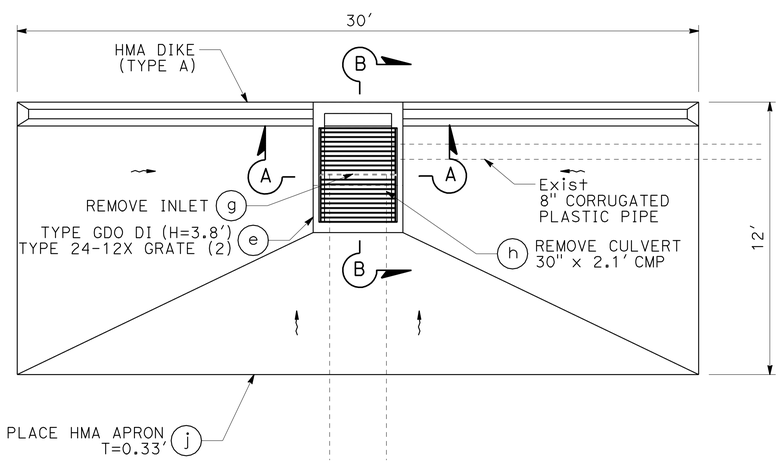

PLAN

PM 55.69
TYPE GDO INLET
SB SHOULDER

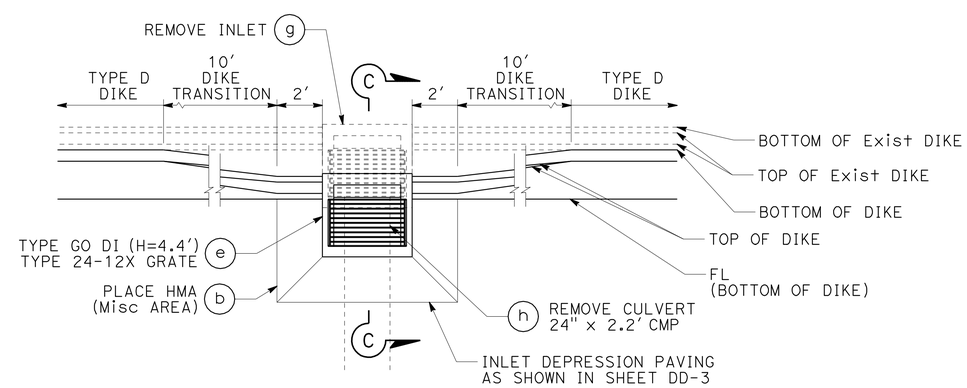

PLAN

PM R55.12
TYPE GO INLET
SB SHOULDER

DRAINAGE DETAILS

NO SCALE **DD-12**

REVISED BY | DATE REVISED
TOBY CRAWFORD | BYRON STANLEY
CALCULATED-DESIGNED BY | CHECKED BY
FUNCTIONAL SUPERVISOR: STEVE TOPAL
STATE OF CALIFORNIA - DEPARTMENT OF TRANSPORTATION
Caltrans® DESIGN
P:\proj1\02\2c450_plans\pse\22c4501c012.dgn

LAST REVISION 03-18-09 | DATE PLOTTED => 02-JUN-2010 | TIME PLOTTED => 15:32

BORDER LAST REVISED 4/11/2008 | RELATIVE BORDER SCALE IS IN INCHES 0 1 2 3 | USERNAME => s123119 | DGN FILE => 22c4501c012.dgn | CU 03 247 | EA 2C4501

Dist	COUNTY	ROUTE	POST MILES TOTAL PROJECT	SHEET No.	TOTAL SHEETS
02	Sha	5	R44.0/58.0	32	142

REGISTERED CIVIL ENGINEER 06-01-10 DATE

06-01-10
PLANS APPROVAL DATE

REGISTERED PROFESSIONAL ENGINEER BYRON H. STANLEY No. C60161 Exp. 6-30-10 CIVIL STATE OF CALIFORNIA

THE STATE OF CALIFORNIA OR ITS OFFICERS OR AGENTS SHALL NOT BE RESPONSIBLE FOR THE ACCURACY OR COMPLETENESS OF SCANNED COPIES OF THIS PLAN SHEET.

NOTES:

1. FOR DETAILS NOT SHOWN, REFER TO STANDARD PLANS.
2. DRILL AND BOND #4 x 8" DOWELS IN ¾" ø HOLES @ 8" C-C TO CONNECT EXISTING INLET TO NEW INLET.
3. CONTRACTOR SHALL FIELD VERIFY DIMENSIONS PRIOR TO CONSTRUCTING AND ADJUSTING INLETS.
4. QUANTITIES FOR TYPE D DIKE (AND TRANSITIONS) AND HMA PAVING INCLUDED IN SUMMARY OF QUANTITIES.

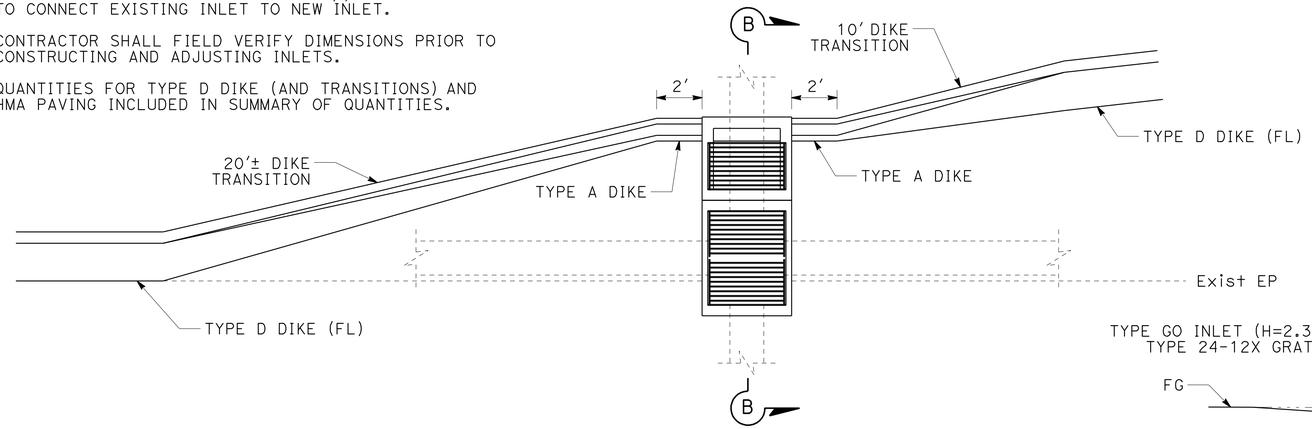

PLAN

DETAIL A

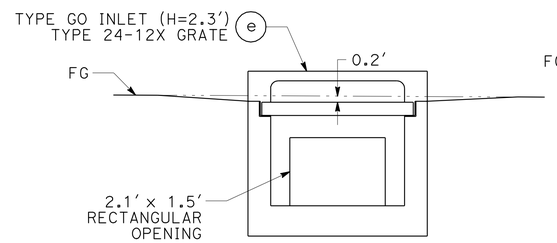

SECTION C-C

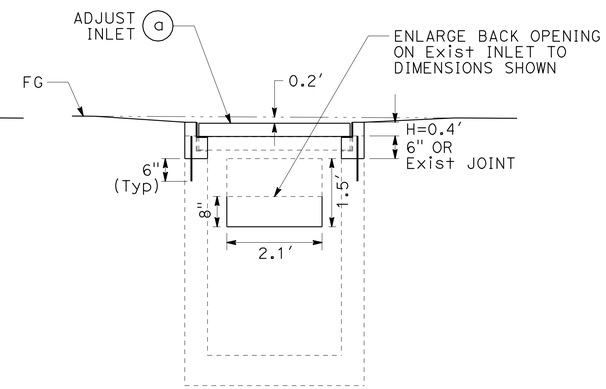

SECTION D-D

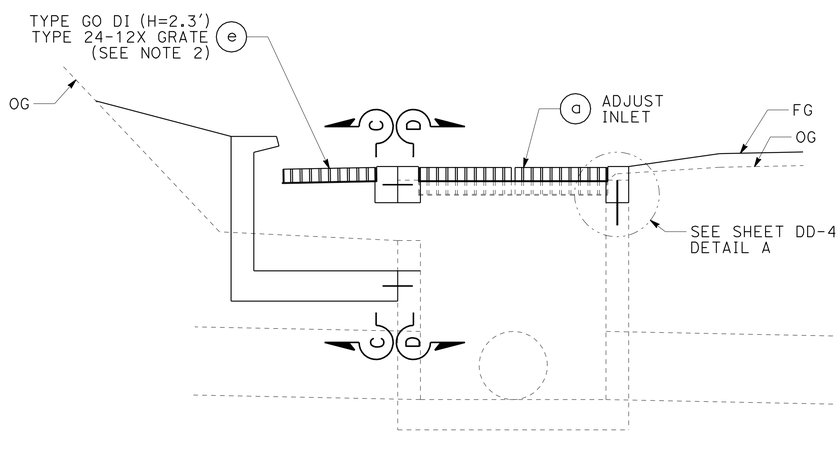

SECTION B-B

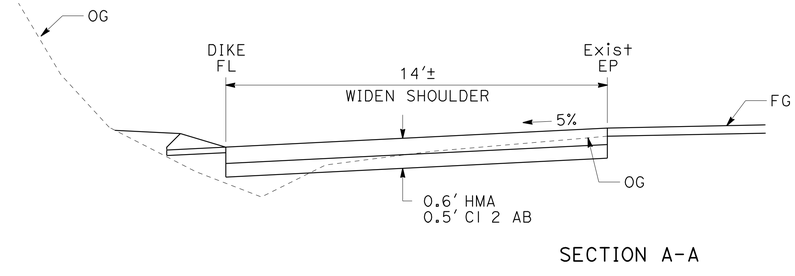

SECTION A-A

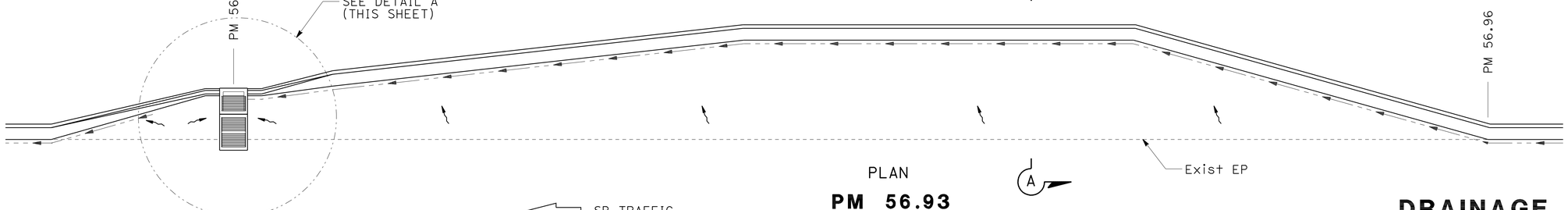

PLAN

SB TRAFFIC

PM 56.93
SB SHOULDER WIDENING AND DRAINAGE INLET

DRAINAGE DETAILS
NO SCALE

DD-13

REVISED BY | DATE REVISED
TOBY CRAWFORD | BYRON STANLEY
CALCULATED-DESIGNED BY | CHECKED BY
FUNCTIONAL SUPERVISOR: STEVE TOPAL

STATE OF CALIFORNIA - DEPARTMENT OF TRANSPORTATION
Caltrans
DESIGN

P:\proj1\02\2c450_plans\pse\22c450ic013.dgn

LAST REVISION | DATE PLOTTED => 02-JUN-2010 | TIME PLOTTED => 15:32
03-18-09

BORDER LAST REVISED 4/11/2008 | RELATIVE BORDER SCALE IS IN INCHES 0 1 2 3 | USERNAME => s123119 | DGN FILE => 22c450ic013.dgn | CU 03 247 | EA 2C4501

Dist	COUNTY	ROUTE	POST MILES TOTAL PROJECT	SHEET No.	TOTAL SHEETS
02	Sha	5	R44.0/58.0	33	142

REGISTERED CIVIL ENGINEER 06-01-10 DATE

06-01-10
PLANS APPROVAL DATE

REGISTERED PROFESSIONAL ENGINEER BYRON H. STANLEY No. C60161 Exp. 6-30-10 CIVIL STATE OF CALIFORNIA

THE STATE OF CALIFORNIA OR ITS OFFICERS OR AGENTS SHALL NOT BE RESPONSIBLE FOR THE ACCURACY OR COMPLETENESS OF SCANNED COPIES OF THIS PLAN SHEET.

NOTES:

1. FOR DETAILS NOT SHOWN, REFER TO STANDARD PLANS AND SHEET DD-1.
2. CONTRACTOR SHALL FIELD VERIFY HEIGHTS PRIOR TO CONSTRUCTING INLETS.

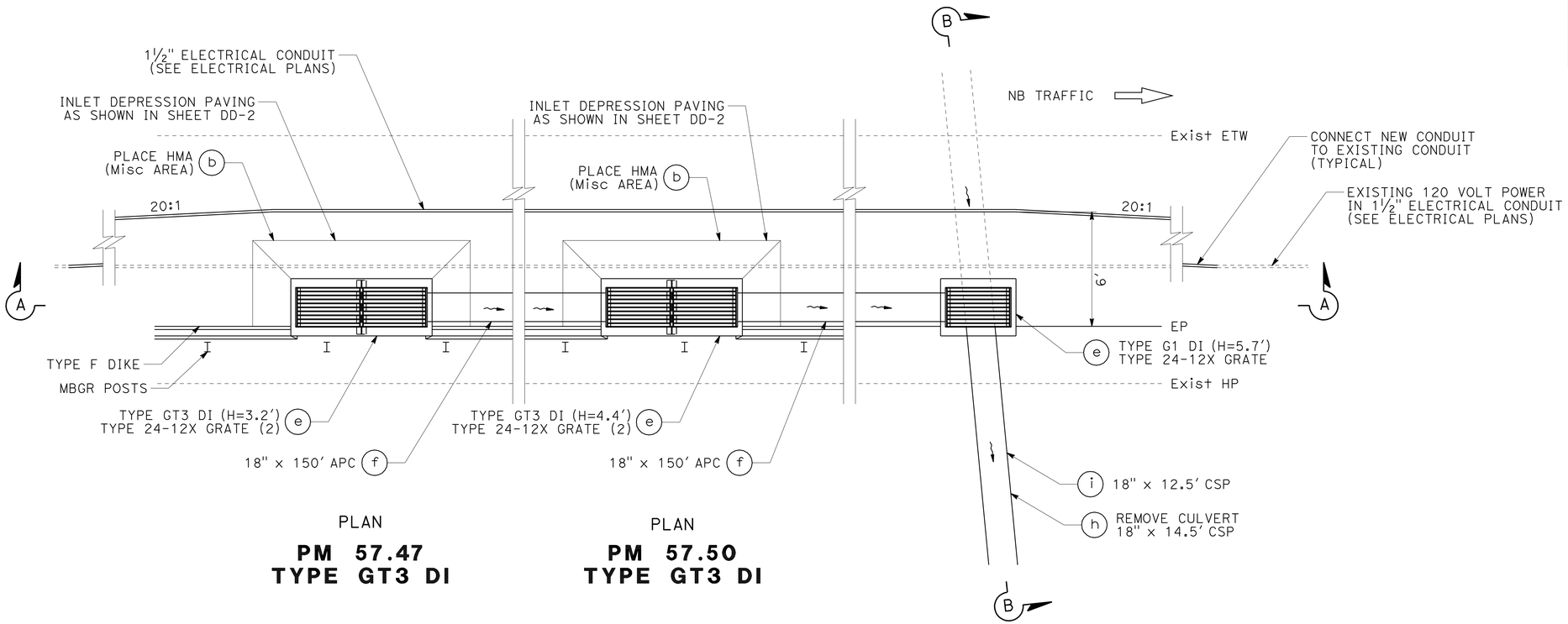

PLAN
PM 57.47
TYPE GT3 DI

PLAN
PM 57.50
TYPE GT3 DI

PLAN
PM 57.53
TYPE G1 DI

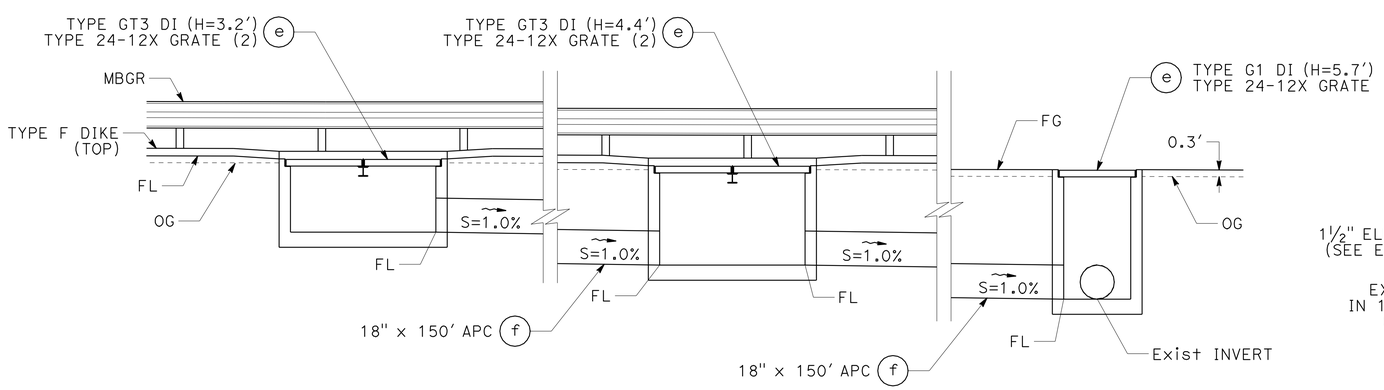

SECTION A-A

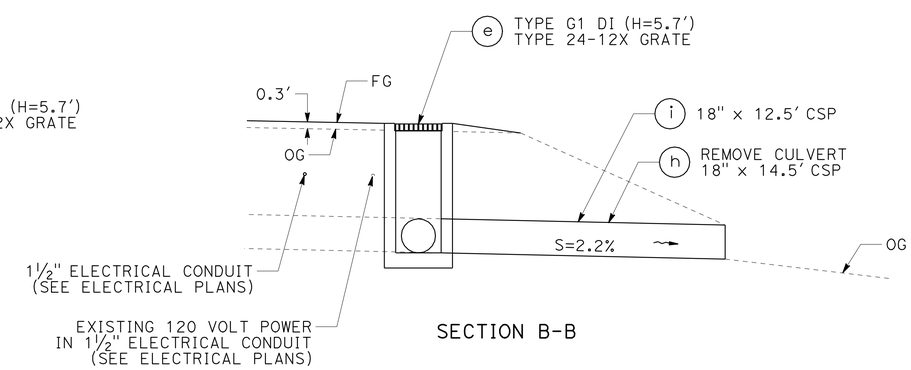

SECTION B-B

NEW NB SHOULDER INLETS

DRAINAGE DETAILS
NO SCALE
DD-14

REVISED BY | DATE REVISED
TOBY CRAWFORD | BYRON STANLEY
CALCULATED-DESIGNED BY | CHECKED BY
FUNCTIONAL SUPERVISOR: STEVE TOPAL
STATE OF CALIFORNIA - DEPARTMENT OF TRANSPORTATION
Caltrans DESIGN
P:\proj1\02\2c450_plans\pse\22c450ic014.dgn

LAST REVISION 03-18-09 | DATE PLOTTED => 02-JUN-2010 | TIME PLOTTED => 15:32

BORDER LAST REVISED 4/11/2008 | RELATIVE BORDER SCALE IS IN INCHES 0 1 2 3 | USERNAME => s123119 | DGN FILE => 22c450ic014.dgn | CU 03 247 | EA 2C4501

Dist	COUNTY	ROUTE	POST MILES TOTAL PROJECT	SHEET No.	TOTAL SHEETS
02	Sha	5	R44.0/58.0	34	142

REGISTERED CIVIL ENGINEER 06-01-10 DATE

06-01-10
PLANS APPROVAL DATE

REGISTERED PROFESSIONAL ENGINEER BYRON H. STANLEY No. C60161 Exp. 6-30-10 CIVIL STATE OF CALIFORNIA

THE STATE OF CALIFORNIA OR ITS OFFICERS OR AGENTS SHALL NOT BE RESPONSIBLE FOR THE ACCURACY OR COMPLETENESS OF SCANNED COPIES OF THIS PLAN SHEET.

NOTES:

1. (N) - NOT A SEPARATE PAY ITEM, FOR INFORMATION ONLY.
2. "Shld" REFERS TO THE OUTSIDE SHOULDERS, "MEDIAN" REFERS TO THE MEDIAN SHOULDER.
3. SEE SHEET Q-2 FOR CLEANOUT ASSEMBLY (EGDE DRAIN) QUANTITIES.

ALTERNATIVE PIPE CULVERT OPTIONS

STATION RANGE	GALVANIZED STEEL		REINFORCED	OTHER
	PLAIN	POLYMERIC SHEET COATING	CONCRETE CEMENT (TYPE II)	
PM 6.86 TO PM 6.98	0.109"	0.109"	YES	ALUMINUM STEEL 0.109"

DRAINAGE QUANTITIES - CHART 1 OF 4

APPROXIMATE POST MILE	LOCATION	SHEET DD-XX	DRAINAGE UNIT ◯	INLET TYPE	HEIGHT (DEFINED IN "DD" SHEETS) (N)	REMOVE ENTRANCE TAPER	REMOVE CULVERT	REMOVE INLET	ADJUST INLET	PLACE HMA (Misc AREA)	PLACE HMA DIKE (TYPE A)	ADJUST SLOTTED DRAIN TO GRADE	MINOR CONCRETE (MINOR STRUCTURE)	18" ALTERNATIVE PIPE CULVERT	18" CORRUGATED STEEL PIPE (0.109" THICK)	ENTRANCE TAPER	Misc IRON AND STEEL	DESCRIPTION
NORTHBOUND						EA	LF	EA	EA	SQYD	LF	LF	CY	LF	LF	EA	LB	
R50.69	Shld	10	j	GO						11.7	16.0							PLACE HMA APRON
R50.84	Shld	10	j	GO						11.7	16.0							PLACE HMA APRON
R50.89	Shld	10	j	GO						11.7	16.0							PLACE HMA APRON
R51.00	Shld	10	j	GMP						12.6	20.0							PLACE HMA APRON
R51.28	Shld	10	j	GO						11.7	16.0							PLACE HMA APRON
R51.52	Shld	10	j	GO						11.7	16.0							PLACE HMA APRON
R51.68	Shld	10	j	GO						11.7	16.0							PLACE HMA APRON
R52.27	Shld	11	b							1.6								PAVED GUTTER FLARE
			k			1										1		ENTRANCE TAPER
R55.35	Shld	10	j	GO						11.7	16.0							PLACE HMA APRON
56.30	Shld	9	b							2.9								INLET DEPRESSION
			e	GO	4.9						4.0		1.71				239	TYPE GO DI, TYPE 24-12X GRATE
			g	OS				1										REMOVE INLET (TYPE OS)
			h				2.0											REMOVE CULVERT 18" x 2' CMP
			i												4.0			18" x 4' CSP
56.36	Shld	11	b							1.6								PAVED GUTTER FLARE
			k			1										1		ENTRANCE TAPER
56.51	Shld	11	b							14.2								OVERSIDE DRAIN AND GUTTER FLARE
56.56	Shld	11	b							1.6								PAVED GUTTER FLARE
			k			1										1		ENTRANCE TAPER
56.59	Shld	11	b							1.6								PAVED GUTTER FLARE
			k			1										1		ENTRANCE TAPER
56.66	Shld	11	b							1.6								PAVED GUTTER FLARE
			k			1										1		ENTRANCE TAPER
56.72	Shld	11	b							1.6								PAVED GUTTER FLARE
			k			1										1		ENTRANCE TAPER
56.80	MEDIAN	1	a	GO	0.3				1									ADJUST MEDIAN INLET
			b							2.9								INLET DEPRESSION
56.81	MEDIAN	1	a	GO	0.3				1									ADJUST MEDIAN INLET
			b							2.9								INLET DEPRESSION
		5	c		0.3					6.0		27.0						ADJUST SLOTTED DRAIN
56.82	MEDIAN	1	a	GO	0.3				1									ADJUST MEDIAN INLET
			b							2.9								INLET DEPRESSION
		5	c		0.3					3.6		16.0						ADJUST SLOTTED DRAIN
56.86	MEDIAN	1	a	GO	0.3				1									ADJUST MEDIAN INLET
			b							2.9								INLET DEPRESSION
56.93	Shld	4	a	G1	0.3				1									ADJUST SHOULDER INLET
			b							2.9								INLET DEPRESSION
56.93	MEDIAN	1	a	GO	0.3				1									ADJUST MEDIAN INLET
			b							2.9								INLET DEPRESSION
56.99	MEDIAN	1	a	GO	0.3				1									ADJUST MEDIAN INLET
			b							2.9								INLET DEPRESSION
TOTALS - CHART 1						6	2.0	1	7	172.5	186.0	43.0	1.71	0	4.0	6	239	

DRAINAGE QUANTITIES
DQ-1

REVISED BY | DATE REVISED
TOBY CRAWFORD | BYRON STANLEY
CALCULATED-DESIGNED BY | CHECKED BY
FUNCTIONAL SUPERVISOR
STEVE TOPAL

STATE OF CALIFORNIA - DEPARTMENT OF TRANSPORTATION
Caltrans® DESIGN

P:\proj1\02\2c450_plans\pse\22c4501d001.dgn

LAST REVISION 03-18-09 | DATE PLOTTED => 02-JUN-2010 TIME PLOTTED => 15:32

Dist	COUNTY	ROUTE	POST MILES TOTAL PROJECT	SHEET No.	TOTAL SHEETS
02	Sha	5	R44.0/58.0	35	142

REGISTERED CIVIL ENGINEER 06-01-10 DATE

06-01-10
PLANS APPROVAL DATE

REGISTERED PROFESSIONAL ENGINEER BYRON H. STANLEY No. C60161 Exp. 6-30-10 CIVIL STATE OF CALIFORNIA

THE STATE OF CALIFORNIA OR ITS OFFICERS OR AGENTS SHALL NOT BE RESPONSIBLE FOR THE ACCURACY OR COMPLETENESS OF SCANNED COPIES OF THIS PLAN SHEET.

NOTES:

1. (N) - NOT A SEPARATE PAY ITEM, FOR INFORMATION ONLY.
2. "Shld" REFERS TO THE OUTSIDE SHOULDERS, "MEDIAN" REFERS TO THE MEDIAN SHOULDER.
3. SEE SHEET Q-2 FOR CLEANOUT ASSEMBLY (EGDE DRAIN) QUANTITIES.

DRAINAGE QUANTITIES - CHART 2 OF 4

APPROXIMATE POST MILE	LOCATION	SHEET DD-XX	DRAINAGE UNIT ◯	INLET TYPE	HEIGHT (DEFINED IN "DD" SHEETS) (N)	REMOVE ENTRANCE TAPER	REMOVE CULVERT	REMOVE INLET	ADJUST INLET	PLACE HMA (Misc AREA)	PLACE HMA DIKE (TYPE A)	ADJUST SLOTTED DRAIN TO GRADE	MINOR CONCRETE (MINOR STRUCTURE)	18" ALTERNATIVE PIPE CULVERT	18" CORRUGATED STEEL PIPE (0.109" THICK)	ENTRANCE TAPER	Misc IRON AND STEEL	DESCRIPTION
NORTHBOUND						EA	LF	EA	EA	SQYD	LF	LF	CY	LF	LF	EA	LB	
57.02	MEDIAN	7	b							2.9								INLET DEPRESSION
			e	G1	2.4								0.82				239	TYPE G1 DI, 24-12X GRATE
			f											150				18" APC (PM 56.99 TO 57.02)
57.04	MEDIAN	1	a	GO	0.3				1									ADJUST MEDIAN INLET
			b							2.9								INLET DEPRESSION
57.09	MEDIAN	1	a	GO	0.3				1									ADJUST MEDIAN INLET
			b							2.9								INLET DEPRESSION
57.27	Shld	11	b							4.4								OVERSIDE DRAIN AND GUTTER FLARE
57.44	Shld	11	b							1.6								PAVED GUTTER FLARE
			k			1										1		ENTRANCE TAPER
57.45	MEDIAN	5	b						1	2.9								INLET DEPRESSION
			c		Var					28.4		128.0						ADJUST SLOTTED DRAIN
57.47	Shld	14	b							3.7								INLET DEPRESSION
			e	GT3	3.2								1.80				478	TYPE GT3 DI, 24-12X DbI GRATE
			f											150				18" APC (PM 57.47 TO 57.50)
57.48	MEDIAN	1	a	GO	0.3				1									ADJUST MEDIAN INLET
			b							2.9								INLET DEPRESSION
57.50	Shld	14	b							3.7								INLET DEPRESSION
			e	GT3	4.4								2.22				478	TYPE GT3 DI, 24-12X DbI GRATE
			f											150				18" APC (PM 57.56 TO 57.53)
57.52	MEDIAN	2	a	G1	0.3				1									ADJUST MEDIAN INLET
			b							2.9								INLET DEPRESSION
57.53	MEDIAN	1	a	GO	0.3				1									ADJUST MEDIAN INLET
			b							2.9								INLET DEPRESSION
		5	c		0.3					14.7		66.0						ADJUST SLOTTED DRAIN
57.53	Shld	14	e	G1	5.7								1.54				239	TYPE GO DI, 24-12X GRATE
			i												12.5			18" x 12.5 CSP
			h				14.5											REMOVE 18" CULVERT
57.56	MEDIAN	1	a	GO	0.3				1									ADJUST MEDIAN INLET
			b							2.9								INLET DEPRESSION
57.59	MEDIAN	7	b							2.9								INLET DEPRESSION
			e	G1	2.9								0.93				239	TYPE G1 DI, 24-12X GRATE
			f											150				18" APC (PM 57.56 TO 57.59)
57.63	MEDIAN	1	a	GO	0.3				1									ADJUST MEDIAN INLET
			b							2.9								INLET DEPRESSION
57.72	MEDIAN	1	a	GO	0.3				1									ADJUST MEDIAN INLET
			b							2.9								INLET DEPRESSION
TOTALS - CHART 2						1	14.5	0	9	88.4	0	194.0	7.31	600	12.5	1	1673	

REVISED BY | DATE REVISED

TOBY CRAWFORD | BYRON STANLEY

CALCULATED-DESIGNED BY | CHECKED BY

FUNCTIONAL SUPERVISOR: STEVE TOPAL

STATE OF CALIFORNIA - DEPARTMENT OF TRANSPORTATION

Caltrans

DESIGN

P:\proj1\02\2c450_plans\pse\22c450id002.dgn

DRAINAGE QUANTITIES
DQ-2

LAST REVISION 03-18-09 | DATE PLOTTED => 02-JUN-2010 | TIME PLOTTED => 15:32

Dist	COUNTY	ROUTE	POST MILES TOTAL PROJECT	SHEET No.	TOTAL SHEETS
02	Sha	5	R44.0/58.0	36	142

REGISTERED CIVIL ENGINEER 06-01-10 DATE

06-01-10
PLANS APPROVAL DATE

REGISTERED PROFESSIONAL ENGINEER BYRON H. STANLEY No. C60161 Exp. 6-30-10 CIVIL STATE OF CALIFORNIA

THE STATE OF CALIFORNIA OR ITS OFFICERS OR AGENTS SHALL NOT BE RESPONSIBLE FOR THE ACCURACY OR COMPLETENESS OF SCANNED COPIES OF THIS PLAN SHEET.

NOTES:

1. (N) - NOT A SEPARATE PAY ITEM, FOR INFORMATION ONLY.
2. "Shld" REFERS TO THE OUTSIDE SHOULDERS, "MEDIAN" REFERS TO THE MEDIAN SHOULDER.
3. SEE SHEET Q-2 FOR CLEANOUT ASSEMBLY (EGDE DRAIN) QUANTITIES.

DRAINAGE QUANTITIES - CHART 3 OF 4

APPROXIMATE POST MILE	LOCATION	SHEET DD-XX	DRAINAGE UNIT ◯	INLET TYPE	HEIGHT (DEFINED IN "DD" SHEETS) (N)	REMOVE ENTRANCE TAPER	REMOVE CULVERT	REMOVE INLET	ADJUST INLET	PLACE HMA (Misc AREA)	PLACE HMA DIKE (TYPE A)	ADJUST SLOTTED DRAIN TO GRADE	MINOR CONCRETE (MINOR STRUCTURE)	18" ALTERNATIVE PIPE CULVERT	18" CORRUGATED STEEL PIPE (0.109" THICK)	ENTRANCE TAPER	Misc IRON AND STEEL	DESCRIPTION
NORTHBOUND						EA	LF	EA	EA	SQYD	LF	LF	CY	LF	LF	EA	LB	
57.86	Shld	11	b							14.2								OVERSIDE DRAIN AND GUTTER FLARE
58.02	Shld	11	b							1.6								PAVED GUTTER FLARE
			k			1										1		ENTRANCE TAPER
SOUTHBOUND																		
R44.36	Shld	10	j	GCP						12.6	20.0							PLACE HMA APRON
R45.25	Shld	10	j	GCP						12.6	20.0							PLACE HMA APRON
R46.33	Shld	10	j	GO						11.7	16.0							PLACE HMA APRON
R46.63	Shld	10	j	GO						11.7	16.0							PLACE HMA APRON
R47.81	Shld	10	j	GO						11.7	16.0							PLACE HMA APRON
R48.65	Shld	10	j	GO						11.7	16.0							PLACE HMA APRON
R48.75	Shld	10	j	GO						25.0	16.0							PLACE HMA APRON
R49.83	Shld	10	j	GO						9.5	16.0							PLACE HMA APRON
R50.17	Shld	10	j	GT3						30.8	17.5							PLACE HMA APRON
R50.26	Shld	10	j	GO						9.5	16.0							PLACE HMA APRON
R50.32	Shld	10	j	GO						6.7	11.0							PLACE HMA APRON
R50.39	Shld	10	j	GO						11.7	16.0							PLACE HMA APRON
R50.60	Shld	10	j	GO						11.7	16.0							PLACE HMA APRON
R50.69	Shld	10	j	GO						11.7	16.0							PLACE HMA APRON
R50.75	Shld	10	j	GDO						10.8	16.0							PLACE HMA APRON
R50.84	Shld	10	j	GO						11.7	16.0							PLACE HMA APRON
R50.89	Shld	10	j	GO						11.7	16.0							PLACE HMA APRON
R50.94	Shld	10	j	GO						11.7	16.0							PLACE HMA APRON
R51.00	Shld	10	j	GO						18.4	26.0							PLACE HMA APRON
R51.07	Shld	10	j	GO						8.4	11.0							PLACE HMA APRON
R51.17	Shld	10	j	GO						25.0	16.0							PLACE HMA APRON
R51.23	Shld	10	j	GO						25.0	16.0							PLACE HMA APRON
R51.28	Shld	10	j	GO						25.0	16.0							PLACE HMA APRON
R51.33	Shld	10	j	GO						25.0	16.0							PLACE HMA APRON
R51.40	Shld	10	j	GO						22.8	16.0							PLACE HMA APRON
R51.68	Shld	10	j	GO						38.4	26.0							PLACE HMA APRON
R52.26	Shld	11	b							54.2								PAVED GUTTER FLARE
53.01	Shld	11	b							15.0								PAVED GUTTER FLARE
53.12	Shld	10	j	GO						11.7	16.0							PLACE HMA APRON
53.22	Shld	10	j	GO						11.7	16.0							PLACE HMA APRON
53.30	Shld	10	j	GO						11.7	16.0							PLACE HMA APRON
53.36	Shld	10	j	GO						11.7	16.0							PLACE HMA APRON
53.59	Shld	10	j	GO						11.7	16.0							PLACE HMA APRON
53.71	Shld	10	j	GO						11.7	16.0							PLACE HMA APRON
R55.12	Shld	12	b							2.9								INLET DEPRESSION
			e	GO	4.4						4.0		1.58				239	TYPE GO DI, 24-12X GRATE
			g					1										REMOVE INLET
			h				2.2											REMOVE CULVERT 24" x 2.2' CMP
R55.69	Shld	12	e	GDO	3.8								1.88				473	TYPE GDO DI, 24-12X GRATE (2)
			g					1										REMOVE INLET
			h				2.1											REMOVE CULVERT 30" x 2.1' CMP
		10	j							37.4	26.0							PLACE HMA APRON
TOTALS - CHART 3						1	4.3	2	0	618.0	561.5	0	3.46	0	0	1	712	

REVISED BY | DATE REVISED

TOBY CRAWFORD | BYRON STANLEY

CALCULATED-DESIGNED BY | CHECKED BY

FUNCTIONAL SUPERVISOR: STEVE TOPAL

STATE OF CALIFORNIA - DEPARTMENT OF TRANSPORTATION

Caltrans® DESIGN

P:\proj1\02\2c450_plans\pse\22c4501d003.dgn

DRAINAGE QUANTITIES
DQ-3

LAST REVISION 03-18-09 | DATE PLOTTED => 02-JUN-2010 | TIME PLOTTED => 15:32

Dist	COUNTY	ROUTE	POST MILES TOTAL PROJECT	SHEET No.	TOTAL SHEETS
02	Sha	5	R44.0/58.0	37	142

REGISTERED CIVIL ENGINEER 06-01-10 DATE

06-01-10
PLANS APPROVAL DATE

REGISTERED PROFESSIONAL ENGINEER BYRON H. STANLEY No. C60161 Exp. 6-30-10 CIVIL STATE OF CALIFORNIA

THE STATE OF CALIFORNIA OR ITS OFFICERS OR AGENTS SHALL NOT BE RESPONSIBLE FOR THE ACCURACY OR COMPLETENESS OF SCANNED COPIES OF THIS PLAN SHEET.

NOTES:

1. (N) - NOT A SEPARATE PAY ITEM, FOR INFORMATION ONLY.
2. "Shld" REFERS TO THE OUTSIDE SHOULDERS, "MEDIAN" REFERS TO THE MEDIAN SHOULDER.
3. SEE SHEET Q-2 FOR CLEANOUT ASSEMBLY (EGDE DRAIN) QUANTITIES.

DRAINAGE QUANTITIES - CHART 4 OF 4

APPROXIMATE POST MILE	LOCATION	SHEET DD-XX	DRAINAGE UNIT ◯	INLET TYPE	HEIGHT (DEFINED IN "DD" SHEETS) (N)	REMOVE ENTRANCE TAPER	REMOVE CULVERT	REMOVE INLET	ADJUST INLET	PLACE HMA (Misc AREA)	PLACE HMA DIKE (TYPE A)	ADJUST SLOTTED DRAIN TO GRADE	MINOR CONCRETE (MINOR STRUCTURE)	18" ALTERNATIVE PIPE CULVERT	18" CORRUGATED STEEL PIPE (0.109" THICK)	ENTRANCE TAPER	Misc IRON AND STEEL	DESCRIPTION
SOUTHBOUND						EA	LF	EA	EA	SQYD	LF	LF	CY	LF	LF	EA	LB	
56.15	Shld	10	j	GO						11.7	16.0							PLACE HMA APRON
56.18	Shld	10	j	GO						11.7	16.0							PLACE HMA APRON
56.22	Shld	4	a	G1	0.3				1									ADJUST SHOULDER INLET
			b							2.9								INLET DEPRESSION
56.30	Shld	3	a	GO	0.3				1									ADJUST SHOULDER INLET
			b							2.9								INLET DEPRESSION
56.51	MEDIAN	2	a	G1	0.3				1									ADJUST MEDIAN INLET
			b							2.9								INLET DEPRESSION
		5	c		0.3					26.2		118.0						ADJUST SLOTTED DRAIN
56.56	MEDIAN	1	a	GO	0.3				1									ADJUST MEDIAN INLET
			b							2.9								INLET DEPRESSION
56.59	MEDIAN	1	a	GO	0.3				1									ADJUST MEDIAN INLET
			b							2.9								INLET DEPRESSION
56.59	Shld	10	j	GO						11.7	16.0							PLACE HMA APRON
56.66	Shld	4	a	G1	0.5				1									ADJUST SHOULDER INLET
			b							2.9								INLET DEPRESSION
56.72	Shld	6	a		0.3				1		4.0							ADJUST SHOULDER INLET
56.72	MEDIAN	1	a	GO	0.3				1									ADJUST MEDIAN INLET
			b							2.9								INLET DEPRESSION
56.87	Shld	4	a	G1	0.4				1									ADJUST SHOULDER INLET
			b							2.9								INLET DEPRESSION
		5	c		0.3					66.7		300.0						ADJUST SLOTTED DRAIN
56.93	Shld	13	a		0.4				1									ADJUST SHOULDER INLET
			e	GO	2.3						4.0		1.07				239	TYPE GO DI, 24-12X GRATE
57.01	Shld	4	a	G1	0.3				1									ADJUST SHOULDER INLET
			b							2.9								INLET DEPRESSION
57.17	Shld	4	a	G1	0.4				1									ADJUST SHOULDER INLET
			b							2.9								INLET DEPRESSION
57.63	Shld	4	a	G1	0.6				1									ADJUST SHOULDER INLET
			b							2.9								INLET DEPRESSION
57.99	MEDIAN	1	a	GO	0.3				1									ADJUST MEDIAN INLET
			b							2.9								INLET DEPRESSION
		5	c		0.3							30.0						ADJUST SLOTTED DRAIN
58.02	MEDIAN	1	a	GO	0.2				1									ADJUST MEDIAN INLET
			b							2.9								INLET DEPRESSION
TOTALS - CHART 4						0	0.0	0	15	165.7	56.0	448.0	1.07	0	0.0	0	239	
TOTALS - CHART 3						1	4.3	2	0	618.0	561.5	0.0	3.46	0	0.0	1	712	
TOTALS - CHART 2						1	14.5	0	9	88.4	0.0	194.0	7.31	600	12.5	1	1673	
TOTALS - CHART 1						6	2.0	1	7	172.5	186.0	43.0	1.71	0	4.0	6	239	
TOTALS						8	20.8	3	31	1044.6	803.5	685.0	13.55	600	16.5	8	2863	

DRAINAGE QUANTITIES
DQ-4

REVISED BY | DATE REVISED
TOBY CRAWFORD | BYRON STANLEY
CALCULATED-DESIGNED BY | CHECKED BY
FUNCTIONAL SUPERVISOR: STEVE TOPAL

STATE OF CALIFORNIA - DEPARTMENT OF TRANSPORTATION
Caltrans
DESIGN

P:\proj1\02\2c450_plans\pse\22c4501d004.dgn

LAST REVISION 03-18-09 | DATE PLOTTED => 02-JUN-2010 | TIME PLOTTED => 15:32

Dist	COUNTY	ROUTE	POST MILES TOTAL PROJECT	SHEET No.	TOTAL SHEETS
02	Sha	5	R44.0/58.0	38	142

REGISTERED CIVIL ENGINEER 06-01-10 DATE

06-01-10
PLANS APPROVAL DATE

REGISTERED PROFESSIONAL ENGINEER BYRON H. STANLEY No. C60161 Exp. 6-30-10 CIVIL STATE OF CALIFORNIA

THE STATE OF CALIFORNIA OR ITS OFFICERS OR AGENTS SHALL NOT BE RESPONSIBLE FOR THE ACCURACY OR COMPLETENESS OF SCANNED COPIES OF THIS PLAN SHEET.

NOTE:
1. EXACT SIGN LOCATION TO BE DETERMINED BY THE ENGINEER.

LEGEND

- PORTABLE SIGN
- PORTABLE CHANGEABLE MESSAGE SIGN
- CONE
- DIRECTION OF TRAVEL

ABBREVIATIONS

PCMS PORTABLE CHANGEABLE MESSAGE SIGN

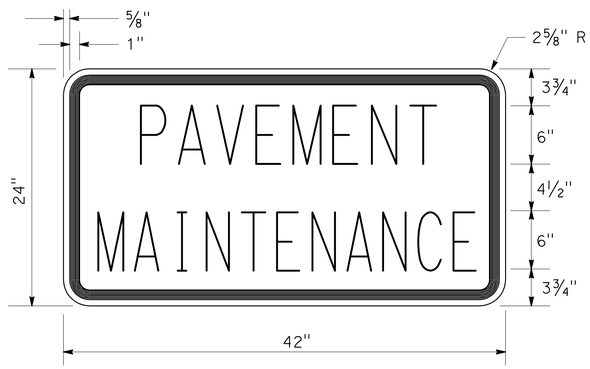

C23B SIGN PANEL DETAIL

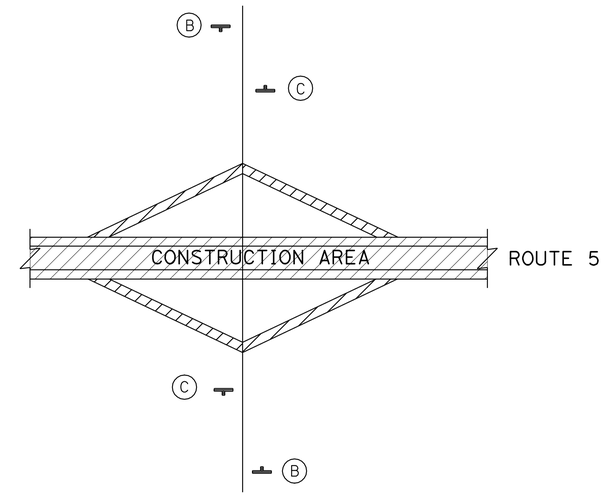

TYPICAL SIGN LOCATIONS FOR ON-RAMPS AND EXIT-RAMPS

CONSTRUCTION AREA SIGNS (STATIONARY MOUNTED)

TYPE	CODE	PANEL SIZE (In)	SIGN MESSAGE	NUMBER AND SIZE OF POST	No. OF SIGNS
A	G20-1	60 x 24	ROAD WORK NEXT XX MILES	2-4" x 6"	6
	C23B	48 x 24	PAVEMENT MAINTENANCE		
B	W20-1	48 x 48	ROAD WORK AHEAD	1-4" x 6"	10
C	G20-2	48 x 24	END ROAD WORK	1-4" x 6"	12
D	C40	60 x 36	TRAFFIC FINES DOUBLE IN CONSTRUCTION ZONES	2-4" x 6"	2

ON-RAMPS AND OFF-RAMPS

PM	LOCATION
R45.74	VOLLMERS Rd NB EXIT-RAMP
R45.88	VOLLMERS Rd SB ON-RAMP
R45.91	VOLLMERS Rd NB ON-RAMP
R46.19	VOLLMERS Rd SB EXIT-RAMP
R48.96	La MOINE Rd NB EXIT-RAMP
R49.17	La MOINE Rd SB ON-RAMP
R49.32	La MOINE Rd NB ON-RAMP
R49.37	La MOINE Rd SB EXIT-RAMP
R50.55	POLLARD FLAT SB ON-RAMP
R50.58	POLLARD FLAT NB EXIT-RAMP
R50.91	POLLARD FLAT NB ON-RAMP
R50.99	POLLARD FLAT SB EXIT-RAMP
R53.07	GIBSON Rd SB ON-RAMP
R53.31	GIBSON Rd NB EXIT-RAMP
R53.46	GIBSON Rd NB ON-RAMP
R53.50	GIBSON Rd SB EXIT-RAMP
R57.21	SIMS Rd NB EXIT-RAMP
R57.31	SIMS Rd NB ON-RAMP
R57.32	SIMS Rd SB ON-RAMP
R57.51	SIMS Rd SB EXIT-RAMP

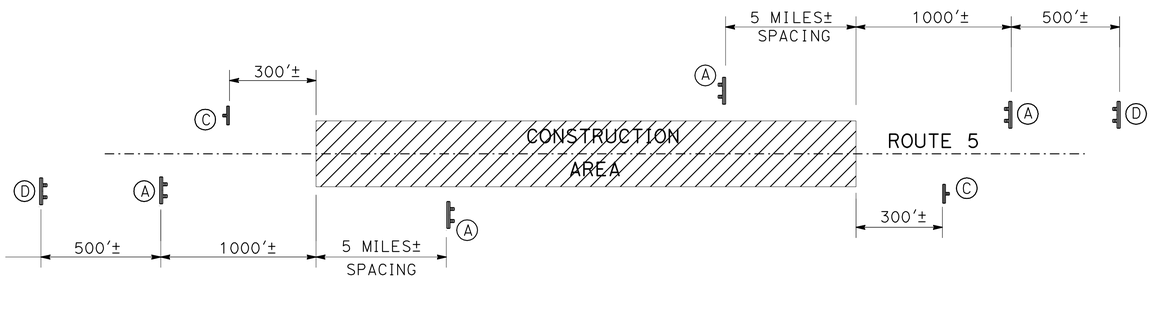

CONSTRUCTION AREA SIGNS

CONSTRUCTION AREA SIGNS

NO SCALE

CS-1

REVISED BY	DATE REVISED

CALCULATED-DESIGNED BY	CHECKED BY
WILL LESLIE	BYRON STANLEY

FUNCTIONAL SUPERVISOR: STEVE TOPAL

STATE OF CALIFORNIA - DEPARTMENT OF TRANSPORTATION
DESIGN
Caltrans

P:\proj1\02\2c450_plans\pse\22c4501a001.dgn

LAST REVISION 03-18-09 | DATE PLOTTED => 02-JUN-2010 | TIME PLOTTED => 15:32

Dist	COUNTY	ROUTE	POST MILES TOTAL PROJECT	SHEET No.	TOTAL SHEETS
02	Sha	5	R44.0/58.0	39	142

REGISTERED CIVIL ENGINEER 06-01-10 DATE

06-01-10
PLANS APPROVAL DATE

REGISTERED PROFESSIONAL ENGINEER BYRON H. STANLEY No. C60161 Exp. 6-30-10 CIVIL STATE OF CALIFORNIA

THE STATE OF CALIFORNIA OR ITS OFFICERS OR AGENTS SHALL NOT BE RESPONSIBLE FOR THE ACCURACY OR COMPLETENESS OF SCANNED COPIES OF THIS PLAN SHEET.

NOTES:

1. EXACT SIGN & PCMS LOCATIONS TO BE DETERMINED BY ENGINEER.
2. SEE STANDARD PLAN T-10 FOR ADDITIONAL REQUIREMENTS.
3. IF THERE IS NO SPEED LIMIT SIGN (R2-1) WITHIN 1 MILE BEYOND THE END OF SPEED LIMIT SIGN (R3(CA)), INSTALL A TEMPORARY APPLICABLE SPEED LIMIT SIGN (R2-1) WITHIN 500 FT ± OF THE END OF SPEED LIMIT SIGN (R3(CA)).
4. SPEED ZONE REDUCTION MAY ONLY BE IN PLACE WHEN COZEEP OFFICERS ARE PRESENT.

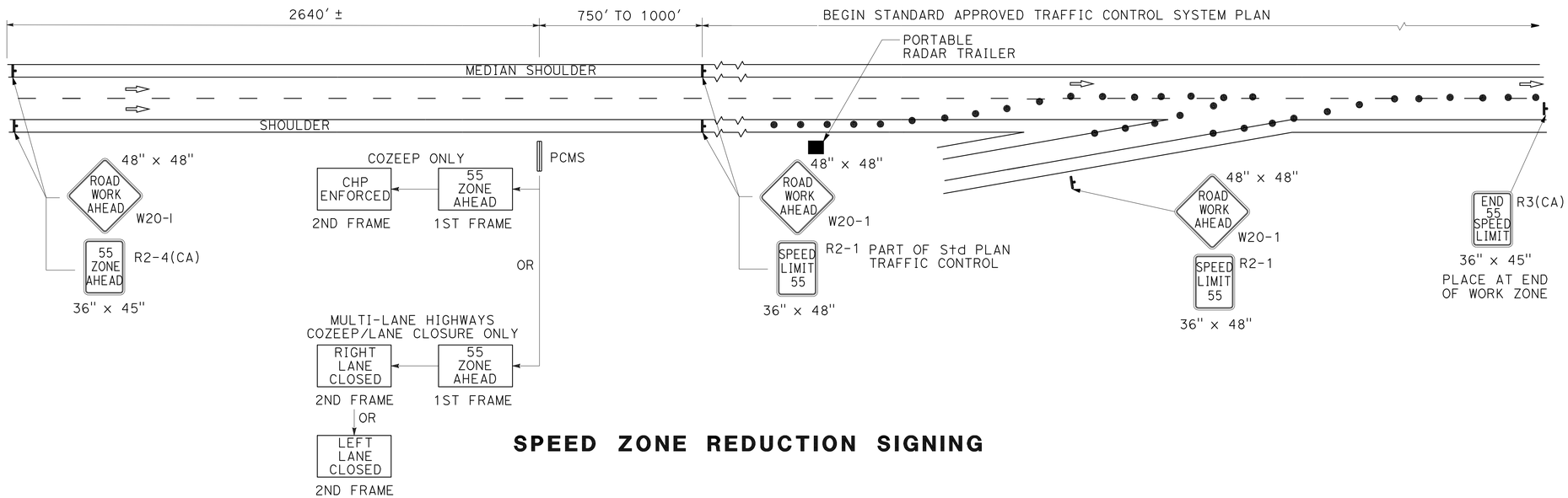

SPEED ZONE REDUCTION SIGNING

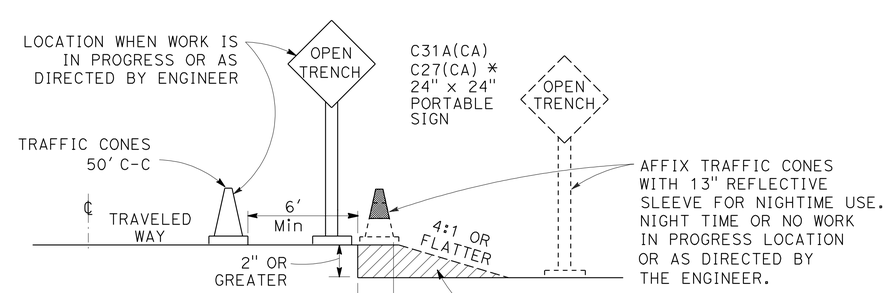

OPEN TRENCH SIGNING AND MARKING

* PLACE AT 250′ INTERVALS THROUGH THE OPEN TRENCH AREA, ALTERNATE C27(CA) (OPEN TRENCH) AND C31A(CA) (NO SHOULDER) SIGNS

CONSTRUCTION AREA SIGNS

NO SCALE

CS-2

REVISED BY | DATE REVISED
WILL LESLIE | BYRON STANLEY
CALCULATED-DESIGNED BY | CHECKED BY
FUNCTIONAL SUPERVISOR | STEVE TOPAL
STATE OF CALIFORNIA - DEPARTMENT OF TRANSPORTATION
Caltrans
DESIGN

P:\proj1\02\2c450_plans\pse\22c4501a002.dgn

LAST REVISION 03-18-09 | DATE PLOTTED => 02-JUN-2010 | TIME PLOTTED => 15:32

Dist	COUNTY	ROUTE	POST MILES TOTAL PROJECT	SHEET No.	TOTAL SHEETS
02	Sha	5	R44.0/58.0	40	142

REGISTERED CIVIL ENGINEER 06-01-10 DATE

06-01-10
PLANS APPROVAL DATE

REGISTERED PROFESSIONAL ENGINEER BYRON H. STANLEY No. C60161 Exp. 6-30-10 CIVIL STATE OF CALIFORNIA

THE STATE OF CALIFORNIA OR ITS OFFICERS OR AGENTS SHALL NOT BE RESPONSIBLE FOR THE ACCURACY OR COMPLETENESS OF SCANNED COPIES OF THIS PLAN SHEET.

NOTES:

1. EXACT LOCATION AND POSITION OF CONSTRUCTION AREA SIGNS TO BE DETERMINED BY THE ENGINEER.
2. SEE QUANTITIES FOR STRIPE TYPES.
3. SEE STAGE 2 PLANS FOR WORK NEAR BRIDGES.
4. TEMPORARY STRIPES TO BE PLACED IN FINAL STRIPE LOCATION.

LEGEND

- CHANNELIZERS (SURFACE MOUNT) 50′ C-C (Typ)
- TEMPORARY RAILING (TYPE K) IN PLAN VIEW
- TEMPORARY RAILING (TYPE K) IN SECTIONAL VIEW
- STAGE CONSTRUCTION
- DIRECTION OF TRAVEL
- PORTABLE FLASHING BEACONS
- FLASHING ARROW SIGN
- TRAFFIC CONE
- CHANNELIZER (SURFACE MOUNTED)

ABBREVIATIONS

P	OBJECT MARKER (TYPE P)
LL	LANE LINE
CB	CONCRETE BARRIER
TTS	TEMPORARY TRAFFIC STRIPE
TS	FINAL TRAFFIC STRIPE

STAGE 1A WORK ITEMS:

1. IMPLEMENT T10 LANE CLOSURE
2. FLUSH EDGE DRAINS (PRIOR TO COLD PLANE)
3. REMOVE MBGR AND AC DIKE (PM 44.0-56.2)
3. CPACP OUTSIDE SHOULDER
4. PLACE HMA OUTSIDE SHOULDER
5. PLACE MBGR AND DIKE (PM 44.0-56.2)
6. REMOVE T10 LANE CLOSURE

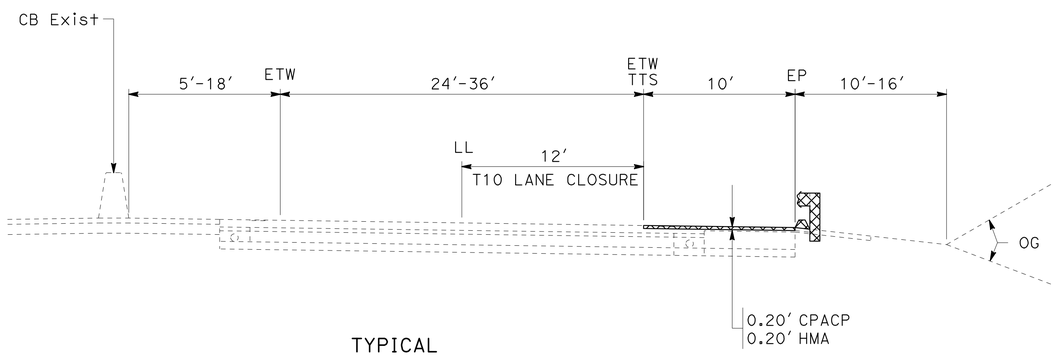

TYPICAL
PM R44.0 TO 56.2

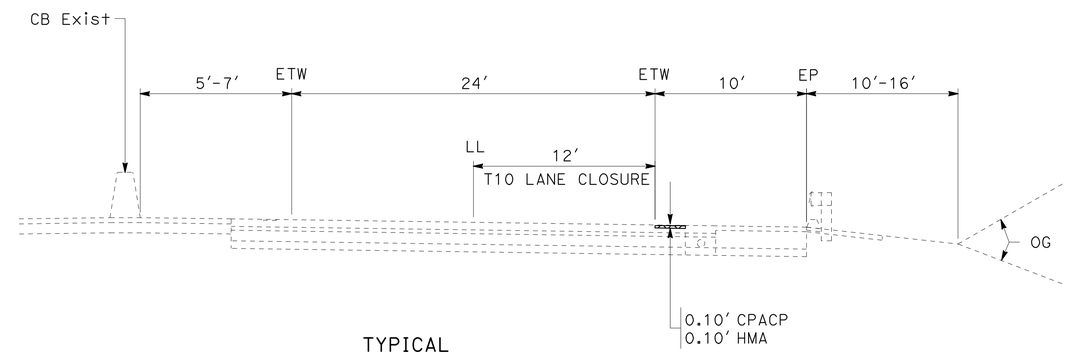

TYPICAL
PM 56.2 TO 58.0

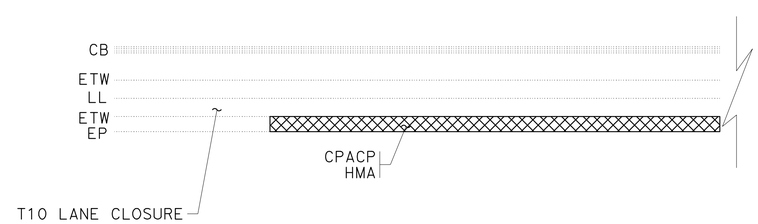

PLAN VIEW
PM R44.0 TO 58.0

COLD PLANE AC AND PLACE HMA

STAGE 1A

STAGE CONSTRUCTION AND TRAFFIC HANDLING

NO SCALE

SC-1

REVISED BY | DATE REVISED
ANDREW STECKLEIN | BYRON STANLEY
CALCULATED-DESIGNED BY | CHECKED BY
FUNCTIONAL SUPERVISOR | STEVE TOPAL

STATE OF CALIFORNIA - DEPARTMENT OF TRANSPORTATION
Caltrans
DESIGN

P:\proj1\02\2c450_plans\pse\22c450ma001.dgn

LAST REVISION 03-18-09 | DATE PLOTTED => 02-JUN-2010 | TIME PLOTTED => 15:32

Dist	COUNTY	ROUTE	POST MILES TOTAL PROJECT	SHEET No.	TOTAL SHEETS
02	Sha	5	R44.0/58.0	41	142

REGISTERED CIVIL ENGINEER 06-01-10 DATE

06-01-10
PLANS APPROVAL DATE

REGISTERED PROFESSIONAL ENGINEER BYRON H. STANLEY No. C60161 Exp. 6-30-10 CIVIL STATE OF CALIFORNIA

THE STATE OF CALIFORNIA OR ITS OFFICERS OR AGENTS SHALL NOT BE RESPONSIBLE FOR THE ACCURACY OR COMPLETENESS OF SCANNED COPIES OF THIS PLAN SHEET.

NOTES:

1. USE SURFACE MOUNTED CHANNELIZER ON RIGHT SIDE IN ABSENCE OF MBGR.
2. TEMPORARY TRAFFIC STRIPE TO BE PLACED IN FINAL STRIPE LOCATION.
3. TRAFFIC HANDLING SIGNS FOR STAGE CONSTRUCTION ARE TO BE MOUNTED ON A TYPE III BARRICADE.
4. MEDIAN SIGNS NOT NEEDED WHERE MEDIAN WIDTH IS LESS THAN 8'.

STAGE 1B WORK ITEMS:

1. REMOVE STAGE 1A TTS
2. IMPLEMENT STAGE 1B TRAFFIC HANDLING MEASURES
3. CPACP AND PLACE HMA INSIDE SHOULDER, #1 LANE AND #2 LANE WHERE TRUCK CLIMBING LANE EXISTS
4. CRACK EXISTING CONCRETE PAVEMENT (PM 56.2-58.0)
5. REMOVE STAGE 1B TRAFFIC HANDLING MEASURES

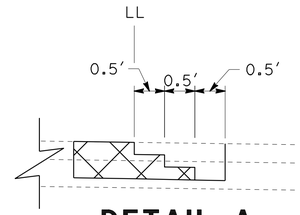

DETAIL A
STAGGER HMA LIFTS

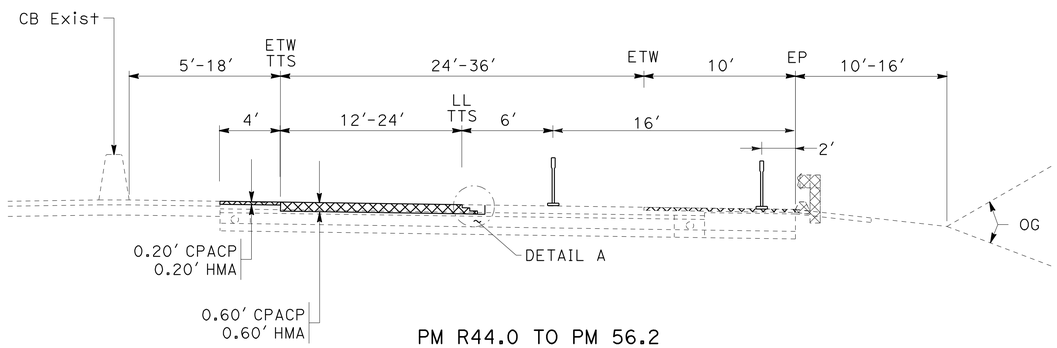

PM R44.0 TO PM 56.2
TYPICAL

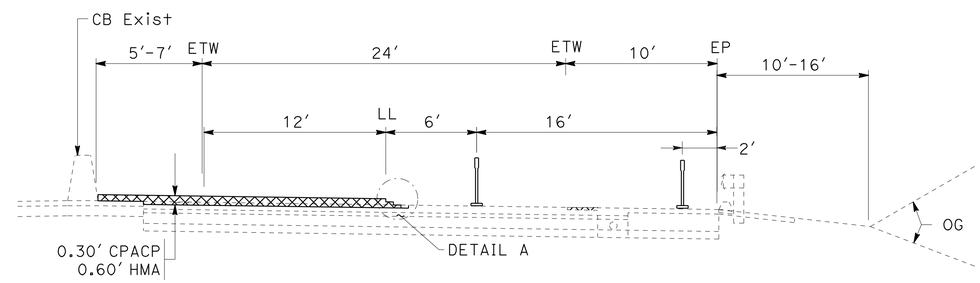

PM 56.2 TO 58.0
TYPICAL

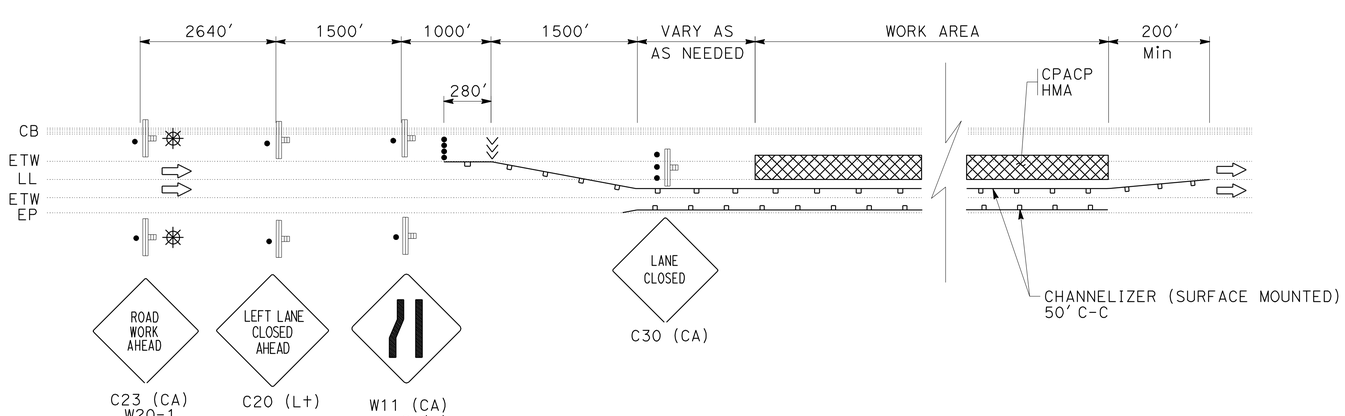

PM R44.0 TO PM 56.2
PLAN VIEW

COLD PLANE AC AND PLACE HMA

STAGE 1B
STAGE CONSTRUCTION AND TRAFFIC HANDLING
NO SCALE
SC-2

REVISED BY | DATE REVISED
ANDREW STECKLEIN | BYRON STANLEY
CALCULATED-DESIGNED BY | CHECKED BY
FUNCTIONAL SUPERVISOR: STEVE TOPAL
STATE OF CALIFORNIA - DEPARTMENT OF TRANSPORTATION
Caltrans
DESIGN
P:\proj1\02\2c450_plans\pse\22c450ma002.dgn

LAST REVISION 03-18-09 | DATE PLOTTED => 02-JUN-2010 | TIME PLOTTED => 15:32

Dist	COUNTY	ROUTE	POST MILES TOTAL PROJECT	SHEET No.	TOTAL SHEETS
02	Sha	5	R44.0/58.0	42	142

REGISTERED CIVIL ENGINEER 06-01-10 DATE

06-01-10
PLANS APPROVAL DATE

REGISTERED PROFESSIONAL ENGINEER
BYRON H. STANLEY
No. C60161
Exp. 6-30-10
CIVIL
STATE OF CALIFORNIA

THE STATE OF CALIFORNIA OR ITS OFFICERS OR AGENTS SHALL NOT BE RESPONSIBLE FOR THE ACCURACY OR COMPLETENESS OF SCANNED COPIES OF THIS PLAN SHEET.

NOTES:

1. USE SURFACE MOUNTED CHANNELIZER ON RIGHT SIDE IN ABSENCE OF MBGR.
2. TEMPORARY TRAFFIC STRIPE TO BE PLACED IN FINAL STRIPE LOCATION.
3. TRAFFIC HANDLING SIGNS FOR STAGE CONSTRUCTION ARE TO BE MOUNTED ON A TYPE III BARRICADE.
4. MEDIAN SIGNS NOT NEEDED WHERE MEDIAN WIDTH IS LESS THAN 8'.

STAGE 1C WORK ITEMS:

1. REMOVE STAGE 1B TTS
2. IMPLEMENT STAGE 1C TRAFFIC HANDLING MEASURES
3. CPACP, CRACK EXISTING CONCRETE PAVEMENT AND PLACE HMA ON #2 LANE OR TRUCK CLIMBING LANE
4. CPACP AND PLACE HMA ON #2 LANE AND ON OUTSIDE SHOULDER (PM 56.2-58.0)
5. REMOVE AND REPLACE HMA DIKE AND MBGR (PM 56.2-58.0)
6. PLACE TRAFFIC STRIPES
7. REMOVE STAGE 1C TRAFFIC HANDLING MEASURES
8. CONSTRUCTION AREA SIGNS ARE TO BE MOUNTED ON A TYPE III BARRICADE

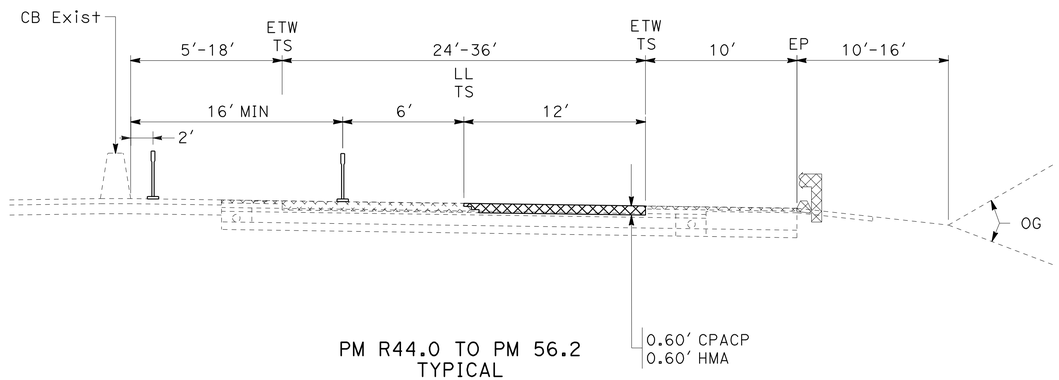

PM R44.0 TO PM 56.2
TYPICAL

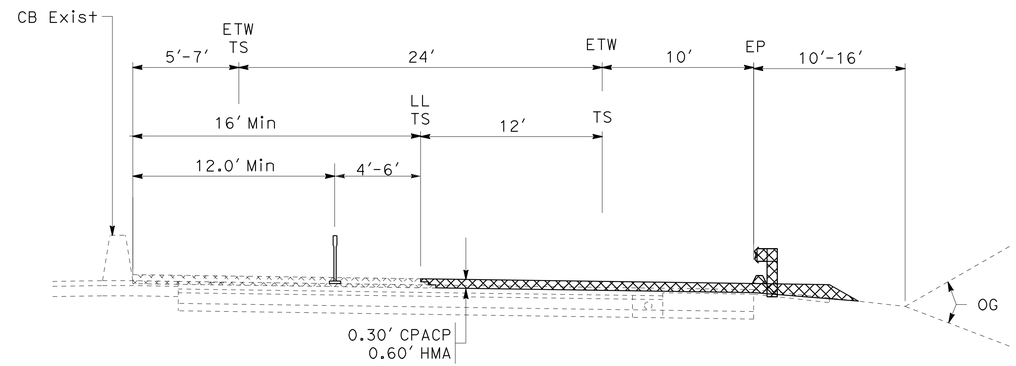

PM 56.2 TO 58.0
TYPICAL

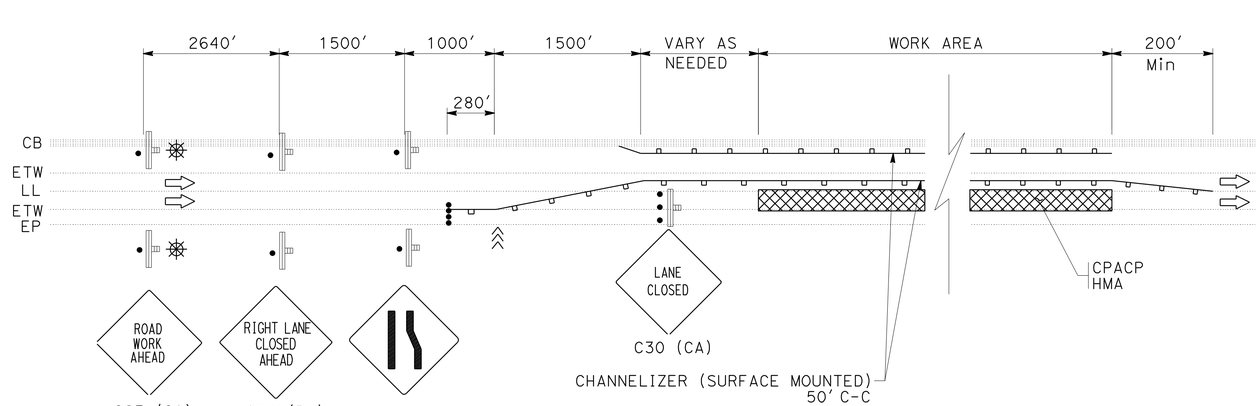

PLAN VIEW

COLD PLANE AC AND PLACE HMA

STAGE 1C
STAGE CONSTRUCTION AND TRAFFIC HANDLING

NO SCALE

SC-3

REVISED BY | DATE REVISED

BYRON STANLEY

CALCULATED-DESIGNED BY | CHECKED BY

FUNCTIONAL SUPERVISOR: STEVE TOPAL

STATE OF CALIFORNIA - DEPARTMENT OF TRANSPORTATION
Caltrans
DESIGN

P:\proj1\02\2c450_plans\pse\22c450ma003.dgn

LAST REVISION 03-18-09 | DATE PLOTTED => 02-JUN-2010 | TIME PLOTTED => 15:32

Dist	COUNTY	ROUTE	POST MILES TOTAL PROJECT	SHEET No.	TOTAL SHEETS
02	Sha	5	R44.0/58.0	43	142

REGISTERED CIVIL ENGINEER 06-01-10 DATE

06-01-10
PLANS APPROVAL DATE

REGISTERED PROFESSIONAL ENGINEER BYRON H. STANLEY No. C60161 Exp. 6-30-10 CIVIL STATE OF CALIFORNIA

THE STATE OF CALIFORNIA OR ITS OFFICERS OR AGENTS SHALL NOT BE RESPONSIBLE FOR THE ACCURACY OR COMPLETENESS OF SCANNED COPIES OF THIS PLAN SHEET.

NOTES:

1. EXACT LOCATION AND POSITION OF CONSTRUCTION AREA SIGNS TO BE DETERMINED BY THE ENGINEER.
2. USE MIRROR IMAGE OF THIS PLAN FOR WORK ON SB ROUTE 5.
3. REPLACE REMOVED RUMBLE STRIP AFTER CONSTRUCTION.

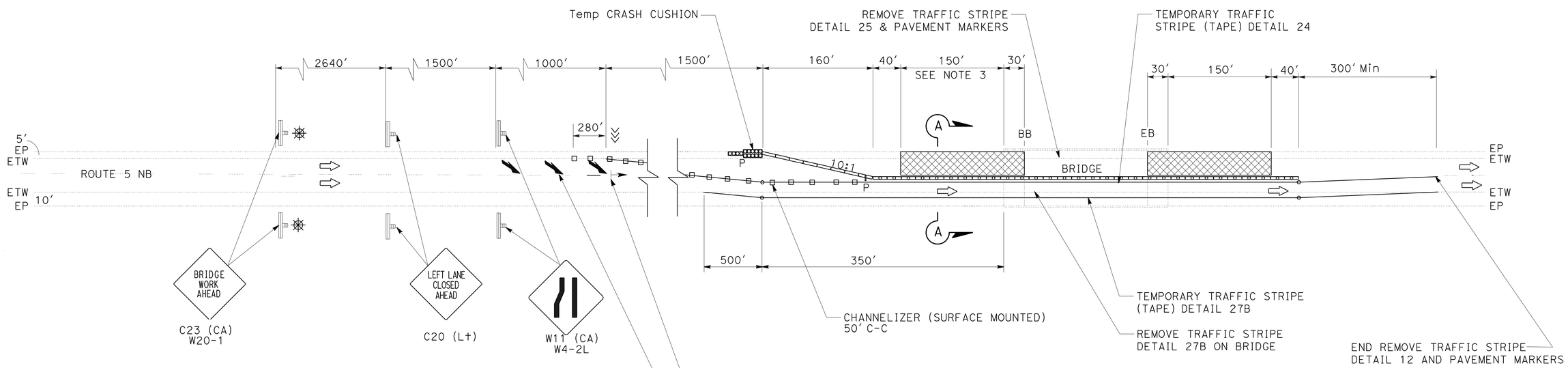

APPROACH/DEPARTURE SLAB REPLACEMENT AND CONFORM

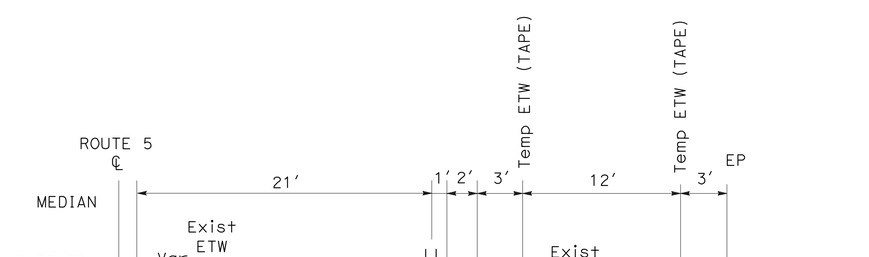

SECTION A-A

STAGE 2A
STAGE CONSTRUCTION AND TRAFFIC HANDLING
NO SCALE

SC-4

REVISED BY	DATE REVISED

CALCULATED-DESIGNED BY: WILL LESLIE
CHECKED BY: BYRON STANLEY
FUNCTIONAL SUPERVISOR: STEVE TOPAL

STATE OF CALIFORNIA - DEPARTMENT OF TRANSPORTATION
Caltrans® DESIGN

P:\proj1\02\2c450_plans\pse\22c450ma004.dgn

LAST REVISION 03-18-09 | DATE PLOTTED => 02-JUN-2010 | TIME PLOTTED => 15:32

Dist	COUNTY	ROUTE	POST MILES TOTAL PROJECT	SHEET No.	TOTAL SHEETS
02	Sha	5	R44.0/58.0	44	142

REGISTERED CIVIL ENGINEER 06-01-10 DATE

06-01-10
PLANS APPROVAL DATE

REGISTERED PROFESSIONAL ENGINEER BYRON H. STANLEY No. C60161 Exp. 6-30-10 CIVIL STATE OF CALIFORNIA

THE STATE OF CALIFORNIA OR ITS OFFICERS OR AGENTS SHALL NOT BE RESPONSIBLE FOR THE ACCURACY OR COMPLETENESS OF SCANNED COPIES OF THIS PLAN SHEET.

NOTES:

1. EXACT LOCATION AND POSITION OF CONSTRUCTION AREA SIGNS TO BE DETERMINED BY THE ENGINEER.
2. USE MIRROR IMAGE OF THIS PLAN FOR WORK ON SB ROUTE 5.
3. REPLACE REMOVED RUMBLE STRIP AFTER CONSTRUCTION.
4. AT END OF STAGE 2B, PLACE Temp STRIPE IN FINAL STRIPING LOCATION

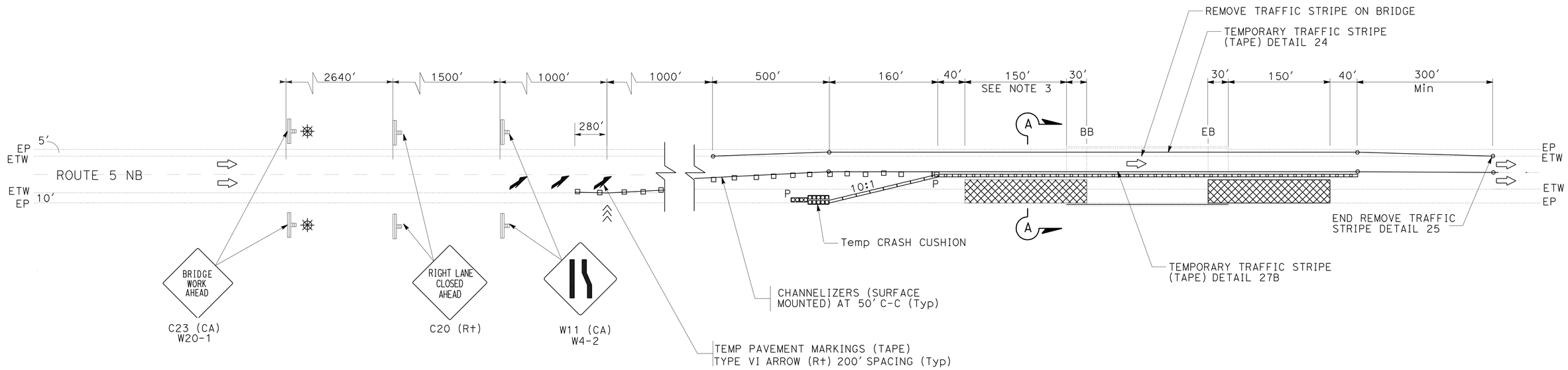

APPROACH/DEPARTURE SLAB REPLACEMENT AND CONFORM

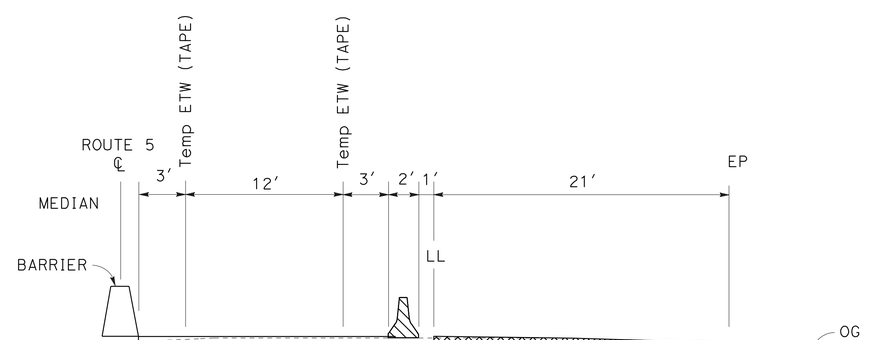

SECTION A-A

STAGE 2B

STAGE CONSTRUCTION AND TRAFFIC HANDLING

NO SCALE

SC-5

REVISED BY	DATE REVISED

CALCULATED-DESIGNED BY	CHECKED BY
WILL LESLIE	BYRON STANLEY

FUNCTIONAL SUPERVISOR: STEVE TOPAL

STATE OF CALIFORNIA - DEPARTMENT OF TRANSPORTATION

Caltrans® DESIGN

P:\proj\02\2c450_plans\pse\22c450ma005.dgn

LAST REVISION 03-18-09 | DATE PLOTTED => 02-JUN-2010 | TIME PLOTTED => 15:32

Dist	COUNTY	ROUTE	POST MILES TOTAL PROJECT	SHEET No.	TOTAL SHEETS
02	Sha	5	R44.0/58.0	45	142

REGISTERED CIVIL ENGINEER 06-01-10 DATE

06-01-10
PLANS APPROVAL DATE

REGISTERED PROFESSIONAL ENGINEER BYRON H. STANLEY No. C60161 Exp. 6-30-10 CIVIL STATE OF CALIFORNIA

THE STATE OF CALIFORNIA OR ITS OFFICERS OR AGENTS SHALL NOT BE RESPONSIBLE FOR THE ACCURACY OR COMPLETENESS OF SCANNED COPIES OF THIS PLAN SHEET.

NOTE:

1. Min 50.0' OR 400:1 SLOPE WHICH EVER IS GREATER.

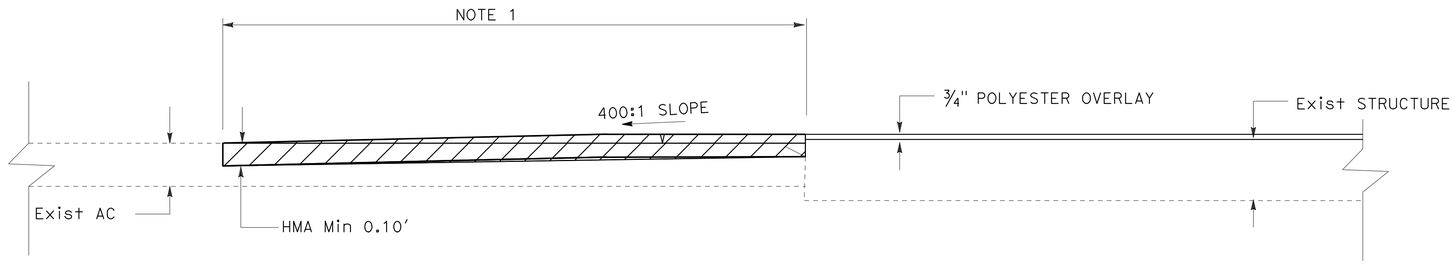

PROFILE

STAGING CONFORM WHERE BRIDGE WORK OCCURS FIRST

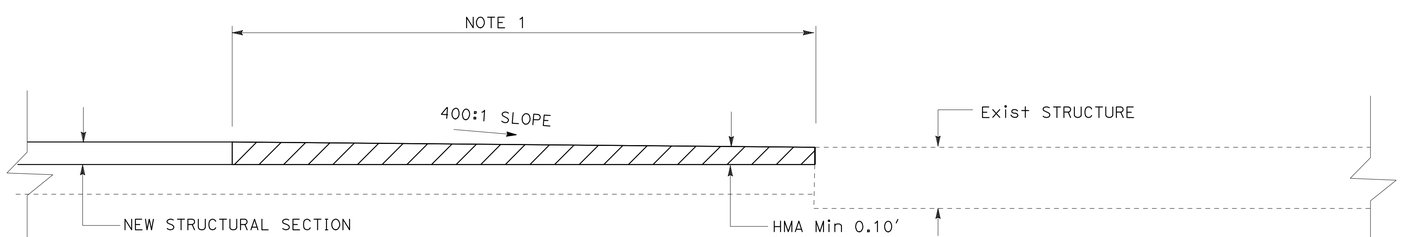

PROFILE

STAGING CONFORM WHERE BRIDGE WORK OCCURS LATER

STAGE CONSTRUCTION AND TRAFFIC HANDLING

NO SCALE

SC-6

REVISED BY | DATE REVISED
WILL LESLIE | BYRON STANLEY
CALCULATED-DESIGNED BY | CHECKED BY
FUNCTIONAL SUPERVISOR: STEVE TOPAL

STATE OF CALIFORNIA - DEPARTMENT OF TRANSPORTATION
Caltrans
DESIGN

P:\proj1\02\2c450_plans\pse\22c450ma006.dgn

LAST REVISION 03-18-09 | DATE PLOTTED => 02-JUN-2010 | TIME PLOTTED => 15:32

Dist	COUNTY	ROUTE	POST MILES TOTAL PROJECT	SHEET No.	TOTAL SHEETS
02	Sha	5	R44.0/58.0	46	142

REGISTERED CIVIL ENGINEER 06-01-10 DATE

06-01-10
PLANS APPROVAL DATE

REGISTERED PROFESSIONAL ENGINEER BYRON H. STANLEY No. C60161 Exp. 6-30-10 CIVIL STATE OF CALIFORNIA

THE STATE OF CALIFORNIA OR ITS OFFICERS OR AGENTS SHALL NOT BE RESPONSIBLE FOR THE ACCURACY OR COMPLETENESS OF SCANNED COPIES OF THIS PLAN SHEET.

NOTES:
1. SEE ALSO SUMMARY OF QUANTITIES AND PAVEMENT DELINEATION QUANTITIES.
2. EXACT SIGN LOCATIONS TO BE DETERMINED BY THE ENGINEER.
3. PORTABLE SIGNS TO BE MOUNTED ON TYPE III BARICADES.
4. (N) - NOT A SEPARATE PAY ITEM, FOR INFORMATION ONLY.

STAGE CONSTRUCTION QUANTITIES

LOCATION		TEMPORARY TRAFFIC STRIPE (TAPE)	TEMPORARY PAVEMENT MARKING (TAPE)	CHANNELIZERS (SUFACE MOUNTED)	TEMPORARY RAILING (TYPE K)	TEMPORARY CRASH CUSHION	REMOVE YELLOW THERMOPLASTIC TRAFFIC STRIPE (HAZARDOUS WASTE)	REMOVE THERMOPLASTIC TRAFFIC STRIPE	REMOVE PAVEMENT MARKER	(N) OBJECT MARKER (TYPE P)
STAGE 2A		LF	SQFT	EA	LF	EA	LF	LF	EA	EA
DOG CREEK BRIDGE	Br No. 06-0027 R†	4173	130	35	1287.5	14	3453	2768	95	2
DOG CREEK BRIDGE	Br No. 06-0027 L†	4173	130	35	1287.5	14	3453	2768	95	2
VOLLMERS ROAD UC	Br No. 06-0181 R†	3117	130	35	762.5	14	2397	2108	73	2
VOLLMERS ROAD UC	Br No. 06-0181 L†	3117	130	35	762.5	14	2397	2108	73	2
SLATE CREEK BRIDGE	Br No. 06-0028 R†	3750	130	35	1087.5	14	1515	2504	87	2
SLATE CREEK BRIDGE	Br No. 06-0028 L†	3750	130	35	1087.5	14	1515	2504	87	2
SACRAMENTO RIVER BRIDGE	Br No. 06-0192 R†	4701	130	35	1562.5	14	3981	3098	107	2
SACRAMENTO RIVER BRIDGE	Br No. 06-0192 L†	4701	130	35	1562.5	14	3981	3098	107	2
SACRAMENTO RIVER BRIDGE	Br No. 06-0193 R†	4278	130	35	1350.0	14	3558	2834	98	2
SACRAMENTO RIVER BRIDGE	Br No. 06-0193 L†	4278	130	35	1350.0	14	3558	2834	98	2
FRONTAGE ROAD UC	Br No. 06-0194 R†	3117	130	35	762.5	14	2397	2108	73	2
FRONTAGE ROAD UC	Br No. 06-0194 L†	3117	130	35	762.5	14	2397	2108	73	2
SIMS ROAD UC	Br No. 06-0111 R†	3311	130	35	862.5	14	1146	2192	71	2
SIMS ROAD UC	Br No. 06-0111 L†	3311	130	35	862.5	14	1146	2192	71	2
STAGE 2B										
DOG CREEK BRIDGE	Br No. 06-0027 R†	4173	130	35	1287.5	14				2
DOG CREEK BRIDGE	Br No. 06-0027 L†	4173	130	35	1287.5	14				2
VOLLMERS ROAD UC	Br No. 06-0181 R†	3117	130	35	762.5	14				2
VOLLMERS ROAD UC	Br No. 06-0181 L†	3117	130	35	762.5	14				2
SLATE CREEK BRIDGE	Br No. 06-0028 R†	3750	130	35	1087.5	14				2
SLATE CREEK BRIDGE	Br No. 06-0028 L†	3750	130	35	1087.5	14				2
SACRAMENTO RIVER BRIDGE	Br No. 06-0192 R†	4701	130	35	1562.5	14				2
SACRAMENTO RIVER BRIDGE	Br No. 06-0192 L†	4701	130	35	1562.5	14				2
SACRAMENTO RIVER BRIDGE	Br No. 06-0193 R†	4278	130	35	1350.0	14				2
SACRAMENTO RIVER BRIDGE	Br No. 06-0193 L†	4278	130	35	1350.0	14				2
FRONTAGE ROAD UC	Br No. 06-0194 R†	3117	130	35	762.5	14				2
FRONTAGE ROAD UC	Br No. 06-0194 L†	3117	130	35	762.5	14				2
SIMS ROAD UC	Br No. 06-0111 R†	3311	130	35	862.5	14				2
SIMS ROAD UC	Br No. 06-0111 L†	3311	130	35	862.5	14				2
MAINLINE STAGE 1B & 1C				13,218						
TOTAL		105,788	3,640	14,197	30,700	392	36,894	35,224	1,208	56

STAGE CONSTRUCTION SIGNS

STAGE	CODE	PANEL SIZE (In)	SIGN MESSAGE	No. OF SIGNS	No. AND SIZE OF POSTS	TYPE OF MOUNT
1	C23 (CA) W20-1	48 x 48	ROAD WORK AHEAD	2	TYPE III BARRICADE	PORTABLE
	C20 (R+)	48 x 48	RIGHT LANE CLOSED AHEAD	2	TYPE III BARRICADE	PORTABLE
	C20 (L+)	48 x 48	LEFT LANE CLOSED AHEAD	2	TYPE III BARRICADE	PORTABLE
	W11 (CA) W4-2R	48 x 48		2	TYPE III BARRICADE	PORTABLE
	W11 (CA) W4-2L	48 x 48		2	TYPE III BARRICADE	PORTABLE
	C30 (CA)	48 x 48	LANE CLOSED	1	TYPE III BARRICADE	PORTABLE
2	C23 (CA) W20-1	48 x 48	ROAD WORK AHEAD	28	2 - 4 x 6	STATIONARY
	C20 (R+)	48 x 48	RIGHT LANE CLOSED AHEAD	28	2 - 4 x 6	STATIONARY
	C20 (L+)	48 x 48	LEFT LANE CLOSED AHEAD	28	2 - 4 x 6	STATIONARY
	W11 (CA) W4-2R	48 x 48		28	2 - 4 x 6	STATIONARY
	W11 (CA) W4-2L	48 x 48		28	2 - 4 x 6	STATIONARY

* THE No. OF SIGNS SHOWN FOR STAGE 1 ARE PER CLOSURE.

TEMPORARY TRAFFIC STRIPE (PAINT)

LOCATION	STAGE	LF
MAINLINE	1A	141,715
MAINLINE	1B	283,430
TOTAL		425,145

CHANNELIZERS (SURFACE MOUNTED) MAINLINE

LOCATION	STAGE	EACH
MAINLINE NB	1B	3066
MAINLINE SB	1B	3484
MAINLINE NB	1C	3334
MAINLINE SB	1C	3334
TOTAL		13,218

STAGE CONSTRUCTION QUANTITIES

SCQ-1

REVISED BY | DATE REVISED
RUSSELL FLOOD | BYRON STANLEY
CALCULATED-DESIGNED BY | CHECKED BY
FUNCTIONAL SUPERVISOR
STEVE TOPAL

STATE OF CALIFORNIA - DEPARTMENT OF TRANSPORTATION
Caltrans
DESIGN

P:\proj1\02\2c450_plans\pse\22c450mc001.dgn

LAST REVISION 03-18-09 | DATE PLOTTED => 02-JUN-2010 | TIME PLOTTED => 15:32

Dist	COUNTY	ROUTE	POST MILES TOTAL PROJECT	SHEET No.	TOTAL SHEETS
02	Sha	5	R44.0/58.0	47	142

REGISTERED CIVIL ENGINEER 06-01-10 DATE

06-01-10
PLANS APPROVAL DATE

REGISTERED PROFESSIONAL ENGINEER BYRON H. STANLEY No. C60161 Exp. 6-30-10 CIVIL STATE OF CALIFORNIA

THE STATE OF CALIFORNIA OR ITS OFFICERS OR AGENTS SHALL NOT BE RESPONSIBLE FOR THE ACCURACY OR COMPLETENESS OF SCANNED COPIES OF THIS PLAN SHEET.

NOTES:

1. PRE-NOTIFICATION PCMS: PLACE NEAR RAMP AND ACTIVATE APPROXIMATELY 12 HOURS PRIOR TO RAMP CLOSURE.

EXIT WILL BE CLOSED	TODAY (or TONIGHT) XX:XXPM - XX:XXAM
FRAME 1	FRAME 2

2. RAMP CLOSED PCMS: MOVE PRE-NOTIFICATION PCMS APPROXIMATELY 1000 FEET BEFORE RAMP AND ACTIVATE DURING RAMP CLOSURE.

EXIT XXX CLOSED	FOLLOW DETOUR
FRAME 1	FRAME 2

3. PLACE 7 DAYS PRIOR TO RAMP CLOSURE.
4. IF AVAILABLE, EXISTING ROUTE SHIELDS AND DIRECTIONS MAY BE USED IN PLACE OF SIGNS SHOWN.
5. RAMP CLOSED PCMS: PLACE BEFORE OPEN ON RAMP AND ACTIVATE DURING RAMP CLOSURE.

NB (OR SB) I-5 ONRAMP CLOSED	FOLLOW DETOUR
FRAME 1	FRAME 2

6. EXIT NUMBER SHOWN AS FOLLOWS.

EXIT NAME	EXIT NUMBER
VOLLMERS Rd	707
La MOINE Rd	710
POLLARD FLAT	712
GIBSON Rd	714
SIMS Rd	718

7. EXACT SIGN LOCATION TO BE DETERMINED BY THE ENGINEER.

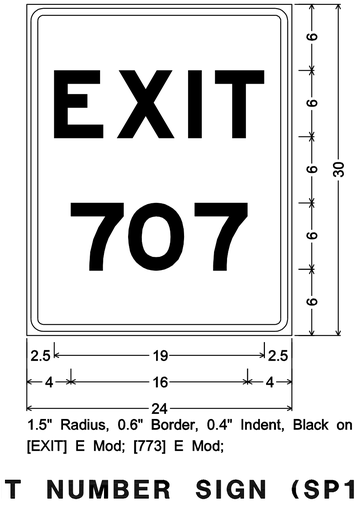

1.5" Radius, 0.6" Border, 0.4" Indent, Black on Orange; [EXIT] E Mod; [773] E Mod;

EXIT NUMBER SIGN (SP1) DETAIL

(SEE NOTE 6)

8. EXISTING UTILITY FACILITIES HAVE NOT BEEN POSITIVELY LOCATED.

CONSTRUCTION AREA SIGNS (PORTABLE)

CODE	PANEL SIZE	SIGN MESSAGE
G27-2(5)(CA)	24" x 24"	ROUTE SHIELD (5)
M3-1	24" x 12"	DIRECTION (NORTH)
M3-3	24" x 12"	DIRECTION (SOUTH)
M4-8A	24" x 18"	END DETOUR
M4-10L	48" x 18"	DETOUR (Lt ARROW)
M4-10R	48" x 18"	DETOUR (Rt ARROW)
SC3 (CA)	48" x 18"	DETOUR WITH UP ARROW
SC6-4 (CA)	48" x 60"	RAMP CLOSED - DATE TIME
SC6-3 (CA)	48" x 48"	RAMP CLOSED - DATE TIME
SP1	24" x 30"	EXIT NUMBER (SEE NOTE 7)

LEGEND

PORTABLE CHANGEABLE MESSAGE SIGN

ABBREVIATIONS

PCMS PORTABLE CHANGEABLE MESSAGE SIGN

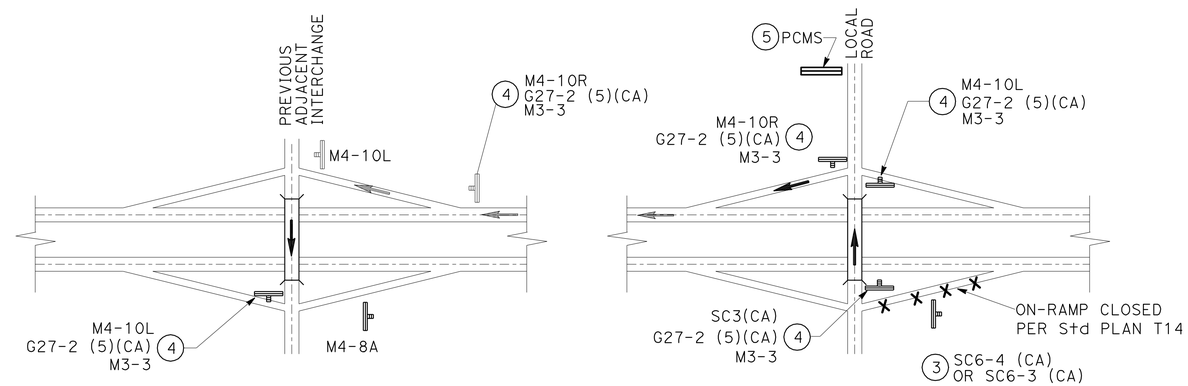

TYPICAL SB ON RAMP DETOUR SIGNING

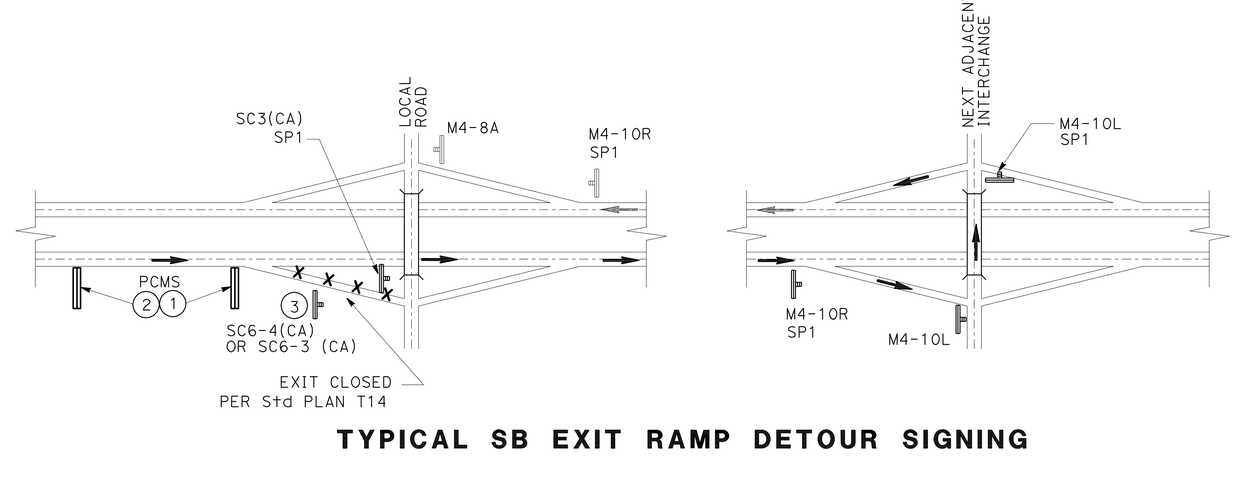

TYPICAL SB EXIT RAMP DETOUR SIGNING

DETOUR PLAN

NO SCALE

DE-1

STATE OF CALIFORNIA - DEPARTMENT OF TRANSPORTATION
DESIGN
Caltrans
FUNCTIONAL SUPERVISOR: STEVE TOPAL
CALCULATED-DESIGNED BY: WILL LESLIE
CHECKED BY: BYRON STANLEY
REVISED BY
DATE REVISED
P:\proj1\02\2c450_plans\pse\22c450mg001.dgn

LAST REVISION 03-18-09
DATE PLOTTED => 02-JUN-2010
TIME PLOTTED => 15:32

Dist	COUNTY	ROUTE	POST MILES TOTAL PROJECT	SHEET No.	TOTAL SHEETS
02	Sha	5	R44.0/58.0	48	142

REGISTERED CIVIL ENGINEER 06-01-10 DATE

06-01-10
PLANS APPROVAL DATE

REGISTERED PROFESSIONAL ENGINEER BYRON H. STANLEY No. C60161 Exp. 6-30-10 CIVIL STATE OF CALIFORNIA

THE STATE OF CALIFORNIA OR ITS OFFICERS OR AGENTS SHALL NOT BE RESPONSIBLE FOR THE ACCURACY OR COMPLETENESS OF SCANNED COPIES OF THIS PLAN SHEET.

NOTE:

1. EXACT PCMS AND SIGN LOCATIONS TO BE DETERMINED BY THE ENGINEER.

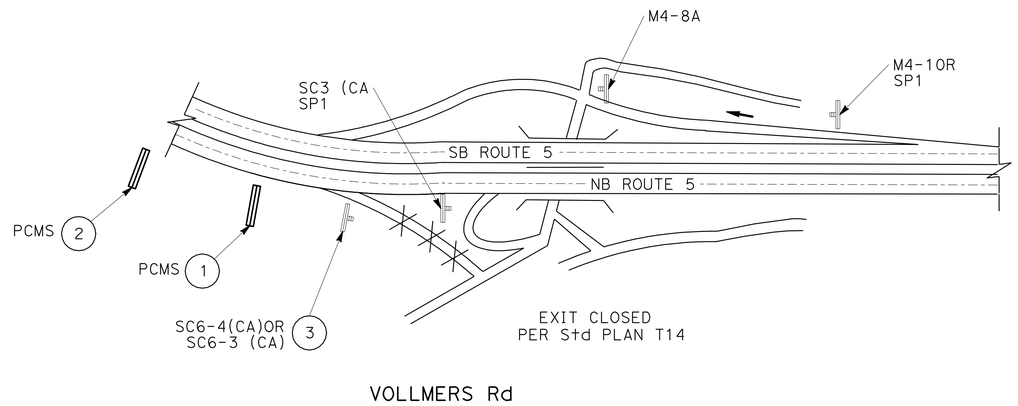

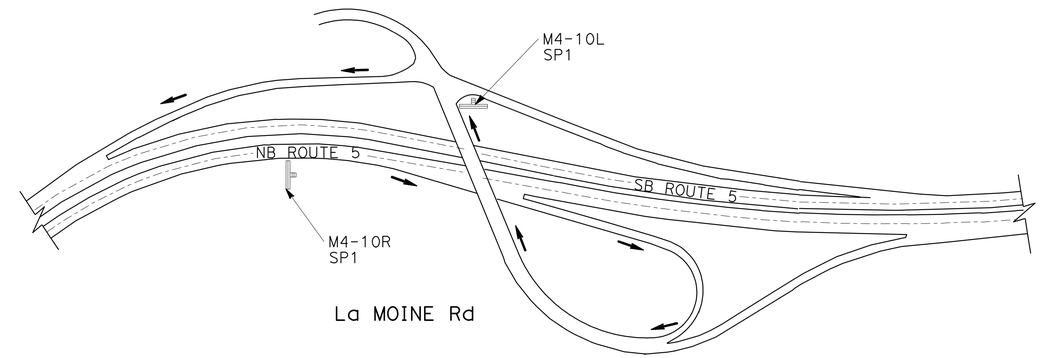

CLOSURE OF NB Rte 5 EXIT TO VOLLMERS Rd

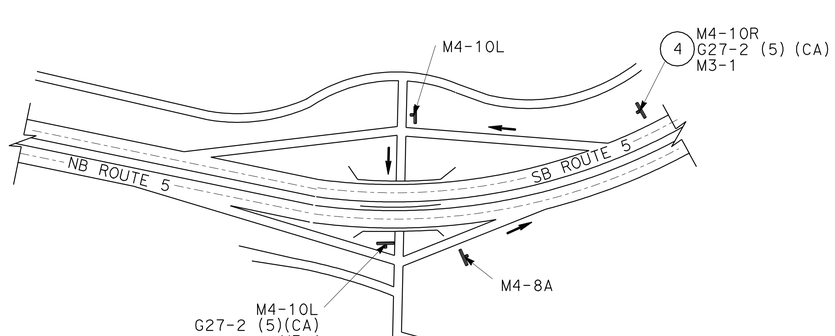

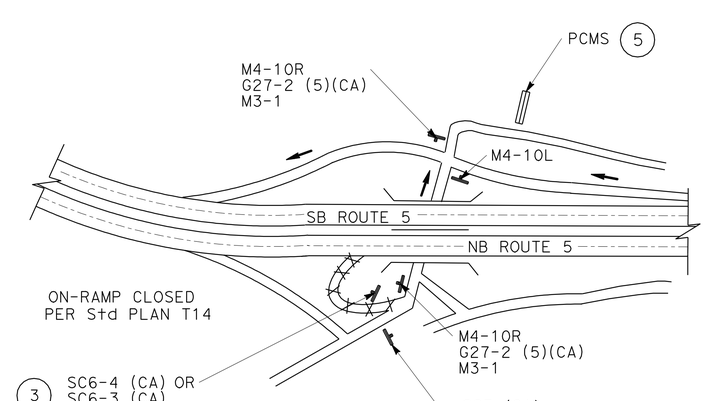

CLOSURE OF NB Rte 5 ON-RAMP FROM VOLLMERS Rd

DETOUR PLAN

NO SCALE

DE-2

STATE OF CALIFORNIA - DEPARTMENT OF TRANSPORTATION
Caltrans
DESIGN

FUNCTIONAL SUPERVISOR: STEVE TOPAL
CALCULATED-DESIGNED BY: WILL LESLIE
CHECKED BY: BYRON STANLEY
REVISED BY
DATE REVISED

P:\proj1\02\2c450_plans\pse\22c450mg002.dgn

LAST REVISION 03-18-09 | DATE PLOTTED => 02-JUN-2010 | TIME PLOTTED => 15:32

Dist	COUNTY	ROUTE	POST MILES TOTAL PROJECT	SHEET No.	TOTAL SHEETS
02	Sha	5	R44.0/58.0	49	142

REGISTERED CIVIL ENGINEER 06-01-10 DATE

06-01-10
PLANS APPROVAL DATE

REGISTERED PROFESSIONAL ENGINEER BYRON H. STANLEY No. C60161 Exp. 6-30-10 CIVIL STATE OF CALIFORNIA

THE STATE OF CALIFORNIA OR ITS OFFICERS OR AGENTS SHALL NOT BE RESPONSIBLE FOR THE ACCURACY OR COMPLETENESS OF SCANNED COPIES OF THIS PLAN SHEET.

NOTE:

1. EXACT PCMS AND SIGN LOCATION TO BE DETERMINED BY THE ENGINEER

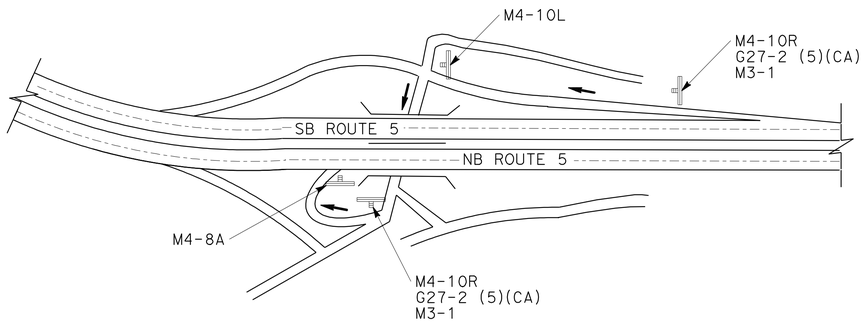

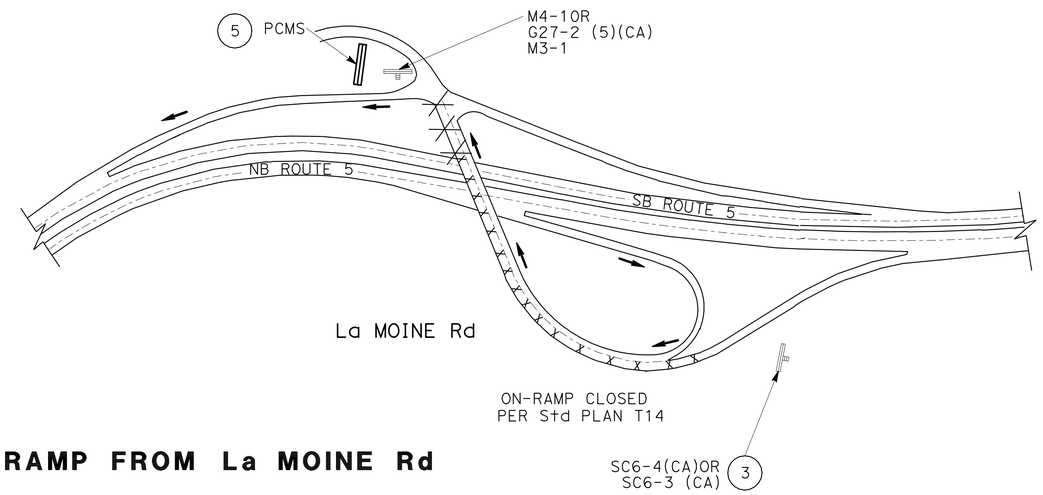

CLOSURE OF NB Rte 5 ON-RAMP FROM La MOINE Rd

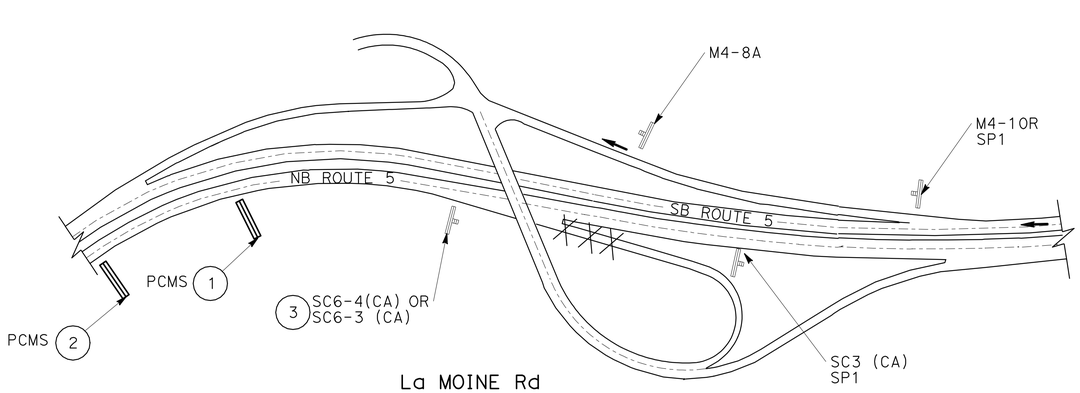

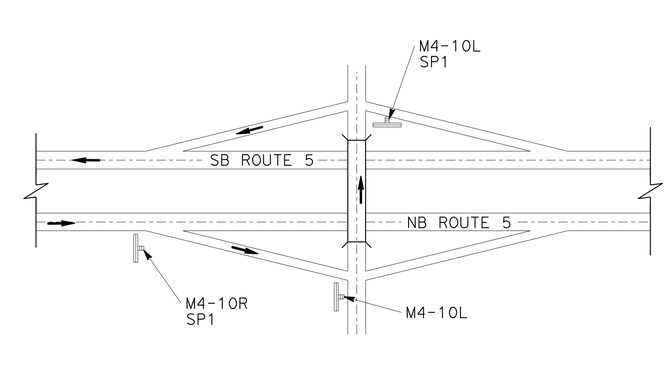

CLOSURE OF NB Rte 5 EXIT TO La MOINE Rd

DETOUR PLAN

NO SCALE

DE-3

REVISED BY	DATE REVISED

CALCULATED-DESIGNED BY	CHECKED BY
WILL LESLIE	BYRON STANLEY

FUNCTIONAL SUPERVISOR: STEVE TOPAL

STATE OF CALIFORNIA - DEPARTMENT OF TRANSPORTATION

Caltrans DESIGN

P:\proj1\02\2c450_plans\pse\22c450mg003.dgn

LAST REVISION 03-18-09 | DATE PLOTTED => 02-JUN-2010 | TIME PLOTTED => 15:32

Dist	COUNTY	ROUTE	POST MILES TOTAL PROJECT	SHEET No.	TOTAL SHEETS
02	Sha	5	R44.0/58.0	50	142

REGISTERED CIVIL ENGINEER 06-01-10 DATE

06-01-10
PLANS APPROVAL DATE

REGISTERED PROFESSIONAL ENGINEER BYRON H. STANLEY No. C60161 Exp. 6-30-10 CIVIL STATE OF CALIFORNIA

THE STATE OF CALIFORNIA OR ITS OFFICERS OR AGENTS SHALL NOT BE RESPONSIBLE FOR THE ACCURACY OR COMPLETENESS OF SCANNED COPIES OF THIS PLAN SHEET.

NOTE:

1. EXACT PCMS AND SIGN LOCATION TO BE DETERMINED BY THE ENGINEER.

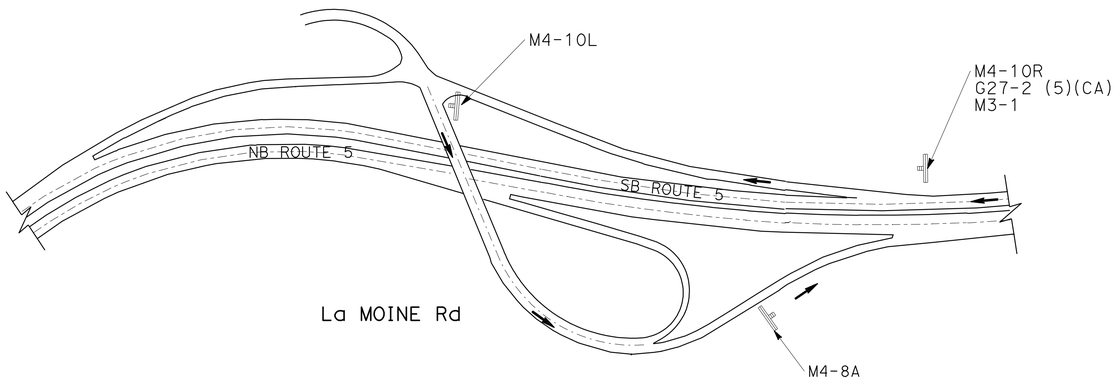

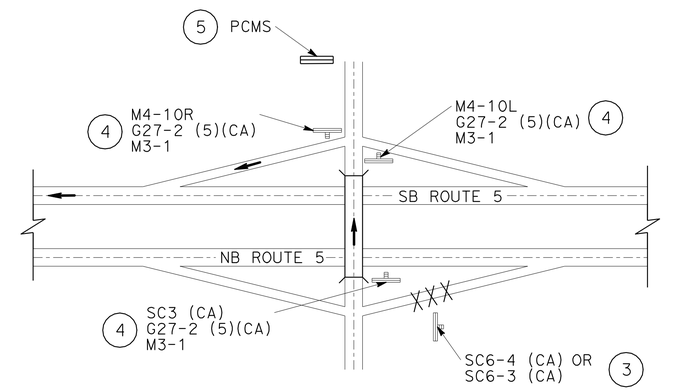

ON-RAMP CLOSED
PER Std PLAN T-14

CLOSURE OF NB Rte 5 ON-RAMP FROM POLLARD FLAT Rd

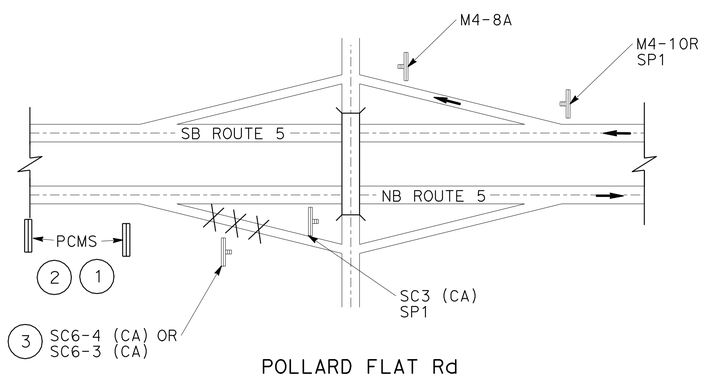

EXIT CLOSED
PER Std PLAN T-14

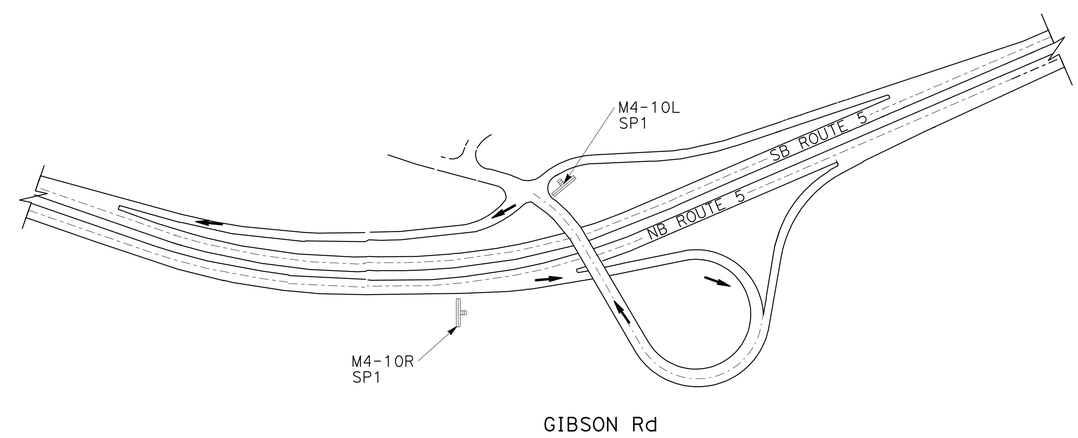

CLOSURE OF NB Rte 5 EXIT TO POLLARD FLAT Rd

DETOUR PLAN

NO SCALE

DE-4

REVISED BY	DATE REVISED

CALCULATED-DESIGNED BY	WILL LESLIE
CHECKED BY	BYRON STANLEY
FUNCTIONAL SUPERVISOR	STEVE TOPAL

STATE OF CALIFORNIA - DEPARTMENT OF TRANSPORTATION
Caltrans
DESIGN

P:\proj1\02\2c450_plans\pse\22c450mg004.dgn

LAST REVISION 03-18-09 | DATE PLOTTED => 02-JUN-2010 | TIME PLOTTED => 15:32

Dist	COUNTY	ROUTE	POST MILES TOTAL PROJECT	SHEET No.	TOTAL SHEETS
02	Sha	5	R44.0/58.0	51	142

REGISTERED CIVIL ENGINEER 06-01-10 DATE

06-01-10
PLANS APPROVAL DATE

REGISTERED PROFESSIONAL ENGINEER BYRON H. STANLEY No. C60161 Exp. 6-30-10 CIVIL STATE OF CALIFORNIA

THE STATE OF CALIFORNIA OR ITS OFFICERS OR AGENTS SHALL NOT BE RESPONSIBLE FOR THE ACCURACY OR COMPLETENESS OF SCANNED COPIES OF THIS PLAN SHEET.

NOTE:

1. EXACT PCMS AND SIGN LOCATIONS TO BE DETERMINED BY THE ENGINEER.

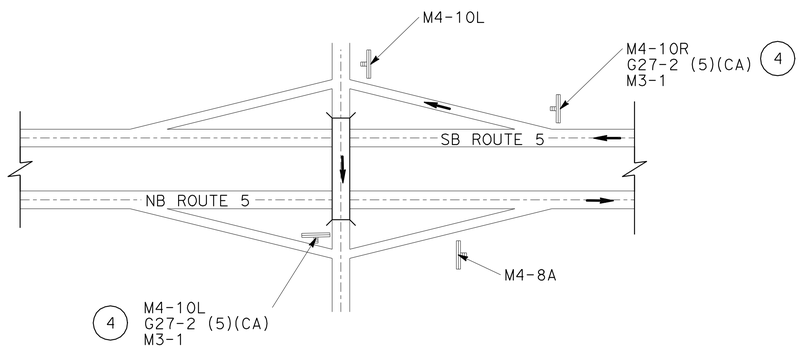

POLLARD FLAT Rd

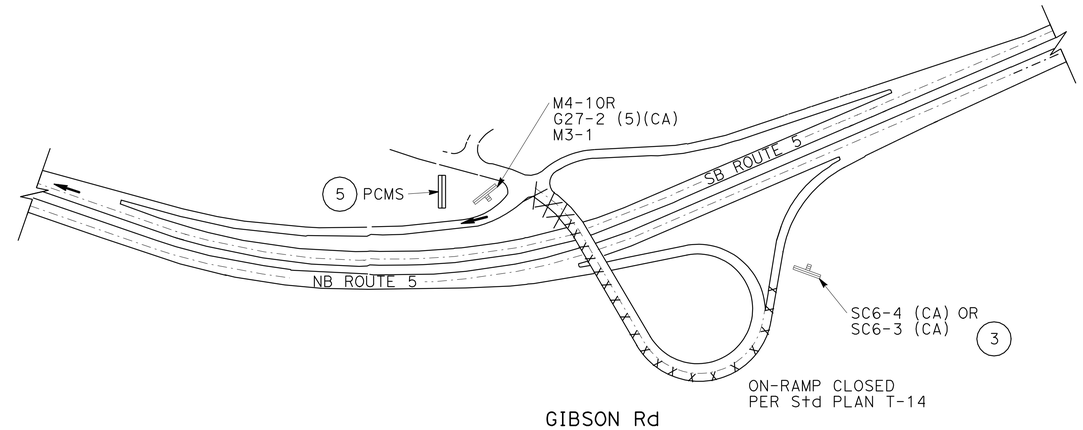

GIBSON Rd

CLOSURE OF NB Rte 5 ON-RAMP FROM GIBSON Rd

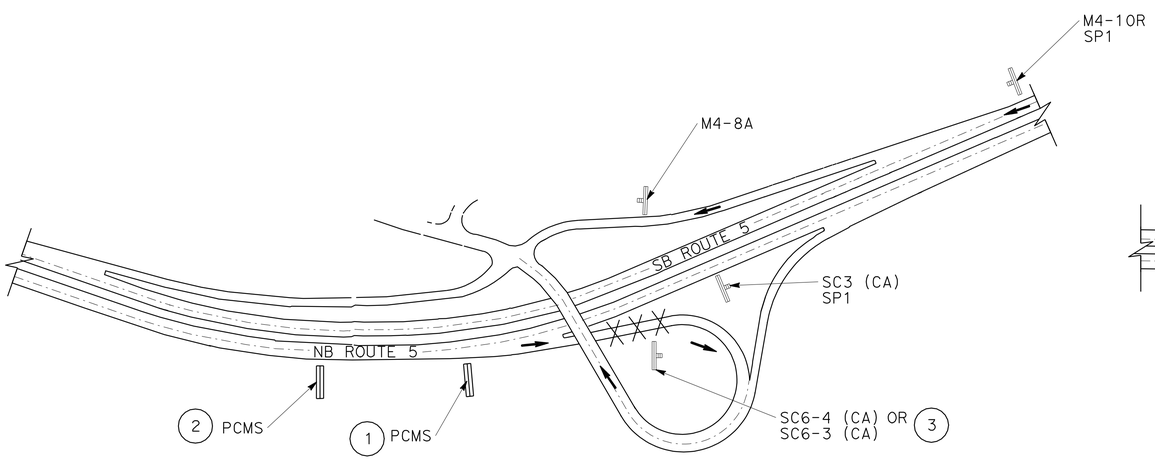

GIBSON Rd

EXIT CLOSED
PER Std PLAN T-14

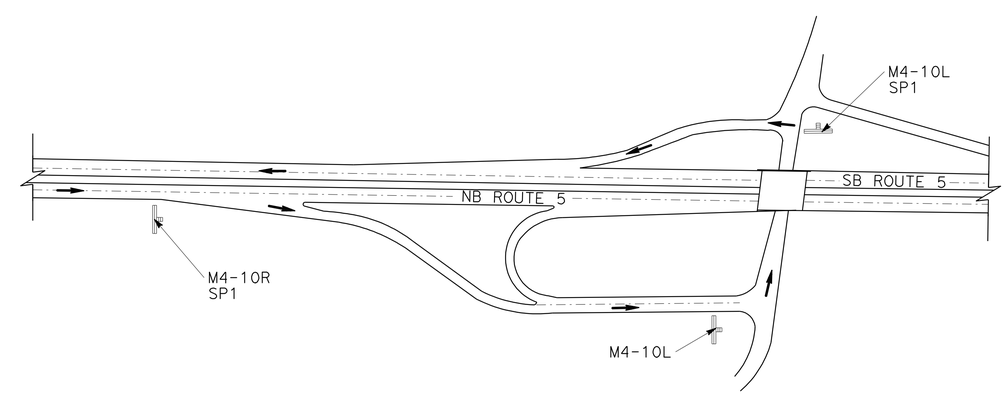

SIMS Rd

CLOSURE OF NB Rte 5 EXIT TO GIBSON Rd

DETOUR PLAN

NO SCALE

DE-5

REVISED BY	DATE REVISED

CALCULATED-DESIGNED BY	CHECKED BY
WILL LESLIE	BYRON STANLEY

FUNCTIONAL SUPERVISOR: STEVE TOPAL

STATE OF CALIFORNIA - DEPARTMENT OF TRANSPORTATION

Caltrans® **DESIGN**

P:\proj1\02\2c450_plans\pse\22c450mg005.dgn

LAST REVISION 03-18-09 | DATE PLOTTED => 02-JUN-2010 | TIME PLOTTED => 15:32

BORDER LAST REVISED 4/11/2008 | RELATIVE BORDER SCALE IS IN INCHES 0 1 2 3 | USERNAME => s123119 | DGN FILE => 22c450mg005.dgn | CU 03 247 | EA 2C4501

Dist	COUNTY	ROUTE	POST MILES TOTAL PROJECT	SHEET No.	TOTAL SHEETS
02	Sha	5	R44.0/58.0	52	142

REGISTERED CIVIL ENGINEER 06-01-10 DATE

06-01-10
PLANS APPROVAL DATE

REGISTERED PROFESSIONAL ENGINEER BYRON H. STANLEY No. C60161 Exp. 6-30-10 CIVIL STATE OF CALIFORNIA

THE STATE OF CALIFORNIA OR ITS OFFICERS OR AGENTS SHALL NOT BE RESPONSIBLE FOR THE ACCURACY OR COMPLETENESS OF SCANNED COPIES OF THIS PLAN SHEET.

NOTE:

1. EXACT PCMS AND SIGN LOCATION TO BE DETERMINED BY THE ENGINEER

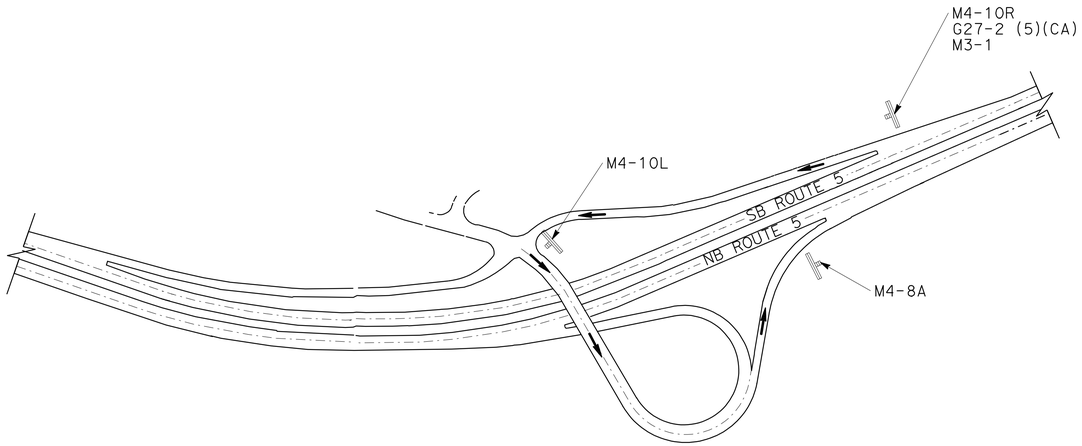

GIBSON Rd

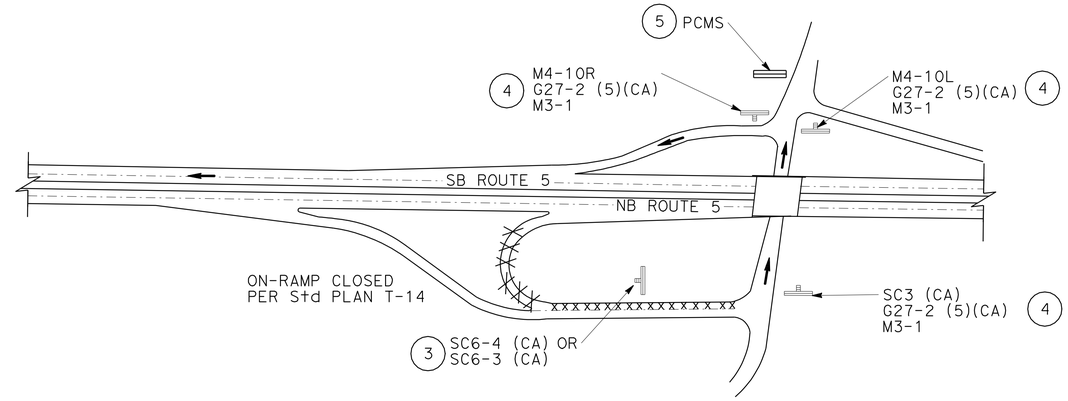

SIMS Rd

CLOSURE OF NB Rte 5 ON-RAMP FROM SIMS Rd

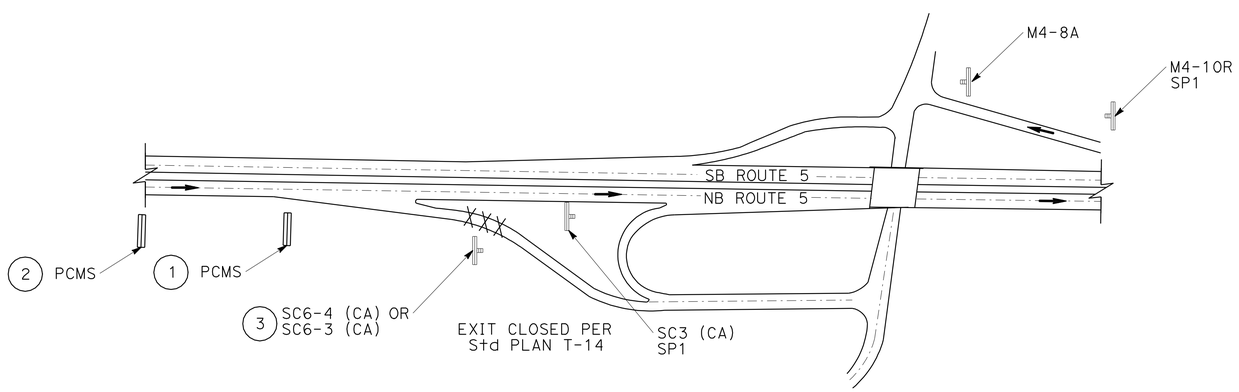

SIMS Rd

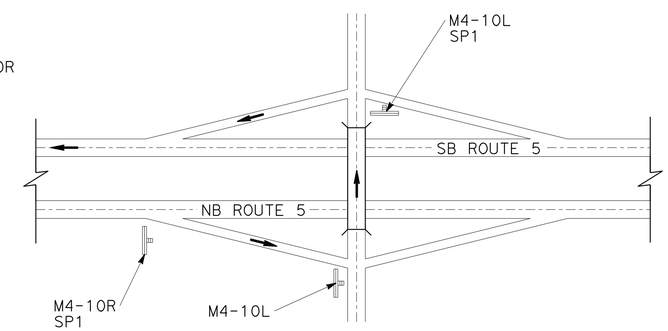

FLUME CREEK Rd

CLOSURE OF NB Rte 5 EXIT TO SIMS Rd

DETOUR PLAN

NO SCALE

DE-6

REVISED BY	DATE REVISED

CALCULATED-DESIGNED BY	WILL LESLIE
CHECKED BY	BYRON STANLEY
FUNCTIONAL SUPERVISOR	STEVE TOPAL

STATE OF CALIFORNIA - DEPARTMENT OF TRANSPORTATION
Caltrans
DESIGN

P:\proj1\02\2c450_plans\pse\22c450mg006.dgn

LAST REVISION 03-18-09 | DATE PLOTTED => 02-JUN-2010 | TIME PLOTTED => 15:32

Dist	COUNTY	ROUTE	POST MILES TOTAL PROJECT	SHEET No.	TOTAL SHEETS
02	Sha	5	R44.0/58.0	53	142

REGISTERED CIVIL ENGINEER 06-01-10 DATE

06-01-10
PLANS APPROVAL DATE

REGISTERED PROFESSIONAL ENGINEER BYRON H. STANLEY No. C60161 Exp. 6-30-10 CIVIL STATE OF CALIFORNIA

THE STATE OF CALIFORNIA OR ITS OFFICERS OR AGENTS SHALL NOT BE RESPONSIBLE FOR THE ACCURACY OR COMPLETENESS OF SCANNED COPIES OF THIS PLAN SHEET.

LEGEND

DIRECTION OF TRAFFIC

XX PAVEMENT DELINEATION STRIPE DETAIL No.

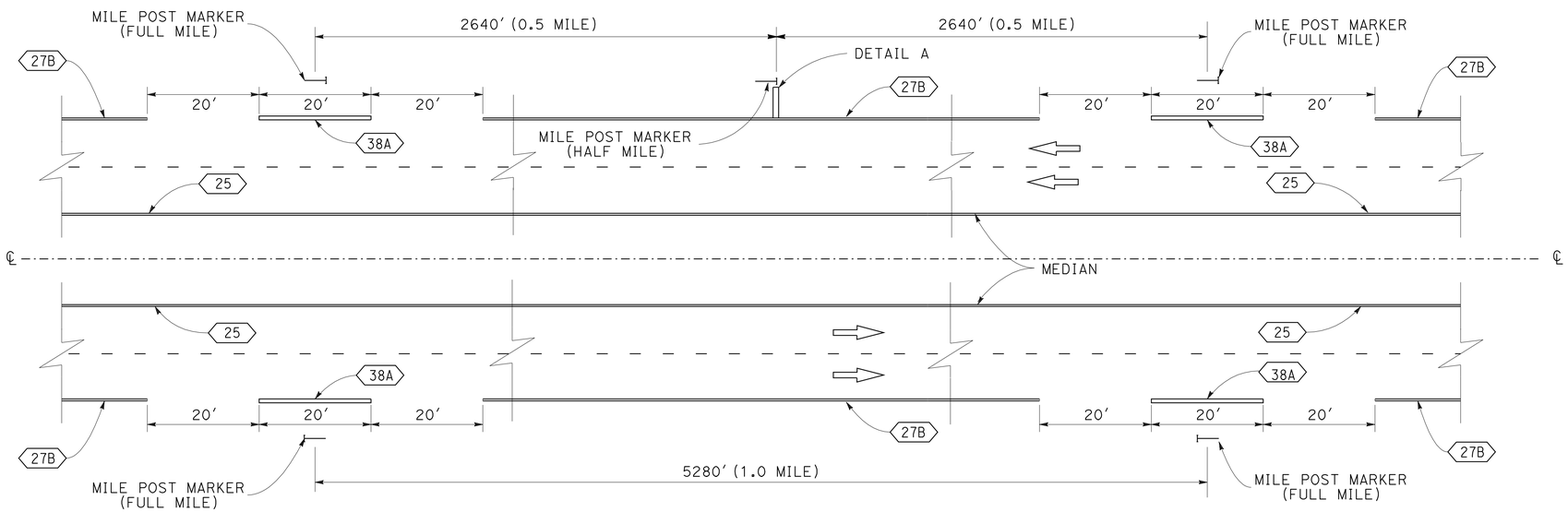

TYPICAL HALF MILE AND MILE POST STRIPE

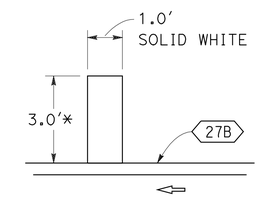

DETAIL "A"

* ACTUAL LENGTH MAY VARY DUE TO PAVEMENT WIDTH

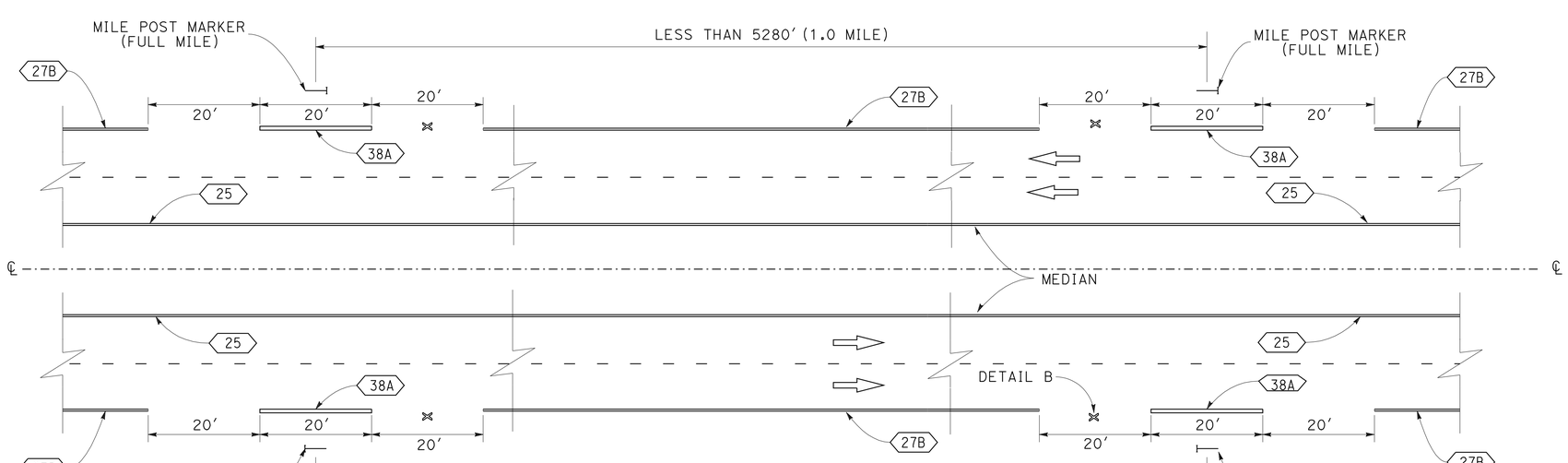

TYPICAL MILE POST STRIPE FOR EQUATIONS

(NO DETAIL "A" WITHIN AN EQUATION)

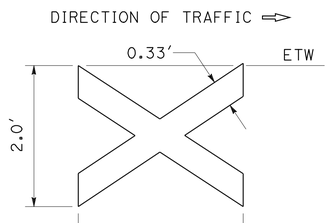

DETAIL "B"

0.33' SOLID WHITE THERMOPLASTIC

PAVEMENT DELINEATION DETAILS

NO SCALE

PDD-1

STATE OF CALIFORNIA - DEPARTMENT OF TRANSPORTATION
Caltrans
DESIGN

FUNCTIONAL SUPERVISOR: STEVE TOPAL
CALCULATED-DESIGNED BY: WILL LESLIE
CHECKED BY: BYRON STANLEY
REVISED BY / DATE REVISED

P:\proj1\02\2c450_plans\pse\22c450nb001.dgn

LAST REVISION 03-18-09 | DATE PLOTTED => 02-JUN-2010 | TIME PLOTTED => 15:32

BORDER LAST REVISED 4/11/2008 | RELATIVE BORDER SCALE IS IN INCHES 0 1 2 3 | USERNAME => s123119 | DGN FILE => 22c450nb001.dgn | CU 03 247 | EA 2C4501

Dist	COUNTY	ROUTE	POST MILES TOTAL PROJECT	SHEET No.	TOTAL SHEETS
02	Sha	5	R44.0/58.0	54	142

REGISTERED CIVIL ENGINEER 06-01-10 DATE

06-01-10
PLANS APPROVAL DATE

REGISTERED PROFESSIONAL ENGINEER BYRON H. STANLEY No. C60161 Exp. 6-30-10 CIVIL STATE OF CALIFORNIA

THE STATE OF CALIFORNIA OR ITS OFFICERS OR AGENTS SHALL NOT BE RESPONSIBLE FOR THE ACCURACY OR COMPLETENESS OF SCANNED COPIES OF THIS PLAN SHEET.

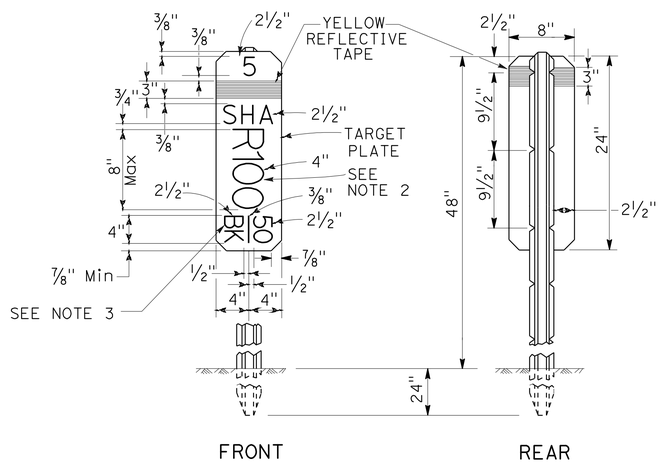

NOTES:

1. THE MARKER SHALL BE WHITE (NON-REFLECTIVE) TARGET PLATE WITH BLACK SERIES D NUMERALS AND LETTERS.
2. A POST MILE PREFIX, SUCH AS "R", SHALL APPLY ONLY WHEN DIRECTED BY THE ENGINEER.
3. "BK" (BACK), "AH" (AHEAD), OR A BLANK SPACE SHALL APPLY AS DIRECTED BY THE ENGINEER.
4. ALL INFORMATION SHALL BE IN ENGLISH UNITS (MILES).

POST MILE MARKER DETAIL

POST MILE MARKERS

PM	EQUATES TO	REMOVE MARKER	MILEPOST MARKER
		EA	EA
R44.00		2	2
R44.50		2	2
R45.00		2	2
R45.25	45.44	4	4
45.50		2	2
R46.00		2	2
R46.50		2	2
R47.00		2	2
R47.50		2	2
R48.00		2	2
R48.50		2	2
R49.00		2	2
R49.50		2	2
R50.00		2	2
R50.50		2	2
R51.00		2	2
R51.50		2	2
R51.69	R51.70	4	4
R52.00		2	2
R52.50	52.80	4	4
53.00		2	2
53.50		2	2
R54.00		2	2
R54.50		2	2
R55.00		2	2
R55.50		2	2
R56.00		2	2
56.50		2	2
57.00		2	2
57.50		2	2
58.00		2	2
TOTAL		68	68

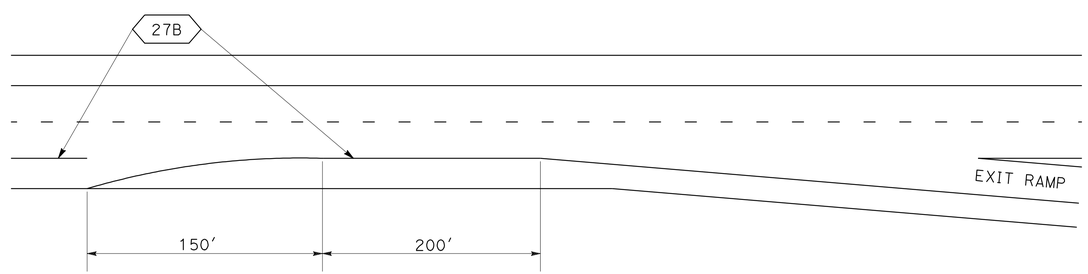

EDGE LINE FLAIR DETAIL

PAVEMENT DELINEATION DETAILS

NO SCALE

PDD-2

REVISED BY	DATE REVISED

CALCULATED-DESIGNED BY	CHECKED BY
WILL LESLIE	BYRON STANLEY

FUNCTIONAL SUPERVISOR: STEVE TOPAL

STATE OF CALIFORNIA - DEPARTMENT OF TRANSPORTATION
Caltrans
DESIGN

P:\proj1\02\2c450_plans\pse\22c450nb002.dgn

LAST REVISION 03-18-09 | DATE PLOTTED => 02-JUN-2010 | TIME PLOTTED => 15:32

Dist	COUNTY	ROUTE	POST MILES TOTAL PROJECT	SHEET No.	TOTAL SHEETS
02	Sha	5	R44.0/58.0	55	142

REGISTERED CIVIL ENGINEER 06-01-10 DATE

06-01-10
PLANS APPROVAL DATE

REGISTERED PROFESSIONAL ENGINEER BYRON H. STANLEY No. C60161 Exp. 6-30-10 CIVIL STATE OF CALIFORNIA

THE STATE OF CALIFORNIA OR ITS OFFICERS OR AGENTS SHALL NOT BE RESPONSIBLE FOR THE ACCURACY OR COMPLETENESS OF SCANNED COPIES OF THIS PLAN SHEET.

NOTE:

1. EXISTING UTILITY FACILITIES HAVE NOT BEEN POSITIVELY LOCATED.

ABBREVIATIONS

ON ON-RAMP
OFF OFF-RAMP

THERMOPLASTIC PAVEMENT MARKING

DESCRIPTION		PM	EA	SQFT	REMARKS
MAINLINE	NB/SB	R44.50	2	6.0	DETAIL A
		R45.00	2	4.8	DETAIL B
		45.50	2	6.0	DETAIL A
		R46.00	2	4.8	DETAIL B
		R46.50	2	6.0	DETAIL A
		R47.50	2	6.0	DETAIL A
		R48.50	2	6.0	DETAIL A
		R49.50	2	6.0	DETAIL A
		R50.50	2	6.0	DETAIL A
		R51.50	2	6.0	DETAIL A
		R52.00	2	4.8	DETAIL B
		R52.50	2	6.0	DETAIL A
		53.00	2	4.8	DETAIL B
		53.50	2	6.0	DETAIL A
		R54.50	2	6.0	DETAIL A
		R55.50	2	6.0	DETAIL A
		56.50	2	6.0	DETAIL A
		57.50	2	6.0	DETAIL A
		58.00	2	6.0	DETAIL A
	NB	R50.25	3	126.0	TYPE VI ARROW (RIGHT)
VOLLMERS Rd	NB OFF	R45.66	2	66.0	TYPE V ARROW
			2	44.0	STOP
			1	31.0	AHEAD
			1	55.0	LIMIT LINE
	SB ON	R45.88	1	31.0	TYPE I 24'-0" ARROW
	NB ON	R45.91	1	31.0	TYPE I 24'-0" ARROW
	SB OFF	R46.19	2	66.0	TYPE V ARROW
			1	22.0	STOP
			1	54.0	LIMIT LINE
La MIONE Rd	SB ON	R48.96	1	31.0	TYPE I 24'-0" ARROW
	NB OFF	R49.18	2	66.0	TYPE V ARROW
	SB OFF	R49.32	2	66.0	TYPE V ARROW
			1	22.0	STOP
			1	71.0	LIMIT LINE
	NB ON	R49.38	1	31.0	TYPE I 24'-0" ARROW
POLLARD FLAT	SB ON	R50.55	1	31.0	TYPE I 24'-0" ARROW
	NB OFF	R50.58	2	66.0	TYPE V ARROW
			1	22.0	STOP
			1	67.0	LIMIT LINE
	NB ON	R50.91	1	31.0	TYPE I 24'-0" ARROW
	SB OFF	R50.91	2	66.0	TYPE V ARROW
			1	22.0	STOP
			1	57.0	LIMIT LINE
GIBSON Rd	NB OFF	53.31	2	66.0	TYPE V ARROW
	NB ON	53.46	1	31.0	TYPE I 24'-0" ARROW
	SB ON	53.46	1	31.0	TYPE I 24'-0" ARROW
	SB OFF	53.50	2	66.0	TYPE V ARROW
			1	22.0	STOP
			1	50.0	LIMIT LINE
SIMS Rd	NB OFF	57.21	2	66.0	TYPE V ARROW
			1	22.0	STOP
			1	29.0	LIMIT LINE
	SB OFF	57.33	2	66.0	TYPE V ARROW
			1	22.0	STOP
			1	77.0	LIMIT LINE
	SB ON	57.52	1	31.0	TYPE I 24'-0" ARROW
	NB ON	57.61	2	62.0	TYPE I 24'-0" ARROW
		TOTAL		1,925.2	

DELINEATORS

DESCRIPTION		POSTMILE LIMITS	DELINEATOR (CLASS II)		REMOVE DELINEATOR	
			TYPE F	TYPE G	TYPE F	TYPE G
		PM-PM	EA	EA	EA	EA
MAINLINE	NB	R44.0/58.0	240		225	
MAINLINE	SB	R44.0/58.0	200		190	
VOLLMERS Rd	NB OFF	R45.66	10	15	8	10
	SB ON	R45.88	6	11	3	2
	NB ON	R45.91	4	9	3	11
	SB OFF	R46.19	12	17	10	5
La MOINE Rd	SB ON	R48.96	9	14	8	1
	NB OFF	R49.18	13	13	2	14
	SB OFF	R49.32	10	15	2	6
	NB ON	R49.38	14	13	13	2
POLLARD FLAT	SB ON	R50.55	14	19	6	6
	NB OFF	R50.58	12	17	10	7
	NB ON	R50.91	6	11	2	6
	SB OFF	R50.91	10	15	5	7
GIBSON Rd	NB OFF	53.31	12	12	3	13
	NB ON	53.46	12	10	20	8
	SB ON	53.46	11	16	5	10
	SB OFF	53.50	10	15	3	6
SIMS Rd	NB OFF	57.21	10	11	5	4
	SB OFF	57.33	5	10	1	3
	SB ON	57.52	4	9	1	1
	NB ON	57.61	7	8	2	4
SUBTOTAL			631	260	527	126
TOTAL			891		653	

MILEPOST MARKER

	EA
TOTAL	68

SEE PDD-2 FOR DETAILS

PAVEMENT MARKER (RETROREFLECTIVE-RECESSED)

DIRECTION	PM/PM	TYPE C	TYPE D	TYPE G	TYPE H
		EA	EA	EA	EA
NB MAINLINE	R44.0/58.0	60	0	1565	1488
SB MAINLINE	R44.0/58.0	60	0	1436	1482
RAMPS	R44.0/58.0	0	54	324	718
SUBTOTAL		120	54	3,325	3,688
TOTAL		7,187			

TWO-COMPONENT PAINT TRAFFIC STRIPE

DESCRIPTION		POSTMILE LIMITS	YELLOW 4"					WHITE 4"	WHITE 8"		WHITE 4" (BROKEN 17-7)	WHITE 4" (BROKEN 36-12)	
			DETAIL 22	DETAIL 25	DETAIL 25A	DETAIL 27	DETAIL 29	DETAIL 27B	DETAIL 36	DETAIL 36A	DETAIL 8	DETAIL 12	DETAIL 14A
		PM-PM	LF	LF	LF	LF	LF	LF	LF	LF	LF	LF	LF
MAINLINE	NB	R44.0/58.0		21,701		99,266		70,013				75,087	2,160
MAINLINE	SB	R44.0/58.0		22,282		97,574		69,854				68,909	2,160
VOLLMERS Rd	NB OFF	R45.66			1,025			1,025	528				
	SB ON	R45.88			555			555		264	158		
	NB ON	R45.91			469			469		158	158		
	SB OFF	R46.19			1,150			1,150	528				
La MIONE Rd	SB ON	R48.96			1,075			1,075		264	370		
	NB OFF	R49.18			1,340			1,340	528				
	SB OFF	R49.32			1,020			1,020	528				
	NB ON	R49.38			755			1,375		264	211		
POLLARD FLAT	SB ON	R50.55			1,420			1,420		317	264		
	NB OFF	R50.58			1,230			1,230	528				
	NB ON	R50.91			565			565		264	211		
	SB OFF	R50.91			945			945	528				
GIBSON Rd	NB OFF	53.31			625			1,255	528				
	NB ON	53.46	740		470		1,040	1,100		264	264		
	SB ON	53.46			1,150			1,150		264	211		
	SB OFF	53.50			1,010			1,010	528				
SIMS Rd	NB OFF	57.21			985			985	528				
	SB OFF	57.33			495			495	316				
	SB ON	57.52			375			375		370	158		
	NB ON	57.61			335			335		211	158		
SUBTOTAL			740	43,983	16,994	196,840	1,040	158,741	5,068	2,640		143,996	4,320
TOTAL			418,338						7,708		2,163	148,316	

PAVEMENT DELINEATION QUANTITIES

PDQ-1

REVISED BY | DATE REVISED
BYRON STANLEY
CALCULATED-DESIGNED BY | CHECKED BY
FUNCTIONAL SUPERVISOR
STEVE TOPAL

STATE OF CALIFORNIA - DEPARTMENT OF TRANSPORTATION
Caltrans DESIGN

P:\proj1\02\2c450_plans\pse\22c450nc001.dgn

LAST REVISION 03-18-09 | DATE PLOTTED => 02-JUN-2010 | TIME PLOTTED => 15:32

Dist	COUNTY	ROUTE	POST MILES TOTAL PROJECT	SHEET No.	TOTAL SHEETS
02	Sha	5	R44.0/58.0	56	142

REGISTERED CIVIL ENGINEER 06-01-10 DATE

06-01-10
PLANS APPROVAL DATE

REGISTERED PROFESSIONAL ENGINEER FRANK RIVAS No. 53592 Exp. 6/30/11 CIVIL STATE OF CALIFORNIA

THE STATE OF CALIFORNIA OR ITS OFFICERS OR AGENTS SHALL NOT BE RESPONSIBLE FOR THE ACCURACY OR COMPLETENESS OF SCANNED COPIES OF THIS PLAN SHEET.

NOTE:

1. FOR ACCURATE RIGHT OF WAY AND ACCESS DATA, CONTACT RIGHT OF WAY ENGINEERING AT THE DISTRICT OFFICE.

LEGEND

- REMOVE ROADSIDE SIGN
- # OVERHEAD SIGN NUMBER
- #-# ROADSIDE SIGN NUMBER
- EXISTING ROADSIDE SIGN (2-POST)
- OVERHEAD SIGN

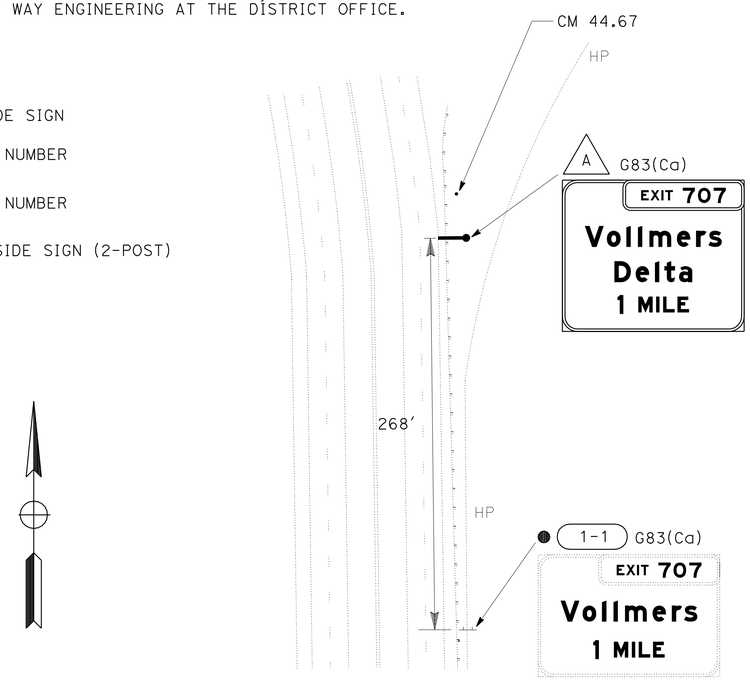

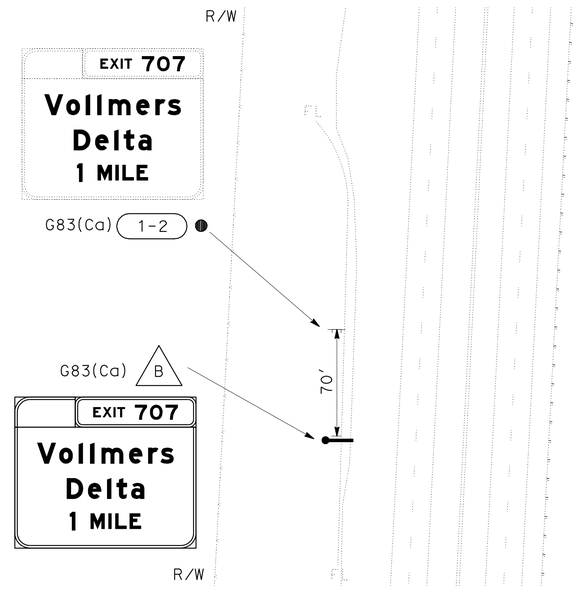

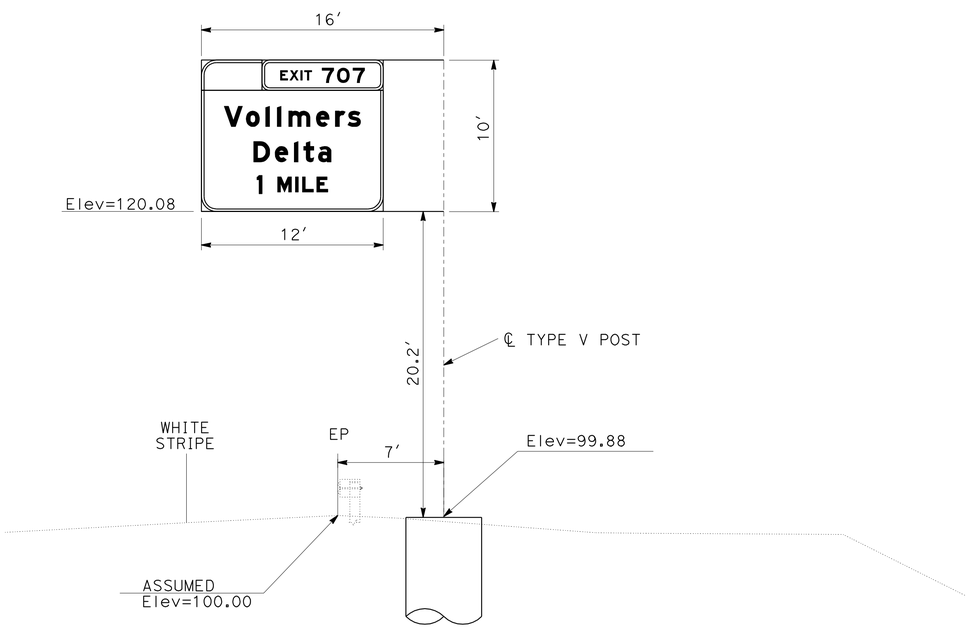

OVERHEAD SIGN A
FNBT PM 44.67
FORMED SIGN PANEL WITH
REMOVABLE SIGN PANEL FRAME

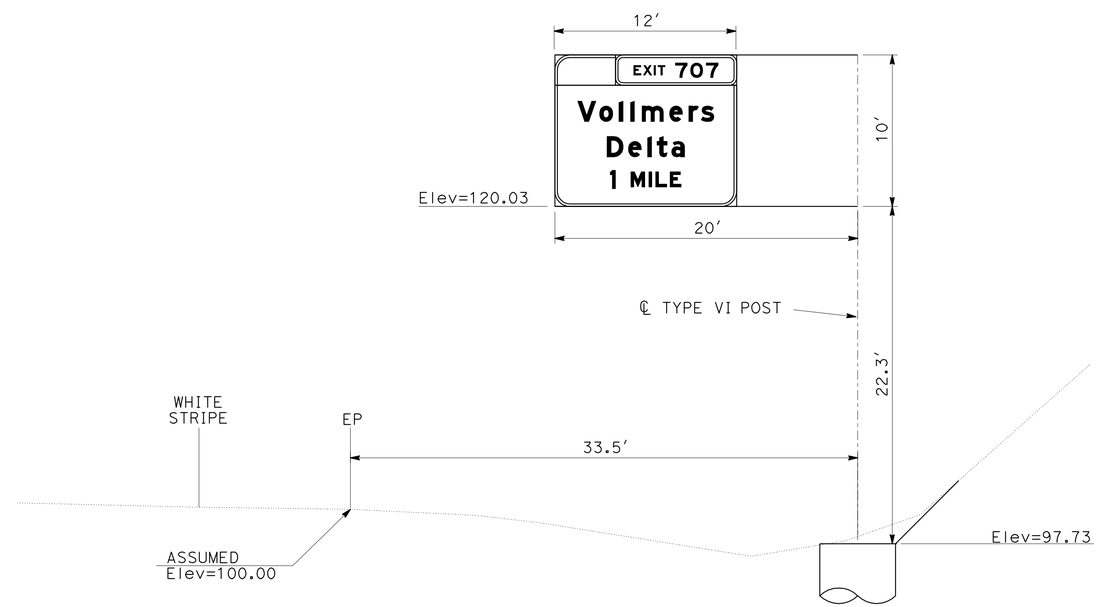

OVERHEAD SIGN B
FSBT PM 47.14
FORMED SIGN PANEL WITH
REMOVABLE SIGN PANEL FRAME

SIGN DETAILS
NO SCALE

SD-1

REVISED BY	DATE REVISED

CALCULATED-DESIGNED BY	CHECKED BY
FRANK RIVAS	JEFF STEPPAT

FUNCTIONAL SUPERVISOR: ROB STINGER

STATE OF CALIFORNIA - DEPARTMENT OF TRANSPORTATION
Caltrans TRAFFIC OPERATIONS

P:\proj1\02\2c450_plans\pse\22c450ob001.dgn

LAST REVISION 03-11-10 | DATE PLOTTED => 02-JUN-2010 | TIME PLOTTED => 15:32

Dist	COUNTY	ROUTE	POST MILES TOTAL PROJECT	SHEET No.	TOTAL SHEETS
02	Sha	5	R44.0/58.0	57	142

Frank J. Rivas 06-01-10
REGISTERED CIVIL ENGINEER DATE

06-01-10
PLANS APPROVAL DATE

REGISTERED PROFESSIONAL ENGINEER
FRANK RIVAS
No. 53592
Exp. 6/30/11
CIVIL
STATE OF CALIFORNIA

THE STATE OF CALIFORNIA OR ITS OFFICERS OR AGENTS SHALL NOT BE RESPONSIBLE FOR THE ACCURACY OR COMPLETENESS OF SCANNED COPIES OF THIS PLAN SHEET.

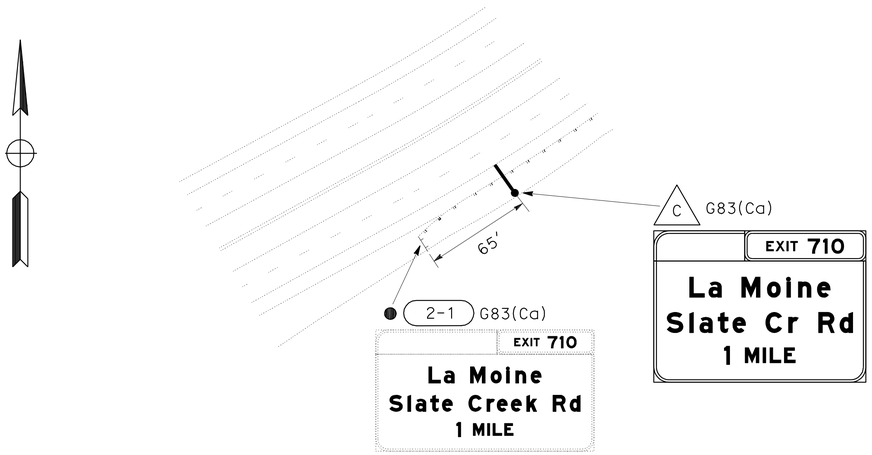

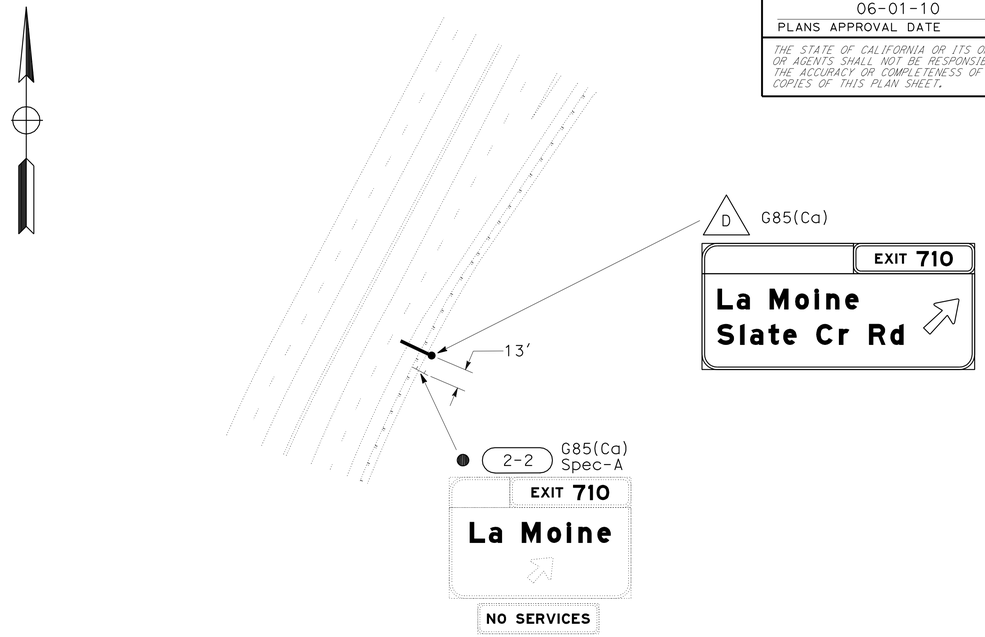

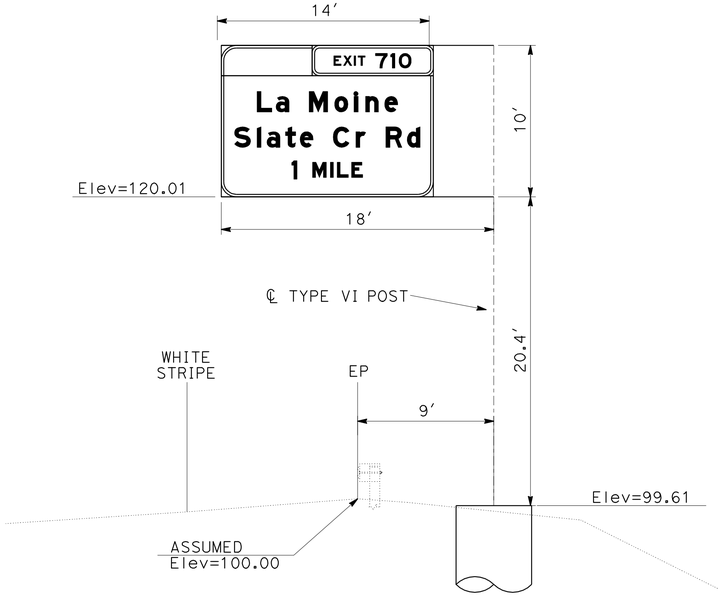

OVERHEAD SIGN C
FNBT PM 48.20
FORMED SIGN PANEL WITH
REMOVABLE SIGN PANEL FRAME

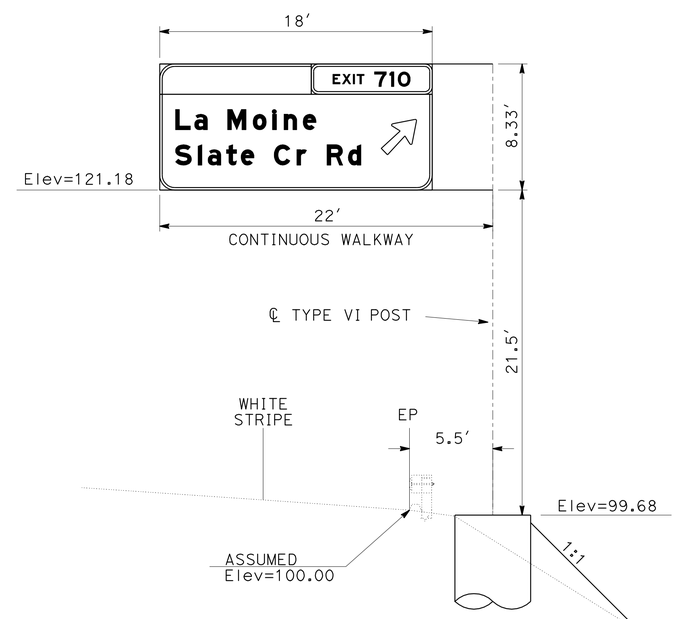

OVERHEAD SIGN D
FNBT PM 49.09
FORMED SIGN PANEL WITH
REMOVABLE SIGN PANEL FRAME

SIGN DETAILS
NO SCALE
SD-2

REVISED BY | DATE REVISED
FRANK RIVAS | JEFF STEPPAT
CALCULATED-DESIGNED BY | CHECKED BY
FUNCTIONAL SUPERVISOR
ROB STINGER

STATE OF CALIFORNIA - DEPARTMENT OF TRANSPORTATION
Caltrans®
TRAFFIC OPERATIONS

P:\proj1\02\2c450_plans\pse\22c450ob002.dgn

LAST REVISION 03-11-10 | DATE PLOTTED => 02-JUN-2010 | TIME PLOTTED => 15:32

Dist	COUNTY	ROUTE	POST MILES TOTAL PROJECT	SHEET No.	TOTAL SHEETS
02	Sha	5	R44.0/58.0	58	142

REGISTERED CIVIL ENGINEER 06-01-10 DATE

06-01-10
PLANS APPROVAL DATE

REGISTERED PROFESSIONAL ENGINEER FRANK RIVAS No. 53592 Exp. 6/30/11 CIVIL STATE OF CALIFORNIA

THE STATE OF CALIFORNIA OR ITS OFFICERS OR AGENTS SHALL NOT BE RESPONSIBLE FOR THE ACCURACY OR COMPLETENESS OF SCANNED COPIES OF THIS PLAN SHEET.

NOTE:

1. FOR ACCURATE RIGHT OF WAY AND ACCESS DATA, CONTACT RIGHT OF WAY ENGINEERING AT THE DISTRICT OFFICE.

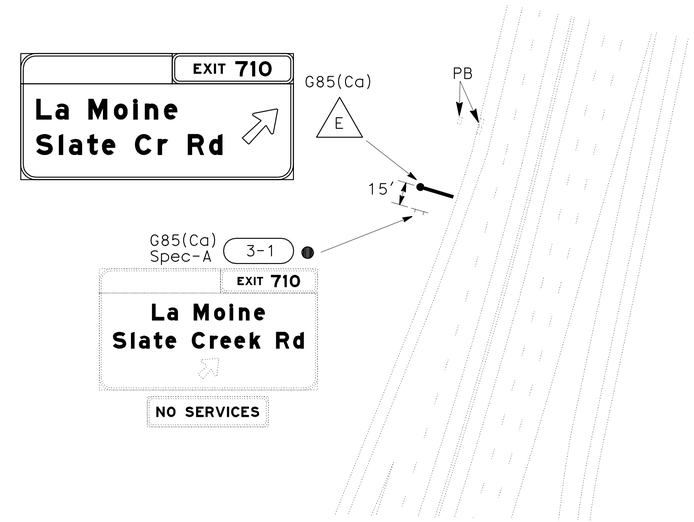

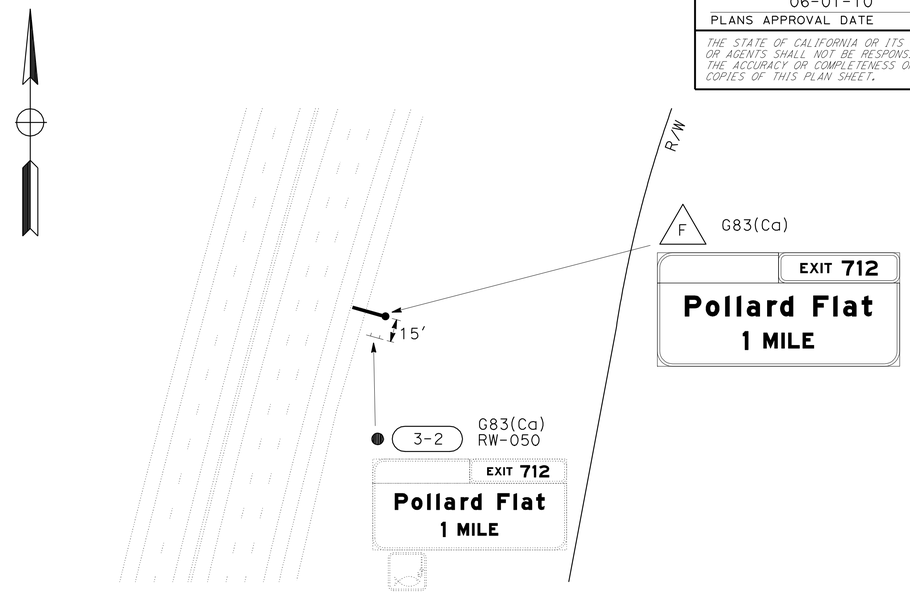

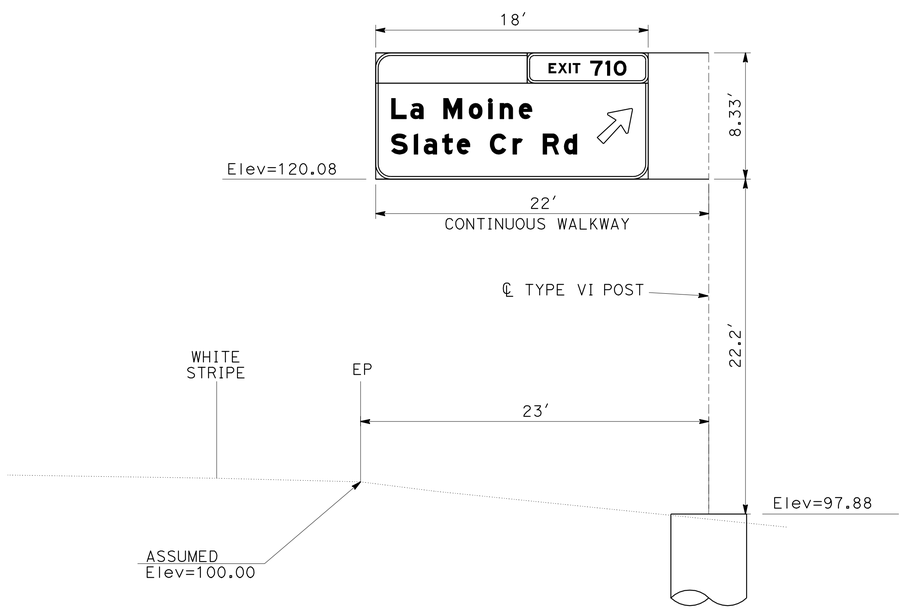

OVERHEAD SIGN E
FSBT PM 49.33
FORMED SIGN PANEL WITH
REMOVABLE SIGN PANEL FRAME

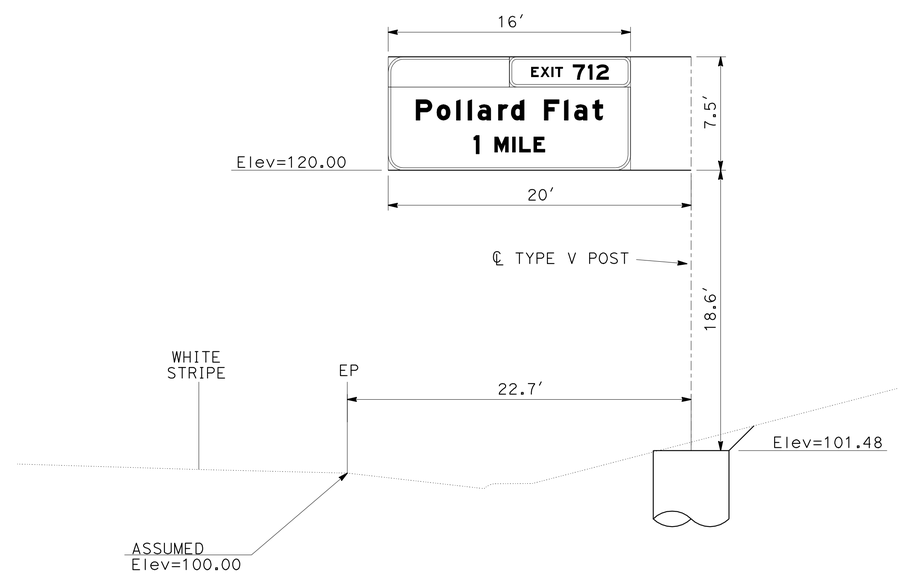

OVERHEAD SIGN F
FNBT PM 49.58
FORMED SIGN PANEL WITH
REMOVABLE SIGN PANEL FRAME

SIGN DETAILS
NO SCALE

SD-3

REVISED BY	DATE REVISED
FRANK RIVAS	JEFF STEPPAT
CALCULATED-DESIGNED BY	CHECKED BY
FUNCTIONAL SUPERVISOR	ROB STINGER

STATE OF CALIFORNIA - DEPARTMENT OF TRANSPORTATION
Caltrans TRAFFIC OPERATIONS

P:\proj1\02\2c450_plans\pse\22c450ob003.dgn

LAST REVISION 03-11-10 | DATE PLOTTED => 02-JUN-2010 | TIME PLOTTED => 15:32

Dist	COUNTY	ROUTE	POST MILES TOTAL PROJECT	SHEET No.	TOTAL SHEETS
02	Sha	5	R44.0/58.0	59	142

REGISTERED CIVIL ENGINEER 06-01-10 DATE

06-01-10
PLANS APPROVAL DATE

REGISTERED PROFESSIONAL ENGINEER FRANK RIVAS No. 53592 Exp. 6/30/11 CIVIL STATE OF CALIFORNIA

THE STATE OF CALIFORNIA OR ITS OFFICERS OR AGENTS SHALL NOT BE RESPONSIBLE FOR THE ACCURACY OR COMPLETENESS OF SCANNED COPIES OF THIS PLAN SHEET.

NOTE:

1. FOR ACCURATE RIGHT OF WAY AND ACCESS DATA, CONTACT RIGHT OF WAY ENGINEERING AT THE DISTRICT OFFICE.

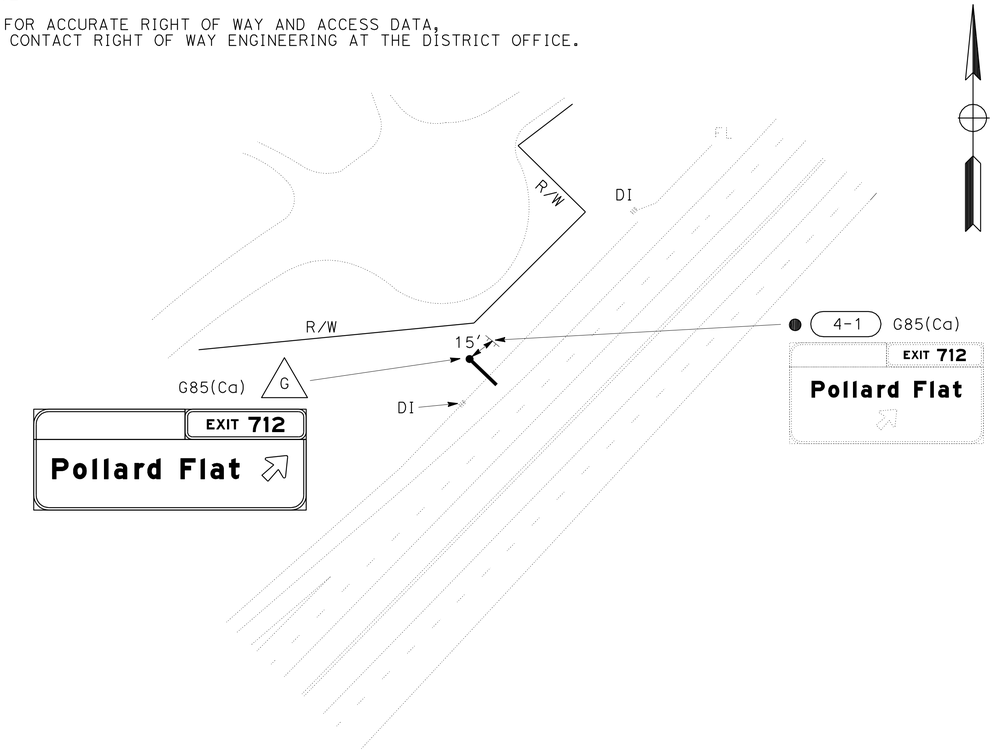

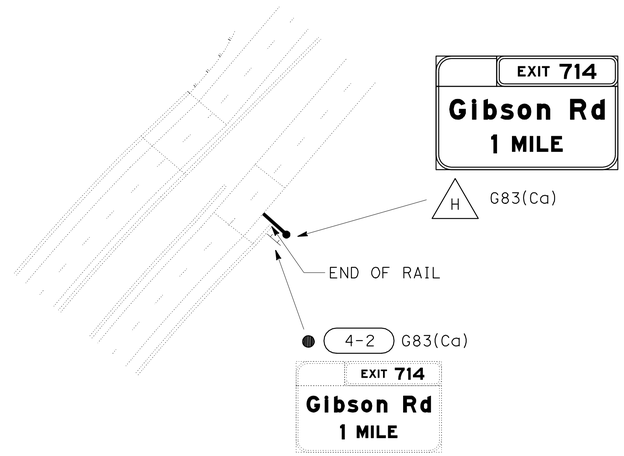

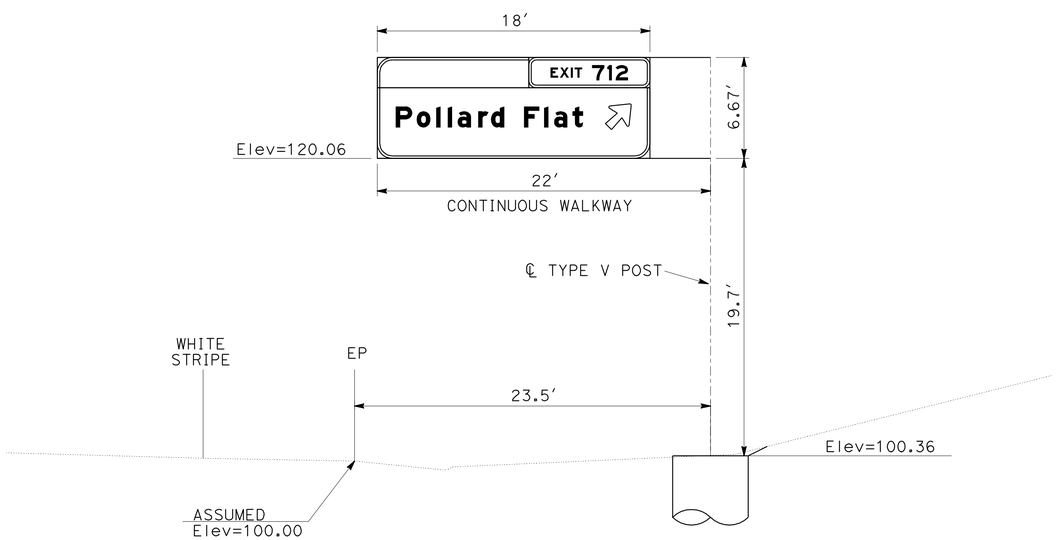

OVERHEAD SIGN G
FSBT PM 51.08
FORMED SIGN PANEL WITH
REMOVABLE SIGN PANEL FRAME

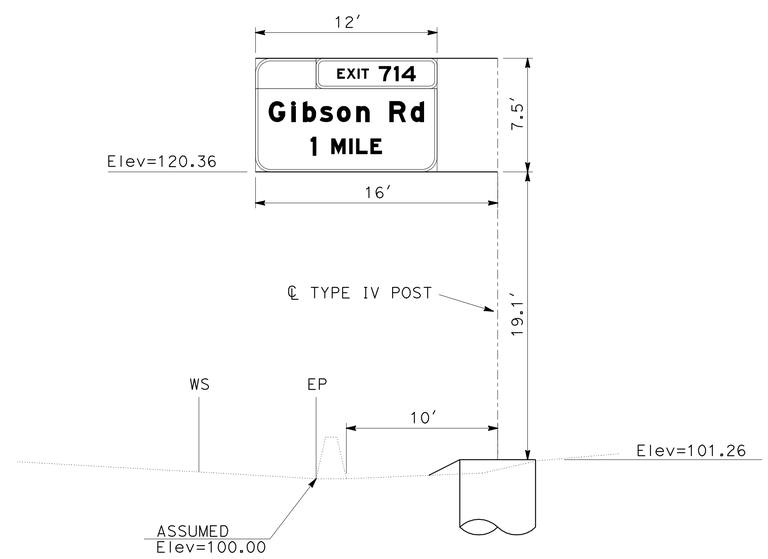

OVERHEAD SIGN H
FNBT PM 51.97
FORMED SIGN PANEL WITH
REMOVABLE SIGN PANEL FRAME

SIGN DETAILS
NO SCALE

SD-4

STATE OF CALIFORNIA - DEPARTMENT OF TRANSPORTATION
Caltrans
TRAFFIC OPERATIONS

FUNCTIONAL SUPERVISOR: ROB STINGER
CALCULATED-DESIGNED BY: FRANK RIVAS
CHECKED BY: JEFF STEPPAT
REVISED BY
DATE REVISED

P:\proj1\02\2c450_plans\pse\22c450ob004.dgn

LAST REVISION 03-11-10 | DATE PLOTTED => 02-JUN-2010 | TIME PLOTTED => 15:32

Dist	COUNTY	ROUTE	POST MILES TOTAL PROJECT	SHEET No.	TOTAL SHEETS
02	Sha	5	R44.0/58.0	60	142

Frank J. Rivas 06-01-10
REGISTERED CIVIL ENGINEER DATE

06-01-10
PLANS APPROVAL DATE

REGISTERED PROFESSIONAL ENGINEER
FRANK RIVAS
No. 53592
Exp. 6/30/11
CIVIL
STATE OF CALIFORNIA

THE STATE OF CALIFORNIA OR ITS OFFICERS OR AGENTS SHALL NOT BE RESPONSIBLE FOR THE ACCURACY OR COMPLETENESS OF SCANNED COPIES OF THIS PLAN SHEET.

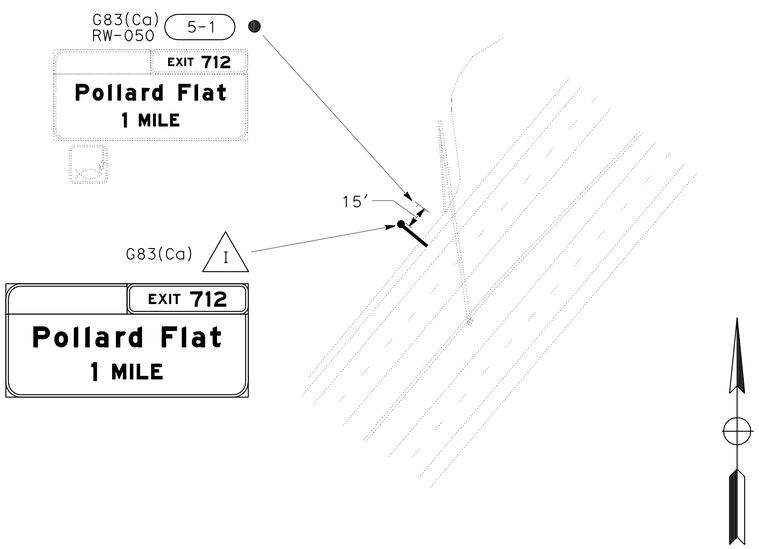

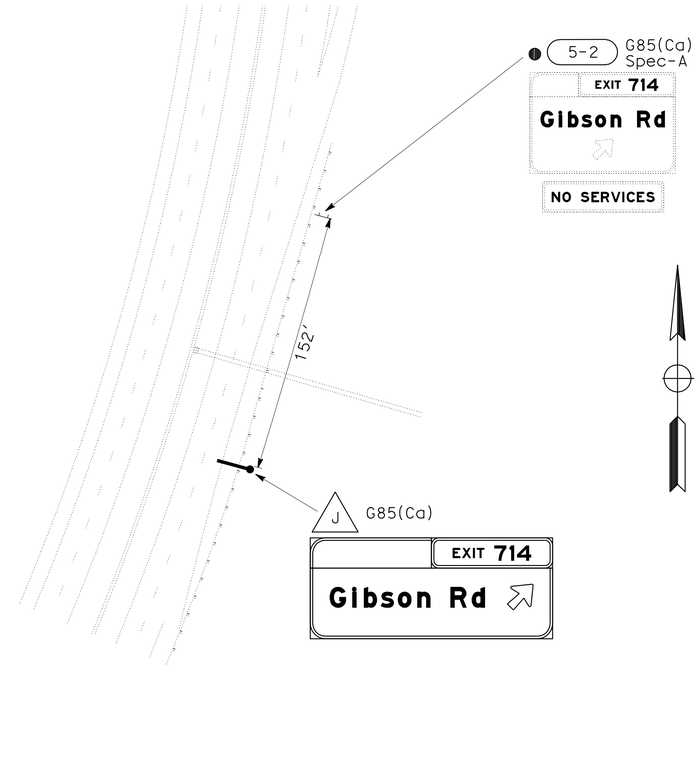

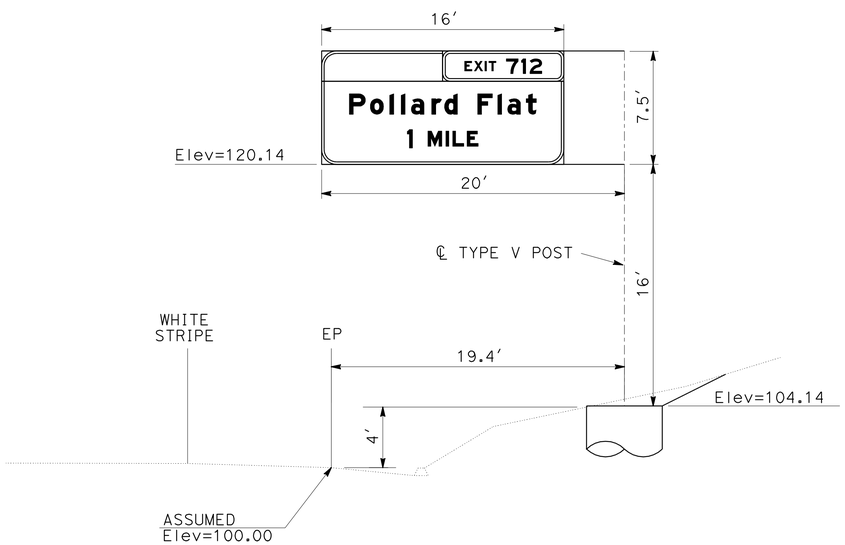

OVERHEAD SIGN I
FSBT PM 52.06
FORMED SIGN PANEL WITH
REMOVABLE SIGN PANEL FRAME

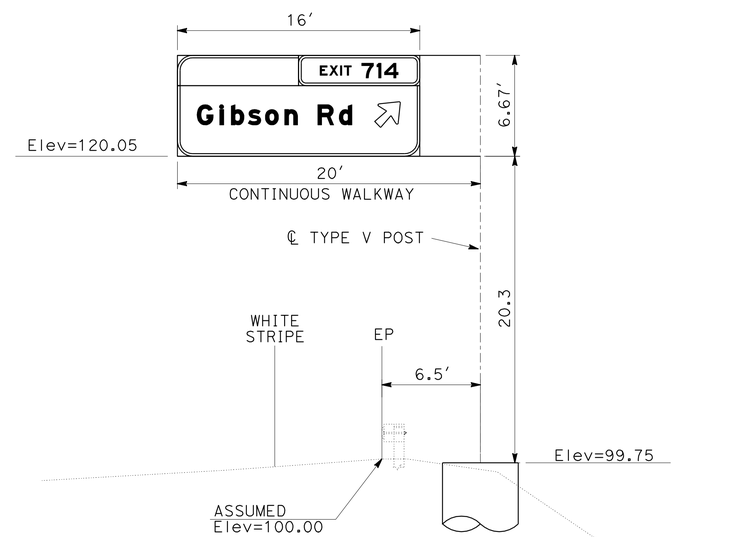

OVERHEAD SIGN J
FNBT PM 53.21
FORMED SIGN PANEL WITH
REMOVABLE SIGN PANEL FRAME

SIGN DETAILS
NO SCALE

SD-5

REVISED BY	DATE REVISED
FRANK RIVAS	JEFF STEPPAT
CALCULATED-DESIGNED BY	CHECKED BY
FUNCTIONAL SUPERVISOR	ROB STINGER

STATE OF CALIFORNIA - DEPARTMENT OF TRANSPORTATION
Caltrans
TRAFFIC OPERATIONS

P:\proj1\02\2c450_plans\pse\22c450ob005.dgn

LAST REVISION 03-11-10 | DATE PLOTTED => 02-JUN-2010 | TIME PLOTTED => 15:32

Dist	COUNTY	ROUTE	POST MILES TOTAL PROJECT	SHEET No.	TOTAL SHEETS
02	Sha	5	R44.0/58.0	61	142

REGISTERED CIVIL ENGINEER 06-01-10 DATE

06-01-10
PLANS APPROVAL DATE

REGISTERED PROFESSIONAL ENGINEER FRANK RIVAS No. 53592 Exp. 6/30/11 CIVIL STATE OF CALIFORNIA

THE STATE OF CALIFORNIA OR ITS OFFICERS OR AGENTS SHALL NOT BE RESPONSIBLE FOR THE ACCURACY OR COMPLETENESS OF SCANNED COPIES OF THIS PLAN SHEET.

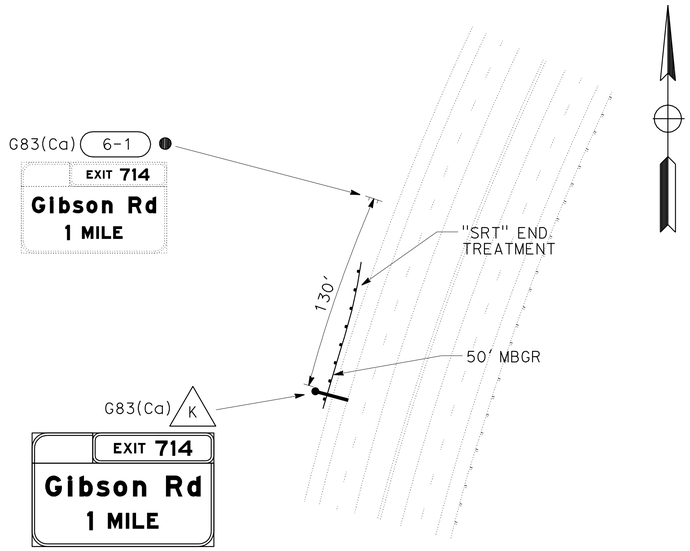

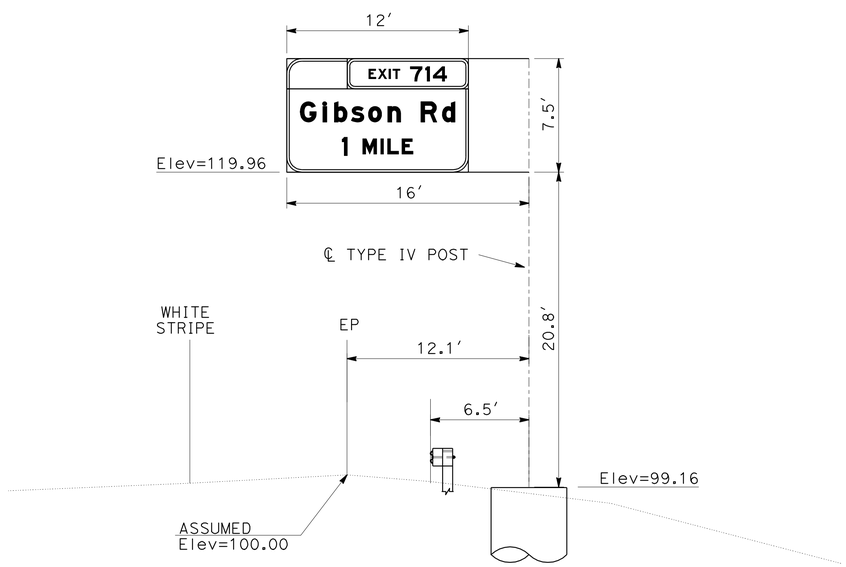

OVERHEAD SIGN K
FSBT PM 54.47
FORMED SIGN PANEL WITH REMOVABLE SIGN PANEL FRAME

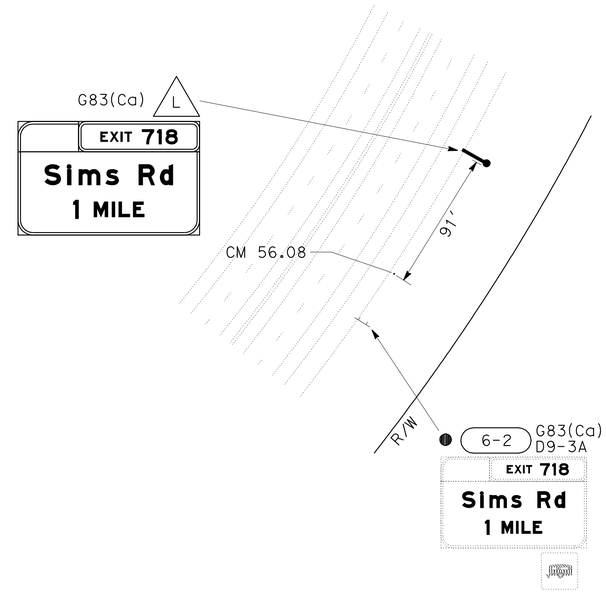

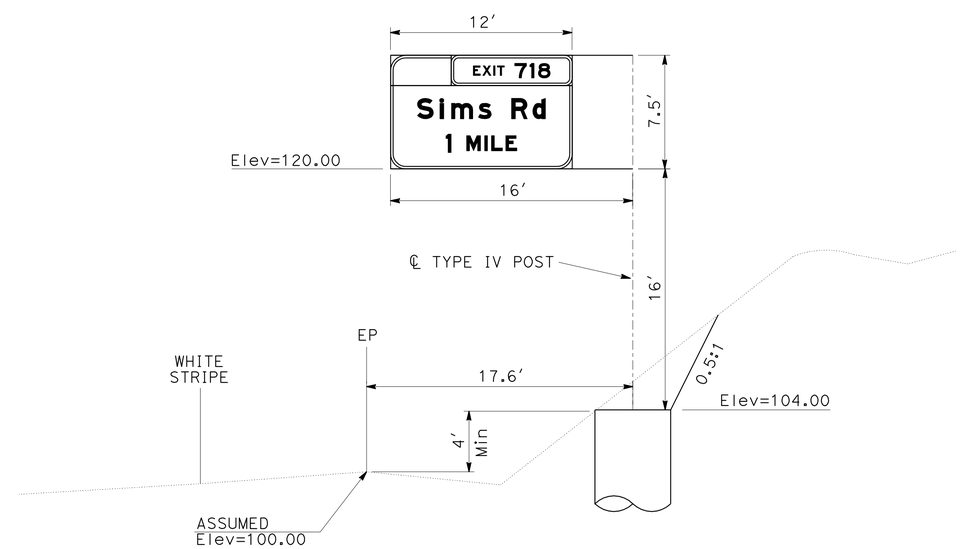

OVERHEAD SIGN L
FNBT PM 56.14
FORMED SIGN PANEL WITH REMOVABLE SIGN PANEL FRAME

SIGN DETAILS
NO SCALE

SD-6

REVISED BY	DATE REVISED
FRANK RIVAS	JEFF STEPPAT
CALCULATED-DESIGNED BY	CHECKED BY
FUNCTIONAL SUPERVISOR	ROB STINGER

STATE OF CALIFORNIA - DEPARTMENT OF TRANSPORTATION
Caltrans
TRAFFIC OPERATIONS

P:\proj1\02\2c450_plans\pse\22c450ob006.dgn

LAST REVISION 03-11-10 | DATE PLOTTED => 02-JUN-2010 | TIME PLOTTED => 15:32

Dist	COUNTY	ROUTE	POST MILES TOTAL PROJECT	SHEET No.	TOTAL SHEETS
02	Sha	5	R44.0/58.0	62	142

REGISTERED CIVIL ENGINEER 06-01-10 DATE

06-01-10
PLANS APPROVAL DATE

REGISTERED PROFESSIONAL ENGINEER FRANK RIVAS No. 53592 Exp. 6/30/11 CIVIL STATE OF CALIFORNIA

THE STATE OF CALIFORNIA OR ITS OFFICERS OR AGENTS SHALL NOT BE RESPONSIBLE FOR THE ACCURACY OR COMPLETENESS OF SCANNED COPIES OF THIS PLAN SHEET.

NOTE:

1. FOR ACCURATE RIGHT OF WAY AND ACCESS DATA, CONTACT RIGHT OF WAY ENGINEERING AT THE DISTRICT OFFICE.

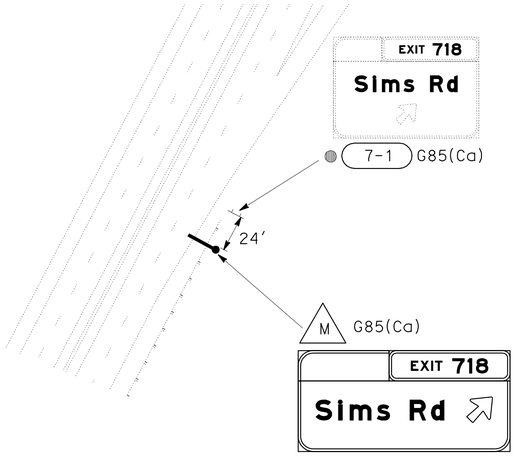

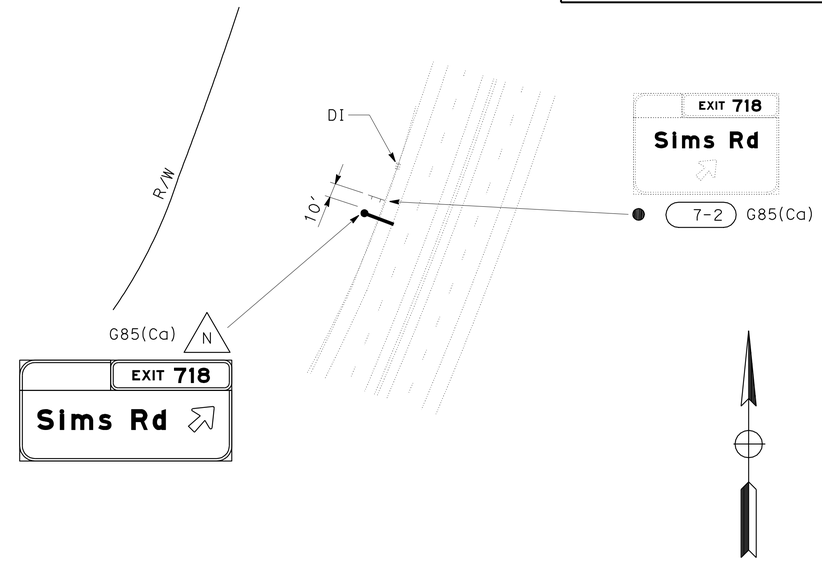

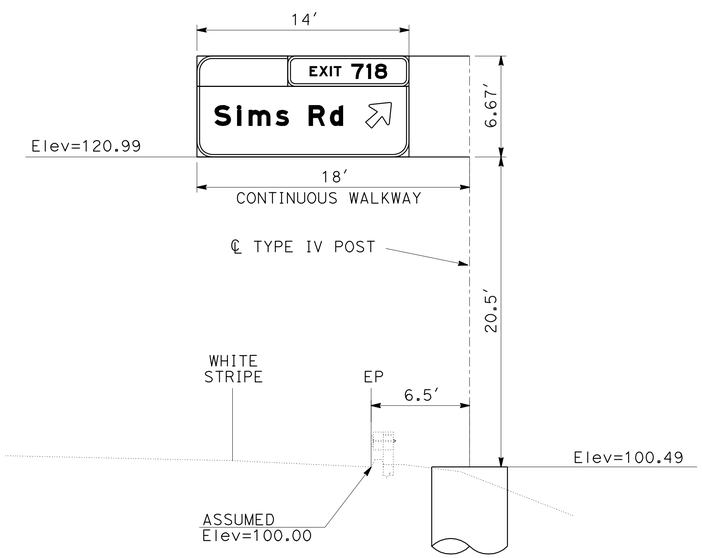

OVERHEAD SIGN M
FNBT PM 57.17
FORMED SIGN PANEL WITH
REMOVABLE SIGN PANEL FRAME

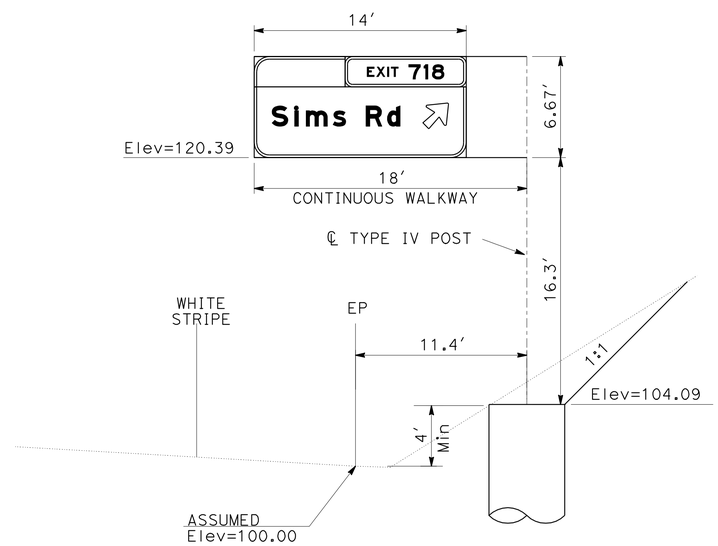

OVERHEAD SIGN N
FSBT PM 57.59
FORMED SIGN PANEL WITH
REMOVABLE SIGN PANEL FRAME

SIGN DETAILS
NO SCALE

SD-7

REVISED BY	DATE REVISED

CALCULATED-DESIGNED BY	FRANK RIVAS
CHECKED BY	JEFF STEPPAT
FUNCTIONAL SUPERVISOR	ROB STINGER

STATE OF CALIFORNIA - DEPARTMENT OF TRANSPORTATION
Caltrans
TRAFFIC OPERATIONS

P:\proj1\02\2c450_plans\pse\22c450ob007.dgn

LAST REVISION 03-11-10
DATE PLOTTED => 02-JUN-2010
TIME PLOTTED => 15:32

Dist	COUNTY	ROUTE	POST MILES TOTAL PROJECT	SHEET No.	TOTAL SHEETS
02	Sha	5	R44.0/58.0	63	142

REGISTERED CIVIL ENGINEER 06-01-10 DATE

06-01-10
PLANS APPROVAL DATE

REGISTERED PROFESSIONAL ENGINEER FRANK RIVAS No. 53592 Exp. 6/30/11 CIVIL STATE OF CALIFORNIA

THE STATE OF CALIFORNIA OR ITS OFFICERS OR AGENTS SHALL NOT BE RESPONSIBLE FOR THE ACCURACY OR COMPLETENESS OF SCANNED COPIES OF THIS PLAN SHEET.

NOTE:

1. FOR ACCURATE RIGHT OF WAY AND ACCESS DATA, CONTACT RIGHT OF WAY ENGINEERING AT THE DISTRICT OFFICE.

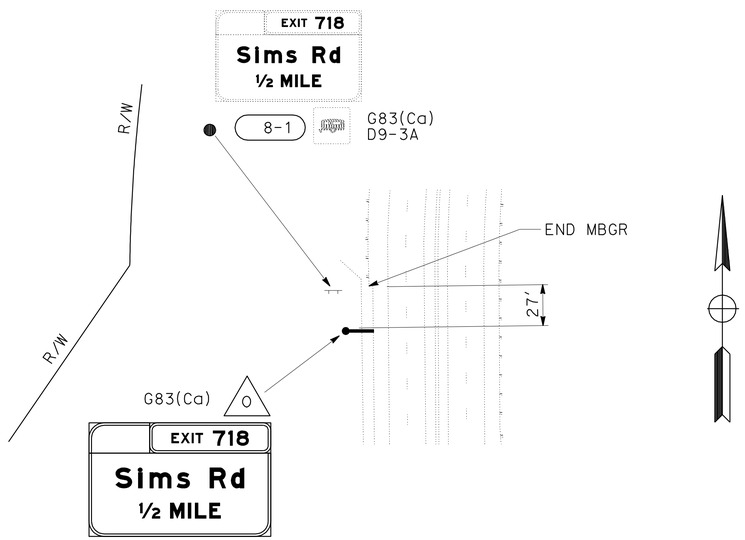

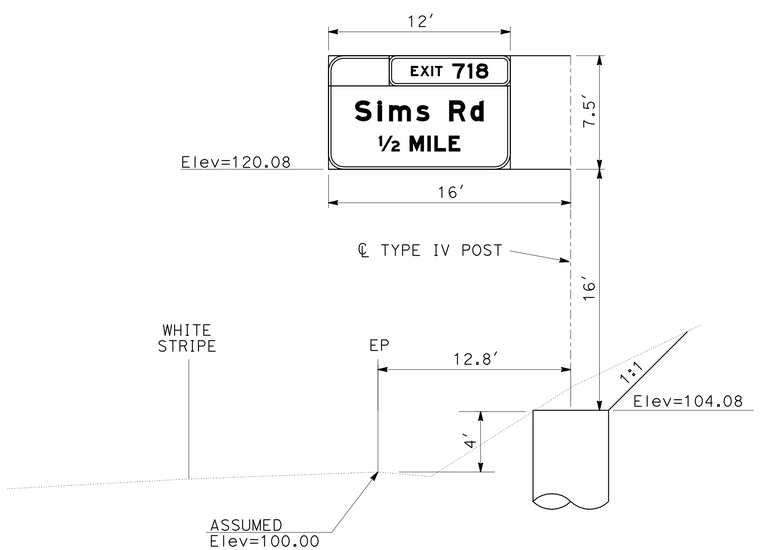

OVERHEAD SIGN O
FSBT PM 58.03
FORMED SIGN PANEL WITH REMOVABLE SIGN PANEL FRAME

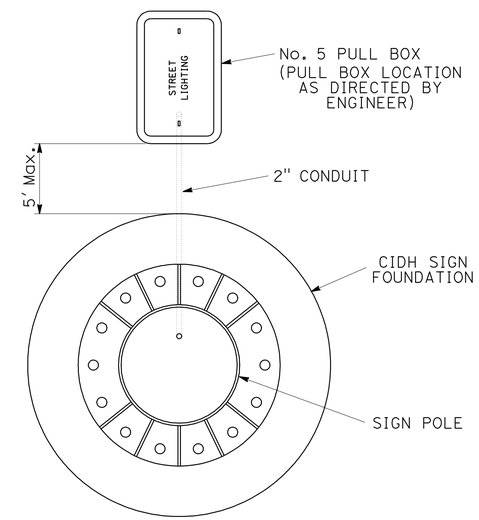

PULL BOX DETAIL

SIGN DETAILS
NO SCALE

SD-8

REVISED BY	DATE REVISED

CALCULATED-DESIGNED BY	FRANK RIVAS
CHECKED BY	JEFF STEPPAT
FUNCTIONAL SUPERVISOR	ROB STINGER

STATE OF CALIFORNIA - DEPARTMENT OF TRANSPORTATION
Caltrans® TRAFFIC OPERATIONS

P:\proj1\02\2c450_plans\pse\22c450ob008.dgn

LAST REVISION 03-11-10 | DATE PLOTTED => 02-JUN-2010 | TIME PLOTTED => 15:32

Dist	COUNTY	ROUTE	POST MILES TOTAL PROJECT	SHEET No.	TOTAL SHEETS
02	Sha	5	R44.0/58.0	64	142

REGISTERED CIVIL ENGINEER 06-01-10 DATE

06-01-10
PLANS APPROVAL DATE

REGISTERED PROFESSIONAL ENGINEER
FRANK RIVAS
No. 53592
Exp. 6/30/11
CIVIL
STATE OF CALIFORNIA

THE STATE OF CALIFORNIA OR ITS OFFICERS OR AGENTS SHALL NOT BE RESPONSIBLE FOR THE ACCURACY OR COMPLETENESS OF SCANNED COPIES OF THIS PLAN SHEET.

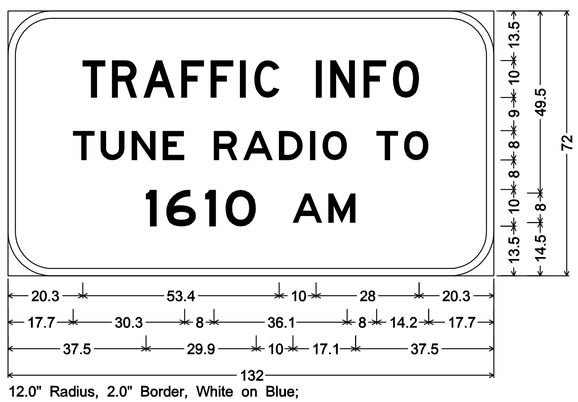

12.0" Radius, 2.0" Border, White on Blue;
[TRAFFIC INFO] D; [TUNE RADIO TO] E; [1610] E; [AM] E;

G81-65(Ca)
PM 45.57 & PM 57.40

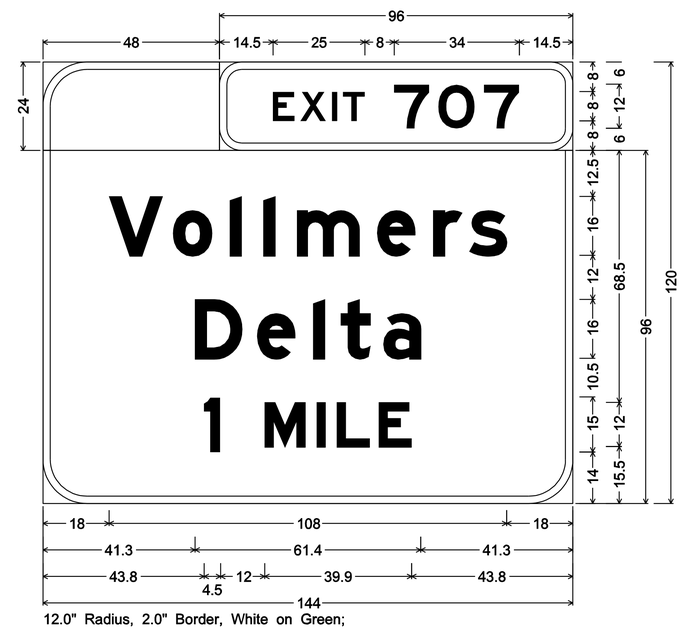

12.0" Radius, 2.0" Border, White on Green;
6.0" Radius, 2.0" Border, White on Green;
[EXIT] E; [707] E;
12.0" Radius, 2.0" Border, White on Green;
[Vollmers] E Mod; [Delta] E Mod; [1] E; [MILE] E Mod;

A B

G83(Ca)

SIGN DETAILS
NO SCALE

SD-9

REVISED BY	DATE REVISED

FRANK RIVAS — CALCULATED-DESIGNED BY
JEFF STEPPAT — CHECKED BY
ROB STINGER — FUNCTIONAL SUPERVISOR

STATE OF CALIFORNIA - DEPARTMENT OF TRANSPORTATION
Caltrans
TRAFFIC OPERATIONS

P:\proj1\02\2c450_plans\pse\22c450ob009.dgn

LAST REVISION 03-11-10 | DATE PLOTTED => 02-JUN-2010 | TIME PLOTTED => 15:32

Dist	COUNTY	ROUTE	POST MILES TOTAL PROJECT	SHEET No.	TOTAL SHEETS
02	Sha	5	R44.0/58.0	65	142

Frank J. Rivas 06-01-10
REGISTERED CIVIL ENGINEER DATE

06-01-10
PLANS APPROVAL DATE

REGISTERED PROFESSIONAL ENGINEER
FRANK RIVAS
No. 53592
Exp. 6/30/11
CIVIL
STATE OF CALIFORNIA

THE STATE OF CALIFORNIA OR ITS OFFICERS OR AGENTS SHALL NOT BE RESPONSIBLE FOR THE ACCURACY OR COMPLETENESS OF SCANNED COPIES OF THIS PLAN SHEET.

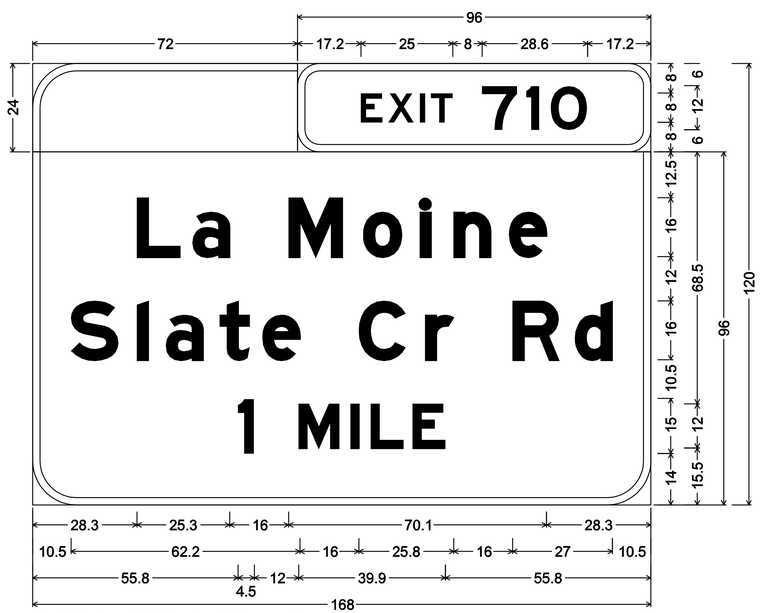

12.0" Radius, 2.0" Border, White on Green;
6.0" Radius, 2.0" Border, White on Green;
[EXIT] E; [710] E;
12.0" Radius, 2.0" Border, White on Green;
[La Moine] E Mod; [Slate Cr Rd] E Mod; [1] E; [MILE] E Mod;

C

G83(Ca)

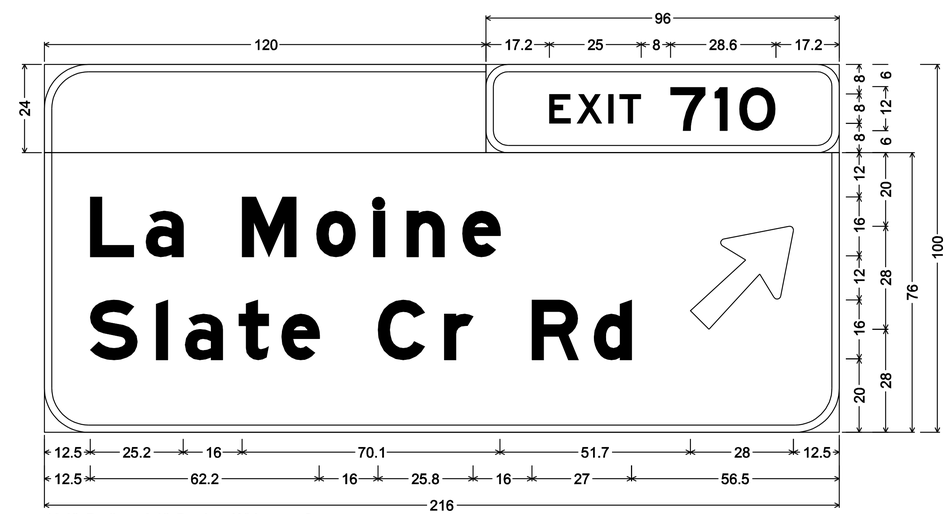

12.0" Radius, 2.0" Border, White on Green;
6.0" Radius, 2.0" Border, White on Green;
[EXIT] E; [710] E;
12.0" Radius, 2.0" Border, White on Green;
[La Moine] E Mod; [Slate Cr Rd] E Mod; Arrow 16CAP-2LV - 35.6" 45°;

D E

G85(Ca)

SIGN DETAILS

NO SCALE

SD-10

REVISED BY | DATE REVISED
FRANK RIVAS | JEFF STEPPAT
CALCULATED-DESIGNED BY | CHECKED BY
FUNCTIONAL SUPERVISOR
ROB STINGER

STATE OF CALIFORNIA - DEPARTMENT OF TRANSPORTATION
Caltrans
TRAFFIC OPERATIONS

P:\proj1\02\2c450_plans\pse\22c450ab010.dgn

LAST REVISION 03-11-10 | DATE PLOTTED => 02-JUN-2010 | TIME PLOTTED => 15:32

Dist	COUNTY	ROUTE	POST MILES TOTAL PROJECT	SHEET No.	TOTAL SHEETS
02	Sha	5	R44.0/58.0	66	142

Frank J. Rivas 06-01-10
REGISTERED CIVIL ENGINEER DATE

06-01-10
PLANS APPROVAL DATE

REGISTERED PROFESSIONAL ENGINEER
FRANK RIVAS
No. 53592
Exp. 6/30/11
CIVIL
STATE OF CALIFORNIA

THE STATE OF CALIFORNIA OR ITS OFFICERS OR AGENTS SHALL NOT BE RESPONSIBLE FOR THE ACCURACY OR COMPLETENESS OF SCANNED COPIES OF THIS PLAN SHEET.

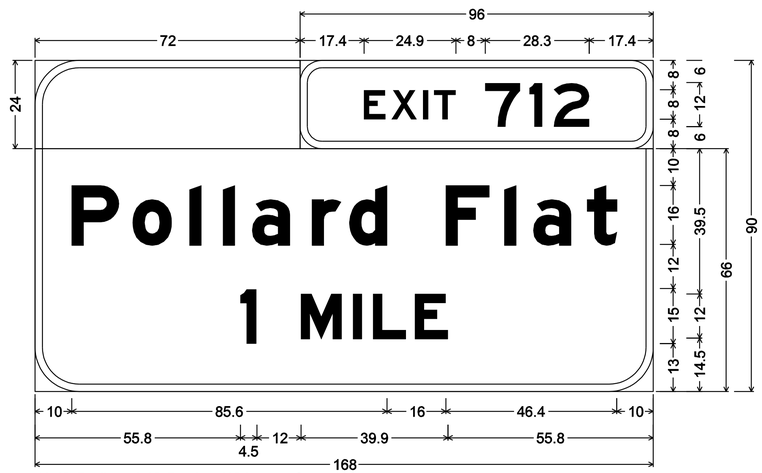

12.0" Radius, 2.0" Border, White on Green;
6.0" Radius, 2.0" Border, White on Green;
[EXIT] E; [712] E;
12.0" Radius, 2.0" Border, White on Green;
[Pollard Flat] E Mod; [1] E; [MILE] E Mod;

F I
G83(Ca)

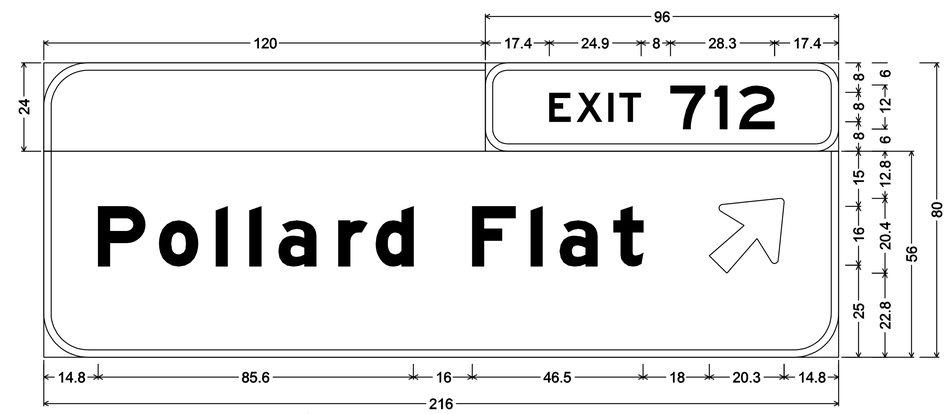

12.0" Radius, 2.0" Border, White on Green;
6.0" Radius, 2.0" Border, White on Green;
[EXIT] E; [712] E;
12.0" Radius, 2.0" Border, White on Green;
[Pollard Flat] E Mod; Arrow 16CAP-1L - 25.0" 45°;

G
G85(Ca)

SIGN DETAILS

NO SCALE

SD-11

REVISED BY	DATE REVISED

FRANK RIVAS — CALCULATED-DESIGNED BY
JEFF STEPPAT — CHECKED BY
ROB STINGER — FUNCTIONAL SUPERVISOR

STATE OF CALIFORNIA - DEPARTMENT OF TRANSPORTATION
TRAFFIC OPERATIONS

P:\proj1\02\2c450_plans\pse\22c450ob011.dgn

LAST REVISION 03-11-10 | DATE PLOTTED => 02-JUN-2010 | TIME PLOTTED => 15:32

Dist	COUNTY	ROUTE	POST MILES TOTAL PROJECT	SHEET No.	TOTAL SHEETS
02	Sha	5	R44.0/58.0	67	142

Frank J. Rivas 06-01-10
REGISTERED CIVIL ENGINEER DATE

06-01-10
PLANS APPROVAL DATE

REGISTERED PROFESSIONAL ENGINEER
FRANK RIVAS
No. 53592
Exp. 6/30/11
CIVIL
STATE OF CALIFORNIA

THE STATE OF CALIFORNIA OR ITS OFFICERS OR AGENTS SHALL NOT BE RESPONSIBLE FOR THE ACCURACY OR COMPLETENESS OF SCANNED COPIES OF THIS PLAN SHEET.

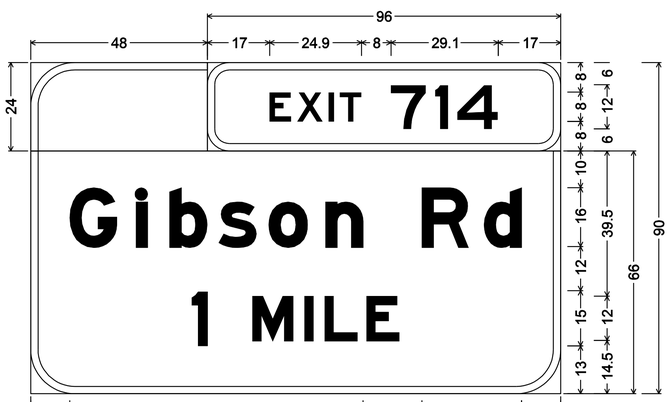

12.0" Radius, 2.0" Border, White on Green;
6.0" Radius, 2.0" Border, White on Green;
[EXIT] E; [714] E;
12.0" Radius, 2.0" Border, White on Green;
[Gibson Rd] E Mod; [1] E; [MILE] E Mod;

H K
G83(Ca)

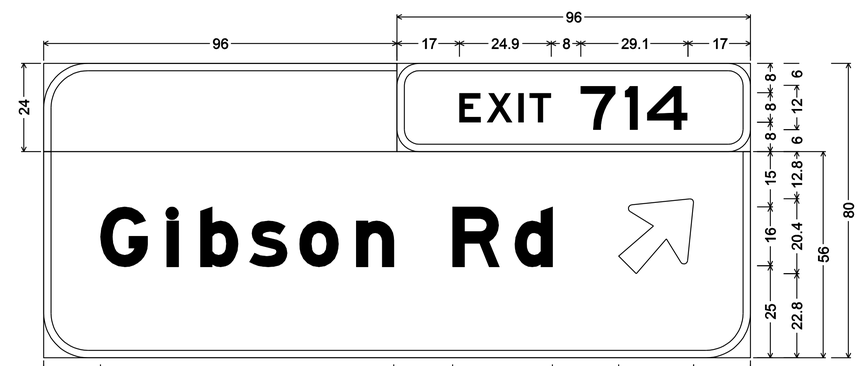

12.0" Radius, 2.0" Border, White on Green;
6.0" Radius, 2.0" Border, White on Green;
[EXIT] E; [714] E;
12.0" Radius, 2.0" Border, White on Green;
[Gibson Rd] E Mod; Arrow 16CAP-1L - 25.0" 45°;

J
G85(Ca)

SIGN DETAILS
NO SCALE

SD-12

REVISED BY | DATE REVISED
FRANK RIVAS | JEFF STEPPAT
CALCULATED-DESIGNED BY | CHECKED BY
FUNCTIONAL SUPERVISOR
ROB STINGER

STATE OF CALIFORNIA - DEPARTMENT OF TRANSPORTATION
Caltrans
TRAFFIC OPERATIONS

P:\proj1\02\2c450_plans\pse\22c450ob012.dgn

LAST REVISION 03-11-10 | DATE PLOTTED => 02-JUN-2010 | TIME PLOTTED => 15:33

BORDER LAST REVISED 4/11/2008 | RELATIVE BORDER SCALE IS IN INCHES 0 1 2 3 | USERNAME => s123119 | DGN FILE => 22c450ob012.dgn | CU 02 365 | EA 2C4501

Dist	COUNTY	ROUTE	POST MILES TOTAL PROJECT	SHEET No.	TOTAL SHEETS
02	Sha	5	R44.0/58.0	68	142

REGISTERED CIVIL ENGINEER 06-01-10 DATE

06-01-10
PLANS APPROVAL DATE

REGISTERED PROFESSIONAL ENGINEER FRANK RIVAS No. 53592 Exp. 6/30/11 CIVIL STATE OF CALIFORNIA

THE STATE OF CALIFORNIA OR ITS OFFICERS OR AGENTS SHALL NOT BE RESPONSIBLE FOR THE ACCURACY OR COMPLETENESS OF SCANNED COPIES OF THIS PLAN SHEET.

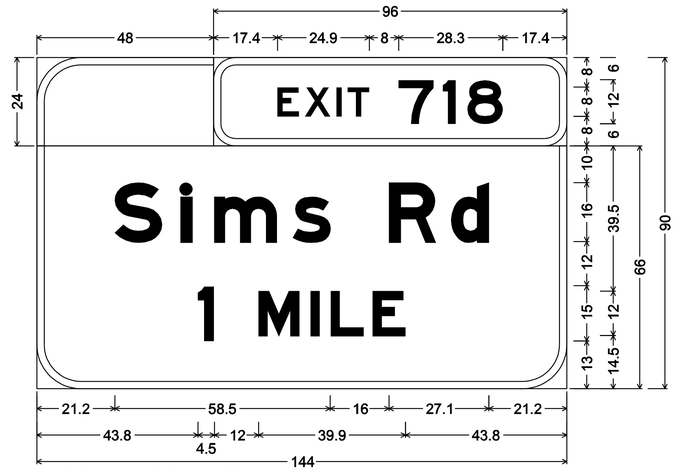

12.0" Radius, 2.0" Border, White on Green;
6.0" Radius, 2.0" Border, White on Green;
[EXIT] E; [718] E;
12.0" Radius, 2.0" Border, White on Green;
[Sims Rd] E Mod; [1] E; [MILE] E Mod;

L

G83(Ca)

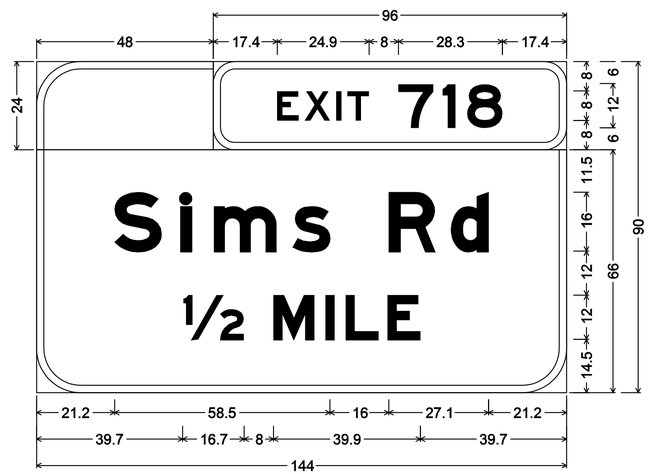

12.0" Radius, 2.0" Border, White on Green;
6.0" Radius, 2.0" Border, White on Green;
[EXIT] E; [718] E;
12.0" Radius, 2.0" Border, White on Green;
[Sims Rd] E Mod; [1½] E Mod; [MILE] E Mod;

O

G83(Ca)

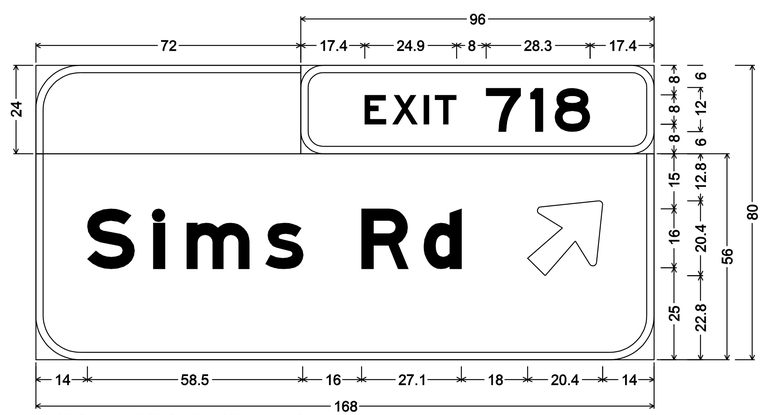

12.0" Radius, 2.0" Border, White on Green;
6.0" Radius, 2.0" Border, White on Green;
[EXIT] E; [718] E;
12.0" Radius, 2.0" Border, White on Green;
[Sims Rd] E Mod; Arrow 16CAP-1L - 25.0" 45°;

M N

G85(Ca)

SIGN DETAILS
NO SCALE

SD-13

STATE OF CALIFORNIA - DEPARTMENT OF TRANSPORTATION
Caltrans® TRAFFIC OPERATIONS

FUNCTIONAL SUPERVISOR: ROB STINGER
CALCULATED-DESIGNED BY: FRANK RIVAS
CHECKED BY: JEFF STEPPAT
REVISED BY
DATE REVISED

P:\proj1\02\2c450_plans\pse\22c450ob013.dgn

LAST REVISION 03-11-10
DATE PLOTTED => 02-JUN-2010
TIME PLOTTED => 15:33

Dist	COUNTY	ROUTE	POST MILES TOTAL PROJECT	SHEET No.	TOTAL SHEETS
02	Sha	5	R44.0/58.0	69	142

REGISTERED CIVIL ENGINEER 06-01-10 DATE

06-01-10
PLANS APPROVAL DATE

REGISTERED PROFESSIONAL ENGINEER BYRON H. STANLEY No. C60161 Exp. 6-30-10 CIVIL STATE OF CALIFORNIA

THE STATE OF CALIFORNIA OR ITS OFFICERS OR AGENTS SHALL NOT BE RESPONSIBLE FOR THE ACCURACY OR COMPLETENESS OF SCANNED COPIES OF THIS PLAN SHEET.

NOTES:

1. WASHER ASSEMBLY CONSIST OF TWO FLAT WASHERS, NUT, FIBER WASHER AND JAM NUT.
2. FOR LOCATION OF SIGNS AND CONCRETE BARRIER DETAILS SEE PROJECT PLANS.

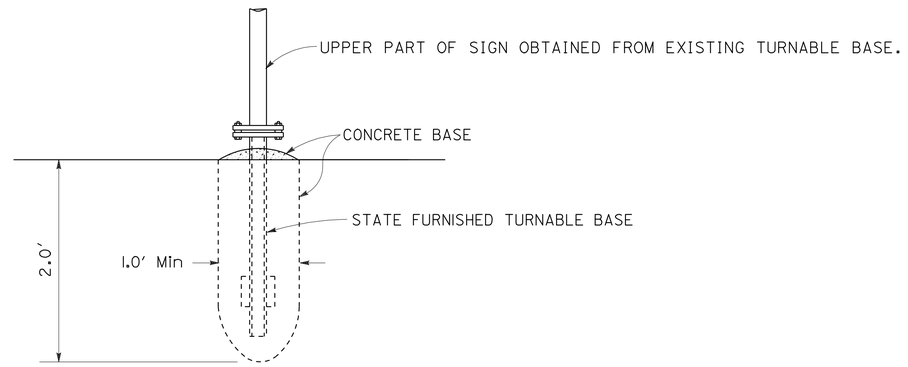

(RELOCATE TURNABLE ROADSIDE SIGN)

TURNABLE SIGN BASE INSTALLATION

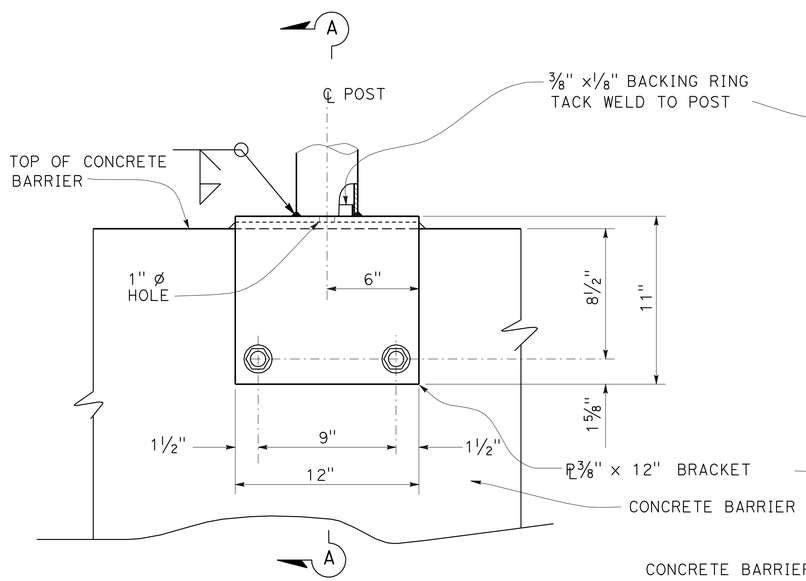

ELEVATION

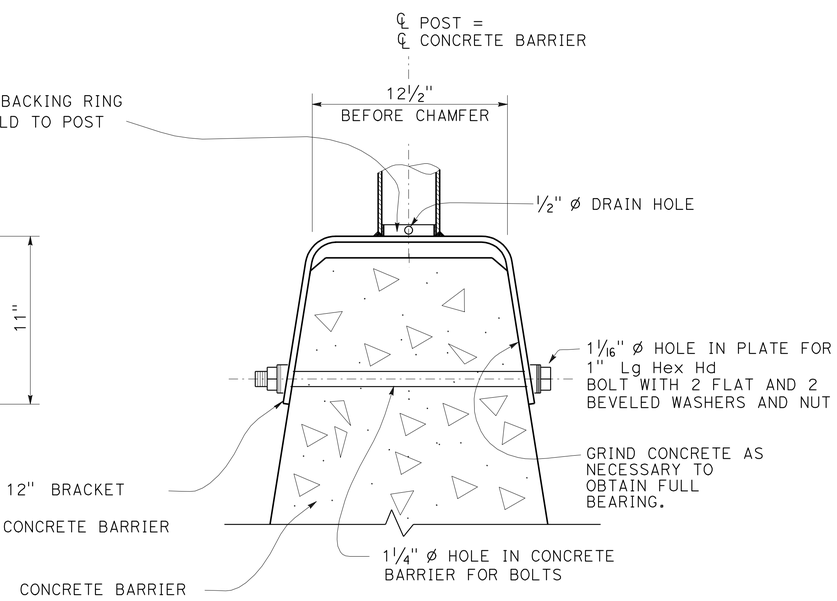

SECTION A-A

MOUNTING BRACKET FOR TEMPORARY SIGNS

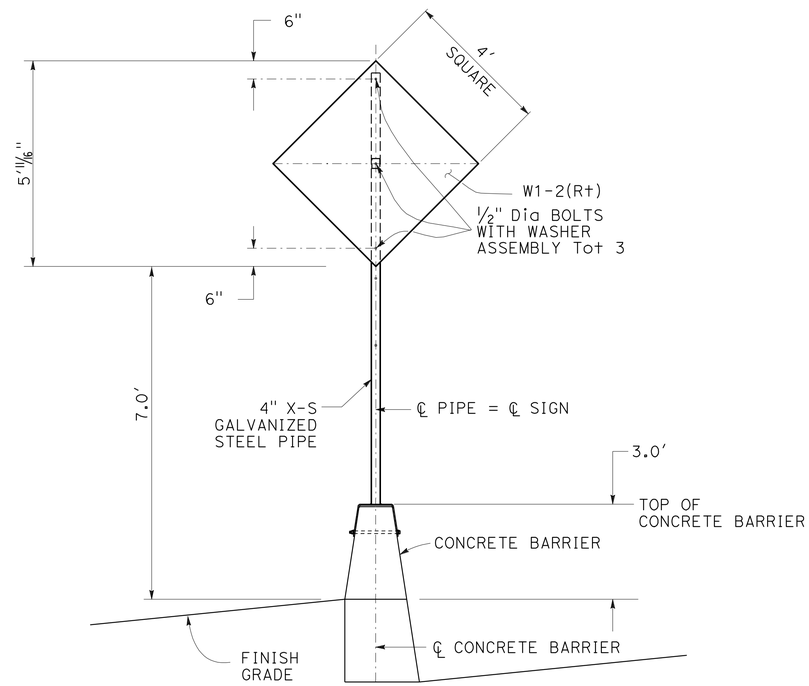

BARRIER MOUNTED SIGN

SIGN DETAILS

NO SCALE

SD-14

REVISED BY | DATE REVISED

BYRON STANLEY

CALCULATED-DESIGNED BY | CHECKED BY

FUNCTIONAL SUPERVISOR: STEVE TOPAL

STATE OF CALIFORNIA - DEPARTMENT OF TRANSPORTATION

Caltrans® **DESIGN**

P:\proj\02\2c450_plans\pse\22c450ob014.dgn

LAST REVISION 03-18-09 | DATE PLOTTED => 02-JUN-2010 | TIME PLOTTED => 15:33

Dist	COUNTY	ROUTE	POST MILES TOTAL PROJECT	SHEET No.	TOTAL SHEETS
02	Sha	5	R44.0/58.0	70	142

Frank F. Rivas 06-01-10
REGISTERED CIVIL ENGINEER DATE

06-01-10
PLANS APPROVAL DATE

REGISTERED PROFESSIONAL ENGINEER
FRANK RIVAS
No. 53592
Exp. 6/30/11
CIVIL
STATE OF CALIFORNIA

THE STATE OF CALIFORNIA OR ITS OFFICERS OR AGENTS SHALL NOT BE RESPONSIBLE FOR THE ACCURACY OR COMPLETENESS OF SCANNED COPIES OF THIS PLAN SHEET.

NOTE:

1. TURNABLE SIGN BASE TO BE STATE FURNISHED. SEE SIGN DETAILS.
2. (N) - NOT A SEPARATE PAY ITEM, FOR INFORMATION ONLY

ROADSIDE SIGNS

POSTMILE	SIGN No.	SIGN CODE	PANEL SIZE in x in	(N) LAMINATED WOOD BOX POST (TYPE M) No. & LENGTH	REMOVE ROADSIDE SIGN (Ea)	RELOCATE TURNABLE ROADSIDE SIGN (NOTE 1) (Ea)	INSTALL ROADSIDE SIGN (LAMINATED WOOD BOX POST) (Ea)
44.67	1-1	G83(Ca)	144 x 102		1		
45.57	HAR	G81-64A(Ca)	132 x 24	2 - 24′			1
		G81-65(Ca)	132 x 72				
47.14	1-2	G83(Ca)	120 x 102		1		
48.20	2-1	G83(Ca)	192 x 102		1		
48.98		W11-2	48 x 48			1	
		W3-5A	48 x 48				
49.09	2-2	G85(Ca)	156 x 78		1		
49.33	3-1	G85(Ca)	192 x 108		1		
49.58	3-2	G83(Ca)	180 x 72		1		
50.05		R75(Ca)	48 x 42			1	
		Spec-A	48 x 30				
50.16		R2-1(25)	24 x 30			1	
		R75-1(Ca)	42 x 42				
		R77(Ca)	48 x 30				
		R79(Ca)	48 x 30				
		R80(Ca)	48 x 30				
50.32		R2-1(35)	24 x 30			1	
		R76-1(Ca)	48 x 24				
		R77(Ca)	48 x 30				
		R79(Ca)	48 x 30				
		R80(Ca)	48 x 30				
51.08	4-1	G85(Ca)	156 x 84		1		
51.97	4-2	G83(Ca)	132 x 78		1		
52.06	5-1	G83(Ca)	180 x 72		1		
53.21	5-2	G85(Ca)	144 x 84		1		
54.47	6-1	G83(Ca)	132 x 78		1		
56.14	6-2	G83(Ca)	144 x 78		1		
57.17	7-1	G85(Ca)	114 x 84		1		
57.40	HAR	G81-64A(Ca)	132 x 24	2 - 24′			1
		G81-65(Ca)	132 x 72				
57.59	7-2	G85(Ca)	132 x 78		1		
58.03	8-1	G83(Ca)	156 x 72		1		
				TOTAL	15	4	2

OVERHEAD SIGNS

POSTMILE	SIGN No.	FURNISH SIGN STRUCTURE (TRUSS) (LB)	INSTALL SIGN STRUCTURE (TRUSS) (LB)	54" CIDH CONCRETE PILE (SIGN STRUCTURE) (LF)	60" CIDH CONCRETE PILE (SIGN STRUCTURE) (LF)
44.67	A	9,548	9,548	19	
47.14	B	12,204	12,204		22
48.20	C	11,658	11,658		22
49.09	D	14,123	14,123		22
49.33	E	14,213	14,213		22
49.58	F	9,790	9,790	19	
51.08	G	11,824	11,824	19	
51.97	H	8,667	8,667	18	
52.06	I	9,511	9,511	19	
53.21	J	11,350	11,350	19	
54.47	K	8,831	8,831	18	
56.14	L	8,367	8,367	18	
57.17	M	10,413	10,413	18	
57.59	N	10,007	10,007	18	
58.03	O	8,367	8,367	18	
	TOTAL	158,873	158,873	203	88

SIGN QUANTITIES
SQ-1

REVISED BY | DATE REVISED
FRANK RIVAS | JEFF STEPPAT
CALCULATED-DESIGNED BY | CHECKED BY
FUNCTIONAL SUPERVISOR
ROB STINGER

STATE OF CALIFORNIA - DEPARTMENT OF TRANSPORTATION
Caltrans® TRAFFIC OPERATIONS

P:\proj\02\2c450_plans\pse\22c450oc001.dgn

LAST REVISION 03-11-10 | DATE PLOTTED => 02-JUN-2010 | TIME PLOTTED => 15:33

Dist	COUNTY	ROUTE	POST MILES TOTAL PROJECT	SHEET No.	TOTAL SHEETS
02	Sha	5	R44.0/58.0	71	142

REGISTERED CIVIL ENGINEER 06-01-10 DATE

06-01-10
PLANS APPROVAL DATE

REGISTERED PROFESSIONAL ENGINEER FRANK RIVAS No. 53592 Exp. 6/30/11 CIVIL STATE OF CALIFORNIA

THE STATE OF CALIFORNIA OR ITS OFFICERS OR AGENTS SHALL NOT BE RESPONSIBLE FOR THE ACCURACY OR COMPLETENESS OF SCANNED COPIES OF THIS PLAN SHEET.

CONTRACTOR FURNISHED SIGNS

POSTMILE	SIGN No.	SIGN CODE	SIGN SIZE L x D (In x In)	SINGLE FACED	DOUBLE FACED	SIGN FACING MATERIAL: BACKGROUND: SHEETING COLOR	SIGN FACING MATERIAL: BACKGROUND: RETROREFLECTIVE ASTM TYPE	SIGN FACING MATERIAL: LEGEND: SHEETING COLOR	SIGN FACING MATERIAL: LEGEND: RETROREFLECTIVE ASTM TYPE	SIGN FACING MATERIAL: PROTECTIVE FILM: STANDARD	SIGN FACING MATERIAL: PROTECTIVE FILM: PREMIUM	SIGN PANEL SUBSTRATE MATERIAL (SQFT): ROADSIDE: SINGLE-SHEET: FRP 0.135"	ROADSIDE: FRAMED ALUMINUM: 0.063"	ROADSIDE: FRAMED ALUMINUM: 0.080"	OVERHEAD: FORMED PANEL	DESCRIPTION (REMARKS)
44.67	A	G83(Ca)	144 x 120	X		GREEN	VII	WHITE	VII						120.0	EXIT 707/Vollmers/Delta/1 MILE
45.57	HAR	G81-64A(Ca)	132 x 24	X		YELLOW	III	BLACK	III					22		WHEN FLASHING
45.57		G81-65(Ca)	132 x 72	X		BLUE	III	WHITE	III					66		TRAFFIC INFO/TUNE RADIO TO/1610 AM
47.14	B	G83(Ca)	144 x 120	X		GREEN	VII	WHITE	VII						120.0	EXIT 707/Vollmers/Delta/1 MILE
48.20	C	G83(Ca)	168 x 120	X		GREEN	VII	WHITE	VII						140.0	EXIT 710/La Moine/Slate Cr Rd/1 MILE
49.09	D	G85(Ca)	216 x 100	X		GREEN	VII	WHITE	VII						150.0	EXIT 710/La Moine/Slate Cr Rd ↗
49.33	E	G85(Ca)	216 x 100	X		GREEN	VII	WHITE	VII						150.0	EXIT 710/La Moine/Slate Cr Rd ↗
49.58	F	G83(Ca)	168 x 90	X		GREEN	VII	WHITE	VII						105.0	EXIT 712/Pollard Flat/1 MILE
51.08	G	G85(Ca)	216 x 80	X		GREEN	VII	WHITE	VII						120.0	EXIT 712/Pollard Flat ↗
51.97	H	G83(Ca)	144 x 90	X		GREEN	VII	WHITE	VII						90.0	EXIT 714/Gibson Rd/1 MILE
52.06	I	G83(Ca)	168 x 90	X		GREEN	VII	WHITE	VII						105.0	EXIT 712/Pollard Flat/1 MILE
53.21	J	G85(Ca)	192 x 80	X		GREEN	VII	WHITE	VII						106.7	EXIT 714/Gibson Rd ↗
54.47	K	G83(Ca)	144 x 90	X		GREEN	VII	WHITE	VII						90.0	EXIT 714/Gibson Rd/1 MILE
56.14	L	G83(Ca)	144 x 90	X		GREEN	VII	WHITE	VII						90.0	EXIT 718/Sims Rd/1 MILE
57.17	M	G85(Ca)	168 x 80	X		GREEN	VII	WHITE	VII						93.3	EXIT 718/Sims Rd ↗
57.40	HAR	G81-64A(Ca)	132 x 24	X		YELLOW	III	BLACK	III					22		WHEN FLASHING
57.40		G81-65(Ca)	132 x 72	X		BLUE	III	WHITE	III					66		TRAFFIC INFO/TUNE RADIO TO/1610 AM
57.59	N	G85(Ca)	168 x 80	X		GREEN	VII	WHITE	VII						93.3	EXIT 718/Sims Rd ↗
58.03	O	G83(Ca)	144 x 90	X		GREEN	VII	WHITE	VII						90.0	EXIT 718/Sims Rd/1/2 MILE
									TOTAL (SQFT)					176	1663.3	

SIGN QUANTITIES
SQ-2

REVISED BY | DATE REVISED
FRANK RIVAS | JEFF STEPPAT
CALCULATED-DESIGNED BY | CHECKED BY
FUNCTIONAL SUPERVISOR
ROB STINGER

STATE OF CALIFORNIA - DEPARTMENT OF TRANSPORTATION
Caltrans® TRAFFIC OPERATIONS

P:\proj1\02\2c450_plans\pse\22c450oc002.dgn

LAST REVISION 03-11-10 | DATE PLOTTED => 02-JUN-2010 | TIME PLOTTED => 15:33

Dist	COUNTY	ROUTE	POST MILES TOTAL PROJECT	SHEET No.	TOTAL SHEETS
02	Sha	5	R44.0/58.0	72	142

REGISTERED CIVIL ENGINEER 06-01-10 DATE

06-01-10
PLANS APPROVAL DATE

REGISTERED PROFESSIONAL ENGINEER BYRON H. STANLEY No. C60161 Exp. 6-30-10 CIVIL STATE OF CALIFORNIA

THE STATE OF CALIFORNIA OR ITS OFFICERS OR AGENTS SHALL NOT BE RESPONSIBLE FOR THE ACCURACY OR COMPLETENESS OF SCANNED COPIES OF THIS PLAN SHEET.

NOTE:
1. EXISTING UTILITY FACILITIES HAVE NOT BEEN POSITIVELY LOCATED.

ABBREVIATIONS

ITS INTELLIGENT TRANSPORTATION SYSTEMS

RAMPS ROADWAY QUANTITIES

DESCRIPTION		PM	RAMP LENGTH (N)	COLD PLANE ASPHALT CONCRETE PAVEMENT	HOT MIX ASPHALT	TACK COAT
				SQYD	TON	TON
VOLLMERS Rd	NB OFF	R45.66	1000	2770	400	1.3
	SB ON	R45.88	559	1790	260	0.8
	NB ON	R45.91	445	1450	210	0.7
	SB OFF	R46.19	1162	3215	465	1.5
La MOINE Rd	SB ON	R48.96	930	2685	385	1.3
	NB OFF	R49.18	1290	3505	505	1.6
	SB OFF	R49.32	1011	2865	415	1.3
	NB ON	R49.38	1405	3505	505	1.6
POLLARD FLAT	SB ON	R50.55	1414	3920	565	1.8
	NB OFF	R50.58	1235	3815	550	1.8
	NB ON	R50.91	576	1705	245	0.8
	SB OFF	R50.91	960	3020	435	1.4
GIBSON Rd	NB OFF	53.31	1204	4400	635	2.1
	NB ON	53.46	1176	2920	420	1.4
	SB ON	53.46	1128	3675	530	1.7
	SB OFF	53.50	1018	2955	425	1.4
SIMS Rd	NB OFF	57.21	1011	2375	375	1.2
	SB OFF	57.33	496	1565	265	0.8
	SB ON	57.52	358	1240	220	0.7
	NB ON	57.61	685	1535	260	0.8
		TOTAL		54,910	8070	26.0

ROADWAY QUANTITIES

MAINLINE POSTMILE LIMITS	COLD PLANE ASPHALT CONCRETE PAVEMENT						ROADWAY EXCAVATION		IMPORTED MATERIAL (SHOULDER BACKING)	SUBGRADE ENHANCEMENT GEOTEXTILE	CLASS 2 AGGREGATE BASE		HOT MIX ASPHALT						SHOULDER RUMBLE STRIP (HMA, GROUND-IN INDENTATIONS)		TACK COAT		CRACK EXISTING CONCRETE PAVEMENT		ASPHALTIC EMULSION (FOG SEAL COAT)	
	NORTHBOUND			SOUTHBOUND									NORTHBOUND			SOUTHBOUND										
	MEDIAN Shld	LANES/ TAPERS	OUTSIDE Shld	MEDIAN Shld	LANES/ TAPERS	OUTSIDE Shld	NB	SB			NB	SB	MEDIAN Shld	LANES/ TAPERS	OUTSIDE Shld	MEDIAN Shld	LANES/ TAPERS	OUTSIDE Shld	NB	SB	NB	SB	NB	SB	NB	SB
PM-PM	SQYD	SQYD	SQYD	SQYD	SQYD	SQYD	CY	CY	TON	SQYD	CY	CY	TON	TON	TON	TON	TON	TON	STA	STA	TON	TON	SQYD	SQYD	TON	TON
R44.0/R44.5	1175	5350	2695	1175	7040	3855	1675	290		1690	1030	130	170	3225	865	170	3040	895	52.8	52.8	8.2	8.9			1.5	1.5
R44.5/R45.0	1175	5210	4045	1175	7040	2100	1530	505		1830	985	230	170	3240	765	170	3040	895	52.8	52.8	8.9	8.5			1.6	1.6
R45.0/45.5	730	4365	2550	730	4365	1600		230				105	105	1885	365	105	1885	505	32.7	32.7	5.4	5.3			1.1	1.1
45.5/R46.0	800	6165	1780	800	5030	2315							115	2665	255	115	2540	335	35.9	49.6	6.7	6.0			1.4	1.2
R46.0/R46.5	1175	7355	2775	1175	7720	4070							170	3175	400	170	3335	585	52.8	52.8	8.4	9.4			1.3	2.0
R46.5/R47.0	1175	7040	3115	1175	7040	3485							170	3040	450	170	3040	500	52.8	52.8	8.3	8.5			1.8	1.4
R47.0/R47.5	1175	3520	4030	1175	7040	2530	2640	445		3520	1760	200	170	3420	580	170	3040	890	52.8	52.8	8.7	8.6			1.5	1.8
R47.5/R48.0	1175	7040	3475	1175	7040	2570		20				10	170	3040	500	170	3040	395	52.8	52.8	8.5	8.1			1.6	1.7
R48.0/R48.5	1175	3520	2375	1175	7040	2965	2640			3520	1760		170	3420	340	170	3040	425	52.8	52.8	8.0	8.2			1.6	1.4
R48.5/R49.0	960	5775	2095	960	6615	2425							140	2495	300	140	2860	350	43.3	43.3	6.6	7.5			1.3	1.2
R49.0/R49.5	1175	12,065	2855	1175	7740	4300							170	5210	410	170	3345	620	52.8	52.8	12.7	9.5			1.2	1.2
R49.5/R50.0	1175	10,695	2730	1175	7040	2630							170	4620	395	170	3040	380	52.8	52.8	11.4	8.1			1.2	1.2
R50.0/R50.5	1175	9915	3085	1175	7535	1185	710	570	80		325	260	170	4280	1280	170	3255	1065	52.8	52.8	10.9	8.6			1.5	1.5
R50.5/R51.0	1175	8855	2440	1175	7980	3000							170	3825	350	170	3445	430	52.8	52.8	9.6	9.1			1.4	1.4
R51.0/R51.5	1175	7390	2845	1175	7690	2825							170	3195	410	170	3320	405	52.8	52.8	8.5	8.7			1.6	1.6
R51.5/R52.0	750	4505	1835	750	4505	2090							110	1945	265	110	1945	300	33.8	33.8	5.2	5.4			1.0	1.0
R52.0/R52.5	845	5070	2230	845	4785	2180	85				40		120	2190	455	120	2070	315	38.0	35.9	6.1	5.7			1.4	0.8
R52.5/53.0	400	2395	450	400	2885	795	130				60		55	1035	270	55	1245	115	18.0	18.0	2.7	3.1			0.5	0.5
53.0/53.5	1175	8615	3815	1175	8115	3385							170	3720	550	170	3505	490	52.8	52.8	10.0	9.4			1.6	1.6
53.5/R54.0	1175	7980	4215	1175	7820	3270							170	3450	605	170	3380	470	52.8	52.8	9.7	9.1			1.6	1.6
R54.0/R54.5	1175	7040	3125	1175	7040	3610	2640				1760		170	3040	450	170	3040	520	52.8	52.8	8.3	8.5			1.5	1.5
R54.5/R55.0	1175	3520	2940	1175	7040	3745				3520			170	3420	425	170	3040	540	52.8	52.8	8.2	8.6			1.5	1.5
R55.0/R55.5	1175	7040	3160	1175	7040	1795		885		1180		590	170	3040	455	170	3040	895	52.8	52.8	8.3	8.2			1.5	1.5
R55.5/R56.0	1175	7040	2790	1175	7040	3530							170	3040	400	170	3040	510	52.8	52.8	8.1	8.5			1.6	1.6
R56.0/56.5	1800	7040	1370	1800	7040	1505			145				640	3040	800	640	3040	805	52.8	52.8	10.6	10.6	4930	4930	0.4	0.4
56.5/57.0	2125	7040	585	2125	7040	585		65	240			30	920	3040	715	920	3040	835	52.8	52.8	10.3	10.4	8215	8215		
57.0/57.5	1715	7510	445	1715	6990	445	1545	1495	240		1030	995	990	3740	955	990	3475	945	50.7	50.7	11.0	10.4	7885	7885		
57.5/58.0	2405	7040	585	2405	7720	585			240				1040	3040	755	1040	3335	775	52.8	52.8	10.7	11.4	8215	8215		
SUBTOTAL	33,680	186,095	70,435	33,680	189,015	69,375							7,295	88,475	14,765	7,295	82,460	16,190								
DIRECTIONAL TOTAL	290,210			292,070			13,595	4,505			8,750	2,550	110,535			105,945			1,361.2	1,372.8	240.0	232.3	29,245	29,245	34.2	33.8
FROM RAMPS	54,910												8,070								26.0					
FROM DIKE (Q-2)													1,924													
FROM WALKWAY (Q-2)											75															
FROM Misc AREA (Q-2)													323													
TOTAL	637,190						18,100		945	15,260	11,375		226,797						2,734.0		498.3		58,490		68.0	

SUMMARY OF QUANTITIES

Q-1

REVISED BY | DATE REVISED
RUSSELL FLOOD | BYRON STANLEY
CALCULATED-DESIGNED BY | CHECKED BY
FUNCTIONAL SUPERVISOR
STEVE TOPAL

STATE OF CALIFORNIA - DEPARTMENT OF TRANSPORTATION
Caltrans
DESIGN

P:\proj1\02\2c450_plans\pse\22c450pa001.dgn

LAST REVISION 03-18-09 | DATE PLOTTED => 02-JUN-2010 | TIME PLOTTED => 15:33

Dist	COUNTY	ROUTE	POST MILES TOTAL PROJECT	SHEET No.	TOTAL SHEETS
02	Sha	5	R44.0/58.0	73	142

REGISTERED CIVIL ENGINEER 06-01-10 DATE

06-01-10
PLANS APPROVAL DATE

REGISTERED PROFESSIONAL ENGINEER BYRON H. STANLEY No. C60161 Exp. 6-30-10 CIVIL STATE OF CALIFORNIA

THE STATE OF CALIFORNIA OR ITS OFFICERS OR AGENTS SHALL NOT BE RESPONSIBLE FOR THE ACCURACY OR COMPLETENESS OF SCANNED COPIES OF THIS PLAN SHEET.

NOTE:

1. FLUSH EXISTING EDGE DRAINS ON OUTSIDE SHOULDERS AND RAMPS ONLY.
2. * INCLUDED IN ROADWAY QUANTITIES TABLE
3. ** INCLUDED IN MBGR QUANTITIES TABLE

PLACE HOT MIX ASPHALT DIKE

DIRECTION	MAINLINE POSTMILE LIMITS	TYPE A	TYPE D	TYPE F	HOT MIX ASPHALT *
	PM-PM	LF	LF	LF	TON
NORTHBOUND	R44.00/R44.06		348		22
	R44.07/R44.14			340	5
	R44.17/R44.23		306		19
	R44.36/R44.44		372		23
	R44.45/R44.63			950	14
	R44.69/R44.73		266		17
	R44.88/R45.01		634		40
	R45.04/R45.11		370		23
	R45.12/R45.25			644	9
	45.44/R44.50			319	5
	R45.99/R46.12			688	10
	R46.55/R46.70			802	11
	R46.92/R47.22			1584	23
	R47.50/R47.76		1320		83
	R47.83/R47.89			316	5
	R48.38/R48.54			845	12
	R48.92/R49.14			1152	16
	R51.73/R51.79			293	4
	R51.98/R52.10		637		40
	R52.25/R52.28			154	2
	52.81/52.82			60	1
	52.91/53.06			779	11
	53.44/R53.76			1713	24
	R53.83/R53.89			330	5
	R54.43/R54.69			1385	20
	R54.91/R55.06			796	11
	R55.54/R55.90			1917	27
	56.36/56.42			326	5
	56.51/56.72			1129	16
	57.12/57.17			262	4
	57.44/57.52			416	6
	57.81/57.86			264	4
SOUTHBOUND	R44.12/R44.24		630		40
	R44.36/R44.50		769		49
	R44.59/R44.75		863		55
	R44.89/R45.15		1398		89
	R45.72/R45.89		880		56
	R45.99/R46.03			211	3
	R47.26/R47.55		1456		92
	R47.58/R47.68		530		34
	R48.96/R49.31		1860		118
	R51.99/R52.07		426		27
	R52.24/R52.26			107	2
	52.97/53.01			210	3
	R55.02/R55.13		575		36
	R55.55/R55.67			629	9
	R55.84/R56.11		1431		91
	56.22/56.37		763		48
	56.43/56.55		640		40
	56.62/56.79		891		56
	56.80/56.93		693		44
	56.93/56.97		175		11
	56.97/57.08		583		37
	57.16/57.18		124		8
SUBTOTAL			18,940	18,621	1465
FROM RAMPS TABLE			6711	776	435
FROM DQ-4		803.5			24
TOTAL		803.5	25,651	19,397	1,924

PLACE HMA (Misc AREA)

DESCRIPTION		HOT MIX ASPHALT *
	SQYD	TON
TRANSITION RAILING (TYPE WB)	300.0	72
FROM DQ-4	1,044.6	251
TOTAL	1,344.6	323

ITS WALKWAY QUANTITIES

		REMOVE CONCRETE (Misc)	IMPORTED BORROW	CLASS 2 AGGREGATE BASE (*)	MINOR CONCRETE (MINOR Str) (**)	MINOR CONCRETE (Misc Const)	VEGETATION CONTROL (MINOR Conc)	PIPE HANDRAILING (POST TYPE)
		CY	CY	CY	CY	CY	SQYD	LF
PM	LINE	-	-	-	-	-	-	-
R45.95	"V1"	2.2		12	3.5	2.8		25
	"V2"						15	
R50.81	"P1"		80	25	4	15.1		
	"P2"			4		0.7		
53.32	"G1"			10		2.8		
	"G2"			4		0.7		
57.41	"S1"	3.5		10		2.8	15	
57.89	"S2"			10		2.3		
	TOTAL	5.7	80	75	7.5	27.2	30	25

RAMPS HOT MIX ASPHALT DIKE

DESCRIPTION		RIGHT	LEFT	TYPE D	TYPE F	HOT MIX ASPHALT *
				LF	LF	TON
VOLLMERS Rd	NB OFF	X		1000		63
	NB ON	X		360		23
	SB OFF		X	715		45
	SB OFF	X		474		30
	SB ON		X	228		14
La MOINE Rd	NB ON	X		522		33
GIBSON Rd	NB OFF	X		1280		81
	NB ON	X		250		16
	SB OFF	X		977		62
	SB ON	X		905		57
SIMS Rd	NB OFF	X			316	4
	SB OFF	X			460	7
TOTAL				6,711	776	435

EROSION CONTROL

	EROSION CONTROL (HYDROSEED)
	ACRE
TOTAL	0.9

WATER POLLUTION CONTROL

	TEMPORARY FIBER ROLL	TEMPORARY SILT FENCE
	LF	LF
TOTAL	1,000	1,000

EDGE DRAIN QUANTITIES

MAINLINE AND RAMPS	FLUSH EXISTING EDGE DRAIN (SEE NOTE 1)	3" PLASTIC PIPE (EDGE DRAIN)	CLEANOUT ASSEMBLY (EDGE DRAIN)	PAVEMENT MARKER (NON-REFLECTIVE -RECESSED)
				TYPE A
	LF	LF	EA	EA
TOTAL	147,840	14,784	95	740

SUMMARY OF QUANTITIES

Q-2

REVISED BY	DATE REVISED
R. WEBER	04-27-10

CALCULATED-DESIGNED BY / CHECKED BY

FUNCTIONAL SUPERVISOR: STEVE TOPAL

RUSSELL FLOOD / BYRON STANLEY

STATE OF CALIFORNIA - DEPARTMENT OF TRANSPORTATION

Caltrans DESIGN

P:\proj1\02\2c450_plans\pse\22c450pa002.dgn

LAST REVISION 03-18-09 | DATE PLOTTED => 02-JUN-2010 | TIME PLOTTED => 15:33

Dist	COUNTY	ROUTE	POST MILES TOTAL PROJECT	SHEET No.	TOTAL SHEETS
02	Sha	5	R44.0/58.0	74	142

REGISTERED CIVIL ENGINEER 06-01-10 DATE

06-01-10
PLANS APPROVAL DATE

REGISTERED PROFESSIONAL ENGINEER BYRON H. STANLEY No. C60161 Exp. 6-30-10 CIVIL STATE OF CALIFORNIA

THE STATE OF CALIFORNIA OR ITS OFFICERS OR AGENTS SHALL NOT BE RESPONSIBLE FOR THE ACCURACY OR COMPLETENESS OF SCANNED COPIES OF THIS PLAN SHEET.

METAL BEAM GUARD RAIL QUANTITIES

LOCATION	MAINLINE POSTMILE LIMITS PM-PM	LOCATION	BRIDGE APPROACH/ DEPARTURE/ QUADRANT	MINOR CONCRETE (MINOR STRUCTURE) CY	TRANSITION RAILING (TYPE WB) EA	ALTERNATIVE FLARED TERMINAL SYSTEM EA	REMOVE MBGR LF	MBGR STEEL POST LF	(N) BURIED POST ANCHOR EA	END ANCHOR ASSEMBLY (TYPE SFT) EA	END CAP TYPE A EA	OBJECT MARKER (TYPE L1) EA	REMOVE MARKER ** EA
NB	R44.06/R44.14						400.0	375.0	1	1		1	1
NB	R44.44/R44.69						1337.5	1312.5	1	1		1	2
NB	R45.11/R45.52	DOG CREEK BRIDGE	APPROACH	0.65	1		1150.0	1112.5	1			2	1
NB	R45.93/R45.95 *	VOLLMERS Rd UC	APPROACH	0.65	1	1	62.5	87.5				1	1
NB	R45.98/R46.12	06-0181	DEPARTURE				750.0	737.5		1	1		
NB	R46.54/R46.83						1537.5	1512.5	2			1	1
NB	R46.92/R47.30						1975.0	1950.0	2			1	1
NB	R47.83/R47.89					1	325.0	275.0		1		1	1
NB	R48.19/R48.60					1	2175.0	2125.0		1		1	1
NB	R48.80/R48.82 *	SLATE CREEK BRIDGE	APPROACH	0.65	1	1	62.5	87.5				1	
NB	R48.92/R49.14	06-0028	DEPARTURE				1175.0	1162.5		1	1		
NB	R49.48/R49.56	CMS				1	412.5	362.5		1		1	
NB	R51.73/R51.79	SACRAMENTO RIVER BOH 06-0192R	APPROACH	0.65	1	1	337.5	275.0				1	1
NB	R52.10/R52.12	SACRAMENTO RIVER BOH	APPROACH	0.65	1		87.5	62.5	1			1	1
NB	R52.25/R52.28	06-0193R	DEPARTURE				137.5	125.0	1		1		
NB	R52.36/52.82	FRONTAGE Rd UC 06-0194R	APPROACH	0.65	1		900.0	862.5	1			1	1
NB	52.90/53.06					1	825.0	775.0		1		1	2
NB	53.16/53.27						575.0	550.0	2			1	1
NB	53.44/53.76						1712.5	1687.5	1	1			1
NB	R53.82/R53.89						375.0	350.0	1	1		1	1
NB	R54.12/R54.26					1	750.0	700.0		1		1	1
NB	R54.43/R54.71					1	1462.5	1412.5		1		1	1
NB	R54.90/R55.06					1	825.0	775.0		1		1	1
NB	R55.54/R55.91					1	1912.5	1862.5		1		1	1
NB	56.36/56.43					1	400.0	350.0		1		1	1
NB	56.51/56.72					1	1062.5	1012.5		1		1	1
NB	57.03/57.17						800.0	775.0	1	1		1	1
NB	57.24/57.35	SIMS ROAD/NB OFF-RAMP				1	562.5	512.5		1		1	1
NB	57.39/57.42 *	SIMS ROAD UC	APPROACH	0.65	1		62.5	112.5	1			1	
NB	57.44/57.52	06-0111	DEPARTURE				400.0	387.5		1	1		
NB	57.68/57.86					1	925.0	875.0		1		1	1
NB	57.87/57.90 *	CMS				1	125.0	150.0	1			1	1
SB	57.45/57.53 *	SIMS ROAD SB OFF-RAMP				1	362.5	312.5	1	1			
SB	57.47/57.44 *	SIMS ROAD UC-06 0111	APPROACH	0.65	1	1	62.5	87.5				1	1
SB	R55.69/R55.55						762.5	737.5	1	1		1	1
SB	R54.49/R54.47	GIBSON Rd OVERHEAD SIGN	SEE NOTE 2			1	0	50.0		1		1	
SB	53.01/52.97						250.0	225.0	1	1		1	1
SB	52.87/52.90 *	FRONTAGE Rd UC 06-0194L	APPROACH	0.65	1	1	62.5	87.5				1	1
SB	R52.28/R52.25	SACRAMENTO RIVER BOH 06-0193L	APPROACH	0.65	1		100.0	62.5	1			1	
SB	R51.99/R51.97	SACRAMENTO RIVER BOH 06-0192L	APPROACH	0.65	1		75.0	37.5	1			1	
SB	R49.21/R49.19	CMS				1	112.5	100.0		1		1	1
SB	R48.99/R48.92	SLATE CREEK Br 06-0028	APPROACH	0.65	1	1	412.5	350.0				1	
SB	R46.51/R46.46						262.5	237.5	2			1	1
SB	R46.26/R46.08	VOLLMERS Rd SB OFF RAMP				1	962.5	912.5		1		1	1
SB	R46.03/R45.99	VOLLMERS Rd UC 06-0181	APPROACH	0.65	1	1	250.0	187.5				1	1
SB	R45.72/R45.70	DOG CREEK Br 06-0027	APPROACH	0.65	1		87.5	50.0	1			1	1
SB	R45.22/R45.16						362.5	337.5	1	1		1	
SB	R44.33/R44.28						300.0	275.0	1	1		1	
SB	R44.14/R44.12	CMS				1	100.0	50.0		1		1	1
LOCAL ROADS	R49.15	La MOINE ROAD OC 06-0180	SOUTHWEST	0.65	1	1	62.5					1	1
			NORTHWEST	0.65	1	1	62.5					1	
			SOUTHEAST	0.65	1	1	62.5					1	
			NORTHEAST	0.65	1	1	900.0	837.5				1	1
	R50.81	POLLARD FLAT OC 06-0176	SOUTHWEST	0.65	1	1	62.5					1	1
			NORTHWEST	0.65	1	1	62.5					1	
			SOUTHEAST	0.65	1	1	62.5					1	
			NORTHEAST	0.65	1	1	62.5					1	1
	53.32	GIBSON ROAD OC 06-0179	SOUTHWEST	0.65	1		837.5	775.0		1		1	1
			NORTHWEST	0.65	1	1	62.5					1	1
			SOUTHEAST	0.65	1	1	812.5	750.0				1	1
		*	NORTHEAST	0.65	1		87.5	100.0	1			1	1
SUBTOTAL				16.90 ***	26	35	33262.5	31275.0	28	30	4	56	47
SUBTOTAL FROM ITS WALKWAY (Q-2)				7.50									
SUBTOTAL FROM PDD-2													68
SUBTOTAL FROM DQ-4				13.55									
TOTAL				37.95	26	35	33,262.5	31275.0	28	30	4	56	115

NOTE:

1. (N) - NOT A SEPARATE PAY ITEM, FOR INFORMATION ONLY.
2. CURRENTLY NO MBGR AT THIS LOCATION.
3. REPLACE ASPHALT CONCRETE SURFACING EXACT LOCATIONS TO BE DETERMINED BY THE ENGINEER.
4. * MBGR TO BE EXTENDED IN THESE LOCATIONS.
5. ** 47 OBJECT MARKERS AND 68 POSTMILE MARKS.
6. *** TRANSITION BLOCK

ALTERNATIVE FLARED TERMINAL SYSTEM

SYSTEM	MANUFACTURER
TYPE FLEAT	ROAD SYSTEMS, Inc
TYPE SRT	TRINITY INDUSTRIES, Inc
TYPE X-TENSION	BARRIER SYSTEMS, Inc

REPLACE ASPHALT CONCRETE SURFACING

TOTAL FROM C-1

CY
671

SUMMARY OF QUANTITIES

Q-3

REVISED BY | DATE REVISED
ERIC COVINGTON | BYRON STANLEY
CALCULATED-DESIGNED BY | CHECKED BY
FUNCTIONAL SUPERVISOR: STEVE TOPAL

STATE OF CALIFORNIA - DEPARTMENT OF TRANSPORTATION
Caltrans DESIGN

P:\proj1\02\2c450_plans\pse\22c450pa003.dgn

LAST REVISION 03-18-09 | DATE PLOTTED => 02-JUN-2010 | TIME PLOTTED => 15:33

Dist	COUNTY	ROUTE	POST MILES TOTAL PROJECT	SHEET No.	TOTAL SHEETS
02	Sha	5	R44.0/58.0	75	142

REGISTERED ELECTRICAL ENGINEER 06-01-10

PLANS APPROVAL DATE 06-01-10

REGISTERED PROFESSIONAL ENGINEER IAN TURNBULL No. E16780 Exp. 9-30-10 ELECTRICAL STATE OF CALIFORNIA

THE STATE OF CALIFORNIA OR ITS OFFICERS OR AGENTS SHALL NOT BE RESPONSIBLE FOR THE ACCURACY OR COMPLETENESS OF ELECTRONIC COPIES OF THIS PLAN SHEET.

NOTES (THIS SHEET):

1. RC PB AND REPLACE WITH ITS NODE PB
2. REMOVE EXISTING CONDUCTORS, 2"C, 2#8 INSTALL 4#8, 2#8G (RWIS), 3#6, 1#6G (FB) (SEE ITS NODE INSULATION COLOR CODE)
3. RC PB AND REPLACE WITH No. 6 PB
4. SEE SHEET C-8 FOR GENERAL LOCATION

ABBREVIATIONS:

SLI	SENSOR LEAD-IN CABLE
TC	TELEPHONE CABLE
Cab	CABINET
CTID	CALTRANS IDENTIFICATION NUMBER
ITS	INTELLIGENT TRANSPORTATION SYSTEM
†c	EXISTING TELEPHONE CABLE
BCG	BARE COPPER GROUND
RU	RACK UNIT
UV	ULTRAVIOLET
Util	UTILITY
PDA	POWER DISTRIBUTION ASSEMBLY

LEGEND:

(PB) OBJECT MARKER (TYPE PB) AND PULL BOX PAVING

FLASHING BEACON

ITS NODE INSULATION COLOR CODE

CIRCUIT	CONDUCTOR	INSULATION
BETWEEN BBS Cab AND ITS NODE Cab	UNGROUNDED UTILITY POWER	BLACK
	GROUNDED UTILITY POWER	WHITE
BETWEEN BBS Cab AND RWIS	UNGROUNDED BBS POWER	BLUE
	GROUNDED BBS POWER	WHITE

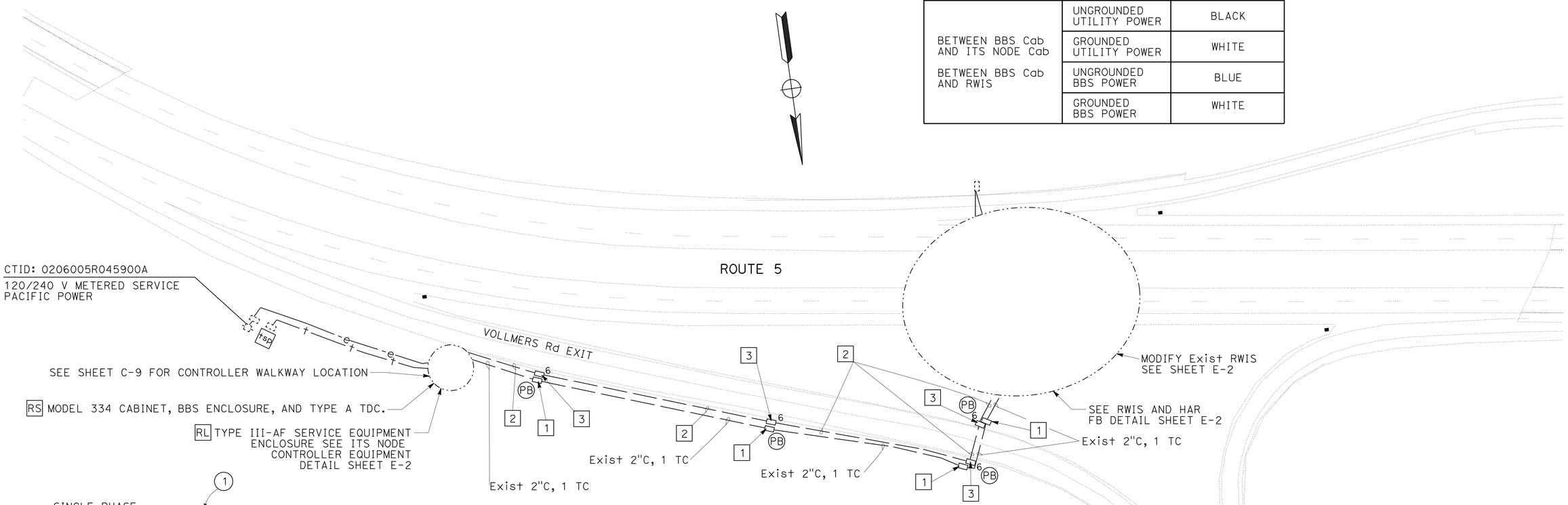

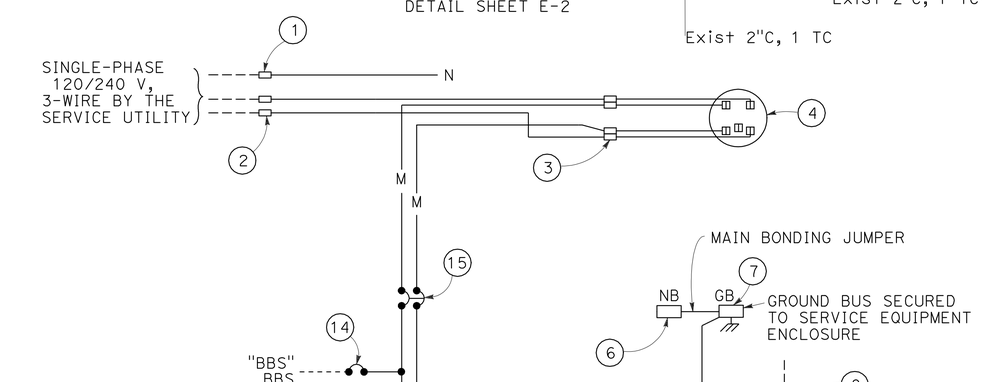

120/240 V SERVICE EQUIPMENT ENCLOSURE WIRING DIAGRAM

EXISTING TRAFFIC MANAGEMENT SYSTEM ELEMENTS TO BE MAINTAINED

COUNTY	ROUTE	PM	TYPE	LOCATION
Sha	5	R44.17	CMS	LAKEHEAD SRRA
Sha	5	R45.75	CCTV	VOLLMERS Rd UC
Sha	5	R45.85	RWIS	VOLLMERS Rd UC
Sha	5	R49.19	CMS	La MOINE Rd
Sha	5	R49.19	CCTV	La MOINE Rd OC
Sha	5	R49.19	CMS	La MOINE Rd
Sha	5	57.87	CCTV	SIMS Rd
Sha	5	57.87	CMS	SIMS Rd

THIS PLAN IS ACCURATE FOR ELECTRICAL WORK ONLY.

CLOSED CIRCUIT TELEVISION SYSTEM HIGHWAY ADVISORY RADIO SYSTEM

SCALE: 1" = 50'

E-1

REVISED BY	DATE REVISED
	03/26/10

CALCULATED-DESIGNED BY: KEITH KOEPPEN
CHECKED BY: STEVE S. LEE
FUNCTIONAL SUPERVISOR: IAN TURNBULL

STATE OF CALIFORNIA - DEPARTMENT OF TRANSPORTATION
Caltrans ELECTRICAL DESIGN

P:\proj1\02\2c450_plans\pse\22c450ua001.dgn

LAST REVISION 01-04-10 | DATE PLOTTED => 02-JUN-2010 | TIME PLOTTED => 15:33

Dist	COUNTY	ROUTE	POST MILES TOTAL PROJECT	SHEET No.	TOTAL SHEETS
02	Sha	5	R44.0/58.0	76	142

Ian Turnbull 06-01-10
REGISTERED ELECTRICAL ENGINEER

06-01-10
PLANS APPROVAL DATE

REGISTERED PROFESSIONAL ENGINEER IAN TURNBULL No. E16780 Exp. 9-30-10 ELECTRICAL STATE OF CALIFORNIA

THE STATE OF CALIFORNIA OR ITS OFFICERS OR AGENTS SHALL NOT BE RESPONSIBLE FOR THE ACCURACY OR COMPLETENESS OF ELECTRONIC COPIES OF THIS PLAN SHEET.

NOTES (THIS SHEET):

1. RL TYPE III-AF SERVICE EQUIPMENT ENCLOSURE SEE WIRING DIAGRAM SHEET E-1 CTID: 0206005R045900A
2. 2"C, 2#8, 1#8G (BBS), 2#12, 1#12G (TDC)
3. 3"C, 4#12, 2#12G (SEE ITS NODE INSULATION COLOR CODE SHEET E-1)
4. 4"C, 1 TC, STATE-FURNISHED CCTV CABLE
5. 3"C, 2#8, 1#8G (BBS), 4#8, 2#8G (RWIS), 3#6 1#6G (FB), 4#12, 2#12G (SEE ITS NODE AND RWIS INSULATION COLOR CODE SHEET E-1)
6. INSTALL STATE-FURNISHED BBS/HAR FB CONTROLLER CABINET
7. INSTALL STATE-FURNISHED ITS NODE EQUIPMENT CABINET
8. COIL CABLES WITH 6' OF SLACK IN BOTTOM OF CABINET
9. 2"C, STATE-FURNISHED CCTV CABLE
10. RC EXISTING CONDUCTORS, 2"C, 2#8 INSTALL 4#8, 2#8G (RWIS), 3#6, 1#6G (FB) (SEE ITS NODE INSULATION COLOR CODE)
11. AB SURFACE PAVEMENT SENSOR
12. INSTALL SURFACE PAVEMENT SENSOR IN CENTER OF LANE
13. INSTALL SURFACE PAVEMENT SENSOR WITH SUBSURFACE TEMPERATURE PROBE IN CENTER OF LANE
14. SEE SHEET C-8 FOR GENERAL LOCATION.

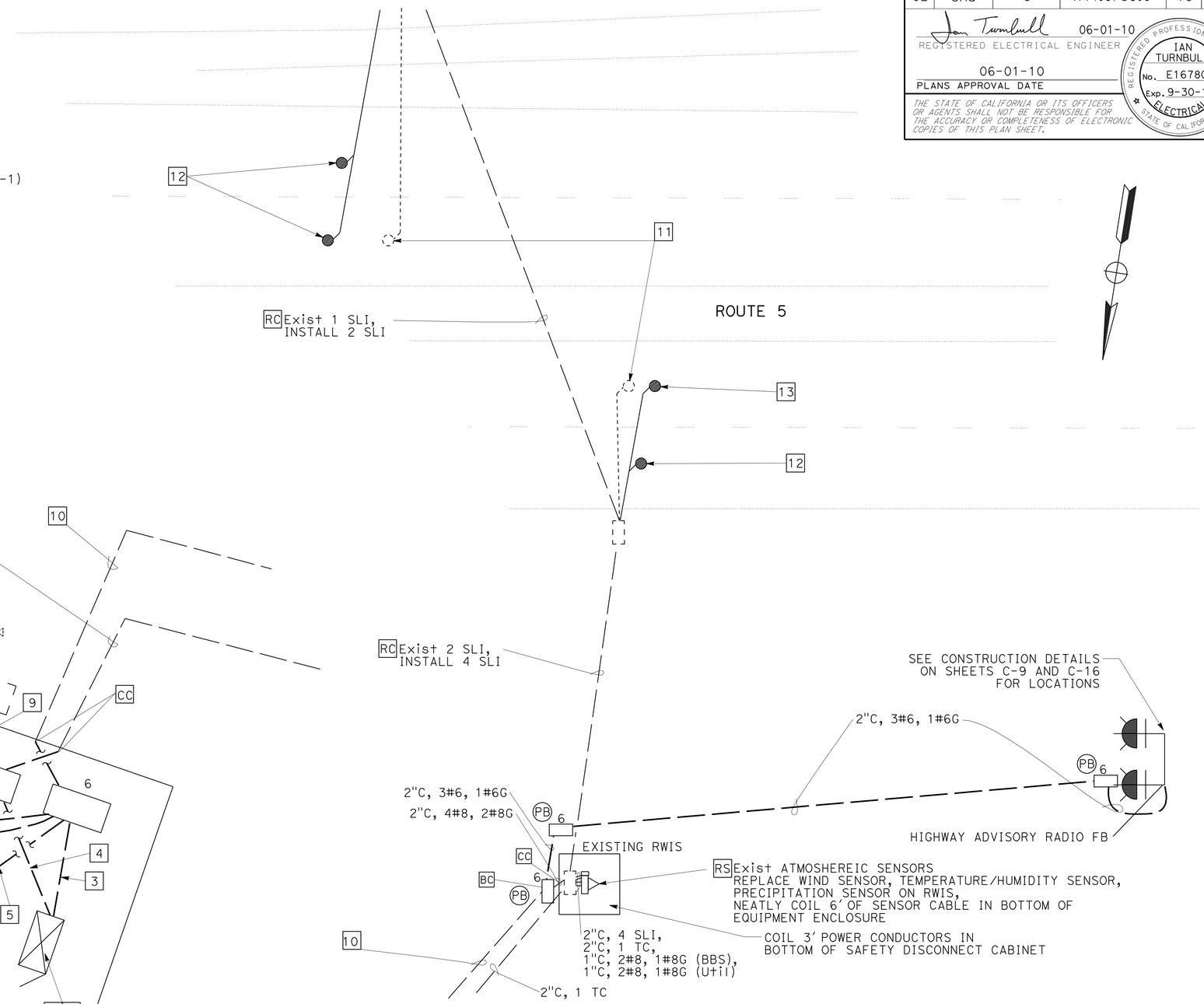

RWIS AND HAR FLASHING BEACON DETAIL

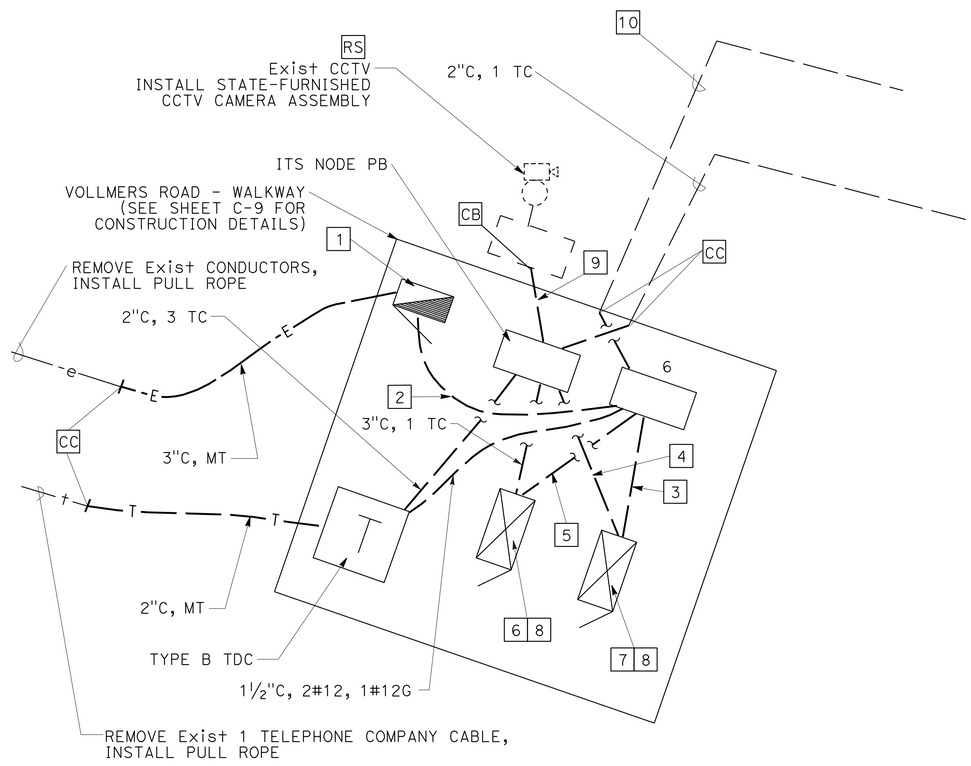

ITS NODE CONTROLLER EQUIPMENT DETAIL

VOLLMERS ROAD

THIS PLAN IS ACCURATE FOR ELECTRICAL WORK ONLY.

CLOSED CIRCUIT TELEVISION SYSTEM
HIGHWAY ADVISORY RADIO SYSTEM

NO SCALE

E-2

REVISED BY	DATE REVISED
	03/26/10

KEITH KOEPPEN — STEVE S. LEE — CALCULATED-DESIGNED BY — CHECKED BY

FUNCTIONAL SUPERVISOR: IAN TURNBULL

STATE OF CALIFORNIA - DEPARTMENT OF TRANSPORTATION — Caltrans — ELECTRICAL DESIGN

P:\proj1\02\2c450_plans\pse\22c450ua002.dgn

LAST REVISION 01-04-10 — DATE PLOTTED => 02-JUN-2010 — TIME PLOTTED => 15:33

Dist	COUNTY	ROUTE	POST MILES TOTAL PROJECT	SHEET No.	TOTAL SHEETS
02	Sha	5	R44.0/58.0	77	142

Ian Turnbull 06-01-10
REGISTERED ELECTRICAL ENGINEER

06-01-10
PLANS APPROVAL DATE

REGISTERED PROFESSIONAL ENGINEER
IAN TURNBULL
No. E16780
Exp. 9-30-10
ELECTRICAL
STATE OF CALIFORNIA

THE STATE OF CALIFORNIA OR ITS OFFICERS OR AGENTS SHALL NOT BE RESPONSIBLE FOR THE ACCURACY OR COMPLETENESS OF ELECTRONIC COPIES OF THIS PLAN SHEET.

NOTES (THIS SHEET):

1. EXACT LOCATIONS WILL BE DETERMINED BY THE ENGINEER.
2. COIL 10' OF CONDUCTORS IN PB.
3. SEE SHEET C-8 FOR GENERAL LOCATION.

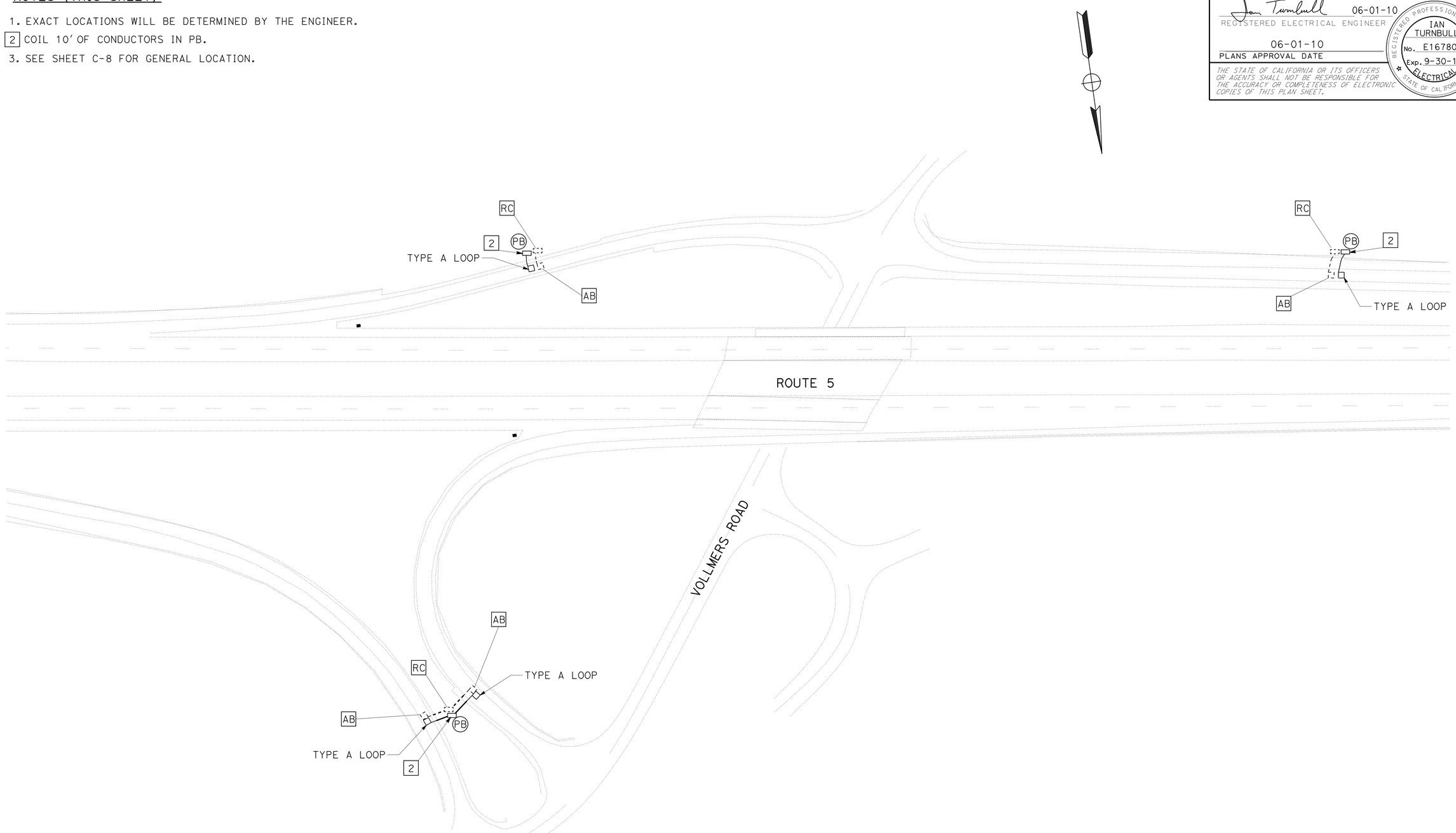

TRAFFIC MONITORING STATION

SCALE: 1" = 50'

E-3

THIS PLAN IS ACCURATE FOR ELECTRICAL WORK ONLY.

STATE OF CALIFORNIA - DEPARTMENT OF TRANSPORTATION
Caltrans ELECTRICAL DESIGN

FUNCTIONAL SUPERVISOR: IAN TURNBULL
CALCULATED-DESIGNED BY: KEITH KOEPPEN
CHECKED BY: STEVE S. LEE
REVISED BY
DATE REVISED 03/29/10

P:\proj1\02\2c450_plans\pse\22c450ua003.dgn

LAST REVISION 01-04-10
DATE PLOTTED => 02-JUN-2010
TIME PLOTTED => 15:33

BORDER LAST REVISED 4/11/2008
RELATIVE BORDER SCALE IS IN INCHES 0 1 2 3
USERNAME => s123119
DGN FILE => 22c450ua003.dgn
CU 02 369
EA 2C4501

Dist	COUNTY	ROUTE	POST MILES TOTAL PROJECT	SHEET No.	TOTAL SHEETS
02	Sha	5	R44.0/58.0	78	142

Ian Turnbull 06-01-10
REGISTERED ELECTRICAL ENGINEER

06-01-10
PLANS APPROVAL DATE

REGISTERED PROFESSIONAL ENGINEER
IAN TURNBULL
No. E16780
Exp. 9-30-10
ELECTRICAL
STATE OF CALIFORNIA

THE STATE OF CALIFORNIA OR ITS OFFICERS OR AGENTS SHALL NOT BE RESPONSIBLE FOR THE ACCURACY OR COMPLETENESS OF ELECTRONIC COPIES OF THIS PLAN SHEET.

NOTES (THIS SHEET):

1. EXACT LOCATIONS WILL BE DETERMINED BY THE ENGINEER.
2. COIL 10′ OF LOOP CONDUCTORS IN PB.
3. SEE SHEET C-8 FOR GENERAL LOCATION.

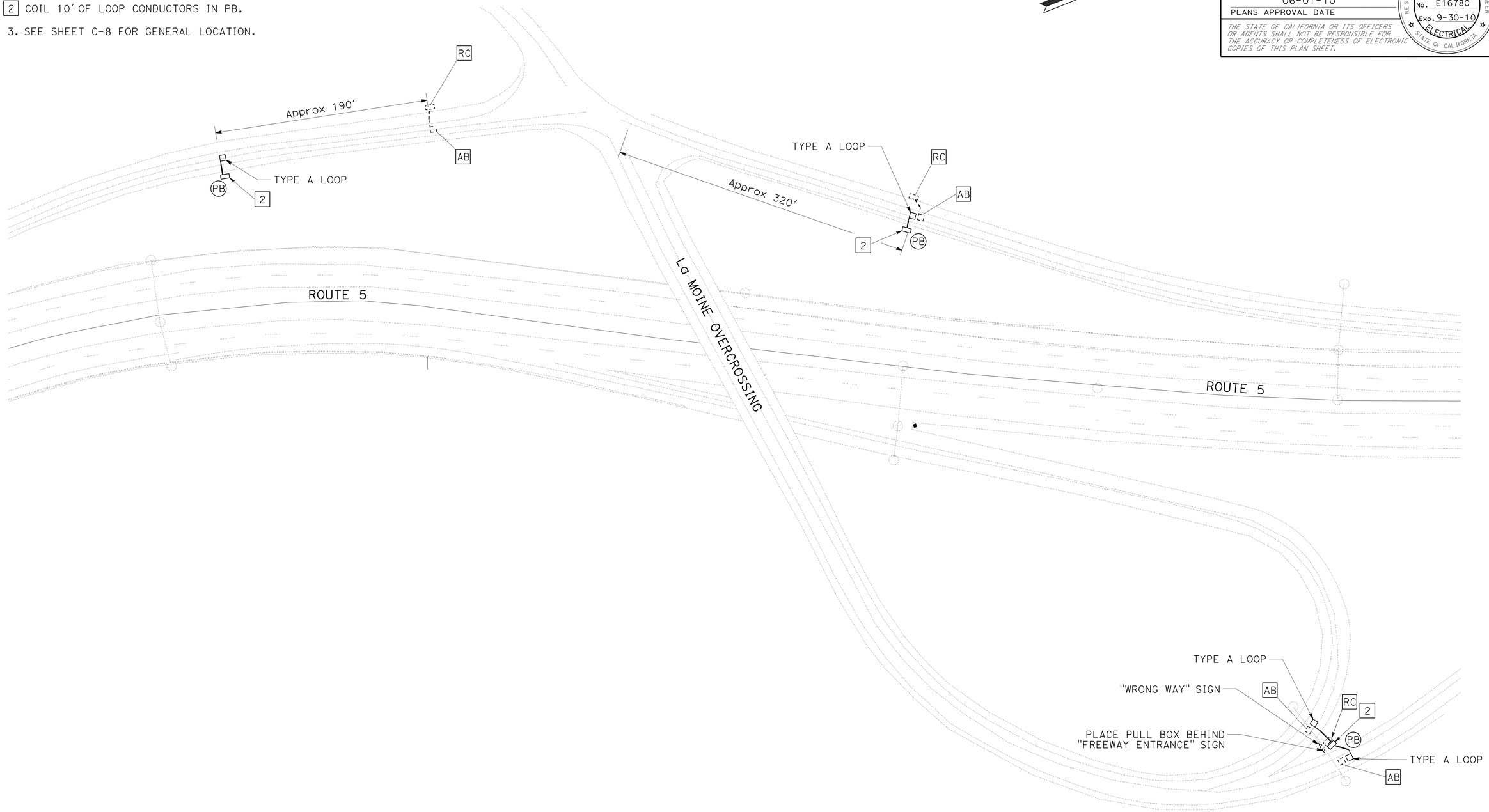

TRAFFIC MONITORING STATION

SCALE: 1" = 50′

E-4

THIS PLAN IS ACCURATE FOR ELECTRICAL WORK ONLY.

REVISED BY	DATE REVISED
	03/29/10

CALCULATED-DESIGNED BY: KEITH KOEPPEN
CHECKED BY: STEVE S. LEE
FUNCTIONAL SUPERVISOR: IAN TURNBULL

STATE OF CALIFORNIA - DEPARTMENT OF TRANSPORTATION
Caltrans ELECTRICAL DESIGN

P:\proj1\02\2c450_plans\pse\22c450ua004.dgn

LAST REVISION 01-04-10 | DATE PLOTTED => 02-JUN-2010 | TIME PLOTTED => 15:33

Dist	COUNTY	ROUTE	POST MILES TOTAL PROJECT	SHEET No.	TOTAL SHEETS
02	Sha	5	R44.0/58.0	79	142

Ian Turnbull 06-01-10
REGISTERED ELECTRICAL ENGINEER

06-01-10
PLANS APPROVAL DATE

REGISTERED PROFESSIONAL ENGINEER IAN TURNBULL No. E16780 Exp. 9-30-10 ELECTRICAL STATE OF CALIFORNIA

THE STATE OF CALIFORNIA OR ITS OFFICERS OR AGENTS SHALL NOT BE RESPONSIBLE FOR THE ACCURACY OR COMPLETENESS OF ELECTRONIC COPIES OF THIS PLAN SHEET.

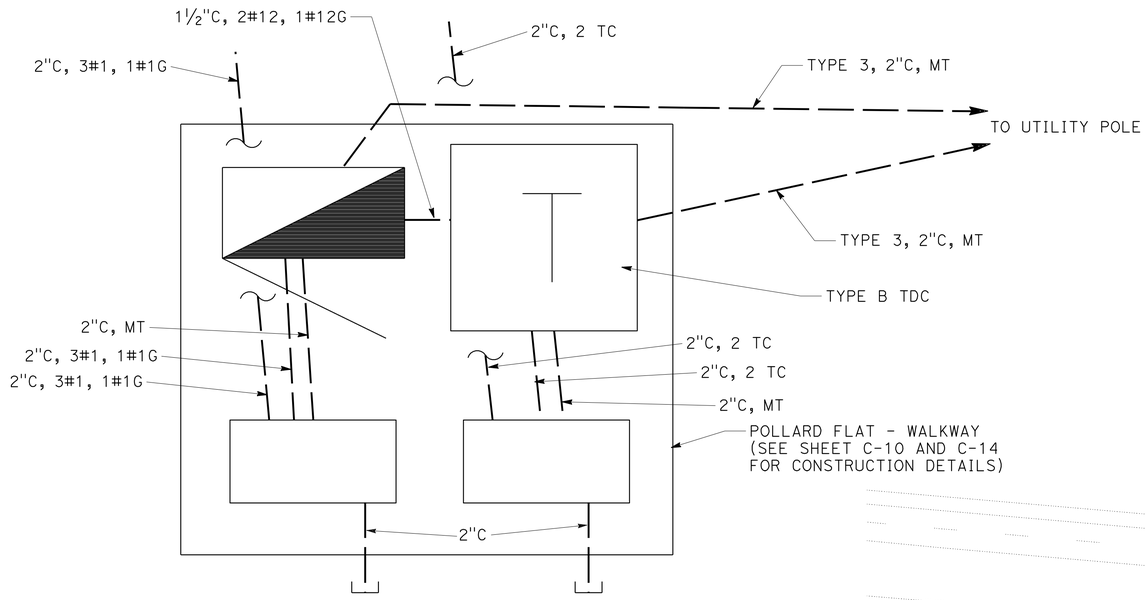

SERVICE EQUIPMENT DETAIL

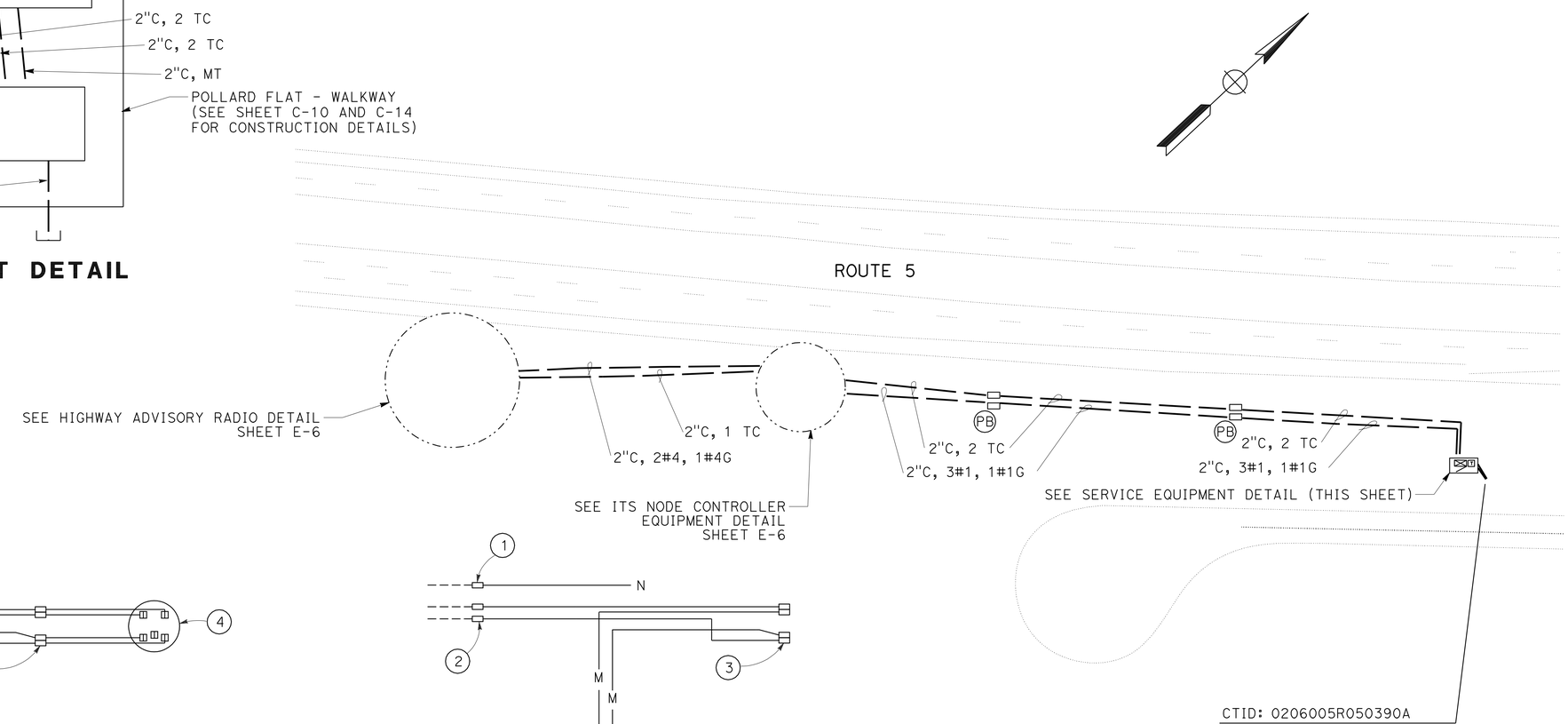

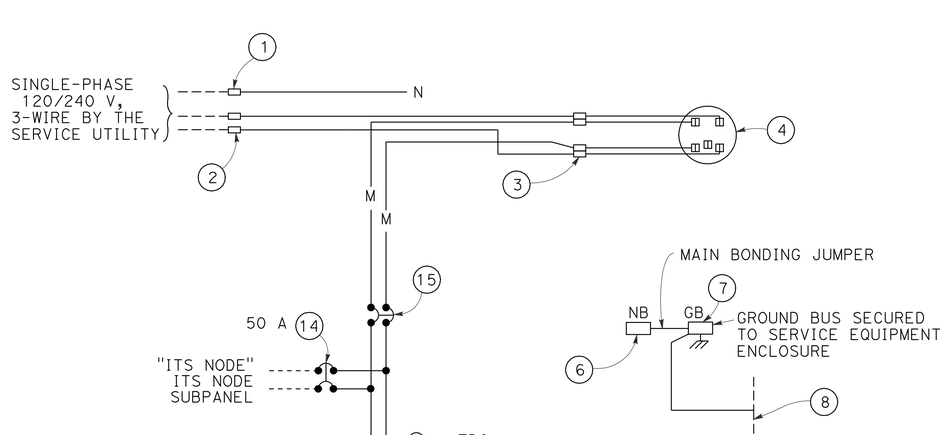

120/240 V SERVICE EQUIPMENT ENCLOSURE WIRING DIAGRAM

(SEE Std PLAN RSP ES-2D)

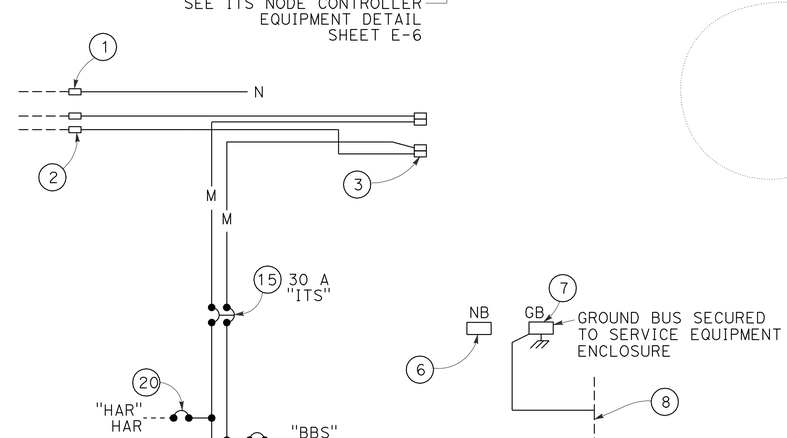

ITS NODE (CCTV) SUBPANEL

(SEE Std PLAN RSP ES-2D)

POLLARD FLAT

CLOSED CIRCUIT TELEVISION SYSTEM HIGHWAY ADVISORY RADIO SYSTEM

SCALE: 1" = 50'

E-5

THIS PLAN IS ACCURATE FOR ELECTRICAL WORK ONLY.

REVISED BY	DATE REVISED
	02/26/10

KEITH KOEPPEN — STEVE S. LEE

CALCULATED-DESIGNED BY — CHECKED BY

FUNCTIONAL SUPERVISOR: IAN TURNBULL

STATE OF CALIFORNIA - DEPARTMENT OF TRANSPORTATION — Caltrans — ELECTRICAL DESIGN

P:\proj1\02\2c450_plans\pse\22c450ua005.dgn

LAST REVISION DATE PLOTTED => 02-JUN-2010 TIME PLOTTED => 15:33

Dist	COUNTY	ROUTE	POST MILES TOTAL PROJECT	SHEET No.	TOTAL SHEETS
02	Sha	5	R44.0/58.0	80	142

Ian Turnbull 06-01-10
REGISTERED ELECTRICAL ENGINEER

06-01-10
PLANS APPROVAL DATE

REGISTERED PROFESSIONAL ENGINEER IAN TURNBULL No. E16780 Exp. 9-30-10 ELECTRICAL STATE OF CALIFORNIA

THE STATE OF CALIFORNIA OR ITS OFFICERS OR AGENTS SHALL NOT BE RESPONSIBLE FOR THE ACCURACY OR COMPLETENESS OF ELECTRONIC COPIES OF THIS PLAN SHEET.

NOTES (THIS SHEET):

1. 2"C, 3#1, 1#1G
2. ITS NODE SUBPANEL, TYPE III-AF SERVICE EQUIPMENT ENCLOSURE WITHOUT METERING SECTION SEE WIRING DIAGRAM ON SHEET E-5 AND PROVIDE ITEMS SHOWN
3. 2"C, 2#8, 1#8G (BBS), 2#4, 1#4G (HAR)
4. 3"C, 2#8, 1#8G (BBS), 4#12, 1#12G (SEE SHEET E-1 FOR ITS NODE INSULATION COLOR CODE)
5. 4"C, 1 TC, STATE-FURNISHED CCTV CABLE
6. 3"C, 4#12, 1#12G (SEE SHEET E-1 FOR ITS NODE INSULATION COLOR CODE)
7. INSTALL STATE-FURNISHED BBS CABINET
8. INSTALL STATE-FURNISHED ITS NODE EQUIPMENT CABINET
9. COIL CABLES WITH 6' OF SLACK IN BOTTOM OF CABINET
10. 2"C, INSTALL STATE-FURNISHED CCTV CABLE
11. SEE SHEET C-8 FOR GENERAL LOCATION
12. ORIENTATION WILL BE DETERMINED BY ENGINEER

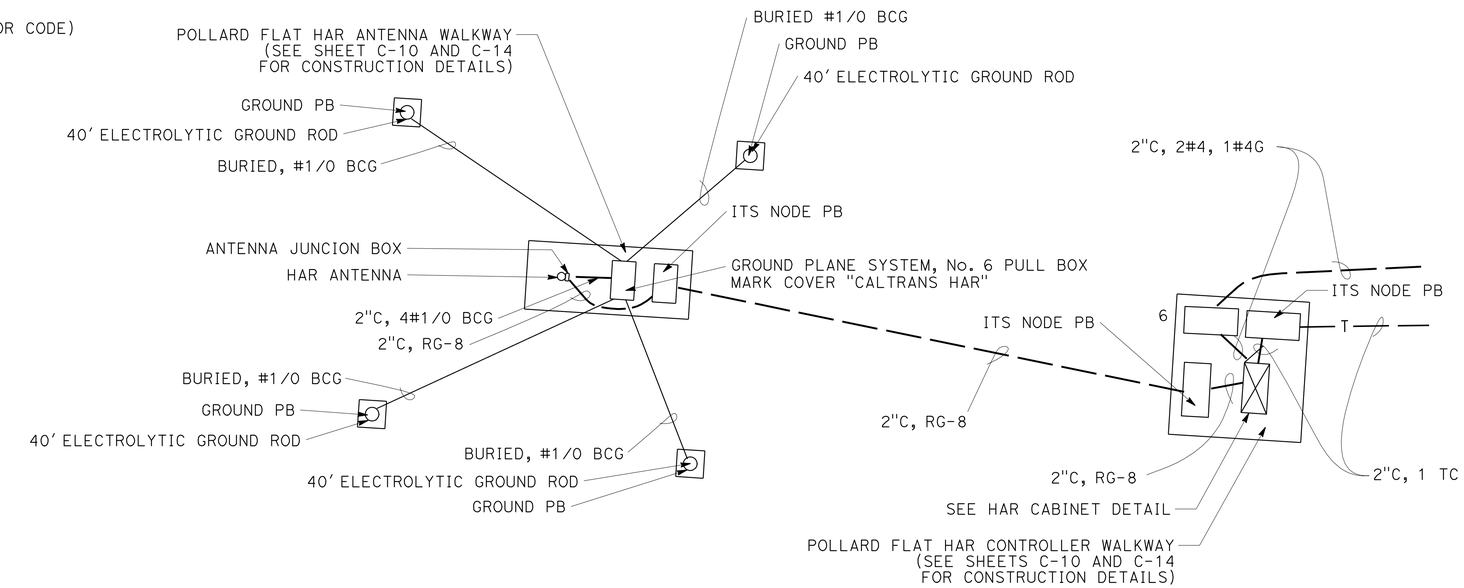

HIGHWAY ADVISORY RADIO DETAIL

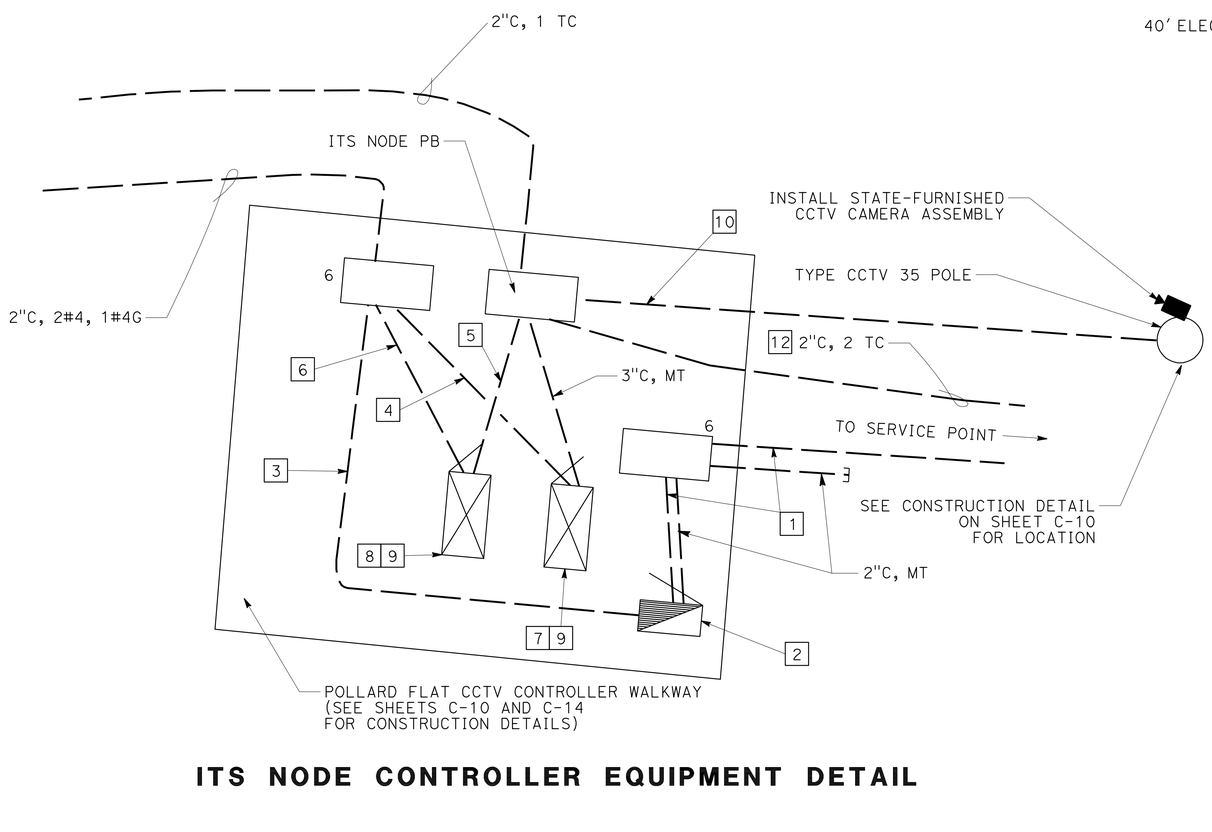

ITS NODE CONTROLLER EQUIPMENT DETAIL

CLOSED CIRCUIT TELEVISION SYSTEM
HIGHWAY ADVISORY RADIO SYSTEM

NO SCALE

E-6

THIS PLAN IS ACCURATE FOR ELECTRICAL WORK ONLY.

REVISED BY	DATE REVISED
KEITH KOEPPEN	03/29/10
STEVE S. LEE	

CALCULATED-DESIGNED BY
CHECKED BY
FUNCTIONAL SUPERVISOR
IAN TURNBULL

STATE OF CALIFORNIA - DEPARTMENT OF TRANSPORTATION
Caltrans ELECTRICAL DESIGN

P:\proj1\02\2c450_plans\pse\22c450ua006.dgn

LAST REVISION 01-04-10 | DATE PLOTTED => 02-JUN-2010 TIME PLOTTED => 15:33

Dist	COUNTY	ROUTE	POST MILES TOTAL PROJECT	SHEET No.	TOTAL SHEETS
02	Sha	5	R44.0/58.0	81	142

Ian Turnbull 06-01-10
REGISTERED ELECTRICAL ENGINEER

06-01-10
PLANS APPROVAL DATE

REGISTERED PROFESSIONAL ENGINEER IAN TURNBULL No. E16780 Exp. 9-30-10 ELECTRICAL STATE OF CALIFORNIA

THE STATE OF CALIFORNIA OR ITS OFFICERS OR AGENTS SHALL NOT BE RESPONSIBLE FOR THE ACCURACY OR COMPLETENESS OF ELECTRONIC COPIES OF THIS PLAN SHEET.

NOTES (THIS SHEET):

1. EXACT LOCATIONS WILL BE DETERMINED BY THE ENGINEER.
2. COIL 10′ OF LOOP CONDUCTORS IN PB.
3. SEE SHEET C-8 FOR GENERAL LOCATION.

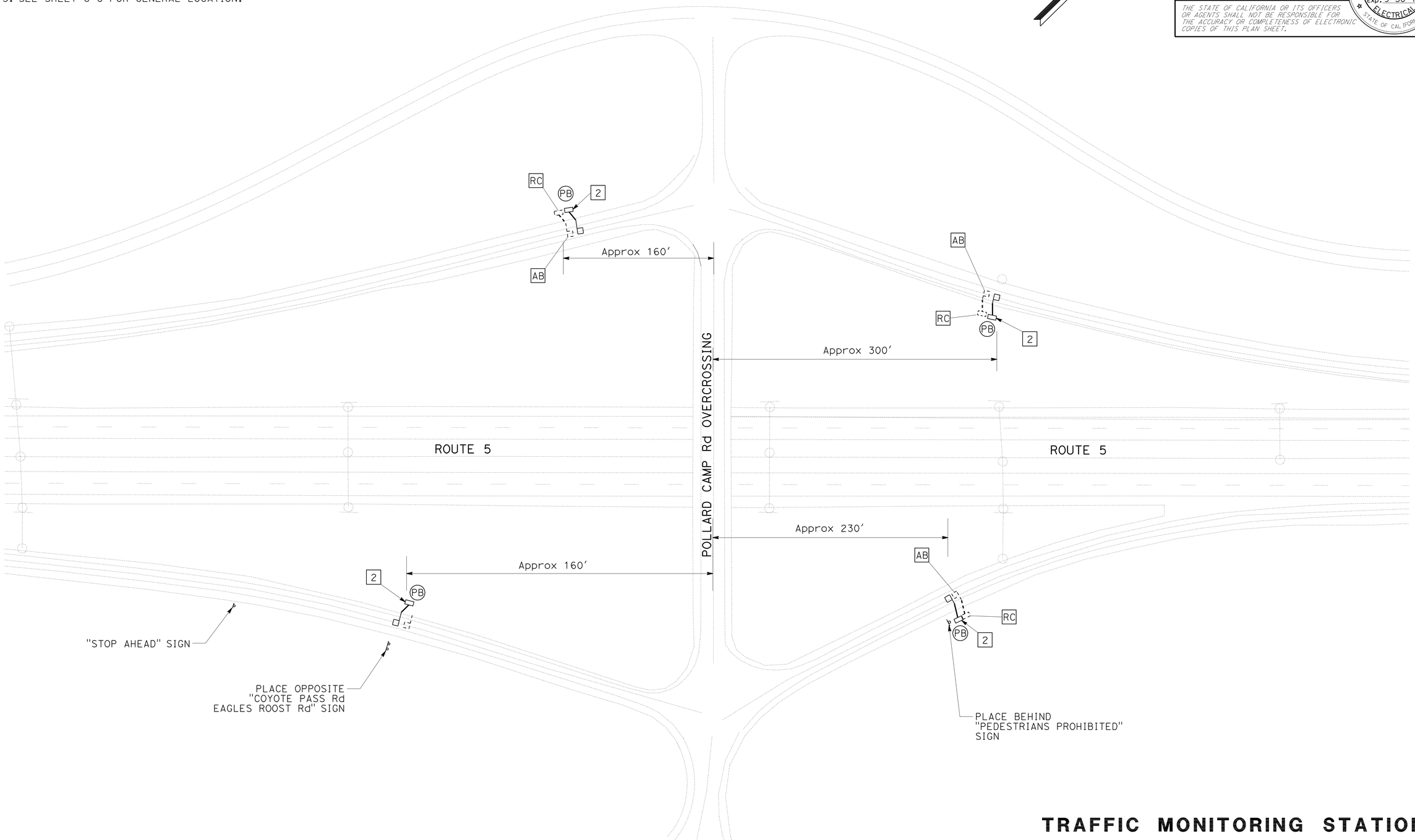

TRAFFIC MONITORING STATION

SCALE: 1" = 50′

E-7

THIS PLAN IS ACCURATE FOR ELECTRICAL WORK ONLY.

REVISED BY	KEITH KOEPPEN
DATE REVISED	02/25/10
CALCULATED-DESIGNED BY	STEVE S. LEE
CHECKED BY	
FUNCTIONAL SUPERVISOR	IAN TURNBULL

STATE OF CALIFORNIA - DEPARTMENT OF TRANSPORTATION
Caltrans ELECTRICAL DESIGN

P:\proj1\02\2c450_plans\pse\22c450ua007.dgn

LAST REVISION 01-04-10 | DATE PLOTTED => 02-JUN-2010 | TIME PLOTTED => 15:33

Dist	COUNTY	ROUTE	POST MILES TOTAL PROJECT	SHEET No.	TOTAL SHEETS
02	Sha	5	R44.0/58.0	82	142

Ian Turnbull 06-01-10
REGISTERED ELECTRICAL ENGINEER

06-01-10
PLANS APPROVAL DATE

REGISTERED PROFESSIONAL ENGINEER IAN TURNBULL No. E16780 Exp. 9-30-10 ELECTRICAL STATE OF CALIFORNIA

THE STATE OF CALIFORNIA OR ITS OFFICERS OR AGENTS SHALL NOT BE RESPONSIBLE FOR THE ACCURACY OR COMPLETENESS OF ELECTRONIC COPIES OF THIS PLAN SHEET.

NOTES (THIS SHEET):

1. PAINT TO FEDERAL COLOR STANDARD 595B No. FS24052 CONFORMING TO Std 86-2.16 "PAINTING"
2. SEE SHEET C-8 FOR GENERAL LOCATION.
3. ORIENTATION WILL BE DETERMINED BY ENGINEER

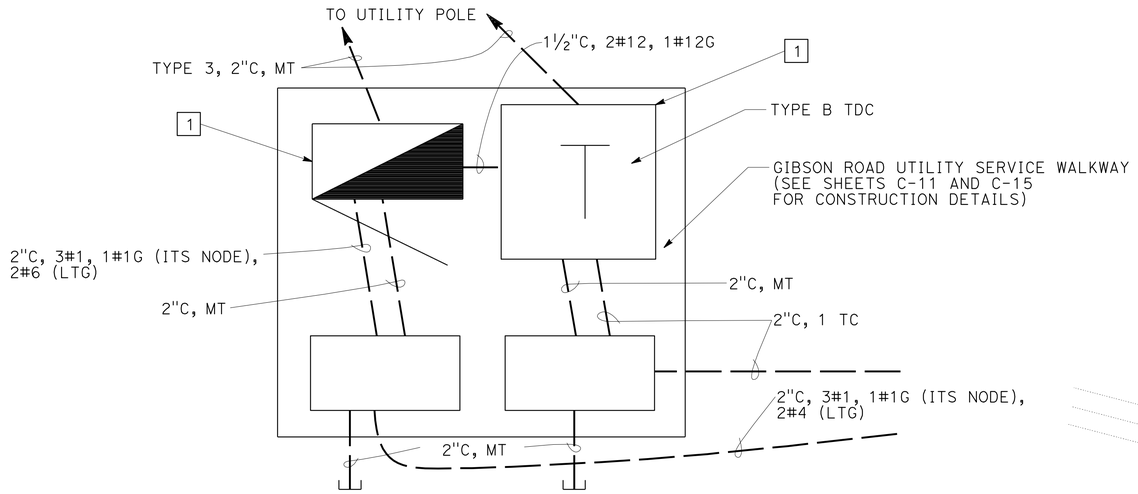

SERVICE EQUIPMENT DETAIL

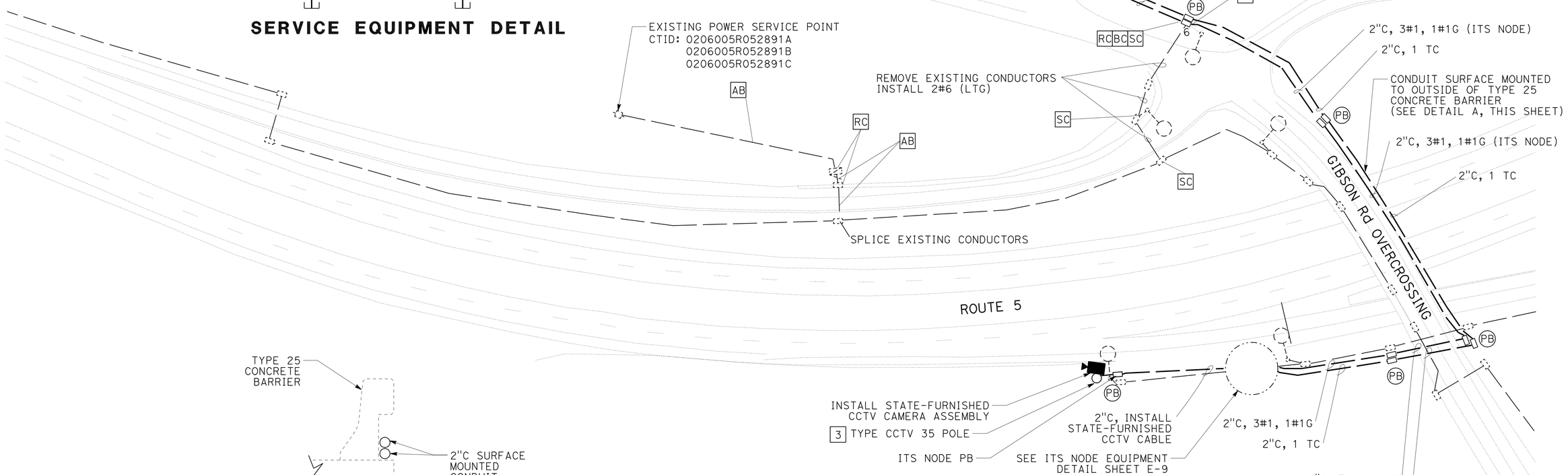

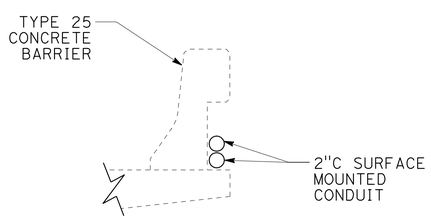

DETAIL A

CLOSED CIRCUIT TELEVISION SYSTEM

SCALE: 1" = 50'

E-8

THIS PLAN IS ACCURATE FOR ELECTRICAL WORK ONLY.

REVISED BY	DATE REVISED
	04/29/10

KEITH KOEPPEN — STEVE S. LEE — CALCULATED-DESIGNED BY — CHECKED BY

FUNCTIONAL SUPERVISOR: IAN TURNBULL

STATE OF CALIFORNIA - DEPARTMENT OF TRANSPORTATION
Caltrans ELECTRICAL DESIGN

P:\proj1\02\2c450_plans\pse\22c450ua008.dgn

LAST REVISION 01-04-10 | DATE PLOTTED => 02-JUN-2010 | TIME PLOTTED => 15:33

Dist	COUNTY	ROUTE	POST MILES TOTAL PROJECT	SHEET No.	TOTAL SHEETS
02	Sha	5	R44.0/58.0	83	142

Ian Turnbull 06-01-10
REGISTERED ELECTRICAL ENGINEER

06-01-10
PLANS APPROVAL DATE

REGISTERED PROFESSIONAL ENGINEER IAN TURNBULL No. E16780 Exp. 9-30-10 ELECTRICAL STATE OF CALIFORNIA

THE STATE OF CALIFORNIA OR ITS OFFICERS OR AGENTS SHALL NOT BE RESPONSIBLE FOR THE ACCURACY OR COMPLETENESS OF ELECTRONIC COPIES OF THIS PLAN SHEET.

NOTES (THIS SHEET):

1. 2"C, 3#1, 1#1G
2. ITS NODE SUBPANEL, TYPE III-AF SERVICE EQUIPMENT ENCLOSURE WITHOUT METERING SECTION SEE WIRING DIAGRAM AND PROVIDE ITEMS SHOWN
3. 2"C, 2#8, 1#8G (BBS)
4. 3"C, 2#8, 1#8G, 4#12, 1#12G (SEE ITS NODE INSULATION COLOR CODE SHEET E-1)
5. 4"C, 1 TC, STATE-FURNISHED CCTV CABLE
6. 3"C, 4#12, 1#12G (SEE ITS NODE INSULATION COLOR CODE SHEET E-1)
7. INSTALL STATE-FURNISHED BBS CABINET
8. INSTALL STATE-FURNISHED ITS NODE EQUIPMENT CABINET
9. COIL CABLES WITH 6' OF SLACK IN BOTTOM OF CABINET
10. 2"C, INSTALL STATE-FURNISHED CCTV CABLE.

11. SEE SHEET C-8 FOR GENERAL LOCATION.

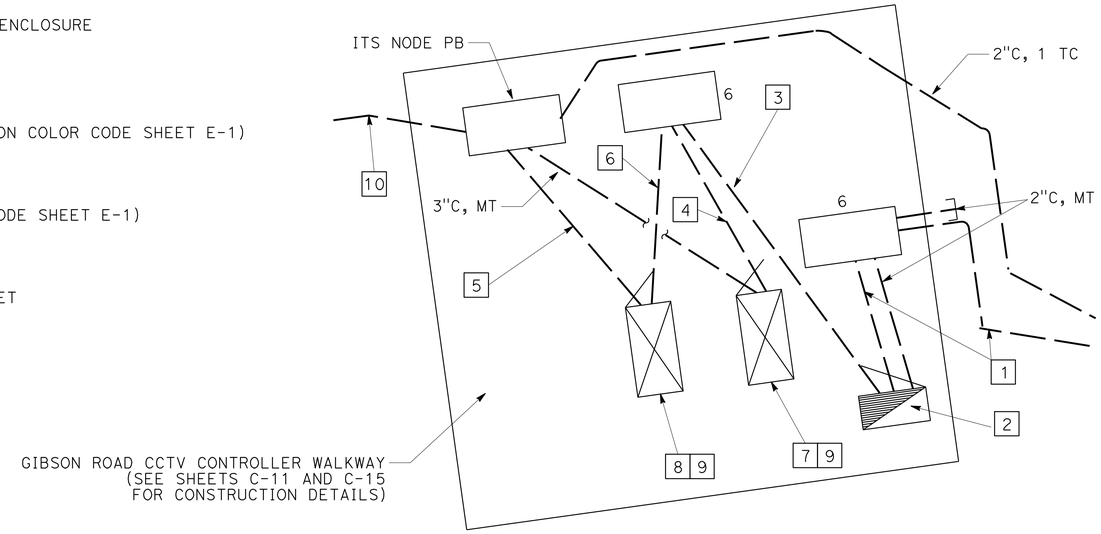

ITS NODE EQUIPMENT DETAIL

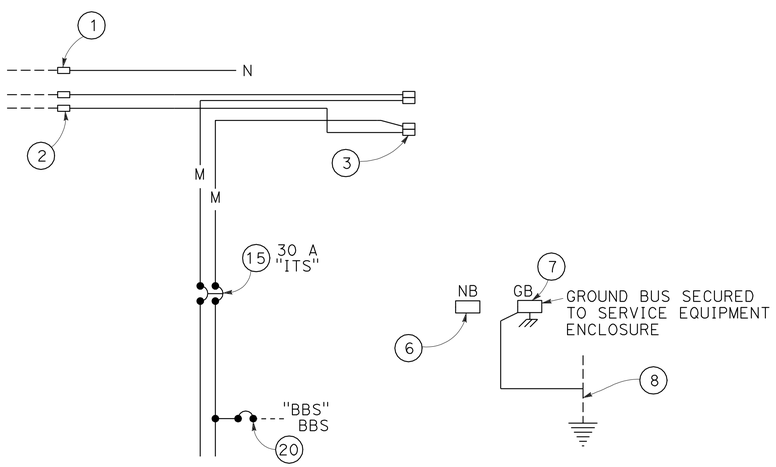

ITS NODE (CCTV) SUBPANEL

(SEE Std PLAN RSP ES-2D)

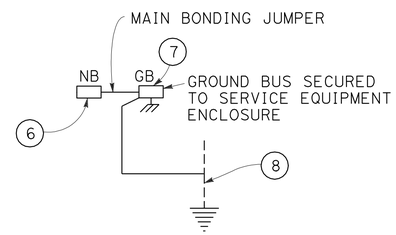

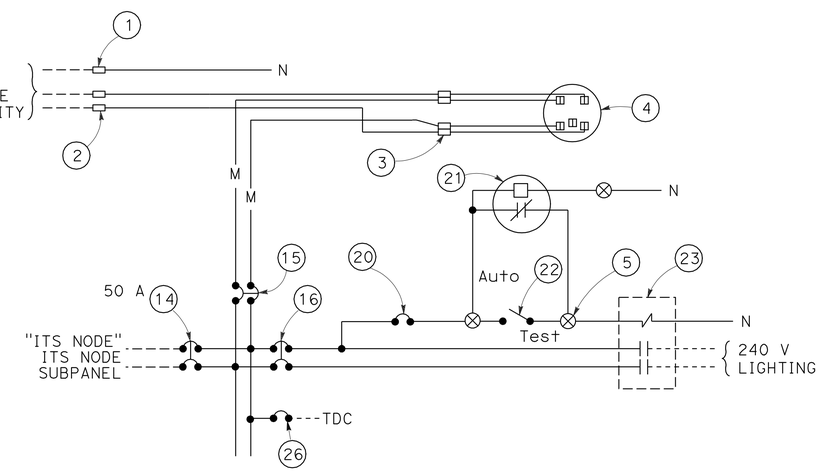

120/240 V SERVICE EQUIPMENT ENCLOSURE WIRING DIAGRAM

(SEE Std PLAN RSP ES-2D)

CLOSED CIRCUIT TELEVISION SYSTEM

NO SCALE

E-9

THIS PLAN IS ACCURATE FOR ELECTRICAL WORK ONLY.

REVISED BY	DATE REVISED
	03/26/10

KEITH KOEPPEN — STEVE S. LEE — CALCULATED-DESIGNED BY — CHECKED BY — FUNCTIONAL SUPERVISOR: IAN TURNBULL

STATE OF CALIFORNIA - DEPARTMENT OF TRANSPORTATION
Caltrans ELECTRICAL DESIGN

P:\proj1\02\2c450_plans\pse\22c450ua009.dgn

LAST REVISION 01-04-10 | DATE PLOTTED => 02-JUN-2010 | TIME PLOTTED => 15:33

Dist	COUNTY	ROUTE	POST MILES TOTAL PROJECT	SHEET No.	TOTAL SHEETS
02	Sha	5	R44.0/58.0	84	142

Ian Turnbull 06-01-10
REGISTERED ELECTRICAL ENGINEER

06-01-10
PLANS APPROVAL DATE

REGISTERED PROFESSIONAL ENGINEER
IAN TURNBULL
No. E16780
Exp. 9-30-10
ELECTRICAL
STATE OF CALIFORNIA

THE STATE OF CALIFORNIA OR ITS OFFICERS OR AGENTS SHALL NOT BE RESPONSIBLE FOR THE ACCURACY OR COMPLETENESS OF ELECTRONIC COPIES OF THIS PLAN SHEET.

NOTES (THIS SHEET):

1. EXACT LOCATIONS WILL BE DETERMINED BY THE ENGINEER

2 COIL 10′ OF LOOP CONDUCTORS IN PB.

3. SEE SHEET C-8 FOR GENERAL LOCATION.

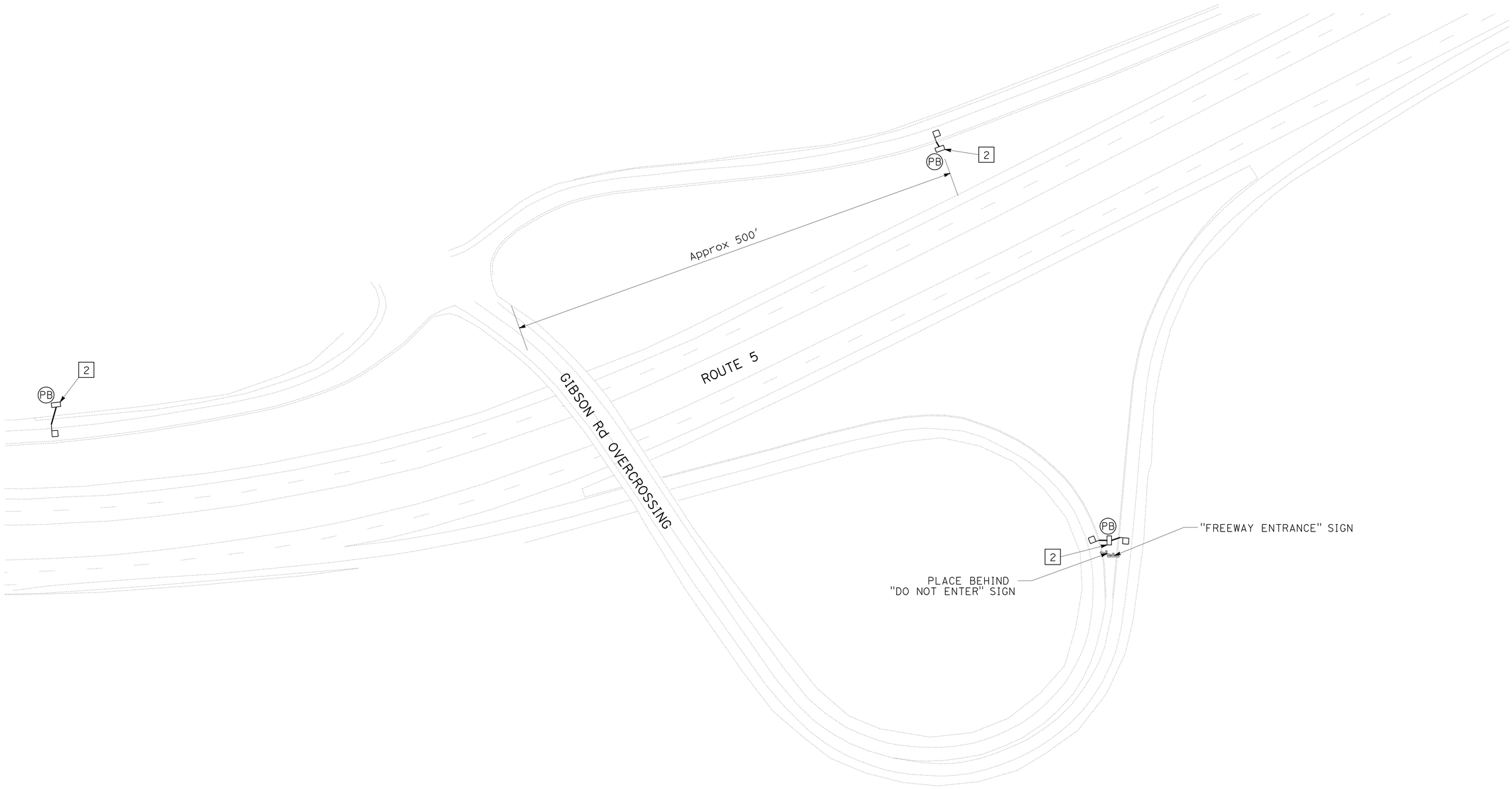

TRAFFIC MONITORING STATION

SCALE: 1" = 50′

E-10

THIS PLAN IS ACCURATE FOR ELECTRICAL WORK ONLY.

REVISED BY: KEITH KOEPPEN
DATE REVISED: 02/25/10
CALCULATED-DESIGNED BY: STEVE S. LEE
CHECKED BY:
FUNCTIONAL SUPERVISOR: IAN TURNBULL

STATE OF CALIFORNIA - DEPARTMENT OF TRANSPORTATION
Caltrans ELECTRICAL DESIGN

P:\proj1\02\2c450_plans\pse\22c450ua010.dgn

LAST REVISION 01-04-10
DATE PLOTTED => 02-JUN-2010
TIME PLOTTED => 15:33

Dist	COUNTY	ROUTE	POST MILES TOTAL PROJECT	SHEET No.	TOTAL SHEETS
02	Sha	5	R44.0/58.0	85	142

Ian Turnbull 06-01-10
REGISTERED ELECTRICAL ENGINEER

06-01-10
PLANS APPROVAL DATE

REGISTERED PROFESSIONAL ENGINEER IAN TURNBULL No. E16780 Exp. 9-30-10 ELECTRICAL STATE OF CALIFORNIA

THE STATE OF CALIFORNIA OR ITS OFFICERS OR AGENTS SHALL NOT BE RESPONSIBLE FOR THE ACCURACY OR COMPLETENESS OF ELECTRONIC COPIES OF THIS PLAN SHEET.

NOTES (THIS SHEET):

1. EXACT LOCATIONS WILL BE DETERMINED BY THE ENGINEER.

[2] COIL 10′ OF LOOP CONDUCTORS IN PB.

[3] 1½"C, 2#6, 1#6G

[4] 1½"C, 2 TC

[5] COORDINATE THIS WORK INSTALLATION OF DRAINAGE. SEE DRAINAGE PLANS FOR EXACT LOCATIONS.

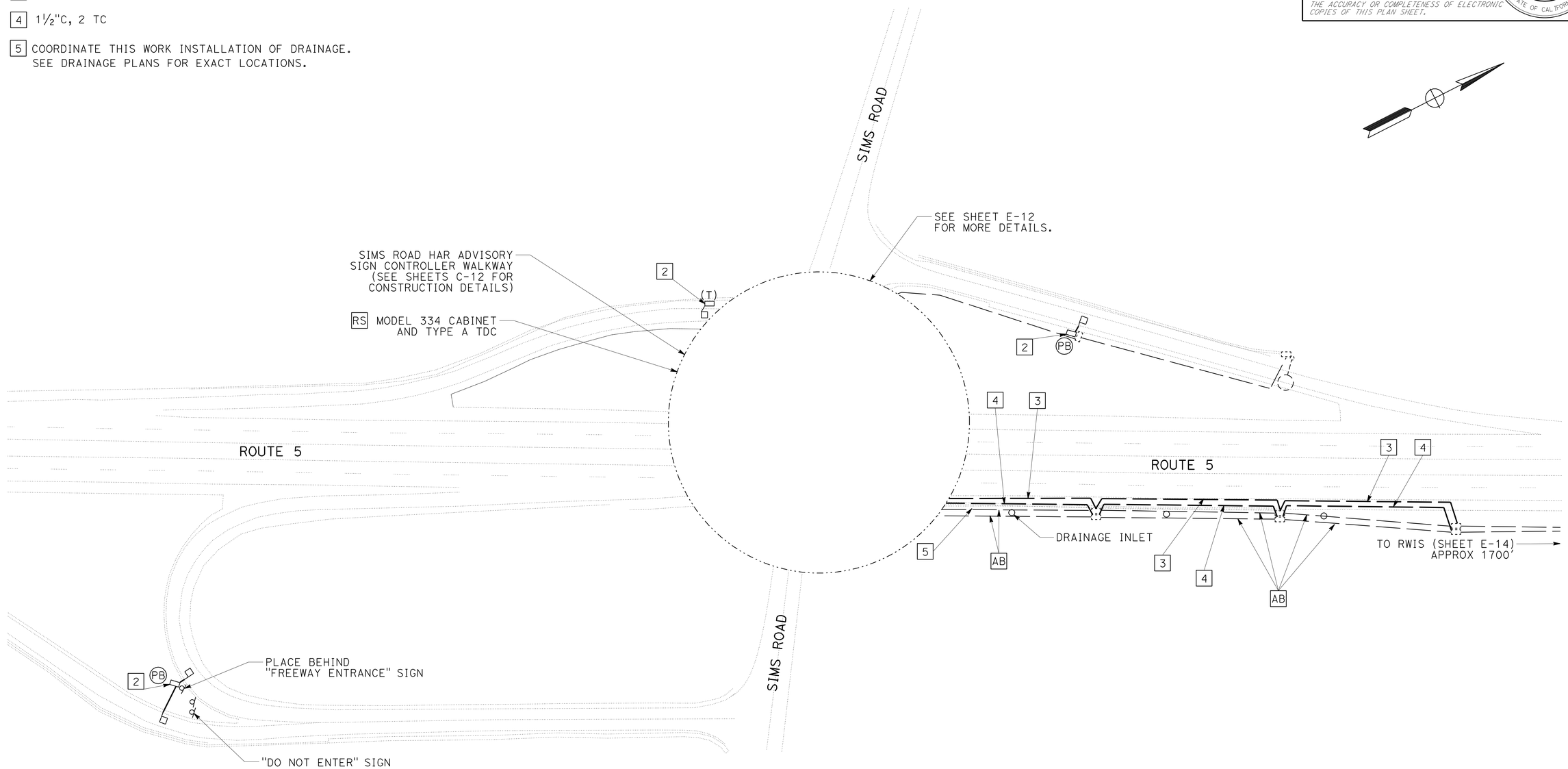

TRAFFIC MONITORING STATION

SCALE: 1" = 50′

E-11

THIS PLAN IS ACCURATE FOR ELECTRICAL WORK ONLY.

REVISED BY	DATE REVISED
	04/20/10

CALCULATED-DESIGNED BY: KEITH KOEPPEN
CHECKED BY: STEVE S. LEE
FUNCTIONAL SUPERVISOR: IAN TURNBULL

STATE OF CALIFORNIA - DEPARTMENT OF TRANSPORTATION
Caltrans ELECTRICAL DESIGN

P:\proj1\02\2c450_plans\pse\22c450ua011.dgn

LAST REVISION 01-04-10 | DATE PLOTTED => 02-JUN-2010 | TIME PLOTTED => 15:33

Dist	COUNTY	ROUTE	POST MILES TOTAL PROJECT	SHEET No.	TOTAL SHEETS
02	Sha	5	R44.0/58.0	86	142

Ian Turnbull 06-01-10
REGISTERED ELECTRICAL ENGINEER

06-01-10
PLANS APPROVAL DATE

REGISTERED PROFESSIONAL ENGINEER IAN TURNBULL No. E16780 Exp. 9-30-10 ELECTRICAL STATE OF CALIFORNIA

THE STATE OF CALIFORNIA OR ITS OFFICERS OR AGENTS SHALL NOT BE RESPONSIBLE FOR THE ACCURACY OR COMPLETENESS OF ELECTRONIC COPIES OF THIS PLAN SHEET.

NOTES (THIS SHEET):

1. 2"C, 3#10, 1#10G (FB)
2. TYPE III-AF SERVICE EQUIPMENT ENCLOSURE SEE WIRING DIAGRAM ON SHEET E-13 AND PROVIDE ITEMS SHOWN
3. 2"C, 6#8, 3#8G, 2#12, 1#12G (TDC)
4. 3"C, 2#8, 1#8G (BBS), 3#10 (FB)
5. 2"C, 1 TC
6. 2"C, 2#8, 1#8G (TMS)
7. INSTALL STATE-FURNISHED HAR FB CONTROLLER CABINET
8. TRAFFIC MONITORING STATION CABINET
9. COIL CABLES WITH 10' OF SLACK IN BOTTOM OF CABINET
10. 2"C, 4 TC
11. 1½"C, REMOVE EXISTING CONDUCTORS REPLACE WITH 2#6, 1#6G
12. REMOVE Exist CONDUCTORS TO PB, INSTALL IN NEW 2#8, 1#8 (LTG)
13. 1½"C, 2 TC
14. SEE SHEET C-8 FOR GENERAL LOCATION.

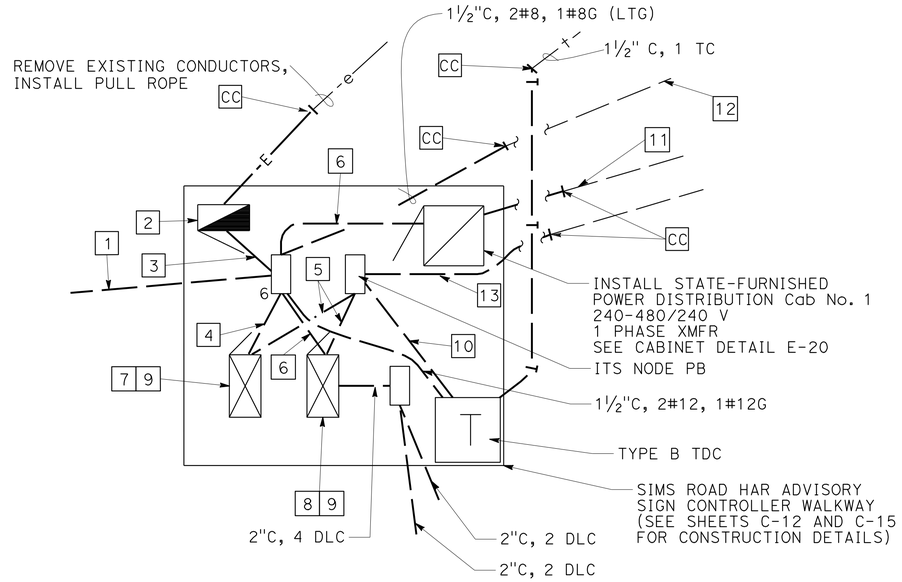

CONTROLLER EQUIPMENT DETAIL

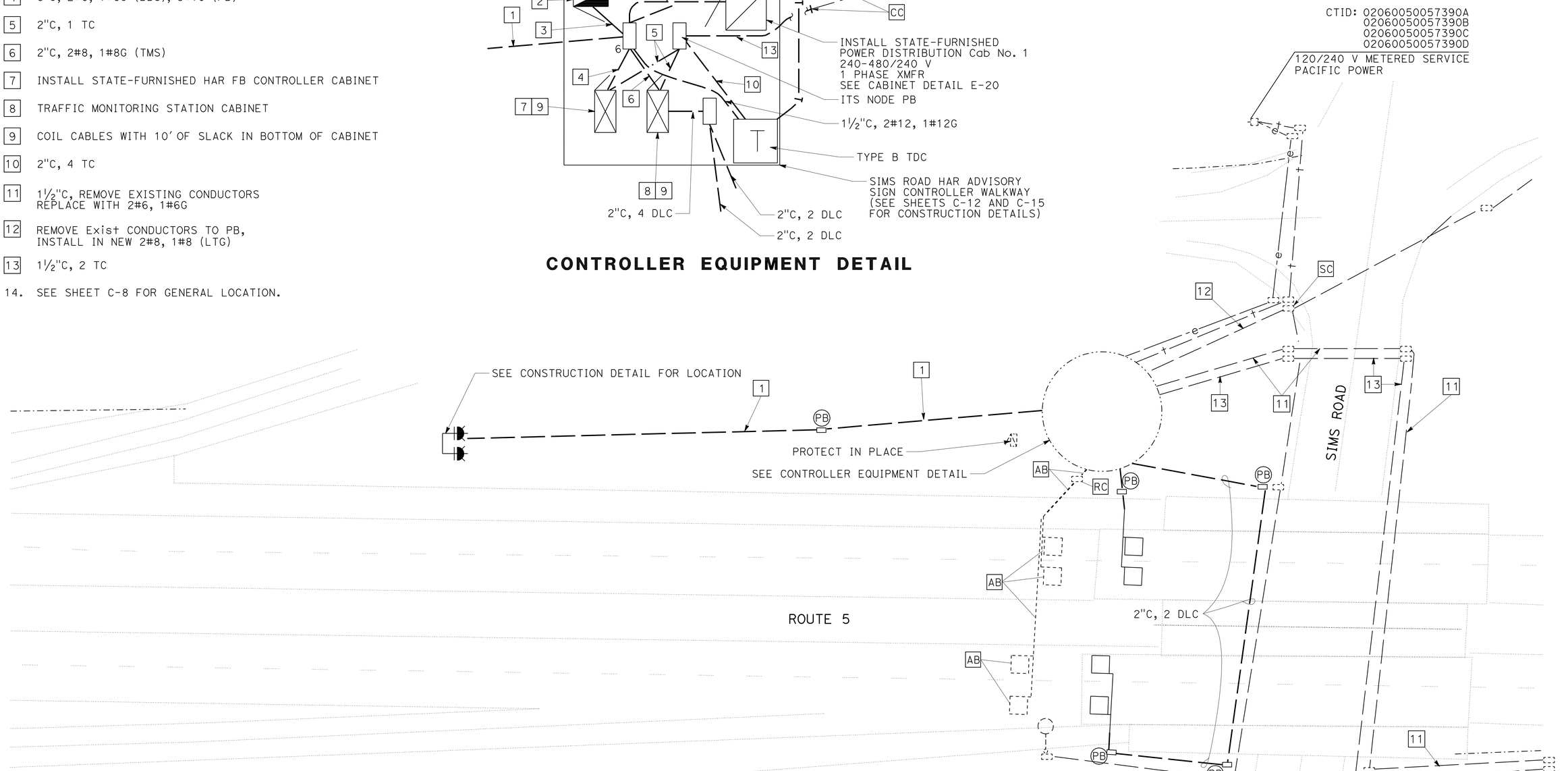

TRAFFIC MONITORING STATION HIGHWAY ADVISORY RADIO SYSTEM

NO SCALE

E-12

THIS PLAN IS ACCURATE FOR ELECTRICAL WORK ONLY.

REVISED BY	DATE REVISED
	04/20/10

CALCULATED-DESIGNED BY: KEITH KOEPPEN
CHECKED BY: STEVE S. LEE
FUNCTIONAL SUPERVISOR: IAN TURNBULL

STATE OF CALIFORNIA - DEPARTMENT OF TRANSPORTATION
Caltrans ELECTRICAL DESIGN

P:\proj1\02\2c450_plans\pse\22c450ua012.dgn

LAST REVISION 01-04-10 | DATE PLOTTED => 02-JUN-2010 | TIME PLOTTED => 19:52

Dist	COUNTY	ROUTE	POST MILES TOTAL PROJECT	SHEET No.	TOTAL SHEETS
02	Sha	5	R44.0/58.0	87	142

REGISTERED ELECTRICAL ENGINEER 06-01-10

PLANS APPROVAL DATE 06-01-10

REGISTERED PROFESSIONAL ENGINEER IAN TURNBULL No. E16780 Exp. 9-30-10 ELECTRICAL STATE OF CALIFORNIA

THE STATE OF CALIFORNIA OR ITS OFFICERS OR AGENTS SHALL NOT BE RESPONSIBLE FOR THE ACCURACY OR COMPLETENESS OF ELECTRONIC COPIES OF THIS PLAN SHEET.

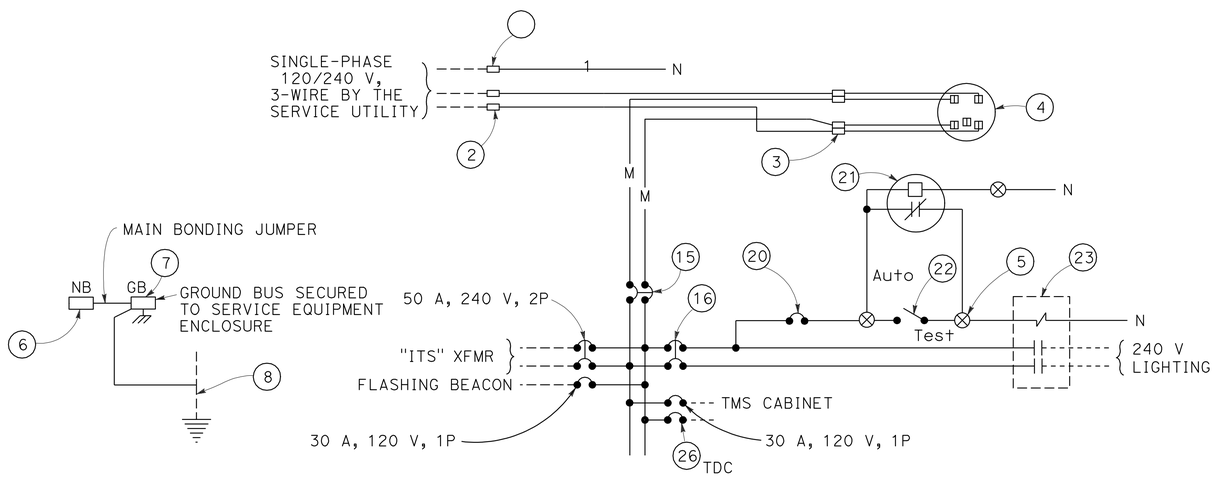

120/240 V SERVICE EQUIPMENT ENCLOSURE WIRING DIAGRAM

(SEE Std PLAN RSP ES-2D)

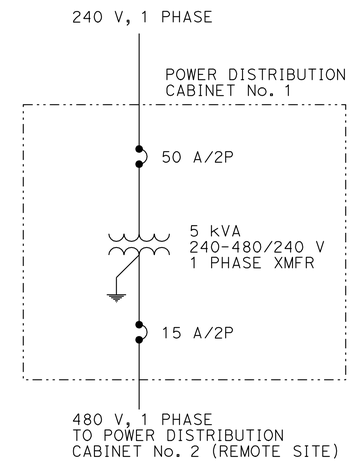

POWER DISTRIBUTION CABINET No. 1 SINGLE-LINE DIAGRAM

(SEE SHEET E-20)

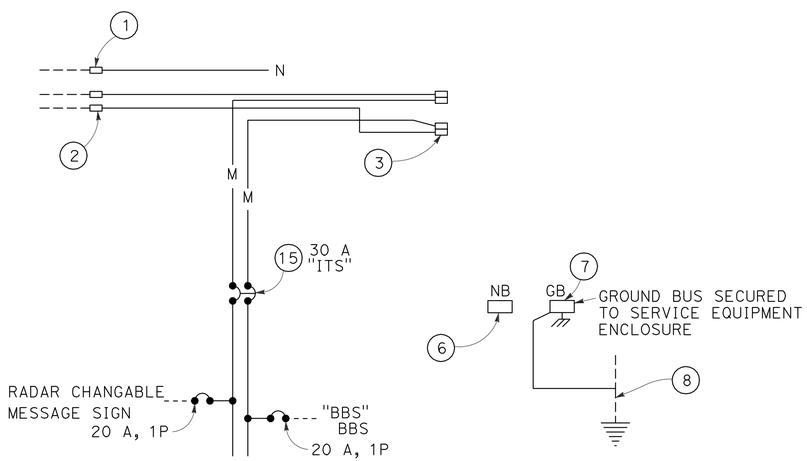

ITS NODE SUBPANEL

(SEE Std PLAN RSP ES-2D)

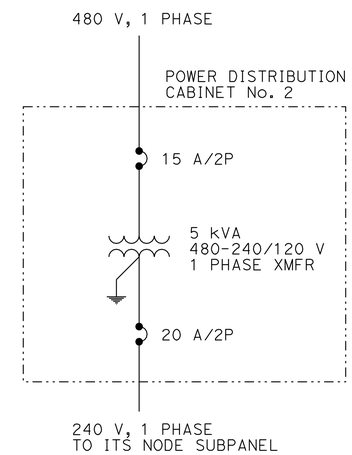

POWER DISTRIBUTION CABINET No. 2 SINGLE-LINE DIAGRAM

(SEE SHEET E-20)

HIGHWAY ADVISORY RADIO SYSTEM ROADSIDE WEATHER INFORMATION SYSTEM (DETAILS)

NO SCALE

E-13

THIS PLAN IS ACCURATE FOR ELECTRICAL WORK ONLY.

REVISED BY	DATE REVISED
	02/25/10

KEITH KOEPPEN — STEVE S. LEE — CALCULATED-DESIGNED BY — CHECKED BY

FUNCTIONAL SUPERVISOR: IAN TURNBULL

STATE OF CALIFORNIA - DEPARTMENT OF TRANSPORTATION — ELECTRICAL DESIGN

P:\proj1\02\2c450_plans\pse\22c450ua013.dgn

LAST REVISION 01-04-10 — DATE PLOTTED => 02-JUN-2010 — TIME PLOTTED => 15:33

Dist	COUNTY	ROUTE	POST MILES TOTAL PROJECT	SHEET No.	TOTAL SHEETS
02	Sha	5	R44.0/58.0	88	142

Ian Turnbull 06-01-10
REGISTERED ELECTRICAL ENGINEER

06-01-10
PLANS APPROVAL DATE

REGISTERED PROFESSIONAL ENGINEER IAN TURNBULL No. E16780 Exp. 9-30-10 ELECTRICAL STATE OF CALIFORNIA

THE STATE OF CALIFORNIA OR ITS OFFICERS OR AGENTS SHALL NOT BE RESPONSIBLE FOR THE ACCURACY OR COMPLETENESS OF ELECTRONIC COPIES OF THIS PLAN SHEET.

NOTES (THIS SHEET):

1. 1½"C, REMOVE EXISTING CONDUCTORS REPLACE WITH 2#6, 1#6G
2. 1½"C, 2 TC
3. 2"C, 1 TC
4. 2"C, 4#12, 2#12G (SEE ITS NODE INSULATION COLOR CODE SHEET E-1)
5. 2"C, 2 SLI
6. 1½"C, 3#8, 1#8G
7. 2"C, Exist TC
   ADD 1 TC
   NEATLY COIL 10' AT BOTTOM OF CABINET
8. 2"C, Exist 2#12, 1#12G
   ADD 4#12, 2#12G
   NEATLY COIL 10' AT BOTTOM OF CABINET
9. INSTALL SURFACE PAVEMENT SENSOR IN CENTER OF LANE
10. INSTALL SURFACE PAVEMENT SENSOR WITH SUBSURFACE TEMPERATURE PROBE IN CENTER OF LANE

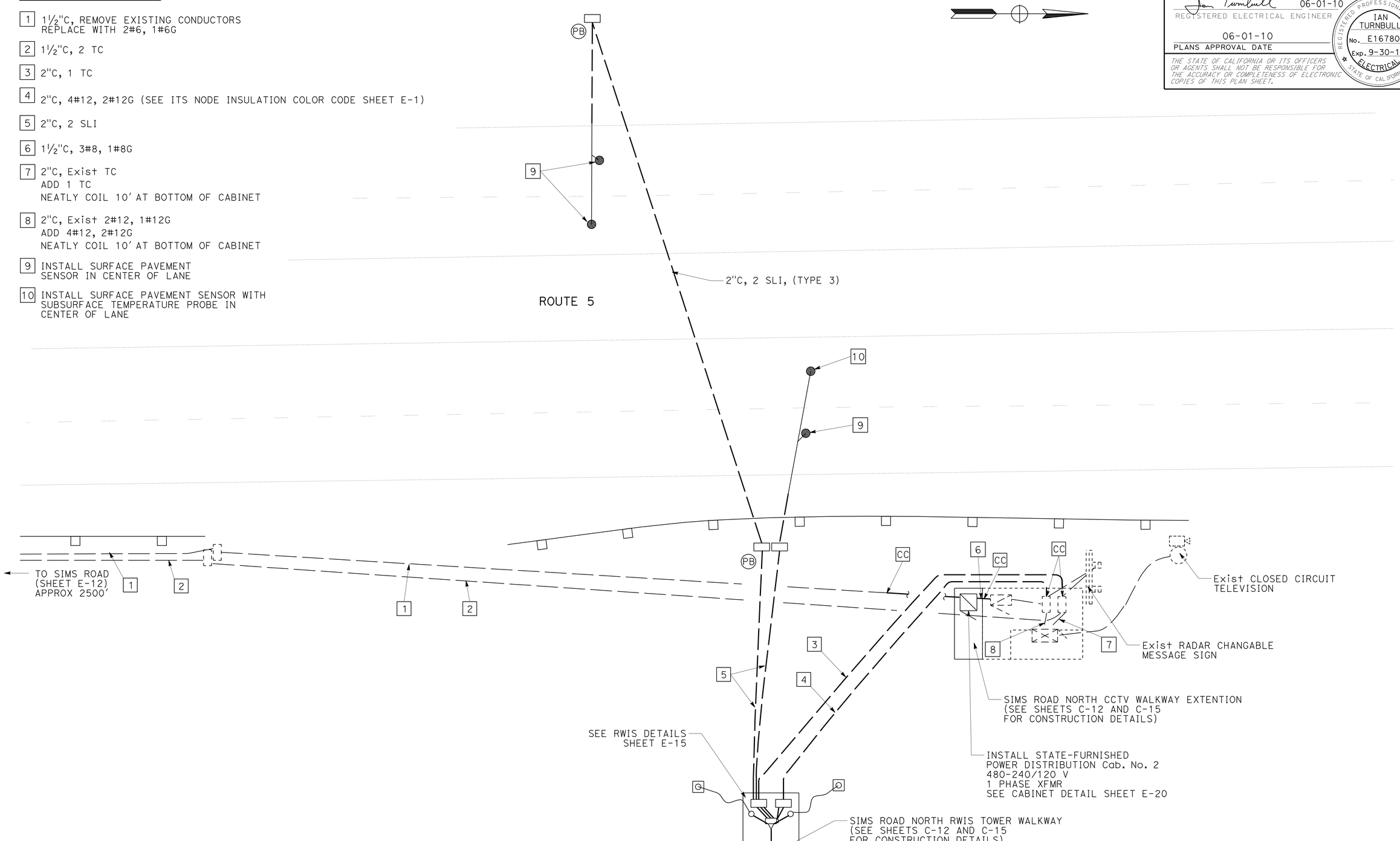

THIS PLAN IS ACCURATE FOR ELECTRICAL WORK ONLY.

ROADSIDE WEATHER INFORMATION SYSTEM

NO SCALE

E-14

REVISED BY	DATE REVISED
	03/29/10

KEITH KOEPPEN — STEVE S. LEE

CALCULATED-DESIGNED BY — CHECKED BY

FUNCTIONAL SUPERVISOR: IAN TURNBULL

STATE OF CALIFORNIA - DEPARTMENT OF TRANSPORTATION
Caltrans ELECTRICAL DESIGN

P:\proj1\02\2c450_plans\pse\22c450ua014.dgn

LAST REVISION 01-04-10 | DATE PLOTTED => 02-JUN-2010 | TIME PLOTTED => 15:33

Dist	COUNTY	ROUTE	POST MILES TOTAL PROJECT	SHEET No.	TOTAL SHEETS
02	Sha	5	R44.0/58.0	89	142

Ian Turnbull 06-01-10
REGISTERED ELECTRICAL ENGINEER

06-01-10
PLANS APPROVAL DATE

REGISTERED PROFESSIONAL ENGINEER IAN TURNBULL No. E16780 Exp. 9-30-10 ELECTRICAL STATE OF CALIFORNIA

THE STATE OF CALIFORNIA OR ITS OFFICERS OR AGENTS SHALL NOT BE RESPONSIBLE FOR THE ACCURACY OR COMPLETENESS OF ELECTRONIC COPIES OF THIS PLAN SHEET.

NOTES (THIS SHEET):

1. 1"C, 2#12, 1#12G (SEE RWIS INSULATION COLOR CODE THIS SHEET)
2. 1"C, 1/0 BCG
3. BURIED, 1/0 BARE GROUND, 36" DEEP
4. 2"C, 4#12, 2#12G
5. 3' ALUMINIUM MAST, 1.25" OUTSIDE DIAMETER 0.125" WALL THICKNESS

RWIS INSULATION COLOR CODE

CIRCUIT	CONDUCTOR	INSULATION
BETWEEN BBS Cab AND RWIS UTILITY SAFETY SWITCH	UNGROUNDED UTILITY POWER	BLACK
	GROUNDED UTILITY POWER	WHITE
BETWEEN BBS Cab AND RWIS BBS SAFETY SWITCH	UNGROUNDED BBS POWER	BLUE
	GROUNDED BBS POWER	WHITE

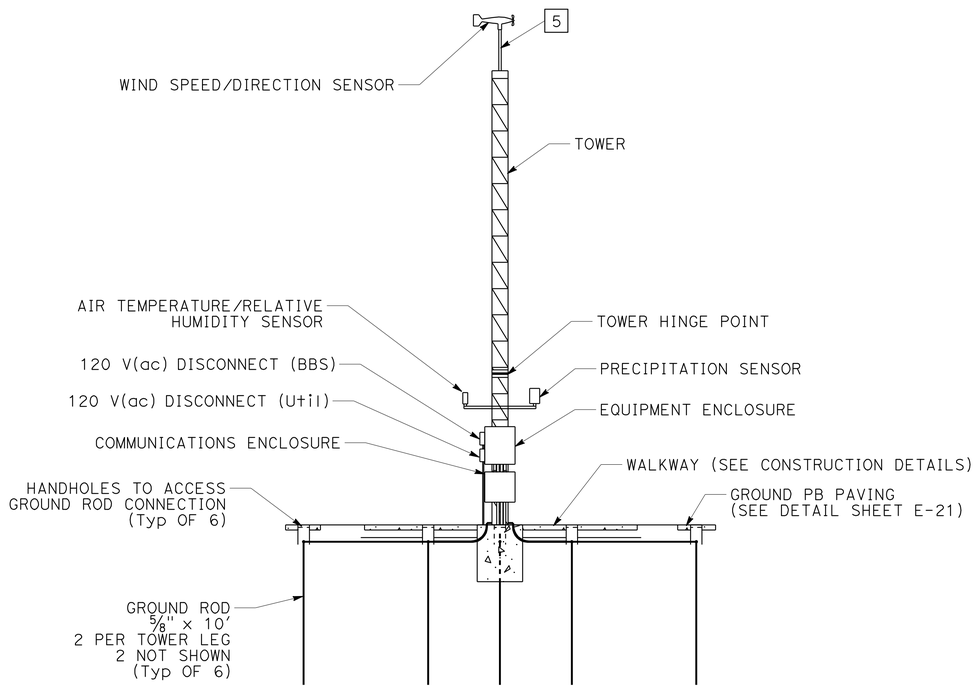

RWIS TOWER AND SENSOR CONFIGURATION

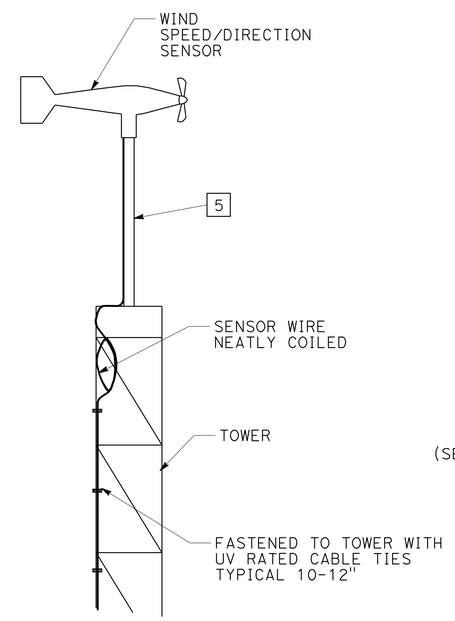

WIND SENSOR DETAIL

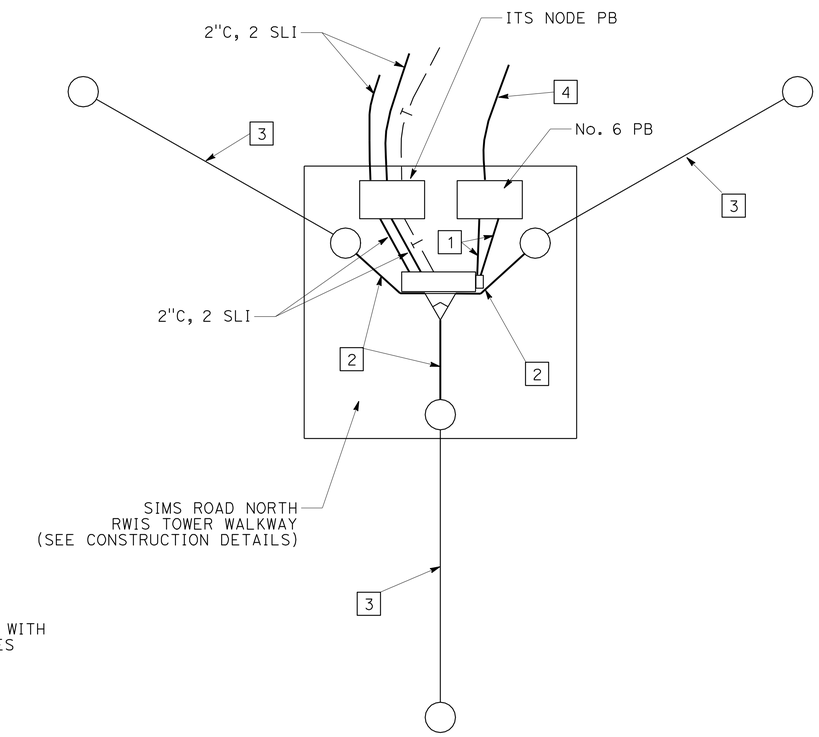

RWIS WALKWAY

ROADWAY WEATHER INFORMATION SYSTEM

NO SCALE

E-15

THIS PLAN IS ACCURATE FOR ELECTRICAL WORK ONLY.

REVISED BY	DATE REVISED
	03/29/10

KEITH KOEPPEN — STEVE S. LEE

CALCULATED-DESIGNED BY — CHECKED BY

FUNCTIONAL SUPERVISOR: IAN TURNBULL

STATE OF CALIFORNIA - DEPARTMENT OF TRANSPORTATION
Caltrans ELECTRICAL DESIGN

P:\proj1\02\2c450_plans\pse\22c450ua015.dgn

LAST REVISION 01-04-10 | DATE PLOTTED => 02-JUN-2010 | TIME PLOTTED => 15:33

Dist	COUNTY	ROUTE	POST MILES TOTAL PROJECT	SHEET No.	TOTAL SHEETS
02	Sha	5	R44.0/58.0	90	142

Ian Turnbull 06-01-10
REGISTERED ELECTRICAL ENGINEER

06-01-10
PLANS APPROVAL DATE

REGISTERED PROFESSIONAL ENGINEER IAN TURNBULL No. E16780 Exp. 9-30-10 ELECTRICAL STATE OF CALIFORNIA

THE STATE OF CALIFORNIA OR ITS OFFICERS OR AGENTS SHALL NOT BE RESPONSIBLE FOR THE ACCURACY OR COMPLETENESS OF ELECTRONIC COPIES OF THIS PLAN SHEET.

NOTES (THIS SHEET):

1. 1/0 BCG MECHANICALLY BONDED TO TOWER, SEE DETAIL E-18
2. BURIED, 1/0 BCG 36" DEEP
3. 1"C, 1/0 BCG
4. 2-2"C, MT, EQUIPMENT ENCLOURE TO COMMUNICATION ENCLOSURE
5. 2"C, 2 SLI
6. 2"C, 1 TC
7. 1"C, 2#12, 1#12G (Util), SEE RWIS INSULATION COLOR CODE E-15
8. 1"C, 2#12, 1#12G (BBS), SEE RWIS INSULATION COLOR CODE E-15

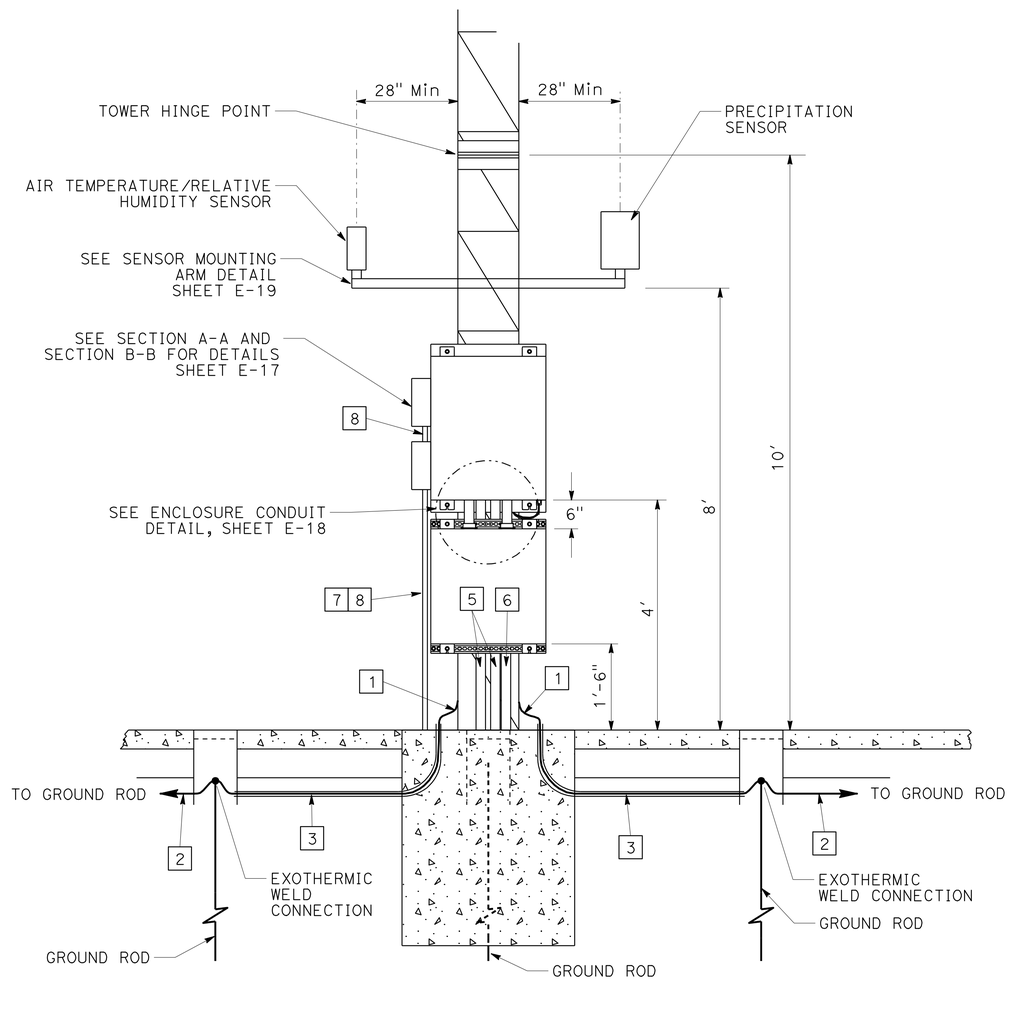

FRONT SIDE

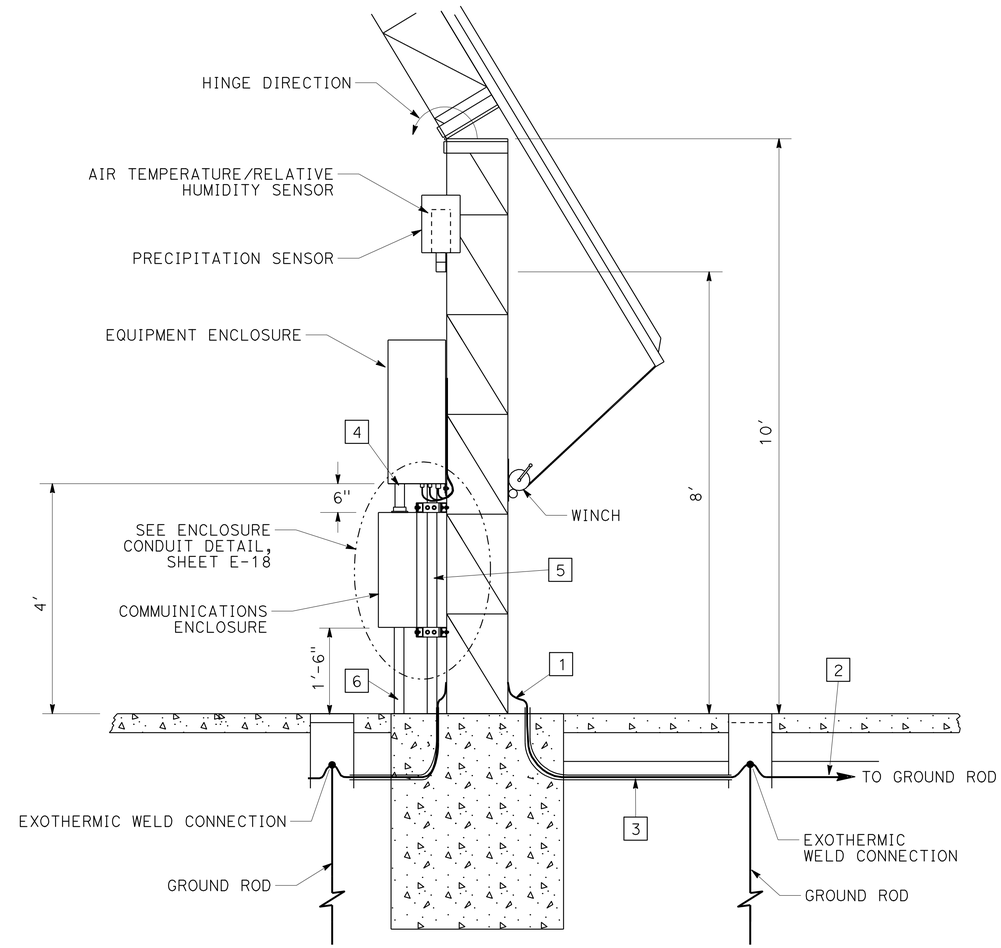

RIGHT SIDE

ROADSIDE WEATHER INFORMATION SYSTEM (DETAILS)

NO SCALE

E-16

THIS PLAN IS ACCURATE FOR ELECTRICAL WORK ONLY.

REVISED BY	DATE REVISED
	03/29/10

KEITH KOEPPEN — STEVE S. LEE

CALCULATED-DESIGNED BY — CHECKED BY

FUNCTIONAL SUPERVISOR: IAN TURNBULL

STATE OF CALIFORNIA - DEPARTMENT OF TRANSPORTATION
Caltrans ELECTRICAL DESIGN

P:\proj1\02\2c450_plans\pse\22c450ua016.dgn

LAST REVISION 01-04-10 | DATE PLOTTED => 02-JUN-2010 | TIME PLOTTED => 15:33

Dist	COUNTY	ROUTE	POST MILES TOTAL PROJECT	SHEET No.	TOTAL SHEETS
02	Sha	5	R44.0/58.0	91	142

REGISTERED ELECTRICAL ENGINEER 06-01-10

PLANS APPROVAL DATE 06-01-10

REGISTERED PROFESSIONAL ENGINEER IAN TURNBULL No. E16780 Exp. 9-30-10 ELECTRICAL STATE OF CALIFORNIA

THE STATE OF CALIFORNIA OR ITS OFFICERS OR AGENTS SHALL NOT BE RESPONSIBLE FOR THE ACCURACY OR COMPLETENESS OF ELECTRONIC COPIES OF THIS PLAN SHEET.

NOTES (THIS SHEET):

1. 1" HUB WATER TIGHT FITTING
2. 1" LB TYPE FITTING WITH COVER
3. INSTALL METAL DUPLEX COVER
4. 1"C, 2#12, 1#12G (BBS), SEE RWIS INSULATION COLOR CODE E-16
5. 1"C, 2#12, 1#12G (U+il), SEE RWIS INSULATION COLOR CODE E-16

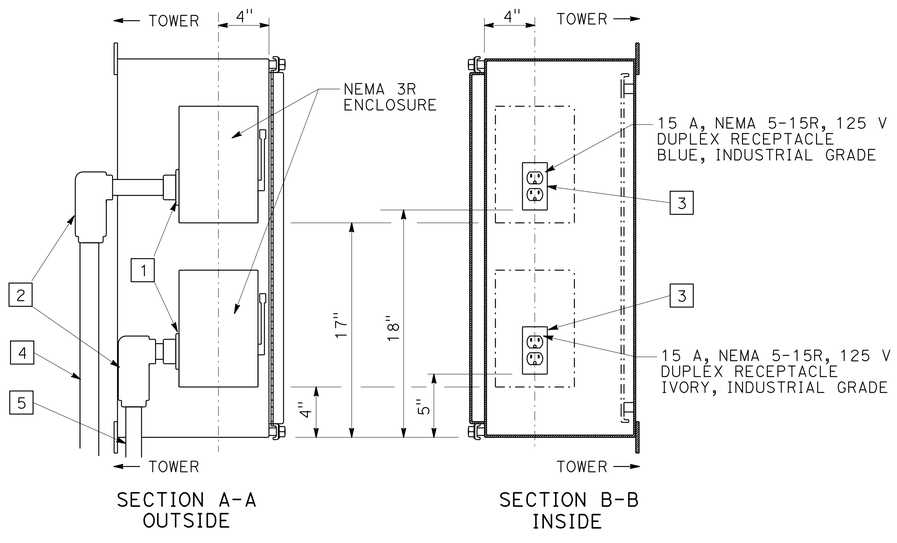

EQUIPMENT ENCLOSURE PLUG DETAIL

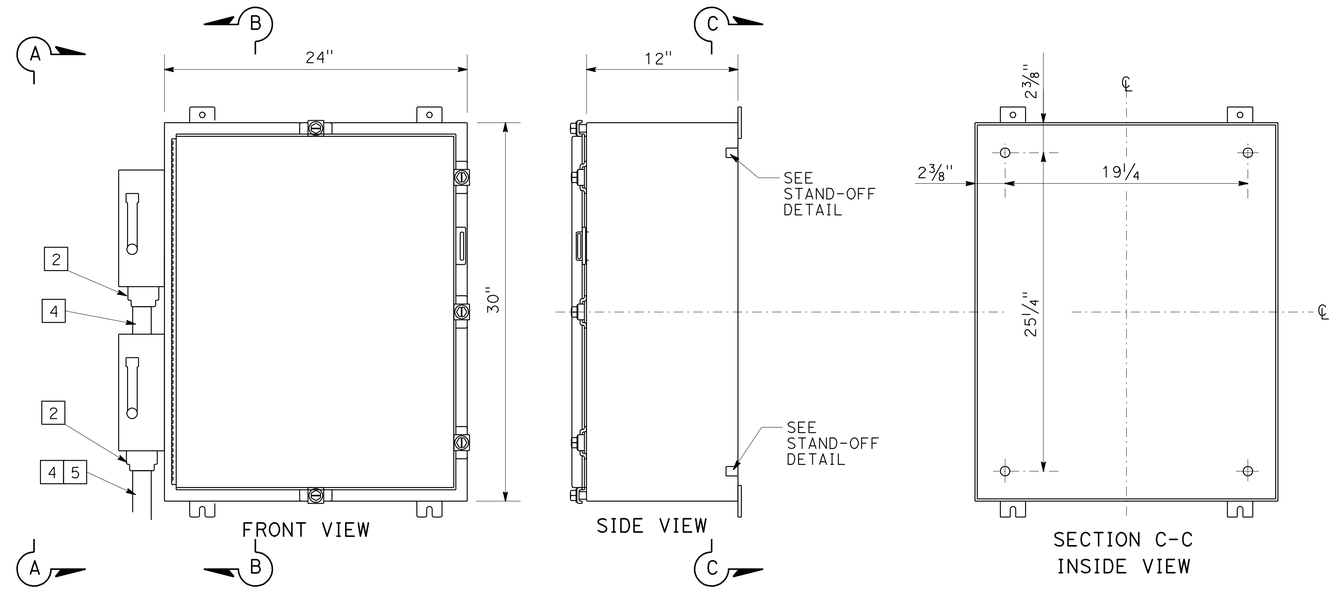

EQUIPMENT ENCLOSURE DETAIL

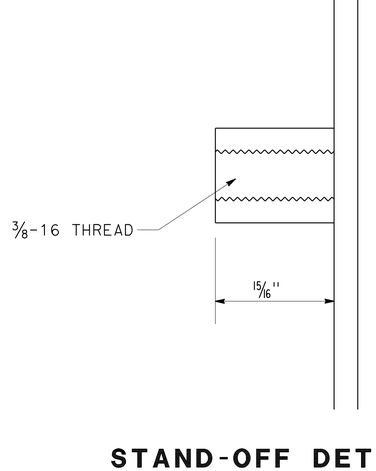

STAND-OFF DETAIL

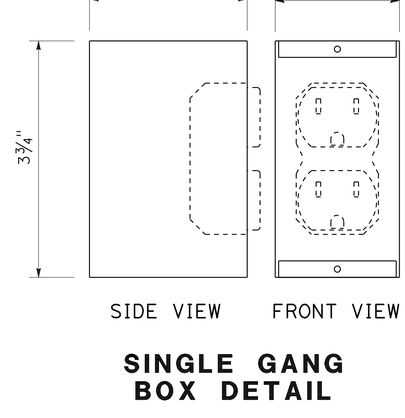

SINGLE GANG BOX DETAIL

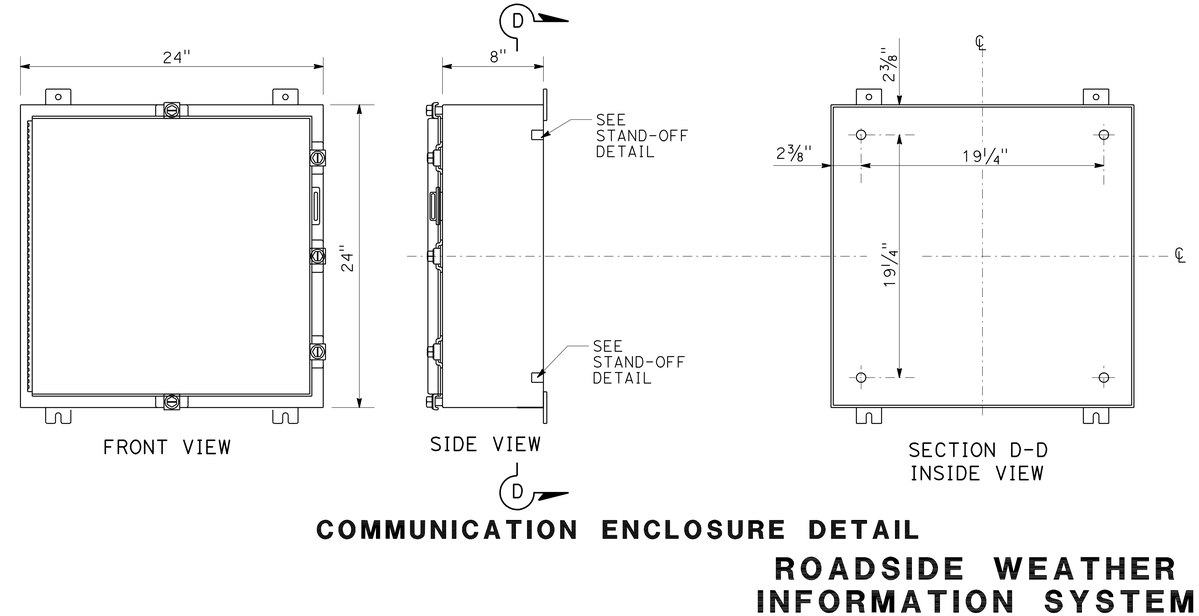

COMMUNICATION ENCLOSURE DETAIL

ROADSIDE WEATHER INFORMATION SYSTEM (DETAILS)

NO SCALE

E-17

THIS PLAN IS ACCURATE FOR ELECTRICAL WORK ONLY.

STATE OF CALIFORNIA - DEPARTMENT OF TRANSPORTATION
Caltrans ELECTRICAL DESIGN

FUNCTIONAL SUPERVISOR: IAN TURNBULL
CALCULATED-DESIGNED BY: KEITH KOEPPEN
CHECKED BY: STEVE S. LEE
REVISED BY
DATE REVISED 03/29/10

P:\proj1\02\2c450_plans\pse\22c450ua017.dgn

LAST REVISION 01-04-10
DATE PLOTTED => 02-JUN-2010
TIME PLOTTED => 15:33

Dist	COUNTY	ROUTE	POST MILES TOTAL PROJECT	SHEET No.	TOTAL SHEETS
02	Sha	5	R44.0/58.0	92	142

Ian Turnbull 06-01-10
REGISTERED ELECTRICAL ENGINEER

06-01-10
PLANS APPROVAL DATE

REGISTERED PROFESSIONAL ENGINEER IAN TURNBULL No. E16780 Exp. 9-30-10 ELECTRICAL STATE OF CALIFORNIA

THE STATE OF CALIFORNIA OR ITS OFFICERS OR AGENTS SHALL NOT BE RESPONSIBLE FOR THE ACCURACY OR COMPLETENESS OF ELECTRONIC COPIES OF THIS PLAN SHEET.

NOTES (THIS SHEET):

1. 1/0 BCG MECHANICALLY BONDED TO TOWER AT NEAREST TOWER BOLT
2. BURIED, 1/0 BCG, 36" DEEP
3. 1"C, 1/0 BARE GROUND
4. 2"C, MT, EQUIPMENT ENCLOURE TO COMMUNICATIONS ENCLOSURE
5. 2"C, 2 SLI
6. 2"C, 1 TC
7. 1"C, 2#12, 1#12G (Util), SEE RWIS INSULATION COLOR CODE SHEET E-15
8. 1"C, 2#12, 1#12G (BBS), SEE RWIS INSULATION COLOR CODE SHEET E-15
9. 2" HUB WATER TIGHT FITTING
10. 1⅝" STRUT CHANNEL
11. CHANNEL ANGLE PLATE 90 DEGREE STEEL, ELECTROGALVANIED
12. LIQUID TIGHT CORD CONNECTOR
13. 4" x ¼" 6061 ALUMINUM ALLOY PLATE BOLTED TO THE TOWER FOR MOUNTING EQUIPMENT ENCLOSURE TO TOWER (TOP AND BOTTOM)

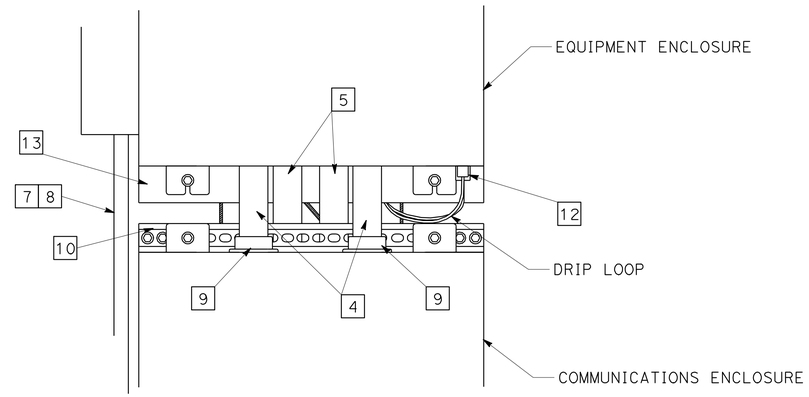

ENCLOSURE CONDUIT DETAIL

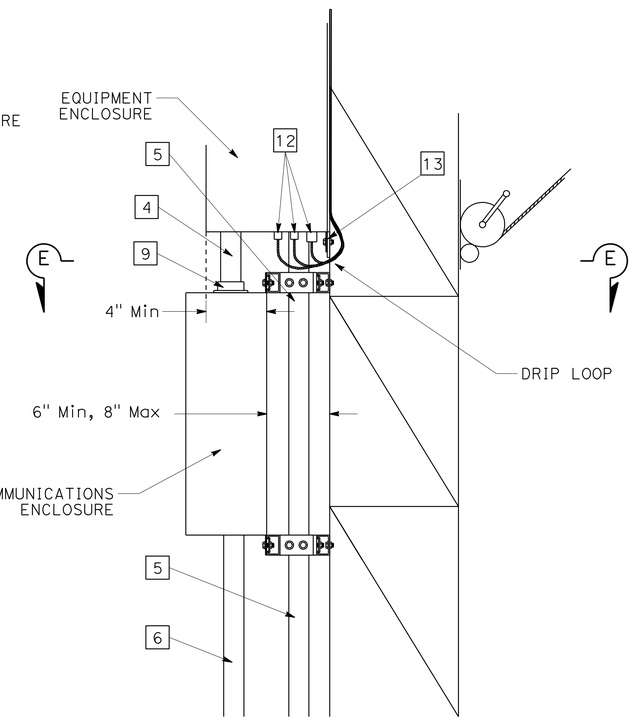

COMMUNICATIONS ENCLOSURE MOUNTING DETAIL

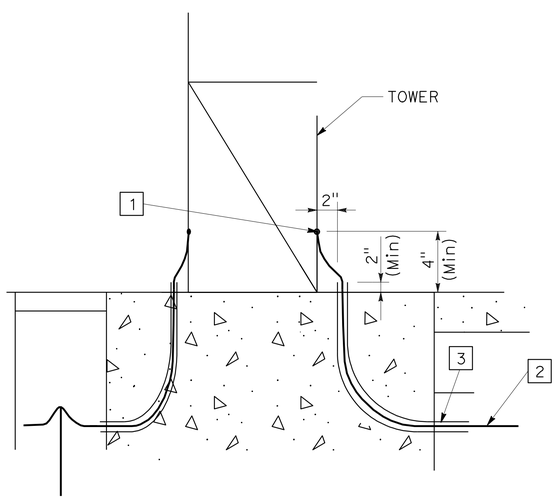

TOWER GROUNDING DETAIL

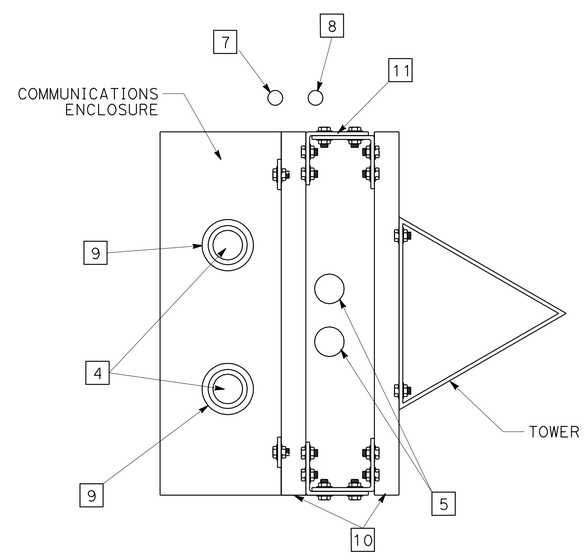

SECTION E-E

ALL HARDWARE IS STAINLESS STEEL UNLESS OTHERWISE NOTED

THIS PLAN IS ACCURATE FOR ELECTRICAL WORK ONLY.

ROADSIDE WEATHER INFORMATION SYSTEM (DETAILS)

NO SCALE

E-18

REVISED BY	DATE REVISED
	03/29/10

KEITH KOEPPEN — STEVE S. LEE

CALCULATED-DESIGNED BY — CHECKED BY

FUNCTIONAL SUPERVISOR: IAN TURNBULL

STATE OF CALIFORNIA - DEPARTMENT OF TRANSPORTATION
Caltrans ELECTRICAL DESIGN

P:\proj\02\2c450_plans\pse\22c450ua018.dgn

LAST REVISION 01-04-10 | DATE PLOTTED => 02-JUN-2010 | TIME PLOTTED => 15:33

Dist	COUNTY	ROUTE	POST MILES TOTAL PROJECT	SHEET No.	TOTAL SHEETS
02	Sha	5	R44.0/58.0	93	142

REGISTERED CIVIL ENGINEER 06-01-10 DATE

06-01-10
PLANS APPROVAL DATE

REGISTERED PROFESSIONAL ENGINEER
BYRON H. STANLEY
No. C60161
Exp. 6-30-10
CIVIL
STATE OF CALIFORNIA

THE STATE OF CALIFORNIA OR ITS OFFICERS OR AGENTS SHALL NOT BE RESPONSIBLE FOR THE ACCURACY OR COMPLETENESS OF SCANNED COPIES OF THIS PLAN SHEET.

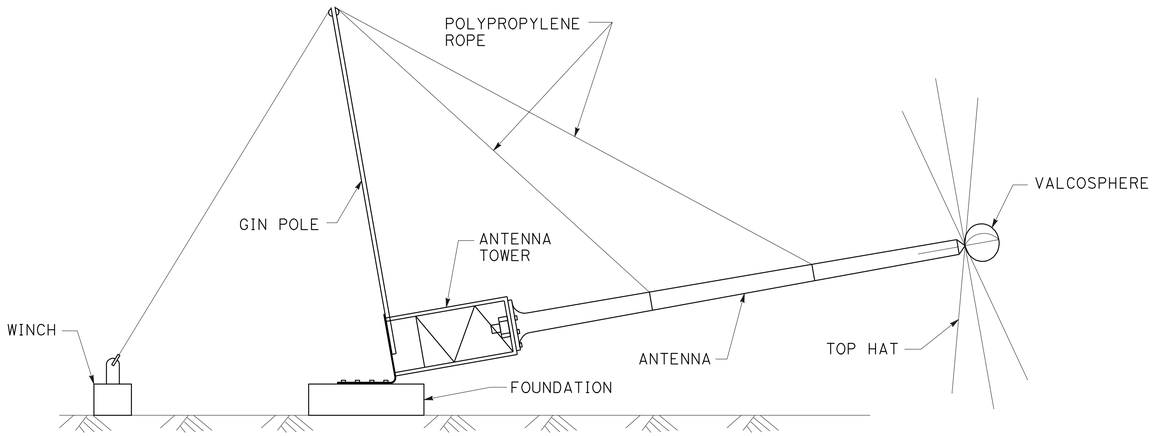

HAR ANTENNA INSTALLATION

NO SCALE

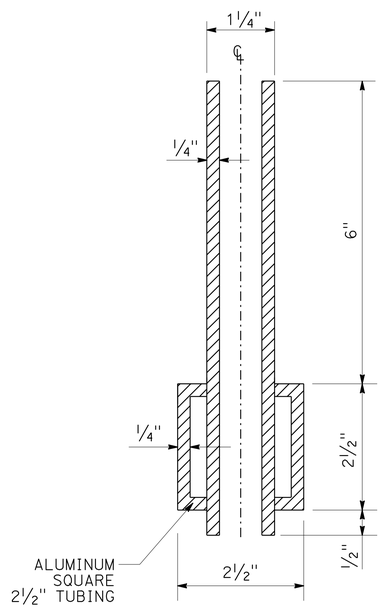

SECTION F-F

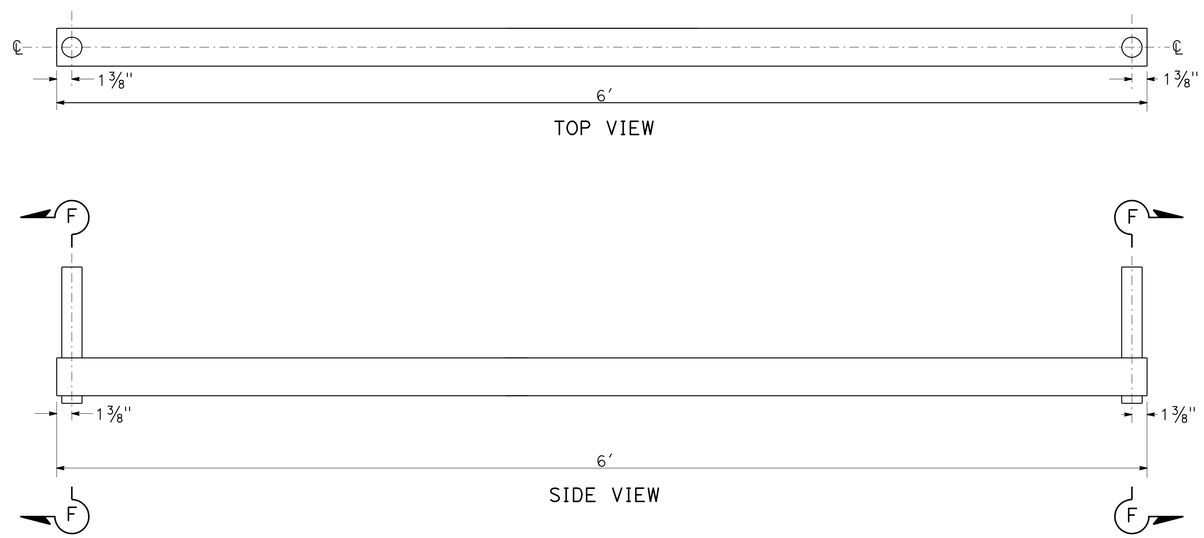

SENSOR MOUNTING ARM DETAIL

HIGHWAY ADVISORY RADIO SYSTEM
ROADSIDE WEATHER INFORMATION SYSTEM
(DETAILS)

NO SCALE

E-19

REVISED BY	DATE REVISED
BYRON STANLEY	03/29/10

CALCULATED-DESIGNED BY: BYRON STANLEY
CHECKED BY:
FUNCTIONAL SUPERVISOR: STEVE TOPAL

STATE OF CALIFORNIA - DEPARTMENT OF TRANSPORTATION
Caltrans
DESIGN

P:\proj1\02\2c450_plans\pse\22c450ua019.dgn

LAST REVISION 03-18-09
DATE PLOTTED => 02-JUN-2010
TIME PLOTTED => 15:34

Dist	COUNTY	ROUTE	POST MILES TOTAL PROJECT	SHEET No.	TOTAL SHEETS
02	Sha	5	R44.0/58.0	94	142

Ian Turnbull 06-01-10
REGISTERED ELECTRICAL ENGINEER

06-01-10
PLANS APPROVAL DATE

REGISTERED PROFESSIONAL ENGINEER IAN TURNBULL No. E16780 Exp. 9-30-10 ELECTRICAL STATE OF CALIFORNIA

THE STATE OF CALIFORNIA OR ITS OFFICERS OR AGENTS SHALL NOT BE RESPONSIBLE FOR THE ACCURACY OR COMPLETENESS OF ELECTRONIC COPIES OF THIS PLAN SHEET.

NOTES (THIS SHEET):

1. UNLESS OTHERWISE SHOWN - ALL EQUIPMENT CONTRACTOR-FURNISHED

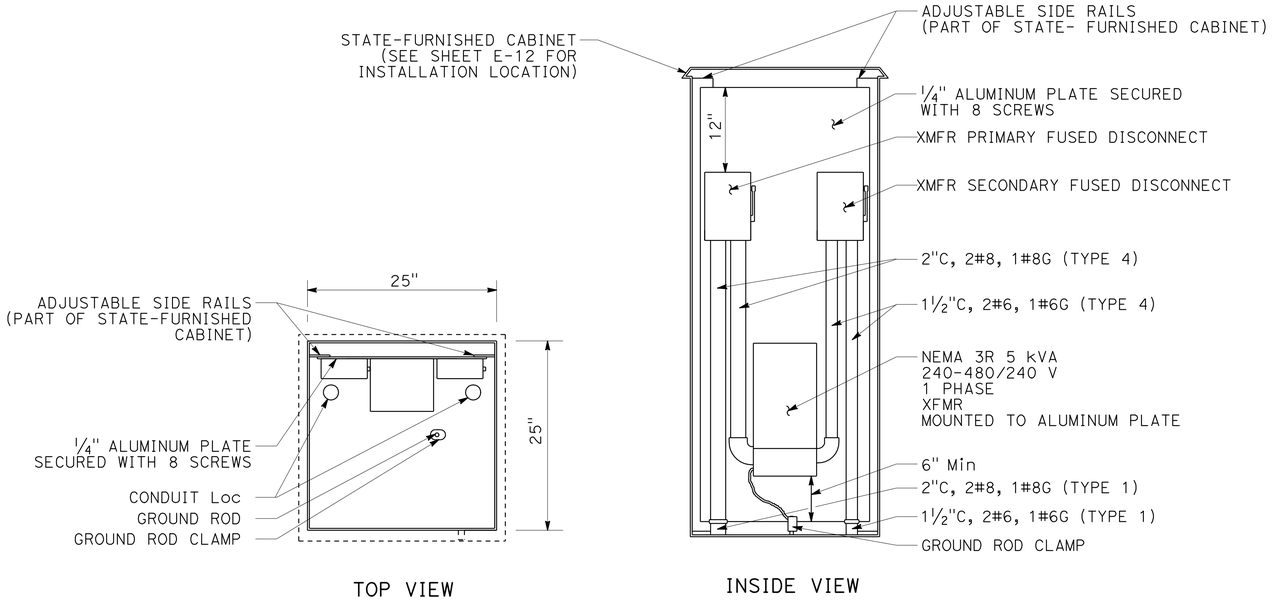

POWER DISTRIBUTION CABINET No. 1 DETAIL

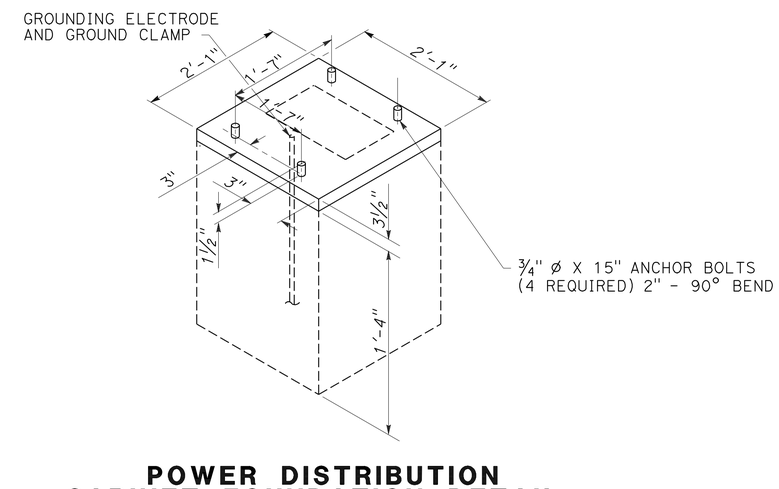

POWER DISTRIBUTION CABINET FOUNDATION DETAIL

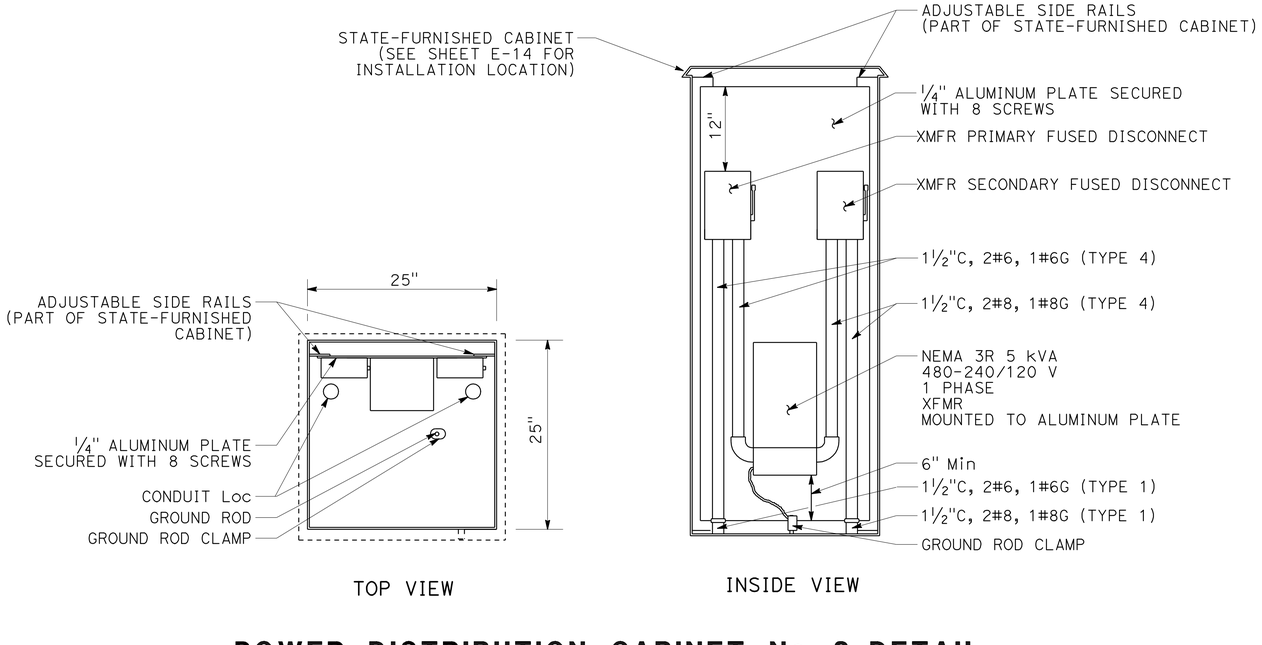

POWER DISTRIBUTION CABINET No. 2 DETAIL

HIGHWAY ADVISORY RADIO SYSTEM
ROADSIDE WEATHER INFORMATION SYSTEM
(DETAILS)

NO SCALE

E-20

THIS PLAN IS ACCURATE FOR ELECTRICAL WORK ONLY.

REVISED BY	DATE REVISED
KEITH KOEPPEN	04/20/10

CALCULATED-DESIGNED BY: STEVE S. LEE
CHECKED BY:
FUNCTIONAL SUPERVISOR: IAN TURNBULL

STATE OF CALIFORNIA - DEPARTMENT OF TRANSPORTATION
Caltrans ELECTRICAL DESIGN

P:\proj1\02\2c450_plans\pse\22c450ua020.dgn

LAST REVISION 01-04-10 | DATE PLOTTED => 02-JUN-2010 | TIME PLOTTED => 19:52

Dist	COUNTY	ROUTE	POST MILES TOTAL PROJECT	SHEET No.	TOTAL SHEETS
02	Sha	5	R44.0/58.0	95	142

Ian Turnbull 06-01-10
REGISTERED ELECTRICAL ENGINEER

06-01-10
PLANS APPROVAL DATE

REGISTERED PROFESSIONAL ENGINEER IAN TURNBULL No. E16780 Exp. 9-30-10 ELECTRICAL STATE OF CALIFORNIA

THE STATE OF CALIFORNIA OR ITS OFFICERS OR AGENTS SHALL NOT BE RESPONSIBLE FOR THE ACCURACY OR COMPLETENESS OF ELECTRONIC COPIES OF THIS PLAN SHEET.

NOTES (THIS SHEET):

1. Std EIA RACK UNIT = 1¾"
2. FOR INSTALLATION DETAILS NOT SHOWN, SEE Std PLANS.

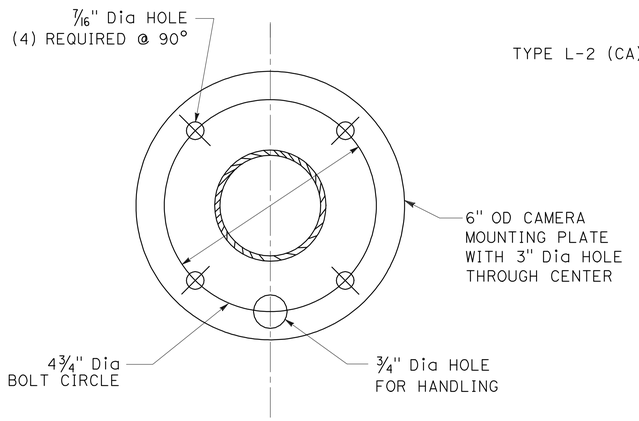

CAMERA BASE PLATE
(SEE SHEET SES-1)

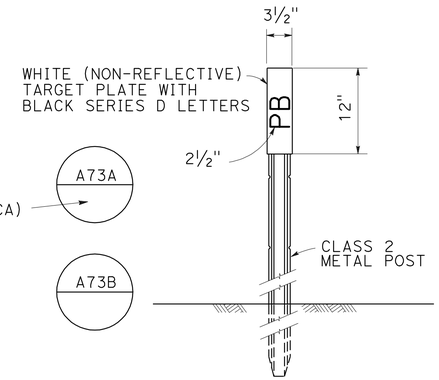

NOTE: MARKERS SHALL COMPLY WITH TYPE L-2 MODIFIED WITH A SNOW POLE BRACKET. PLACE MARKER 2" OUTSIDE PULL BOX PAVING ON SIDE AWAY FROM TRAFFIC. SEE PULL BOX PAVING DETAIL.

OBJECT MARKER (TYPE PB)

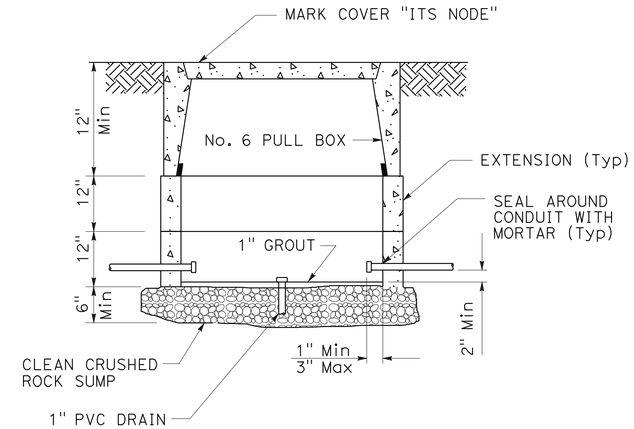

ITS NODE PULL BOX

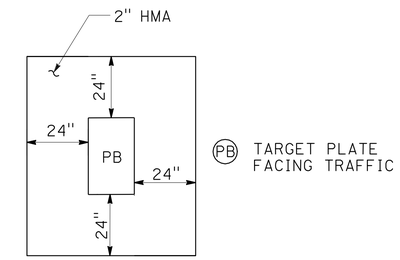

PULL BOX PAVING

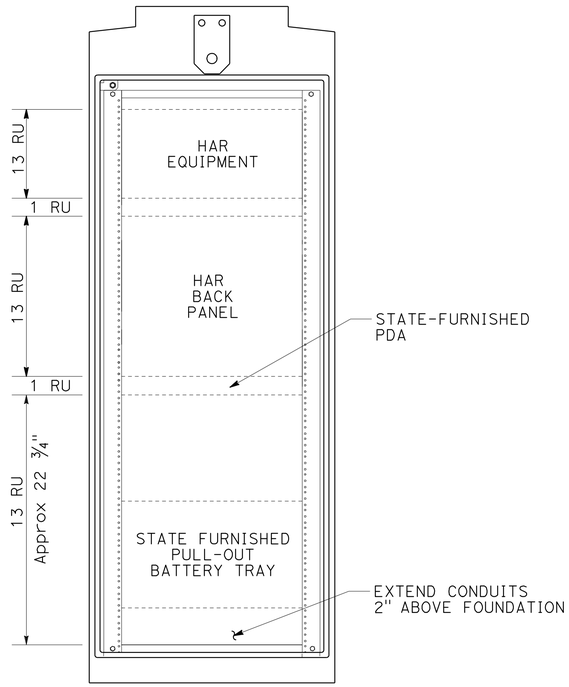

HAR EQUIPMENT LAYOUT

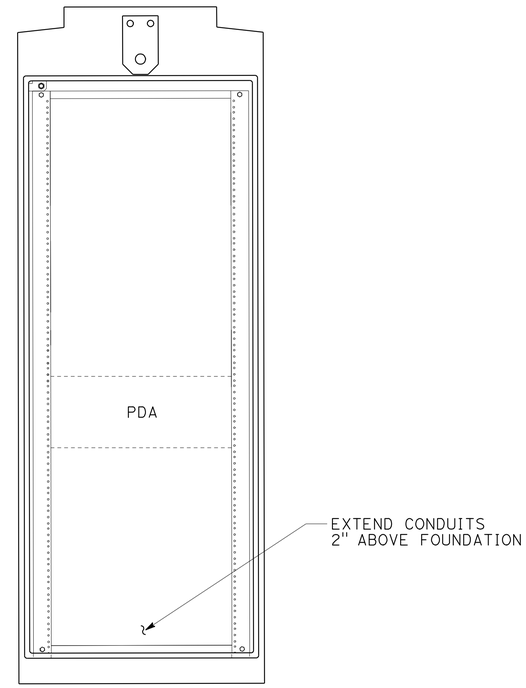

TMS CABINET LAYOUT

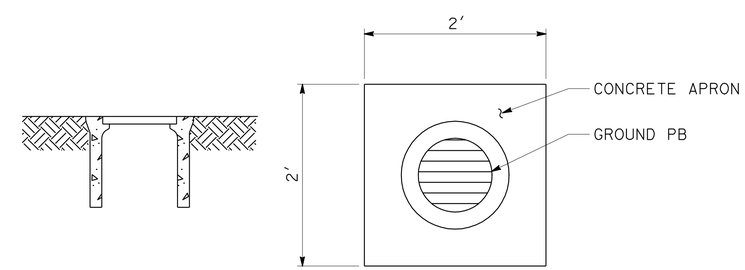

GROUND SYSTEM PB PAVING

THIS PLAN IS ACCURATE FOR ELECTRICAL WORK ONLY.

ELECTRICAL DETAILS
NO SCALE

E-21

REVISED BY	DATE REVISED
KEITH KOEPPEN	03/29/10

CALCULATED-DESIGNED BY: STEVE S. LEE
CHECKED BY:
FUNCTIONAL SUPERVISOR: IAN TURNBULL

STATE OF CALIFORNIA - DEPARTMENT OF TRANSPORTATION
Caltrans ELECTRICAL DESIGN

P:\proj1\02\2c450_plans\pse\22c450ua021.dgn

LAST REVISION 01-04-10
DATE PLOTTED => 02-JUN-2010
TIME PLOTTED => 15:34

Dist	COUNTY	ROUTE	POST MILES TOTAL PROJECT	SHEET No.	TOTAL SHEETS
02	Sha	5	R44.0/58.0	96	142

Ian Turnbull 06-01-10
REGISTERED ELECTRICAL ENGINEER

06-01-10
PLANS APPROVAL DATE

REGISTERED PROFESSIONAL ENGINEER IAN TURNBULL No. E16780 Exp. 9-30-10 ELECTRICAL STATE OF CALIFORNIA

THE STATE OF CALIFORNIA OR ITS OFFICERS OR AGENTS SHALL NOT BE RESPONSIBLE FOR THE ACCURACY OR COMPLETENESS OF ELECTRONIC COPIES OF THIS PLAN SHEET.

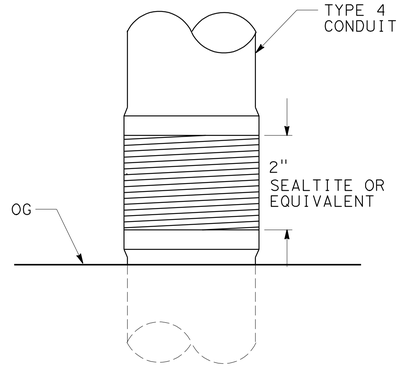

CONDUIT DETAIL

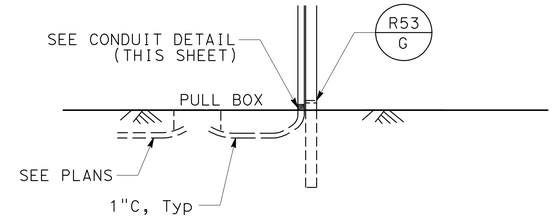

BREAKAWAY POST
(CONDUIT CONNECTION)

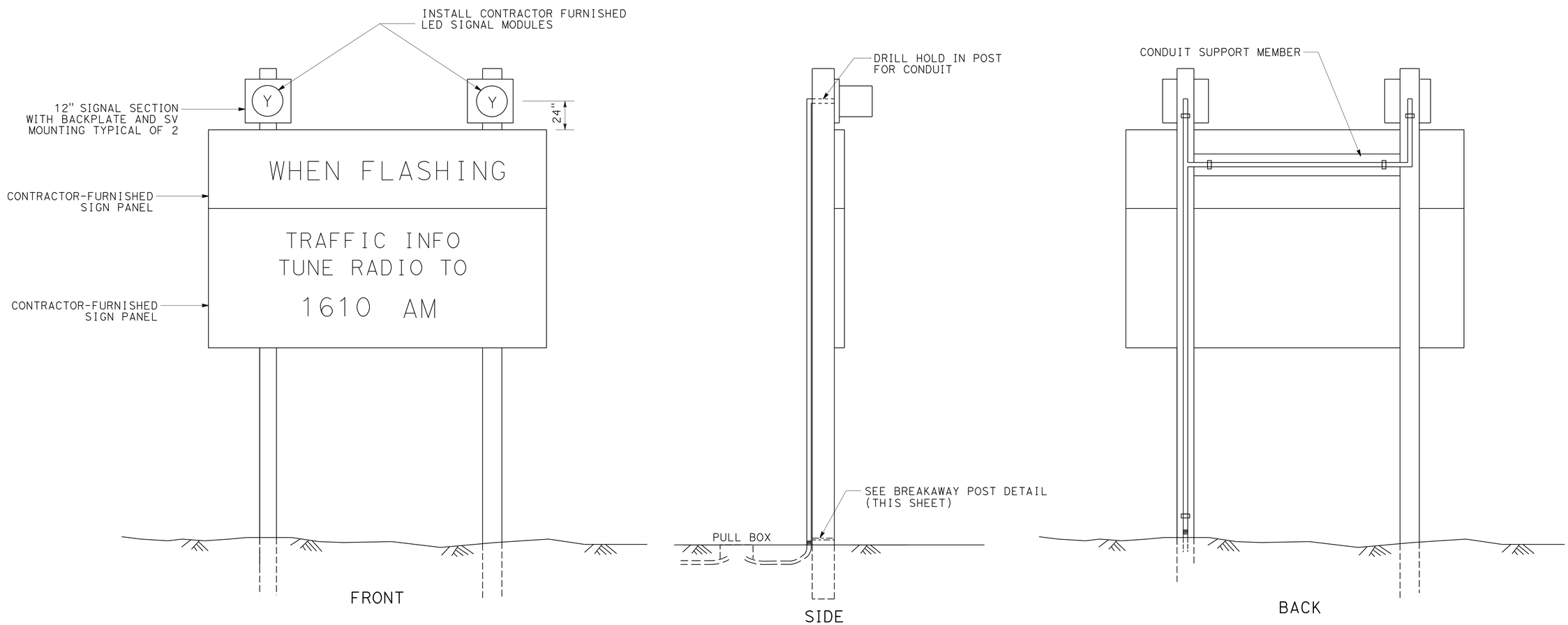

HAR ADVISORY SIGN INSTALLATION

HIGHWAY ADVISORY RADIO SYSTEM (DETAILS)
NO SCALE

E-22

THIS PLAN IS ACCURATE FOR ELECTRICAL WORK ONLY.

REVISED BY	DATE REVISED
	03/30/10

CALCULATED-DESIGNED BY: KEITH KOEPPEN
CHECKED BY: STEVE S. LEE
FUNCTIONAL SUPERVISOR: IAN TURNBULL

STATE OF CALIFORNIA - DEPARTMENT OF TRANSPORTATION
Caltrans ELECTRICAL DESIGN

P:\proj1\02\2c450_plans\pse\22c450ua022.dgn

LAST REVISION 01-04-10
DATE PLOTTED => 02-JUN-2010
TIME PLOTTED => 15:34

DIST	COUNTY	ROUTE	POST MILES TOTAL PROJECT	SHEET No	TOTAL SHEETS
02	Sha	5	R44.0/58.0	97	142

REGISTERED CIVIL ENGINEER 6-1-10 DATE

6-1-10
PLANS APPROVAL DATE

REGISTERED PROFESSIONAL ENGINEER JEFFREY B. WOODY No. C41260 Exp. 3/31/11 CIVIL STATE OF CALIFORNIA

The State of California or its officers or agents shall not be responsible for the accuracy or completeness of electronic copies of this plan sheet.

To get to the Caltrans web site, go to: http://www.dot.ca.gov

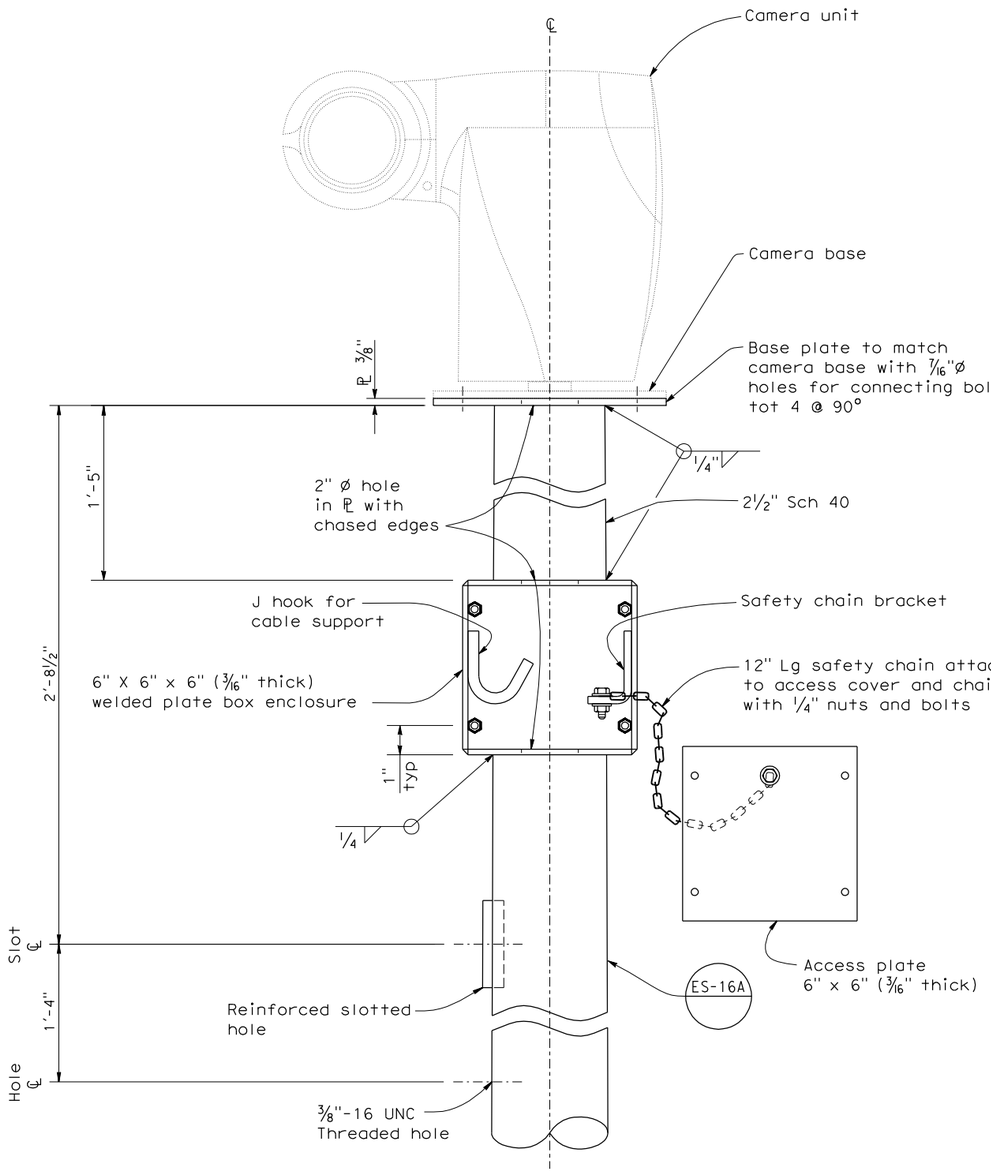

DETAIL A
CCTV POLE MOUNTING WITH ADAPTER

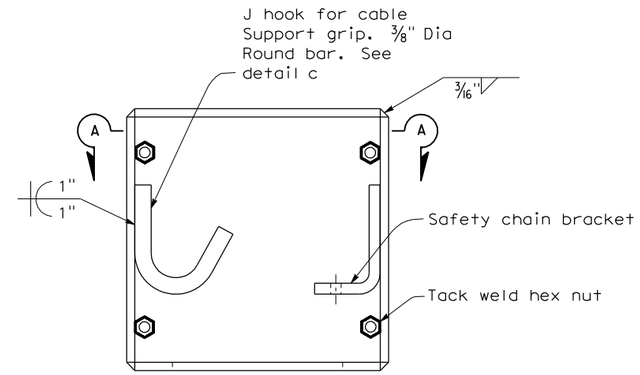

DETAIL B
BOX ENCLOSURE

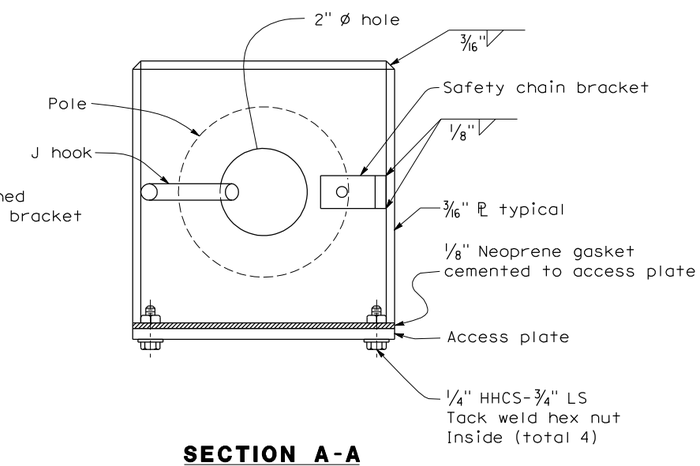

SECTION A-A

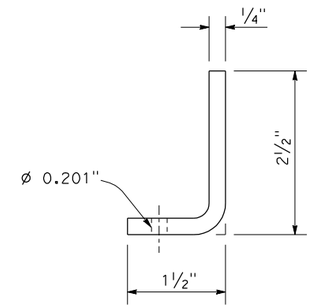

DETAIL D
SAFETY CHAIN BRACKET

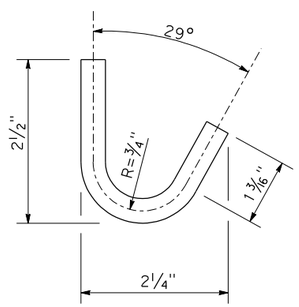

DETAIL C
J HOOK

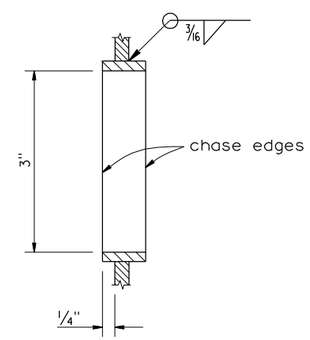

REINFORCED SLOTTED HOLE DETAIL

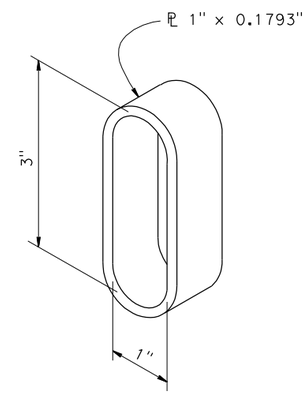

REINFORCING RING

NOTE:
THE CONTRACTOR SHALL VERIFY ALL CONTROLLING FIELD DIMENSIONS BEFORE ORDERING OR FABRICATING ANY MATERIAL.

BRANCH CHIEF

	BY	CHECKED
DESIGN	J WOODY	R GIORGIS
DETAILS	D W JUSTICE Jr	J WOODY
QUANTITIES	_	_

STATE OF CALIFORNIA
DEPARTMENT OF TRANSPORTATION

DIVISION OF ENGINEERING SERVICES
DESIGN AND TECHNICAL SERVICES
SPECIAL DESIGNS BRANCH
A

BRIDGE NO. N/A
POST MILE Var

ELECTRICAL DETAILS
CAMERA MOUNTING DETAILS

SES-1

(ENGLISH) SPECIAL DESIGNS BRANCH BORDER SHEET (REV. 7-1-09)

ORIGINAL SCALE IN INCHES FOR REDUCED PLANS 0 1 2 3

CU 02
EA 2c4501

DISREGARD PRINTS BEARING EARLIER REVISION DATES 5-27-10

REVISION DATES | SHEET _ | OF _

FILE => spec_des_br_prj/dell/02-2c4501/ $REQUEST

USERNAME => $USER DATE PLOTTED => $DATE TIME PLOTTED => $TIME

DIST	COUNTY	ROUTE	POST MILES TOTAL PROJECT	SHEET NO.	TOTAL SHEETS
02	Sha	5	R44.0/58.0	98	142

REGISTERED CIVIL ENGINEER

June 6, 2008
PLANS APPROVAL DATE

REGISTERED PROFESSIONAL ENGINEER Donald E. Howe No. C46402 Exp. 3-31-09 CIVIL STATE OF CALIFORNIA

The State of California or its officers or agents shall not be responsible for the accuracy or completeness of electronic copies of this plan sheet.

To accompany plans dated 06-01-10

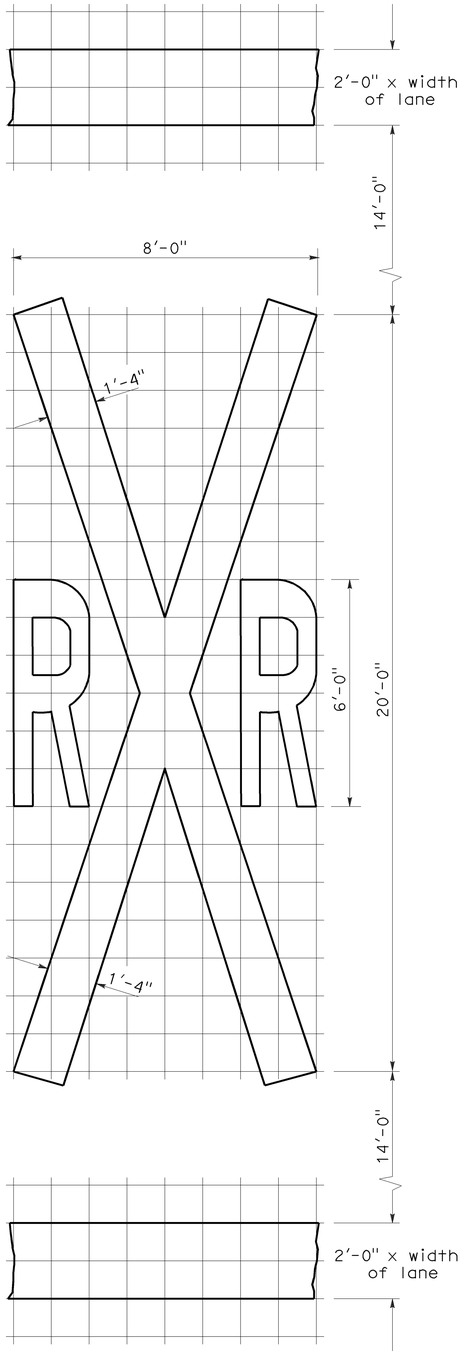

1'-0" GRID
A=70 sq ft ✳

RAILROAD CROSSING SYMBOL

✳70 sq ft DOES NOT INCLUDE THE 2'-0" x VARIABLE WIDTH TRANSVERSE LINES.

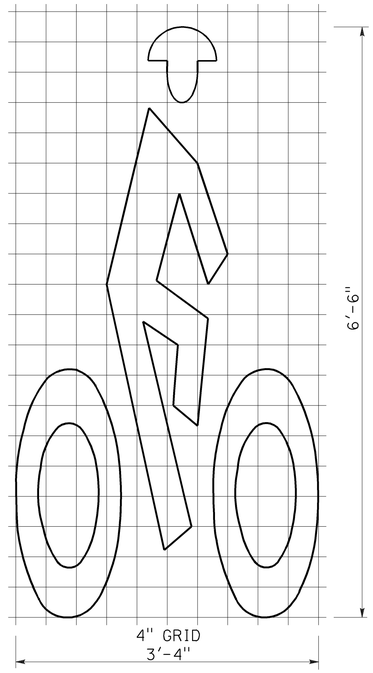

A=7 sq ft

BIKE LANE SYMBOL

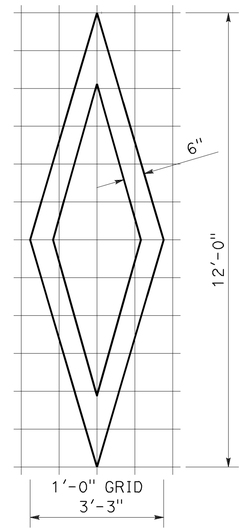

A=11 sq ft

DIAMOND SYMBOL

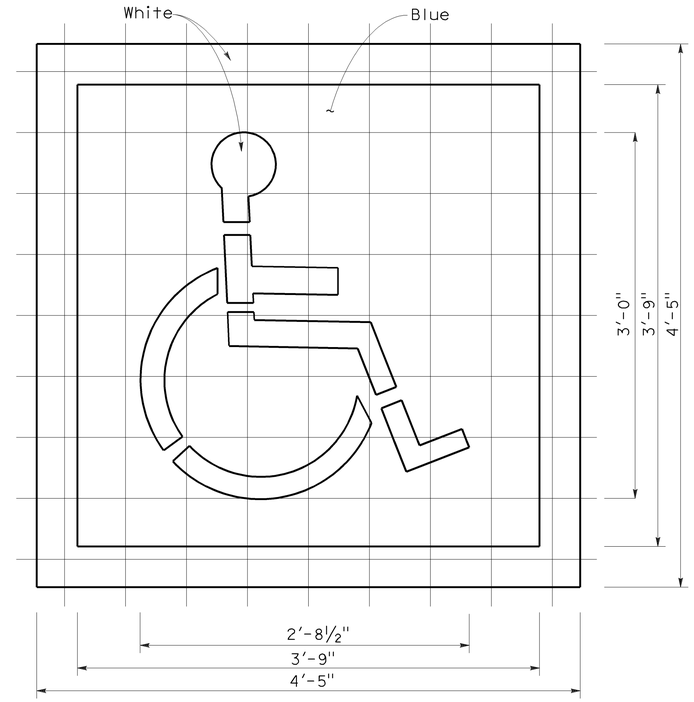

6" GRID
A (White) =9 sq ft
A (Blue) =14 sq ft

INTERNATIONAL SYMBOL OF ACCESSIBILITY MARKING

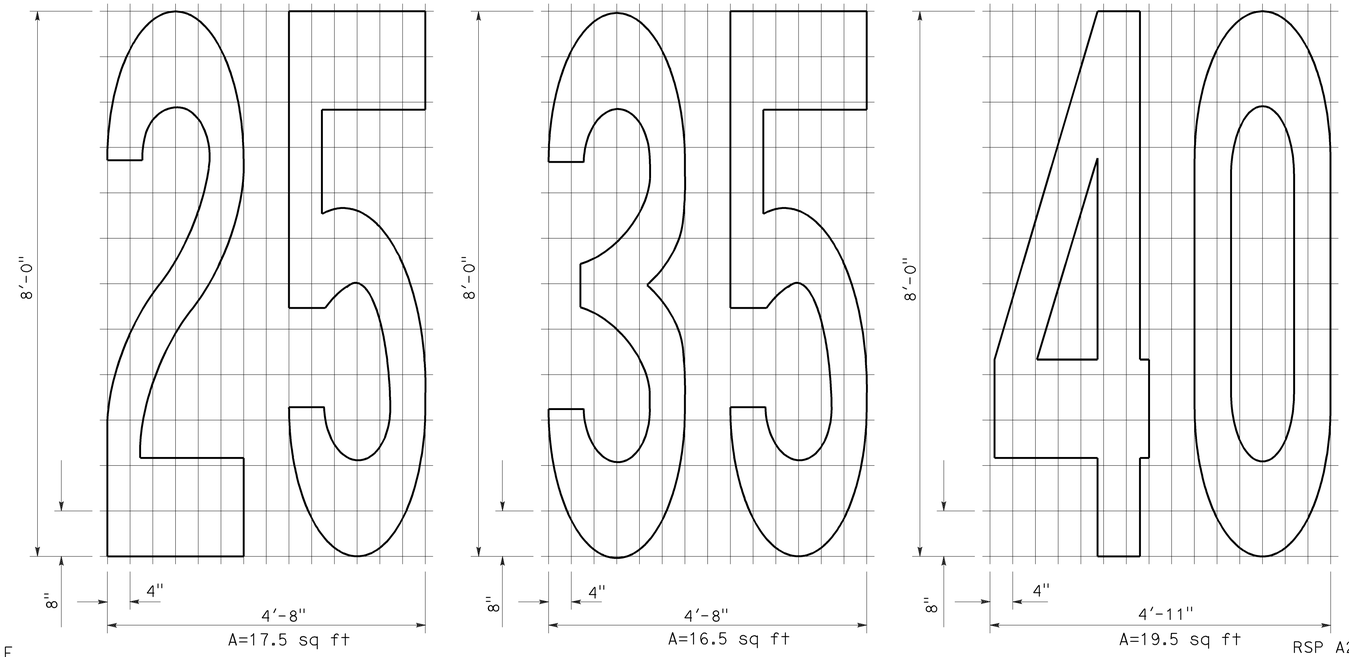

A=17.5 sq ft A=16.5 sq ft A=19.5 sq ft

NUMERALS

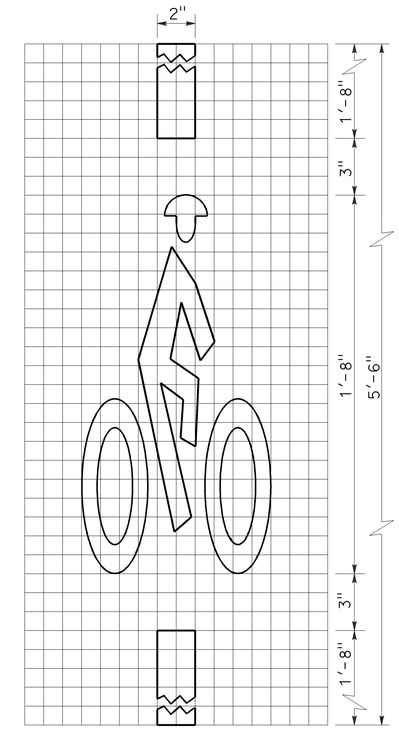

1" GRID
10"
A=2 sq ft

BICYCLE LOOP DETECTOR SYMBOL

NOTE:

1. Minor variations in dimensions may be accepted by the Engineer.

STATE OF CALIFORNIA
DEPARTMENT OF TRANSPORTATION

PAVEMENT MARKINGS SYMBOLS AND NUMERALS

NO SCALE

RSP A24C DATED JUNE 6, 2008 SUPERSEDES STANDARD PLAN A24C DATED MAY 1, 2006 - PAGE 11 OF THE STANDARD PLANS BOOK DATED MAY 2006.

REVISED STANDARD PLAN RSP A24C

2006 REVISED STANDARD PLAN RSP A24C

5-27-08

DIST	COUNTY	ROUTE	POST MILES TOTAL PROJECT	SHEET NO.	TOTAL SHEETS
02	Sha	5	R44.0/58.0	99	142

Randell D. Hiatt
REGISTERED CIVIL ENGINEER

June 6, 2008
PLANS APPROVAL DATE

REGISTERED PROFESSIONAL ENGINEER Randell D. Hiatt No. C50200 Exp. 6-30-09 CIVIL STATE OF CALIFORNIA

The State of California or its officers or agents shall not be responsible for the accuracy or completeness of electronic copies of this plan sheet.

To accompany plans dated 06-01-10

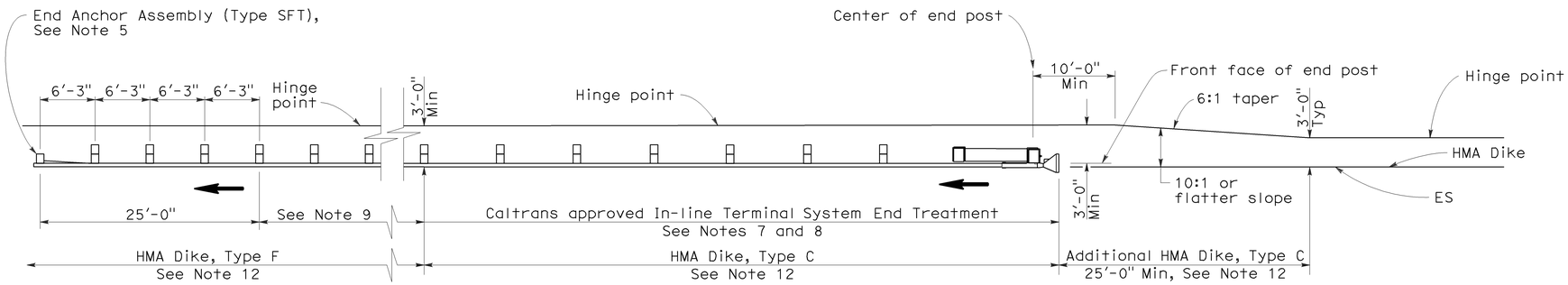

TYPE 11A LAYOUT

(EMBANKMENT GUARD INSTALLATION WITH IN-LINE END TREATMENT AT TRAFFIC APPROACH END OF RAILING)
See Note 6

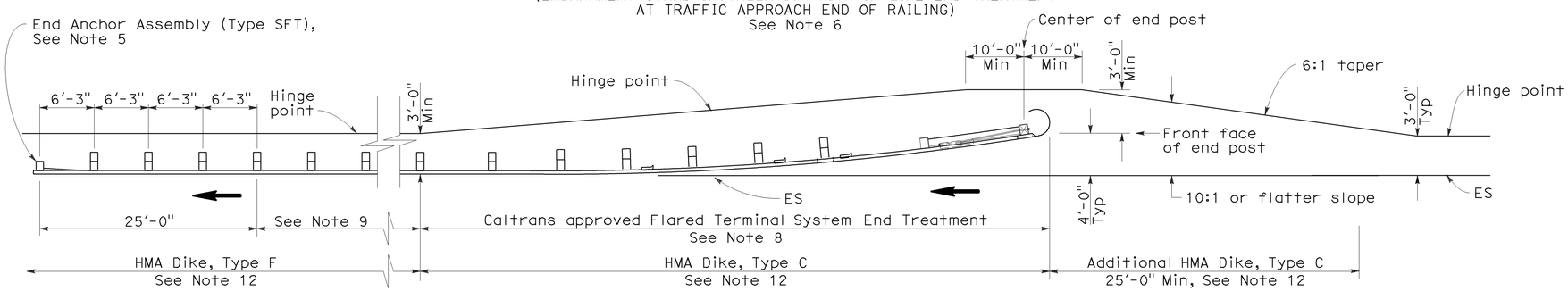

TYPE 11B LAYOUT

(EMBANKMENT GUARD RAILING INSTALLATION WITH FLARED END TREATMENT AT TRAFFIC APPROACH END OF RAILING)
See Note 6

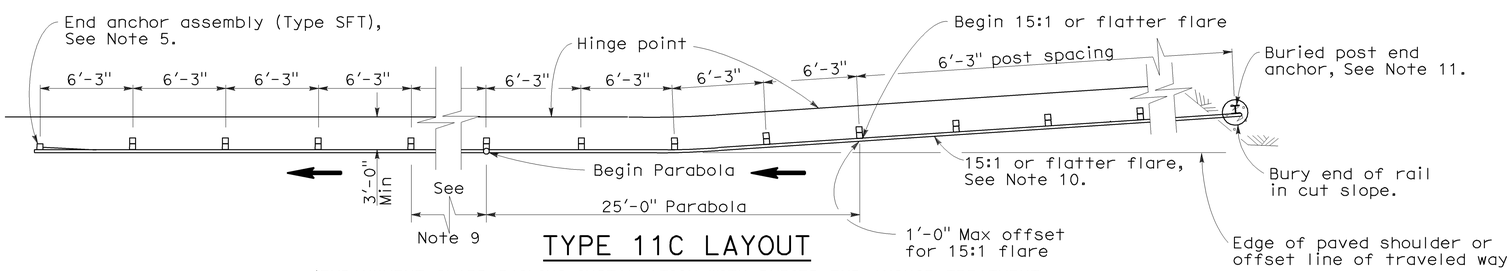

TYPE 11C LAYOUT

(EMBANKMENT GUARD RAILING INSTALLATION WITH BURIED END ANCHOR TREATMENT AT TRAFFIC APPROACH END OF RAILING)
See Notes 6 and 12

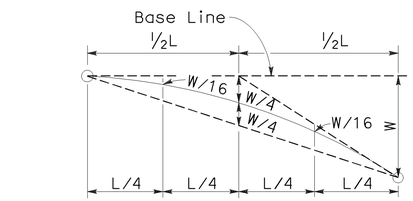

TYPICAL PARABOLIC LAYOUT

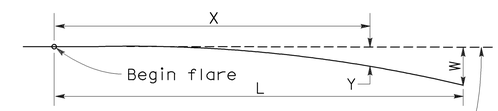

Base Line (Edge of paved shoulder or offset line of edge of traveled way)

$$Y = \frac{WX^2}{L^2}$$

Y = Offset from base line
W = Maximum offset
X = Distance along base line
L = Length of flare

PARABOLIC FLARE OFFSETS

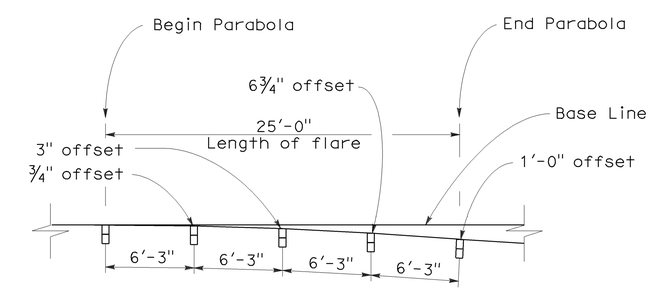

TYPICAL FLARE OFFSETS FOR 1 FOOT MAX END OFFSET

NOTES:

1. Line post, blocks and hardware to be used are shown on Standard Plans A77A1, A77A2, A77B1, A77C1, and A77C2.
2. Guard rail post spacing to be 6'-3" center to center, except as otherwise noted.
3. Except as noted, line posts are 6" x 8" x 6'-0" wood with 6" x 8" x 1'-2" wood blocks. W6 x 9 steel posts, 6'-0" in length, with 6" x 8" x 1'-2" notched wood blocks or recycled plastic blocks may be used for 6" x 8" x 6'-0" wood post with 6" x 8" x 1'-2" wood blocks where applicable and when specified.
4. Direction of adjacent traffic indicated by ⟶.
5. For End Anchor Assembly (Type SFT) details, see Standard Plan A77H1.
6. Layout Types 11A, 11B or 11C are typically used where guard railing is recommended to shield embankment slopes and a crashworthy end treatment is required for only one direction of traffic.
7. In-line Terminal System End Treatments are used where site conditions will not accommodate a flared end treatment.
8. The type of terminal system end treatment to be used will be shown on the Project Plans.
9. Dependent on site conditions (embankment height and side slope), construction of additional guard railing (length equal to multiples of 12'-6" with 6'-3" post spacing) may be advisable.
10. The 15:1 or flatter flare used with buried end anchors is based on the edge of the paved shoulder or offset line of edge of the traveled way. The length of guard railing within the 15:1 or flatter flare is based on site conditions and should be a length equal to multiples of 12'-6".
11. For details of the buried post end anchor used with Type 11C Layout, see Standard Plan A77I2.
12. Where placement of dike is required with guard railing installations, see Revised Standard Plan RSP A77C4 for dike positioning details.

STATE OF CALIFORNIA
DEPARTMENT OF TRANSPORTATION

METAL BEAM GUARD RAILING TYPICAL LAYOUTS FOR EMBANKMENTS

NO SCALE

RSP A77E1 DATED JUNE 6, 2008 SUPERSEDES STANDARD PLAN A77E1 DATED MAY 1, 2006 - PAGE 48 OF THE STANDARD PLANS BOOK DATED MAY 2006.

REVISED STANDARD PLAN RSP A77E1

2006 REVISED STANDARD PLAN RSP A77E1

12-10-07

DIST	COUNTY	ROUTE	POST MILES TOTAL PROJECT	SHEET NO.	TOTAL SHEETS
02	Sha	5	R44.0/58.0	100	142

Randell D. Hiatt
REGISTERED CIVIL ENGINEER

June 6, 2008
PLANS APPROVAL DATE

REGISTERED PROFESSIONAL ENGINEER
Randell D. Hiatt
No. C50200
Exp. 6-30-09
CIVIL
STATE OF CALIFORNIA

The State of California or its officers or agents shall not be responsible for the accuracy or completeness of electronic copies of this plan sheet.

To accompany plans dated 06-01-10

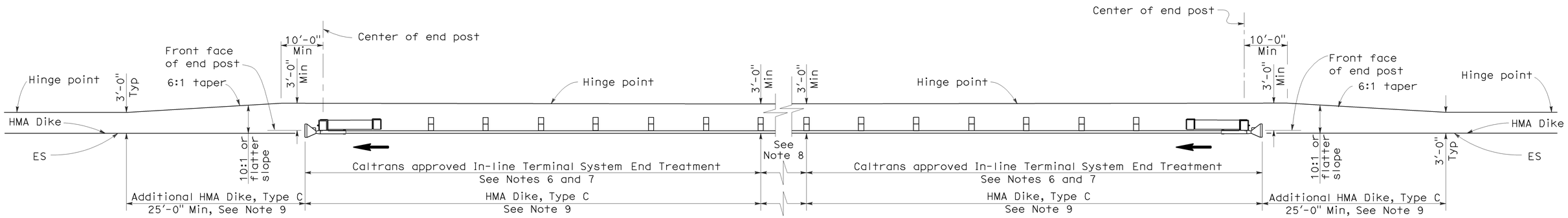

TYPE 11D LAYOUT

(EMBANKMENT GUARD RAILING INSTALLATION WITH IN-LINE END TREATMENT AT EACH END OF RAILING)
See Note 5

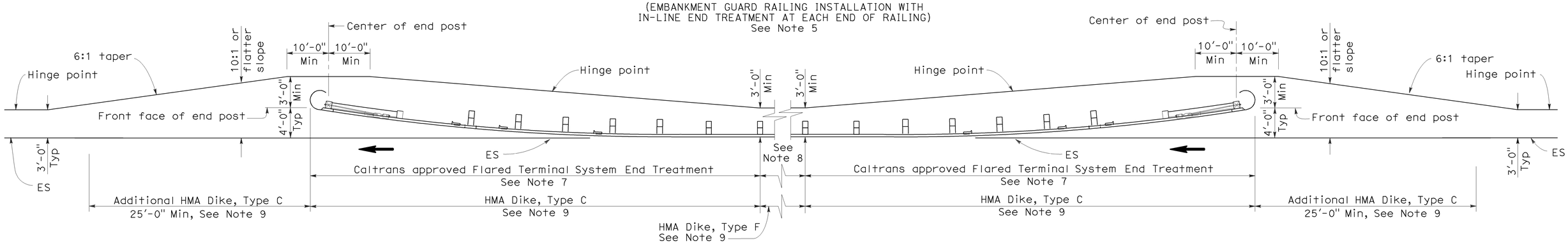

TYPE 11E LAYOUT

(EMBANKMENT GUARD RAILING INSTALLATION WITH FLARED END TREATMENT AT EACH END OF RAILING)
See Note 5

NOTES:

1. Line post, blocks and hardware to be used are shown on Standard Plans A77A1, A77A2, A77B1, A77C1 and A77C2.
2. Guard rail post spacing to be 6'-3" center to center, except as otherwise noted.
3. Except as noted, line posts are 6" x 8" x 6'-0" wood with 6" x 8" x 1'-2" wood blocks. W6 x 9 steel posts, 6'-0" in length, with 6" x 8" x 1'-2" notched wood blocks or plastic blocks may be used for 6" x 8" x 6'-0" wood post with 6" x 8" x 1'-2" wood blocks where applicable and when specified.
4. Direction of adjacent traffic indicated by ⟶.
5. Layout Types 11D through 11L, shown on the A77E Series of Revised Standard Plans, are typically used where guard railing is recommended to shield embankment slopes and a crashworthy end treatment is required for both directions of traffic.
6. In-line Terminal System End Treatments are used where site conditions will not accommodate a flared end treatment.
7. The type of terminal system end treatment to be used will be shown on the Project Plans.
8. Dependent on site conditions (embankment height and side slope), construction of additional guard railing (length equal to multiples of 12'-6" with 6'-3" post spacing) may be advisable.
9. Where placement of dike is required with guard railing installations, see Revised Standard Plan RSP A77C4 for dike positioning details.

STATE OF CALIFORNIA
DEPARTMENT OF TRANSPORTATION

METAL BEAM GUARD RAILING TYPICAL LAYOUTS FOR EMBANKMENTS

NO SCALE

RSP A77E2 DATED JUNE 6, 2008 SUPERSEDES STANDARD PLAN A77E2
DATED MAY 1, 2006 - PAGE 49 OF THE STANDARD PLANS BOOK DATED MAY 2006.

REVISED STANDARD PLAN RSP A77E2

2006 REVISED STANDARD PLAN RSP A77E2

12-10-07