Dist	COUNTY	ROUTE	POST MILES TOTAL PROJECT	SHEET No.	TOTAL SHEETS
02	Sis	96	R0.0/R12.0	101	143

Zidan M. Zhang 10-13-10
REGISTERED CIVIL ENGINEER DATE

6-13-11
PLANS APPROVAL DATE

REGISTERED PROFESSIONAL ENGINEER Z. M. ZHANG No. C69054 Exp. 6-30-12 CIVIL STATE OF CALIFORNIA

THE STATE OF CALIFORNIA OR ITS OFFICERS OR AGENTS SHALL NOT BE RESPONSIBLE FOR THE ACCURACY OR COMPLETENESS OF ELECTRONIC COPIES OF THIS PLAN SHEET.

NOTE:

1. FOR DETAILS NOT SHOWN REFER TO STANDARD PLANS

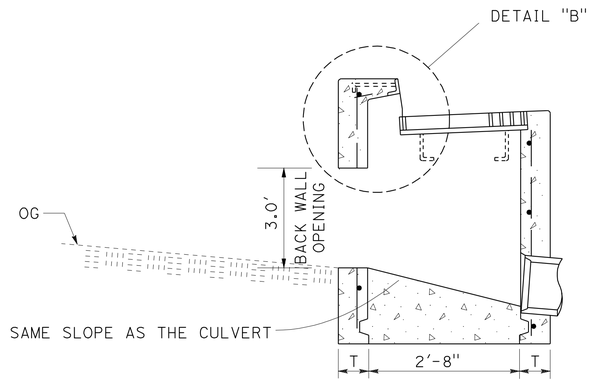

SECTION F-F

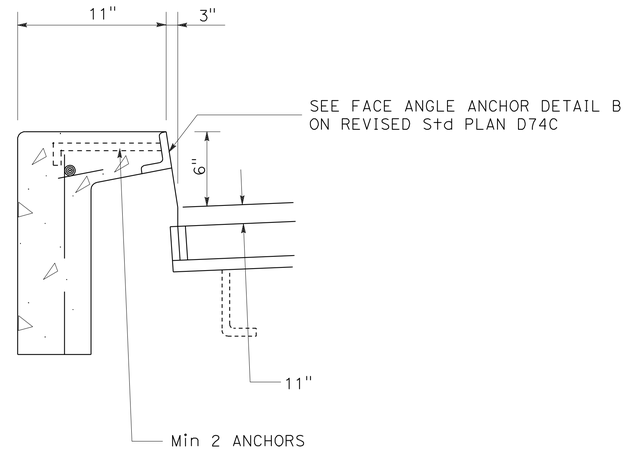

DETAIL "B"

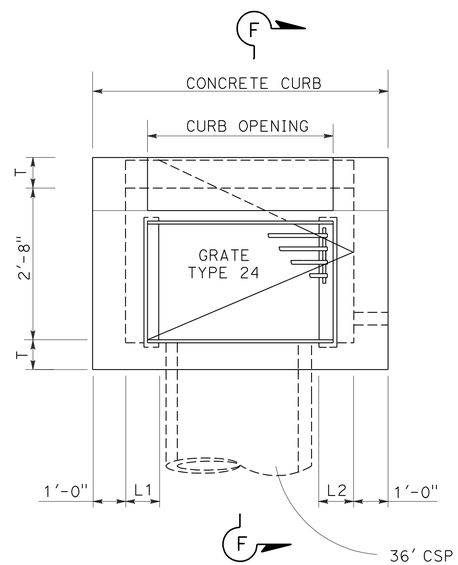

PLAN

MODIFIED TYPE G2 DRAINAGE INLET WITH CURB OPENING

68

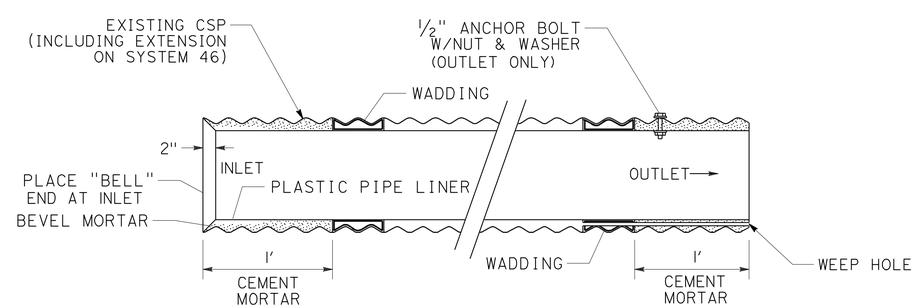

PLASTIC PIPE LINER MORTAR ENDS

1 2 46

DRAINAGE DETAILS

NO SCALE

DD-8

REVISED BY	DATE REVISED
LDB	10-23-08

LINDA BREAZEALE
ZIDAN ZHANG

CALCULATED-DESIGNED BY
CHECKED BY

FUNCTIONAL SUPERVISOR
JULIE CASEY

STATE OF CALIFORNIA - DEPARTMENT OF TRANSPORTATION
Caltrans
DESIGN

P:\proj2\02\2c950_plans\pse\22c950ic008.dgn

LAST REVISION
DATE PLOTTED => 15-JUN-2011
TIME PLOTTED => 10:58

Dist	COUNTY	ROUTE	POST MILES TOTAL PROJECT	SHEET No.	TOTAL SHEETS
02	Sis	96	R0.0/R12.0	102	143

Zidan M. Zhang 10-13-10
REGISTERED CIVIL ENGINEER DATE

6-13-11
PLANS APPROVAL DATE

REGISTERED PROFESSIONAL ENGINEER Z. M. ZHANG No. C69054 Exp. 6-30-12 CIVIL STATE OF CALIFORNIA

THE STATE OF CALIFORNIA OR ITS OFFICERS OR AGENTS SHALL NOT BE RESPONSIBLE FOR THE ACCURACY OR COMPLETENESS OF ELECTRONIC COPIES OF THIS PLAN SHEET.

NOTES:

1. NO DEDUCTION MADE IN QUANTITIES FOR THICKNESS OF PIPE WALLS.
2. ALL REINFORCING STEEL #4 BARS. ALL VERTICAL AND HORIZONTAL TIE BARS 1'-6" MAXIMUM SPACING.
3. LENGTH OF WALL "W" MAY BE VARIED TO SUIT CONDITIONS ENCOUNTERED IN THE FIELD, AND STRAIGHT LINE INTERPOLATION MAY BE USED TO CALCULATE QUANTITIES.
4. CABLE RAILING TO BE INSTALLED ON TOP OF HEADWALL WHEN SHOWN ON PROJECT PLANS. SEE STANDARD PLAN B11-47 FOR CABLE RAILING DETAILS.

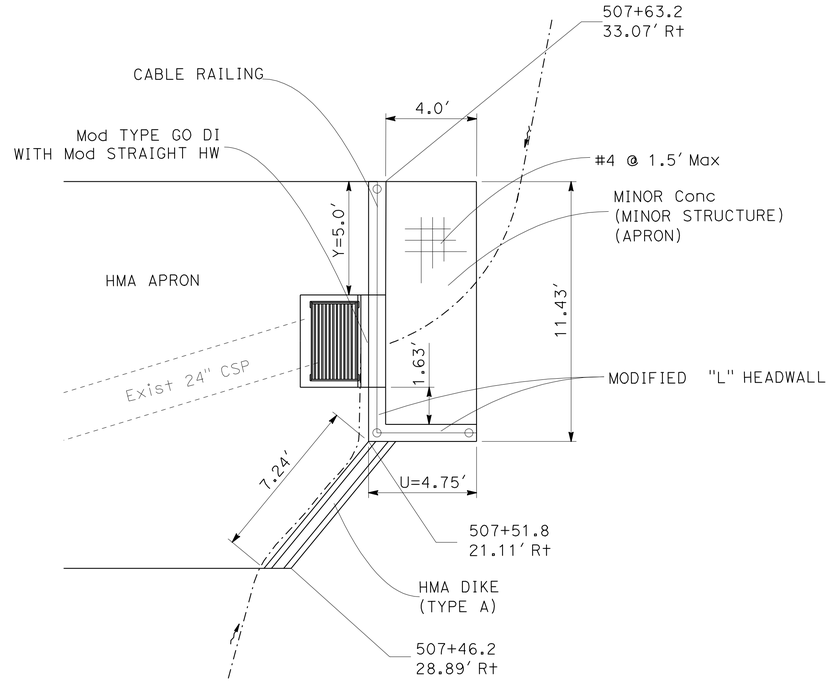

PLAN

MODIFIED "L" HEADWALL AND CONCRETE APRON

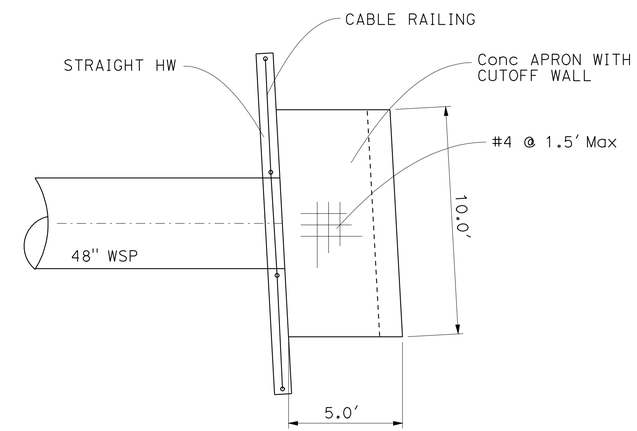

PLAN

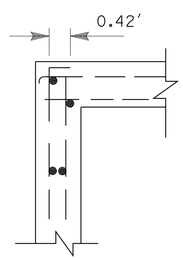

CORNER STEEL DETAIL

SECTION A-A

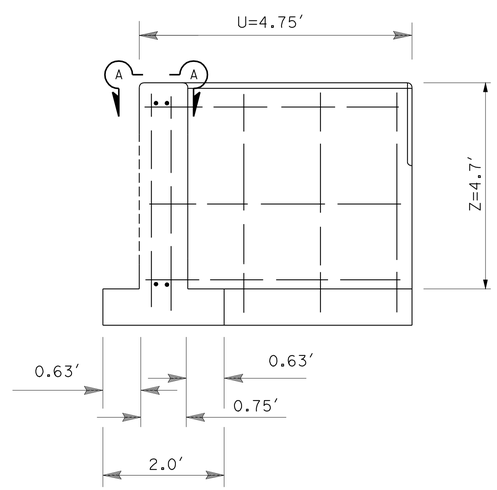

ELEVATION

MODIFIED "L" HEADWALL

DRAINAGE SYSTEM No. 58

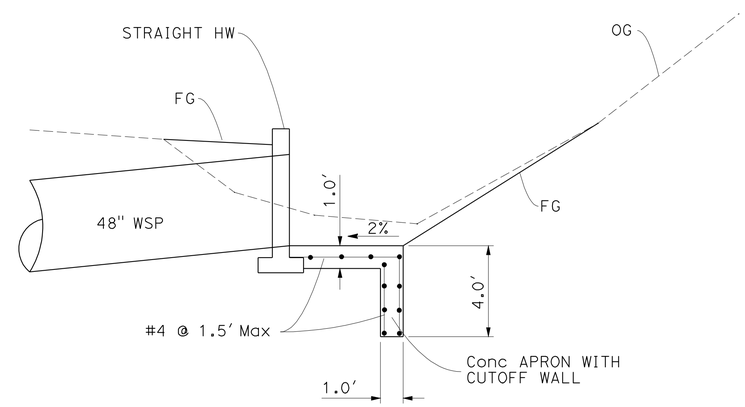

ELEVATION

CONCRETE APRON WITH CUTOFF WALL

DRAINAGE SYSTEM No. 20

DRAINAGE DETAILS

NO SCALE **DD-9**

REVISED BY	DATE REVISED
LDB	10-23-08

LINDA BREAZEALE — ZIDAN ZHANG — CALCULATED-DESIGNED BY — CHECKED BY — FUNCTIONAL SUPERVISOR: JULIE CASEY

STATE OF CALIFORNIA - DEPARTMENT OF TRANSPORTATION — Caltrans — DESIGN

P:\proj2\02\2c950_plans\pse\22c950ic009.dgn

LAST REVISION — DATE PLOTTED => 15-JUN-2011 — TIME PLOTTED => 10:58

Dist	COUNTY	ROUTE	POST MILES TOTAL PROJECT	SHEET No.	TOTAL SHEETS
02	Sis	96	R0.0/R12.0	103	143

Zidan M. Zhang 10-13-10
REGISTERED CIVIL ENGINEER DATE

6-13-11
PLANS APPROVAL DATE

REGISTERED PROFESSIONAL ENGINEER Z. M. ZHANG No. C69054 Exp. 6-30-12 CIVIL STATE OF CALIFORNIA

THE STATE OF CALIFORNIA OR ITS OFFICERS OR AGENTS SHALL NOT BE RESPONSIBLE FOR THE ACCURACY OR COMPLETENESS OF ELECTRONIC COPIES OF THIS PLAN SHEET.

NOTES:

1. REFER TO STANDARD PLANS FOR DIMENSIONS AND DETAILS NOT SHOWN.
2. VERIFY ALL CONTROLLING FIELD DIMENSIONS PRIOR TO CASTING DRAINAGE INLET.

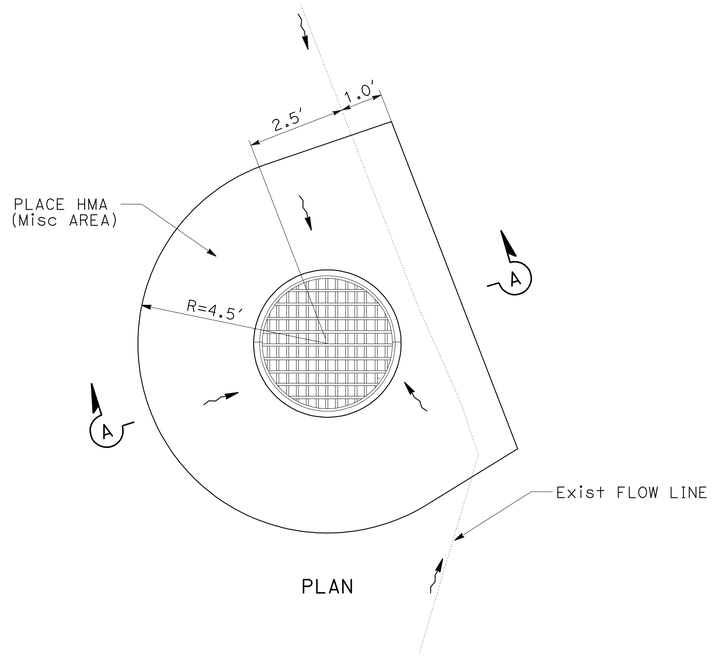

PLAN

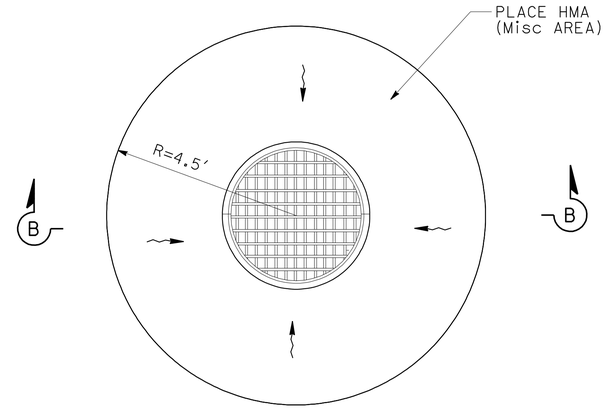

PLAN

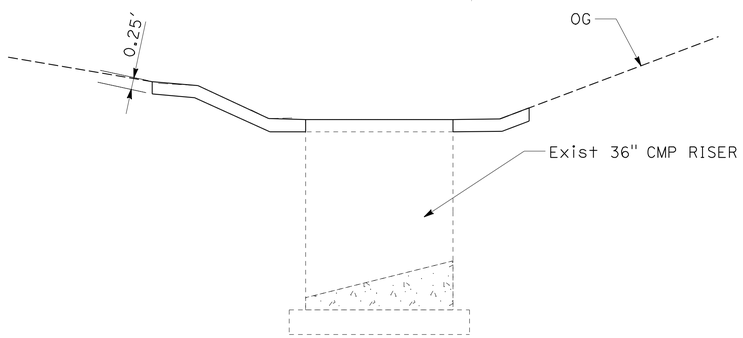

SECTION A-A
DRAINAGE SYSTEM No. 1

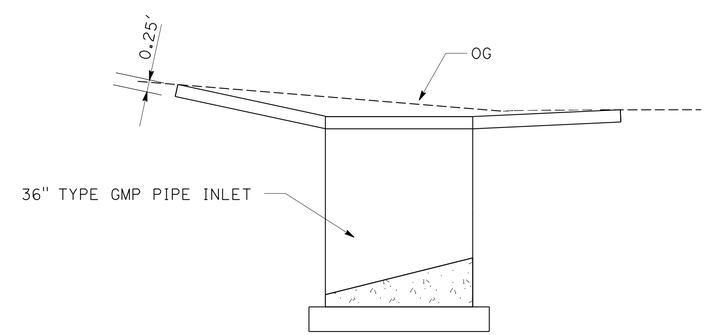

SECTION B-B
DRAINAGE SYSTEM No. 14 59

PLACE HMA (Misc AREA)

DRAINAGE DETAILS

NO SCALE **DD-10**

REVISED BY	DATE REVISED
LDB	10-23-08

CALCULATED-DESIGNED BY: LINDA BREAZEALE
CHECKED BY: ZIDAN ZHANG
FUNCTIONAL SUPERVISOR: JULIE CASEY

STATE OF CALIFORNIA - DEPARTMENT OF TRANSPORTATION
Caltrans DESIGN

\\sf02cadam02\proj2\02\2c950_plans\pse\resubmit03-09-11\22c950ic010.dgn

LAST REVISION DATE PLOTTED => 15-JUN-2011 TIME PLOTTED => 10:58

Dist	COUNTY	ROUTE	POST MILES TOTAL PROJECT	SHEET No.	TOTAL SHEETS
02	Sis	96	R0.0/R12.0	104	143

Zidan M. Zhang 10-13-10
REGISTERED CIVIL ENGINEER DATE

6-13-11
PLANS APPROVAL DATE

REGISTERED PROFESSIONAL ENGINEER Z. M. ZHANG No. C69054 Exp. 6-30-12 CIVIL STATE OF CALIFORNIA

THE STATE OF CALIFORNIA OR ITS OFFICERS OR AGENTS SHALL NOT BE RESPONSIBLE FOR THE ACCURACY OR COMPLETENESS OF ELECTRONIC COPIES OF THIS PLAN SHEET.

NOTES:

1. (N) - NOT A SEPARATE PAY ITEM, FOR INFORMATION ONLY
2. EXCEPT FOR PIPE DOWNDRAINS WHICH REQUIRE WATER TIGHT JOINTS, ALL JOINTS ARE STANDARD JOINT TYPE.

DRAINAGE QUANTITIES

POST MILE	DRAINAGE PLAN SHEET No.	DRAINAGE SYSTEM No.	DRAINAGE UNIT No.	ABANDON GMP PIPE INLET	ABANDON CULVERT	SAND BACKFILL	REMOVE CULVERT	REMOVE INLET	REMOVE HEADWALL	DITCH EXCAVATION	MINOR HOT MIX ASPHALT	PLACE HOT MIX ASPHALT DIKE (TYPE A)	PLACE HOT MIX ASPHALT (MISCELLANEIOUS AREA)	MINOR CONCRETE (MINOR STRUCTURE)	24" CSP (.109" THICK)	30" CSP (.109" THICK)	36" CSP (.109" THICK)	48" CSP (0.168" THICK)	8" PERFORATED PLASTIC PIPE UNDERDRAIN	36" CORRUGATED STEEL PIPE INLET (.109" THICK)	48" CORRUGATED STEEL PIPE INLET (.168" THICK)	ROCK SLOPE PROTECTION (FACING, METHOD B)	ROCK SLOPE PROTECTION FABRIC	MARKER (CULVERT)	MISCELLANEOUS IRON AND STEEL	HEIGHT OF INLET (N)	DESCRIPTION	SEE TABLE "B" FOR MORE DATA	STATION	DRAINAGE PLAN SHEET No.	DRAINAGE SYSTEM No.	DRAINAGE UNIT No.
				LF	LF	CY	LF	EA	EA	CY	TON	LF	SQYD	CY	LF	LF	LF	LF	LF	LF	LF	CY	SQYD	EA	LB	LF						
R0.42	D-1	1	a								1.0		6.0														APRON		"A" 21+91.4	D-1	1	a
			b																					2			21" PLASTIC PIPE-LINER	"B"				b
			c																			4.7	16.0				RSP (FACING, METHOD B)					c
			d																						215		GRATE TYPE 36RX (Exist CMP RISER)					d
R0.50	D-2	2	a					1																			REMOVE OMP PIPE INLET		"A" 25+91.3	D-2	2	a
			b											1.36											239	3.5	TYPE GO DI					b
			c								0.4	16															PLACE HMA DIKE (TYPE A)					c
			d								1.8		10.8														APRON					d
			e																					2			21" PLASTIC PIPE LINER	"B"				e
			f																			5.3	17.5				RSP (FACING, METHOD B)					f
R0.56	D-3	3	a					1																			REMOVE OMP PIPE INLET		"A" 29+42.4	D-3	3	a
			b											1.53											239	4.2	TYPE GO DI					b
			c								0.4	16															PLACE HMA DIKE (TYPE A)					c
			d								2.8		16.6														APRON					d
			e												4									1			EXTEND 24" CSP					e
			f																			3.3	13.0				RSP (FACING, METHOD B)					f
R0.68	D-4	4	a		95.8	11.5																					Exist 24" CSP		"A" 35+78.1	D-4	4	a
			b																								REMOVE 24" CSP DOWNDRAIN	"B"				b
			c																								24" CSP FES	"B"				c
			d								3.9		23.4														APRON					d
			e												84									2			24" CSP					e
			f																								24" CSP DD W/ ANCHOR ASSEMBLY	"B"				f
			g																				22.0				RSP (LIGHT, METHOD B)	"B"				g
			h	11.1		2.9																					Exist 36" CMP					i
R0.89	D-5	5	a											1.26											239	3.1	TYPE GO DI		"A" 46+31.4	D-5	5	a
			b												2									2			EXTEND 24" CSP					b
			c								0.5	20															PLACE HMA DIKE (TYPE A)					c
			d								7.0		41.4														APRON					d
			e																				28.8				RSP (LIGHT, METHOD B)	"B"				e
R0.94	D-6	6	a																					2			24" CSP FES	"B"	"A" 48+95.7	D-6	6	a
			b																			4.7	16.0				RSP (FACING, METHOD B)					b
R1.09	D-7	7	a											1.46											239	3.9	TYPE GO DI		"A" 57+21.0	D-7	7	a
			b												4									1			EXTEND 24" CSP					b
			c								0.5	17															PLACE HMA DIKE (TYPE A)					c
			d								7.6		44.9														APRON					d
			e				5																				Exist 24" CSP					e
			f																			39.2	108.7				RSP (FACING, METHOD B)					f
			g												30									2			24" CSP W/MINOR Conc (BACKFILL)	"B"				g
			h				30																				Exist 24" CSP					h
				11.1	95.8	14.4	35	2	0	0	26.0	69	143.1	5.61	124	0	0	0	0	0	0	57.2	222.0	14	1171		TOTAL (THIS SHEET)					

LINDA BREAZEALE — REVISED BY — DATE REVISED
ZIDAN ZHANG — CALCULATED-DESIGNED BY — CHECKED BY
JULIE CASEY — FUNCTIONAL SUPERVISOR

STATE OF CALIFORNIA - DEPARTMENT OF TRANSPORTATION
Caltrans DESIGN

P:\proj2\02\2c950_plans\pse\22c950id001.dgn

DATE PLOTTED => 15-JUN-2011
TIME PLOTTED => 10:58
LAST REVISION

Dist	COUNTY	ROUTE	POST MILES TOTAL PROJECT	SHEET No.	TOTAL SHEETS
02	Sis	96	R0.0/R12.0	105	143

Zidan M. Zhang 10-13-10
REGISTERED CIVIL ENGINEER DATE

6-13-11
PLANS APPROVAL DATE

REGISTERED PROFESSIONAL ENGINEER Z. M. ZHANG No. C69054 Exp. 6-30-12 CIVIL STATE OF CALIFORNIA

THE STATE OF CALIFORNIA OR ITS OFFICERS OR AGENTS SHALL NOT BE RESPONSIBLE FOR THE ACCURACY OR COMPLETENESS OF ELECTRONIC COPIES OF THIS PLAN SHEET.

NOTES:

1. (N) - NOT A SEPARATE PAY ITEM, FOR INFORMATION ONLY
2. EXCEPT FOR PIPE DOWNDRAINS WHICH REQUIRE WATER TIGHT JOINTS, ALL JOINTS ARE STANDARD JOINT TYPE.

DRAINAGE QUANTITIES

POST MILE	DRAINAGE PLAN SHEET No.	DRAINAGE SYSTEM No.	DRAINAGE UNIT No.	ABANDON GMP PIPE INLET	ABANDON CULVERT	SAND BACKFILL	REMOVE CULVERT	REMOVE INLET	REMOVE HEADWALL	DITCH EXCAVATION	MINOR HOT MIX ASPHALT	PLACE HOT MIX ASPHALT DIKE (TYPE A)	PLACE HOT MIX ASPHALT (MISCELLANEIOUS AREA)	MINOR CONCRETE (MINOR STRUCTURE)	24" CSP (.109" THICK)	30" CSP (.109" THICK)	36" CSP (.109" THICK)	48" CSP (0.168" THICK)	8" PERFORATED PLASTIC PIPE UNDERDRAIN	36" CORRUGATED STEEL PIPE INLET (.109" THICK)	48" CORRUGATED STEEL PIPE INLET (.168" THICK)	ROCK SLOPE PROTECTION (FACING, METHOD B)	ROCK SLOPE PROTECTION FABRIC	MARKER (CULVERT)	MISCELLANEOUS IRON AND STEEL	HEIGHT OF INLET (N)	DESCRIPTION	SEE TABLE "B" FOR MORE DATA	STATION	DRAINAGE PLAN SHEET No.	DRAINAGE SYSTEM No.	DRAINAGE UNIT No.
				LF	LF	CY	LF	EA	EA	CY	TON	LF	SQYD	CY	LF	LF	LF	LF	LF	LF	LF	CY	SQYD	EA	LB	LF						
R1.29	D-8/	8	a		81.8	84.8																					Exist 72" CSP		"A" 67+40.9	D-8/	8	a
	D-9		b																					2			72" WSP	"B"		D-9		b
			c				70																				Exist ABANDON 60" CSP					c
			d											3.67													STRAIGHT HEADWALL, H=12.8′					d
			e											7.78													WINGWALL (TYPE A) Lt & Rt					e
			f											1.97													Conc APRON					f
			g																50								8" PPP UD					g
			h																			46.9	129.8				RSP (FACING, METHOD B)					h
			i																				102.0				RSP (1/2 TON, METHOD A)	"B"				i
			j																				61.8				RSP (LIGHT, METHOD B)	"B"				j
			k																								CABLE RAILING, L=21.7′	"B"				k
R1.52	D-10	9	a											2.02													STRAIGHT HEADWALL, H=4.7′		"A" 79+45.6	D-10	9	a
			b				61																				Exist 24" CSP					b
			c														68							2			36" CSP					c
			d																			46.2	109.2				RSP (FACING, METHOD B)					d
			e																								CABLE RAILING, L=12.0′	"B"				e
R1.60	D-11	10	a											1.62											473	3.0	TYPE GDO INLET		"A" 84+01.2	D-11	10	a
			b								0.7	26.50															PLACE HMA DIKE (TYPE A)					b
			c								5.6		34.1														APRON					c
			d												4									1			EXTEND 24" CSP					d
R1.65/	D-12/	11	a					1																			REMOVE GMP INLET		"A" 86+58.6	D-12/	11	a
R1.70	D-13		b											1.47										1	239	3.9	TYPE GO DI			D-13		b
			c								0.6	21.2															PLACE HMA DIKE (TYPE A)					c
			d								5.1		29.9														APRON					d
			e																299								8" PPP UD					e
R2.06	D-14	12	a											1.32													STRAIGHT HEADWALL, H=4.2′		"A" 108+07.7	D-14	12	a
			b												2									2			EXTEND 24" CSP					b
			c							1.2																	DITCH EXCAVATION					c
			d																			4.2	14.8				RSP (FACING, METHOD B)					d
R2.53	D-15	13	a																				61.4	1			RSP (LIGHT, METHOD B)	"B"	"A" 132+67.8	D-15	13	a
R2.74	D-16	14	a																	4.2					215	3.7	36" TYPE GMP PIPE INLET		"A" 143+81.6	D-16	14	a
			b								1.1		6.3														APRON					b
			c																					2			30" WSP	"B"				c
			d		74.9	8.7																					Exist 24" CSP					d
			e																								24" CSP DD W/ ANCHOR ASSEMBLY	"B"				e
			f																								SLIP JOINT	"B"				f
			g																								Exist 24" DD	"B"				g
			h																				20.7				RSP (LIGHT, METHOD B)	"B"				h
			i																12								8" PPP UD					i
				0	156.7	93.5	131	1	0	1.2	13.1	47.7	70.3	19.85	6	0	68	0	361	4.2	0	97.3	499.7	11	927		TOTAL (THIS SHEET)					

DRAINAGE QUANTITIES

DQ-2

LINDA BREAZEALE — REVISED BY
ZIDAN ZHANG — DATE REVISED
CALCULATED-DESIGNED BY
CHECKED BY
FUNCTIONAL SUPERVISOR
JULIE CASEY

STATE OF CALIFORNIA - DEPARTMENT OF TRANSPORTATION
Caltrans
DESIGN

P:\proj2\02\2c950_plans\pse\22c950id002.dgn

LAST REVISION
DATE PLOTTED => 15-JUN-2011
TIME PLOTTED => 10:58

Dist	COUNTY	ROUTE	POST MILES TOTAL PROJECT	SHEET No.	TOTAL SHEETS
02	Sis	96	R0.0/R12.0	106	143

Zidan M. Zhang 10-13-10
REGISTERED CIVIL ENGINEER DATE

6-13-11
PLANS APPROVAL DATE

REGISTERED PROFESSIONAL ENGINEER Z. M. ZHANG No. C69054 Exp. 6-30-12 CIVIL STATE OF CALIFORNIA

THE STATE OF CALIFORNIA OR ITS OFFICERS OR AGENTS SHALL NOT BE RESPONSIBLE FOR THE ACCURACY OR COMPLETENESS OF ELECTRONIC COPIES OF THIS PLAN SHEET.

NOTES:

1. (N) - NOT A SEPARATE PAY ITEM, FOR INFORMATION ONLY
2. EXCEPT FOR PIPE DOWNDRAINS WHICH REQUIRE WATER TIGHT JOINTS, ALL JOINTS ARE STANDARD JOINT TYPE.

DRAINAGE QUANTITIES

POST MILE	DRAINAGE PLAN SHEET No. ⬡	DRAINAGE SYSTEM No. ◯	DRAINAGE UNIT No.	ABANDON GMP PIPE INLET	ABANDON CULVERT	SAND BACKFILL	REMOVE CULVERT	REMOVE INLET	REMOVE HEADWALL	DITCH EXCAVATION	MINOR HOT MIX ASPHALT	PLACE HOT MIX ASPHALT DIKE (TYPE A)	PLACE HOT MIX ASPHALT (MISCELLANEIOUS AREA)	MINOR CONCRETE (MINOR STRUCTURE)	24" CSP (.109" THICK)	30" CSP (.109" THICK)	36" CSP (.109" THICK)	48" CSP (0.168" THICK)	8" PERFORATED PLASTIC PIPE UNDERDRAIN	36" CORRUGATED STEEL PIPE INLET (.109" THICK)	48" CORRUGATED STEEL PIPE INLET (.168" THICK)	ROCK SLOPE PROTECTION (FACING, METHOD B)	ROCK SLOPE PROTECTION FABRIC	MARKER (CULVERT)	MISCELLANEOUS IRON AND STEEL	HEIGHT OF INLET (N)	DESCRIPTION	SEE TABLE "B" FOR MORE DATA	STATION	DRAINAGE PLAN SHEET No.	DRAINAGE SYSTEM No. ⬡	DRAINAGE UNIT No. ◯
				LF	LF	CY	LF	EA	EA	CY	TON	LF	SQYD	CY	LF	LF	LF	LF	LF	LF	LF	CY	SQYD	EA	LB	LF						
R3.10	D-17	15	a						1																		REMOVE HEADWALL (H=5′)		"A" 162+50.3	D-17	15	a
			b											4.43											239	3.9	Mod TYPE GO DI W/ Mod STRAIGHT HW					b
			c								5.0		29.3														APRON					c
			d													66								2			30" CSP					d
			e																				163.5				RSP (LIGHT, METHOD B)	"B"				e
			f				64.1																				Exist 24" CSP					f
R3.18	D-18	16	a						1																		REMOVE HEADWALL (H=5′)		"A" 167+04.7	D-18	16	a
			b											1.36											239	3.5	TYPE GO DI					b
			c								0.4	16															PLACE HMA DIKE (TYPE A)					c
			d								4.0		24.0														APRON					d
			e				107																				Exist 24" CMP					e
			f												100									2			24" CSP					f
			g																			3.2	12.4				RSP (FACING, METHOD B)					g
R3.25	D-19	17	a											1.57													STRAIGHT HEADWALL, H=4.2′		"A" 107+26.7	D-19	17	a
			b						1																		REMOVE HEADWALL (H=5′)					b
			c											0.73													CONCRETE APRON					c
			d				148.4																				Exist 24" CSP					d
			e																					2			24" WELDED STEEL PIPE	"B"				e
			f																				18.3				RSP (LIGHT, METHOD B)	"B"				f
R3.30	D-20	18	a						1																		REMOVE HEADWALL (H=5′)		"A" 173+82.6	D-20	18	a
			b											2.1											473	4.5	TYPE GDO DI					b
			c								0.5	19.5															PLACE HMA DIKE (TYPE A)					c
			d								3.4		20.3														APRON					d
			e												2									1			EXTEND 24" CSP					e
			f																			3.9	14.4				RSP (FACING, METHOD B)					f
R3.58	D-21	19	a						1																		REMOVE HEADWALL (H=5′)		"A" 187+98.3	D-21	19	a
			b								4.7		27.6														APRON					b
			c				71.1																				Exist 24" CSP					c
			d																					2			24" WELDED STEEL PIPE	"B"				d
			e											1.63											239	4.6	TYPE GO DI					e
			f								0.4	16															PLACE HMA DIKE (TYPE A)					f
			g																			8.4	25.4				RSP (FACING, METHOD B)					g
R3.66	D-22	20	a											2.75													STRAIGHT HEADWALL, H=5.7′		"A" 192+20.2	D-22	20	a
			b											2.96													CONCRETE APRON W/ CUTOFF WALL					b
			c																			13.0	20.2				RSP (FACING, METHOD B)					c
			d																					2			48" WELDED STEEL PIPE	"B"				d
			e																				80.6				RSP (LIGHT, METHOD B)	"B"				e
			f																								CABLE RAILING, L=15.0′	"B"				f
			g				82.0																				Exist 36" CSP					g
				0	0	0	472.6	0	5	0	18.4	51.5	101.2	17.53	102	66	0	0	0	0	0	28.5	334.8	11	1190		TOTAL (THIS SHEET)					

LINDA BREAZEALE — REVISED BY
ZIDAN ZHANG — DATE REVISED
CALCULATED-DESIGNED BY
CHECKED BY
FUNCTIONAL SUPERVISOR
JULIE CASEY

STATE OF CALIFORNIA - DEPARTMENT OF TRANSPORTATION
Caltrans
DESIGN

P:\proj2\02\2c950_plans\pse\22c950id003.dgn

DRAINAGE QUANTITIES
DQ-3

LAST REVISION — DATE PLOTTED => 15-JUN-2011 TIME PLOTTED => 10:58

Dist	COUNTY	ROUTE	POST MILES TOTAL PROJECT	SHEET No.	TOTAL SHEETS
02	Sis	96	R0.0/R12.0	107	143

Zidan M. Zhang 10-13-10
REGISTERED CIVIL ENGINEER DATE

6-13-11
PLANS APPROVAL DATE

REGISTERED PROFESSIONAL ENGINEER Z. M. ZHANG No. C69054 Exp. 6-30-12 CIVIL STATE OF CALIFORNIA

THE STATE OF CALIFORNIA OR ITS OFFICERS OR AGENTS SHALL NOT BE RESPONSIBLE FOR THE ACCURACY OR COMPLETENESS OF ELECTRONIC COPIES OF THIS PLAN SHEET.

NOTES:

1. (N) - NOT A SEPARATE PAY ITEM, FOR INFORMATION ONLY
2. EXCEPT FOR PIPE DOWNDRAINS WHICH REQUIRE WATER TIGHT JOINTS, ALL JOINTS ARE STANDARD JOINT TYPE.

DRAINAGE QUANTITIES

POST MILE	DRAINAGE PLAN SHEET No.	DRAINAGE SYSTEM No. ⬡	DRAINAGE UNIT No. ◯	ABANDON GMP PIPE INLET (LF)	ABANDON CULVERT (LF)	SAND BACKFILL (CY)	REMOVE CULVERT (LF)	REMOVE INLET (EA)	REMOVE HEADWALL (EA)	DITCH EXCAVATION (CY)	MINOR HOT MIX ASPHALT (TON)	PLACE HOT MIX ASPHALT DIKE (TYPE A) (LF)	PLACE HOT MIX ASPHALT (MISCELLANEIOUS AREA) (SQYD)	MINOR CONCRETE (MINOR STRUCTURE) (CY)	24" CSP (.109" THICK) (LF)	30" CSP (.109" THICK) (LF)	36" CSP (.109" THICK) (LF)	48" CSP (0.168" THICK) (LF)	8" PERFORATED PLASTIC PIPE UNDERDRAIN (LF)	36" CORRUGATED STEEL PIPE INLET (.109" THICK) (LF)	48" CORRUGATED STEEL PIPE INLET (.168" THICK) (LF)	ROCK SLOPE PROTECTION (FACING, METHOD B) (CY)	ROCK SLOPE PROTECTION FABRIC (SQYD)	MARKER (CULVERT) (EA)	MISCELLANEOUS IRON AND STEEL (LB)	HEIGHT OF INLET (N) (LF)	DESCRIPTION	SEE TABLE "B" FOR MORE DATA	STATION	DRAINAGE PLAN SHEET No.	DRAINAGE SYSTEM No. ⬡	DRAINAGE UNIT No. ◯
R4.36	D-23	21	a								4.5		26.5														APRON		"A" 229+08.9	D-23	21	a
			b						1																		REMOVE HEADWALL (H=5′)					b
			c											1.46											239	3.9	TYPE GO DI					c
			d				81.0																				Exist 24" CSP					d
			e												82									2			24" CSP					e
			f																			5.3	15.9				RSP (FACING, METHOD B)					f
			g								0.4	16															PLACE HMA DIKE (TYPE A)					
R4.64	D-24	22	a																30								8" PPP UD		"A" 243+84.5	D-24	22	a
			b											1.95													STRAIGHT HEADWALL, H=4.7′					b
			c																			2.4	14.1				RSP (FACING, METHOD B)					c
			d																								CABLE RAILING, L=12.0′	"B"				d
			e																				36.6				RSP (BACKING No. 2, METHOD B)	"B"				e
			f																					2			36" WSP	"B"				f
			g		143.6	9.2																					Exist 24" CSP AND Exist PSP UD					g
			h																				28.3				RSP (LIGHT, METHOD B)	"B"				h
R4.99	D-25	23	a								3.7		21.6														APRON		"A" 262+61.9	D-25	23	a
			b						1																		REMOVE HEADWALL (H=5′)					b
			c											1.22											239	2.9	TYPE GO DI					c
			d								0.4	16															PLACE HMA DIKE (TYPE A)					d
			e												4												EXTEND 24" CSP					e
R5.44	D-26	24	a																						215		GRATE TYPE 36RX (Exist 36"GMP INLET)		"A" 287+39.2	D-26	24	a
R5.47	D-27	25	a								5.9		34.8														APRON		"A" 288+92.5	D-27	25	a
			b					1																			REMOVE INLET					b
			c											1.39											239	3.6	TYPE GO DI					c
			d								0.4	16															PLACE HMA DIKE (TYPE A)					d
			e				77.6																				Exist 24" CSP					e
			f												62									2			24" CSP					f
			g																								24" CSP DD W/ ANCHOR ASSEMBLY	"B"				g
R6.07	D-28	26	a								5.1		30.2														APRON		"A" 322+04.9	D-28	26	a
			b						1																		REMOVE HEADWALL (H=5′)					b
			c											1.94											473	4.0	TYPE GDO INLET					c
			d				60.6																				Exist 24" CSP					d
			e												54									2			24" CSP					e
			f																			4.7	14.4				RSP (FACING, METHOD B)					f
			g								0.4	16															PLACE HMA DIKE (TYPE A)					g
R6.35	D-29	27	a								10.3		61.1														APRON		"A" 335+50.7	D-29	27	a
			b								0.7	25.7															PLACE HMA DIKE (TYPE A)					b
			c																5								8" PPP UD					c
			d											1.22											239	2.9	TYPE GO DI					d
			e												6									1			EXTEND 24" CSP					e
				0	143.6	9.2	219.2	1	3	0	31.8	89.7	174.2	9.18	208	0	0	0	35	0	0	12.4	109.3	9	1644		TOTAL (THIS SHEET)					

DRAINAGE QUANTITIES
DQ-4

LINDA BREAZEALE — REVISED BY
ZIDAN ZHANG — DATE REVISED
CALCULATED-DESIGNED BY
CHECKED BY
FUNCTIONAL SUPERVISOR
JULIE CASEY

STATE OF CALIFORNIA - DEPARTMENT OF TRANSPORTATION
Caltrans DESIGN

P:\proj2\02\2c950_plans\pse\22c950id004.dgn

LAST REVISION — DATE PLOTTED => 15-JUN-2011 TIME PLOTTED => 10:58

Dist	COUNTY	ROUTE	POST MILES TOTAL PROJECT	SHEET No.	TOTAL SHEETS
02	Sis	96	R0.0/R12.0	108	143

Zidan M. Zhang 10-13-10
REGISTERED CIVIL ENGINEER DATE

6-13-11
PLANS APPROVAL DATE

REGISTERED PROFESSIONAL ENGINEER Z. M. ZHANG No. C69054 Exp. 6-30-12 CIVIL STATE OF CALIFORNIA

THE STATE OF CALIFORNIA OR ITS OFFICERS OR AGENTS SHALL NOT BE RESPONSIBLE FOR THE ACCURACY OR COMPLETENESS OF ELECTRONIC COPIES OF THIS PLAN SHEET.

NOTES:

1. (N) - NOT A SEPARATE PAY ITEM, FOR INFORMATION ONLY
2. EXCEPT FOR PIPE DOWNDRAINS WHICH REQUIRE WATER TIGHT JOINTS, ALL JOINTS ARE STANDARD JOINT TYPE.

DRAINAGE QUANTITIES

POST MILE	DRAINAGE PLAN SHEET No.	DRAINAGE SYSTEM No. ⬡	DRAINAGE UNIT No. ◯	ABANDON GMP PIPE INLET (LF)	ABANDON CULVERT (LF)	SAND BACKFILL (CY)	REMOVE CULVERT (LF)	REMOVE INLET (EA)	REMOVE HEADWALL (EA)	DITCH EXCAVATION (CY)	MINOR HOT MIX ASPHALT (TON)	PLACE HOT MIX ASPHALT DIKE (TYPE A) (LF)	PLACE HOT MIX ASPHALT (MISCELLANEIOUS AREA) (SQYD)	MINOR CONCRETE (MINOR STRUCTURE) (CY)	24" CSP (.109" THICK) (LF)	30" CSP (.109" THICK) (LF)	36" CSP (.109" THICK) (LF)	48" CSP (0.168" THICK) (LF)	8" PERFORATED PLASTIC PIPE UNDERDRAIN (LF)	36" CORRUGATED STEEL PIPE INLET (.109" THICK) (LF)	48" CORRUGATED STEEL PIPE INLET (.168" THICK) (LF)	ROCK SLOPE PROTECTION (FACING, METHOD B) (CY)	ROCK SLOPE PROTECTION FABRIC (SQYD)	MARKER (CULVERT) (EA)	MISCELLANEOUS IRON AND STEEL (LB)	HEIGHT OF INLET (N) (LF)	DESCRIPTION	SEE TABLE "B" FOR MORE DATA	STATION	DRAINAGE PLAN SHEET No.	DRAINAGE SYSTEM No. ⬡	DRAINAGE UNIT No. ◯
R6.41	D-30	28	a																12								8" PPP UD		"A" 338+55.2	D-30	28	a
			b											1.66													STRAIGHT HEADWALL, H=4.2′					b
			c						1																		REMOVE HEADWALL (H=5′)					c
			d				71.1																				Exist 24" CSP					d
			e												70												24" CSP					e
			f																			7.8	7.7				RSP (FACING, METHOD B)					f
R6.46	D-31	29	a								2.1		12.4														APRON		"A" 341+52.2	D-31	29	a
			b						1																		REMOVE HEADWALL (H=5′)					b
			c											1.34										2	239	3.4	TYPE GO DI					c
			d								0.4	16.6															PLACE HMA DIKE (TYPE A)					d
			e																								24" CSP DD W/ ANCHOR ASSEMBLY	"B"				e
			f												10												EXTEND 24" CSP					f
R6.54	D-32	30	a								3.5		20.6														APRON		"A" 345+61.3	D-32	30	a
			b						1																		REMOVE HEADWALL (H=5′)					b
			c											1.22											239	2.9	TYPE GO DI					c
			d												6									2			EXTEND 24" CSP					d
			e								0.4	16.0															PLACE HMA DIKE (TYPE A)					e
			f																			3.7	12.2				RSP (FACING, METHOD B)					f
R6.65	D-33	31	a								3.8		22.4														APRON		"A" 351+59.7	D-33	31	a
			b												4												EXTEND 24" CSP					b
			c						1																		REMOVE HEADWALL (H=5′)					c
			d											1.22										1	239	2.9	TYPE GO DI					d
			e								0.4	16.0															PLACE HMA DIKE (TYPE A)					e
R6.74	D-34	32	a								3.1		18.2														APRON		"A" 356+21.6	D-34	32	a
			~~b~~																								DELETED					~~b~~
			c						1																		REMOVE HEADWALL (H=5′)					c
			d											3.69											239	3.9	Mod TYPE GO DI W/ Mod STRAIGHT HW					d
			e																10								8" PPP UD					e
			f				93.2																				Exist 24" CSP					f
			g												94									2			24" CSP					g
			h																				20.8				RSP (LIGHT, METHOD B)	"B"				h
R6.82	D-35	33	a								4.6		27.2														APRON		"A" 361+89.3	D-35	33	a
			b						2																		REMOVE HEADWALLS (H=8′)					b
			c																10								8" PPP UD					c
			d											3.97											239	3.9	Mod TYPE G2 DI W/ Mod STRAIGHT HW					d
			e																10								8" PPP UD					e
			f				118.0																				Exist 36" CSP					f
			g																					2			36" WSP	"B"				g
			h																				24.6				RSP (LIGHT, METHOD B)	"B"				h
			i																								CABLE RAILING, L=16.0′	"B"				i
			j							2																	DITCH EXCAVATION					j
				0	0	0	282.3	0	7	2	18.3	48.6	100.8	13.10	184	0	0	0	42	0	0	11.5	65.3	9	1195		TOTAL (THIS SHEET)					

DRAINAGE QUANTITIES
DQ-5

LINDA BREAZEALE — REVISED BY
ZIDAN ZHANG — DATE REVISED
CALCULATED-DESIGNED BY
CHECKED BY
FUNCTIONAL SUPERVISOR
JULIE CASEY

STATE OF CALIFORNIA - DEPARTMENT OF TRANSPORTATION
Caltrans DESIGN

P:\proj2\02\2c950_plans\pse\22c950id005.dgn

LAST REVISION — DATE PLOTTED => 15-JUN-2011 TIME PLOTTED => 10:59

Dist	COUNTY	ROUTE	POST MILES TOTAL PROJECT	SHEET No.	TOTAL SHEETS
02	Sis	96	R0.0/R12.0	109	143

Zidan M. Zhang 10-13-10
REGISTERED CIVIL ENGINEER DATE

6-13-11
PLANS APPROVAL DATE

REGISTERED PROFESSIONAL ENGINEER Z. M. ZHANG No. C69054 Exp. 6-30-12 CIVIL STATE OF CALIFORNIA

THE STATE OF CALIFORNIA OR ITS OFFICERS OR AGENTS SHALL NOT BE RESPONSIBLE FOR THE ACCURACY OR COMPLETENESS OF ELECTRONIC COPIES OF THIS PLAN SHEET.

NOTES:

1. (N) - NOT A SEPARATE PAY ITEM, FOR INFORMATION ONLY
2. EXCEPT FOR PIPE DOWNDRAINS WHICH REQUIRE WATER TIGHT JOINTS, ALL JOINTS ARE STANDARD JOINT TYPE.

DRAINAGE QUANTITIES

POST MILE	DRAINAGE PLAN SHEET No.	DRAINAGE SYSTEM No.	DRAINAGE UNIT No.	ABANDON GMP PIPE INLET	ABANDON CULVERT	SAND BACKFILL	REMOVE CULVERT	REMOVE INLET	REMOVE HEADWALL	DITCH EXCAVATION	MINOR HOT MIX ASPHALT	PLACE HOT MIX ASPHALT DIKE (TYPE A)	PLACE HOT MIX ASPHALT (MISCELLANEIOUS AREA)	MINOR CONCRETE (MINOR STRUCTURE)	24" CSP (.109" THICK)	30" CSP (.109" THICK)	36" CSP (.109" THICK)	48" CSP (0.168" THICK)	8" PERFORATED PLASTIC PIPE UNDERDRAIN	36" CORRUGATED STEEL PIPE INLET (.109" THICK)	48" CORRUGATED STEEL PIPE INLET (.168" THICK)	ROCK SLOPE PROTECTION (FACING, METHOD B)	ROCK SLOPE PROTECTION FABRIC	MARKER (CULVERT)	MISCELLANEOUS IRON AND STEEL	HEIGHT OF INLET (N)	DESCRIPTION	SEE TABLE "B" FOR MORE DATA	STATION	DRAINAGE PLAN SHEET No.	DRAINAGE SYSTEM No.	DRAINAGE UNIT No.
				LF	LF	CY	LF	EA	EA	CY	TON	LF	SQYD	CY	LF	LF	LF	LF	LF	LF	LF	CY	SQYD	EA	LB	LF						
R6.88	D-36	34	a						1																		REMOVE HEADWALL (H=5′)		"A" 363+95.4	D-36	34	a
			b											1.20													STRAIGHT HEADWALL, H=3.7′					b
			c				82.4																				Exist 24" CSP					c
			d												84									2			24" CSP					d
			e																			24.4	54.7				RSP (FACING, METHOD B)					e
R6.97	D-37	35	a								5.3		31.2														APRON		"A" 368+81.2	D-37	35	a
			b						1																		REMOVE HEADWALL (H=5′)					b
			c												8									2			EXTEND 24" CSP					c
			d											1.24											239	3.0	TYPE GO DI					d
			e								0.4	16															PLACE HMA DIKE (TYPE A)					e
			f																			8.2	24.9				RSP (FACING, METHOD B)					f
R7.07	D-38	36	a								2.8		16.8														APRON		"A" 373+75.1	D-38	36	a
			b						1																		REMOVE HEADWALL (H=5′)					b
			c				1.4																				Exist 8" CMP					c
			d											3.47											239	2.7	Mod TYPE G2 DI W/Mod STRAIGHT HW					d
			e												4									1			EXTEND 24" CSP					e
			f																								2-1/2" CAST IRON PIPE	"B"				f
R7.09	D-39	37	a								3.1		18.5														APRON		"A" 374+82.6	D-39	37	a
			b						1																		REMOVE HEADWALL (H=5′)					b
			c												4									1			EXTEND 24" CSP					c
			d											1.22											239	2.9	TYPE GO DI					d
			e								0.4	16															PLACE HMA DIKE (TYPE A)					e
R7.17	D-40	38	a								4.0		23.5														APRON		"A" 379+06.7	D-40	38	a
			b						1																		REMOVE HEADWALL (H=5′)					b
			c												4									1			EXTEND 24" CSP					c
			d											1.22											239	2.9	TYPE GO DI					d
			e								0.4	16															PLACE HMA DIKE (TYPE A)					e
R7.44	D-41	39	a								2.4		14.3														APRON		"A" 393+35.1	D-41	39	a
			b						1																		REMOVE HEADWALL (H=5′)					b
			c												4									1			EXTEND 24" CSP					c
			d											1.22											239	2.9	TYPE GO DI					d
			e								0.4	16															PLACE HMA DIKE (TYPE A)					e
R7.52	D-42	40	a								2.4		14.3														APRON		"A" 397+34.0	D-42	40	a
			b						1																		REMOVE HEADWALL (H=5′)					b
			c											2.01											473	4.2	TYPE GDO DI					c
			d								0.4	16															PLACE HMA DIKE (TYPE A)					d
			e				95.4																				Exist 24" CSP					e
			f												96									2			24" CSP					f
			g																				24.6				RSP (LIGHT, METHOD B)	"B"				g
				0	0	0	179.2	0	7	0	22.0	80	118.6	11.58	204	0	0	0	0	0	0	32.6	104.2	10	1668		TOTAL (THIS SHEET)					

DRAINAGE QUANTITIES
DQ-6

REVISED BY | DATE REVISED
LINDA BREAZEALE | ZIDAN ZHANG
CALCULATED-DESIGNED BY | CHECKED BY
FUNCTIONAL SUPERVISOR
JULIE CASEY

STATE OF CALIFORNIA - DEPARTMENT OF TRANSPORTATION
Caltrans DESIGN

P:\proj2\02\2c950_plans\pse\22c950id006.dgn

LAST REVISION | DATE PLOTTED => 17-JUN-2011 | TIME PLOTTED => 08:05

Dist	COUNTY	ROUTE	POST MILES TOTAL PROJECT	SHEET No.	TOTAL SHEETS
02	Sis	96	R0.0/R12.0	110	143

Zidan M. Zhang 10-13-10
REGISTERED CIVIL ENGINEER DATE

6-13-11
PLANS APPROVAL DATE

REGISTERED PROFESSIONAL ENGINEER Z. M. ZHANG No. C69054 Exp. 6-30-12 CIVIL STATE OF CALIFORNIA

THE STATE OF CALIFORNIA OR ITS OFFICERS OR AGENTS SHALL NOT BE RESPONSIBLE FOR THE ACCURACY OR COMPLETENESS OF ELECTRONIC COPIES OF THIS PLAN SHEET.

NOTES:

1. (N) - NOT A SEPARATE PAY ITEM, FOR INFORMATION ONLY
2. EXCEPT FOR PIPE DOWNDRAINS WHICH REQUIRE WATER TIGHT JOINTS, ALL JOINTS ARE STANDARD JOINT TYPE.

DRAINAGE QUANTITIES

POST MILE	DRAINAGE PLAN SHEET No. ⬡	DRAINAGE SYSTEM No. ◯	DRAINAGE UNIT No.	ABANDON GMP PIPE INLET	ABANDON CULVERT	SAND BACKFILL	REMOVE CULVERT	REMOVE INLET	REMOVE HEADWALL	DITCH EXCAVATION	MINOR HOT MIX ASPHALT	PLACE HOT MIX ASPHALT DIKE (TYPE A)	PLACE HOT MIX ASPHALT (MISCELLANEIOUS AREA)	MINOR CONCRETE (MINOR STRUCTURE)	24" CSP (.109" THICK)	30" CSP (.109" THICK)	36" CSP (.109" THICK)	48" CSP (0.168" THICK)	8" PERFORATED PLASTIC PIPE UNDERDRAIN	36" CORRUGATED STEEL PIPE INLET (.109" THICK)	48" CORRUGATED STEEL PIPE INLET (.168" THICK)	ROCK SLOPE PROTECTION (FACING, METHOD B)	ROCK SLOPE PROTECTION FABRIC	MARKER (CULVERT)	MISCELLANEOUS IRON AND STEEL	HEIGHT OF INLET (N)	DESCRIPTION	SEE TABLE "B" FOR MORE DATA	STATION	DRAINAGE PLAN SHEET No. ⬡	DRAINAGE SYSTEM No. ◯	DRAINAGE UNIT No. ◯
				LF	LF	CY	LF	EA	EA	CY	TON	LF	SQYD	CY	LF	LF	LF	LF	LF	LF	LF	CY	SQYD	EA	LB	LF						
R7.57	D-43	41	a								2.4		14.0														APRON		"A" 400+34.5	D-43	41	a
			b						1																		REMOVE HEADWALL (H=5′)					b
			c											1.53											239	4.2	TYPE GO DI					c
			d								0.4	16.0															PLACE HMA DIKE (TYPE A)					d
			e				92.5																				Exist 24" CSP					e
			f												94									2			24" CSP					f
			g																			4.7	16.0				RSP (FACING, METHOD B)					g
R7.75	D-44	42	a								2.2		12.8														APRON		"A" 408+58.9	D-44	42	a
			b						1																		REMOVE HEADWALL (H=5′)					b
			c											1.22										1	239	2.9	TYPE GO DI					c
			d								0.4	16.0															PLACE HMA DIKE (TYPE A)					d
			e				0.8																				12" CSP TRIM TO CONNECT DI					e
			f												2												EXTEND 24" CSP					f
R7.79	D-45	43	a								3.5		20.6														APRON		"A" 411+84.6	D-45	43	a
			b						1																		REMOVE HEADWALL (H=5′)					b
			c												4									1			EXTEND 24" CSP					c
			d											1.22											239	2.9	TYPE GO DI					d
			e								0.4	16.7															PLACE HMA DIKE (TYPE A)					e
R7.83	D-46	44	a								3.8		22.4														APRON		"A" 413+99.2	D-46	44	a
			b												4									1			EXTEND 24" CSP					b
			c						1																		REMOVE HEADWALL (H=5′)					c
			d											1.16											239	2.7	TYPE GO DI					d
			e								0.4	16.0															PLACE HMA DIKE (TYPE A)					e
R7.88	D-47	45	a								3.6		21.5														APRON		"A" 416+84.2	D-47	45	a
			b												4									1			EXTEND 24" CSP					b
			c						1																		REMOVE HEADWALL (H=5′)					c
			d											1.22											239	2.9	TYPE GO DI					d
			e								0.4	16.0															PLACE HMA DIKE (TYPE A)					e
R8.04	D-48	46	a								3.1		18.4														APRON		"A" 425+36.5	D-48	46	a
			b						1																		REMOVE HEADWALL (H=5′)					b
			c											2.08											478	4.0	TYPE GT3 DI					c
			d								0.4	12.8															PLACE HMA DIKE (TYPE A)					d
			e																					2			30" PLASTIC PIPE LINEAR	"B"				e
			f																				30.0				RSP (LIGHT, METHOD B)	"B"				f
			g														6										EXTEND 36" CSP					g
R8.47	D-49	47	a								2.9		17.0														APRON		"A" 448+28.1	D-49	47	a
			b						1																		REMOVE HEADWALL (H=5′)					b
			c												4									1			EXTEND 24" CSP					c
			d											1.26											239	3.1	TYPE GO DI					d
			e								0.6	23.0															PLACE HMA DIKE (TYPE A)					e
				0	0	0	93.3	0	7	0	24.5	116.5	126.7	9.69	112	0	6	0	0	0	0	4.7	46.0	9	1912		TOTAL (THIS SHEET)					

DRAINAGE QUANTITIES
DQ-7

LINDA BREAZEALE — REVISED BY
ZIDAN ZHANG — DATE REVISED
CALCULATED-DESIGNED BY
CHECKED BY
FUNCTIONAL SUPERVISOR
JULIE CASEY

STATE OF CALIFORNIA - DEPARTMENT OF TRANSPORTATION
Caltrans DESIGN

P:\proj2\02\2c950_plans\pse\22c950id007.dgn

LAST REVISION
DATE PLOTTED => 15-JUN-2011
TIME PLOTTED => 10:59

Dist	COUNTY	ROUTE	POST MILES TOTAL PROJECT	SHEET No.	TOTAL SHEETS
02	Sis	96	R0.0/R12.0	111	143

Zidan M. Zhang 10-13-10
REGISTERED CIVIL ENGINEER DATE

6-13-11
PLANS APPROVAL DATE

REGISTERED PROFESSIONAL ENGINEER Z. M. ZHANG No. C69054 Exp. 6-30-12 CIVIL STATE OF CALIFORNIA

THE STATE OF CALIFORNIA OR ITS OFFICERS OR AGENTS SHALL NOT BE RESPONSIBLE FOR THE ACCURACY OR COMPLETENESS OF ELECTRONIC COPIES OF THIS PLAN SHEET.

NOTES:

1. (N) - NOT A SEPARATE PAY ITEM, FOR INFORMATION ONLY
2. EXCEPT FOR PIPE DOWNDRAINS WHICH REQUIRE WATER TIGHT JOINTS, ALL JOINTS ARE STANDARD JOINT TYPE.

DRAINAGE QUANTITIES

POST MILE	DRAINAGE PLAN SHEET No.	DRAINAGE SYSTEM No.	DRAINAGE UNIT No.	ABANDON GMP PIPE INLET	ABANDON CULVERT	SAND BACKFILL	REMOVE CULVERT	REMOVE INLET	REMOVE HEADWALL	DITCH EXCAVATION	MINOR HOT MIX ASPHALT	PLACE HOT MIX ASPHALT DIKE (TYPE A)	PLACE HOT MIX ASPHALT (MISCELLANEIOUS AREA)	MINOR CONCRETE (MINOR STRUCTURE)	24" CSP (.109" THICK)	30" CSP (.109" THICK)	36" CSP (.109" THICK)	48" CSP (0.168" THICK)	8" PERFORATED PLASTIC PIPE UNDERDRAIN	36" CORRUGATED STEEL PIPE INLET (.109" THICK)	48" CORRUGATED STEEL PIPE INLET (.168" THICK)	ROCK SLOPE PROTECTION (FACING, METHOD B)	ROCK SLOPE PROTECTION FABRIC	MARKER (CULVERT)	MISCELLANEOUS IRON AND STEEL	HEIGHT OF INLET (N)	DESCRIPTION	SEE TABLE "B" FOR MORE DATA	STATION	DRAINAGE PLAN SHEET No.	DRAINAGE SYSTEM No.	DRAINAGE UNIT No.
				LF	LF	CY	LF	EA	EA	CY	TON	LF	SQYD	CY	LF	LF	LF	LF	LF	LF	LF	CY	SQYD	EA	LB	LF						
R8.57	D-50	48	a								2.8		16.4														APRON		"A" 453+80.0	D-50	48	a
			b						1																		REMOVE HEADWALL (H=5′)					b
			c																	3.2					215	2.7	GRATE TYPE 36RX (GMP INLET)					c
			d												16												EXTEND 24" CSP W/MINOR Conc (BACKFILL)	"B"				d
			e											1.20													HEADWALL, H=3.7′					e
R8.72	D-51	49	a						1																		REMOVE HEADWALL (H=5′)		"A" 462+29.6	D-51	49	a
			b												8									1			EXTEND 24" CSP					b
			c											1.20													STRAIGHT HW, H=3.7′					c
R8.82	D-52	50	a								3.2		19.2														APRON		"A" 466+69.3	D-52	50	a
			b					1																			REMOVE INLET (36" RISER)					b
			c											1.41											239	3.7	TYPE GO DI					c
			d								0.4	16.0															PLACE HMA DIKE (TYPE A)					d
			e																80								8" PPP UD					e
			f				3																	1			TRIM & CONNECT 24" CSP TO DI					f
			g						1																		REMOVE HEADWALL (H=5′)					g
R8.89	D-53	51	a								8.7		51.5														APRON		"A" 470+74.4	D-53	51	a
			b												4									2			EXTEND 24" CSP (RT)					b
			c						1																		REMOVE HEADWALL (H=5′)					c
			d					1																			REMOVE PIPE INLET					d
			e											1.26											239	3.1	TYPE GO DI					e
			f								0.7	27.1															PLACE HMA DIKE (TYPE A)					f
			g																			8.0	23.6				RSP (FACING, METHOD B)					g
			h				4																				TRIM Exist 24" CSP (Lt)					h
R8.99	D-54	52	a								5.1		30.2														APRON		"A" 470+74.4	D-54	52	a
			b						1																		REMOVE HEADWALL (H=5′)					b
			c												6									1			24" CSP					c
			d											1.24											239	3.0	TYPE GO DI					d
			e								0.4	16.0															PLACE HMA DIKE (TYPE A)					e
R9.18	D-55	53	a								3.6		21.2														APRON		"A" 475+11.6	D-55	53	a
			b						1																		REMOVE HEADWALL (H=5′)					b
			c												6									2			EXTEND 24" CSP					c
			d											1.35											239	3.4	TYPE GO DI					d
			e								0.4	16.0															PLACE HMA DIKE (TYPE A)					e
			f																			4.7	16.0				RSP (FACING, METHOD B)					f
				0	0	0	7	2	6	0	25.3	75.1	138.5	7.66	40	0	0	0	80	3.2	0	12.7	39.6	7	1171		TOTAL (THIS SHEET)					

DRAINAGE QUANTITIES
DQ-8

REVISED BY | DATE REVISED
LINDA BREAZEALE | ZIDAN ZHANG
CALCULATED-DESIGNED BY | CHECKED BY
FUNCTIONAL SUPERVISOR
JULIE CASEY

STATE OF CALIFORNIA - DEPARTMENT OF TRANSPORTATION
Caltrans
DESIGN

P:\proj2\02\2c950_plans\pse\22c950id008.dgn

LAST REVISION | DATE PLOTTED => 15-JUN-2011 | TIME PLOTTED => 11:27

Dist	COUNTY	ROUTE	POST MILES TOTAL PROJECT	SHEET No.	TOTAL SHEETS
02	Sis	96	R0.0/R12.0	112	143

Zidan M. Zhang 10-13-10
REGISTERED CIVIL ENGINEER DATE

6-13-11
PLANS APPROVAL DATE

REGISTERED PROFESSIONAL ENGINEER Z. M. ZHANG No. C69054 Exp. 6-30-12 CIVIL STATE OF CALIFORNIA

THE STATE OF CALIFORNIA OR ITS OFFICERS OR AGENTS SHALL NOT BE RESPONSIBLE FOR THE ACCURACY OR COMPLETENESS OF ELECTRONIC COPIES OF THIS PLAN SHEET.

NOTES:

1. (N) - NOT A SEPARATE PAY ITEM, FOR INFORMATION ONLY
2. EXCEPT FOR PIPE DOWNDRAINS WHICH REQUIRE WATER TIGHT JOINTS, ALL JOINTS ARE STANDARD JOINT TYPE.

DRAINAGE QUANTITIES

POST MILE	DRAINAGE PLAN SHEET No.	DRAINAGE SYSTEM No.	DRAINAGE UNIT No.	ABANDON GMP PIPE INLET	ABANDON CULVERT	SAND BACKFILL	REMOVE CULVERT	REMOVE INLET	REMOVE HEADWALL	DITCH EXCAVATION	MINOR HOT MIX ASPHALT	PLACE HOT MIX ASPHALT DIKE (TYPE A)	PLACE HOT MIX ASPHALT (MISCELLANEIOUS AREA)	MINOR CONCRETE (MINOR STRUCTURE)	24" CSP (.109" THICK)	30" CSP (.109" THICK)	36" CSP (.109" THICK)	48" CSP (0.168" THICK)	8" PERFORATED PLASTIC PIPE UNDERDRAIN	36" CORRUGATED STEEL PIPE INLET (.109" THICK)	48" CORRUGATED STEEL PIPE INLET (.168" THICK)	ROCK SLOPE PROTECTION (FACING, METHOD B)	ROCK SLOPE PROTECTION FABRIC	MARKER (CULVERT)	MISCELLANEOUS IRON AND STEEL	HEIGHT OF INLET (N)	DESCRIPTION	SEE TABLE "B" FOR MORE DATA	STATION	DRAINAGE PLAN SHEET No.	DRAINAGE SYSTEM No.	DRAINAGE UNIT No.
				LF	LF	CY	LF	EA	EA	CY	TON	LF	SQYD	CY	LF	LF	LF	LF	LF	LF	LF	CY	SQYD	EA	LB	LF						
R9.31	D-56	54	a								2.0		11.9														APRON		"A" 492+23.1	D-56	54	a
			b												2									2			EXTEND 24" CSP (R+)					b
			c						1																		REMOVE HEADWALL (H=5′)					c
			d											1.44											239	3.8	TYPE GO DI					d
			e								0.6	20.7															PLACE HMA DIKE (TYPE A)					e
			f												6												EXTEND 24" CSP (L+)					f
			g																			45.7	90.6				RSP (FACING, METHOD B)					g
R9.39	D-57	55	a								3.2		19.1														APRON		"A" 496+07.3	D-57	55	a
			b						1																		REMOVE HEADWALL (H=5′)					b
			c												2									2			EXTEND 24" CSP (R+)					c
			d											1.35											239	3.4	TYPE GO DI					d
			e								0.5	19.4															PLACE HMA DIKE (TYPE A)					e
			f												6												EXTEND 24" CSP (L+)					f
			g																			24.7	58.0				RSP (FACING, METHOD B)					g
R9.46	D-58	56	a								8.4		49.9														APRON		"A" 499+75.1	D-58	56	a
			b						1																		REMOVE HEADWALL (H=5′)					b
			c											1.72											473	3.3	TYPE GDO INLET					c
			d								0.8	28.4															PLACE HMA DIKE (TYPE A)					d
R9.53	D-59	57	a								6.1		36.0														APRON		"A" 503+30.4	D-59	57	a
			b						1																		REMOVE HEADWALL (H=5′)					b
			c												10									1			EXTEND 24" CSP					c
			d											1.19											239	2.8	TYPE GO DI					d
			e								0.4	16.0															PLACE HMA DIKE (TYPE A)					e
			f																			4.7	16.0				RSP (FACING, METHOD B)					f
R9.61	D-60	58	a								7.1		42.0														APRON		"A" 512+61.9	D-60	58	a
			b						1																		REMOVE HEADWALL (H=5′)					b
			c							6.7																	DITCH EXCAVATON					c
			d											3.65										1	239	4.5	Mod TYPE GO DI W/ Mod STRAIGHT & "L" HWS					d
			e											1.60													CONCRETE APRON					e
			f								0.2	8.0															PLACE HMA DIKE (TYPE A)					f
			g																			4.7	16.0				RSP (FACING, METHOD B)					g
			h																								CABLE RAILING, L=12.0′	"B"				h
			i												2												24" CSP					i
R9.70	D-61	59	a								1.1		6.3											1			APRON		"A" 512+61.9	D-61	59	a
			b																						215		GRATE TYPE 36RX (GMP INLET)					b
				0	0	0	0	0	5	6.7	30.4	92.5	165.2	10.95	28	0	0	0	0	0	0	79.8	180.6	7	1644		TOTAL (THIS SHEET)					

DRAINAGE QUANTITIES
DQ-9

LINDA BREAZEALE — REVISED BY
ZIDAN ZHANG — DATE REVISED
CALCULATED-DESIGNED BY
CHECKED BY
FUNCTIONAL SUPERVISOR
JULIE CASEY

STATE OF CALIFORNIA - DEPARTMENT OF TRANSPORTATION
Caltrans DESIGN

P:\proj2\02\2c950_plans\pse\22c950id009.dgn

LAST REVISION DATE PLOTTED => 15-JUN-2011
TIME PLOTTED => 11:28

Dist	COUNTY	ROUTE	POST MILES TOTAL PROJECT	SHEET No.	TOTAL SHEETS
02	Sis	96	R0.0/R12.0	113	143

Zidan M. Zhang 10-13-10
REGISTERED CIVIL ENGINEER DATE

6-13-11
PLANS APPROVAL DATE

REGISTERED PROFESSIONAL ENGINEER Z. M. ZHANG No. C69054 Exp. 6-30-12 CIVIL STATE OF CALIFORNIA

THE STATE OF CALIFORNIA OR ITS OFFICERS OR AGENTS SHALL NOT BE RESPONSIBLE FOR THE ACCURACY OR COMPLETENESS OF ELECTRONIC COPIES OF THIS PLAN SHEET.

NOTES:

1. (N) - NOT A SEPARATE PAY ITEM, FOR INFORMATION ONLY
2. EXCEPT FOR PIPE DOWNDRAINS WHICH REQUIRE WATER TIGHT JOINTS, ALL JOINTS ARE STANDARD JOINT TYPE.

DRAINAGE QUANTITIES

POST MILE	DRAINAGE PLAN SHEET No.	DRAINAGE SYSTEM No.	DRAINAGE UNIT No.	ABANDON GMP PIPE INLET (LF)	ABANDON CULVERT (LF)	SAND BACKFILL (CY)	REMOVE CULVERT (LF)	REMOVE INLET (EA)	REMOVE HEADWALL (EA)	DITCH EXCAVATION (CY)	MINOR HOT MIX ASPHALT (TON)	PLACE HOT MIX ASPHALT DIKE (TYPE A) (LF)	PLACE HOT MIX ASPHALT (MISCELLANEIOUS AREA) (SQYD)	MINOR CONCRETE (MINOR STRUCTURE) (CY)	24" CSP (.109" THICK) (LF)	30" CSP (.109" THICK) (LF)	36" CSP (.109" THICK) (LF)	48" CSP (0.168" THICK) (LF)	8" PERFORATED PLASTIC PIPE UNDERDRAIN (LF)	36" CORRUGATED STEEL PIPE INLET (.109" THICK) (LF)	48" CORRUGATED STEEL PIPE INLET (.168" THICK) (LF)	ROCK SLOPE PROTECTION (FACING, METHOD B) (CY)	ROCK SLOPE PROTECTION FABRIC (SQYD)	MARKER (CULVERT) (EA)	MISCELLANEOUS IRON AND STEEL (LB)	HEIGHT OF INLET (N) (LF)	DESCRIPTION	SEE TABLE "B" FOR MORE DATA	STATION	DRAINAGE PLAN SHEET No.	DRAINAGE SYSTEM No.	DRAINAGE UNIT No.
R9.79	D-62	60	a								7.7		6.3														APRON		"A" 517+21.2	D-62	60	a
			b																	4.4					215	3.9	GRATE TYPE 36RX (GMP INLET)					b
			c						1																		REMOVE HW (H=5.0')					c
			d														12										EXTEND 36" CSP W/MINOR Conc (BACKFILL)	"B"				d
			e											2.76													STRAIGHT HW, H=4.7'					e
			f																			42.8	78.3				RSP (FACING, METHOD B)					f
			g				8																				TRIM & CONNECT 36" CSP TO GMP					g
			h																								CABLE RAILING, L=17.0'	"B"				h
R9.98	D-63	61	a						1																		REMOVE HW (H=5.0')		"A" 526+27.8	D-63	61	a
			b												8									2			EXTEND 24" CSP					b
			c											1.20													STRAIGHT HW, H=3.7'					c
			d																25								8" PPP UD					d
R10.21	D-64	62	a								5.3		31.2														APRON		"A" 539+60.4	D-64	62	a
			b											1.22										1	239	2.9	TYPE GO DI					b
			c								0.5	17.4															PLACE HMA DIKE (TYPE A)					c
			d					1																			REMOVE Conc. INLET					d
R10.30	D-65	63	a								0.4	16.0															HMA DIKE (TYPE A)		"A" 542+10.9	D-65	63	a
			b											2.04											473	4.3	TYPE GDO DI					b
			c												4									1			EXTEND 24" CSP					c
			d						1																		REMOVE HW (H=5.0')					d
			e								5.7		33.5														PLACE HMA (Misc AREA)					e
			f												4												EXTEND 24" CSP					f
R10.40	D-66	64	a						1																		REMOVE HW (H=6')		"A" 548+08.2	D-66	64	a
			b															10						2			EXTEND 48" CSP (R+)					b
			c											2.75													STRAIGHT HW, H=5.7'					c
			d															6									EXTEND 48" CSP (L+)					d
			e																				59.1				RSP (LIGHT, METHOD B)	"B"				e
			f																								CABLE RAILING, L=15.0'	"B"				f
			g							2																	DITCH EXCAVATION					g
R10.45	D-67	65	a								4.0		23.8														APRON		"A" 552+35.4	D-67	65	a
			b						1																		REMOVE HW (H=5.0')					b
			c											1.32											239	3.3	TYPE GO DI					c
			d								0.4	16.0															HMA DIKE (TYPE A)					d
			e												64									2			24" CSP					e
			f				60																				Exist 24" SCP					f
			g																			5.3	21.5				RSP (FACING, METHOD B)					g
R10.56	D-68	66	a						1																		REMOVE HW (H=5.0')		"A" 556+76.9	D-68	66	a
			b												10									1			EXTEND 24" CSP					b
			c											1.20													STRAIGHT HW, H=3.7'					c
			d																			4.7	17.9				RSP (FACING, METHOD B)					d
			e							2																	DITCH EXCAVATION					e
				0	0	0	68	1	6	4	24.0	49.4	94.8	12.49	90	0	12	16	25	4.4	0	52.8	176.8	9	1166		TOTAL (THIS SHEET)					

DRAINAGE QUANTITIES
DQ-10

LINDA BREAZEALE — REVISED BY
ZIDAN ZHANG — DATE REVISED
CALCULATED-DESIGNED BY
CHECKED BY
JULIE CASEY — FUNCTIONAL SUPERVISOR

STATE OF CALIFORNIA - DEPARTMENT OF TRANSPORTATION
Caltrans DESIGN

P:\proj2\02\2c950_plans\pse\22c950id010.dgn

LAST REVISION — DATE PLOTTED => 15-JUN-2011 TIME PLOTTED => 11:28

Dist	COUNTY	ROUTE	POST MILES TOTAL PROJECT	SHEET No.	TOTAL SHEETS
02	Sis	96	R0.0/R12.0	114	143

Zidan M. Zhang 10-13-10
REGISTERED CIVIL ENGINEER DATE

6-13-11
PLANS APPROVAL DATE

REGISTERED PROFESSIONAL ENGINEER Z. M. ZHANG No. C69054 Exp. 6-30-12 CIVIL STATE OF CALIFORNIA

THE STATE OF CALIFORNIA OR ITS OFFICERS OR AGENTS SHALL NOT BE RESPONSIBLE FOR THE ACCURACY OR COMPLETENESS OF ELECTRONIC COPIES OF THIS PLAN SHEET.

NOTES:

1. (N) - NOT A SEPARATE PAY ITEM, FOR INFORMATION ONLY
2. EXCEPT FOR PIPE DOWNDRAINS WHICH REQUIRE WATER TIGHT JOINTS, ALL JOINTS ARE STANDARD JOINT TYPE.

DRAINAGE QUANTITIES

POST MILE	DRAINAGE PLAN SHEET No.	DRAINAGE SYSTEM No. ⬡	DRAINAGE UNIT No. ◯	ABANDON GMP PIPE INLET	ABANDON CULVERT	SAND BACKFILL	REMOVE CULVERT	REMOVE INLET	REMOVE HEADWALL	DITCH EXCAVATION	MINOR HOT MIX ASPHALT	PLACE HOT MIX ASPHALT DIKE (TYPE A)	PLACE HOT MIX ASPHALT (MISCELLANEIOUS AREA)	MINOR CONCRETE (MINOR STRUCTURE)	24" CSP (.109" THICK)	30" CSP (.109" THICK)	36" CSP (.109" THICK)	48" CSP (0.168" THICK)	8" PERFORATED PLASTIC PIPE UNDERDRAIN	36" CORRUGATED STEEL PIPE INLET (.109" THICK)	48" CORRUGATED STEEL PIPE INLET (.168" THICK)	ROCK SLOPE PROTECTION (FACING, METHOD B)	ROCK SLOPE PROTECTION FABRIC	MARKER (CULVERT)	MISCELLANEOUS IRON AND STEEL	HEIGHT OF INLET (N)	DESCRIPTION	SEE TABLE "B" FOR MORE DATA	STATION	DRAINAGE PLAN SHEET No.	DRAINAGE SYSTEM No. ⬡	DRAINAGE UNIT No. ◯
				LF	LF	CY	LF	EA	EA	CY	TON	LF	SQYD	CY	LF	LF	LF	LF	LF	LF	LF	CY	SQYD	EA	LB	LF						
R10.58	D-69	67	a													142								2			30" CSP		"A" 558+31.2	D-69	67	a
			b								8.5		50.0														APRON					b
			c																		5.9				382	5.4	GRATE TYPE 48RX (GMP INLET)					c
R10.60	D-70	68	a						1																		REMOVE HW (H=5.0′)		"A" 559+14.6	D-70	68	a
			b											4.31										1	239	3.9	Mod TYPE G2 DI W/ CURB OPENING & W/ Mod STRAIGHT HW					b
			c																30								8" PPP UD					c
			d								4.5		26.6														APRON					d
			e																			18.2	48.6				RSP (FACING, METHOD B)					e
			f																80								8" PPP UD					f
			g														4										EXTEND 36" CSP					g
			h																								CABLE RAILING, L=20.0′	"B"				h
R10.64	D-71	69	a								4.6		27.0														APRON		"A" 562+34.8	D-71	69	a
			b											4.13											239	4.0	Mod TYPE G2 DI W/ Mod STRAIGHT HW					b
			c														6							2			EXTEND 36" CSP					c
			d																			18.7	56.0				RSP (FACING, METHOD B)					d
			e						1																		REMOVE HW (H=5.0′)					e
			f																								CABLE RAILING, L=18.0′	"B"				f
			g							2.0																	DITCH EXCAVATION					g
R10.81	D-72	70	a							7.5																	DITCH EXCAVATION		"A" 569+93.3	D-72	70	a
			b								3.9		23.3														APRON					b
			c								0.4	16.0															HMA DIKE (TYPE A)					c
			d											1.14										2	239	2.6	TYPE GO DI					d
			e						1																		REMOVE HW (H=5.0′)					e
R10.88	D-73	71	a								6.3		37.1														APRON		"A" 574+94.3	D-73	71	a
			b								0.7	26.9															HMA DIKE (TYPE A)					b
			c											1.24											239	3.0	TYPE GO DI					c
			d						1																		REMOVE HW (H=5.0′)					d
			e												2									1			EXTEND 24" CSP					e
R11.07	D-74	72	a								5.0		29.5														APRON		"A" 583+90.4	D-74	72	a
			b								0.4	16.0															HMA DIKE (TYPE A)					b
			c											1.19											239	2.8	TYPE GO DI					c
			d						1																		REMOVE HW (H=5.0′)					d
			e				61.0																				Exist 24" CSP					e
			f												66									2			24" CSP					f
			g																			4.0	14.3				RSP (FACING, METHOD B)					g
R11.14	D-75	73	a						1																		REMOVE HW (H=5.0′)		"A" 587+90.9	D-75	73	a
			b											1.52													STRAIGHT HW, H=4.2′					b
			c				80.4																				Exist 24" CSP					c
			d													86								2			30" CSP					d
			e																			5.2	19.4				RSP (FACING, METHOD B)					e
			f							1.8																	DITCH EXCAVATION					f
				0	0	0	141.4	0	6	11.3	34.3	58.9	193.5	13.53	68	228	10	0	110	0	5.9	46.1	138.3	12	1577		TOTAL (THIS SHEET)					

DRAINAGE QUANTITIES
DQ-11

LINDA BREAZEALE — REVISED BY
ZIDAN ZHANG — DATE REVISED
CALCULATED-DESIGNED BY
CHECKED BY
FUNCTIONAL SUPERVISOR
JULIE CASEY

STATE OF CALIFORNIA - DEPARTMENT OF TRANSPORTATION
Caltrans
DESIGN

P:\proj2\02\2c950_plans\pse\22c950id011.dgn

LAST REVISION
DATE PLOTTED => 15-JUN-2011
TIME PLOTTED => 11:28

Dist	COUNTY	ROUTE	POST MILES TOTAL PROJECT	SHEET No.	TOTAL SHEETS
02	Sis	96	R0.0/R12.0	115	143

Zidan M. Zhang 10-13-10
REGISTERED CIVIL ENGINEER DATE

6-13-11
PLANS APPROVAL DATE

REGISTERED PROFESSIONAL ENGINEER Z. M. ZHANG No. C69054 Exp. 6-30-12 CIVIL STATE OF CALIFORNIA

THE STATE OF CALIFORNIA OR ITS OFFICERS OR AGENTS SHALL NOT BE RESPONSIBLE FOR THE ACCURACY OR COMPLETENESS OF ELECTRONIC COPIES OF THIS PLAN SHEET.

NOTES:

1. (N) - NOT A SEPARATE PAY ITEM, FOR INFORMATION ONLY
2. EXCEPT FOR PIPE DOWNDRAINS WHICH REQUIRE WATER TIGHT JOINTS, ALL JOINTS ARE STANDARD JOINT TYPE.

DRAINAGE QUANTITIES

POST MILE	DRAINAGE PLAN SHEET No.	DRAINAGE SYSTEM No.	DRAINAGE UNIT No.	ABANDON GMP PIPE INLET	ABANDON CULVERT	SAND BACKFILL	REMOVE CULVERT	REMOVE INLET	REMOVE HEADWALL	DITCH EXCAVATION	MINOR HOT MIX ASPHALT	PLACE HOT MIX ASPHALT DIKE (TYPE A)	PLACE HOT MIX ASPHALT (MISCELLANEIOUS AREA)	MINOR CONCRETE (MINOR STRUCTURE)	24" CSP (.109" THICK)	30" CSP (.109" THICK)	36" CSP (.109" THICK)	48" CSP (0.168" THICK)	8" PERFORATED PLASTIC PIPE UNDERDRAIN	36" CORRUGATED STEEL PIPE INLET (.109" THICK)	48" CORRUGATED STEEL PIPE INLET (.168" THICK)	ROCK SLOPE PROTECTION (FACING, METHOD B)	ROCK SLOPE PROTECTION FABRIC	MARKER (CULVERT)	MISCELLANEOUS IRON AND STEEL	HEIGHT OF INLET (N)	DESCRIPTION	SEE TABLE "B" FOR MORE DATA	STATION	DRAINAGE PLAN SHEET No.	DRAINAGE SYSTEM No.	DRAINAGE UNIT No.
				LF	LF	CY	LF	EA	EA	CY	TON	LF	SQYD	CY	LF	LF	LF	LF	LF	LF	LF	CY	SQYD	EA	LB	LF						
R11.21	D-76	74	a						1																		REMOVE HW (H=5.0′)		"A" 591+45.7	D-76	74	a
			b								2.5		14.8														APRON					b
			c											3.57											239	3.7	Mod TYPE GO DI W/ Mod STRAIGHT HW					c
			d												6									2			EXTEND 24" CSP					d
			e																			8.0	23.6				RSP (FACING, METHOD B)					e
			f							4.2																	DITCH EXCAVATION					f
R11.30	D-77	75	a								4.7		27.7														APRON		"A" 596+38.7	D-77	75	a
			b								0.6	20.5															HMA DIKE (TYPE A)					b
			c											1.49											239	4.0	TYPE GO DI					c
			d						1																		REMOVE HW (H=5.0′)					d
			e												6									2			EXTEND 24" CSP (Rt)					e
			f												4												EXTEND 24" CSP (Lt)					f
			g																			6.7	19.4				RSP (FACING, METHOD B)					g
R11.39	D-78	76	a						1																		REMOVE HW (H=5.0′)		"A" 600+88.9	D-78	76	a
			b												12									2			EXTEND 24" CSP					b
			c											1.20													STRAIGHT HW, H=3.7′					c
			d							1.9																	DITCH EXCAVATION					d
			e																			8.0	23.6				RSP (FACING, METHOD B)					e
R11.49	D-79	77	a												6									1			EXTEND 24" CSP		"A" 605+99.0	D-79	77	a
			b						1																		REMOVE HW (H=5.0′)					b
			c								5.2		30.9														APRON					c
			d								0.7	26.2															HMA DIKE (TYPE A)					d
			e											1.29											239	3.2	TYPE GO DI					e
			f																12								8" PPP UD					f
R11.57	D-80	78	a								3.1		18.1														APRON		"A" 609+83.4	D-80	78	a
			b								0.4	16.0															HMA DIKE (TYPE A)					b
			c											1.34											239	3.4	TYPE GO DI					c
			d						1																		REMOVE HW (H=5.0′)					d
			e				55.4																				REMOVE CULVERT					e
			f												58									2			24" CSP					f
R11.63	D-81	79	a						1																		REMOVE HW (H=5.0′)		"A" 613+20.1	D-81	79	a
			b								5.2		30.6														APRON					b
			c											5.30											239	4.1	Mod TYPE G2 DI W/ Mod STRAIGHT HW					c
			d				99.7																				Exist 30" CSP					d
			e														94										36" CSP					e
			f																								DD 30" CSP W/ ANCHOR ASSEMBLY	"B"				f
			g																								36" SLIP JOINT	"B"				g
			h																								CABLE RAILING, L=22.0′	"B"				h
			i							2.0																	DITCH EXCAVATION					i
				0	0	0	155.1	0	6	8.1	22.4	62.7	122.1	14.19	92	0	94	0	12	0	0	22.7	66.6	9	1195		TOTAL (THIS SHEET)					

DRAINAGE QUANTITIES
DQ-12

REVISED BY | DATE REVISED
LINDA BREAZEALE | ZIDAN ZHANG
CALCULATED-DESIGNED BY | CHECKED BY
FUNCTIONAL SUPERVISOR
JULIE CASEY

STATE OF CALIFORNIA - DEPARTMENT OF TRANSPORTATION
Caltrans DESIGN

P:\proj2\02\2c950_plans\pse\22c950id012.dgn

LAST REVISION | DATE PLOTTED => 15-JUN-2011 | TIME PLOTTED => 11:28

Dist	COUNTY	ROUTE	POST MILES TOTAL PROJECT	SHEET No.	TOTAL SHEETS
02	Sis	96	R0.0/R12.0	116	143

Zidan M. Zhang 10-13-10
REGISTERED CIVIL ENGINEER DATE

6-13-11
PLANS APPROVAL DATE

REGISTERED PROFESSIONAL ENGINEER Z. M. ZHANG No. C69054 Exp. 6-30-12 CIVIL STATE OF CALIFORNIA

THE STATE OF CALIFORNIA OR ITS OFFICERS OR AGENTS SHALL NOT BE RESPONSIBLE FOR THE ACCURACY OR COMPLETENESS OF ELECTRONIC COPIES OF THIS PLAN SHEET.

NOTES:

1. (N) - NOT A SEPARATE PAY ITEM, FOR INFORMATION ONLY
2. EXCEPT FOR PIPE DOWNDRAINS WHICH REQUIRE WATER TIGHT JOINTS, ALL JOINTS ARE STANDARD JOINT TYPE.

DRAINAGE QUANTITIES

POST MILE	DRAINAGE PLAN SHEET No.	DRAINAGE SYSTEM No. ⬡	DRAINAGE UNIT No. ◯	ABANDON GMP PIPE INLET (LF)	ABANDON CULVERT (LF)	SAND BACKFILL (CY)	REMOVE CULVERT (LF)	REMOVE INLET (EA)	REMOVE HEADWALL (EA)	DITCH EXCAVATION (CY)	MINOR HOT MIX ASPHALT (TON)	PLACE HOT MIX ASPHALT (TYPE A) (LF)	PLACE HOT MIX ASPHALT (MISCELLANEIOUS AREA) (SQYD)	MINOR CONCRETE (MINOR STRUCTURE) (CY)	24" CSP (.109" THICK) (LF)	30" CSP (.109" THICK) (LF)	36" CSP (.109" THICK) (LF)	48" CSP (0.168" THICK) (LF)	8" PERFORATED PLASTIC PIPE UNDERDRAIN (LF)	36" CORRUGATED STEEL PIPE INLET (.109" THICK) (LF)	48" CORRUGATED STEEL PIPE INLET (.168" THICK) (LF)	ROCK SLOPE PROTECTION (FACING, METHOD B) (CY)	ROCK SLOPE PROTECTION FABRIC * (SQYD)	MARKER (CULVERT) (EA)	MISCELLANEOUS IRON AND STEEL (LB)	HEIGHT OF INLET (N) (LF)	DESCRIPTION	SEE TABLE "B" FOR MORE DATA	STATION	DRAINAGE PLAN SHEET No.	DRAINAGE SYSTEM No. ⬡	DRAINAGE UNIT No. ◯
R11.72	D-82	80	a								3.9		23.2														APRON		"A" 617+93.0	D-82	80	a
			b								0.4	16.0															HMA DIKE (TYPE A)					b
			c											2.10											473	4.5	TYPE GDO DI					c
			d						1																		REMOVE HW (H=5.0')					d
			e				58.4																				Exist 24" CSP					e
			f														64							2			36" CSP					f
			g																								DD 30" CSP W/ ANCHOR ASSEMBLY	"B"				g
			h																								Exist DD 24" CSP	"B"				h
			i																								36" SLIP JOINT	"B"				i
R11.76	D-83	81	a								3.5		20.5														PLACE HMA (Misc AREA)		"A" 620+44.7	D-83	81	a
			b								0.6	20.4															HMA DIKE (TYPE A)					b
			c											1.85										1	473	3.7	TYPE GDO DI					c
			d						1																		REMOVE HW (H=5.0')					d
R11.79	D-84	82	a								2.6		15.3														APRON		"A" 622+46.3	D-84	82	a
			b											0.23													MINOR CONCRETE COLLAR (N)					b
			c																		3.0			1	382	2.5	Mod 48" TYPE GMP PIPE INLET					c
			d					1																			TRIM 36" GMP INLET					d
			e																50								8" PPP UD					e
R11.85	D-85	83	a								3.9		22.9														APRON		"A" 625+43.7	D-85	83	a
			b								0.4	16.0															HMA DIKE (TYPE A)					b
			c											1.24											239	2.9	TYPE GO DI					c
			d												4									1			EXTEND 24" CSP					d
			e																								REMOVE HW (H=5.0')					e
R11.90	D-86	84	a								4.6		27.3														APRON		"A" 628+44.7	D-86	84	a
			b						1																		REMOVE HW (H=5.0')					b
			c											4.50											239	4.0	Mod TYPE GO DI W/ Mod STRAIGHT HW					c
			d																30								8" PPP UD					d
			e				61.4																				Exist 24" CSP					e
			f													62								2			30" CSP					f
			g																			4.7	17.1				RSP (FACING, METHOD B)					g
				0	0	0	119.8	1	3	0	19.9	52.4	109.2	9.92	4	62	64	0	80	0	3.0	4.7	17.1	7	1806		TOTAL (THIS SHEET)					
				11.1	396.1	117.1	1903.9	8	61	33.3	310.3	894.0	1658.2	155.28	1262	356	254	16	745	11.8	8.9	463.0	*2000.3	124	18266		GRAND TOTAL					

* SEE SUMMARY OF QUANTITIES FOR ADDITIONAL QUANTITIES

LINDA BREAZEALE — REVISED BY
ZIDAN ZHANG — DATE REVISED
CALCULATED-DESIGNED BY
CHECKED BY
FUNCTIONAL SUPERVISOR
JULIE CASEY

STATE OF CALIFORNIA - DEPARTMENT OF TRANSPORTATION
Caltrans DESIGN

P:\proj2\02\2c950_plans\pse\22c950id013.dgn

LAST REVISION — DATE PLOTTED => 15-JUN-2011 TIME PLOTTED => 11:28

DRAINAGE QUANTITIES
DQ-13

Dist	COUNTY	ROUTE	POST MILES TOTAL PROJECT	SHEET No.	TOTAL SHEETS
02	Sis	96	R0.0/R12.0	117	143

Zidan M. Zhang 10-13-10
REGISTERED CIVIL ENGINEER DATE

6-13-11
PLANS APPROVAL DATE

REGISTERED PROFESSIONAL ENGINEER Z. M. ZHANG No. C69054 Exp. 6-30-12 CIVIL STATE OF CALIFORNIA

THE STATE OF CALIFORNIA OR ITS OFFICERS OR AGENTS SHALL NOT BE RESPONSIBLE FOR THE ACCURACY OR COMPLETENESS OF ELECTRONIC COPIES OF THIS PLAN SHEET.

NOTES:

1. (N) - NOT A SEPARATE PAY ITEM, FOR INFORMATION ONLY
2. EXCEPT FOR PIPE DOWNDRAINS WHICH REQUIRE WATER TIGHT JOINTS, ALL JOINTS ARE STANDARD JOINT TYPE.

DRAINAGE QUANTITIES
TABLE B

POST MILE	DRAINAGE PLAN SHEET No.	⬡ DRAINAGE SYSTEM No.	◯ DRAINAGE UNIT No.	REMOVE DOWNDRAIN (LF)	MINOR CONCRETE (BACKFILL) (CY)	21" PLASTIC PIPE-LINER (LF)	30" PLASTIC PIPE-LINER (LF)	24" CORRUGATED STEEL PIPE DOWNDRAIN (.079" THICK) (LF)	30" CORRUGATED STEEL PIPE DOWNDRAIN (.079" THICK) (LF)	30" DOWNDRAIN SLIP JOINT (EA)	36" DOWNDRAIN SLIP JOINT (EA)	24" WELDED STEEL PIPE (.250" THICK) (F) (LF)	30" WELDED STEEL PIPE (.250" THICK) (LF)	36" WELDED STEEL PIPE (0.250" THICK) (LF)	48" WELDED STEEL PIPE (.375" THICK) (LF)	72" WELDED STEEL PIPE (.250" THICK) (LF)	2-1/2" CAST IRON PIPE (LF)	24" STEEL FLARED END SECTION (EA)	ROCK SLOPE PROTECTION (1/2 TON, METHOD A) (CY)	ROCK SLOPE PROTECTION (LIGHT, METHOD B) (CY)	ROCK SLOPE PROTECTION * (BACKING No. 2, METHOD B) (CY)	ANCHOR ASSEMBLY (EA)	CABLE ANCHORAGE SYSTEM (N) (EA)	CABLE RAILING (LF)	JOINT CLASSIFICATION	DESCRIPTION	STATION	DRAINAGE PLAN SHEET No.	⬡ DRAINAGE SYSTEM No.	◯ DRAINAGE UNIT No.
R0.42	D-1	1	b			62																				21" PLASTIC PIPE LINER	"A" 21+91.4	D-1	1	b
R0.50	D-2	2	e			61																				21" PLASTIC PIPE LINER	"A" 25+91.3	D-2	2	e
R0.68	D-4	4	b	22.8																						Exist 24" CSP	"A" 35+78.1	D-4	4	b
			c															1								24" CSP FES				c
			f					46														2	1		DD	24" CSP DD W/ ANCHOR ASSEMBLY				f
			g																	9.1						RSP (LIGHT, METHOD B)				g
R0.89	D-5	5	e																	11.3						RSP (LIGHT, METHOD B)	"A" 46+31.4	D-5	5	e
R0.94	D-6	6	a															1								24" CSP FES	"A" 48+95.7	D-6	6	a
R1.09	D-7	7	g		3.9																					24" CSP W/ MINOR Conc (BACKFILL)	"A" 51+21.0	D-7	7	g
R1.29	D-8/ D-9	8	b													82.2										72" WSP	"A" 67+40.9	D-8/ D-9	8	b
			i																69.5							RSP (1/2 TON, METHOD A)				i
			j																	31.0						RSP (LIGHT, METHOD B)				j
			k																					21		CABLE RAILING				k
R1.52	D-10	9	e																					12		CABLE RAILING				e
R2.53	D-15	13	a																	44.6						RSP (LIGHT, METHOD B)	"A" 132+67.8	D-15	13	a
R2.74	D-16	14	c										65.5													30" WSP	"A" 143+81.6	D-16	14	c
			e					46														2	1		DD	24" CSP DD W/ ANCHOR ASSEMBLY				e
			f							1																SLIP JOINT				f
			g	30.2																						Exist 24" DD				g
			h																	6.7						RSP (LIGHT, METHOD B)				h
R3.10	D-17	15	e																	106.3						RSP (LIGHT, METHOD B)	"A" 162+50.3	D-17	15	e
R3.25	D-19	17	e									144.4														24" WELDED STEEL PIPE	"A" 107+26.7	D-19	17	e
			f																	5.5						RSP (LIGHT, METHOD B)				f
R3.58	D-21	19	d									74.5														24" WELDED STEEL PIPE	"A" 187+98.3	D-21	19	d
R3.66	D-22	20	d												76.2											48" WELDED STEEL PIPE	"A" 192+20.2	D-22	20	d
			e																	44.5						RSP (LIGHT, METHOD B)				e
			f																					15		CABLE RAILING				f
R4.64	D-24	22	d																					12		CABLE RAILING	"A" 243+84.5	D-24	22	d
			e																		6.6					RSP (BACKING No. 2, METHOD B)				e
			f											87.3												36" WSP				f
			h																	11.1						RSP (LIGHT, METHOD B)				h
				53.0	3.9	123	0	92	0	1	0	218.9	65.5	87.3	76.2	82.2	0	2	69.5	270.1	*6.6	4	2	60		TOTAL (THIS SHEET)				

* SEE SUMMARY OF QUANTITIES FOR ADDITIONAL QUANTITIES

DRAINAGE QUANTITIES
DQ-14

REVISED BY | DATE REVISED
LINDA BREAZEALE | ZIDAN ZHANG
CALCULATED-DESIGNED BY | CHECKED BY
FUNCTIONAL SUPERVISOR: JULIE CASEY

STATE OF CALIFORNIA - DEPARTMENT OF TRANSPORTATION
Caltrans DESIGN

P:\proj\02\2c950_plans\pse\22c950id014.dgn

LAST REVISION | DATE PLOTTED => 15-JUN-2011 | TIME PLOTTED => 11:28

Dist	COUNTY	ROUTE	POST MILES TOTAL PROJECT	SHEET No.	TOTAL SHEETS
02	Sis	96	R0.0/R12.0	118	143

Zidan M. Zhang 10-13-10
REGISTERED CIVIL ENGINEER DATE

6-13-11
PLANS APPROVAL DATE

REGISTERED PROFESSIONAL ENGINEER Z. M. ZHANG No. C69054 Exp. 6-30-12 CIVIL STATE OF CALIFORNIA

THE STATE OF CALIFORNIA OR ITS OFFICERS OR AGENTS SHALL NOT BE RESPONSIBLE FOR THE ACCURACY OR COMPLETENESS OF ELECTRONIC COPIES OF THIS PLAN SHEET.

NOTES:

1. (N) - NOT A SEPARATE PAY ITEM, FOR INFORMATION ONLY

DRAINAGE QUANTITIES
TABLE B

POST MILE	DRAINAGE PLAN SHEET No.	DRAINAGE SYSTEM No.	DRAINAGE UNIT No.	REMOVE DOWNDRAIN	MINOR CONCRETE (BACKFILL)	21" PLASTIC PIPE-LINER	30" PLASTIC PIPE-LINER	24" CORRUGATED STEEL PIPE DOWNDRAIN (.079" THICK)	30" CORRUGATED STEEL PIPE DOWNDRAIN (.079" THICK)	30" DOWNDRAIN SLIP JOINT	36" DOWNDRAIN SLIP JOINT	24" WELDED STEEL PIPE (.250" THICK) (F)	30" WELDED STEEL PIPE (.250" THICK)	36" WELDED STEEL PIPE (0.250" THICK)	48" WELDED STEEL PIPE (.375" THICK)	72" WELDED STEEL PIPE (.250" THICK)	2-1/2" CAST IRON PIPE	24" STEEL FLARED END SECTION	ROCK SLOPE PROTECTION (1/2 TON, METHOD A)	ROCK SLOPE PROTECTION (LIGHT, METHOD B)	ROCK SLOPE PROTECTION * (BACKING No. 2, METHOD B)	ANCHOR ASSEMBLY	CABLE ANCHORAGE SYSTEM (N)	CABLE RAILING	JOINT CLASSIFICATION	DESCRIPTION	STATION	DRAINAGE PLAN SHEET No.	DRAINAGE SYSTEM No.	DRAINAGE UNIT No.
				LF	CY	LF	LF	LF	LF	EA	EA	LF	LF	LF	LF	LF	LF	EA	CY	CY	CY	EA	EA	LF						
R5.47	D-27	25	g					32														2	1		DD	24" CSP DD W/ ANCHOR ASSEMBLY	"A" 288+92.5	D-27	25	g
R6.46	D-31	29	e					8														1			DD	24" CSP DD W/ ANCHOR ASSEMBLY	"A" 341+52.2	D-31	29	e
R6.74	D-34	32	h																	6.7						RSP (LIGHT, METHOD B)	"A" 356+21.6	D-34	32	h
R6.82	D-35	33	g											111.5												36" WSP	"A" 361+89.3	D-35	33	g
			h																	8.9						RSP (LIGHT, METHOD B)				h
			i																					16		CABLE RAILING				i
R7.07	D-38	36	f														20									RECONNECT 2-1/2" CAST IRON PIPE	"A" 373+75.1	D-38	36	f
R7.52	D-42	40	g																	8.9						RSP (LIGHT, METHOD B)	"A" 397+34.0	D -42	40	g
R8.04	D-48	46	e				103																			30" PLASTIC PIPE LINER	"A" 425+36.5	D-48	46	e
			f																	12.0						RSP (LIGHT, METHOD B)				f
R8.57	D-50	48	d		1.3																					EXTEND 24" CSP W/MINOR Conc (BACKFILL)	"A" 453+80.0	D-50	48	d
R9.61	D-60	58	h																					12		CABLE RAILING	"A" 512+61.9	D-60	58	h
R9.79	D-62	60	d		2.8																					EXTEND 36" CSP W/MINOR Conc (BACKFILL)	"A" 517+21.2	D-62	60	d
			h																					17		CABLE RAILING				h
R10.40	D-66	64	e																	32.4						RSP (LIGHT, METHOD B)	"A" 548+08.2	D-66	64	e
			f																					15		CABLE RAILING				f
R10.60	D-69	68	h																					20		CABLE RAILING	"A" 559+14.6	D-69	68	h
R10.64	D-71	69	f																					18		CABLE RAILING	"A" 562+34.8	D-71	69	f
R11.63	D-81	79	f						22													1			DD	DD 30" CSP W/ ANCHOR ASSEMBLY	"A" 613+20.1	D-81	79	f
			g								1															SLIP JOINT				g
			h																					22		CABLE RAILING				h
R11.72	D-82	80	g						62													3	1		DD	DD 30" CSP W/ ANCHOR ASSEMBLY	"A" 617+93.0	D-82	80	g
			h	62.6																						Exist DD 24" CSP				h
			i								1															36" SLIP JOINT				i
				62.6	4.1	0	103	40	84	0	2	0	0	111.5	0	0	20	0	0	68.9	0	7	2	120		TOTAL (THIS SHEET)				
				115.6	8.0	123	103	132	84	1	2	218.9	65.5	198.8	76.2	82.2	20	2	69.5	339.0	*6.6	11	4	180		GRAND TOTAL				

* SEE SUMMARY OF QUANTITIES FOR ADDITIONAL QUANTITIES

DRAINAGE QUANTITIES
DQ-15

LINDA BREAZEALE — REVISED BY
ZIDAN ZHANG — DATE REVISED
CALCULATED-DESIGNED BY
CHECKED BY
FUNCTIONAL SUPERVISOR
JULIE CASEY

STATE OF CALIFORNIA - DEPARTMENT OF TRANSPORTATION
Caltrans
DESIGN

P:\proj2\02\2c950_plans\pse\22c950id015.dgn

LAST REVISION
DATE PLOTTED => 15-JUN-2011
TIME PLOTTED => 11:28

Dist	COUNTY	ROUTE	POST MILES TOTAL PROJECT	SHEET No.	TOTAL SHEETS
02	Sis	96	R0.0/R12.0	119	143

Zidan M. Zhang 10-13-10
REGISTERED CIVIL ENGINEER DATE

6-13-11
PLANS APPROVAL DATE

REGISTERED PROFESSIONAL ENGINEER Z. M. ZHANG No. C69054 Exp. 6-30-12 CIVIL STATE OF CALIFORNIA

THE STATE OF CALIFORNIA OR ITS OFFICERS OR AGENTS SHALL NOT BE RESPONSIBLE FOR THE ACCURACY OR COMPLETENESS OF SCANNED COPIES OF THIS PLAN SHEET.

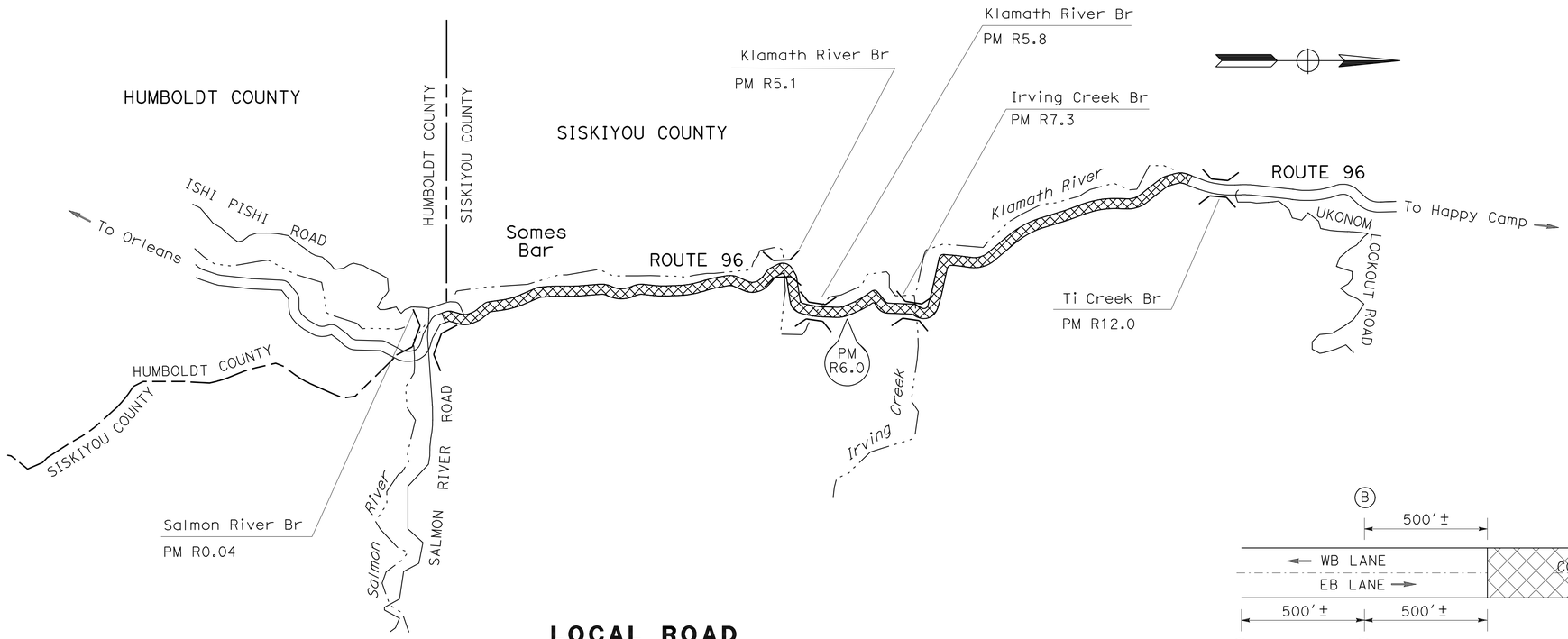

LEGEND

(X) SIGN TYPE

CONSTRUCTION AREA

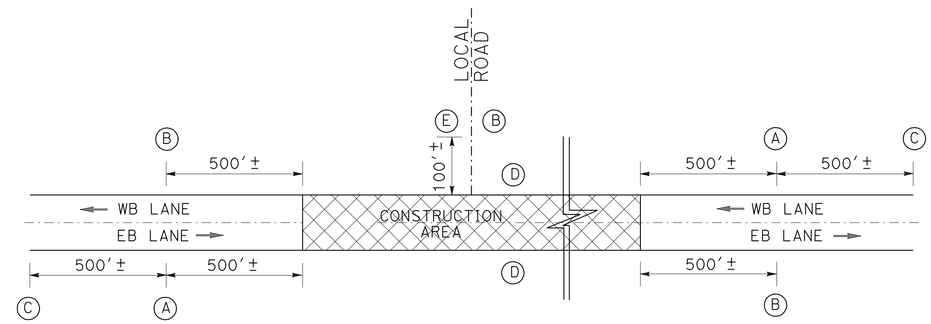

TYPICAL STATIONARY SIGN PLACEMENT

LOCAL ROAD

PM	LOCATION
R0.3	FORKS OF THE SALMON Rd
R0.55	ISHI PISHI Rd
R0.8	UKONOM RANGER Sta ENTERANCE
R4.8	STUARTS BAR Rd (USFS 12N52)
R8.7	PATTERSON Rd (USFS 13N12)
R12.2	TI BAR Rd (USFS 12N11)

CONSTRUCTION AREA SIGNS (STATIONARY MOUNTED)

TYPE		PANEL SIZE	SIGN MESSAGE	No. AND SIZE OF POST	No. OF SIGNS
(A)	G20-1	48" x 48"	"ROAD WORK NEXT 12 MILES"		
	C23B (CA)	36' x 18"	"DRAINAGE IMPROVEMENTS"	1 - 4" x 6"	2
(B)	G20-2	36" x 18"	"END ROAD WORK"	1 - 4" x 6"	8
(C)	C40 (CA)	72" x 36"	"TRAFFIC FINES DOUBLE IN CONSTRUCTION ZONES"	2 - 4" x 6"	2
(D)	G20-1	36" x 18"	"ROAD WORK NEXT 6 MILES"	1 - 4" x 6"	2
(E)	W20-1	36" x 18"	"ROAD WORK AHEAD"	1 - 4" x 6"	6

NOTES:

1. EXACT SIGN LOCATIONS TO BE DETERMINED BY ENGINEER.
2. CALIFORNIA SIGN CODE IS DESIGNATED BY (CA), OTHERWISE FEDERAL CODES APPLY.

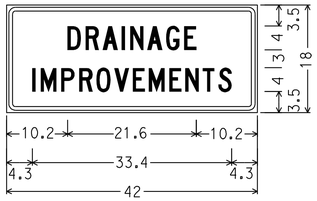

1.5" Radius, 0.6" Border, 0.4" Indent, Black on Orange;
[DRAINAGE] C;
[IMPROVEMENTS] C;
C23B(CA)

(A)

CONSTRUCTION AREA SIGNS

NO SCALE

CS-1

REVISED BY	DATE REVISED
LINDA BREAZEALE	ZIDAN ZHANG
CALCULATED-DESIGNED BY	CHECKED BY
FUNCTIONAL SUPERVISOR	JULIE CASEY

STATE OF CALIFORNIA - DEPARTMENT OF TRANSPORTATION
Caltrans
DESIGN

P:\proj2\02\2c950_plans\pse\22C9501a001.dgn

LAST REVISION 10-13-10 | DATE PLOTTED => 15-JUN-2011 | TIME PLOTTED => 11:28

Dist	COUNTY	ROUTE	POST MILES TOTAL PROJECT	SHEET No.	TOTAL SHEETS
02	Sis	96	R0.0/R12.0	120	143

Zidan M. Zhang 10-13-10
REGISTERED CIVIL ENGINEER DATE

6-13-11
PLANS APPROVAL DATE

REGISTERED PROFESSIONAL ENGINEER Z. M. ZHANG No. C69054 Exp. 6-30-12 CIVIL STATE OF CALIFORNIA

THE STATE OF CALIFORNIA OR ITS OFFICERS OR AGENTS SHALL NOT BE RESPONSIBLE FOR THE ACCURACY OR COMPLETENESS OF ELECTRONIC COPIES OF THIS PLAN SHEET.

NOTE:

1. (N) NOT A SEPARATE PAY ITEM, FOR INFORMATION ONLY.

PAVEMENT DELINEATION QUANTITIES

SHEET No.	STATION LIMITS	POST MILE	DRAINAGE SYSTEM NUMBER	THERMOPLASTIC TRAFFIC STRIPE (SPRAYABLE)			
				DETAIL 5	DETAIL 18	DETAIL 21	DETAIL 27B
				LF	LF	LF	LF
D-4	Sta "A1" 35+78.1	0.68	4			100	200
D-8	Sta "A1" 67+40.9	1.29	8			100	200
D-9	Sta "A1" 79+45.6	1.52	9	100			200
D-16	Sta "A1" 143+81.6	2.74	14			100	200
D-17	Sta "A1" 162+50.3	3.10	15			100	200
D-18	Sta "A1" 167+04.7	3.18	16			100	200
D-19	Sta "A1" 107+26.7	3.25	17			100	200
D-21	Sta "A1" 187+98.3	3.58	19			100	200
D-22	Sta "A1" 192+20.2	3.66	20			100	200
D-23	Sta "A1" 229+08.9	4.36	21			100	200
D-24	Sta "A1" 243+84.5	4.64	22			100	200
D-27	Sta "A1" 288+92.5	5.47	25			100	200
D-28	Sta "A1" 322+04.9	6.07	26		100		200
D-30	Sta "A1" 338+55.2	6.41	28			100	200
D-34	Sta "A1" 356+21.6	6.74	32			100	200
D-35	Sta "A1" 361+89.3	6.82	33		100		200
D-36	Sta "A1" 363+95.4	6.88	34		100		200
D-42	Sta "A1" 397+34.0	7.52	40			100	200
D-43	Sta "A1" 400+34.5	7.57	41			100	200
D-67	Sta "A1" 552+35.4	10.45	65			100	200
D-69	Sta "A1" 558+31.2	10.58	67			100	200
D-74	Sta "A1" 583+90.4	11.07	72			100	200
D-75	Sta "A1" 587+90.9	11.14	73			100	200
D-80	Sta "A1" 609+83.4	11.57	78			100	200
D-81	Sta "A1" 613+20.1	11.63	79			100	200
D-82	Sta "A1" 617+93.0	11.72	80			100	200
D-86	Sta "A1" 628+44.7	11.90	84			100	200
	SUBTOTALS			100	300	2300	5400
	TOTALS			8100			

WATER LINE

SHEET	2" PLASTIC PIPE (SCHEDULE 40) (SUPPLY LINE) (LF)	REMOVE 2" PLASTIC PIPE (SCHEDULE 40) (SUPPLY LINE)
D-24	11.0	7.3
TOTAL	11.0	7.3

FENCE (BW, METAL POST)

SHEET	BEGIN STATION / OFFSET	END STATION / OFFSET	LENGTH (LF)
D-4	"A" 35+95.62, 86.09' Lt	"A" 35+35+58.23, 95.86' Lt	40
		TOTAL	40

REMOVE FENCE

SHEET	BEGIN STATION / OFFSET	END STATION / OFFSET	LENGTH (LF)
D-4	"A" 35+95.62, 86.09' Lt	"A" 35+35+58.23, 95.86' Lt	40
		TOTAL	40

METAL BEAM GUARD RAILING

SHEET No.	DRAINAGE SYSTEM	STATION	ALTERNATIVE FLARED TERMINAL SYSTEM	MBGR
			EA	LF
D-8	8	"A" 66+76.1 TO 67+11.5, Rt	1	
D-8	8	"A" 67+11.5 TO 67+70.0, Rt		58.5
D-8	8	"A" 67+70.0 TO 68+10.0, Rt	1	
		TOTAL	2	58.5

SUMMARY OF QUANTITIES
Q-1

LINDA BREAZEALE — REVISED BY — LDB
ZIDAN ZHANG — DATE REVISED — 10-23-08
CALCULATED-DESIGNED BY
CHECKED BY
FUNCTIONAL SUPERVISOR — JULIE CASEY
STATE OF CALIFORNIA - DEPARTMENT OF TRANSPORTATION
Caltrans DESIGN
P:\proj2\02\2c950_plans\pse\22c950pa001.dgn
LAST REVISION — DATE PLOTTED => 17-JUN-2011 — TIME PLOTTED => 08:05

Dist	COUNTY	ROUTE	POST MILES TOTAL PROJECT	SHEET No.	TOTAL SHEETS
02	Sis	96	R0.0/R12.0	121	143

Zidan M. Zhang 10-13-10
REGISTERED CIVIL ENGINEER DATE

6-13-11
PLANS APPROVAL DATE

REGISTERED PROFESSIONAL ENGINEER Z. M. ZHANG No. C69054 Exp. 6-30-12 CIVIL STATE OF CALIFORNIA

THE STATE OF CALIFORNIA OR ITS OFFICERS OR AGENTS SHALL NOT BE RESPONSIBLE FOR THE ACCURACY OR COMPLETENESS OF ELECTRONIC COPIES OF THIS PLAN SHEET.

NOTE:

1. (N) NOT A SEPARATE PAY ITEM, FOR INFORMATION ONLY.

ROADWAY QUANTITIES

SHEET No.	STATION LIMITS	POST MILE	DRAINAGE SYSTEM No.	ROADWAY EXCAVATION (NATURALLY OCCURING ASBESTOS)	EMBANKMENT (N)
				CY	CY
D-8/D-9	"A" 67+40.9	R1.29	8	0	32.3
D-61	"A" 512+61.9	R9.70	59	0.7	
D-69/D-70	"A" 558+31.2 TO "A" 559+146	R10.58/R10.60	67/68	6.2	40
			TOTALS	6.9	72.3

TRACTION SAND TRAP

SHEET No.	DRAINAGE SYSTEM No.	LOCATION (STATION)	RSP (BACKING No. 2, METHOD B) (CY)	RSP FABRIC (SQYD)
D-16	14	"A" 144+00 R†	0.5	4.7
D-19	17	"A" 170+90 R†	0.5	4.7
D-58	56	"A" 500+10 R†	0.4	3.4
D-59	57	"A" 503+50 R†	0.6	4.8
D-60	58	"A" 507+80 R†	0.3	2.9
D-61	59	"A" 512+90 R†	0.7	6.1
D-63	61	"A" 526+65 R†	0.3	2.5
D-64	62	"A" 539+82 R†	1.5	5.7
(FROM DRAINAGE QUANTITIES)			6.6	2000.3
		TOTAL	11.4	2035.1

TEMPORARY FENCE (TYPE ESA)

R†	L†	POST MILE	DRAINAGE SYSTEM	LENGTH LF
X		R0.68	4	460
	X	R0.68	4	180
X		R0.89	5	80
X		R2.06	12	14
X		R2.53	13	15
X		R2.74	14	17
	X	R5.44	24	19
X		R5.47	25	19
X		R6.82	33	22
X		R6.88	34	15
X		R6.97	35	16
X		R8.04	46	17
X		R8.47	47	150
X		R8.57	48	150
X		R8.99	52	19
X		R10.21	62	65
X		R10.30	63	75
X		R10.81	70	17
	X	R11.07	72	150
X		R11.14	73	25
X		R11.21	74	90
X		R11.79	82	16
X		R11.90	84	33
			TOTAL	1664

PLANTING TUBES

L†	POST MILE	DRAINAGE SYSTEM	PLANTING TUBE (N)	IMPORTED TOPSOIL (N)	TOTAL LENGTH
			EA	CY	LF
X	R1.29	8	4	3.9	26.0
X	R10.60	68	2	1.7	11.5
X	R10.64	69	2	1.1	9.5
		TOTAL	8	7.0	47.0

1. 28% SHRINKAGE FACTOR CALCULATED FOR IMPORTED TOPSOIL
2. PLANTING TUBES HAVE 24" DIAMETERS

EROSION CONTROL (HYDROSEED)

STATION RANGE	EROSION CONTROL (HYDROSEED)	(N) FIBER	(N) SEED	(N) COMMERCIAL FERTILIZER	(N) TACKIFIER
	ACRE	LB	LB	LB	LB
021+91.4 TO 628+44.7	5.0	16218	424	749	1248

TEMPORARY EROSION CONTROL

STATION RANGE	TEMPORARY FIBER ROLL	TEMPORARY CHECK DAM	TEMPORARY GRAVEL BAG BERM	TEMPORARY DRAINAGE INLET PROTECTION
	LF	LF	LF	EA
021+91.4 TO 628+44.7	1000	960	960	25

SUMMARY OF QUANTITIES

Q-2

LINDA BREAZEALE — REVISED BY — LDB
ZIDAN ZHANG — DATE REVISED — 10-23-08
CALCULATED-DESIGNED BY — CHECKED BY
FUNCTIONAL SUPERVISOR — JULIE CASEY

STATE OF CALIFORNIA - DEPARTMENT OF TRANSPORTATION
Caltrans DESIGN

P:\proj2\02\2c950_plans\pse\22c950pa002.dgn

LAST REVISION DATE PLOTTED => 15-JUN-2011 TIME PLOTTED => 11:28

Dist	COUNTY	ROUTE	POST MILES TOTAL PROJECT	SHEET No.	TOTAL SHEETS
02	Sis	96	R0.0/R12.0	122	143

Randell D. Hiatt
REGISTERED CIVIL ENGINEER

May 20, 2011
PLANS APPROVAL DATE

REGISTERED PROFESSIONAL ENGINEER
Randell D. Hiatt
No. C50200
Exp. 6-30-11
CIVIL
STATE OF CALIFORNIA

The State of California or its officers or agents shall not be responsible for the accuracy or completeness of electronic copies of this plan sheet.

To accompany plans dated 6-13-11

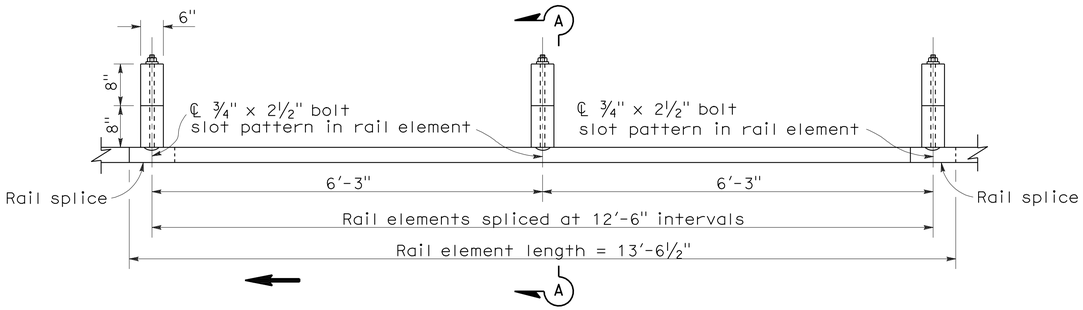

PLAN

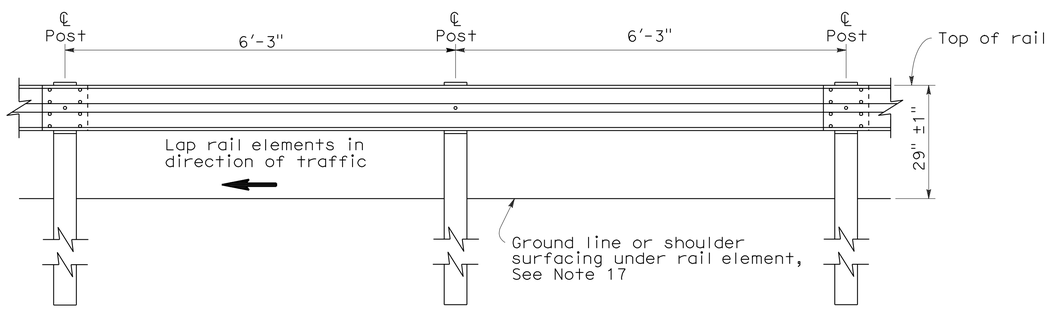

ELEVATION

METAL BEAM GUARD RAILING WITH WOOD POST AND BLOCKS

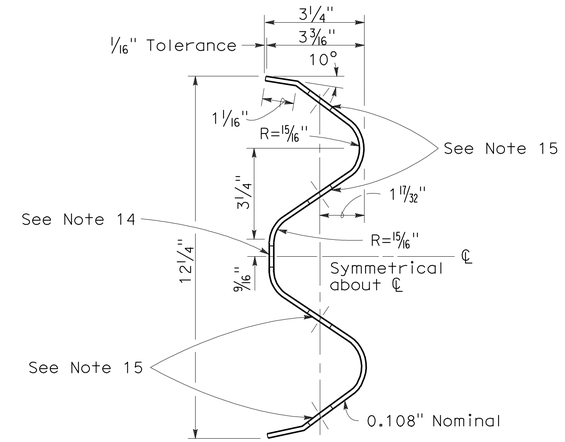

SECTION THRU RAIL ELEMENT

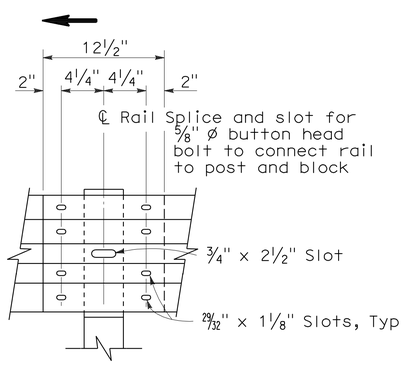

ELEVATION

RAIL ELEMENT SPLICE DETAIL

a) Connect the over lapped end of the rail elements with ⅝" ø x 1⅜" button head oval shoulder splice bolts inserted into the 29⁄32" x 1⅛" slots and bolted together with ⅝" ø recessed hex nuts. Recess of hex nut points toward rail element. A total of 8 bolts and nuts are to be used at each rail splice connection.

b) The ends of the rail elements are to be overlapped in the direction of traffic (see details).

c) Where end cap is to be attached to the end of a rail element, a total of 4 of the above described splice bolts and nuts are to be used.

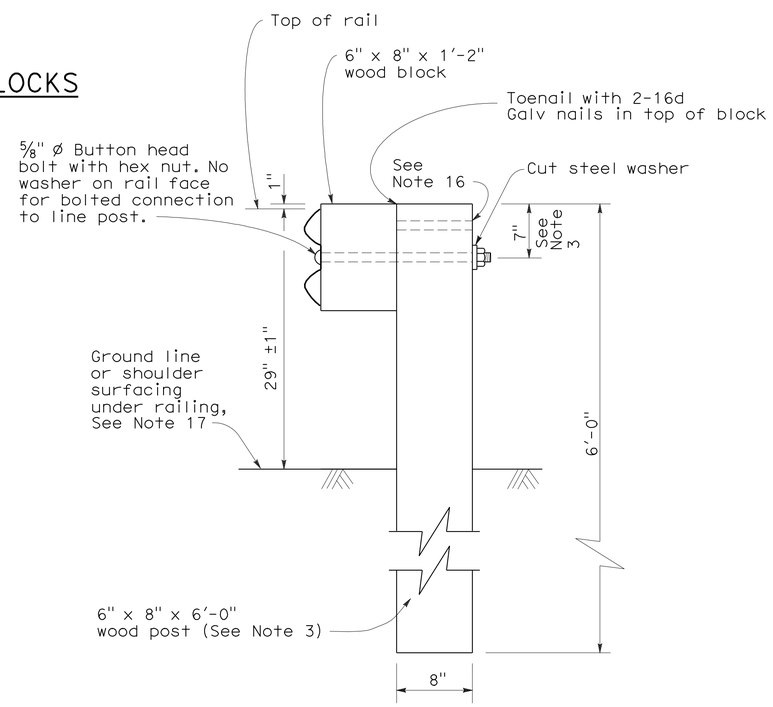

SECTION A-A

TYPICAL WOOD LINE POST INSTALLATION

See Note 4

NOTES:

1. For details of steel post installations, see Standard Plan A77A2.
2. For details of standard hardware used to construct guard railing, see Standard Plan A77B1.
3. For details of wood posts and wood blocks used to construct guard railing, see Standard Plan A77C1.
4. For additional installation details, see Standard Plan A77C3.
5. Guard railing post spacing to be 6'-3" center to center, except as otherwise noted.
6. For guard railing typical layouts, see the A77E, A77F and A77G Series of Standard Plans.
7. For terminal system end treatment details, see the A77L Series of Standard Plans. To connect railing to terminal system end treatment, transition the top of railing height at a ratio of 120:1 to terminal system end treatment height plus one 12'-6" standard railing section at the transitioned height for a horizontal connection to the end treatment.
8. For guard railing end anchor details, see Standard Plans A77H1 and A77I2.
9. For details of guard railing transition to bridge railing, see Standard Plan A77J4.
10. For additional details of guard railing connection to bridge railings, see Standard Plans A77J1, A77J2 and A77K1.
11. For guard railing connection details to abutments and walls, see Standard Plan A77J3.
12. Direction of adjacent traffic indicated by ➡.
13. For typical guard railing delineation and dike positioning details, see Standard Plan A77C4.
14. Slotted hole for bolted connection of rail element to block and post. See "Section Thru Rail Element".
15. Slotted holes for splice bolts to overlap ends of rail element. See "Section Thru Rail Element".
16. Additional hole in uppermost portion of line post is for potential future adjustments of railing height. See Standard Plan A77C1.
17. Install posts in soil.

STATE OF CALIFORNIA
DEPARTMENT OF TRANSPORTATION

METAL BEAM GUARD RAILING STANDARD RAILING SECTION (WOOD POST WITH WOOD BLOCK)

NO SCALE

RSP A77A1 DATED MAY 20, 2011 SUPERSEDES STANDARD PLAN A77A1 DATED MAY 1, 2006 - PAGE 41 OF THE STANDARD PLANS BOOK DATED MAY 2006.

REVISED STANDARD PLAN RSP A77A1

2006 REVISED STANDARD PLAN RSP A77A1

3-10-11

Dist	COUNTY	ROUTE	POST MILES TOTAL PROJECT	SHEET No.	TOTAL SHEETS
02	Sis	96	R0.0/R12.0	123	143

Randell D. Hiatt
REGISTERED CIVIL ENGINEER

May 20, 2011
PLANS APPROVAL DATE

REGISTERED PROFESSIONAL ENGINEER
Randell D. Hiatt
No. C50200
Exp. 6-30-11
CIVIL
STATE OF CALIFORNIA

The State of California or its officers or agents shall not be responsible for the accuracy or completeness of electronic copies of this plan sheet.

To accompany plans dated 6-13-11

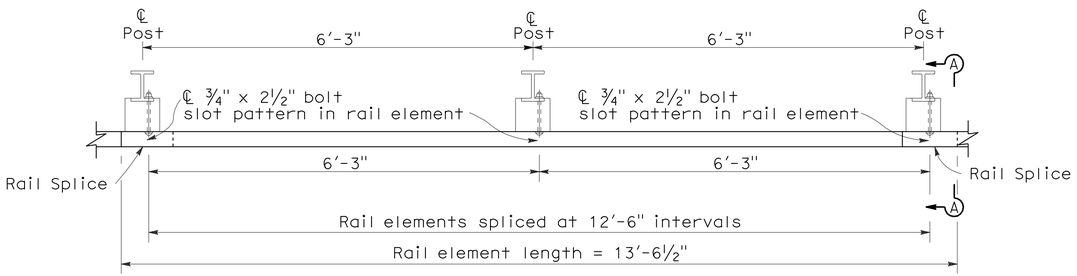

PLAN

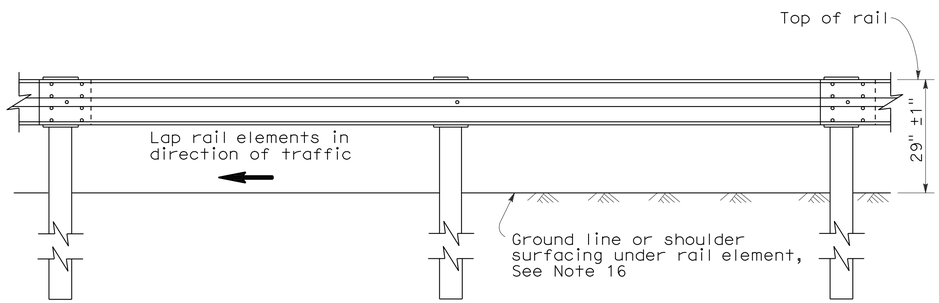

ELEVATION

METAL BEAM GUARD RAILING WITH STEEL POSTS AND NOTCHED WOOD OR NOTCHED RECYCLED PLASTIC BLOCKS

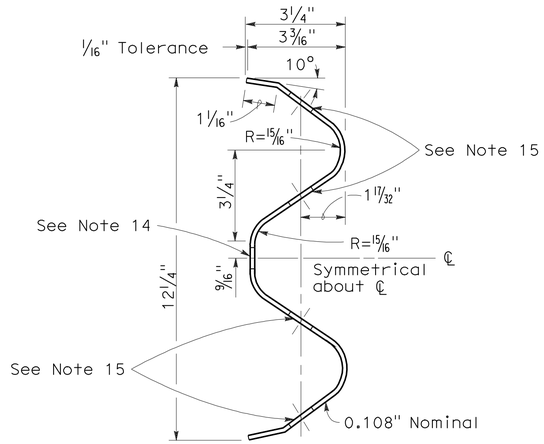

SECTION THRU RAIL ELEMENT

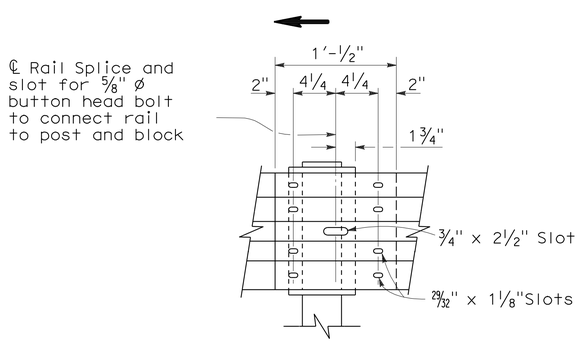

ELEVATION

RAIL ELEMENT SPLICE DETAIL

a) Connect the over lapped end of the rail elements with ⅝" ø x 1⅜" button head oval shoulder splice bolts inserted into the 29⁄₃₂" x 1⅛" slots and bolted together with ⅝" ø recessed hex nuts. Recess of hex nut points toward rail element. A total of 8 bolts and nuts are to be used at each rail splice connection.

b) The ends of the rail elements are to be overlapped in the direction of traffic (see details).

c) Where end cap is to be attached to the end of a rail element, a total of 4 of the above described splice bolts and nuts are to be used.

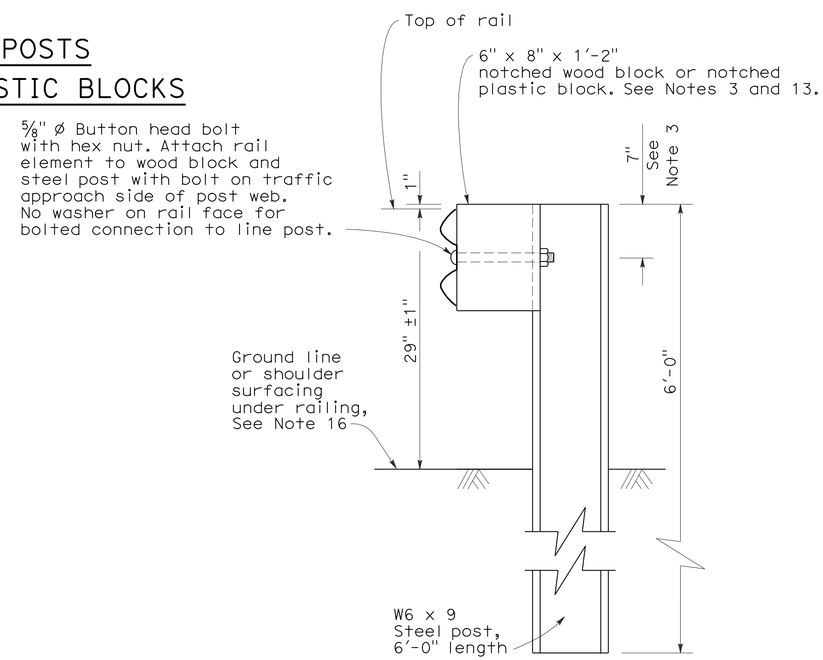

SECTION A-A

TYPICAL STEEL LINE POST INSTALLATION

See Note 4

NOTES:

1. For details of wood post installations, see Standard Plan A77A1.
2. For details of standard hardware used to construct guard railing, see Standard Plan A77B1.
3. For details of steel posts and notched wood blocks used to construct guard railing, see Standard Plan A77C2.
4. For additional installation details, see Standard Plan A77C3.
5. Guard railing post spacing to be 6'-3" center to center, except as otherwise noted.
6. For guard railing typical layouts, see the A77E, A77F and A77G Series of Standard Plans.
7. For terminal system end treatment details, see the A77L Series of Standard Plans. To connect railing to terminal system end treatment, transition the top of railing height at a ratio of 120:1 to terminal system end treatment height plus one 12'-6" standard railing section at the transitioned height for a horizontal connection to the end treatment.
8. For guard railing end anchor details, see Standard Plans A77H1 and A77I2.
9. For details of guard railing transition to bridge railing, see Standard Plan A77J4.
10. For additional details of guard railing connection to bridge railings, see Standard Plans A77J1, A77J2 and A77K1.
11. For dike positioning and guard railing delineation details, see Standard Plan A77C4.
12. Direction of adjacent traffic indicated by → .
13. Notched face of block faces steel post.
14. Slotted hole for bolted connection of rail element to block and post. See "Section Thru Rail Element".
15. Slotted holes for splice bolts to overlap ends of rail element. See "Section Thru Rail Element".
16. Install posts in soil.

STATE OF CALIFORNIA
DEPARTMENT OF TRANSPORTATION

METAL BEAM GUARD RAILING STANDARD RAILING SECTION (STEEL POST WITH NOTCHED WOOD OR NOTCHED RECYCLED PLASTIC BLOCK)

NO SCALE

RSP A77A2 DATED MAY 20, 2011 SUPERSEDES STANDARD PLAN A77A2 DATED MAY 1, 2006 - PAGE 42 OF THE STANDARD PLANS BOOK DATED MAY 2006.

REVISED STANDARD PLAN RSP A77A2

2006 REVISED STANDARD PLAN RSP A77A2

5-4-11

To accompany plans dated 6-13-11

Dist	COUNTY	ROUTE	POST MILES TOTAL PROJECT	SHEET No.	TOTAL SHEETS
02	Sis	96	R0.0/R12.0	124	143

Randell D. Hiatt
REGISTERED CIVIL ENGINEER

May 20, 2011
PLANS APPROVAL DATE

REGISTERED PROFESSIONAL ENGINEER
Randell D. Hiatt
No. C50200
Exp. 6-30-11
CIVIL
STATE OF CALIFORNIA

The State of California or its officers or agents shall not be responsible for the accuracy or completeness of electronic copies of this plan sheet.

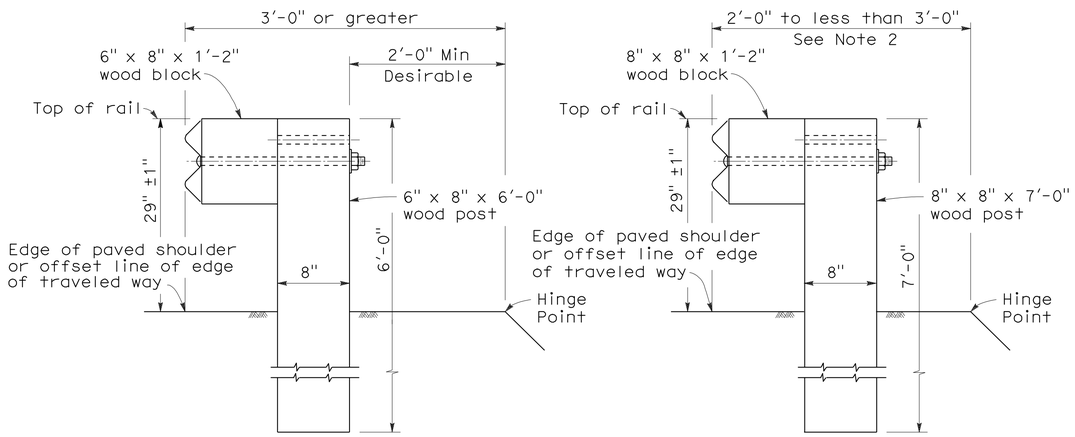

DETAIL A
TYPICAL ROADWAY INSTALLATION
See Note 1

DETAIL B
NARROW ROADWAY INSTALLATION
See Note 1

POST EMBEDMENT

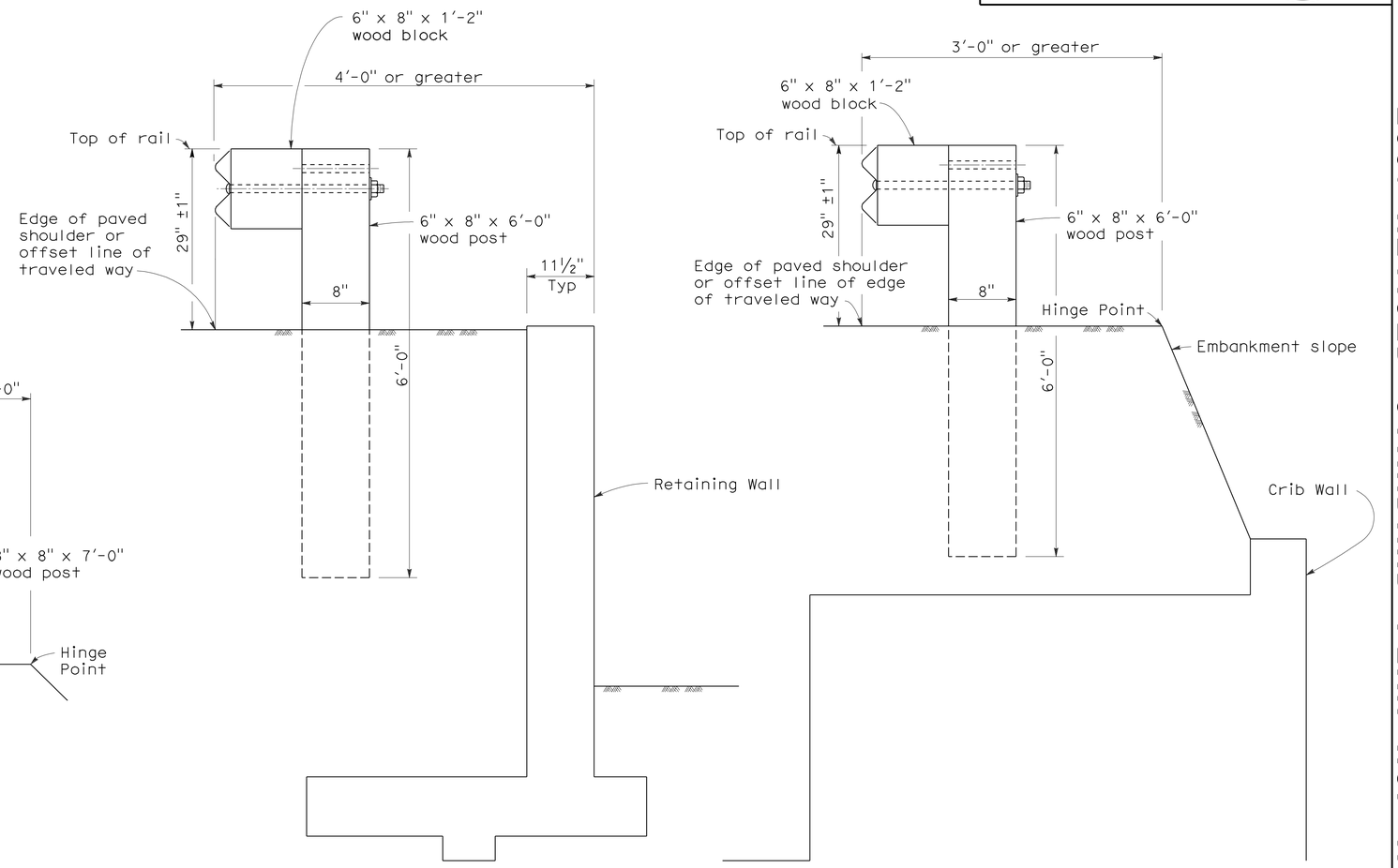

DETAIL C

DETAIL D

INSTALLATION AT EARTH RETAINING WALLS

NOTES:

1. These installation details also applicable to steel line post installations. For Detail A, C, and D, where steel line post installations are constructed, W6 x 9 steel post, 6'-0" in length, with 6" x 8" x 1'-2" notched wood blocks or notched recycled plastic blocks are to be used in place of the size of wood post and wood block shown. For Detail B, where steel line post installations are constructed, W6 x 9 steel post, 7'-0" in length, with 6" x 8" x 1'-2" notched wood blocks or notched recycled plastic blocks are to be used in place of the size of wood post and wood block shown. For additional installation details, see Standard Plans A77A1 and A77A2.

2. Where the distance between the face of the rail and the hinge point is less than 2'-0", see the Project Plans for special details.

3. For dike positioning with guard railing installations, see Standard Plan A77C4.

STATE OF CALIFORNIA
DEPARTMENT OF TRANSPORTATION

METAL BEAM GUARD RAILING TYPICAL LINE POST EMBEDMENT AND HINGE POINT OFFSET DETAILS

NO SCALE

RSP A77C3 DATED MAY 20, 2011 SUPERSEDES STANDARD PLAN A77C3
DATED MAY 1, 2006 - PAGE 46 OF THE STANDARD PLANS BOOK DATED MAY 2006.

REVISED STANDARD PLAN RSP A77C3

2006 REVISED STANDARD PLAN RSP A77C3

3-10-11

DIST	COUNTY	ROUTE	POST MILES TOTAL PROJECT	SHEET NO.	TOTAL SHEETS
02	Sis	96	R0.0/R12.0	125	143

Randell D. Hiatt
REGISTERED CIVIL ENGINEER

June 6, 2008
PLANS APPROVAL DATE

REGISTERED PROFESSIONAL ENGINEER
Randell D. Hiatt
No. C50200
Exp. 6-30-09
CIVIL
STATE OF CALIFORNIA

The State of California or its officers or agents shall not be responsible for the accuracy or completeness of electronic copies of this plan sheet.

To accompany plans dated 6-13-11

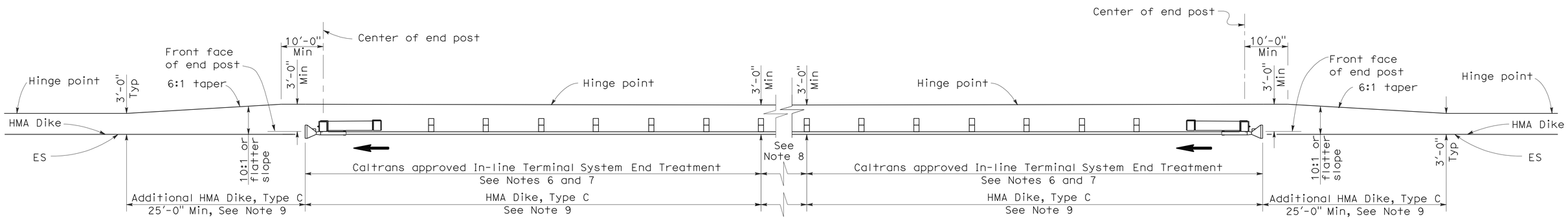

TYPE 11D LAYOUT

(EMBANKMENT GUARD RAILING INSTALLATION WITH
IN-LINE END TREATMENT AT EACH END OF RAILING)
See Note 5

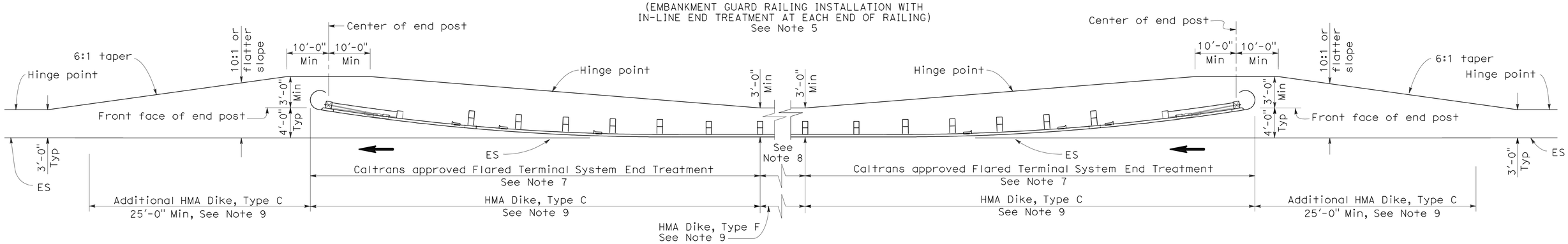

TYPE 11E LAYOUT

(EMBANKMENT GUARD RAILING INSTALLATION WITH
FLARED END TREATMENT AT EACH END OF RAILING)
See Note 5

NOTES:

1. Line post, blocks and hardware to be used are shown on Standard Plans A77A1, A77A2, A77B1, A77C1 and A77C2.
2. Guard rail post spacing to be 6'-3" center to center, except as otherwise noted.
3. Except as noted, line posts are 6" x 8" x 6'-0" wood with 6" x 8" x 1'-2" wood blocks, W6 x 9 steel posts, 6'-0" in length, with 6" x 8" x 1'-2" notched wood blocks or plastic blocks may be used for 6" x 8" x 6'-0" wood post with 6" x 8" x 1'-2" wood blocks where applicable and when specified.
4. Direction of adjacent traffic indicated by ⟶.
5. Layout Types 11D through 11L, shown on the A77E Series of Revised Standard Plans, are typically used where guard railing is recommended to shield embankment slopes and a crashworthy end treatment is required for both directions of traffic.
6. In-line Terminal System End Treatments are used where site conditions will not accommodate a flared end treatment.
7. The type of terminal system end treatment to be used will be shown on the Project Plans.
8. Dependent on site conditions (embankment height and side slope), construction of additional guard railing (length equal to multiples of 12'-6" with 6'-3" post spacing) may be advisable.
9. Where placement of dike is required with guard railing installations, see Revised Standard Plan RSP A77C4 for dike positioning details.

STATE OF CALIFORNIA
DEPARTMENT OF TRANSPORTATION

METAL BEAM GUARD RAILING TYPICAL LAYOUTS FOR EMBANKMENTS

NO SCALE

RSP A77E2 DATED JUNE 6, 2008 SUPERSEDES STANDARD PLAN A77E2
DATED MAY 1, 2006 - PAGE 49 OF THE STANDARD PLANS BOOK DATED MAY 2006.

REVISED STANDARD PLAN RSP A77E2

2006 REVISED STANDARD PLAN RSP A77E2

12-10-07

DIST	COUNTY	ROUTE	POST MILES TOTAL PROJECT	SHEET NO.	TOTAL SHEETS
02	Sis	96	R0.0/R12.0	126	143

REGISTERED CIVIL ENGINEER

June 5, 2009
PLANS APPROVAL DATE

REGISTERED PROFESSIONAL ENGINEER Glenn DeCou No. C34547 Exp. 9-30-09 CIVIL STATE OF CALIFORNIA

The State of California or its officers or agents shall not be responsible for the accuracy or completeness of electronic copies of this plan sheet.

To accompany plans dated 6-13-11

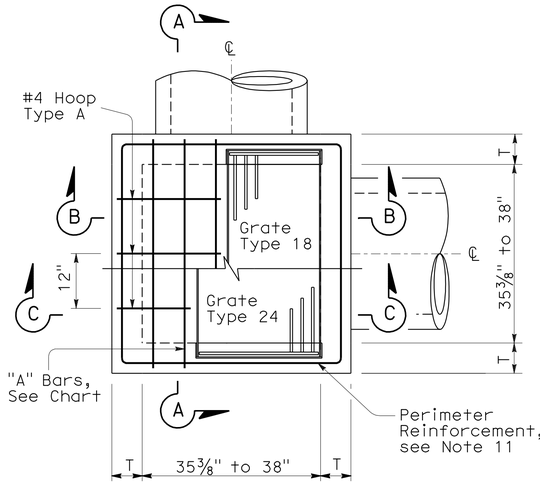

STANDARD TYPE G2 OR G4

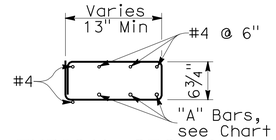

TYPICAL SECTION
(HOOP TYPE A)

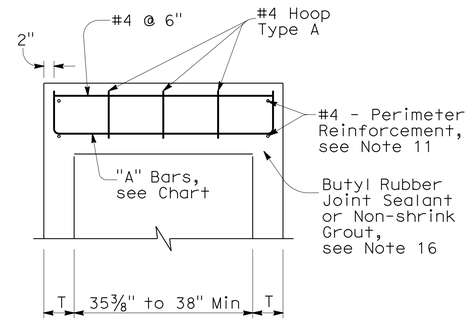

SECTION A-A

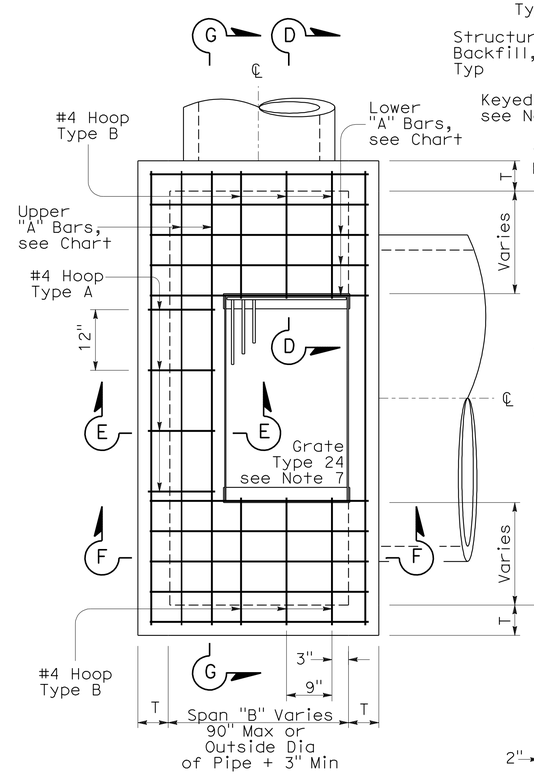

EXPANDED TYPE G2 OR G4
(Top Rebar Not Shown)

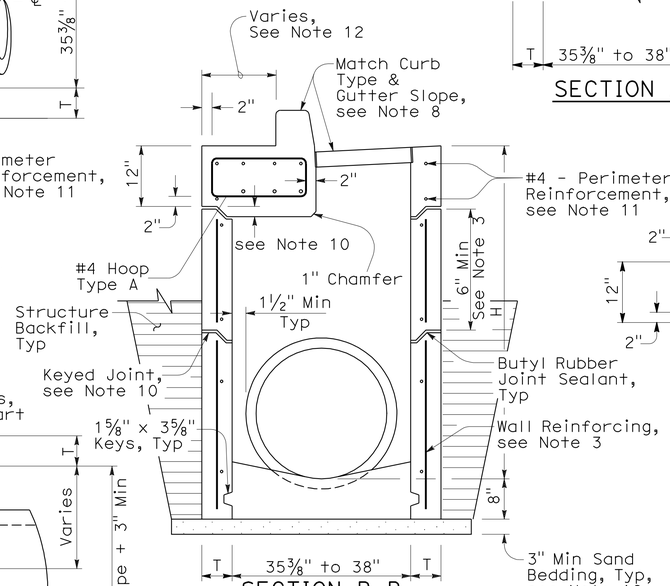

SECTION B-B
(with G4 Top)

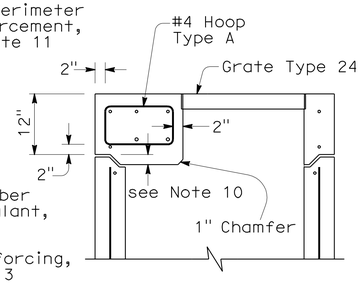

SECTION C-C
(with G2 Top)

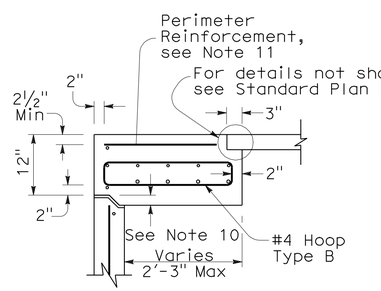

SECTION D-D

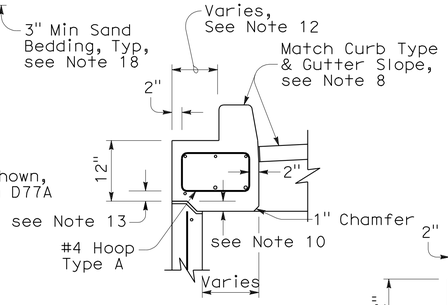

SECTION E-E
(with G4 Top)

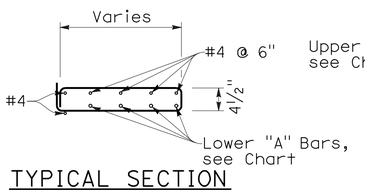

TYPICAL SECTION
(HOOP TYPE B)

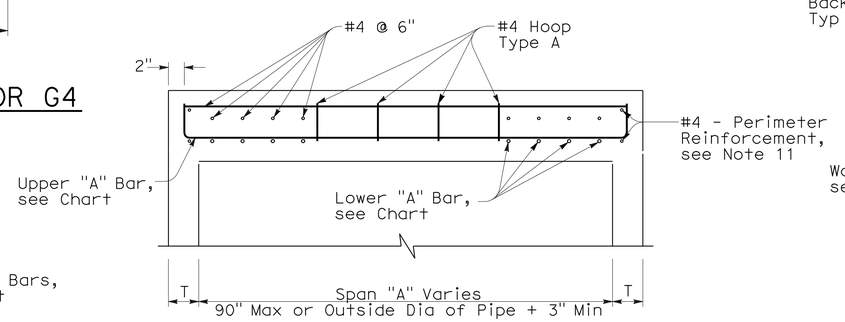

SECTION G-G

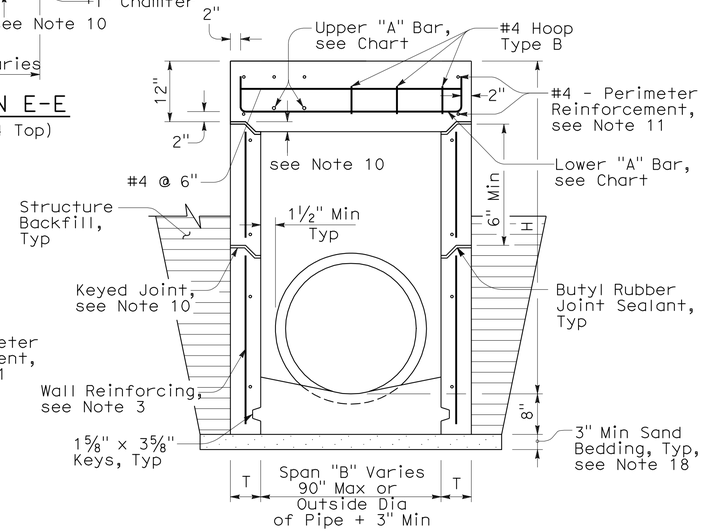

SECTION F-F
(with G2 Top)

NOTES:

1. "H" is the difference in elevation between the outlet pipe flow line and the normal gutter grade line undepressed.
2. For "T" wall thickness: T=6" when "H" is 8' or less. T=8" when "H" is over 8'.
3. Wall reinforcing not required when "H" is 8' or less and the unsupported width or length is 6'-0" or less. Reinforce wall exceeding these limits with #4 bars @ 1'-6" ± centers placed 2" clear to the inside of inlet unless otherwise shown. Short independent wall sections or height adjustment rings 6" to 24" high must have a minimum of two #4 horizontal bars.
4. Seal pre-cast inlets connection openings between wall and pipe with non-shrink grout or resilient connectors as specified in the Special Provisions.
5. Steps - None required where "H" is less than 2'-6". Where "H" is 2'-6" or more, install steps with lowest rung 1'-0" above the floor and highest rung not more than 6" below bottom of lid. The distance between steps must not exceed 1'-0" and be uniform throughout the length of the wall. Place steps in the wall without an opening. Steps inserts may be substituted for the bar steps. Step inserts must comply with State Industrial Safety Requirements. See Standard Plan D74C for step details.
6. Pipe(s) can be placed in any wall.
7. Set inlet so that grate bars are parallel to direction of principal surface flow.
8. Type G4 inlet can use Grate Type 18 or 24. Type G2 inlet uses Grate Type 24. See Revised Standard Plan RSP D77A and Standard Plan D77B for grate and frame details and weights of miscellaneous Iron and Steel.
9. G4 inlet details are the same as the G2 with the addition of a curb and sloped grate that matches the adjacent curb and gutter depression. See Standard Plans D78A & D78B for gutter and inlet depresssion details. See Revised Standard Plan RSP A87A & Standard Plan A87B for Curb and Dike Details.
10. Provide pre-cast inlets with separate top sections for final grade adjustment under Standard Specifcation Section 51-1.02. Provide keyed joints between the top and wall and multiple wall sections. Joint design may vary but must be 1" to 3" in depth.
11. Perimeter reinforcement serves as a rigid frame to position and attach the required structural reinforcement and may be tack welded at outer corners when using ASTM A706 weldable bars.
12. This dimension will vary with different grates, curbs types, box width and wall thickness.
13. 2" unless inlet is expanded in the Span "A" direction, then clearance is 2" plus the diameter of the lower "A" bar.
14. Place "A" Bars at an angle so hooked ends will maintain 2" clear coverage.
15. Refer to Standard Plan D73, Table A for concrete quantities.
16. Non-shrink grout can be used for upper most joint to facilitate final top grade adjustment.
17. Slope inlet floors 4:1 towards the outlet pipe. Pre-cast inlets may have monolithic sloped floors, flat floors, or no floors in which case a sloped floor must be cast in the field. Inlet floors do not require reinforcing.
18. Extend sand bedding under all structure backfill.

TOP REINFORCEMENT CHART

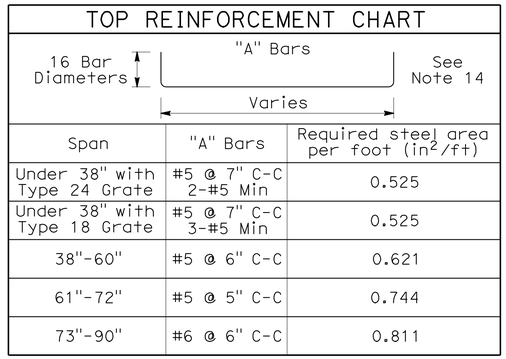

Span	"A" Bars	Required steel area per foot (in^2/ft)
Under 38" with Type 24 Grate	#5 @ 7" C-C 2-#5 Min	0.525
Under 38" with Type 18 Grate	#5 @ 7" C-C 3-#5 Min	0.525
38"-60"	#5 @ 6" C-C	0.621
61"-72"	#5 @ 5" C-C	0.744
73"-90"	#6 @ 6" C-C	0.811

STATE OF CALIFORNIA
DEPARTMENT OF TRANSPORTATION

DRAINAGE INLETS (PRECAST)

NO SCALE

NSP D73A DATED JUNE 5, 2009 SUPPLEMENTS THE STANDARD PLANS BOOK DATED MAY 2006.

NEW STANDARD PLAN NSP D73A

2006 NEW STANDARD PLAN NSP D73A

3-16-09

DIST	COUNTY	ROUTE	POST MILES TOTAL PROJECT	SHEET NO.	TOTAL SHEETS
02	Sis	96	R0.0/R12.0	127	143

REGISTERED CIVIL ENGINEER

June 15, 2007
PLANS APPROVAL DATE

REGISTERED PROFESSIONAL ENGINEER Glenn DeCou No. C34547 Exp. 9-30-07 CIVIL STATE OF CALIFORNIA

The State of California or its officers or agents shall not be responsible for the accuracy or completeness of electronic copies of this plan sheet.

To accompany plans dated 6-13-11

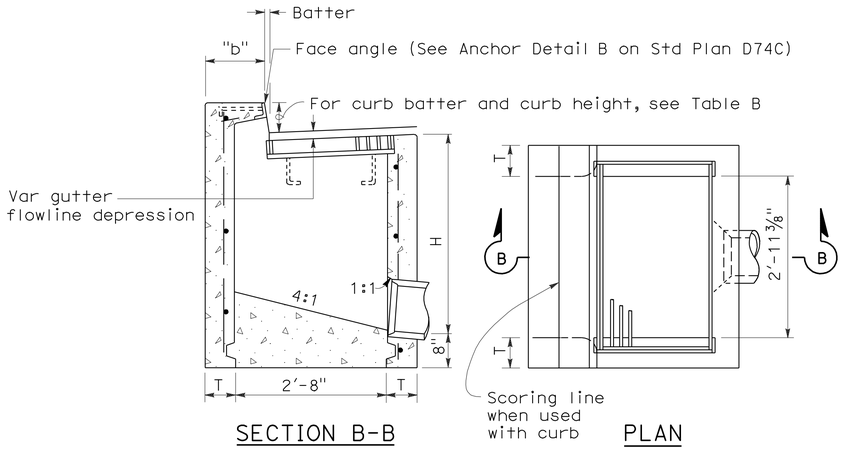

SECTION B-B PLAN

TYPE GO

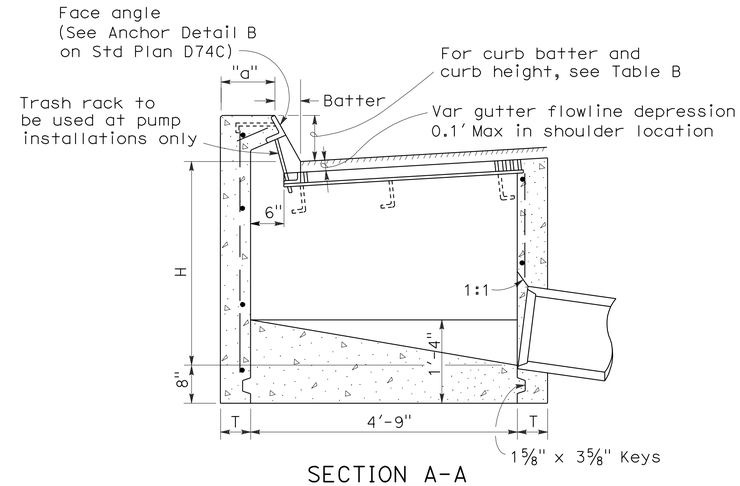

SECTION A-A

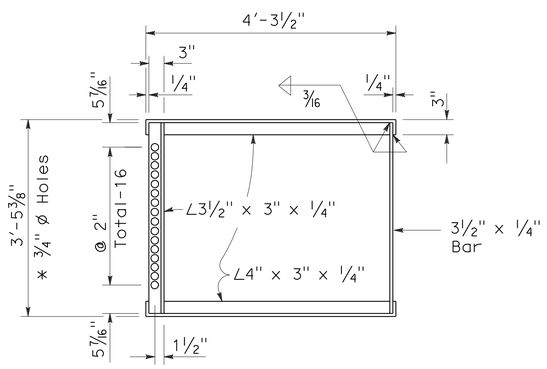

* 3/4" ø Holes required only with trash rack

GRATE FRAME FOR TYPE GDO INLET

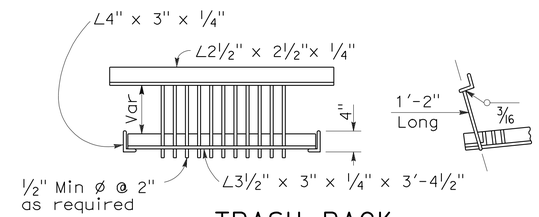

TRASH RACK

(For use with pump installation)

TABLE A

CONCRETE QUANTITIES				
	H=3'-0" TO 8'-0" (T=6")		H=8'-1" TO 20'-0" (T=8")	
TYPE	H=3'-0" (CY)	ADDITIONAL PCC PER FOOT (CY)	H=8'-1" (CY)	ADDITIONAL PCC PER FOOT (CY)
GO	1.24	0.245	3.39	0.346
GDO	1.62	0.322	4.36	0.446

Table based on 8" floor slab, no deduction for pipe openings, and curb type giving highest quantity of concrete. No deductions or adjustments are to be made to these quantities because of pipe openings, different floor alternatives or different curb type.

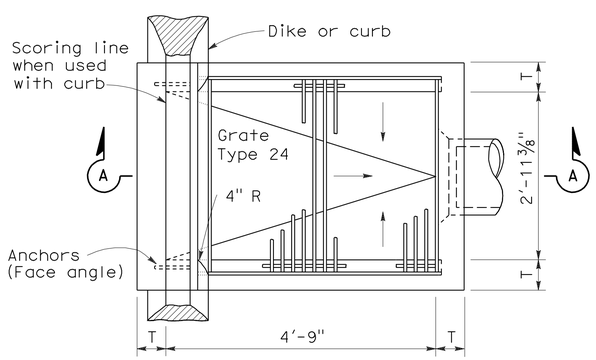

PLAN

TYPE GDO

TABLE B

CURB TYPE	NORMAL CURB HEIGHT	CURB BATTER	"a" DIMENSION	"b" DIMENSION
A1-6	6"	1 1/2"	T+7 1/2"	T+6 1/2"
A1-8	8"	2"	T+7"	T+6"
B1-6	6"	4"	T+5"	T+4"
Type A Dike	6"	3"	T+6"	T+5"

NOTES:

1. "H" is the difference in elevation between the outlet pipe flow line and the normal gutter grade line undepressed.
2. For "T" wall thickness, see Table A below.
3. Wall reinforcing not required when "H" is 8'-0" or less and the unsupported width or length is 7'-0" or less. Walls exceeding these limits shall be reinforced with #4 @ 18"± centers placed 1 1/2" clear to inside of box unless otherwise shown.
4. Inlet bottom reinforcing not required. See Standard Plan D74C for alternative reinforced bottom.
5. Steps - None required where "H" is less than 2'-6" Where "H" is 2'-6" or more, install steps with lowest rung 1'-0" above the floor and highest rung not more than 6" below top of inlet. The distance between steps shall not exceed 1'-0" and shall be uniform throughout the length of the wall. Place steps in the wall without an opening. Step inserts may be substituted for the bar steps. Step Inserts shall comply with State Industrial Safety requirements. See Standard Plan D74C for step details.
6. When shown on the project plans, place a 3/4" plain round protection bar horizontally across the length of the opening and bend back 4" into the inlet wall on each side.
7. Pipe(s) can be placed in any wall.
8. Curb section shall match adjacent curb.
9. Basin floors shall have wood trowel finish and shall slope toward the outlet pipe as shown.
10. Galvanizing - See Standard Specifications or Special Provisions.
11. See Standard Plan D77A and D77B for grate and frame details and weights of miscellaneous iron and Steel.
12. See Standard Plan D78A for gutter depression details.
13. Full penetration butt welds may be substituted for the fillet welds on all anchors.
14. Standard square, hexagon, round or equivalent headed anchors may be substituted for the right angle hooks on the anchors shown on this plan.
15. Cast-in-place or precast alternative is optional with contractor. See Standard Specifications.
16. Cast-in-place inlets to be formed around all pipes/stubs intersecing the inlet and concrete poured in one continuous operation. Precast inlets shall have mortared pipe connections conforming to details for Type GCP inlets on Standard Plan D75B. See Standard Specifications for mortar composition.

STATE OF CALIFORNIA
DEPARTMENT OF TRANSPORTATION

DRAINAGE INLETS

NO SCALE

RSP D74B DATED JUNE 15, 2007 SUPERSEDES STANDARD PLAN D74B DATED MAY 1, 2006 - PAGE 150 OF THE STANDARD PLANS BOOK DATED MAY 2006.

REVISED STANDARD PLAN RSP D74B

2006 REVISED STANDARD PLAN RSP D74B

4-16-07

DIST	COUNTY	ROUTE	POST MILES TOTAL PROJECT	SHEET NO.	TOTAL SHEETS
02	Sis	96	R0.0/R12.0	128	143

Raymond Don Tsztoo
REGISTERED CIVIL ENGINEER

June 6, 2008
PLANS APPROVAL DATE

REGISTERED PROFESSIONAL ENGINEER
Raymond Don Tsztoo
No. C37332
Exp. 6-30-08
CIVIL
STATE OF CALIFORNIA

The State of California or its officers or agents shall not be responsible for the accuracy or completeness of electronic copies of this plan sheet.

To accompany plans dated 6-13-11

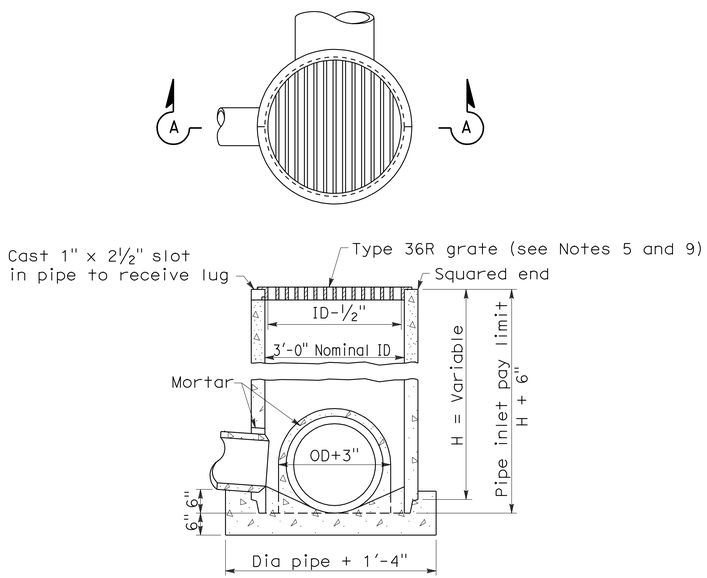

SECTION A-A

TYPE GCP

CONCRETE PIPE INLET WITH GRATE

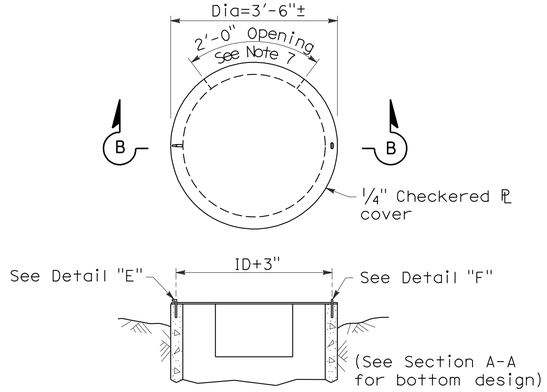

SECTION B-B

TYPE OCP or OCPI

CONCRETE PIPE INLET WITH STEEL COVER
(See Note 6)

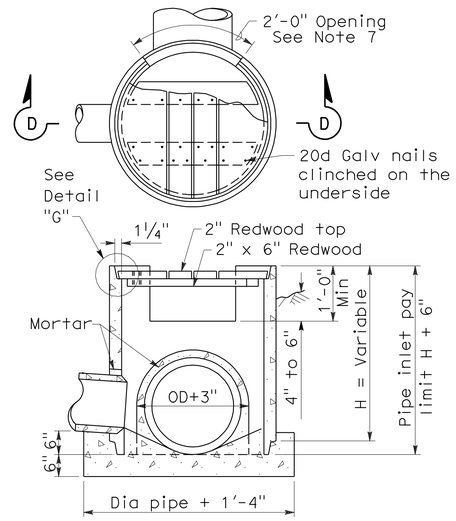

SECTION D-D

TYPE OCP or OCPI

CONCRETE PIPE INLET WITH REDWOOD COVER
(See Notes 6 and 10)

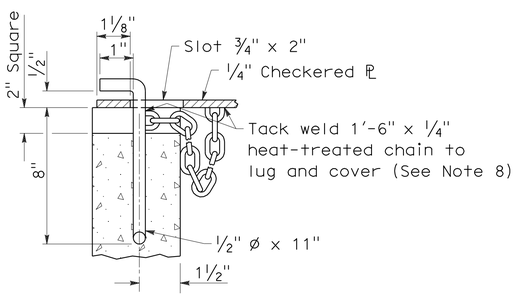

DETAIL "E"

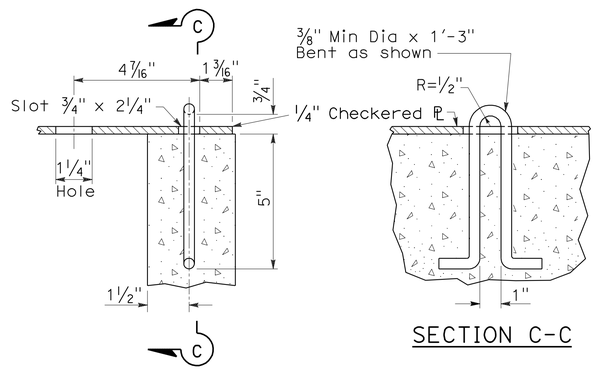

DETAIL "F"

SECTION C-C

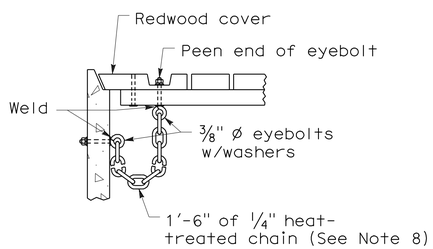

DETAIL "G"

NOTES:

1. For details of steel pipe inlets, see Standard Plan D75A.
2. For details of ladder and steps and when ladder or steps are required, see Standard Plan D75C.
3. Inlet pipes shall not protrude into basin.
4. Except for inlets used for junction boxes, basin floors shall have minimum slope of 4:1 from all directions toward outlet pipe, and a wood trowel finish.
5. See Revised Standard Plan RSP D77A and Standard Plan D77B for Grate and Frame Details and Weights of Miscellaneous Iron and Steel.
6. Designation of Type OCPI pipe inlets on plans indicates trash racks are to be furnished and installed on all side openings. See Standard Plan D75C for Trash Rack details.
7. More than one side opening may be required. Location and number as ordered by the Engineer. Opening may be cast in pipe.
8. Chain to be provided when specified.
9. Place pipe so bars of grate will be parallel with main surface flow.
10. Redwood covers shall only be placed at locations designated on the plans.

STATE OF CALIFORNIA
DEPARTMENT OF TRANSPORTATION

CONCRETE PIPE INLETS

NO SCALE

RSP D75B DATED JUNE 6, 2008 SUPERSEDES STANDARD PLAN D75B
DATED MAY 1, 2006 - PAGE 153 OF THE STANDARD PLANS BOOK DATED MAY 2006.

REVISED STANDARD PLAN RSP D75B

2006 REVISED STANDARD PLAN RSP D75B

DIST	COUNTY	ROUTE	POST MILES TOTAL PROJECT	SHEET NO.	TOTAL SHEETS
02	Sis	96	R0.0/R12.0	129	143

Raymond Don Tsztoo
REGISTERED CIVIL ENGINEER

January 18, 2008
PLANS APPROVAL DATE

REGISTERED PROFESSIONAL ENGINEER
Raymond Don Tsztoo
No. C37332
Exp. 6-30-08
CIVIL
STATE OF CALIFORNIA

The State of California or its officers or agents shall not be responsible for the accuracy or completeness of electronic copies of this plan sheet.

To accompany plans dated 6-13-11

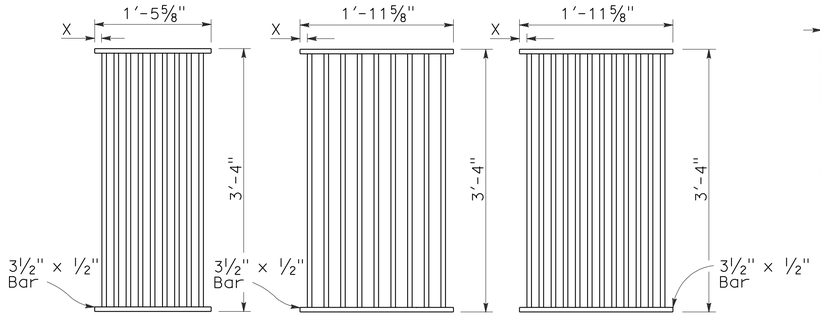

TYPE 18-9

1⅜" Clear spacing. Use within the roadbed on highways where bicycles and pedestrians are excluded.

TYPE 24-9

2" Clear spacing. Use in locations off the roadbed on all types of highways.

TYPE 24-12

1⅜" Clear spacing. Use within the roadbed on highways where bicycles and pedestrians are excluded.

RECTANGULAR GRATE DETAILS

(See table below)

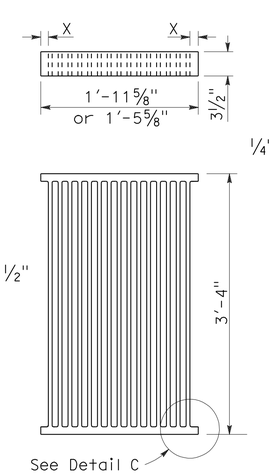

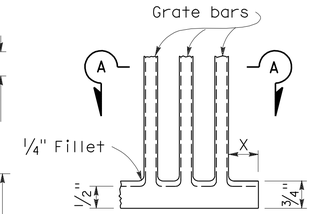

DETAIL C

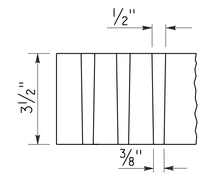

SECTION A-A

ALTERNATIVE CAST NODULAR IRON GRATE OR CAST STEEL GRATE

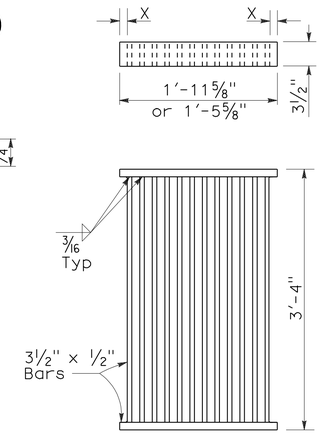

ALTERNATIVE WELDED GRATE

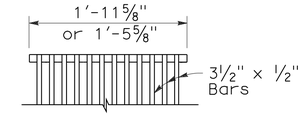

CAST END BLOCK

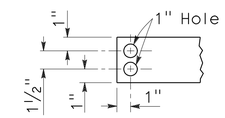

END OF BAR

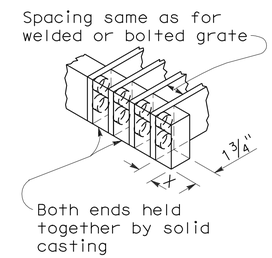

ALTERNATIVE CAST NODULAR IRON OR CAST STEEL END BLOCK GRATE

NOTES:

1. Grate type numbers refer to approximate width of grate in inches and number of bars, respectively.
2. Contractor has the option of using cast nodular iron, cast steel, welded, bolted, or cast end block grate.
3. See Special Provisions for requirements pertaining to galvanizing or asphalt dipping of grates and frames.
4. Rounded top of bars optional on all grates.
5. Pipe inlets with a grate shall be placed so that bars parallel direction of principle surface flow.
6. Full penetration butt welds may be substituted for the fillet welds on all anchors.
7. Standard square, hexagon, round or equivalent headed anchors may be substituted for the right angle hooks on the anchors shown on this plan.
8. Grate and frame weights are based on welded grates (weights of face angles, steps, protection bars, etc. are not included).

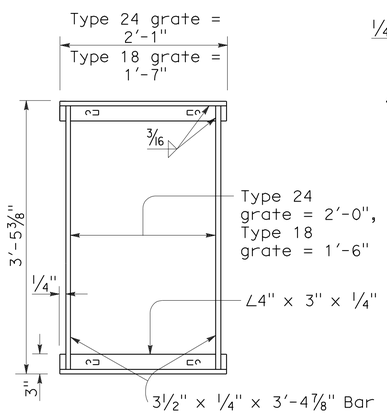

TYPICAL FRAME

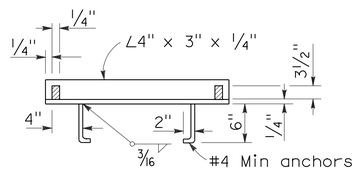

CROSS SECTION

(Thru frame)

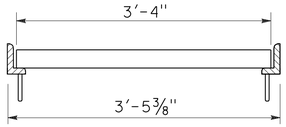

LONGITUDINAL SECTION

(Thru frame and grate)

RECTANGULAR FRAME DETAILS

(For all rectangular grates)

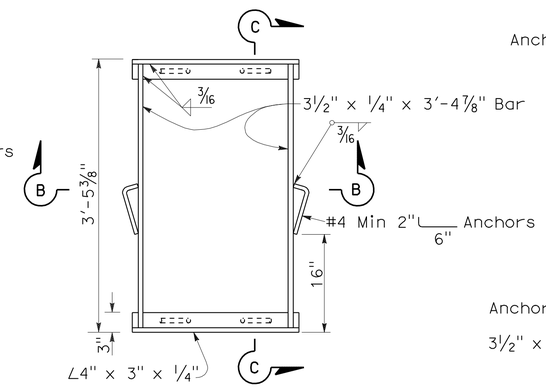

TYPICAL FRAME

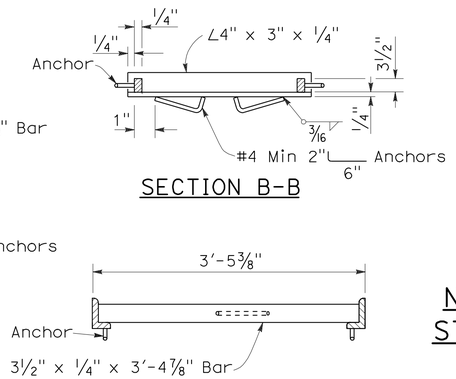

SECTION B-B

SECTION C-C

ALTERNATIVE ANCHOR FOR RECTANGULAR FRAME

(For details not shown, See Rectangular Frame Details)

INLET TYPE	GRATE TYPE	No. OF GRATES	WEIGHT LB
GDO	24-12	2	634
GOL-7	24-12	1	326
GOL-10	24-12	1	326
GO,G1,G2,G3,G4 (TYPE 24)	24-9	1	263
	24-12	1	326
G4 (TYPE 18),G5,G6	18-9	1	249
GT1	18-9	2	498
GT2	18-9	2	498
GT3	24-12	2	652
GT4	24-12	2	652
TRASH RACK			22

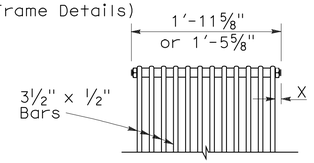

BOLTED END BLOCK

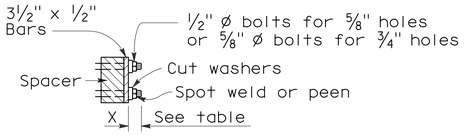

BOLTING DETAIL

ALTERNATIVE BOLTED GRATE

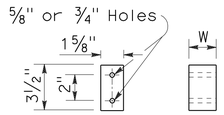

BAR SPACER

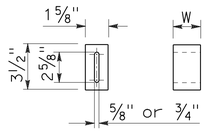

ALTERNATIVE SPACER

W = 1⅜" or 2"

GRATE BAR SPACING TABLE

TYPE	No. OF BARS	CLEAR BAR SPACING	X
18-9	9	1⅜"	1 1/16"
24-9	9	2"	1 9/16"
24-12	12	1⅜"	1¼"

INLET TYPE	COVER TYPE	WEIGHT LB
OS	PLATE	174
OL-7	PLATE	170
OL-10	PLATE	170
OL-14	PLATE	170
OL-21	PLATE	170
OCP	PLATE	112
OCPI	PLATE	112
OCPI	REDWOOD	42
OMP	PLATE	177
OMPI	PLATE	177

BASIS FOR MISC IRON & STEEL FINAL PAY WEIGHTS FOR DRAINAGE INLETS

(See General Notes, No 8)

STATE OF CALIFORNIA
DEPARTMENT OF TRANSPORTATION

GRATE DETAILS

NO SCALE

RSP D77A DATED JANUARY 18, 2008 SUPERSEDES STANDARD PLAN D77A DATED MAY 1, 2006 - PAGE 155 OF THE STANDARD PLANS BOOK DATED MAY 2006.

REVISED STANDARD PLAN RSP D77A

2006 REVISED STANDARD PLAN RSP D77A

12-14-07

DIST	COUNTY	ROUTE	POST MILES TOTAL PROJECT	SHEET NO.	TOTAL SHEETS
02	Sis	96	R0.0/R12.0	130	143

Raymond Don Tsztoo
REGISTERED CIVIL ENGINEER

June 6, 2008
PLANS APPROVAL DATE

REGISTERED PROFESSIONAL ENGINEER
Raymond Don Tsztoo
No. C37332
Exp. 6-30-08
CIVIL
STATE OF CALIFORNIA

The State of California or its officers or agents shall not be responsible for the accuracy or completeness of electronic copies of this plan sheet.

To accompany plans dated 6-13-11

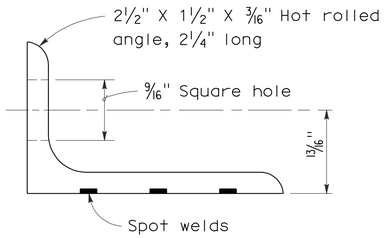

ANGLE

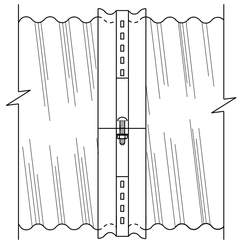

SIDE VIEW
ANGLE

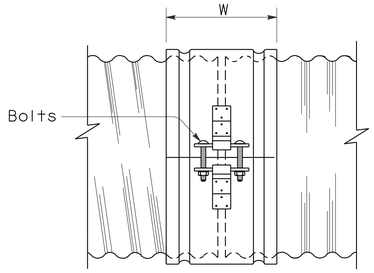

SIDE VIEW
SINGLE BAR AND STRAP

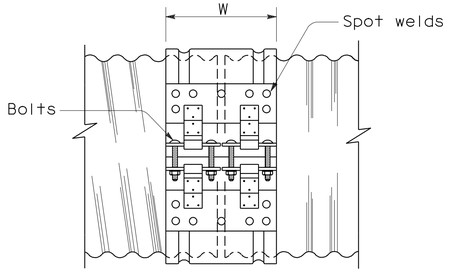

SIDE VIEW
DOUBLE BAR AND STRAP

NOTES:

1. All ferrous metal coupling band connection hardware shall be galvanized or electroplated in accordance with the Standard Specifications.
2. Dimensions and thicknesses shown are minimum.
3. Spot welds shall develop minimum required strength of strap.
4. Fillet welds of equivalent strength may be substituted for spot welds or rivets.
5. Dimension depends upon whether end condition is lips up or lips down.

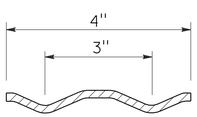

SECTION

H-4 HUGGER BAND

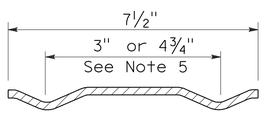

SECTION

H-7 HUGGER BAND

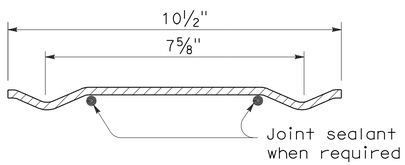

SECTION

H-10 HUGGER BAND

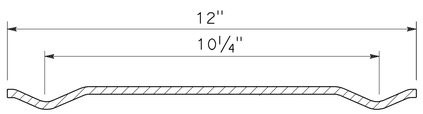

SECTION

H-12 HUGGER BAND

HUGGER COUPLING BANDS

STATE OF CALIFORNIA
DEPARTMENT OF TRANSPORTATION

CORRUGATED METAL PIPE COUPLING DETAILS No. 4 HUGGER COUPLING BANDS

NO SCALE

RSP D97D DATED JUNE 6, 2008 SUPERSEDES STANDARD PLAN D97D
DATED MAY 1, 2006 - PAGE 186 OF THE STANDARD PLANS BOOK DATED MAY 2006.

REVISED STANDARD PLAN RSP D97D

2006 REVISED STANDARD PLAN RSP D97D

3-24-08

DIST	COUNTY	ROUTE	POST MILES TOTAL PROJECT	SHEET NO.	TOTAL SHEETS
02	Sis	96	R0.0/R12.0	131	143

Raymond Don Tsztoo
REGISTERED CIVIL ENGINEER

June 6, 2008
PLANS APPROVAL DATE

REGISTERED PROFESSIONAL ENGINEER Raymond Don Tsztoo No. C37332 Exp. 6-30-08 CIVIL STATE OF CALIFORNIA

The State of California or its officers or agents shall not be responsible for the accuracy or completeness of electronic copies of this plan sheet.

ANNULAR AND HELICAL PROFILE

COUPLING TYPE	PIPE CORRUGATION	PIPE SIZE	W OR A	PIPE WALL THICKNESS CSP	PIPE WALL THICKNESS CAP	BAND THICKNESS CSP	BAND THICKNESS CAP	BAR AND STRAP (CSP ONLY) STRAP THICKNESS	BOLTS Dia	BAR Dia	BAR YIELD STRENGTH	ANGLE DIMENSIONS CSP	ANGLE DIMENSIONS CAP	BOLTS (No.- Dia) CSP	BOLTS (No.- Dia) CAP	RIVETS ANGLE TO BAND CSP	RIVETS ANGLE TO BAND CAP	SPOT WELDS ANGLE TO BAND CSP
TWO PIECE INTEGRAL FLANGE	1½′ × ¼"	6"-10"	7"	0.052"-0.079"	0.048"-0.060"	0.052"	0.060"							2-⅜"	2-⅜"			
		12"-18"	7"	0.052"-0.079"		0.064"								2-½"				
	2⅔" × ½"	12"-24"	7"	0.052"-0.079"	0.060"-0.105"	0.064"	0.060"							2-½"	2-½"			
UNIVERSAL	2⅔" × ½"	THROUGH 36"	12"	0.052"-0.138"	0.060"-0.135"	0.052"	0.060"					2" × 2" × 3/16"	2" × 2" × 3/16"	3-½"	3-½"	3-⅜"	3-⅜"	3-½"
		42"-60"	12"	0.052"-0.168"	0.075"-0.164"	0.052"	0.060"					2" × 2" × 3/16"	2" × 2" × 3/16"	3-½"	3-½"	3-⅜"	3-⅜"	5-½"
		THROUGH 72"	12"	0.052"-0.168"	0.164"	0.052"	0.105"	0.079"	½"	⅞"	32 ksi	2" × 2" × 3/16"	2" × 2" × 3/16"	3-½"	3-½"	3-⅜"	3-⅜"	5-½"
		78"-84"	16¼"	0.168"		0.079"		DOUBLE 0.079"	½"	⅞"	32 ksi							
ANNULAR	2⅔" × ½"	THROUGH 36"	7"	0.064"-0.138"	0.060"-0.135"	0.052"	0.060"	0.079"	½"	⅞"	32 ksi	2" × 2" × 3/16"	2" × 2" × 3/16"	2-½"	2-½"	3-⅜"	3-⅜"	3-½"
		42"-72"	12"	0.064"-0.168"	0.075"-0.164"	0.052"	0.105"	0.079"	½"	⅞"	32 ksi	2" × 2" × 3/16"	2" × 2" × 3/16"	3-½"	3-½"	3-⅜"	3-⅜"	5-½"
		78"-84"	12"	0.168"		0.079"		0.109"	½"	⅞"	45 ksi	2" × 2" × 3/16"		3-½"		3-⅜"		5-½"
	3" × 1"	48"-90"	14"	0.064"-0.109"		0.052"		0.079"	½"	⅞"	32 ksi	2" × 2" × 3/16"		3-½"		3-⅜"		5-½"
		96"-120"	14"	0.079"-0.109"		0.052"		0.109"	½"	⅞"	45 ksi	2" × 2" × 3/16"		3-½"		4-⅜"		
		42"-108"	14"		0.060"-0.135"		0.060"						2" × 2" × 3/16"		3-½"		3-⅜"	
HELICAL	2⅔" × ½"	THROUGH 36"	12"	0.052"-0.138"	0.060"-0.135"	0.052"	0.060"	0.079"	½"	⅞"	32 ksi	2" × 2" × 3/16"	2" × 2" × 3/16"	3-½"	3-½"	3-⅜"	3-⅜"	3-½"
		42"-72"	12"	0.052"-0.168"	0.075"-0.164"	0.052"	0.060"	0.079"	½"	⅞"	32 ksi	2" × 2" × 3/16"	2" × 2" × 3/16"	3-½"	3-½"	3-⅜"	3-⅜"	5-½"
		78"-84"	12"	0.168"		0.079"		0.109"	½"	⅞"	45 ksi	2" × 2" × 3/16"		3-½"		3-⅜"		5-½"
	3" × 1"	48"-90"	14"	0.064"-0.109"		0.052"		0.079"	½"	⅞"	32 ksi	2" × 2" × 3/16"		3-½"		3-⅜"		5-½"
		96"-120"	14"	0.079"-0.109"		0.052"		0.109"	½"	⅞"	45 ksi	2" × 2" × 3/16"		3-½"		4-⅜"		
		42"-108"	14"		0.060"-0.135"		0.060"						2" × 2" × 3/16"		3-½"		3-⅜"	
HUGGER	2⅔" × ½" REROLLED END	12"-54"	4"	0.052"-0.109"		0.052"						2½" × 1½" × 3/16"	2½" × 1½" × 3/16"	1-½"				3-½"
		60"-66"	4"	0.109"		0.064"						2½" × 1½" × 3/16"	2½" × 1½" × 3/16"	1-½"				3-½"
		36"-48"	4"	0.138"		0.064"						2½" × 1½" × 3/16"	2½" × 1½" × 3/16"	1-½"				3-½"
		THROUGH 72"	10½"	0.052"-0.168"		0.052"		0.079"	½"	⅞"	32 ksi							
		78"-84"	10½"	0.168"		0.079"		0.109"	½"	⅞"	45 ksi							
	3" × 1" REROLLED END	48"-90"	10½"	0.064"-0.109"		0.052"		0.079"	½"	⅞"	32 ksi							
		96"-120"	10½"	0.079"-0.109"		0.052"		0.109"	½"	⅞"	45 ksi							
	5" × 1" REROLLED END	48"-66"	7½"	0.064"-0.109"		0.064"		0.079"	½"	⅞"	32 ksi	2½" × 1½" × 3/16"	2½" × 1½" × 3/16"	1-½"				3-½"
		72"-90"	7½"	0.064"-0.079"		0.064"		0.079"	½"	⅞"	32 ksi	2½" × 1½" × 3/16"	2½" × 1½" × 3/16"	1-½"				3-½"
		48"-90"	7½"	0.064"-0.138"		0.064"		0.079"	½"	⅞"	32 ksi							
		48"-120"	12" SEE	0.064"-0.109"		0.064"		0.079"	½"	⅞"	32 ksi							
		48"-84"	12" NOTE	0.138"		0.064"		0.079"	½"	⅞"	32 ksi							
		90"-120"	12" 11	0.138"		0.064"		DOUBLE 0.079"	½"	⅞"	32 ksi							

SPIRAL RIB PROFILE

COUPLING TYPE	PIPE CORRUGATION	PIPE SIZE	W	PIPE WALL THICKNESS SSRP	PIPE WALL THICKNESS ASRP	BAND THICKNESS SSRP	BAND THICKNESS ASRP	BAR AND STRAP (SSRP ONLY) STRAP THICKNESS	BOLTS Dia	BAR Dia	BAR YIELD STRENGTH	ANGLE DIMENSIONS SSRP	ANGLE DIMENSIONS ASRP	BOLTS (No.- Dia) SSRP	BOLTS (No.- Dia) ASRP	RIVETS ANGLE TO BAND SSRP	RIVETS ANGLE TO BAND ASRP	SPOT WELDS ANGLE TO BAND SSRP
ANNULAR	2⅔" × ½" * REROLLED END	24"-36"	12"	0.064"-0.109"	0.060"-0.105"	0.052"	0.060"	0.079"	½"	⅞"	32 ksi	2" × 2" × 3/16"	2" × 2" × 3/16"	3-½"	3-½"	3-⅜"	3-⅜"	5-½"
		42"-60"	12"	0.064"-0.109"	0.075"-0.105"	0.052"	0.105"	0.079"	½"	⅞"	32 ksi	2" × 2" × 3/16"	2" × 2" × 3/16"	3-½"	3-½"	3-⅜"	3-⅜"	5-½"
		66"-72"	12"	0.064"-0.109"		0.052"		0.079"	½"	⅞"	32 ksi	2" × 2" × 3/16"	2" × 2" × 3/16"	3-½"	3-½"	3-⅜"	3-⅜"	5-½"
		78"-114"	12"	0.079"-0.109"		0.079"		0.109"	½"	⅞"	45 ksi	2" × 2" × 3/16"	2" × 2" × 3/16"	3-½"	3-½"	3-⅜"	3-⅜"	5-½"
HUGGER	2⅔" × ½" * REROLLED END	24"-72"	10½"	0.064"-0.109"		0.052"		0.079"	½"	⅞"	32 ksi							
		78"-84"	10½"	0.109"		0.079"		0.109"	½"	⅞"	45 ksi							

* See Note 14.

14. All profiles of Spiral Rib Pipe (¾" × ¾" ribs at 7½" pitch and ¾" × 1" ribs at 11½" pitch in both steel and aluminum and ¾" × 1" ribs at 8½" pitch in steel only) shall be manufactured with rerolled ends. Corrugation profile of the rerolled ends shall be 2⅔" × ½" annual corrugations with a minimum of two full corrugations at each end.

NOTES:

To accompany plans dated 6-13-11

1. All ferrous metal coupling band connection hardware shall be galvanized or electroplated in accordance with the Standard Specifications.
2. For helically corrugated coupling bands, the connection angles may be oriented parallel to the pipe axis, provided connecting holes are slotted lengthwise sufficiently to allow adjustment for the helix angle.
3. Tension strap may be connected to band with either spot welds or fillet welds that develop minimum required strength of strap.
4. Use 1¼" gage line dimension on attached angle leg for rivets and spot welds.
5. Band thickness shall not be less than:
   a. 3 standard thicknesses lighter than the thickness of the pipe for Corrugated Steel Pipe.
   b. 2 standard thicknesses lighter than the thickness of the pipe and in no case lighter than 0.060" for Corrugated Aluminum Pipe.
6. Dimensions, thicknesses and strengths shown are minimum.
7. For pipe arches use same width band as for round pipe of equal periphery.
8. Fillet welds of equivalent strenght may be substituted for spot welds or rivets.
9. Spot welds shall develop minimum required strength of strap.
10. Pipe with rerolled ends having at least two 2⅔" × ½" annular corrugations at each end with or without an upturned flange may be connected with any of the annular coupling bands shown for pipe of the same diameter and wall thickness and having 2⅔" × ½" corrugations.
11. In the case of H-12 huggerbands, two piece bands are required for diameters through 96" and three piece bands are required for diameters 102" through 120".
12. Two piece bands are required for pipes greater than 42" diameter.
13. The 2¼" × 2" × 0.109" thick galvanized die-formed angle connector may be used in lieu of the 2" × 2" × 3/16" angle connector for standard joints only on pipes through 72" diameter.

STATE OF CALIFORNIA
DEPARTMENT OF TRANSPORTATION

CORRUGATED METAL PIPE COUPLING DETAILS No. 5 STANDARD JOINT

NO SCALE

RSP D97E DATED JUNE 6, 2008 SUPERSEDES STANDARD PLAN D97E
DATED MAY 1, 2006 - PAGE 187 OF THE STANDARD PLANS BOOK DATED MAY 2006.

REVISED STANDARD PLAN RSP D97E

2006 REVISED STANDARD PLAN RSP D97E

4-2-08

DIST	COUNTY	ROUTE	POST MILES TOTAL PROJECT	SHEET NO.	TOTAL SHEETS
02	Sis	96	R0.0/R12.0	132	143

Raymond Don Tsztoo
REGISTERED CIVIL ENGINEER

June 6, 2008
PLANS APPROVAL DATE

REGISTERED PROFESSIONAL ENGINEER Raymond Don Tsztoo No. C37332 Exp. 6-30-08 CIVIL STATE OF CALIFORNIA

The State of California or its officers or agents shall not be responsible for the accuracy or completeness of electronic copies of this plan sheet.

To accompany plans dated 6-13-11

ANNULAR AND HELICAL PROFILE

COUPLING TYPE	PIPE CORRUGATION	PIPE SIZE	W OR A	PIPE WALL THICKNESS CSP	PIPE WALL THICKNESS CAP	BAND THICKNESS CSP	BAND THICKNESS CAP	BAR AND STRAP (CSP ONLY) STRAP THICKNESS	BOLTS Dia	BAR Dia	BAR YIELD STRENGTH	ANGLE DIMENSIONS CSP	ANGLE DIMENSIONS CAP	BOLTS (No. - Dia) CSP	BOLTS (No. - Dia) CAP	RIVETS ANGLE TO BAND CSP	RIVETS ANGLE TO BAND CAP	SPOT WELDS ANGLE TO BAND CSP
TWO PIECE INTEGRAL FLANGE	1½" × ¼"	6"-10"	7"	0.064"-0.079"	0.060"	0.064"	0.060"							2-⅜"	2-⅜"			
	2⅔" × ½"	12"-24"	12"		0.060"-0.105"		0.060"								3-½"			
UNIVERSAL	2⅔" × ½"	THROUGH 36"	12"	0.064"-0.138"	0.060"-0.135"	0.064"	0.060"	0.079"	½"	⅞"	32 ksi	2" × 2" × 3/16"	2" × 2" × 3/16"	3-½"	3-½"	3-⅜"	3-⅜"	5-½"
		42"-60"	16¼"	0.064"-0.168"	0.060"-0.164"	0.064"	0.060"	DOUBLE 0.079"	½"	⅞"	32 ksi	2" × 2" × ¼"	2" × 2" × ¼"	4-½"	4-½"	5-⅜"	5-⅜"	
ANNULAR	2⅔" × ½"	THROUGH 36"	12"	0.064"-0.138"	0.060"-0.135"	0.064"	0.060"					2" × 2" × 3/16"	2" × 2" × 3/16"	3-½"	3-½"	3-⅜"	3-⅜"	5-½"
		42"-60"	12"	0.064"-0.079"		0.064"						2" × 2" × 3/16"		3-½"		3-⅜"		5-½"
		42"-60"	12"	0.109"-0.168"	0.135"-0.164"	0.064"	0.075"					2" × 2" × ¼"	2" × 2" × ¼"	3-½"	3-½"	5-⅜"	5-⅜"	
		66"-72"	24"		0.164"		0.105"						2" × 2" × ¼"		5-½"		5-½"	
		66"-84"	24"	0.109"-0.168"		0.064"						2" × 2" × ¼"		5-½"		7-⅜"		
		42"-54"	12"		0.060"-0.105"		0.060"						2" × 2" × 3/16"		3-½"		3-⅜"	
	3" × 1"	48"-60"	14"	0.064"-0.079"		0.064"						2" × 2" × 3/16"		3-½"		3-⅜"		5-½"
		48"-60"	14"	0.109"		0.064"						2" × 2" × 3/16"		3-½"		5-⅜"		
		66"-120"	25"	0.064"-0.109"		0.064"						2" × 2" × 3/16"		5-½"		9-⅜"		
		42"-60"	14"		0.060"-0.105"		0.060"						2" × 2" × 3/16"		3-½"		5-⅜"	
		42"-60"	14"		0.135"		0.075"						2" × 2" × ¼"		3-½"		5-⅜"	
		66"-96"	25"		0.060"-0.135"		0.060"						2" × 2" × ¼"		5-½"		7-⅜"	
		96"-108"	25"		0.135"		0.075"						2" × 2" × ¼"		5-½"		7-⅜"	
HELICAL	2⅔" × ½"	THROUGH 36"	12"	0.064"-0.138"	0.060"-0.135"	0.064"	0.060"					2" × 2" × 3/16"	2" × 2" × 3/16"	3-½"	3-½"	3-⅜"	3-⅜"	5-½"
		42"-54"	12"		0.060"-0.105"		0.060"						2" × 2" × 3/16"		3-½"		3-⅜"	
		42"-60"	12"	0.064"-0.079"		0.064"						2" × 2" × 3/16"		3-½"		3-⅜"		5-½"
		42"-60"	12"	0.109"-0.168"	0.135"-0.164"	0.064"	0.075"					2" × 2" × ¼"	2" × 2" × ¼"	3-½"	3-½"	5-⅜"	5-⅜"	
		66'-84"	24"	0.109"-0.168"		0.064"						2" × 2" × ¼"		5-½"		7-⅜"		
		66"-72"	24"		0.164"		0.105"						2" × 2" × ¼"		5-½"		5-⅜"	
	3" × 1"	48"-60"	14"	0.064"-0.079"		0.064"						2" × 2" × 3/16"		3-½"		3-⅜"		5-½"
		48"-60"	14"	0.109"		0.064"						2" × 2" × 3/16"		3-½"		5-⅜"		
		66"-120"	25"	0.064"-0.109"		0.064"						2" × 2" × 3/16"		5-½"		9-⅜"		
		42"-60"	14"		0.060"-0.105"		0.060"						2" × 2" × 3/16"		3-½"		5-⅜"	
		42"-60"	14"		0.135"		0.075"						2" × 2" × ¼"		3-½"		5-⅜"	
		66"-96"	25"		0.060"-0.135"		0.060"						2" × 2" × ¼"		5-½"		7-⅜"	
		96"-108"	25"		0.135"		0.075"						2" × 2" × ¼"		5-½"		7-⅜"	
HUGGER	2⅔" × ½" REROLLED END	THROUGH 48"	10½"	0.109"		0.064"		0.079"	½"	⅞"	32 ksi							
		54"- 66"	10½"	0.109"		0.064"		DOUBLE 0.079"	½"	⅞"	32 ksi							
		THROUGH 54"	10½"	0.064"-0.079"		0.064"		0.079"	½"	⅞"	32 ksi							
		THROUGH 60"	10½"	0.138"		0.079"		DOUBLE 0.079"	½"	⅞"	32 ksi							
		66"-72"	10½"	0.138"		0.109"		DOUBLE 0.079"	½"	⅞"	32 ksi							
		THROUGH 72"	10½"	0.168"		0.109"		DOUBLE 0.109"	½"	⅞"	45 ksi							
	3" × 1" REROLLED END	48"-84"	10½"	0.109"		0.079"		DOUBLE 0.079"	½"	⅞"	32 ksi							
		48"-90"	10½"	0.064"-0.079"		0.064"		DOUBLE 0.079"	½"	⅞"	32 ksi							
		96"-102"	10½"	0.079"		0.079"		DOUBLE 0.079"	½"	⅞"	32 ksi							
		90"-120"	10½"	0.109"		0.109"		DOUBLE 0.109"	½"	⅞"	45 ksi							

SPIRAL RIB PROFILE

COUPLING TYPE	PIPE CORRUGATION	PIPE SIZE	W	PIPE WALL THICKNESS SSRP	PIPE WALL THICKNESS ASRP	BAND THICKNESS SSRP	BAND THICKNESS ASRP	BAR AND STRAP (SSRP ONLY) STRAP THICKNESS	BOLTS Dia	BAR Dia	BAR YIELD STRENGTH	ANGLE DIMENSIONS SSRP	ANGLE DIMENSIONS ASRP	BOLTS (No.- Dia) SSRP	BOLTS (No.- Dia) ASRP	RIVETS ANGLE TO BAND SSRP	RIVETS ANGLE TO BAND ASRP	SPOT WELDS ANGLE TO BAND SSRP
ANNULAR	2⅔" × ½" * REROLLED END	24"-36"	12"	0.064"-0.109"	0.060"-0.105"	0.064"	0.060"	0.079"	½"	⅞"	32 ksi	2" × 2" × 3/16"	2" × 2" × 3/16"	3-½"	3-½"	3-⅜"	3-⅜"	5-½"
		42"-60"	12"	0.064"-0.079"	0.075"-0.105"	0.064"	0.075"	0.079"	½"	⅞"	32 ksi	2" × 2" × 3/16"	2" × 2" × 3/16"	3-½"	3-½"	3-⅜"	3-⅜"	5-½"
		42"-60"	12"	0.109"		0.064"		0.079"	½"	⅞"	32 ksi	2" × 2" × ¼"		3-½"		5-⅜"		
		66"-84"	24"	0.109"		0.064"		0.079"	½"	⅞"	32 ksi	2" × 2" × ¼"		5-½"		7-⅜"		
HUGGER	2⅔" × ½" * REROLLED END	24"-54"	10½"	0.064"-0.079"		0.064"		0.079"	½"	⅞"	32 ksi							
		24"-48"	10½"	0.109"		0.064"		0.079"	½"	⅞"	32 ksi							
		54"-66"	10½"	0.109"		0.064"		Double 0.079"	½"	⅞"	32 ksi							

* See Note 13.

NOTES:

1. All ferrous metal coupling band connection hardware shall be galvanized or electroplated in accordance with the Standard Specifications.
2. For helically corrugated coupling bands, the connection angles may be oriented parallel to the pipe axis, provided connecting holes are slotted lengthwise sufficiently to allow adjustment for the helix angle.
3. Tension strap may be connected to band with either spot welds or fillet welds that develop minimum required strength of strap.
4. Use 1¼" gage line dimension on attached angle leg for rivets and spot welds.
5. Band thickness shall not be less than:
   a. 3 standard thicknesses lighter than the thickness of the pipe for Corrugated Steel Pipe.
   b. 2 standard thicknesses lighter than the thickness of the pipe and in no case lighter than 0.060" for Corrugated Aluminum Pipe.
6. Dimensions, thicknesses and strengths shown are minimum.
7. For pipe arches use same width band as for round pipe of equal periphery.
8. Fillet welds of equivalent strength may be substituted for spot welds or rivets.
9. Spot welds shall develop minimum required strength of strap.
10. Pipe with rerolled ends having at least two 2⅔" × ½" annular corrugations at each end with or without an upturned flange may be connected with any of the annular coupling bands shown for pipe of the same diameter and wall thickness and having 2⅔" × ½" corrugations.
11. In the case of H-12 huggerbands, two piece bands are required for diameters through 96" and three piece bands are required for diameters 102" through 120".
12. Two piece bands are required for pipes greater than 42" diameter.
13. All profiles of Spiral Rib Pipe (¾" × ¾" ribs at 7½" pitch and ¾" × 1" ribs at 11½" pitch in both steel and aluminum and ¾" × 1" ribs at 8½" pitch in steel only) shall be manufactured with rerolled ends. Corrugation profile of the rerolled ends shall be 2⅔" × ½" annual corrugations with a minimum of two full corrugations at each end.

STATE OF CALIFORNIA
DEPARTMENT OF TRANSPORTATION

CORRUGATED METAL PIPE COUPLING DETAILS No. 6 POSITIVE JOINT

NO SCALE

RSP D97F DATED JUNE 6, 2008 SUPERSEDES STANDARD PLAN D97F
DATED MAY 1, 2006 - PAGE 188 OF THE STANDARD PLANS BOOK DATED MAY 2006.

REVISED STANDARD PLAN RSP D97F

2006 REVISED STANDARD PLAN RSP D97F

4-2-08

DIST	COUNTY	ROUTE	POST MILES TOTAL PROJECT	SHEET NO.	TOTAL SHEETS
02	Sis	96	R0.0/R12.0	133	143

Raymond Don Tsztoo
REGISTERED CIVIL ENGINEER

June 6, 2008
PLANS APPROVAL DATE

REGISTERED PROFESSIONAL ENGINEER
Raymond Don Tsztoo
No. C37332
Exp. 6-30-08
CIVIL
STATE OF CALIFORNIA

The State of California or its officers or agents shall not be responsible for the accuracy or completeness of electronic copies of this plan sheet.

To accompany plans dated 6-13-11

ANNULAR AND HELICAL PROFILE

COUPLING TYPE	PIPE CORRUGATION	PIPE SIZE	W OR A	PIPE WALL THICKNESS		BAND THICKNESS		BAR AND STRAP (CSP ONLY)			ANGLE						
											DIMENSIONS		BOLTS (No.- Dia)		RIVETS ANGLE TO BAND		SPOT WELDS ANGLE TO BAND
				CSP	CAP	CSP	CAP	STRAP THICKNESS	BOLTS Dia	BAR Dia	CSP	CAP	CSP	CAP	CSP	CAP	CSP
TWO PIECE INTEGRAL FLANGE	1½′ × ¼"	6"	7"	0.064"-0.168"		0.052"							3-⅜"				
	1½′ × ¼"	8"-10"	7"	0.064"-0.168"	0.060"-0.164"	0.064"	0.060"						3-⅜"	3-⅜"			
ANNULAR	2⅔" × ½"	THROUGH 24"	12"	0.064"-0.168"	0.060"-0.164"	0.064"	0.060"				2" × 2" × 3/16"	2" × 2" × 3/16"	3-½"	3-½"	3-⅜"	3-⅜"	3-½"
HUGGER	2⅔" × ½" REROLLED END	THROUGH 24"	10½"	0.064"-0.168"		0.064"		0.079"	½"	⅞"							

SPIRAL RIB PROFILE

COUPLING TYPE	PIPE CORRUGATION	PIPE SIZE	W	PIPE WALL THICKNESS		BAND THICKNESS		BAR AND STRAP (SSRP ONLY)			ANGLE						
											DIMENSIONS		BOLTS (No.- Dia)		RIVETS ANGLE TO BAND		SPOT WELDS ANGLE TO BAND
				SSRP	ASRP	SSRP	ASRP	STRAP THICKNESS	BOLTS Dia	BAR Dia	SSRP	ASRP	SSRP	ASRP	SSRP	ASRP	SSRP
ANNULAR	2⅔" × ½" * REROLLED END	24"	12"	0.064"-0.168"	0.060"-0.164"	0.064"	0.060"				2" × 2" × 3/16"	2" × 2" × 3/16"	3-½"	3-½"	3-⅜"	3-⅜"	3-½"
HUGGER	2⅔" × ½" * REROLLED END	24"	10½"	0.064"-0.168"		0.064"		0.079"	½"	⅞"							

* See Note 12.

NOTES:

1. All ferrous metal coupling band connection hardware shall be galvanized or electro-plated in accordance with the Standard Specifications.
2. For helically corrugated coupling bands, the connection angles may be oriented parallel to the pipe axis, provided connecting holes are slotted lengthwise sufficiently to allow adjustment for the helix angle.
3. Tension strap may be connected to band with either spot welds or fillet welds that develop minimum required strength of strap.
4. Use 1¼" gage line dimension on attached angle leg for rivets and spot welds.
5. Band thickness shall not be less than:
   a. 3 standard thicknesses lighter than the thickness of the pipe for Corrugated Steel Pipe.
   b. 2 standard thicknesses lighter than the thickness of the pipe and in no case lighter than 0.060" for Corrugated Aluminum Pipe.
6. Dimensions, thicknesses and strengths shown are minimum.
7. For pipe arches use same width band as for round pipe of equal periphery.
8. Fillet welds of equivalent strenght may be substituted for spot welds or rivets.
9. Spot welds shall develop minimum required strength of strap.
10. Pipe with rerolled ends having at least two 2⅔" × ½" annular corrugations at each end with or without an upturned flange may be connected with any of the annular coupling bands shown for pipe of the same diameter and wall thickness and having 2⅔" × ½" corrugations.
11. For downdrain applications, two piece integral flange couplers shall have factory applied sleeve type rubber gaskets with a minimum length of 7" measured along the length of the pipe.
12. All profiles of Spiral Rib Pipe (¾" × ¾" ribs at 7½" pitch and ¾" × 1" ribs at 11½" pitch in both steel and aluminum and ¾" × 1" ribs at 8½" pitch in steel only) shall be manufactured with rerolled ends. Corrugation profile of the rerolled ends shall be 2⅔" × ½" annual corrugations with a minimum of two full corrugations at each end.

STATE OF CALIFORNIA
DEPARTMENT OF TRANSPORTATION

CORRUGATED METAL PIPE COUPLING DETAILS No. 7 DOWNDRAIN

NO SCALE

RSP D97G DATED JUNE 6, 2008 SUPERSEDES STANDARD PLAN D97G
DATED MAY 1, 2006 - PAGE 189 OF THE STANDARD PLANS BOOK DATED MAY 2006.

REVISED STANDARD PLAN RSP D97G

2006 REVISED STANDARD PLAN RSP D97G

4-4-08

DIST	COUNTY	ROUTE	POST MILES TOTAL PROJECT	SHEET NO.	TOTAL SHEETS
02	Sis	96	R0.0/R12.0	134	143

Randell D. Hiatt
REGISTERED CIVIL ENGINEER

June 6, 2008
PLANS APPROVAL DATE

REGISTERED PROFESSIONAL ENGINEER
Randell D. Hiatt
No. C50200
Exp. 6-30-09
CIVIL
STATE OF CALIFORNIA

The State of California or its officers or agents shall not be responsible for the accuracy or completeness of electronic copies of this plan sheet.

To accompany plans dated 6-13-11

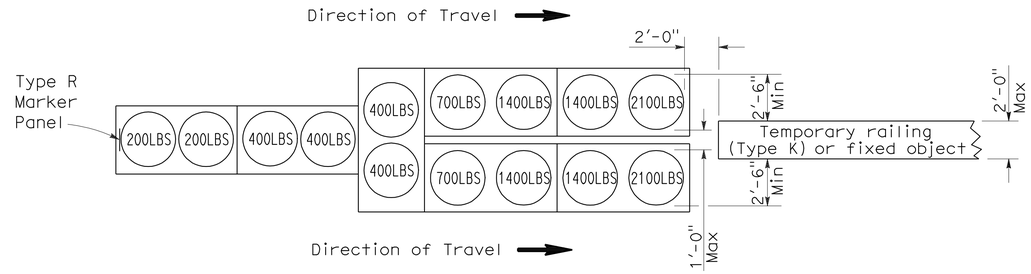

ARRAY 'TU14'

Approach speed 45 mph or more

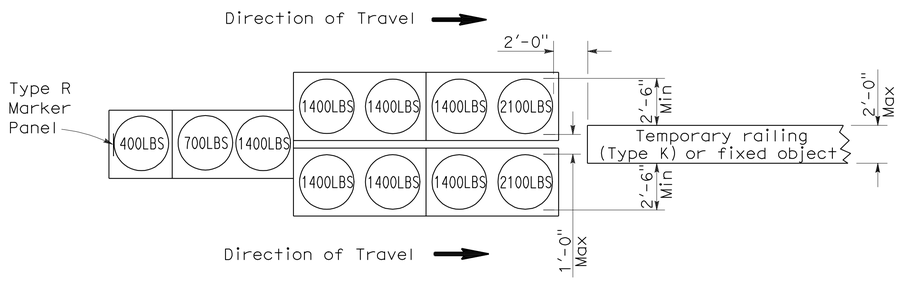

ARRAY 'TU11'

Approach speed less than 45 mph

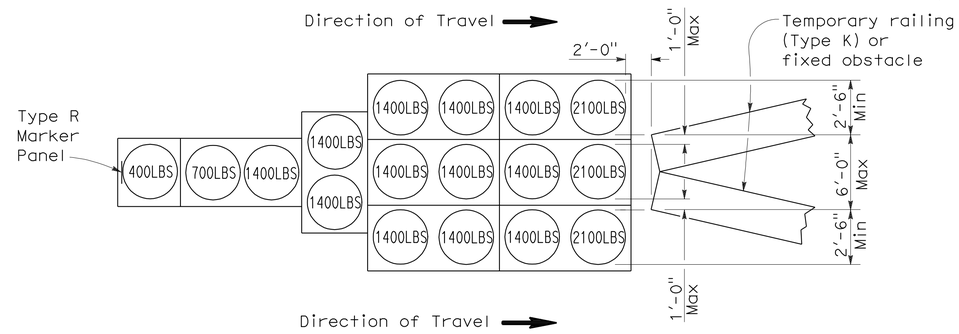

ARRAY 'TU17'

Approach speed less than 45 mph

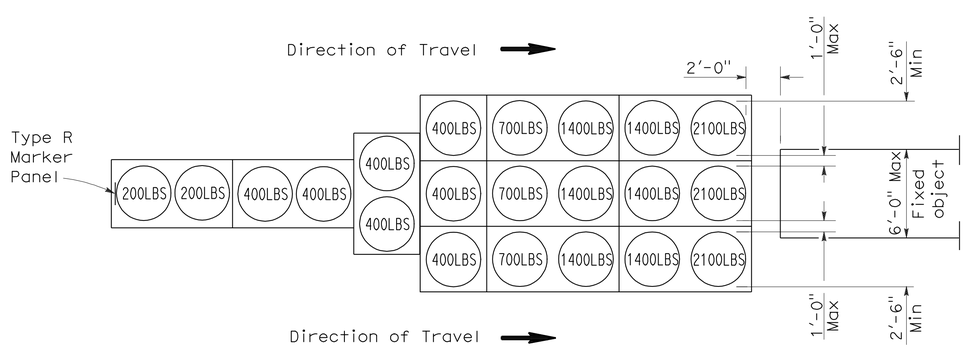

ARRAY 'TU21'

Approach speed 45 mph or more

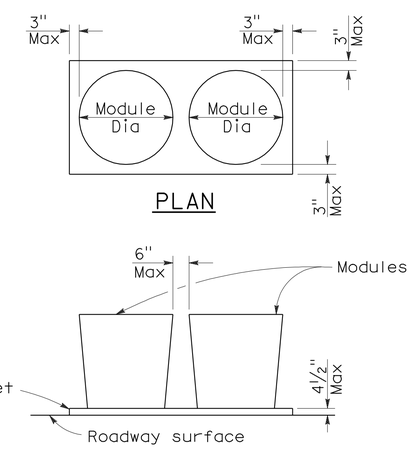

PLAN

ELEVATION

CRASH CUSHION PALLET DETAIL

See Note 7

NOTES:

1. (XXX) Indicates sand filled module location and weight of sand in pounds for each module. Module spacing is based on the greater diameter of the module.
2. All sand weights are nominal.
3. Temporary crash cushion arrays shall not encroach on the traveled way.
4. Place the top of Type R marker panel 1" below the module lid.
5. Refer to Standard Plan A73B for marker details.
6. Approach speeds indicated conform to NCHRP 350 Report criteria.
7. Use of pallets is optional.

STATE OF CALIFORNIA
DEPARTMENT OF TRANSPORTATION

TEMPORARY CRASH CUSHION, SAND FILLED (UNIDIRECTIONAL)

NO SCALE

RSP T1A DATED JUNE 6, 2008 SUPERSEDES STANDARD PLAN T1A
DATED MAY 1, 2006 - PAGE 211 OF THE STANDARD PLANS BOOK DATED MAY 2006.

REVISED STANDARD PLAN RSP T1A

2006 REVISED STANDARD PLAN RSP T1A

DIST	COUNTY	ROUTE	POST MILES TOTAL PROJECT	SHEET NO.	TOTAL SHEETS
02	Sis	96	R0.0/R12.0	135	143

Randell D. Hiatt
REGISTERED CIVIL ENGINEER

June 6, 2008
PLANS APPROVAL DATE

REGISTERED PROFESSIONAL ENGINEER
Randell D. Hiatt
No. C50200
Exp. 6-30-09
CIVIL
STATE OF CALIFORNIA

The State of California or its officers or agents shall not be responsible for the accuracy or completeness of electronic copies of this plan sheet.

To accompany plans dated 6-13-11

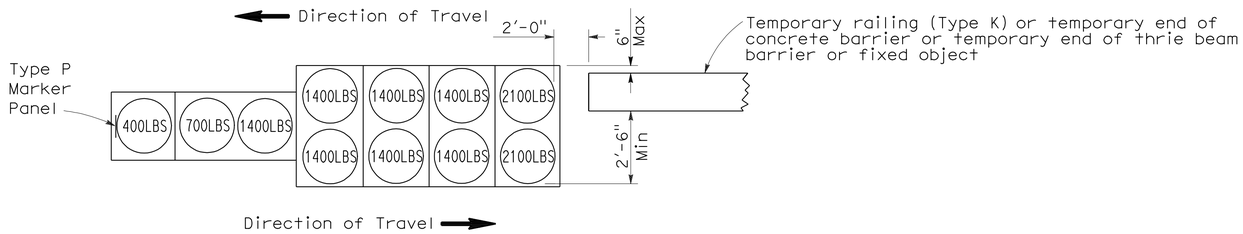

ARRAY 'TB11'

Approach speed less than 45 mph

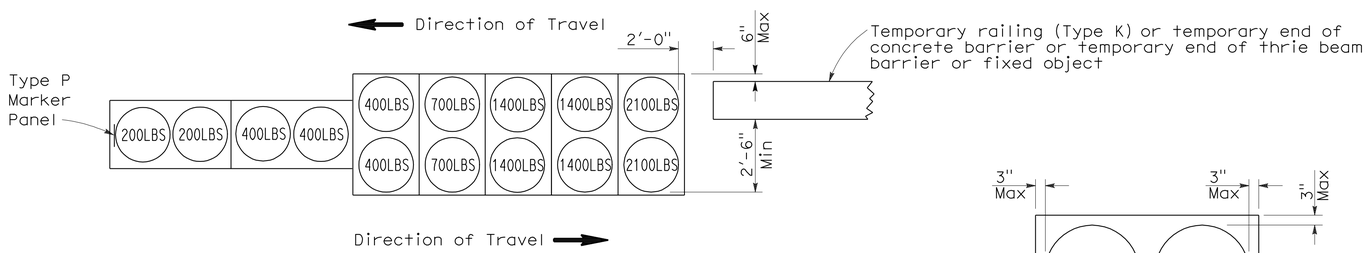

ARRAY 'TB14'

Approach speed 45 mph or more

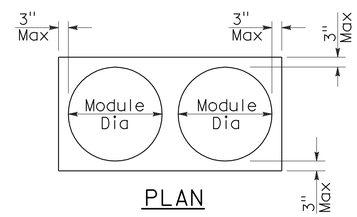

PLAN

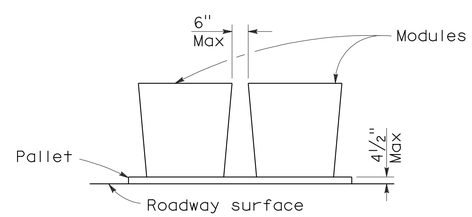

ELEVATION

CRASH CUSHION PALLET DETAIL

See Note 7

NOTES:

1. (XXX) Indicates sand filled module location and weight of sand in pounds for each module. Module spacing is based on the greater diameter of the module.
2. All sand weights are nominal.
3. Temporary crash cushion arrays shall not encroach on the traveled way.
4. Place the Type P marker panel so that the bottom of the panel rests upon the pallet.
5. Refer to Standard Plan A73B for marker details.
6. Approach speeds indicated conform to NCHRP 350 Report criteria.
7. Use of pallets is optional.

STATE OF CALIFORNIA
DEPARTMENT OF TRANSPORTATION

TEMPORARY CRASH CUSHION, SAND FILLED (BIDIRECTIONAL)

NO SCALE

RSP T1B DATED JUNE 6, 2008 SUPERSEDES STANDARD PLAN T1B
DATED MAY 1, 2006 - PAGE 212 OF THE STANDARD PLANS BOOK DATED MAY 2006.

REVISED STANDARD PLAN RSP T1B

2006 REVISED STANDARD PLAN RSP T1B

5-15-08

DIST	COUNTY	ROUTE	POST MILES TOTAL PROJECT	SHEET NO.	TOTAL SHEETS
02	Sis	96	R0.0/R12.0	136	143

Randell D. Hiatt
REGISTERED CIVIL ENGINEER

June 6, 2008
PLANS APPROVAL DATE

REGISTERED PROFESSIONAL ENGINEER
Randell D. Hiatt
No. C50200
Exp. 6-30-09
CIVIL
STATE OF CALIFORNIA

The State of California or its officers or agents shall not be responsible for the accuracy or completeness of electronic copies of this plan sheet.

To accompany plans dated 6-13-11

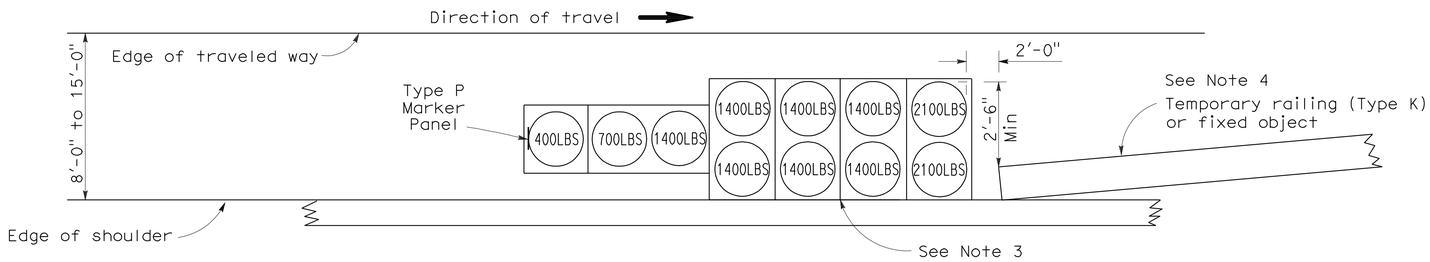

ARRAY 'TS11'

Approach speed less than 45 mph
See Note 9

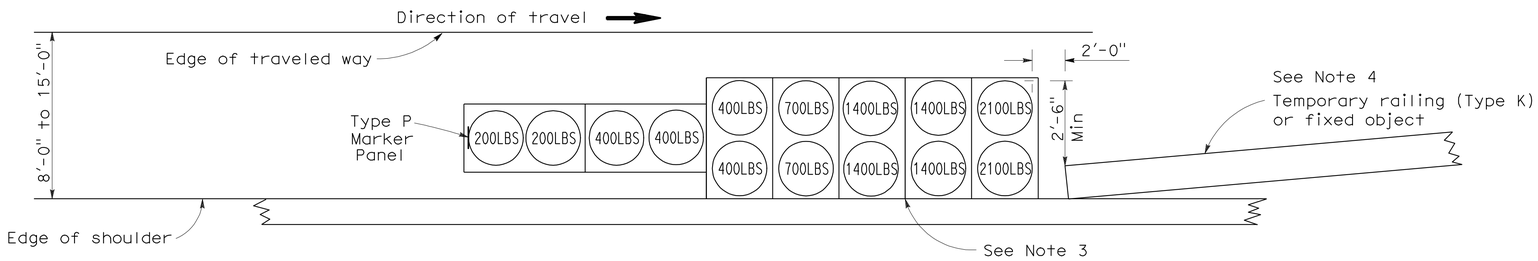

ARRAY 'TS14'

Approach speed 45 mph or more
See Note 9

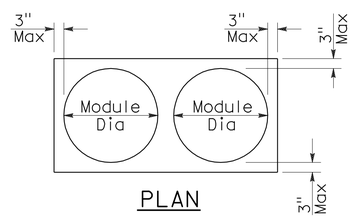

PLAN

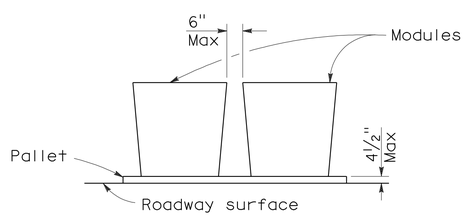

ELEVATION

CRASH CUSHION PALLET DETAIL

See Note 11

NOTES:

1. (XXX) Indicates sand filled module location and weight of sand in pounds for each module. Module spacing is based on the greater diameter of the module.
2. All sand weights are nominal.
3. The temporary crash cushion arrays shown on this plan shall be used only in locations where there will be traffic on one side of the temporary crash cushion array.
4. If the fixed object or approach end of the temporary railing is less than 15'-0" from the edge of traveled way, a temporary crash cushion is required in a construction or work zone.
5. Temporary crash cushion arrays shall not encroach on the traveled way.
6. Arrays for median shoulders shall conform to details shown on this plan for outside shoulders.
7. Place the Type P marker panel so that the bottom of the panel rests upon the pallet and faces traffic.
8. Refer to Standard Plan A73B for marker details.
9. For shoulder widths less than 8'-0", appropriate approved crash cushion protection, other than sand filled modules, shall be provided at fixed objects and at approach ends of temporary railing. The specific type of crash cushion shall be as shown on the project plans or as specified in the Special Provisions, or if not shown on the project plans or specified in the Special Provisions, shall be as approved by the Engineer.
10. Approach speeds indicated conform to NCHRP 350 Report criteria.
11. Use of pallets is optional.

STATE OF CALIFORNIA
DEPARTMENT OF TRANSPORTATION

TEMPORARY CRASH CUSHION, SAND FILLED (SHOULDER INSTALLATIONS)

NO SCALE

RSP T2 DATED JUNE 6, 2008 SUPERSEDES STANDARD PLAN T2
DATED MAY 1, 2006 - PAGE 213 OF THE STANDARD PLANS BOOK DATED MAY 2006.

REVISED STANDARD PLAN RSP T2

2006 REVISED STANDARD PLAN RSP T2

5-15-08

Dist	COUNTY	ROUTE	POST MILES TOTAL PROJECT	SHEET No.	TOTAL SHEETS
02	Sis	96	R0.0/R12.0	137	143

Randell D. Hiatt
REGISTERED CIVIL ENGINEER

May 20, 2011
PLANS APPROVAL DATE

REGISTERED PROFESSIONAL ENGINEER
Randell D. Hiatt
No. C50200
Exp. 6-30-11
CIVIL
STATE OF CALIFORNIA

The State of California or its officers or agents shall not be responsible for the accuracy or completeness of electronic copies of this plan sheet.

To accompany plans dated 6-13-11

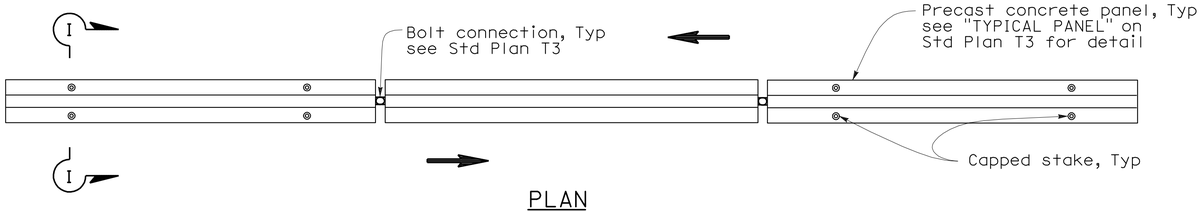

PLAN

RAILING STAKING CONFIGURATION FOR TWO-WAY TRAFFIC

See Note 1

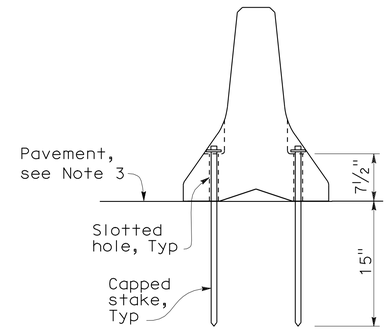

SECTION I-I

NOTES:

1. Where Type K Temporary Railing is placed as a temporary or long term barrier in two-way traffic on highways with less than 24" from the edge of traveled way, use four capped stakes per every other panel with end panels staked.
2. Where Type K Temporary Railing is placed 3" to 24" from the edge of an excavation on highways, use two capped stakes per panel along the traffic side.
3. Staked Type K Temporary Railing must be supported by at least 4" thick concrete, hot mix asphalt or existing asphalt concrete pavement.
4. The minimum yield strength for the washer must be 60,000 psi.
5. Direction of adjacent traffic indicated by ⟹.

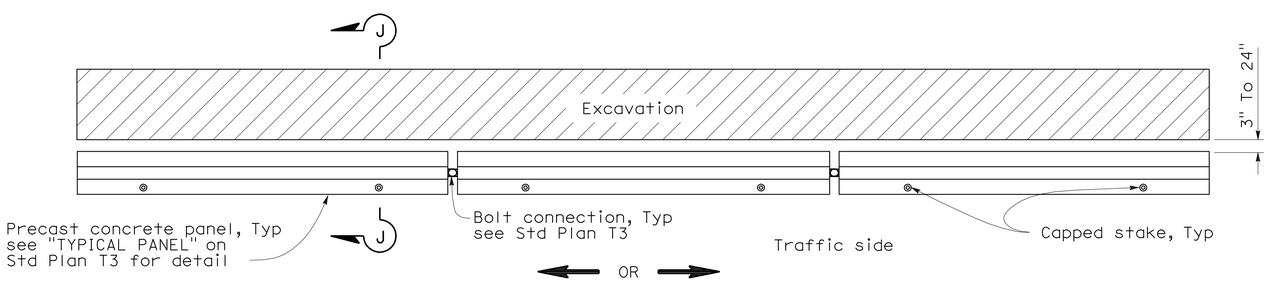

PLAN

RAILING STAKING CONFIGURATION ADJACENT TO AN EXCAVATION

See Note 2

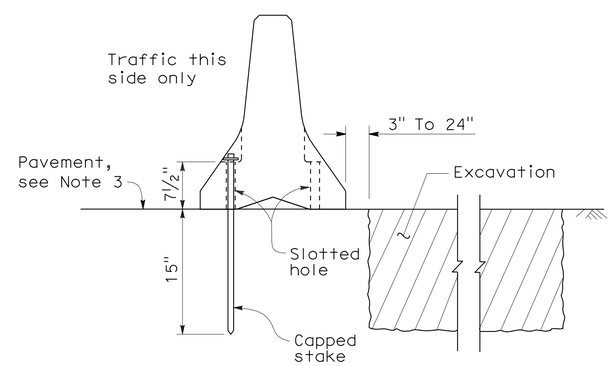

SECTION J-J

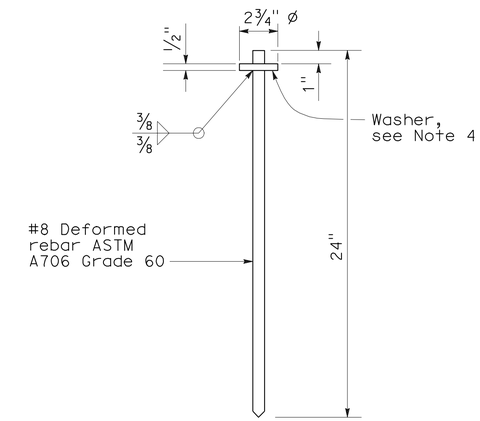

CAPPED STAKE DETAIL

STATE OF CALIFORNIA
DEPARTMENT OF TRANSPORTATION

TEMPORARY RAILING (TYPE K)

NO SCALE

NSP T3A DATED MAY 20, 2011 SUPPLEMENTS
THE STANDARD PLANS BOOK DATED MAY 2006.

NEW STANDARD PLAN NSP T3A

2006 NEW STANDARD PLAN NSP T3A

DIST	COUNTY	ROUTE	POST MILES TOTAL PROJECT	SHEET NO.	TOTAL SHEETS
02	Sis	96	R0.0/R12.0	138	143

LICENSED LANDSCAPE ARCHITECT

April 3, 2009
PLANS APPROVAL DATE

The State of California or its officers or agents shall not be responsible for the accuracy or completeness of electronic copies of this plan sheet.

LICENSED LANDSCAPE ARCHITECT — Robert B. Schott — Signature — 11-30-10 Renewal Date — 2-25-09 Date — STATE OF CALIFORNIA

To accompany plans dated 6-13-11

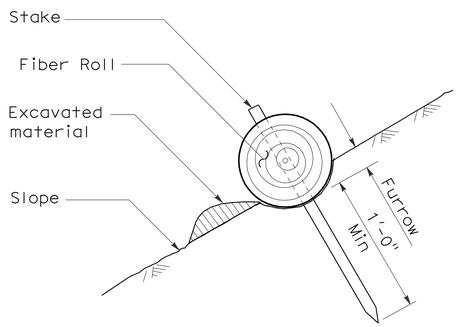

SECTION

TEMPORARY FIBER ROLL (TYPE 1)

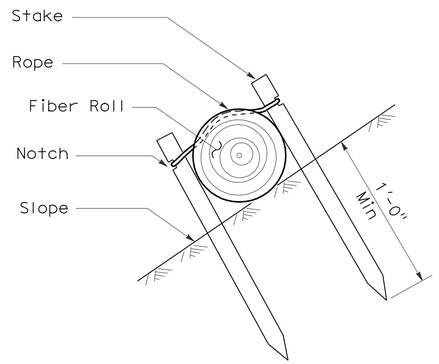

SECTION

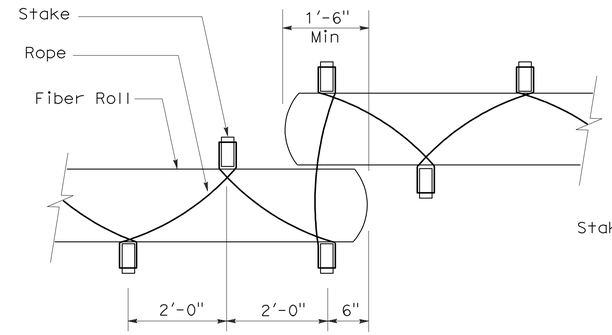

PLAN

TEMPORARY FIBER ROLL (TYPE 2)

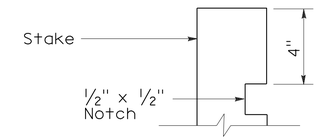

ELEVATION

STAKE NOTCH DETAIL

NOTES:

1. Temporary fiber roll spacing varies depending upon slope inclination.
2. Installations shown in the perspectives are for slope inclination of 10:1 and steeper.

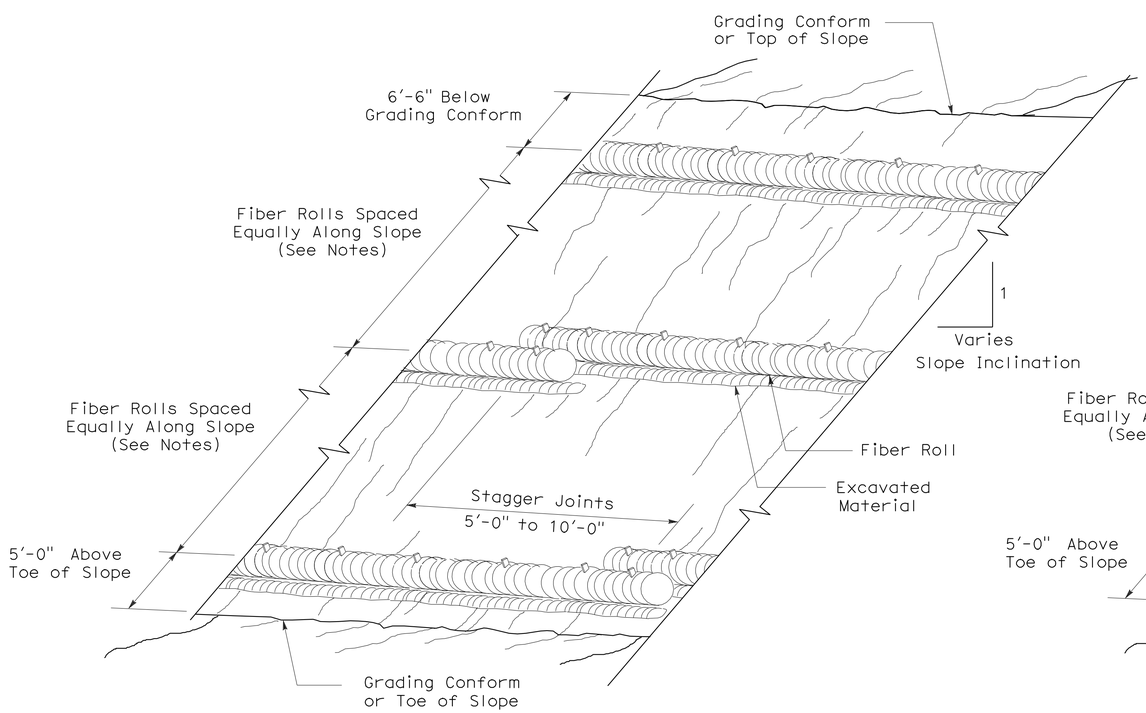

PERSPECTIVE

TEMPORARY FIBER ROLL (TYPE 1)

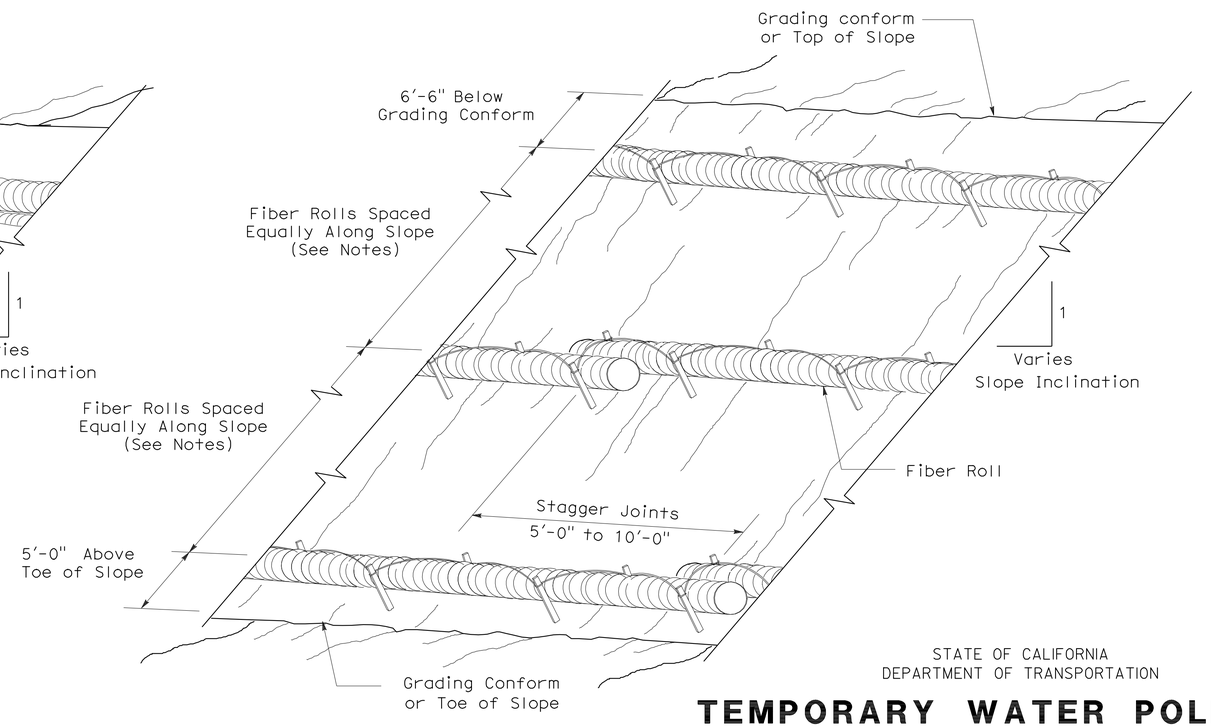

PERSPECTIVE

TEMPORARY FIBER ROLL (TYPE 2)

STATE OF CALIFORNIA
DEPARTMENT OF TRANSPORTATION

TEMPORARY WATER POLLUTION CONTROL DETAILS (TEMPORARY FIBER ROLL)

NO SCALE

RSP T56 DATED APRIL 3, 2009 SUPERSEDES STANDARD PLAN T56
DATED MAY 1, 2006 - PAGE 232 OF THE STANDARD PLANS BOOK DATED MAY 2006.

REVISED STANDARD PLAN RSP T56

2006 REVISED STANDARD PLAN RSP T56

2-23-09

DIST	COUNTY	ROUTE	POST MILES TOTAL PROJECT	SHEET NO.	TOTAL SHEETS
02	Sis	96	R0.0/R12.0	139	143

LICENSED LANDSCAPE ARCHITECT

August 15, 2008
PLANS Approval DATE

The State of California or its officers or agents shall not be responsible for the accuracy or completeness of electronic copies of this plan sheet.

LICENSED LANDSCAPE ARCHITECT Robert B. Schott 3625 Signature 11-04-08 Renewal Date 08-11-08 Date STATE OF CALIFORNIA

To accompany plans dated 6-13-11

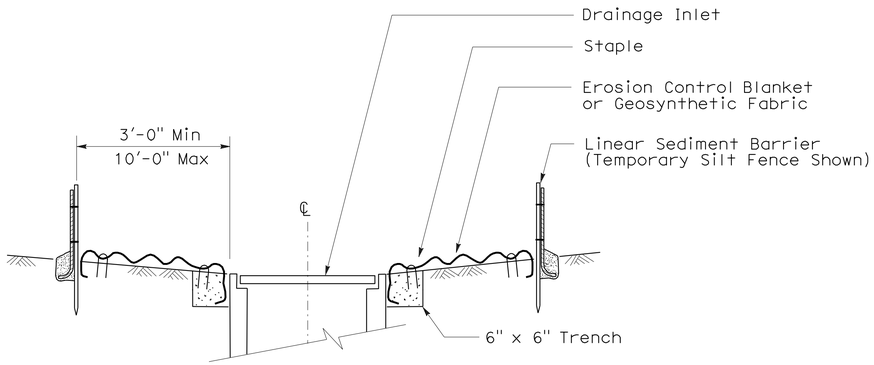

SECTION A-A

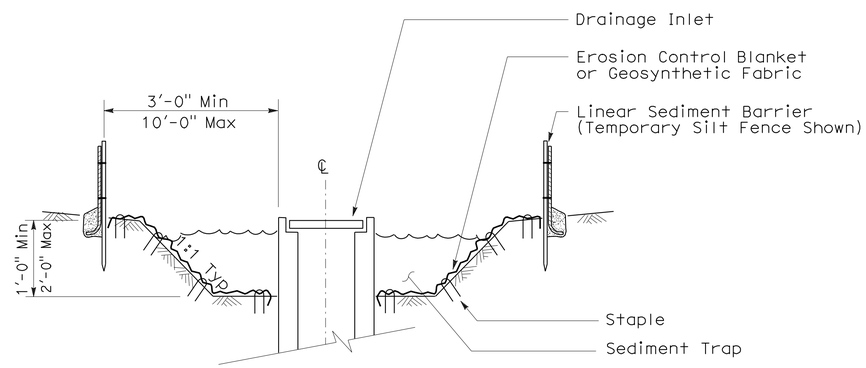

SECTION B-B

NOTES:

1. See Standard Plan T51 for Temporary Silt Fence.
2. Dimensions may vary to fit field conditions.

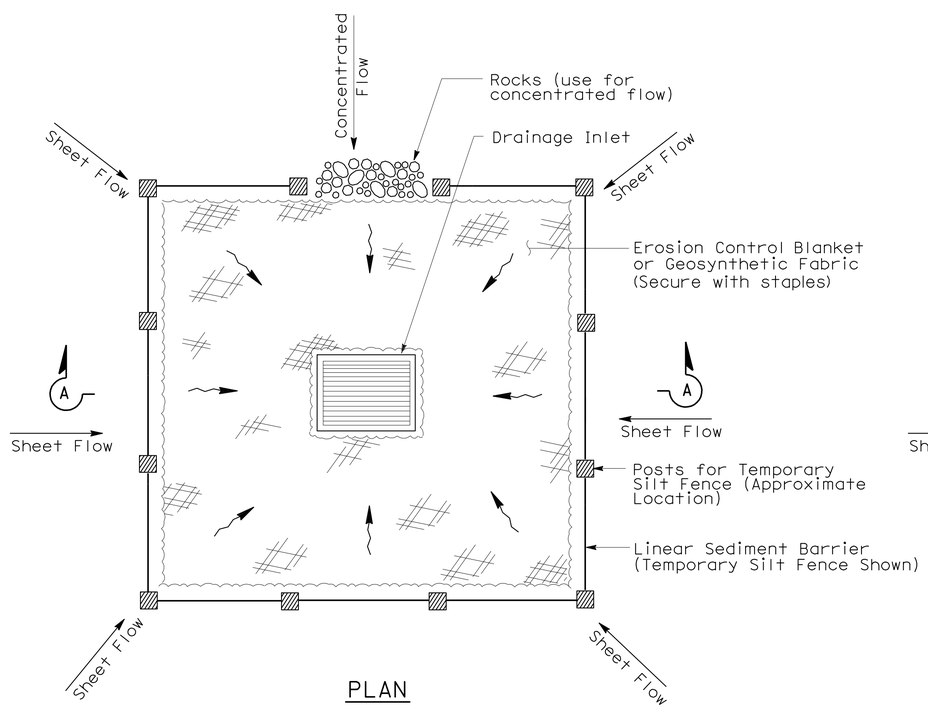

PLAN

TEMPORARY DRAINAGE INLET PROTECTION (TYPE 1)

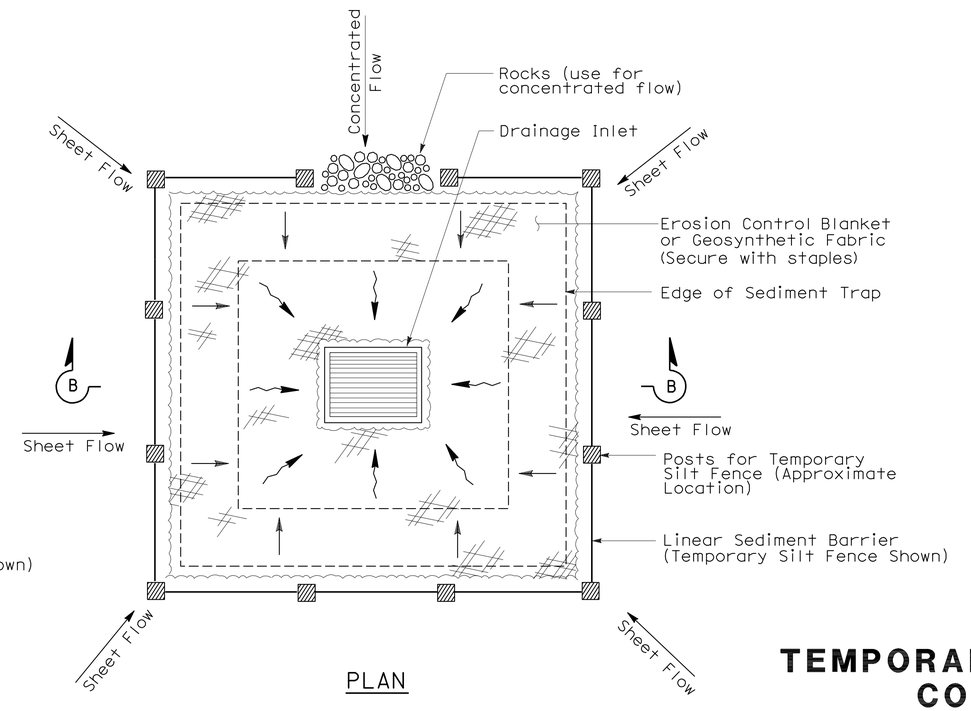

PLAN

TEMPORARY DRAINAGE INLET PROTECTION (TYPE 2) (EXCAVATED SEDIMENT TRAP)

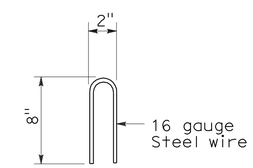

STAPLE DETAIL

STATE OF CALIFORNIA
DEPARTMENT OF TRANSPORTATION

TEMPORARY WATER POLLUTION CONTROL DETAILS (TEMPORARY DRAINAGE INLET PROTECTION)

NO SCALE

NSP T61 DATED AUGUST 15, 2008 SUPPLEMENTS THE STANDARD PLANS BOOK DATED MAY 2006.

NEW STANDARD PLAN NSP T61

2006 NEW STANDARD PLAN NSP T61

7-11-08

DIST	COUNTY	ROUTE	POST MILES TOTAL PROJECT	SHEET NO.	TOTAL SHEETS
02	Sis	96	R0.0/R12.0	140	143

LICENSED LANDSCAPE ARCHITECT

August 15, 2008
PLANS APPROVAL DATE

LICENSED LANDSCAPE ARCHITECT — Robert B. Schott — Signature — 11-04-08 Renewal Date — 08-11-08 Date — STATE OF CALIFORNIA

The State of California or its officers or agents shall not be responsible for the accuracy or completeness of electronic copies of this plan sheet.

To accompany plans dated 6-13-11

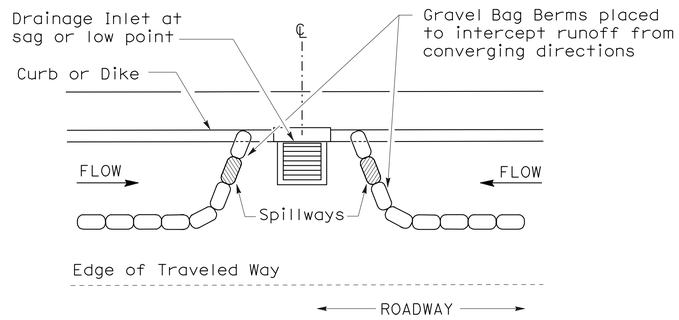

PLAN

CONFIGURATION FOR SAG POINT INLET (GRAVEL BAG BERM)

GRAVEL BAG BERM (TYPE 3A) SPACING TABLE

SLOPE OF ROADWAY (PERCENT)	1 to 3.9	4 to 5.9	6 to 7.9	8 to 10	10+
INTERVAL BETWEEN BERM	100′	75′	50′	25′	12′

For slope of less than 1%, install barriers only if erosion/sediment is prevalent

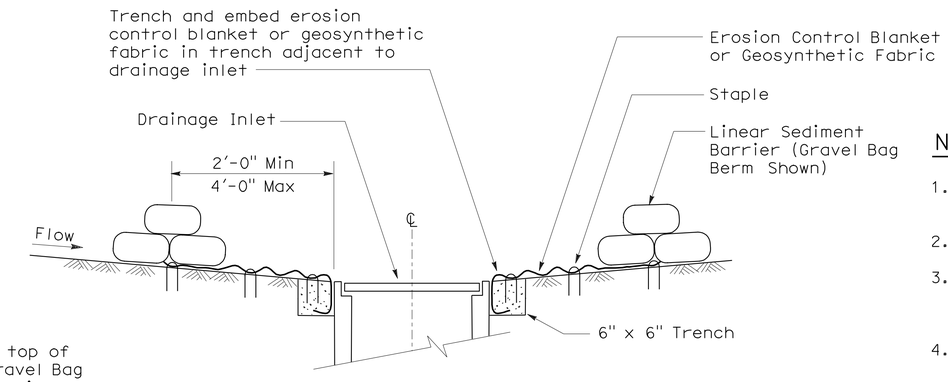

SECTION A-A

NOTES:

1. Place safety cones adjacent to drainage inlet protection.
2. Dimensions may vary to fit field conditions.
3. Install a minimum of 3 gravel bag berms upstream of each drainage inlet to be protected.
4. Position erosion control blanket or geosynthetic fabric at edge of concrete apron and secure in trench.
5. Erosion control blanket or geosynthetic fabric is not required if the area adjacent to the drainage inlet is vegetated or paved.

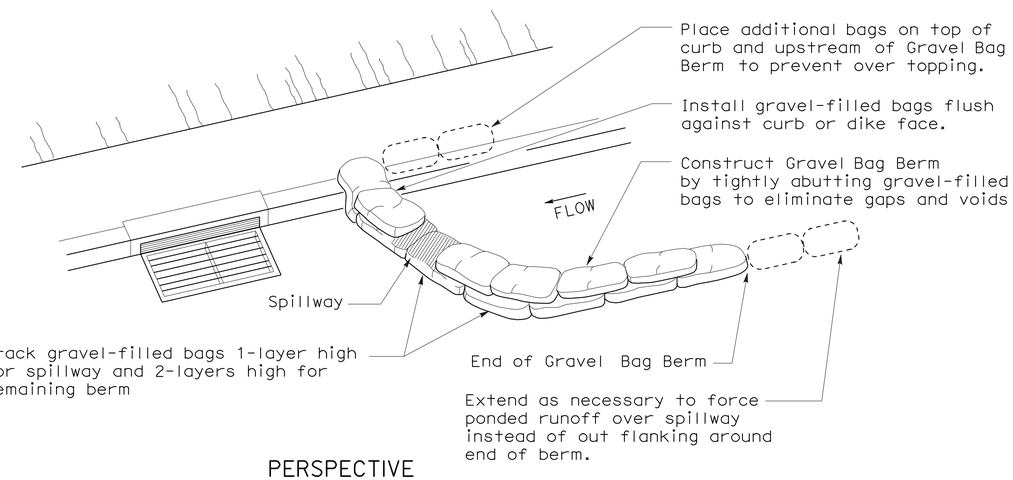

PERSPECTIVE

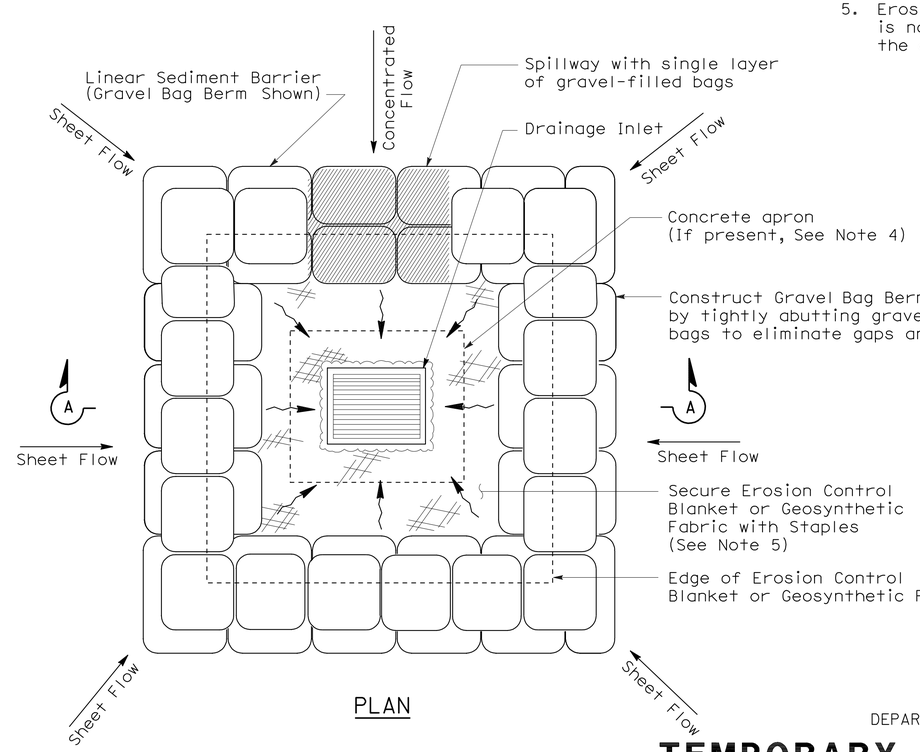

PLAN

TEMPORARY DRAINAGE INLET PROTECTION (TYPE 3B)

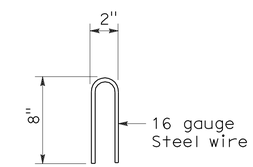

STAPLE DETAIL

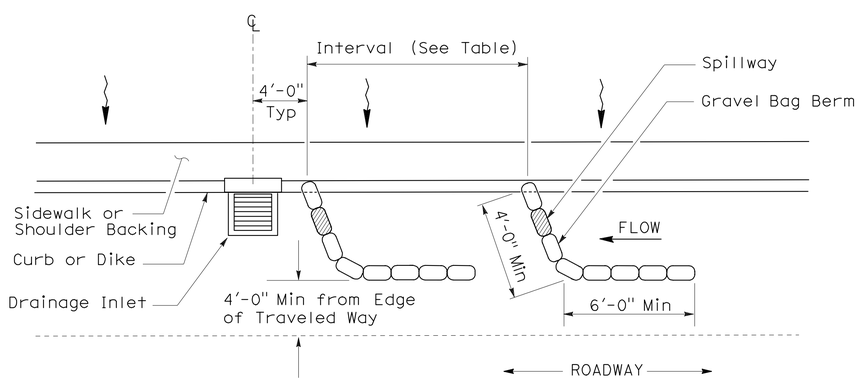

PLAN

TEMPORARY DRAINAGE INLET PROTECTION (TYPE 3A) (GRAVEL BAG BERM)

STATE OF CALIFORNIA
DEPARTMENT OF TRANSPORTATION

TEMPORARY WATER POLLUTION CONTROL DETAILS (TEMPORARY DRAINAGE INLET PROTECTION)

NO SCALE

NSP T62 DATED AUGUST 15, 2008 SUPPLEMENTS THE STANDARD PLANS BOOK DATED MAY 2006.

NEW STANDARD PLAN NSP T62

2006 NEW STANDARD PLAN NSP T62

7-11-08

DIST	COUNTY	ROUTE	POST MILES TOTAL PROJECT	SHEET NO.	TOTAL SHEETS
02	Sis	96	R0.0/R12.0	141	143

Robert B Schott
LICENSED LANDSCAPE ARCHITECT

August 15, 2008
PLANS APPROVAL DATE

The State of California or its officers or agents shall not be responsible for the accuracy or completeness of electronic copies of this plan sheet.

LICENSED LANDSCAPE ARCHITECT Robert B. Schott 3625 Signature 11-04-08 Renewal Date 08-11-08 Date STATE OF CALIFORNIA

To accompany plans dated 6-13-11

FLEXIBLE SEDIMENT BARRIER SPACING TABLE

SLOPE OF ROADWAY (PERCENT)	0 to 0.9	1 to 1.9	2 to 2.9	3 to 4	5+
INTERVAL BETWEEN BARRIERS	50′	35′	30′	25′	20′
ANGLE FROM FACE OF CURB	70°	70°	70°	45°	45°
SUGGESTED BARRIER LENGTH	6′	6′	6′	6′	6′

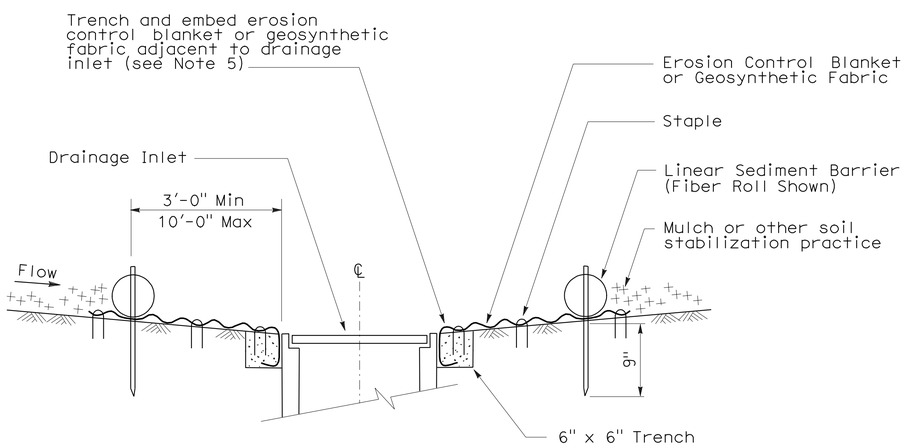

SECTION A-A

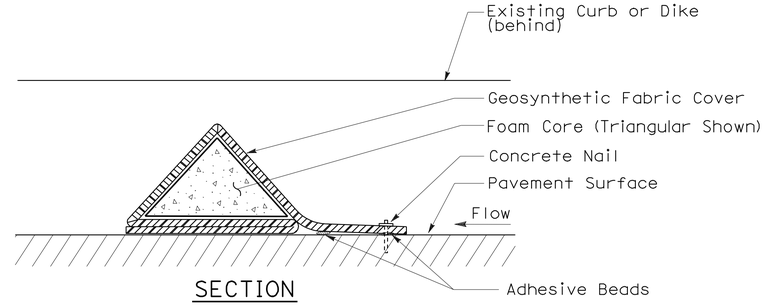

SECTION

FLEXIBLE SEDIMENT BARRIER DETAIL (FOAM BARRIER SHOWN)

NOTES:

1. See Standard Plan T51 for Temporary Silt Fence.
2. Dimensions may vary to fit field conditions.
3. Install a minimum of 3 flexible sediment barriers upstream of each drainage inlet to be protected.
4. Position erosion control blanket or geosynthetic fabric at edge of concrete apron and secure in trench.
5. Erosion control blanket or geosynthetic fabric is not required if the area adjacent to the drainage inlet is vegetated.

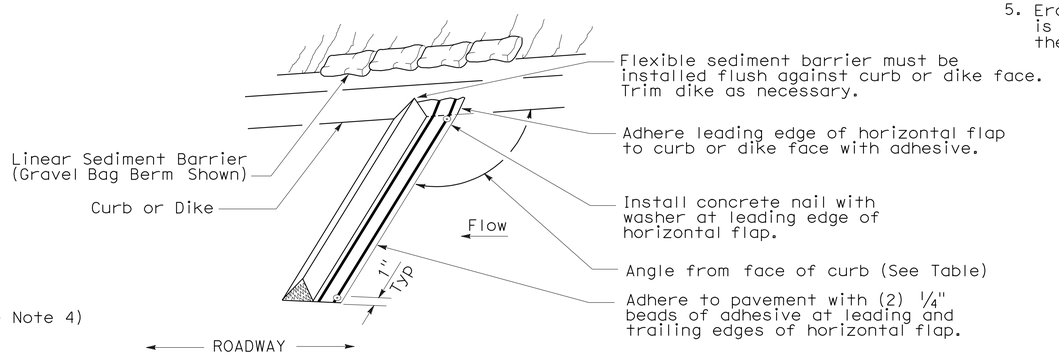

PERSPECTIVE

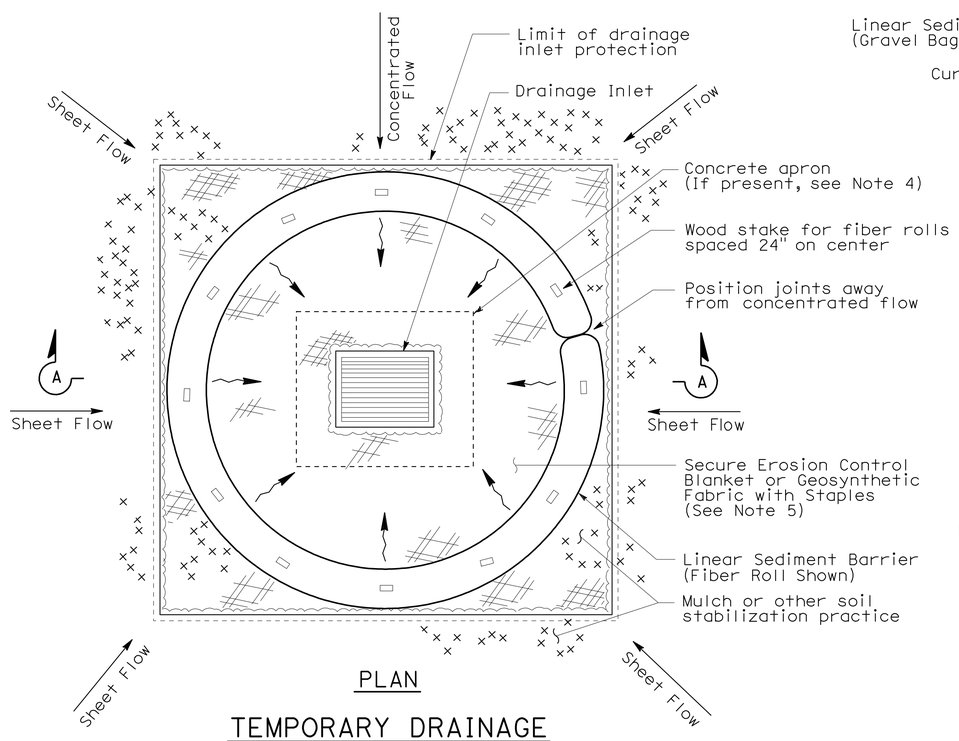

PLAN

TEMPORARY DRAINAGE INLET PROTECTION (TYPE 4A)

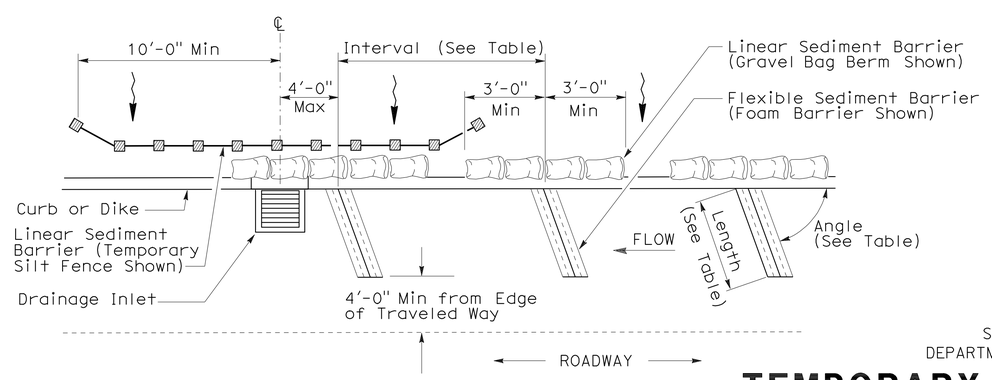

PLAN

TEMPORARY DRAINAGE INLET PROTECTION (TYPE 4B) FLEXIBLE SEDIMENT BARRIER

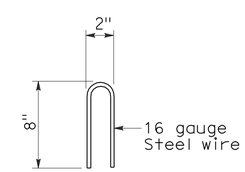

STAPLE DETAIL

STATE OF CALIFORNIA
DEPARTMENT OF TRANSPORTATION

TEMPORARY WATER POLLUTION CONTROL DETAILS (TEMPORARY DRAINAGE INLET PROTECTION)

NO SCALE

NSP T63 DATED AUGUST 15, 2008 SUPPLEMENTS THE STANDARD PLANS BOOK DATED MAY 2006.

NEW STANDARD PLAN NSP T63

2006 NEW STANDARD PLAN NSP T63

7-11-08

DIST	COUNTY	ROUTE	POST MILES TOTAL PROJECT	SHEET NO.	TOTAL SHEETS
02	Sis	96	R0.0/R12.0	142	143

LICENSED LANDSCAPE ARCHITECT

August 15, 2008
PLANS APPROVAL DATE

LICENSED LANDSCAPE ARCHITECT
Robert B. Schott 3625
Signature
11-04-08
Renewal Date
08-11-08
Date
STATE OF CALIFORNIA

The State of California or its officers or agents shall not be responsible for the accuracy or completeness of electronic copies of this plan sheet.

To accompany plans dated 6-13-11

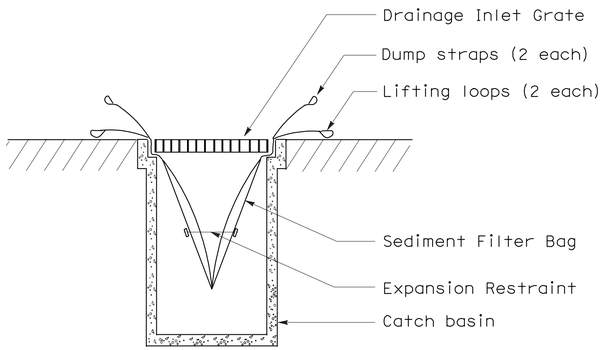

SECTION B-B

SEDIMENT FILTER BAG DETAIL

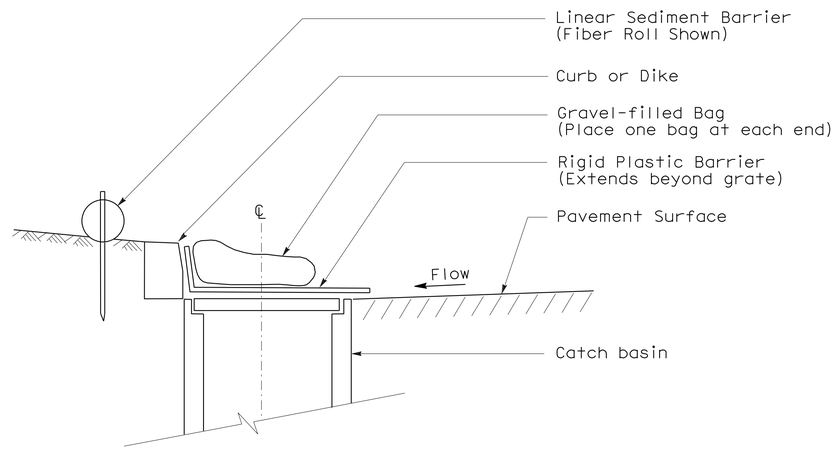

SECTION

TEMPORARY DRAINAGE INLET PROTECTION (TYPE 6A) (CATCH BASIN WITH GRATE)

NOTES:

1. See Standard Plan T51 for Temporary Silt Fence.
2. Dimensions may vary to fit field conditions.

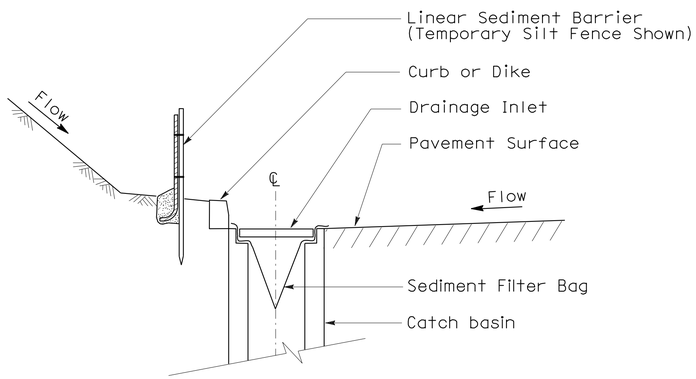

SECTION A-A

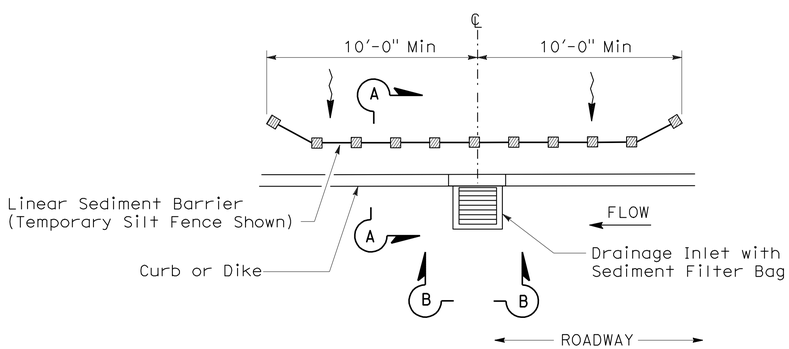

PLAN

TEMPORARY DRAINAGE INLET PROTECTION (TYPE 5) (SEDIMENT FILTER BAG)

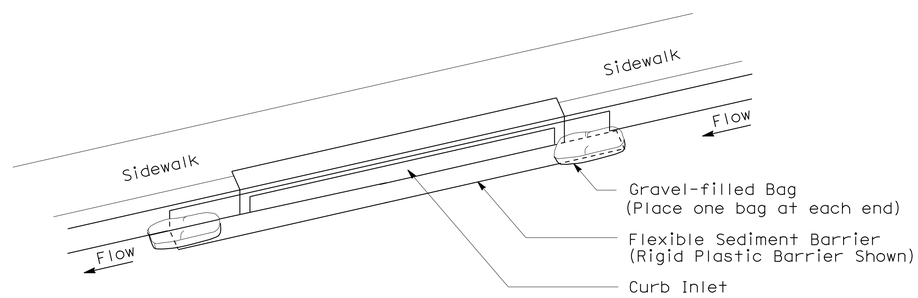

PERSPECTIVE

TEMPORARY DRAINAGE INLET PROTECTION (TYPE 6B) (CURB INLET WITHOUT GRATE)

STATE OF CALIFORNIA
DEPARTMENT OF TRANSPORTATION

TEMPORARY WATER POLLUTION CONTROL DETAILS (TEMPORARY DRAINAGE INLET PROTECTION)

NO SCALE

NSP T64 DATED AUGUST 15, 2008 SUPPLEMENTS
THE STANDARD PLANS BOOK DATED MAY 2006.

NEW STANDARD PLAN NSP T64

2006 NEW STANDARD PLAN NSP T64

7-11-08

DIST	COUNTY	ROUTE	POST MILES TOTAL PROJECT	SHEET NO.	TOTAL SHEETS
02	Sis	96	R0.0/R12.0	143	143

LICENSED LANDSCAPE ARCHITECT

April 3, 2009
PLANS APPROVAL DATE

The State of California or its officers or agents shall not be responsible for the accuracy or completeness of electronic copies of this plan sheet.

LICENSED LANDSCAPE ARCHITECT — Robert B. Schott 3025 — Signature — 11-30-10 Renewal Date — 2-25-09 Date — STATE OF CALIFORNIA

To accompany plans dated 6-13-11

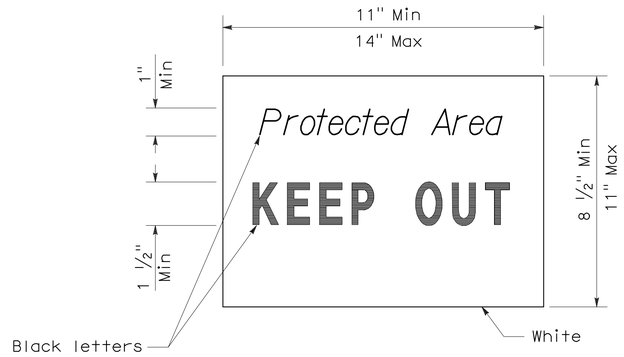

SIGN DETAIL

NOTE:

1. Temporary silt fence and temporary straw bale barrier shown for reference purposes only.

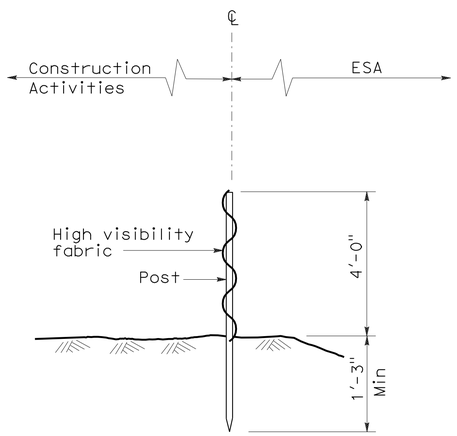

SECTION
TEMPORARY FENCE (TYPE ESA)

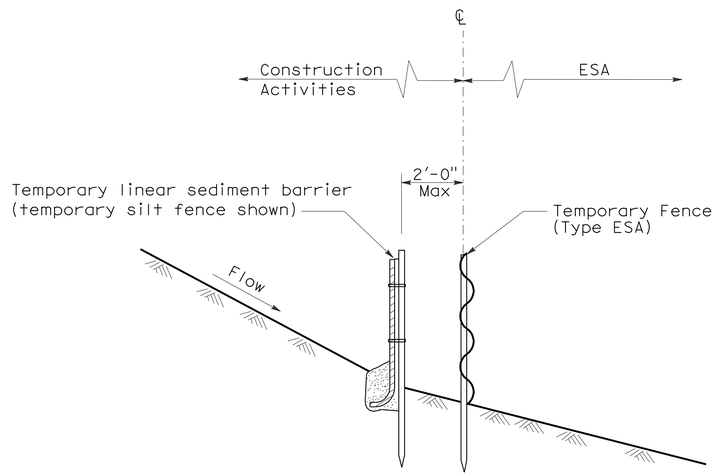

SECTION
PLACEMENT DETAIL
FOR TEMPORARY LINEAR SEDIMENT BARRIER
USED WITH TEMPORARY
FENCE (TYPE ESA)
(See Note 1)

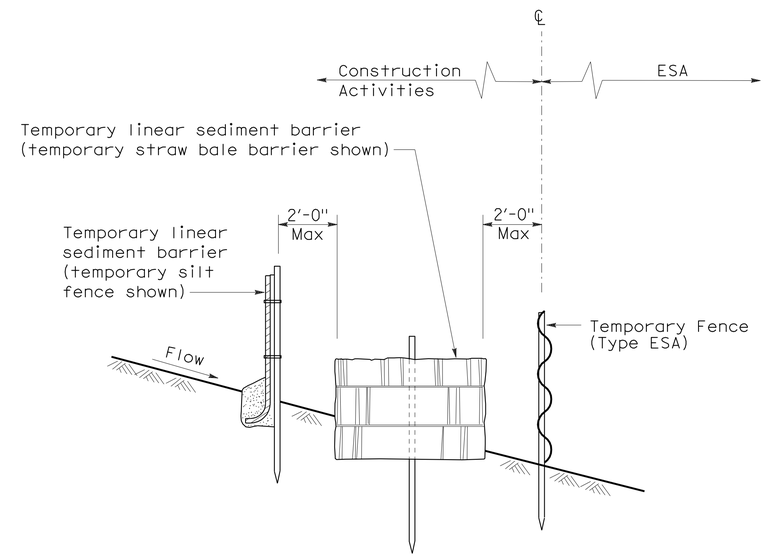

SECTION
PLACEMENT DETAIL
FOR TEMPORARY SILT FENCE
AND TEMPORARY STRAW BALE BARRIER
USED WITH TEMPORARY FENCE (TYPE ESA)
(See Note 1)

STATE OF CALIFORNIA
DEPARTMENT OF TRANSPORTATION

TEMPORARY WATER POLLUTION CONTROL DETAILS [TEMPORARY FENCE (TYPE ESA)]

NO SCALE

NSP T65 DATED APRIL 3, 2009 SUPPLEMENTS
THE STANDARD PLANS BOOK DATED MAY 2006.

NEW STANDARD PLAN NSP T65

2006 NEW STANDARD PLAN NSP T65