ACHSIMG-005-8(343)E

Dist	COUNTY	ROUTE	POST MILES TOTAL PROJECT	SHEET No.	TOTAL SHEETS
02	Sha	5	R8.5/R11.3	1	51

STATE OF CALIFORNIA

DEPARTMENT OF TRANSPORTATION

PROJECT PLANS FOR CONSTRUCTION ON

STATE HIGHWAY

IN SHASTA COUNTY
IN AND NEAR REDDING
FROM 1.3 MILES SOUTH OF KNIGHTON ROAD OVERCROSSING TO 0.5 MILE NORTH OF SMITH ROAD OVERCROSSING

TO BE SUPPLEMENTED BY STANDARD PLANS DATED MAY 2006

INDEX OF SHEETS

SHEET No.	DESCRIPTION
1	TITLE AND LOCATION MAP
2	TYPICAL CROSS SECTIONS
3-13	LAYOUTS
14-16	CONSTRUCTION DETAILS
17-29	DRAINAGE PROFILES, DETAILS AND QUANTITIES
30-31	CONSTRUCTION AREA SIGNS
32	SUMMARY OF QUANTITIES
33-34	MICROWAVE VIDEO DETECTION SYSTEM STANDARD
35-51	REVISED AND NEW STANDARD PLANS

THE STANDARD PLANS LIST APPLICABLE TO THIS CONTRACT IS INCLUDED IN THE NOTICE TO BIDDERS AND SPECIAL PROVISIONS BOOK.

LOCATION MAP

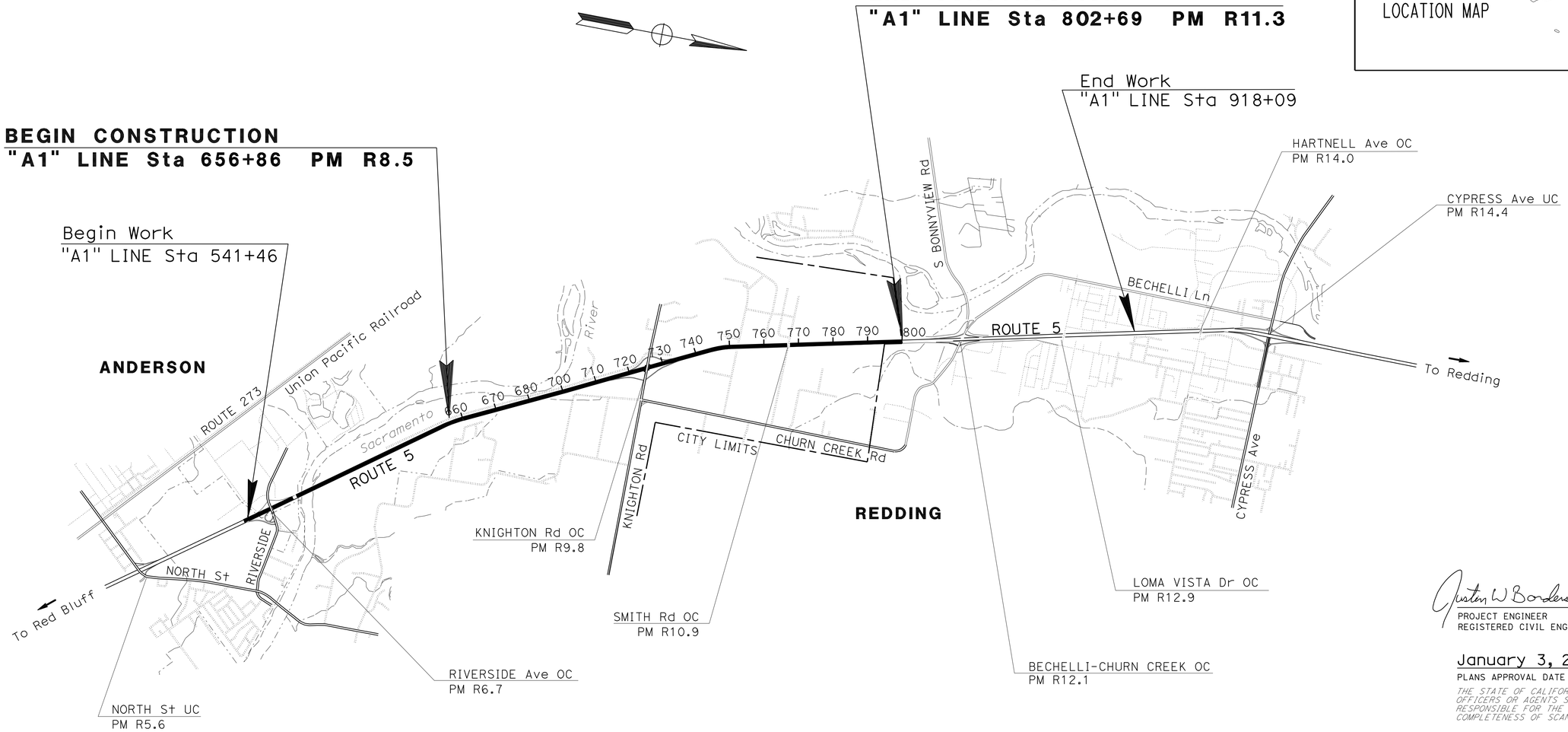

THE CONTRACTOR SHALL POSSESS THE CLASS (OR CLASSES) OF LICENSE AS SPECIFIED IN THE "NOTICE TO BIDDERS."

NO SCALE

Justin W Borders 12-07-10
PROJECT ENGINEER DATE
REGISTERED CIVIL ENGINEER

REGISTERED PROFESSIONAL ENGINEER JUSTIN W. BORDERS No. C65618 Exp. 6-30-12 CIVIL STATE OF CALIFORNIA

January 3, 2011
PLANS APPROVAL DATE

THE STATE OF CALIFORNIA OR ITS OFFICERS OR AGENTS SHALL NOT BE RESPONSIBLE FOR THE ACCURACY OR COMPLETENESS OF SCANNED COPIES OF THIS PLAN SHEET.

CONTRACT No.	02-2E2404
PROJECT ID	0200000207

PROJECT MANAGER: CHRIS HARVEY
DESIGN ENGINEER: AL TRUJILLO

P:\proj2\02\2E240_plans\pse\22e240ab001.dgn

LAST REVISION 08-30-10 | DATE PLOTTED => 16-FEB-2011 | TIME PLOTTED => 12:37

Dist	COUNTY	ROUTE	POST MILES TOTAL PROJECT	SHEET No.	TOTAL SHEETS
02	Sha	5	R8.5/R11.3	2	51

REGISTERED CIVIL ENGINEER 12-07-10 DATE

1-3-11
PLANS APPROVAL DATE

REGISTERED PROFESSIONAL ENGINEER JUSTIN W. BORDERS No. C65618 Exp. 6-30-12 CIVIL STATE OF CALIFORNIA

THE STATE OF CALIFORNIA OR ITS OFFICERS OR AGENTS SHALL NOT BE RESPONSIBLE FOR THE ACCURACY OR COMPLETENESS OF SCANNED COPIES OF THIS PLAN SHEET.

NOTES:

1. DIMENSIONS OF THE PAVEMENT STRUCTURES (STRUCTURAL SECTIONS) ARE SUBJECT TO TOLERANCES SPECIFIED IN THE STANDARD SPECIFICATIONS.
2. SUPERELEVATIONS AS SHOWN OR AS DETERMINED BY THE ENGINEER.

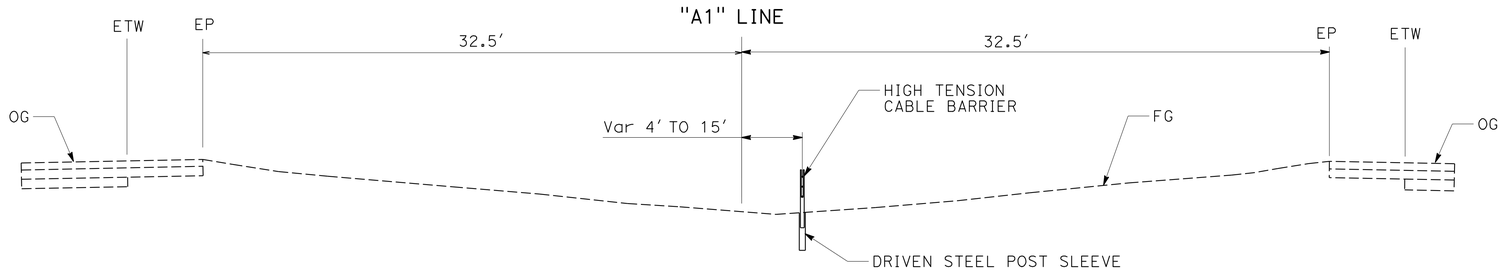

"A1" LINE Sta 762+00 TO Sta 802+69

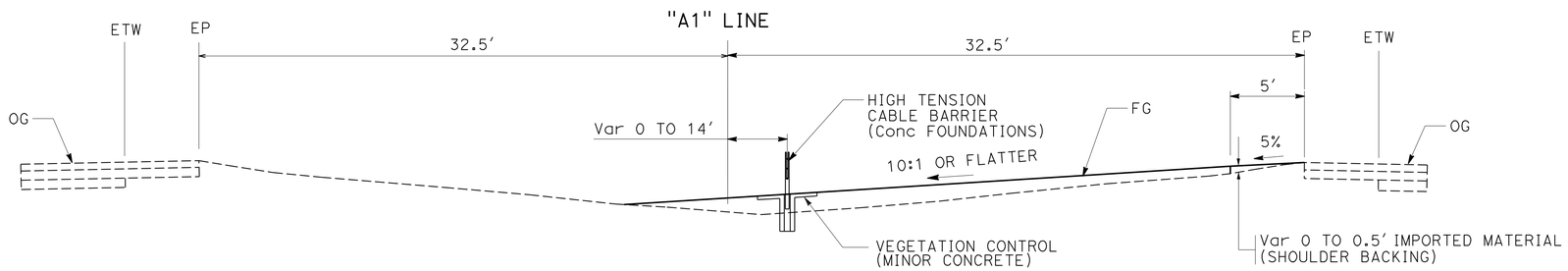

"A1" LINE Sta 665+50 TO Sta 762+00

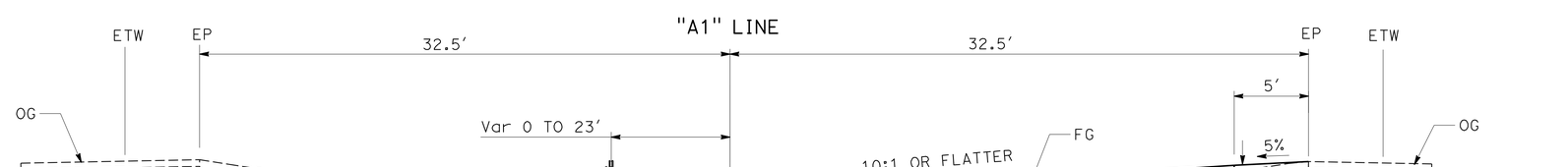

"A1" LINE Sta 656+85 TO Sta 665+50

ROUTE 5

TYPICAL CROSS SECTIONS

NO SCALE

X-1

REVISED BY | DATE REVISED
BILL LEHMAN | JUSTIN BORDERS
CALCULATED-DESIGNED BY | CHECKED BY
FUNCTIONAL SUPERVISOR
AL TRUJILLO

STATE OF CALIFORNIA - DEPARTMENT OF TRANSPORTATION
Caltrans
DESIGN

P:\proj2\02\2E240_plans\pse\22e240ca001.dgn

LAST REVISION 08-30-10 | DATE PLOTTED => 07-JAN-2011 | TIME PLOTTED => 11:41

Dist	COUNTY	ROUTE	POST MILES TOTAL PROJECT	SHEET No.	TOTAL SHEETS
02	Sha	5	R8.5/R11.3	3	51

REGISTERED CIVIL ENGINEER 12-07-10 DATE

1-3-11
PLANS APPROVAL DATE

REGISTERED PROFESSIONAL ENGINEER JUSTIN W. BORDERS No. C65618 Exp. 6-30-12 CIVIL STATE OF CALIFORNIA

THE STATE OF CALIFORNIA OR ITS OFFICERS OR AGENTS SHALL NOT BE RESPONSIBLE FOR THE ACCURACY OR COMPLETENESS OF SCANNED COPIES OF THIS PLAN SHEET.

NOTES:

1. FOR ACCURATE RIGHT OF WAY DATA, CONTACT RIGHT OF WAY ENGINEERING AT THE DISTRICT OFFICE.
2. EXISTING UTILITY FACILITIES HAVE NOT BEEN POSITIVELY LOCATED.

LEGEND:

- DIRECTION OF TRAVEL
- HIGH TENSION CABLE BARRIER
- MINOR HMA
- DRAINAGE SYSTEM No.
- DRAINAGE UNIT No.
- CULVERT MARKER (CABLE MOUNTED)
- OBJECT MARKER (TYPE L-2)

ABBREVIATIONS:

MVDS = MICROWAVE VIDEO DETECTION SYSTEM STANDARD

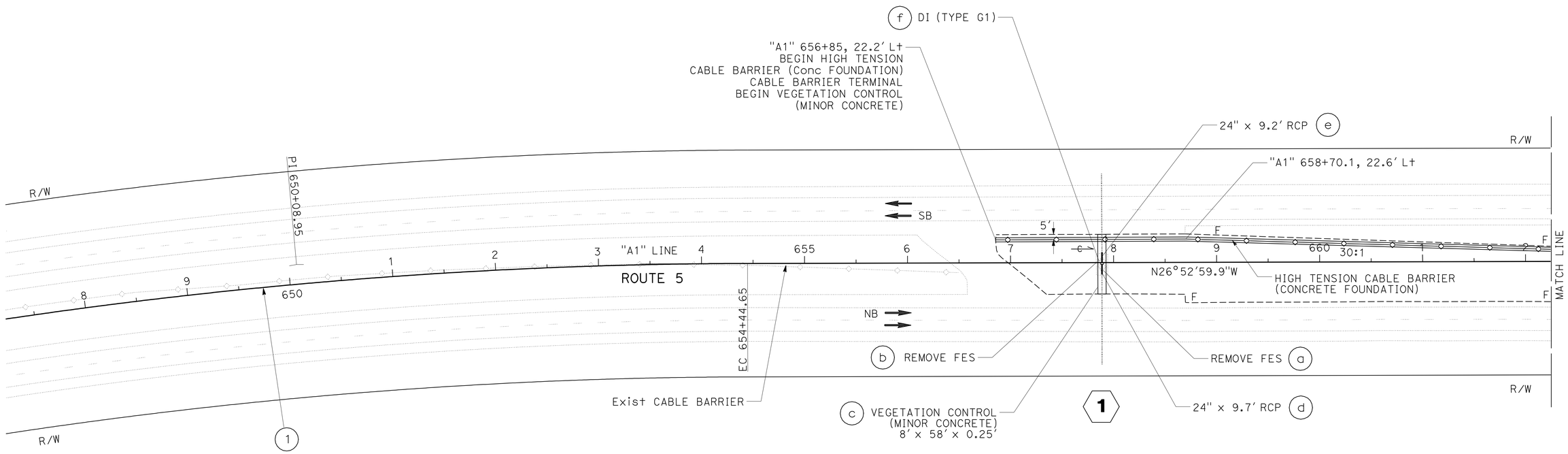

CURVE DATA

No. (H)	R	Δ	T	L
1	5000′	10°0′41"	437.93′	873.63′

LAYOUT

SCALE: 1" = 50′

L-1

BILL LEHMAN — REVISED BY
JUSTIN BORDERS — DATE REVISED
CALCULATED-DESIGNED BY
CHECKED BY
FUNCTIONAL SUPERVISOR
AL TRUJILLO

STATE OF CALIFORNIA - DEPARTMENT OF TRANSPORTATION
Caltrans
DESIGN

P:\proj2\02\2E240_plans\pse\22e240ea001.dgn

LAST REVISION 08-30-10 | DATE PLOTTED => 07-JAN-2011 | TIME PLOTTED => 11:38

Dist	COUNTY	ROUTE	POST MILES TOTAL PROJECT	SHEET No.	TOTAL SHEETS
02	Sha	5	R8.5/R11.3	4	51

REGISTERED CIVIL ENGINEER 12-07-10 DATE

1-3-11
PLANS APPROVAL DATE

REGISTERED PROFESSIONAL ENGINEER JUSTIN W. BORDERS No. C65618 Exp. 6-30-12 CIVIL STATE OF CALIFORNIA

THE STATE OF CALIFORNIA OR ITS OFFICERS OR AGENTS SHALL NOT BE RESPONSIBLE FOR THE ACCURACY OR COMPLETENESS OF SCANNED COPIES OF THIS PLAN SHEET.

NOTES:

1. FOR ACCURATE RIGHT OF WAY DATA, CONTACT RIGHT OF WAY ENGINEERING AT THE DISTRICT OFFICE.
2. EXISTING UTILITY FACILITIES HAVE NOT BEEN POSITIVELY LOCATED.

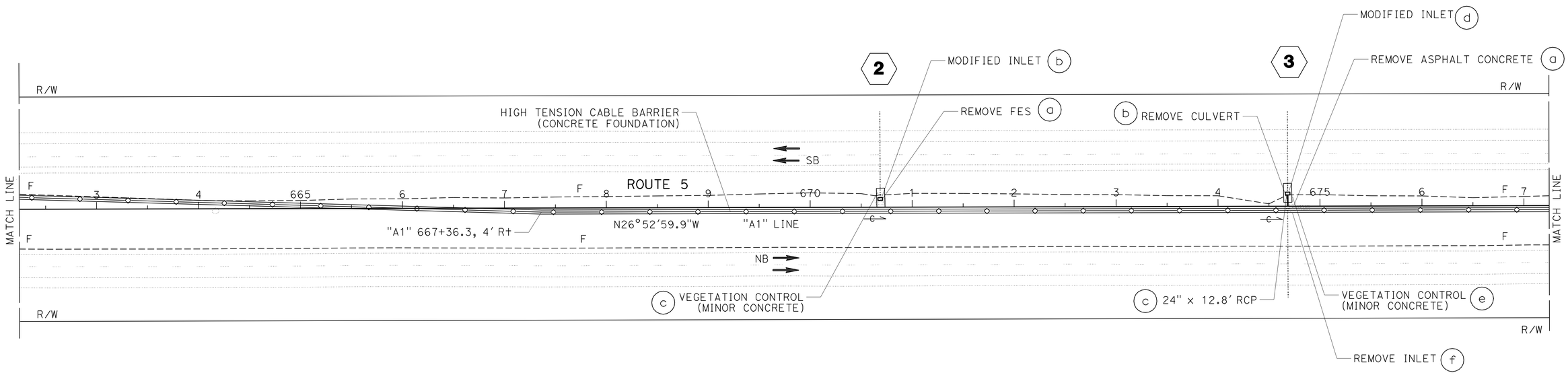

LAYOUT
SCALE: 1" = 50'

L-2

REVISED BY | DATE REVISED
BILL LEHMAN | JUSTIN BORDERS
CALCULATED-DESIGNED BY | CHECKED BY
FUNCTIONAL SUPERVISOR
AL TRUJILLO

STATE OF CALIFORNIA - DEPARTMENT OF TRANSPORTATION
Caltrans
DESIGN

P:\proj2\02\2E240_plans\pse\22e240ea002.dgn

LAST REVISION | DATE PLOTTED => 07-JAN-2011 | TIME PLOTTED => 11:38
08-30-10

Dist	COUNTY	ROUTE	POST MILES TOTAL PROJECT	SHEET No.	TOTAL SHEETS
02	Sha	5	R8.5/R11.3	5	51

Justin W Borders 12-07-10
REGISTERED CIVIL ENGINEER DATE

1-3-11
PLANS APPROVAL DATE

REGISTERED PROFESSIONAL ENGINEER
JUSTIN W. BORDERS
No. C65618
Exp. 6-30-12
CIVIL
STATE OF CALIFORNIA

THE STATE OF CALIFORNIA OR ITS OFFICERS OR AGENTS SHALL NOT BE RESPONSIBLE FOR THE ACCURACY OR COMPLETENESS OF SCANNED COPIES OF THIS PLAN SHEET.

NOTES:

1. FOR ACCURATE RIGHT OF WAY DATA, CONTACT RIGHT OF WAY ENGINEERING AT THE DISTRICT OFFICE.
2. EXISTING UTILITY FACILITIES HAVE NOT BEEN POSITIVELY LOCATED.

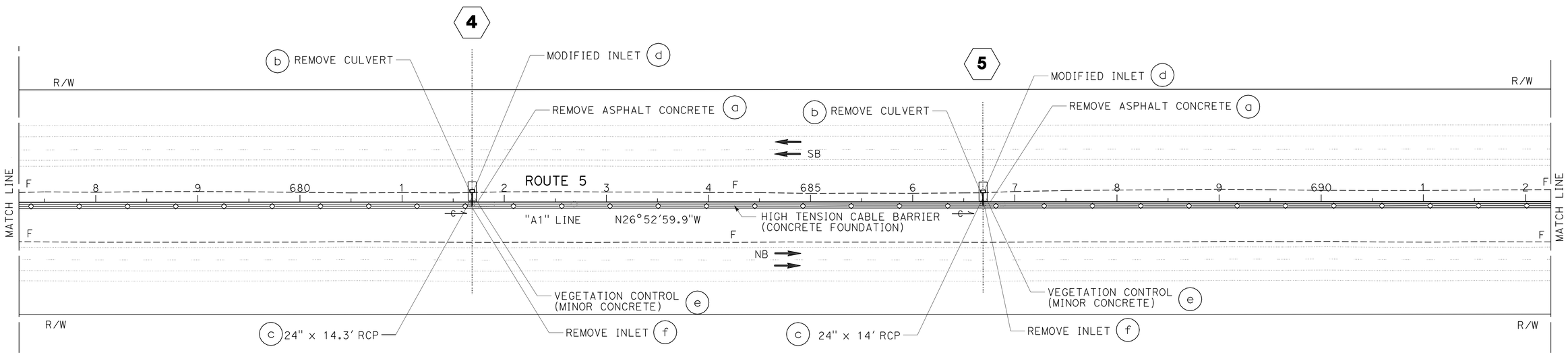

LAYOUT

SCALE: 1" = 50'

L-3

REVISED BY | DATE REVISED
BILL LEHMAN | JUSTIN BORDERS
CALCULATED-DESIGNED BY | CHECKED BY
FUNCTIONAL SUPERVISOR
AL TRUJILLO

STATE OF CALIFORNIA - DEPARTMENT OF TRANSPORTATION
Caltrans
DESIGN

P:\proj2\02\2E240_plans\pse\22e240ea003.dgn

LAST REVISION 08-30-10 | DATE PLOTTED => 07-JAN-2011 | TIME PLOTTED => 11:38

Dist	COUNTY	ROUTE	POST MILES TOTAL PROJECT	SHEET No.	TOTAL SHEETS
02	Sha	5	R8.5/R11.3	6	51

REGISTERED CIVIL ENGINEER 12-07-10 DATE

1-3-11
PLANS APPROVAL DATE

REGISTERED PROFESSIONAL ENGINEER JUSTIN W. BORDERS No. C65618 Exp. 6-30-12 CIVIL STATE OF CALIFORNIA

THE STATE OF CALIFORNIA OR ITS OFFICERS OR AGENTS SHALL NOT BE RESPONSIBLE FOR THE ACCURACY OR COMPLETENESS OF SCANNED COPIES OF THIS PLAN SHEET.

NOTES:

1. FOR ACCURATE RIGHT OF WAY DATA, CONTACT RIGHT OF WAY ENGINEERING AT THE DISTRICT OFFICE.
2. EXISTING UTILITY FACILITIES HAVE NOT BEEN POSITIVELY LOCATED.

SECTION A-A

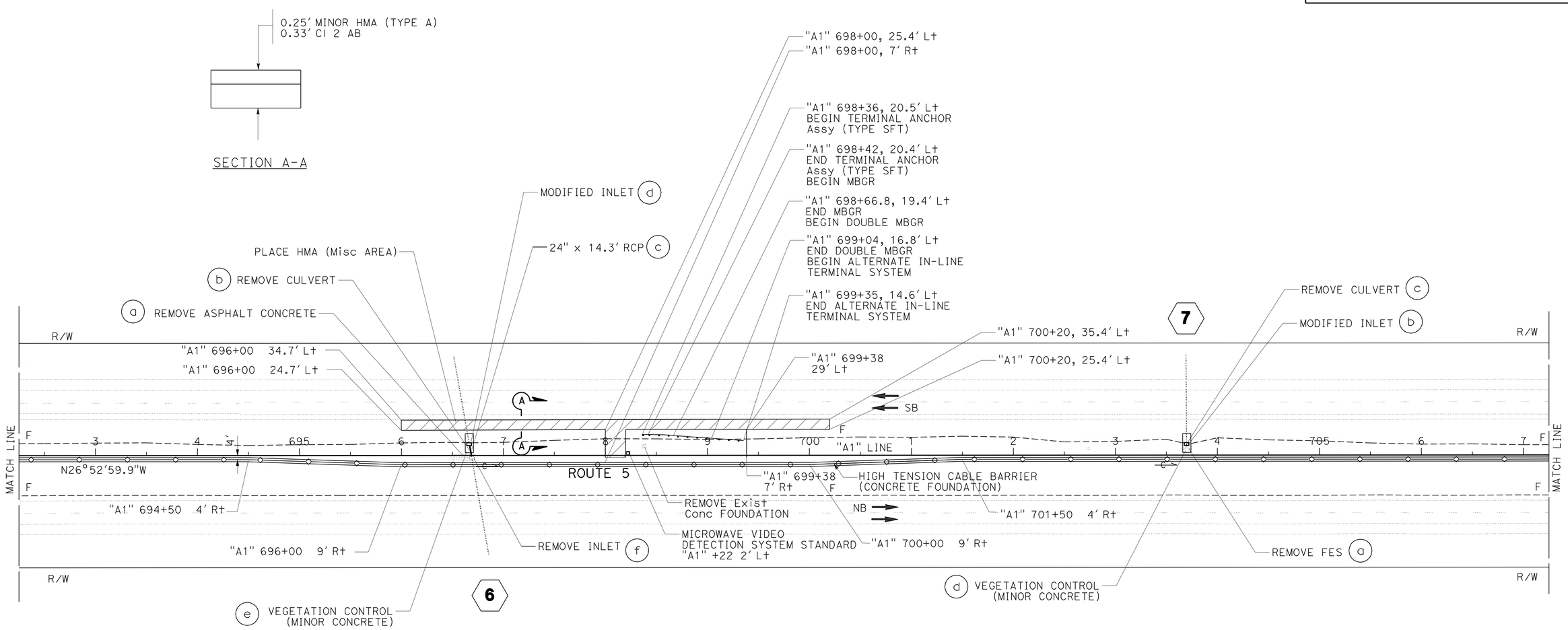

LAYOUT
SCALE: 1" = 50'

L-4

CALCULATED-DESIGNED BY	REVISED BY	DATE REVISED
CHECKED BY		

BILL LEHMAN — JUSTIN BORDERS — AL TRUJILLO

STATE OF CALIFORNIA - DEPARTMENT OF TRANSPORTATION
Caltrans
DESIGN

P:\proj2\02\2E240_plans\pse\22e240ea004.dgn

LAST REVISION 08-30-10 | DATE PLOTTED => 07-JAN-2011 | TIME PLOTTED => 11:38

Dist	COUNTY	ROUTE	POST MILES TOTAL PROJECT	SHEET No.	TOTAL SHEETS
02	Sha	5	R8.5/R11.3	7	51

Justin W Borders 12-07-10
REGISTERED CIVIL ENGINEER DATE

1-3-11
PLANS APPROVAL DATE

REGISTERED PROFESSIONAL ENGINEER
JUSTIN W. BORDERS
No. C65618
Exp. 6-30-12
CIVIL
STATE OF CALIFORNIA

THE STATE OF CALIFORNIA OR ITS OFFICERS OR AGENTS SHALL NOT BE RESPONSIBLE FOR THE ACCURACY OR COMPLETENESS OF SCANNED COPIES OF THIS PLAN SHEET.

NOTES:

1. FOR ACCURATE RIGHT OF WAY DATA, CONTACT RIGHT OF WAY ENGINEERING AT THE DISTRICT OFFICE.
2. EXISTING UTILITY FACILITIES HAVE NOT BEEN POSITIVELY LOCATED.

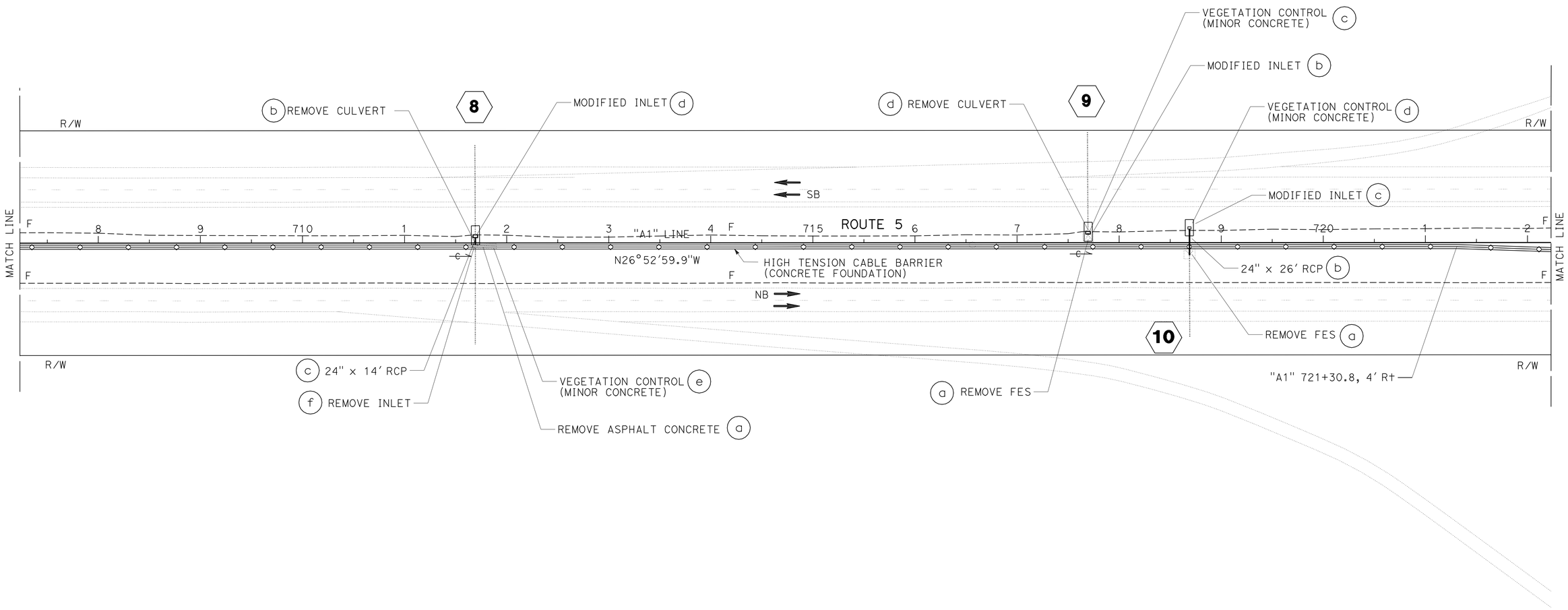

LAYOUT

SCALE: 1" = 50'

L-5

REVISED BY	DATE REVISED

CALCULATED-DESIGNED BY: BILL LEHMAN
CHECKED BY: JUSTIN BORDERS
FUNCTIONAL SUPERVISOR: AL TRUJILLO

STATE OF CALIFORNIA - DEPARTMENT OF TRANSPORTATION
Caltrans DESIGN

P:\proj2\02\2E240_plans\pse\22e240ea005.dgn

LAST REVISION 08-30-10 | DATE PLOTTED => 07-JAN-2011 | TIME PLOTTED => 11:39

Dist	COUNTY	ROUTE	POST MILES TOTAL PROJECT	SHEET No.	TOTAL SHEETS
02	Sha	5	R8.5/R11.3	8	51

REGISTERED CIVIL ENGINEER 12-07-10 DATE

1-3-11
PLANS APPROVAL DATE

REGISTERED PROFESSIONAL ENGINEER JUSTIN W. BORDERS No. C65618 Exp. 6-30-12 CIVIL STATE OF CALIFORNIA

THE STATE OF CALIFORNIA OR ITS OFFICERS OR AGENTS SHALL NOT BE RESPONSIBLE FOR THE ACCURACY OR COMPLETENESS OF SCANNED COPIES OF THIS PLAN SHEET.

NOTES:

1. FOR ACCURATE RIGHT OF WAY DATA, CONTACT RIGHT OF WAY ENGINEERING AT THE DISTRICT OFFICE.
2. EXISTING UTILITY FACILITIES HAVE NOT BEEN POSITIVELY LOCATED.

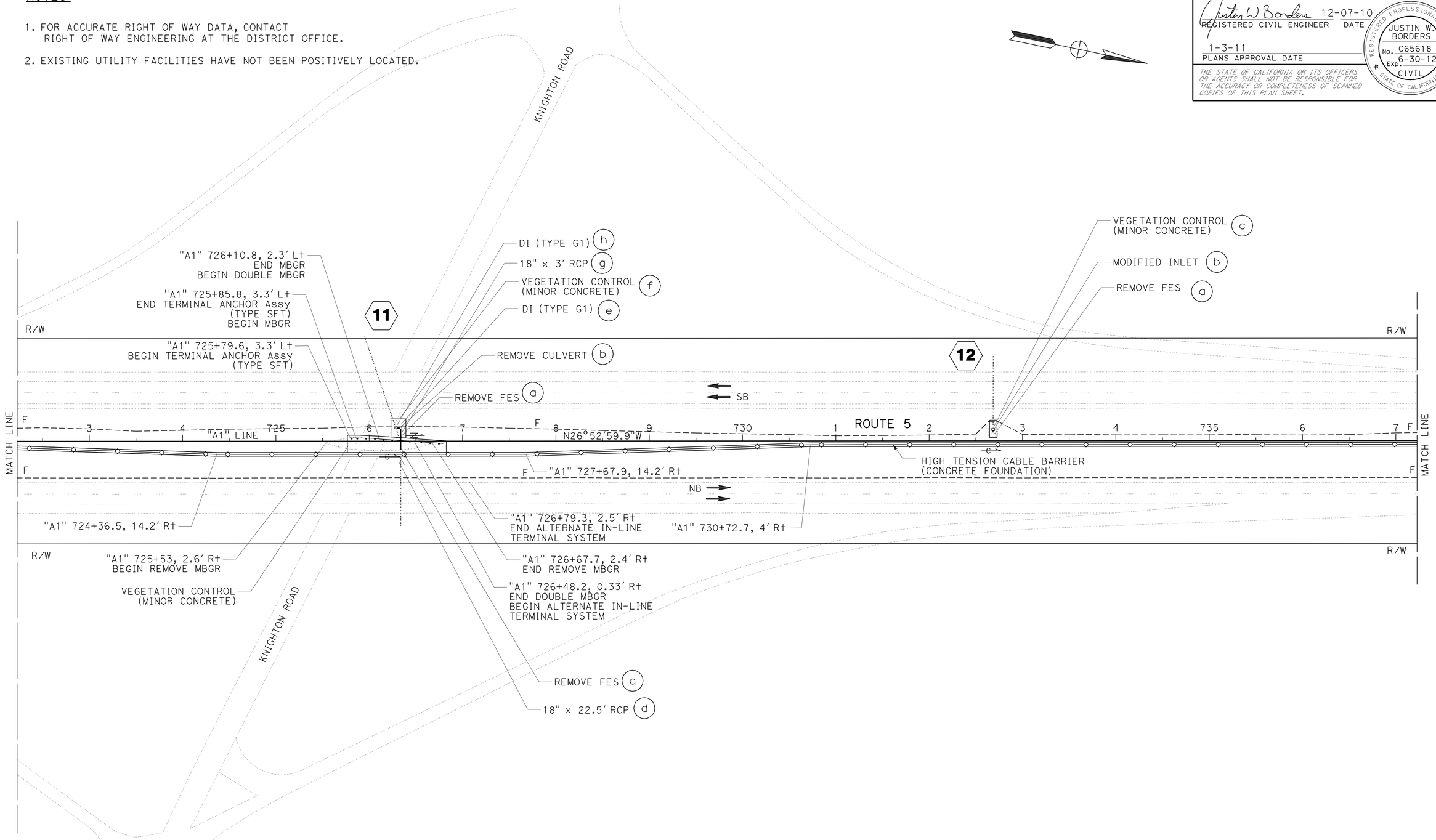

LAYOUT
SCALE: 1" = 50′

L-6

REVISED BY | DATE REVISED
BILL LEHMAN | JUSTIN BORDERS
CALCULATED-DESIGNED BY | CHECKED BY
FUNCTIONAL SUPERVISOR
AL TRUJILLO

STATE OF CALIFORNIA - DEPARTMENT OF TRANSPORTATION
Caltrans
DESIGN

P:\proj2\02\2E240_plans\pse\22e240ea006.dgn

LAST REVISION 08-30-10 | DATE PLOTTED => 07-JAN-2011 | TIME PLOTTED => 11:39

Dist	COUNTY	ROUTE	POST MILES TOTAL PROJECT	SHEET No.	TOTAL SHEETS
02	Sha	5	R8.5/R11.3	9	51

Justin W Borders 12-07-10
REGISTERED CIVIL ENGINEER DATE

1-3-11
PLANS APPROVAL DATE

REGISTERED PROFESSIONAL ENGINEER
JUSTIN W. BORDERS
No. C65618
Exp. 6-30-12
CIVIL
STATE OF CALIFORNIA

THE STATE OF CALIFORNIA OR ITS OFFICERS OR AGENTS SHALL NOT BE RESPONSIBLE FOR THE ACCURACY OR COMPLETENESS OF SCANNED COPIES OF THIS PLAN SHEET.

NOTES:

1. FOR ACCURATE RIGHT OF WAY DATA, CONTACT RIGHT OF WAY ENGINEERING AT THE DISTRICT OFFICE.
2. EXISTING UTILITY FACILITIES HAVE NOT BEEN POSITIVELY LOCATED.

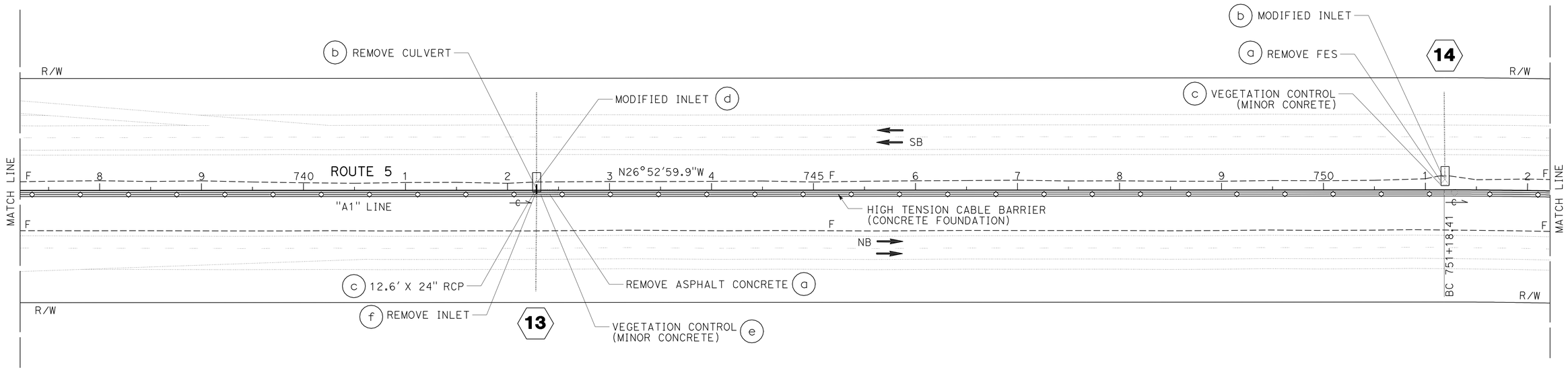

LAYOUT

SCALE: 1" = 50'

L-7

REVISED BY	DATE REVISED

CALCULATED-DESIGNED BY: BILL LEHMAN
CHECKED BY: JUSTIN BORDERS
FUNCTIONAL SUPERVISOR: AL TRUJILLO

STATE OF CALIFORNIA - DEPARTMENT OF TRANSPORTATION
Caltrans
DESIGN

P:\proj2\02\2E240_plans\pse\22e240ea007.dgn

LAST REVISION 08-30-10
DATE PLOTTED => 07-JAN-2011
TIME PLOTTED => 11:39

Dist	COUNTY	ROUTE	POST MILES TOTAL PROJECT	SHEET No.	TOTAL SHEETS
02	Sha	5	R8.5/R11.3	10	51

REGISTERED CIVIL ENGINEER 12-07-10 DATE

1-3-11
PLANS APPROVAL DATE

REGISTERED PROFESSIONAL ENGINEER JUSTIN W. BORDERS No. C65618 Exp. 6-30-12 CIVIL STATE OF CALIFORNIA

THE STATE OF CALIFORNIA OR ITS OFFICERS OR AGENTS SHALL NOT BE RESPONSIBLE FOR THE ACCURACY OR COMPLETENESS OF SCANNED COPIES OF THIS PLAN SHEET.

NOTES:

1. FOR ACCURATE RIGHT OF WAY DATA, CONTACT RIGHT OF WAY ENGINEERING AT THE DISTRICT OFFICE.
2. EXISTING UTILITY FACILITIES HAVE NOT BEEN POSITIVELY LOCATED.

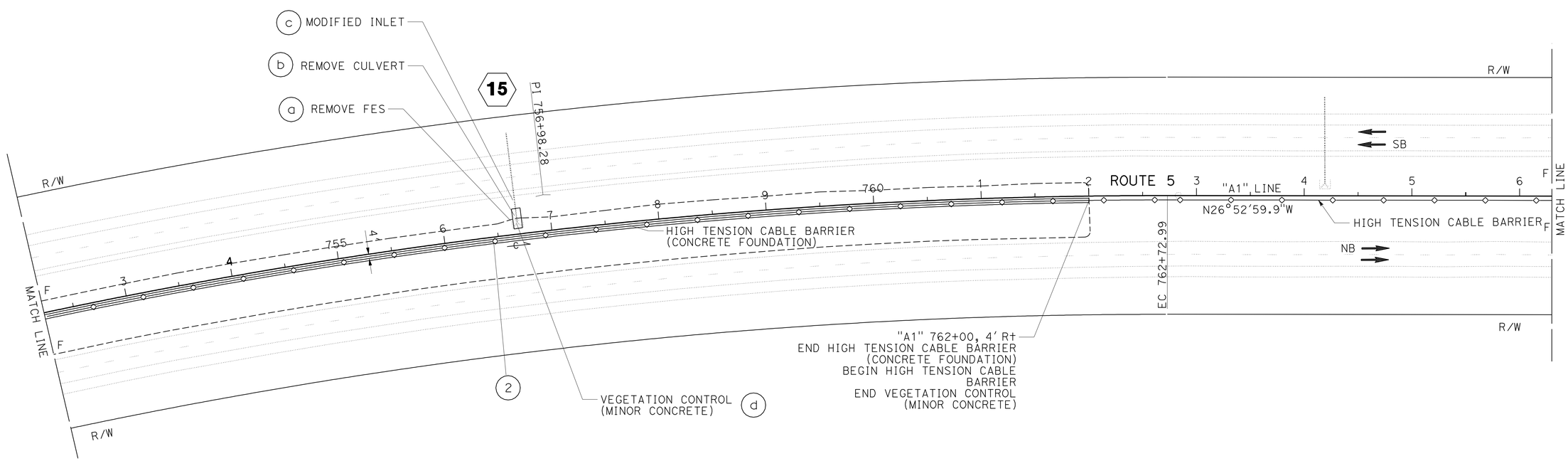

CURVE DATA

No. ⊛	R	Δ	T	L
2	5000'	13°13'49"	579.87'	1154.58'

LAYOUT

SCALE: 1" = 50'

L-8

BILL LEHMAN — REVISED BY
JUSTIN BORDERS — DATE REVISED
CALCULATED-DESIGNED BY
CHECKED BY
FUNCTIONAL SUPERVISOR
AL TRUJILLO

STATE OF CALIFORNIA - DEPARTMENT OF TRANSPORTATION
Caltrans
DESIGN

P:\proj2\02\2E240_plans\pse\22e240ea008.dgn

LAST REVISION 08-30-10
DATE PLOTTED => 07-JAN-2011
TIME PLOTTED => 10:11

Dist	COUNTY	ROUTE	POST MILES TOTAL PROJECT	SHEET No.	TOTAL SHEETS
02	Sha	5	R8.5/R11.3	11	51

Justin W Borders 12-07-10
REGISTERED CIVIL ENGINEER DATE

1-3-11
PLANS APPROVAL DATE

REGISTERED PROFESSIONAL ENGINEER
JUSTIN W. BORDERS
No. C65618
Exp. 6-30-12
CIVIL
STATE OF CALIFORNIA

THE STATE OF CALIFORNIA OR ITS OFFICERS OR AGENTS SHALL NOT BE RESPONSIBLE FOR THE ACCURACY OR COMPLETENESS OF SCANNED COPIES OF THIS PLAN SHEET.

NOTES:

1. FOR ACCURATE RIGHT OF WAY DATA, CONTACT RIGHT OF WAY ENGINEERING AT THE DISTRICT OFFICE.
2. EXISTING UTILITY FACILITIES HAVE NOT BEEN POSITIVELY LOCATED.

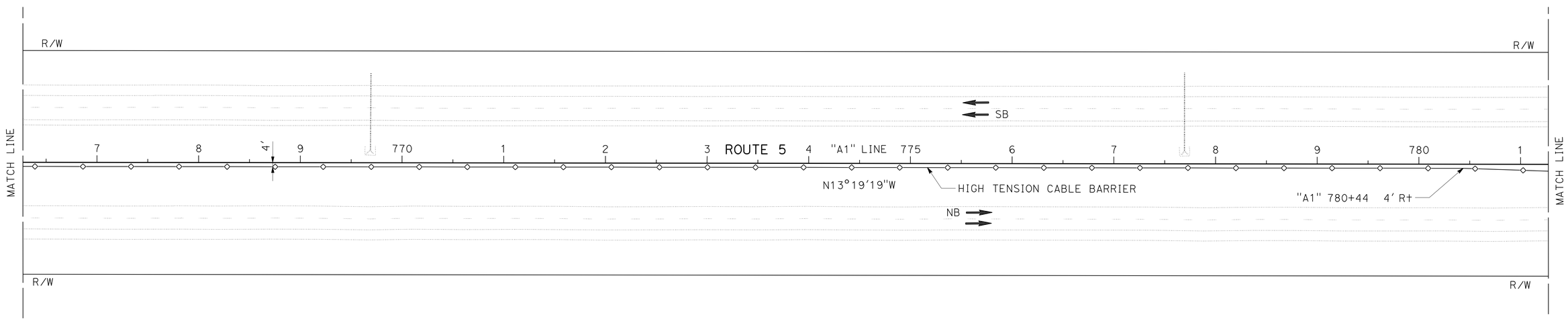

LAYOUT

SCALE: 1" = 50'

L-9

REVISED BY	DATE REVISED

CALCULATED-DESIGNED BY	CHECKED BY
BILL LEHMAN	JUSTIN BORDERS

FUNCTIONAL SUPERVISOR: AL TRUJILLO

STATE OF CALIFORNIA - DEPARTMENT OF TRANSPORTATION

Caltrans® DESIGN

P:\proj2\02\2E240_plans\pse\22e240ea009.dgn

LAST REVISION 08-30-10 | DATE PLOTTED => 07-JAN-2011 | TIME PLOTTED => 10:11

Dist	COUNTY	ROUTE	POST MILES TOTAL PROJECT	SHEET No.	TOTAL SHEETS
02	Sha	5	R8.5/R11.3	12	51

Justin W Borders 12-07-10
REGISTERED CIVIL ENGINEER DATE

1-3-11
PLANS APPROVAL DATE

REGISTERED PROFESSIONAL ENGINEER
JUSTIN W. BORDERS
No. C65618
Exp. 6-30-12
CIVIL
STATE OF CALIFORNIA

THE STATE OF CALIFORNIA OR ITS OFFICERS OR AGENTS SHALL NOT BE RESPONSIBLE FOR THE ACCURACY OR COMPLETENESS OF SCANNED COPIES OF THIS PLAN SHEET.

NOTES:

1. FOR ACCURATE RIGHT OF WAY DATA, CONTACT RIGHT OF WAY ENGINEERING AT THE DISTRICT OFFICE.
2. EXISTING UTILITY FACILITIES HAVE NOT BEEN POSITIVELY LOCATED.

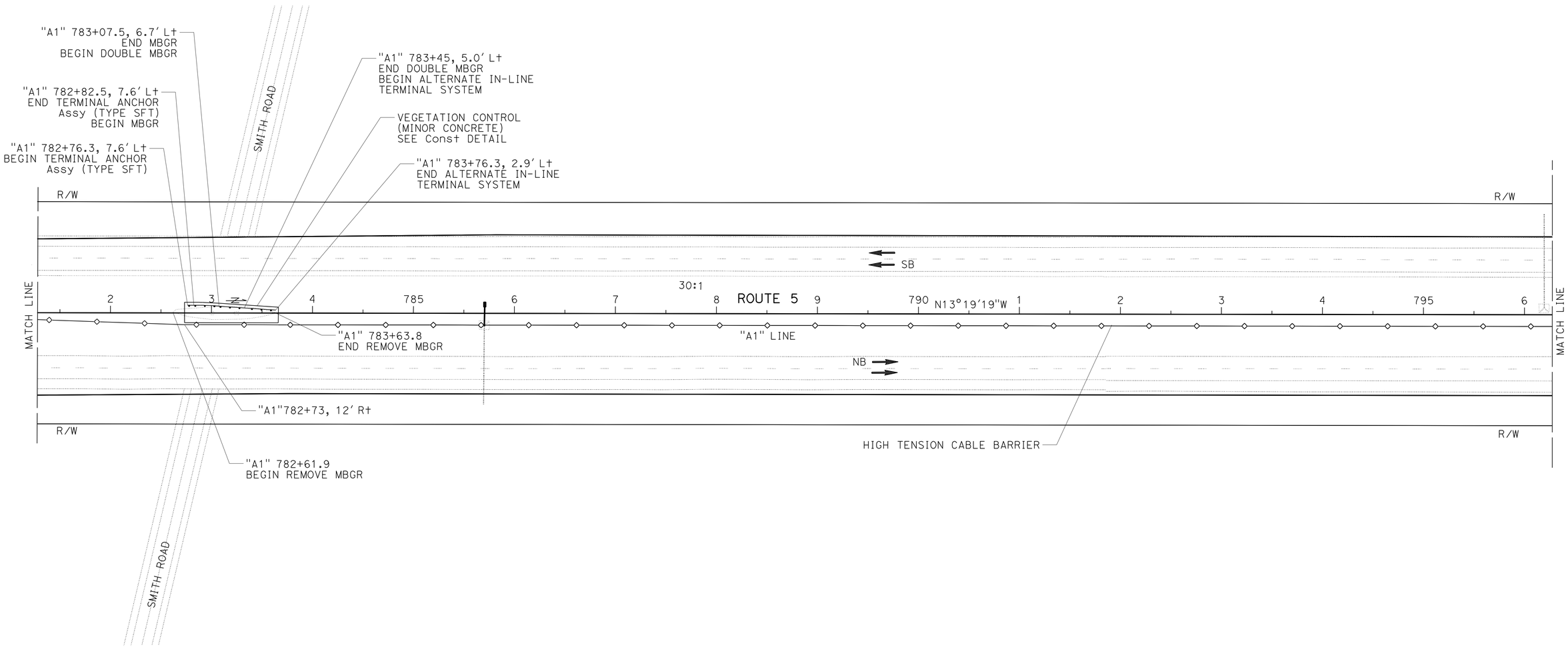

LAYOUT
SCALE: 1" = 50'

L-10

REVISED BY	DATE REVISED

CALCULATED-DESIGNED BY	CHECKED BY
BILL LEHMAN	JUSTIN BORDERS

FUNCTIONAL SUPERVISOR: AL TRUJILLO

STATE OF CALIFORNIA - DEPARTMENT OF TRANSPORTATION
Caltrans®
DESIGN

P:\proj2\02\2E240_plans\pse\22e240ea010.dgn

LAST REVISION 08-30-10 | DATE PLOTTED => 07-JAN-2011 | TIME PLOTTED => 10:11

Dist	COUNTY	ROUTE	POST MILES TOTAL PROJECT	SHEET No.	TOTAL SHEETS
02	Sha	5	R8.5/R11.3	13	51

Justin W Borders 12-07-10
REGISTERED CIVIL ENGINEER DATE

1-3-11
PLANS APPROVAL DATE

REGISTERED PROFESSIONAL ENGINEER
JUSTIN W. BORDERS
No. C65618
Exp. 6-30-12
CIVIL
STATE OF CALIFORNIA

THE STATE OF CALIFORNIA OR ITS OFFICERS OR AGENTS SHALL NOT BE RESPONSIBLE FOR THE ACCURACY OR COMPLETENESS OF SCANNED COPIES OF THIS PLAN SHEET.

NOTES:

1. FOR ACCURATE RIGHT OF WAY DATA, CONTACT RIGHT OF WAY ENGINEERING AT THE DISTRICT OFFICE.
2. EXISTING UTILITY FACILITIES HAVE NOT BEEN POSITIVELY LOCATED.
3. ALIGNMENT OF BARRIER TERMINUS AND LOCATION OF CABLE BARRIER TERMINALS TO BE DETERMINED BY THE ENGINEER.

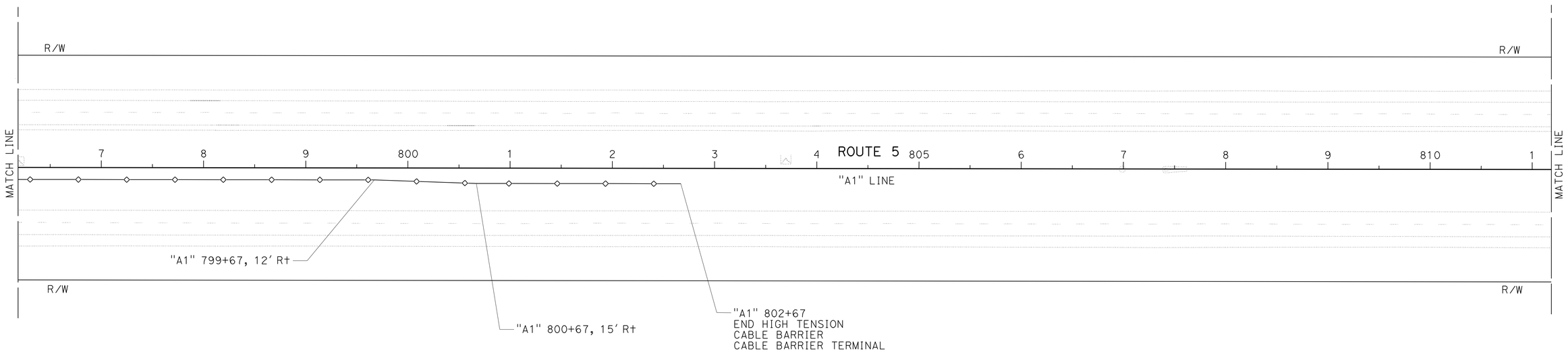

LAYOUT
SCALE: 1" = 50'

L-11

REVISED BY	DATE REVISED
BILL LEHMAN	JUSTIN BORDERS

CALCULATED-DESIGNED BY
CHECKED BY

FUNCTIONAL SUPERVISOR
AL TRUJILLO

STATE OF CALIFORNIA - DEPARTMENT OF TRANSPORTATION
Caltrans
DESIGN

P:\proj2\02\2E240_plans\pse\22e240ea011.dgn

LAST REVISION 08-30-10 | DATE PLOTTED => 07-JAN-2011 | TIME PLOTTED => 10:11

Dist	COUNTY	ROUTE	POST MILES TOTAL PROJECT	SHEET No.	TOTAL SHEETS
02	Sha	5	R8.5/R11.3	14	51

Justin W Borders 12-07-10
REGISTERED CIVIL ENGINEER DATE

1-3-11
PLANS APPROVAL DATE

REGISTERED PROFESSIONAL ENGINEER
JUSTIN W. BORDERS
No. C65618
Exp. 6-30-12
CIVIL
STATE OF CALIFORNIA

THE STATE OF CALIFORNIA OR ITS OFFICERS OR AGENTS SHALL NOT BE RESPONSIBLE FOR THE ACCURACY OR COMPLETENESS OF SCANNED COPIES OF THIS PLAN SHEET.

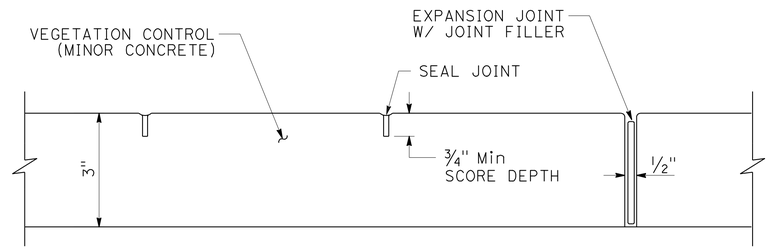

ELEVATION

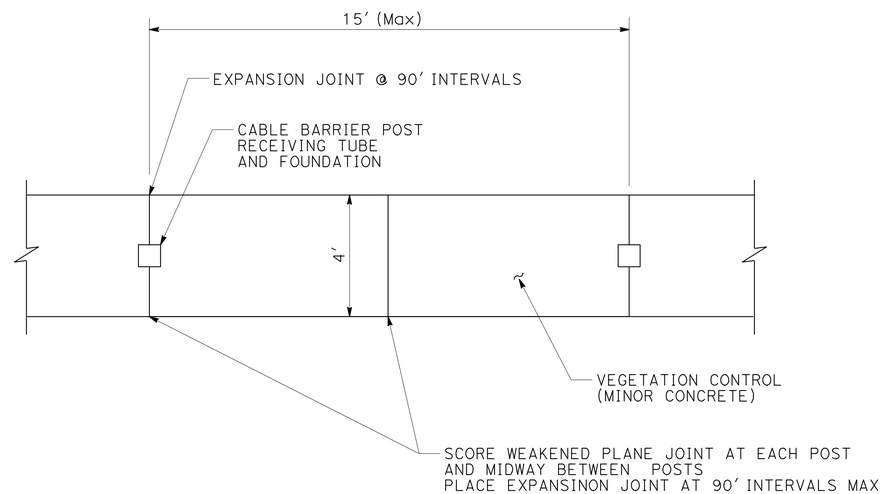

PLAN

VEGETATION CONTROL (MINOR CONCRETE) SCORING DETAIL

"A1" 656+85 TO 762+00

CONSTRUCTION DETAILS

NO SCALE

C-1

REVISED BY	DATE REVISED

CALCULATED-DESIGNED BY	BILL LEHMAN
CHECKED BY	JUSTIN BORDERS

FUNCTIONAL SUPERVISOR: AL TRUJILLO

STATE OF CALIFORNIA - DEPARTMENT OF TRANSPORTATION
Caltrans® DESIGN

P:\proj2\02\2E240_plans\pse\22e240ga001.dgn

LAST REVISION 08-30-10 | DATE PLOTTED => 07-JAN-2011 | TIME PLOTTED => 10:11

Dist	COUNTY	ROUTE	POST MILES TOTAL PROJECT	SHEET No.	TOTAL SHEETS
02	Sha	5	R8.5/R11.3	15	51

REGISTERED CIVIL ENGINEER — DATE 12-07-10

1-3-11
PLANS APPROVAL DATE

REGISTERED PROFESSIONAL ENGINEER — JUSTIN W. BORDERS — No. C65618 — Exp. 6-30-12 — CIVIL — STATE OF CALIFORNIA

THE STATE OF CALIFORNIA OR ITS OFFICERS OR AGENTS SHALL NOT BE RESPONSIBLE FOR THE ACCURACY OR COMPLETENESS OF SCANNED COPIES OF THIS PLAN SHEET.

LEGEND:

VEGETATION CONTROL (MINOR CONCRETE)

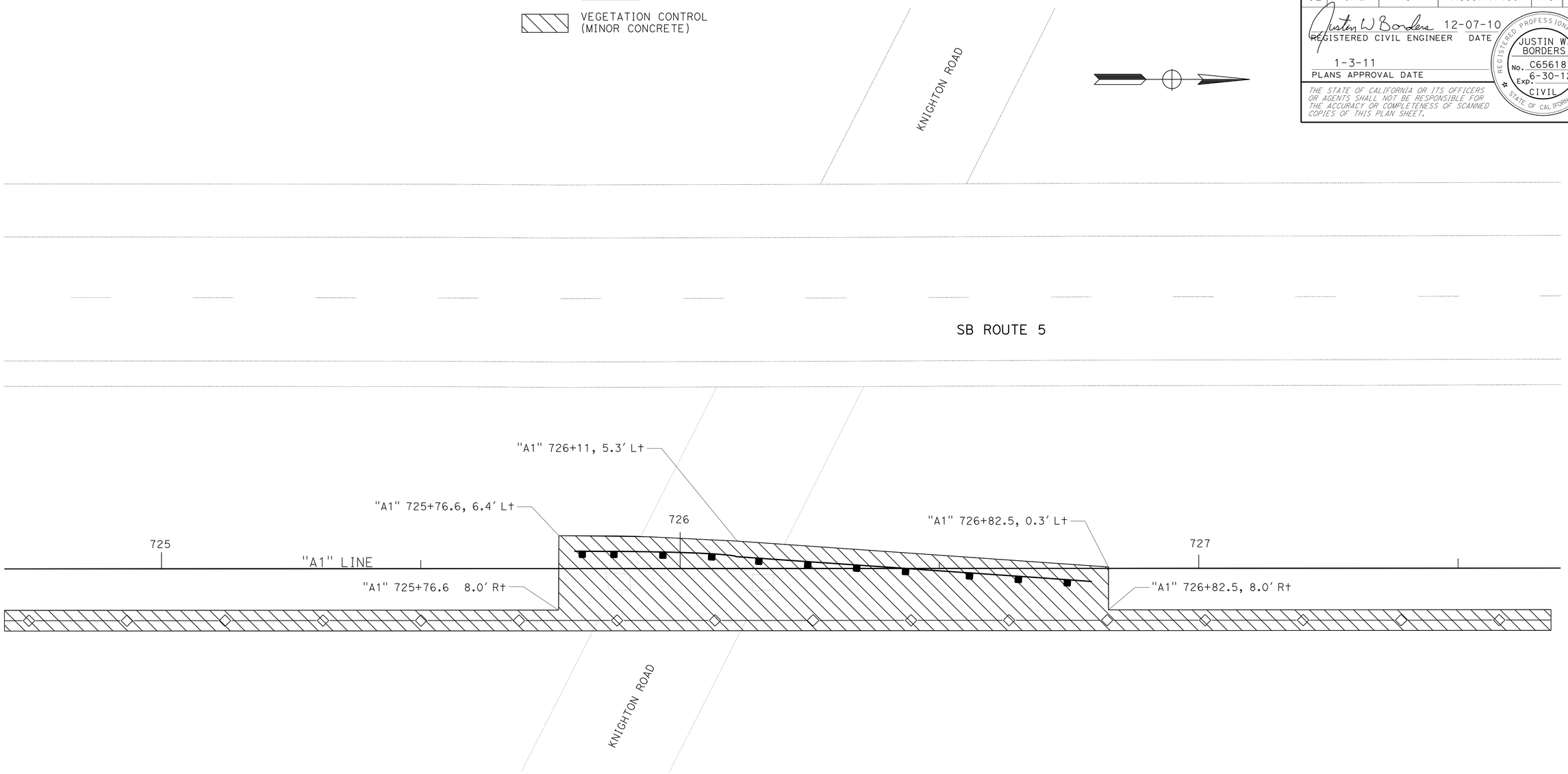

VEGETATION CONTROL (MINOR CONCRETE) DETAIL

CONSTRUCTION DETAILS

NO SCALE

C-2

REVISED BY	DATE REVISED

CALCULATED-DESIGNED BY: BILL LEHMAN
CHECKED BY: JUSTIN BORDERS
FUNCTIONAL SUPERVISOR: AL TRUJILLO

STATE OF CALIFORNIA - DEPARTMENT OF TRANSPORTATION
Caltrans
DESIGN

P:\proj2\02\2E240_plans\pse\22e240ga002.dgn

LAST REVISION 08-30-10 | DATE PLOTTED => 07-JAN-2011 | TIME PLOTTED => 10:11

Dist	COUNTY	ROUTE	POST MILES TOTAL PROJECT	SHEET No.	TOTAL SHEETS
02	Sha	5	R8.5/R11.3	16	51

Justin W Borders 12-07-10
REGISTERED CIVIL ENGINEER DATE

1-3-11
PLANS APPROVAL DATE

REGISTERED PROFESSIONAL ENGINEER
JUSTIN W. BORDERS
No. C65618
Exp. 6-30-12
CIVIL
STATE OF CALIFORNIA

THE STATE OF CALIFORNIA OR ITS OFFICERS OR AGENTS SHALL NOT BE RESPONSIBLE FOR THE ACCURACY OR COMPLETENESS OF SCANNED COPIES OF THIS PLAN SHEET.

LEGEND:

VEGETATION CONTROL (MINOR CONCRETE)

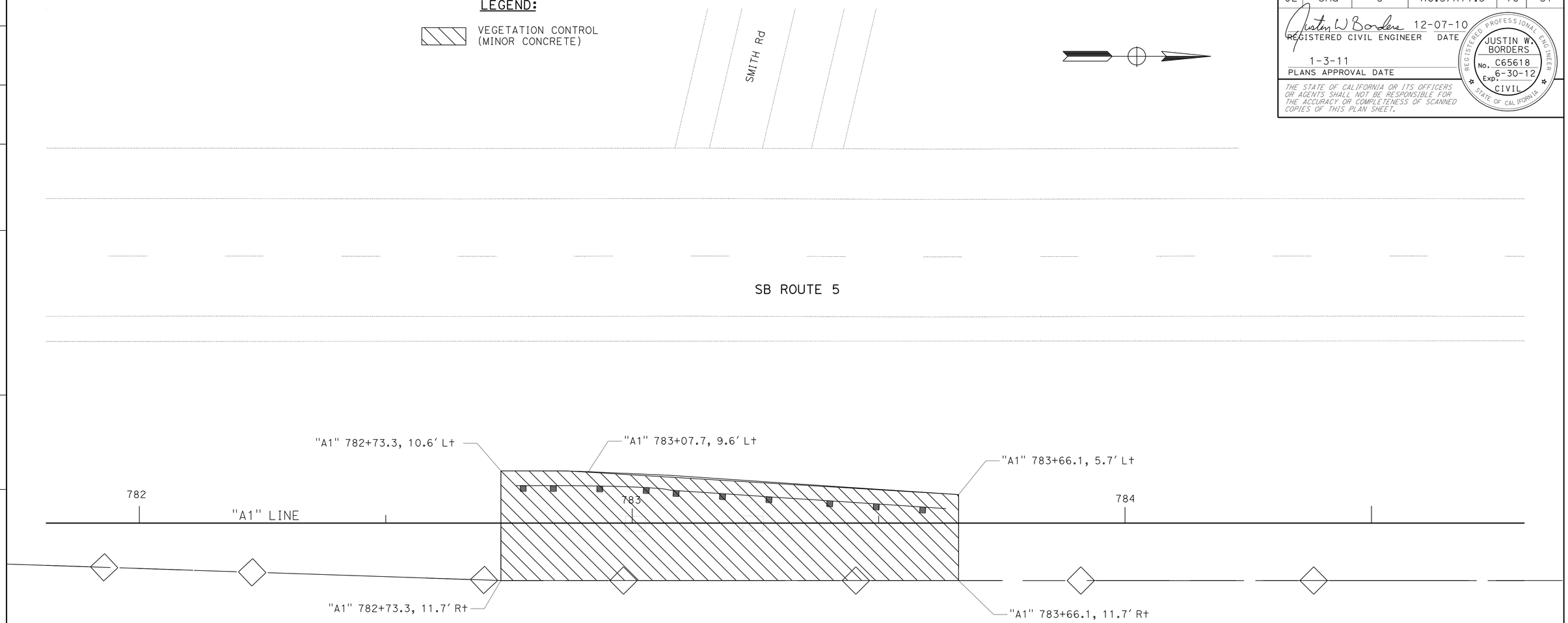

VEGETATION CONTROL (MINOR CONCRETE) DETAIL

CONSTRUCTION DETAILS

NO SCALE

C-3

BILL LEHMAN — REVISED BY
JUSTIN BORDERS — DATE REVISED
CALCULATED-DESIGNED BY
CHECKED BY
FUNCTIONAL SUPERVISOR
AL TRUJILLO

STATE OF CALIFORNIA - DEPARTMENT OF TRANSPORTATION
Caltrans
DESIGN

P:\proj2\02\2E240_plans\pse\22e240ga003.dgn

LAST REVISION DATE PLOTTED => 07-JAN-2011
08-30-10 TIME PLOTTED => 10:12

Dist	COUNTY	ROUTE	POST MILES TOTAL PROJECT	SHEET No.	TOTAL SHEETS
02	Sha	5	R8.5/R11.3	17	51

REGISTERED CIVIL ENGINEER 12-07-10 DATE

1-3-11
PLANS APPROVAL DATE

REGISTERED PROFESSIONAL ENGINEER JUSTIN W. BORDERS No. C65618 Exp. 6-30-12 CIVIL STATE OF CALIFORNIA

THE STATE OF CALIFORNIA OR ITS OFFICERS OR AGENTS SHALL NOT BE RESPONSIBLE FOR THE ACCURACY OR COMPLETENESS OF SCANNED COPIES OF THIS PLAN SHEET.

NOTE:
OFFSET MEASURED TO THE CENTER OF INLET.

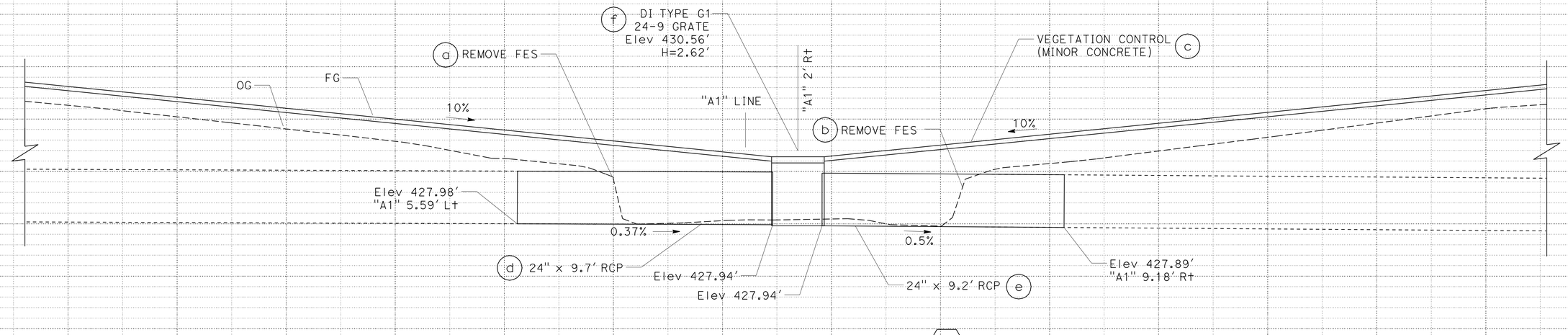

DRAINAGE SYSTEM No. 1
"A1" 657+88

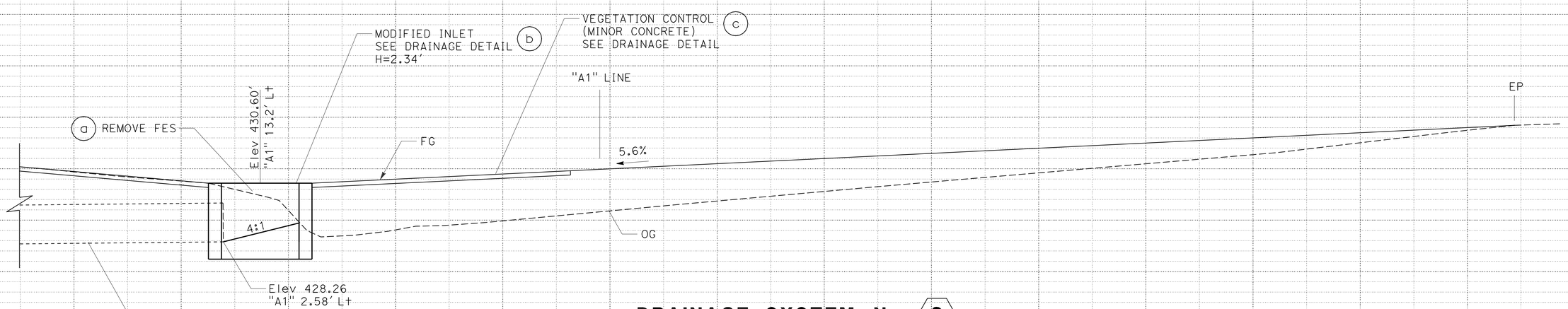

DRAINAGE SYSTEM No. 2
"A1" 670+68

DRAINAGE PROFILES

SCALE: Horiz 1" = 2'
Vert 1" = 2'

DP-1

STATION		TOTAL
CY	Exc	
	Emb	

REVISED BY | DATE REVISED
BILL LEHMAN | JUSTIN BORDERS
CALCULATED-DESIGNED BY | CHECKED BY
FUNCTIONAL SUPERVISOR | AL TRUJILLO

STATE OF CALIFORNIA - DEPARTMENT OF TRANSPORTATION
Caltrans
DESIGN

P:\proj2\02\2E240_plans\pse\22e240ib001.dgn

LAST REVISION 08-30-10 | DATE PLOTTED => 07-JAN-2011 | TIME PLOTTED => 10:35

Dist	COUNTY	ROUTE	POST MILES TOTAL PROJECT	SHEET No.	TOTAL SHEETS
02	Sha	5	R8.5/R11.3	18	51

REGISTERED CIVIL ENGINEER 12-07-10 DATE

1-3-11
PLANS APPROVAL DATE

REGISTERED PROFESSIONAL ENGINEER JUSTIN W. BORDERS No. C65618 Exp. 6-30-12 CIVIL STATE OF CALIFORNIA

THE STATE OF CALIFORNIA OR ITS OFFICERS OR AGENTS SHALL NOT BE RESPONSIBLE FOR THE ACCURACY OR COMPLETENESS OF SCANNED COPIES OF THIS PLAN SHEET.

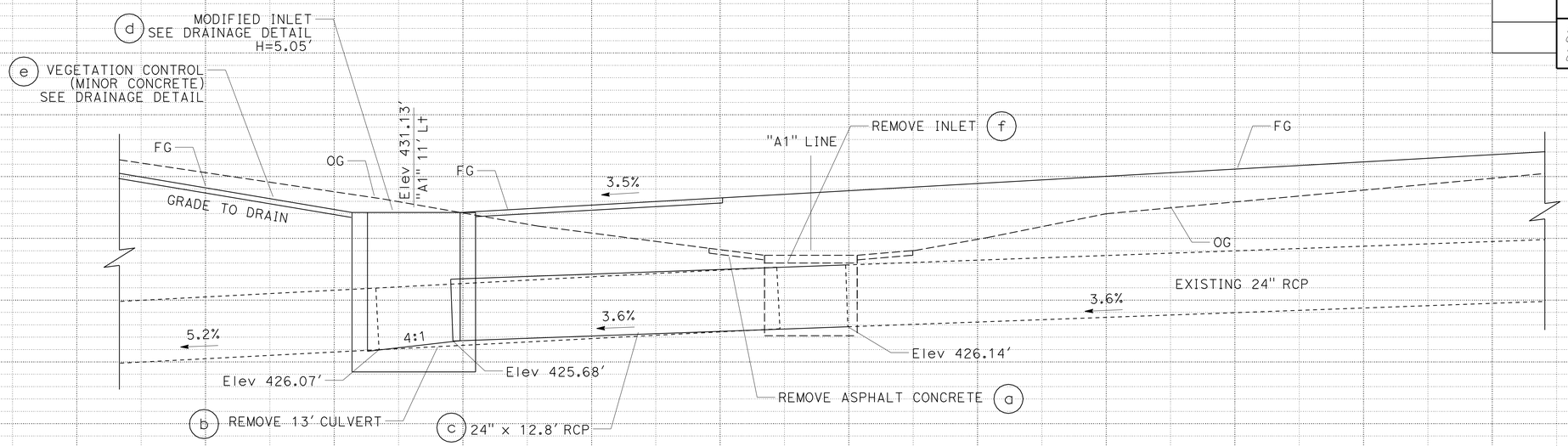

DRAINAGE SYSTEM No. 3

"A1" 674+68

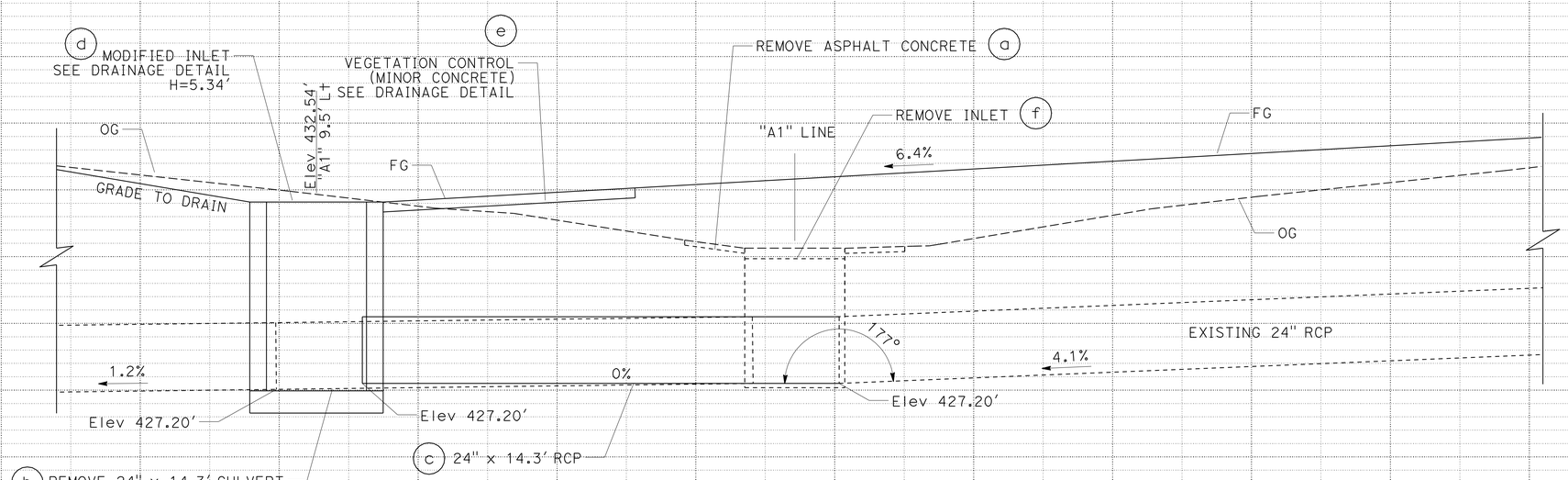

DRAINAGE SYSTEM No. 4

"A1" 681+68

DRAINAGE PROFILES

SCALE: Horiz 1" = 2'
Vert 1" = 2'

DP-2

STATION		TOTAL
CY	Exc	
	Emb	

REVISED BY | DATE REVISED
BILL LEHMAN | JUSTIN BORDERS
CALCULATED-DESIGNED BY | CHECKED BY
FUNCTIONAL SUPERVISOR: AL TRUJILLO

STATE OF CALIFORNIA - DEPARTMENT OF TRANSPORTATION
Caltrans DESIGN

P:\proj2\02\2E240_plans\pse\22e240ib002.dgn

LAST REVISION 08-30-10 | DATE PLOTTED => 07-JAN-2011 | TIME PLOTTED => 10:35

Dist	COUNTY	ROUTE	POST MILES TOTAL PROJECT	SHEET No.	TOTAL SHEETS
02	Sha	5	R8.5/R11.3	19	51

REGISTERED CIVIL ENGINEER 12-07-10 DATE

1-3-11
PLANS APPROVAL DATE

REGISTERED PROFESSIONAL ENGINEER JUSTIN W. BORDERS No. C65618 Exp. 6-30-12 CIVIL STATE OF CALIFORNIA

THE STATE OF CALIFORNIA OR ITS OFFICERS OR AGENTS SHALL NOT BE RESPONSIBLE FOR THE ACCURACY OR COMPLETENESS OF SCANNED COPIES OF THIS PLAN SHEET.

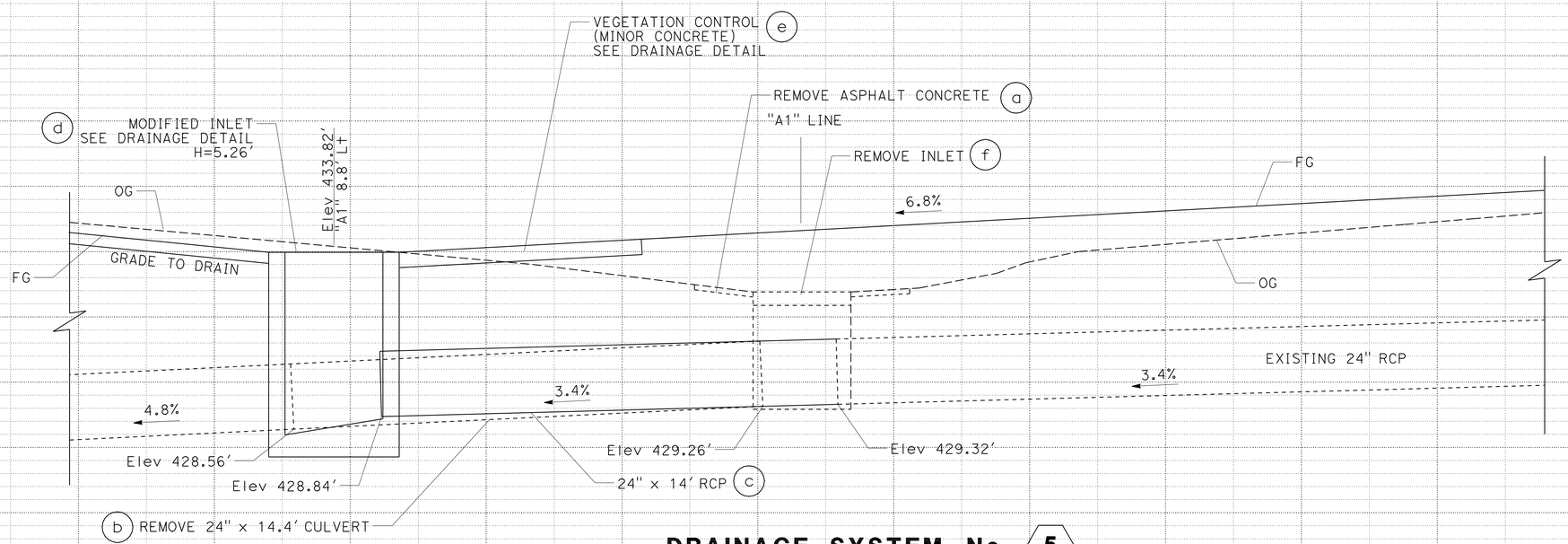

DRAINAGE SYSTEM No. 5
"A1" 686+68

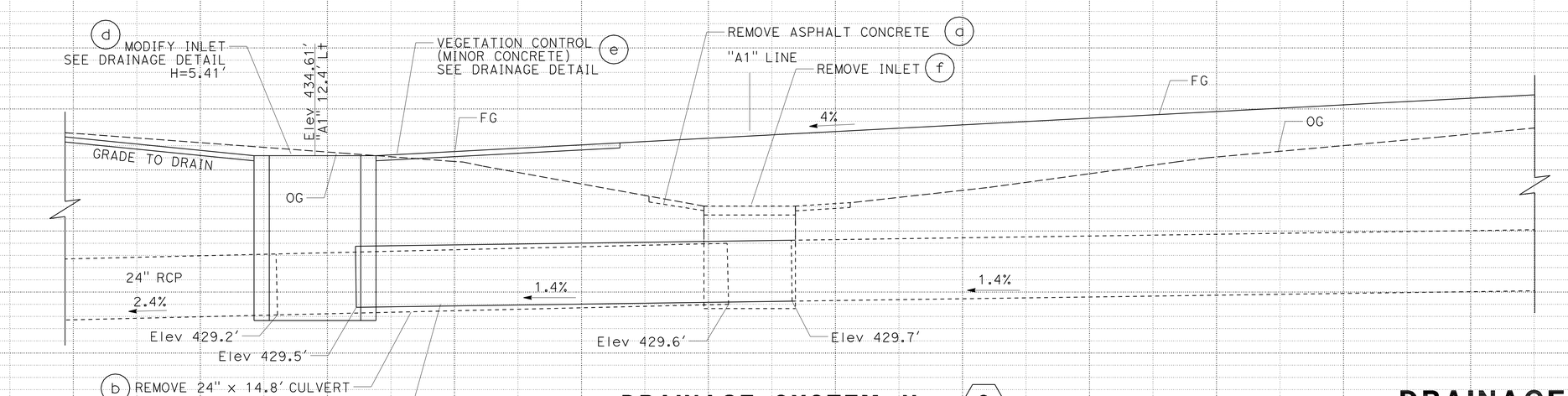

DRAINAGE SYSTEM No. 6
"A1" 696+69

DRAINAGE PROFILES

SCALE: Horiz 1" = 2'
Vert 1" = 2'

DP-3

STATION		TOTAL
CY	Exc	
	Emb	

REVISED BY | DATE REVISED
BILL LEHMAN | JUSTIN BORDERS
CALCULATED-DESIGNED BY | CHECKED BY
FUNCTIONAL SUPERVISOR: AL TRUJILLO

STATE OF CALIFORNIA - DEPARTMENT OF TRANSPORTATION
Caltrans DESIGN

P:\proj\02\2E240_plans\pse\22e240ib003.dgn

LAST REVISION 08-30-10 | DATE PLOTTED => 07-JAN-2011 | TIME PLOTTED => 10:35

Dist	COUNTY	ROUTE	POST MILES TOTAL PROJECT	SHEET No.	TOTAL SHEETS
02	Sha	5	R8.5/R11.3	20	51

Justin W Borders 12-07-10
REGISTERED CIVIL ENGINEER DATE

1-3-11
PLANS APPROVAL DATE

REGISTERED PROFESSIONAL ENGINEER
JUSTIN W. BORDERS
No. C65618
Exp. 6-30-12
CIVIL
STATE OF CALIFORNIA

THE STATE OF CALIFORNIA OR ITS OFFICERS OR AGENTS SHALL NOT BE RESPONSIBLE FOR THE ACCURACY OR COMPLETENESS OF SCANNED COPIES OF THIS PLAN SHEET.

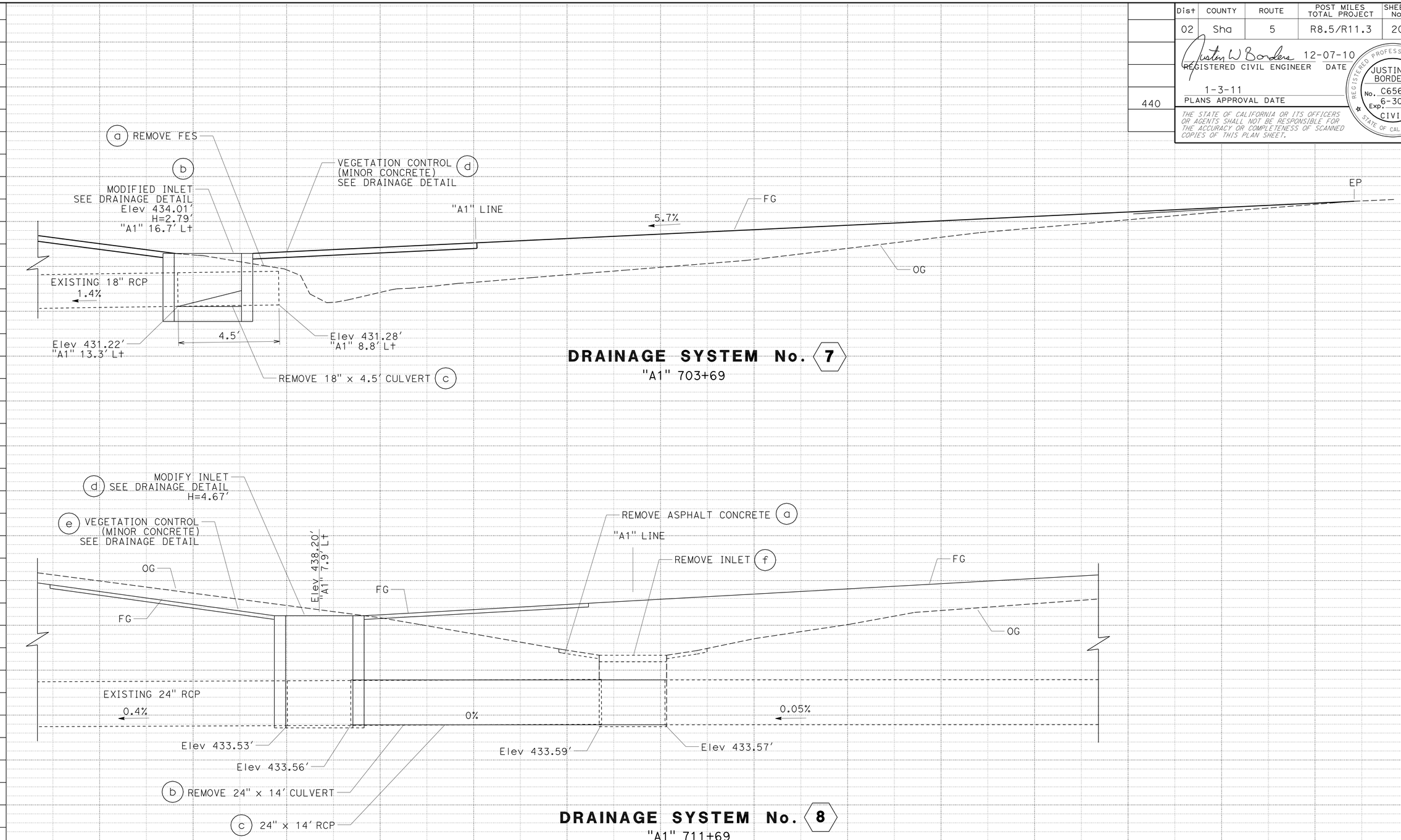

DRAINAGE PROFILES

SCALE: Horiz 1" = 2'
Vert 1" = 2'

DP-4

STATION		TOTAL
CY	Exc	
	Emb	

REVISED BY | DATE REVISED
BILL LEHMAN | JUSTIN BORDERS
CALCULATED-DESIGNED BY | CHECKED BY
FUNCTIONAL SUPERVISOR | AL TRUJILLO

STATE OF CALIFORNIA - DEPARTMENT OF TRANSPORTATION
Caltrans
DESIGN

P:\proj2\02\2E240_plans\pse\22e240ib004.dgn

LAST REVISION 08-30-10 | DATE PLOTTED => 07-JAN-2011 | TIME PLOTTED => 10:35

BORDER LAST REVISED 7/2/2010 | USERNAME => trmartin | DGN FILE => 22e240ib004.dgn | RELATIVE BORDER SCALE IS IN INCHES 0 1 2 3 | UNIT 0316 | PROJECT NUMBER & PHASE 02000002071

Dist	COUNTY	ROUTE	POST MILES TOTAL PROJECT	SHEET No.	TOTAL SHEETS
02	Sha	5	R8.5/R11.3	21	51

REGISTERED CIVIL ENGINEER 12-07-10 DATE

1-3-11
PLANS APPROVAL DATE

REGISTERED PROFESSIONAL ENGINEER JUSTIN W. BORDERS No. C65618 Exp. 6-30-12 CIVIL STATE OF CALIFORNIA

THE STATE OF CALIFORNIA OR ITS OFFICERS OR AGENTS SHALL NOT BE RESPONSIBLE FOR THE ACCURACY OR COMPLETENESS OF SCANNED COPIES OF THIS PLAN SHEET.

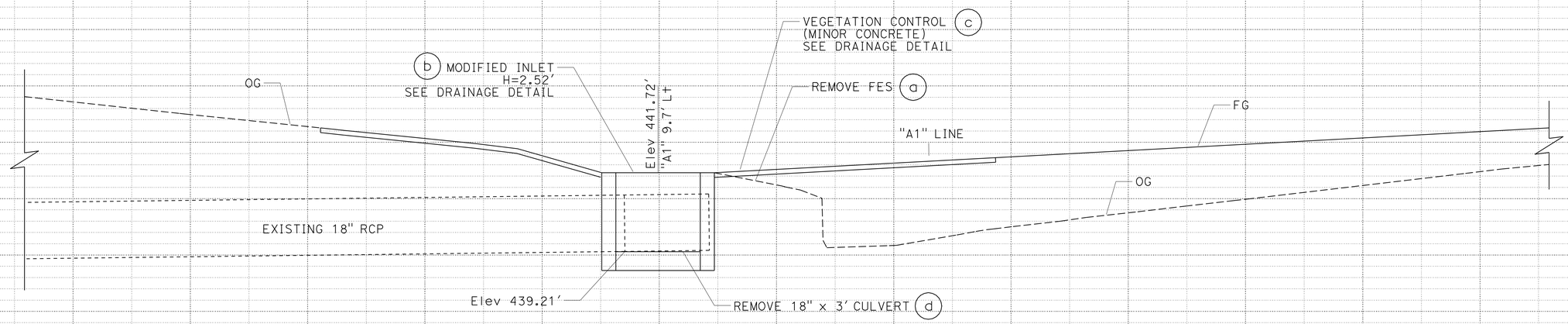

DRAINAGE SYSTEM No. 9

"A1" 717+69

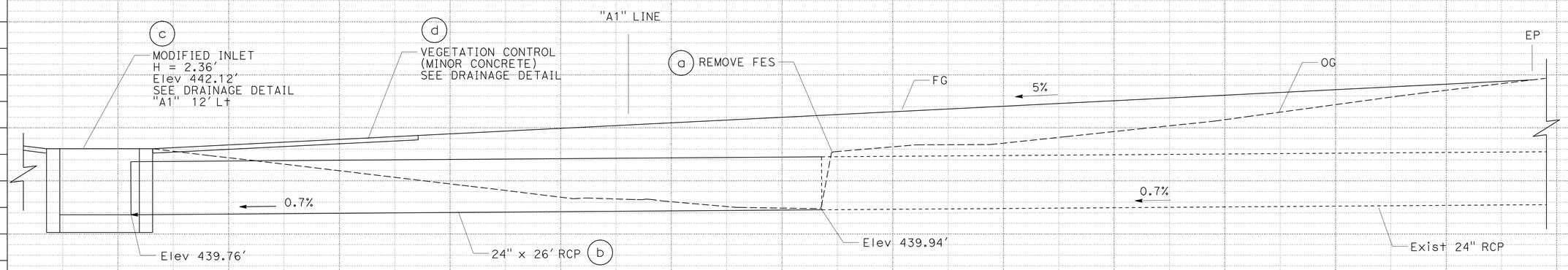

DRAINAGE SYSTEM No. 10

"A1" 718+69

DRAINAGE PROFILES

SCALE: Horiz 1" = 2'
Vert 1" = 2'

DP-5

STATION		TOTAL
CY	Exc	
	Emb	

REVISED BY | DATE REVISED
BILL LEHMAN | JUSTIN BORDERS
CALCULATED-DESIGNED BY | CHECKED BY
FUNCTIONAL SUPERVISOR: AL TRUJILLO

STATE OF CALIFORNIA - DEPARTMENT OF TRANSPORTATION
Caltrans
DESIGN

P:\proj2\02\2E240_plans\pse\22e240ib005.dgn

LAST REVISION 08-30-10 | DATE PLOTTED => 07-JAN-2011 | TIME PLOTTED => 10:35

Dist	COUNTY	ROUTE	POST MILES TOTAL PROJECT	SHEET No.	TOTAL SHEETS
02	Sha	5	R8.5/R11.3	22	51

REGISTERED CIVIL ENGINEER 12-07-10 DATE

1-3-11
PLANS APPROVAL DATE

REGISTERED PROFESSIONAL ENGINEER JUSTIN W. BORDERS No. C65618 Exp. 6-30-12 CIVIL STATE OF CALIFORNIA

THE STATE OF CALIFORNIA OR ITS OFFICERS OR AGENTS SHALL NOT BE RESPONSIBLE FOR THE ACCURACY OR COMPLETENESS OF SCANNED COPIES OF THIS PLAN SHEET.

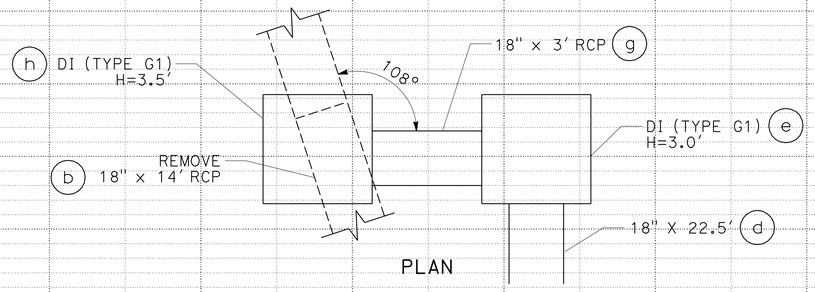

PLAN

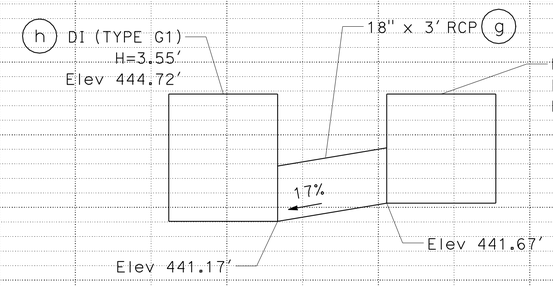

SECTION A-A

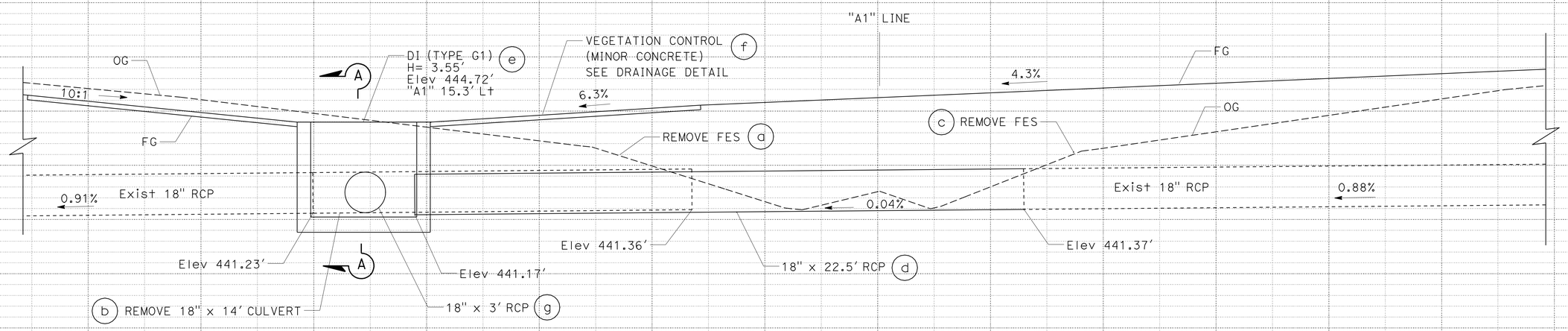

DRAINAGE SYSTEM No. 11
"A1" 726+33

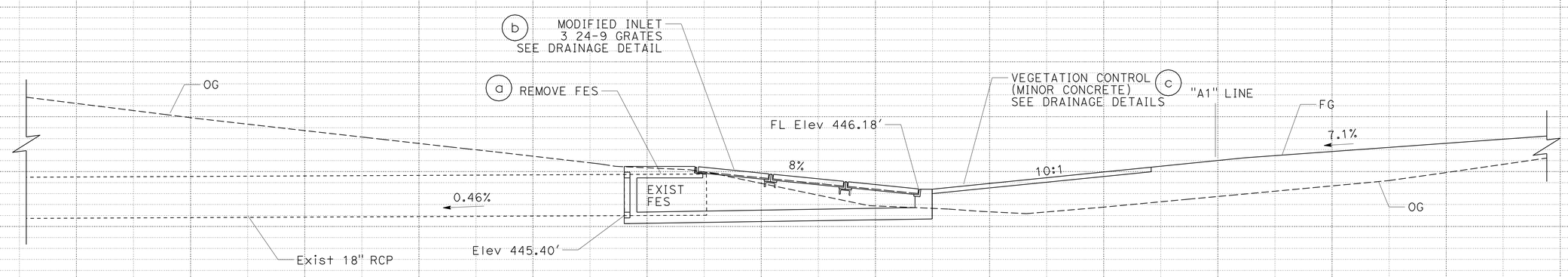

DRAINAGE SYSTEM No. 12
"A1" 732+68

DRAINAGE PROFILES

SCALE: Horiz 1" = 2'
Vert 1" = 2'

DP-6

STATION		TOTAL
CY	Exc	
	Emb	

STATE OF CALIFORNIA - DEPARTMENT OF TRANSPORTATION
Caltrans DESIGN

FUNCTIONAL SUPERVISOR: AL TRUJILLO
CALCULATED-DESIGNED BY: JUSTIN BORDERS
CHECKED BY: BILL LEHMAN
REVISED BY / DATE REVISED

P:\proj2\02\2E240_plans\pse\22e240ib006.dgn

LAST REVISION 08-30-10 | DATE PLOTTED => 07-JAN-2011 | TIME PLOTTED => 10:35

Dist	COUNTY	ROUTE	POST MILES TOTAL PROJECT	SHEET No.	TOTAL SHEETS
02	Sha	5	R8.5/R11.3	23	51

REGISTERED CIVIL ENGINEER 12-07-10 DATE

1-3-11
PLANS APPROVAL DATE

REGISTERED PROFESSIONAL ENGINEER JUSTIN W. BORDERS No. C65618 Exp. 6-30-12 CIVIL STATE OF CALIFORNIA

THE STATE OF CALIFORNIA OR ITS OFFICERS OR AGENTS SHALL NOT BE RESPONSIBLE FOR THE ACCURACY OR COMPLETENESS OF SCANNED COPIES OF THIS PLAN SHEET.

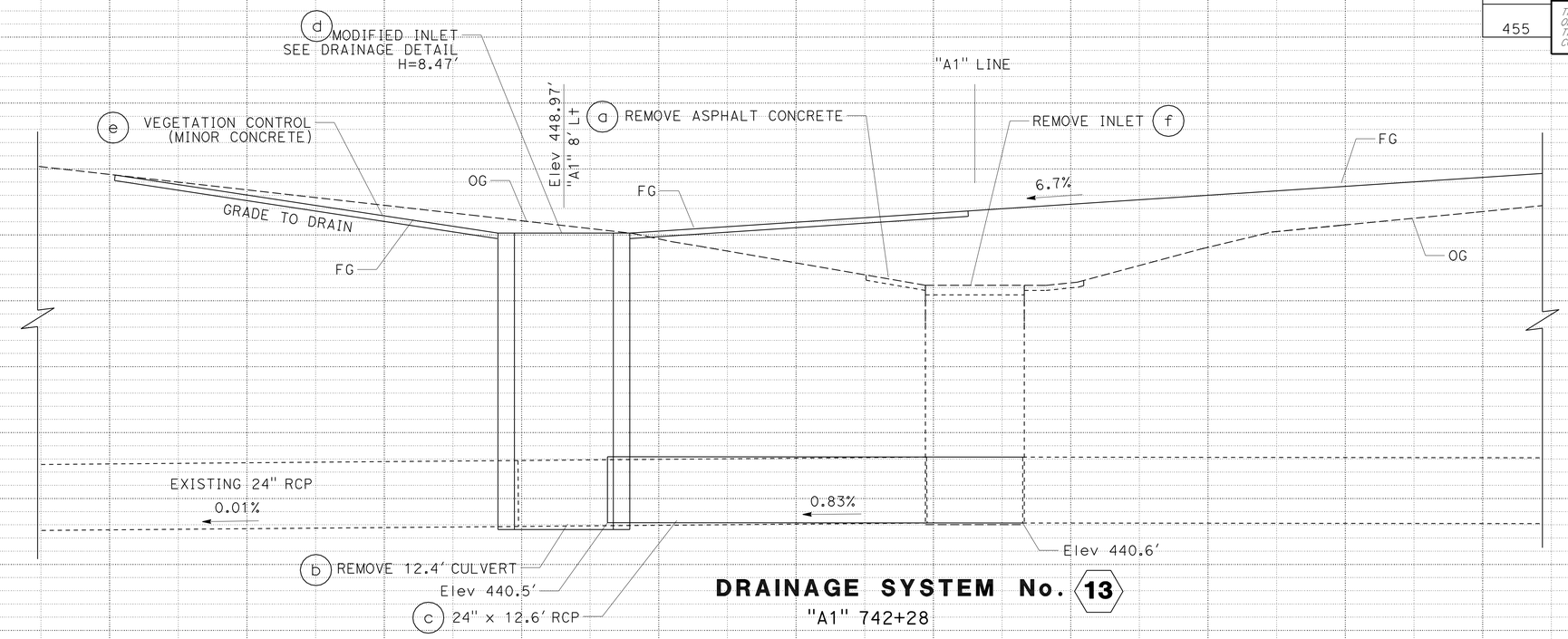

DRAINAGE SYSTEM No. 13

"A1" 742+28

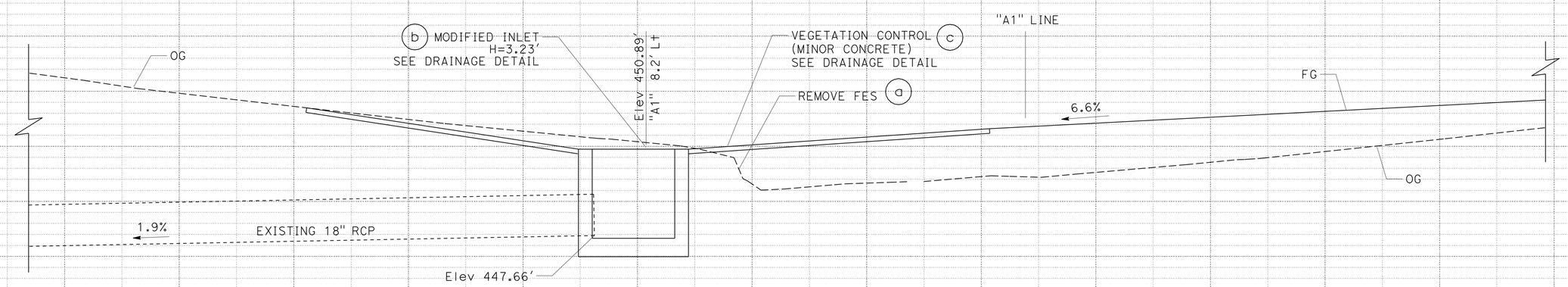

DRAINAGE SYSTEM No. 14

"A1" 751+18

DRAINAGE PROFILES

SCALE: Horiz 1" = 2'
Vert 1" = 2'

DP-7

STATION		TOTAL
CY	Exc	
	Emb	

REVISED BY | DATE REVISED

BILL LEHMAN | JUSTIN BORDERS

CALCULATED-DESIGNED BY | CHECKED BY

FUNCTIONAL SUPERVISOR: AL TRUJILLO

STATE OF CALIFORNIA - DEPARTMENT OF TRANSPORTATION

DESIGN

Caltrans

P:\proj2\02\2E240_plans\pse\22e240ib007.dgn

LAST REVISION | DATE PLOTTED => 07-JAN-2011 | TIME PLOTTED => 10:35

08-30-10

BORDER LAST REVISED 7/2/2010 | USERNAME => trmartin | DGN FILE => 22e240ib007.dgn | RELATIVE BORDER SCALE IS IN INCHES 0 1 2 3 | UNIT 0316 | PROJECT NUMBER & PHASE 02000002071

Dist	COUNTY	ROUTE	POST MILES TOTAL PROJECT	SHEET No.	TOTAL SHEETS
02	Sha	5	R8.5/R11.3	24	51

REGISTERED CIVIL ENGINEER DATE 12-07-10

1-3-11
PLANS APPROVAL DATE

REGISTERED PROFESSIONAL ENGINEER JUSTIN W. BORDERS No. C65618 Exp. 6-30-12 CIVIL STATE OF CALIFORNIA

THE STATE OF CALIFORNIA OR ITS OFFICERS OR AGENTS SHALL NOT BE RESPONSIBLE FOR THE ACCURACY OR COMPLETENESS OF SCANNED COPIES OF THIS PLAN SHEET.

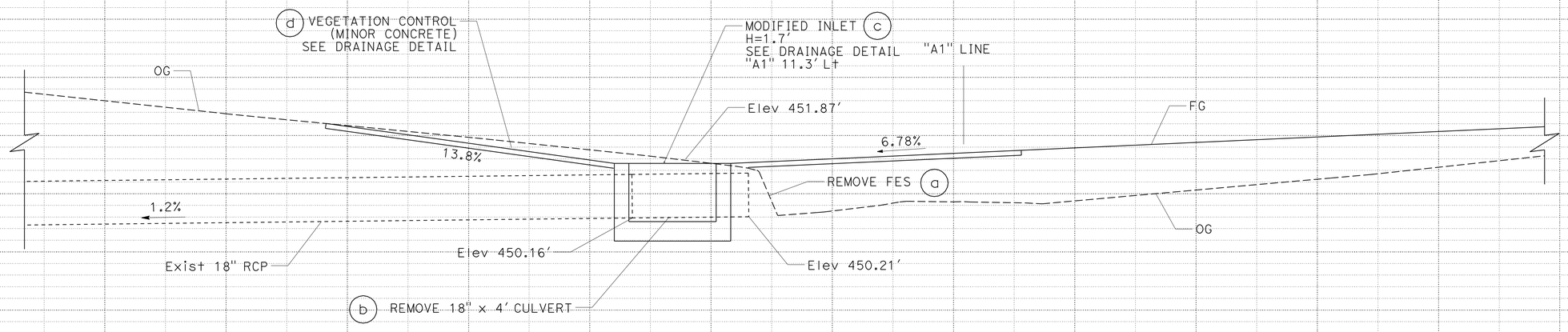

DRAINAGE SYSTEM No. 15

"A1" 756+68

DRAINAGE PROFILES

SCALE: Horiz 1" = 2'
Vert 1" = 2'

DP-8

STATION		TOTAL
CY	Exc	
	Emb	

BILL LEHMAN — JUSTIN BORDERS — REVISED BY — DATE REVISED — CALCULATED-DESIGNED BY — CHECKED BY — FUNCTIONAL SUPERVISOR — AL TRUJILLO

STATE OF CALIFORNIA - DEPARTMENT OF TRANSPORTATION — DESIGN — Caltrans

P:\proj2\02\2E240_plans\pse\22e240ib008.dgn

LAST REVISION 08-30-10 — DATE PLOTTED => 07-JAN-2011 — TIME PLOTTED => 10:35

Dist	COUNTY	ROUTE	POST MILES TOTAL PROJECT	SHEET No.	TOTAL SHEETS
02	Sha	5	R8.5/R11.3	25	51

REGISTERED CIVIL ENGINEER 12-07-10 DATE

1-3-11
PLANS APPROVAL DATE

REGISTERED PROFESSIONAL ENGINEER JUSTIN W. BORDERS No. C65618 Exp. 6-30-12 CIVIL STATE OF CALIFORNIA

THE STATE OF CALIFORNIA OR ITS OFFICERS OR AGENTS SHALL NOT BE RESPONSIBLE FOR THE ACCURACY OR COMPLETENESS OF SCANNED COPIES OF THIS PLAN SHEET.

NOTES:

1. FIELD VERIFY ALL MEASUREMENTS.
2. FOR INLET FRAME DETAILS NOT SHOWN, SEE Std PLAN RSP D77A.

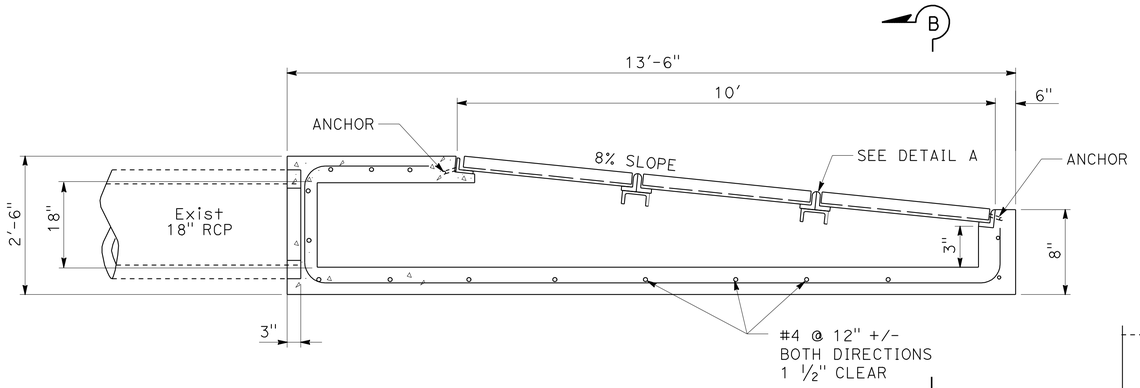

SECTION A-A

MODIFIED INLET

12 b

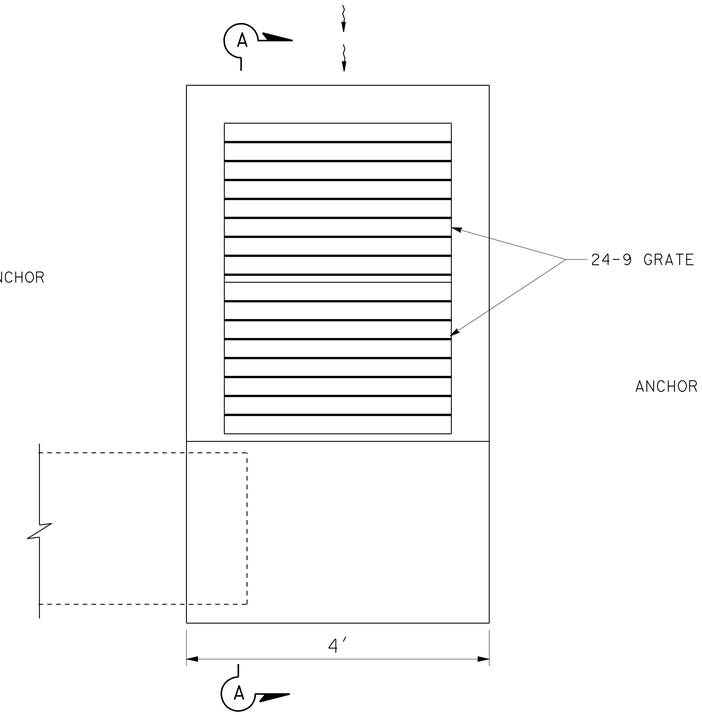

PLAN

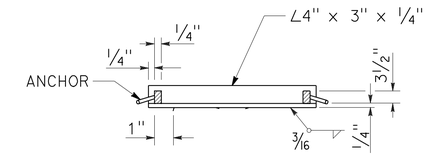

SECTION D-D

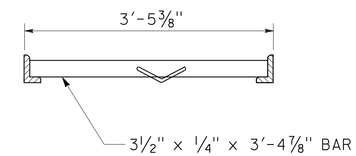

SECTION C-C

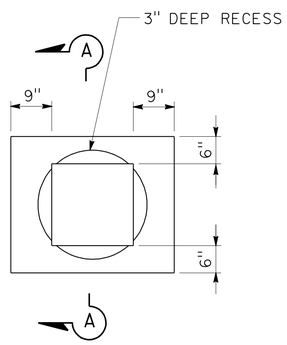

FRONT

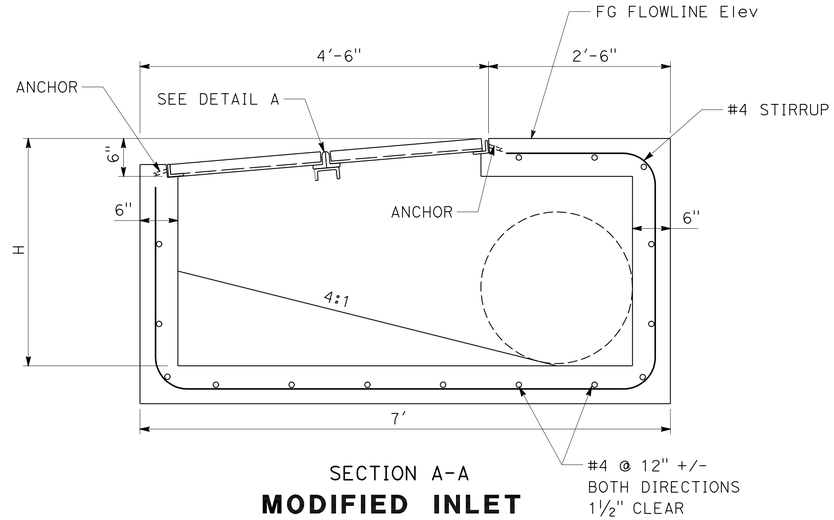

SECTION A-A

MODIFIED INLET DETAIL

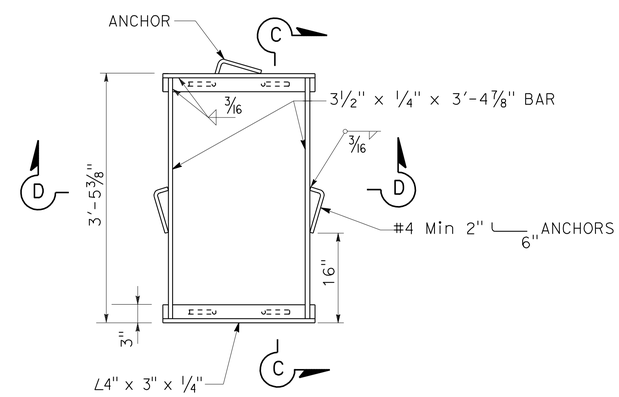

MODIFIED INLET FRAME

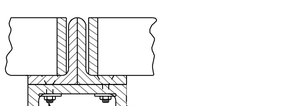

DETAIL A

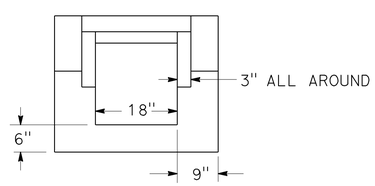

SECTION B-B

DRAINAGE SYSTEM No.

2 b, 3 d, 4 d, 5 d, 6 d, 7 b, 8 d, 9 b, 10 c, 13 d, 14 b, 15 c

DRAINAGE DETAILS

NO SCALE

DD-1

REVISED BY	DATE REVISED
BILL LEHMAN	JUSTIN BORDERS

CALCULATED-DESIGNED BY / CHECKED BY

FUNCTIONAL SUPERVISOR: AL TRUJILLO

STATE OF CALIFORNIA - DEPARTMENT OF TRANSPORTATION

Caltrans® **DESIGN**

P:\proj2\02\2E240_plans\pse\22e240ic001.dgn

LAST REVISION 08-30-10 | DATE PLOTTED => 07-JAN-2011 | TIME PLOTTED => 10:52

Dist	COUNTY	ROUTE	POST MILES TOTAL PROJECT	SHEET No.	TOTAL SHEETS
02	Sha	5	R8.5/R11.3	26	51

REGISTERED CIVIL ENGINEER 12-07-10 DATE

1-3-11
PLANS APPROVAL DATE

REGISTERED PROFESSIONAL ENGINEER JUSTIN W. BORDERS No. C65618 Exp. 6-30-12 CIVIL STATE OF CALIFORNIA

THE STATE OF CALIFORNIA OR ITS OFFICERS OR AGENTS SHALL NOT BE RESPONSIBLE FOR THE ACCURACY OR COMPLETENESS OF SCANNED COPIES OF THIS PLAN SHEET.

NOTE:

1. SEE L-1 FOR DRAINAGE SYSTEM (1) APRON DIMENSIONS.

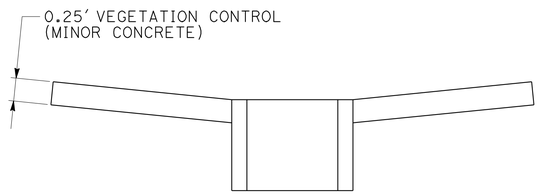

SECTION A-A

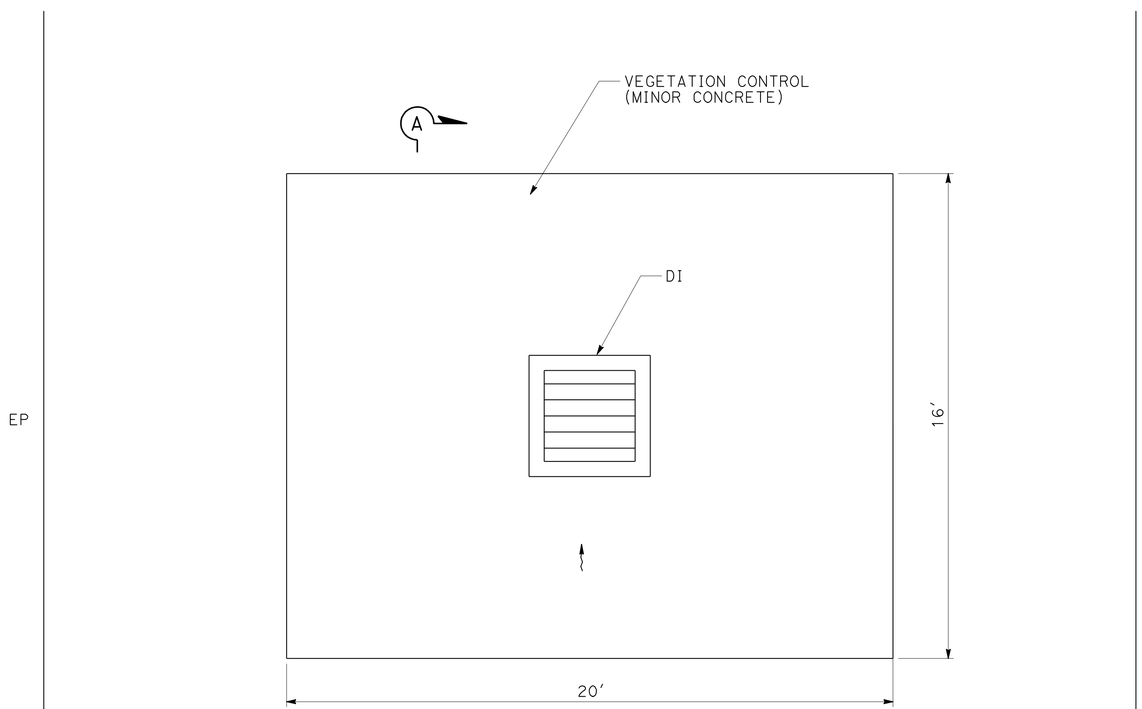

PLAN

VEGETATION CONTROL (MINOR CONCRETE)

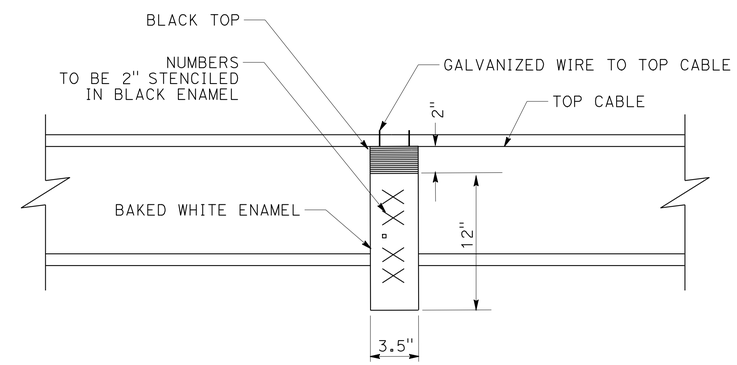

CULVERT MARKER (BARRIER MOUNTED)

EP

DRAINAGE DETAILS

NO SCALE

DD-2

REVISED BY	DATE REVISED
BILL LEHMAN	JUSTIN BORDERS

CALCULATED-DESIGNED BY	CHECKED BY

FUNCTIONAL SUPERVISOR: AL TRUJILLO

STATE OF CALIFORNIA - DEPARTMENT OF TRANSPORTATION

Caltrans DESIGN

P:\proj2\02\2E240_plans\pse\22e240ic002.dgn

LAST REVISION 08-30-10 | DATE PLOTTED => 07-JAN-2011 | TIME PLOTTED => 10:52

Dist	COUNTY	ROUTE	POST MILES TOTAL PROJECT	SHEET No.	TOTAL SHEETS
02	Sha	5	R8.5/R11.3	27	51

REGISTERED CIVIL ENGINEER 12-07-10 DATE

1-3-11
PLANS APPROVAL DATE

REGISTERED PROFESSIONAL ENGINEER JUSTIN W. BORDERS No. C65618 Exp. 6-30-12 CIVIL STATE OF CALIFORNIA

THE STATE OF CALIFORNIA OR ITS OFFICERS OR AGENTS SHALL NOT BE RESPONSIBLE FOR THE ACCURACY OR COMPLETENESS OF SCANNED COPIES OF THIS PLAN SHEET.

NOTES:

1. ALL JOINTS ARE STANDARD JOINT TYPE.
2. (N) NOT A SEPARATE PAY ITEM, FOR INFORMATION ONLY.

DRAINAGE QUANTITIES

SHEET No.	DRAINAGE SYSTEM No.	DRAINAGE UNIT No.	REMOVE FLARED END SECTION	REMOVE INLET	REMOVE ASPHALT CONCRETE	REMOVE CULVERT	MINOR CONCRETE (MINOR STRUCTURE)	18" REINFORCED CONCRETE PIPE	24" REINFORCED CONCRETE PIPE	MISCELLANEOUS IRON AND STEEL	VEGETATION CONTROL (MINOR CONCRETE)	(N) HEIGHT OF INLET (H)	STATION	DESCRIPTION	SHEET No.	DRAINAGE SYSTEM No.	DRAINAGE UNIT No.
			EA	EA	SQYD	EA	CY	LF	LF	LB	SQYD	LF	"A1" LINE				
DP-1	1	a	1										657+88		DP-1	1	a
		b	1														b
		c									92			16′ x 52′ APRON			c
		d							9.7								d
		e							9.2								e
		f					1.0			263		2.62		G1 INLET 24-9 GRATE			f
DP-1	2	a	1										670+68		DP-1	2	a
		b					2.2			526		2.34		MODIFIED INLET, 2 24-9 GRATES			b
		c									36			16′ x 20′ APRON			c
DP-2	3	a			14								674+68		DP-2	3	a
		b				1								13′ x 24" RCP			b
		c							12.8								c
		d					3.8			526		5.06		MODIFIED INLET, 2 24-9 GRATES			d
		e									36			16′ x 20′ APRON			e
		f		1													f
DP-2	4	a			14								681+68		DP-2	4	a
		b				1								14.3′ x 24" RCP			b
		c							14.3								c
		d					3.8			526		5.34		MODIFIED INLET, 2 24-9 GRATES			d
		e									36			16′ x 20′ APRON			e
		f		1													f
DP-3	5	a			14								686+68		DP-3	5	a
		b				1								14.4′ x 24" RCP			b
		c							14.0								c
		d					3.9			526		5.26		MODIFIED INLET, 2 24-9 GRATES			d
		e									36			16′ x 20′ APRON			e
		f		1													f
DP-3	6	a			14								696+69		DP-3	6	a
		b				1								14.8′ x 24" RCP			b
		c							14.3								c
		d					4.1			526		5.41		MODIFIED INLET, 2 24-9 GRATES			d
		e									36			16′ x 20′ APRON			e
		f		1													f
SUBTOTAL			3	4	56	4	18.8	0	74.3	2893	272						

DRAINAGE QUANTITIES

DQ-1

BILL LEHMAN — REVISED BY
JUSTIN BORDERS — DATE REVISED
CALCULATED-DESIGNED BY
CHECKED BY
FUNCTIONAL SUPERVISOR
AL TRUJILLO

STATE OF CALIFORNIA - DEPARTMENT OF TRANSPORTATION
Caltrans
DESIGN

P:\proj2\02\2E240_plans\pse\22e240id001.dgn

LAST REVISION DATE PLOTTED => 07-JAN-2011
08-30-10 TIME PLOTTED => 10:53

Dist	COUNTY	ROUTE	POST MILES TOTAL PROJECT	SHEET No.	TOTAL SHEETS
02	Sha	5	R8.5/R11.3	28	51

REGISTERED CIVIL ENGINEER 12-07-10 DATE

1-3-11
PLANS APPROVAL DATE

REGISTERED PROFESSIONAL ENGINEER JUSTIN W. BORDERS No. C65618 Exp. 6-30-12 CIVIL STATE OF CALIFORNIA

THE STATE OF CALIFORNIA OR ITS OFFICERS OR AGENTS SHALL NOT BE RESPONSIBLE FOR THE ACCURACY OR COMPLETENESS OF SCANNED COPIES OF THIS PLAN SHEET.

NOTES:

1. ALL JOINTS ARE STANDARD JOINT TYPE.
2. (N) NOT A SEPARATE PAY ITEM, FOR INFORMATION ONLY.

DRAINAGE QUANTITIES

SHEET No.	DRAINAGE SYSTEM No. ⬡	DRAINAGE UNIT No. ◯	REMOVE FLARED END SECTION	REMOVE INLET	REMOVE ASPHALT CONCRETE	REMOVE CULVERT	MINOR CONCRETE (MINOR STRUCTURE)	18" REINFORCED CONCRETE PIPE	24" REINFORCED CONCRETE PIPE	MISCELLANEOUS IRON AND STEEL	VEGETATION CONTROL (MINOR CONCRETE)	(N) HEIGHT OF INLET (H)	STATION	DESCRIPTION	SHEET No.	DRAINAGE SYSTEM No. ⬡	DRAINAGE UNIT No. ◯
			EA	EA	SQYD	EA	CY	LF	LF	LB	SQYD	LF	"A1" LINE				
DP-4	7	a	1										703+69		DP-4	7	a
		b					2.5			526		2.79		MODIFIED INLET, 2 24-9 GRATES			b
		c				1								4.5′ x 18" RCP			c
		d									36			8′ x 16′ APRON			d
DP-4	8	a			14								711+69		DP-4	8	a
		b				1								14′ x 24" RCP			b
		c							14								c
		d					3.6			526		4.67		MODIFIED INLET, 2 24-9 GRATES			d
		e									36						e
		f		1													
DP-5	9	a	1										717+69		DP-5	9	a
		b					2.3			526		2.52		MODIFIED INLET, 2 24-9 GRATES			b
		c									36						c
		d				1								3′ x 18" RCP			d
DP-5	10	a	1										718+69		DP-5	10	a
		b							26								b
		c					2.3			526		2.36		MODIFIED INLET, 2 24-9 GRATES			c
		d									36						d
DP-6	11	a	1										726+33		DP-6	11	a
		b				1								14′ x 18" RCP			b
		c	1														c
		d						22.5									d
		e					1.0			263		3.05		DI (TYPE G1), 24-9 GRATE			e
		f									36						f
		g						3									g
		h					1.1			263		3.55		DI (TYPE G1), 24-9 GRATE			h
DP-6	12	a	1										732+68		DP-6	12	a
		b					1.7			526		2.00		MODIFIED INLET, 2 24-9 GRATES			b
		c									36						c
SUBTOTAL			6	1	14	4	14.5	25.5	40	3156	216						

DRAINAGE QUANTITIES

DQ-2

REVISED BY | DATE REVISED
BILL LEHMAN | JUSTIN BORDERS
CALCULATED-DESIGNED BY | CHECKED BY
FUNCTIONAL SUPERVISOR
AL TRUJILLO

STATE OF CALIFORNIA - DEPARTMENT OF TRANSPORTATION
Caltrans
DESIGN

P:\proj2\02\2E240_plans\pse\22e240id002.dgn

LAST REVISION 08-30-10 | DATE PLOTTED => 07-JAN-2011 | TIME PLOTTED => 11:14

Dist	COUNTY	ROUTE	POST MILES TOTAL PROJECT	SHEET No.	TOTAL SHEETS
02	Sha	5	R8.5/R11.3	29	51

REGISTERED CIVIL ENGINEER DATE 12-07-10

1-3-11
PLANS APPROVAL DATE

REGISTERED PROFESSIONAL ENGINEER JUSTIN W. BORDERS No. C65618 Exp. 6-30-12 CIVIL STATE OF CALIFORNIA

THE STATE OF CALIFORNIA OR ITS OFFICERS OR AGENTS SHALL NOT BE RESPONSIBLE FOR THE ACCURACY OR COMPLETENESS OF SCANNED COPIES OF THIS PLAN SHEET.

NOTES:

1. ALL JOINTS ARE STANDARD JOINT TYPE.
2. (N) NOT A SEPARATE PAY ITEM, FOR INFORMATION ONLY.

DRAINAGE QUANTITIES

SHEET No.	DRAINAGE SYSTEM No. ⬡	DRAINAGE UNIT No. ◯	REMOVE FLARED END SECTION	REMOVE INLET	REMOVE ASPHALT CONCRETE	REMOVE CULVERT	MINOR CONCRETE (MINOR STRUCTURE)	18" REINFORCED CONCRETE PIPE	24" REINFORCED CONCRETE PIPE	MISCELLANEOUS IRON AND STEEL	VEGETATION CONTROL (MINOR CONCRETE)	(N) HEIGHT OF INLET (H)	STATION	DESCRIPTION	SHEET No.	DRAINAGE SYSTEM No. ⬡	DRAINAGE UNIT No. ◯
			EA	EA	SQYD	EA	CY	LF	LF	LB	SQYD	LF	"A1" LINE				
DP-7	13	a			14								742+28		DP-7	13	a
		b				1								12.4′ x 24" RCP			b
		c							12.6								c
		d					5.9			526		8.47		MODIFIED INLET, 2 24-9 GRATES			d
		e									36						e
		f		1													f
DP-7	14	a	1										751+18		DP-7	14	a
		b					2.7			526		3.23		MODIFIED INLET, 2 24-9 GRATES			b
		c									36						c
DP-8	15	a	1										756+68		DP-8	15	a
		b				1								4′ x 18" RCP			b
		c					1.9			526		1.71		MODIFIED INLET, 2 24-9 GRATES			c
		d									36						d
SUBTOTAL			2	1	14	2	10.5		12.6	1578	108						
TOTAL			11	6	84	10	43.8	25.5	126.9	7627	596						

REVISED BY | DATE REVISED

BILL LEHMAN | JUSTIN BORDERS | CALCULATED-DESIGNED BY | CHECKED BY | FUNCTIONAL SUPERVISOR | AL TRUJILLO

STATE OF CALIFORNIA - DEPARTMENT OF TRANSPORTATION
Caltrans DESIGN

P:\proj2\02\2E240_plans\pse\22e240id003.dgn

DRAINAGE QUANTITIES

DQ-3

LAST REVISION 08-30-10 | DATE PLOTTED => 07-JAN-2011 | TIME PLOTTED => 11:15

Dist	COUNTY	ROUTE	POST MILES TOTAL PROJECT	SHEET No.	TOTAL SHEETS
02	Sha	5	R8.5/R11.3	30	51

REGISTERED CIVIL ENGINEER 12-07-10 DATE

1-3-11
PLANS APPROVAL DATE

REGISTERED PROFESSIONAL ENGINEER JUSTIN W. BORDERS No. C65618 Exp. 6-30-12 CIVIL STATE OF CALIFORNIA

THE STATE OF CALIFORNIA OR ITS OFFICERS OR AGENTS SHALL NOT BE RESPONSIBLE FOR THE ACCURACY OR COMPLETENESS OF SCANNED COPIES OF THIS PLAN SHEET.

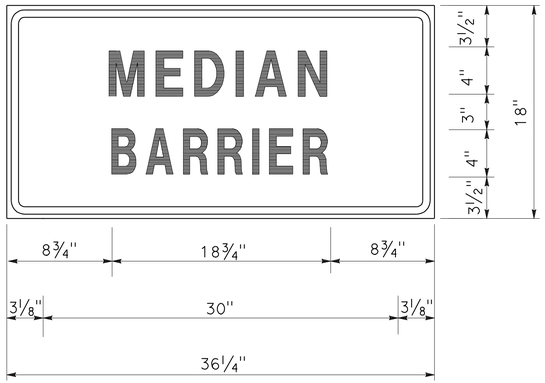

1.5" RADIUS, 0.6" BORDERS, 0.4" INDENT, BLACK ON ORANGE;

C23B SIGN PANEL DETAIL

PLACE UNDER C11 SIGN

CONSTRUCTION AREA SIGNS (STATIONARY MOUNTED)

TYPE	CODE	PANEL SIZE	SIGN MESSAGE	No. AND SIZE OF POSTS	No. OF SIGNS	COMMENTS
A	C40A (CA)	48" x 48"	TRAFFIC FINES DOUBLED IN WORK AREA	2 - 4" x 6"	2	
B	C11	60" x 36"	ROAD WORK NEXT 4 MILES	2 - 4" x 6"	2	PLACE "MEDIAN BARRIER" SIGN ON "ROAD WORK AHEAD" SIGN POST
C	C23B (CA)	36" x 18"	MEDIAN BARRIER			
D	W20-1	48" x 48"	ROAD WORK AHEAD	1 - 4" x 6"	2	
E	C14	48" x 24"	END ROAD WORK	2 - 4" x 6"	4	

EXACT SIGN LOCATIONS TO BE DETERMINED BY THE ENGINEER.

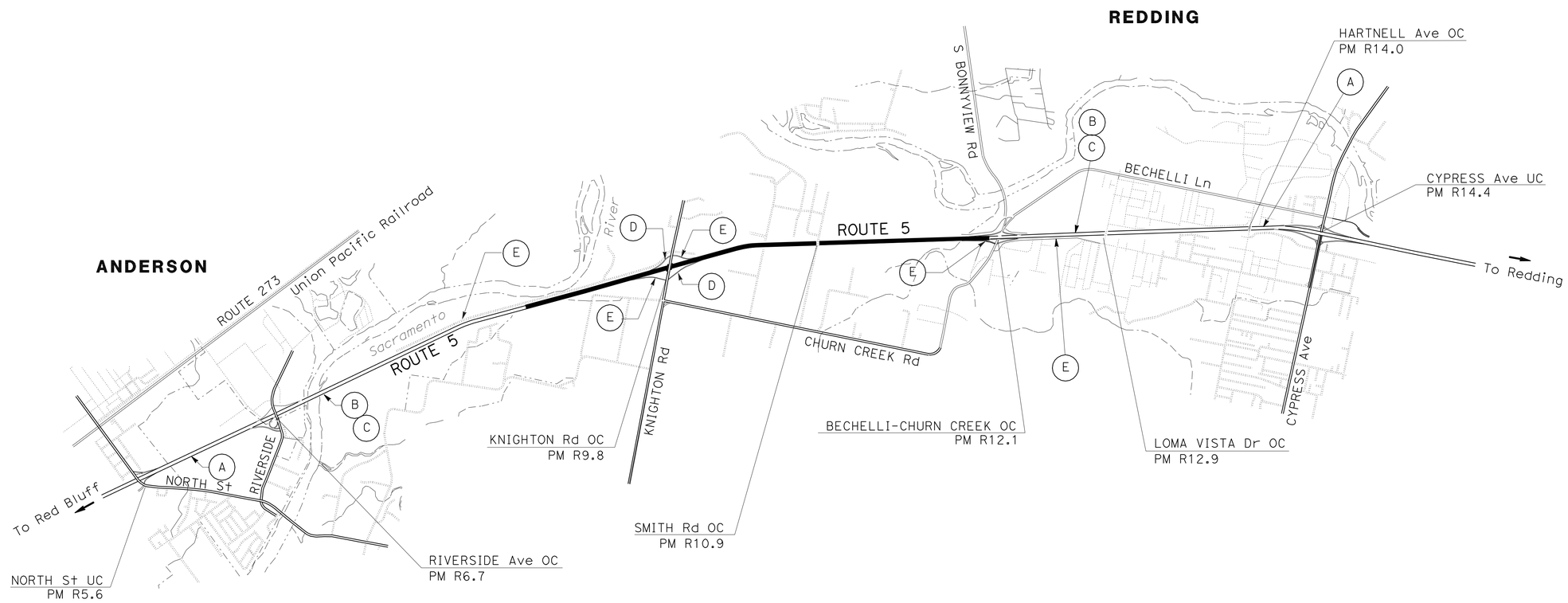

CONSTRUCTION AREA SIGNS

NO SCALE

CS-1

THIS PLAN ACCURATE FOR CONSTRUCTION AREA SIGN WORK ONLY

STATE OF CALIFORNIA - DEPARTMENT OF TRANSPORTATION
Caltrans® DESIGN

FUNCTIONAL SUPERVISOR: AL TRUJILLO
CALCULATED-DESIGNED BY: BILL LEHMAN
CHECKED BY: JUSTIN BORDERS
REVISED BY / DATE REVISED

P:\proj2\02\2E240_plans\pse\22e2401a001.dgn

LAST REVISION 08-30-10 | DATE PLOTTED => 07-JAN-2011 | TIME PLOTTED => 11:15

BORDER LAST REVISED 7/2/2010 | USERNAME => trstrk | DGN FILE => 22e2401a001.dgn | RELATIVE BORDER SCALE IS IN INCHES 0 1 2 3 | UNIT 0316 | PROJECT NUMBER & PHASE 02000002071

Dist	COUNTY	ROUTE	POST MILES TOTAL PROJECT	SHEET No.	TOTAL SHEETS
02	Sha	5	R8.5/R11.3	31	51

REGISTERED CIVIL ENGINEER 12-07-10 DATE

1-3-11
PLANS APPROVAL DATE

REGISTERED PROFESSIONAL ENGINEER JUSTIN W. BORDERS No. C65618 Exp. 6-30-12 CIVIL STATE OF CALIFORNIA

THE STATE OF CALIFORNIA OR ITS OFFICERS OR AGENTS SHALL NOT BE RESPONSIBLE FOR THE ACCURACY OR COMPLETENESS OF SCANNED COPIES OF THIS PLAN SHEET.

NOTES:

1. EXACT SIGN & PCMS LOCATIONS TO BE DETERMINED BY ENGINEER.
2. SEE STANDARD PLANS FOR LANE CLOSURE REQUIREMENTS.
3. SPEED ZONE REDUCTION MAY ONLY BE IN PLACE WHEN COZEEP OFFICERS ARE PRESENT.
4. COVER EXISTING SPEED LIMIT SIGNS WITHIN REDUCED SPEED ZONE.
5. IF THERE IS NO SPEED LIMIT SIGN (R2-1) WITHIN 1 MILE BEYOND THE END OF SPEED LIMIT SIGN (R3) (CA), INSTALL A TEMPORARY APPLICABLE SPEED LIMIT SIGN (R2-1) WITHIN 500 FT +/- OF THE END OF SPEED LIMIT SIGN (R3) (CA).

LEGEND:

- PORTABLE SIGN
- DIRECTION OF TRAVEL
- PORTABLE CHANGEABLE MESSAGE SIGN (PCMS)
- TRAFFIC CONE
- PORTABLE RADAR TRAILER

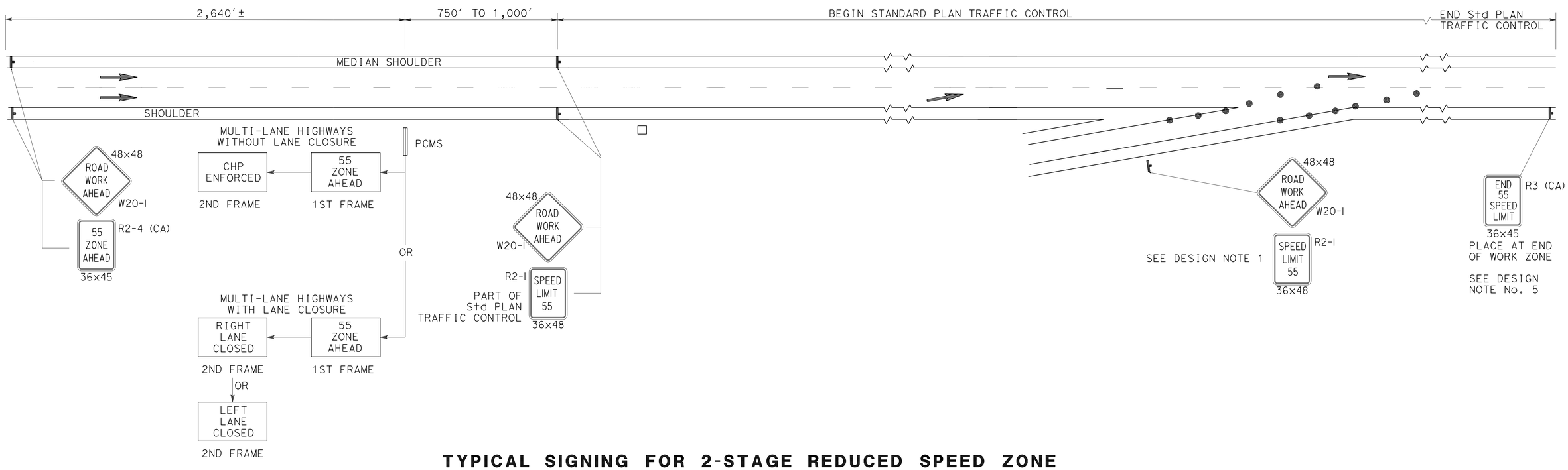

TYPICAL SIGNING FOR 2-STAGE REDUCED SPEED ZONE

CONSTRUCTION AREA SIGNS SPEED ZONE REDUCTION

NO SCALE

CS-2

STATE OF CALIFORNIA - DEPARTMENT OF TRANSPORTATION
Caltrans® DESIGN

FUNCTIONAL SUPERVISOR: AL TRUJILLO
CALCULATED-DESIGNED BY: BILL LEHMAN
CHECKED BY: JUSTIN BORDERS
REVISED BY
DATE REVISED

P:\proj2\02\2E240_plans\pse\22e2401a002.dgn

LAST REVISION 08-30-10 | DATE PLOTTED => 07-JAN-2011 | TIME PLOTTED => 11:15

Dist	COUNTY	ROUTE	POST MILES TOTAL PROJECT	SHEET No.	TOTAL SHEETS
02	Sha	5	R8.5/R11.3	32	51

REGISTERED CIVIL ENGINEER 12-07-10 DATE

1-3-11
PLANS APPROVAL DATE

REGISTERED PROFESSIONAL ENGINEER JUSTIN W. BORDERS No. C65618 Exp. 6-30-12 CIVIL STATE OF CALIFORNIA

THE STATE OF CALIFORNIA OR ITS OFFICERS OR AGENTS SHALL NOT BE RESPONSIBLE FOR THE ACCURACY OR COMPLETENESS OF SCANNED COPIES OF THIS PLAN SHEET.

NOTE:

(N) - NOT A SEPARATE PAY ITEM, FOR INFORMATION ONLY.

EXISTING TRAFFIC MANAGEMENT SYSTEM ELEMENTS (N)

ELEMENT	LOCATION PM	DESCRIPTION
CMS	R10.86	FNTB MOUNTED ON SMITH Rd OC
EMS/HAR SIGN	R10.86	FNTB MOUNTED ON SMITH Rd OC

* EXISTING TRAFFIC MANAGEMENT SYSTEM ELEMENTS SHALL BE PROTECTED IN PLACE

MBGR

STATION	REMOVE MBGR	METAL BEAM GUARD RAILING	DOUBLE METAL BEAM GUARD RAILING (WOOD POST)	ALTERNATIVE IN-LINE TERMINAL SYSTEM	TERMINAL ANCHOR ASSEMBLY (TYPE SFT)	LOCATION
	LF	LF	LF	EA	EA	Lt/Rt
698+36 TO 698+42					1	Lt
698+42 TO 698+67		25				Lt
698+77 TO 699+04			37.5			Lt
699+04 TO 699+35				1		Lt
725+53 TO 726+68	232					Lt/Rt
725+80 TO 725+86					1	Lt
725+86 TO 726+11		25				Lt
726+11 TO 726+48			37.5			Lt
726+48 TO 726+80				1		Lt
782+62 TO 783+64	207					Lt/Rt
782+76 TO 782+83					1	Lt
782+83 TO 783+08		25				Lt
783+08 TO 783+32			37.5			Lt
783+45 TO 783+76				1		Lt
TOTAL	439	75	112.5	3	3	

TEMPORARY WATER POLLUTION CONTROL

TEMPORARY CHECK DAM	TEMPORARY FIBER ROLL	TEMPORARY DRAINAGE INLET PROTECTION	TEMPORARY SOIL BINDER
LF	LF	EA	SQYD
100	250	20	131,000

EROSION CONTROL (HYDROSEED)

ACRE
21

ROADWAY ITEMS

STATION	IMPORTED MATERIAL (SHOULDER BACKING)	IMPORTED BORROW	HIGH TENSION CABLE BARRIER (CONCRETE FOUNDATIONS)	HIGH TENSION CABLE BARRIER	CABLE BARRIER TERMINAL	VEGETATION CONTROL (MINOR CONCRETE)	PLACE HMA (Misc AREA)	CLASS 2 AGGREGATE BASE	MINOR HMA (TYPE A)	LOCATION
"A1" ALIGNMENT	TON	CY	LF	LF	EA	SQYD	SQYD	CY	TON	Lt/Rt
656+85					1					Lt
656+85 TO 762+00	1367	18,434	10,514			4673				Lt/Rt
696+00 TO 700+20							500	55	84	Lt
762+00 TO 802+69				4069						Rt
725+77 TO 726+82						139				Lt
782+73 TO 783+66						210				Lt
800+09					1					Rt
QUANTITIES FROM DRAINAGE						596				
TOTAL	1367	18,434	10,514	4069	2	6214	500	55	84	

CULVERT MARKER (BARRIER MOUNTED)

STATION	EA	PM
657+88	1	8.52
670+68	1	8.76
674+68	1	8.84
681+68	1	8.97
686+68	1	9.06
696+69	1	9.25
703+69	1	9.39
711+69	1	9.54
717+69	1	9.65
718+69	1	9.67
726+33	1	9.82
732+68	1	9.94
742+28	1	10.12
751+18	1	10.29
756+68	1	10.39
764+19	1	10.53
769+69	1	10.64
777+69	1	10.79
785+70	1	10.94
796+20	1	11.14
TOTAL	20	

OBJECT MARKER (TYPE L-2)

STATION	EA	Lt/Rt
726+00	1	Lt
783+00	1	Lt
TOTAL	2	

SUMMARY OF QUANTITIES

Q-1

STATE OF CALIFORNIA - DEPARTMENT OF TRANSPORTATION
Caltrans DESIGN

FUNCTIONAL SUPERVISOR: AL TRUJILLO
CALCULATED-DESIGNED BY: BILL LEHMAN
CHECKED BY: JUSTIN BORDERS
REVISED BY / DATE REVISED

P:\proj2\02\2E240_plans\pse\22e240pa001.dgn

LAST REVISION 08-30-10 | DATE PLOTTED => 07-JAN-2011 | TIME PLOTTED => 11:15

Dist	COUNTY	ROUTE	POST MILES TOTAL PROJECT	SHEET No.	TOTAL SHEETS
02	Sha	5	R8.5/R11.3	33	51

REGISTERED ELECTRICAL ENGINEER 12-20-10 DATE

1-3-11
PLANS APPROVAL DATE

REGISTERED PROFESSIONAL ENGINEER
IAN TURNBULL
No. E16780
Exp. 9-30-12
ELECTRICAL
STATE OF CALIFORNIA

THE STATE OF CALIFORNIA OR ITS OFFICERS OR AGENTS SHALL NOT BE RESPONSIBLE FOR THE ACCURACY OR COMPLETENESS OF SCANNED COPIES OF THIS PLAN SHEET.

NOTES:

1. FOR ACCURATE RIGHT OF WAY DATA, CONTACT RIGHT OF WAY ENGINEERING AT THE DISTRICT OFFICE.
2. EXISTING UTILITY FACILITIES HAVE NOT BEEN POSITIVELY LOCATED.

[3] MVDS STANDARD, SEE DETAIL SHEET SES-1, MVDS EQUIPMENT BY OTHERS.

ABBREVIATION:

MVDS - MICROWAVE VIDEO DETECTION SYSTEM STANDARD

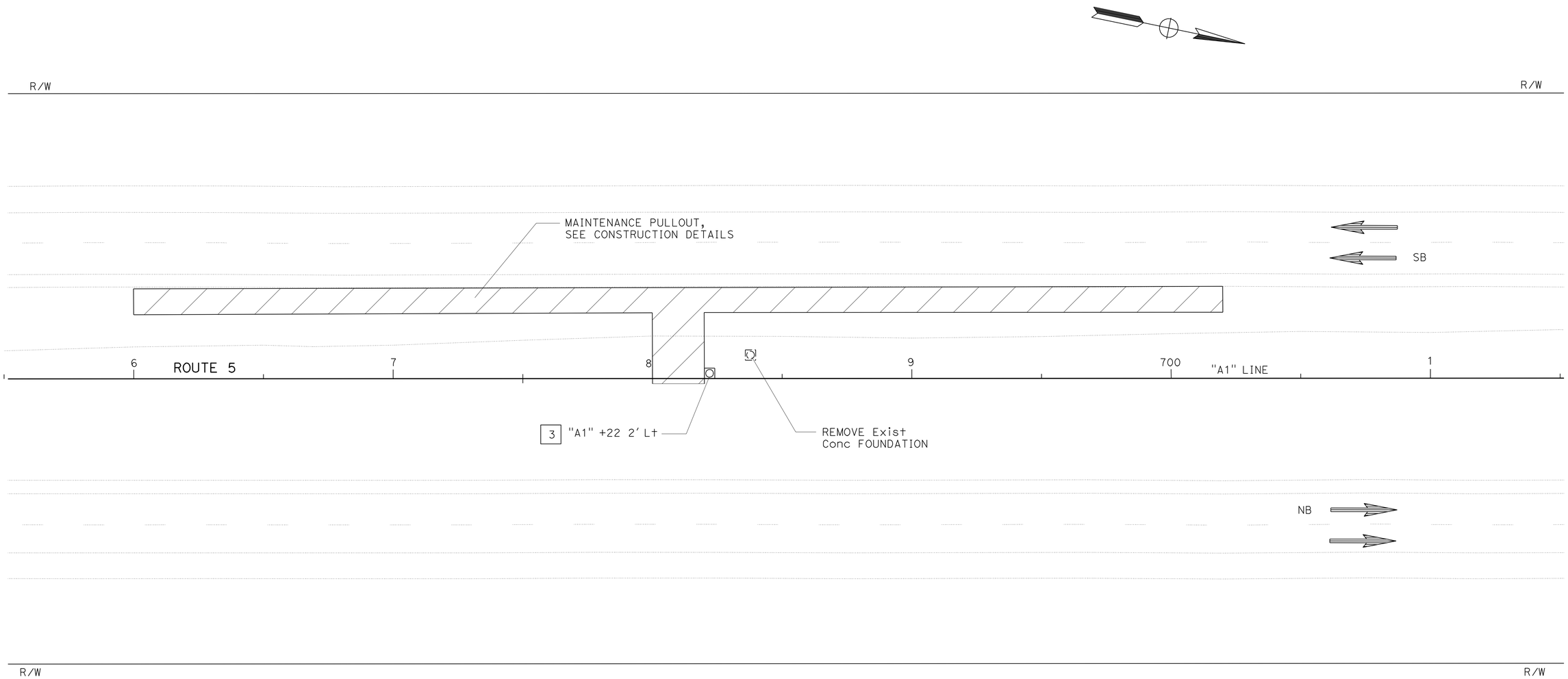

MICROWAVE VIDEO DETECTION SYSTEM STANDARD

SCALE: 1" = 20'

E-1

THIS PLAN IS ACCURATE FOR ELECTRICAL WORK ONLY.

REVISED BY | DATE REVISED
JEREMIAH PEARCE | IAN TURNBULL
CALCULATED-DESIGNED BY | CHECKED BY
FUNCTIONAL SUPERVISOR
IAN TURNBULL

STATE OF CALIFORNIA - DEPARTMENT OF TRANSPORTATION
Caltrans® ITS ENGINEERING

P:\proj2\02\2E240_plans\pse\Revised_Submittal\22e240ua001.dgn

LAST REVISION 12-15-10 | DATE PLOTTED => 07-JAN-2011 | TIME PLOTTED => 11:15

DIST	COUNTY	ROUTE	POST MILES TOTAL PROJECT	SHEET No	TOTAL SHEETS
02	Sha	5	R8.5/R11.3	34	51

K. C. Liu 12-7-10
REGISTERED CIVIL ENGINEER DATE

1-3-11
PLANS APPROVAL DATE

REGISTERED PROFESSIONAL ENGINEER K. C. LIU No. C 50291 Exp. 06-30-11 CIVIL STATE OF CALIFORNIA

The State of California or its officers or agents shall not be responsible for the accuracy or completeness of electronic copies of this plan sheet.

TABLE A

POLE TYPE	POLE DATA				BASE PLATE DATA				"d" 2'-0" Ø CIDH Pile		STRUCTURAL STEEL lbs PLUS 3.5% GALVANIZING
	HEIGHT "h"	Min OD		THICKNESS	"C"	THICKNESS	ANCHOR BOLTS				
		BASE	TOP				SIZE	BC = BOLT CIRCLE	LEVEL GROUND	SLOPING GROUND	
VDS 35	35'	8⅝"	3⅞"	0.1793"	1'-1"	1"	1¼" x 3'-0 x 4"	1'-1"	10'-0"	12'-0"	550

TABLE C

SPREAD FOOTING		
GROUND	FOOTING SIZE LENGTH x WIDTH x DEPTH	REINFORCEMENT TOP AND BOTTOM
LEVEL	6'-0" x 6'-0" x 1'-6"	7 - #4
SLOPING	7'-0" x 7'-0" x 1'-6"	8 - #4

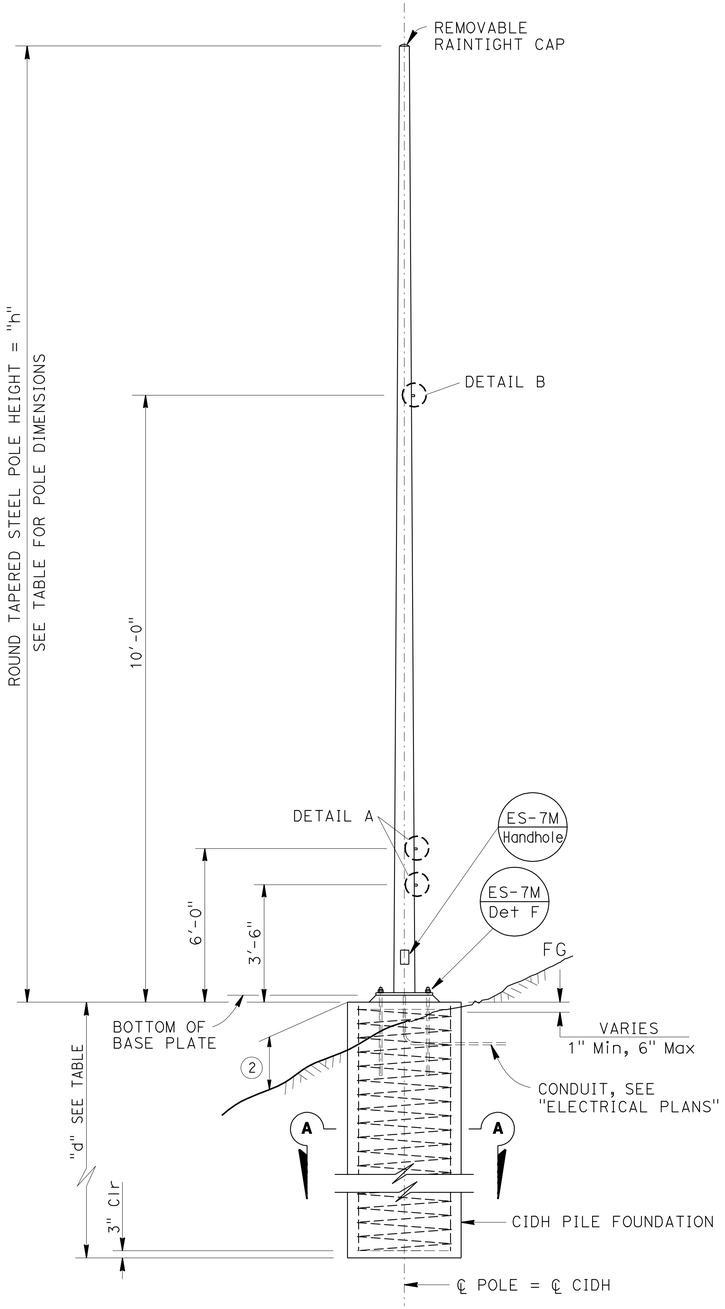

ELEVATION

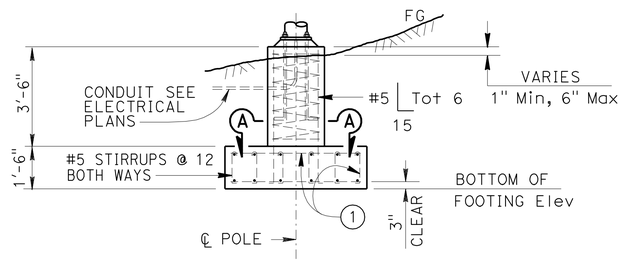

ALTERNATIVE FOOTING ELEVATION

(1) #5 BARS AND #5 STIRRUPS (TOP AND BOTTOM) TO RUN BOTH LONGITUDINAL AND TRANVERSE DIRECTION.

(2) 1'-3" Max FOR SLOPED FINISHED GRADE.

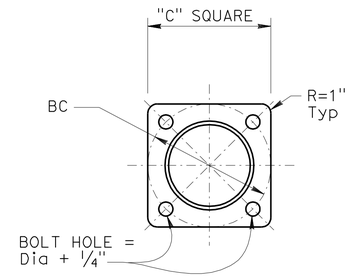

BASE PLATE

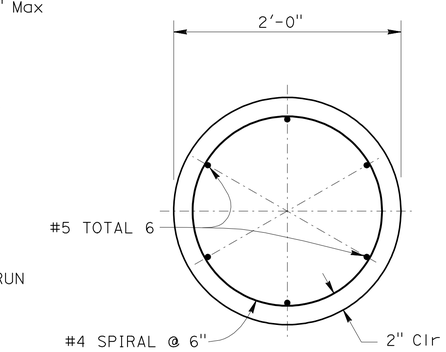

SECTION A-A

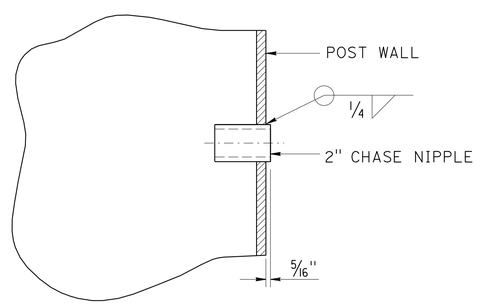

2" CHASE NIPPLE DETAIL A (TYPICAL)

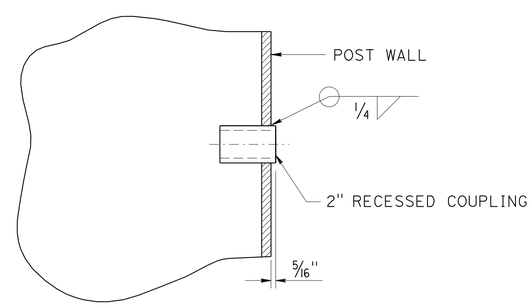

2" RECESSED COUPLING DETAIL B (TYPICAL)

ABBREVIATION:

WVDS - WIRELESS VEHICLE DETECTION SYSTEM

GENERAL NOTES:

SPECIFICATIONS

DESIGN: AASHTO STANDARD SPECIFICATIONS FOR STRUCTURAL SUPPORTS FOR HIGHWAY SIGNS, LUMINAIRES AND TRAFFIC SIGNALS DATED 2001.

LOADING

WIND LOADINGS: 100 MPH

UNIT STRESSES:

STRUCTURAL STEEL: fy = 48,000 psi TAPERED STEEL TUBE
fy = 36,000 psi UNLESS OTHERWISE NOTED.

ANCHOR BOLTS = A307

REINFORCED CONCRETE: f'c = 3,600 psi
fy = 60,000 psi

NOTES:

1. ALL STEEL SHALL BE GALVANIZED AFTER FABRICATION.
2. DURING POLE ERECTION THE POST SHALL BE RAKED AS NECESSARY WITH THE USE OF LEVELING NUTS TO PROVIDE A PLUMB POLE AXIS.
3. THE FOUNDATION SHALL BE TREATED AS LEVEL GROUND CONDITION IF THE SLOPE INCLINATION IS FLATTER THAN 4H:1V.
4. FOUNDATION DESIGN IS BASED ON AASHTO 2001 ARTICLE 13.6 BROMS' APPROXIMATE PROCEDURE ASSUMING A COHESSIONLESS MATERIAL. THE ANGLE OF INTERNAL FRICTION USED IS 30 DEGREES AND UNIT WEIGHT OF SOIL USED IS 120 lbs/ft^3.
5. FOR DETAILS NOT SHOWN, SEE "2006 STANDARD PLANS" AND "2006 REVISED STANDARD PLANS".
6. PLACE ALL COUPLINGS ON THE SAME SIDE OF POLE.
7. CHASE NIPPLES AND COUPLING SHALL HAVE A RAIN TIGHT PLUG. PLUGS SHOULD ONLY BE REMOVED IF CHASE NIPPLE AND COUPLING IS USED.

NOTE:
THE CONTRACTOR SHALL VERIFY ALL CONTROLLING FIELD DIMENSIONS BEFORE ORDERING OR FABRICATING ANY MATERIAL.

NO SCALE

BRANCH CHIEF Jeffrey B. Woody

	BY	CHECKED
DESIGN	K.C. LIU	
DETAILS	D W JUSTICE Jr	K.C. LIU
QUANTITIES		

STATE OF CALIFORNIA
DEPARTMENT OF TRANSPORTATION

DIVISION OF ENGINEERING SERVICES
DESIGN AND TECHNICAL SERVICES
SPECIAL DESIGNS BRANCH A

BRIDGE NO. N/A
POST MILE

ELECTRICAL SYSTEMS
MICROWAVE VIDEO DETECTION SYSTEM STANDARD DETAILS

SES-1

(ENGLISH) SPECIAL DESIGNS BRANCH BORDER SHEET (REV. 7-1-09)

ORIGINAL SCALE IN INCHES FOR REDUCED PLANS 0 1 2 3

CU 02
EA 2E2401

DISREGARD PRINTS BEARING EARLIER REVISION DATES 10-18-10 11-18-10 12-7-10

REVISION DATES | SHEET | OF

FILE => spec_des_br_prj/2010sd/02-2E2401/02-2e2401_ses1.dgn

USERNAME => ttrstrk DATE PLOTTED => 07-JAN-2011 TIME PLOTTED => 13:35

DIST	COUNTY	ROUTE	POST MILES TOTAL PROJECT	SHEET NO.	TOTAL SHEETS
02	Sha	5	R8.5/R11.3	35	51

REGISTERED CIVIL ENGINEER

November 17, 2006
PLANS APPROVAL DATE

REGISTERED PROFESSIONAL ENGINEER Dallas Forester No. C37765 Exp. 12-31-06 CIVIL STATE OF CALIFORNIA

The State of California or its officers or agents shall not be responsible for the accuracy or completeness of electronic copies of this plan sheet.

To accompany plans dated 1-3-11

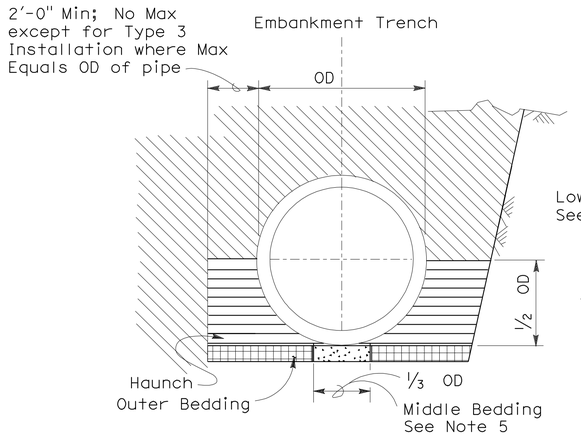

BACKFILL

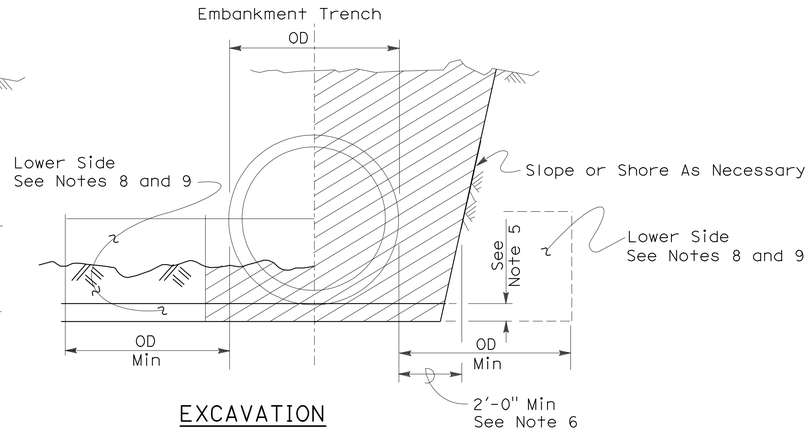

EXCAVATION

Roadway Embankment

Structure Backfill (Culvert) See Note 6

Structure Backfill (Culvert) See Note 6

Loose Backfill

Excavation Structure (Culvert)

TYPE 1 INSTALLATION:

The haunch and outer bedding shall be compacted to a minimum 90 percent relative compaction. In addition, the minimum sand equivalent in these areas shall be 30 and the maximum percentage passing the 75 μm sieve size shall be 12.

TYPE 2 INSTALLATION:

The haunch and outer bedding shall be compacted to a minimum 90 percent relative compaction. In addition, the minimum sand equivalent in these areas shall be 25.

TYPE 3 INSTALLATION:

The haunch and outer bedding shall be compacted to a minimum 85 percent relative compaction. 90 percent relative compaction will be required where the fill over the pipe is less than 4'-0" or 1/2 OD.

INSTALLATION TYPE 1

MINIMUM CLASS AND D-LOAD	COVER	
	108" Dia AND SMALLER	OVER 108" Dia
Class II 1000D	14.9'	12.9'
Class III 1350D	15.0' - 20.9'	13.0' - 18.9'
Class III Special 1700D	21.0' - 26.9'	19.0' - 24.9'
Class IV 2000D	27.0' - 31.9'	25.0' - 29.9'
Class IV Special 2500D	32.0' - 40.9'	30.0' - 38.9'
Class V 3000D	41.0' - 49.9'	39.0' - 46.9'
Class V Special 3600D	50.0' - 59.0'	47.0' - 58.0'

INSTALLATION TYPE 2

MINIMUM CLASS AND D-LOAD	COVER
Class II 1000D	9.9'
Class III 1350D	10.0'- 14.9'
Class III Special 1700D	15.0' - 19.9'
Class IV 2000D	20.0' - 24.9'
Class IV Special 2500D	25.0' - 31.9'
Class V 3000D	32.0' - 38.9'
Class V Special 3600D	39.0' - 47.0'

INSTALLATION TYPE 3

MINIMUM CLASS AND D-LOAD	COVER	
	48" Dia AND SMALLER	OVER 48" Dia
Class II 1000D	7.9'	5.9'
Class III 1350D	8.0' - 10.9'	6.0' - 8.9'
Class III Special 1700D	11.0' - 14.9'	9.0' - 12.9'
Class IV 2000D	15.0' - 17.9'	13.0' - 15.9'
Class IV Special 2500D	18.0' - 21.9'	16.0' - 19.9'
Class V 3000D	22.0' - 26.9'	20.0' - 24.9'
Class V Special 3600D	30.0' - 33.0'	25.0' - 31.0'

NOTES:

1. Unless otherwise shown on the plans or specified in the special provision, the Contractor shall have the option of selecting the class of RCP and the type of installation to be used, provided the height of cover does not exceed the value shown for the RCP selected.
   Example: 24" RCP culvert with maximum cover of 19'-0" the options are:
   a) Class III or stronger with Installation Type 1.
   b) Class III Special or stronger with Installation Type 2.
   c) Class IV Special or stronger with Installation Type 3.
   Cover is defined as the maximum vertical distance from top of the pipe to finished grade within the length of any given culvert.
2. The class of RCP and Installation Type selected shall be the same throughout the length of any given culvert.
3. The "length of any culvert" is defined as the culvert between:
   a) Successive drainage structure (inlets, junction boxes, headwalls, etc.).
   b) A drainage structure and the inlet or outlet end of the culvert.
   c) The inlet and outlet end of the culvert when there are no intervening drainage structures.
4. Oval and arch shaped RCP shall not be used.
5. 1/25 OD Min, not less than 3".
6. Slurry cement backfill may be substituted for backfill in the outer bedding and haunch areas. If slurry is used the outer and middle beddings shall be omitted. Prior to installation the soil under the middle 1/3 of the outside diameter of the pipe shall be softened by scarifying or other means to a minimum depth of 1/25 OD, but not less than 3". Where slurry cement backfill is used clear distance to trench wall may be reduced as set forth in Section 19-3.062 of the Standard Specifications.
7. Backfill shall be placed full width of excavation except where dimensions are shown for backfill width or thickness. Dimensions shown are minimums.
8. Lower side shall be suitable material as determined by the Engineer. Otherwise it shall be considered unsuitable as set forth in Section 19-2.02 of the Standard Specifications. See Note 9.
9. Where the pipe is placed in a trench, if the trench walls are sloped at 5 vertical to 1 horizontal or steeper for at least 90 percent of the trench height or up to not less than 12" from the grading plane, the firmness of the soil in the lower side need not be considered.
10. Non-reinforced precast concrete pipe sizes 3'-0" or smaller may be placed under installation Types 1, 2 or 3.

STATE OF CALIFORNIA
DEPARTMENT OF TRANSPORTATION

EXCAVATION AND BACKFILL CONCRETE PIPE CULVERTS

NO SCALE

RSP A62DA DATED NOVEMBER 17, 2006 SUPERSEDES STANDARD PLAN A62DA DATED MAY 1, 2006 - PAGE 20 OF THE STANDARD PLANS BOOK DATED MAY 2006.

REVISED STANDARD PLAN RSP A62DA

2006 REVISED STANDARD PLAN RSP A62DA

10-26-06

DIST	COUNTY	ROUTE	POST MILES TOTAL PROJECT	SHEET NO.	TOTAL SHEETS
02	Sha	5	R8.5/R11.3	36	51

Randell D. Hiatt
REGISTERED CIVIL ENGINEER

October 20, 2006
PLANS APPROVAL DATE

REGISTERED PROFESSIONAL ENGINEER
Randell D. Hiatt
No. C50200
Exp. 6-30-07
CIVIL
STATE OF CALIFORNIA

The State of California or its officers or agents shall not be responsible for the accuracy or completeness of electronic copies of this plan sheet.

To accompany plans dated 1-3-11

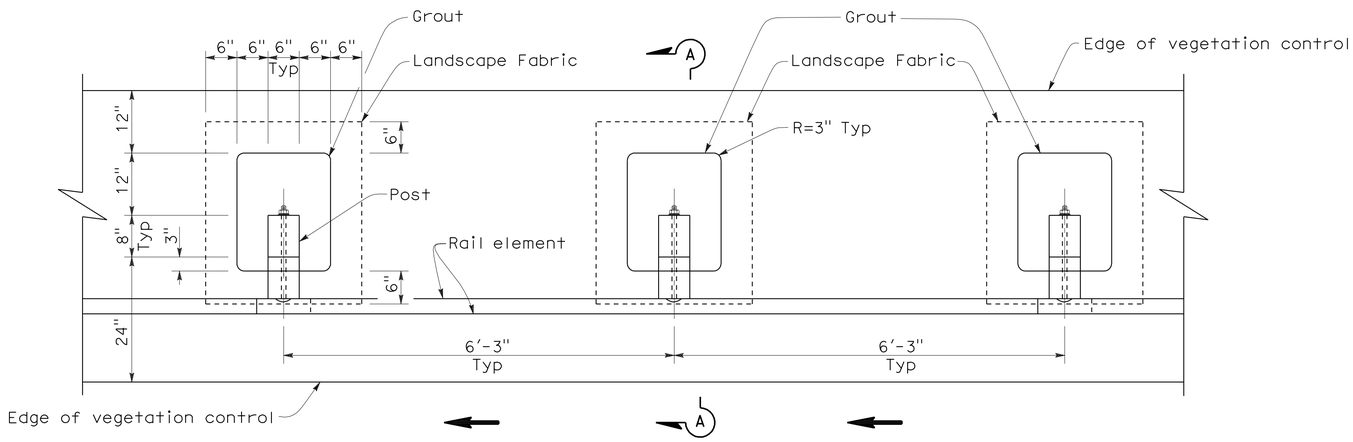

PLAN

NOTES:

1. Where the distance between back of post and hinge point is less than 24", vegetation control to be constructed flush with the back edge of the post.
2. Where dike is constructed under railing, construct vegetation control to back edge of dike. Where paved shoulder is constructed within 24" in front of the post, construct vegetation control to the edge of paved shoulder.
3. Direction of adjacent traffic indicated by ← .

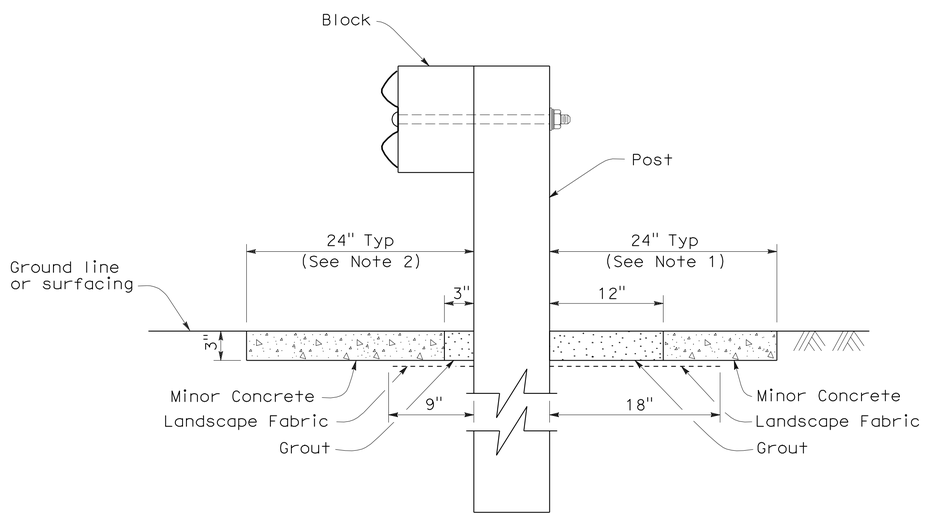

SECTION A-A

STATE OF CALIFORNIA
DEPARTMENT OF TRANSPORTATION

METAL BEAM GUARD RAILING TYPICAL VEGETATION CONTROL STANDARD RAILING SECTION

NO SCALE

NSP A77C5 DATED OCTOBER 20, 2006 SUPPLEMENTS THE STANDARD PLANS BOOK DATED MAY 2006.

NEW STANDARD PLAN NSP A77C5

2006 NEW STANDARD PLAN NSP A77C5

7-17-06

DIST	COUNTY	ROUTE	POST MILES TOTAL PROJECT	SHEET NO.	TOTAL SHEETS
02	Sha	5	R8.5/R11.3	37	51

Randell D. Hiatt
REGISTERED CIVIL ENGINEER

October 20, 2006
PLANS APPROVAL DATE

REGISTERED PROFESSIONAL ENGINEER
Randell D. Hiatt
No. C50200
Exp. 6-30-07
CIVIL
STATE OF CALIFORNIA

The State of California or its officers or agents shall not be responsible for the accuracy or completeness of electronic copies of this plan sheet.

To accompany plans dated 1-3-11

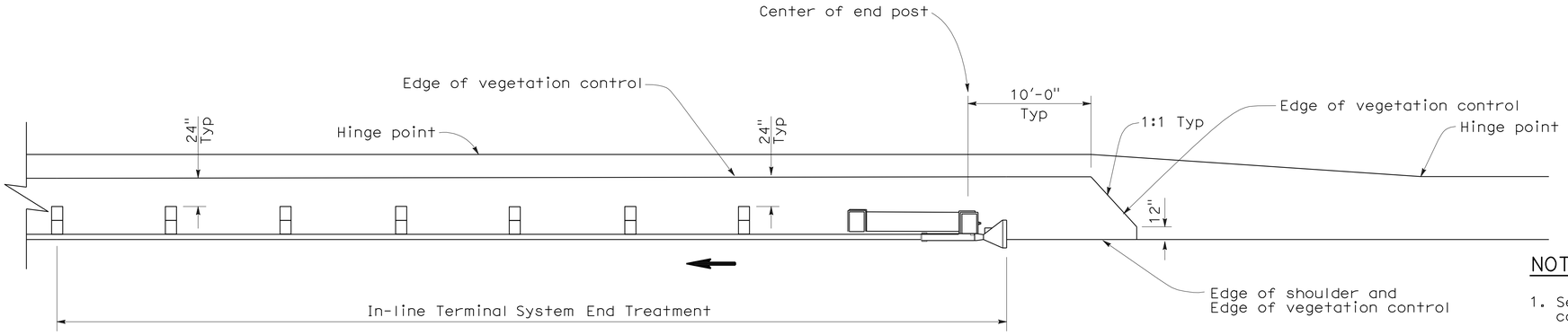

PLAN

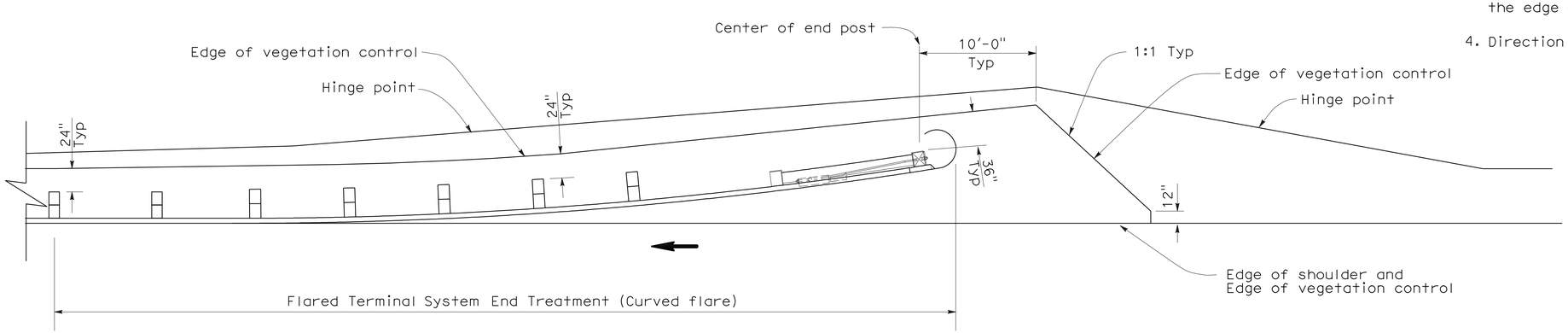

PLAN

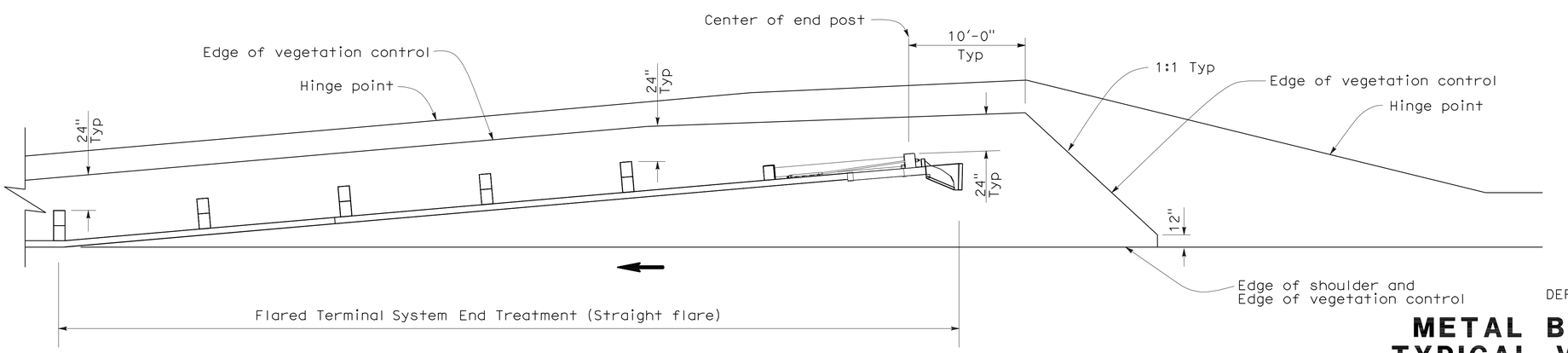

PLAN

NOTES:

1. See New Standard Plan NSP A77C5 for additional vegetation control details.
2. Where the distance between back of post and hinge point is less than 24", vegetation control to be constructed flush with the back edge of the post.
3. Where dike is constructed under railing, construct vegetation control to back edge of dike. Where paved shoulder is constructed within 24" in front of the post, construct vegetation control to the edge of paved shoulder.
4. Direction of adjacent traffic indicated by ←.

STATE OF CALIFORNIA
DEPARTMENT OF TRANSPORTATION

METAL BEAM GUARD RAILING TYPICAL VEGETATION CONTROL FOR TERMINAL SYSTEM END TREATMENTS

NO SCALE

NSP A77C6 DATED OCTOBER 20, 2006 SUPPLEMENTS THE STANDARD PLANS BOOK DATED MAY 2006.

NEW STANDARD PLAN NSP A77C6

2006 NEW STANDARD PLAN NSP A77C6

7-17-06

DIST	COUNTY	ROUTE	POST MILES TOTAL PROJECT	SHEET NO.	TOTAL SHEETS
02	Sha	5	R8.5/R11.3	38	51

Randell D. Hiatt
REGISTERED CIVIL ENGINEER

October 20, 2006
PLANS APPROVAL DATE

REGISTERED PROFESSIONAL ENGINEER
Randell D. Hiatt
No. C50200
Exp. 6-30-07
CIVIL
STATE OF CALIFORNIA

The State of California or its officers or agents shall not be responsible for the accuracy or completeness of electronic copies of this plan sheet.

To accompany plans dated 1-3-11

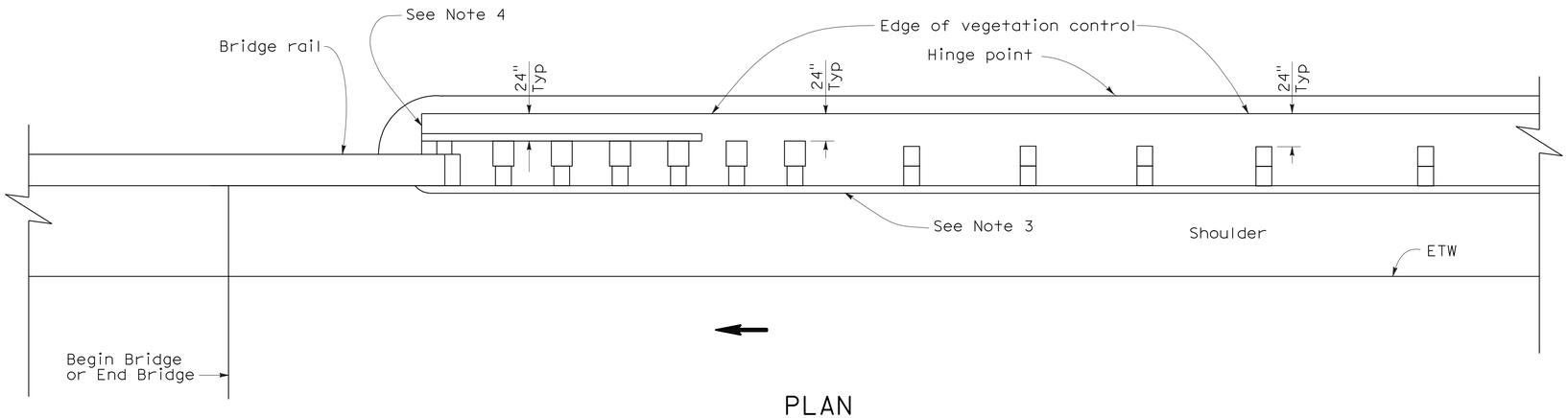

PLAN

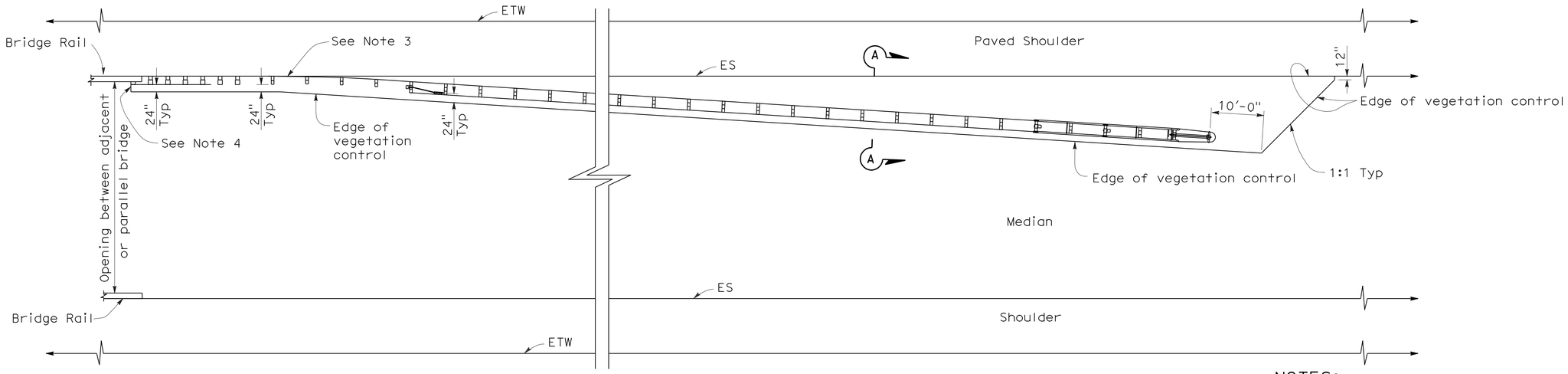

PLAN

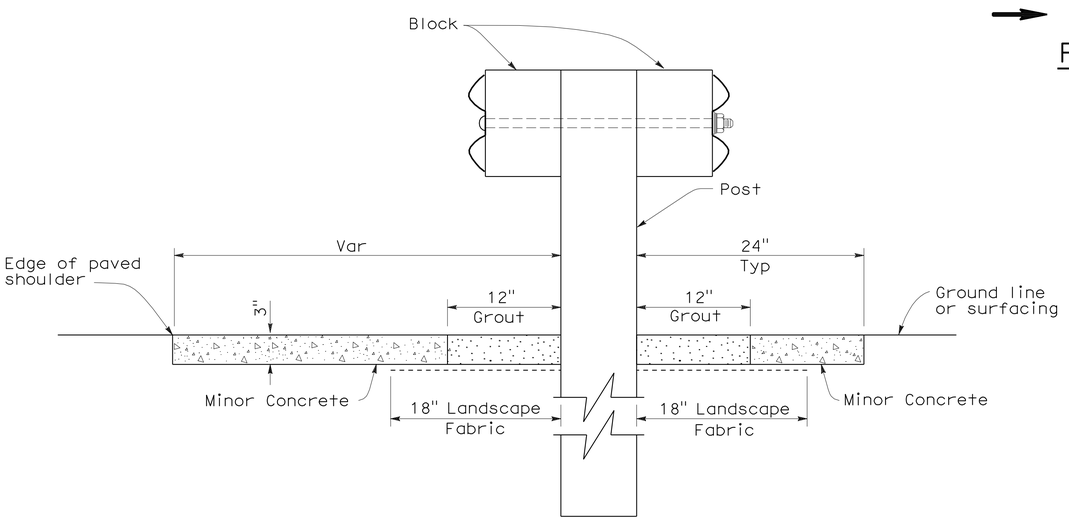

SECTION A-A

NOTES:

1. See New Standard Plan NSP A77C5 for additional vegetation control details.
2. Where the distance between back of post and hinge point is less than 24", vegetation control to be constructed flush with the back edge of the post.
3. Where dike is constructed under railing, construct vegetation control to back edge of dike. Where paved shoulder is constructed within 24" in front of the post, construct vegetation control to the edge of paved shoulder.
4. End vegetation control at end of backside rail element.
5. Direction of adjacent traffic indicated by ←.

STATE OF CALIFORNIA
DEPARTMENT OF TRANSPORTATION

METAL BEAM GUARD RAILING TYPICAL VEGETATION CONTROL AT STRUCTURE APPROACH AND DEPARTURE

NO SCALE

NSP A77C7 DATED OCTOBER 20, 2006 SUPPLEMENTS THE STANDARD PLANS BOOK DATED MAY 2006.

NEW STANDARD PLAN NSP A77C7

2006 NEW STANDARD PLAN NSP A77C7

7-17-06

DIST	COUNTY	ROUTE	POST MILES TOTAL PROJECT	SHEET NO.	TOTAL SHEETS
02	Sha	5	R8.5/R11.3	39	51

Randell D. Hiatt
REGISTERED CIVIL ENGINEER

October 20, 2006
PLANS APPROVAL DATE

REGISTERED PROFESSIONAL ENGINEER
Randell D. Hiatt
No. C50200
Exp. 6-30-07
CIVIL
STATE OF CALIFORNIA

The State of California or its officers or agents shall not be responsible for the accuracy or completeness of electronic copies of this plan sheet.

To accompany plans dated 1-3-11

2006 NEW STANDARD PLAN NSP A77C8

NOTES:

1. See New Standard Plan NSP A77C5 for additional vegetation control details.
2. Where the distance between back of post and hinge point is less than 24", vegetation control to be constructed flush with the back edge of the post.
3. Where dike is constructed under railing, construct vegetation control to back edge of dike. Where paved shoulder is constructed within 24" in front of the post, construct vegetation control to the edge of paved shoulder.
4. Direction of adjacent traffic indicated by ←.

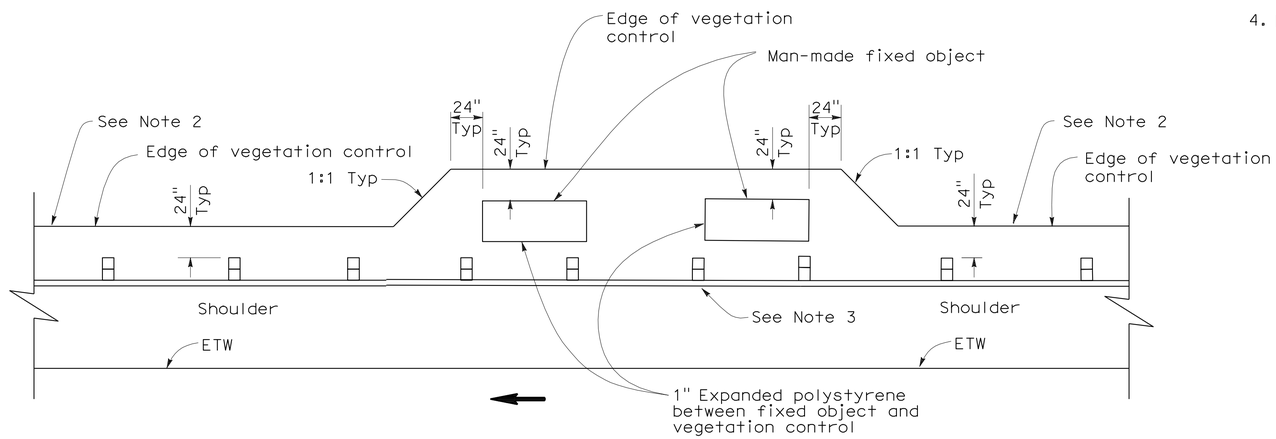

PLAN

FIXED OBJECT(S) ON SHOULDER

STATE OF CALIFORNIA
DEPARTMENT OF TRANSPORTATION

METAL BEAM GUARD RAILING TYPICAL VEGETATION CONTROL AT FIXED OBJECT

NO SCALE

NSP A77C8 DATED OCTOBER 20, 2006 SUPPLEMENTS THE STANDARD PLANS BOOK DATED MAY 2006.

NEW STANDARD PLAN NSP A77C8

7-17-06

DIST	COUNTY	ROUTE	POST MILES TOTAL PROJECT	SHEET NO.	TOTAL SHEETS
02	Sha	5	R8.5/R11.3	40	51

Randell D. Hiatt
REGISTERED CIVIL ENGINEER

October 20, 2006
PLANS APPROVAL DATE

REGISTERED PROFESSIONAL ENGINEER
Randell D. Hiatt
No. C50200
Exp. 6-30-07
CIVIL
STATE OF CALIFORNIA

The State of California or its officers or agents shall not be responsible for the accuracy or completeness of electronic copies of this plan sheet.

To accompany plans dated 1-3-11

NOTES:

1. See New Standard Plan NSP A77C5 for additional vegetation control details.
2. Where dike is constructed under railing, construct vegetation control to back edge of dike. Where paved shoulder is constructed within 24" in front of the post, construct vegetation control to the edge of paved shoulder.
3. Direction of adjacent traffic indicated by ← .

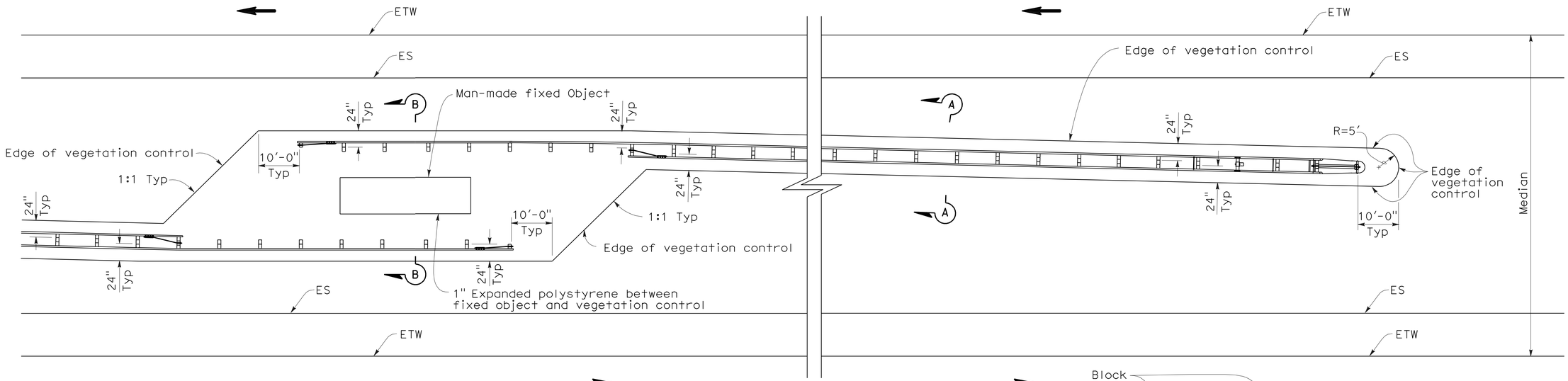

PLAN

FIXED OBJECT(S) IN MEDIAN

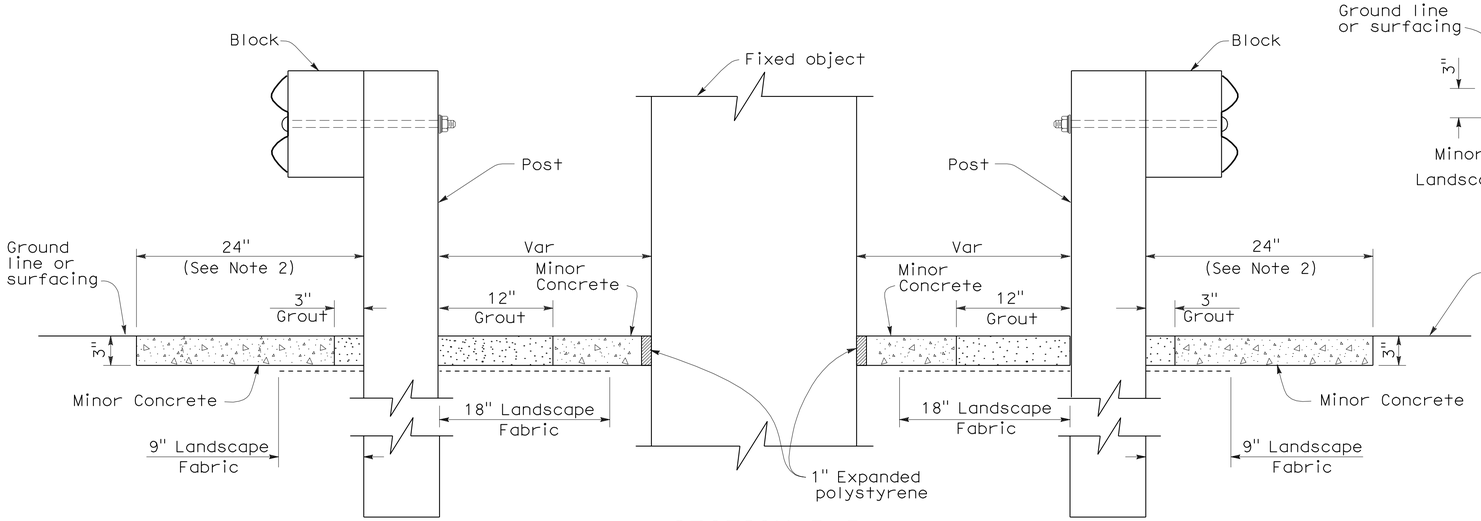

SECTION B-B

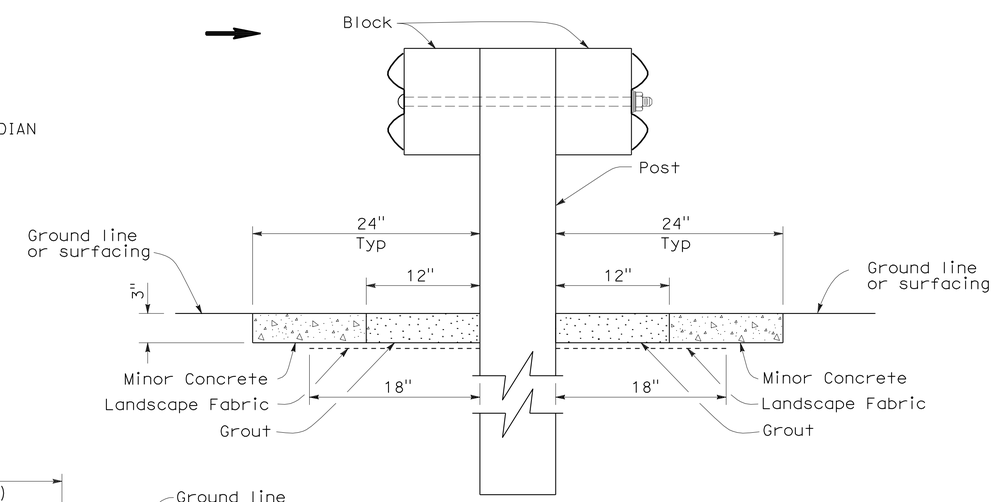

SECTION A-A

STATE OF CALIFORNIA
DEPARTMENT OF TRANSPORTATION

METAL BEAM GUARD RAILING TYPICAL VEGETATION CONTROL AT FIXED OBJECT

NO SCALE

NSP A77C9 DATED OCTOBER 20, 2006 SUPPLEMENTS THE STANDARD PLANS BOOK DATED MAY 2006.

NEW STANDARD PLAN NSP A77C9

2006 NEW STANDARD PLAN NSP A77C9

7-17-06

DIST	COUNTY	ROUTE	POST MILES TOTAL PROJECT	SHEET NO.	TOTAL SHEETS
02	Sha	5	R8.5/R11.3	41	51

Randell D. Hiatt
REGISTERED CIVIL ENGINEER

October 20, 2006
PLANS APPROVAL DATE

REGISTERED PROFESSIONAL ENGINEER
Randell D. Hiatt
No. C50200
Exp. 6-30-07
CIVIL
STATE OF CALIFORNIA

The State of California or its officers or agents shall not be responsible for the accuracy or completeness of electronic copies of this plan sheet.

To accompany plans dated 1-3-11

NOTES:

1. See New Standard Plan NSP A77C5 for additional vegetation control details.
2. Where dike is constructed under railing, construct vegetation control to back edge of dike. Where paved shoulder is constructed within 24" in front of the post, construct vegetation control to the edge of paved shoulder.
3. Direction of adjacent traffic indicated by ←.

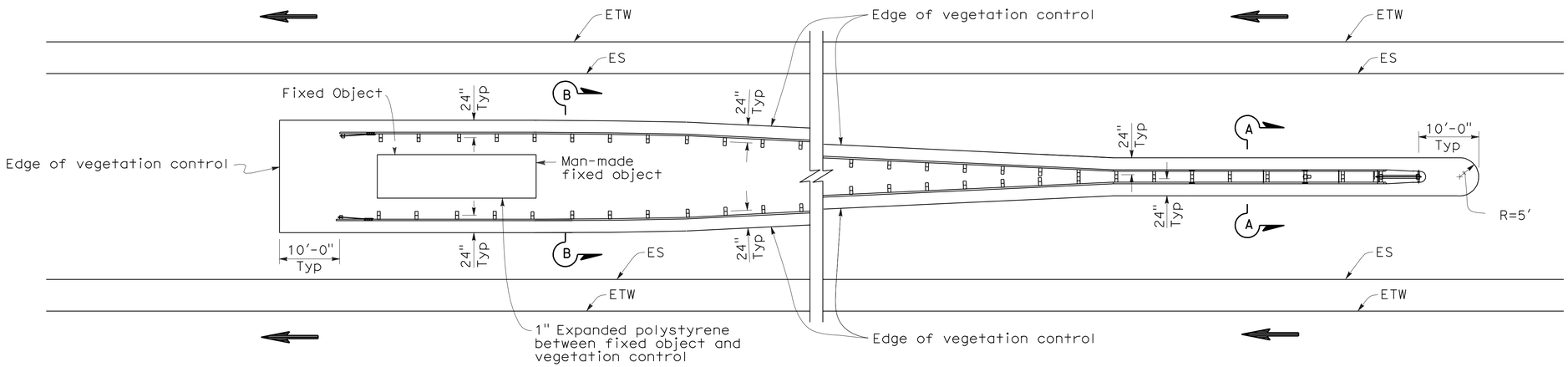

PLAN

FIXED OBJECT(S) BETWEEN SEPARATE ROADBEDS
(ONE-WAY TRAFFIC)

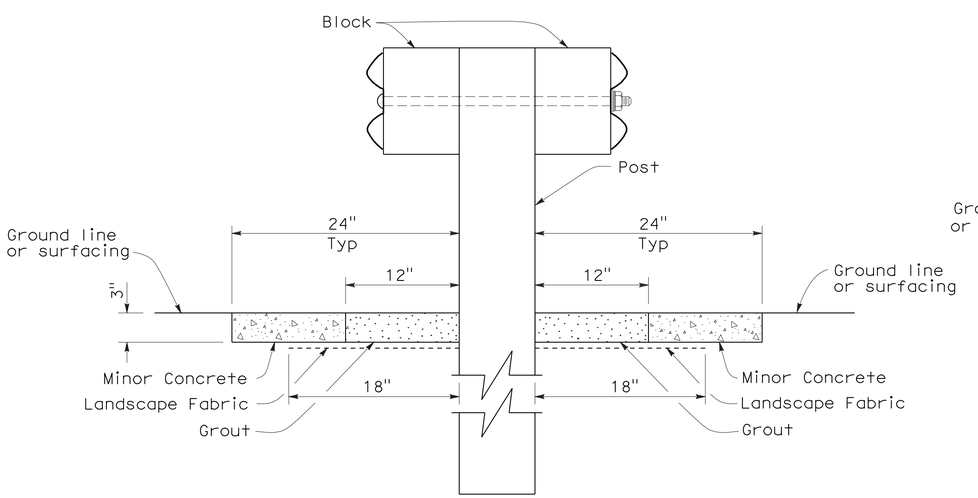

SECTION A-A

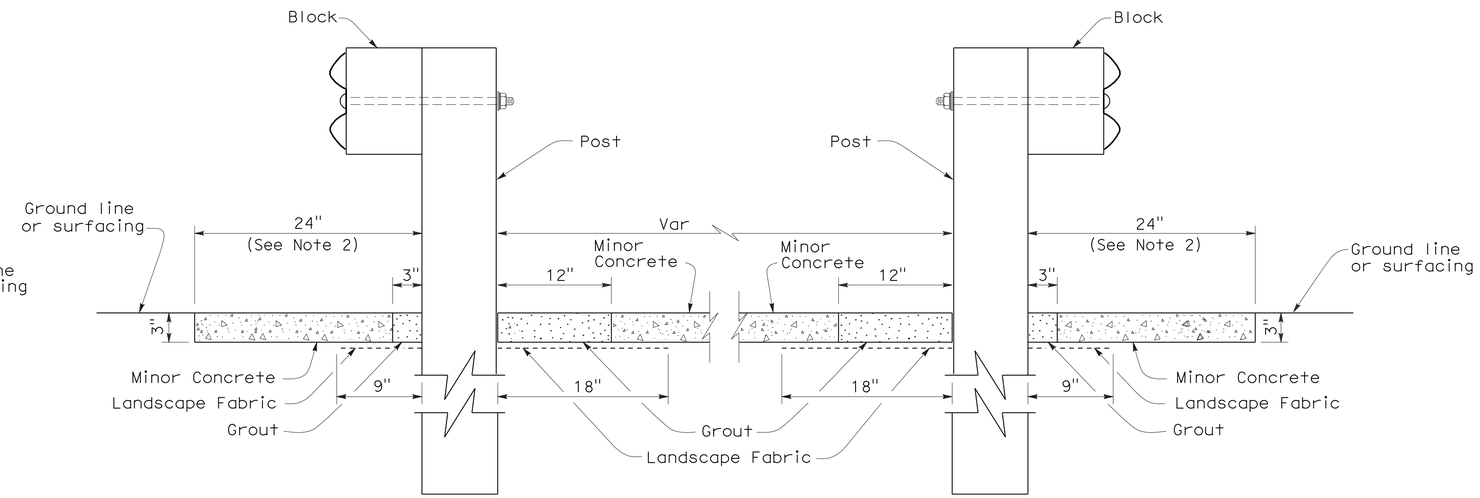

SECTION B-B

STATE OF CALIFORNIA
DEPARTMENT OF TRANSPORTATION

METAL BEAM GUARD RAILING TYPICAL VEGETATION CONTROL AT FIXED OBJECT

NO SCALE

NSP A77C10 DATED OCTOBER 20, 2006 SUPPLEMENTS THE STANDARD PLANS BOOK DATED MAY 2006.

NEW STANDARD PLAN NSP A77C10

2006 NEW STANDARD PLAN NSP A77C10

7-17-06

DIST	COUNTY	ROUTE	POST MILES TOTAL PROJECT	SHEET NO.	TOTAL SHEETS
02	Sha	5	R8.5/R11.3	42	51

Raymond Don Tsztoo
REGISTERED CIVIL ENGINEER

January 18, 2008
PLANS APPROVAL DATE

REGISTERED PROFESSIONAL ENGINEER
Raymond Don Tsztoo
No. C37332
Exp. 6-30-08
CIVIL
STATE OF CALIFORNIA

The State of California or its officers or agents shall not be responsible for the accuracy or completeness of electronic copies of this plan sheet.

To accompany plans dated 1-3-11

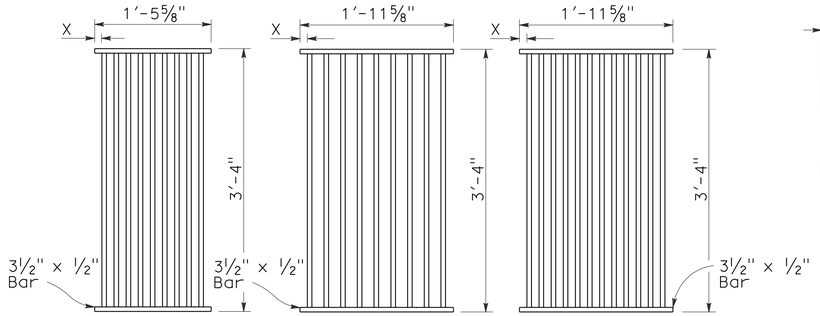

TYPE 18-9

1⅜" Clear spacing. Use within the roadbed on highways where bicycles and pedestrians are excluded.

TYPE 24-9

2" Clear spacing. Use in locations off the roadbed on all types of highways.

TYPE 24-12

1⅜" Clear spacing. Use within the roadbed on highways where bicycles and pedestrians are excluded.

RECTANGULAR GRATE DETAILS

(See table below)

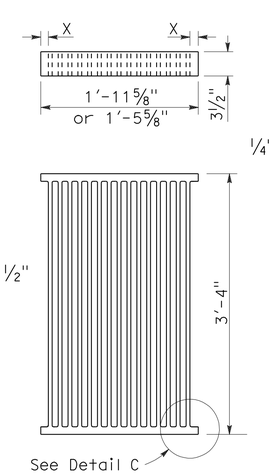

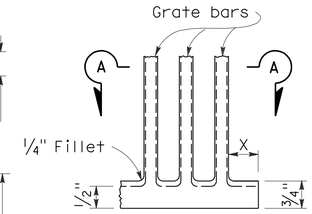

DETAIL C

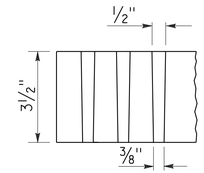

SECTION A-A

ALTERNATIVE CAST NODULAR IRON GRATE OR CAST STEEL GRATE

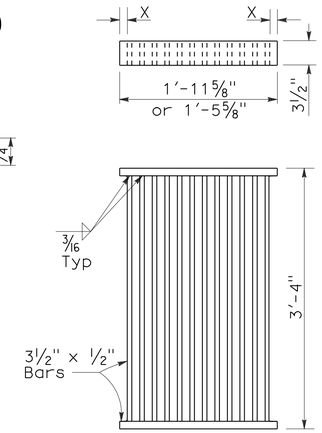

ALTERNATIVE WELDED GRATE

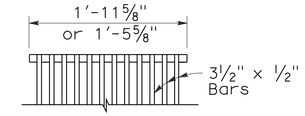

CAST END BLOCK

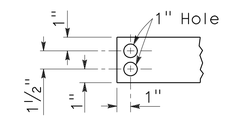

END OF BAR

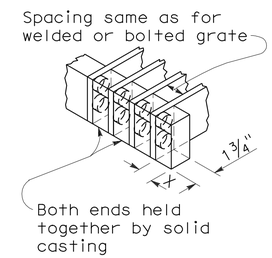

ALTERNATIVE CAST NODULAR IRON OR CAST STEEL END BLOCK GRATE

NOTES:

1. Grate type numbers refer to approximate width of grate in inches and number of bars, respectively.
2. Contractor has the option of using cast nodular iron, cast steel, welded, bolted, or cast end block grate.
3. See Special Provisions for requirements pertaining to galvanizing or asphalt dipping of grates and frames.
4. Rounded top of bars optional on all grates.
5. Pipe inlets with a grate shall be placed so that bars parallel direction of principle surface flow.
6. Full penetration butt welds may be substituted for the fillet welds on all anchors.
7. Standard square, hexagon, round or equivalent headed anchors may be substituted for the right angle hooks on the anchors shown on this plan.
8. Grate and frame weights are based on welded grates (weights of face angles, steps, protection bars, etc. are not included).

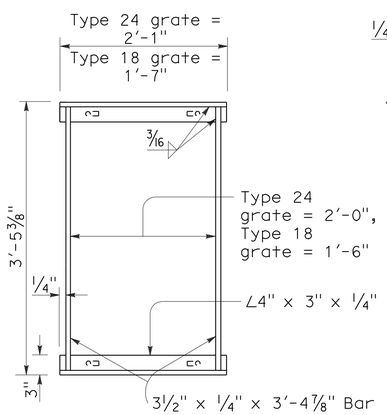

TYPICAL FRAME

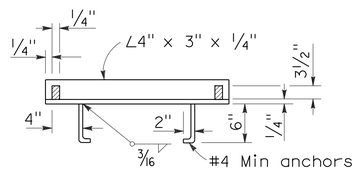

CROSS SECTION

(Thru frame)

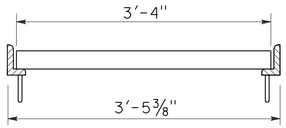

LONGITUDINAL SECTION

(Thru frame and grate)

RECTANGULAR FRAME DETAILS

(For all rectangular grates)

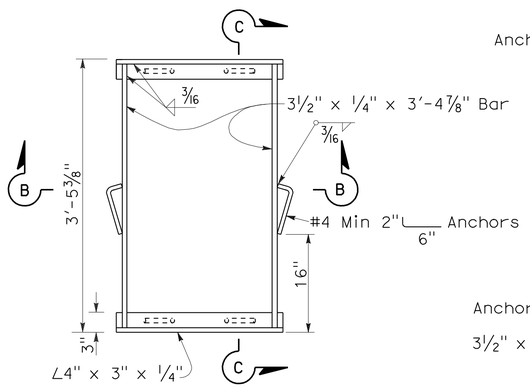

TYPICAL FRAME

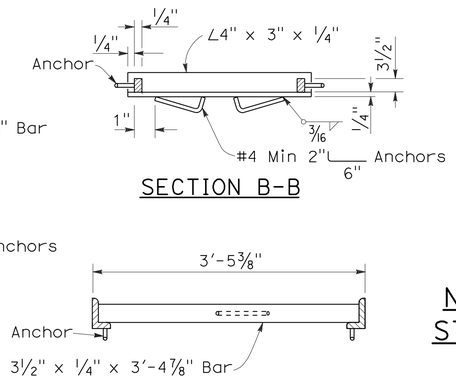

SECTION B-B

SECTION C-C

ALTERNATIVE ANCHOR FOR RECTANGULAR FRAME

(For details not shown, See Rectangular Frame Details)

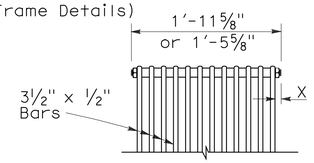

BOLTED END BLOCK

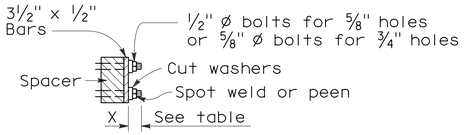

BOLTING DETAIL

ALTERNATIVE BOLTED GRATE

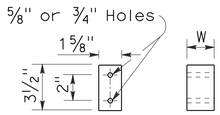

BAR SPACER

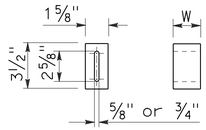

ALTERNATIVE SPACER

W = 1⅜" or 2"

GRATE BAR SPACING TABLE

TYPE	No. OF BARS	CLEAR BAR SPACING	X
18-9	9	1⅜"	1 1/16"
24-9	9	2"	1 9/16"
24-12	12	1⅜"	1¼"

INLET TYPE	COVER TYPE	WEIGHT LB
OS	PLATE	174
OL-7	PLATE	170
OL-10	PLATE	170
OL-14	PLATE	170
OL-21	PLATE	170
OCP	PLATE	112
OCPI	PLATE	112
OCPI	REDWOOD	42
OMP	PLATE	177
OMPI	PLATE	177

INLET TYPE	GRATE TYPE	No. OF GRATES	WEIGHT LB
GDO	24-12	2	634
GOL-7	24-12	1	326
GOL-10	24-12	1	326
GO,G1,G2,G3,G4 (TYPE 24)	24-9	1	263
	24-12	1	326
G4 (TYPE 18),G5,G6	18-9	1	249
GT1	18-9	2	498
GT2	18-9	2	498
GT3	24-12	2	652
GT4	24-12	2	652
TRASH RACK			22

BASIS FOR MISC IRON & STEEL FINAL PAY WEIGHTS FOR DRAINAGE INLETS

(See General Notes, No 8)

STATE OF CALIFORNIA
DEPARTMENT OF TRANSPORTATION

GRATE DETAILS

NO SCALE

RSP D77A DATED JANUARY 18, 2008 SUPERSEDES STANDARD PLAN D77A DATED MAY 1, 2006 - PAGE 155 OF THE STANDARD PLANS BOOK DATED MAY 2006.

REVISED STANDARD PLAN RSP D77A

2006 REVISED STANDARD PLAN RSP D77A

12-14-07

DIST	COUNTY	ROUTE	POST MILES TOTAL PROJECT	SHEET NO.	TOTAL SHEETS
02	Sha	5	R8.5/R11.3	43	51

Randell D. Hiatt
REGISTERED CIVIL ENGINEER

June 6, 2008
PLANS APPROVAL DATE

REGISTERED PROFESSIONAL ENGINEER
Randell D. Hiatt
No. C50200
Exp. 6-30-09
CIVIL
STATE OF CALIFORNIA

The State of California or its officers or agents shall not be responsible for the accuracy or completeness of electronic copies of this plan sheet.

To accompany plans dated 1-3-11

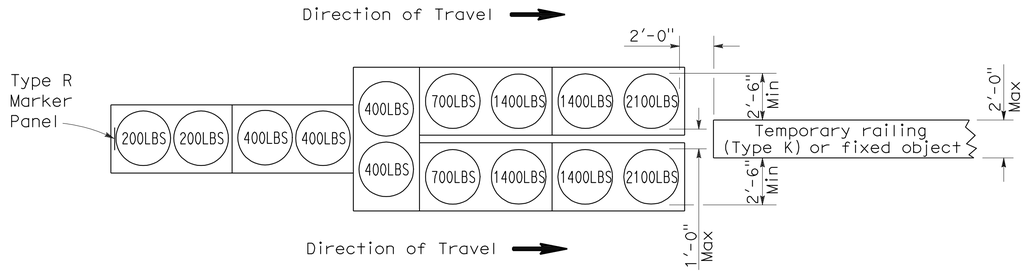

ARRAY 'TU14'

Approach speed 45 mph or more

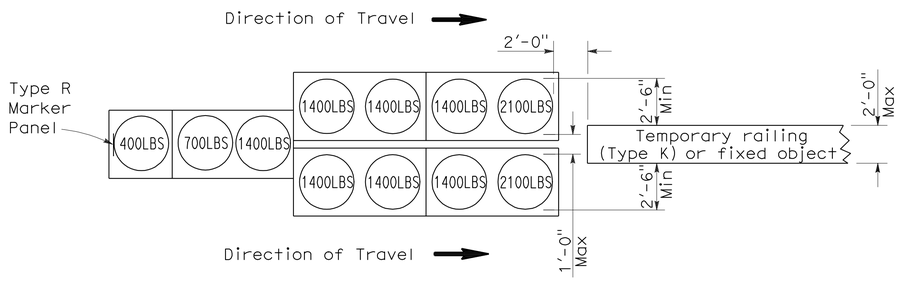

ARRAY 'TU11'

Approach speed less than 45 mph

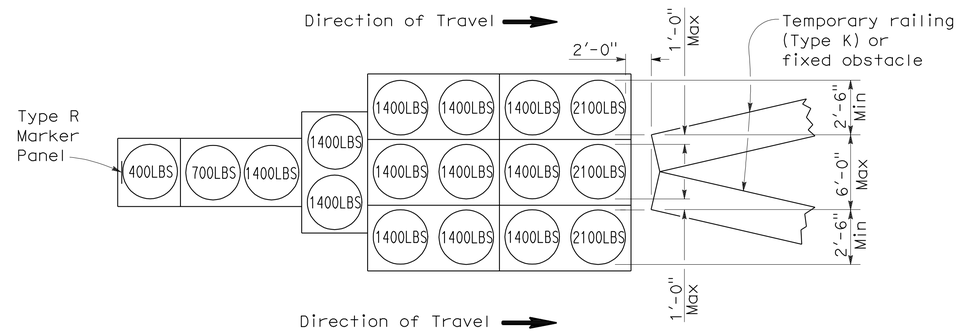

ARRAY 'TU17'

Approach speed less than 45 mph

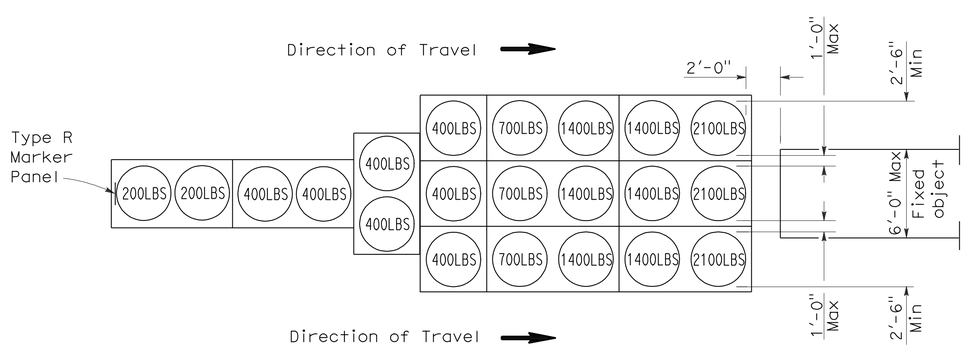

ARRAY 'TU21'

Approach speed 45 mph or more

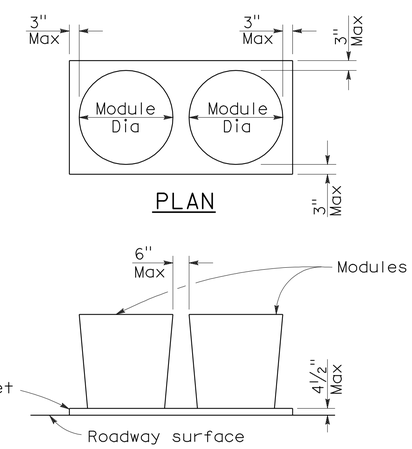

PLAN

ELEVATION

CRASH CUSHION PALLET DETAIL

See Note 7

NOTES:

1. (XXX) Indicates sand filled module location and weight of sand in pounds for each module. Module spacing is based on the greater diameter of the module.
2. All sand weights are nominal.
3. Temporary crash cushion arrays shall not encroach on the traveled way.
4. Place the top of Type R marker panel 1" below the module lid.
5. Refer to Standard Plan A73B for marker details.
6. Approach speeds indicated conform to NCHRP 350 Report criteria.
7. Use of pallets is optional.

STATE OF CALIFORNIA
DEPARTMENT OF TRANSPORTATION

TEMPORARY CRASH CUSHION, SAND FILLED (UNIDIRECTIONAL)

NO SCALE

RSP T1A DATED JUNE 6, 2008 SUPERSEDES STANDARD PLAN T1A
DATED MAY 1, 2006 - PAGE 211 OF THE STANDARD PLANS BOOK DATED MAY 2006.

REVISED STANDARD PLAN RSP T1A

2006 REVISED STANDARD PLAN RSP T1A

DIST	COUNTY	ROUTE	POST MILES TOTAL PROJECT	SHEET NO.	TOTAL SHEETS
02	Sha	5	R8.5/R11.3	44	51

Randell D. Hiatt
REGISTERED CIVIL ENGINEER

June 6, 2008
PLANS APPROVAL DATE

REGISTERED PROFESSIONAL ENGINEER
Randell D. Hiatt
No. C50200
Exp. 6-30-09
CIVIL
STATE OF CALIFORNIA

The State of California or its officers or agents shall not be responsible for the accuracy or completeness of electronic copies of this plan sheet.

To accompany plans dated 1-3-11

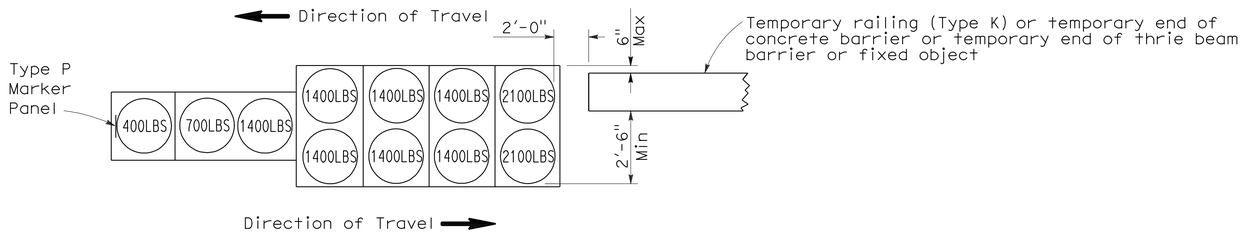

ARRAY 'TB11'

Approach speed less than 45 mph

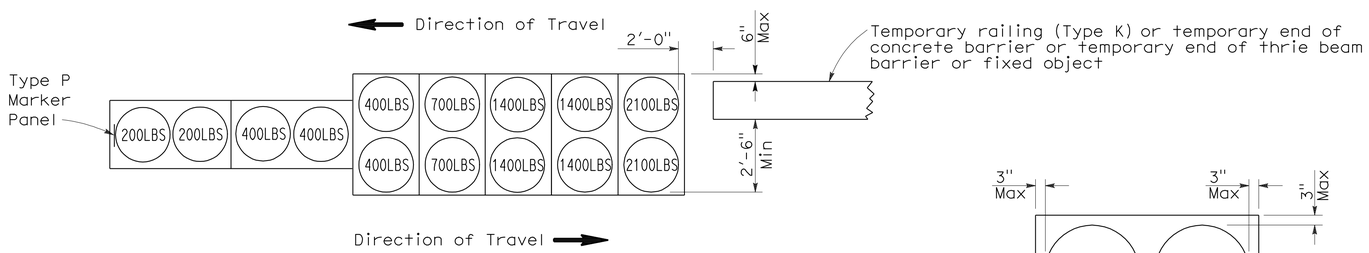

ARRAY 'TB14'

Approach speed 45 mph or more

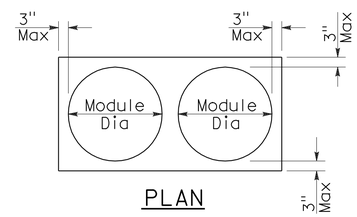

PLAN

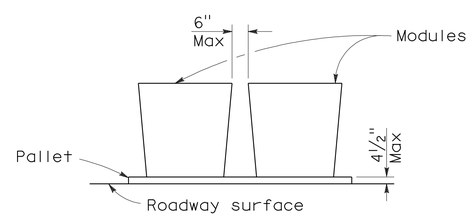

ELEVATION

CRASH CUSHION PALLET DETAIL

See Note 7

NOTES:

1. (XXX) Indicates sand filled module location and weight of sand in pounds for each module. Module spacing is based on the greater diameter of the module.
2. All sand weights are nominal.
3. Temporary crash cushion arrays shall not encroach on the traveled way.
4. Place the Type P marker panel so that the bottom of the panel rests upon the pallet.
5. Refer to Standard Plan A73B for marker details.
6. Approach speeds indicated conform to NCHRP 350 Report criteria.
7. Use of pallets is optional.

STATE OF CALIFORNIA
DEPARTMENT OF TRANSPORTATION

TEMPORARY CRASH CUSHION, SAND FILLED (BIDIRECTIONAL)

NO SCALE

RSP T1B DATED JUNE 6, 2008 SUPERSEDES STANDARD PLAN T1B
DATED MAY 1, 2006 - PAGE 212 OF THE STANDARD PLANS BOOK DATED MAY 2006.

REVISED STANDARD PLAN RSP T1B

2006 REVISED STANDARD PLAN RSP T1B

DIST	COUNTY	ROUTE	POST MILES TOTAL PROJECT	SHEET NO.	TOTAL SHEETS
02	Sha	5	R8.5/R11.3	45	51

Randell D. Hiatt
REGISTERED CIVIL ENGINEER

June 6, 2008
PLANS APPROVAL DATE

REGISTERED PROFESSIONAL ENGINEER
Randell D. Hiatt
No. C50200
Exp. 6-30-09
CIVIL
STATE OF CALIFORNIA

The State of California or its officers or agents shall not be responsible for the accuracy or completeness of electronic copies of this plan sheet.

To accompany plans dated 1-3-11

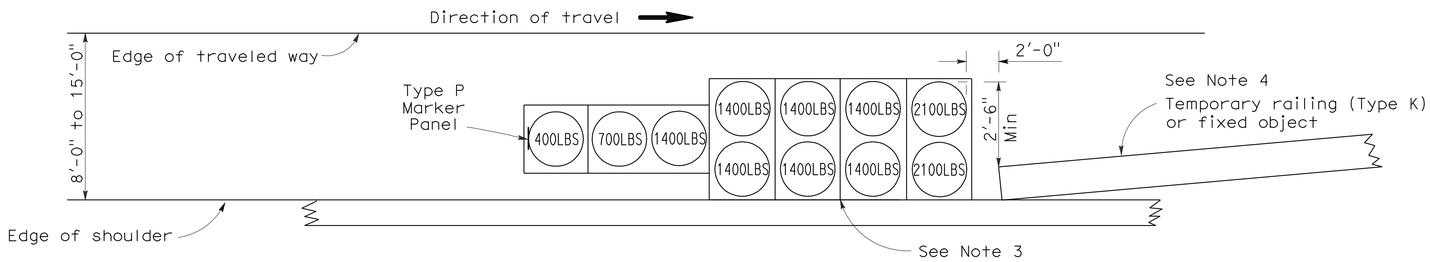

ARRAY 'TS11'

Approach speed less than 45 mph
See Note 9

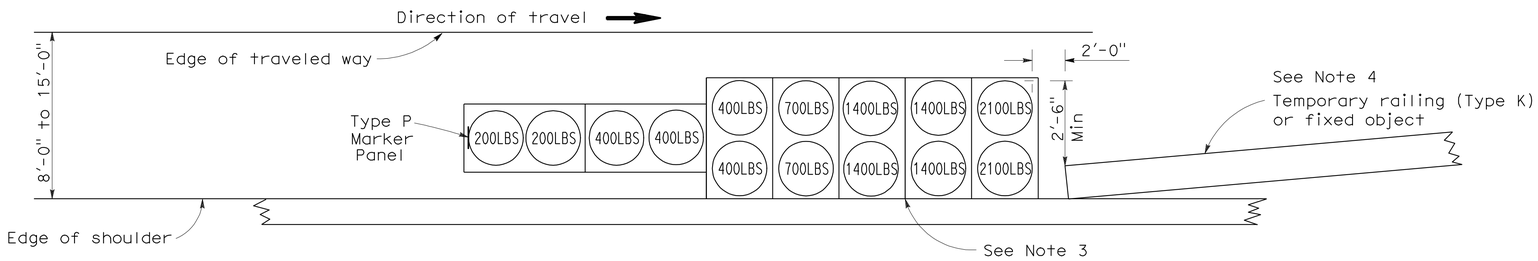

ARRAY 'TS14'

Approach speed 45 mph or more
See Note 9

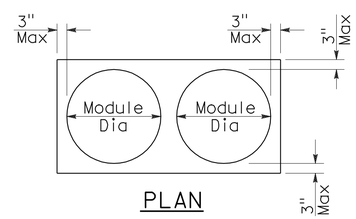

PLAN

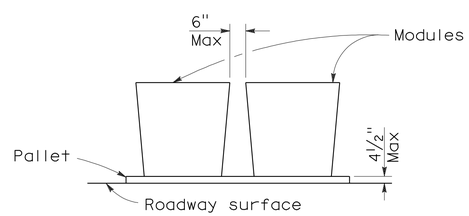

ELEVATION

CRASH CUSHION PALLET DETAIL

See Note 11

NOTES:

1. (XXX) Indicates sand filled module location and weight of sand in pounds for each module. Module spacing is based on the greater diameter of the module.
2. All sand weights are nominal.
3. The temporary crash cushion arrays shown on this plan shall be used only in locations where there will be traffic on one side of the temporary crash cushion array.
4. If the fixed object or approach end of the temporary railing is less than 15'-0" from the edge of traveled way, a temporary crash cushion is required in a construction or work zone.
5. Temporary crash cushion arrays shall not encroach on the traveled way.
6. Arrays for median shoulders shall conform to details shown on this plan for outside shoulders.
7. Place the Type P marker panel so that the bottom of the panel rests upon the pallet and faces traffic.
8. Refer to Standard Plan A73B for marker details.
9. For shoulder widths less than 8'-0", appropriate approved crash cushion protection, other than sand filled modules, shall be provided at fixed objects and at approach ends of temporary railing. The specific type of crash cushion shall be as shown on the project plans or as specified in the Special Provisions, or if not shown on the project plans or specified in the Special Provisions, shall be as approved by the Engineer.
10. Approach speeds indicated conform to NCHRP 350 Report criteria.
11. Use of pallets is optional.

STATE OF CALIFORNIA
DEPARTMENT OF TRANSPORTATION

TEMPORARY CRASH CUSHION, SAND FILLED (SHOULDER INSTALLATIONS)

NO SCALE

RSP T2 DATED JUNE 6, 2008 SUPERSEDES STANDARD PLAN T2
DATED MAY 1, 2006 - PAGE 213 OF THE STANDARD PLANS BOOK DATED MAY 2006.

REVISED STANDARD PLAN RSP T2

2006 REVISED STANDARD PLAN RSP T2

DIST	COUNTY	ROUTE	POST MILES TOTAL PROJECT	SHEET NO.	TOTAL SHEETS
02	Sha	5	R8.5/R11.3	46	51

Greg W. Edwards
REGISTERED CIVIL ENGINEER

November 17, 2006
PLANS APPROVAL DATE

REGISTERED PROFESSIONAL ENGINEER
Greg W. Edwards
No. C36386
Exp. 6-30-08
CIVIL
STATE OF CALIFORNIA

The State of California or its officers or agents shall not be responsible for the accuracy or completeness of electronic copies of this plan sheet.

To accompany plans dated 1-3-11

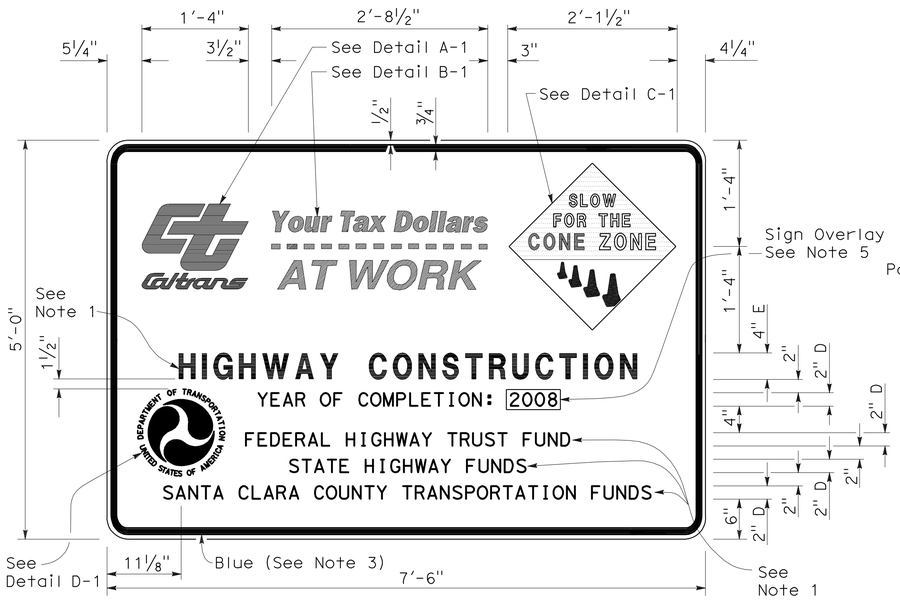

TYPE 1

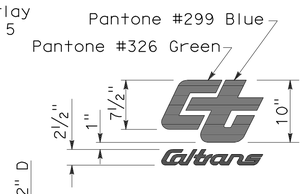

DETAIL A-1

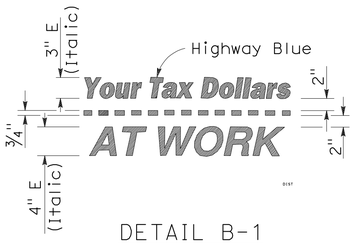

DETAIL B-1
(See Note 3)

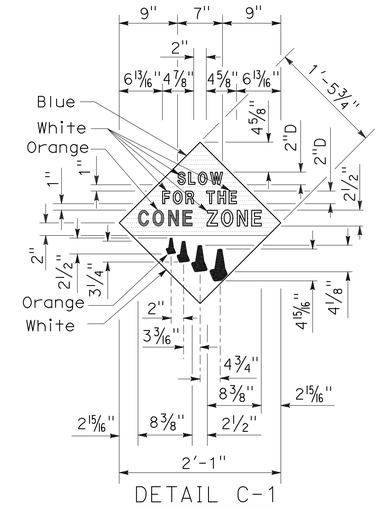

DETAIL C-1
(See Note 4)

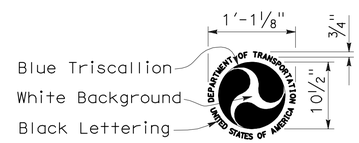

DETAIL D-1
(See Note 6)

NOTES:

1. The sign messages shown for type of project and fund types are examples only. See the Special Provisions for the applicable type of project and fund type messages to be used.
2. Except as otherwise shown, the legend of sign shall be black on a white background (non-reflective).
3. The border of the signs and details "B-1" and "B-2" shall be blue (non-reflective).
4. The diamond in details "C-1" and "C-2" shall be blue for the background of message, " SLOW FOR THE CONE ZONE", and white background for the orange cones. The color and type of font for the "SLOW FOR THE CONE ZONE" message shall be: "SLOW" white D; "FOR THE" white D; "CONE" orange Arial font; "ZONE" white Arial font.
5. Year of completion of project construction shown on the overlay is an example only. See the Special Provisions.
6. Use when the Project involves Federal Highway Trust Fund.

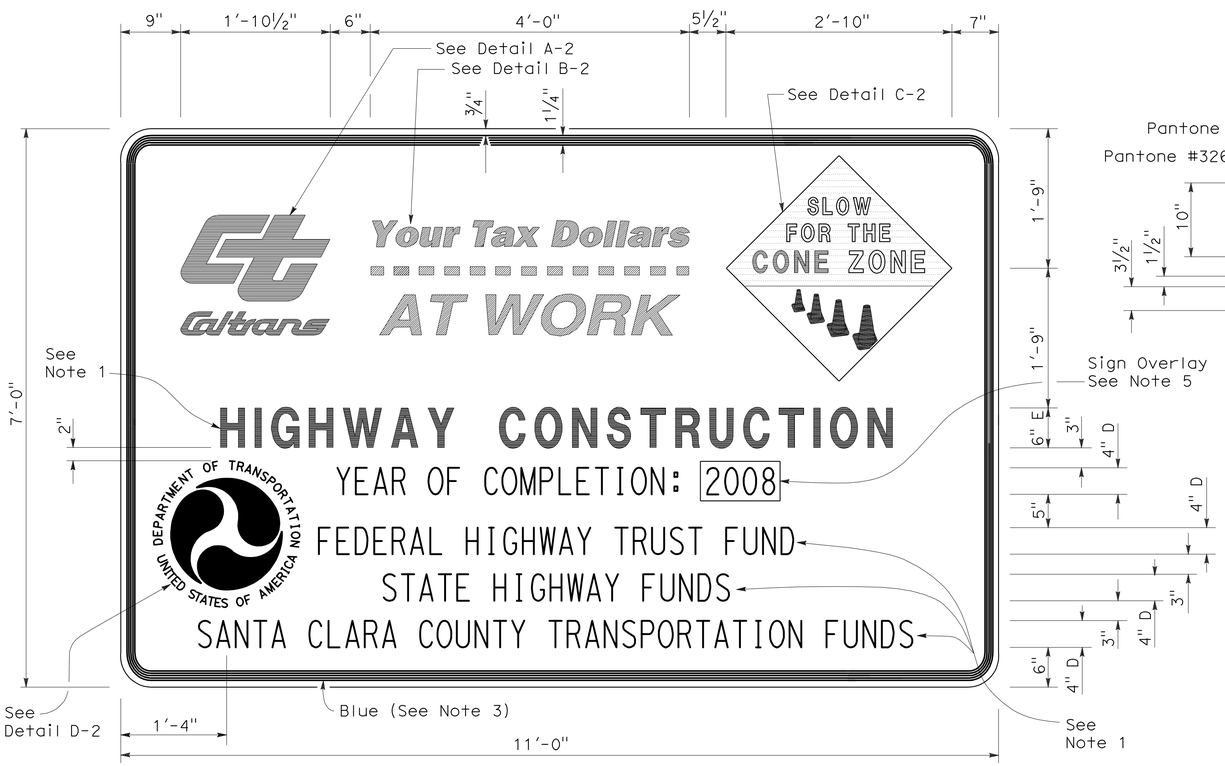

TYPE 2

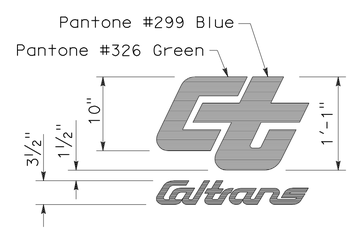

DETAIL A-2

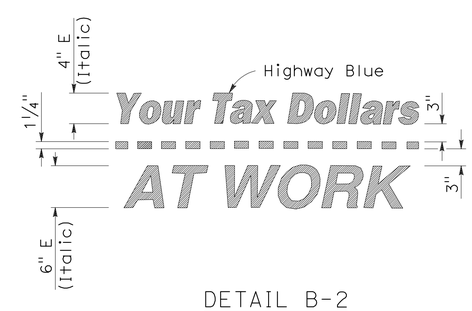

DETAIL B-2
(See Note 3)

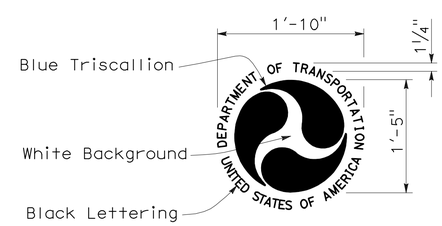

DETAIL D-2
(See Note 6)

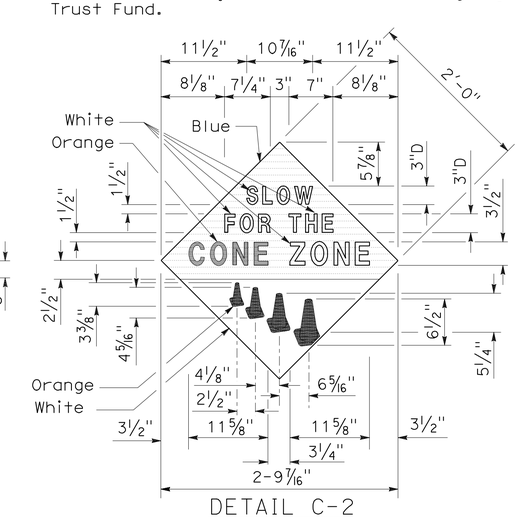

DETAIL C-2
(See Note 4)

STATE OF CALIFORNIA
DEPARTMENT OF TRANSPORTATION

CONSTRUCTION PROJECT FUNDING IDENTIFICATION SIGNS

NO SCALE

RSP T7 DATED NOVEMBER 17, 2006 SUPERSEDES STANDARD PLAN T7
DATED MAY 1, 2006 - PAGE 217 OF THE STANDARD PLANS BOOK DATED MAY 2006.

REVISED STANDARD PLAN RSP T7

2006 REVISED STANDARD PLAN RSP T7

9-7-06

DIST	COUNTY	ROUTE	POST MILES TOTAL PROJECT	SHEET NO.	TOTAL SHEETS
02	Sha	5	R8.5/R11.3	47	51

LICENSED LANDSCAPE ARCHITECT

April 3, 2009
PLANS APPROVAL DATE

LICENSED LANDSCAPE ARCHITECT — Robert B. Schott — Signature — 11-30-10 Renewal Date — 2-25-09 Date — STATE OF CALIFORNIA

The State of California or its officers or agents shall not be responsible for the accuracy or completeness of electronic copies of this plan sheet.

To accompany plans dated 1-3-11

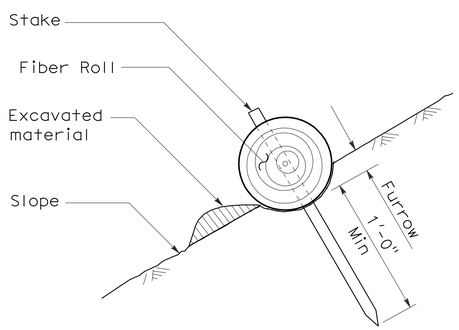

SECTION

TEMPORARY FIBER ROLL (TYPE 1)

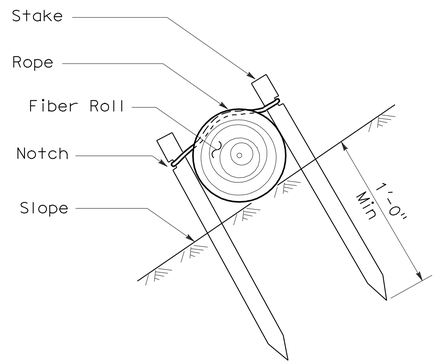

SECTION

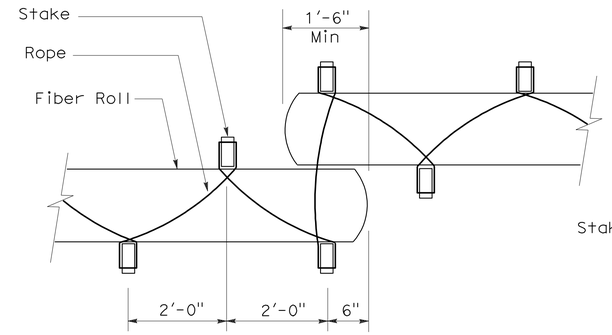

PLAN

TEMPORARY FIBER ROLL (TYPE 2)

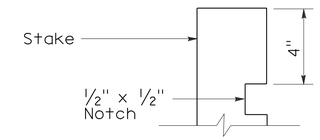

ELEVATION

STAKE NOTCH DETAIL

NOTES:

1. Temporary fiber roll spacing varies depending upon slope inclination.
2. Installations shown in the perspectives are for slope inclination of 10:1 and steeper.

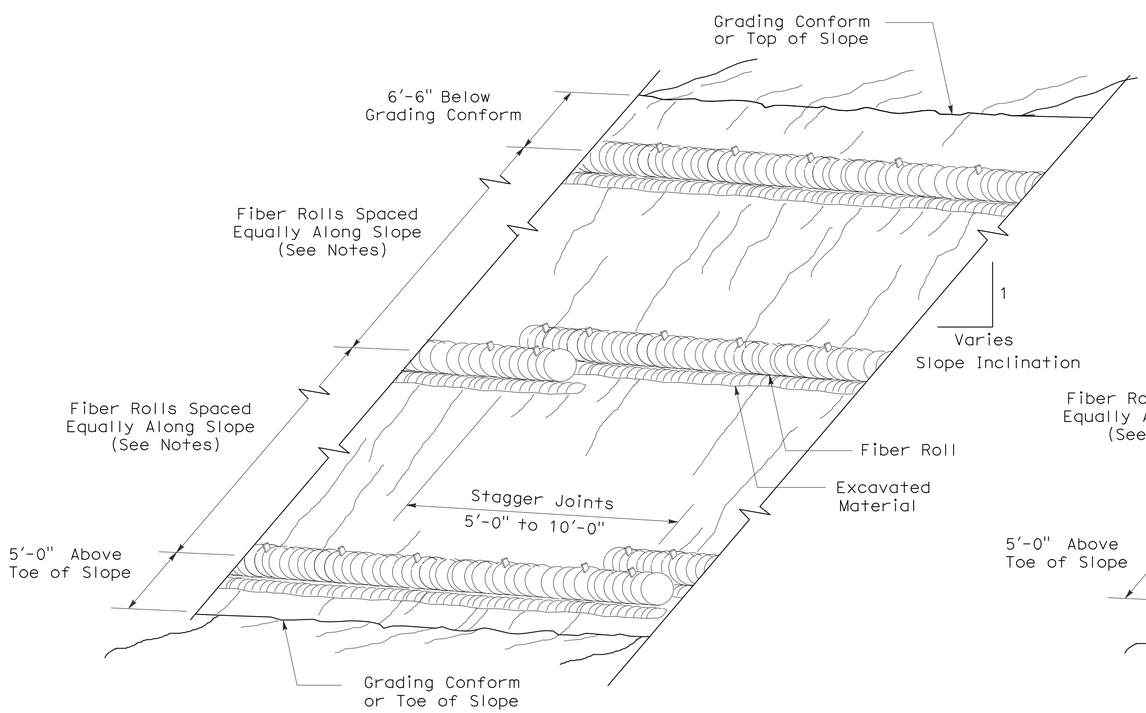

PERSPECTIVE

TEMPORARY FIBER ROLL (TYPE 1)

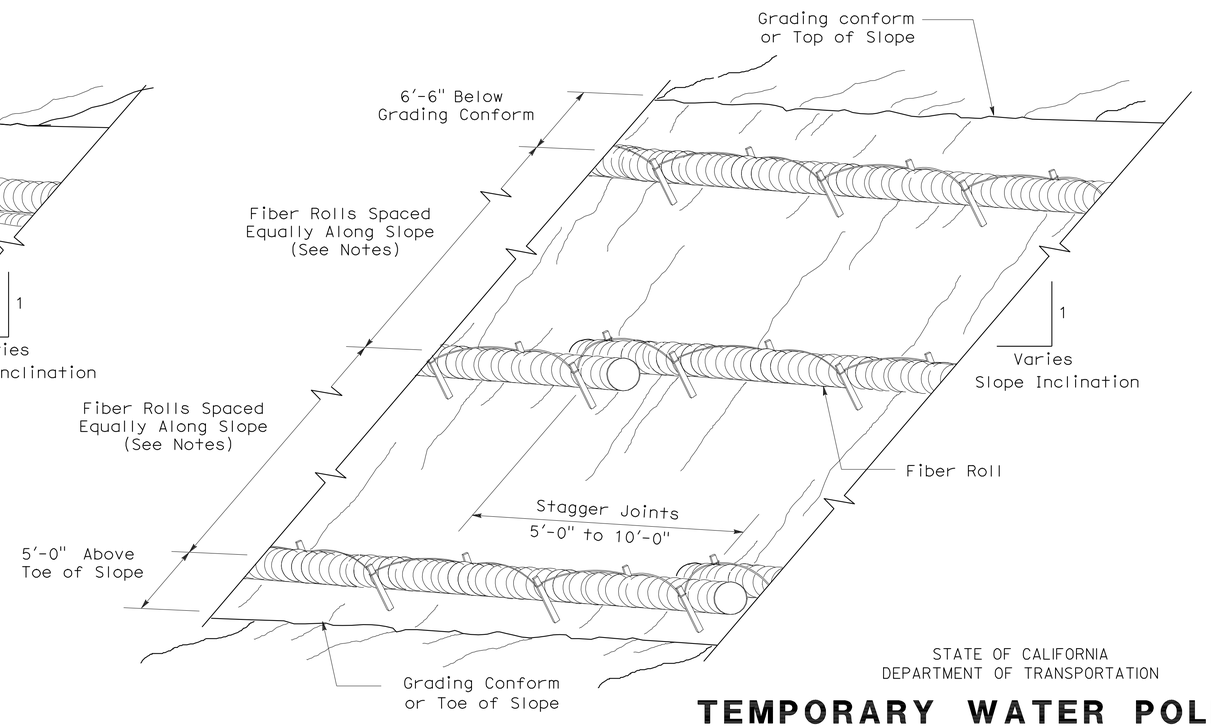

PERSPECTIVE

TEMPORARY FIBER ROLL (TYPE 2)

STATE OF CALIFORNIA
DEPARTMENT OF TRANSPORTATION

TEMPORARY WATER POLLUTION CONTROL DETAILS (TEMPORARY FIBER ROLL)

NO SCALE

RSP T56 DATED APRIL 3, 2009 SUPERSEDES STANDARD PLAN T56
DATED MAY 1, 2006 - PAGE 232 OF THE STANDARD PLANS BOOK DATED MAY 2006.

REVISED STANDARD PLAN RSP T56

2006 REVISED STANDARD PLAN RSP T56

2-23-09

DIST	COUNTY	ROUTE	POST MILES TOTAL PROJECT	SHEET NO.	TOTAL SHEETS
02	Sha	5	R8.5/R11.3	48	51

LICENSED LANDSCAPE ARCHITECT

August 15, 2008
PLANS Approval DATE

The State of California or its officers or agents shall not be responsible for the accuracy or completeness of electronic copies of this plan sheet.

LICENSED LANDSCAPE ARCHITECT — Robert B. Schott — Signature — 11-04-08 Renewal Date — 08-11-08 Date — STATE OF CALIFORNIA

To accompany plans dated 1-3-11

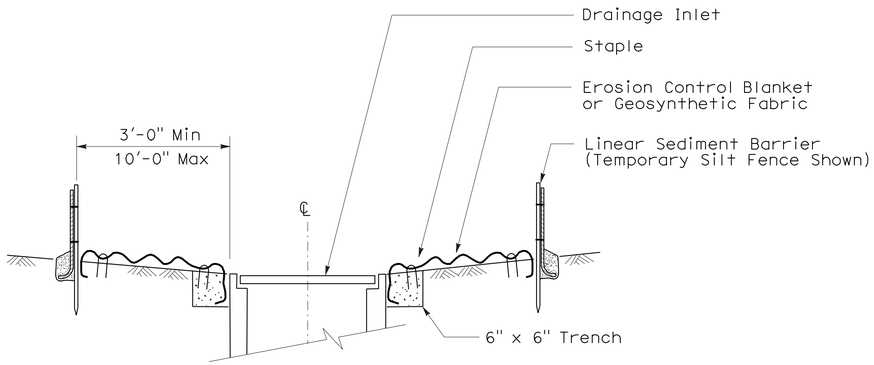

SECTION A-A

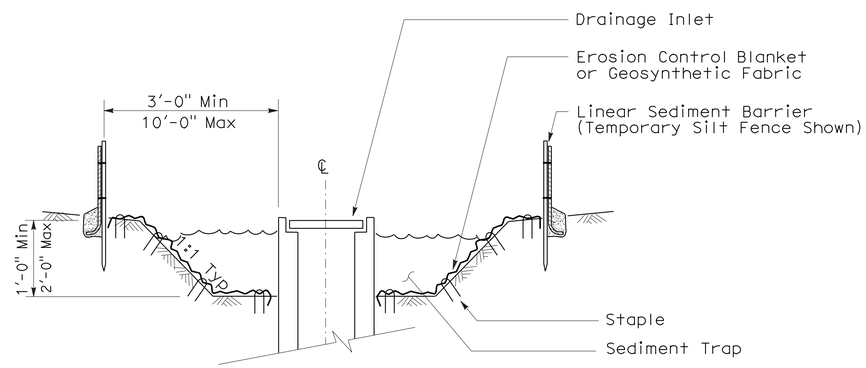

SECTION B-B

NOTES:

1. See Standard Plan T51 for Temporary Silt Fence.
2. Dimensions may vary to fit field conditions.

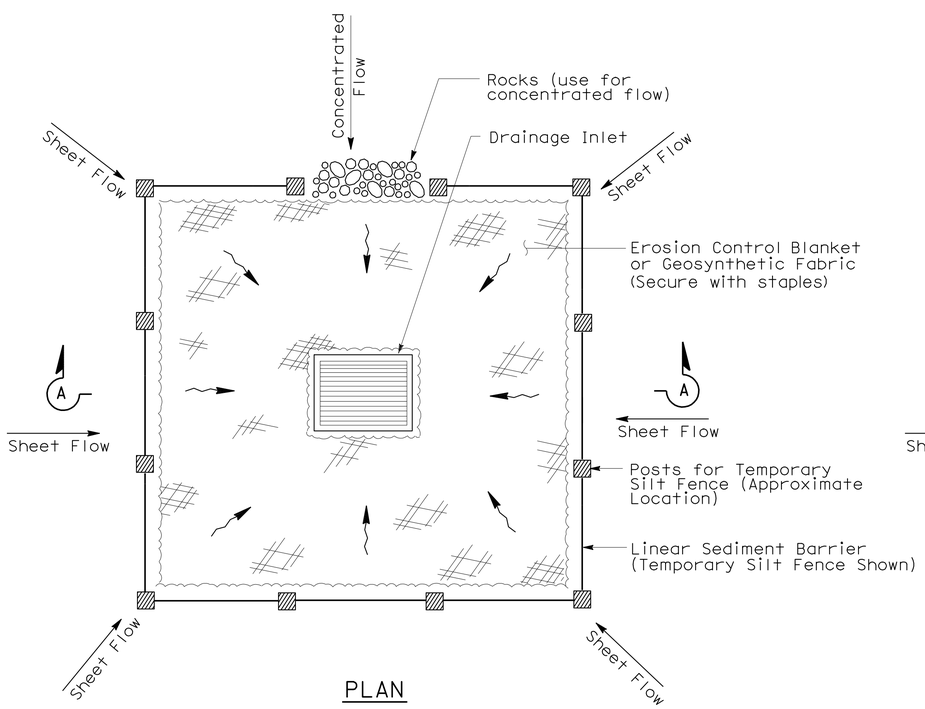

PLAN

TEMPORARY DRAINAGE INLET PROTECTION (TYPE 1)

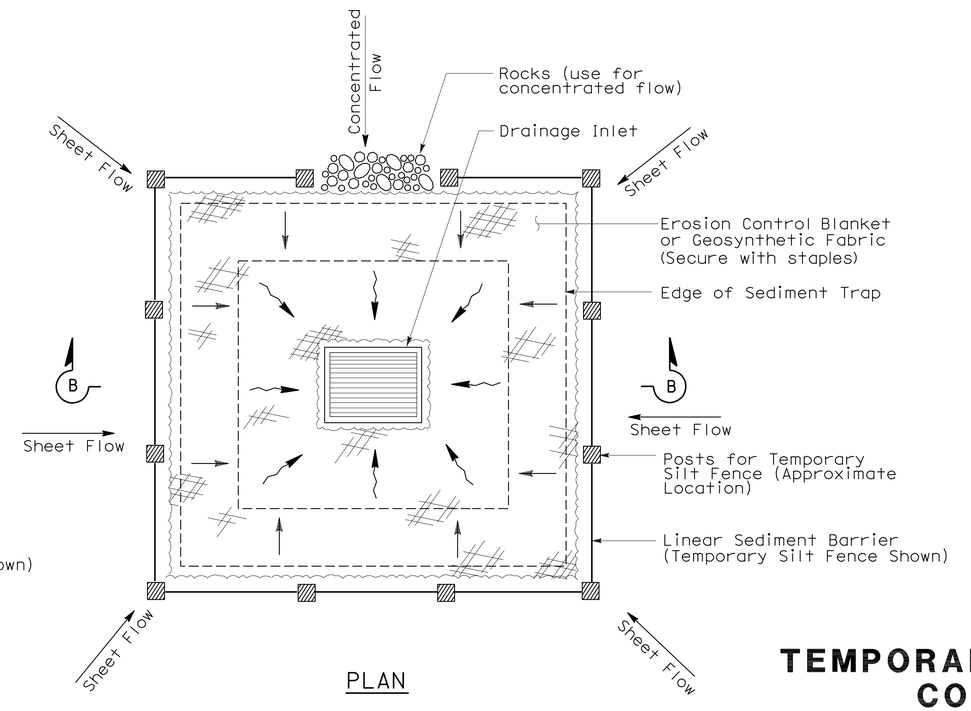

PLAN

TEMPORARY DRAINAGE INLET PROTECTION (TYPE 2) (EXCAVATED SEDIMENT TRAP)

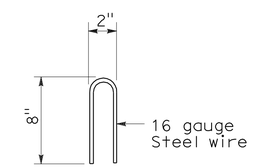

STAPLE DETAIL

STATE OF CALIFORNIA
DEPARTMENT OF TRANSPORTATION

TEMPORARY WATER POLLUTION CONTROL DETAILS (TEMPORARY DRAINAGE INLET PROTECTION)

NO SCALE

NSP T61 DATED AUGUST 15, 2008 SUPPLEMENTS THE STANDARD PLANS BOOK DATED MAY 2006.

NEW STANDARD PLAN NSP T61

2006 NEW STANDARD PLAN NSP T61

7-11-08

DIST	COUNTY	ROUTE	POST MILES TOTAL PROJECT	SHEET NO.	TOTAL SHEETS
02	Sha	5	R8.5/R11.3	49	51

LICENSED LANDSCAPE ARCHITECT

August 15, 2008
PLANS APPROVAL DATE

LICENSED LANDSCAPE ARCHITECT — Robert B. Schott — Signature — 11-04-08 Renewal Date — 08-11-08 Date — STATE OF CALIFORNIA

The State of California or its officers or agents shall not be responsible for the accuracy or completeness of electronic copies of this plan sheet.

To accompany plans dated 1-3-11

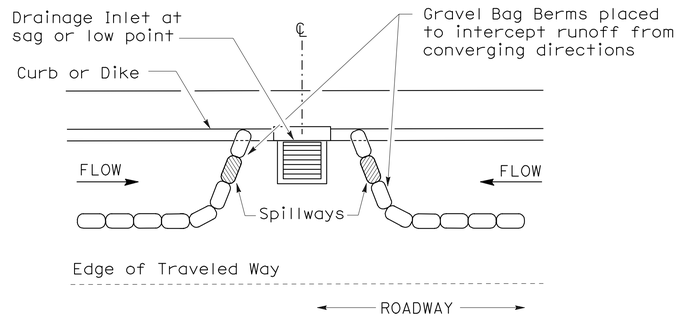

PLAN

CONFIGURATION FOR SAG POINT INLET (GRAVEL BAG BERM)

GRAVEL BAG BERM (TYPE 3A) SPACING TABLE

SLOPE OF ROADWAY (PERCENT)	1 to 3.9	4 to 5.9	6 to 7.9	8 to 10	10+
INTERVAL BETWEEN BERM	100′	75′	50′	25′	12′

For slope of less than 1%, install barriers only if erosion/sediment is prevalent

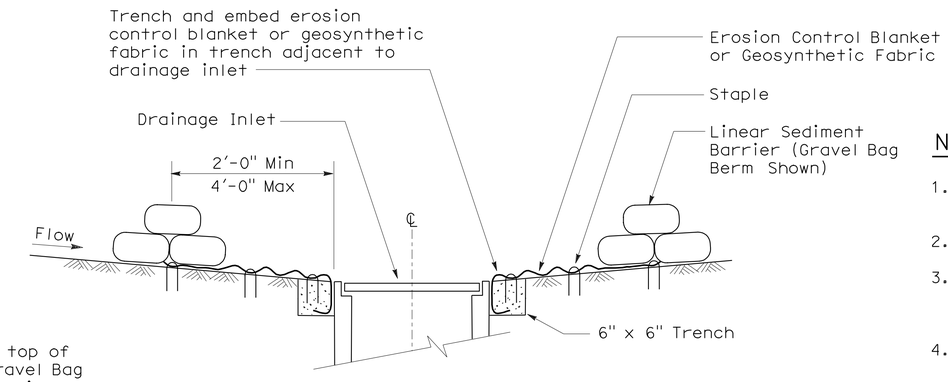

SECTION A-A

NOTES:

1. Place safety cones adjacent to drainage inlet protection.
2. Dimensions may vary to fit field conditions.
3. Install a minimum of 3 gravel bag berms upstream of each drainage inlet to be protected.
4. Position erosion control blanket or geosynthetic fabric at edge of concrete apron and secure in trench.
5. Erosion control blanket or geosynthetic fabric is not required if the area adjacent to the drainage inlet is vegetated or paved.

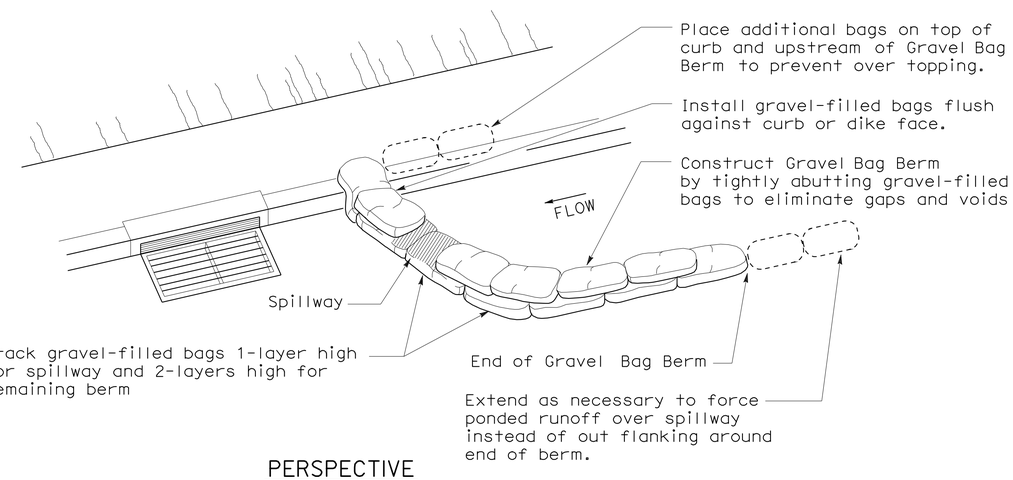

PERSPECTIVE

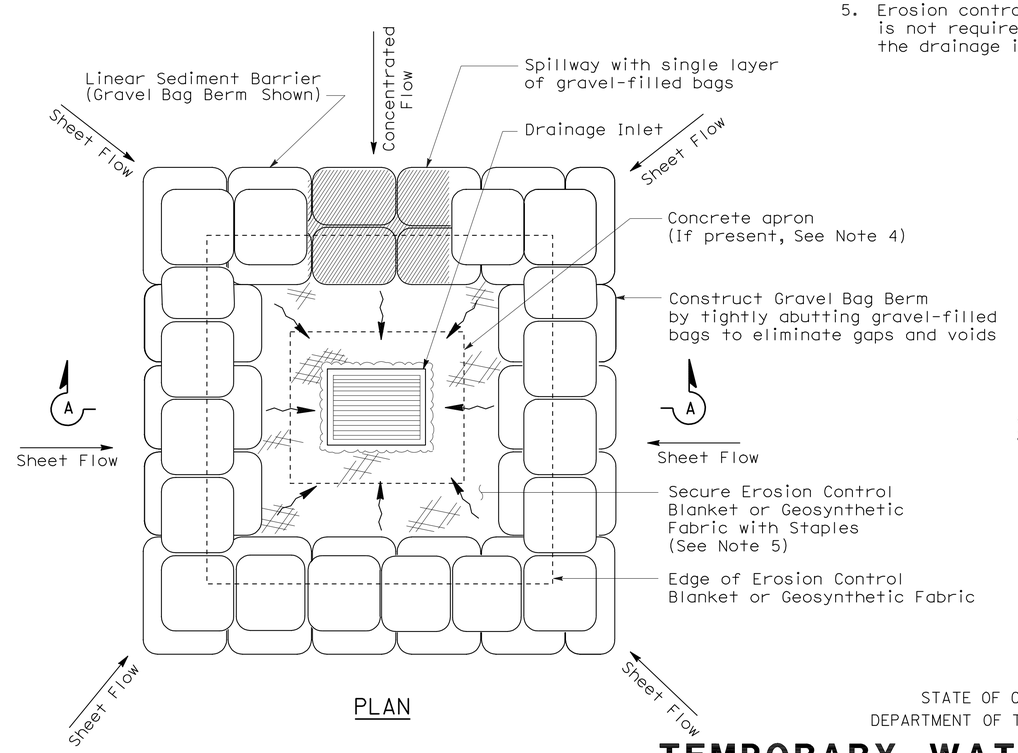

PLAN

TEMPORARY DRAINAGE INLET PROTECTION (TYPE 3B)

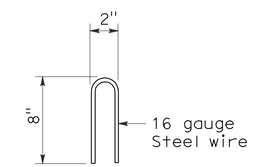

STAPLE DETAIL

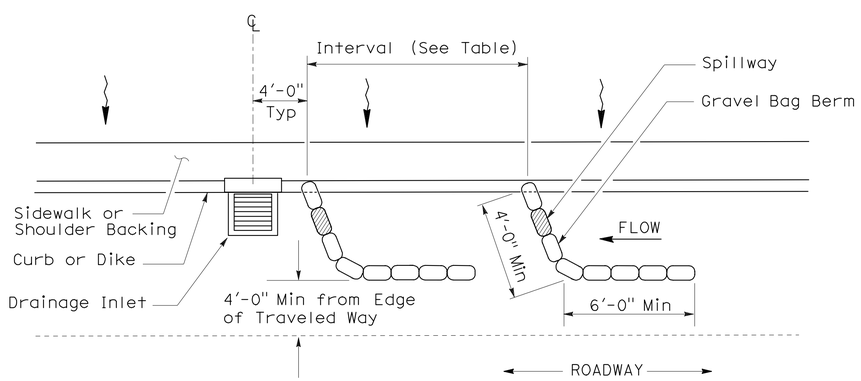

PLAN

TEMPORARY DRAINAGE INLET PROTECTION (TYPE 3A) (GRAVEL BAG BERM)

STATE OF CALIFORNIA
DEPARTMENT OF TRANSPORTATION

TEMPORARY WATER POLLUTION CONTROL DETAILS (TEMPORARY DRAINAGE INLET PROTECTION)

NO SCALE

NSP T62 DATED AUGUST 15, 2008 SUPPLEMENTS THE STANDARD PLANS BOOK DATED MAY 2006.

NEW STANDARD PLAN NSP T62

2006 NEW STANDARD PLAN NSP T62

7-11-08

DIST	COUNTY	ROUTE	POST MILES TOTAL PROJECT	SHEET NO.	TOTAL SHEETS
02	Sha	5	R8.5/R11.3	50	51

LICENSED LANDSCAPE ARCHITECT

August 15, 2008
PLANS APPROVAL DATE

The State of California or its officers or agents shall not be responsible for the accuracy or completeness of electronic copies of this plan sheet.

LICENSED LANDSCAPE ARCHITECT Robert B. Schott 3625 Signature 11-04-08 Renewal Date 08-11-08 Date STATE OF CALIFORNIA

To accompany plans dated 1-3-11

FLEXIBLE SEDIMENT BARRIER SPACING TABLE

SLOPE OF ROADWAY (PERCENT)	0 to 0.9	1 to 1.9	2 to 2.9	3 to 4	5+
INTERVAL BETWEEN BARRIERS	50′	35′	30′	25′	20′
ANGLE FROM FACE OF CURB	70°	70°	70°	45°	45°
SUGGESTED BARRIER LENGTH	6′	6′	6′	6′	6′

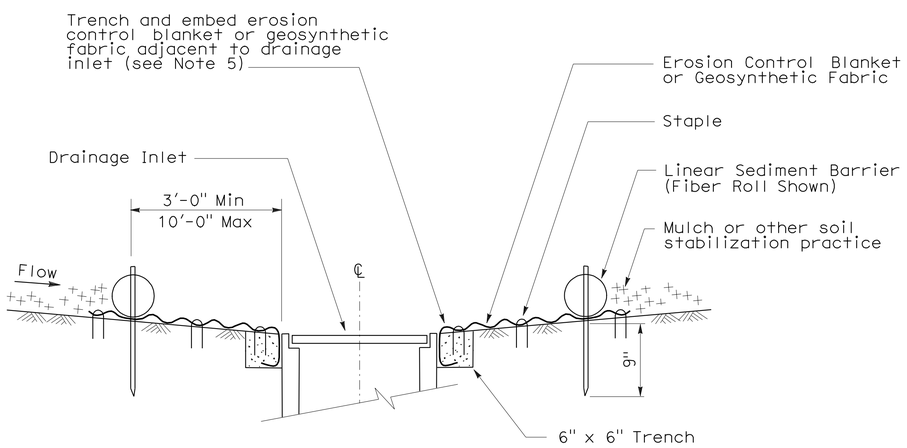

SECTION A-A

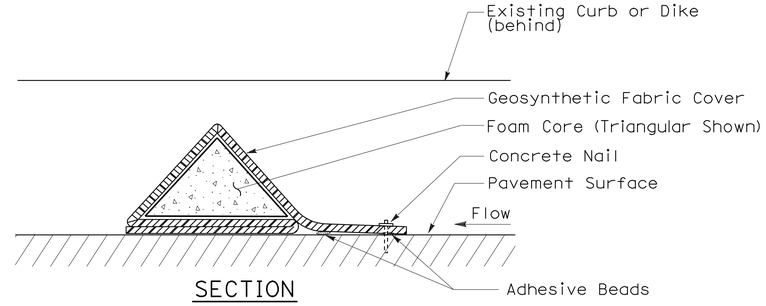

SECTION

FLEXIBLE SEDIMENT BARRIER DETAIL (FOAM BARRIER SHOWN)

NOTES:

1. See Standard Plan T51 for Temporary Silt Fence.
2. Dimensions may vary to fit field conditions.
3. Install a minimum of 3 flexible sediment barriers upstream of each drainage inlet to be protected.
4. Position erosion control blanket or geosynthetic fabric at edge of concrete apron and secure in trench.
5. Erosion control blanket or geosynthetic fabric is not required if the area adjacent to the drainage inlet is vegetated.

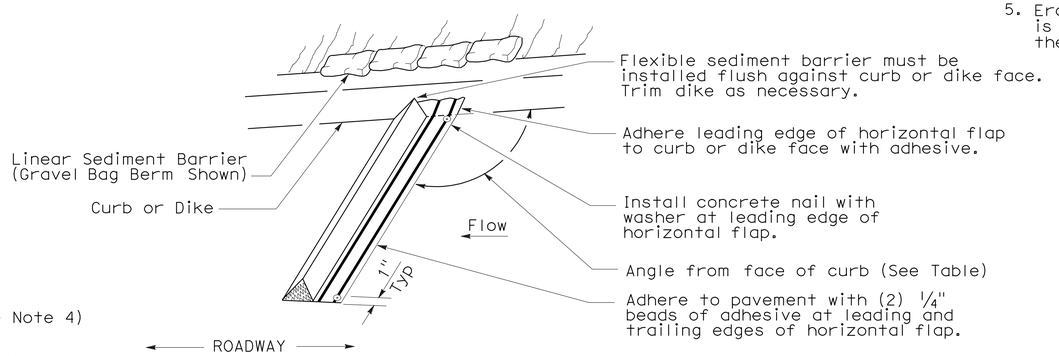

PERSPECTIVE

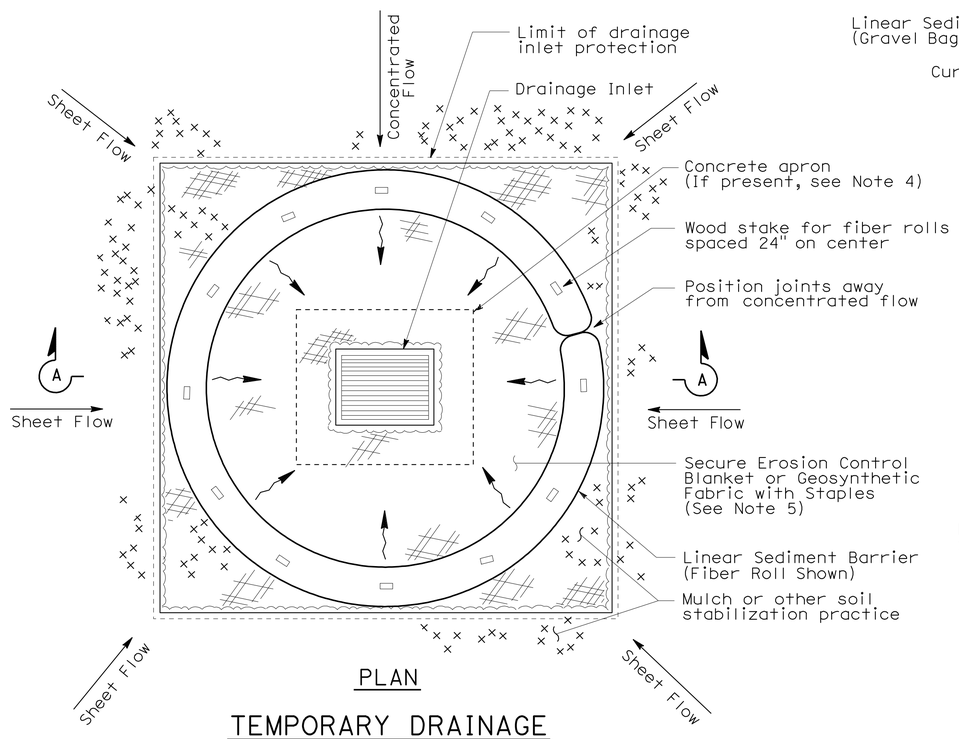

PLAN

TEMPORARY DRAINAGE INLET PROTECTION (TYPE 4A)

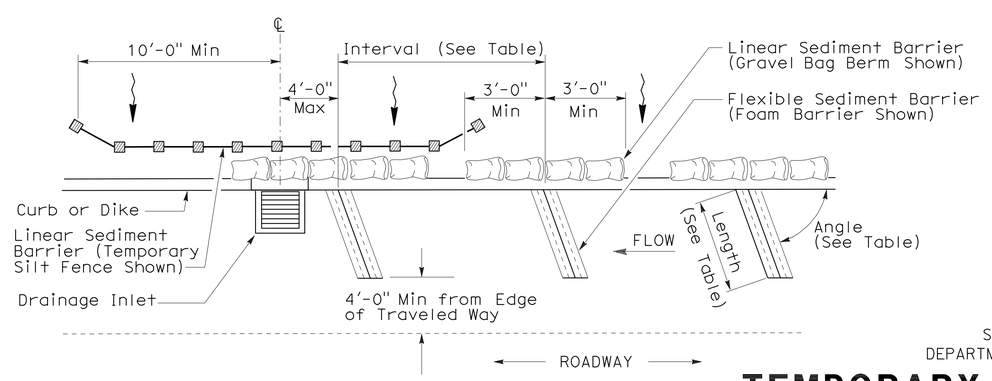

PLAN

TEMPORARY DRAINAGE INLET PROTECTION (TYPE 4B) FLEXIBLE SEDIMENT BARRIER

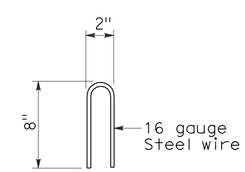

STAPLE DETAIL

STATE OF CALIFORNIA
DEPARTMENT OF TRANSPORTATION

TEMPORARY WATER POLLUTION CONTROL DETAILS (TEMPORARY DRAINAGE INLET PROTECTION)

NO SCALE

NSP T63 DATED AUGUST 15, 2008 SUPPLEMENTS THE STANDARD PLANS BOOK DATED MAY 2006.

NEW STANDARD PLAN NSP T63

2006 NEW STANDARD PLAN NSP T63

7-11-08

DIST	COUNTY	ROUTE	POST MILES TOTAL PROJECT	SHEET NO.	TOTAL SHEETS
02	Sha	5	R8.5/R11.3	51	51

LICENSED LANDSCAPE ARCHITECT

August 15, 2008
PLANS APPROVAL DATE

LICENSED LANDSCAPE ARCHITECT
Robert B. Schott 3625
Signature
11-04-08
Renewal Date
08-11-08
Date
STATE OF CALIFORNIA

The State of California or its officers or agents shall not be responsible for the accuracy or completeness of electronic copies of this plan sheet.

To accompany plans dated 1-3-11

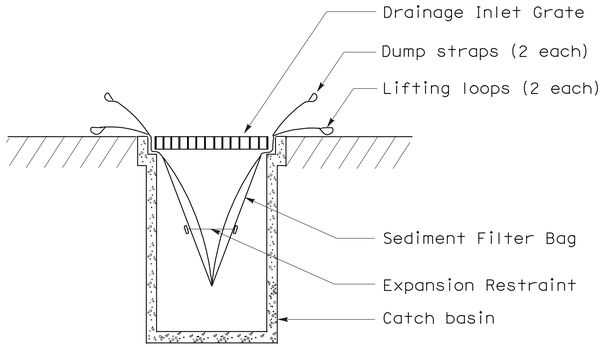

SECTION B-B

SEDIMENT FILTER BAG DETAIL

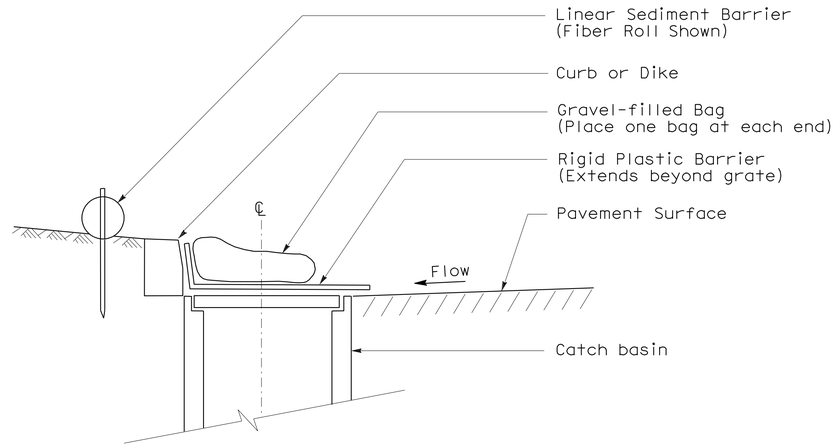

SECTION

TEMPORARY DRAINAGE INLET PROTECTION (TYPE 6A) (CATCH BASIN WITH GRATE)

NOTES:

1. See Standard Plan T51 for Temporary Silt Fence.
2. Dimensions may vary to fit field conditions.

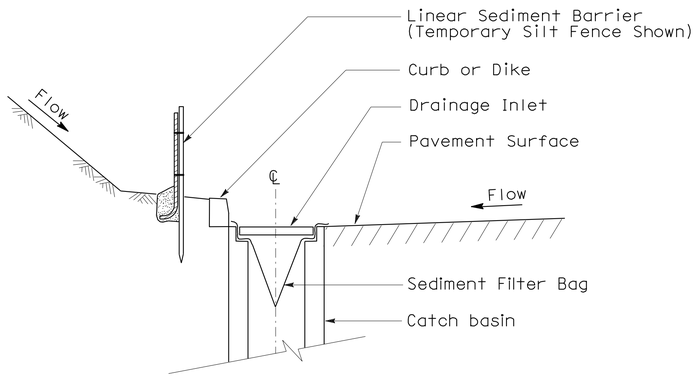

SECTION A-A

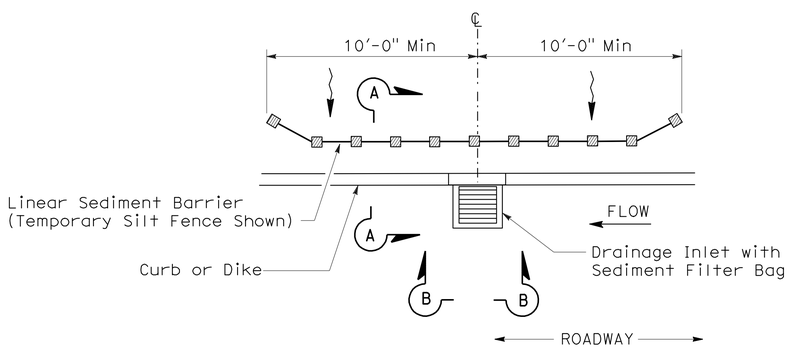

PLAN

TEMPORARY DRAINAGE INLET PROTECTION (TYPE 5) (SEDIMENT FILTER BAG)

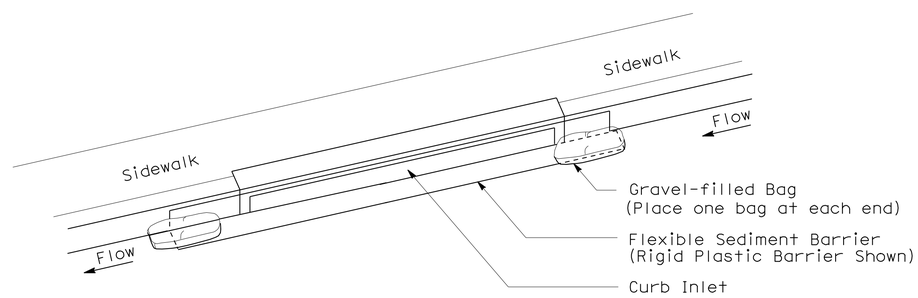

PERSPECTIVE

TEMPORARY DRAINAGE INLET PROTECTION (TYPE 6B) (CURB INLET WITHOUT GRATE)

STATE OF CALIFORNIA
DEPARTMENT OF TRANSPORTATION

TEMPORARY WATER POLLUTION CONTROL DETAILS (TEMPORARY DRAINAGE INLET PROTECTION)

NO SCALE

NSP T64 DATED AUGUST 15, 2008 SUPPLEMENTS
THE STANDARD PLANS BOOK DATED MAY 2006.

NEW STANDARD PLAN NSP T64

2006 NEW STANDARD PLAN NSP T64

7-11-08