Dist	COUNTY	ROUTE	POST MILES TOTAL PROJECT	SHEET No.	TOTAL SHEETS
02	Teh	32	22.3/22.8	1	34

ACHSSTP-P032(041)E

STATE OF CALIFORNIA
DEPARTMENT OF TRANSPORTATION

PROJECT PLANS FOR CONSTRUCTION ON
STATE HIGHWAY
IN TEHAMA COUNTY
ABOUT 35 MILES EAST OF FOREST RANCH
FROM 0.6 MILE WEST TO 0.1 MILE WEST
OF DEER CREEK BRIDGE 08-0072

TO BE SUPPLEMENTED BY STANDARD PLANS DATED MAY 2010

INDEX OF PLANS

SHEET No.	DESCRIPTION
1	TITLE AND LOCATION MAP
2-3	TYPICAL CROSS SECTIONS
4-5	LAYOUTS
6-7	PROFILES
8-9	CONSTRUCTION DETAILS
10-12	EROSION CONTROL
13-21	DRAINAGE PLANS, PROFILES, DETAILS AND QUANTITIES
22	CONSTRUCTION AREA SIGNS
23	TRAFFIC HANDLING PLANS
24-25	DETOUR PLANS, LAYOUT AND PROFILE
26-28	PAVEMENT DELINEATION PLANS, DETAILS AND QUANTITIES
29	SIGN PLANS, DETAILS AND QUANTITIES
30	SUMMARY OF QUANTITIES
31-34	REVISED STANDARD PLANS

THE STANDARD PLANS LIST APPLICABLE TO THIS CONTRACT IS INCLUDED IN THE NOTICE TO BIDDERS AND SPECIAL PROVISIONS BOOK.

LOCATION MAP

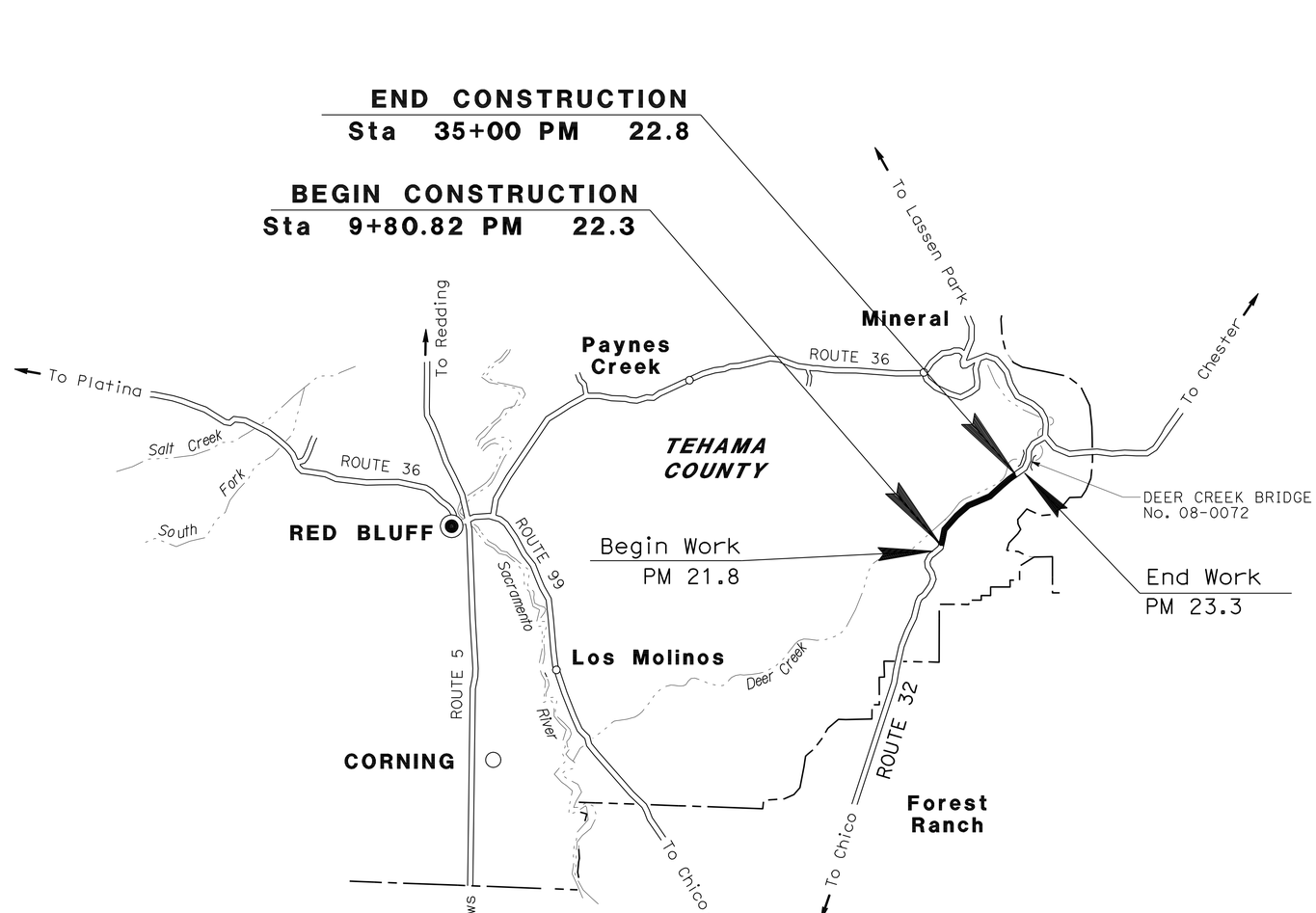

NO SCALE

THE CONTRACTOR SHALL POSSESS THE CLASS (OR CLASSES) OF LICENSE AS SPECIFIED IN THE "NOTICE TO BIDDERS."

PROJECT MANAGER: CHRIS HARVEY
DESIGN ENGINEER: AL TRUJILLO

Ken Hallis 12-03-12
PROJECT ENGINEER DATE
REGISTERED CIVIL ENGINEER

January 14, 2013
PLANS APPROVAL DATE

REGISTERED PROFESSIONAL ENGINEER KEN HALLIS No. C38203 Exp. 3-31-13 CIVIL STATE OF CALIFORNIA

THE STATE OF CALIFORNIA OR ITS OFFICERS OR AGENTS SHALL NOT BE RESPONSIBLE FOR THE ACCURACY OR COMPLETENESS OF SCANNED COPIES OF THIS PLAN SHEET.

CONTRACT No.	02-2E7304
PROJECT ID	0200000599

LAST REVISION 12-03-12 DATE PLOTTED => 22-FEB-2013 TIME PLOTTED => 05:49

Dist	COUNTY	ROUTE	POST MILES TOTAL PROJECT	SHEET No.	TOTAL SHEETS
02	Teh	32	22.3/22.8	2	34

REGISTERED CIVIL ENGINEER 11-15-12 DATE

1-14-13
PLANS APPROVAL DATE

REGISTERED PROFESSIONAL ENGINEER KEN HALLIS No. C38203 Exp. 3-31-13 CIVIL STATE OF CALIFORNIA

THE STATE OF CALIFORNIA OR ITS OFFICERS OR AGENTS SHALL NOT BE RESPONSIBLE FOR THE ACCURACY OR COMPLETENESS OF SCANNED COPIES OF THIS PLAN SHEET.

NOTES:

1. DIMENSIONS OF THE PAVEMENT STRUCTURES (STRUCTURAL SECTIONS) ARE SUBJECT TO TOLERANCES SPECIFIED IN THE STANDARD SPECIFICATIONS.
2. SUPERELEVATIONS AS SHOWN OR AS DETERMINED BY THE ENGINEER.

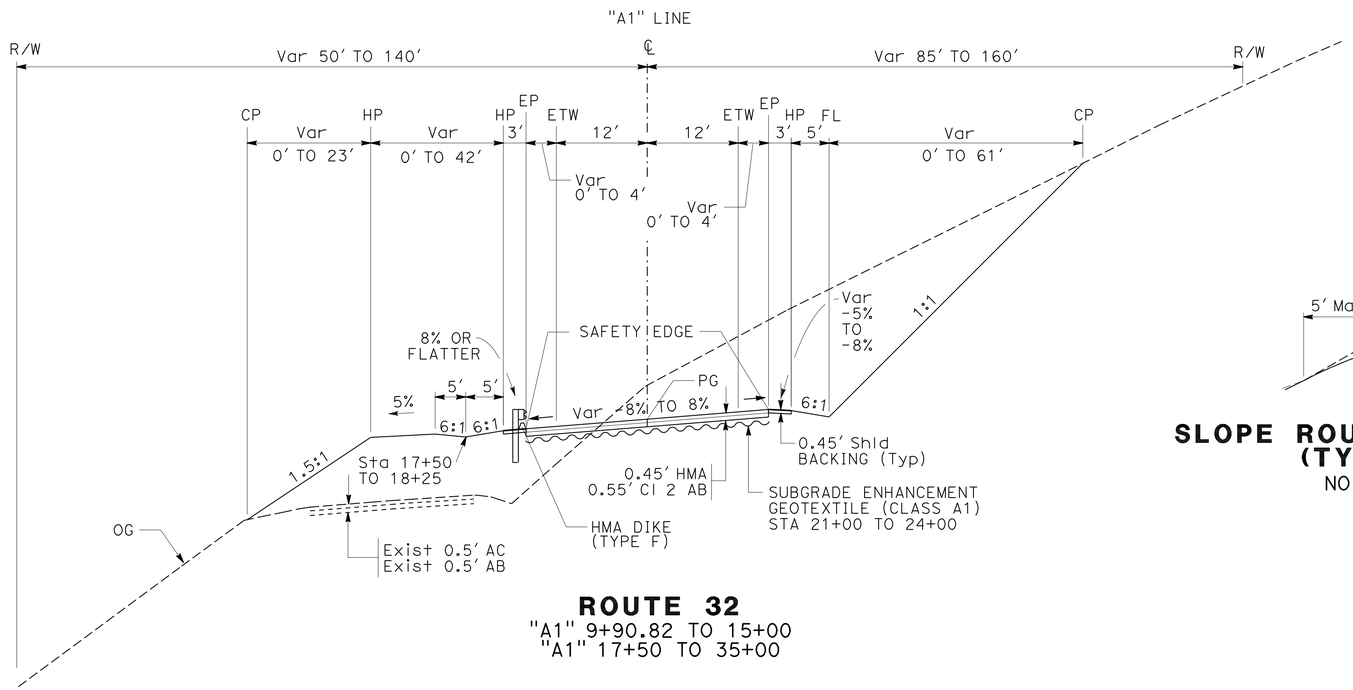

ROUTE 32
"A1" 9+90.82 TO 15+00
"A1" 17+50 TO 35+00

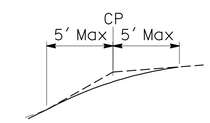

SLOPE ROUNDING DETAIL (TYPICAL)
NO SCALE

TYPICAL CROSS SECTIONS
SCALE: 1" = 10'

X-1

REVISED BY	DATE REVISED

RYAN PRINS	CALCULATED-DESIGNED BY
KEN HALLIS	CHECKED BY

FUNCTIONAL SUPERVISOR: AL TRUJILLO

STATE OF CALIFORNIA - DEPARTMENT OF TRANSPORTATION
Caltrans
DESIGN

P:\proj2\02\2E730_plans\pse\22e730ca001.dgn

LAST REVISION 11-15-12 | DATE PLOTTED => 17-JAN-2013 | TIME PLOTTED => 07:22

Dist	COUNTY	ROUTE	POST MILES TOTAL PROJECT	SHEET No.	TOTAL SHEETS
02	Teh	32	22.3/22.8	3	34

REGISTERED CIVIL ENGINEER 11-15-12 DATE

1-14-13
PLANS APPROVAL DATE

REGISTERED PROFESSIONAL ENGINEER
KEN HALLIS
No. C38203
Exp. 3-31-13
CIVIL
STATE OF CALIFORNIA

THE STATE OF CALIFORNIA OR ITS OFFICERS OR AGENTS SHALL NOT BE RESPONSIBLE FOR THE ACCURACY OR COMPLETENESS OF SCANNED COPIES OF THIS PLAN SHEET.

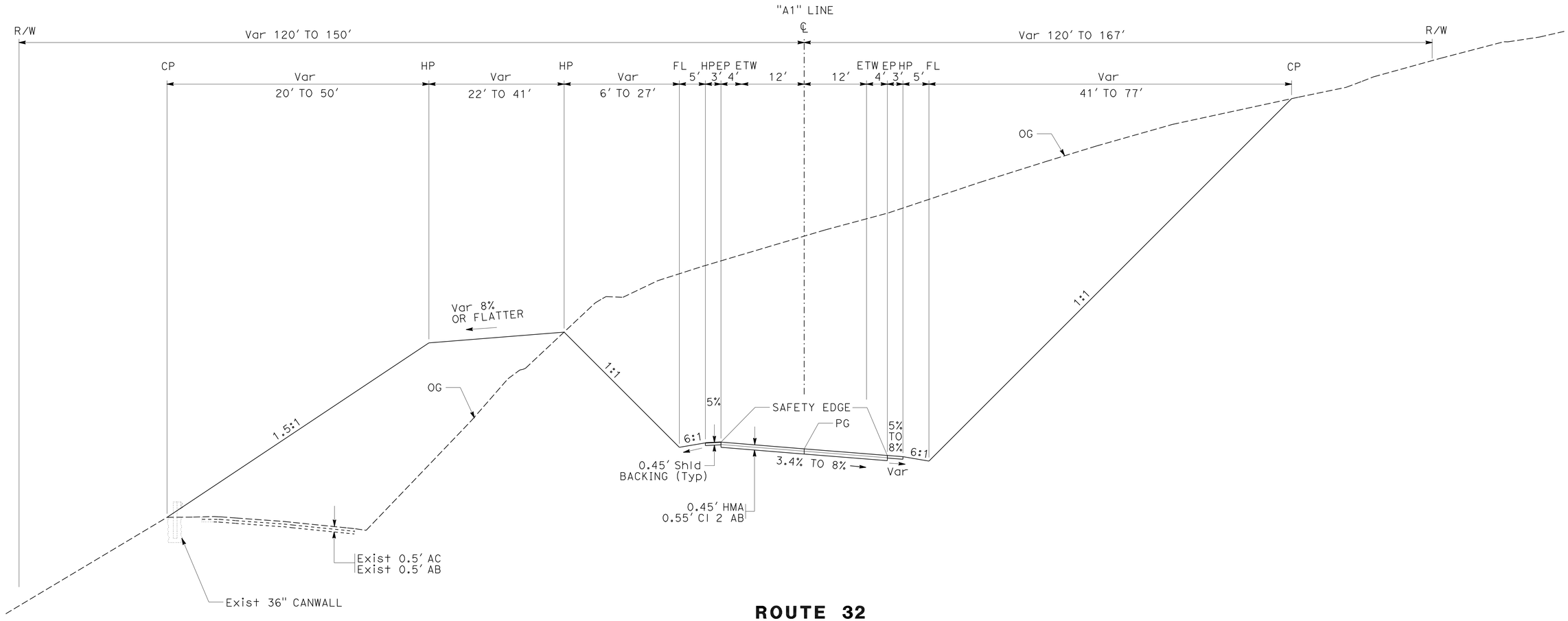

ROUTE 32

"A1" 15+00 TO 17+50

TYPICAL CROSS SECTIONS

SCALE: 1" = 10'

X-2

REVISED BY | DATE REVISED

RYAN PRINS | KEN HALLIS

CALCULATED-DESIGNED BY | CHECKED BY

FUNCTIONAL SUPERVISOR

AL TRUJILLO

STATE OF CALIFORNIA - DEPARTMENT OF TRANSPORTATION

Caltrans®

DESIGN

P:\proj2\02\2E730_plans\pse\22e730ca002.dgn

LAST REVISION 11-15-12 | DATE PLOTTED => 17-JAN-2013 | TIME PLOTTED => 07:22

BORDER LAST REVISED 7/2/2010 | USERNAME => s128843 | DGN FILE => 22e730ca002.dgn | RELATIVE BORDER SCALE IS IN INCHES 0 1 2 3 | UNIT 0316 | PROJECT NUMBER & PHASE 02000005991

Dist	COUNTY	ROUTE	POST MILES TOTAL PROJECT	SHEET No.	TOTAL SHEETS
02	Teh	32	22.3/22.8	4	34

REGISTERED CIVIL ENGINEER 11-15-12 DATE

1-14-13
PLANS APPROVAL DATE

REGISTERED PROFESSIONAL ENGINEER KEN HALLIS No. C38203 Exp. 3-31-13 CIVIL STATE OF CALIFORNIA

THE STATE OF CALIFORNIA OR ITS OFFICERS OR AGENTS SHALL NOT BE RESPONSIBLE FOR THE ACCURACY OR COMPLETENESS OF SCANNED COPIES OF THIS PLAN SHEET.

NOTE:

1. FOR ACCURATE RIGHT OF WAY DATA, CONTACT RIGHT OF WAY ENGINEERING AT THE DISTRICT OFFICE.

LEGEND:

COLD PLANE ASPHALT CONCRETE PAVING

EARTH RETAINING SYSTEM

ABBREVIATIONS:

CPACP	COLD PLANE ASPHALT CONCRETE PAVING
SE	SAFETY EDGE

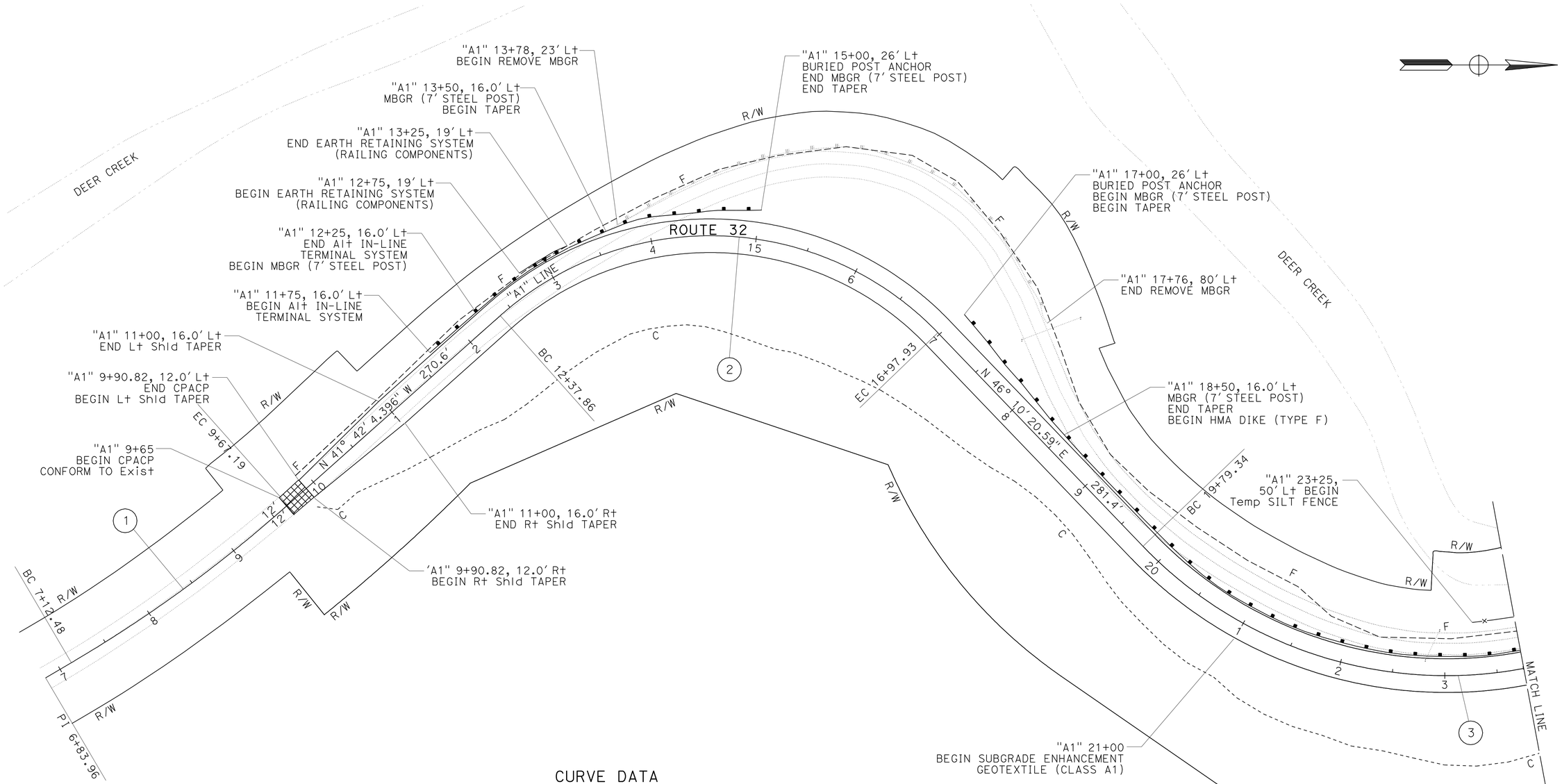

CURVE DATA

No. ⊕	R	Δ	T	L
1	1300'	11°13'34"	127.76'	254.71'
2	300'	87°52'07"	289.04'	460.08'
3	400'	76°35'16"	315.83'	534.68'

LAYOUT

SCALE: 1" = 50'

L-1

REVISED BY | DATE REVISED
RYAN PRINS | KEN HALLIS
CALCULATED-DESIGNED BY | CHECKED BY
FUNCTIONAL SUPERVISOR
AL TRUJILLO

STATE OF CALIFORNIA - DEPARTMENT OF TRANSPORTATION
Caltrans
DESIGN

P:\proj2\02\2E730_plans\pse\22e730ea001.dgn

LAST REVISION 11-15-12 | DATE PLOTTED => 17-JAN-2013 | TIME PLOTTED => 08:09

Dist	COUNTY	ROUTE	POST MILES TOTAL PROJECT	SHEET No.	TOTAL SHEETS
02	Teh	32	22.3/22.8	5	34

REGISTERED CIVIL ENGINEER 11-15-12 DATE

1-14-13
PLANS APPROVAL DATE

REGISTERED PROFESSIONAL ENGINEER KEN HALLIS No. C38203 Exp. 3-31-13 CIVIL STATE OF CALIFORNIA

THE STATE OF CALIFORNIA OR ITS OFFICERS OR AGENTS SHALL NOT BE RESPONSIBLE FOR THE ACCURACY OR COMPLETENESS OF SCANNED COPIES OF THIS PLAN SHEET.

NOTE:

1. FOR ACCURATE RIGHT OF WAY DATA, CONTACT RIGHT OF WAY ENGINEERING AT THE DISTRICT OFFICE.

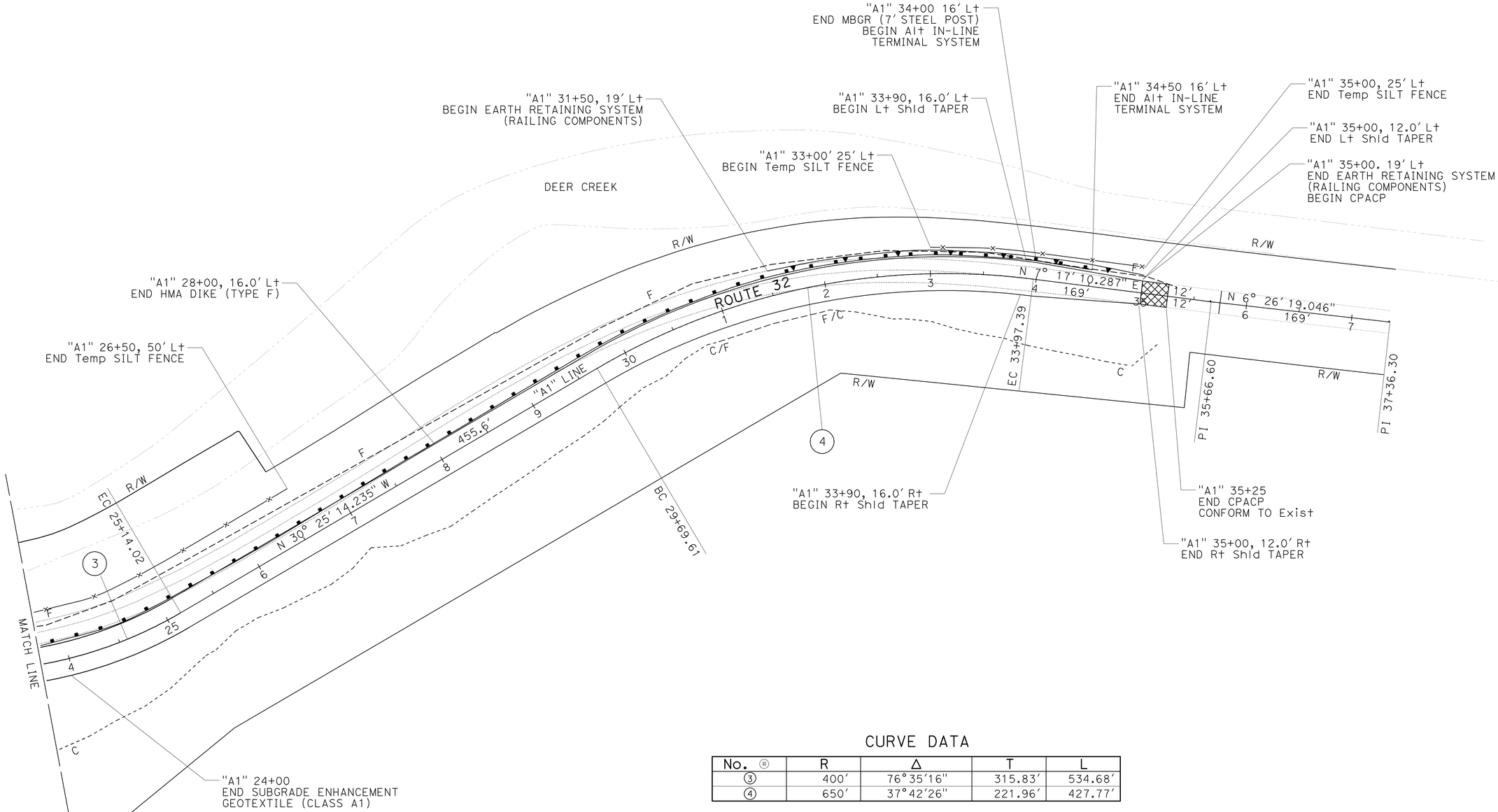

CURVE DATA

No. ⊕	R	Δ	T	L
③	400'	76°35'16"	315.83'	534.68'
④	650'	37°42'26"	221.96'	427.77'

LAYOUT

SCALE: 1" = 50'

L-2

REVISED BY | DATE REVISED
RYAN PRINS | KEN HALLIS
CALCULATED-DESIGNED BY | CHECKED BY
FUNCTIONAL SUPERVISOR
AL TRUJILLO

STATE OF CALIFORNIA - DEPARTMENT OF TRANSPORTATION
Caltrans
DESIGN

P:\proj2\02\2E730_plans\pse\22e730ea002.dgn

LAST REVISION 11-15-12 | DATE PLOTTED => 17-JAN-2013 | TIME PLOTTED => 08:09

Dist	COUNTY	ROUTE	POST MILES TOTAL PROJECT	SHEET No.	TOTAL SHEETS
02	Teh	32	22.3/22.8	6	34

REGISTERED CIVIL ENGINEER 11-15-12 DATE

1-14-13
PLANS APPROVAL DATE

REGISTERED PROFESSIONAL ENGINEER KEN HALLIS No. C38203 Exp. 3-31-13 CIVIL STATE OF CALIFORNIA

THE STATE OF CALIFORNIA OR ITS OFFICERS OR AGENTS SHALL NOT BE RESPONSIBLE FOR THE ACCURACY OR COMPLETENESS OF SCANNED COPIES OF THIS PLAN SHEET.

ABBREVIATIONS:

CPACP COLD PLANE ASPHALT CONCRETE PAVING
SE SAFETY EDGE

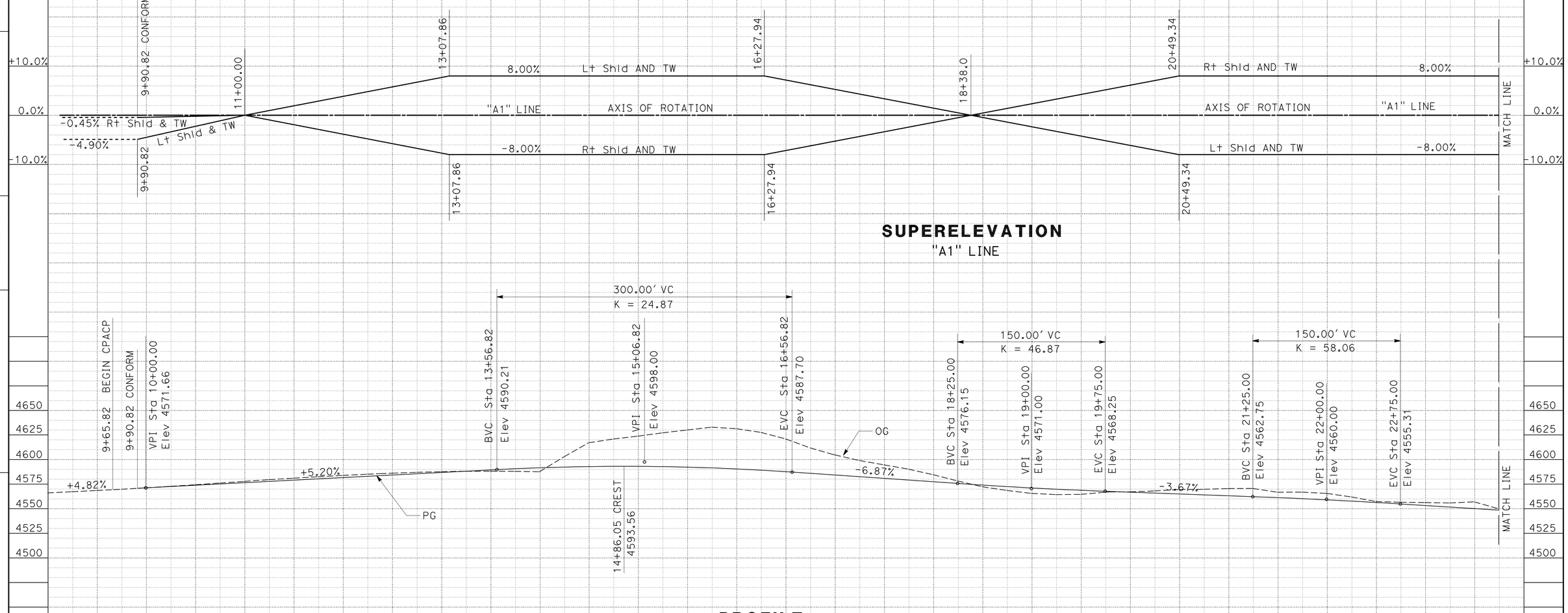

PROFILE AND SUPERELEVATION DIAGRAM

SCALE: 1" = 50' Horiz
1" = 50' Vert

PS-1

STATION		10	11	12	13	14	15	16	17	18	19	20	21	22	23	TOTAL
CY	Exc								61,161							61,161
	Emb								15,188							15,188

REVISED BY | DATE REVISED
RYAN PRINS | KEN HALLIS
CALCULATED-DESIGNED BY | CHECKED BY
FUNCTIONAL SUPERVISOR: AL TRUJILLO

STATE OF CALIFORNIA - DEPARTMENT OF TRANSPORTATION
Caltrans
DESIGN

P:\proj2\02\2E730_plans\pse\22e730fb001.dgn

LAST REVISION 11-15-12 | DATE PLOTTED => 17-JAN-2013 | TIME PLOTTED => 07:22

Dist	COUNTY	ROUTE	POST MILES TOTAL PROJECT	SHEET No.	TOTAL SHEETS
02	Teh	32	22.3/22.8	7	34

REGISTERED CIVIL ENGINEER 11-15-12 DATE

1-14-13
PLANS APPROVAL DATE

REGISTERED PROFESSIONAL ENGINEER
KEN HALLIS
No. C38203
Exp. 3-31-13
CIVIL
STATE OF CALIFORNIA

THE STATE OF CALIFORNIA OR ITS OFFICERS OR AGENTS SHALL NOT BE RESPONSIBLE FOR THE ACCURACY OR COMPLETENESS OF SCANNED COPIES OF THIS PLAN SHEET.

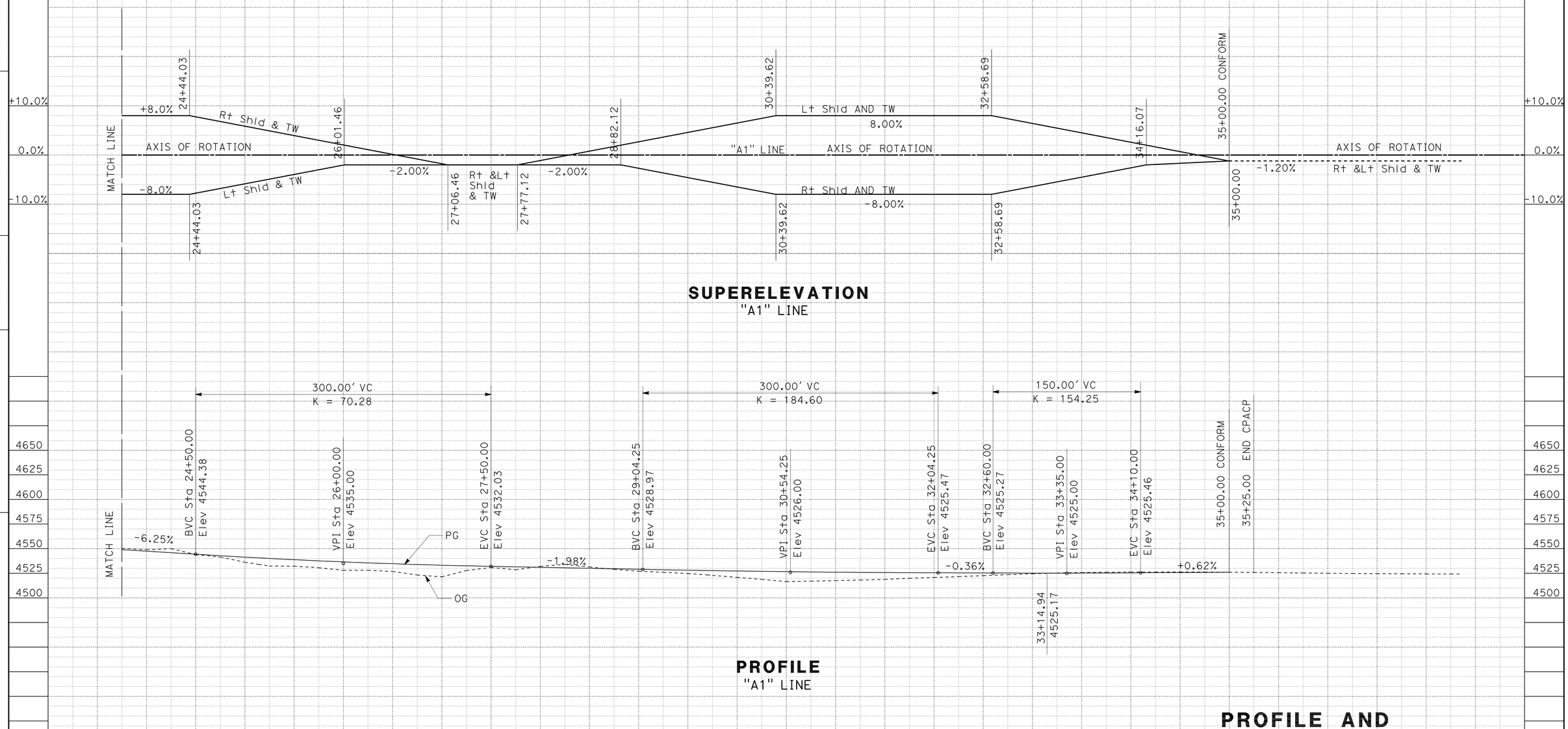

PROFILE AND SUPERELEVATION DIAGRAM

SCALE: 1" = 50' Horiz
1" = 50' Vert

PS-2

STATION	24	25	26	27	28	29	30	31	32	33	34	35	36	37	TOTAL
CY Exc							10,104								71,265
CY Emb							9,192								24,380

REVISED BY | DATE REVISED
RYAN PRINS | KEN HALLIS
CALCULATED-DESIGNED BY | CHECKED BY
FUNCTIONAL SUPERVISOR
AL TRUJILLO

STATE OF CALIFORNIA - DEPARTMENT OF TRANSPORTATION
Caltrans® DESIGN

P:\proj2\02\2E730_plans\pse\22e730fb002.dgn

LAST REVISION 11-15-12
DATE PLOTTED => 17-JAN-2013
TIME PLOTTED => 07:23

Dist	COUNTY	ROUTE	POST MILES TOTAL PROJECT	SHEET No.	TOTAL SHEETS
02	Teh	32	22.3/22.8	8	34

REGISTERED CIVIL ENGINEER 11-15-12 DATE

1-14-13
PLANS APPROVAL DATE

REGISTERED PROFESSIONAL ENGINEER KEN HALLIS No. C38203 Exp. 3-31-13 CIVIL STATE OF CALIFORNIA

THE STATE OF CALIFORNIA OR ITS OFFICERS OR AGENTS SHALL NOT BE RESPONSIBLE FOR THE ACCURACY OR COMPLETENESS OF SCANNED COPIES OF THIS PLAN SHEET.

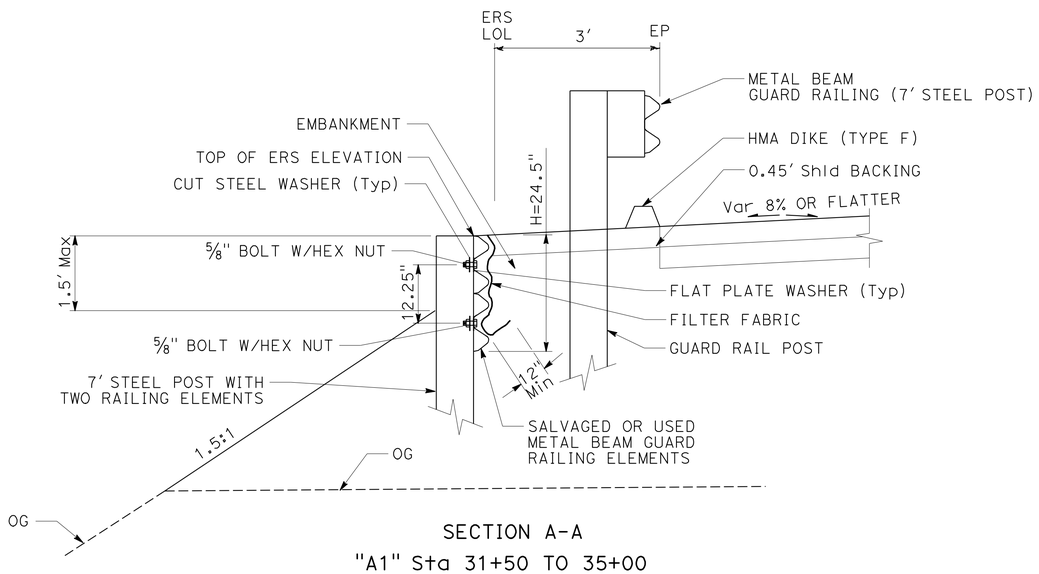

SECTION A-A
"A1" Sta 31+50 TO 35+00

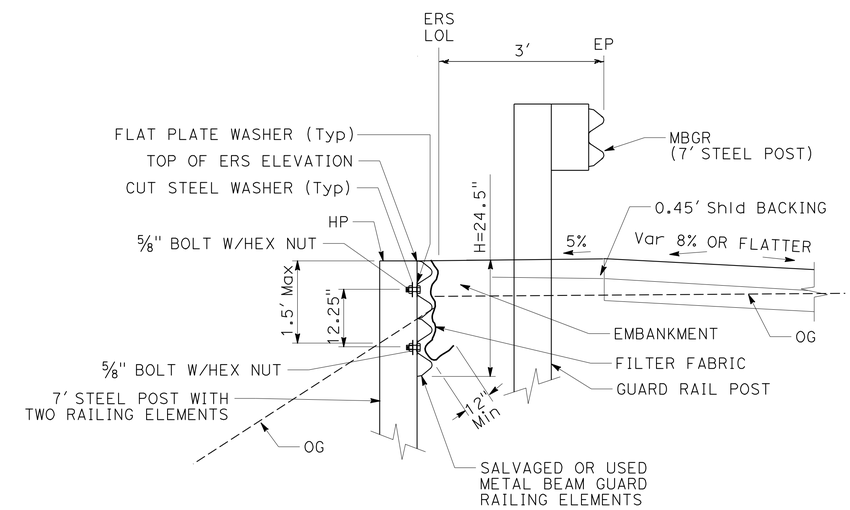

SECTION A-A
"A1" Sta 12+75 TO 13+25

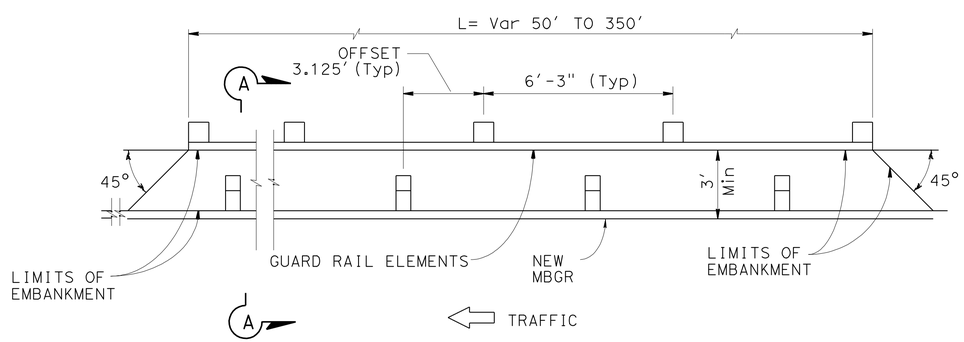

PLAN

EARTH RETAINING SYSTEM (RAILING COMPONENTS)

"A1" Sta 12+75 TO 13+25
"A1" Sta 31+50 TO 35+00

CONSTRUCTION DETAILS

NO SCALE

C-1

REVISED BY	DATE REVISED
RYAN PRINS	KEN HALLIS
CALCULATED-DESIGNED BY	CHECKED BY
FUNCTIONAL SUPERVISOR	AL TRUJILLO

STATE OF CALIFORNIA - DEPARTMENT OF TRANSPORTATION
Caltrans
DESIGN

P:\proj2\02\2E730_plans\pse\22e730ga001.dgn

LAST REVISION 11-15-12 | DATE PLOTTED => 17-JAN-2013 | TIME PLOTTED => 07:23

Dist	COUNTY	ROUTE	POST MILES TOTAL PROJECT	SHEET No.	TOTAL SHEETS
02	Teh	32	22.3/22.8	9	34

REGISTERED CIVIL ENGINEER 11-15-12 DATE

1-14-13
PLANS APPROVAL DATE

REGISTERED PROFESSIONAL ENGINEER
KEN HALLIS
No. C38203
Exp. 3-31-13
CIVIL
STATE OF CALIFORNIA

THE STATE OF CALIFORNIA OR ITS OFFICERS OR AGENTS SHALL NOT BE RESPONSIBLE FOR THE ACCURACY OR COMPLETENESS OF SCANNED COPIES OF THIS PLAN SHEET.

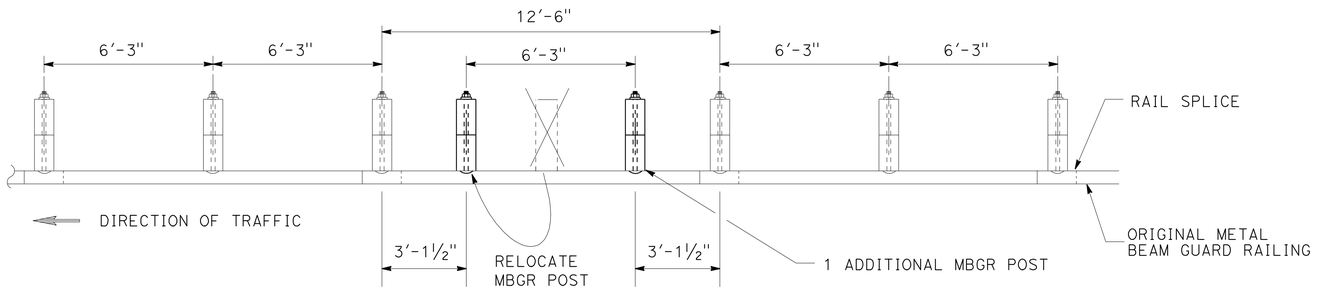

MBGR DETAIL
(ONE POST OMITTED, MOVE THE POST and ADD ONE POST)

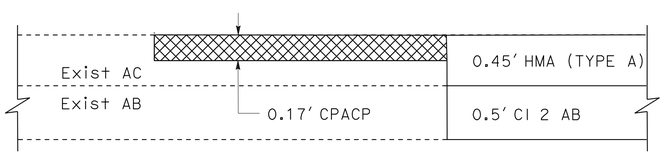

PAVEMENT CONFORM
"A1" Sta 9+65 TO 9+90
"A1" Sta 35+00 TO 35+25

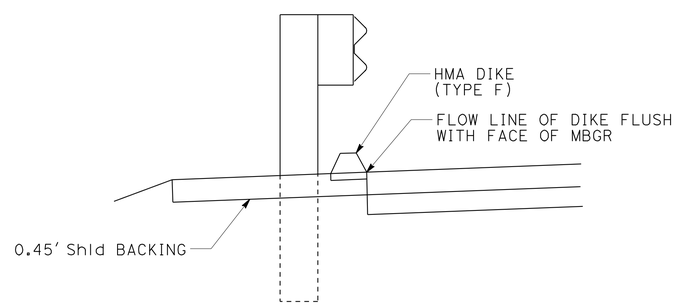

HMA DIKE (TYPE F) DIKE POSITIONING
"A1" Sta 18+50 TO 28+00

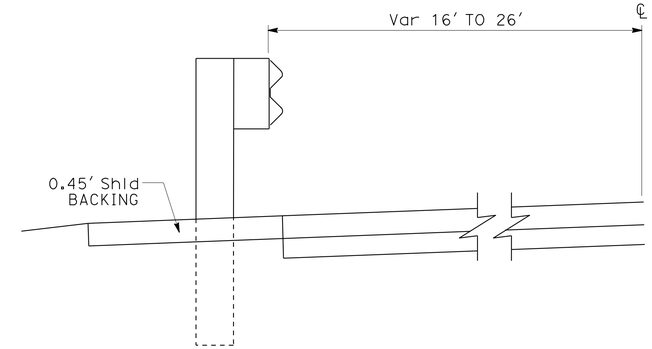

MBGR POSITIONING
"A1" Sta 13+50 TO 18+50

CONSTRUCTION DETAILS
NO SCALE

C-2

STATE OF CALIFORNIA - DEPARTMENT OF TRANSPORTATION
Caltrans® DESIGN

FUNCTIONAL SUPERVISOR: AL TRUJILLO
CALCULATED-DESIGNED BY: RYAN PRINS
CHECKED BY: KEN HALLIS
REVISED BY
DATE REVISED

P:\proj2\02\2E730_plans\pse\22e730ga002.dgn

LAST REVISION 11-15-12
DATE PLOTTED => 17-JAN-2013
TIME PLOTTED => 07:23

Dist	COUNTY	ROUTE	POST MILES TOTAL PROJECT	SHEET No.	TOTAL SHEETS
02	Teh	32	22.3/22.8	10	34

REGISTERED CIVIL ENGINEER 11-15-12 DATE

1-14-13
PLANS APPROVAL DATE

REGISTERED PROFESSIONAL ENGINEER KEN HALLIS No. C38203 Exp. 3-31-13 CIVIL STATE OF CALIFORNIA

THE STATE OF CALIFORNIA OR ITS OFFICERS OR AGENTS SHALL NOT BE RESPONSIBLE FOR THE ACCURACY OR COMPLETENESS OF SCANNED COPIES OF THIS PLAN SHEET.

NOTE:

1. FOR ACCURATE RIGHT OF WAY DATA, CONTACT RIGHT OF WAY ENGINEERING AT THE DISTRICT OFFICE.

LEGEND:

HYDROSEED

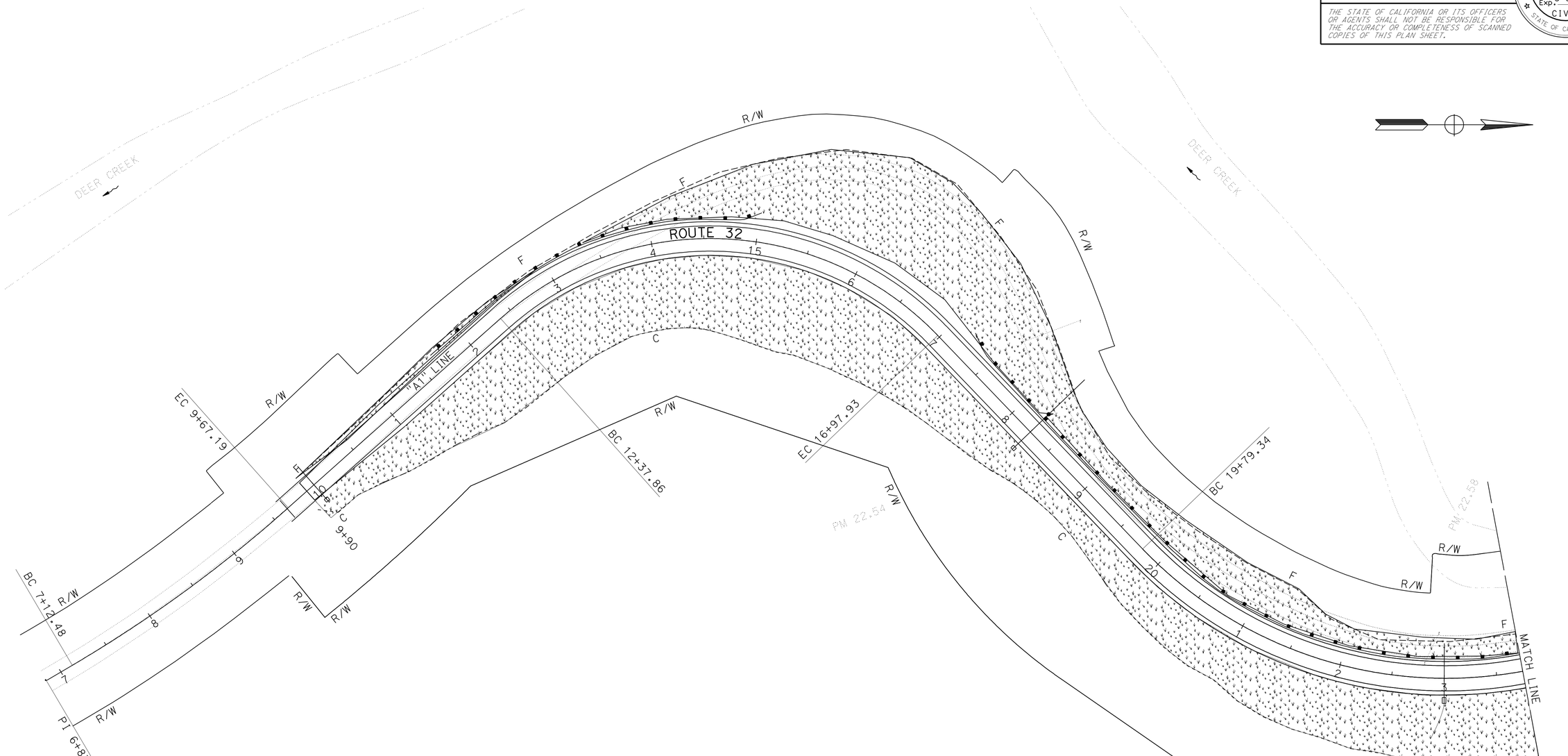

EROSION CONTROL PLAN

SCALE: 1" = 50'

EC-1

APPROVED FOR EROSION CONTROL WORK ONLY

REVISED BY	DATE REVISED

CALCULATED-DESIGNED BY	RYAN PRINS
CHECKED BY	KEN HALLIS
FUNCTIONAL SUPERVISOR	AL TRUJILLO

STATE OF CALIFORNIA - DEPARTMENT OF TRANSPORTATION

Caltrans® **DESIGN**

P:\proj2\02\2E730_plans\pse\22e730ge001.dgn

LAST REVISION 11-15-12 | DATE PLOTTED => 17-JAN-2013 | TIME PLOTTED => 08:09

Dist	COUNTY	ROUTE	POST MILES TOTAL PROJECT	SHEET No.	TOTAL SHEETS
02	Teh	32	22.3/22.8	11	34

REGISTERED CIVIL ENGINEER 11-15-12 DATE

1-14-13
PLANS APPROVAL DATE

REGISTERED PROFESSIONAL ENGINEER KEN HALLIS No. C38203 Exp. 3-31-13 CIVIL STATE OF CALIFORNIA

THE STATE OF CALIFORNIA OR ITS OFFICERS OR AGENTS SHALL NOT BE RESPONSIBLE FOR THE ACCURACY OR COMPLETENESS OF SCANNED COPIES OF THIS PLAN SHEET.

NOTE:

1. FOR ACCURATE RIGHT OF WAY DATA, CONTACT RIGHT OF WAY ENGINEERING AT THE DISTRICT OFFICE.

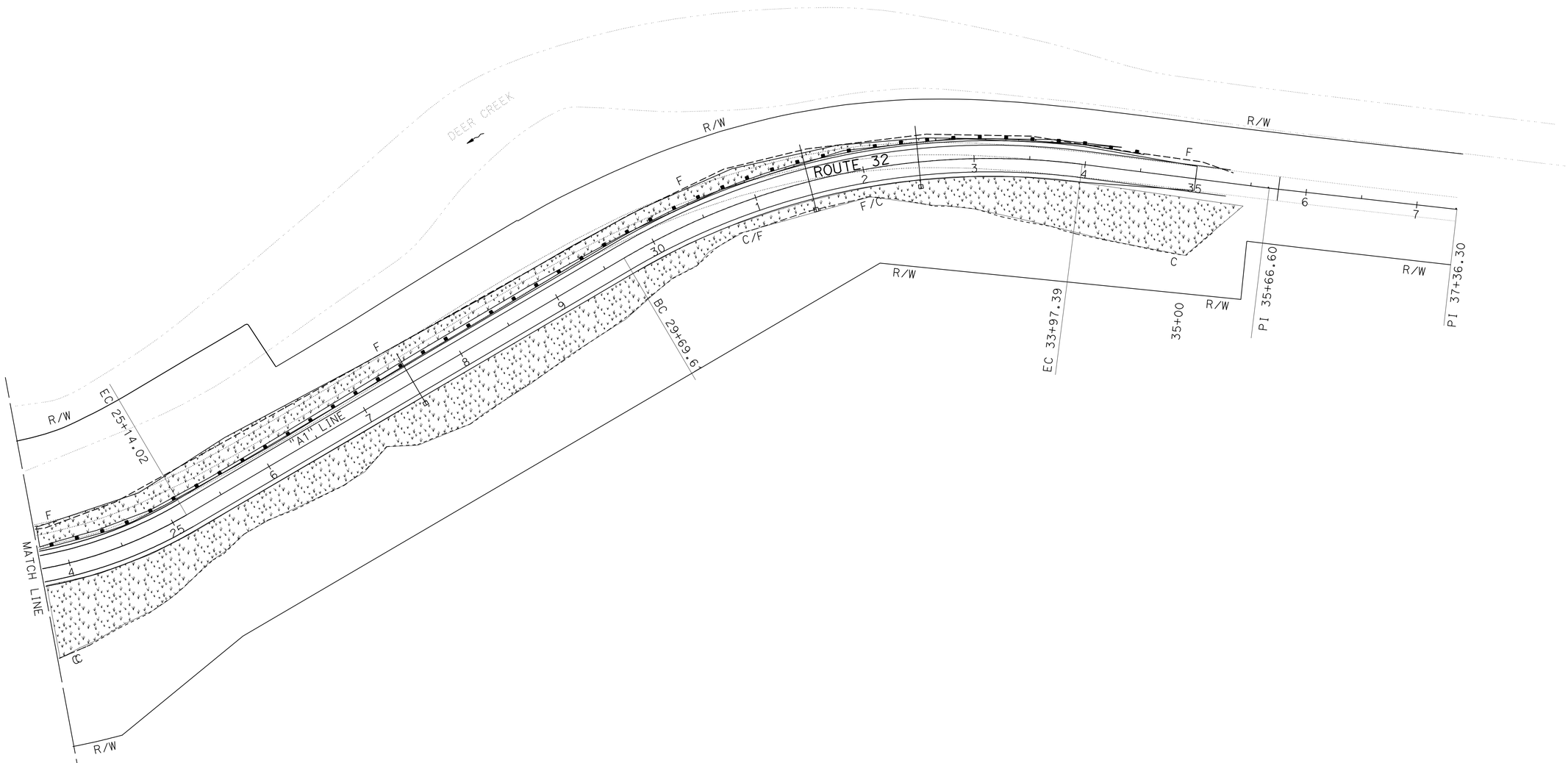

EROSION CONTROL PLAN

SCALE: 1" = 50'

EC-2

APPROVED FOR EROSION CONTROL WORK ONLY

REVISED BY	DATE REVISED

CALCULATED-DESIGNED BY	CHECKED BY
RYAN PRINS	KEN HALLIS

FUNCTIONAL SUPERVISOR: AL TRUJILLO

STATE OF CALIFORNIA - DEPARTMENT OF TRANSPORTATION

Caltrans DESIGN

P:\proj2\02\2E730_plans\pse\22e730ge002.dgn

LAST REVISION 11-15-12 | DATE PLOTTED => 17-JAN-2013 | TIME PLOTTED => 08:09

Dist	COUNTY	ROUTE	POST MILES TOTAL PROJECT	SHEET No.	TOTAL SHEETS
02	Teh	32	22.3/22.8	12	34

LICENSED LANDSCAPE ARCHITECT

1-14-13
PLANS APPROVAL DATE

LICENSED LANDSCAPE ARCHITECT J. PATRICK SULLIVAN #3125 Signature 07/31/14 Renewal Date 11/15/12 Date STATE OF CALIFORNIA

THE STATE OF CALIFORNIA OR ITS OFFICERS OR AGENTS SHALL NOT BE RESPONSIBLE FOR THE ACCURACY OR COMPLETENESS OF SCANNED COPIES OF THIS PLAN SHEET.

NOTE:

1. (N) - NOT A SEPARATE PAY ITEM, FOR INFORMATION ONLY.

HYDROSEED SEQUENCE/ APPLICATION RATES (N)

SEQUENCE	ITEM	MATERIAL DESCRIPTION	MATERIAL TYPE	APPLICATION RATE (N)
STEP 1	HYDROSEED	PURE LIVE SEED	MIX	101 LB/ACRE
		FIBER	ALTERNATE	2000 LB/ACRE
		SLOW RELEASE FERTILIZER	GRANULAR 16-6-10	100 LB/ACRE
STEP 2	HYDROSEED	COMPOST	COMPOSTED WOOD PRODUCT	1.2 CY/ ACRE
		FIBER	ALTERNATE	2000 LB/ACRE
		TACKIFIER	PSYLLIUM	100 LB/ACRE

SEED MIX (N)

BOTANICAL NAME (COMMON NAME)	PERCENT GERMINATION (MINIMUM)	POUNDS PURE LIVE SEED PER ACRE (N) (SLOPE MEASUREMENT)
ACHILLEA MILLEFOLIUM (COMMON YARROW)	50	2
ELYMUS GLAUCUS (BLUE WILDRYE)	70	25
ESCHSCHOLZIA CALIFORNICA (CALIFORNIA POPPY)	70	2
FESTUCA IDAHOENSIS (BLUE FESCUE)	70	20
LOTUS PURSHIANUS (SPANISH LOTUS)	70	8
LUPINUS BICOLOR (SKY LUPINE)	60	2
LUPINUS NANA (DWARF LUPINES)	60	2
POA SECUNDA (BLUE PINE GRASS)	60	15
VULPIA MICROSTACHYS (SMALL FESCUE)	80	25
	TOTAL	101

HYDROSEED

MATERIAL DESCRIPTION	MATERIAL TYPE	TOTALS	
PURE LIVE SEED	MIX	509.97 LB (N)	HYDROSEED
FIBER	ALTERNATE	19880 LB (N)	
SLOW RELEASE FERTILIZER	GRANULAR 16-6-10	497 LB (N)	
COMPOST	COMPOSTED WOOD PRODUCT	5.076 CY (N)	
TACKIFIER	PSYLLIUM	497 LB (N)	
FROM STA 9+91 TO 35+50		TOTAL SQFT	216,442

EROSION CONTROL QUANTITIES

ECQ-1

APPROVED FOR LANDSCAPE WORK ONLY

REVISED BY | DATE REVISED
J. PATRICK SULLIVAN | RON FLORY
CALCULATED-DESIGNED BY | CHECKED BY
SENIOR LANDSCAPE ARCHITECT | RON FLORY
STATE OF CALIFORNIA - DEPARTMENT OF TRANSPORTATION
Caltrans® LANDSCAPE ARCHITECTURE
P:\proj2\02\2E730_plans\pse\22e730gh001.dgn

LAST REVISION 10-03-12 | DATE PLOTTED => 17-JAN-2013 TIME PLOTTED => 07:25

Dist	COUNTY	ROUTE	POST MILES TOTAL PROJECT	SHEET No.	TOTAL SHEETS
02	Teh	32	22.3/22.8	13	34

REGISTERED CIVIL ENGINEER 11-15-12 DATE

1-14-13
PLANS APPROVAL DATE

REGISTERED PROFESSIONAL ENGINEER KEN HALLIS No. C38203 Exp. 3-31-13 CIVIL STATE OF CALIFORNIA

THE STATE OF CALIFORNIA OR ITS OFFICERS OR AGENTS SHALL NOT BE RESPONSIBLE FOR THE ACCURACY OR COMPLETENESS OF SCANNED COPIES OF THIS PLAN SHEET.

NOTE:

1. FOR ACCURATE RIGHT OF WAY DATA, CONTACT RIGHT OF WAY ENGINEERING AT THE DISTRICT OFFICE.

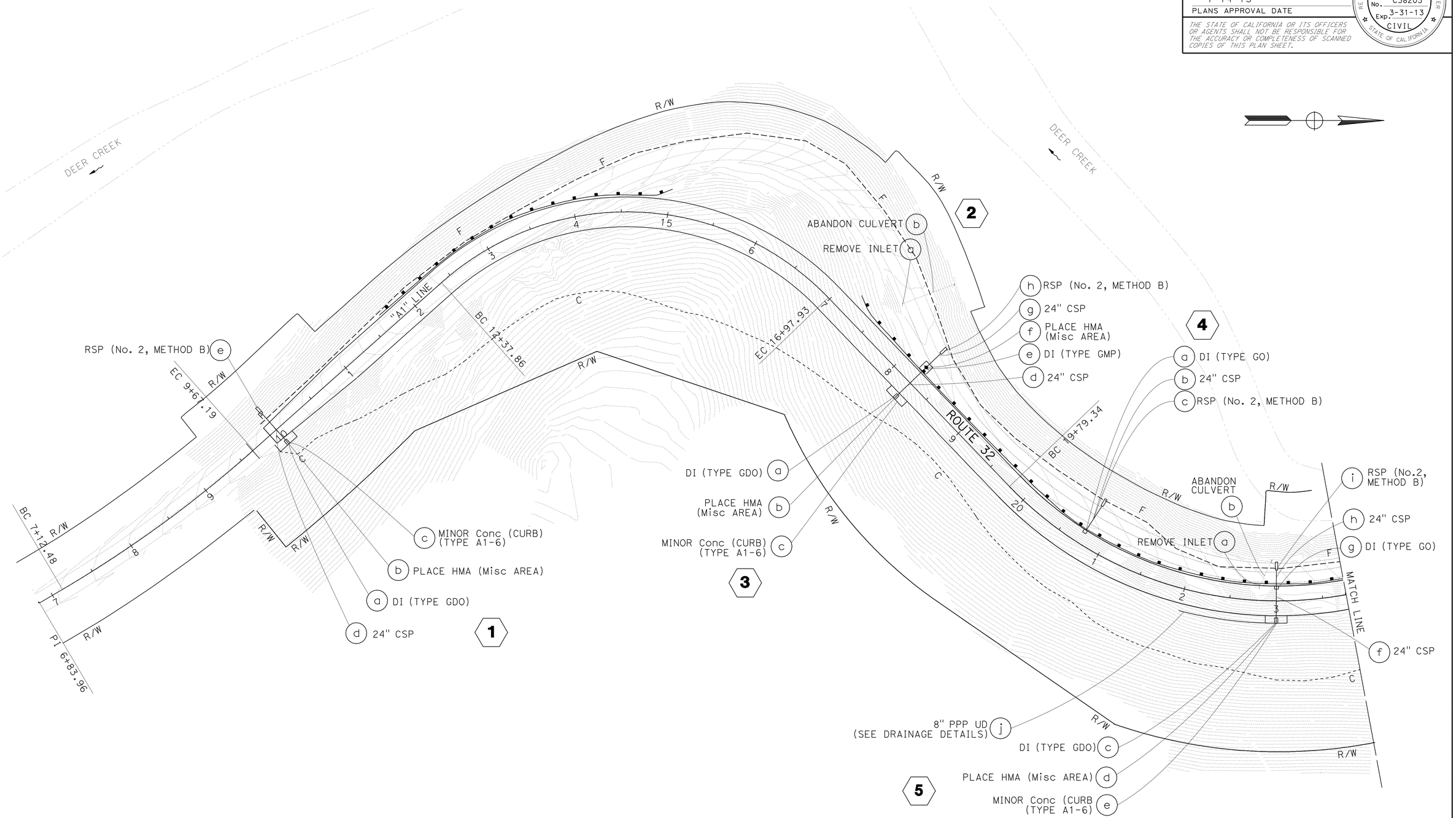

DRAINAGE PLAN

SCALE: 1" = 50'

D-1

APPROVED FOR DRAINAGE WORK ONLY

REVISED BY	DATE REVISED
RYAN PRINS	KEN HALLIS

CALCULATED-DESIGNED BY / CHECKED BY

FUNCTIONAL SUPERVISOR: AL TRUJILLO

STATE OF CALIFORNIA - DEPARTMENT OF TRANSPORTATION

Caltrans® DESIGN

P:\proj2\02\2E730_plans\pse\22e730ia001.dgn

LAST REVISION 11-15-12 | DATE PLOTTED => 17-JAN-2013 TIME PLOTTED => 07:36

Dist	COUNTY	ROUTE	POST MILES TOTAL PROJECT	SHEET No.	TOTAL SHEETS
02	Teh	32	22.3/22.8	14	34

REGISTERED CIVIL ENGINEER 11-15-12 DATE

1-14-13
PLANS APPROVAL DATE

REGISTERED PROFESSIONAL ENGINEER KEN HALLIS No. C38203 Exp. 3-31-13 CIVIL STATE OF CALIFORNIA

THE STATE OF CALIFORNIA OR ITS OFFICERS OR AGENTS SHALL NOT BE RESPONSIBLE FOR THE ACCURACY OR COMPLETENESS OF SCANNED COPIES OF THIS PLAN SHEET.

NOTE:

1. FOR ACCURATE RIGHT OF WAY DATA, CONTACT RIGHT OF WAY ENGINEERING AT THE DISTRICT OFFICE.

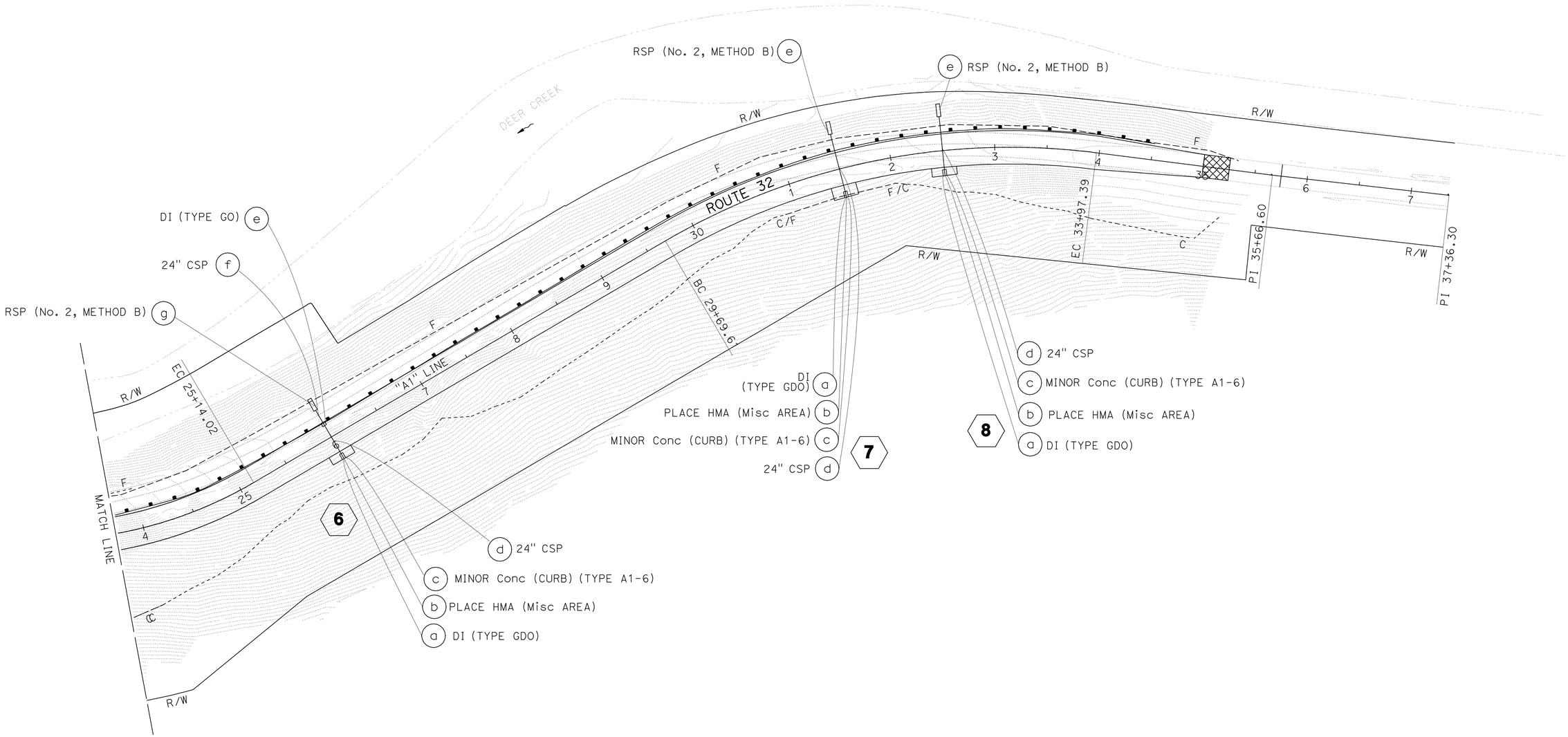

DRAINAGE PLAN

SCALE: 1" = 50'

D-2

REVISED BY	DATE REVISED
RYAN PRINS	KEN HALLIS

CALCULATED-DESIGNED BY / CHECKED BY

FUNCTIONAL SUPERVISOR: AL TRUJILLO

STATE OF CALIFORNIA - DEPARTMENT OF TRANSPORTATION

Caltrans

DESIGN

P:\proj2\02\2E730_plans\pse\22e730ia002.dgn

LAST REVISION 11-15-12 | DATE PLOTTED => 17-JAN-2013 | TIME PLOTTED => 07:33

Dist	COUNTY	ROUTE	POST MILES TOTAL PROJECT	SHEET No.	TOTAL SHEETS
02	Teh	32	22.3/22.8	15	34

REGISTERED CIVIL ENGINEER 11-15-12 DATE

1-14-13
PLANS APPROVAL DATE

REGISTERED PROFESSIONAL ENGINEER KEN HALLIS No. C38203 Exp. 3-31-13 CIVIL STATE OF CALIFORNIA

THE STATE OF CALIFORNIA OR ITS OFFICERS OR AGENTS SHALL NOT BE RESPONSIBLE FOR THE ACCURACY OR COMPLETENESS OF SCANNED COPIES OF THIS PLAN SHEET.

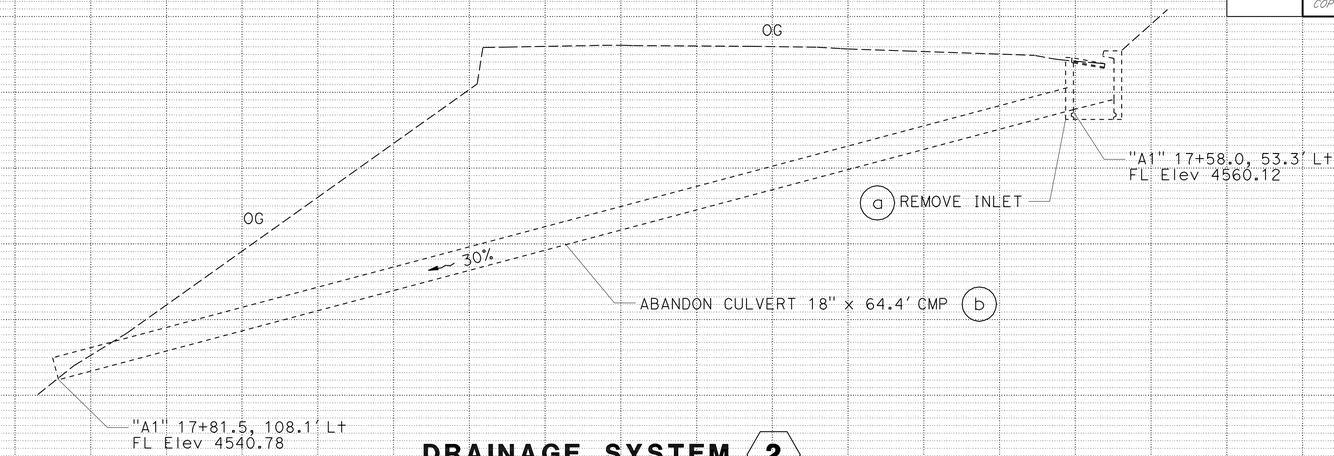

DRAINAGE SYSTEM 2
"A1" Sta 17+58 TO 17+81

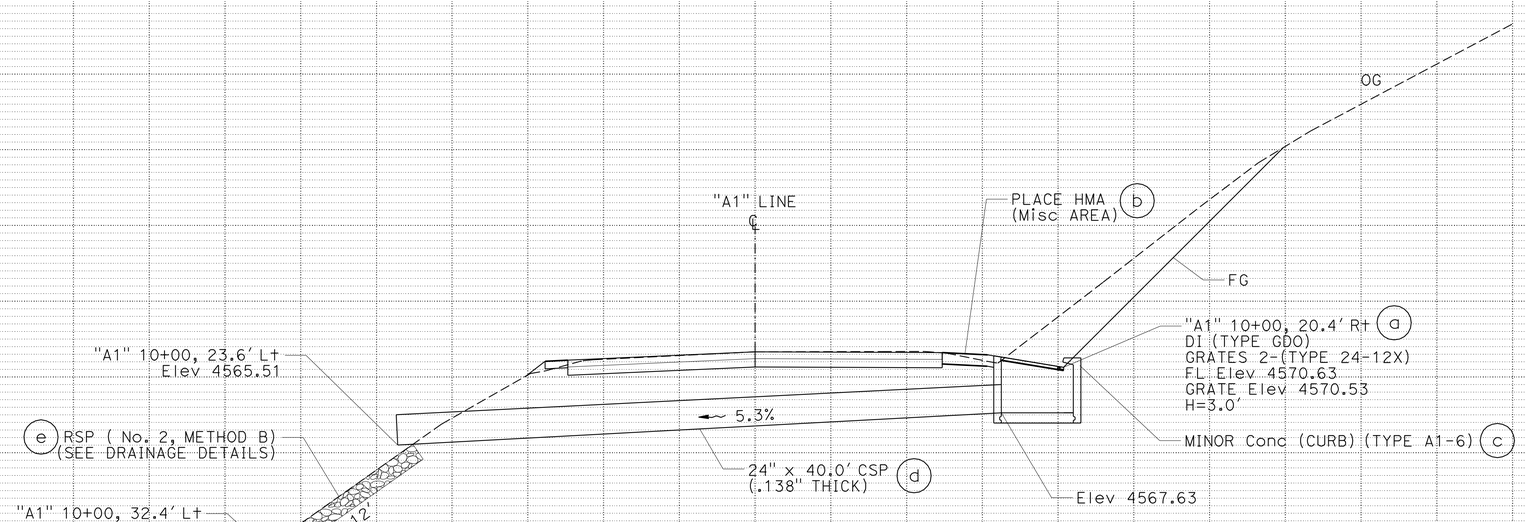

DRAINAGE SYSTEM 1
"A1" Sta 10+00

DRAINAGE PROFILES
SCALE: 1" = 5' Horiz
1" = 5' Vert

DP-1

REVISED BY | DATE REVISED
RYAN PRINS | KEN HALLIS
CALCULATED-DESIGNED BY | CHECKED BY
FUNCTIONAL SUPERVISOR
AL TRUJILLO

STATE OF CALIFORNIA - DEPARTMENT OF TRANSPORTATION
Caltrans
DESIGN

P:\proj2\02\2E730_plans\pse\22e730ib001.dgn

LAST REVISION 11-15-12 | DATE PLOTTED => 17-JAN-2013 | TIME PLOTTED => 07:25

Dist	COUNTY	ROUTE	POST MILES TOTAL PROJECT	SHEET No.	TOTAL SHEETS
02	Teh	32	22.3/22.8	16	34

REGISTERED CIVIL ENGINEER 11-15-12 DATE

1-14-13
PLANS APPROVAL DATE

REGISTERED PROFESSIONAL ENGINEER KEN HALLIS No. C38203 Exp. 3-31-13 CIVIL STATE OF CALIFORNIA

THE STATE OF CALIFORNIA OR ITS OFFICERS OR AGENTS SHALL NOT BE RESPONSIBLE FOR THE ACCURACY OR COMPLETENESS OF SCANNED COPIES OF THIS PLAN SHEET.

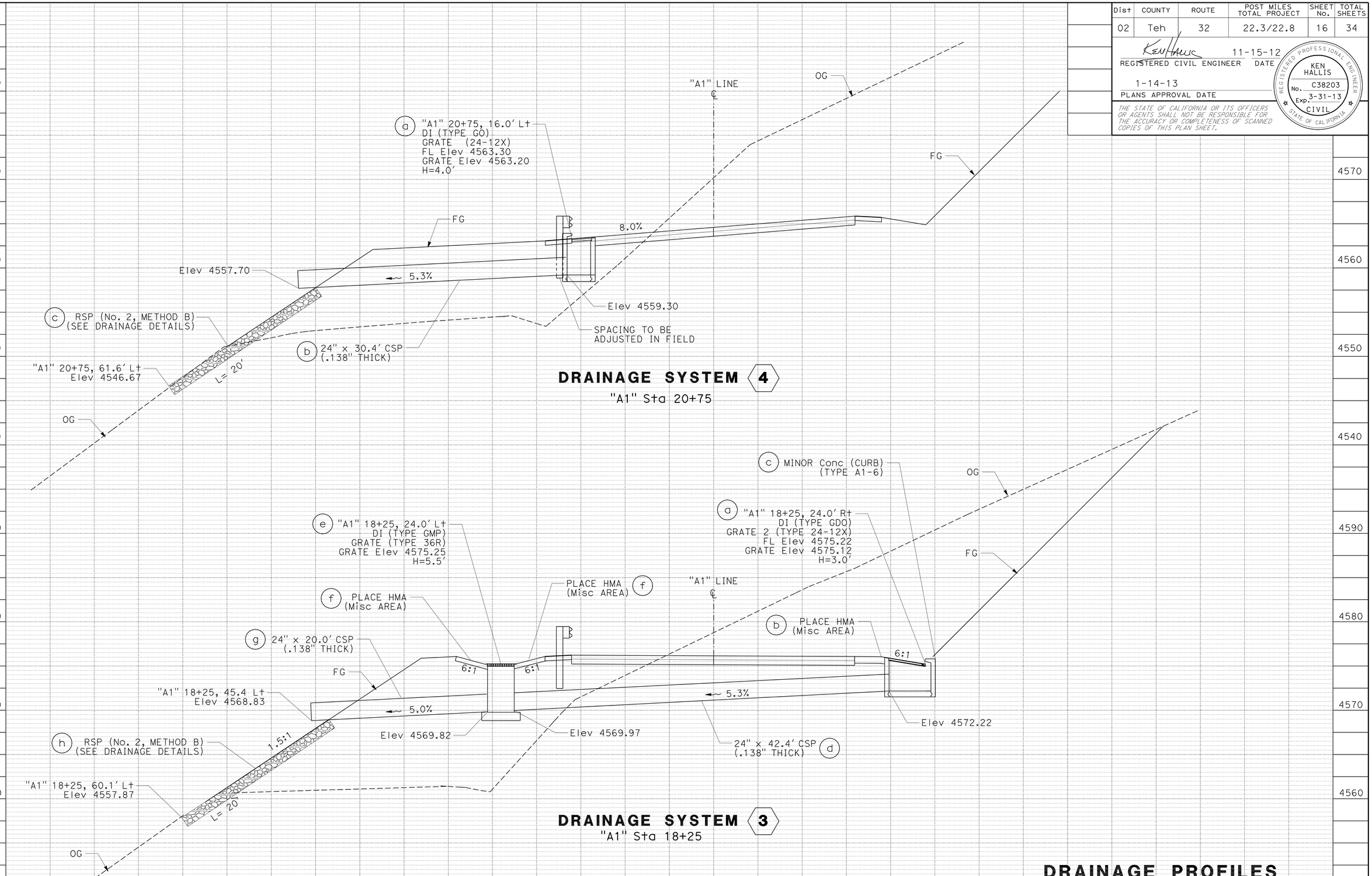

DRAINAGE PROFILES

SCALE: 1" = 5' Horiz
1" = 5' Vert

DP-2

REVISED BY | DATE REVISED
RYAN PRINS | KEN HALLIS
CALCULATED-DESIGNED BY | CHECKED BY
FUNCTIONAL SUPERVISOR
AL TRUJILLO

STATE OF CALIFORNIA - DEPARTMENT OF TRANSPORTATION
Caltrans
DESIGN

P:\proj2\02\2E730_plans\pse\22e730ib002.dgn

LAST REVISION 11-15-12 | DATE PLOTTED => 17-JAN-2013 | TIME PLOTTED => 07:25

BORDER LAST REVISED 7/2/2010 | USERNAME => s114640 | DGN FILE => 22e730ib002.dgn | RELATIVE BORDER SCALE IS IN INCHES 0 1 2 3 | UNIT 0316 | PROJECT NUMBER & PHASE 02000005991

Dist	COUNTY	ROUTE	POST MILES TOTAL PROJECT	SHEET No.	TOTAL SHEETS
02	Teh	32	22.3/22.8	17	34

REGISTERED CIVIL ENGINEER 11-15-12 DATE

1-14-13
PLANS APPROVAL DATE

REGISTERED PROFESSIONAL ENGINEER KEN HALLIS No. C38203 Exp. 3-31-13 CIVIL STATE OF CALIFORNIA

THE STATE OF CALIFORNIA OR ITS OFFICERS OR AGENTS SHALL NOT BE RESPONSIBLE FOR THE ACCURACY OR COMPLETENESS OF SCANNED COPIES OF THIS PLAN SHEET.

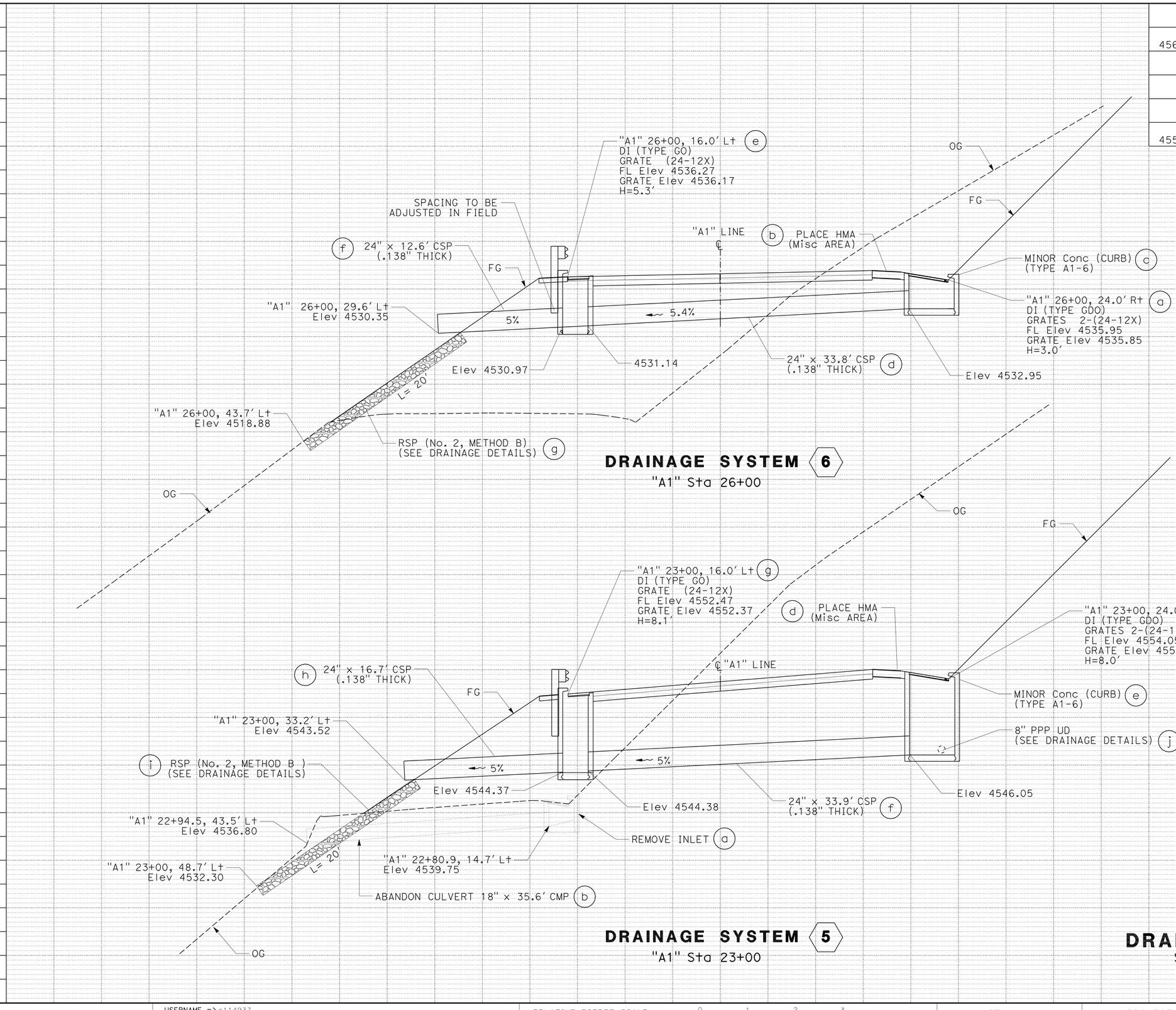

DRAINAGE PROFILES

SCALE: 1" = 5' Horiz
1" = 5' Vert

DP-3

REVISED BY | DATE REVISED
RYAN PRINS | KEN HALLIS
CALCULATED-DESIGNED BY | CHECKED BY
FUNCTIONAL SUPERVISOR: AL TRUJILLO

STATE OF CALIFORNIA - DEPARTMENT OF TRANSPORTATION
Caltrans
DESIGN

P:\proj2\02\2E730_plans\pse\22e730ib003.dgn

LAST REVISION 11-15-12 | DATE PLOTTED => 17-JAN-2013 | TIME PLOTTED => 07:00

BORDER LAST REVISED 7/2/2010 | USERNAME => s114937 | DGN FILE => 22e730ib003.dgn | RELATIVE BORDER SCALE IS IN INCHES 0 1 2 3 | UNIT 0316 | PROJECT NUMBER & PHASE 02000005991

Dist	COUNTY	ROUTE	POST MILES TOTAL PROJECT	SHEET No.	TOTAL SHEETS
02	Teh	32	22.3/22.8	18	34

REGISTERED CIVIL ENGINEER 11-15-12 DATE

1-14-13
PLANS APPROVAL DATE

REGISTERED PROFESSIONAL ENGINEER KEN HALLIS No. C38203 Exp. 3-31-13 CIVIL STATE OF CALIFORNIA

THE STATE OF CALIFORNIA OR ITS OFFICERS OR AGENTS SHALL NOT BE RESPONSIBLE FOR THE ACCURACY OR COMPLETENESS OF SCANNED COPIES OF THIS PLAN SHEET.

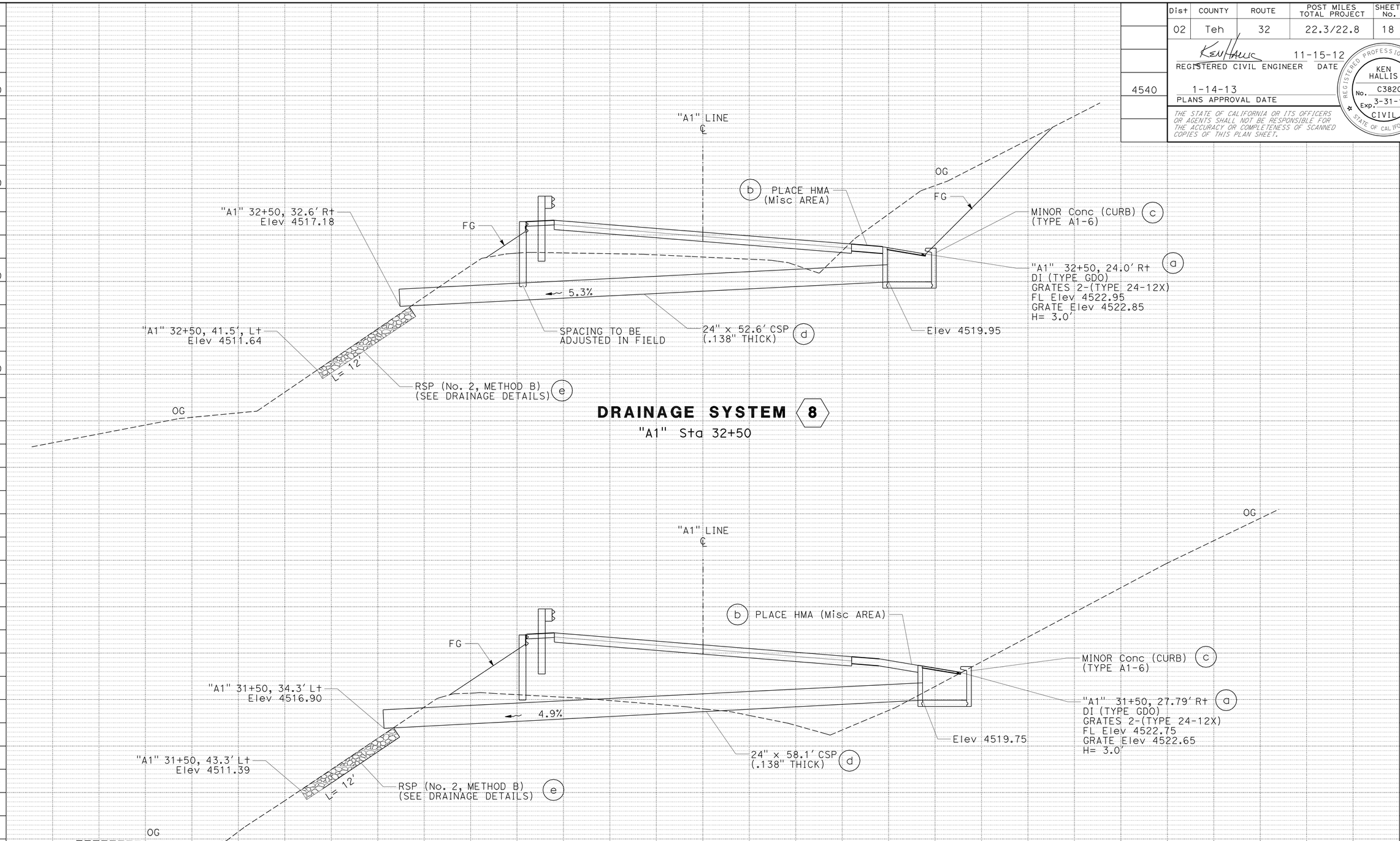

DRAINAGE PROFILES

SCALE: 1" = 5' Horiz
1" = 5' Vert

DP-4

STATE OF CALIFORNIA - DEPARTMENT OF TRANSPORTATION
Caltrans DESIGN

FUNCTIONAL SUPERVISOR: AL TRUJILLO
CALCULATED-DESIGNED BY: RYAN PRINS
CHECKED BY: KEN HALLIS
REVISED BY / DATE REVISED

P:\proj2\02\2E730_plans\pse\22e730ib004.dgn

LAST REVISION 11-15-12 | DATE PLOTTED => 17-JAN-2013 | TIME PLOTTED => 07:02

BORDER LAST REVISED 7/2/2010 | USERNAME => s114937 | DGN FILE => 22e730ib004.dgn | RELATIVE BORDER SCALE IS IN INCHES 0 1 2 3 | UNIT 0316 | PROJECT NUMBER & PHASE 02000005991

Dist	COUNTY	ROUTE	POST MILES TOTAL PROJECT	SHEET No.	TOTAL SHEETS
02	Teh	32	22.3/22.8	19	34

REGISTERED CIVIL ENGINEER 11-15-12 DATE

1-14-13
PLANS APPROVAL DATE

REGISTERED PROFESSIONAL ENGINEER KEN HALLIS No. C38203 Exp. 3-31-13 CIVIL STATE OF CALIFORNIA

THE STATE OF CALIFORNIA OR ITS OFFICERS OR AGENTS SHALL NOT BE RESPONSIBLE FOR THE ACCURACY OR COMPLETENESS OF SCANNED COPIES OF THIS PLAN SHEET.

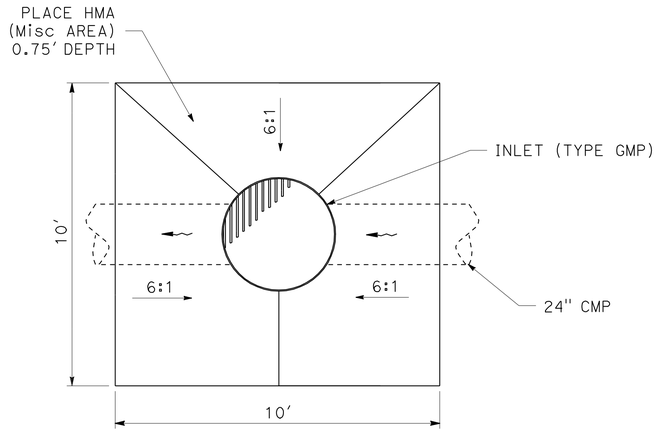

PLAN
HMA APRON
DRAINAGE SYSTEM No. 3 (f)

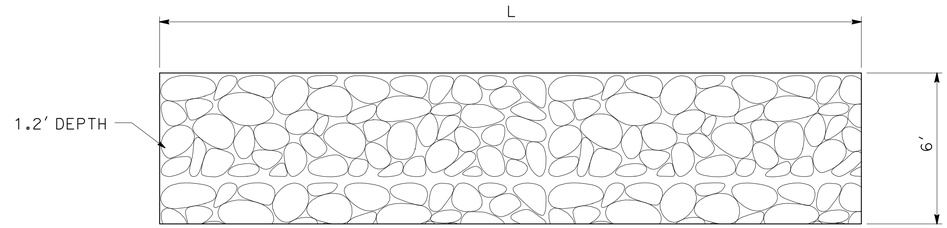

RSP (No.2, METHOD B)

DRAINAGE SYSTEM No.	"L" RSP LENGTH
1e	12'
3h	20'
4c	20'
5i	20'
6g	20'
7e	12'
8e	12'

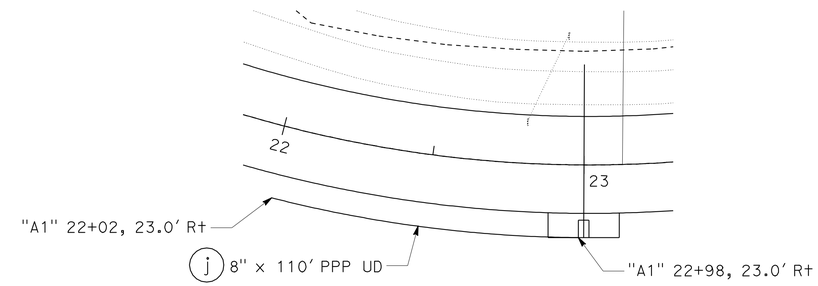

PLAN

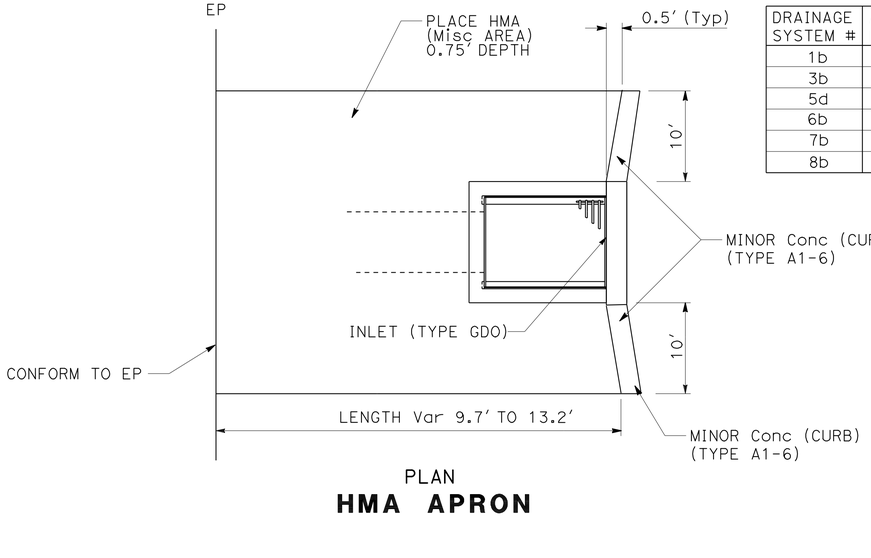

DRAINAGE SYSTEM #	APRON LENGTH
1b	9.8'
3b	9.7'
5d	9.7'
6b	9.7'
7b	13.2'
8b	9.7'

PLAN
HMA APRON

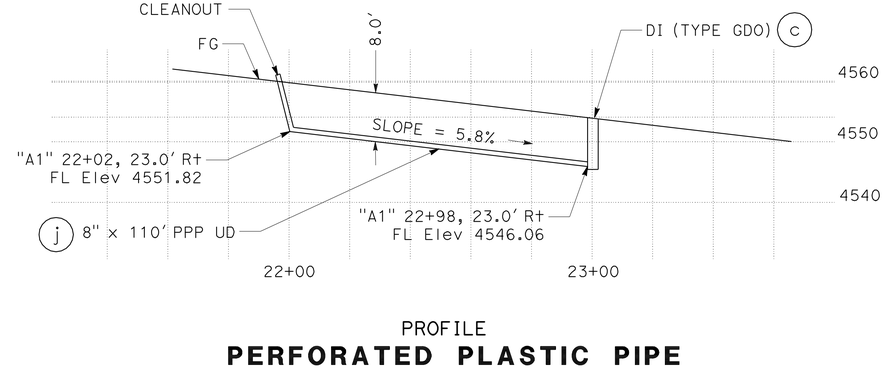

PROFILE
PERFORATED PLASTIC PIPE UNDERDRAIN
DRAINAGE SYSTEM No. 5 (j)

DRAINAGE DETAILS
NO SCALE

DD-1

REVISED BY	DATE REVISED
RYAN PRINS	KEN HALLIS

CALCULATED-DESIGNED BY / CHECKED BY

FUNCTIONAL SUPERVISOR: AL TRUJILLO

STATE OF CALIFORNIA - DEPARTMENT OF TRANSPORTATION
Caltrans
DESIGN

P:\proj2\02\2E730_plans\pse\22e730ic001.dgn

LAST REVISION 11-15-12 | DATE PLOTTED => 17-JAN-2013 | TIME PLOTTED => 06:58

Dist	COUNTY	ROUTE	POST MILES TOTAL PROJECT	SHEET No.	TOTAL SHEETS
02	Teh	32	22.3/22.8	20	34

REGISTERED CIVIL ENGINEER 11-15-12 DATE

1-14-13
PLANS APPROVAL DATE

REGISTERED PROFESSIONAL ENGINEER KEN HALLIS No. C38203 Exp. 3-31-13 CIVIL STATE OF CALIFORNIA

THE STATE OF CALIFORNIA OR ITS OFFICERS OR AGENTS SHALL NOT BE RESPONSIBLE FOR THE ACCURACY OR COMPLETENESS OF SCANNED COPIES OF THIS PLAN SHEET.

DRAINAGE QUANTITIES

DRAINAGE PLAN SHEET No.	SYSTEM No. ⬡	UNIT No. ◯	REMOVE INLET (EA)	ABANDON CULVERT (LF)	SAND BACKFILL (CY)	MINOR CONCRETE (MINOR Str) (CY)	MINOR CONCRETE (CURB) (CY)	MISCELLANEOUS IRON AND STEEL (LB)	(N) H (FT)	PLACE HMA (Misc AREA) (SQYD)	* HMA (TYPE A) (TON)	24" CSP (.138" THICK) (LF)	36" CSP INLET (.138" THICK) (LF)	RSP (No.2, METHOD B) (CY)	8" PPP UD (LF)	(N) FILTER FABRIC (SQYD)	(N) PERMEABLE MATERIAL (CY)	COMMENTS	"A1" STATION	DRAINAGE PLAN SHEET No.	SYSTEM No. ⬡	UNIT No. ◯
D-1	1	a				1.62		473	3.0									GDO GRATE (TYPE 24-12X)	10+00	D-1	1	a
		b								23.2	10.9							HMA APRON				b
		c					.52											Conc CURB TYPE A1-6				c
		d										40.0										d
		e												3.2								e
D-1	2	a	1																17+58 TO 17+81	D-1	2	a
		b		64.4	4.2													18" CMP				b
D-1	3	a				1.62		473	3.0									GDO GRATE (TYPE 24-12X)	18+25	D-1	3	a
		b								23.2	10.9							HMA APRON				b
		c					.52											Conc CURB TYPE A1-6				c
		d										42.4										d
		e				0.25		236	5.5				6.0					GMP GRATE (TYPE 36R)				e
		f								10.3	5.2							HMA APRON				f
		g										20.0										g
		h												5.4								h
D-1	4	a				1.49		239	4.0									GO GRATE (TYPE 24-12X)	20+75	D-1	4	a
		b										30.4										b
		c												5.4								c
D-1	5	a	1																22+00 TO 23+00	D-1	5	a
		b		35.6	2.3													18" CMP				b
		c				3.48		473	8.0									GDO GRATE (TYPE 24-12X)				c
		d								23.2	10.9							HMA APRON				d
		e					.52											Conc CURB TYPE A1-6				e
		f										33.9										f
		g				3.39		239	8.1									GO GRATE (TYPE 24-12X)				g
		h										16.7										h
		i												5.4								i
		j													110	237	55.4					j
D-2	6	a				1.62		473	3.0									GDO GRATE (TYPE 24-12X)	26+00	D-2	6	a
		b								23.2	10.9							HMA APRON				b
		c					.52											Conc CURB TYPE A1-6				c
		d										33.8										d
		e				1.80		239	5.3									GO GRATE (TYPE 24-12X)				e
		f										12.6										f
		g												5.4								g
DQ-1 TOTALS			2	100.0	6.5	15.27	2.08	2845		103.1	48.8	229.8	6.0	24.8	110							

(N) - NOT A SEPARATE PAY ITEM, FOR INFORMATION ONLY
* - ADDITIONAL QUANTITY SHOWN ON ROADWAY QUANTITIES (SHEET Q-1)

REVISED BY | DATE REVISED
RYAN PRINS | KEN HALLIS
CALCULATED-DESIGNED BY | CHECKED BY
FUNCTIONAL SUPERVISOR: AL TRUJILLO

STATE OF CALIFORNIA - DEPARTMENT OF TRANSPORTATION
Caltrans® DESIGN

P:\proj2\02\2E730_plans\pse\22e730id001.dgn

DRAINAGE QUANTITIES
DQ-1

LAST REVISION 11-15-12 | DATE PLOTTED => 17-JAN-2013 | TIME PLOTTED => 07:10

Dist	COUNTY	ROUTE	POST MILES TOTAL PROJECT	SHEET No.	TOTAL SHEETS
02	Teh	32	22.3/22.8	21	34

REGISTERED CIVIL ENGINEER 11-15-12 DATE

1-14-13
PLANS APPROVAL DATE

REGISTERED PROFESSIONAL ENGINEER KEN HALLIS No. C38203 Exp. 3-31-13 CIVIL STATE OF CALIFORNIA

THE STATE OF CALIFORNIA OR ITS OFFICERS OR AGENTS SHALL NOT BE RESPONSIBLE FOR THE ACCURACY OR COMPLETENESS OF SCANNED COPIES OF THIS PLAN SHEET.

DRAINAGE QUANTITIES

DRAINAGE PLAN SHEET No.	SYSTEM No. ⬡	UNIT No. ◯	REMOVE INLET EA	ABANDON CULVERT LF	SAND BACKFILL CY	MINOR CONCRETE (MINOR Str) CY	MINOR CONCRETE (CURB) CY	MISCELLANEOUS IRON AND STEEL LB	(N) H FT	PLACE HMA (Misc AREA) SQYD	* HMA (TYPE A) TON	24" CSP (.138" THICK) LF	36" CSP INLET (.138" THICK) LF	RSP (No.2, METHOD B) CY	8" PPP UD LF	(N) FILTER FABRIC SQYD	(N) PERMEABLE MATERIAL CY	DESCRIPTION	"A1" STATION	DRAINAGE PLAN SHEET No.	SYSTEM No. ⬡	UNIT No. ◯
D-2	7	a				1.62		473	3.0									GDO GRATE (TYPE 24-12X)	31+50	D-2	7	a
		b								32.5	15.4							HMA APRON	↓			b
		c					.52											Conc CURB TYPE A1-6				c
		d										58.1										d
		e												3.2								e
D-2	8	a				1.62		473	3.0									GDO GRATE (TYPE 24-12X)	32+50	D-2	8	a
		b								23.2	10.9							HMA APRON	↓			b
		c					.52											Conc CURB TYPE A1-6				c
		d										52.6										d
		e												3.2								e
DQ-1 TOTALS			2	100.0	6.5	15.27	2.08	2845		103.1	48.8	229.8	6.0	24.8	110							
DQ-2 TOTALS			0	0	0	3.24	1.04	946		55.7	26.3	110.7	0	6.4	0							
GRAND TOTAL			2	100.0	6.5	18.51	3.12	3791		158.8	75.1	340.5	6.0	31.2	110							

(N) - NOT A SEPARATE PAY ITEM, FOR INFORMATION ONLY
* - ADDITIONAL QUANTITY SHOWN ON ROADWAY QUANTITIES (SHEET Q-1)

DRAINAGE QUANTITIES
DQ-2

RYAN PRINS — REVISED BY
KEN HALLIS — DATE REVISED
CALCULATED-DESIGNED BY
CHECKED BY
FUNCTIONAL SUPERVISOR
AL TRUJILLO
STATE OF CALIFORNIA - DEPARTMENT OF TRANSPORTATION
Caltrans
DESIGN

P:\proj2\02\2E730_plans\pse\22e730id002.dgn

LAST REVISION 11-15-12 | DATE PLOTTED => 17-JAN-2013 | TIME PLOTTED => 07:08

Dist	COUNTY	ROUTE	POST MILES TOTAL PROJECT	SHEET No.	TOTAL SHEETS
02	Teh	32	22.3/22.8	22	34

REGISTERED CIVIL ENGINEER 11-15-12 DATE

1-14-13
PLANS APPROVAL DATE

REGISTERED PROFESSIONAL ENGINEER KEN HALLIS No. C38203 Exp. 3-31-13 CIVIL STATE OF CALIFORNIA

THE STATE OF CALIFORNIA OR ITS OFFICERS OR AGENTS SHALL NOT BE RESPONSIBLE FOR THE ACCURACY OR COMPLETENESS OF SCANNED COPIES OF THIS PLAN SHEET.

NOTE:

ALL CONSTRUCTION AREA SIGNS SHALL BE BLACK ON ORANGE.

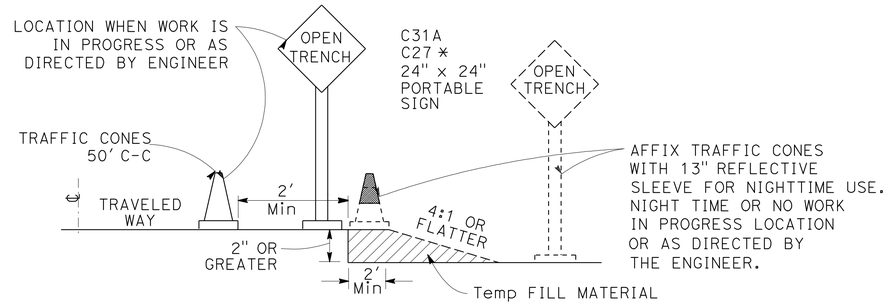

OPEN TRENCH SIGNING AND MARKING

✳ PLACE AT 250' INTERVALS THROUGH THE OPEN TRENCH AREA ALTERNATE C27 (OPEN TRENCH) AND C31A (NO SHOULDER) SIGNS

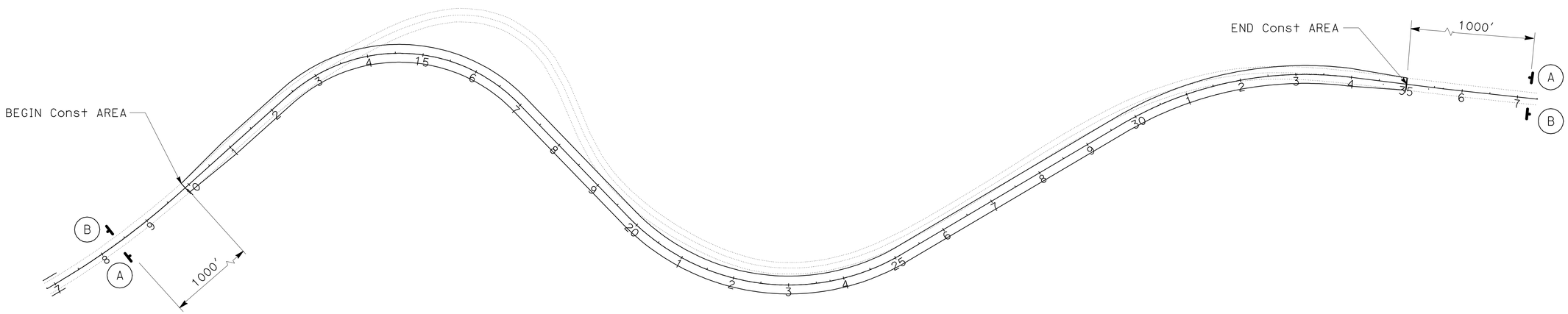

CONSTRUCTION AREA SIGNS (STATIONARY MOUNTED)

SIGN No.	SIGN CODE	PANEL SIZE	SIGN MESSAGE	SIZE OF POSTS	No. OF SIGNS	No. OF POSTS
A	W20-1	48" x 48"	ROAD WORK AHEAD	4" x 6"	2	1
B	G20-2	36" x 18"	END ROAD WORK	4" x 6"	2	1

CONSTRUCTION AREA SIGNS

SCALE: 1" = 100'

CS-1

REVISED BY | DATE REVISED
RYAN PRINS | KEN HALLIS
CALCULATED-DESIGNED BY | CHECKED BY
FUNCTIONAL SUPERVISOR
AL TRUJILLO

STATE OF CALIFORNIA - DEPARTMENT OF TRANSPORTATION
Caltrans
DESIGN

P:\proj2\02\2E730_plans\pse\22e7301a001.dgn

LAST REVISION 11-15-12 | DATE PLOTTED => 17-JAN-2013 | TIME PLOTTED => 07:08

Dist	COUNTY	ROUTE	POST MILES TOTAL PROJECT	SHEET No.	TOTAL SHEETS
02	Teh	32	22.3/22.8	23	34

REGISTERED CIVIL ENGINEER 11-15-12 DATE

1-14-13
PLANS APPROVAL DATE

REGISTERED PROFESSIONAL ENGINEER KEN HALLIS No. C38203 Exp. 3-31-13 CIVIL STATE OF CALIFORNIA

THE STATE OF CALIFORNIA OR ITS OFFICERS OR AGENTS SHALL NOT BE RESPONSIBLE FOR THE ACCURACY OR COMPLETENESS OF SCANNED COPIES OF THIS PLAN SHEET.

NOTES:

Unless otherwise specified in the special provisions, all temporary warning signs shall have black legend on orange background.

California code are designated by (CA). Otherwise, Federal (MUTCD) codes are shown.

TYPICAL LANE CLOSURE WITH REVERSIBLE CONTROL

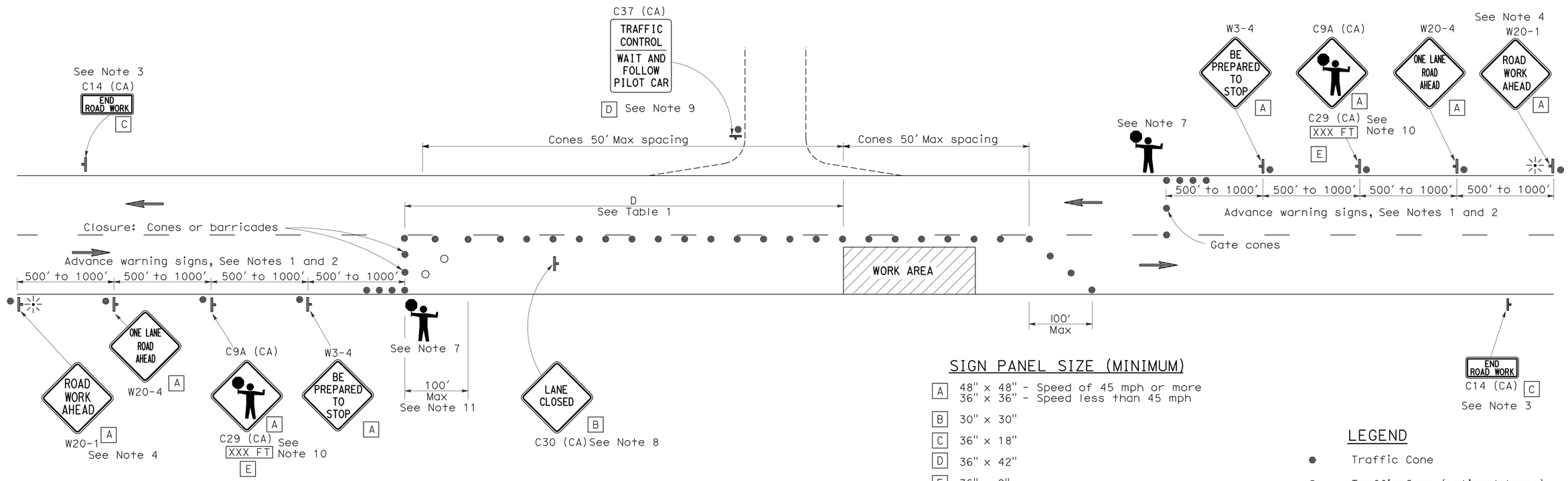

SIGN PANEL SIZE (MINIMUM)

- A 48" x 48" - Speed of 45 mph or more
  36" x 36" - Speed less than 45 mph
- B 30" x 30"
- C 36" x 18"
- D 36" x 42"
- E 36" x 9"

LEGEND

- Traffic Cone
- Traffic Cone (optional taper)
- Temporary Sign
- Direction of Travel
- Portable Flashing Beacon
- Flagger

NOTES:

1. Where approach speeds are low, advance warning signs may be placed at 300' spacing, and closer in urban areas.
2. Each advance warning sign in each direction of travel shall be equipped with at least two flags for daytime closure. Each flag shall be at least 16" x 16" in size and shall be orange or fluorescent red-orange in color. Flashing beacons shall be placed at the locations indicated for lane closure during hours of darkness.
3. A C14 (CA) "END ROAD WORK" sign, as appropriate, shall be placed at the end of the lane control unless the end of work area is obvious, or ends within a larger project's limits.
4. If the W20-1 sign would follow within 2000' of a stationary W20-1 or C11 (CA) "ROAD WORK NEXT _____MILES", use a W20-4 sign for the first advance warning sign.
5. All cones used for lane closures during the hours of darkness shall be fitted with retroreflective bands (or sleeves) as specified in the specifications.
6. Portable delineators, placed at one-half the spacing indicated for traffic cones, may be used instead of cones for daytime closures only.
7. Additional advance flaggers may be required. Flagger should stand in a conspicuous place, be visible to approaching traffic as well as approaching vehicles after the first vehicle has stopped. During the hours of darkness, the flagging-station and flagger shall be illuminated and clearly visible to approaching traffic. The illumination footprint of the lighting on the ground shall be at least 20' in diameter. Place a minimum of four cones at 50' intervals in advance of flagger station as shown.
8. Place C30 (CA) "LANE CLOSED" sign at 500' to 1000' intervals throughout extended work areas. They are optional if the work area is visible from the flagger station.
9. When a pilot car is used, place a C37 (CA) "TRAFFIC CONTROL-WAIT AND FOLLOW PILOT CAR" sign at all intersections within traffic control area. Signs shall be clean and visible at all times.
10. An optional C29 (CA) sign may be placed below the C9A (CA) sign.
11. Traffic cones or barricades may be placed on the optional taper as shown, barricades shall be Type I, II, or III.

TABLE 1

Approach Speed	Minimum D	Downgrade Minimum D *		
		-3%	-6%	-9%
mph	ft	ft	ft	ft
25 and below	155	158	165	173
30	200	205	215	227
35	250	257	271	287
40	305	315	333	354
45	360	378	400	427
50	425	446	474	507
55	495	520	553	593
60	570	598	638	686
65	645	682	728	785

* Use on sustained downgrade steeper than -3 percent and longer than 1 mile.

TRAFFIC CONTROL SYSTEM FOR LANE CLOSURE ON TWO LANE CONVENTIONAL HIGHWAYS

TRAFFIC HANDLING DETAILS

NO SCALE

THD-1

REVISED BY | DATE REVISED
RYAN PRINS | KEN HALLIS
CALCULATED-DESIGNED BY | CHECKED BY
FUNCTIONAL SUPERVISOR
AL TRUJILLO

STATE OF CALIFORNIA - DEPARTMENT OF TRANSPORTATION
Caltrans DESIGN

P:\proj2\02\2E730_plans\pse\22e730me001.dgn

LAST REVISION 11-15-12 | DATE PLOTTED => 17-JAN-2013 | TIME PLOTTED => 07:08

Dist	COUNTY	ROUTE	POST MILES TOTAL PROJECT	SHEET No.	TOTAL SHEETS
02	Teh	32	22.3/22.8	24	34

REGISTERED CIVIL ENGINEER 11-15-12 DATE

1-14-13
PLANS APPROVAL DATE

REGISTERED PROFESSIONAL ENGINEER MATTHEW R. GOWAN No. C52309 Exp. 12-31-14 CIVIL STATE OF CALIFORNIA

THE STATE OF CALIFORNIA OR ITS OFFICERS OR AGENTS SHALL NOT BE RESPONSIBLE FOR THE ACCURACY OR COMPLETENESS OF SCANNED COPIES OF THIS PLAN SHEET.

NOTE:

SEE SHEET DE-2 FOR PCMS MESSAGE SCHEDULE.

LEGEND:

PORTABLE CHANGEABLE MESSAGE SIGN

APPROACH BARRICADE (Min 3 EACH)

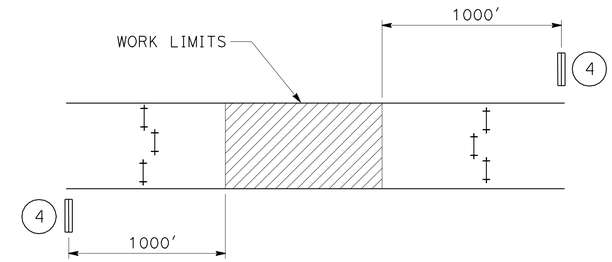

ROAD CLOSURE DETAIL

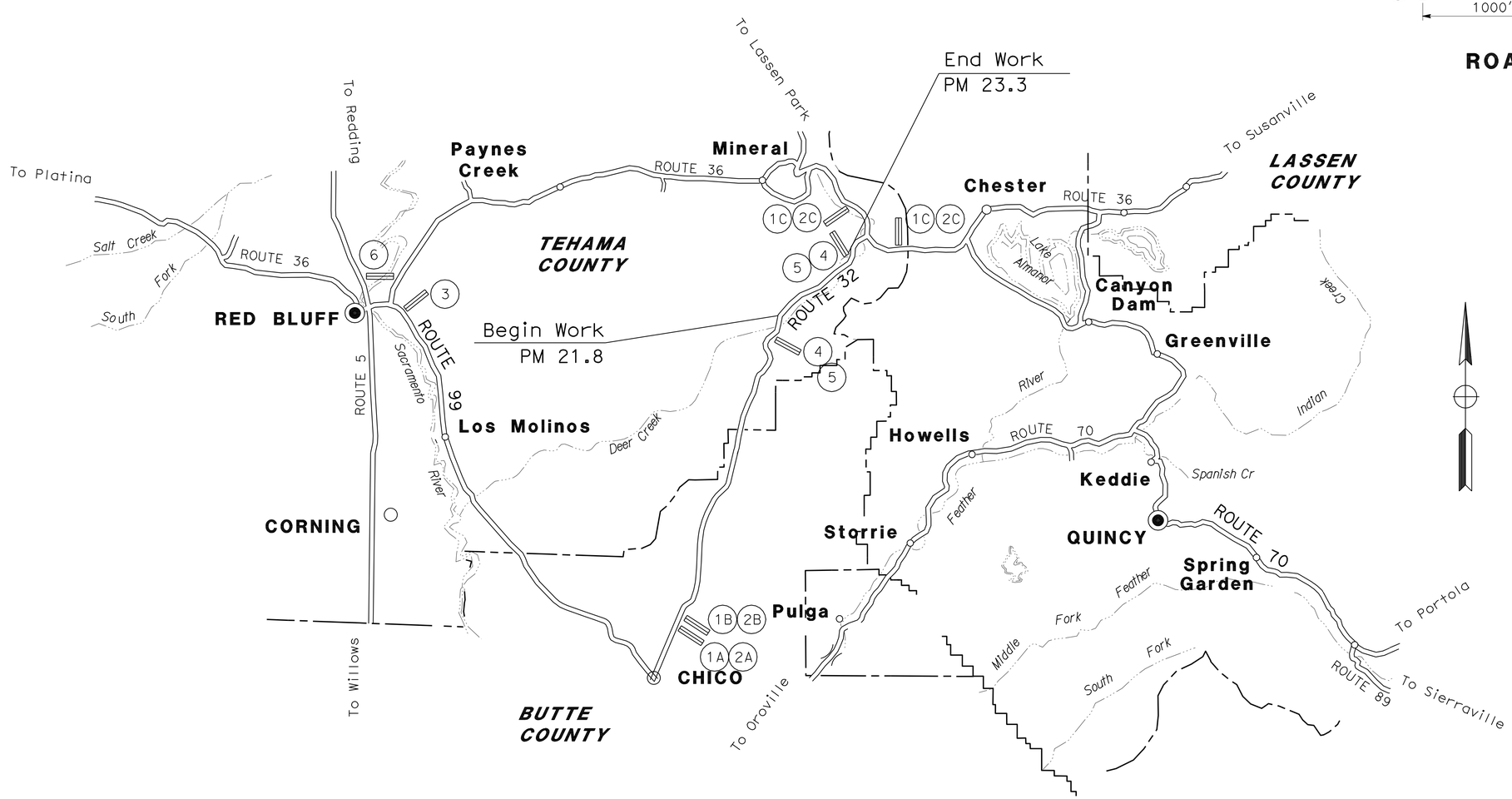

DETOUR PLAN

NO SCALE

DE-1

REVISED BY	DATE REVISED

CALCULATED-DESIGNED BY	CHECKED BY
MATT GOWAN	KEN HALLIS

FUNCTIONAL SUPERVISOR: AL TRUJILLO

STATE OF CALIFORNIA - DEPARTMENT OF TRANSPORTATION

Caltrans® **DESIGN**

P:\proj2\02\2E730_plans\pse\22e730mg001.dgn

LAST REVISION 11-15-12 | DATE PLOTTED => 17-JAN-2013 | TIME PLOTTED => 07:08

Dist	COUNTY	ROUTE	POST MILES TOTAL PROJECT	SHEET No.	TOTAL SHEETS
02	Teh	32	22.3/22.8	25	34

REGISTERED CIVIL ENGINEER 11-15-12 DATE

1-14-13
PLANS APPROVAL DATE

REGISTERED PROFESSIONAL ENGINEER MATTHEW R. GOWAN No. C52309 Exp. 12-31-14 CIVIL STATE OF CALIFORNIA

THE STATE OF CALIFORNIA OR ITS OFFICERS OR AGENTS SHALL NOT BE RESPONSIBLE FOR THE ACCURACY OR COMPLETENESS OF SCANNED COPIES OF THIS PLAN SHEET.

PRE-NOTIFICATION (ACTIVATE 7 DAYS PRIOR TO CLOSURE)

	FRAME 1	FRAME 2	FRAME 3
1A	PLANNED ROUTE 32 CLOSURE	47 MILES AHEAD	
1B	MO-DAY TO MO-DAY	MON 6 AM THRU FRI 6 AM	
1C	PLANNED ROUTE 32 CLOSURE	MO-DAY TO MO-DAY	MON 6 AM THRU FRI 6 AM

DURING CLOSURE (PCMS SAME LOCATION, CHANGE MESSAGE)

2A	ROUTE 32 CLOSED	47 MILES AHEAD	MON 6 AM THRU FRI 6 AM
2B	ROUTE 32 DETOUR	USE 99N TO 36E	
2C	ROUTE 32 CLOSED	MON 6 AM THRU FRI 6 AM	USE 36W TO 99S

	FRAME 1	FRAME 2
3	ROUTE 32 DETOUR	USE 36E
4	ROAD CLOSED AHEAD	MON 6 AM THRU FRI 6 AM

DURING TRAFFIC CONTROL

5	TRAFFIC CONTROL AHEAD	BE PREPARED TO STOP

DURING CLOSURE

6	ROUTE 32 DETOUR	USE 99S

PCMS MESSAGE SCHEDULE

DETOUR PLAN

NO SCALE

DE-2

REVISED BY	DATE REVISED
MATT GOWAN	KEN HALLIS
CALCULATED-DESIGNED BY	CHECKED BY
FUNCTIONAL SUPERVISOR	AL TRUJILLO

STATE OF CALIFORNIA - DEPARTMENT OF TRANSPORTATION

Caltrans® DESIGN

P:\proj2\02\2E730_plans\pse\22e730mg002.dgn

LAST REVISION 11-15-12 DATE PLOTTED => 07-FEB-2013 TIME PLOTTED => 13:40

Dist	COUNTY	ROUTE	POST MILES TOTAL PROJECT	SHEET No.	TOTAL SHEETS
02	Teh	32	22.3/22.8	26	34

REGISTERED CIVIL ENGINEER 11-15-12 DATE

1-14-13
PLANS APPROVAL DATE

REGISTERED PROFESSIONAL ENGINEER KEN HALLIS No. C38203 Exp. 3-31-13 CIVIL STATE OF CALIFORNIA

THE STATE OF CALIFORNIA OR ITS OFFICERS OR AGENTS SHALL NOT BE RESPONSIBLE FOR THE ACCURACY OR COMPLETENESS OF SCANNED COPIES OF THIS PLAN SHEET.

LEGEND:

- DELINEATOR (CLASS 2, TYPE E)
- ORIGINAL LOCATION OF RESET ROADSIDE SIGN
- RESET ROADSIDE SIGN (1-POST)
- RESET ROADSIDE SIGN (2-POST)
- UNDERDRAIN MARKER
- MILEPOST MARKER
- CULVERT MARKER

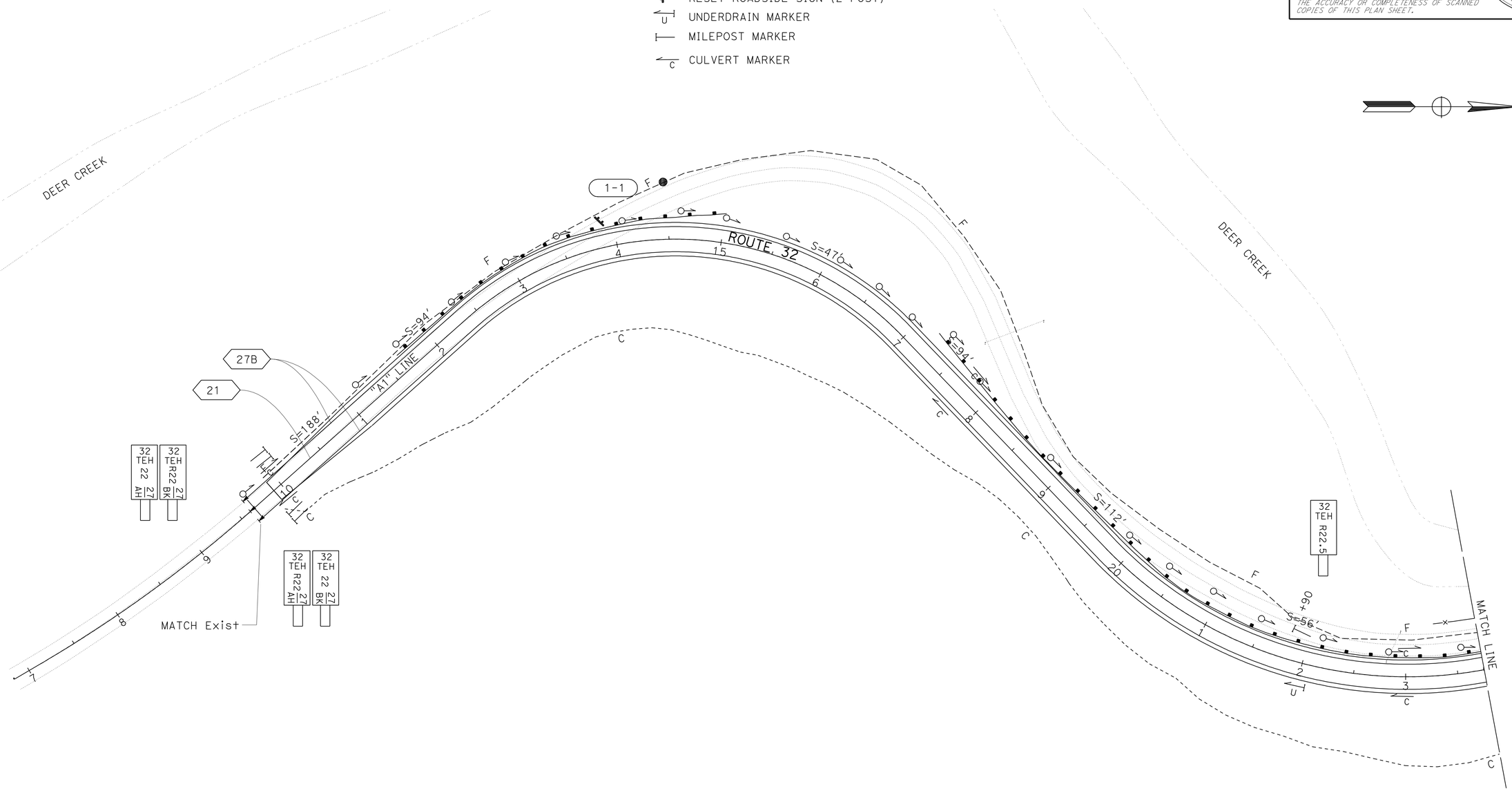

APPROVED FOR PAVEMENT DELINEATION AND SIGN WORK ONLY

PAVEMENT DELINEATION AND SIGN PLAN

SCALE: 1" = 50'

PD-1

STATE OF CALIFORNIA - DEPARTMENT OF TRANSPORTATION
Caltrans® DESIGN

FUNCTIONAL SUPERVISOR: AL TRUJILLO
CALCULATED-DESIGNED BY: RYAN PRINS
CHECKED BY: KEN HALLIS
REVISED BY / DATE REVISED

P:\proj2\02\2E730_plans\pse\22e730na001.dgn

LAST REVISION 11-15-12 | DATE PLOTTED => 17-JAN-2013 | TIME PLOTTED => 08:09

Dist	COUNTY	ROUTE	POST MILES TOTAL PROJECT	SHEET No.	TOTAL SHEETS
02	Teh	32	22.3/22.8	27	34

REGISTERED CIVIL ENGINEER 11-15-12 DATE

1-14-13
PLANS APPROVAL DATE

REGISTERED PROFESSIONAL ENGINEER KEN HALLIS No. C38203 Exp. 3-31-13 CIVIL STATE OF CALIFORNIA

THE STATE OF CALIFORNIA OR ITS OFFICERS OR AGENTS SHALL NOT BE RESPONSIBLE FOR THE ACCURACY OR COMPLETENESS OF SCANNED COPIES OF THIS PLAN SHEET.

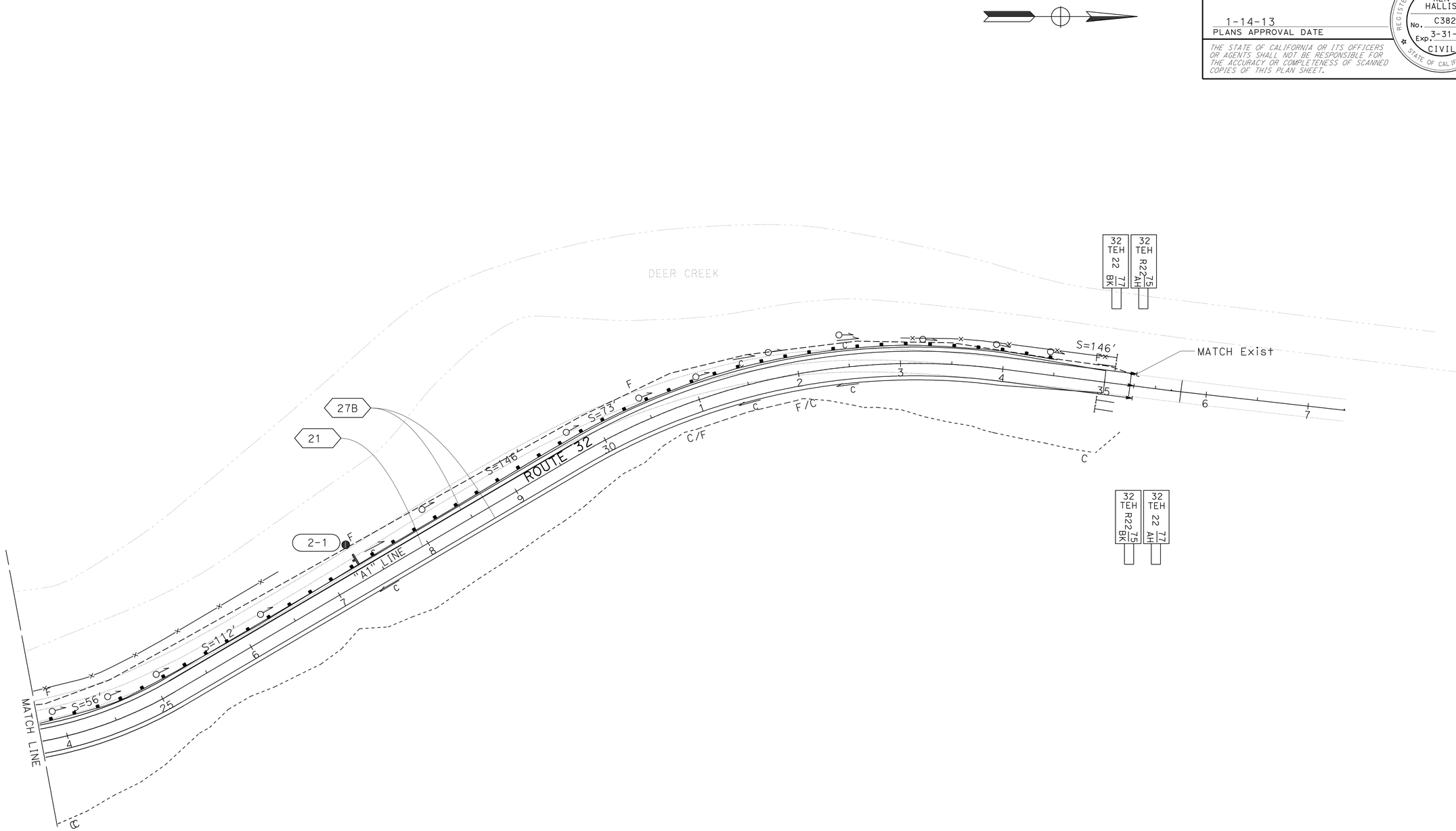

PAVEMENT DELINEATION AND SIGN PLAN

SCALE: 1" = 50'

PD-2

APPROVED FOR PAVEMENT DELINEATION AND SIGN WORK ONLY

STATE OF CALIFORNIA - DEPARTMENT OF TRANSPORTATION
Caltrans DESIGN

FUNCTIONAL SUPERVISOR: AL TRUJILLO
CALCULATED-DESIGNED BY: RYAN PRINS
CHECKED BY: KEN HALLIS
REVISED BY
DATE REVISED

P:\proj2\02\2E730_plans\pse\22e730na002.dgn

DATE PLOTTED => 17-JAN-2013
TIME PLOTTED => 08:09
LAST REVISION 11-15-12

BORDER LAST REVISED 7/2/2010
USERNAME => s121614
DGN FILE => 22e730na002.dgn
RELATIVE BORDER SCALE IS IN INCHES 0 1 2 3
UNIT 0316
PROJECT NUMBER & PHASE 02000005991

Dist	COUNTY	ROUTE	POST MILES TOTAL PROJECT	SHEET No.	TOTAL SHEETS
02	Teh	32	22.3/22.8	28	34

REGISTERED CIVIL ENGINEER 11-15-12 DATE

1-14-13
PLANS APPROVAL DATE

REGISTERED PROFESSIONAL ENGINEER KEN HALLIS No. C38203 Exp. 3-31-13 CIVIL STATE OF CALIFORNIA

THE STATE OF CALIFORNIA OR ITS OFFICERS OR AGENTS SHALL NOT BE RESPONSIBLE FOR THE ACCURACY OR COMPLETENESS OF SCANNED COPIES OF THIS PLAN SHEET.

NOTE:

1. (N) - NOT A SEPARATE PAY ITEM, FOR INFORMATION ONLY.

MARKERS AND DELINEATORS

STATION "A1" LINE	DELINEATOR (CLASS 2) (TYPE E)	MARKER (CULVERT)	MILEPOST MARKER	UNDERDRAIN MARKER
	EA	EA	EA	EA
9+65 TO 35+25	34	13	9	1
TOTAL	34	13	9	1

CULVERT MARKER POSTMILE TABLE (N)

"A1" LINE Sta	PM	Qty
10+00	R22.28	2
18+25	R22.43	2
20+75	R22.48	1
23+00	R22.52	2
26+00	R22.58	2
31+50	R22.68	2
32+50	R22.70	2

PAVEMENT DELINEATION QUANTITIES

STATION "A1" LINE	THERMOPLASTIC TRAFFIC STRIPE (SPRAYABLE)	
	DETAIL 21	DETAIL 27B
	LF	LF
9+15 TO 35+75	2660	5320
21+90		
TOTAL	7980	

ROADSIDE SIGNS

SHEET No.	STATION "A1" LINE	SIGN No. #-#	SIGN CODE	RESET ROADSIDE SIGN	REMARKS
				EA	
PD-1	13+75	1-1	W4-1 SQUARE	1	RESET ROADSIDE SIGN (TWO POST)
PD-2	27+30	2-1	W1-3 W13-1	1	RESET ROADSIDE SIGN (ONE POST) REMOVE W13-1
			TOTAL	2	

PAVEMENT DELINEATION AND SIGN QUANTITIES

PDQ-1

REVISED BY | DATE REVISED
RYAN PRINS | KEN HALLIS
CALCULATED-DESIGNED BY | CHECKED BY
FUNCTIONAL SUPERVISOR
AL TRUJILLO

STATE OF CALIFORNIA - DEPARTMENT OF TRANSPORTATION
Caltrans DESIGN

P:\proj2\02\2E730_plans\pse\22e730nc001.dgn

LAST REVISION 11-15-12 | DATE PLOTTED => 17-JAN-2013 TIME PLOTTED => 08:09

Dist	COUNTY	ROUTE	POST MILES TOTAL PROJECT	SHEET No.	TOTAL SHEETS
02	Teh	32	22.3/22.8	29	34

REGISTERED CIVIL ENGINEER 11-15-12 DATE

1-14-13
PLANS APPROVAL DATE

REGISTERED PROFESSIONAL ENGINEER KEN HALLIS No. C38203 Exp. 3-31-13 CIVIL STATE OF CALIFORNIA

THE STATE OF CALIFORNIA OR ITS OFFICERS OR AGENTS SHALL NOT BE RESPONSIBLE FOR THE ACCURACY OR COMPLETENESS OF SCANNED COPIES OF THIS PLAN SHEET.

NOTE:

1. CALIFORNIA SIGN CODES ARE DESIGNATED BY (CA), OTHERWISE FEDERAL SIGN CODES ARE SHOWN.

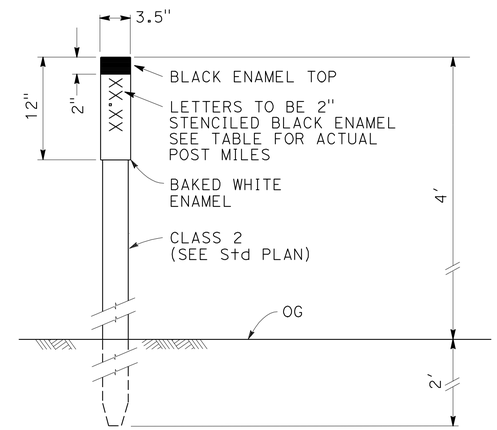

MARKER (CULVERT)

NOTE:
1. PLACE MARKER 2' FROM EP AT EACH CULVERT LOCATION.

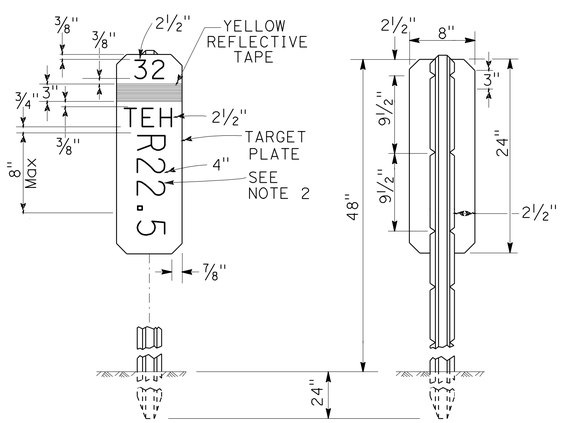

NOTES:

1. THE MARKER SHALL BE WHITE (NON-REFLECTIVE) TARGET PLATE WITH BLACK SERIES D NUMERALS AND LETTERS.
2. A POST MILE PREFIX, SUCH AS "R", SHALL APPLY ONLY WHEN DIRECTED BY THE ENGINEER.
3. ALL INFORMATION SHALL BE IN ENGLISH UNITS (MILES).

POST MILE MARKER DETAIL

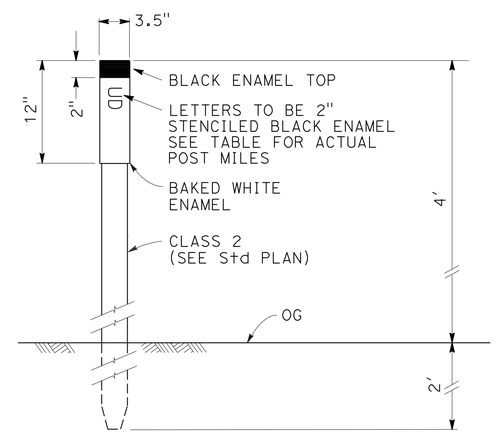

UNDERDRAIN MARKER

NOTE:
1. PLACE MARKER 2' FROM EACH CLEANOUT LOCATION.

SIGN DETAILS

NO SCALE

SD-1

REVISED BY	DATE REVISED
RYAN PRINS	KEN HALLIS

CALCULATED-DESIGNED BY	CHECKED BY

FUNCTIONAL SUPERVISOR: AL TRUJILLO

STATE OF CALIFORNIA - DEPARTMENT OF TRANSPORTATION

Caltrans® DESIGN

P:\proj2\02\2E730_plans\pse\22e730ob001.dgn

LAST REVISION 11-15-12 | DATE PLOTTED => 17-JAN-2013 | TIME PLOTTED => 07:04

Dist	COUNTY	ROUTE	POST MILES TOTAL PROJECT	SHEET No.	TOTAL SHEETS
02	Teh	32	22.3/22.8	30	34

REGISTERED CIVIL ENGINEER 11-15-12 DATE

1-14-13
PLANS APPROVAL DATE

REGISTERED PROFESSIONAL ENGINEER KEN HALLIS No. C38203 Exp. 3-31-13 CIVIL STATE OF CALIFORNIA

THE STATE OF CALIFORNIA OR ITS OFFICERS OR AGENTS SHALL NOT BE RESPONSIBLE FOR THE ACCURACY OR COMPLETENESS OF SCANNED COPIES OF THIS PLAN SHEET.

NOTE:

1. (N) - NOT A SEPARATE PAY ITEM, FOR INFORMATION ONLY.

TEMPORARY WATER POLLUTION CONTROL

DESCRIPTION	TEMPORARY INLET PROTECTION	TEMPORARY CHECK DAM	Temp SILT FENCE	Temp FIBER ROLL
	EA	LF	LF	LF
STORMWATER BMP ITEMS	10	100	525	2000
TOTAL	10	100	525	2000

ROADWAY QUANTITIES

STATION RANGE/LOCATION "A1" LINE	ROADWAY EXCAVATION	(N) EMBANKMENT	HOT MIX ASPHALT (TYPE A)	HOT MIX ASPHALT DIKE (TYPE F)	CLASS 2 AGGREGATE BASE	SHOULDER BACKING	COLD PLANE ASPHALT CONCRETE PAVEMENT	METAL BEAM GUARD RAIL (7" STEEL POST)	A1+ IN-LINE TERMINAL SYSTEM	EARTH RETAINING SYSTEM (RAILING COMPONENTS)	TACK COAT	REMOVE METAL BEAM GUARD RAIL	SUBGRADE ENHANCEMENT GEOTEXTILE (CLASS A1)	COMMENTS
	CY	CY	TON	LF	CY	TON	SQYD	LF	EA	SQFT	TON	LF	SQYD	
9+90 TO 35+00	71,265	24,380	2764		1636	500					3.1			STRUCTURAL SECTION, EARTHWORK
9+65 TO 9+90							69.5							
35+00 TO 35+25							69.5							
9+90 TO 35+00			* 75.1											HMA (Misc AREA) DI APRONS
18+50 TO 28+00			12.7	950										DIKE HMA
12+25 TO 15+00								275	1					
17+25 TO 34+00								1675	1					
12+75 TO 13+25										102				
31+50 TO 35+00										714				
13+78 TO 17+76												500		
9+90 TO 35+00			39.3		102									SAFETY EDGE
21+00 TO 24+00													1067	
TOTAL	71,265	24,380	2891.1	950	1738	500	139	1950	2	816	3.1	500	1067	

* QUANTITY SHOWN ON SHEET DQ-1

SUMMARY OF QUANTITIES

Q-1

REVISED BY | DATE REVISED
RYAN PRINS | KEN HALLIS
CALCULATED-DESIGNED BY | CHECKED BY
FUNCTIONAL SUPERVISOR
AL TRUJILLO

STATE OF CALIFORNIA - DEPARTMENT OF TRANSPORTATION
Caltrans DESIGN

P:\proj2\02\2E730_plans\pse\22e730pa001.dgn

LAST REVISION 11-15-12 | DATE PLOTTED => 17-JAN-2013 | TIME PLOTTED => 08:10

DIST	COUNTY	ROUTE	POST MILES TOTAL PROJECT	SHEET No.	TOTAL SHEETS
02	Teh	32	22.3/22.8	31	34

REGISTERED CIVIL ENGINEER

January 20, 2012
PLANS APPROVAL DATE

REGISTERED PROFESSIONAL ENGINEER Cornelis M. Hakim No. C55610 Exp. 12-31-12 CIVIL STATE OF CALIFORNIA

THE STATE OF CALIFORNIA OR ITS OFFICERS OR AGENTS SHALL NOT BE RESPONSIBLE FOR THE ACCURACY OR COMPLETENESS OF SCANNED COPIES OF THIS PLAN SHEET.

TO ACCOMPANY PLANS DATED 1-14-13

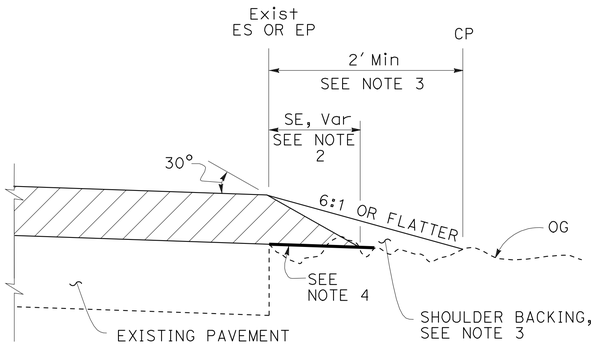

CASE A
Safety Edge

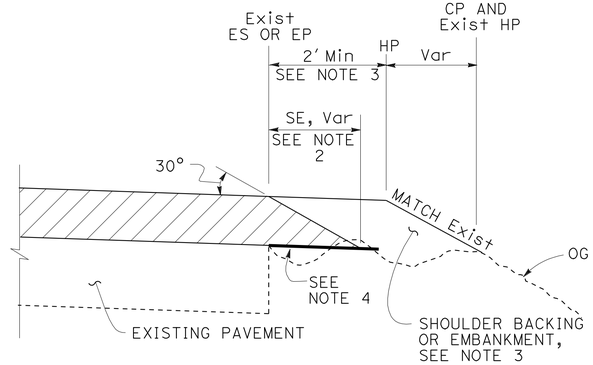

CASE B
Safety Edge

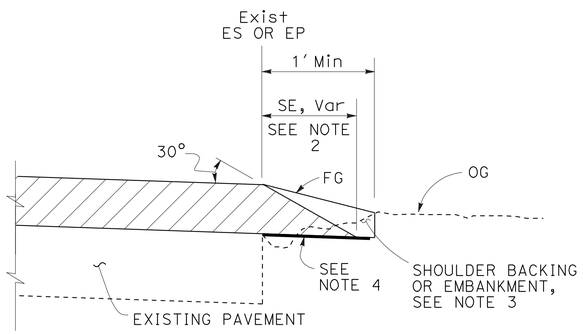

CASE C
Safety Edge

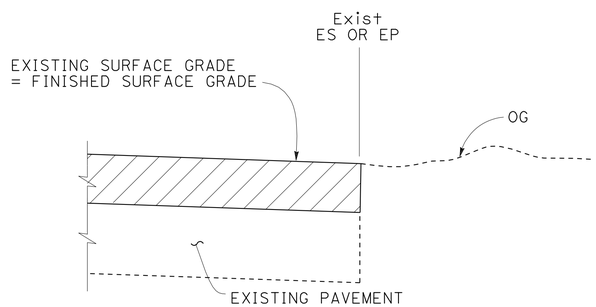

CASE D
Vertical Edge

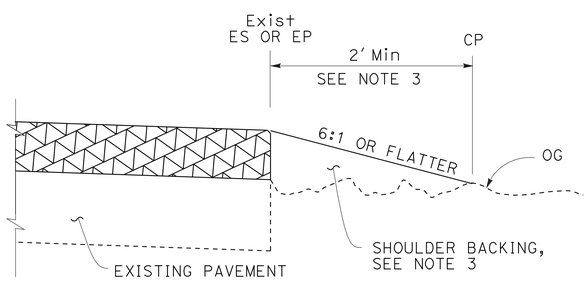

CASE E
Vertical Edge

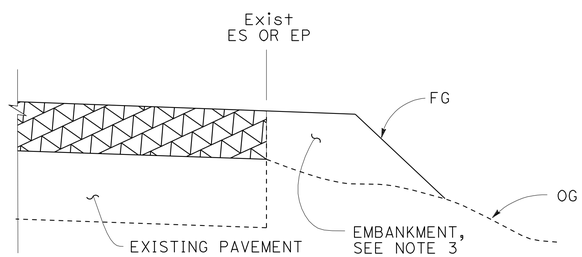

CASE F
Vertical Edge
* See Table A and Revised Std Plan RSP P74

LEGEND:

- HMA OVERLAY
- HMA OR CONCRETE OVERLAY
- CONCRETE OVERLAY

ABBREVIATIONS:

SE SAFETY EDGE
TT TOTAL THICKNESS OF SE

TABLE A
EDGE TREATMENT FOR VARIOUS OVERLAY THICKNESS AND CONDITIONS

	OVERLAY THICKNESS	
FIELD CONDITION	LESS THAN 0.15′	0.15′ OR MORE
Exist SLOPE 6:1 OR FLATTER	CASE E	CASE A
Exist SLOPE 3:1 TO 6:1	CASE E	CASE B
Exist SLOPE STEEPER THAN 3:1	CASE F	CASE F
CUT SECTION (REPLACE, COLD PLANE, MILL PAVEMENT)	CASE D	CASE C

ADDITIONAL HMA OR CONCRETE QUANTITIES FOR SE/SIDE/MILE

TYPICAL CROSS SECTION	TT	TOTAL ADDITIONAL MATERIAL FOR SE/SIDE/MILE		
		HMA (TON)	CONCRETE (CY)*	CONCRETE (CY)**
TT	0.15′	NA	NA	NA
	0.20′	13.7	NA	NA
	0.30′	30.9	NA	NA
	0.40′	54.9	NA	NA
	0.45′	69.4	NA	NA
TT 0.43′	0.50′	84.2	NA	NA
	0.60′	113.9	NA	NA
	0.70′	143.6	70.9	94.2
	0.80′	173.3	85.6	112.2
	0.90′	203.0	100.3	130.2
	1.00′	232.7	114.9	148.2
	1.10′	262.4	129.6	166.2
	1.20′	292.1	144.3	184.2

* For Detail "A"
** For Optional Detail "A"

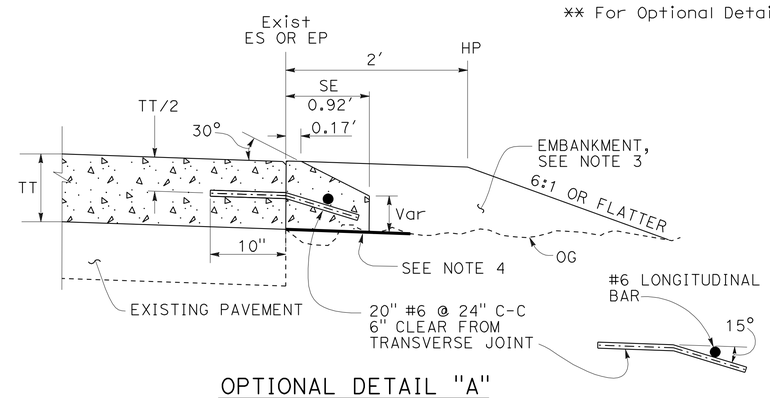

OPTIONAL DETAIL "A"
For concrete overlay
See Note 5

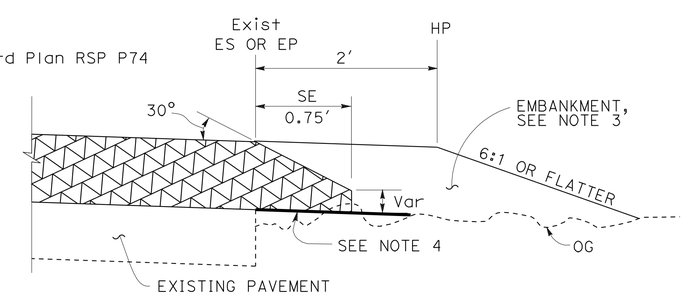

DETAIL "A"
For HMA overlay thickness more than 0.43′ or concrete overlay

NOTES:

1. For limits of safety edge and vertical edge treatments, see Revised Standard Plan RSP P74.
2. Details shown for HMA overlay thickness less than 0.43′. See Detail "A" for HMA overlay thickness more than 0.43′ or concrete overlay.
3. For locations and limits of shoulder backing or embankment see project plans.
4. Grade existing ground to place safety edge. 1′ minimum width
5. Safety edge transverse joint must match overlay transverse joint. End of #6 longitudinal bar must be 2" ±½" clear from transverse joint.
6. Safety edge is not needed in the area of MBGR, barrier, right turn lane and acceleration lane. See Revised Standard Plan RSP P74.

STATE OF CALIFORNIA
DEPARTMENT OF TRANSPORTATION

PAVEMENT EDGE TREATMENTS-OVERLAYS

NO SCALE

RSP P75 DATED JANUARY 20, 2012 SUPPLEMENTS THE STANDARD PLANS BOOK DATED 2010.

REVISED STANDARD PLAN RSP P75

2010 REVISED STANDARD PLAN RSP P75

DIST	COUNTY	ROUTE	POST MILES TOTAL PROJECT	SHEET No.	TOTAL SHEETS
02	Teh	32	22.3/22.8	32	34

REGISTERED CIVIL ENGINEER

January 20, 2012
PLANS APPROVAL DATE

REGISTERED PROFESSIONAL ENGINEER
Cornelis M. Hakim
No. C55610
Exp. 12-31-12
CIVIL
STATE OF CALIFORNIA

THE STATE OF CALIFORNIA OR ITS OFFICERS OR AGENTS SHALL NOT BE RESPONSIBLE FOR THE ACCURACY OR COMPLETENESS OF SCANNED COPIES OF THIS PLAN SHEET.

TO ACCOMPANY PLANS DATED 1-14-13

LEGEND:

- HMA PAVEMENT
- HMA OR CONCRETE PAVEMENT
- CONCRETE PAVEMENT

ABBREVIATIONS:

SE SAFETY EDGE
TT TOTAL THICKNESS OF SE
HW HINGE WIDTH, DISTANCE FROM ES OR EP TO HP

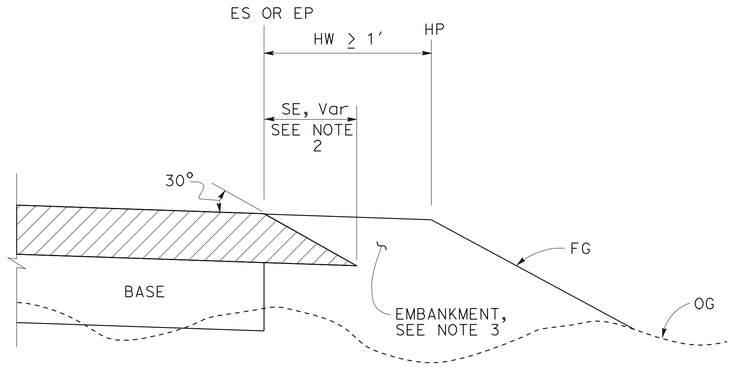

CASE K
Safety Edge - Fill Section, HW ≥ 1′

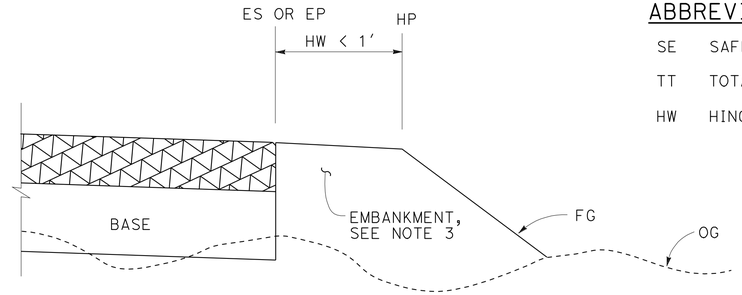

CASE L
Vertical Edge - Fill Section, HW < 1′

FILL SECTION

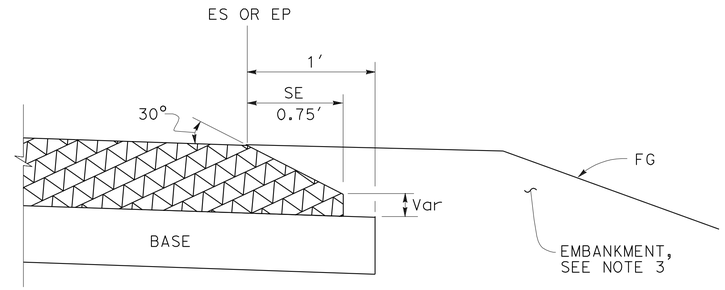

DETAIL "B"
For HMA pavement thickness more than 0.43′ or concrete pavement

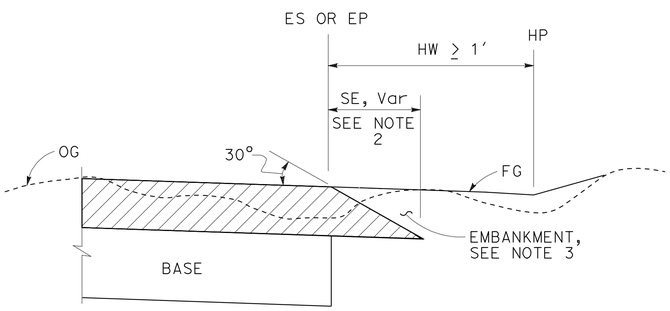

CASE M
Safety Edge - Cut Section, HW ≥ 1′

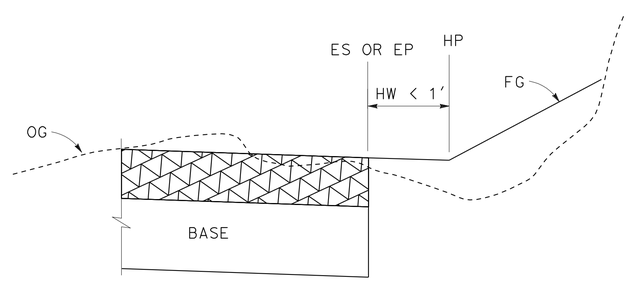

CASE N
Vertical Edge - Cut Section, HW < 1′

CUT SECTION

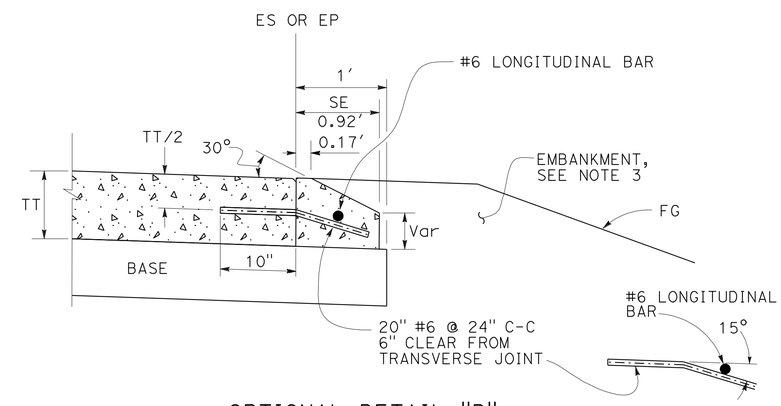

OPTIONAL DETAIL "B"
For concrete pavement
See Note 4

NOTES:

1. For limits of safety edge and vertical edge treatments, see Revised Standard Plan RSP P74
2. Details shown for HMA pavement thickness less than 0.43′. See Detail "B" for HMA pavement thickness more than 0.43′ or concrete pavement.
3. For locations and limits of embankment see project plans.
4. Safety edge transverse joint must match pavement transverse joint. End of #6 longitudinal bar must be 2" ±½" clear from transverse joint.
5. Safety edge is not needed in the area of MBGR, barrier, right turn lane and acceleration lane. See Revised Standard Plan RSP P74.

STATE OF CALIFORNIA
DEPARTMENT OF TRANSPORTATION

PAVEMENT EDGE TREATMENTS-NEW CONSTRUCTION

NO SCALE

RSP P76 DATED JANUARY 20, 2012 SUPPLEMENTS THE STANDARD PLANS BOOK DATED 2010.

REVISED STANDARD PLAN RSP P76

2010 REVISED STANDARD PLAN RSP P76

Dist	COUNTY	ROUTE	POST MILES TOTAL PROJECT	SHEET No.	TOTAL SHEETS
02	Teh	32	22.3/22.8	33	34

Raymond Don Tsztoo
REGISTERED CIVIL ENGINEER

July 20, 2012
PLANS APPROVAL DATE

REGISTERED PROFESSIONAL ENGINEER
Raymond Don Tsztoo
No. C37332
Exp. 6-30-14
CIVIL
STATE OF CALIFORNIA

THE STATE OF CALIFORNIA OR ITS OFFICERS OR AGENTS SHALL NOT BE RESPONSIBLE FOR THE ACCURACY OR COMPLETENESS OF SCANNED COPIES OF THIS PLAN SHEET.

TO ACCOMPANY PLANS DATED 1-14-13

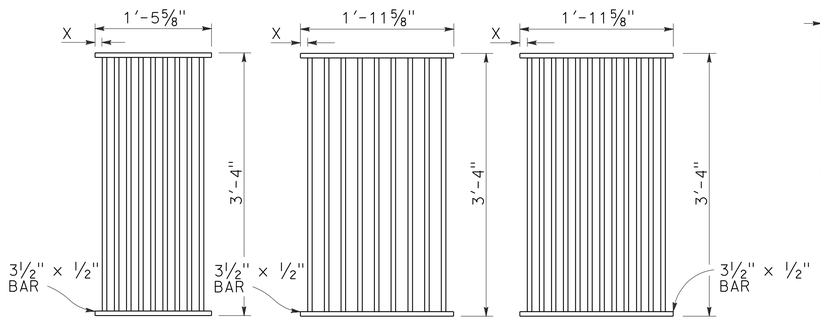

TYPE 18-9
1⅜" Clear spacing. Use within the roadbed on highways where bicycles and pedestrians are excluded.

TYPE 24-9
2" Clear spacing. Use in locations off the roadbed on all types of highways.

TYPE 24-12
1⅜" Clear spacing. Use within the roadbed on highways where bicycles and pedestrians are excluded.

RECTANGULAR GRATE DETAILS
(See table below)

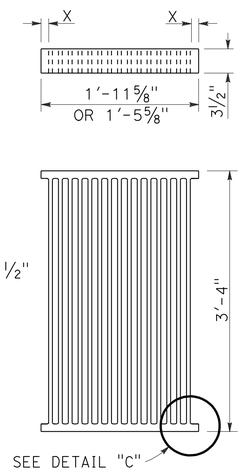

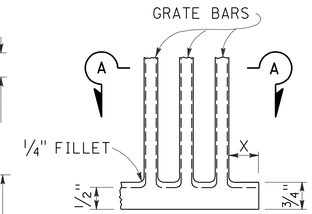

DETAIL "C"

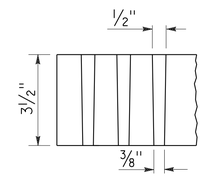

SECTION A-A

ALTERNATIVE CAST DUCTILE IRON GRATE OR CAST CARBON STEEL GRATE

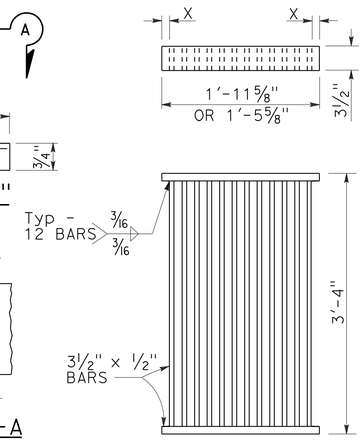

ALTERNATIVE WELDED GRATE

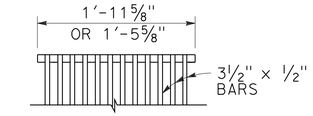

CAST END BLOCK

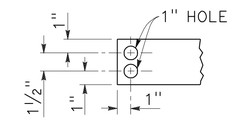

END OF BAR

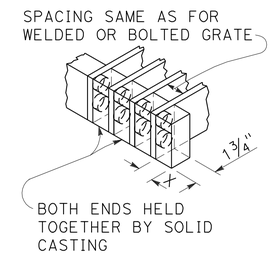

ALTERNATIVE CAST DUCTILE IRON OR CAST CARBON STEEL END BLOCK GRATE

NOTES:

1. Grate type numbers refer to approximate width of grate in inches and number of bars, respectively.
2. Contractor has the option of using cast ductile iron, cast carbon steel, welded, bolted, or cast end block grate.
3. Rounded top of bars optional on all grates.
4. Pipe inlets with a grate shall be placed so that bars parallel direction of principle surface flow.
5. Complete joint penetration butt welds may be substituted for the fillet welds on all anchors.
6. Standard square, hexagon, round or equivalent headed anchors may be substituted for the right angle hooks on the anchors shown on this plan.
7. Grate and frame weights are based on welded grates (weights of face angles, steps, protection bars, etc. are not included).
8. Connect chain to grate and frame only at locations shown on the plans. When chain is required, do not use cast ductile iron grates.

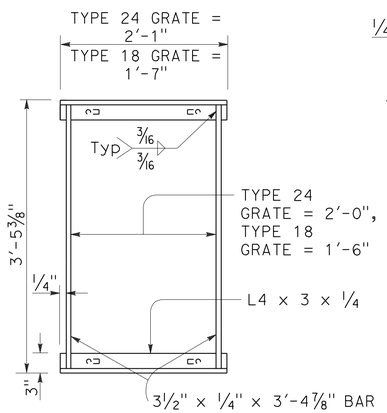

TYPICAL FRAME

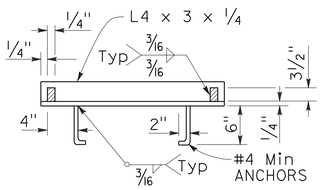

CROSS SECTION
(Thru frame)

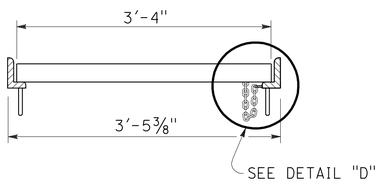

LONGITUDINAL SECTION
(Thru frame and grate)

RECTANGULAR FRAME DETAILS
(For all rectangular grates)

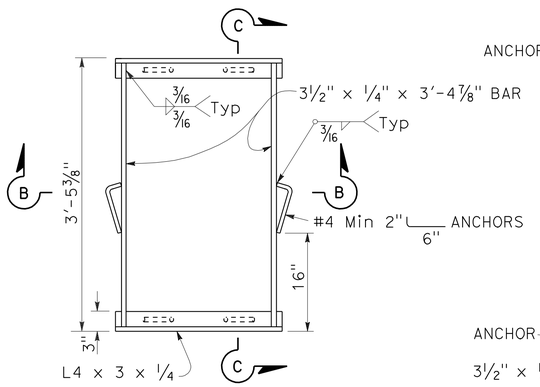

TYPICAL FRAME

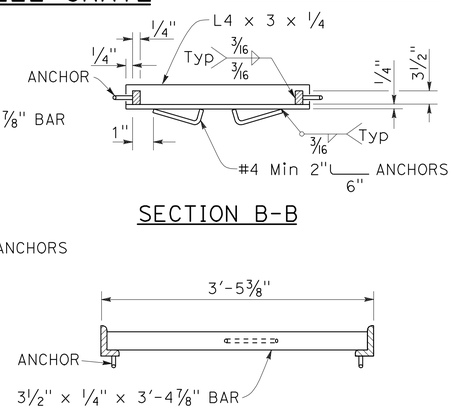

SECTION B-B

SECTION C-C

ALTERNATIVE ANCHOR FOR RECTANGULAR FRAME
(For details not shown, See Rectangular Frame Details)

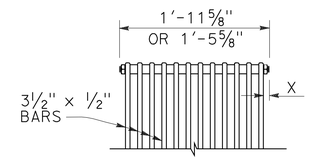

BOLTED END BLOCK

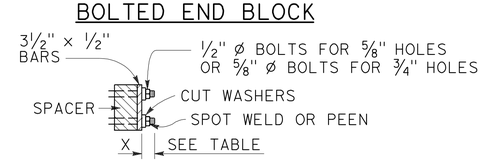

BOLTING DETAIL

ALTERNATIVE BOLTED GRATE

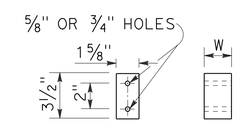

BAR SPACER

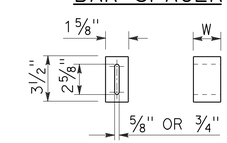

ALTERNATIVE SPACER
W = 1⅜" or 2"

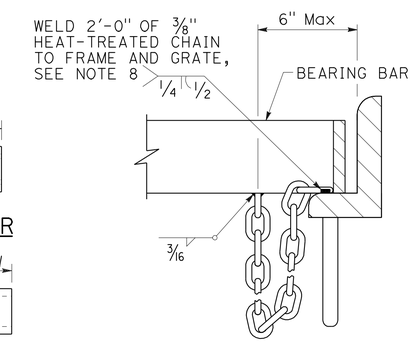

DETAIL "D"
(Steel grates only)

GRATE BAR SPACING TABLE

TYPE	No. OF BARS	CLEAR BAR SPACING	X
18-9	9	1⅜"	1 1/16"
24-9	9	2"	1 9/16"
24-12	12	1⅜"	1¼"

INLET TYPE	COVER TYPE	WEIGHT LB
OS	PLATE	174
OL-7	PLATE	170
OL-10	PLATE	170
OL-14	PLATE	170
OL-21	PLATE	170
OCP	PLATE	112
OCPI	PLATE	112
OCPI	REDWOOD	42
OMP	PLATE	177
OMPI	PLATE	177

INLET TYPE	GRATE TYPE	No. OF GRATES	WEIGHT LB
GDO	24-12	2	634
GOL-7	24-12	1	326
GOL-10	24-12	1	326
GO,G1,G2,G3,G4 (TYPE 24)	24-9	1	263
	24-12	1	326
G4 (TYPE 18),G5,G6	18-9	1	249
GT1	18-9	2	498
GT2	18-9	2	498
GT3	24-12	2	652
GT4	24-12	2	652
TRASH RACK			22
GRATE CHAIN			3

BASIS FOR Misc IRON & STEEL FINAL PAY WEIGHTS FOR DRAINAGE INLETS
(See Note 7)

STATE OF CALIFORNIA
DEPARTMENT OF TRANSPORTATION

GRATE DETAILS

NO SCALE

RSP D77A DATED JULY 20, 2012 SUPERSEDES STANDARD PLAN D77A
DATED MAY 20, 2011 - PAGE 164 OF THE STANDARD PLANS BOOK DATED 2010.

REVISED STANDARD PLAN RSP D77A

2010 REVISED STANDARD PLAN RSP D77A

6-13-12

Dist	COUNTY	ROUTE	POST MILES TOTAL PROJECT	SHEET No.	TOTAL SHEETS
02	Teh	32	22.3/22.8	34	34

Raymond Don Tsztoo
REGISTERED CIVIL ENGINEER

July 20, 2012
PLANS APPROVAL DATE

REGISTERED PROFESSIONAL ENGINEER Raymond Don Tsztoo No. C37332 Exp. 6-30-14 CIVIL STATE OF CALIFORNIA

THE STATE OF CALIFORNIA OR ITS OFFICERS OR AGENTS SHALL NOT BE RESPONSIBLE FOR THE ACCURACY OR COMPLETENESS OF SCANNED COPIES OF THIS PLAN SHEET.

TO ACCOMPANY PLANS DATED 1-14-13

2010 REVISED STANDARD PLAN RSP D77B

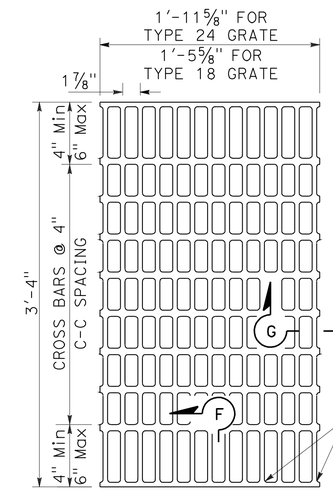

NOTES:

Bearing bars to be 3½" × ¼" bars on 1⅞" centers.

⅜"± ø Cross bars may be fillet welded, resistance welded or electroforged to bearing bars.

Weight of Type 24 grate = 141 LBS.

Weight of Type 18 grate = 107 LBS. (Type 24 grate shown).

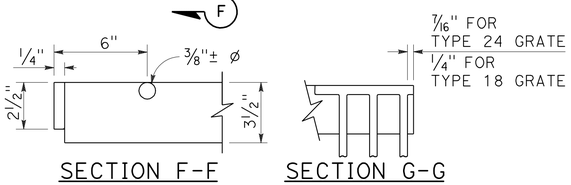

SECTION F-F SECTION G-G

TYPE 18-10 AND 24-13 GRATE

(Welded Steel)

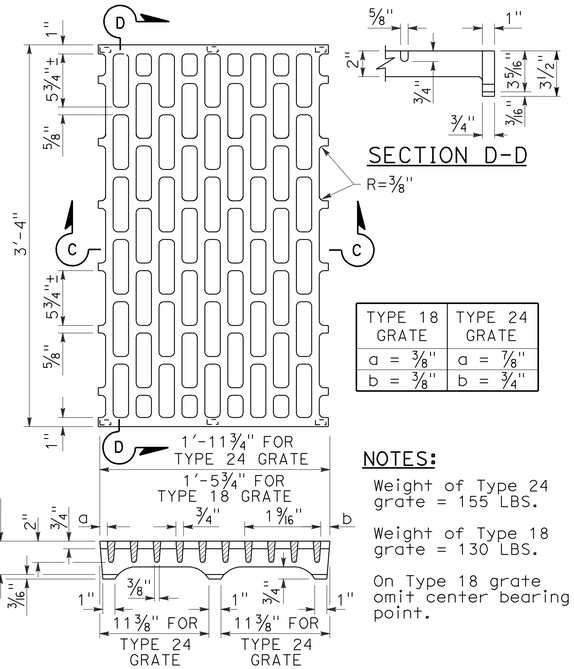

TYPE 18 GRATE	TYPE 24 GRATE
a = ⅜"	a = ⅞"
b = ⅜"	b = ¾"

NOTES:

Weight of Type 24 grate = 155 LBS.

Weight of Type 18 grate = 130 LBS.

On Type 18 grate omit center bearing point.

SECTION C-C

TYPE 18-8C AND 24-10C GRATE

(Cast ductile iron)

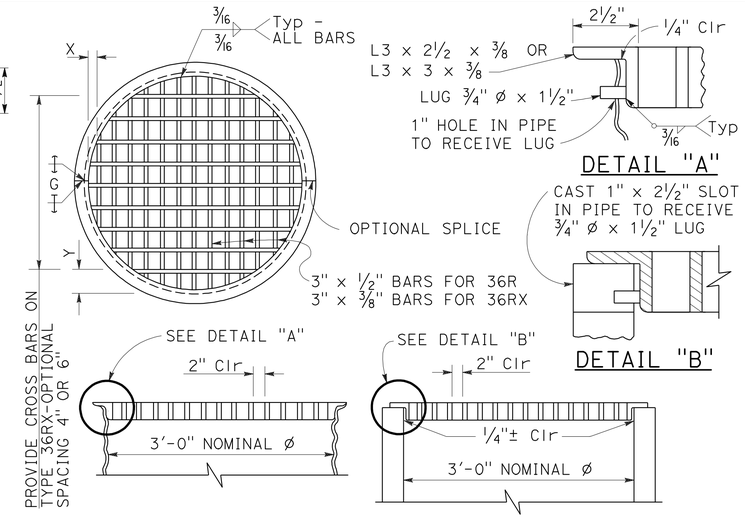

TYPE 36R AND 36RX GRATE DETAILS

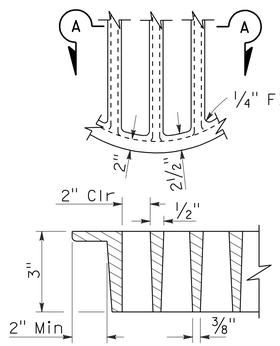

SECTION A-A

ALTERNATIVE CAST DUCTILE IRON GRATE OR CAST CARBON STEEL GRATE TYPE 36R AND 36RX

BASIS FOR Misc IRON AND STEEL FINAL PAY WEIGHTS FOR DRAINAGE INLETS

INLET TYPE	GRATE TYPE	No. OF GRATES	WEIGHT LB
GDO (SEE NOTE 4)	24-10C	2	391
	24-10S	2	456
	24-12X	2	473
	24-13	2	374
GO,GOL,G1,G2, G3,G4 (TYPE 24)	24-10C	1	202
	24-10S	1	229
	24-12X	1	239
	24-13	1	188
G4 (TYPE 18) G5,G6	18-8S	1	187
	18-9X	1	187
	18-10	1	149
GT1,GT2	18-8S	2	374
	18-9X	2	374
	18-10	2	298
GT3,GT4	24-10C	2	404
	24-10S	2	458
	24-12X	2	478
	24-13	2	376
ODI	36RX (Mod)	1	196
GMP,GCP,GCPI	36RX	1	215
ODI	36R (Mod)	1	220
GMP,GCP,GCPI	36R	1	236
TRASH RACK			22
GRATE CHAIN			3

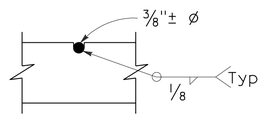

⅜"± ø Cross bars may be fillet welded, resistance welded or electroforged to bearing bars.

CROSS BAR DETAIL TYPE 36RX GRATE (WELDED STEEL)

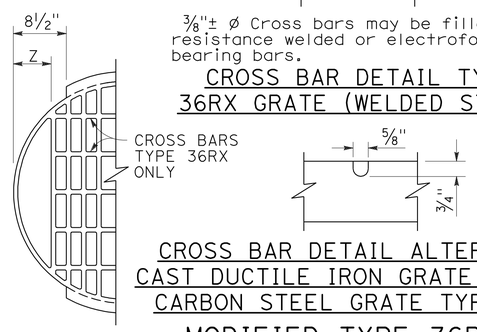

CROSS BAR DETAIL ALTERNATIVE CAST DUCTILE IRON GRATE OR CAST CARBON STEEL GRATE TYPE 36RX

MODIFIED TYPE 36R AND 36RX GRATE FOR ODI INLET

NOTES:

1. When alternative grates are allowed - Final pay based on alternative with the lesser weight.
2. Use frame shown on Standard Plan D74A, D74B or RSP D77A as appropriate.
3. When Type 24-10S, 24-12X or 24-13 grates are used with GDO Inlets, a ¼" × 3½" × 3'-4⅞" steel bar shall be welded across the center of inlet frame to separate the individual grates.
4. See Revised Standard Plan RSP D77A for connecting chain to welded grate and frame. When chain is required, do not use cast ductile iron grate.

GRATE BAR SPACING TABLE

TYPE	No. OF BARS	CLEAR BAR SPACING	X	Y 4" SPACING	Y 6" SPACING	Z
36R	13	2"	2⅛"	-	-	-
36RX (STEEL)	15	2"	9/16"	3¾"	5¾"	-
36RX (CAST)	13	2"	2⅛"	3¾"	5¾"	-
36R Mod	12	2"	2⅛"	-	-	5"
36RX Mod (STEEL)	13	2"	9/16"	3¾"	5¾"	5 11/16"
36RX Mod (CAST)	12	2"	2⅛"	3¾"	5¾"	5"

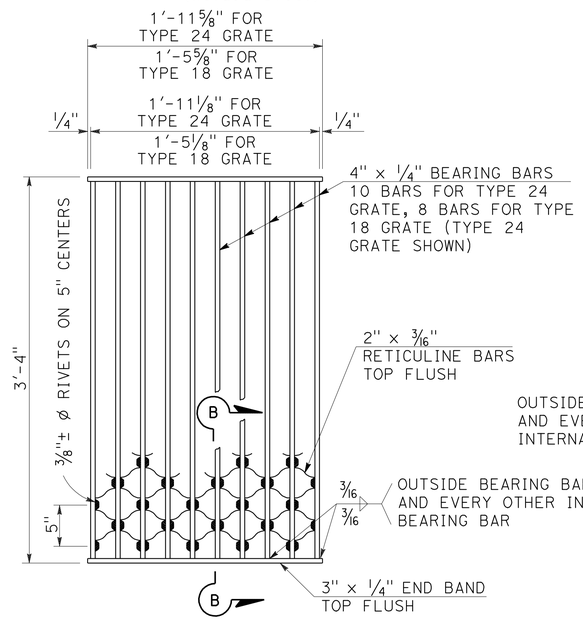

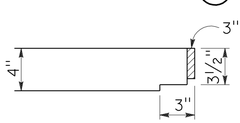

NOTES:

Weight of Type 24 grate = 182 LBS.
Weight of Type 18 grate = 145 LBS.

SECTION B-B

TYPE 18-8S AND 24-10S GRATE

(Welded Steel) Reticuline type

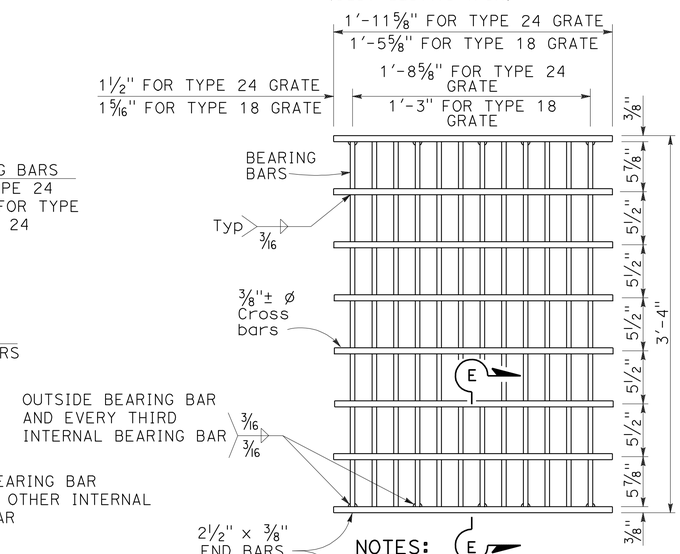

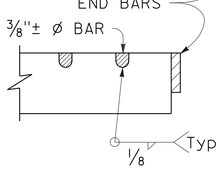

SECTION E-E

NOTES:

Bearing bars to be 3½" × ⅜" bars on 1⅞" centers.

12 Bars for Type 24 grate - 9 bars for Type 18 grates. (Type 24 grate shown).

Weight of Type 24 grate = 192 LBS.

Weight of Type 18 grate = 145 LBS.

⅜"± ø Cross bars may be fillet welded, resistance welded or electroforged to bearing bars.

TYPE 18-9X AND 24-12X GRATE

(Welded Steel)

STATE OF CALIFORNIA
DEPARTMENT OF TRANSPORTATION

BICYCLE TRAVERSABLE GRATE DETAILS

NO SCALE

RSP D77B DATED JULY 20, 2012 SUPERSEDES STANDARD PLAN D77B DATED MAY 20, 2011 - PAGE 165 OF THE STANDARD PLANS BOOK DATED 2010.

REVISED STANDARD PLAN RSP D77B

4-17-12