Dist	COUNTY	ROUTE	POST MILES TOTAL PROJECT	SHEET No.	TOTAL SHEETS
02	Sha	299	83.0/84.0	1	61

STATE OF CALIFORNIA

DEPARTMENT OF TRANSPORTATION

STP-P299(183)E

PROJECT PLANS FOR CONSTRUCTION ON

STATE HIGHWAY

IN SHASTA COUNTY
ABOUT 8 MILES EAST OF BURNEY
FROM 1.0 MILE WEST OF HAT CREEK BRIDGE
TO HAT CREEK BRIDGE

TO BE SUPPLEMENTED BY STANDARD PLANS DATED MAY 2010

INDEX OF PLANS

SHEET No.	DESCRIPTION
1	TITLE AND LOCATION MAP
2-3	TYPICAL CROSS SECTIONS
4-7	LAYOUTS
8-11	PROFILE AND SUPERELEVATION DIAGRAM
12-20	CONSTRUCTION DETAILS
21-24	DRAINAGE PLAN
25-28	DRAINAGE PROFILES
29-30	DRAINAGE DETAILS
31-33	DRAINAGE QUANTITIES
34	CONSTRUCTION AREA SIGNS
35-38	PAVEMENT DELINEATION AND SIGN PLAN
39-40	PAVEMENT DELINEATION AND SIGN DETAILS
41	PAVEMENT DELINEATION QUANTITIES
42	SIGN QUANTITIES
43	SUMMARY OF QUANTITIES
44-47	EROSION CONTROL PLAN
48	EROSION CONTROL QUANTITIES
49-61	REVISED STANDARD PLANS

THE STANDARD PLANS LIST APPLICABLE TO THIS CONTRACT IS INCLUDED IN THE NOTICE TO BIDDERS AND SPECIAL PROVISIONS BOOK.

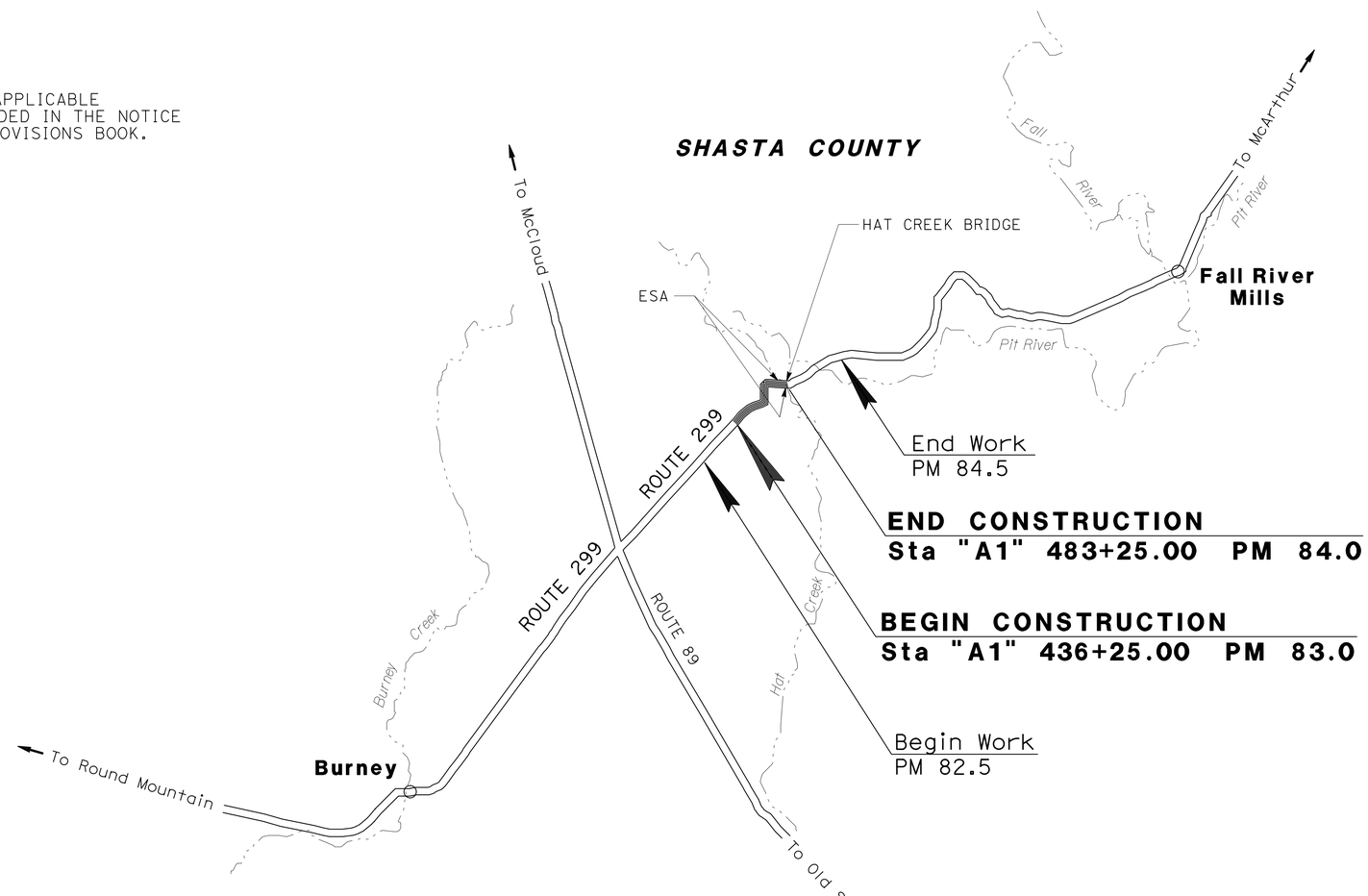

NO SCALE

THE CONTRACTOR SHALL POSSESS THE CLASS (OR CLASSES) OF LICENSE AS SPECIFIED IN THE "NOTICE TO BIDDERS."

PROJECT MANAGER: CHRIS HARVEY
DESIGN ENGINEER: AL TRUJILLO

P:\proj2\02\2E740_plans\pse\22e740ab001.dgn

05-14-14
PROJECT ENGINEER REGISTERED CIVIL ENGINEER — DATE

May 19, 2014
PLANS APPROVAL DATE

REGISTERED PROFESSIONAL ENGINEER — SHAUN ALEXANDER — No. C70833 — Exp. 06-30-15 — CIVIL — STATE OF CALIFORNIA

THE STATE OF CALIFORNIA OR ITS OFFICERS OR AGENTS SHALL NOT BE RESPONSIBLE FOR THE ACCURACY OR COMPLETENESS OF SCANNED COPIES OF THIS PLAN SHEET.

CONTRACT No.	02-2E74U4
PROJECT ID	0214000069

LAST REVISION 05-14-14 | DATE PLOTTED => 18-JUN-2014 | TIME PLOTTED => 14:15

Dist	COUNTY	ROUTE	POST MILES TOTAL PROJECT	SHEET No.	TOTAL SHEETS
02	Sha	299	83.0/84.0	2	61

REGISTERED CIVIL ENGINEER DATE 05-14-15

05-19-14
PLANS APPROVAL DATE

REGISTERED PROFESSIONAL ENGINEER SHAUN ALEXANDER No. C70833 Exp. 06-30-15 CIVIL STATE OF CALIFORNIA

THE STATE OF CALIFORNIA OR ITS OFFICERS OR AGENTS SHALL NOT BE RESPONSIBLE FOR THE ACCURACY OR COMPLETENESS OF SCANNED COPIES OF THIS PLAN SHEET.

NOTES:

1. DIMENSIONS OF THE PAVEMENT STRUCTURES (STRUCTURAL SECTIONS) ARE SUBJECT TO TOLERANCES SPECIFIED IN THE STANDARD SPECIFICATIONS.
2. SUPERELEVATIONS ARE SHOWN ON THE SUPERELEVATION DIAGRAM.

DESIGN DESIGNATION:

ADT (2013)	3250	D	73%
ADT (2033)	4100	T	6%
DHV	360	V	55 MPH
EAL	1,557,300	TI_{20}	9.5

CLIMATE REGION:

HIGH MOUNTAIN

ABBREVIATIONS:

SBKG	SHOULDER BACKING
(E)	EXISTING
GFL	GUTTER FLOW LINE

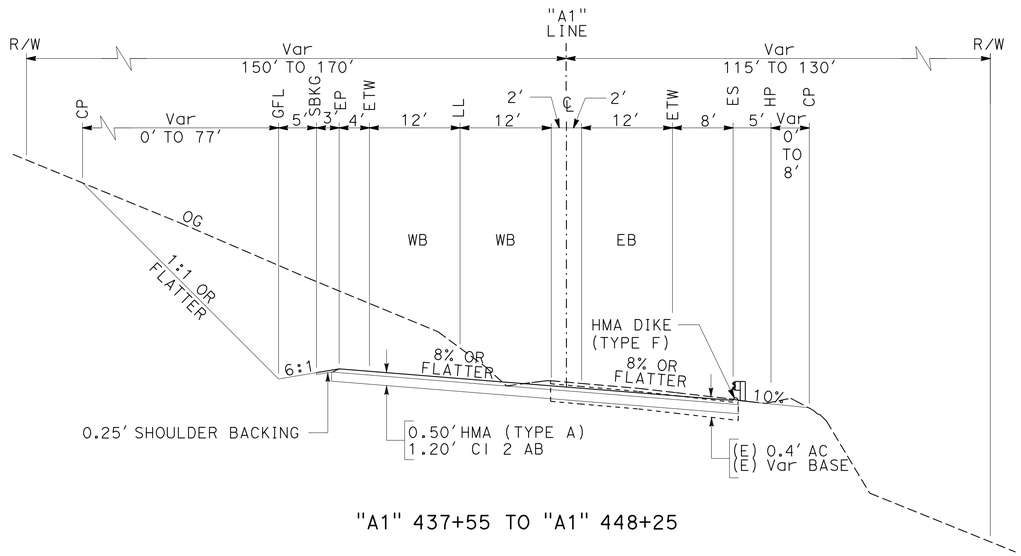

"A1" 437+55 TO "A1" 448+25

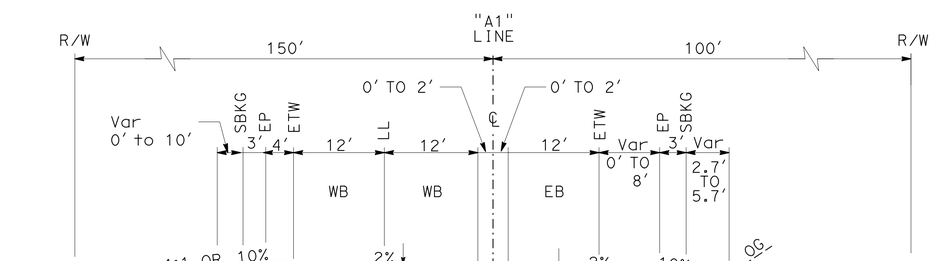

"A1" 436+25 TO "A1" 437+55

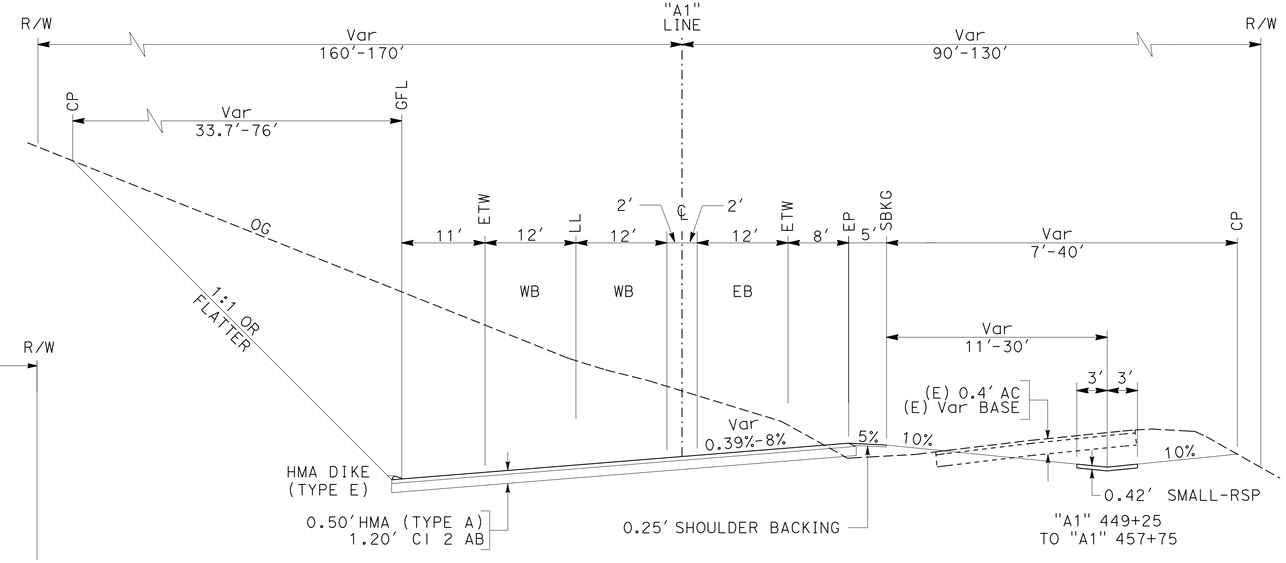

"A1" 448+25 TO "A1" 458+75

TYPICAL CROSS SECTIONS

NO SCALE

ROUTE 299

X-1

REVISED BY	DATE REVISED
JEFF CARSON	SHAUN ALEXANDER
CALCULATED-DESIGNED BY	CHECKED BY
FUNCTIONAL SUPERVISOR	AL TRUJILLO

STATE OF CALIFORNIA - DEPARTMENT OF TRANSPORTATION
Caltrans
DESIGN

P:\proj2\02\2E740_plans\pse\22e740ca001.dgn

LAST REVISION 05-13-14 | DATE PLOTTED => 14-MAY-2014 | TIME PLOTTED => 13:52

Dist	COUNTY	ROUTE	POST MILES TOTAL PROJECT	SHEET No.	TOTAL SHEETS
02	Sha	299	83.0/84.0	3	61

REGISTERED CIVIL ENGINEER 05-14-15 DATE

05-19-14
PLANS APPROVAL DATE

REGISTERED PROFESSIONAL ENGINEER SHAUN ALEXANDER No. C70833 Exp. 06-30-15 CIVIL STATE OF CALIFORNIA

THE STATE OF CALIFORNIA OR ITS OFFICERS OR AGENTS SHALL NOT BE RESPONSIBLE FOR THE ACCURACY OR COMPLETENESS OF SCANNED COPIES OF THIS PLAN SHEET.

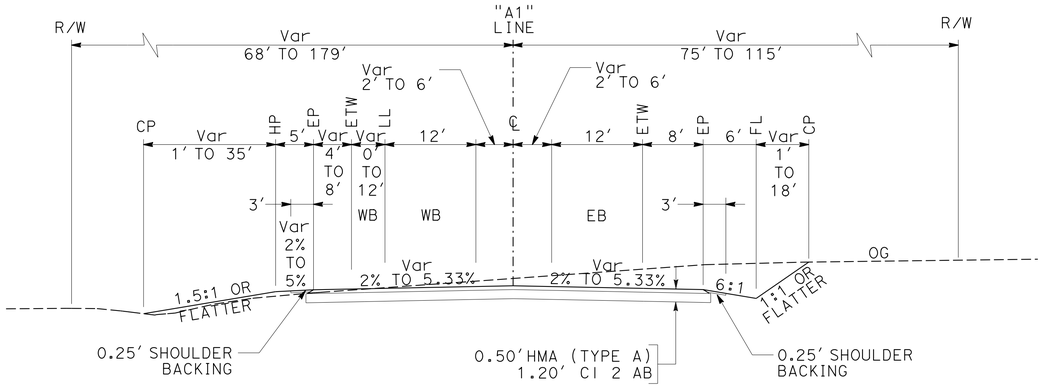

"A1" 472+74.43 TO "A1" 478+69.15

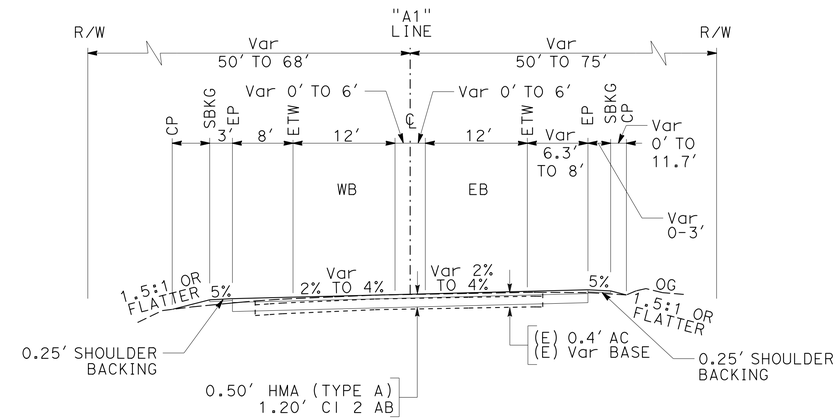

"A1" 478+69.16 TO "A1" 483+25

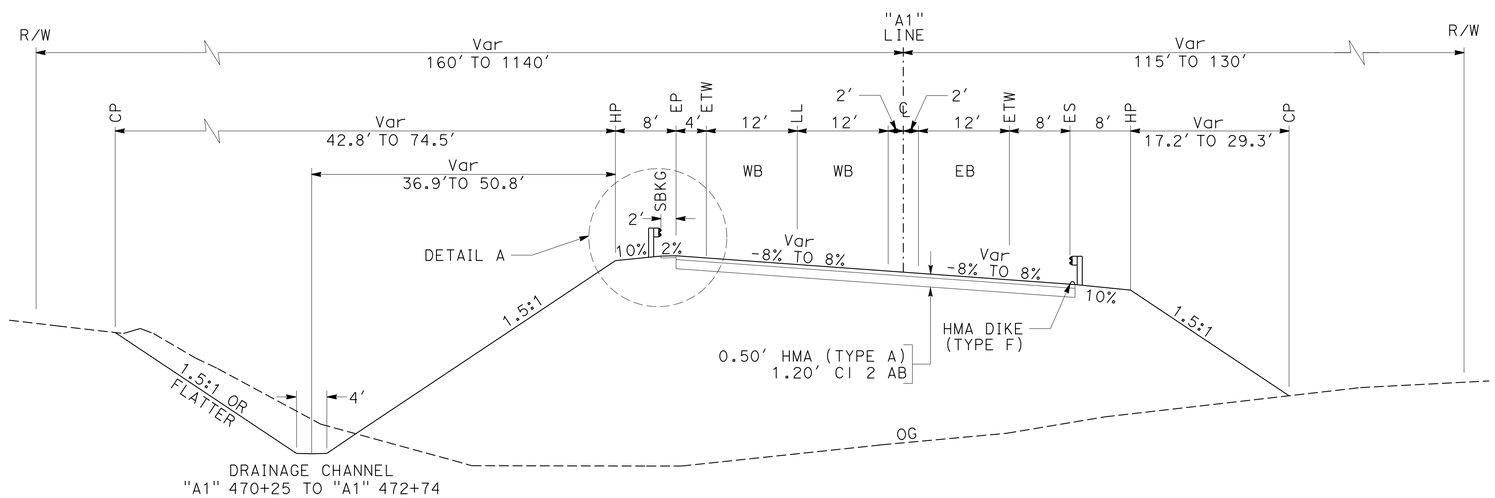

"A1" 458+75 TO "A1" 472+74.43

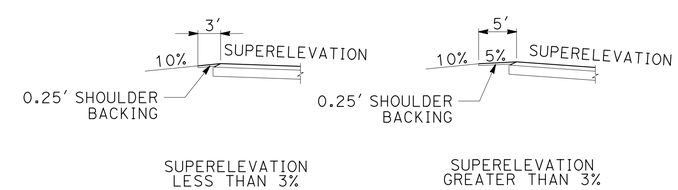

DETAIL A

TYPICAL (NO DIKE)

TYPICAL CROSS SECTIONS

NO SCALE

X-2

ROUTE 299

REVISED BY	DATE REVISED
JEFF CARSON	SHAUN ALEXANDER
CALCULATED-DESIGNED BY	CHECKED BY
FUNCTIONAL SUPERVISOR	AL TRUJILLO

STATE OF CALIFORNIA - DEPARTMENT OF TRANSPORTATION

Caltrans® **DESIGN**

P:\proj2\02\2E740_plans\pse\22e740ca002.dgn

LAST REVISION 05-13-14 | DATE PLOTTED => 14-MAY-2014 | TIME PLOTTED => 13:52

Dist	COUNTY	ROUTE	POST MILES TOTAL PROJECT	SHEET No.	TOTAL SHEETS
02	Sha	299	83.0/84.0	4	61

REGISTERED CIVIL ENGINEER 05-14-15 DATE

05-19-14
PLANS APPROVAL DATE

REGISTERED PROFESSIONAL ENGINEER SHAUN ALEXANDER No. C70833 Exp. 06-30-15 CIVIL STATE OF CALIFORNIA

THE STATE OF CALIFORNIA OR ITS OFFICERS OR AGENTS SHALL NOT BE RESPONSIBLE FOR THE ACCURACY OR COMPLETENESS OF SCANNED COPIES OF THIS PLAN SHEET.

NOTE:

1. FOR ACCURATE RIGHT OF WAY DATA, CONTACT RIGHT OF WAY ENGINEERING AT THE DISTRICT OFFICE.

ABBREVIATIONS:

AITS	ALTERNATIVE IN-LINE TERMINAL SYSTEM
ERS	EARTH RETAINING SYSTEM (RAILING COMPONENTS)
MBGR	METAL BEAM GUARD RAILING (STEEL POST)
EAA	END ANCHOR ASSEMBLY (TYPE SFT)
AFTS	ALTERNATIVE FLARED TERMINAL SYSTEM
CPACP	COLD PLANE ASPHALT CONCRETE PAVEMENT

LEGEND

CPACP

OBLITERATE SURFACE

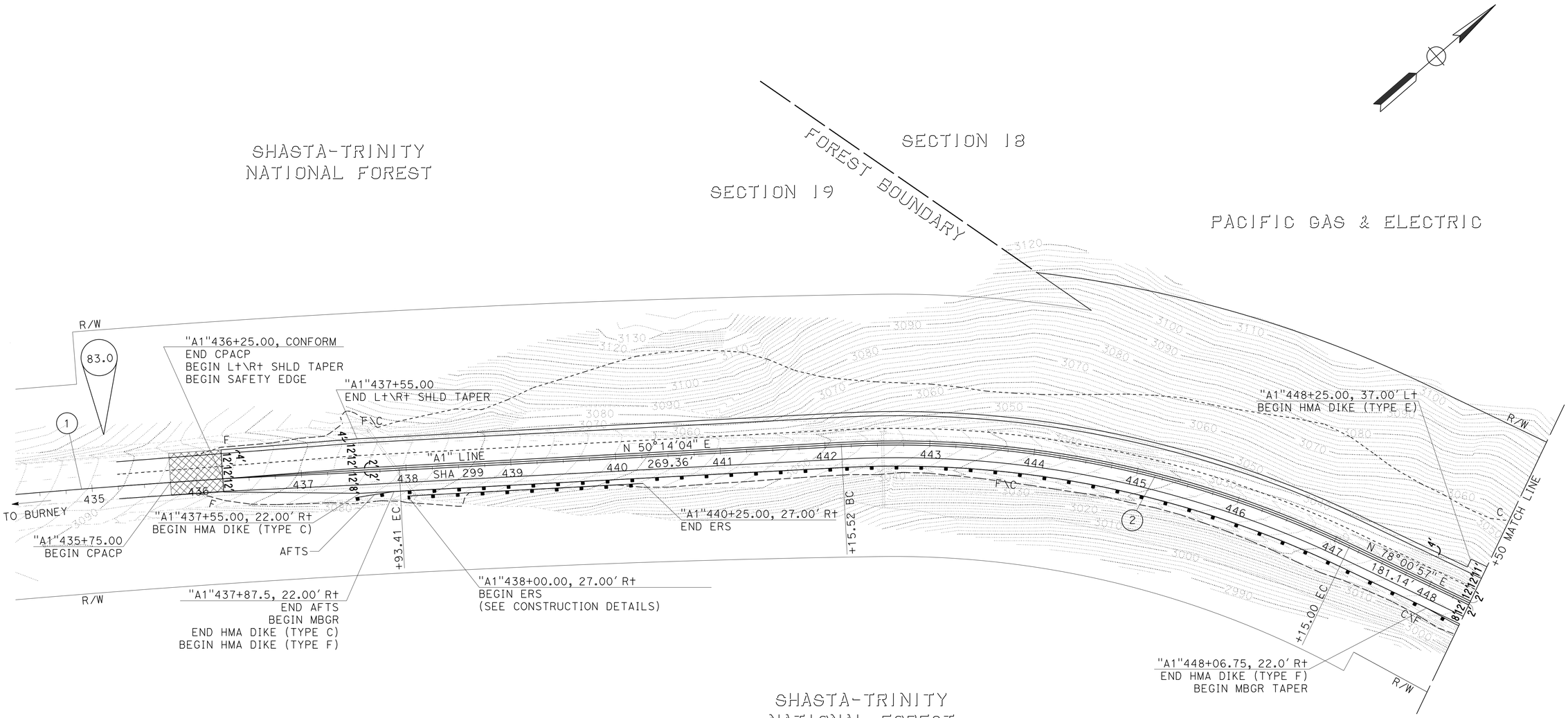

CURVE DATA

No. ⊕	R	Δ	T	L
1	12000'	9°4'24"	952.16'	1900.34'
2	1000'	27°46'53"	247.30'	484.88'

LAYOUT
SCALE: 1" = 50'

L-1

REVISED BY | DATE REVISED
JEFF CARSON | SHAUN ALEXANDER
CALCULATED-DESIGNED BY | CHECKED BY
FUNCTIONAL SUPERVISOR
AL TRUJILLO

STATE OF CALIFORNIA - DEPARTMENT OF TRANSPORTATION
Caltrans
DESIGN

P:\proj2\02\2E740_plans\pse\22e740ea001.dgn

LAST REVISION 05-13-14 | DATE PLOTTED => 14-MAY-2014 | TIME PLOTTED => 13:52

Dist	COUNTY	ROUTE	POST MILES TOTAL PROJECT	SHEET No.	TOTAL SHEETS
02	Sha	299	83.0/84.0	5	61

REGISTERED CIVIL ENGINEER 05-14-15 DATE

05-19-14
PLANS APPROVAL DATE

REGISTERED PROFESSIONAL ENGINEER SHAUN ALEXANDER No. C70833 Exp. 06-30-15 CIVIL STATE OF CALIFORNIA

THE STATE OF CALIFORNIA OR ITS OFFICERS OR AGENTS SHALL NOT BE RESPONSIBLE FOR THE ACCURACY OR COMPLETENESS OF SCANNED COPIES OF THIS PLAN SHEET.

NOTE:

1. FOR ACCURATE RIGHT OF WAY DATA, CONTACT RIGHT OF WAY ENGINEERING AT THE DISTRICT OFFICE.

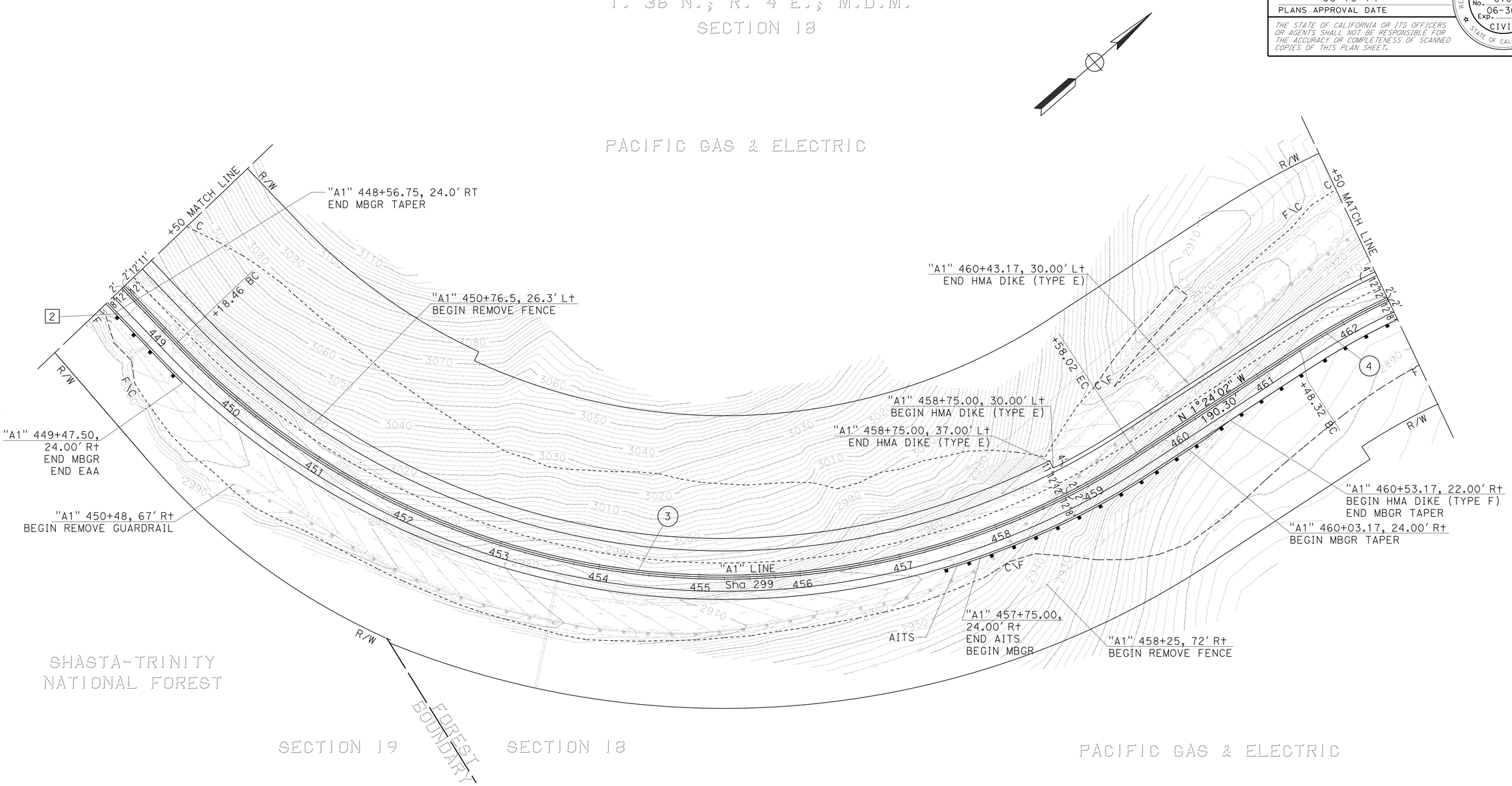

SHORT LINE TABLE

No. #	BEARING	DISTANCE
2	N 78°00'57" E	181.14'

CURVE DATA

No. #	R	Δ	T	L
3	750'	79°25'00"	622.84'	1039.56'
4	750'	86°01'44"	699.74'	1126.11'

LAYOUT
SCALE: 1" = 50' **L-2**

STATE OF CALIFORNIA - DEPARTMENT OF TRANSPORTATION
Caltrans DESIGN
FUNCTIONAL SUPERVISOR: AL TRUJILLO
CALCULATED-DESIGNED BY: JEFF CARSON
CHECKED BY: SHAUN ALEXANDER
REVISED BY / DATE REVISED

P:\proj2\02\2E740_plans\pse\22e740ea002.dgn

LAST REVISION 05-13-14 | DATE PLOTTED => 14-MAY-2014 | TIME PLOTTED => 13:52

BORDER LAST REVISED 7/2/2010 | USERNAME => s115152 | DGN FILE => 22e740ea002.dgn | RELATIVE BORDER SCALE IS IN INCHES 0 1 2 3 | UNIT 0316 | PROJECT NUMBER & PHASE 02-1400-0069-1 EA 02-2E74U1

Dist	COUNTY	ROUTE	POST MILES TOTAL PROJECT	SHEET No.	TOTAL SHEETS
02	Sha	299	83.0/84.0	6	61

REGISTERED CIVIL ENGINEER 05-14-15 DATE

05-19-14
PLANS APPROVAL DATE

REGISTERED PROFESSIONAL ENGINEER SHAUN ALEXANDER No. C70833 Exp. 06-30-15 CIVIL STATE OF CALIFORNIA

THE STATE OF CALIFORNIA OR ITS OFFICERS OR AGENTS SHALL NOT BE RESPONSIBLE FOR THE ACCURACY OR COMPLETENESS OF SCANNED COPIES OF THIS PLAN SHEET.

NOTE:

1. FOR ACCURATE RIGHT OF WAY DATA, CONTACT RIGHT OF WAY ENGINEERING AT THE DISTRICT OFFICE.

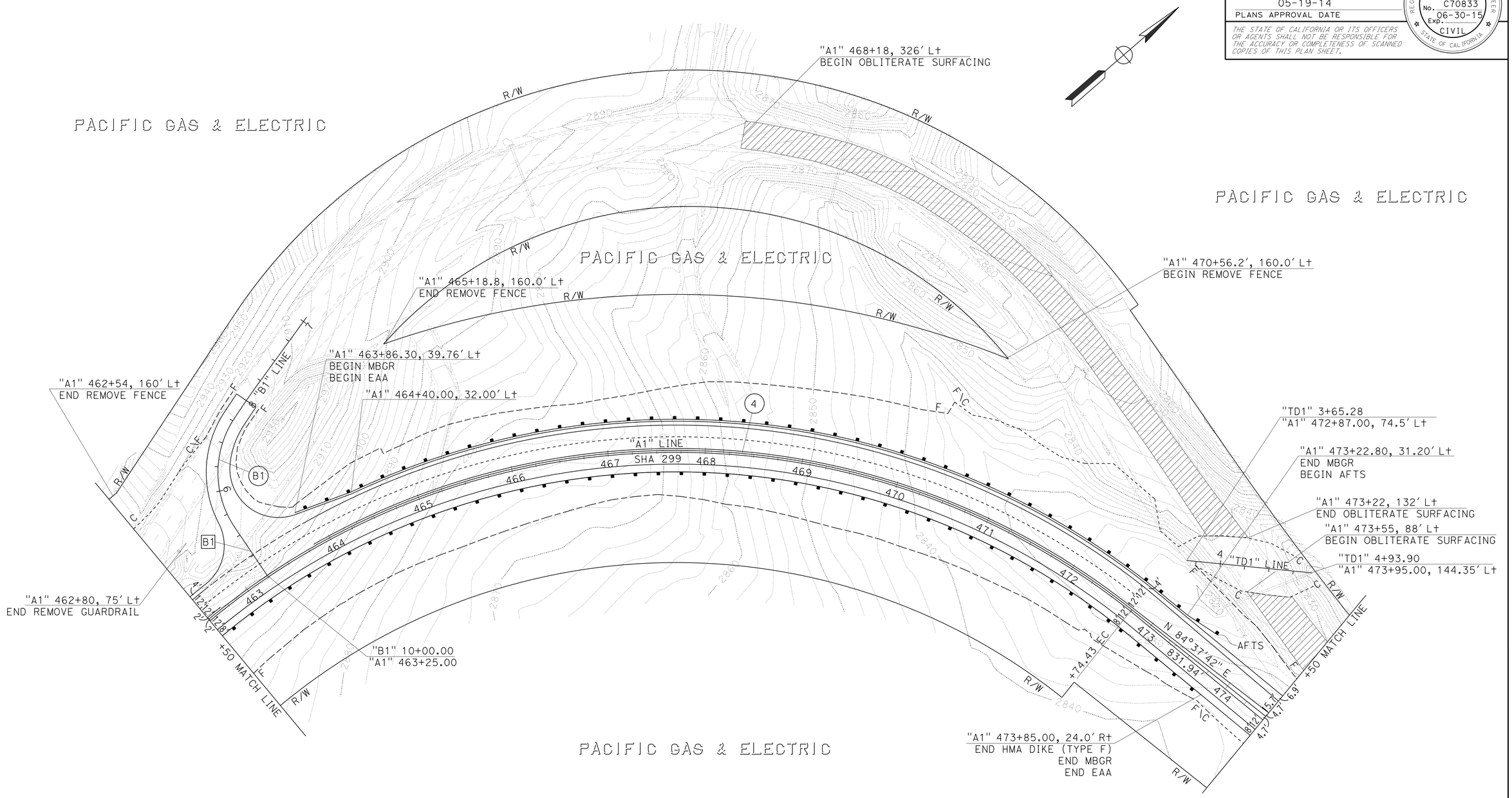

SHORT LINE TABLE

No. #	BEARING	DISTANCE
B1	S 77°54'11" E	59.75'

CURVE DATA

No. #	R	Δ	T	L
4	750'	86°01'44"	699.74'	1126.11'
B1	100'	67°11'23"	66.43'	117.27'

LAYOUT
SCALE: 1" = 50'

L-3

REVISED BY | DATE REVISED
JEFF CARSON | SHAUN ALEXANDER
CALCULATED-DESIGNED BY | CHECKED BY
FUNCTIONAL SUPERVISOR
AL TRUJILLO

STATE OF CALIFORNIA - DEPARTMENT OF TRANSPORTATION
Caltrans
DESIGN

P:\proj2\02\2E740_plans\pse\22e740ea003.dgn

LAST REVISION | DATE PLOTTED => 14-MAY-2014
05-13-14 | TIME PLOTTED => 13:52

Dist	COUNTY	ROUTE	POST MILES TOTAL PROJECT	SHEET No.	TOTAL SHEETS
02	Sha	299	83.0/84.0	7	61

REGISTERED CIVIL ENGINEER 05-14-15 DATE

05-19-14
PLANS APPROVAL DATE

REGISTERED PROFESSIONAL ENGINEER SHAUN ALEXANDER No. C70833 Exp. 06-30-15 CIVIL STATE OF CALIFORNIA

THE STATE OF CALIFORNIA OR ITS OFFICERS OR AGENTS SHALL NOT BE RESPONSIBLE FOR THE ACCURACY OR COMPLETENESS OF SCANNED COPIES OF THIS PLAN SHEET.

NOTE:

1. FOR ACCURATE RIGHT OF WAY DATA, CONTACT RIGHT OF WAY ENGINEERING AT THE DISTRICT OFFICE.

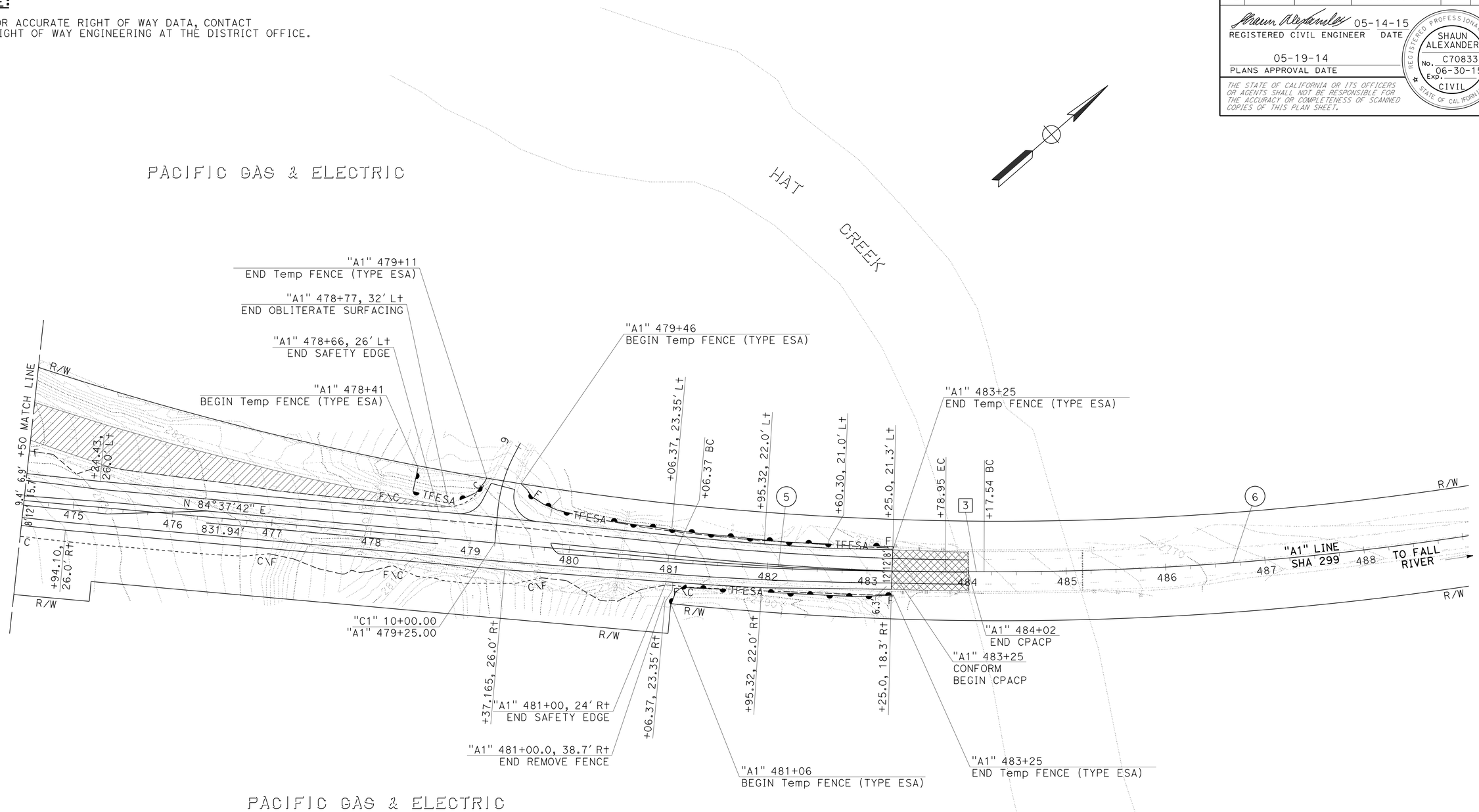

SHORT LINE TABLE

No. ⊞	BEARING	DISTANCE
3	N 79°40'13" E	38.59'

CURVE DATA

No. ⊕	R	Δ	T	L
5	3150'	4°57'29"	136.37'	272.58'
6	3150'	13°47'14"	380.84'	757.99'

LAYOUT

SCALE: 1" = 50'

L-4

REVISED BY	DATE REVISED
JEFF CARSON	SHAUN ALEXANDER

CALCULATED-DESIGNED BY / CHECKED BY

FUNCTIONAL SUPERVISOR: AL TRUJILLO

STATE OF CALIFORNIA - DEPARTMENT OF TRANSPORTATION

Caltrans DESIGN

P:\proj2\02\2E740_plans\pse\22e740ea004.dgn

LAST REVISION 05-13-14 | DATE PLOTTED => 14-MAY-2014 | TIME PLOTTED => 13:52

Dist	COUNTY	ROUTE	POST MILES TOTAL PROJECT	SHEET No.	TOTAL SHEETS
02	Sha	299	83.0/84.0	8	61

REGISTERED CIVIL ENGINEER 05-14-15 DATE

05-19-14
PLANS APPROVAL DATE

REGISTERED PROFESSIONAL ENGINEER SHAUN ALEXANDER No. C70833 Exp. 06-30-15 CIVIL STATE OF CALIFORNIA

THE STATE OF CALIFORNIA OR ITS OFFICERS OR AGENTS SHALL NOT BE RESPONSIBLE FOR THE ACCURACY OR COMPLETENESS OF SCANNED COPIES OF THIS PLAN SHEET.

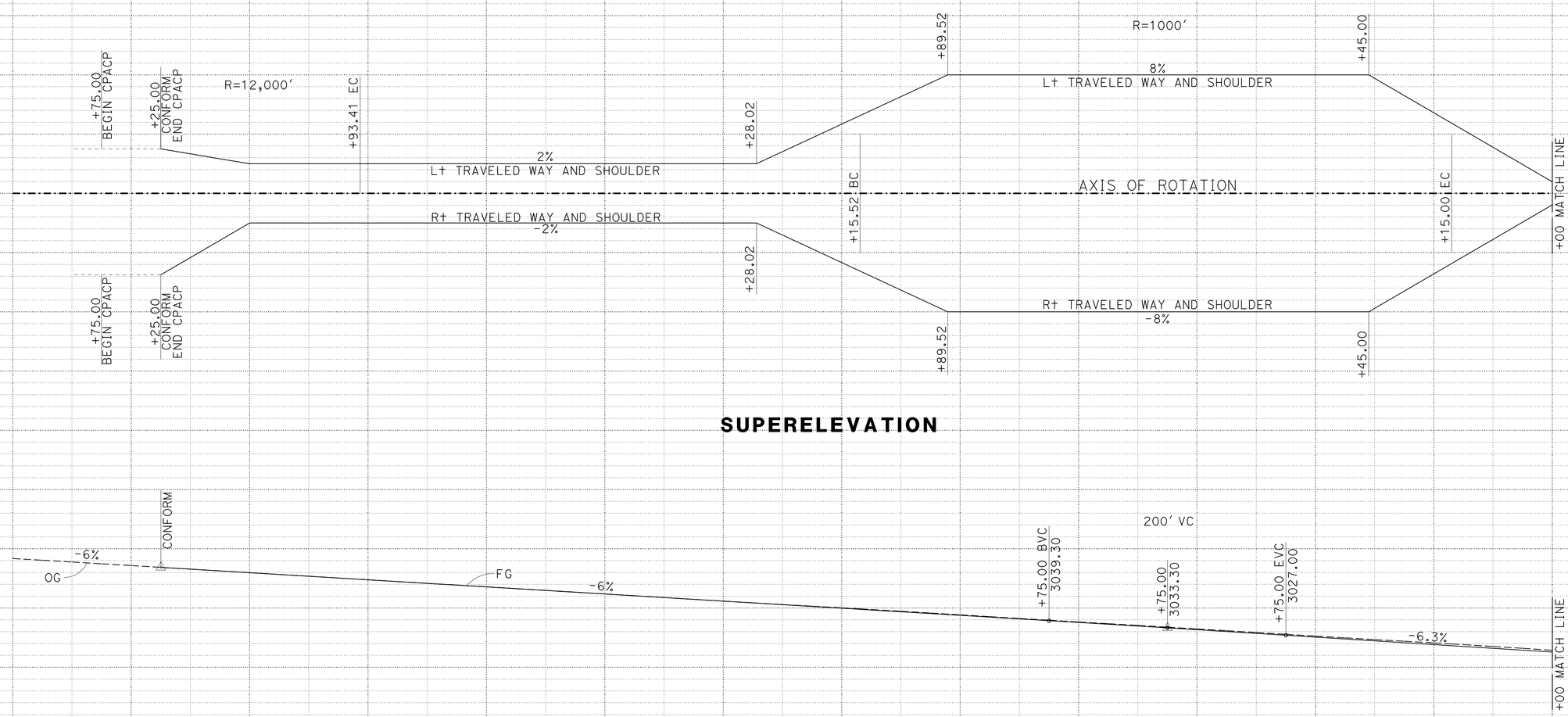

SUPERELEVATION

"A1" PROFILE

PROFILE AND SUPERELEVATION DIAGRAM

SCALE: 1" = 50′ Horiz
1" = 50′ Vert

PS-1

STATION	435+00	436+00	437+00	438+00	439+00	440+00	441+00	442+00	443+00	444+00	445+00	446+00	447+00	448+00	TOTAL
CY Exc								27,375							27,375
CY Emb								176							176

REVISED BY | DATE REVISED
JEFF CARSON | SHAUN ALEXANDER
CALCULATED-DESIGNED BY | CHECKED BY
FUNCTIONAL SUPERVISOR: AL TRUJILLO

STATE OF CALIFORNIA - DEPARTMENT OF TRANSPORTATION
Caltrans DESIGN

P:\proj2\02\2E740_plans\pse\22e740fb001.dgn

LAST REVISION 05-13-14 | DATE PLOTTED => 14-MAY-2014 | TIME PLOTTED => 13:52

Dist	COUNTY	ROUTE	POST MILES TOTAL PROJECT	SHEET No.	TOTAL SHEETS
02	Sha	299	83.0/84.0	9	61

05-14-15
REGISTERED CIVIL ENGINEER DATE

05-19-14
PLANS APPROVAL DATE

REGISTERED PROFESSIONAL ENGINEER
SHAUN ALEXANDER
No. C70833
Exp. 06-30-15
CIVIL
STATE OF CALIFORNIA

THE STATE OF CALIFORNIA OR ITS OFFICERS OR AGENTS SHALL NOT BE RESPONSIBLE FOR THE ACCURACY OR COMPLETENESS OF SCANNED COPIES OF THIS PLAN SHEET.

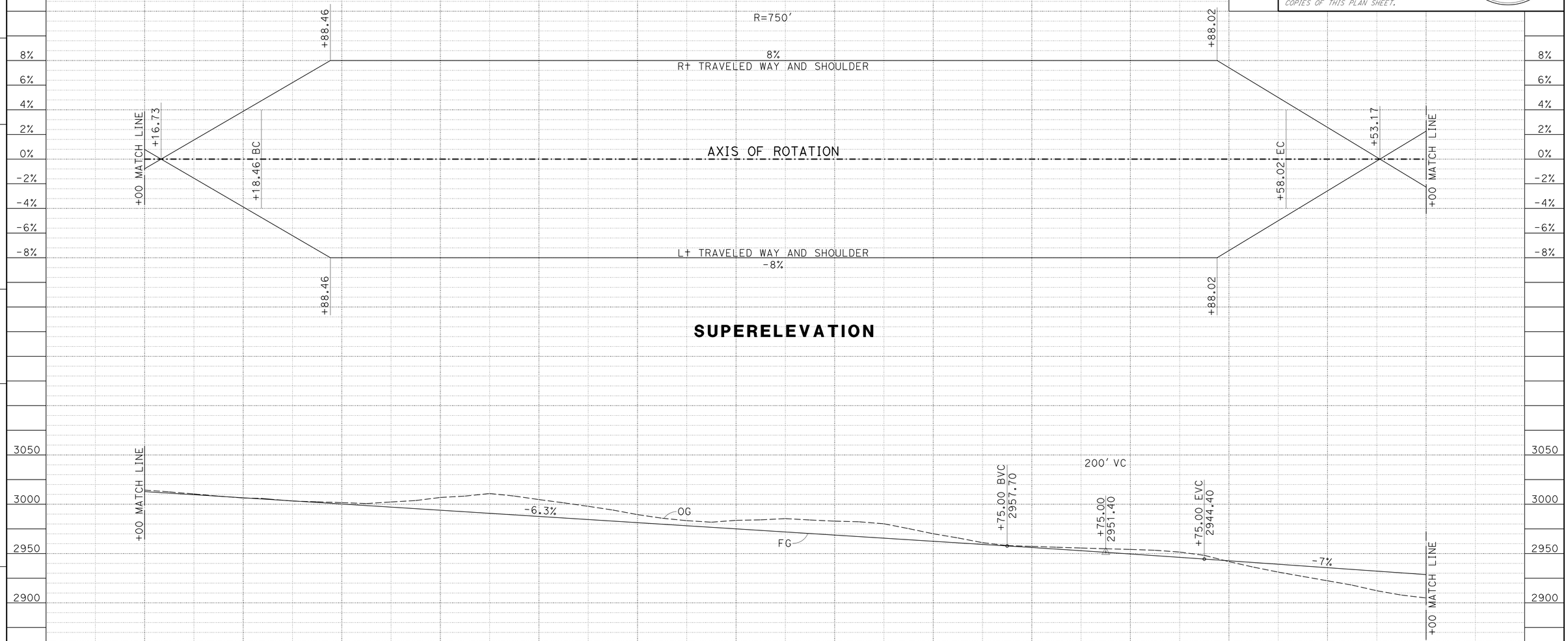

PROFILE AND SUPERELEVATION DIAGRAM

SCALE: 1" = 50' Horiz
1" = 50' Vert

PS-2

STATION		448+00	449+00	450+00	451+00	452+00	453+00	454+00	455+00	456+00	457+00	458+00	459+00	460+00	461+00	TOTAL
CY	Exc						72,939						4476			77,414
	Emb						215						14,707			14,922

REVISED BY | DATE REVISED
JEFF CARSON | SHAUN ALEXANDER
CALCULATED-DESIGNED BY | CHECKED BY
FUNCTIONAL SUPERVISOR
AL TRUJILLO

STATE OF CALIFORNIA - DEPARTMENT OF TRANSPORTATION
Caltrans
DESIGN

P:\proj2\02\2E740_plans\pse\22e740fb002.dgn

LAST REVISION 05-13-14 | DATE PLOTTED => 14-MAY-2014 | TIME PLOTTED => 13:52

BORDER LAST REVISED 7/2/2010 | USERNAME => s115152 | DGN FILE => 22e740fb002.dgn | RELATIVE BORDER SCALE IS IN INCHES 0 1 2 3 | UNIT 0316 | PROJECT NUMBER & PHASE 02-1400-0069-1 | EA 02-2E74U1

Dist	COUNTY	ROUTE	POST MILES TOTAL PROJECT	SHEET No.	TOTAL SHEETS
02	Sha	299	83.0/84.0	10	61

Shaun Alexander 05-14-15
REGISTERED CIVIL ENGINEER DATE

05-19-14
PLANS APPROVAL DATE

REGISTERED PROFESSIONAL ENGINEER
SHAUN ALEXANDER
No. C70833
Exp. 06-30-15
CIVIL
STATE OF CALIFORNIA

THE STATE OF CALIFORNIA OR ITS OFFICERS OR AGENTS SHALL NOT BE RESPONSIBLE FOR THE ACCURACY OR COMPLETENESS OF SCANNED COPIES OF THIS PLAN SHEET.

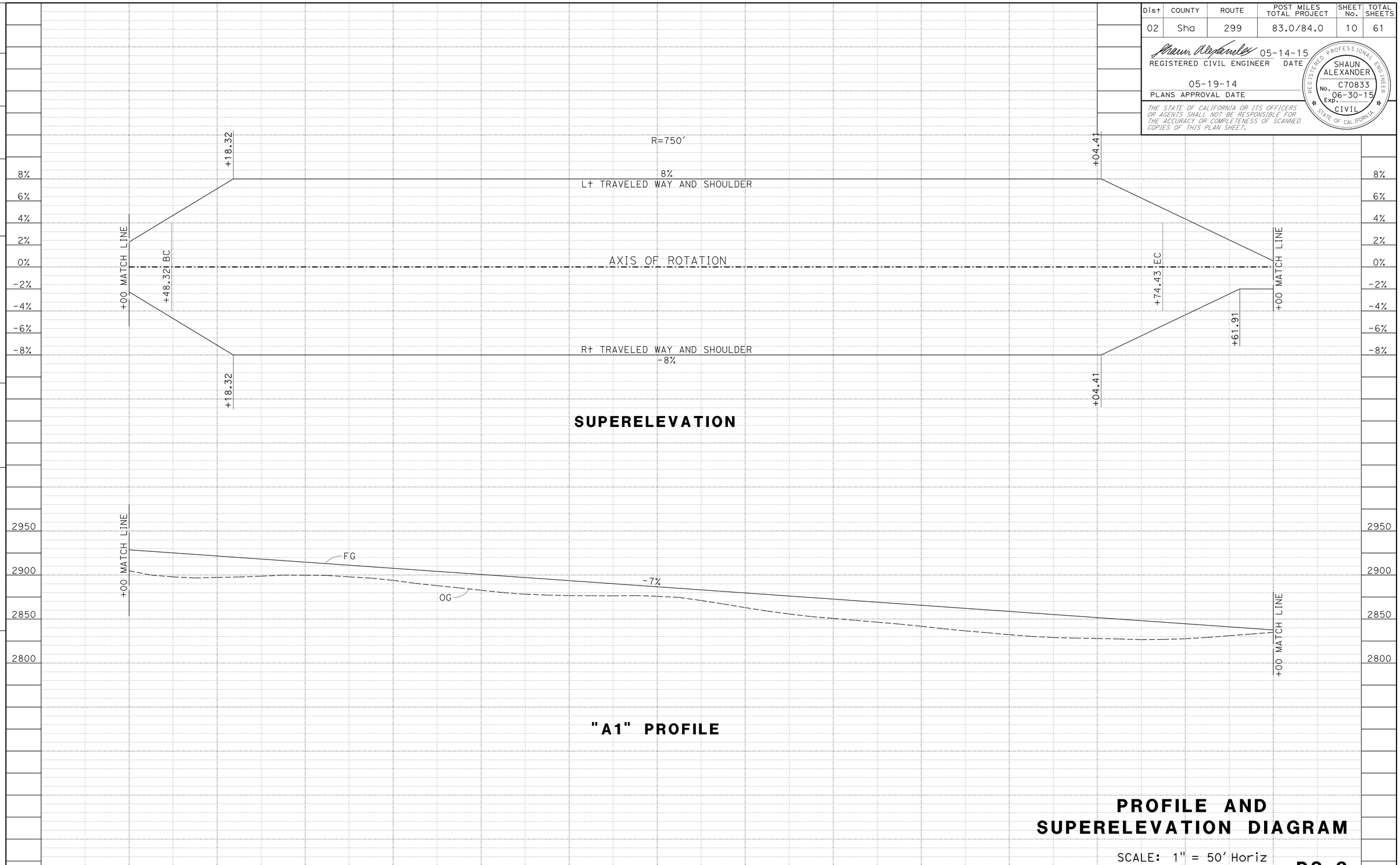

PROFILE AND SUPERELEVATION DIAGRAM

SCALE: 1" = 50' Horiz
1" = 50' Vert

PS-3

REVISED BY	DATE REVISED

JEFF CARSON — SHAUN ALEXANDER — CALCULATED-DESIGNED BY — CHECKED BY

FUNCTIONAL SUPERVISOR: AL TRUJILLO

STATE OF CALIFORNIA - DEPARTMENT OF TRANSPORTATION
Caltrans DESIGN

P:\proj2\02\2E740_plans\pse\22e740fb003.dgn

LAST REVISION 05-13-14 | DATE PLOTTED => 14-MAY-2014 | TIME PLOTTED => 13:52

Dist	COUNTY	ROUTE	POST MILES TOTAL PROJECT	SHEET No.	TOTAL SHEETS
02	Sha	299	83.0/84.0	11	61

REGISTERED CIVIL ENGINEER 05-14-15 DATE

05-19-14
PLANS APPROVAL DATE

REGISTERED PROFESSIONAL ENGINEER SHAUN ALEXANDER No. C70833 Exp. 06-30-15 CIVIL STATE OF CALIFORNIA

THE STATE OF CALIFORNIA OR ITS OFFICERS OR AGENTS SHALL NOT BE RESPONSIBLE FOR THE ACCURACY OR COMPLETENESS OF SCANNED COPIES OF THIS PLAN SHEET.

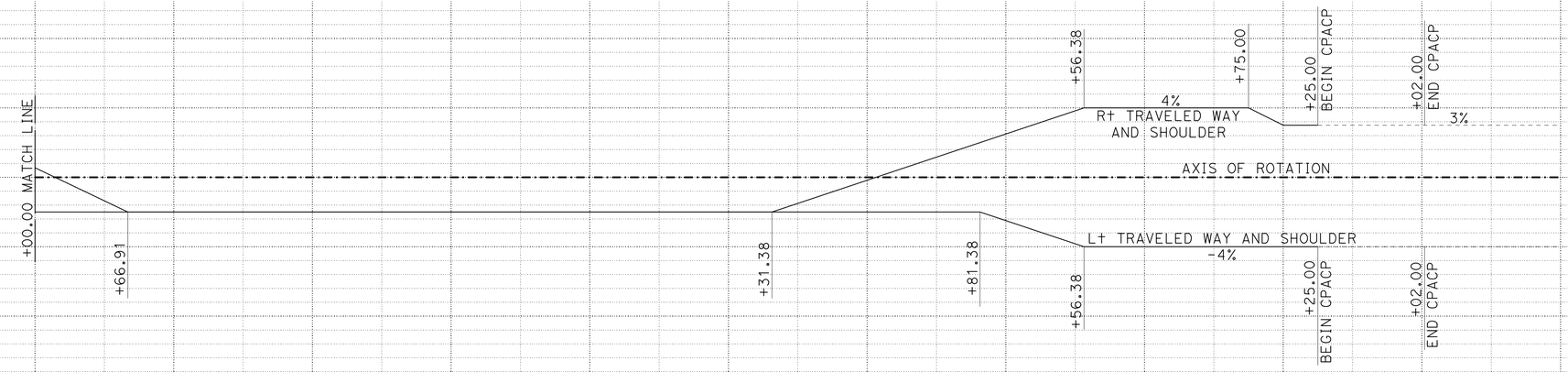

SUPERELEVATION

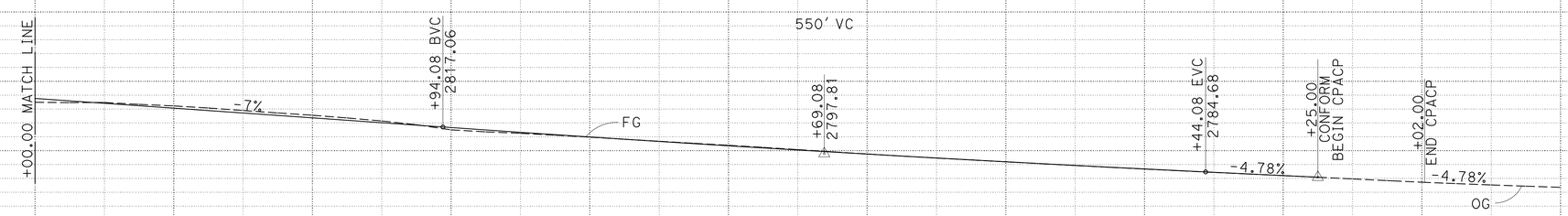

"A1" PROFILE

PROFILE AND SUPERELEVATION DIAGRAM

SCALE: 1" = 50' Horiz
1" = 50' Vert

PS-4

STATION	474+00	475+00	476+00	477+00	478+00	479+00	480+00	481+00	482+00	483+00	484+00	485+00	SHEET TOTAL	TOTAL
CY Exc	4143												4143	111,984
CY Emb	895												895	98,823

REVISED BY | DATE REVISED
JEFF CARSON | SHAUN ALEXANDER
CALCULATED-DESIGNED BY | CHECKED BY
FUNCTIONAL SUPERVISOR: AL TRUJILLO

STATE OF CALIFORNIA - DEPARTMENT OF TRANSPORTATION
Caltrans® DESIGN

P:\proj2\02\2E740_plans\pse\22e740fb004.dgn

LAST REVISION 05-13-14 | DATE PLOTTED => 14-MAY-2014 | TIME PLOTTED => 13:52

Dist	COUNTY	ROUTE	POST MILES TOTAL PROJECT	SHEET No.	TOTAL SHEETS
02	Sha	299	83.0/84.0	12	61

REGISTERED CIVIL ENGINEER 05-14-15 DATE

05-19-14
PLANS APPROVAL DATE

REGISTERED PROFESSIONAL ENGINEER SHAUN ALEXANDER No. C70833 Exp. 06-30-15 CIVIL STATE OF CALIFORNIA

THE STATE OF CALIFORNIA OR ITS OFFICERS OR AGENTS SHALL NOT BE RESPONSIBLE FOR THE ACCURACY OR COMPLETENESS OF SCANNED COPIES OF THIS PLAN SHEET.

"B1" LINE - EDGE OF PAVEMENT

No. ⊕	INTERVAL	ALIGN	Sta	OFFSET	Elev
B2	BC	B1	8+22.98	12.00' Lt	2915.49
B2	Δ/2	B1	8+46.77	12.00' Lt	2916.81
B2\B3	PCC	B1	8+70.55	12.00' Lt	2917.68
B3	Δ/4	B1	8+99.43	14.75' Lt	2917.77
B3	Δ/2	B1	9+28.80	22.85' Lt	2916.60
B3	3Δ/4	B1	9+52.54	37.00' Lt	2914.14
B3	EC	A1	463+81.20	37.80' Lt	2911.68
B4	BC	B1	8+22.98	12.00' Rt	2916.55
B4	Δ/4	B1	8+49.52	12.00' Rt	2918.12
B4	Δ/2	B1	8+76.04	12.00' Rt	2919.10
B4	3Δ/4	B1	9+02.58	12.00' Rt	2919.71
B4\B5	PRC	B1	9+21.11	12.00' Rt	2919.01
B5	Δ/2	B1	9+58.26	26.30' Rt	2918.12
B5	EC	A1	462+69.85	30.00' Lt	2919.50

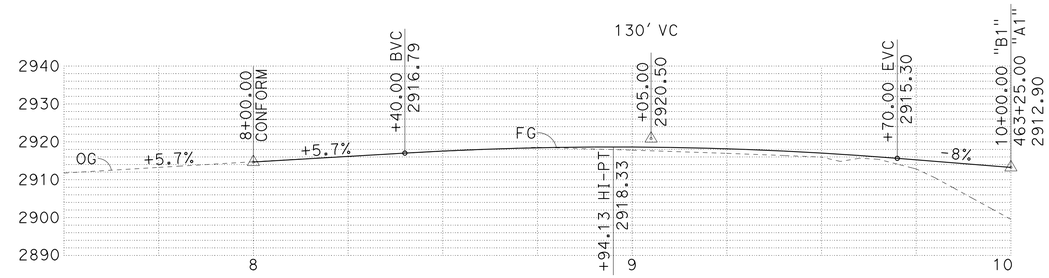

PROFILE
"B1" LINE
SCALE: 1" = 20'

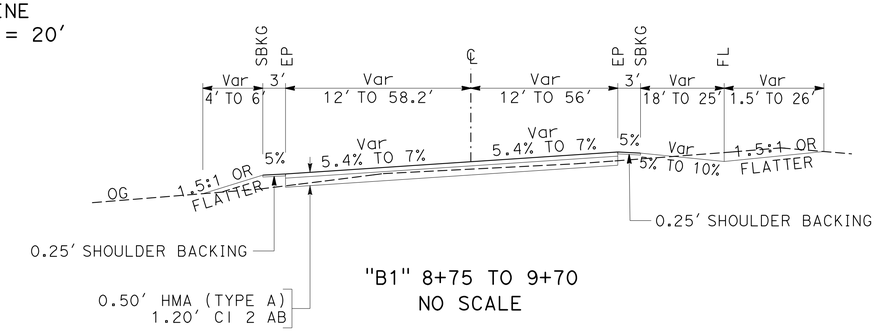

"B1" 8+75 TO 9+70
NO SCALE

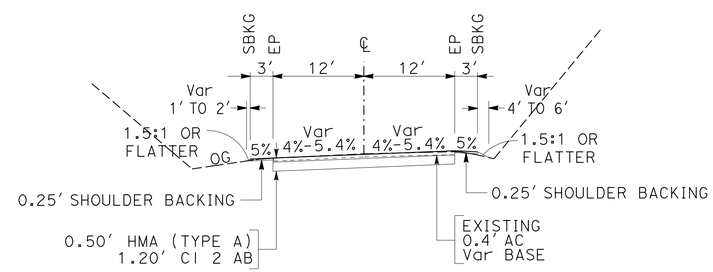

TYPICAL SECTION
"B1" 8+00 TO 8+75
NO SCALE

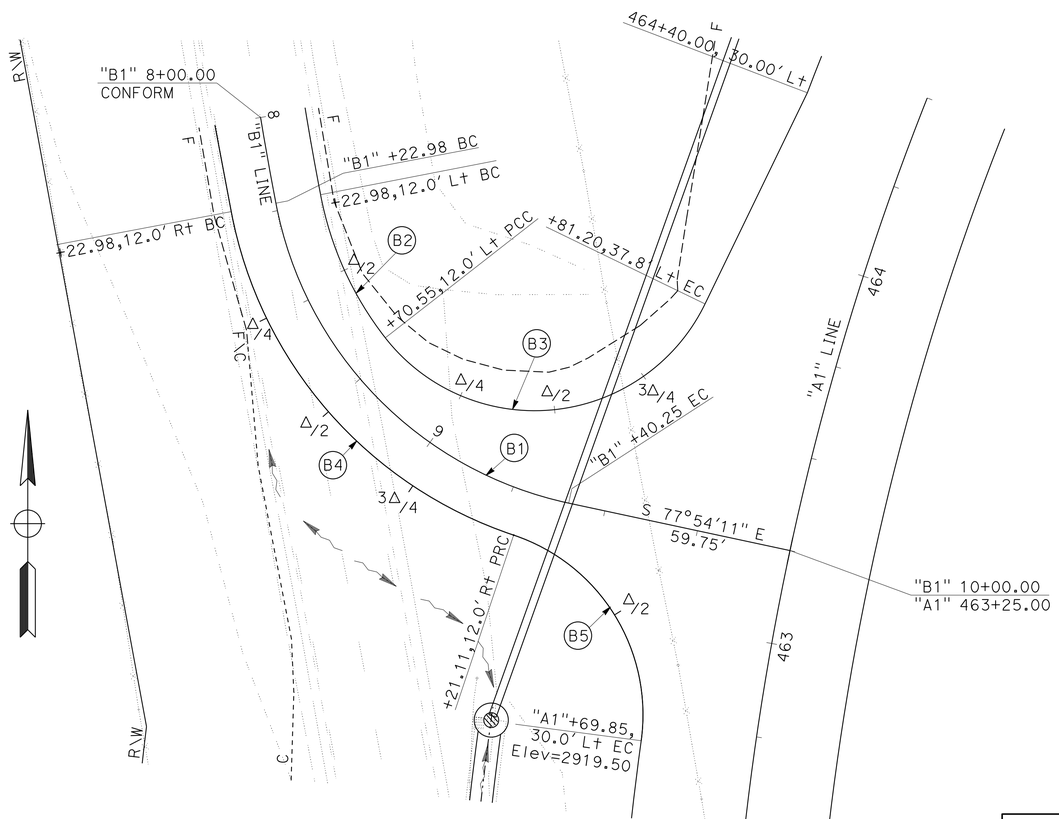

PLAN
"B1" LINE
SCALE: 1" = 20'

CURVE DATA

No. ⊕	R	Δ	T	L
1	100'	67°11'23"	66.43'	117.27'
2	88'	27°15'26"	21.34'	41.86'
3	50'	116°10'27"	80.29'	101.38'
4	112'	60°48'23"	65.72'	118.86'
5	50'	79°24'22"	41.52'	69.29'

CONSTRUCTION DETAILS

SCALE: AS SHOWN

C-1

REVISED BY | DATE REVISED
JEFF CARSON | SHAUN ALEXANDER
CALCULATED-DESIGNED BY | CHECKED BY
FUNCTIONAL SUPERVISOR
AL TRUJILLO

STATE OF CALIFORNIA - DEPARTMENT OF TRANSPORTATION
Caltrans
DESIGN

P:\proj2\02\2E740_plans\pse\22e740ga001.dgn

LAST REVISION 05-13-14 | DATE PLOTTED => 14-MAY-2014 | TIME PLOTTED => 13:52

Dist	COUNTY	ROUTE	POST MILES TOTAL PROJECT	SHEET No.	TOTAL SHEETS
02	Sha	299	83.0/84.0	13	61

REGISTERED CIVIL ENGINEER 05-14-15 DATE

05-19-14
PLANS APPROVAL DATE

REGISTERED PROFESSIONAL ENGINEER SHAUN ALEXANDER No. C70833 Exp. 06-30-15 CIVIL STATE OF CALIFORNIA

THE STATE OF CALIFORNIA OR ITS OFFICERS OR AGENTS SHALL NOT BE RESPONSIBLE FOR THE ACCURACY OR COMPLETENESS OF SCANNED COPIES OF THIS PLAN SHEET.

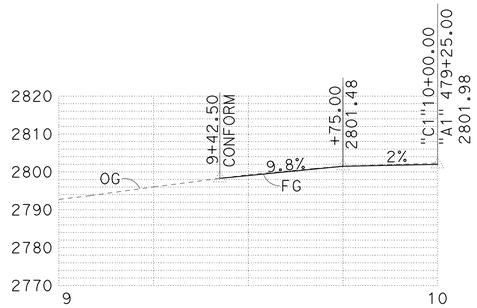

PROFILE
"C1" LINE
SCALE: 1" = 20'

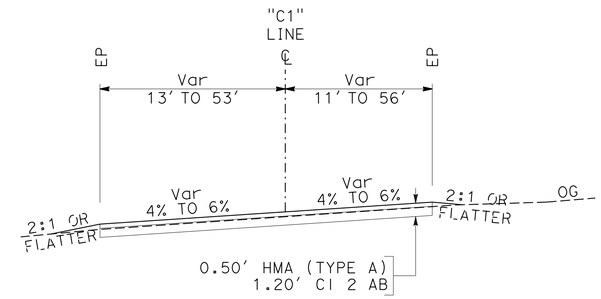

TYPICAL SECTION
"C1" 9+42.5 TO 9+75.0
NO SCALE

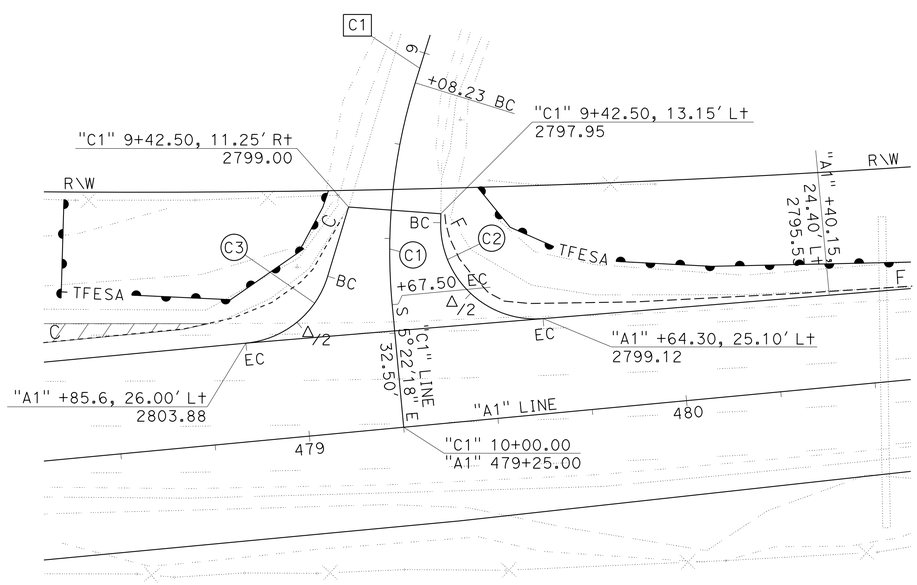

PLAN
"C1" LINE
SCALE: 1" = 20'

"C1" LINE - EDGE OF PAVEMENT

No.	INTERVAL	ALIGN	STA	OFFSET	ELEV
C2	BC	A1	479+15.95	59.25' Lt	2797.95
C2	Δ/2	A1	479+39.80	52.85' Lt	2798.55
C2	EC	A1	479+64.30	25.10' Lt	2799.12
C3	BC	A1	479+40.05	55.20' Lt	2799.00
C3	Δ/2	A1	479+08.75	41.55' Lt	2801.40
C3	EC	A1	478+85.60	26.00 Lt	2803.88

CURVE DATA

No.	R	Δ	T	L
C1	150'	22°38'14"	30.02'	59.26'
C2	25'	95°35'56"	27.57'	41.71'
C3	25'	67°49'31"	16.81'	29.59'

SHORT LINE TABLE

No.	BEARING	DISTANCE
C1	S 17°15'55" W	8.23'

CONSTRUCTION DETAILS

SCALE: AS SHOWN

C-2

REVISED BY | DATE REVISED
JEFF CARSON | SHAUN ALEXANDER
CALCULATED-DESIGNED BY | CHECKED BY
FUNCTIONAL SUPERVISOR
AL TRUJILLO

STATE OF CALIFORNIA - DEPARTMENT OF TRANSPORTATION
Caltrans
DESIGN

P:\proj2\02\2E740_plans\pse\22e740ga002.dgn

LAST REVISION 05-13-14 | DATE PLOTTED => 14-MAY-2014 TIME PLOTTED => 13:53

Dist	COUNTY	ROUTE	POST MILES TOTAL PROJECT	SHEET No.	TOTAL SHEETS
02	Sha	299	83.0/84.0	14	61

REGISTERED CIVIL ENGINEER 05-14-15 DATE

05-19-14
PLANS APPROVAL DATE

REGISTERED PROFESSIONAL ENGINEER SHAUN ALEXANDER No. C70833 Exp. 06-30-15 CIVIL STATE OF CALIFORNIA

THE STATE OF CALIFORNIA OR ITS OFFICERS OR AGENTS SHALL NOT BE RESPONSIBLE FOR THE ACCURACY OR COMPLETENESS OF SCANNED COPIES OF THIS PLAN SHEET.

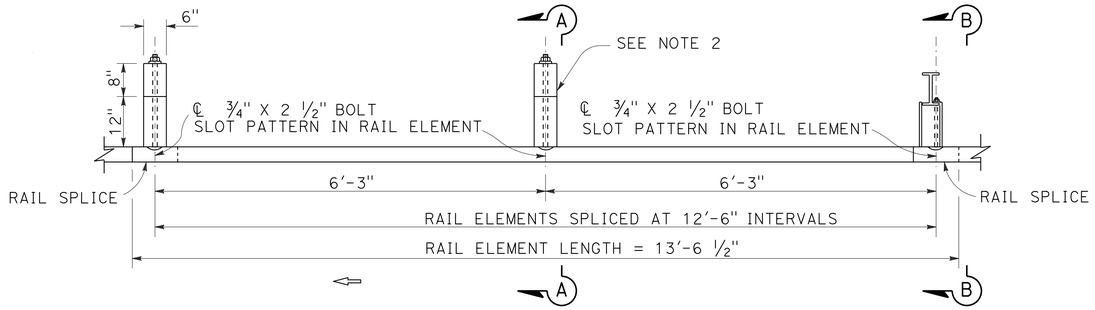

PLAN

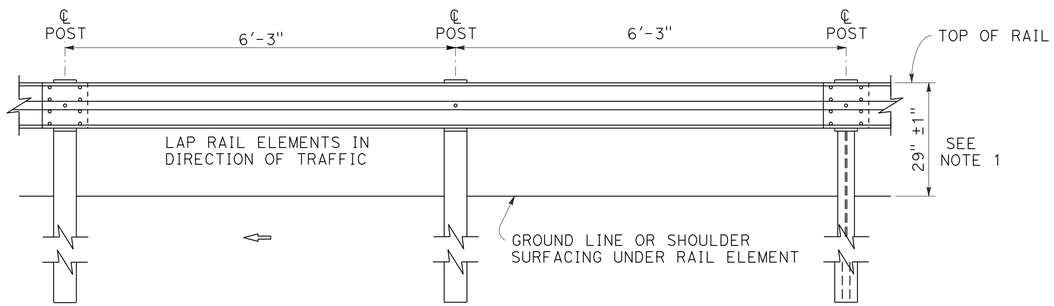

ELEVATION

METAL BEAM GUARD RAILING

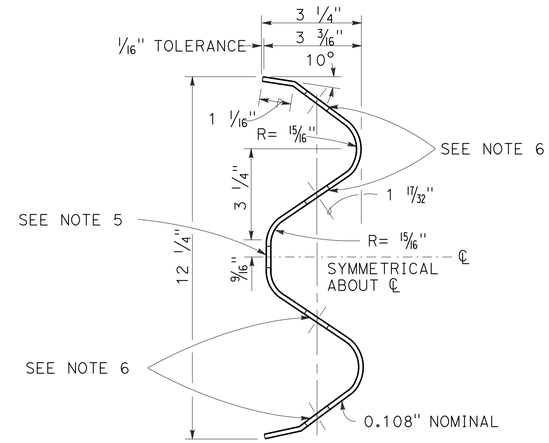

SECTION B-B

RAIL ELEMENT

NOTES:

1. SEE MEASURE HEIGHT DETAIL AT GRADE BREAK (GB).
2. A SINGLE LINE POST MAY BE OFFSET UP TO 12" INLINE WITH THE GUARD RAILING.
3. DO NOT INSTALL POST THROUGH PAVEMENT TO ALLOW FOR POST ROTATION DURING IMPACTS.
4. PLACE TYPE F DIKE UNDER GUARD RAILING PER MBGR DIKE POSITIONING DETAIL.
5. SLOTTED HOLE FOR BOLTED CONNECTION OF RAIL ELEMENT TO BLOCK AND POST. SEE "RAIL ELEMENT SPLICE DETAIL".
6. SLOTTED HOLES FOR SPLICE BOLTS TO OVERLAP ENDS OF RAIL ELEMENT. SEE "RAIL ELEMENT SPLICE DETAIL".
7. TO CONNECT RAILING TO TERMINAL SYSTEM END TREATMENT, TRANSITION THE TOP OF RAILING HEIGHT AT A RATIO OF 120:1 TO TERMINAL SYSTEM END TREATMENT HEIGHT PLUS ONE 12'-6" STANDARD RAILING SECTION AT THE TRANSITIONED HEIGHT FOR A HORIZONTAL CONNECTION TO THE END TREATMENT.

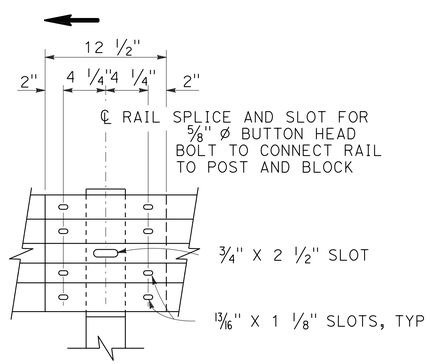

ELEVATION

RAIL ELEMENT SPLICE DETAIL

A) CONNECT THE OVER LAPPED END OF THE RAIL ELEMENTS WITH ⅝" ø X 1 ¾" BUTTON HEAD OVAL SHOULDER SPLICE BOLTS INSERTED INTO THE 13/16" X 1 ⅛" SLOTS AND BOLTED TOGETHER WITH ⅝" ø RECESSED HEX NUTS. RECESS OF HEX NUT POINTS TOWARD RAIL ELEMENT. A TOTAL OF 8 BOLTS AND NUTS ARE TO BE USED AT EACH RAIL SPLICE CONNECTION.

B) THE ENDS OF THE RAIL ELEMENTS ARE TO BE OVERLAPPED IN THE DIRECTION OF TRAFFIC (SEE DETAILS).

C) WHERE END CAP IS TO BE ATTACHED TO THE END OF A RAIL ELEMENT, A TOTAL OF 4 OF THE ABOVE DESCRIBED SPLICE BOLTS AND NUTS ARE TO BE USED.

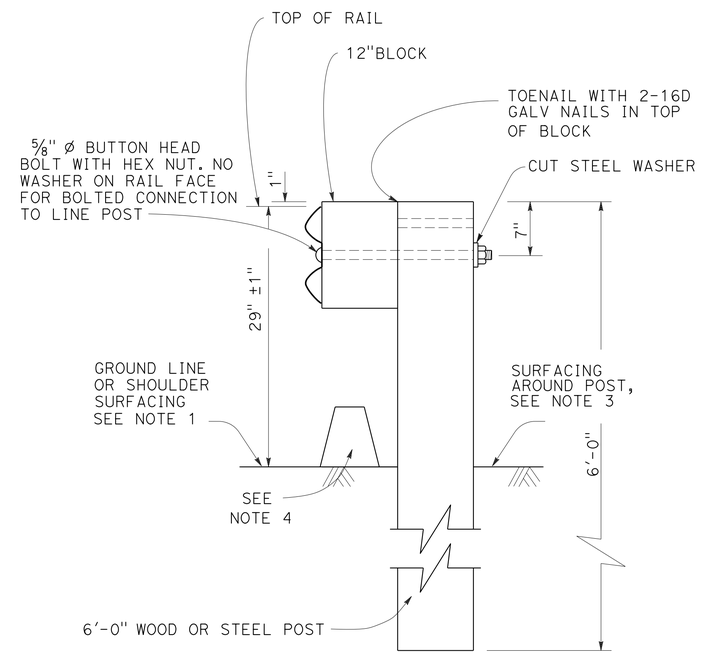

SECTION A-A

TYPICAL LINE POST INSTALLATION

SEE NOTE 2

CONSTRUCTION DETAILS GUARD RAILING STANDARD RAILING SECTION

NO SCALE

C-3

REVISED BY	DATE REVISED

CALCULATED-DESIGNED BY: JEFF CARSON
CHECKED BY: SHAUN ALEXANDER
FUNCTIONAL SUPERVISOR: AL TRUJILLO

STATE OF CALIFORNIA - DEPARTMENT OF TRANSPORTATION
Caltrans
DESIGN

P:\proj2\02\2E740_plans\pse\22e740ga003.dgn

LAST REVISION 05-13-14
DATE PLOTTED => 14-MAY-2014
TIME PLOTTED => 13:53

Dist	COUNTY	ROUTE	POST MILES TOTAL PROJECT	SHEET No.	TOTAL SHEETS
02	Sha	299	83.0/84.0	15	61

REGISTERED CIVIL ENGINEER 05-14-15 DATE

05-19-14
PLANS APPROVAL DATE

REGISTERED PROFESSIONAL ENGINEER SHAUN ALEXANDER No. C70833 Exp. 06-30-15 CIVIL STATE OF CALIFORNIA

THE STATE OF CALIFORNIA OR ITS OFFICERS OR AGENTS SHALL NOT BE RESPONSIBLE FOR THE ACCURACY OR COMPLETENESS OF SCANNED COPIES OF THIS PLAN SHEET.

NOTE:

1. THESE INSTALLATION DETAILS APPLICABLE TO WOOD AND STEEL LINE POST INSTALLATIONS.

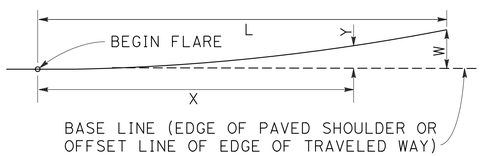

$$Y = \frac{WX^2}{L^2}$$

Y = OFFSET FROM BASE LINE
W = MAXIMUM OFFSET
X = DISTANCE ALONG BASE LINE
L = LENGTH OF FLARE

PARABOLIC FLARE OFFSETS

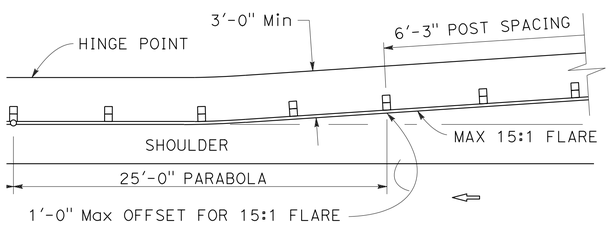

GUARD RAILING WITH FLARED ALIGNMENT

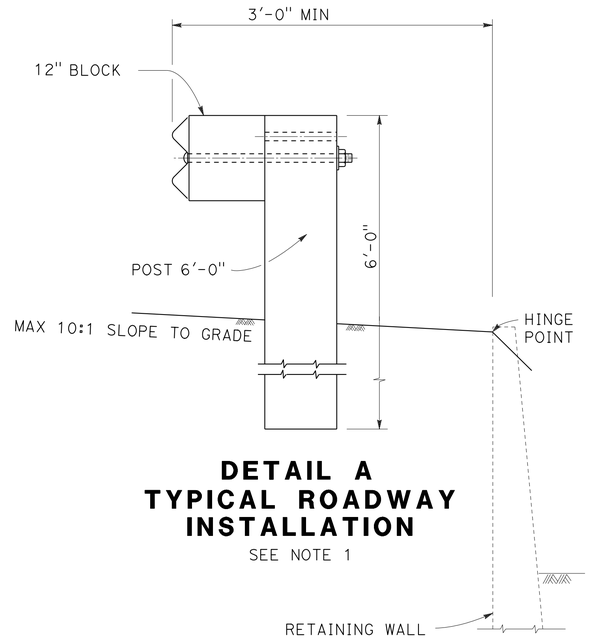

DETAIL A
TYPICAL ROADWAY INSTALLATION

SEE NOTE 1

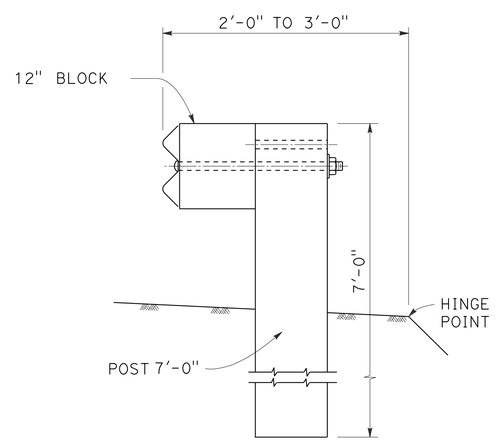

DETAIL B
NARROW ROADWAY INSTALLATION

SEE NOTE 1

POST EMBEDMENT

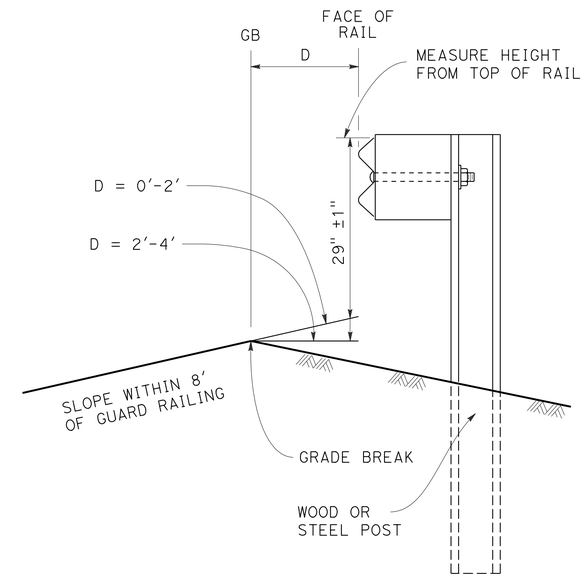

MEASURE HEIGHT DETAIL AT GRADE BREAK (GB)

CONSTRUCTON DETAILS METAL BEAM GUARD RAILING TYPICAL LINE POST EMBEDMENT AND HINGE POINT OFFSET DETAILS

NO SCALE

C-4

REVISED BY | DATE REVISED
JEFF CARSON | SHAUN ALEXANDER
CALCULATED-DESIGNED BY | CHECKED BY
FUNCTIONAL SUPERVISOR
AL TRUJILLO

STATE OF CALIFORNIA - DEPARTMENT OF TRANSPORTATION
Caltrans
DESIGN

P:\proj2\02\2E740_plans\pse\22e740ga004.dgn

LAST REVISION 05-13-14 | DATE PLOTTED => 14-MAY-2014 | TIME PLOTTED => 13:53

Dist	COUNTY	ROUTE	POST MILES TOTAL PROJECT	SHEET No.	TOTAL SHEETS
02	Sha	299	83.0/84.0	16	61

REGISTERED CIVIL ENGINEER 05-14-15 DATE

05-19-14
PLANS APPROVAL DATE

REGISTERED PROFESSIONAL ENGINEER SHAUN ALEXANDER No. C70833 Exp. 06-30-15 CIVIL STATE OF CALIFORNIA

THE STATE OF CALIFORNIA OR ITS OFFICERS OR AGENTS SHALL NOT BE RESPONSIBLE FOR THE ACCURACY OR COMPLETENESS OF SCANNED COPIES OF THIS PLAN SHEET.

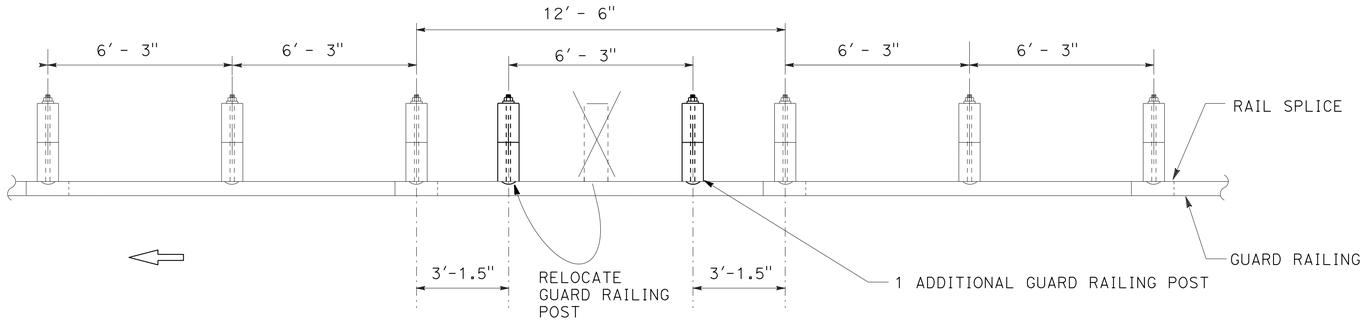

CASE 1

(ONE POST CONFLICT, MOVE THE POST and ADD ONE POST)
(NO NESTED RAIL REQUIRED)

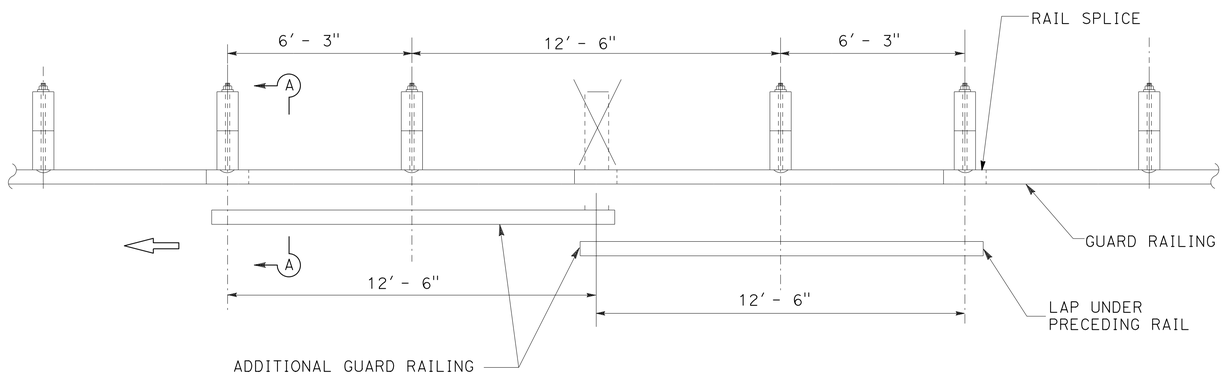

CASE 2

(ONE POST OMITTED AT JUNCTION OF TWO ELEMENTS)
(NEST TWO LENGTHS OF RAIL REQUIRED)

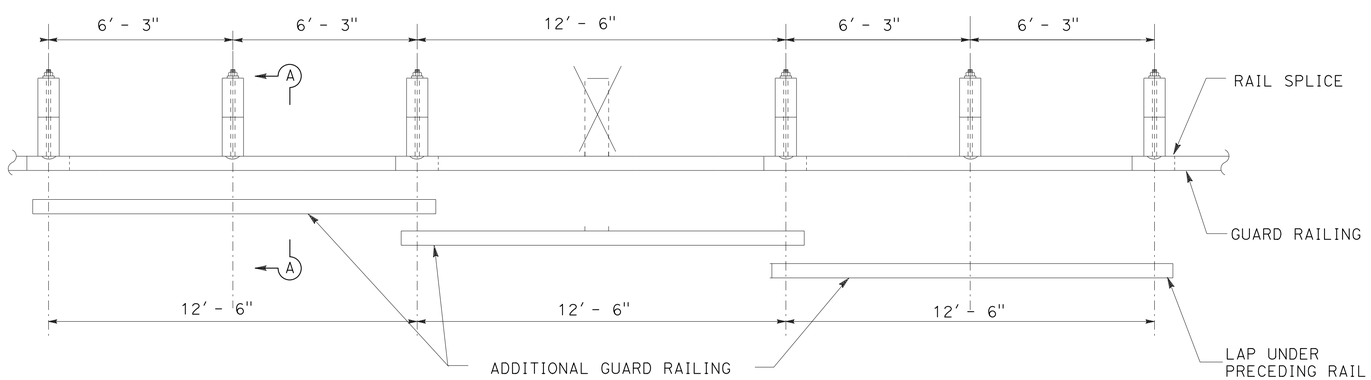

CASE 3

(ONE POST OMITTED AT CENTER OF ELEMENT)
(NEST THREE LENGTHS OF RAIL REQUIRED)
(ONE ADDITIONAL POST MAY BE OMITTED SEE NOTE 3)

LONG SPAN NESTED GUARD RAILING

NOTES:

1. NEST ALL RAILS AT EXISTING RAIL LAPS.
2. WHEN A POST IS REMOVED AND THE RAIL ELEMENTS ARE NESTED, THEN THE NESTED ELEMENTS MUST BE SUPPORTED BY A MIN OF 2 POST EACH SIDE OF THE MISSING POST OR ADD ADDITIONAL LENGTH OF NESTED ELEMENTS.

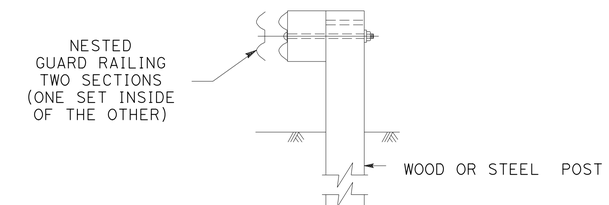

SECTION A-A

TYPICAL RAILING OVERLAP INSTALLATION AT POST

CONSTRUCTION DETAILS GUARD RAILING REMOVE POST OPTIONS

NO SCALE

C-5

REVISED BY | DATE REVISED
JEFF CARSON | SHAUN ALEXANDER
CALCULATED-DESIGNED BY | CHECKED BY
FUNCTIONAL SUPERVISOR | AL TRUJILLO

STATE OF CALIFORNIA - DEPARTMENT OF TRANSPORTATION
Caltrans
DESIGN

P:\proj2\02\2E740_plans\pse\22e740ga005.dgn

LAST REVISION 05-13-14 | DATE PLOTTED => 14-MAY-2014 | TIME PLOTTED => 13:53

BORDER LAST REVISED 7/2/2010 | USERNAME => s115152 | DGN FILE => 22e740ga005.dgn | RELATIVE BORDER SCALE IS IN INCHES 0 1 2 3 | UNIT 0316 | PROJECT NUMBER & PHASE 02-1400-0069-1 EA 02-2E74U1

Dist	COUNTY	ROUTE	POST MILES TOTAL PROJECT	SHEET No.	TOTAL SHEETS
02	Sha	299	83.0/84.0	17	61

REGISTERED CIVIL ENGINEER 05-14-15 DATE

05-19-14
PLANS APPROVAL DATE

REGISTERED PROFESSIONAL ENGINEER SHAUN ALEXANDER No. C70833 Exp. 06-30-15 CIVIL STATE OF CALIFORNIA

THE STATE OF CALIFORNIA OR ITS OFFICERS OR AGENTS SHALL NOT BE RESPONSIBLE FOR THE ACCURACY OR COMPLETENESS OF SCANNED COPIES OF THIS PLAN SHEET.

ABBREVIATIONS:

MBGR METAL BEAM GUARD RAILING (STEEL POST)

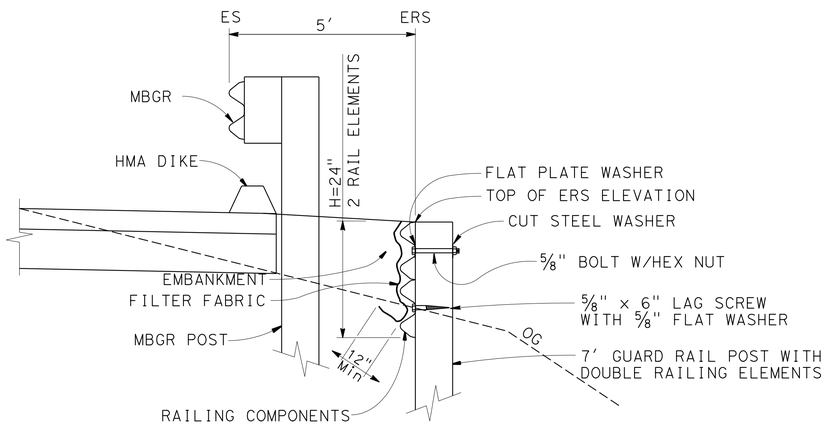

SECTION A-A

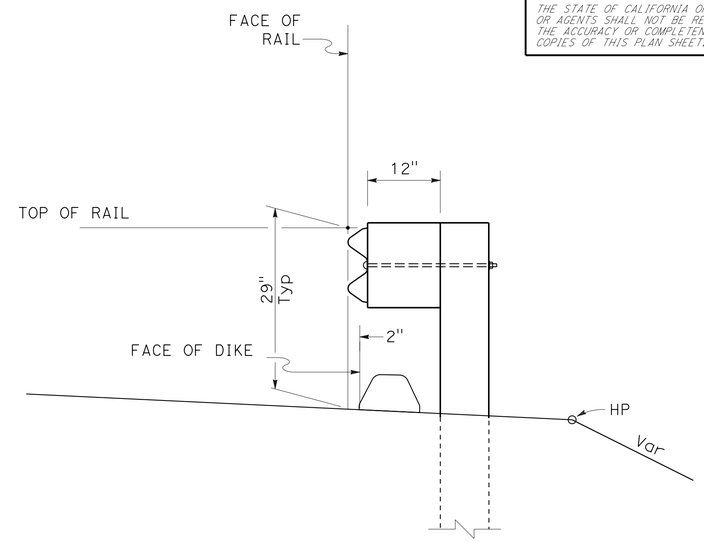

MBGR DIKE POSITIONING

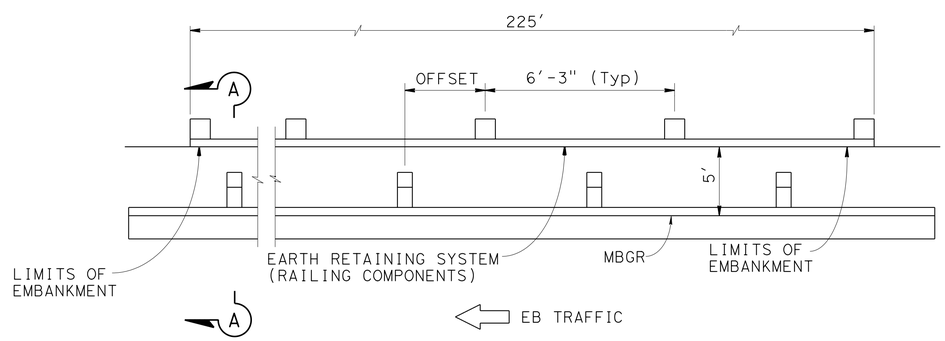

PLAN

EARTH RETAINING SYSTEM (RAILING COMPONENTS)

"A1" 438+00.00 TO "A1" 440+25.00

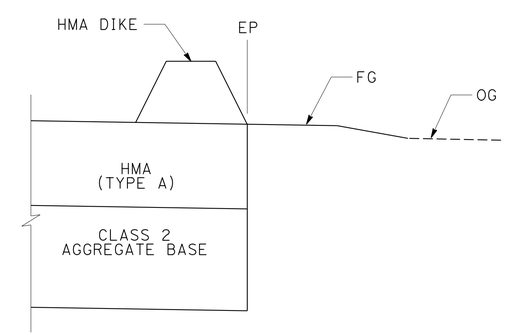

PLACE HMA DIKE

(TYPICAL BOTH DIRECTIONS)

CONSTRUCTION DETAILS

NO SCALE **C-6**

REVISED BY | DATE REVISED
JEFF CARSON | SHAUN ALEXANDER
CALCULATED-DESIGNED BY | CHECKED BY
FUNCTIONAL SUPERVISOR
AL TRUJILLO

STATE OF CALIFORNIA - DEPARTMENT OF TRANSPORTATION
Caltrans®
DESIGN

P:\proj2\02\2E740_plans\pse\22e740ga006.dgn

LAST REVISION 05-13-14 | DATE PLOTTED => 14-MAY-2014 | TIME PLOTTED => 13:53

Dist	COUNTY	ROUTE	POST MILES TOTAL PROJECT	SHEET No.	TOTAL SHEETS
02	Sha	299	83.0/84.0	18	61

REGISTERED CIVIL ENGINEER 05-14-15 DATE

PLANS APPROVAL DATE 05-19-14

REGISTERED PROFESSIONAL ENGINEER SHAUN ALEXANDER No. C70833 Exp. 06-30-15 CIVIL STATE OF CALIFORNIA

THE STATE OF CALIFORNIA OR ITS OFFICERS OR AGENTS SHALL NOT BE RESPONSIBLE FOR THE ACCURACY OR COMPLETENESS OF SCANNED COPIES OF THIS PLAN SHEET.

NOTES:

1. ALL HOLES IN STEEL POST SHALL BE 13/16" Dia MAXIMUM.
2. SLOTTED HOLES FOR SPLICE BOLTS TO OVERLAP ENDS OF RAIL ELEMENT.

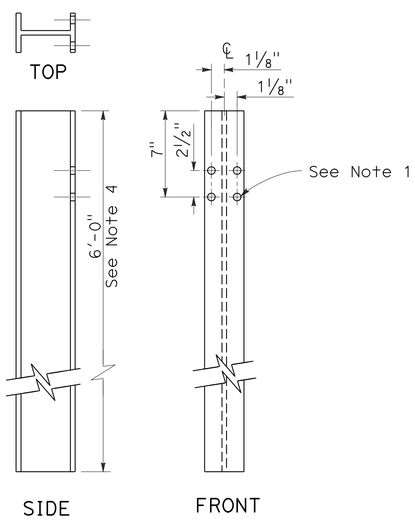

W6 x 9
STEEL POST
See Note 1

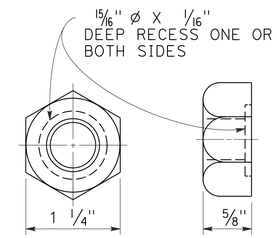

5/8" Dia RECESS NUT

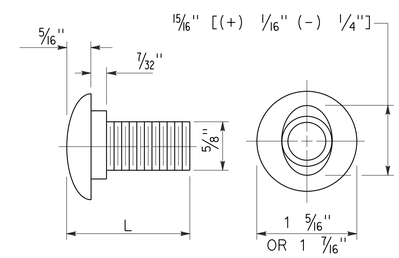

5/8" Dia BUTTON HEAD BOLT

L	THREAD LENGTH
1 3/8"	FULL THREAD LENGTH
2"	FULL THREAD LENGTH
10"	4" MIN THREAD LENGTH
1'-6"	4" MIN THREAD LENGTH
** 2 3/4"	2" MIN THREAD LENGTH
** 1'-7"	4" MIN THREAD LENGTH

** FOR NESTED RAIL APPLICATIONS.

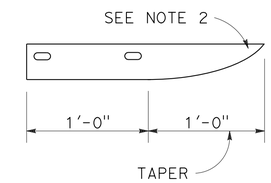

PLAN

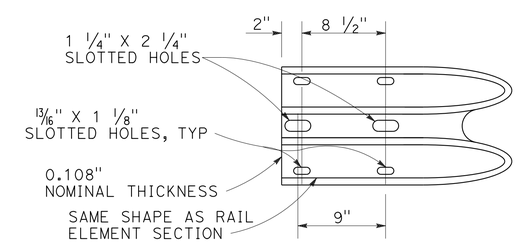

ELEVATION
END CAP (TYPE A)

CONSTRUCTION DETAILS
METAL BEAM GUARD RAILING
STANDARD HARDWARE
AND STEEL POST DETAILS

NO SCALE

C-7

REVISED BY | DATE REVISED
JEFF CARSON | SHAUN ALEXANDER
CALCULATED-DESIGNED BY | CHECKED BY
FUNCTIONAL SUPERVISOR
AL TRUJILLO

STATE OF CALIFORNIA - DEPARTMENT OF TRANSPORTATION
Caltrans
DESIGN

P:\proj2\02\2E740_plans\pse\22e740ga007.dgn

LAST REVISION 05-13-14 | DATE PLOTTED => 14-MAY-2014 | TIME PLOTTED => 13:53

Dist	COUNTY	ROUTE	POST MILES TOTAL PROJECT	SHEET No.	TOTAL SHEETS
02	Sha	299	83.0/84.0	19	61

REGISTERED CIVIL ENGINEER 05-14-15 DATE

05-19-14
PLANS APPROVAL DATE

REGISTERED PROFESSIONAL ENGINEER SHAUN ALEXANDER No. C70833 Exp. 06-30-15 CIVIL STATE OF CALIFORNIA

THE STATE OF CALIFORNIA OR ITS OFFICERS OR AGENTS SHALL NOT BE RESPONSIBLE FOR THE ACCURACY OR COMPLETENESS OF SCANNED COPIES OF THIS PLAN SHEET.

NOTE:

1. SEE REVISED STANDARD PLAN A77L3 FOR TYPICAL USE OF ANCHOR CABLE AND ANCHOR PLATE.

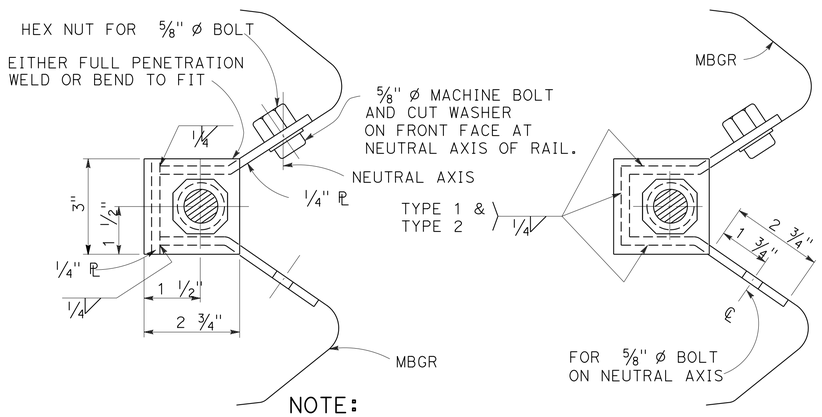

NOTE:
DIMENSIONING APPLIES TO BOTH TYPES.

SECTION A-A (ALTERNATIVE TYPE 1) **SECTION A-A (ALTERNATIVE TYPE 2)**

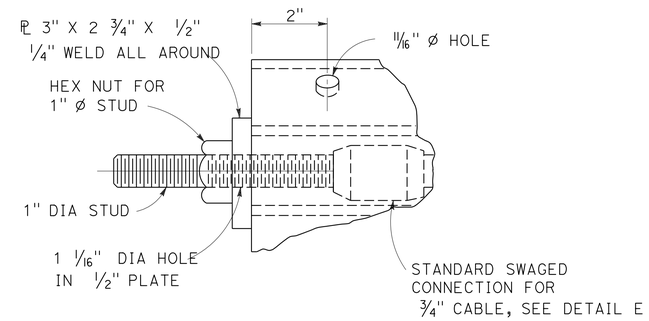

DETAIL D

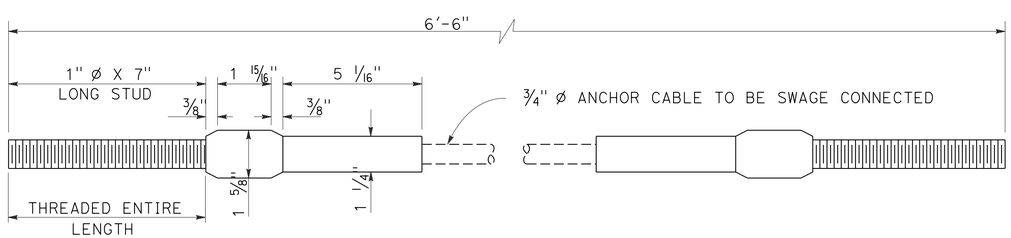

DETAIL E
ANCHOR CABLE WITH SWAGED FITTING AND STUD

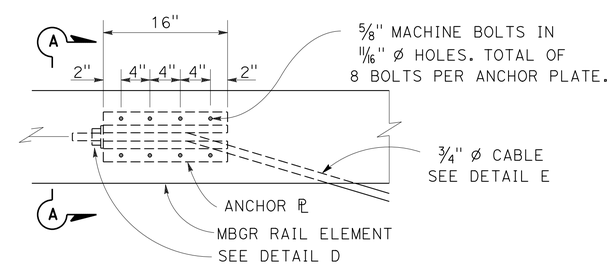

ANCHOR PLATE DETAIL
(MBGR SHOWN, TBB SIMILAR)

CONSTRUCTION DETAILS METAL RAILING ANCHOR CABLE AND ANCHOR PLATE DETAILS

NO SCALE

C-8

REVISED BY | DATE REVISED
JEFF CARSON | SHAUN ALEXANDER
CALCULATED-DESIGNED BY | CHECKED BY
FUNCTIONAL SUPERVISOR: AL TRUJILLO
STATE OF CALIFORNIA - DEPARTMENT OF TRANSPORTATION
Caltrans DESIGN
P:\proj2\02\2E740_plans\pse\22e740ga008.dgn

LAST REVISION 05-13-14 | DATE PLOTTED => 14-MAY-2014 | TIME PLOTTED => 13:53

Dist	COUNTY	ROUTE	POST MILES TOTAL PROJECT	SHEET No.	TOTAL SHEETS
02	Sha	299	83.0/84.0	20	61

Shaun Alexander 05-14-15
REGISTERED CIVIL ENGINEER DATE

05-19-14
PLANS APPROVAL DATE

REGISTERED PROFESSIONAL ENGINEER
SHAUN ALEXANDER
No. C70833
Exp. 06-30-15
CIVIL
STATE OF CALIFORNIA

THE STATE OF CALIFORNIA OR ITS OFFICERS OR AGENTS SHALL NOT BE RESPONSIBLE FOR THE ACCURACY OR COMPLETENESS OF SCANNED COPIES OF THIS PLAN SHEET.

LEGEND

CPACP

ABBREVIATIONS

CPACP COLD PLANE ASPHALT CONCRETE PAVEMENT

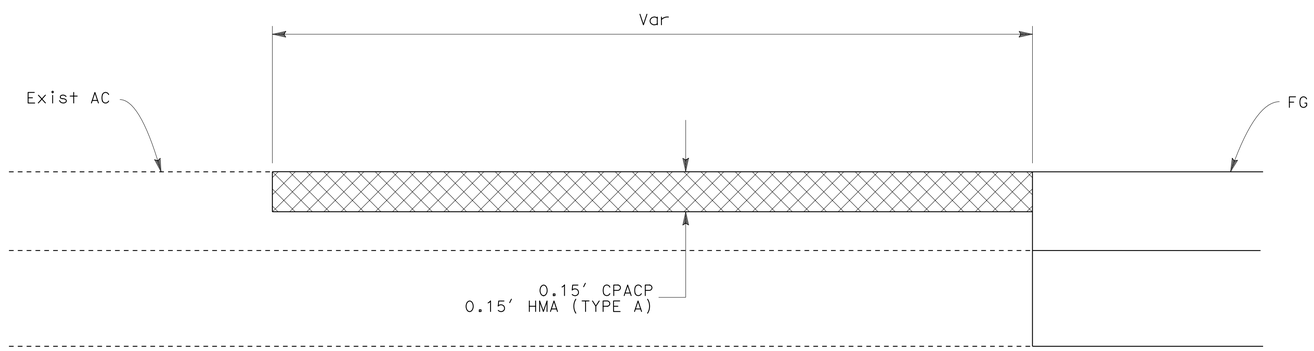

PROFILE

PAVEMENT CONFORM

"A1" 435+75 TO 436+25
"A1" 483+25 TO 484+02

CONSTRUCTION DETAILS

NO SCALE

C-9

CALCULATED-DESIGNED BY	JEFF CARSON
CHECKED BY	SHAUN ALEXANDER
FUNCTIONAL SUPERVISOR	AL TRUJILLO
REVISED BY	
DATE REVISED	

STATE OF CALIFORNIA - DEPARTMENT OF TRANSPORTATION
Caltrans
DESIGN

P:\proj2\02\2E740_plans\pse\22e740ga009.dgn

LAST REVISION 05-13-14
DATE PLOTTED => 14-MAY-2014
TIME PLOTTED => 13:53

Dist	COUNTY	ROUTE	POST MILES TOTAL PROJECT	SHEET No.	TOTAL SHEETS
02	Sha	299	83.0/84.0	21	61

REGISTERED CIVIL ENGINEER 05-14-15 DATE

05-19-14
PLANS APPROVAL DATE

REGISTERED PROFESSIONAL ENGINEER SHAUN ALEXANDER No. C70833 Exp. 06-30-15 CIVIL STATE OF CALIFORNIA

THE STATE OF CALIFORNIA OR ITS OFFICERS OR AGENTS SHALL NOT BE RESPONSIBLE FOR THE ACCURACY OR COMPLETENESS OF SCANNED COPIES OF THIS PLAN SHEET.

NOTE:

1. FOR ACCURATE RIGHT OF WAY DATA, CONTACT RIGHT OF WAY ENGINEERING AT THE DISTRICT OFFICE.

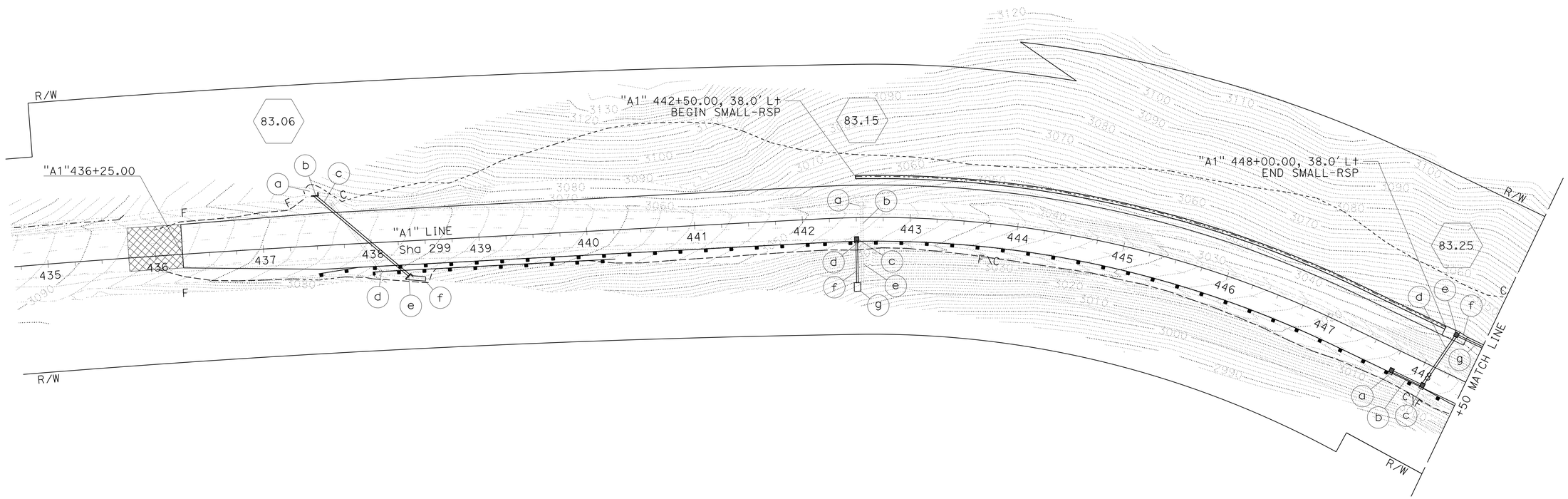

DRAINAGE PLAN

SCALE: 1" = 50'

D-1

APPROVED FOR DRAINAGE WORK ONLY

REVISED BY | DATE REVISED

JEFF CARSON | SHAUN ALEXANDER

CALCULATED-DESIGNED BY | CHECKED BY

FUNCTIONAL SUPERVISOR: AL TRUJILLO

STATE OF CALIFORNIA - DEPARTMENT OF TRANSPORTATION

Caltrans DESIGN

P:\proj2\02\2E740_plans\pse\22e740ia001.dgn

LAST REVISION 05-13-14 | DATE PLOTTED => 14-MAY-2014 | TIME PLOTTED => 13:53

Dist	COUNTY	ROUTE	POST MILES TOTAL PROJECT	SHEET No.	TOTAL SHEETS
02	Sha	299	83.0/84.0	22	61

REGISTERED CIVIL ENGINEER 05-14-15 DATE

05-19-14
PLANS APPROVAL DATE

REGISTERED PROFESSIONAL ENGINEER SHAUN ALEXANDER No. C70833 Exp. 06-30-15 CIVIL STATE OF CALIFORNIA

THE STATE OF CALIFORNIA OR ITS OFFICERS OR AGENTS SHALL NOT BE RESPONSIBLE FOR THE ACCURACY OR COMPLETENESS OF SCANNED COPIES OF THIS PLAN SHEET.

NOTE:

1. FOR ACCURATE RIGHT OF WAY DATA, CONTACT RIGHT OF WAY ENGINEERING AT THE DISTRICT OFFICE.

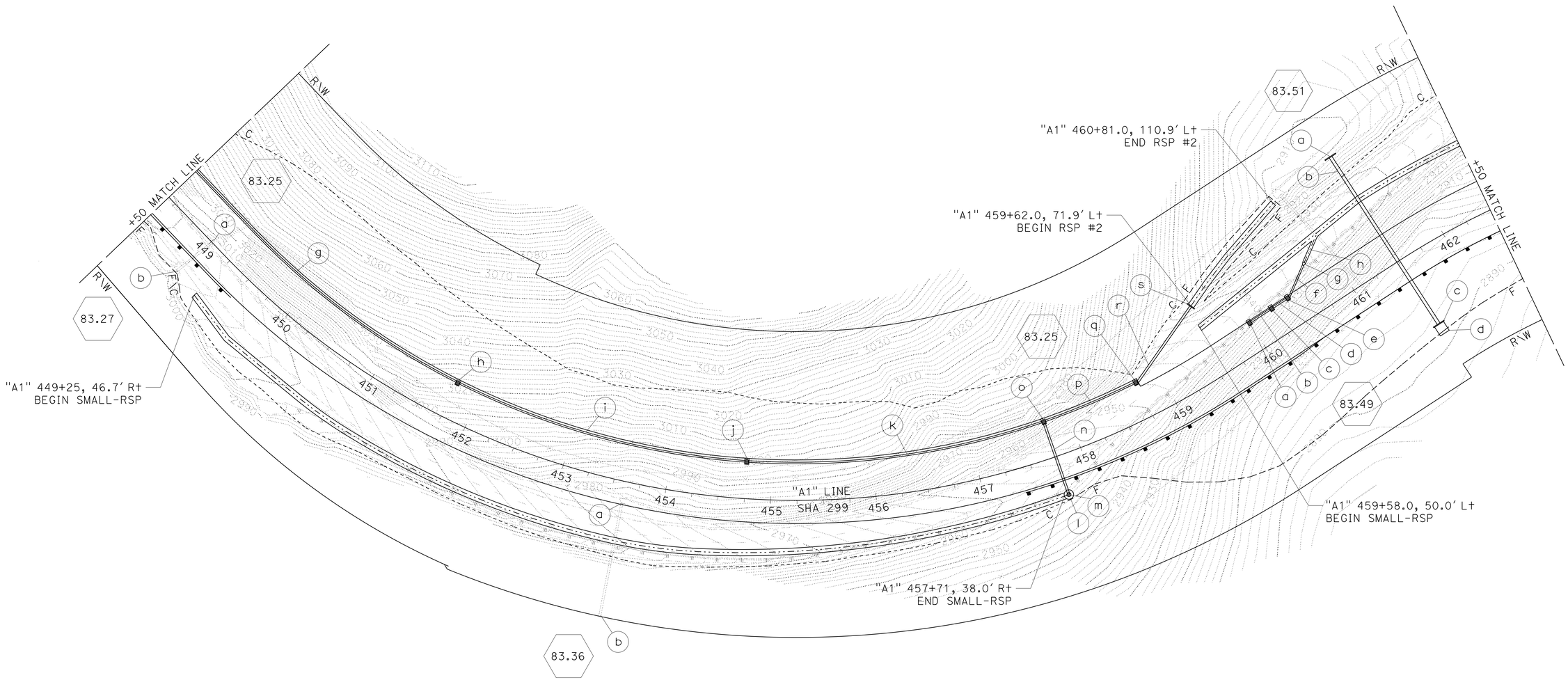

DRAINAGE PLAN

SCALE: 1" = 50'

D-2

APPROVED FOR DRAINAGE WORK ONLY

STATE OF CALIFORNIA - DEPARTMENT OF TRANSPORTATION
Caltrans
DESIGN

FUNCTIONAL SUPERVISOR: AL TRUJILLO
CALCULATED-DESIGNED BY: SHAUN ALEXANDER
CHECKED BY: JEFF CARSON
REVISED BY
DATE REVISED

P:\proj2\02\2E740_plans\pse\22e740ia002.dgn

LAST REVISION 05-13-14 | DATE PLOTTED => 14-MAY-2014 | TIME PLOTTED => 13:53

BORDER LAST REVISED 7/2/2010 | USERNAME => s115152 | DGN FILE => 22e740ia002.dgn | RELATIVE BORDER SCALE IS IN INCHES 0 1 2 3 | UNIT 0316 | PROJECT NUMBER & PHASE 02-1400-0069-1 EA 02-2E74U1

Dist	COUNTY	ROUTE	POST MILES TOTAL PROJECT	SHEET No.	TOTAL SHEETS
02	Sha	299	83.0/84.0	23	61

REGISTERED CIVIL ENGINEER 05-14-15 DATE

05-19-14
PLANS APPROVAL DATE

REGISTERED PROFESSIONAL ENGINEER SHAUN ALEXANDER No. C70833 Exp. 06-30-15 CIVIL STATE OF CALIFORNIA

THE STATE OF CALIFORNIA OR ITS OFFICERS OR AGENTS SHALL NOT BE RESPONSIBLE FOR THE ACCURACY OR COMPLETENESS OF SCANNED COPIES OF THIS PLAN SHEET.

NOTE:

1. FOR ACCURATE RIGHT OF WAY DATA, CONTACT RIGHT OF WAY ENGINEERING AT THE DISTRICT OFFICE.

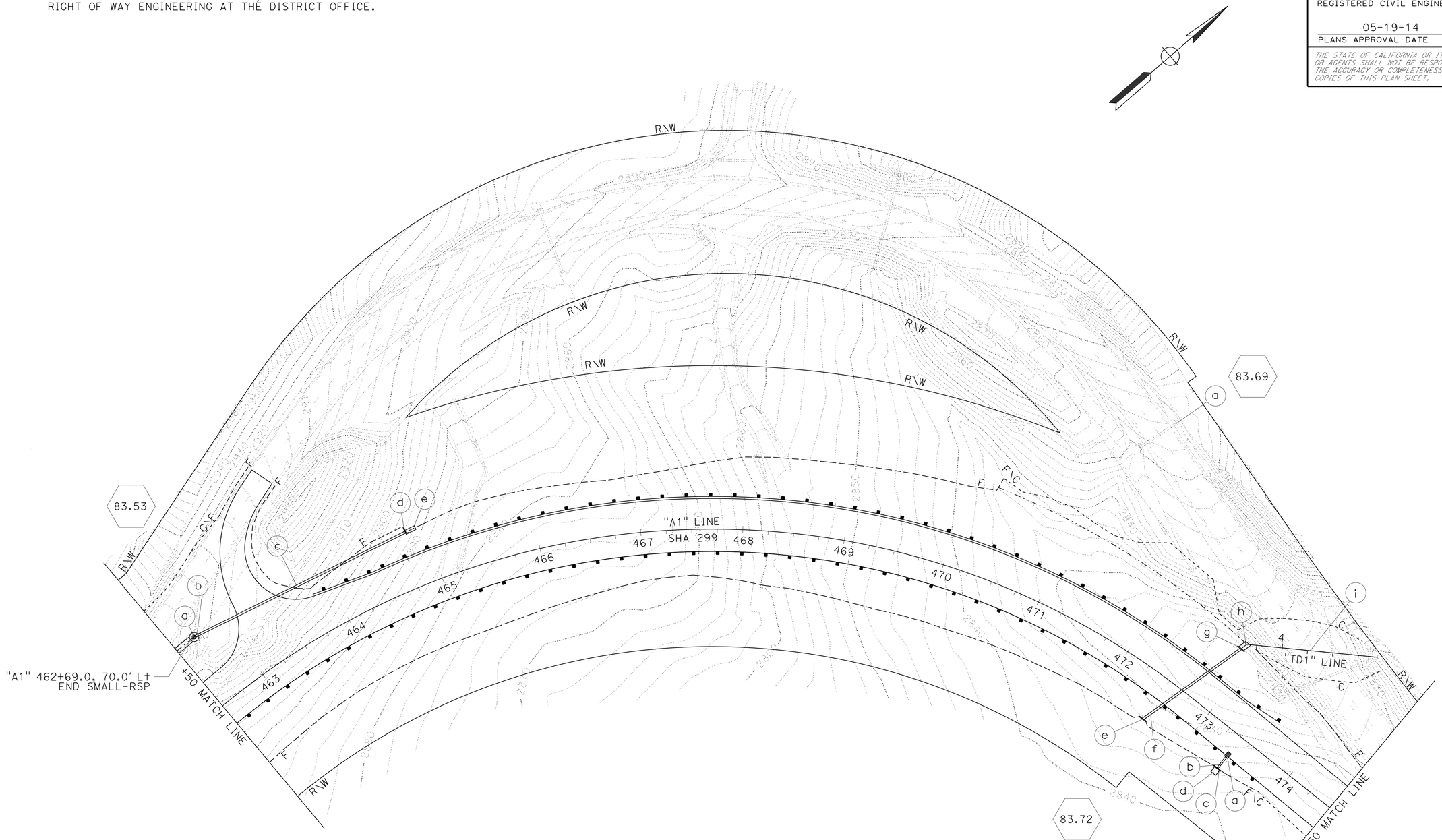

DRAINAGE PLAN

SCALE: 1" = 50'

D-3

APPROVED FOR DRAINAGE WORK ONLY

STATE OF CALIFORNIA - DEPARTMENT OF TRANSPORTATION
Caltrans DESIGN

FUNCTIONAL SUPERVISOR: AL TRUJILLO
CALCULATED-DESIGNED BY: JEFF CARSON
CHECKED BY: SHAUN ALEXANDER
REVISED BY
DATE REVISED

P:\proj2\02\2E740_plans\pse\22e740ia003.dgn

LAST REVISION 05-13-14 | DATE PLOTTED => 14-MAY-2014 | TIME PLOTTED => 13:53

BORDER LAST REVISED 7/2/2010 | USERNAME => s115152 | DGN FILE => 22e740ia003.dgn | RELATIVE BORDER SCALE IS IN INCHES 0 1 2 3 | UNIT 0316 | PROJECT NUMBER & PHASE 02-1400-0069-1 | EA 02-2E74U1

Dist	COUNTY	ROUTE	POST MILES TOTAL PROJECT	SHEET No.	TOTAL SHEETS
02	Sha	299	83.0/84.0	24	61

Shaun Alexander 05-14-15
REGISTERED CIVIL ENGINEER DATE

05-19-14
PLANS APPROVAL DATE

REGISTERED PROFESSIONAL ENGINEER
SHAUN ALEXANDER
No. C70833
Exp. 06-30-15
CIVIL
STATE OF CALIFORNIA

THE STATE OF CALIFORNIA OR ITS OFFICERS OR AGENTS SHALL NOT BE RESPONSIBLE FOR THE ACCURACY OR COMPLETENESS OF SCANNED COPIES OF THIS PLAN SHEET.

NOTE:

1. FOR ACCURATE RIGHT OF WAY DATA, CONTACT RIGHT OF WAY ENGINEERING AT THE DISTRICT OFFICE.

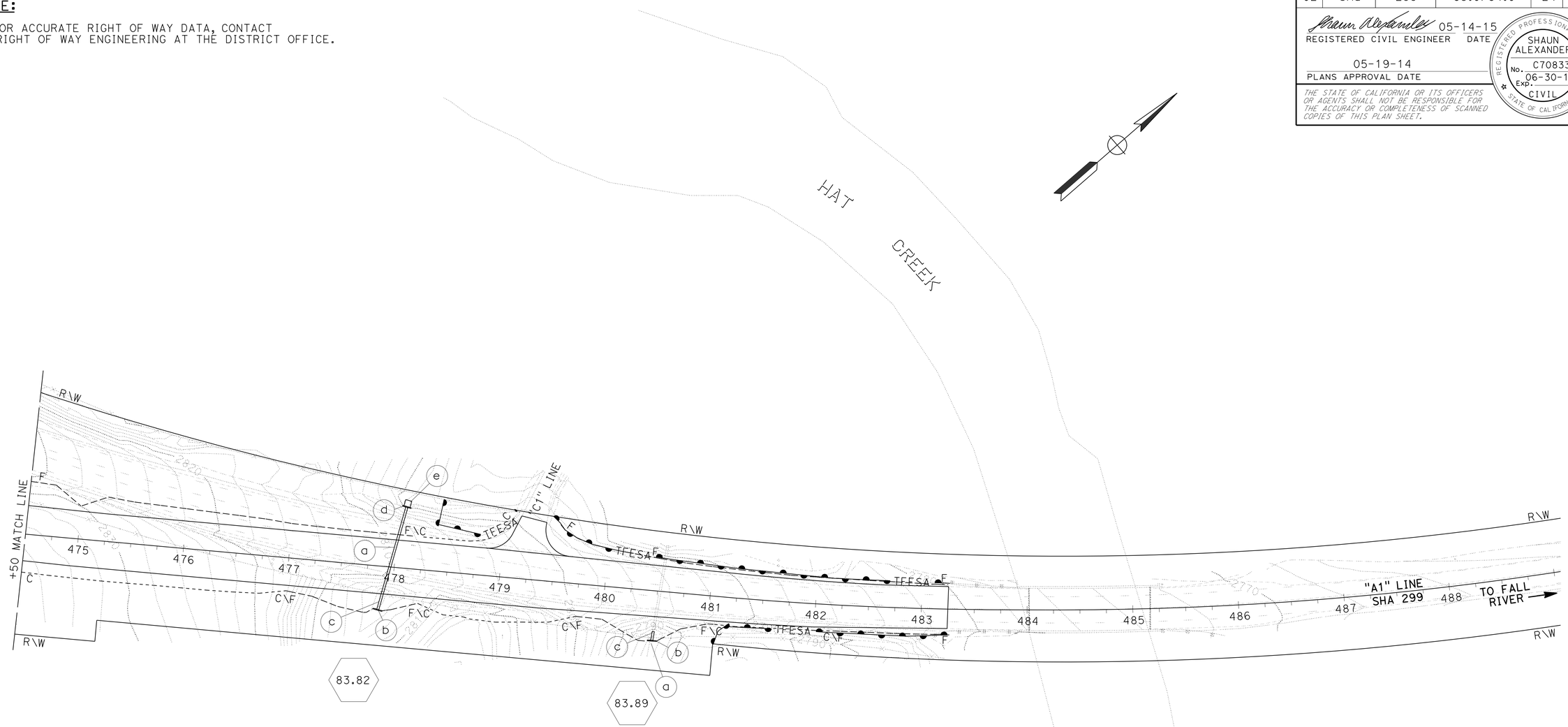

DRAINAGE PLAN

SCALE: 1" = 50'

D-4

APPROVED FOR DRAINAGE WORK ONLY

CALCULATED-DESIGNED BY	
CHECKED BY	
REVISED BY	
DATE REVISED	
JEFF CARSON	
SHAUN ALEXANDER	
FUNCTIONAL SUPERVISOR	
AL TRUJILLO	

STATE OF CALIFORNIA - DEPARTMENT OF TRANSPORTATION

Caltrans

DESIGN

P:\proj2\02\2E740_plans\pse\22e740ia004.dgn

LAST REVISION 05-13-14 | DATE PLOTTED => 14-MAY-2014 | TIME PLOTTED => 13:53

Dist	COUNTY	ROUTE	POST MILES TOTAL PROJECT	SHEET No.	TOTAL SHEETS
02	Sha	299	83.0/84.0	25	61

REGISTERED CIVIL ENGINEER 05-14-14 DATE

05-19-14
PLANS APPROVAL DATE

REGISTERED PROFESSIONAL ENGINEER MIKE MOGEN No. C67018 Exp. 09-30-14 CIVIL STATE OF CALIFORNIA

THE STATE OF CALIFORNIA OR ITS OFFICERS OR AGENTS SHALL NOT BE RESPONSIBLE FOR THE ACCURACY OR COMPLETENESS OF SCANNED COPIES OF THIS PLAN SHEET.

NOTE:

1. FOR INFORMATION NOT SHOWN, SEE STANDARD PLANS AND DRAINAGE DETAILS.

ABBREVIATIONS:

SI LONGITUDINAL SLOPE
Sx CROSS SLOPE

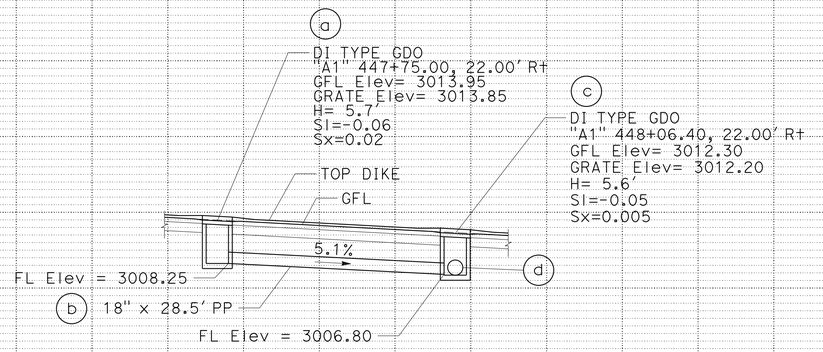

DRAINAGE SYSTEM (83.25)

"A1" 447+75.00, 22.00' Rt TO "A1" 448+06.40, 22.00' Rt

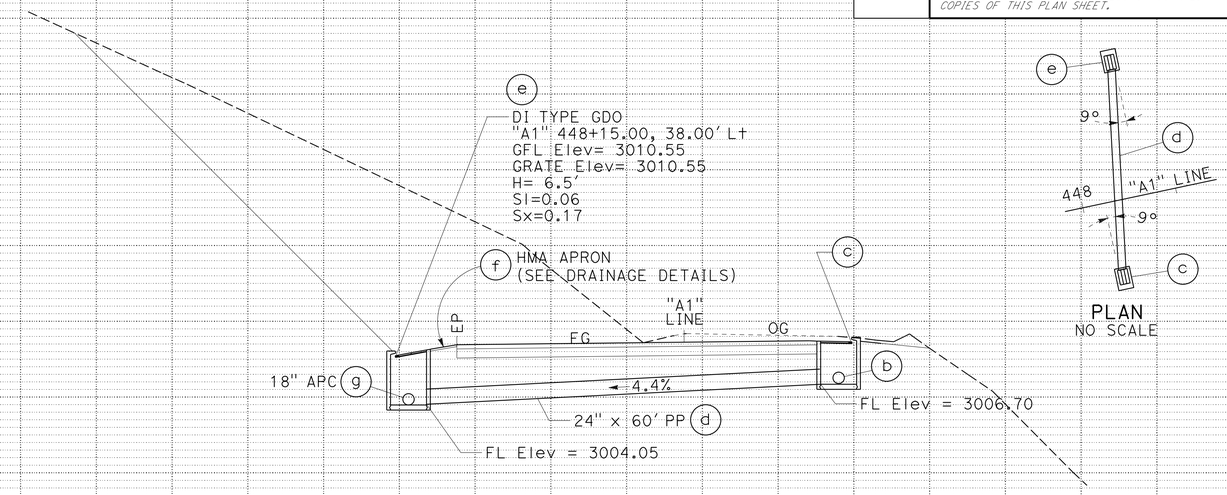

PLAN
NO SCALE

DRAINAGE SYSTEM (83.25)

"A1" 448+06.40, 22.00' Rt TO "A1" 448+15.00, 38.00' Lt

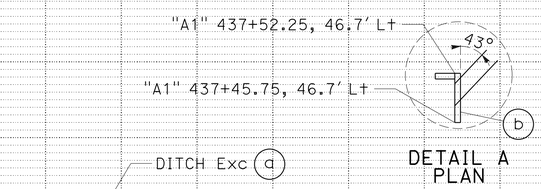

DETAIL A
PLAN

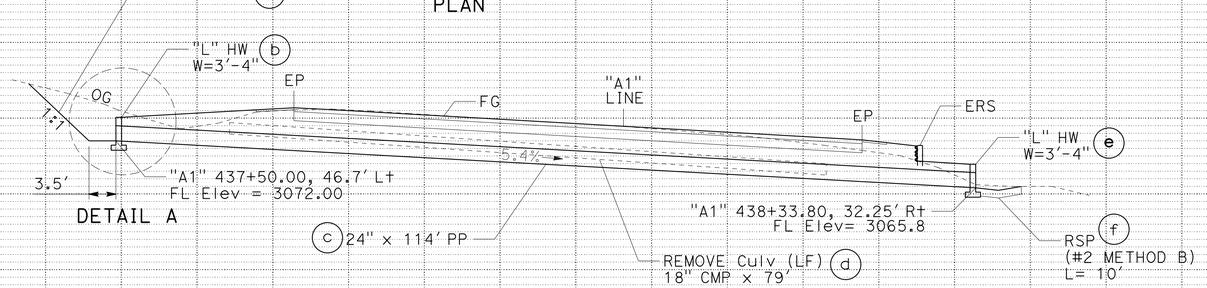

DRAINAGE SYSTEM (83.06)

"A1" 437+50.00, 46.7' Lt TO "A1" 438+33.80, 33.25' Rt

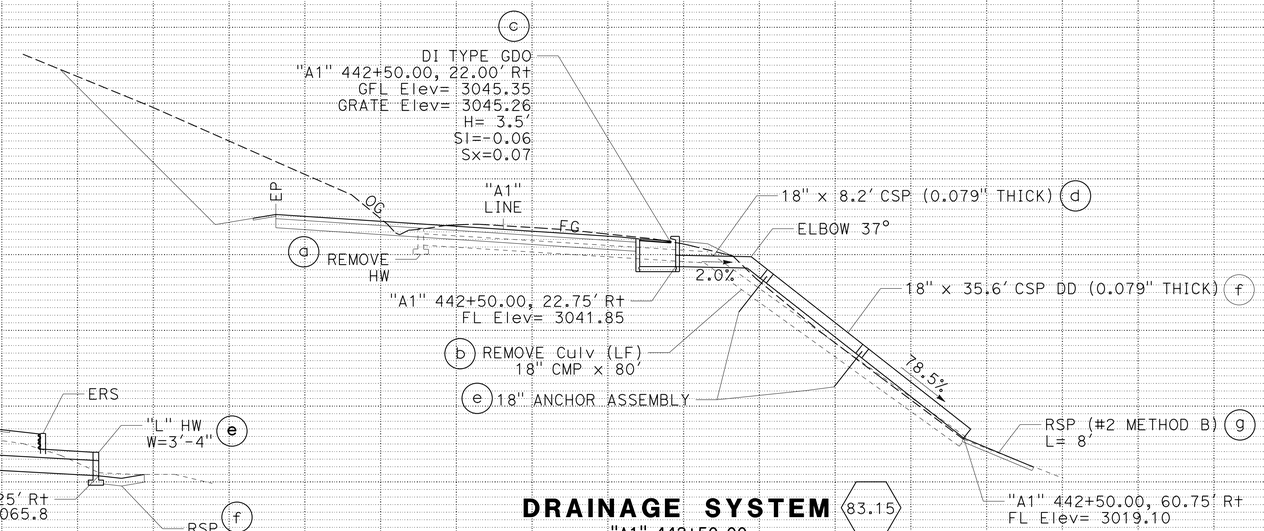

DRAINAGE SYSTEM (83.15)

"A1" 442+50.00

DRAINAGE PROFILES

SCALE: 1" = 10'

DP-1

REVISED BY	DATE REVISED
MIKE MOGEN	JEFF CARSON
CALCULATED-DESIGNED BY	CHECKED BY
FUNCTIONAL SUPERVISOR	STEVE THORNE

STATE OF CALIFORNIA - DEPARTMENT OF TRANSPORTATION
Caltrans
DESIGN

P:\proj2\02\2E740_plans\pse\22e740ib001.dgn

LAST REVISION 05-08-14 | DATE PLOTTED => 14-MAY-2014 | TIME PLOTTED => 13:53

Dist	COUNTY	ROUTE	POST MILES TOTAL PROJECT	SHEET No.	TOTAL SHEETS
02	Sha	299	83.0/84.0	26	61

REGISTERED CIVIL ENGINEER 05-14-14 DATE

05-19-14
PLANS APPROVAL DATE

REGISTERED PROFESSIONAL ENGINEER MIKE MOGEN No. C67018 Exp. 09-30-14 CIVIL STATE OF CALIFORNIA

THE STATE OF CALIFORNIA OR ITS OFFICERS OR AGENTS SHALL NOT BE RESPONSIBLE FOR THE ACCURACY OR COMPLETENESS OF SCANNED COPIES OF THIS PLAN SHEET.

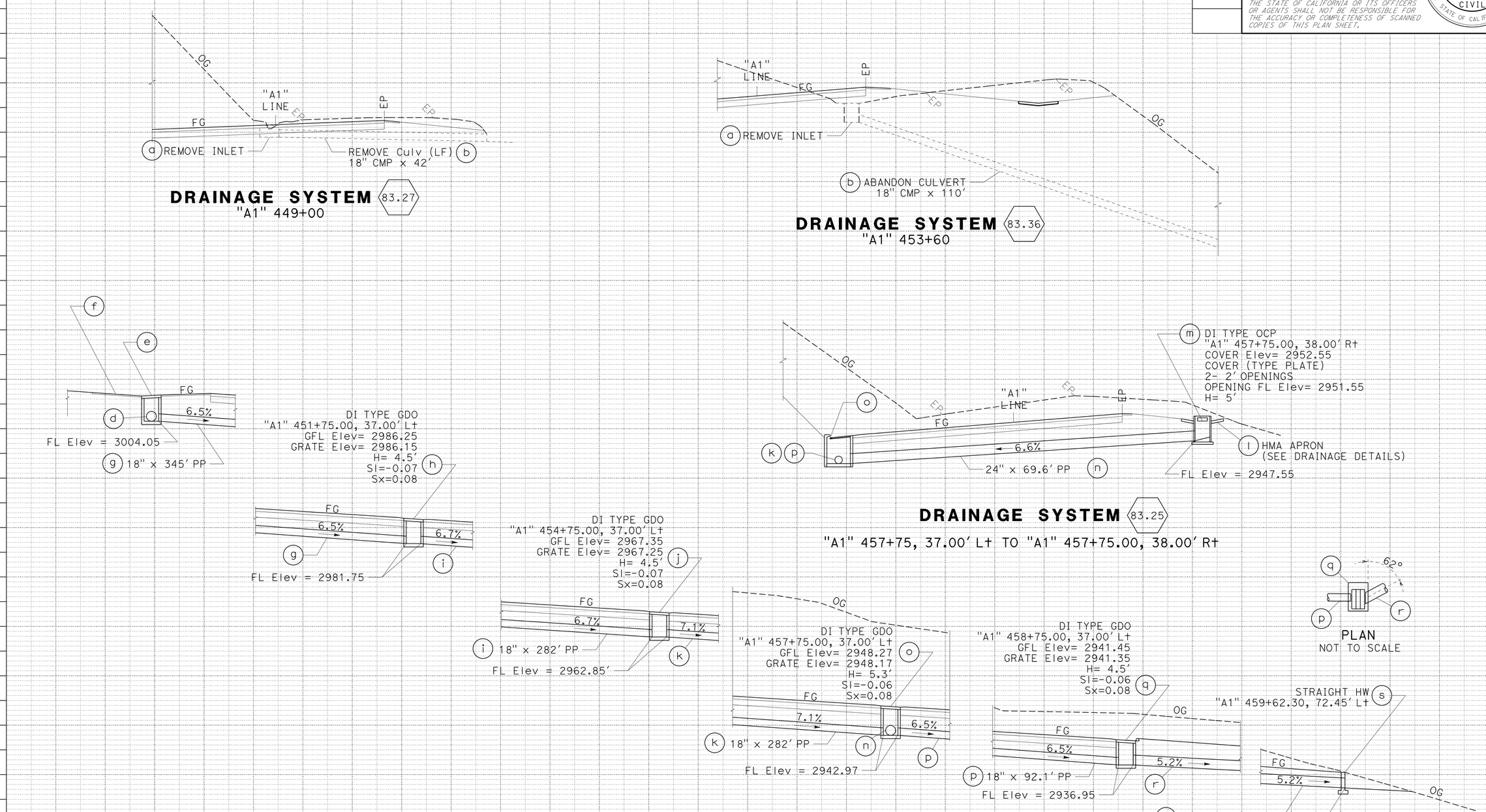

DRAINAGE PROFILES

SCALE: 1" = 10'

DP-2

REVISED BY | DATE REVISED
MIKE MOGEN | JEFF CARSON
CALCULATED-DESIGNED BY | CHECKED BY
FUNCTIONAL SUPERVISOR: STEVE THORNE

STATE OF CALIFORNIA - DEPARTMENT OF TRANSPORTATION
Caltrans
DESIGN

P:\proj2\02\2E740_plans\pse\22e740ib002.dgn

LAST REVISION DATE PLOTTED => 14-MAY-2014
05-08-14 TIME PLOTTED => 13:53

Dist	COUNTY	ROUTE	POST MILES TOTAL PROJECT	SHEET No.	TOTAL SHEETS
02	Sha	299	83.0/84.0	27	61

REGISTERED CIVIL ENGINEER 05-14-14 DATE

05-19-14
PLANS APPROVAL DATE

REGISTERED PROFESSIONAL ENGINEER MIKE MOGEN No. C67018 Exp. 09-30-14 CIVIL STATE OF CALIFORNIA

THE STATE OF CALIFORNIA OR ITS OFFICERS OR AGENTS SHALL NOT BE RESPONSIBLE FOR THE ACCURACY OR COMPLETENESS OF SCANNED COPIES OF THIS PLAN SHEET.

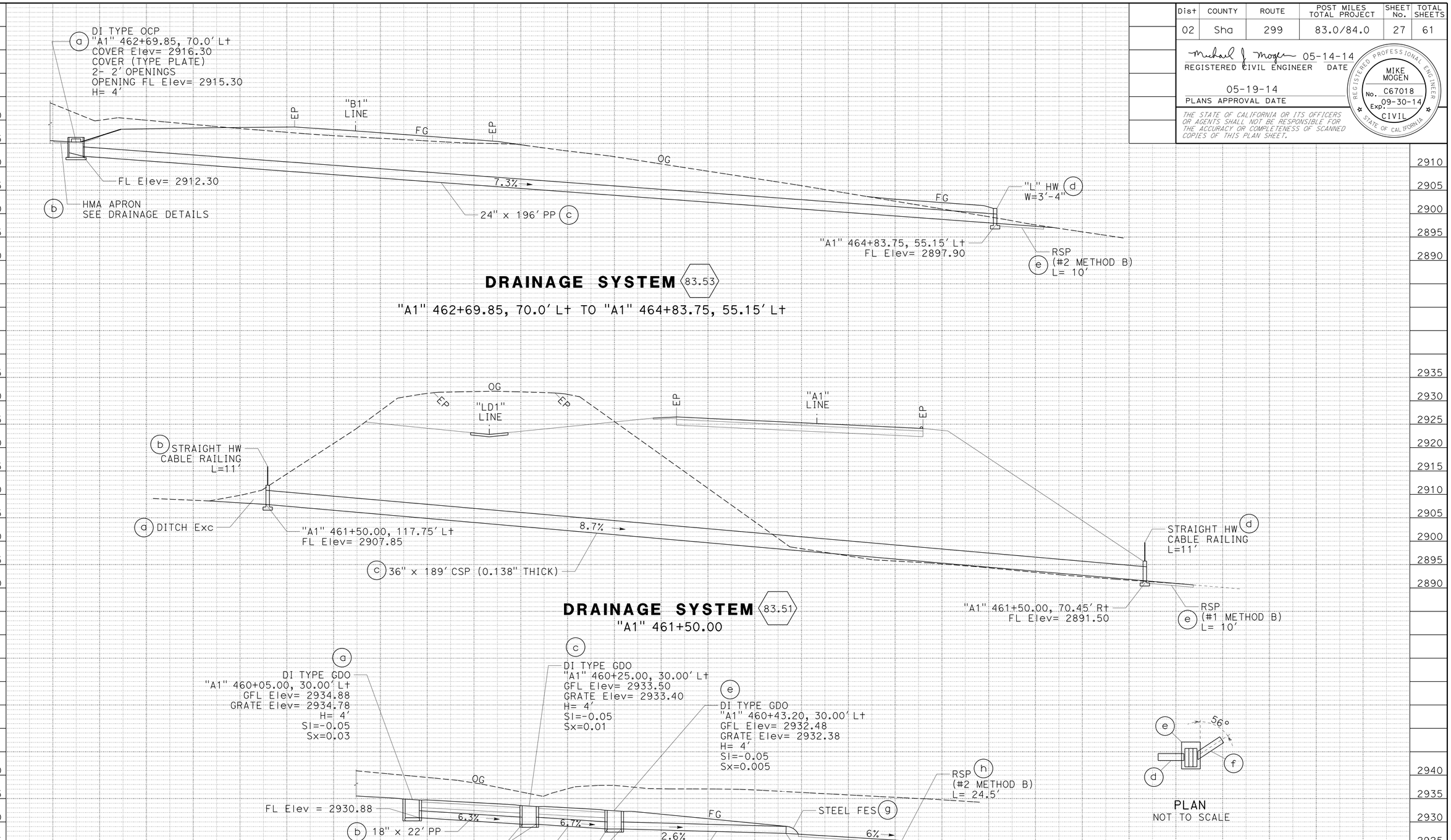

DRAINAGE PROFILES

SCALE: 1" = 10'

DP-3

REVISED BY | DATE REVISED
MIKE MOGEN | JEFF CARSON
CALCULATED-DESIGNED BY | CHECKED BY
FUNCTIONAL SUPERVISOR: STEVE THORNE

STATE OF CALIFORNIA - DEPARTMENT OF TRANSPORTATION
Caltrans
DESIGN

P:\proj2\02\2E740_plans\pse\22e740ib003.dgn

LAST REVISION | DATE PLOTTED => 14-MAY-2014
05-08-14 | TIME PLOTTED => 13:53

Dist	COUNTY	ROUTE	POST MILES TOTAL PROJECT	SHEET No.	TOTAL SHEETS
02	Sha	299	83.0/84.0	28	61

REGISTERED CIVIL ENGINEER 05-14-14 DATE

05-19-14
PLANS APPROVAL DATE

MIKE MOGEN No. C67018 Exp. 09-30-14 CIVIL — REGISTERED PROFESSIONAL ENGINEER — STATE OF CALIFORNIA

THE STATE OF CALIFORNIA OR ITS OFFICERS OR AGENTS SHALL NOT BE RESPONSIBLE FOR THE ACCURACY OR COMPLETENESS OF SCANNED COPIES OF THIS PLAN SHEET.

NOTE:

1. FOR CONNECTION TO AN EXISTING PIPE, FIELD VERIFY EXISTING PIPE SIZE, TYPE, AND SLOPE.

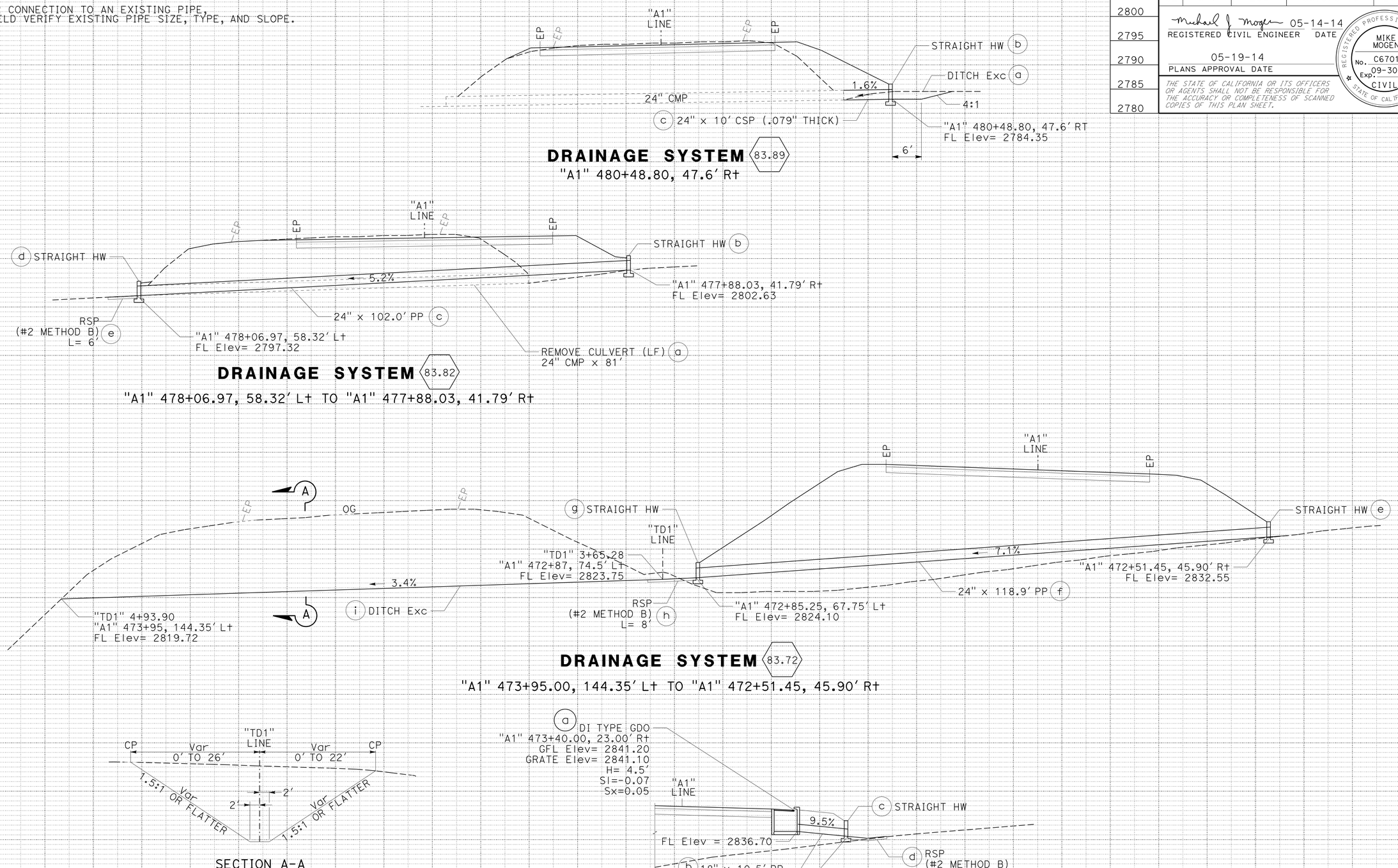

DRAINAGE PROFILES

SCALE: 1" = 10'

DP-4

REVISED BY | DATE REVISED
MIKE MOGEN | JEFF CARSON
CALCULATED-DESIGNED BY | CHECKED BY
FUNCTIONAL SUPERVISOR: STEVE THORNE

STATE OF CALIFORNIA - DEPARTMENT OF TRANSPORTATION
Caltrans
DESIGN

P:\proj2\02\2E740_plans\pse\22e740ib004.dgn

LAST REVISION 05-08-14 | DATE PLOTTED => 14-MAY-2014 | TIME PLOTTED => 13:53

Dist	COUNTY	ROUTE	POST MILES TOTAL PROJECT	SHEET No.	TOTAL SHEETS
02	Sha	299	83.0/84.0	29	61

REGISTERED CIVIL ENGINEER 05-14-15 DATE

05-19-14
PLANS APPROVAL DATE

REGISTERED PROFESSIONAL ENGINEER SHAUN ALEXANDER No. C70833 Exp. 06-30-15 CIVIL STATE OF CALIFORNIA

THE STATE OF CALIFORNIA OR ITS OFFICERS OR AGENTS SHALL NOT BE RESPONSIBLE FOR THE ACCURACY OR COMPLETENESS OF SCANNED COPIES OF THIS PLAN SHEET.

ABBREVIATIONS:

SI LONGITUDINAL SLOPE
Sx CROSS SLOPE

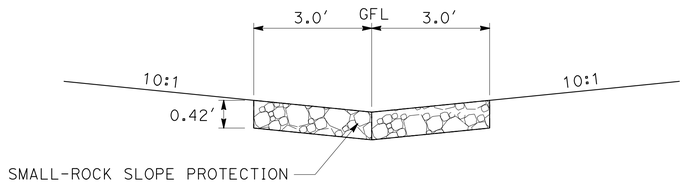

SMALL-RSP DETAIL
"A1" 449+25 TO 457+71 Rt
"A1" 459+58 TO 462+69 Lt

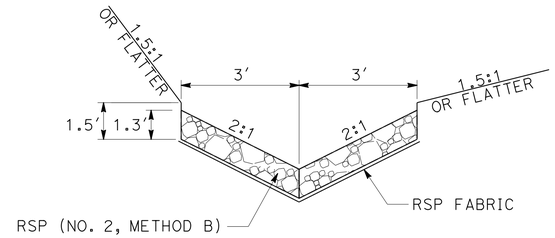

RSP No. 2 DETAIL

83.49 (h) 83.72 (d) 83.72 (h)

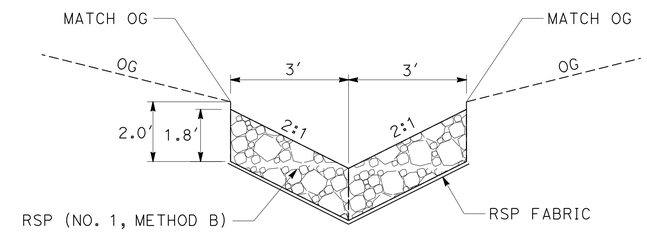

RSP No. 1 DETAIL

83.51 (e)

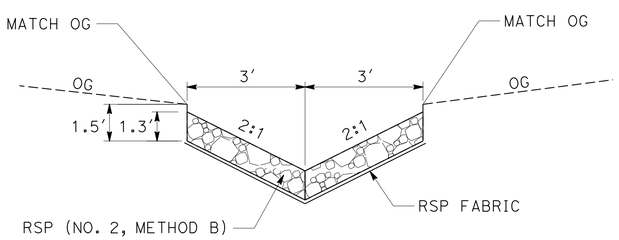

RSP No. 2 DETAIL
"A1" 459+62 TO 460+81

83.06 (f) 83.15 (g) 83.53 (e) 83.82 (e)

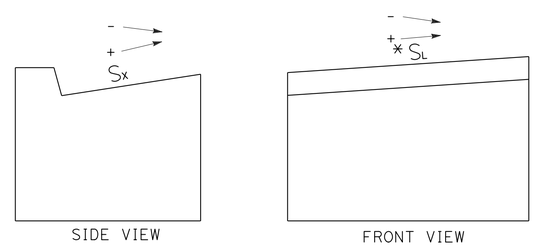

INLET SLOPE FIGURE
* THE SLOPE S_L REFERENCES UP-STATION

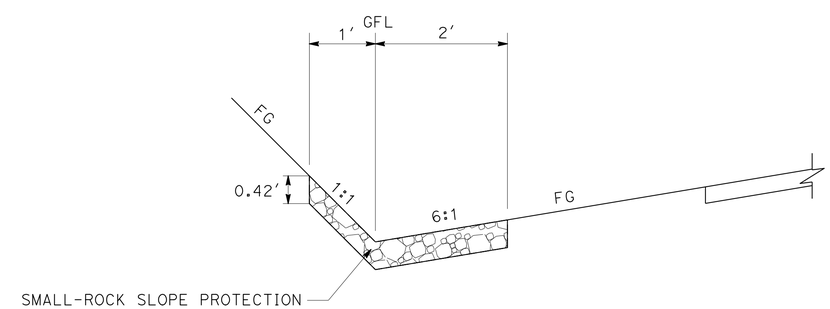

SMALL-RSP DETAIL
"A1" 442+50 TO 448+00

DRAINAGE DETAILS

NO SCALE

DD-1

REVISED BY	DATE REVISED
JEFF CARSON	SHAUN ALEXANDER
CALCULATED-DESIGNED BY	CHECKED BY
FUNCTIONAL SUPERVISOR	AL TRUJILLO

STATE OF CALIFORNIA - DEPARTMENT OF TRANSPORTATION
Caltrans
DESIGN

P:\proj2\02\2E740_plans\pse\22e740ic001.dgn

LAST REVISION 05-13-14 | DATE PLOTTED => 14-MAY-2014 | TIME PLOTTED => 13:53

Dist	COUNTY	ROUTE	POST MILES TOTAL PROJECT	SHEET No.	TOTAL SHEETS
02	Sha	299	83.0/84.0	30	61

REGISTERED CIVIL ENGINEER 05-14-15 DATE

05-19-14
PLANS APPROVAL DATE

REGISTERED PROFESSIONAL ENGINEER SHAUN ALEXANDER No. C70833 Exp. 06-30-15 CIVIL STATE OF CALIFORNIA

THE STATE OF CALIFORNIA OR ITS OFFICERS OR AGENTS SHALL NOT BE RESPONSIBLE FOR THE ACCURACY OR COMPLETENESS OF SCANNED COPIES OF THIS PLAN SHEET.

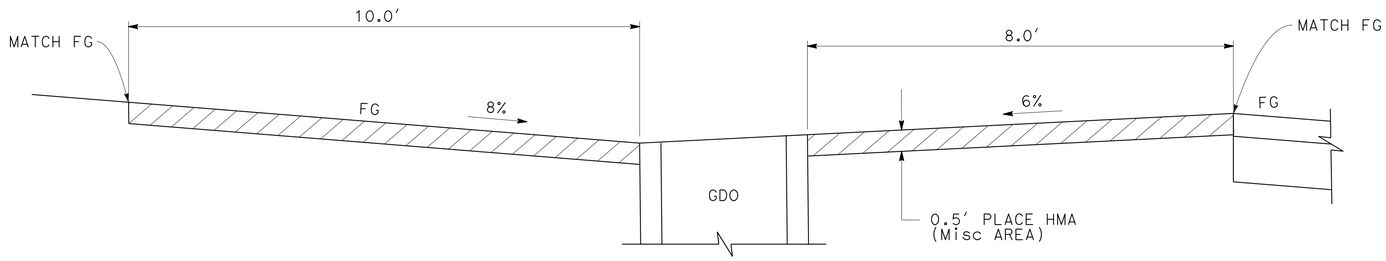

SECTION B-B

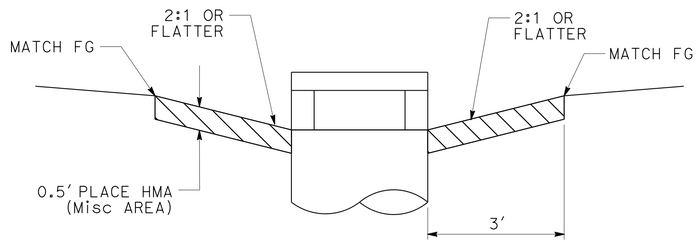

SECTION C-C

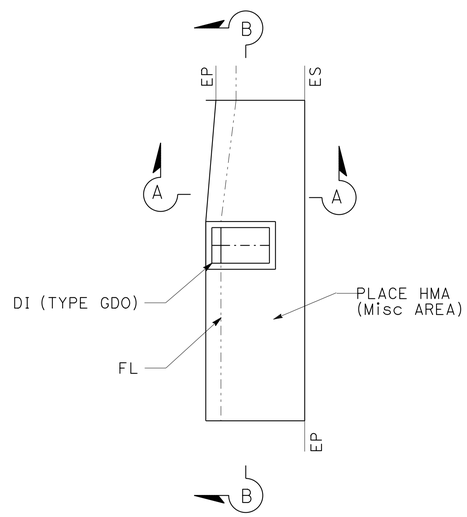

PLAN

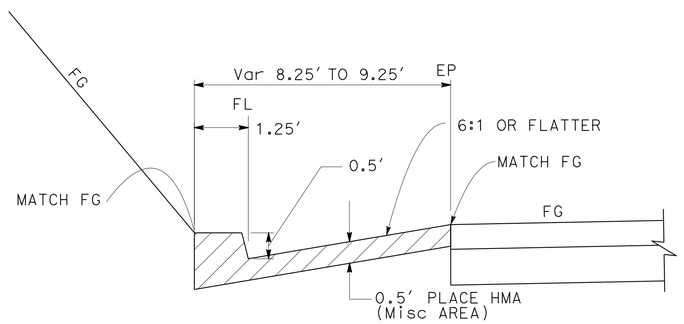

SECTION A-A

GDO INLET APRON DETAIL

DRAINAGE SYSTEM No.

83.25 (f)

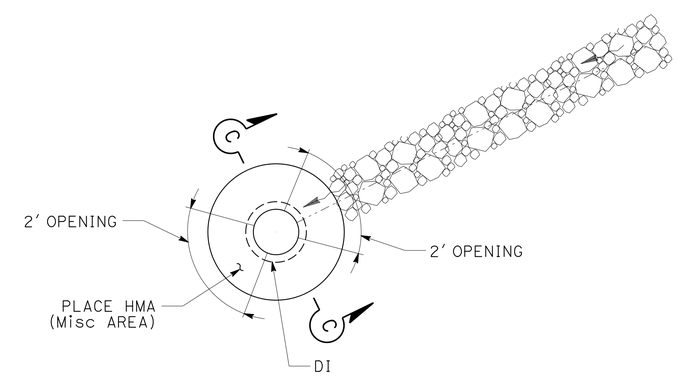

HMA APRON AND DRAINAGE INLET DETAIL

83.25 (I) 83.53 (D)

DRAINAGE DETAILS

NO SCALE **DD-2**

REVISED BY	DATE REVISED
JEFF CARSON	SHAUN ALEXANDER
CALCULATED-DESIGNED BY	CHECKED BY
FUNCTIONAL SUPERVISOR	AL TRUJILLO

STATE OF CALIFORNIA - DEPARTMENT OF TRANSPORTATION
Caltrans
DESIGN

P:\proj2\02\2E740_plans\pse\22e740ic002.dgn

LAST REVISION 05-13-14 | DATE PLOTTED => 14-MAY-2014 | TIME PLOTTED => 13:53

Dist	COUNTY	ROUTE	POST MILES TOTAL PROJECT	SHEET No.	TOTAL SHEETS
02	Sha	299	83.0/84.0	31	61

REGISTERED CIVIL ENGINEER 05-14-15 DATE

05-19-14
PLANS APPROVAL DATE

REGISTERED PROFESSIONAL ENGINEER SHAUN ALEXANDER No. C70833 Exp. 06-30-15 CIVIL STATE OF CALIFORNIA

THE STATE OF CALIFORNIA OR ITS OFFICERS OR AGENTS SHALL NOT BE RESPONSIBLE FOR THE ACCURACY OR COMPLETENESS OF SCANNED COPIES OF THIS PLAN SHEET.

NOTES:

1. ALL PP CULVERTS SHALL HAVE SMOOTH INTERIOR WALL.
2. ALL CULVERT PIPES WITH POSITIVE OR DOWNDRAIN JOINT TYPES SHALL BE WATERTIGHT.

LINED CHANNEL QUANTITIES

STATION	SMALL-ROCK SLOPE PROTECTION	ROCK SLOPE PROTECTION (No. 2, METHOD B)	ROCK SLOPE PROECTION FABRIC (CLASS 8)	COMMENTS
	CY	CY	SQYD	
"A1" 442+50, 38.0′ L+ TO "A1" 448+00, 38.0′ L+	27			SMALL-RSP
"A1" 449+25, 46.7′ R+ TO "A1" 457+71, 38.0′ R+	85			SMALL-RSP
"A1" 459+62, 71.9′ L+ TO "A1" 460+81, 110.9′ L+		42	93	RSP No. 2\FABRIC
"A1" 459+58, 50.0′ L+ TO "A1" 462+69, 70.0′ L+	31			SMALL-RSP
TOTAL	143	42	93	INCLUDED ON DRAINAGE QUANTITY TABLE

DRAINAGE QUANTITIES
DQ-1

REVISED BY | DATE REVISED
JEFF CARSON | SHAUN ALEXANDER
CALCULATED-DESIGNED BY | CHECKED BY
FUNCTIONAL SUPERVISOR
AL TRUJILLO

STATE OF CALIFORNIA - DEPARTMENT OF TRANSPORTATION
Caltrans
DESIGN

P:\proj2\02\2E740_plans\pse\22e740id001.dgn

LAST REVISION 05-13-14 | DATE PLOTTED => 14-MAY-2014 | TIME PLOTTED => 13:53

Dist	COUNTY	ROUTE	POST MILES TOTAL PROJECT	SHEET No.	TOTAL SHEETS
02	Sha	299	83.0/84.0	32	61

REGISTERED CIVIL ENGINEER 05-14-15 DATE

05-19-14
PLANS APPROVAL DATE

REGISTERED PROFESSIONAL ENGINEER SHAUN ALEXANDER No. C70833 Exp. 06-30-15 CIVIL STATE OF CALIFORNIA

THE STATE OF CALIFORNIA OR ITS OFFICERS OR AGENTS SHALL NOT BE RESPONSIBLE FOR THE ACCURACY OR COMPLETENESS OF SCANNED COPIES OF THIS PLAN SHEET.

DRAINAGE QUANTITIES

SHEET No.	SYSTEM No. ⬡	UNIT No. ◯	36" CORRUGATED STEEL PIPE (0.138" THICK) LF	24" PLASTIC PIPE LF	18" PLASTIC PIPE LF	18" CORRUGATED STEEL PIPE (0.079" THICK) LF	18" CORRUGATED STEEL PIPE DOWNDRAIN (0.079" THICK) LF	18" ANCHOR ASSEMBLY EA	MINOR CONCRETE (MINOR STRUCTURE) CY	Misc IRON AND STEEL LB	36" PRECAST CONCRETE PIPE INLET LF	HOT MIX ASPHALT (TYPE A) TON	PLACE HOT MIX ASPHALT (MISCELLANEOUS AREA) SQYD	ROCK SLOPE PROTECTION (No. 2 METHOD B) CY	REMOVE CULVERT (LF) LF	ABANDON CULVERT LF	REMOVE HEADWALL EA	REMOVE INLET EA	DITCH EXCAVATION CY	18" STEEL FLARED END SECTION EA	CABLE RAILING LF	ROCK SLOPE PROTECTION (No. 1, METHOD B) CY	SAND BACKFILL CY	ROCK SLOPE PROTECTION FABRIC (CLASS 8) SQYD	24" CORRUGATED STEEL PIPE (0.079" THICK) LF	SMALL-ROCK SLOPE PROTECTION CY	(N) HEIGHT LF	COMMENTS	SHEET No.	SYSTEM No. ⬡	UNIT No. ◯
DP-1	83.06	a																	61										DP-1	83.06	a
		b							1.29																			"L" HW, W= 3'-4"			b
		c		114																											c
		d													79													REMOVE 18" CMP x 79'			d
		e							1.29																			"L" HW, W= 3'-4"			e
		f												3.2										7.5							f
	83.15	a															1											REMOVE HW		83.15	a
		b													80													REMOVE 18" CMP x 80'			b
		c							1.78	473																	3.5	DI (TYPE GDO), GRATE (TYPE 24-12X)			c
		d				8.2																									d
		e						2																							e
		f					35.6																								f
		g												2.6										6.0							g
	83.25	a							2.49	473																	5.7	DI (TYPE GDO), GRATE (TYPE 24-12X)		83.25	a
		b			28.5																										b
		c							2.46	473																	5.6	DI (TYPE GDO), GRATE (TYPE 24-12X)			c
		d		60																											d
		e							2.75	473																	6.5	DI (TYPE GDO), GRATE (TYPE 24-12X)			e
		f										7.5	19.8															HMA APRON			f
DP-2		g			345																								DP-2		g
		h							2.10	473																	4.5	DI (TYPE GDO), GRATE (TYPE 24-12X)			h
		i			282																										i
		j							2.10	473																	4.5	DI (TYPE GDO), GRATE (TYPE 24-12X)			j
		k			282																										k
		l										2.0	6.3															HMA APRON			l
		m							0.40	112	5.5																5	DI (TYPE OCP), COVER (TYPE PLATE)			m
		n		69.6																											n
		o							2.36	473																	5.3	DI (TYPE GDO), GRATE (TYPE 24-12X)			o
		p			92.1																										p
		q							2.10	473																	4.5	DI (TYPE GDO), GRATE (TYPE 24-12X)			q
		r		88.7																											r
		s							1.20																			STRAIGHT HW			s
	83.27	a																1												83.27	a
		b													42													REMOVE 18" CMP x 42'			b
	83.36	a																1												83.36	a
		b														110							7.2					ABANDON 18" x 110' CMP			b
SUBTOTAL			0	332.3	1029.6	8.2	35.6	2	22.32	3896	5.5	9.5	26.1	5.8	201	110	1	2	61	0	0	0	7.2	13.5	0	0					

(N) - NOT A SEPARATE PAY ITEM, FOR INFORMATION ONLY

DRAINAGE QUANTITIES
DQ-2

STATE OF CALIFORNIA - DEPARTMENT OF TRANSPORTATION
Caltrans® DESIGN

FUNCTIONAL SUPERVISOR: AL TRUJILLO
CALCULATED-DESIGNED BY: JEFF CARSON
CHECKED BY: SHAUN ALEXANDER
REVISED BY
DATE REVISED

P:\proj2\02\2E740_plans\pse\22e740id002.dgn

LAST REVISION 05-13-14 | DATE PLOTTED => 14-MAY-2014 | TIME PLOTTED => 13:53

Dist	COUNTY	ROUTE	POST MILES TOTAL PROJECT	SHEET No.	TOTAL SHEETS
02	Sha	299	83.0/84.0	33	61

REGISTERED CIVIL ENGINEER 05-14-15 DATE

05-19-14
PLANS APPROVAL DATE

REGISTERED PROFESSIONAL ENGINEER SHAUN ALEXANDER No. C70833 Exp. 06-30-15 CIVIL STATE OF CALIFORNIA

THE STATE OF CALIFORNIA OR ITS OFFICERS OR AGENTS SHALL NOT BE RESPONSIBLE FOR THE ACCURACY OR COMPLETENESS OF SCANNED COPIES OF THIS PLAN SHEET.

DRAINAGE QUANTITIES

SHEET No.	SYSTEM No.	UNIT No.	36" CORRUGATED STEEL PIPE (0.138" THICK)	24" PLASTIC PIPE	18" PLASTIC PIPE	18" CORRUGATED STEEL PIPE (0.079" THICK)	18" CORRUGATED STEEL PIPE DOWNDRAIN (0.079" THICK)	18" ANCHOR ASSEMBLY	MINOR CONCRETE (MINOR STRUCTURE)	Misc IRON AND STEEL	36" PRECAST CONCRETE PIPE INLET	HOT MIX ASPHALT (TYPE A)	PLACE HOT MIX ASPHALT (MISCELLANEOUS AREA)	ROCK SLOPE PROTECTION (No. 2 METHOD B)	REMOVE CULVERT	ABANDON CULVERT	REMOVE HEADWALL	REMOVE INLET	DITCH EXCAVATION	18" STEEL FLARED END SECTION	CABLE RAILING	ROCK SLOPE PROTECTION (No. 1, METHOD B)	SAND BACKFILL	ROCK SLOPE PROTECTION FABRIC (CLASS 8)	24" CORRUGATED STEEL PIPE (0.079" THICK)	SMALL-ROCK SLOPE PROTECTION	(N) HEIGHT	COMMENTS	SHEET No.	SYSTEM No.	UNIT No.
			LF	LF	LF	LF	LF	EA	CY	LB	LF	TON	SQYD	CY	LF	LF	EA	EA	CY	EA	LF	CY	CY	SQYD	LF	CY	LF				
DP-3	83.49	a							1.94	473																	4	DI (TYPE GDO), GRATE (TYPE 24-12X)	DP-3	83.49	a
		b			22																										b
		c							1.94	473																	4	DI (TYPE GDO), GRATE (TYPE 24-12X)			c
		d			15.2																										d
		e							1.94	473																	4	DI (TYPE GDO), GRATE (TYPE 24-12X)			e
		f				35.2																									f
		g																		1								18" STEEL FLARED END SECTION			g
		h												7.9										18.3							h
	83.51	a																	18											83.51	a
		b							1.95												11							STRAIGHT HW, CABLE RAILING			b
		c	189																												c
		d							1.95												11							STRAIGHT HW, CABLE RAILING			d
		e																				4.5		7.5							e
	83.53	a							0.40	112	4.5																4	DI (TYPE OCP), COVER (TYPE PLATE)		83.53	a
		b										2.0	6.3															HMA APRON			b
		c		196																											c
		d							1.29																			"L" HW, W=3'-4"			d
		e												3.2										7.5							e
DP-4	83.72	a							2.10	473																	4.5	DI (TYPE GDO), GRATE (TYPE 24-12X)	DP-4	83.72	a
		b			10.5																										b
		c							0.91																			STRAIGHT HW			c
		d												2.6										6.0							d
		e							1.20																			STRAIGHT HW			e
		f		118.9																											f
		g							1.20																			STRAIGHT HW			g
		h												2.6										6.0							h
		i																	1308												i
	83.82	a													81													REMOVE 24" CMP x 81'		83.82	a
		b							1.20																			STRAIGHT HW			b
		c		102																											c
		d							1.20																			STRAIGHT HW			d
		e												1.9										4.5							e
	83.89	a																	14											83.89	a
		b							1.20																			STRAIGHT HW			b
		c																							10						c
DQ-3 TOTALS			189	416.9	47.7	35.2	0	0	20.42	2004	4.5	2.0	6.3	18.2	81	0	0	0	1340	1	22	4.5	0	49.8	10	0					
DQ-2 TOTALS			0	332.3	1029.6	8.2	35.6	2	22.32	3896	5.5	9.5	26.1	5.8	201	110	1	2	61	0	0	0	7.2	13.5	0	0					
DQ-1 TOTALS			0	0	0	0	0	0	0	0	0	0	0	42.0	0	0	0	0	0	0	0	0	0	93.0	0	143					
GRAND TOTALS			189	749.2	1077.3	43.4	35.6	2	42.74	5900	10.0	*11.5	32.4	66.0	282	110	1	2	1401	1	22	4.5	7.2	156.3	10	143					

(N) - NOT A SEPARATE PAY ITEM, FOR INFORMATION ONLY
* - QUANTITY SHOWN ON SUMMARY OF QUANTITIES (SHEET Q-1)

DRAINAGE QUANTITIES
DQ-3

REVISED BY | DATE REVISED
JEFF CARSON | SHAUN ALEXANDER
CALCULATED-DESIGNED BY | CHECKED BY
FUNCTIONAL SUPERVISOR
AL TRUJILLO

STATE OF CALIFORNIA - DEPARTMENT OF TRANSPORTATION
Caltrans
DESIGN

P:\proj2\02\2E740_plans\pse\22e740id003.dgn

LAST REVISION 05-13-14 | DATE PLOTTED => 14-MAY-2014 | TIME PLOTTED => 13:53

Dist	COUNTY	ROUTE	POST MILES TOTAL PROJECT	SHEET No.	TOTAL SHEETS
02	Sha	299	83.0/84.0	34	61

REGISTERED CIVIL ENGINEER 05-14-15 DATE

05-19-14
PLANS APPROVAL DATE

REGISTERED PROFESSIONAL ENGINEER SHAUN ALEXANDER No. C70833 Exp. 06-30-15 CIVIL STATE OF CALIFORNIA

THE STATE OF CALIFORNIA OR ITS OFFICERS OR AGENTS SHALL NOT BE RESPONSIBLE FOR THE ACCURACY OR COMPLETENESS OF SCANNED COPIES OF THIS PLAN SHEET.

NOTES:

1. EXACT SIGN LOCATIONS WILL BE DETERMINED BY THE ENGINEER.
2. CALIFORNIA CODES ARE DESIGNATED BY (CA), OTHERWISE FEDERAL CODES ARE SHOWN.

LEGEND

SIGN, STATIONARY MOUNTED, SINGLE POST

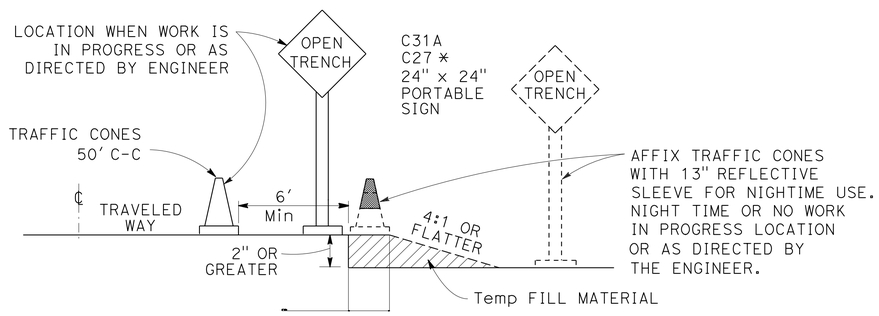

OPEN TRENCH SIGNING AND MARKING

* PLACE AT 250' INTERVALS THROUGH THE OPEN TRENCH AREA, ALTERNATE C27 (OPEN TRENCH) AND C31A (NO SHOULDER) SIGNS

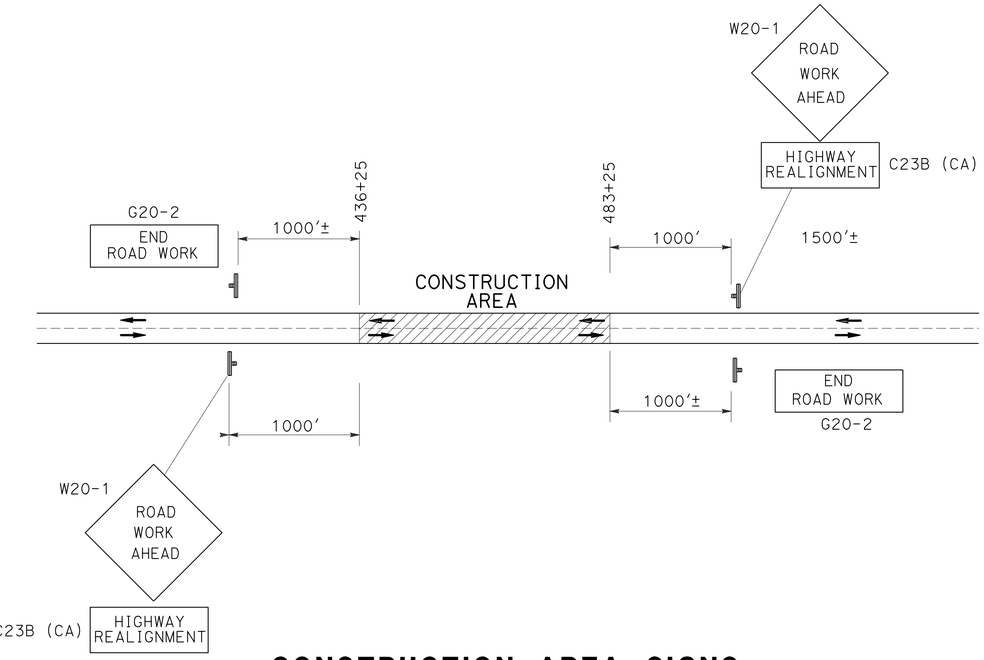

CONSTRUCTION AREA SIGNS (TYPICAL)

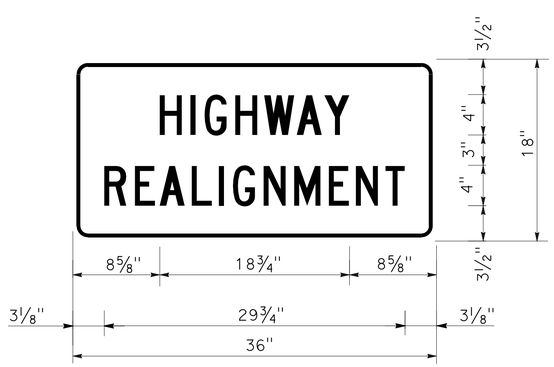

C23B (CA) SIGN DETAIL

1.5" RADIUS, 0.4" BORDER, 0.4" INDENT, BLACK ON ORANGE; [HIGHWAY] C; [REALIGNMENT] C;

CONSTRUCTION AREA SIGNS (STATIONARY MOUNTED)

CODE	PANEL SIZE	SIGN MESSAGE	No. AND SIZE OF POSTS	EACH
W20-1	48" x 48"	ROAD WORK AHEAD	1-4" x 6"	2
C23B (CA)	36" x 18"	HIGHWAY REALIGNMENT		2
G20-2	36" x 18"	END ROAD WORK	1-4" x 4"	2
TOTAL				6

CONSTRUCTION AREA SIGNS

NO SCALE

CS-1

REVISED BY | DATE REVISED
JEFF CARSON | SHAUN ALEXANDER
CALCULATED-DESIGNED BY | CHECKED BY
FUNCTIONAL SUPERVISOR: AL TRUJILLO
STATE OF CALIFORNIA - DEPARTMENT OF TRANSPORTATION
Caltrans® DESIGN
P:\proj2\02\2E740_plans\pse\22e7401a001.dgn

LAST REVISION 05-13-14 | DATE PLOTTED => 14-MAY-2014 | TIME PLOTTED => 13:53

Dist	COUNTY	ROUTE	POST MILES TOTAL PROJECT	SHEET No.	TOTAL SHEETS
02	Sha	299	83.0/84.0	35	61

REGISTERED CIVIL ENGINEER 05-14-15 DATE

05-19-14
PLANS APPROVAL DATE

REGISTERED PROFESSIONAL ENGINEER SHAUN ALEXANDER No. C70833 Exp. 06-30-15 CIVIL STATE OF CALIFORNIA

THE STATE OF CALIFORNIA OR ITS OFFICERS OR AGENTS SHALL NOT BE RESPONSIBLE FOR THE ACCURACY OR COMPLETENESS OF SCANNED COPIES OF THIS PLAN SHEET.

LEGEND:

- S=XX′ DELINEATOR SPACING
- ROADSIDE SIGN (1-POST)
- MILEPOST MARKER
- MARKER (CULVERT)
- OBJECT MARKER (TYPE L)
- DELINEATOR (TYPE E)
- STRIPING CHANGE
- REMOVE ROADSIDE SIGN
- REMOVE MARKER
- REMOVE DELINEATOR
- RELOCATE ROADSIDE SIGN
- RECONSTRUCT TURNABLE ROADSIDE SIGN
- ROADSIDE SIGN
- PAVEMENT DELINEATION STRIPE DETAIL No.

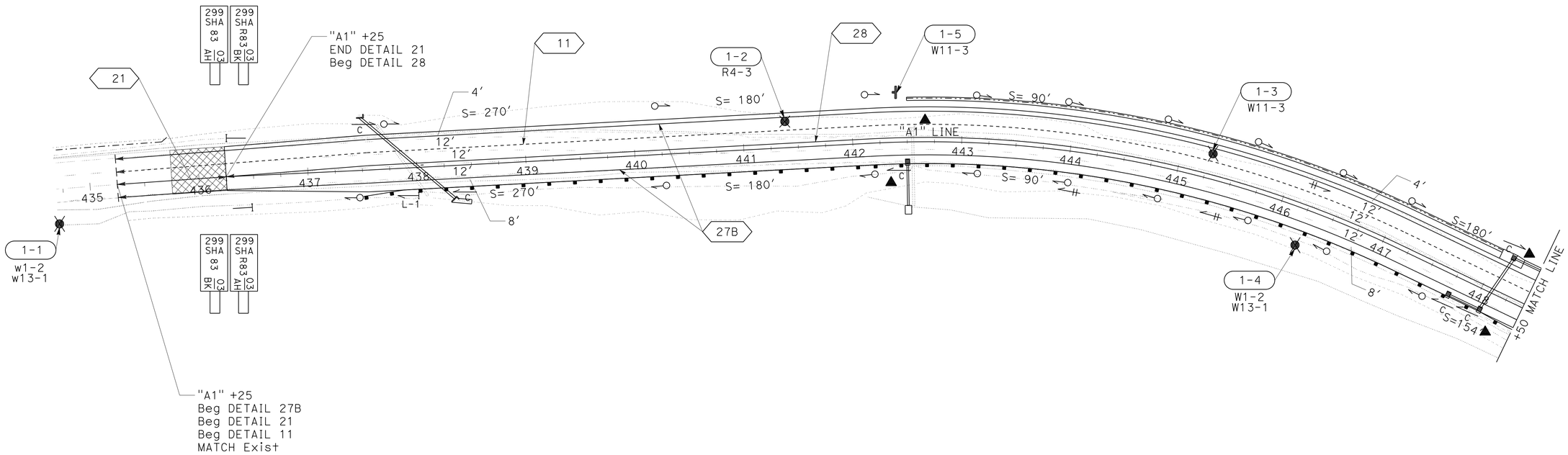

PAVEMENT DELINEATION AND SIGN PLAN

SCALE: 1" = 50′

PD-1

APPROVED FOR PAVEMENT DELINEATION AND SIGN WORK ONLY

REVISED BY	DATE REVISED

CALCULATED-DESIGNED BY: JEFF CARSON
CHECKED BY: SHAUN ALEXANDER
FUNCTIONAL SUPERVISOR: AL TRUJILLO

STATE OF CALIFORNIA - DEPARTMENT OF TRANSPORTATION
Caltrans® DESIGN

P:\proj2\02\2E740_plans\pse\22e740na001.dgn

LAST REVISION 05-13-14 | DATE PLOTTED => 14-MAY-2014 | TIME PLOTTED => 13:53

Dist	COUNTY	ROUTE	POST MILES TOTAL PROJECT	SHEET No.	TOTAL SHEETS
02	Sha	299	83.0/84.0	36	61

Shaun Alexander 05-14-15
REGISTERED CIVIL ENGINEER DATE

05-19-14
PLANS APPROVAL DATE

REGISTERED PROFESSIONAL ENGINEER
SHAUN ALEXANDER
No. C70833
Exp. 06-30-15
CIVIL
STATE OF CALIFORNIA

THE STATE OF CALIFORNIA OR ITS OFFICERS OR AGENTS SHALL NOT BE RESPONSIBLE FOR THE ACCURACY OR COMPLETENESS OF SCANNED COPIES OF THIS PLAN SHEET.

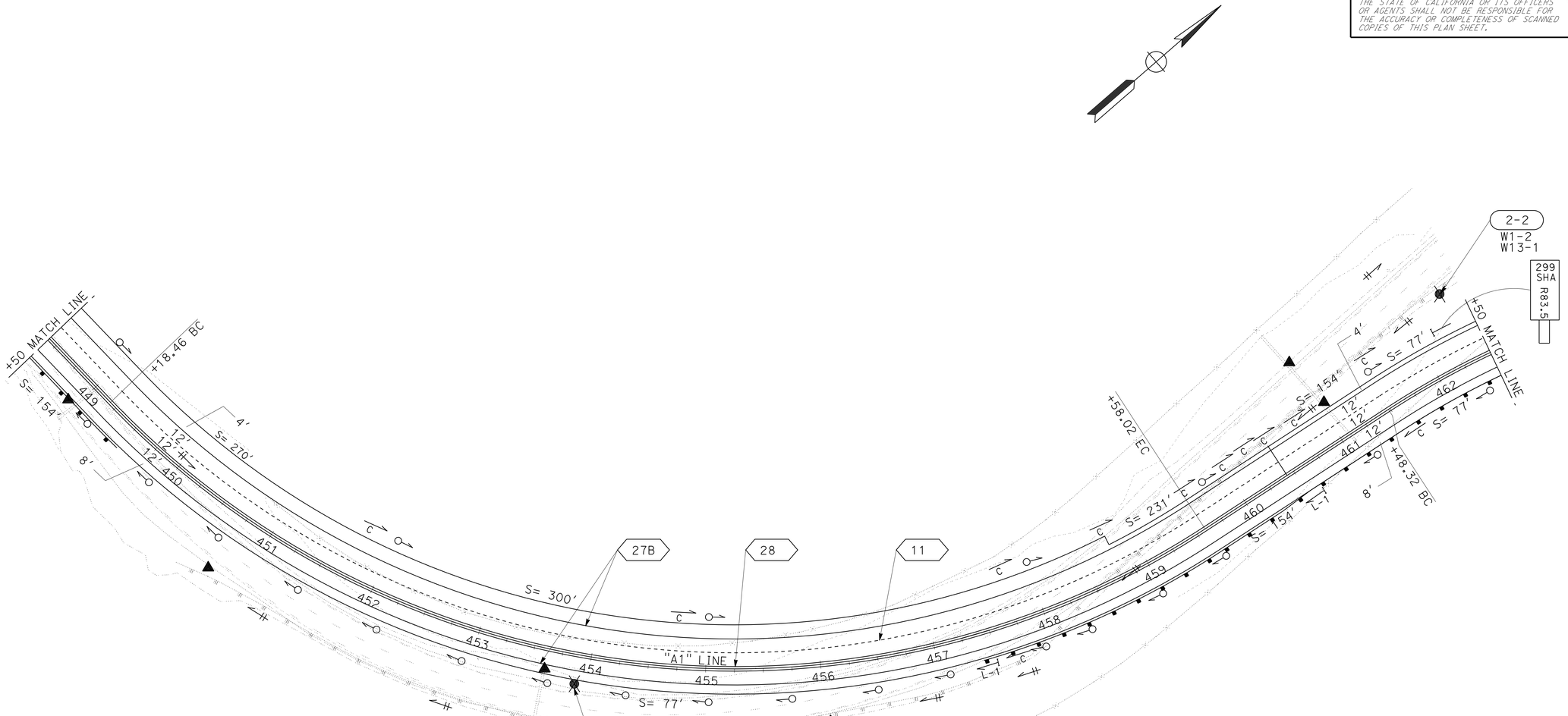

APPROVED FOR PAVEMENT DELINEATION AND SIGN WORK ONLY

PAVEMENT DELINEATION AND SIGN PLAN

SCALE: 1" = 50'

PD-2

CALCULATED-DESIGNED BY	JEFF CARSON	REVISED BY
CHECKED BY	SHAUN ALEXANDER	DATE REVISED
FUNCTIONAL SUPERVISOR	AL TRUJILLO	

STATE OF CALIFORNIA - DEPARTMENT OF TRANSPORTATION
Caltrans
DESIGN

P:\proj2\02\2E740_plans\pse\22e740na002.dgn

LAST REVISION 05-13-14 | DATE PLOTTED => 14-MAY-2014 | TIME PLOTTED => 13:53

Dist	COUNTY	ROUTE	POST MILES TOTAL PROJECT	SHEET No.	TOTAL SHEETS
02	Sha	299	83.0/84.0	37	61

REGISTERED CIVIL ENGINEER 05-14-15 DATE

05-19-14
PLANS APPROVAL DATE

REGISTERED PROFESSIONAL ENGINEER
SHAUN ALEXANDER
No. C70833
Exp. 06-30-15
CIVIL
STATE OF CALIFORNIA

THE STATE OF CALIFORNIA OR ITS OFFICERS OR AGENTS SHALL NOT BE RESPONSIBLE FOR THE ACCURACY OR COMPLETENESS OF SCANNED COPIES OF THIS PLAN SHEET.

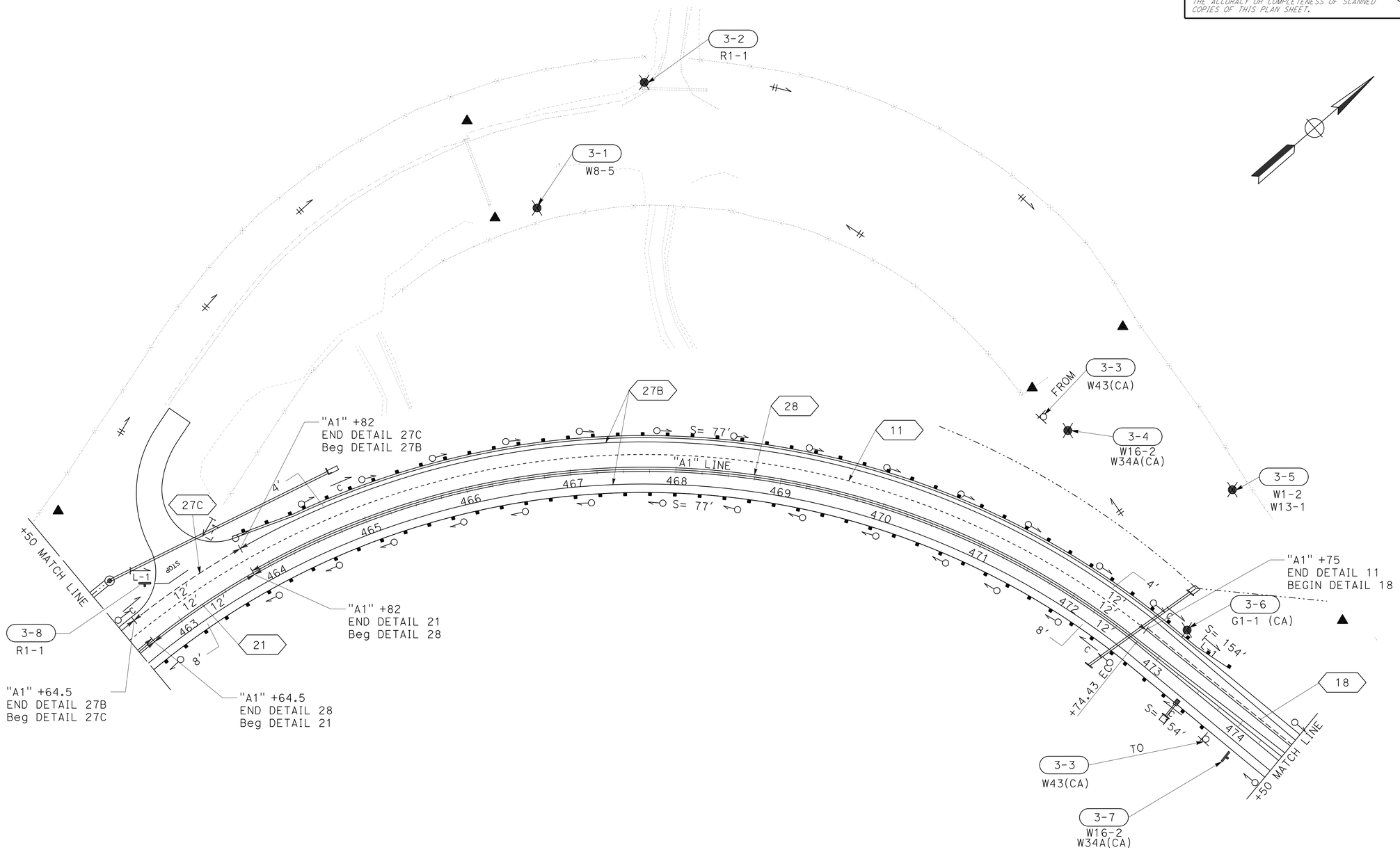

PAVEMENT DELINEATION AND SIGN PLAN

SCALE: 1" = 50'

PD-3

APPROVED FOR PAVEMENT DELINEATION AND SIGN WORK ONLY

REVISED BY	DATE REVISED

CALCULATED-DESIGNED BY	JEFF CARSON
CHECKED BY	SHAUN ALEXANDER
FUNCTIONAL SUPERVISOR	AL TRUJILLO

STATE OF CALIFORNIA - DEPARTMENT OF TRANSPORTATION
Caltrans
DESIGN

P:\proj2\02\2E740_plans\pse\22e740na003.dgn

LAST REVISION 05-13-14 | DATE PLOTTED => 14-MAY-2014 | TIME PLOTTED => 13:53

Dist	COUNTY	ROUTE	POST MILES TOTAL PROJECT	SHEET No.	TOTAL SHEETS
02	Sha	299	83.0/84.0	38	61

Shaun Alexander 05-14-15
REGISTERED CIVIL ENGINEER DATE

05-19-14
PLANS APPROVAL DATE

REGISTERED PROFESSIONAL ENGINEER
SHAUN ALEXANDER
No. C70833
Exp. 06-30-15
CIVIL
STATE OF CALIFORNIA

THE STATE OF CALIFORNIA OR ITS OFFICERS OR AGENTS SHALL NOT BE RESPONSIBLE FOR THE ACCURACY OR COMPLETENESS OF SCANNED COPIES OF THIS PLAN SHEET.

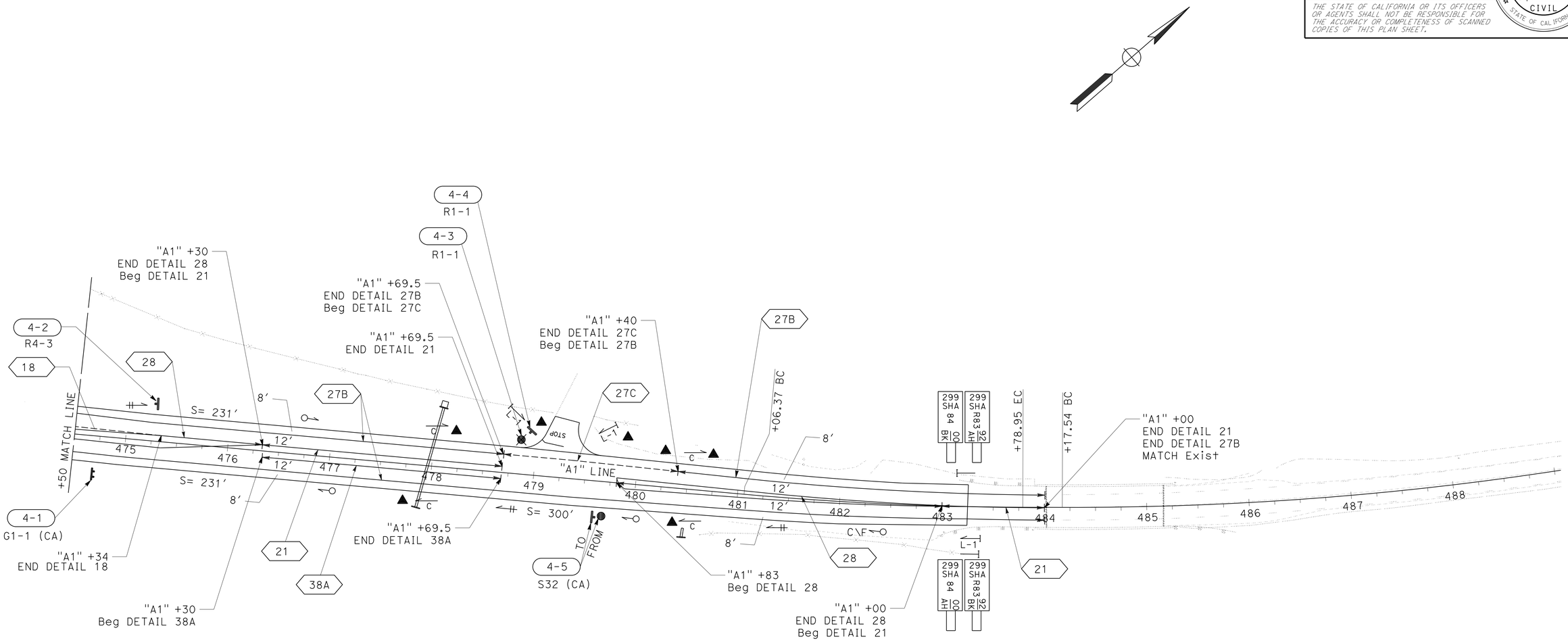

PAVEMENT DELINEATION AND SIGN PLAN

SCALE: 1" = 50′

PD-4

APPROVED FOR PAVEMENT DELINEATION AND SIGN WORK ONLY

CALCULATED-DESIGNED BY	REVISED BY
CHECKED BY	DATE REVISED
JEFF CARSON	
SHAUN ALEXANDER	
FUNCTIONAL SUPERVISOR	
AL TRUJILLO	

STATE OF CALIFORNIA - DEPARTMENT OF TRANSPORTATION
Caltrans®
DESIGN

P:\proj2\02\2E740_plans\pse\22e740na004.dgn

LAST REVISION 05-13-14 | DATE PLOTTED => 14-MAY-2014 | TIME PLOTTED => 13:53

Dist	COUNTY	ROUTE	POST MILES TOTAL PROJECT	SHEET No.	TOTAL SHEETS
02	Sha	299	83.0/84.0	39	61

Shaun Alexander 05-14-15
REGISTERED CIVIL ENGINEER DATE

05-19-14
PLANS APPROVAL DATE

REGISTERED PROFESSIONAL ENGINEER
SHAUN ALEXANDER
No. C70833
Exp. 06-30-15
CIVIL
STATE OF CALIFORNIA

THE STATE OF CALIFORNIA OR ITS OFFICERS OR AGENTS SHALL NOT BE RESPONSIBLE FOR THE ACCURACY OR COMPLETENESS OF SCANNED COPIES OF THIS PLAN SHEET.

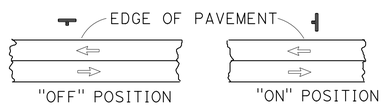

POSITION OF TURNABLE ROADSIDE SIGN

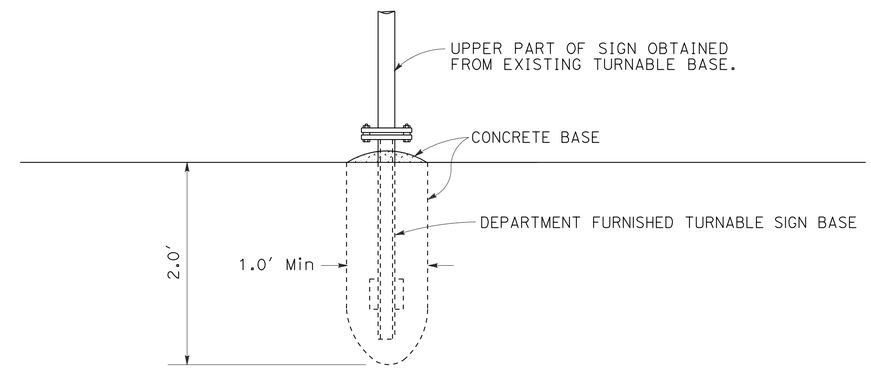

TURNABLE ROADSIDE SIGN BASE INSTALLATION

(RECONSTRUCT TURNABLE ROADSIDE SIGN)

PAVEMENT DELINEATION AND SIGN DETAILS

NO SCALE

PDD-1

REVISED BY	DATE REVISED

CALCULATED-DESIGNED BY: JEFF CARSON
CHECKED BY: SHAUN ALEXANDER

FUNCTIONAL SUPERVISOR: AL TRUJILLO

STATE OF CALIFORNIA - DEPARTMENT OF TRANSPORTATION
Caltrans
DESIGN

P:\proj2\02\2E740_plans\pse\22e740nb001.dgn

LAST REVISION 05-13-14
DATE PLOTTED => 14-MAY-2014
TIME PLOTTED => 13:53

Dist	COUNTY	ROUTE	POST MILES TOTAL PROJECT	SHEET No.	TOTAL SHEETS
02	Sha	299	83.0/84.0	40	61

REGISTERED CIVIL ENGINEER 05-14-15 DATE

05-19-14
PLANS APPROVAL DATE

REGISTERED PROFESSIONAL ENGINEER SHAUN ALEXANDER No. C70833 Exp. 06-30-15 CIVIL STATE OF CALIFORNIA

THE STATE OF CALIFORNIA OR ITS OFFICERS OR AGENTS SHALL NOT BE RESPONSIBLE FOR THE ACCURACY OR COMPLETENESS OF SCANNED COPIES OF THIS PLAN SHEET.

NOTES:

1. USE A 2¼" SQUARE TUBE x 30" LONG, 3/16" THICK ANCHOR FOR 2" POSTS. USE A 3" SQUARE TUBE x 3' LONG, 3/16" THICK ANCHOR FOR 2-1/2 " POSTS.
2. USE A 5/16" CORNER BOLT OR TWO DRIVE RIVETS TO FASTEN ASSEMBLED SIGN AND POST INTO ANCHOR. INSTALL CORNER BOLT OR DRIVE RIVETS INTO THE SIDES FACING TRAFFIC.
3. REMOVE EXISTING AC OR PCC, DRIVE ANCHOR SLEEVE INTO SOIL AND RECAP WITH LIKE MATERIAL, MATCHING EXISTING THICKNESS.
4. 2" POSTS ARE TO BE 1/8" THICK, PERFORATIONS OF 7/16" IN DIAMETER ARE 1" ON CENTER ON ALL SIDES, LENGTHS ARE 10' AND 12'.
5. 2-1/2" POSTS ARE TO BE 1/8" THICK, PERFORATIONS OF 7/16" IN DIAMETER ARE 1" ON CENTER ON ALL SIDES, 2-1/2" POSTS ARE 12' AND 14' IN LENGTH.
6. FOR DETAILS NOT SHOWN, REFER TO THE STANDARD PLANS.
7. ALL ANCHOR SLEEVES SHALL BE EMBEDDED IN MINOR CONCRETE.
8. THE MARKER SHALL BE WHITE (NON-REFLECTIVE) TARGET PLATE WITH BLACK SERIES D NUMERALS AND LETTERS.
9. A POST MILE PREFIX, SUCH AS "R", SHALL APPLY ONLY WHEN DIRECTED BY THE ENGINEER.
10. "BK" (BACK), "AH" (AHEAD), OR A BLANK SPACE SHALL APPLY AS DIRECTED BY THE ENGINEER.
11. ALL INFORMATION SHALL BE IN ENGLISH UNITS (MILES).

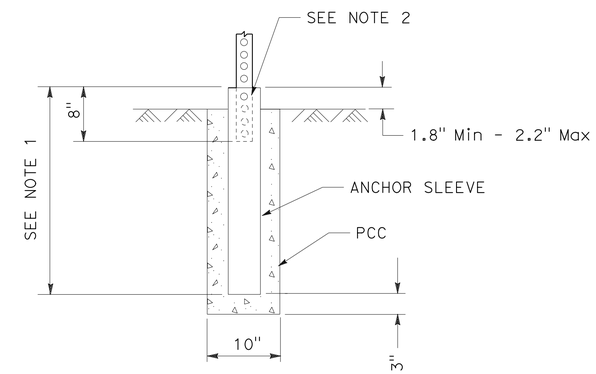

INSTALLATION IN SOIL (PCC)
(SEE NOTE 7)

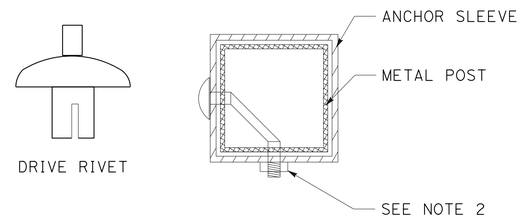

FASTENER DETAILS

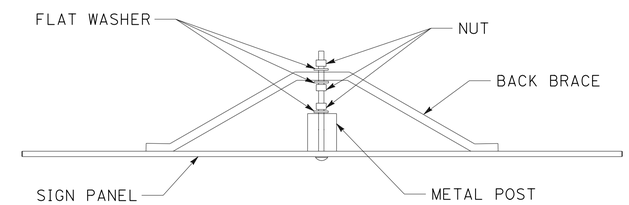

BACK BRACE MOUNTING DETAIL

METAL SIGN POST INSTALLATION DETAILS

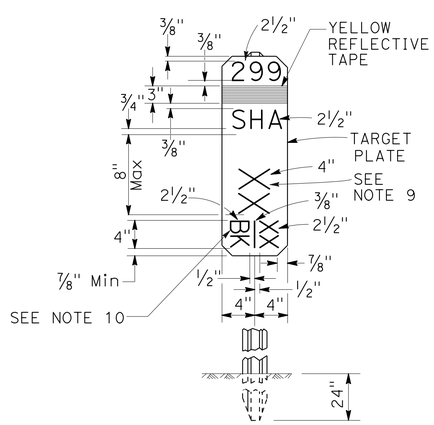

FRONT
BACK

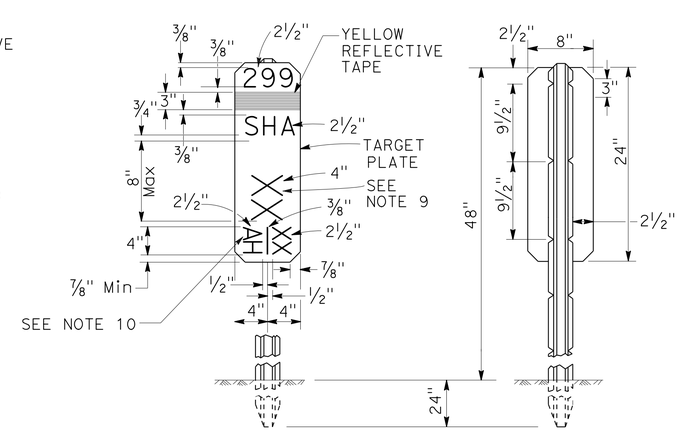

FRONT REAR

AHEAD

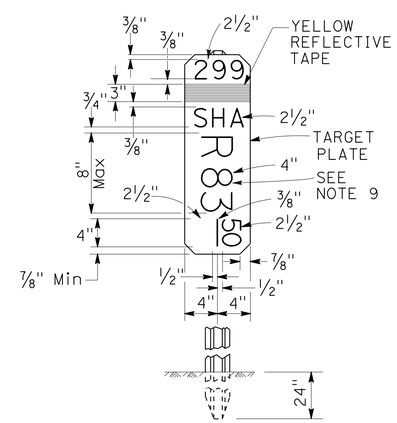

MILEPOST MARKER DETAIL

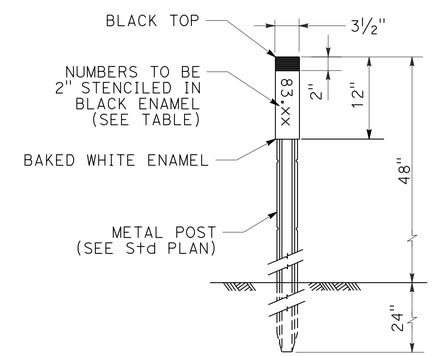

CULVERT MARKER

PAVEMENT DELINEATION AND SIGN DETAILS

NO SCALE

PDD-2

REVISED BY	DATE REVISED

CALCULATED-DESIGNED BY	CHECKED BY
JEFF CARSON	SHAUN ALEXANDER

FUNCTIONAL SUPERVISOR: AL TRUJILLO

STATE OF CALIFORNIA - DEPARTMENT OF TRANSPORTATION
Caltrans® DESIGN

P:\proj2\02\2E740_plans\pse\22e740nb002.dgn

LAST REVISION 05-13-14 | DATE PLOTTED => 14-MAY-2014 | TIME PLOTTED => 13:53

Dist	COUNTY	ROUTE	POST MILES TOTAL PROJECT	SHEET No.	TOTAL SHEETS
02	Sha	299	83.0/84.0	41	61

REGISTERED CIVIL ENGINEER 05-14-15 DATE

05-19-14
PLANS APPROVAL DATE

REGISTERED PROFESSIONAL ENGINEER SHAUN ALEXANDER No. C70833 Exp. 06-30-15 CIVIL STATE OF CALIFORNIA

THE STATE OF CALIFORNIA OR ITS OFFICERS OR AGENTS SHALL NOT BE RESPONSIBLE FOR THE ACCURACY OR COMPLETENESS OF SCANNED COPIES OF THIS PLAN SHEET.

PAVEMENT MARKING

SHEET	STATION	THERMOPLASTIC PAVEMENT MARKING	DESCRIPTION
		SQFT	
PD-3	"B1" 9+49 TO 9+57	22	"STOP"
	"B1" 9+58 TO 9+65	36	LIMIT LINE
PD-4	"C1" 9+54 TO 9+62	22	"STOP"
	"C1" 9+65 TO 9+70	23	LIMIT LINE
	TOTAL	103	

MILEPOST MARKER DETAIL

STATION	POST MILE	QUANTITY
"A1" 436+25	83.03	2
"A1" 436+25	R83.03	2
"A1" 461+07	R83.50	1
"A1" 483+25	R83.92	2
"A1" 483+25	84.00	2

MARKERS AND DELINEATORS

SHEET	STATION "A1" LINE	DELINEATOR (CLASS 2) (TYPE E)	MARKER (CULVERT)	MILEPOST MARKER	OBJECT MARKER (TYPE L-1)	REMOVE DELINEATOR	REMOVE MARKER
		EA	EA	EA	EA	EA	EA
PD-1	435+25 TO 448+50	18	6	4	1	3	4
PD-2	448+50 TO 462+50	24	12	1	1	10	7
PD-3	462+50 TO 474+50	32	5	0	3	8	6
PD-4	474+50 TO 484+00	4	4	4	3	3	6
	TOTAL	78	27	9	8	24	23

CULVERT MARKER POSTMILE TABLE

"A1" LINE Sta	PM	Qty
437+50	R83.05	1
438+34	R83.07	1
442+50	R83.15	1
447+75	R83.25	1
448+07	R83.25	1
448+15	R83.26	1
451+75	R83.32	1
454+75	R83.38	1
457+75	R83.44	2
458+75	R83.46	1
459+62	R83.47	1
460+05	R83.48	1
460+25	R83.48	1
460+43	R83.49	1
460+75	R83.49	1
461+50	R83.51	2
462+70	R83.53	1
464+84	R83.57	1
472+51	R83.72	1
472+85	R83.72	1
473+40	R83.73	1
477+88	R83.82	1
478+07	R83.82	1
480+50	R83.87	2

PAVEMENT DELINEATION QUANTITIES

STATION "A1" LINE	THERMOPLASTIC TRAFFIC STRIPE (SPRAYABLE)						
	DETAIL 11	DETAIL 18	DETAIL 21	DETAIL 27B	DETAIL 27C	DETAIL 28	DETAIL 38A
	LF	LF	LF	LF	LF	LF	LF
435+25 TO 472+75	3758						
435+25 TO 436+25			100				
435+25 TO 484+00				4867			
435+25 TO 462+64.5				2721			
436+25 TO 462+64.5						5288	
462+64.5 TO 463+82			114		123		
463+82 TO 478+69.5				1514			
463+82 TO 476+30						2500	
472+75 TO 475+34		260					
476+30 TO 478+69.5			235				235
478+69.5 TO 480+40					171		
480+40 TO 484+00				359			
479+83 TO 483+00						638	
483+00 TO 484+00			100				
SUBTOTAL	3758	260	549	9461	294	8426	235
TOTAL	22,983						

PAVEMENT DELINEATION QUANTITIES

PDQ-1

REVISED BY | DATE REVISED
JEFF CARSON | SHAUN ALEXANDER
CALCULATED-DESIGNED BY | CHECKED BY
FUNCTIONAL SUPERVISOR
AL TRUJILLO

STATE OF CALIFORNIA - DEPARTMENT OF TRANSPORTATION
Caltrans
DESIGN

P:\proj2\02\2E740_plans\pse\22e740nc001.dgn

LAST REVISION 05-13-14 | DATE PLOTTED => 14-MAY-2014 | TIME PLOTTED => 13:53

Dist	COUNTY	ROUTE	POST MILES TOTAL PROJECT	SHEET No.	TOTAL SHEETS
02	Sha	299	83.0/84.0	42	61

REGISTERED CIVIL ENGINEER 05-14-15 DATE

05-19-14
PLANS APPROVAL DATE

REGISTERED PROFESSIONAL ENGINEER SHAUN ALEXANDER No. C70833 Exp. 06-30-15 CIVIL STATE OF CALIFORNIA

THE STATE OF CALIFORNIA OR ITS OFFICERS OR AGENTS SHALL NOT BE RESPONSIBLE FOR THE ACCURACY OR COMPLETENESS OF SCANNED COPIES OF THIS PLAN SHEET.

NOTES:

1. TURNABLE SIGN BASE TO BE DEPARTMENT FURNISHED. SEE SIGN DETAILS.
2. (N) - NOT A SEPARATE PAY ITEM, FOR INFORMATION ONLY

ABBREVIATIONS

FYG FLUORESCENT YELLOW GREEN

MATERIAL SUMMARY CONTRACTOR FURNISHED SIGNS

SHEET No.	SIGN No.	(N) SIGN CODE	(N) SIGN SIZE (L x D)	(N) SINGLE FACED	(N) PREMIUM FILM	BACKGROUND (N) SHEETING COLOR	BACKGROUND (N) RETROREFLECTIVE ASTM TYPE	LEGEND (N) SHEETING COLOR	LEGEND (N) RETROREFLECTIVE ASTM TYPE	FURNISH SINGLE SHEET ALUMINUM SIGN (0.080"-UNFRAMED) SQFT 0.080"	FURNISH SINGLE SHEET ALUMINUM SIGN (0.063"-FRAMED) SQFT 0.063"	DESCRIPTION (REMARKS)
PD-1	1-5	W11-3	36" x 36"	X		YELLOW	III	BLACK	II	9.0		DEER CROSSING
PD-3	3-7	W16-2	36" x 36"	X		FYG	III	BLACK	II	9.0		PEDESTRIAN
		W34A(CA)	18" x 24"	X		FYG	III	BLACK	II	3.0		1000 FT AHEAD
PD-3	3-8	R1-1	30" x 30"	X		RED	III	WHITE	III	6.3		STOP
PD-4	4-1	G1-1(CA)	102" x 18"	X	X	GREEN	III	WHITE	III		12.8	HAT CREEK ROAD
PD-4	4-2	R4-3	24" x 30"	X		WHITE	III	BLACK	II	5.0		SLOW TRAFFIC KEEP RIGHT
PD-4	4-4	R1-1	30" x 30"	X		RED	III	WHITE	III	6.3		STOP
									TOTAL	38.6	12.8	

ROADSIDE SIGNS

SHEET No.	SIGN No.	SIGN CODE	(N) PANEL SIZE	(N) POST LENGTH	(N) POST SIZE METAL POST	ROADSIDE SIGN ONE POST	ROADSIDE SIGN TWO POST	ROADSIDE SIGN RECONSTRUCT TURNABLE ROADSIDE SIGN	REMOVE ROADSIDE SIGN	RELOCATE ROADSIDE SIGN-ONE POST	REMARKS
				LF		EA	EA	EA	EA	EA	
PD-1	1-1	W1-2 W13-1							1		RIGHT CURVE 50MPH
	1-2	R4-3							1		SLOW TRAFFIC KEEP RIGHT
	1-3	W11-3							1		DEER CROSSING
	1-4	W1-2 W13-1							1		LEFT CURVE 40MPH
	1-5	W11-3	36" x 36"	10	2.5" x 2.5"	1					DEER CROSSING
PD-2	2-1	R68							1		PASSING LANE AHEAD
	2-2	W1-2 W13-1							1		RIGHT CURVE 40MPH
PD-3	3-1	W8-5							1		SLIPPERY WHEN WET
	3-2	R1-1							1		STOP
	3-3	W43						1			ICY (TURNABLE)
	3-4	W16-2 W16-2aP							1		PEDESTRIAN AHEAD 1600 FT
	3-5	W1-2 W13-1							1		LEFT CURVE 40MPH
	3-6	G1-1 (CA)							1		HAT CREEK PARK
	3-7	W16-2 W34A(CA)	36" x 36" 16" x 30"	12	2.5" x 2.5"	1					PEDESTRIAN 1000 FT AHEAD
	3-8	R1-1	30" x 30"	10	2.5" x 2.5"	1					STOP
PD-4	4-1	G1-1 (CA)	102" x 18"	10	2.5" x 2.5"		1				HAT CREEK PARK
	4-2	R4-3	24" x 30"	10	2.5" x 2.5"	1					SLOW TRAFFIC KEEP RIGHT
	4-3	R1-1							1		STOP
	4-4	R1-1	30" x 30"	10	2.5" x 2.5"	1					STOP
	4-5	S32 (CA)								1	LITTER REMOVAL
					TOTAL	5	1	1	12	1	

SIGN QUANTITIES

SQ-1

REVISED BY | DATE REVISED
JEFF CARSON | SHAUN ALEXANDER
CALCULATED-DESIGNED BY | CHECKED BY
FUNCTIONAL SUPERVISOR
AL TRUJILLO

STATE OF CALIFORNIA - DEPARTMENT OF TRANSPORTATION
Caltrans
DESIGN

P:\proj2\02\2E740_plans\pse\22e740oc001.dgn

LAST REVISION 05-13-14 | DATE PLOTTED => 14-MAY-2014 | TIME PLOTTED => 13:53

Dist	COUNTY	ROUTE	POST MILES TOTAL PROJECT	SHEET No.	TOTAL SHEETS
02	Sha	299	83.0/84.0	43	61

REGISTERED CIVIL ENGINEER 05-14-15 DATE

05-19-14
PLANS APPROVAL DATE

REGISTERED PROFESSIONAL ENGINEER SHAUN ALEXANDER No. C70833 Exp. 06-30-15 CIVIL STATE OF CALIFORNIA

THE STATE OF CALIFORNIA OR ITS OFFICERS OR AGENTS SHALL NOT BE RESPONSIBLE FOR THE ACCURACY OR COMPLETENESS OF SCANNED COPIES OF THIS PLAN SHEET.

NOTE:

1. (N) - NOT A SEPARATE PAY ITEM, FOR INFORMATION ONLY

TEMPORARY WATER POLLUTION CONTROL

	TEMPORARY FIBER ROLL	TEMPORARY CHECK DAM	TEMPORARY DRAINAGE INLET PROTECTION
	LF	LF	EA
TOTAL	3000	1000	4

GUARDRAIL

STATION	L+/R+	REMOVE GUARDRAIL	METAL BEAM GUARD RAILING (STEEL POST)	ALTERNATIVE FLARED TERMINAL SYSTEM	ALTERNATIVE IN-LINE TERMINAL SYSTEM	END ANCHOR ASSEMBLY (TYPE SFT)
		LF	LF	EA	EA	EA
"A1" 437+87.50	R+			1		
"A1" 437+87.50 TO 449+47.50	R+		1150			
"A1" 449+47.50	R+					1
"A1" 450+48.00 TO 462+80.00	L+/R+	1310				
"A1" 457+75.00	R+				1	
"A1" 457+75.00 TO 473+85.00	R+		1587.5			
"A1" 463+86.30	L+					1
"A1" 463+86.30 TO 473+22.80	L+		975			
"A1" 473+22.80	L+			1		
"A1" 473+85.00	R+					1
TOTAL		1310	3712.5	2	1	3

TEMPORARY FENCE

STATION	L+/R+	TEMPORARY FENCE (TYPE ESA)
		LF
"A1" 478+41 TO 479+11	L+	109
"A1" 479+46 TO 483+25	L+	387
"A1" 481+06 TO 483+25	R+	235
TOTAL		731

TREATED WOOD WASTE

STATION	TREATED WOOD WASTE
	LB
"A1" 434+75 TO 473+00	17,000

SAFETY EDGE

STATION	(N) SAFETY EDGE
	LF
"A1" 436+25.00 TO 481+00.00	3616

SUMMARY OF QUANTITIES

STATION	L+/R+	OBLITERATE SURFACING	ROADWAY EXCAVATION	(N) EMBANKMENT	CLASS 2 AGGREGATE BASE	HOT MIX ASPHALT (TYPE A)	SHOULDER BACKING	HMA DIKE (TYPE F)	HMA DIKE (TYPE E)	HMA DIKE (TYPE C)	TACK COAT	COLD PLANE ASPHALT CONCRETE PAVEMENT	REMOVE FENCE	EARTH RETAINING SYSTEM (RAILING COMPONENTS)	COMMENTS
	L+/R+	SQYD	CY	CY	CY	TON	TON	LF	LF	LF	TON	SQYD	LF	SQFT	
"A1" 435+75.00 TO 436+25.00	L+/R+					23					0.1	224			CONFORM
"A1" 436+25.00 TO 483+25.00	L+/R+		111,632	98,957	11,206	9450	355				3.6				
"A1" 437+55.00 TO 437+87.50	R+									33					
"A1" 437+87.50 TO 448+06.75	R+					14		1008							
"A1" 448+25.00 TO 458+75.00	L+					26			1005						
"A1" 458+75.00 TO 460+43.17	L+					5			163						
"A1" 460+53.17 TO 473+85.00	R+					17		1300							
"A1" 468+18.00 TO 473+22.00	L+	2122													
"A1" 473+55.00 TO 478+77.00	L+	1408													
"A1" 483+25.00 TO 484+02.00	L+/R+					34					0.1	332			CONFORM
"A1" 436+25.00 TO 483+25.00	L+/R+				160	68									SAFETY EDGE
"B1" 8+00.00 TO 9+70.00	L+/R+		530	135	256	238	20				0.1				
"A1" 450+76.50 TO 462+54.00	L+												1170		
"C1" 9+42.50 TO 9+70.00	L+/R+		110	6	52	44					0.1				
"A1" 458+25.00 TO 473+25.00	R+														
"A1" 464+75.00 TO 473+50.00	L+														
"A1" 438+00.00 TO 440+25.00	R+													450	
"A1" 458+25.00 TO 465+18.80	L+/R+												776		
"A1" 470+56.20 TO 481+00.00	L+/R+												1136		
						11.5									FROM DRAINAGE QUANTITIES
TOTAL		3530	112,272	99,098	11,674	9931	375	2308	1168	33	4	556	3082	450	

SUMMARY OF QUANTITIES

Q-1

REVISED BY	DATE REVISED

CALCULATED-DESIGNED BY: JEFF CARSON
CHECKED BY: SHAUN ALEXANDER
FUNCTIONAL SUPERVISOR: AL TRUJILLO

STATE OF CALIFORNIA - DEPARTMENT OF TRANSPORTATION
Caltrans DESIGN

P:\proj2\02\2E740_plans\pse\22e740pa001.dgn

LAST REVISION 05-13-14
DATE PLOTTED => 14-MAY-2014
TIME PLOTTED => 13:53

Dist	COUNTY	ROUTE	POST MILES TOTAL PROJECT	SHEET No.	TOTAL SHEETS
02	Sha	299	83.0/84.0	44	61

LICENSED LANDSCAPE ARCHITECT

05-19-14
PLANS APPROVAL DATE

LICENSED LANDSCAPE ARCHITECT J. PATRICK SULLIVAN #3125 Signature 07/31/14 Renewal Date 05/14/14 Date STATE OF CALIFORNIA

THE STATE OF CALIFORNIA OR ITS OFFICERS OR AGENTS SHALL NOT BE RESPONSIBLE FOR THE ACCURACY OR COMPLETENESS OF SCANNED COPIES OF THIS PLAN SHEET.

NOTES:

1. DISTURBED AREA MEASUREMENTS INCLUDE SLOPE FACTORS.
2. FOR ACCURATE RIGHT OF WAY DATA, CONTACT RIGHT OF WAY ENGINEERING AT THE DISTRICT OFFICE.

LEGEND

WOOD MULCH

HYDROSEED

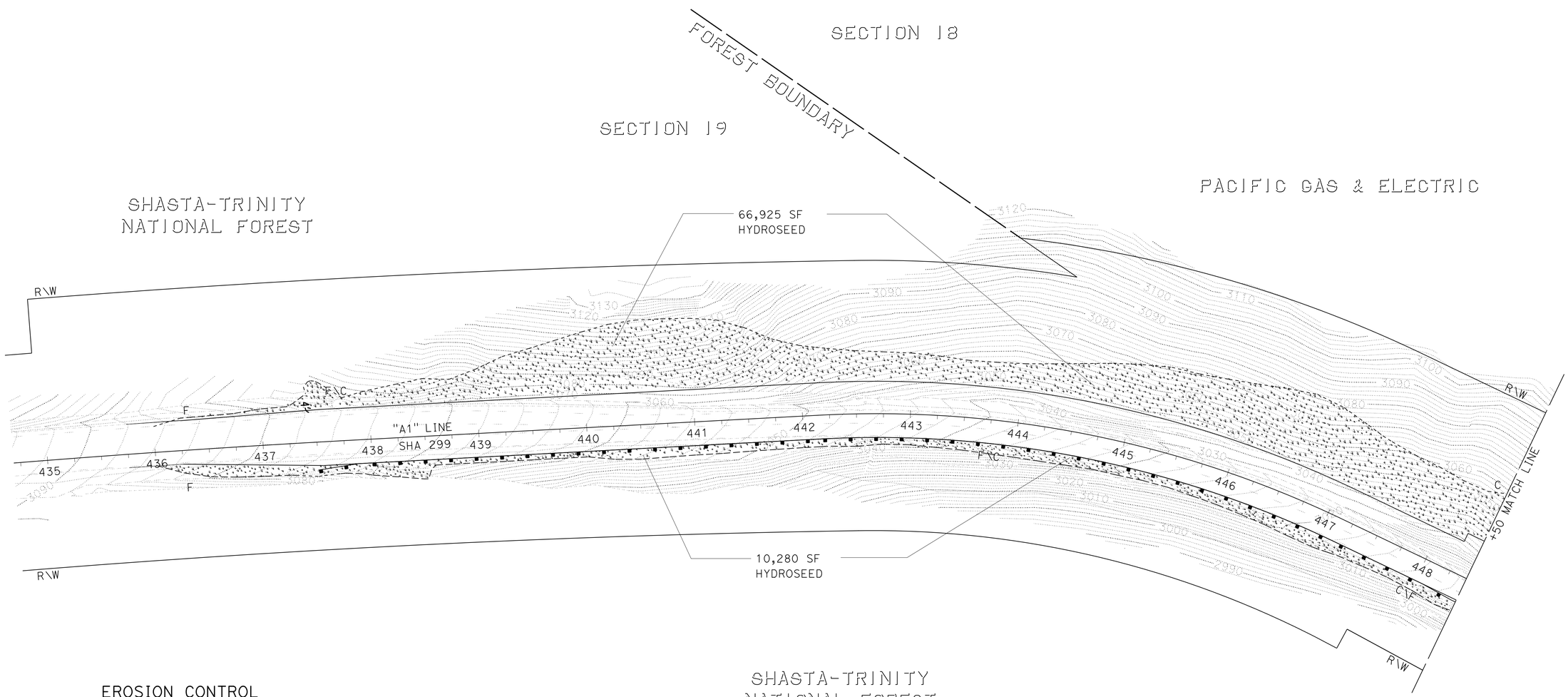

EROSION CONTROL QUANTITY TABLE

HYDROSEED	
TOTAL SF THIS SHEET	77,205

EROSION CONTROL PLAN

SCALE: 1" = 50'

EC-1

APPROVED FOR EROSION CONTROL WORK ONLY

STATE OF CALIFORNIA - DEPARTMENT OF TRANSPORTATION
Caltrans® LANDSCAPE ARCHITECTURE

SENIOR LANDSCAPE ARCHITECT: RON FLORY
CALCULATED-DESIGNED BY: J. PATRICK SULLIVAN
CHECKED BY: RON FLORY
REVISED BY
DATE REVISED

P:\proj2\02\2E740_plans\pse\22e740te001.dgn

LAST REVISION 05-14-14
DATE PLOTTED => 14-MAY-2014
TIME PLOTTED => 13:53

Dist	COUNTY	ROUTE	POST MILES TOTAL PROJECT	SHEET No.	TOTAL SHEETS
02	Sha	299	83.0/84.0	45	61

LICENSED LANDSCAPE ARCHITECT

05-19-14
PLANS APPROVAL DATE

LICENSED LANDSCAPE ARCHITECT J. PATRICK SULLIVAN #3125 Signature 07/31/14 Renewal Date 05/14/14 Date STATE OF CALIFORNIA

THE STATE OF CALIFORNIA OR ITS OFFICERS OR AGENTS SHALL NOT BE RESPONSIBLE FOR THE ACCURACY OR COMPLETENESS OF SCANNED COPIES OF THIS PLAN SHEET.

NOTE:

1. FOR ACCURATE RIGHT OF WAY DATA, CONTACT RIGHT OF WAY ENGINEERING AT THE DISTRICT OFFICE.

T. 36 N., R. 4 E., M.D.M.
SECTION 18

EROSION CONTROL QUANTITY TABLE

HYDROSEED	
TOTAL SF THIS SHEET	190,530

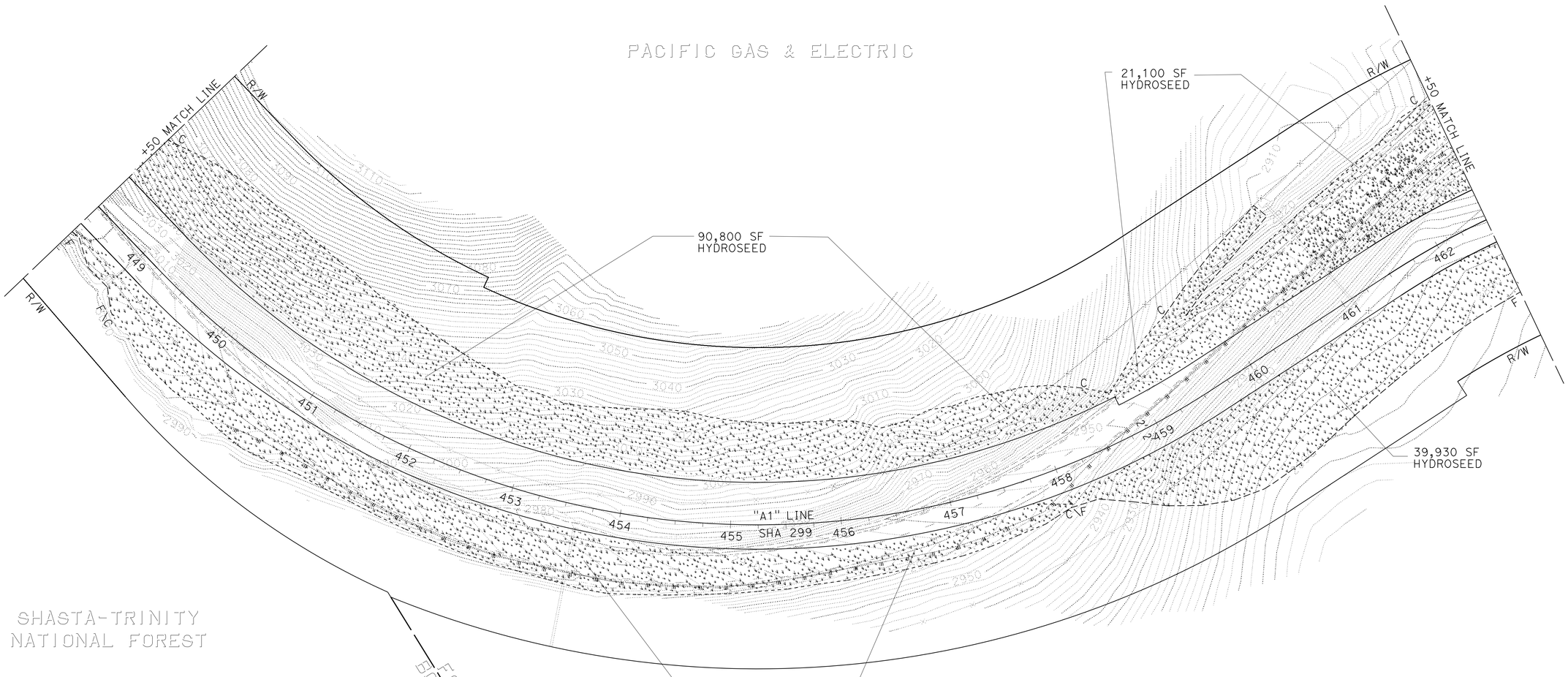

EROSION CONTROL PLAN

SCALE: 1" = 50'

EC-2

APPROVED FOR EROSION CONTROL WORK ONLY

STATE OF CALIFORNIA - DEPARTMENT OF TRANSPORTATION
Caltrans® LANDSCAPE ARCHITECTURE

SENIOR LANDSCAPE ARCHITECT: RON FLORY
CALCULATED-DESIGNED BY: J. PATRICK SULLIVAN
CHECKED BY: RON FLORY
REVISED BY
DATE REVISED

P:\proj2\02\2E740_plans\pse\22e740te002.dgn

LAST REVISION 05-14-14
DATE PLOTTED => 14-MAY-2014
TIME PLOTTED => 13:53

Dist	COUNTY	ROUTE	POST MILES TOTAL PROJECT	SHEET No.	TOTAL SHEETS
02	Sha	299	83.0/84.0	46	61

LICENSED LANDSCAPE ARCHITECT

05-19-14
PLANS APPROVAL DATE

LICENSED LANDSCAPE ARCHITECT J. PATRICK SULLIVAN #3125 Signature 07/31/14 Renewal Date 05/14/14 Date STATE OF CALIFORNIA

THE STATE OF CALIFORNIA OR ITS OFFICERS OR AGENTS SHALL NOT BE RESPONSIBLE FOR THE ACCURACY OR COMPLETENESS OF SCANNED COPIES OF THIS PLAN SHEET.

NOTE:

1. FOR ACCURATE RIGHT OF WAY DATA, CONTACT RIGHT OF WAY ENGINEERING AT THE DISTRICT OFFICE.

EROSION CONTROL QUANTITY TABLE

WOOD MULCH	
TOTAL CY THIS SHEET	431
HYDROSEED	
TOTAL SF THIS SHEET	127,125

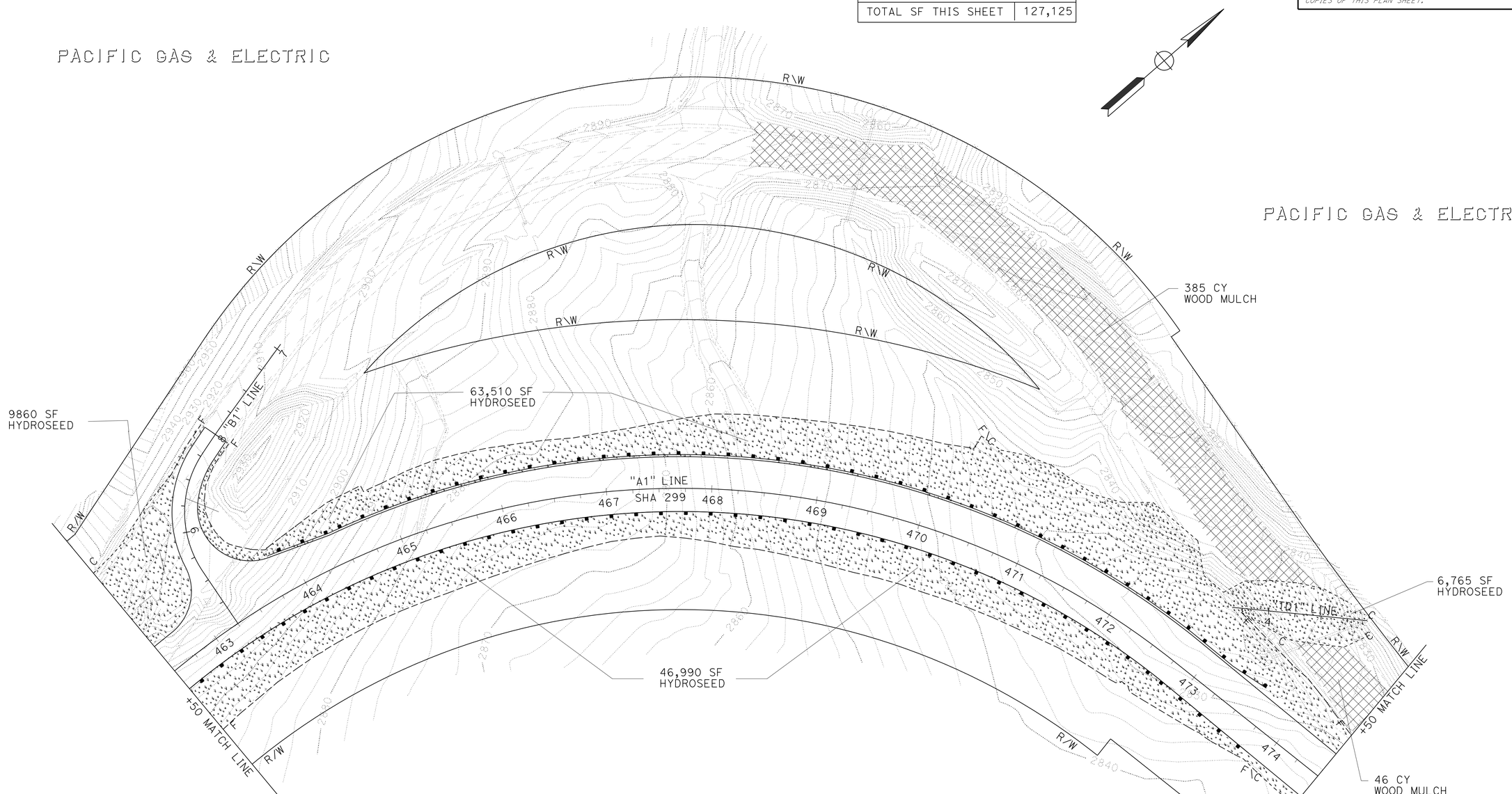

EROSION CONTROL PLAN

SCALE: 1" = 50'

EC-3

APPROVED FOR EROSION CONTROL WORK ONLY

STATE OF CALIFORNIA - DEPARTMENT OF TRANSPORTATION
Caltrans® LANDSCAPE ARCHITECTURE

SENIOR LANDSCAPE ARCHITECT: RON FLORY
CALCULATED-DESIGNED BY: J. PATRICK SULLIVAN
CHECKED BY: RON FLORY
REVISED BY
DATE REVISED

P:\proj2\02\2E740_plans\pse\22e740te003.dgn

LAST REVISION 05-14-14
DATE PLOTTED => 14-MAY-2014
TIME PLOTTED => 13:53

Dist	COUNTY	ROUTE	POST MILES TOTAL PROJECT	SHEET No.	TOTAL SHEETS
02	Sha	299	83.0/84.0	47	61

LICENSED LANDSCAPE ARCHITECT

05-19-14
PLANS APPROVAL DATE

LICENSED LANDSCAPE ARCHITECT J. PATRICK SULLIVAN #3125 Signature 07/31/14 Renewal Date 05/14/14 Date STATE OF CALIFORNIA

THE STATE OF CALIFORNIA OR ITS OFFICERS OR AGENTS SHALL NOT BE RESPONSIBLE FOR THE ACCURACY OR COMPLETENESS OF SCANNED COPIES OF THIS PLAN SHEET.

NOTE:

1. FOR ACCURATE RIGHT OF WAY DATA, CONTACT RIGHT OF WAY ENGINEERING AT THE DISTRICT OFFICE.

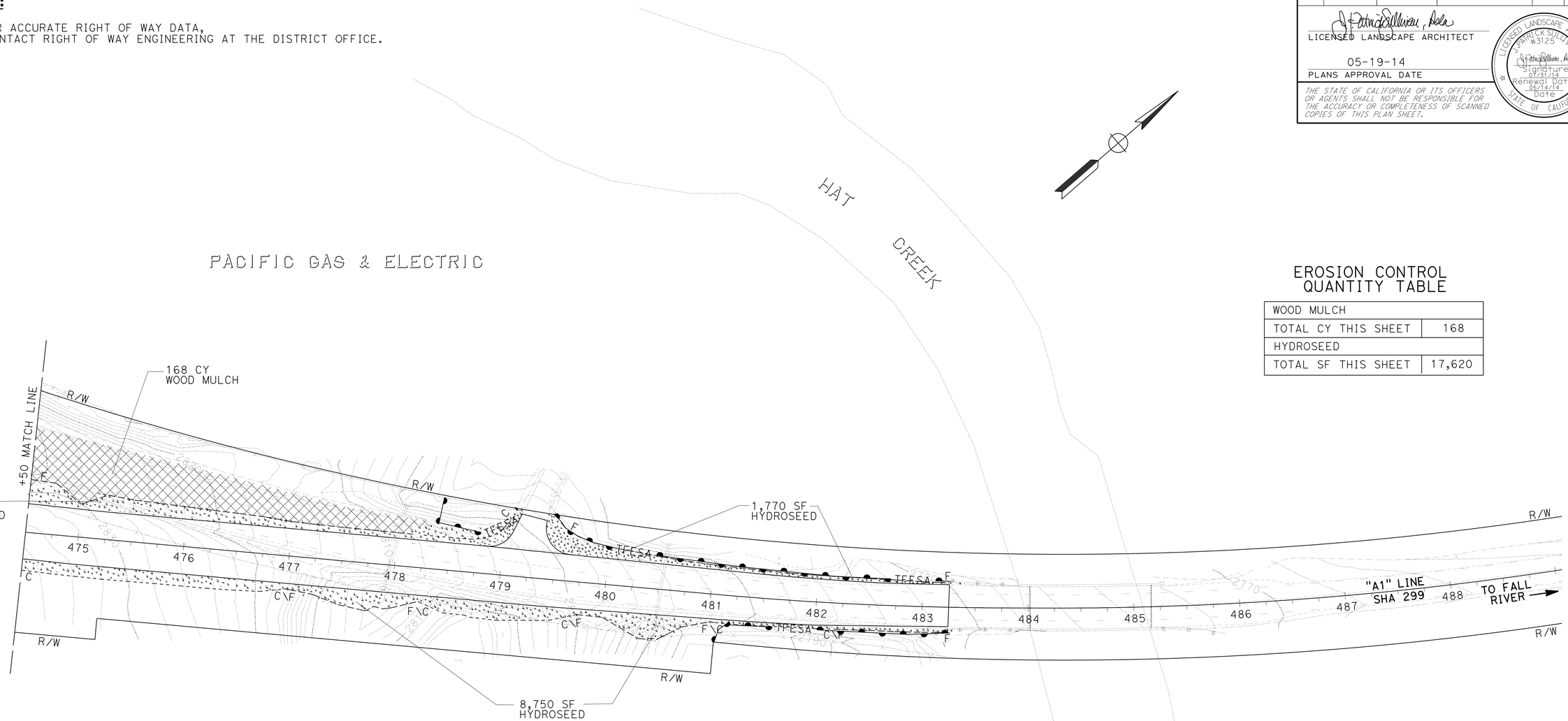

EROSION CONTROL QUANTITY TABLE

WOOD MULCH	
TOTAL CY THIS SHEET	168
HYDROSEED	
TOTAL SF THIS SHEET	17,620

EROSION CONTROL PLAN

SCALE: 1" = 50'

EC-4

APPROVED FOR EROSION CONTROL WORK ONLY

STATE OF CALIFORNIA - DEPARTMENT OF TRANSPORTATION
Caltrans® LANDSCAPE ARCHITECTURE

SENIOR LANDSCAPE ARCHITECT: RON FLORY
J. PATRICK SULLIVAN
RON FLORY
CALCULATED-DESIGNED BY
CHECKED BY
REVISED BY
DATE REVISED

P:\proj2\02\2E740_plans\pse\22e740te004.dgn

LAST REVISION 05-14-14
DATE PLOTTED => 14-MAY-2014
TIME PLOTTED => 13:53

Dist	COUNTY	ROUTE	POST MILES TOTAL PROJECT	SHEET No.	TOTAL SHEETS
02	Sha	299	83.0/84.0	48	61

LICENSED LANDSCAPE ARCHITECT

05-19-14
PLANS APPROVAL DATE

LICENSED LANDSCAPE ARCHITECT J. PATRICK SULLIVAN #3125 Signature 07/31/14 Renewal Date 05/14/14 Date STATE OF CALIFORNIA

THE STATE OF CALIFORNIA OR ITS OFFICERS OR AGENTS SHALL NOT BE RESPONSIBLE FOR THE ACCURACY OR COMPLETENESS OF SCANNED COPIES OF THIS PLAN SHEET.

NOTES:

1. (N) - NOT A SEPARATE PAY ITEM, FOR INFORMATION ONLY
2. REFER TO INDIVIDUAL EC SHEETS FOR LOCATIONS, EC TYPES & QUANTITIES.
3. APPLY STRAW SUFFICIENTLY TO FULLY COVER SLOPES.
4. TOTAL HYDROSEEDING ACREAGE IS 8.62 ACRES (N).

HYDROSEED SEQUENCE/APPLICATION RATES (N)

SEQUENCE	ITEM	MATERIAL DESCRIPTION	MATERIAL TYPE	APPLICATION RATE (N)
STEP 1	HYDROSEED APPLICATION	PURE LIVE SEED	MIX	80 LB/ACRE
		FIBER	ALTERNATE	2000 LB/ACRE
		SLOW RELEASE FERTLIZER	GRANULAR	100 LB/ACRE
STEP 2	STRAW APPLICATION	STRAW	WHEAT/ BARLEY	4 TON/ACRE
STEP 3	HYDROSEED APPLICATION	COMPOST	RECYCLED WOOD PRODUCT	1.2 CY/ACRE
		FIBER	ALTERNATE	1000 LB/ACRE
		TACKIFIER	PSYLLIUM	100 LB/ACRE

WOOD MULCH TOTALS

SHEET No. LOCATION(S)	WOOD MULCH CY
EC-1 THRU EC-4	566
TOTAL	566

NOTES:
1. PLACE 4" DEPTH OF MULCH ON DISTURBED SOIL WHERE SHOWN ON THE PLANS.
2. MULCH TYPE MUST BE TREE TRIMMING MULCH.

SEED MIX (N)

BOTANICAL NAME (COMMON NAME)	PERCENT GERMINATION (MINIMUM)	POUNDS PURE LIVE SEED PER ACRE (N) (SLOPE MEASUREMENT)
ACHILLEA MILLEFOLIUM (COMMON YARROW)	70	2
ELYMUS ELYMOIDIES (SQUIRRELTAIL RYE)	70	8
ELYMUS GLAUCUS (BLUE WILDRYE)	80	20
FESTUCA IDAHOENSIS (WESTERN FESCUE)	80	20
LUPINUS NANA (DWARF LUPINES)	60	3
POA SECUNDA (BLUE PINE GRASS)	70	12
VULPIA MICROSTACHYS (THREE-WEEKS FESCUE)	70	15
	TOTAL	80

HYDROSEED TOTALS

MATERIAL DESCRIPTION	MATERIAL TYPE	TOTALS	
PURE LIVE SEED	MIX	678.4 LBS (N)	HYDROSEED
FIBER	ALTERNATE	25,440 LBS (N)	HYDROSEED
SLOW RELEASE FERTLIZER	GRANULAR	848 LBS (N)	HYDROSEED
COMPOST	RECYCLED WOOD PRODUCT	10.18 CY (N)	HYDROSEED
STRAW	WHEAT/ BARLEY	34 TONS (N)	HYDROSEED
TACKIFIER	PSYLLIUM	848 LBS (N)	HYDROSEED
SHEET No. EC-1 THRU EC-4			SQFT 375,420
		TOTAL SQFT	375,420

EROSION CONTROL QUANTITIES

ECQ-1

REVISED BY | DATE REVISED
J. PATRICK SULLIVAN | RON FLORY
CALCULATED-DESIGNED BY | CHECKED BY
SENIOR LANDSCAPE ARCHITECT | RON FLORY
STATE OF CALIFORNIA - DEPARTMENT OF TRANSPORTATION
Caltrans® LANDSCAPE ARCHITECTURE
P:\proj2\02\2E740_plans\pse\22e740tg001.dgn

LAST REVISION 05-14-14 | DATE PLOTTED => 14-MAY-2014 TIME PLOTTED => 13:53

M

Maint	MAINTENANCE
Max	MAXIMUM
MB	METAL BEAM
MBB	METAL BEAM BARRIER
MBGR	METAL BEAM GUARD RAILING
Med	MEDIAN
MGS	MIDWEST GUARDRAIL SYSTEM
MH	MANHOLE
Min	MINIMUM
Misc	MISCELLANEOUS
Misc I & S	MISCELLANEOUS IRON AND STEEL
Mkr	MARKER
Mod	MODIFIED, MODIFY
Mon	MONUMENT
MP	METAL PLATE
MPGR	METAL PLATE GUARD RAILING
MR	MOVEMENT RATING
MSE	MECHANICALLY STABILIZED EMBANKMENT
Mt	MOUNTAIN, MOUNT
Mtl	MATERIAL
MVP	MAINTENANCE VEHICLE PULLOUT

N

N	NORTH
NB	NORTHBOUND
No.	NUMBER (MUST HAVE PERIOD)
Nos.	NUMBERS (MUST HAVE PERIOD)
NPS	NOMINAL PIPE SIZE
NS	NEAR SIDE
NSP	NEW STANDARD PLAN
NTS	NOT TO SCALE

O

Oblr	OBLITERATE
OC	OVERCROSSING
OD	OUTSIDE DIAMETER
OF	OUTSIDE FACE
OG	ORIGINAL GROUND
OGAC	OPEN GRADED ASPHALT CONCRETE
OGFC	OPEN GRADED FRICTION COURSE
OH	OVERHEAD
OHWM	ORDINARY HIGH WATER MARK
O-O	OUT TO OUT
Opp	OPPOSITE
OSD	OVERSIDE DRAIN

P

P	PAGE
PAP	PERFORATED ALUMINUM PIPE
PB	PULL BOX
PC	POINT OF CURVATURE, PRECAST
PCC	POINT OF COMPOUND CURVE, PORTLAND CEMENT CONCRETE
PCMS	PORTABLE CHANGEABLE MESSAGE SIGN
PCP	PERFORATED CONCRETE PIPE, PRESTRESSED CONCRETE PIPE
PCVC	POINT OF COMPOUND VERTICAL CURVE
PEC	PERMIT TO ENTER AND CONSTRUCT
Ped	PEDESTRIAN
Ped OC	PEDESTRIAN OVERCROSSING
Ped UC	PEDESTRIAN UNDERCROSSING
Perm Mtl	PERMEABLE MATERIAL

P continued

PG	PROFILE GRADE
PI	POINT OF INTERSECTION
PJP	PARTIAL JOINT PENETRATION
Pkwy	PARKWAY
₱,PL	PLATE
P/L	PROPERTY LINE
PM	POST MILE, TIME FROM NOON TO MIDNIGHT
PN	PAVING NOTCH
POC	POINT OF HORIZONTAL CURVE
POT	POINT OF TANGENT
POVC	POINT OF VERTICAL CURVE
PP	PIPE PILE, PLASTIC PIPE, POWER POLE
PPL	PREFORMED PERMEABLE LINER
PPP	PERFORATED PLASTIC PIPE
PRC	POINT OF REVERSE CURVE
PRF	PAVEMENT REINFORCING FABRIC
PRVC	POINT OF REVERSE VERTICAL CURVE
PS&E	PLANS, SPECIFICATIONS AND ESTIMATES
PS, P/S	PRESTRESSED
PSP	PERFORATED STEEL PIPE
PT	POINT OF TANGENCY
PVC	POLYVINYL CHLORIDE
Pvmt	PAVEMENT

Q

Qty	QUANTITY

R

R	RADIUS
R & D	REMOVE AND DISPOSE
R & S	REMOVE AND SALVAGE
R/C	RATE OF CHANGE
RCA	REINFORCED CONCRETE ARCH
RCB	REINFORCED CONCRETE BOX
RCP	REINFORCED CONCRETE PIPE
RCPA	REINFORCED CONCRETE PIPE ARCH
Rd	ROAD
Reinf	REINFORCED, REINFORCEMENT, REINFORCING
Rel	RELOCATE
Repl	REPLACEMENT
Ret	RETAINING
Rev	REVISED, REVISION
Rdwy	ROADWAY
RHMA	RUBBERIZED HOT MIX ASPHALT
Riv	RIVER
RM	ROAD-MIXED
RP	RADIUS POINT, REFERENCE POINT
RR	RAILROAD
RSP	ROCK SLOPE PROTECTION, REVISED STANDARD PLAN
Rt	RIGHT
Rte	ROUTE
RW	REDWOOD, RETAINING WALL
R/W	RIGHT OF WAY
Rwy	RAILWAY

S

S	SOUTH, SUPPLEMENT
SAE	STRUCTURE APPROACH EMBANKMENT
Salv	SALVAGE
SAPP	STRUCTURAL ALUMINUM PLATE PIPE
SB	SOUTHBOUND
SC	SAND CUSHION
SCSP	SLOTTED CORRUGATED STEEL PIPE
SD	STORM DRAIN
Sec	SECOND, SECTION
Sep	SEPARATION
SG	SUBGRADE
Shld	SHOULDER
Sht	SHEET
Sim	SIMILAR
℄	STATION LINE
SM	SELECTED MATERIAL
Spec	SPECIAL, SPECIFICATIONS
SPP	SLOTTED PLASTIC PIPE
SS	SLOPE STAKE
SSBM	STRAP AND SADDLE BRACKET METHOD
SSD	STRUCTURAL SECTION DRAIN
SSPA	STRUCTURAL STEEL PLATE ARCH
SSPP	STRUCTURAL STEEL PLATE PIPE
SSPPA	STRUCTURAL STEEL PLATE PIPE ARCH
SSRP	STEEL SPIRAL RIB PIPE
St	STREET
Sta	STATION
STBB	SINGLE THRIE BEAM BARRIER
Std	STANDARD
Str	STRUCTURE
Surf	SURFACING
SW	SIDEWALK, SOUND WALL
Swr	SEWER
Sym	SYMMETRICAL
S4S	SURFACE 4 SIDES

T

T	SEMI-TANGENT
Tan	TANGENT
TBB	THRIE BEAM BARRIER
Tbr	TIMBER
TC	TOP OF CURB
TCB	TRAFFIC CONTROL BOX
TCE	TEMPORARY CONSTRUCTION EASEMENT
Tel	TELEPHONE
Temp	TEMPORARY
TG	TOP OF GRADE
Tot	TOTAL
TP	TELEPHONE POLE
TPB	TREATED PERMEABLE BASE
TPM	TREATED PERMEABLE MATERIAL
Trans	TRANSITION

T continued

TS	TRANSVERSE, TRAFFIC SIGNAL, TUBULAR STEEL
Typ	TYPICAL

U

UC	UNDERCROSSING
UD	UNDERDRAIN
UG	UNDERGROUND
UON	UNLESS OTHERWISE NOTED
UP	UNDERPASS

V

V	VALVE, DESIGN SPEED
Var	VARIABLE, VARIES
VC	VERTICAL CURVE
VCP	VITRIFIED CLAY PIPE
Vert	VERTICAL
Via	VIADUCT
Vol	VOLUME

W

W	WEST, WIDTH
WB	WESTBOUND
WH	WEEP HOLE
WM	WIRE MESH
WS	WATER SURFACE
WSP	WELDED STEEL PIPE
Wt	WEIGHT
WV	WATER VALVE
WW	WINGWALL
WWLOL	WINGWALL LAYOUT LINE

X

X Sec	CROSS SECTION
Xing	CROSSING

Y

Yr	YEAR
Yrs	YEARS

Dist	COUNTY	ROUTE	POST MILES TOTAL PROJECT	SHEET No.	TOTAL SHEETS
02	Sha	299	83.0/84.0	49	61

Grace M. Tsushima
REGISTERED CIVIL ENGINEER

July 19, 2013
PLANS APPROVAL DATE

REGISTERED PROFESSIONAL ENGINEER Grace M. Tsushima No. C49814 Exp. 9-30-14 CIVIL STATE OF CALIFORNIA

THE STATE OF CALIFORNIA OR ITS OFFICERS OR AGENTS SHALL NOT BE RESPONSIBLE FOR THE ACCURACY OR COMPLETENESS OF SCANNED COPIES OF THIS PLAN SHEET.

TO ACCOMPANY PLANS DATED 05-19-14

UNIT OF MEASUREMENT SYMBOLS:

Some of the symbols used in the project plan quantity tables and in the Bid Item List are:

TABLE A

SYMBOL USED	DEFINITIONS
ACRE	ACRE
CF	CUBIC FOOT
CY	CUBIC YARD
EA	EACH
GAL	GALLON
LB	POUND
LF	LINEAR FOOT
SQFT	SQUARE FOOT
SQYD	SQUARE YARD
STA	100 FEET
TAB	TABLET
TON	2,000 POUNDS

Some of the symbols used in the plans other than in the project plan quantity tables are:

TABLE B

SYMBOL USED	DEFINITIONS
ksi	KIPS PER SQUARE INCH
ksf	KIPS PER SQUARE FOOT
psi	POUNDS PER SQUARE INCH
psf	POUNDS PER SQUARE FOOT
lb/ft^3, pcf	POUNDS PER CUBIC FOOT
tsf	TONS PER SQUARE FOOT
mph, MPH *	MILES PER HOUR
ø	NOMINAL DIAMETER
oz	OUNCE
lb	POUND
kip	1,000 POUNDS
cal	CALORIE
ft	FOOT OR FEET
gal	GALLON

* For use on a sign panel only

STATE OF CALIFORNIA
DEPARTMENT OF TRANSPORTATION

ABBREVIATIONS (SHEET 2 OF 2)

NO SCALE

RSP A10B DATED JULY 19, 2013 SUPERSEDES STANDARD PLAN A10B DATED MAY 20, 2011 - PAGE 2 OF THE STANDARD PLANS BOOK DATED 2010.

REVISED STANDARD PLAN RSP A10B

2010 REVISED STANDARD PLAN RSP A10B

DATE PLOTTED => 14-MAY-2014
TIME PLOTTED => 13:33

Dist	COUNTY	ROUTE	POST MILES TOTAL PROJECT	SHEET No.	TOTAL SHEETS
02	Sha	299	83.0/84.0	50	61

REGISTERED CIVIL ENGINEER

July 20, 2012
PLANS APPROVAL DATE

REGISTERED PROFESSIONAL ENGINEER
Roberta L. McLaughlin
No. C40375
Exp. 3-31-13
CIVIL
STATE OF CALIFORNIA

THE STATE OF CALIFORNIA OR ITS OFFICERS OR AGENTS SHALL NOT BE RESPONSIBLE FOR THE ACCURACY OR COMPLETENESS OF SCANNED COPIES OF THIS PLAN SHEET.

TO ACCOMPANY PLANS DATED 05-19-14

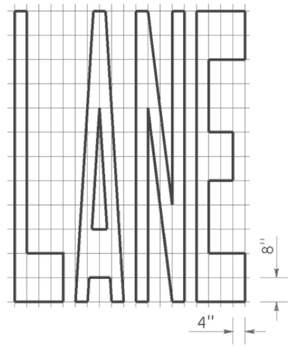

A=24 ft^2

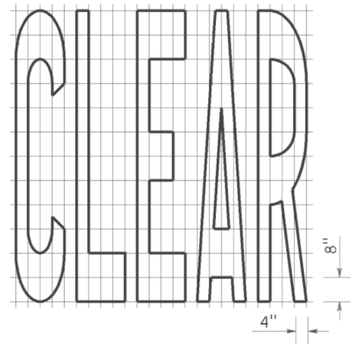

A=27 ft^2

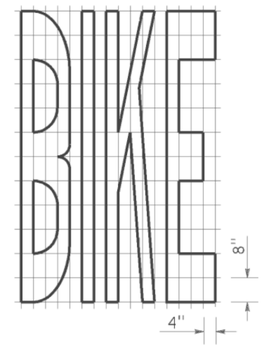

A=21 ft^2

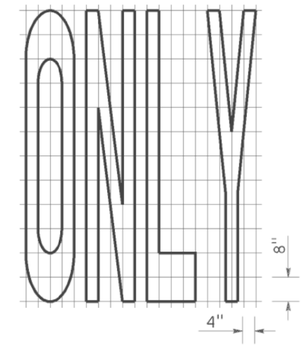

A=22 ft^2

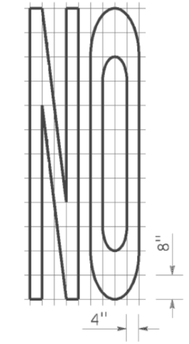

A=14 ft^2

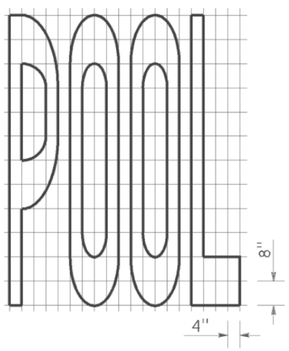

A=23 ft^2

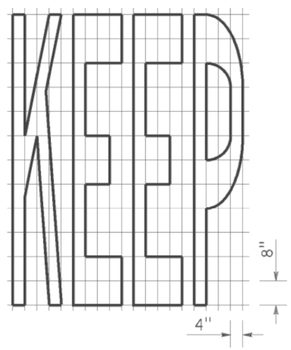

A=24 ft^2

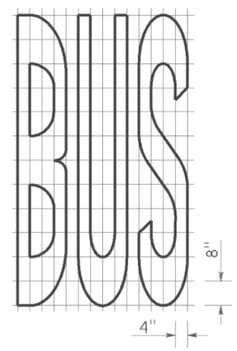

A=20 ft^2

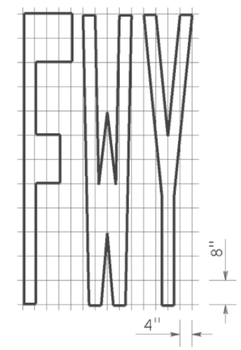

A=16 ft^2

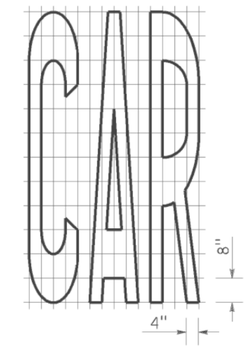

A=17 ft^2

WORD MARKINGS			
ITEM	ft^2	ITEM	ft^2
LANE	24	NO	14
POOL	23	BIKE	21
CAR	17	BUS	20
CLEAR	27	ONLY	22
KEEP	24	FWY	16

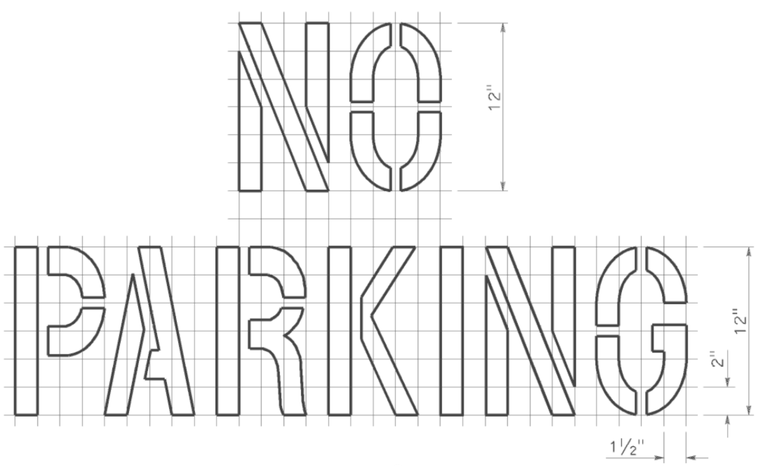

A=2 ft^2
See Notes 6 and 7

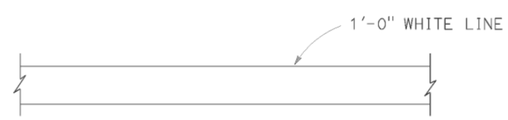

LIMIT LINE (STOP LINE)

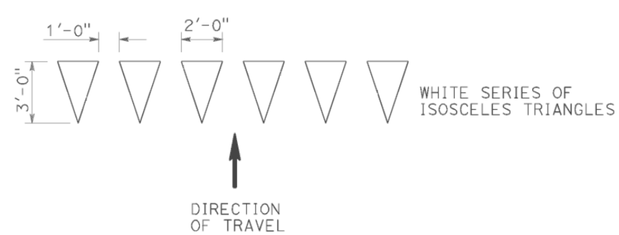

YIELD LINE

NOTES:

1. If a message consists of more than one word, it should read "UP", i.e., the first word should be nearest the driver.
2. The space between words should be at least four times the height of the characters for low speed roads, but not more than ten times the height of the characters. The space may be reduced appropriately where there is limited space because of local conditions.
3. Minor variations in dimensions may be accepted by the Engineer.
4. Portions of a letter, number or symbol may be separated by connecting segments not to exceed 2" in width.
5. The words "NO PARKING" pavement marking is to be used for parking facilities. For typical locations of markings, see Standard Plans A90A and A90B.
6. The words "NO PARKING", shall be painted in white letters no less than 1'-0" high on a contrasting background and located so that it is visible to traffic enforcement officials.

STATE OF CALIFORNIA
DEPARTMENT OF TRANSPORTATION

PAVEMENT MARKINGS WORDS, LIMIT AND YIELD LINES

NO SCALE

RSP A24E DATED JULY 20, 2012 SUPERSEDES STANDARD PLAN A24E
DATED MAY 20, 2011 - PAGE 17 OF THE STANDARD PLANS BOOK DATED 2010.

REVISED STANDARD PLAN RSP A24E

2010 REVISED STANDARD PLAN RSP A24E

DATE PLOTTED => 14-MAY-2014
TIME PLOTTED => 13:53

Dist	COUNTY	ROUTE	POST MILES TOTAL PROJECT	SHEET No.	TOTAL SHEETS
02	Sha	299	83.0/84.0	51	61

Randell D. Hiatt
REGISTERED CIVIL ENGINEER

July 19, 2013
PLANS APPROVAL DATE

REGISTERED PROFESSIONAL ENGINEER
Randell D. Hiatt
No. C50200
Exp. 6-30-15
CIVIL
STATE OF CALIFORNIA

THE STATE OF CALIFORNIA OR ITS OFFICERS OR AGENTS SHALL NOT BE RESPONSIBLE FOR THE ACCURACY OR COMPLETENESS OF SCANNED COPIES OF THIS PLAN SHEET.

TO ACCOMPANY PLANS DATED 05-19-14

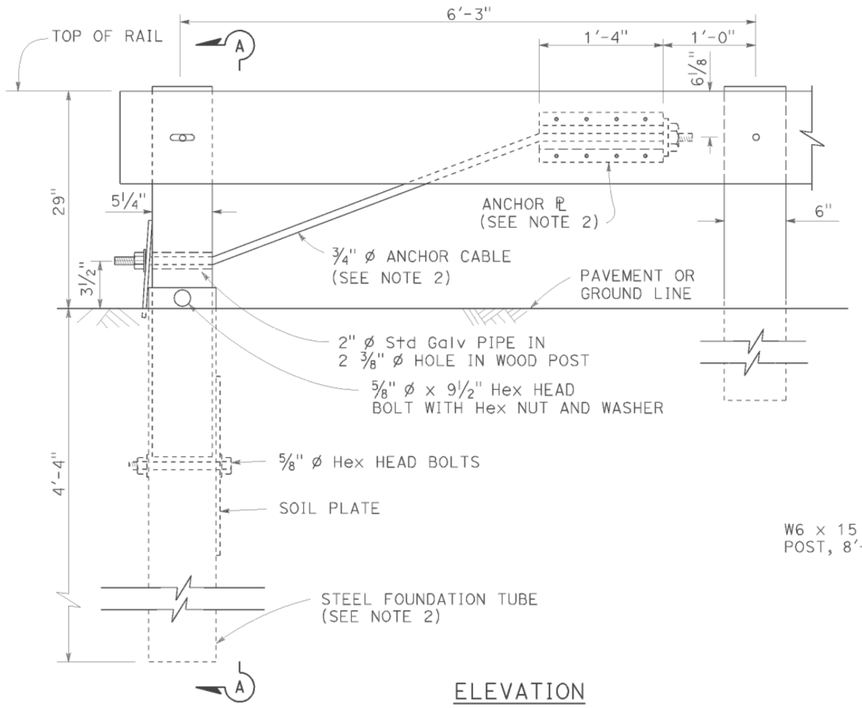

ELEVATION
END ANCHOR
ASSEMBLY (TYPE SFT)

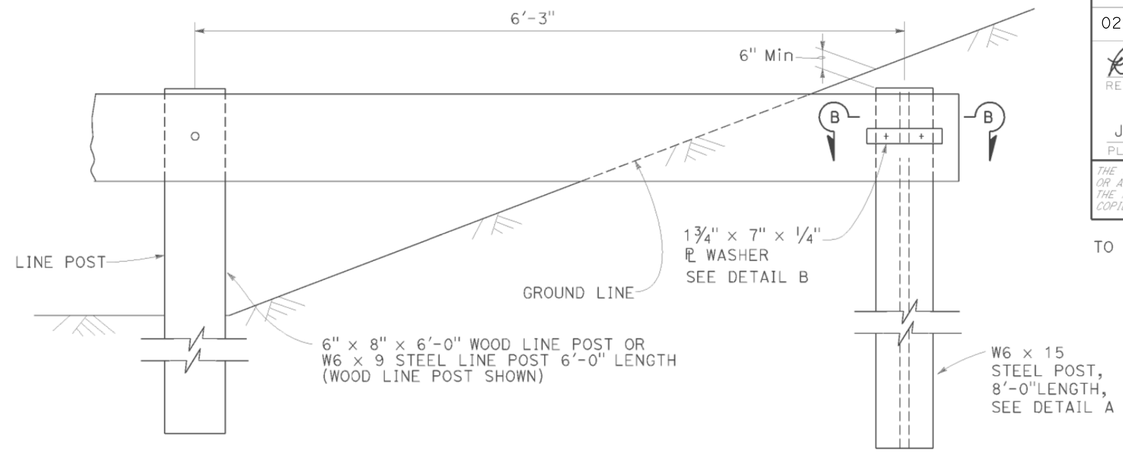

BURIED POST END ANCHOR

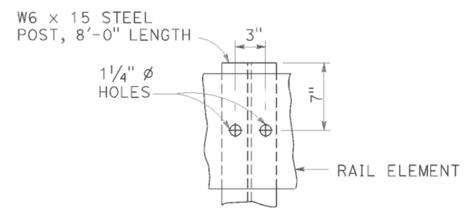

DETAIL A

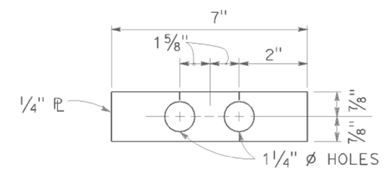

DETAIL B

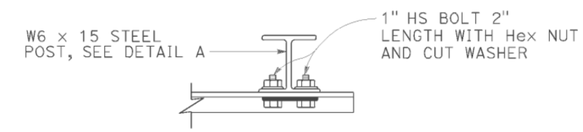

SECTION B-B

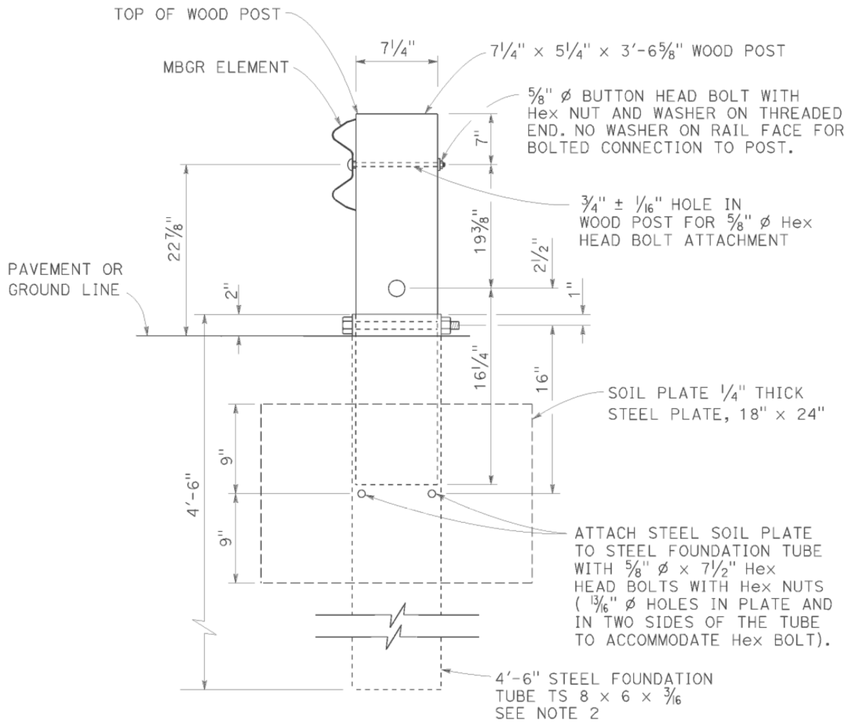

SECTION A-A

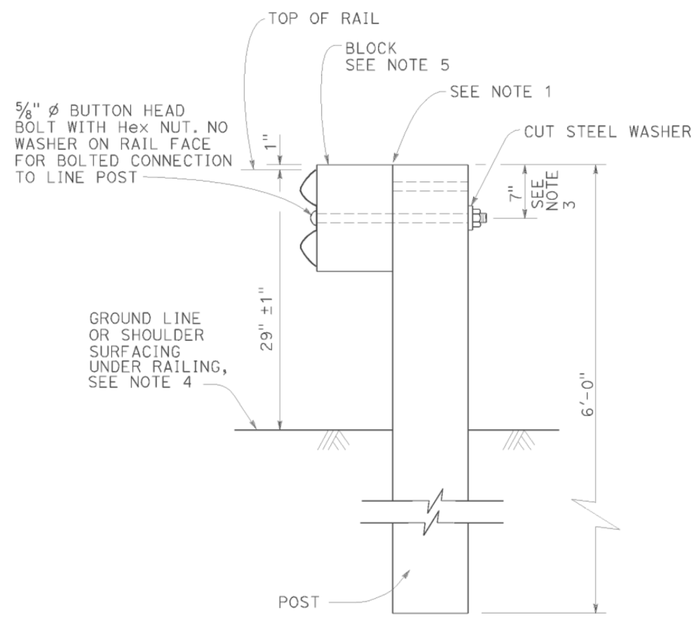

TYPICAL LINE
POST INSTALLATION

NOTES:

1. For wood post and wood block, toenail with 2-16d Galv nails in top of block. For steel post and notched wood or plastic block, notched face of block faces steel post.
2. A 6'-0" Length steel foundation tube, TS 8 x 6 x 3/16, without a soil plate, may be furnished and installed in place of the 4'-6" length steel foundation tube and soil plate shown, Minimum embadment of the 6'-0" length tube shall be 5'-9". A 5/8" ø Hex head bolt and nut shall be installed in the hole in the 6'-0" length tube to keep the wood post from dropping into the tube.
3. To connect railing to 27" terminal system end treatment, transition the top of railing height at a ratio of 120:1 to terminal system end treatment height plus one 12'-6" standard railing section at the transitioned height for a horizontal connection to the end treatment.
4. Install posts in soil.
5. See Revised Standard Plans RSP A77N1 and RSP A77N2 for details.
6. Holes excavation in the slope to construct the buried post end anchor shall be backfilled with selected earth, placed in layers approximately 1'-0" thick. Each layer shall be moistened and thoroughly compacted.

STATE OF CALIFORNIA
DEPARTMENT OF TRANSPORTATION

METAL BEAM GUARD RAILING RECONSTRUCT INSTALLATION

NO SCALE

RSP A77L3 DATED JULY 19, 2013 SUPPLEMENTS THE STANDARD PLANS BOOK DATED 2010.

REVISED STANDARD PLAN RSP A77L3

2010 REVISED STANDARD PLAN RSP A77L3

DATE PLOTTED => 14-MAY-2014
TIME PLOTTED => 13:53

Dist	COUNTY	ROUTE	POST MILES TOTAL PROJECT	SHEET No.	TOTAL SHEETS
02	Sha	299	83.0/84.0	52	61

REGISTERED CIVIL ENGINEER

July 19, 2013
PLANS APPROVAL DATE

REGISTERED PROFESSIONAL ENGINEER
Michael Janzen
No. 44788
Exp. 03-31-14
CIVIL
STATE OF CALIFORNIA

THE STATE OF CALIFORNIA OR ITS OFFICERS OR AGENTS SHALL NOT BE RESPONSIBLE FOR THE ACCURACY OR COMPLETENESS OF SCANNED COPIES OF THIS PLAN SHEET.

TO ACCOMPANY PLANS DATED 05-19-14

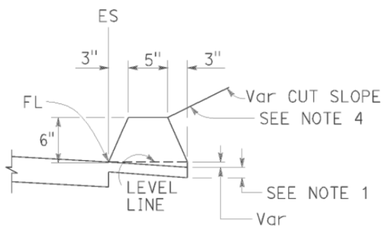

TYPE A
See Note 3

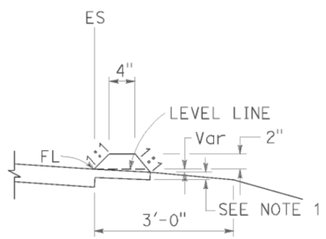

TYPE C

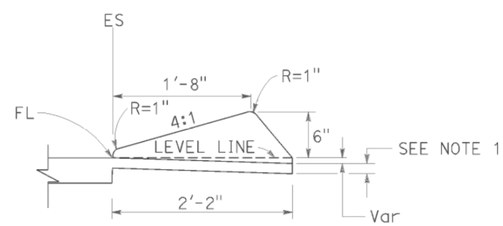

TYPE D

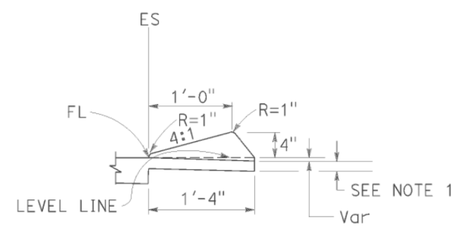

TYPE E

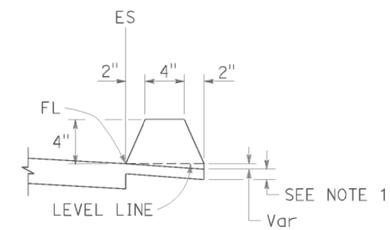

TYPE F
See Note 5

DIKES

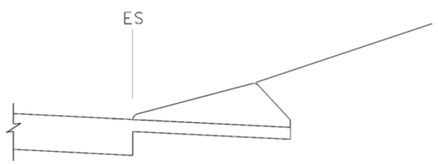

CASE C-1
Cut Slope

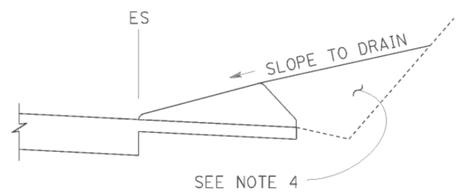

CASE C-2
Cut Slope

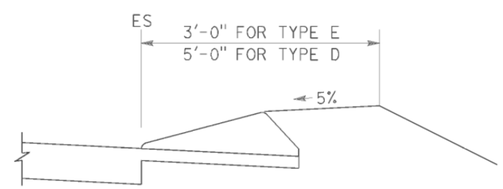

CASE F

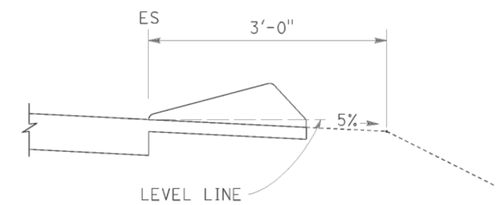

CASE R
See Note 2

TYPE D AND E BACKFILL DETAILS

NOTES:

1. For HMA shoulders only, extend top layer of HMA placed on the shoulder under dike with no joint at the ES. For projects with OGFC shoulders, do not extend OGFC under dike. See project plans for modified dike detail.
2. Case R applies to retrofit only projects where restrictive conditions do not provide enough width for Case F backfill.
3. Type A dike only to be used where restrictive slope conditions do not provide enough width to use Type D or Type E dike.
4. Fill and compact with excavated material to top of dike.
5. Use Type F dike, where dike is required with guard railing installations. See Revised Standard Plan RSP A77N4 for dike positioning details.

DIKE QUANTITIES

TYPE	CUBIC YARDS PER LINEAR FOOT
A	0.0135
C	0.0038
D	0.0293
E	0.0130
F	0.0066

Quantities based on 5% cross slope.

STATE OF CALIFORNIA
DEPARTMENT OF TRANSPORTATION

HOT MIX ASPHALT DIKES

NO SCALE

RSP A87B DATED JULY 19, 2013 SUPERSEDES STANDARD PLAN A87B DATED MAY 20, 2011 - PAGE 120 OF THE STANDARD PLANS BOOK DATED 2010.

REVISED STANDARD PLAN RSP A87B

2010 REVISED STANDARD PLAN RSP A87B

DATE PLOTTED => 14-MAY-2014
TIME PLOTTED => 13:54

DIST	COUNTY	ROUTE	POST MILES TOTAL PROJECT	SHEET No.	TOTAL SHEETS
02	Sha	299	83.0/84.0	53	61

REGISTERED CIVIL ENGINEER

November 15, 2013
PLANS APPROVAL DATE

REGISTERED PROFESSIONAL ENGINEER
Cornelis M. Hakim
No. C55610
Exp. 12-31-14
CIVIL
STATE OF CALIFORNIA

THE STATE OF CALIFORNIA OR ITS OFFICERS OR AGENTS SHALL NOT BE RESPONSIBLE FOR THE ACCURACY OR COMPLETENESS OF SCANNED COPIES OF THIS PLAN SHEET.

TO ACCOMPANY PLANS DATED 05-19-14

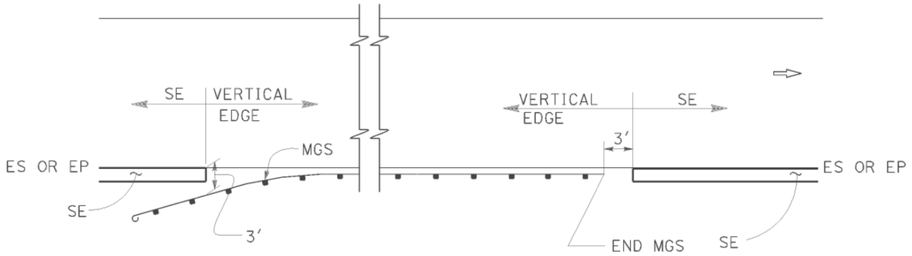

MGS

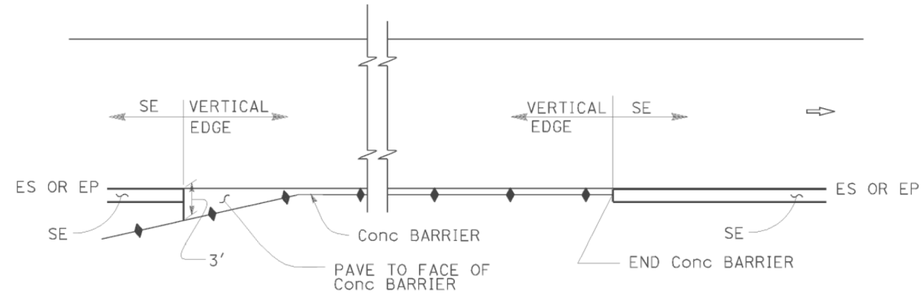

CONCRETE BARRIER

ABBREVIATIONS:

SE SAFETY EDGE

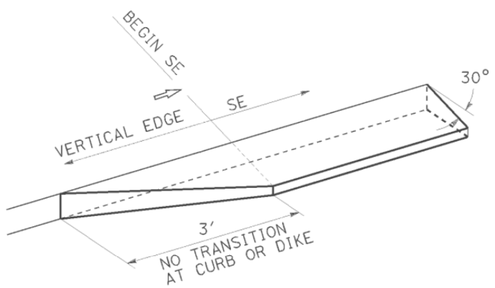

TRANSITION DETAIL FOR CONCRETE ONLY

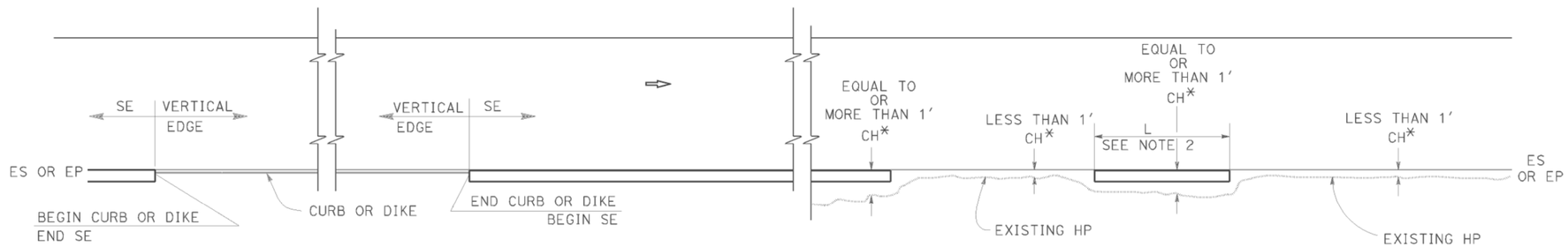

CURB OR DIKE

NARROW SIDE SLOPE

* CH = Distance from ES or EP to existing HP.

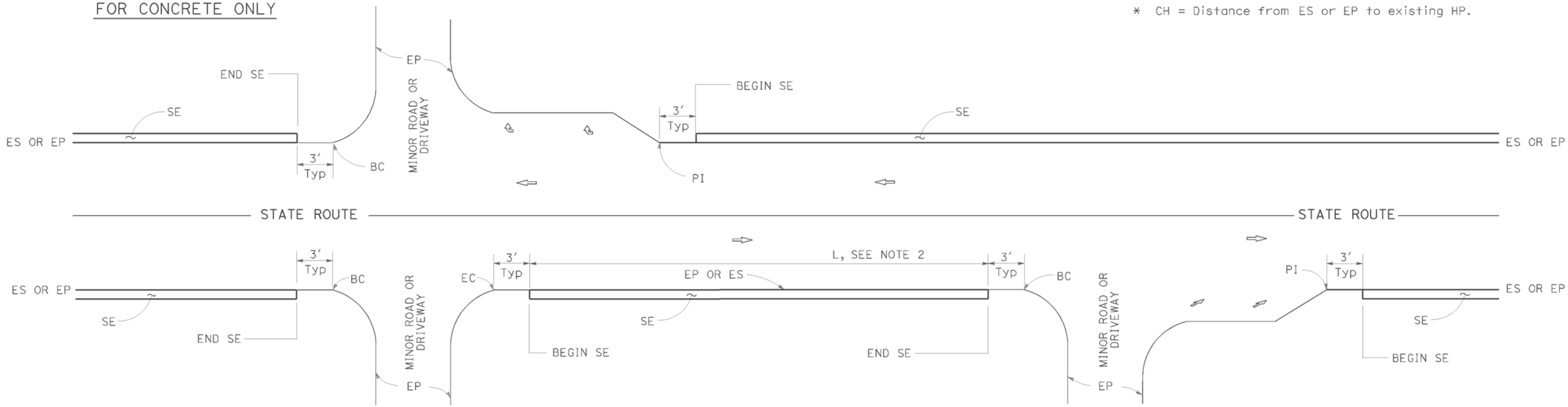

INTERSECTION

MINOR ROADWAY OR DRIVEWAY

DRIVEWAY AND INTERSECTION

NOTES:

1. For details not shown, see Revised Standard Plans RSP P75 and RSP P76.
2. Safety edge is optional when L is less than 30'.

STATE OF CALIFORNIA
DEPARTMENT OF TRANSPORTATION

PAVEMENT EDGE TREATMENTS

NO SCALE

RSP P74 DATED NOVEMBER 15, 2013 SUPERSEDES RSP P74 DATED JANUARY 20, 2012 THAT SUPPLEMENTS THE STANDARD PLANS BOOK DATED 2010.

REVISED STANDARD PLAN RSP P74

2010 REVISED STANDARD PLAN RSP P74

DATE PLOTTED => 14-MAY-2014
TIME PLOTTED => 13:54

DIST	COUNTY	ROUTE	POST MILES TOTAL PROJECT	SHEET No.	TOTAL SHEETS
02	Sha	299	83.0/84.0	54	61

REGISTERED CIVIL ENGINEER

November 15, 2013
PLANS APPROVAL DATE

REGISTERED PROFESSIONAL ENGINEER Cornelis M. Hakim No. C55610 Exp. 12-31-14 CIVIL STATE OF CALIFORNIA

THE STATE OF CALIFORNIA OR ITS OFFICERS OR AGENTS SHALL NOT BE RESPONSIBLE FOR THE ACCURACY OR COMPLETENESS OF SCANNED COPIES OF THIS PLAN SHEET.

TO ACCOMPANY PLANS DATED 05-19-14

LEGEND:

- HMA PAVEMENT
- HMA OR CONCRETE PAVEMENT
- CONCRETE PAVEMENT

ABBREVIATIONS:

SE SAFETY EDGE
TT TOTAL THICKNESS OF SE
HW HINGE WIDTH, DISTANCE FROM ES OR EP TO HP

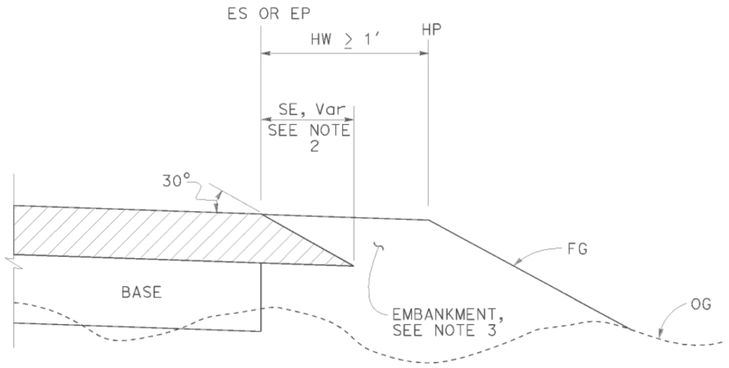

CASE K
Safety Edge - Fill Section, HW ≥ 1′

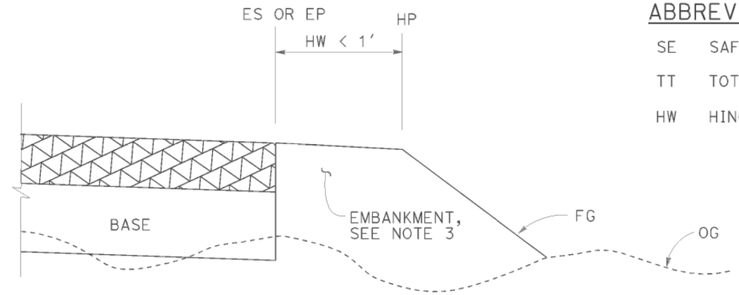

CASE L
Vertical Edge - Fill Section, HW < 1′

FILL SECTION

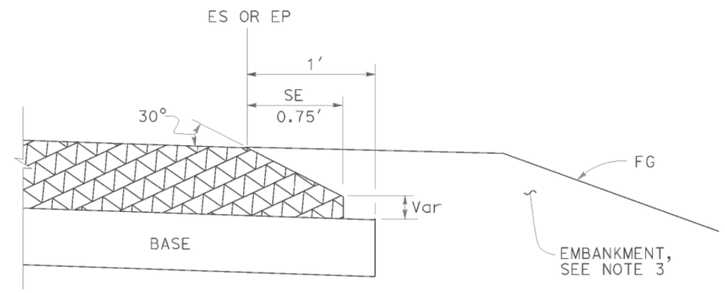

DETAIL "B"
For HMA pavement thickness more than 0.43′ or concrete pavement

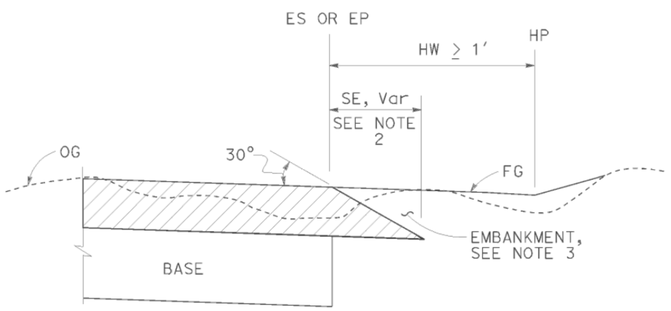

CASE M
Safety Edge - Cut Section, HW ≥ 1′

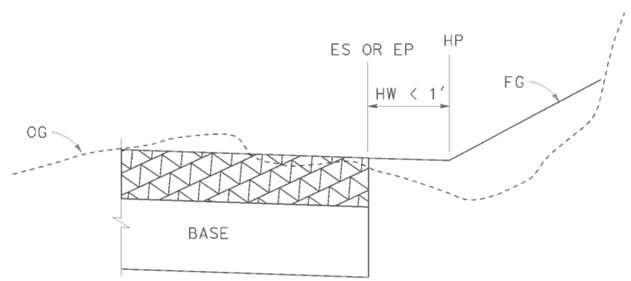

CASE N
Vertical Edge - Cut Section, HW < 1′

CUT SECTION

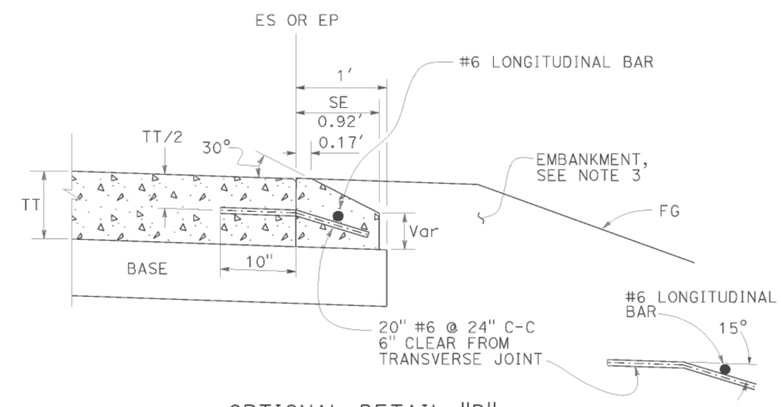

OPTIONAL DETAIL "B"
For concrete pavement
See Note 4

NOTES:

1. For limits of safety edge and vertical edge treatments, see Revised Standard Plan RSP P74
2. Details shown for HMA pavement thickness less than 0.43′. See Detail "B" for HMA pavement thickness more than 0.43′ or concrete pavement.
3. For locations and limits of embankment see project plans.
4. Safety edge transverse joint must match pavement transverse joint. End of #6 longitudinal bar must be 2" ±½" clear from transverse joint.
5. Safety edge is not needed in the area of MGS, barrier, right turn lane and acceleration lane. See Revised Standard Plan RSP P74.

STATE OF CALIFORNIA
DEPARTMENT OF TRANSPORTATION

PAVEMENT EDGE TREATMENTS-NEW CONSTRUCTION

NO SCALE

RSP P76 DATED NOVEMBER 15, 2013 SUPERSEDES RSP P76 DATED JANUARY 20, 2012 THAT SUPPLEMENTS THE STANDARD PLANS BOOK DATED 2010.

REVISED STANDARD PLAN RSP P76

2010 REVISED STANDARD PLAN RSP P76

DATE PLOTTED => 14-MAY-2014
TIME PLOTTED => 13:54

Dist	COUNTY	ROUTE	POST MILES TOTAL PROJECT	SHEET No.	TOTAL SHEETS
02	Sha	299	83.0/84.0	55	61

Raymond Don Tsztoo
REGISTERED CIVIL ENGINEER

April 19, 2013
PLANS APPROVAL DATE

REGISTERED PROFESSIONAL ENGINEER Raymond Don Tsztoo No. C37332 Exp. 6-30-14 CIVIL STATE OF CALIFORNIA

THE STATE OF CALIFORNIA OR ITS OFFICERS OR AGENTS SHALL NOT BE RESPONSIBLE FOR THE ACCURACY OR COMPLETENESS OF SCANNED COPIES OF THIS PLAN SHEET.

TO ACCOMPANY PLANS DATED 05-19-14

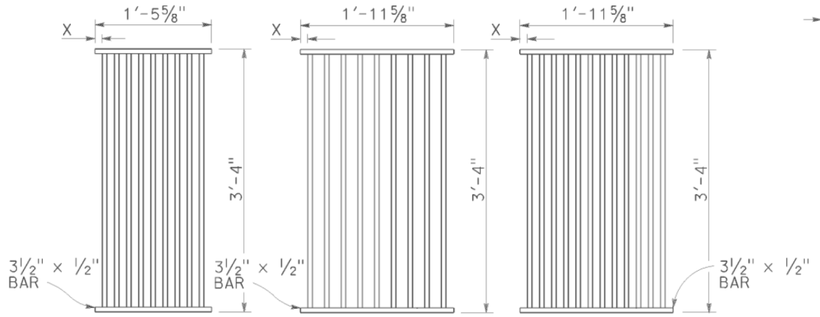

TYPE 18-9

1⅜" Clear spacing. Use within the roadbed on highways where bicycles and pedestrians are excluded.

TYPE 24-9

2" Clear spacing. Use in locations off the roadbed on all types of highways.

TYPE 24-12

1⅜" Clear spacing. Use within the roadbed on highways where bicycles and pedestrians are excluded.

RECTANGULAR GRATE DETAILS

(See table below)

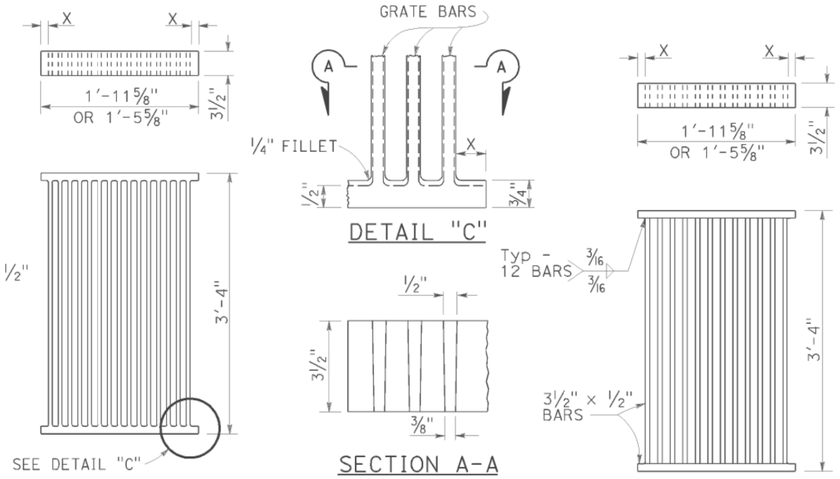

ALTERNATIVE CAST DUCTILE IRON GRATE OR CAST CARBON STEEL GRATE

ALTERNATIVE WELDED GRATE

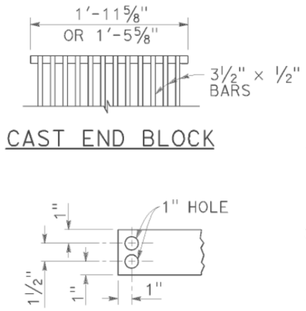

CAST END BLOCK

END OF BAR

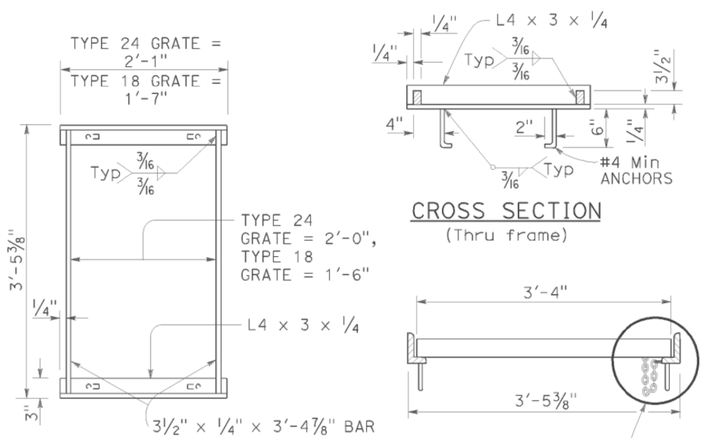

TYPICAL FRAME

CROSS SECTION

(Thru frame)

LONGITUDINAL SECTION

(Thru frame and grate)

RECTANGULAR FRAME DETAILS

(For all rectangular grates)

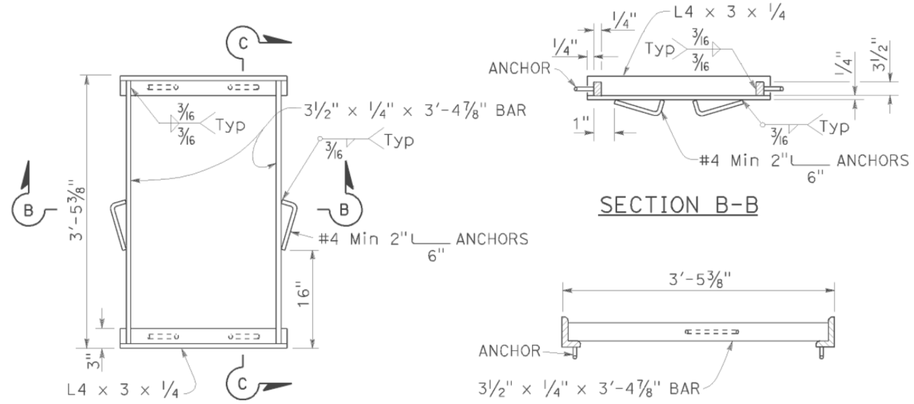

TYPICAL FRAME

SECTION B-B

SECTION C-C

ALTERNATIVE ANCHOR FOR RECTANGULAR FRAME

(For details not shown, See Rectangular Frame Details)

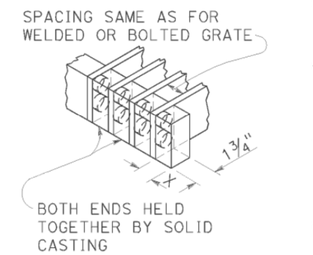

ALTERNATIVE CAST DUCTILE IRON OR CAST CARBON STEEL END BLOCK GRATE

NOTES:

1. Grate type numbers refer to approximate width of grate in inches and number of bars, respectively.
2. Contractor has the option of using cast ductile iron, cast carbon steel, welded, bolted, or cast end block grate.
3. Rounded top of bars optional on all grates.
4. Pipe inlets with a grate shall be placed so that bars parallel direction of principle surface flow.
5. Complete joint penetration butt welds may be substituted for the fillet welds on all anchors.
6. Standard square, hexagon, round or equivalent headed anchors may be substituted for the right angle hooks on the anchors shown on this plan.
7. Grate and frame weights are based on welded grates (weights of face angles, steps, protection bars, etc. are not included).
8. Connect chain to grate and frame only at locations shown on the plans. When chain is required, do not use cast ductile iron grates.

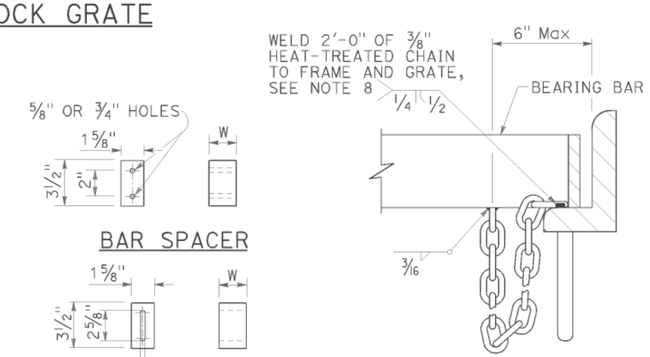

BAR SPACER

ALTERNATIVE SPACER

W = 1⅜" or 2"

DETAIL "D"

(Steel grates only)

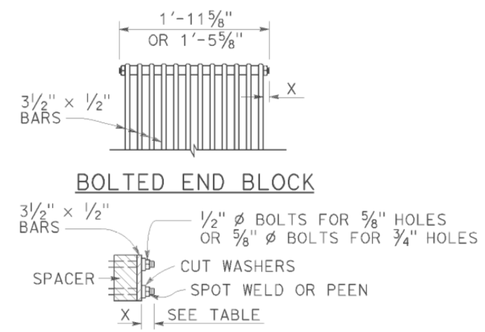

BOLTED END BLOCK

BOLTING DETAIL

ALTERNATIVE BOLTED GRATE

GRATE BAR SPACING TABLE

TYPE	No. OF BARS	CLEAR BAR SPACING	X
18-9	9	1⅜"	1 1/16"
24-9	9	2"	1 9/16"
24-12	12	1⅜"	1¼"

INLET TYPE	COVER TYPE	WEIGHT LB
OS	PLATE	174
OL-7	PLATE	170
OL-10	PLATE	170
OL-14	PLATE	170
OL-21	PLATE	170
OCP	PLATE	112
OCPI	PLATE	112
OCPI	REDWOOD	42
OMP	PLATE	177
OMPI	PLATE	177

INLET TYPE	GRATE TYPE	No. OF GRATES	WEIGHT LB
GDO	24-12	2	634
GOL-7	24-12	1	326
GOL-10	24-12	1	326
GO,G1,G2,G3,G4 (TYPE 24)	24-9	1	263
	24-12	1	326
G4 (TYPE 18),G5,G6	18-9	1	249
GT1	18-9	2	498
GT2	18-9	2	498
GT3	24-12	2	652
GT4	24-12	2	652
TRASH RACK			22
GRATE CHAIN			3

BASIS FOR Misc IRON & STEEL FINAL PAY WEIGHTS FOR DRAINAGE INLETS

(See Note 7)

STATE OF CALIFORNIA
DEPARTMENT OF TRANSPORTATION

GRATE DETAILS No. 1

NO SCALE

RSP D77A DATED APRIL 19, 2013 SUPERSEDES RSP D77A DATED JULY 20, 2012 AND STANDARD PLAN D77A DATED MAY 20, 2011 - PAGE 164 OF THE STANDARD PLANS BOOK DATED 2010.

REVISED STANDARD PLAN RSP D77A

2010 REVISED STANDARD PLAN RSP D77A

DATE PLOTTED => 14-MAY-2014
TIME PLOTTED => 13:54

Dist	COUNTY	ROUTE	POST MILES TOTAL PROJECT	SHEET No.	TOTAL SHEETS
02	Sha	299	83.0/84.0	56	61

Raymond Don Tsztoo
REGISTERED CIVIL ENGINEER

April 19, 2013
PLANS APPROVAL DATE

REGISTERED PROFESSIONAL ENGINEER Raymond Don Tsztoo No. C37332 Exp. 6-30-14 CIVIL STATE OF CALIFORNIA

THE STATE OF CALIFORNIA OR ITS OFFICERS OR AGENTS SHALL NOT BE RESPONSIBLE FOR THE ACCURACY OR COMPLETENESS OF SCANNED COPIES OF THIS PLAN SHEET.

TO ACCOMPANY PLANS DATED 05-19-14

2010 REVISED STANDARD PLAN RSP D77B

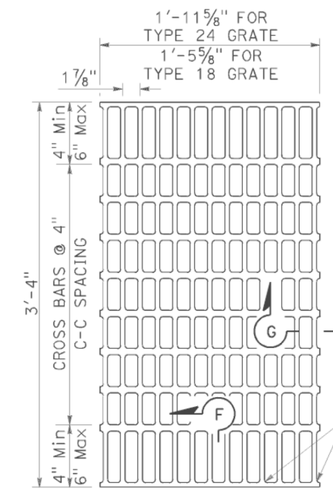

NOTES:

Bearing bars to be 3½" × ¼" bars on 1⅞" centers.

⅜"± ø Cross bars may be fillet welded, resistance welded or electroforged to bearing bars.

Weight of Type 24 grate = 141 LBS.

Weight of Type 18 grate = 107 LBS. (Type 24 grate shown).

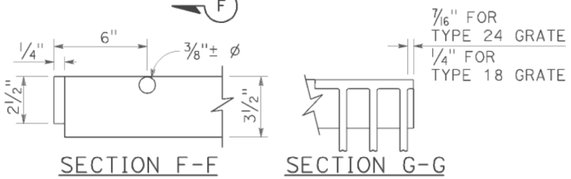

SECTION F-F SECTION G-G

TYPE 18-10 AND 24-13 GRATE

(Welded Steel)

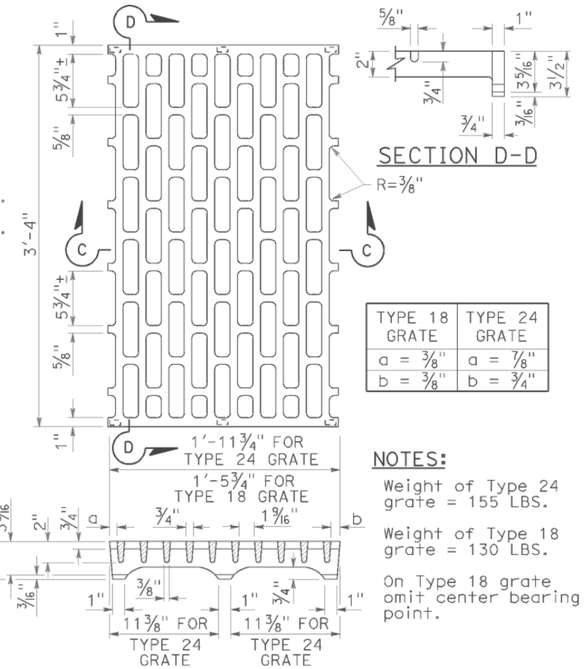

SECTION D-D

TYPE 18 GRATE	TYPE 24 GRATE
a = ⅜"	a = ⅞"
b = ⅜"	b = ¾"

SECTION C-C

NOTES:

Weight of Type 24 grate = 155 LBS.

Weight of Type 18 grate = 130 LBS.

On Type 18 grate omit center bearing point.

TYPE 18-8C AND 24-10C GRATE

(Cast ductile iron)

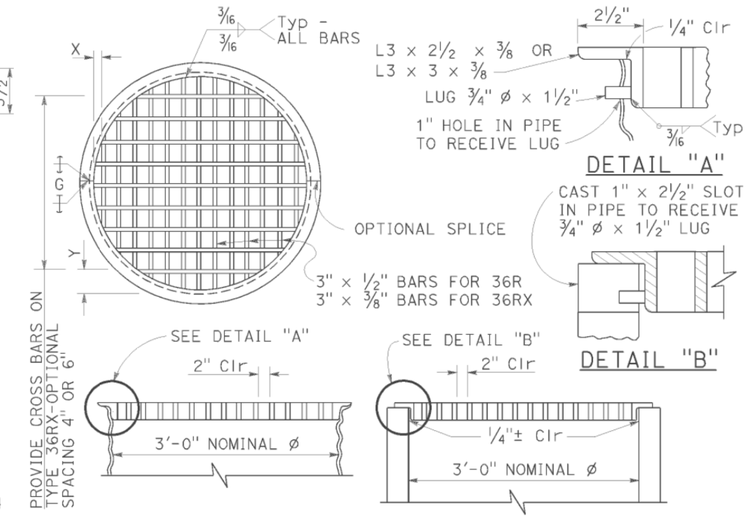

DETAIL "A"

DETAIL "B"

TYPE 36R AND 36RX GRATE DETAILS

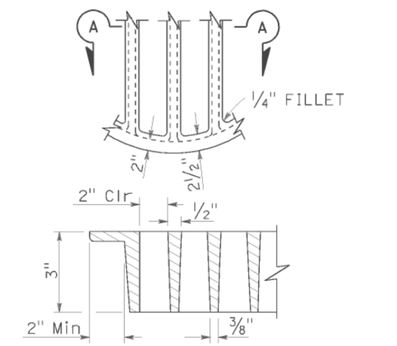

SECTION A-A

ALTERNATIVE CAST DUCTILE IRON GRATE OR CAST CARBON STEEL GRATE TYPE 36R AND 36RX

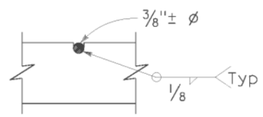

⅜"± ø Cross bars may be fillet welded, resistance welded or electroforged to bearing bars.

CROSS BAR DETAIL TYPE 36RX GRATE (WELDED STEEL)

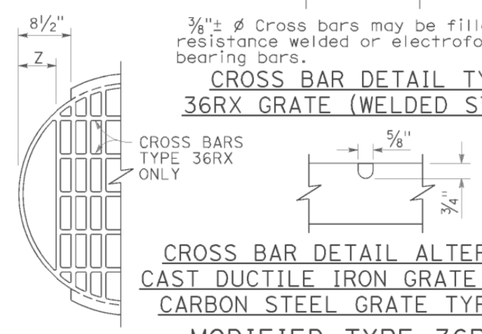

CROSS BAR DETAIL ALTERNATIVE CAST DUCTILE IRON GRATE OR CAST CARBON STEEL GRATE TYPE 36RX

MODIFIED TYPE 36R AND 36RX GRATE FOR ODI INLET

BASIS FOR Misc IRON AND STEEL FINAL PAY WEIGHTS FOR DRAINAGE INLETS

INLET TYPE	GRATE TYPE	No. OF GRATES	WEIGHT LB
GDO (SEE NOTE 4)	24-10C	2	391
	24-10S	2	456
	24-12X	2	473
	24-13	2	374
GO,GOL,G1,G2, G3,G4 (TYPE 24)	24-10C	1	202
	24-10S	1	229
	24-12X	1	239
	24-13	1	188
G4 (TYPE 18) G5,G6	18-8S	1	187
	18-9X	1	187
	18-10	1	149
GT1,GT2	18-8S	2	374
	18-9X	2	374
	18-10	2	298
GT3,GT4	24-10C	2	404
	24-10S	2	458
	24-12X	2	478
	24-13	2	376
ODI	36RX (Mod)	1	196
GMP,GCP,GCPI	36RX	1	215
ODI	36R (Mod)	1	220
GMP,GCP,GCPI	36R	1	236
TRASH RACK			22
GRATE CHAIN			3

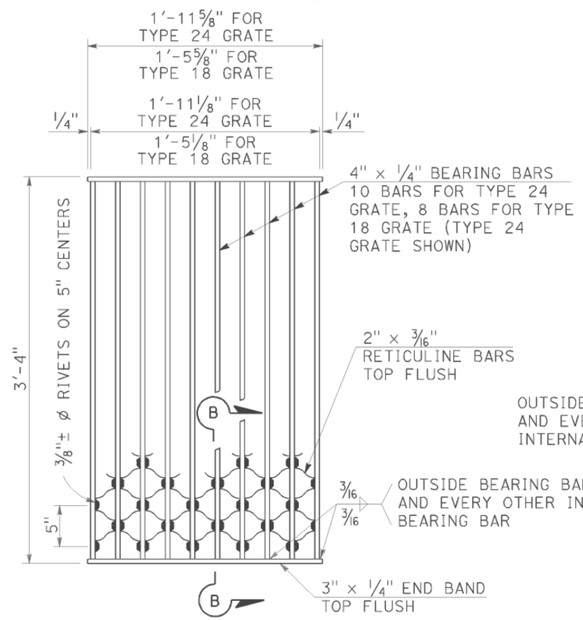

SECTION B-B

NOTES:

Weight of Type 24 grate = 182 LBS.
Weight of Type 18 grate = 145 LBS.

TYPE 18-8S AND 24-10S GRATE

(Welded Steel) Reticuline type

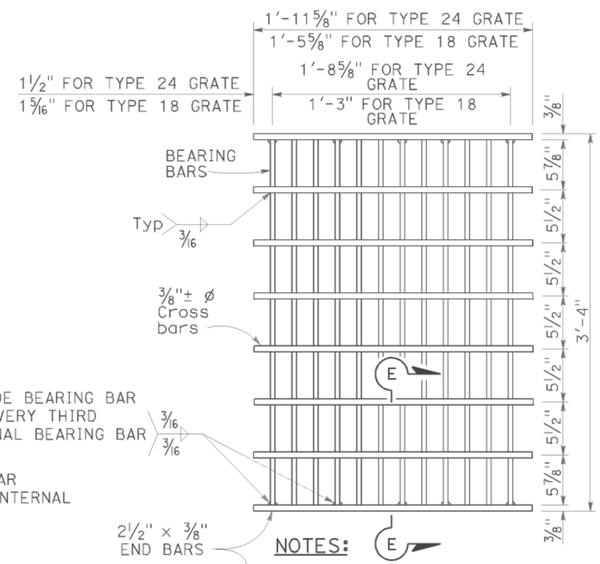

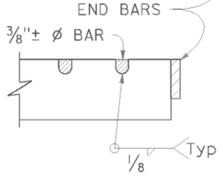

SECTION E-E

NOTES:

Bearing bars to be 3½" × ⅜" bars on 1⅞" centers.

12 Bars for Type 24 grate - 9 bars for Type 18 grates. (Type 24 grate shown).

Weight of Type 24 grate = 192 LBS.

Weight of Type 18 grate = 145 LBS.

⅜"± ø Cross bars may be fillet welded, resistance welded or electroforged to bearing bars.

TYPE 18-9X AND 24-12X GRATE

(Welded Steel)

NOTES:

1. When alternative grates are allowed - Final pay based on alternative with the lesser weight.
2. Use frame shown on Standard Plan D74A, D74B or RSP D77A as appropriate.
3. When Type 24-10S, 24-12X or 24-13 grates are used with GDO Inlets, a ¼" × 3½" × 3'-4⅞" steel bar shall be welded across the center of inlet frame to separate the individual grates.
4. See Revised Standard Plan RSP D77A for connecting chain to welded grate and frame. When chain is required, do not use cast ductile iron grate.

GRATE BAR SPACING TABLE

TYPE	No. OF BARS	CLEAR BAR SPACING	X	Y 4" SPACING	Y 6" SPACING	Z
36R	13	2"	2⅛"	–	–	–
36RX (STEEL)	15	2"	9/16"	3¾"	5¾"	–
36RX (CAST)	13	2"	2⅛"	3¾"	5¾"	–
36R Mod	12	2"	2⅛"	–	–	5"
36RX Mod (STEEL)	13	2"	9/16"	3¾"	5¾"	5 11/16"
36RX Mod (CAST)	12	2"	2⅛"	3¾"	5¾"	5"

STATE OF CALIFORNIA
DEPARTMENT OF TRANSPORTATION

GRATE DETAILS No. 2

NO SCALE

RSP D77B DATED APRIL 19, 2013 SUPERSEDES RSP D77B DATED JULY 20, 2012 AND STANDARD PLAN D77B DATED MAY 20, 2011 - PAGE 165 OF THE STANDARD PLANS BOOK DATED 2010.

REVISED STANDARD PLAN RSP D77B

DATE PLOTTED => 14-MAY-2014
TIME PLOTTED => 13:54

Dist	COUNTY	ROUTE	POST MILES TOTAL PROJECT	SHEET No.	TOTAL SHEETS
02	Sha	299	83.0/84.0	57	61

Gregory A. Balzer
LICENSED LANDSCAPE ARCHITECT

July 19, 2013
PLANS APPROVAL DATE

LICENSED LANDSCAPE ARCHITECT
Gregory A. Balzer 2478
Gregory A. Balzer
Original Date 2-28-15
Renewal Date 7-19-13
Date
STATE OF CALIFORNIA

THE STATE OF CALIFORNIA OR ITS OFFICERS OR AGENTS SHALL NOT BE RESPONSIBLE FOR THE ACCURACY OR COMPLETENESS OF SCANNED COPIES OF THIS PLAN SHEET.

TO ACCOMPANY PLANS DATED 05-19-14

A

AB	AGGREGATE BASE
ABS	ACRYLONITRILE-BUTADIENE-STYRENE
AC	ASPHALT CONCRETE
ACC	ARMOR-CLAD CONDUCTORS
Adj	ADJACENT/ADJUSTABLE
AIC	AUXILIARY IRRIGATION CONTROLLER
Alt	ALTERNATIVE
AMEND	AMENDMENT
ARV	AIR RELEASE VALVE
AUTO	AUTOMATIC
AUX	AUXILIARY
AVB	ATMOSPHERIC VACUUM BREAKER

B

B&B	BALLED AND BURLAPPED
B/B	BRASS/BRONZE
B/B/PL	BRASS/BRONZE/PLASTIC
B/PL	BRASS/PLASTIC
BFM	BONDED FIBER MATRIX
Bit Ctd	BITUMINOUS COATED
BP	BOOSTER PUMP
BPA	BACKFLOW PREVENTER ASSEMBLY
BPE	BACKFLOW PREVENTER ENCLOSURE
BV	BALL VALVE

C

C	CONDUIT
CAP	CORRUGATED ALUMINUM PIPE
CARV	COMBINATION AIR RELEASE VALVE
CB	COUPLING BAND
CCA	CAM COUPLER ASSEMBLY
CEC	CONTROLLER ENCLOSURE CABINET
CHDPE	CORRUGATED HIGH DENSITY POLYETHYLENE
CL	CHAIN LINK
CNC	CONTROL AND NEUTRAL CONDUCTORS
Conc	CONCRETE
CP	COPPER PIPE
CS	COMPOST SOCK
CSP	CORRUGATED STEEL PIPE
CST	CENTER STRIP
CV	CHECK VALVE

D

Dia	DIAMETER
DIP	DUCTILE IRON PIPE
DIT	DRIP IRRIGATION TUBING
DG	DECOMPOSED GRANITE
DN	DIAMETER NOMINAL
DVA	DRIP VALVE ASSEMBLY

E

EC	EROSION CONTROL
ECTC	EROSION CONTROL TECHNOLOGY COUNCIL
Elect	ELECTRIC/ELECTRICAL
Elev	ELEVATION
ELL	ELBOW
ENCL	ENCLOSURE
EP	EDGE OF PAVEMENT
ES	EDGE OF SHOULDER
EST	END STRIP
ESTB	ESTABLISHMENT
ETW	EDGE OF TRAVELED WAY

F

F	FULL CIRCLE
F/P	FULL/PART CIRCLE
FCV	FLOW CONTROL VALVE
FERT	FERTILIZER
FG	FINISHED GRADE
FH	FLEXIBLE HOSE
FIPT	FEMALE IRON PIPE THREAD
FIS	FERTILIZER INJECTOR SYSTEM
FL	FLOW LINE
FR	FIBER ROLL
FS	FLOW SENSOR
FSC	FLOW SENSOR CABLE
FV	FLUSH VALVE

G

Galv	GALVANIZED
GARV	GARDEN VALVE
GARVA	GARDEN VALVE ASSEMBLY
GM	GRAVEL MULCH
GPH	GALLONS PER HOUR
GPM	GALLONS PER MINUTE
GSP	GALVANIZED STEEL PIPE
GV	GATE VALVE

H

H	HALF CIRCLE
HDPE	HIGH DENSITY POLYETHYLENE
HP	HORSEPOWER/HINGE POINT
HPL	HIGH PRESSURE LINE
Hwy	HIGHWAY

I

IC	IRRIGATION CONTROLLER
ICC	IRRIGATION CONTROLLER(S) IN CONTROLLER ENCLOSURE CABINET
ID	INSIDE DIAMETER
IFS	IRRIGATION FILTRATION SYSTEM
IPS	IRON PIPE SIZE
IPT	IRON PIPE THREAD
Irr	IRRIGATION

L

L	LENGTH

M

Max	MAXIMUM
MBGR	METAL BEAM GUARD RAILING
MCV	MANUAL CONTROL VALVE
MIC	MASTER IRRIGATION CONTROLLER
Min	MINIMUM
MIPT	MALE IRON PIPE THREAD
Misc	MISCELLANEOUS
Mtl	MATERIAL
MVP	MAINTENANCE VEHICLE PULLOUT

N

NCN	NO COMMON NAME
NL	NOZZLE LINE
No.	NUMBER
NPT	NATIONAL PIPE THREAD

O

O/C	ON CENTER
OD	OUTSIDE DIAMETER
OL	OVERLAP

P

P	PART CIRCLE
PB	PULL BOX
PCC	PORTLAND CEMENT CONCRETE
PE	POLYETHYLENE
Pkt	PACKET
PL	PLASTIC
PLS	PURE LIVE SEED
PLT	PLANT/PLANTING
PLT ESTB	PLANT ESTABLISHMENT
PM	POST MILE
PR	PRESSURE RATED
PRLV	PRESSURE RELIEF VALVE
PRV	PRESSURE REGULATING VALVE
PVC	POLYVINYL CHLORIDE
Pvmt	PAVEMENT

Q

Q	QUARTER CIRCLE
QCV	QUICK COUPLING VALVE

NOTE:

For additional abbreviations, see Standard Plans A10A and A10B.

R

R	RADIUS
RCP	REINFORCED CONCRETE PIPE
RCV	REMOTE CONTROL VALVE
RCVM	REMOTE CONTROL VALVE (MASTER)
RCVMF	REMOTE CONTROL VALVE (MASTER) W/FLOW SENSOR
RCVP	REMOTE CONTROL VALVE W/PRESSURE REGULATOR
RCW	RECYCLED WATER
RECP	ROLLED EROSION CONTROL PRODUCT
REQ	REQUIRED
RICS	REMOTE IRRIGATION CONTROL SYSTEM
R/W	RIGHT OF WAY

S

S	SLIP
SCH	SCHEDULE
SF	STATE-FURNISHED
Shld	SHOULDER
Sq	SQUARE
SST	SIDE STRIP
Sta	STATION
Std	STANDARD
SW	SIDEWALK/SOUND WALL

T

T	THIRD CIRCLE/THREAD
TLS	TRUCK LOADING STANDPIPE
TQ	THREE QUARTER CIRCLE
TRM	TURF REINFORCEMENT MAT
TT	TWO-THIRDS CIRCLE
TWSA	TREE WELL SPRINKLER ASSEMBLY
Typ	TYPICAL

U

UG	UNDERGROUND

W

W	WIDTH
W/	WITH
WM	WATER METER
WS	WYE STRAINER
WSA	WYE STRAINER ASSEMBLY
WSP	WELDED STEEL PIPE
WWM	WELDED WIRE MESH

STATE OF CALIFORNIA
DEPARTMENT OF TRANSPORTATION

LANDSCAPE AND EROSION CONTROL ABBREVIATIONS

NO SCALE

RSP H1 DATED JULY 19, 2013 SUPERSEDES STANDARD PLAN H1
DATED MAY 20, 2011 - PAGE 218 OF THE STANDARD PLANS BOOK DATED 2010.

REVISED STANDARD PLAN RSP H1

2010 REVISED STANDARD PLAN RSP H1

DATE PLOTTED => 14-MAY-2014
TIME PLOTTED => 13:54

Dist	COUNTY	ROUTE	POST MILES TOTAL PROJECT	SHEET No.	TOTAL SHEETS
02	Sha	299	83.0/84.0	58	61

LICENSED LANDSCAPE ARCHITECT

November 15, 2013
PLANS APPROVAL DATE

LICENSED LANDSCAPE ARCHITECT — Gregory A. Balzer 2-28-15 — STATE OF CALIFORNIA

THE STATE OF CALIFORNIA OR ITS OFFICERS OR AGENTS SHALL NOT BE RESPONSIBLE FOR THE ACCURACY OR COMPLETENESS OF SCANNED COPIES OF THIS PLAN SHEET.

TO ACCOMPANY PLANS DATED 05-19-14

EXISTING	NEW	ITEM DESCRIPTION
		WATER METER (WM)
		BACKFLOW PREVENTER ASSEMBLY (BPA)
		BACKFLOW PREVENTER ENCLOSURE (BPE)
		BOOSTER PUMP (BP)
		TRUCK LOADING STANDPIPE (TLS)
	FS	FLOW SENSOR (FS)
X	X	MASTER IRRIGATION CONTROLLER (MIC)
		AUXILIARY IRRIGATION CONTROLLER (AIC)
		IRRIGATION CONTROLLER (IC) IRRIGATION CONTROLLER (IC) (BATTERY) IRRIGATION CONTROLLER (IC) (SOLAR) IRRIGATION CONTROLLER (IC) (TWO WIRE)
		IRRIGATION CONTROLLER(S) IN CONTROLLER ENCLOSURE CABINET (ICC)
acc	ACC	ARMOR-CLAD CONDUCTORS (ACC)
cnc	CNC	CONTROL AND NEUTRAL CONDUCTORS (CNC)
		IRRIGATION CONDUIT
		EXTEND IRRIGATION CONDUIT
dip	DIP	DUCTILE IRON PIPE (SUPPLY LINE) (MAIN) (DIP)
		GALVANIZED STEEL PIPE (SUPPLY LINE) (MAIN) (GSP)
		GALVANIZED STEEL PIPE (SUPPLY LINE) (LATERAL) (GSP)
		PLASTIC PIPE (SUPPLY LINE) (MAIN)
		PLASTIC PIPE (SUPPLY LINE) (LATERAL)
cp	CP	COPPER PIPE (SUPPLY LINE)
dit	DIT	DRIP IRRIGATION TUBING
		REMOTE CONTROL VALVE (RCV) REMOTE CONTROL VALVE (MASTER) (RCVM) REMOTE CONTROL VALVE (MASTER) W/FLOW METER (RCVMF)
P	P	REMOTE CONTROL VALVE W/PRESSURE REGULATOR (RCVP)
		EXISTING MANUAL CONTROL VALVE (MCV)
V	V	DRIP VALVE ASSEMBLY (DVA)
Y	Y	WYE STRAINER ASSEMBLY (WSA)

EXISTING	NEW	ITEM DESCRIPTION
		GATE VALVE (GV)
		BALL VALVE (BV)
		QUICK COUPLING VALVE (QCV)
		CAM COUPLER ASSEMBLY (CCA)
		GARDEN VALVE ASSEMBLY (GARVA)
		PRESSURE REGULATING VALVE (PRV)
		PRESSURE RELIEF VALVE (PRLV)
		FLOW CONTROL VALVE (FCV)
		COMBINATION AIR RELEASE VALVE (CARV)
		CHECK VALVE (CV)
		FLUSH VALVE (FV)
		EXISTING NOZZLE LINE W/TURNING UNION
		EXISTING IRRIGATION SYSTEM
		EXISTING IRRIGATION SYSTEM TO BE REMOVED
		CHAIN LINK GATE
		QUICK COUPLING VALVE W/SPRINKLER PROTECTOR
3	3	SPRINKLER W/SPRINKLER PROTECTOR
	C	CONNECT TO EXISTING SYSTEM
		CAP
		CAP EXISTING
	\\\FR\\\	FIBER ROLL
	\\\CS\\\	COMPOST SOCK

- RCV SIZE
- IRRIGATION CONTROLLER
- CONTROLLER STATION
- VALVE IN PARALLEL (IF APPLICABLE)
- GPM
- QUANTITY OF SPRINKLERS (WHEN SHOWN)

* 2½"-A-2b-40-60

VALVE CODE

* VALVE CODES FOR EXISTING VALVES ARE SHOWN IN A DASHED ENCLOSURE.

STATE OF CALIFORNIA
DEPARTMENT OF TRANSPORTATION

LANDSCAPE AND EROSION CONTROL SYMBOLS

NO SCALE

RSP H2 DATED NOVEMBER 15, 2013 SUPERSEDES RSP H2 DATED JULY 19, 2013 AND STANDARD PLAN H2 DATED MAY 20, 2011 - PAGE 219 OF THE STANDARD PLANS BOOK DATED 2010.

REVISED STANDARD PLAN RSP H2

2010 REVISED STANDARD PLAN RSP H2

DATE PLOTTED => 14-MAY-2014
TIME PLOTTED => 13:54

Dist	COUNTY	ROUTE	POST MILES TOTAL PROJECT	SHEET No.	TOTAL SHEETS
02	Sha	299	83.0/84.0	59	61

REGISTERED CIVIL ENGINEER

July 19, 2013
PLANS APPROVAL DATE

REGISTERED PROFESSIONAL ENGINEER
Gurinderpal Bhullar
No. C48815
Exp. 9-30-14
CIVIL
STATE OF CALIFORNIA

THE STATE OF CALIFORNIA OR ITS OFFICERS OR AGENTS SHALL NOT BE RESPONSIBLE FOR THE ACCURACY OR COMPLETENESS OF SCANNED COPIES OF THIS PLAN SHEET.

TO ACCOMPANY PLANS DATED 05-19-14

2010 REVISED STANDARD PLAN RSP T9

TABLE 1

TAPER LENGTH CRITERIA AND CHANNELIZING DEVICE SPACING

SPEED (S)	MINIMUM TAPER LENGTH * FOR WIDTH OF OFFSET 12 FEET (W)				MAXIMUM CHANNELIZING DEVICE SPACING		
					X	Y	Z **
	TANGENT 2L	MERGING L	SHIFTING L/2	SHOULDER L/3	TAPER	TANGENT	CONFLICT
mph	ft	ft	ft	ft	ft	ft	ft
20	160	80	40	27	20	40	10
25	250	125	63	42	25	50	12
30	360	180	90	60	30	60	15
35	490	245	123	82	35	70	17
40	640	320	160	107	40	80	20
45	1080	540	270	180	45	90	22
50	1200	600	300	200	50	100	25
55	1320	660	330	220	55	110	27
60	1440	720	360	240	60	120	30
65	1560	780	390	260	65	130	32
70	1680	840	420	280	70	140	35

* - For other offsets, use the following merging taper length formula for L:
For speed of 40 mph or less, $L = WS^2/60$
For speed of 45 mph or more, $L = WS$

Where: L = Taper length in feet
W = Width of offset in feet
S = Posted speed limit, off-peak 85th-percentile speed prior to work starting, or the anticipated operating speed in mph

** - Use for taper and tangent sections where there are no pavement markings or where there is a conflict between existing pavement markings and channelizers (CA).

TABLE 2

LONGITUDINAL BUFFER SPACE AND FLAGGER STATION SPACING

SPEED *	Min D **	DOWNGRADE Min D ***		
		-3%	-6%	-9%
mph	ft	ft	ft	ft
20	115	116	120	126
25	155	158	165	173
30	200	205	215	227
35	250	257	271	287
40	305	315	333	354
45	360	378	400	427
50	425	446	474	507
55	495	520	553	593
60	570	598	638	686
65	645	682	728	785
70	730	771	825	891

* - Speed is posted speed limit, off-peak 85th-percentile speed prior to work starting, or the anticipated operating speed in mph

** - Longitudinal buffer space or flagger station spacing

*** - Use on sustained downgrade steeper than -3 percent and longer than 1 mile.

TABLE 3

ADVANCE WARNING SIGN SPACING

ROAD TYPE	DISTANCE BETWEEN SIGNS *		
	A	B	C
	ft	ft	ft
URBAN - 25 mph OR LESS	100	100	100
URBAN - MORE THAN 25 mph TO 40 mph	250	250	250
URBAN - MORE THAN 40 mph	350	350	350
RURAL	500	500	500
EXPRESSWAY / FREEWAY	1000	1500	2640

* - The distances are approximate, are intended for guidance purposes only, and should be applied with engineering judgment. These distances should be adjusted by the Engineer for field conditions, if necessary, by increasing or decreasing the recommmended distances.

STATE OF CALIFORNIA
DEPARTMENT OF TRANSPORTATION

TRAFFIC CONTROL SYSTEM TABLES FOR LANE AND RAMP CLOSURES

NO SCALE

RSP T9 DATED JULY 19, 2013 SUPERSEDES RSP T9 DATED APRIL 19, 2013 THAT SUPPLEMENTS THE STANDARD PLANS BOOK DATED 2010.

REVISED STANDARD PLAN RSP T9

DATE PLOTTED => 14-MAY-2014
TIME PLOTTED => 13:54

Dist	COUNTY	ROUTE	POST MILES TOTAL PROJECT	SHEET No.	TOTAL SHEETS
02	Sha	299	83.0/84.0	60	61

REGISTERED CIVIL ENGINEER

April 19, 2013
PLANS APPROVAL DATE

REGISTERED PROFESSIONAL ENGINEER Gurinderpal Bhullar No. C48815 Exp. 9-30-14 CIVIL STATE OF CALIFORNIA

THE STATE OF CALIFORNIA OR ITS OFFICERS OR AGENTS SHALL NOT BE RESPONSIBLE FOR THE ACCURACY OR COMPLETENESS OF SCANNED COPIES OF THIS PLAN SHEET.

TO ACCOMPANY PLANS DATED 05-19-14

NOTES:

See Revised Standard Plan RSP T9 for tables.

Use cone spacing X for taper segment, Y for tangent segment or Z for conflict situations, as approriate, per Table 1, unless X, Y, or Z cone spacing is shown on this sheet.

Unless otherwise specified in the special provisions, all temporary warning signs shall have black legend on fluorescent orange background.

California codes are designated by (CA). Otherwise, Federal (MUTCD) codes are shown.

TYPICAL LANE CLOSURE WITH REVERSIBLE CONTROL

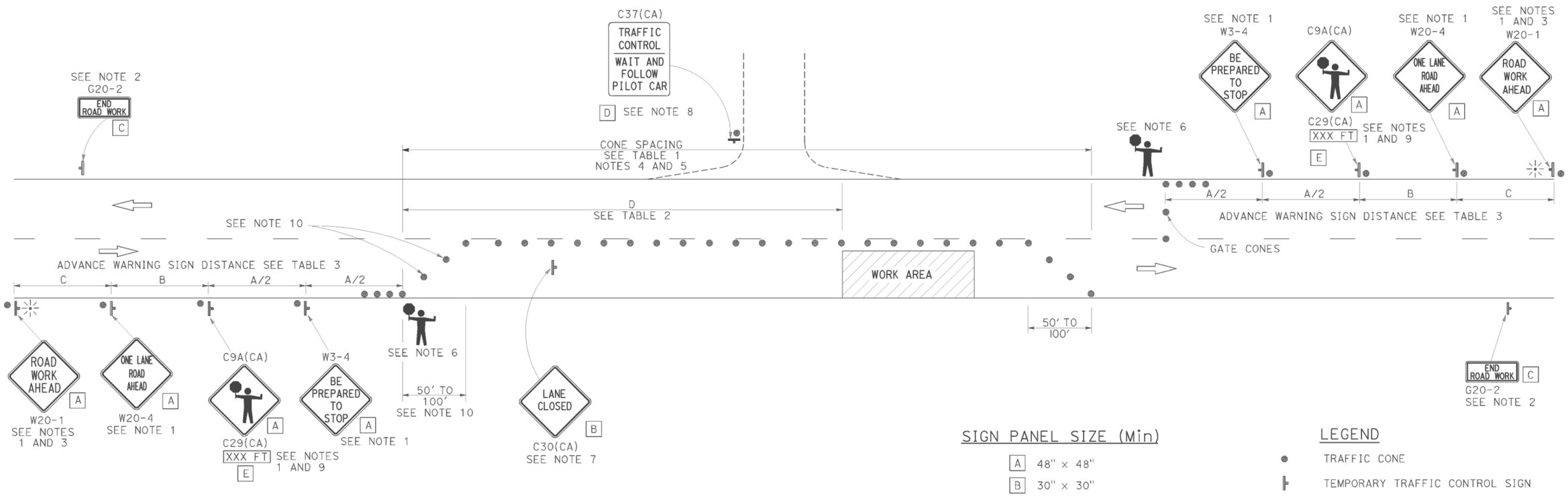

SIGN PANEL SIZE (Min)

A	48" × 48"
B	30" × 30"
C	36" × 18"
D	36" × 42"
E	20" × 7"

LEGEND

- TRAFFIC CONE
- TEMPORARY TRAFFIC CONTROL SIGN
- PORTABLE FLASHING BEACON
- FLAGGER

NOTES:

1. Each advance warning sign in each direction of travel shall be equipped with at least two flags for daytime closure. Each flag shall be at least 16" x 16" in size and shall be orange or fluorescent red-orange in color. Flashing beacons shall be placed at the locations indicated for lane closure during hours of darkness.
2. A G20-2 "END ROAD WORK" sign, as appropriate, shall be placed at the end of the lane control unless the end of work area is obvious, or ends within a larger project's limits.
3. If the W20-1 sign would follow within 2000' of a stationary W20-1 or G20-1 "ROAD WORK NEXT _____ MILES", use a W20-4 sign for the first advance warning sign.
4. All cones used for lane closures during the hours of darkness shall be fitted with retroreflective bands (or sleeves) as specified in the specifications.
5. Portable delineators, placed at one-half the spacing indicated for traffic cones, may be used instead of cones for daytime closures only.
6. Additional advance flaggers may be required. Flagger should stand in a conspicuous place, be visible to approaching traffic as well as approaching vehicles after the first vehicle has stopped. During the hours of darkness, the flagging-station and flagger shall be illuminated and clearly visible to approaching traffic. The illumination footprint of the lighting on the ground shall be at least 20' in diameter. Place a minimum of four cones at 50' intervals in advance of flagger station as shown.
7. Place C30(CA) "LANE CLOSED" sign at 500' to 1000' intervals throughout extended work areas. They are optional if the work area is visible from the flagger station.
8. When a pilot car is used, place a C37(CA) "TRAFFIC CONTROL-WAIT AND FOLLOW PILOT CAR" sign with black legend on white background at all intersections, driveways and alleys without a flagger within traffic control area. Signs shall be clean and visible at all times. Where traffic can not be effectively self-regulated, at least one flagger shall be used at each intersection within traffic control area.
9. An optional C29(CA) sign may be placed below the C9A(CA) sign.
10. Either traffic cones or barricades shall be placed on the taper. Barricades shall be Type I, II, or III.

STATE OF CALIFORNIA
DEPARTMENT OF TRANSPORTATION

TRAFFIC CONTROL SYSTEM FOR LANE CLOSURE ON TWO LANE CONVENTIONAL HIGHWAYS

NO SCALE

RSP T13 DATED APRIL 19, 2013 SUPERSEDES STANDARD PLAN T13 DATED MAY 20, 2011 - PAGE 241 OF THE STANDARD PLANS BOOK DATED 2010.

REVISED STANDARD PLAN RSP T13

2010 REVISED STANDARD PLAN RSP T13

DATE PLOTTED => 14-MAY-2014
TIME PLOTTED => 13:54

Dist	COUNTY	ROUTE	POST MILES TOTAL PROJECT	SHEET No.	TOTAL SHEETS
02	Sha	299	83.0/84.0	61	61

REGISTERED CIVIL ENGINEER

October 21, 2011
PLANS APPROVAL DATE

REGISTERED PROFESSIONAL ENGINEER Tillat Satter No. C42892 Exp. 3-31-12 CIVIL STATE OF CALIFORNIA

THE STATE OF CALIFORNIA OR ITS OFFICERS OR AGENTS SHALL NOT BE RESPONSIBLE FOR THE ACCURACY OR COMPLETENESS OF SCANNED COPIES OF THIS PLAN SHEET.

TO ACCOMPANY PLANS DATED 05-19-14

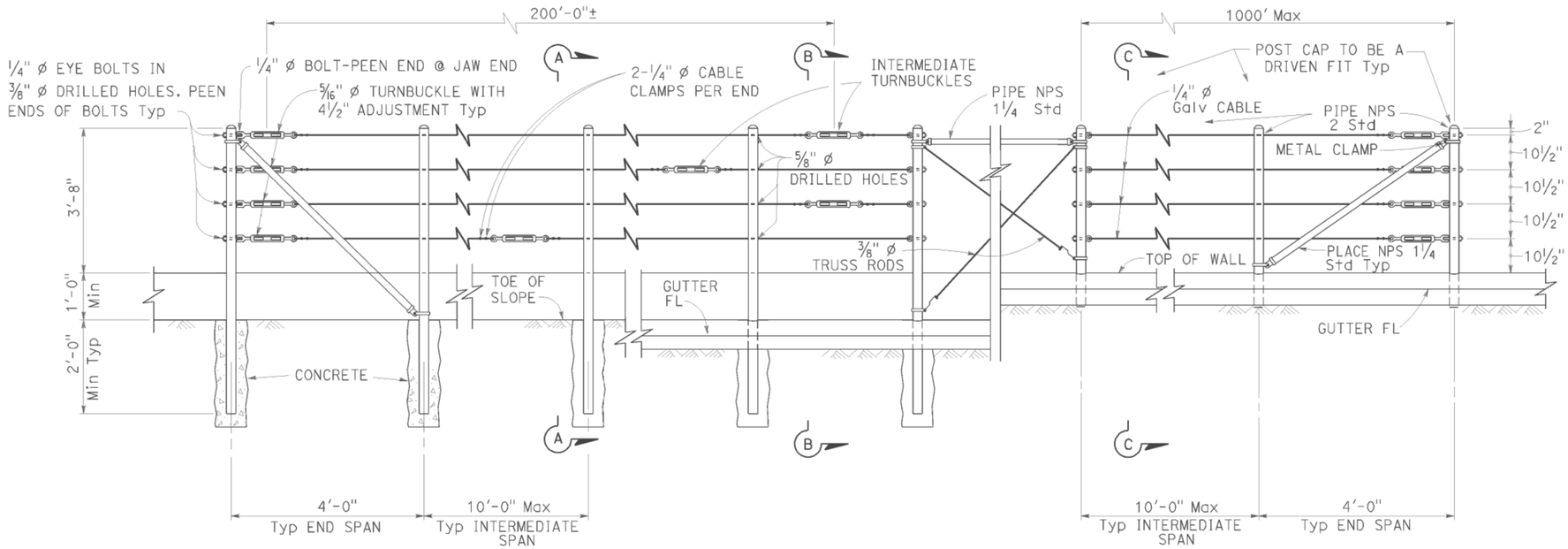

EXISTING WALL (WITHOUT GUTTER)
Existing

RETAINING WALL (WITH GUTTER)
Existing

RETAINING WALL (WITH GUTTER)
New construction

ELEVATION

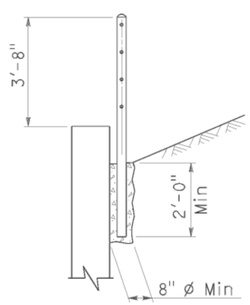

SECTION A-A
Existing

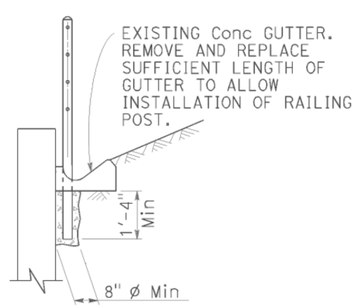

SECTION B-B
Existing

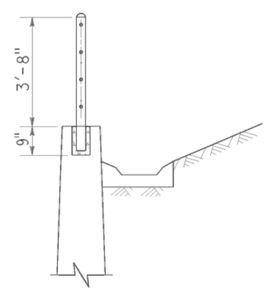

SECTION C-C
New construction

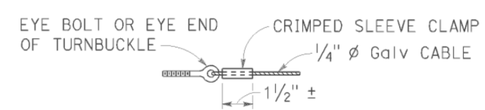

ALTERNATIVE CABLE CONNECTION

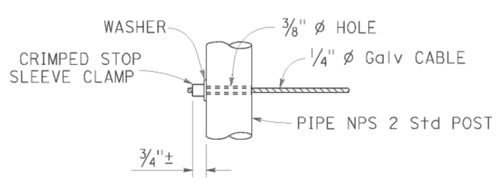

ALTERNATIVE DEAD END ANCHORAGE

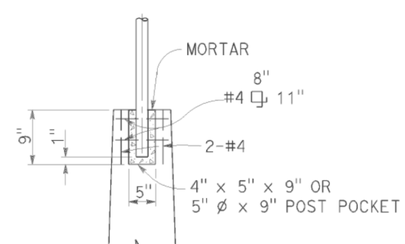

POST POCKET

NOTES:

1. Maximum distance between turnbuckles shall be 200'-0"±.
2. Intermediate turnbuckles to be placed in adjacent spans.
3. Cable shall not be spliced between intermediate turnbuckles and end posts.
4. Posts to be vertical.
5. Alignment of holes in posts may vary to conform to slope of top of retaining wall.
6. The Contractor shall verify all dependent dimensions in the field before ordering or fabricating any material.
7. Line posts shall be braced horizontally and trussed diagonally in both directions at intervals not to exceed 1000'.
8. Post pockets to be centered in top of wall.
9. Typical end spans, braced in both directions, shall be constructed at changes in line where the angle of deflection is 15° or more.
10. Provide thimbles at all cable loops.

STATE OF CALIFORNIA
DEPARTMENT OF TRANSPORTATION

CABLE RAILING

NO SCALE

RSP B11-47 DATED OCTOBER 21, 2011 SUPERSEDES STANDARD PLAN B11-47 DATED MAY 20, 2011 - PAGE 293 OF THE STANDARD PLANS BOOK DATED 2010.

REVISED STANDARD PLAN RSP B11-47

2010 REVISED STANDARD PLAN RSP B11-47

DATE PLOTTED => 14-MAY-2014
TIME PLOTTED => 13:55