HSIMG-005-8(342)E

Dist	COUNTY	ROUTE	POST MILES TOTAL PROJECT	SHEET No.	TOTAL SHEETS
02	Sha,Teh	5	0.0/44.0, 0.0/42.1	1	77

STATE OF CALIFORNIA

DEPARTMENT OF TRANSPORTATION

PROJECT PLANS FOR CONSTRUCTION ON

STATE HIGHWAY

IN SHASTA AND TEHAMA COUNTIES FROM TEHAMA COUNTY LINE TO 1.5 MILES SOUTH OF DOG CREEK BRIDGE

TO BE SUPPLEMENTED BY STANDARD PLANS DATED MAY 2006

INDEX OF SHEETS

SHEET No.	DESCRIPTION
1	TITLE AND LOCATION MAP
2-12	CONSTRUCTION DETAILS
13	CONSTRUCTION AREA SIGNS
14-15	TRAFFIC HANDLING DETAILS AND QUANTITIES
16-33	DETOUR PLANS
34-45	SUMMARY OF QUANTITIES
46-52	ELECTRICAL PLANS
53-77	REVISED STANDARD PLANS

THE STANDARD PLANS LIST APPLICABLE TO THIS CONTRACT IS INCLUDED IN THE NOTICE TO BIDDERS AND SPECIAL PROVISIONS BOOK.

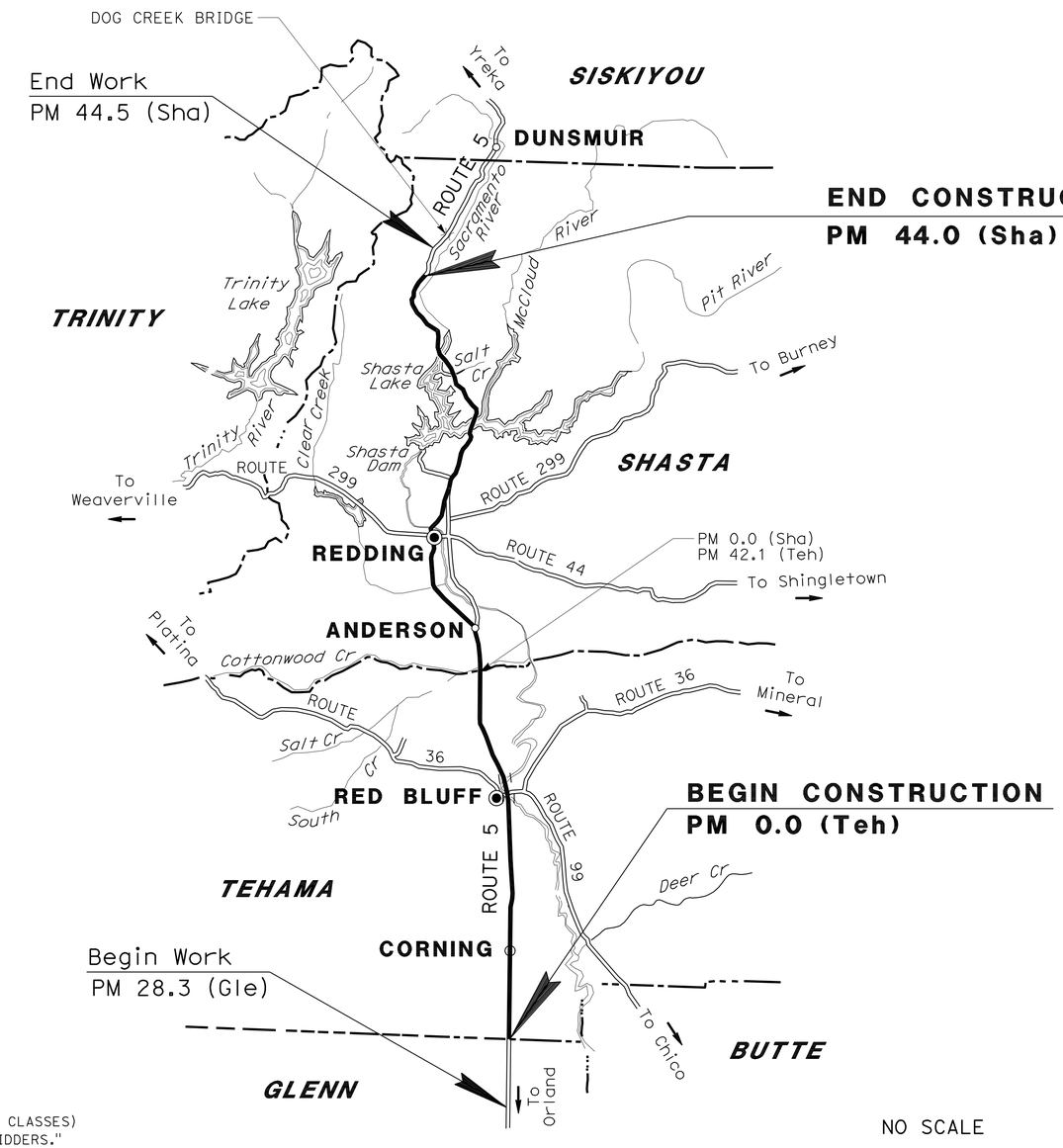

LOCATION MAP

THE CONTRACTOR SHALL POSSESS THE CLASS (OR CLASSES) OF LICENSE AS SPECIFIED IN THE "NOTICE TO BIDDERS."

NO SCALE

Frank J. Rivas 07-08-10
PROJECT ENGINEER REGISTERED CIVIL ENGINEER — DATE

July 12, 2010
PLANS APPROVAL DATE

REGISTERED PROFESSIONAL ENGINEER — FRANK RIVAS — No. 53592 — Exp. 6/30/11 — CIVIL — STATE OF CALIFORNIA

THE STATE OF CALIFORNIA OR ITS OFFICERS OR AGENTS SHALL NOT BE RESPONSIBLE FOR THE ACCURACY OR COMPLETENESS OF SCANNED COPIES OF THIS PLAN SHEET.

CONTRACT No.	02-2E9704
PROJECT ID	0200020012

PROJECT MANAGER: STEVE ROGERS
DESIGN ENGINEER: ROB STINGER

p:\proj2\02\2e9701_plans\pse\22e9701ab001.dgn

LAST REVISION 07-08-10 — DATE PLOTTED => 10-AUG-2010 — TIME PLOTTED => 13:14

Dist	COUNTY	ROUTE	POST MILES TOTAL PROJECT	SHEET No.	TOTAL SHEETS
02	Sha,Teh	5	0.0/44.0, 0.0/42.1	2	77

Michael R. Webb 07-08-10
REGISTERED CIVIL ENGINEER DATE

7-12-10
PLANS APPROVAL DATE

REGISTERED PROFESSIONAL ENGINEER MICHAEL R. WEBB No. C73986 Exp. 6-30-11 CIVIL STATE OF CALIFORNIA

THE STATE OF CALIFORNIA OR ITS OFFICERS OR AGENTS SHALL NOT BE RESPONSIBLE FOR THE ACCURACY OR COMPLETENESS OF SCANNED COPIES OF THIS PLAN SHEET.

NOTES:

1. RESIN CAPSULE ANCHORAGE IS SUBJECT TO APPROVAL BY THE ENGINEER. INSTALLATION PROCEDURES SHALL COMPLY WITH MANUFACTURER'S RECOMMENDATIONS.
2. CONTRACTOR SHALL VERIFY ALL CONTROLLING FIELD DIMENSIONS BEFORE ORDERING OR FABRICATING ANY MATERIALS.
3. SEE EXISTING BRIDGE COLUMN INFORMATION FOR No. OF, SIZE, SHAPE, AND SPACING OF EXISTING BRIDGE COLUMNS.
4. STEP CONCRETE BARRIER AS SHOWN ONLY IF BARRIER FOUNDATION IS WITHIN 1'-0" OF BRIDGE COLUMN FOUNDATION.
5. WEEP HOLE SYSTEM (INCLUDING SCUPPER, PERMEABLE MATERIAL, AND RSP FABRIC) SHALL ONLY BE USED AT LOCATIONS WHERE THE CONCRETE BARRIER FILL-IN WALL IS RETAINING SOIL.
6. EXISTING UTILITY FACILITIES HAVE NOT BEEN POSITIVELY IDENTIFIED.

LEGEND:

- CONCRETE
- PERMEABLE MATERIAL
- CONCRETE BARRIER (TYPE 60 MODIFIED) PAVING
- DIRECTION OF TRAFFIC
- DIRECTION OF FLOW

ABBREVIATION:

ERS EARTH RETAINING STRUCTURE

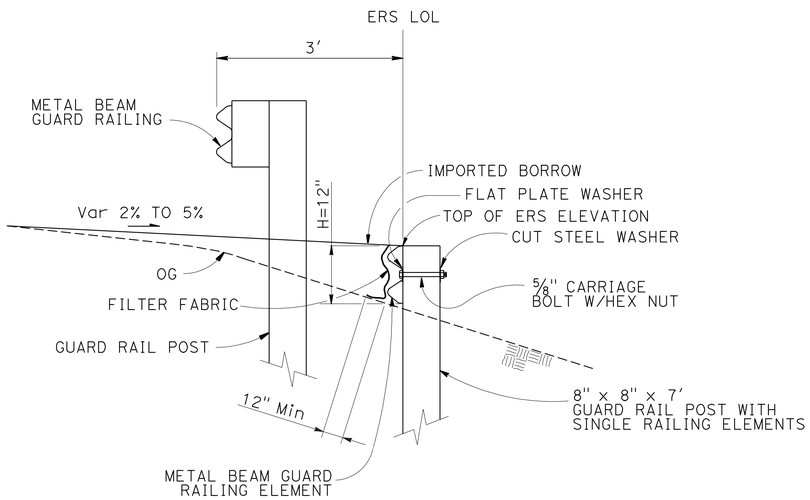

SECTION A-A

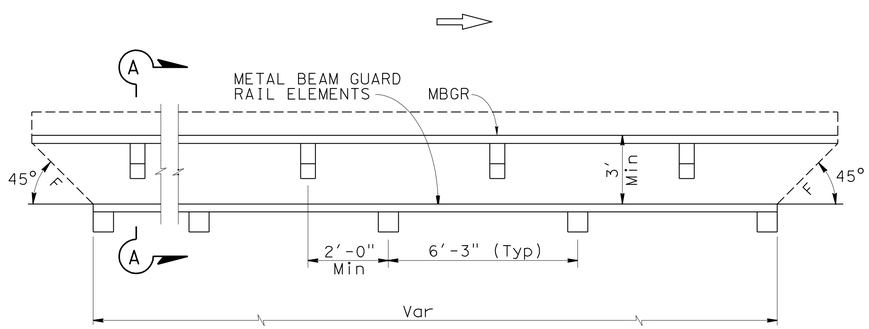

PLAN

EARTH RETAINING STRUCTURE (GUARD RAILING)

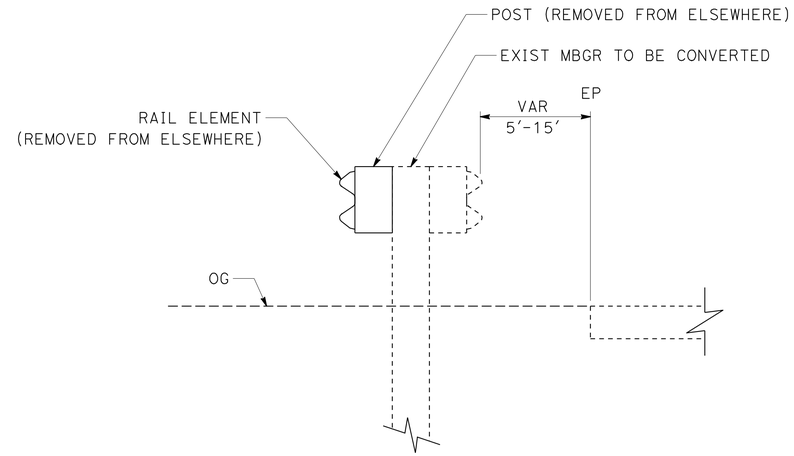

CONVERT MBGR

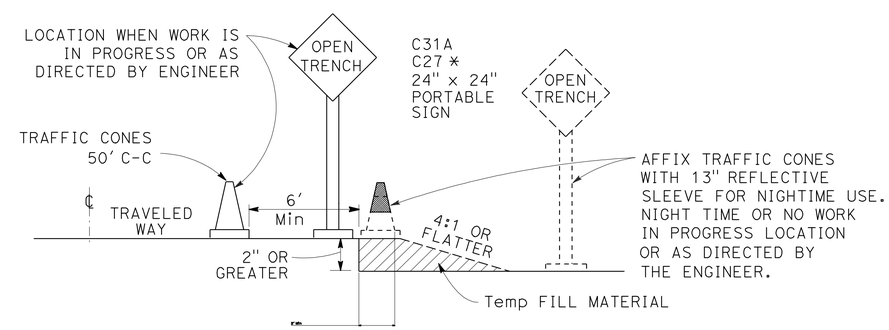

OPEN TRENCH SIGNING AND MARKING

NO SCALE

* PLACE AT 250' INTERVALS THROUGH THE OPEN TRENCH AREA, ALTERNATE C27 (OPEN TRENCH) AND C31A (NO SHOULDER) SIGNS

CONSTRUCTION DETAILS

NO SCALE

C-1

REVISED BY | DATE REVISED
MICHAEL WEBB | MICHAEL MOGEN
CALCULATED-DESIGNED BY | CHECKED BY
FUNCTIONAL SUPERVISOR
JULIE CASEY

STATE OF CALIFORNIA - DEPARTMENT OF TRANSPORTATION
Caltrans
DESIGN

\\Sv02s01\CAD\PSESubmit\02-2E9701\22e9701ga001.dgn

LAST REVISION 07-08-10 | DATE PLOTTED => 15-JUL-2010 | TIME PLOTTED => 17:12

Dist	COUNTY	ROUTE	POST MILES TOTAL PROJECT	SHEET No.	TOTAL SHEETS
02	Sha,Teh	5	0.0/44.0, 0.0/42.1	3	77

Michael R. Webb 07-08-10
REGISTERED CIVIL ENGINEER DATE

7-12-10
PLANS APPROVAL DATE

REGISTERED PROFESSIONAL ENGINEER
MICHAEL R. WEBB
No. C73986
Exp. 6-30-11
CIVIL
STATE OF CALIFORNIA

THE STATE OF CALIFORNIA OR ITS OFFICERS OR AGENTS SHALL NOT BE RESPONSIBLE FOR THE ACCURACY OR COMPLETENESS OF SCANNED COPIES OF THIS PLAN SHEET.

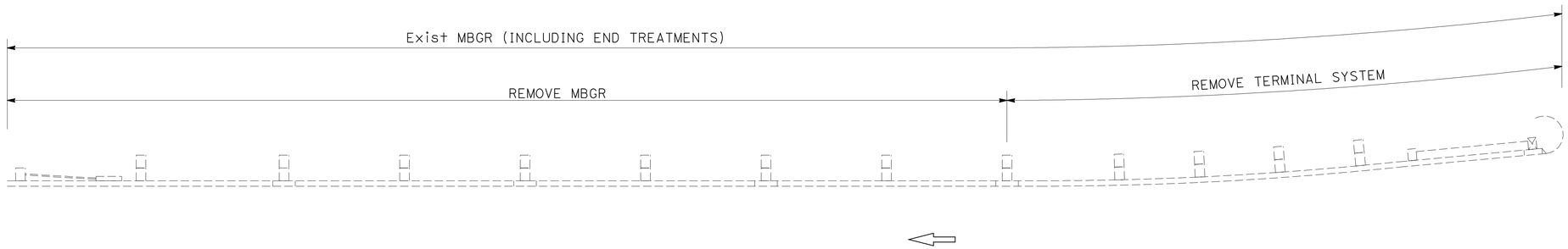

PLAN

REMOVE METAL BEAM GUARD RAILING

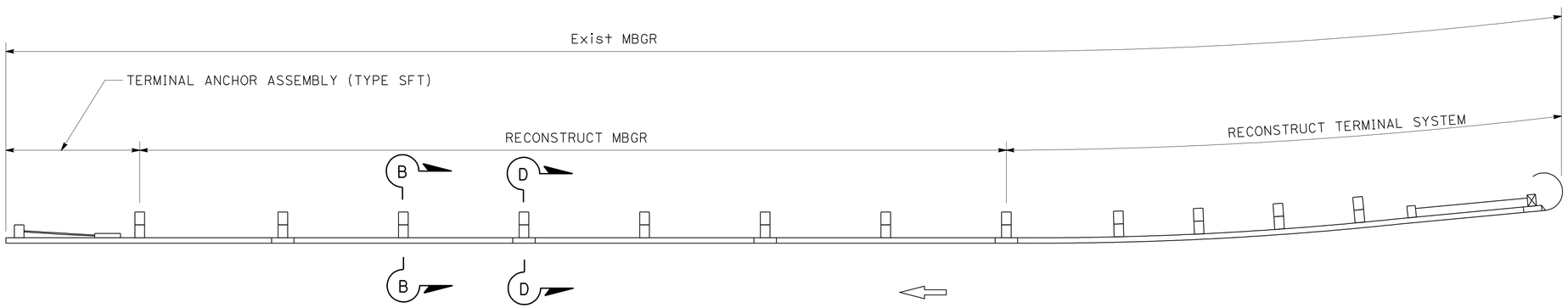

PLAN

RECONSTRUCT METAL BEAM GUARD RAILING

REVISED BY | DATE REVISED

MICHAEL WEBB | MICHAEL MOGEN

CALCULATED-DESIGNED BY | CHECKED BY

FUNCTIONAL SUPERVISOR: JULIE CASEY

STATE OF CALIFORNIA - DEPARTMENT OF TRANSPORTATION

Caltrans® DESIGN

\\Sv02s01\CAD\PSESubmit\02-2E9701\22e9701ga002.dgn

CONSTRUCTION DETAILS

NO SCALE

C-2

LAST REVISION 07-08-10 | DATE PLOTTED => 15-JUL-2010 | TIME PLOTTED => 17:12

Dist	COUNTY	ROUTE	POST MILES TOTAL PROJECT	SHEET No.	TOTAL SHEETS
02	Sha,Teh	5	0.0/44.0, 0.0/42.1	4	77

Michael R. Webb 07-08-10
REGISTERED CIVIL ENGINEER DATE

7-12-10
PLANS APPROVAL DATE

REGISTERED PROFESSIONAL ENGINEER MICHAEL R. WEBB No. C73986 Exp. 6-30-11 CIVIL STATE OF CALIFORNIA

THE STATE OF CALIFORNIA OR ITS OFFICERS OR AGENTS SHALL NOT BE RESPONSIBLE FOR THE ACCURACY OR COMPLETENESS OF SCANNED COPIES OF THIS PLAN SHEET.

NOTE:

1. EXACT LOCATION OF RELOCATED MBGR TO BE DETERMINED BY THE ENGINEER.

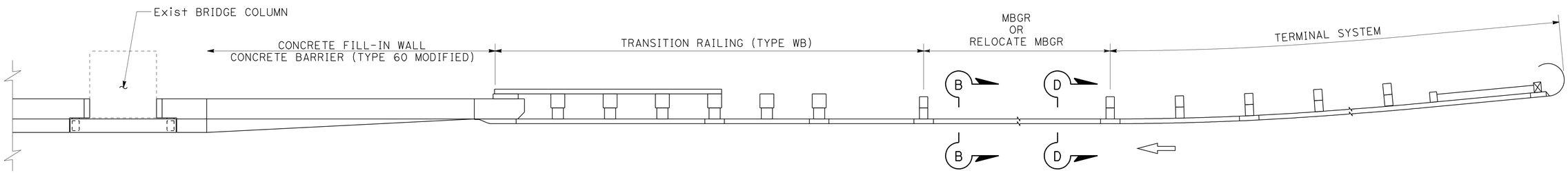

PLAN

METAL BEAM GUARD RAILING FOR CONCRETE FILL-IN WALL

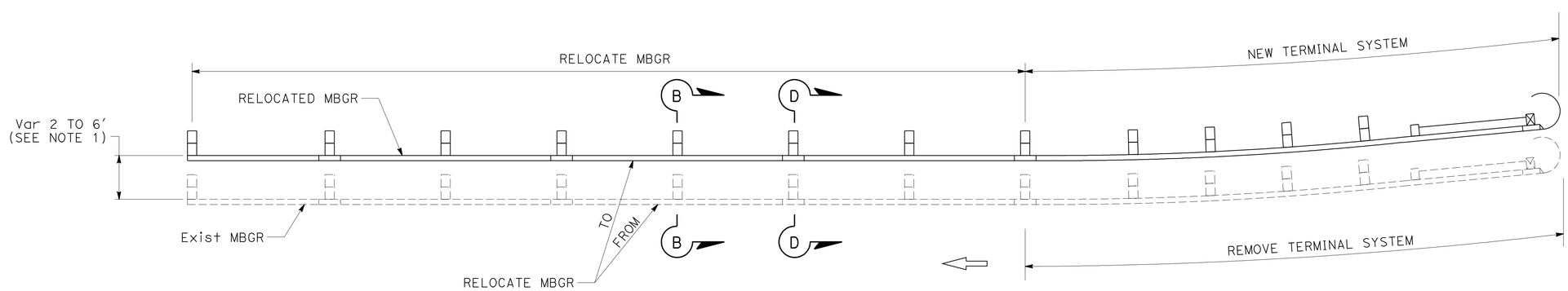

PLAN

RELOCATE METAL BEAM GUARD RAILING

CONSTRUCTION DETAILS

NO SCALE

C-3

REVISED BY | DATE REVISED
MICHAEL WEBB | MICHAEL MOGEN
CALCULATED-DESIGNED BY | CHECKED BY
FUNCTIONAL SUPERVISOR: JULIE CASEY

STATE OF CALIFORNIA - DEPARTMENT OF TRANSPORTATION
Caltrans® DESIGN

p:\proj2\02\2e970_plans\pse\22e9701ga003.dgn

LAST REVISION 07-08-10 | DATE PLOTTED => 15-JUL-2010 | TIME PLOTTED => 17:12

Dist	COUNTY	ROUTE	POST MILES TOTAL PROJECT	SHEET No.	TOTAL SHEETS
02	Sha,Teh	5	0.0/44.0, 0.0/42.1	5	77

Michael R. Webb 07-08-10
REGISTERED CIVIL ENGINEER DATE

7-12-10
PLANS APPROVAL DATE

REGISTERED PROFESSIONAL ENGINEER MICHAEL R. WEBB No. C73986 Exp. 6-30-11 CIVIL STATE OF CALIFORNIA

THE STATE OF CALIFORNIA OR ITS OFFICERS OR AGENTS SHALL NOT BE RESPONSIBLE FOR THE ACCURACY OR COMPLETENESS OF SCANNED COPIES OF THIS PLAN SHEET.

NOTES:

1. USE MBGR SPLICE OVERLAP DETAIL WHEN INSTALLING CONCRETE BARRIER (TRANSITION ANCHOR BLOCK) AND TRANSITION RAILING (TYPE WB) TO EXISTING MBGR.
2. ONLY THE TOP 2 AND BOTTOM 2 SPLICE BOLTS WITH WASHERS ARE REQUIRED AT THIS SPLICE WITH NO POST.

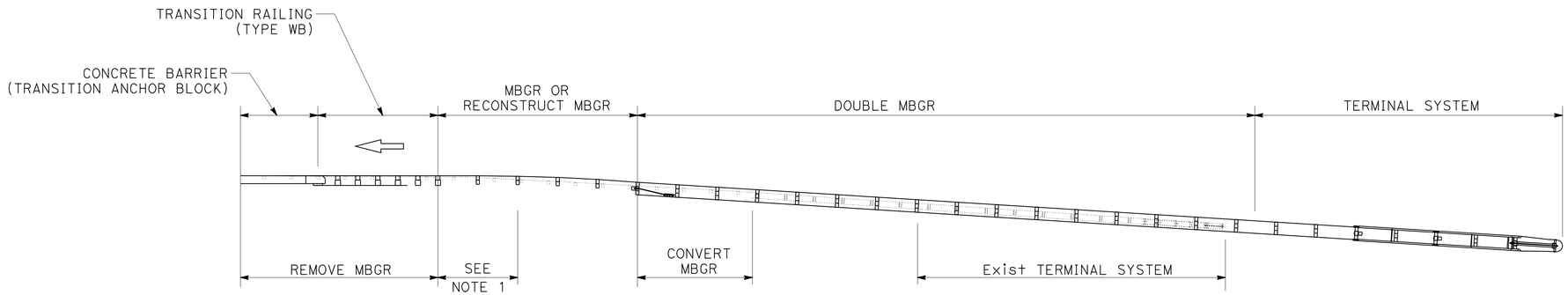

PLAN

METAL BEAM GUARD RAILING FOR STRUCTURE APPROACH

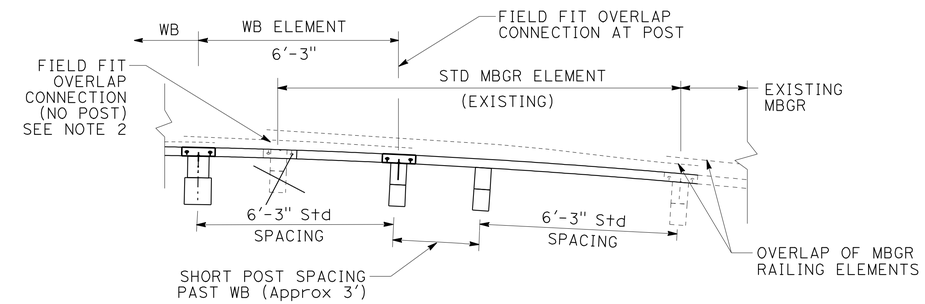

MBGR OVERLAP SPLICE DETAIL

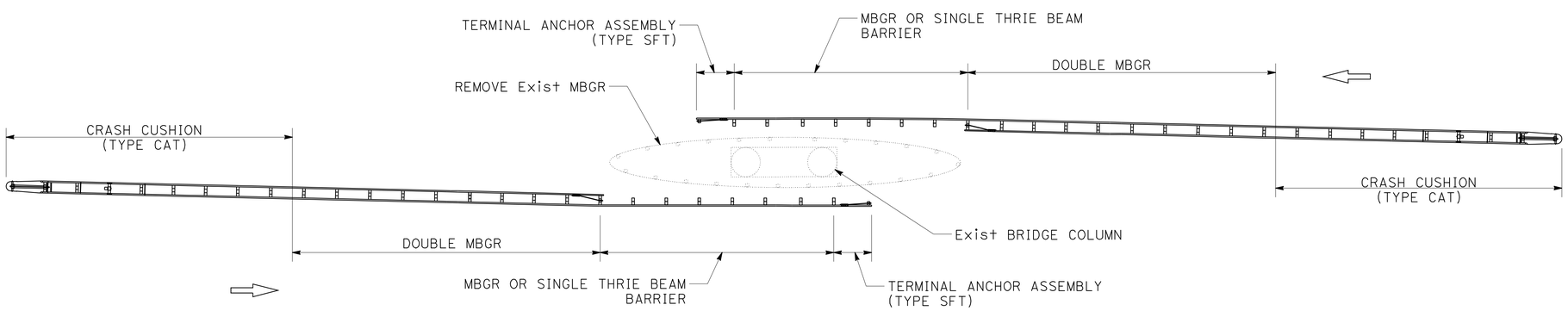

PLAN

METAL BEAM GUARD RAILING FOR FIXED OBJECTS BETWEEN SEPARATE ROADBEDS

CONSTRUCTION DETAILS

NO SCALE

C-4

REVISED BY | DATE REVISED
MICHAEL WEBB | MICHAEL MOGEN
CALCULATED-DESIGNED BY | CHECKED BY
FUNCTIONAL SUPERVISOR: JULIE CASEY

STATE OF CALIFORNIA - DEPARTMENT OF TRANSPORTATION
Caltrans
DESIGN

p:\proj\02\2e970_plans\pse\22e9701ga004.dgn

LAST REVISION 07-08-10 | DATE PLOTTED => 15-JUL-2010 | TIME PLOTTED => 17:12

Dist	COUNTY	ROUTE	POST MILES TOTAL PROJECT	SHEET No.	TOTAL SHEETS
02	Sha,Teh	5	0.0/44.0, 0.0/42.1	6	77

Michael R. Webb 07-08-10
REGISTERED CIVIL ENGINEER DATE

7-12-10
PLANS APPROVAL DATE

REGISTERED PROFESSIONAL ENGINEER
MICHAEL R. WEBB
No. C73986
Exp. 6-30-11
CIVIL
STATE OF CALIFORNIA

THE STATE OF CALIFORNIA OR ITS OFFICERS OR AGENTS SHALL NOT BE RESPONSIBLE FOR THE ACCURACY OR COMPLETENESS OF SCANNED COPIES OF THIS PLAN SHEET.

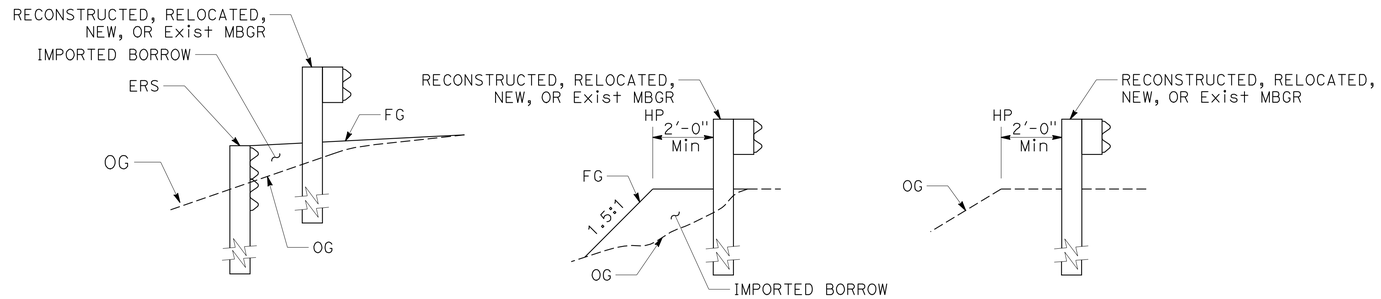

EARTH RETAINING STRUCTURE (GUARD RAILING) IMPORTED BORROW NO WORK

SECTIONS B-B

METAL BEAM GUARD RAILING BACKING CONDITIONS

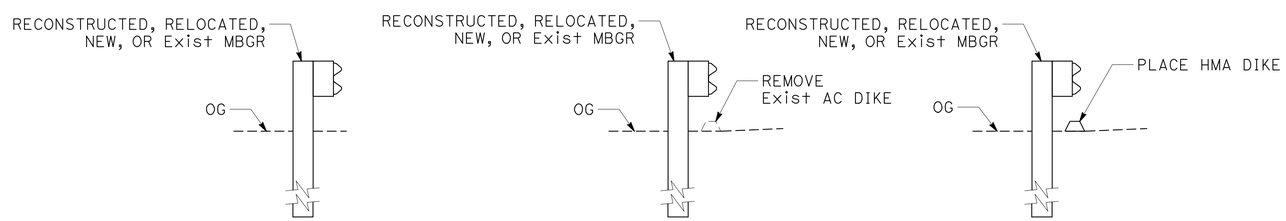

NO WORK REMOVE AC DIKE PLACE HMA DIKE

SECTIONS D-D

METAL BEAM GUARD RAILING DIKE CONDITIONS

CONSTRUCTION DETAILS

NO SCALE **C-5**

REVISED BY	DATE REVISED
MICHAEL WEBB	MICHAEL MOGEN
CALCULATED-DESIGNED BY	CHECKED BY
FUNCTIONAL SUPERVISOR	JULIE CASEY

STATE OF CALIFORNIA - DEPARTMENT OF TRANSPORTATION
Caltrans® DESIGN

p:\proj2\02\2e970_plans\pse\22e9701ga005.dgn

LAST REVISION 07-08-10 | DATE PLOTTED => 15-JUL-2010 | TIME PLOTTED => 17:12

Dist	COUNTY	ROUTE	POST MILES TOTAL PROJECT	SHEET No.	TOTAL SHEETS
02	Sha,Teh	5	0.0/44.0, 0.0/42.1	7	77

Michael R. Webb 07-08-10
REGISTERED CIVIL ENGINEER DATE

7-12-10
PLANS APPROVAL DATE

REGISTERED PROFESSIONAL ENGINEER MICHAEL R. WEBB No. C73986 Exp. 6-30-11 CIVIL STATE OF CALIFORNIA

THE STATE OF CALIFORNIA OR ITS OFFICERS OR AGENTS SHALL NOT BE RESPONSIBLE FOR THE ACCURACY OR COMPLETENESS OF SCANNED COPIES OF THIS PLAN SHEET.

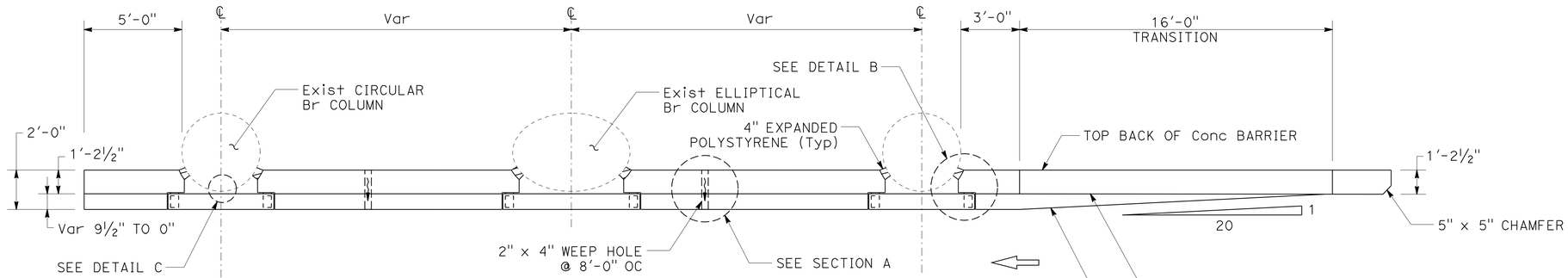

PLAN
CIRCULAR/ELLIPTICAL COLUMN

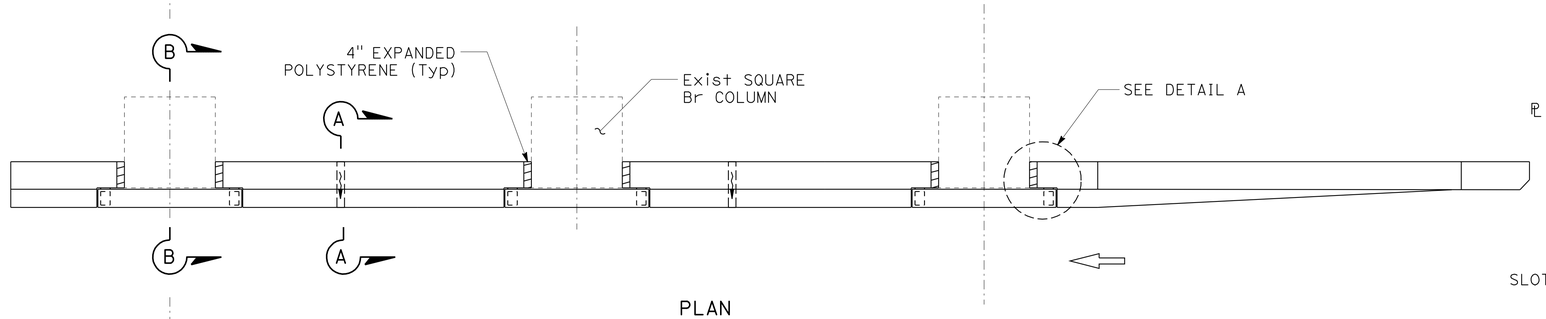

PLAN
RECTANGULAR COLUMN

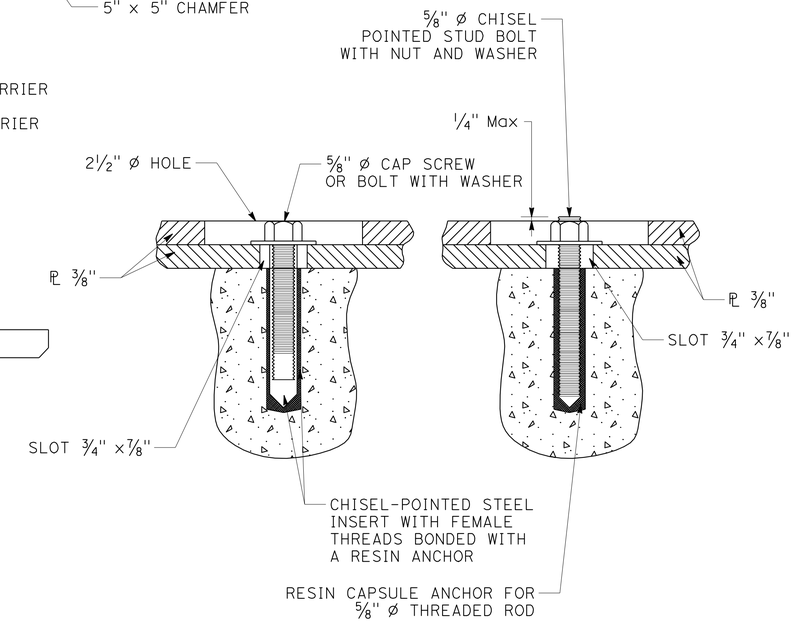

ALTERNATIVE ANCHORAGE

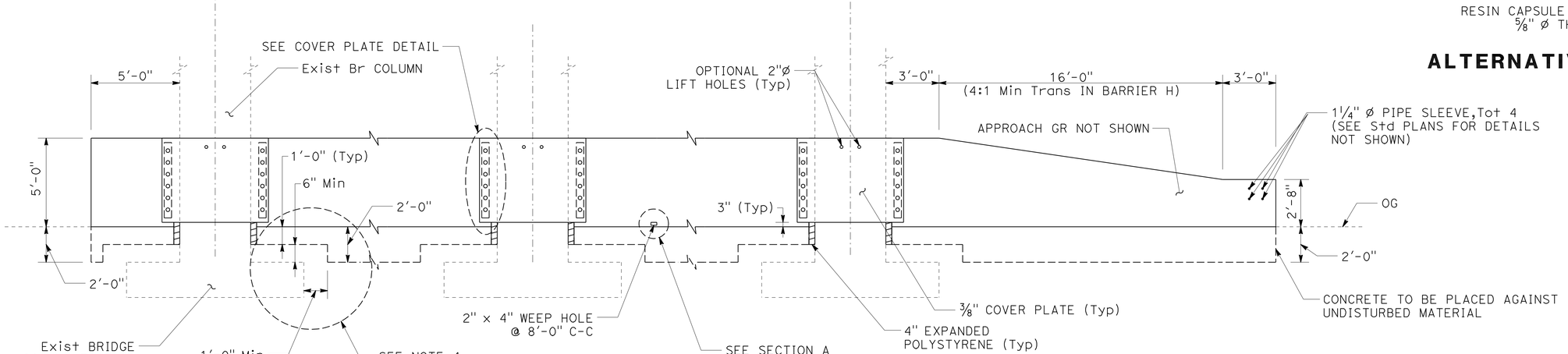

ELEVATION
CONCRETE BARRIER (TYPE 60 MODIFIED)

CONSTRUCTION DETAILS
NO SCALE

C-6

REVISED BY | DATE REVISED
MICHAEL WEBB | MICHAEL MOGEN
CALCULATED-DESIGNED BY | CHECKED BY
FUNCTIONAL SUPERVISOR | JULIE CASEY

STATE OF CALIFORNIA - DEPARTMENT OF TRANSPORTATION
Caltrans
DESIGN

p:\proj2\02\2e970_plans\pse\22e9701ga006.dgn

LAST REVISION 07-08-10 | DATE PLOTTED => 15-JUL-2010 | TIME PLOTTED => 17:13

Dist	COUNTY	ROUTE	POST MILES TOTAL PROJECT	SHEET No.	TOTAL SHEETS
02	Sha,Teh	5	0.0/44.0, 0.0/42.1	8	77

Michael R. Webb 07-08-10
REGISTERED CIVIL ENGINEER DATE

7-12-10
PLANS APPROVAL DATE

REGISTERED PROFESSIONAL ENGINEER MICHAEL R. WEBB No. C73986 Exp. 6-30-11 CIVIL STATE OF CALIFORNIA

THE STATE OF CALIFORNIA OR ITS OFFICERS OR AGENTS SHALL NOT BE RESPONSIBLE FOR THE ACCURACY OR COMPLETENESS OF SCANNED COPIES OF THIS PLAN SHEET.

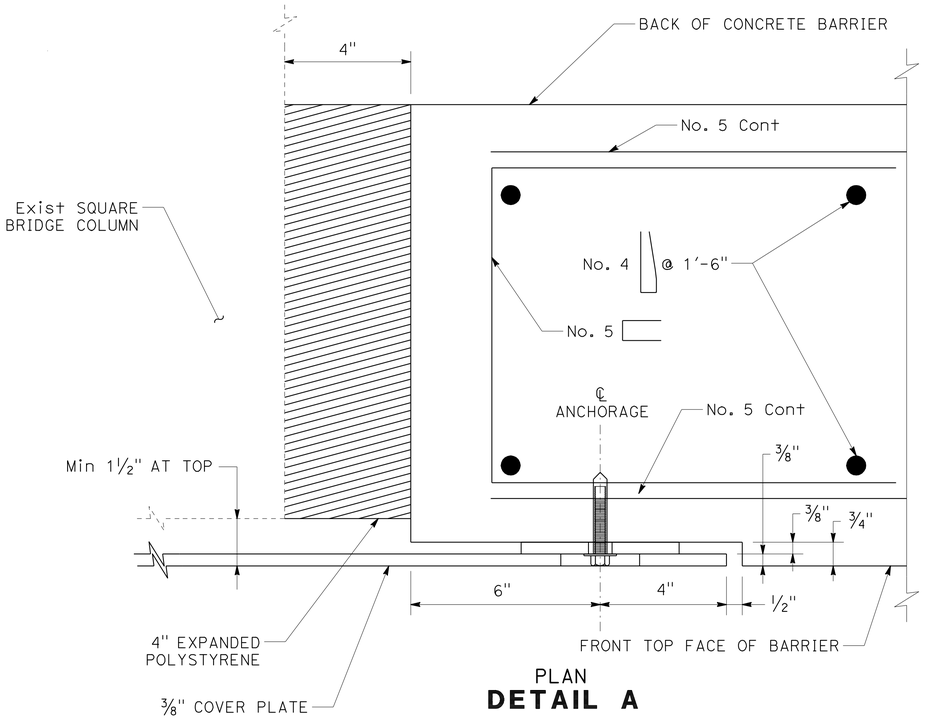

PLAN
DETAIL A

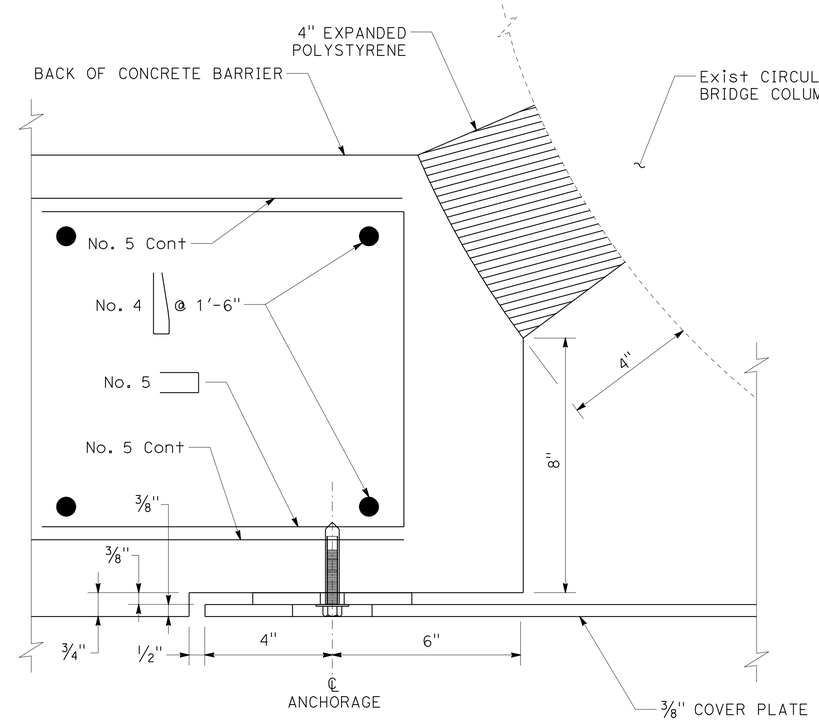

PLAN
DETAIL B

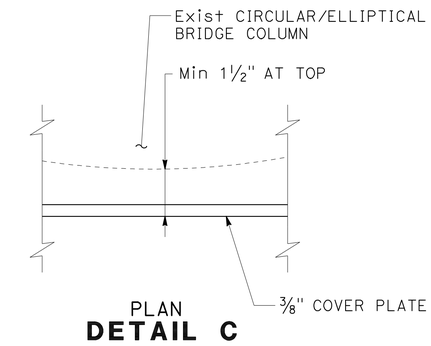

PLAN
DETAIL C

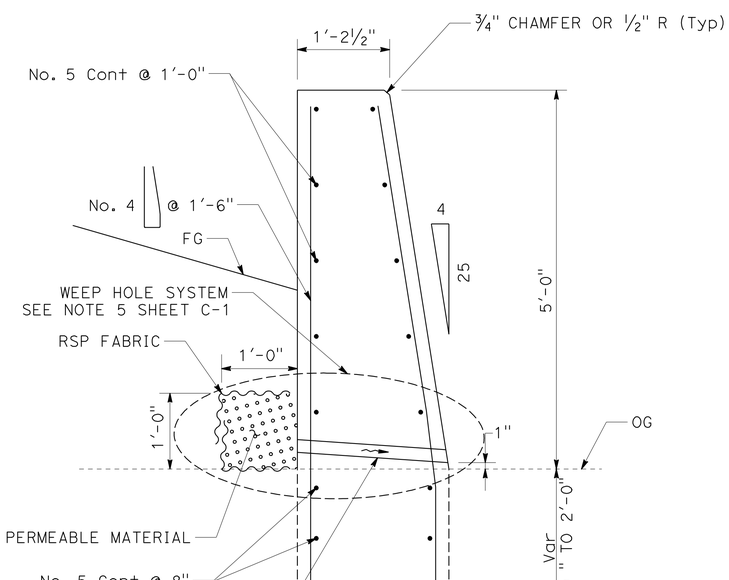

SECTION A-A

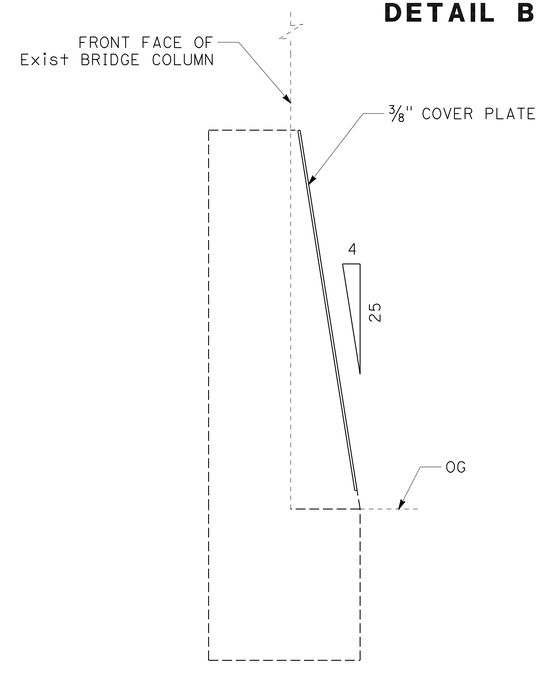

SECTION B-B

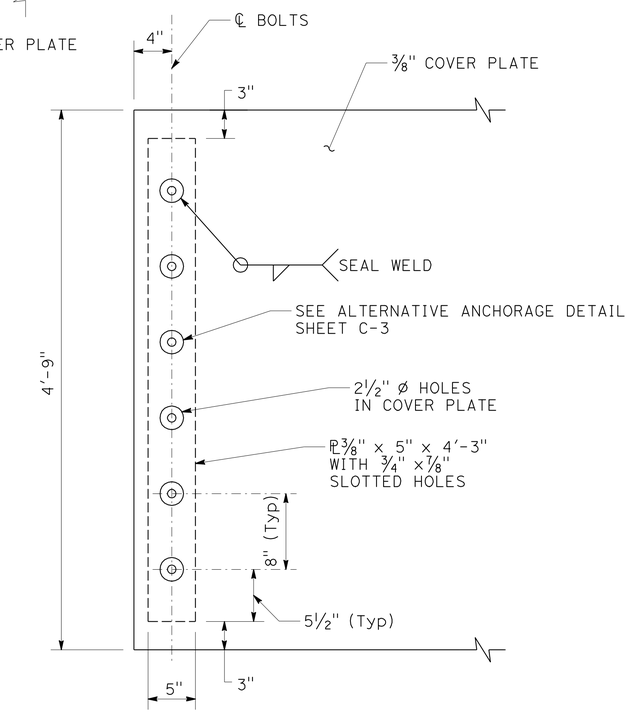

COVER PLATE

CONCRETE BARRIER (TYPE 60 MODIFIED)

CONSTRUCTION DETAILS

NO SCALE

C-7

REVISED BY | DATE REVISED
MICHAEL WEBB | MICHAEL MOGEN
CALCULATED-DESIGNED BY | CHECKED BY
FUNCTIONAL SUPERVISOR: JULIE CASEY

STATE OF CALIFORNIA - DEPARTMENT OF TRANSPORTATION
Caltrans® **DESIGN**

p:\proj2\02\2e970_plans\pse\22e9701ga007.dgn

LAST REVISION 07-08-10 | DATE PLOTTED => 15-JUL-2010 | TIME PLOTTED => 17:13

Dist	COUNTY	ROUTE	POST MILES TOTAL PROJECT	SHEET No.	TOTAL SHEETS
02	Sha,Teh	5	0.0/44.0, 0.0/42.1	9	77

Michael R. Webb 07-08-10
REGISTERED CIVIL ENGINEER DATE

7-12-10
PLANS APPROVAL DATE

REGISTERED PROFESSIONAL ENGINEER MICHAEL R. WEBB No. C73986 Exp. 6-30-11 CIVIL STATE OF CALIFORNIA

THE STATE OF CALIFORNIA OR ITS OFFICERS OR AGENTS SHALL NOT BE RESPONSIBLE FOR THE ACCURACY OR COMPLETENESS OF SCANNED COPIES OF THIS PLAN SHEET.

EXISTING BRIDGE COLUMN INFORMATION

COUNTY	STRUCTURE	PM	STRUCTURE No.	DIRECTION	COLUMN INFORMATION				
					SHAPE	No.	WIDTH INCHES	DEPTH INCHES	SPACING LF
Teh	CORNING ROAD OC	8.98	08-0109	S	CIRCULAR	2	36		19
Teh	FLORES Ave OC	19.78	08-0118	N	CIRCULAR	2	36		17
Teh	FLORES Ave OC	19.78	08-0118	S	CIRCULAR	2	36		17
Teh	N RED BLUFF (36/5) Sep	28.38	08-0098E	S	SQUARE	2	48	36	21.5
Teh	WILCOX ROAD OC	31.04	08-0104	N	SQUARE	2	42	30	15.5
Teh	WILCOX ROAD OC	31.04	08-0104	S	SQUARE	2	42	30	15.5
Teh	JELLYS FERRY ROAD OC	32.24	08-0103	S	SQUARE	2	42	30	15.5
Teh	NINE MILE HILL OC	36.37	08-0101	N	SQUARE	2	42	30	15.5
Teh	NINE MILE HILL OC	36.37	08-0101	S	SQUARE	2	42	30	15.5
Teh	SUNSET HILLS Dr OC	38.72	08-0102	N	SQUARE	2	42	30	15.5
Teh	SUNSET HILLS Dr OC	38.72	08-0102	S	SQUARE	2	42	30	15.5
Teh	BOWMAN ROAD OC	41.53	08-0105	N	SQUARE	2	42	30	15.5
Teh	BOWMAN ROAD OC	41.53	08-0105	S	SQUARE	2	42	30	15.5
Sha	FIRST St OC	0.66	06-0016	N	SQUARE	2	42	30	20.5
Sha	FIRST St OC	0.66	06-0016	S	SQUARE	2	42	30	20.5
Sha	FOURTH St OC	0.91	06-0037	N	SQUARE	2	42	30	20.5
Sha	FOURTH St OC	0.91	06-0037	S	SQUARE	2	42	30	20.5
Sha	KNIGHTON ROAD OC	9.77	06-0134	N	SQUARE	2	48	36	23.5
Sha	KNIGHTON ROAD OC	9.77	06-0134	S	SQUARE	2	48	36	23.5
Sha	SMITH ROAD OC	10.85	06-0138	N	SQUARE	2	48	36	20
Sha	SMITH ROAD OC	10.85	06-0138	S	SQUARE	2	48	36	20
Sha	CHURN CREEK ROAD OC	12.15	06-0122	N	SQUARE	6	48	36	Var 11.5 TO 19.5
Sha	CHURN CREEK ROAD OC	12.15	06-0122	S	SQUARE	6	48	36	Var 11.5 TO 19.5
Sha	LOMA VISTA Dr OC	12.92	06-0123	N	SQUARE	2	48	36	22
Sha	LOMA VISTA Dr OC	12.92	06-0123	S	SQUARE	2	48	36	22
Sha	HARTNELL Ave OC	13.95	06-0124	N	SQUARE	4	Var 48 TO 60	36	Var 15 TO 26
Sha	HILLTOP Dr OC	16.15	06-0101	N	SQUARE	2	48	36	16
Sha	HILLTOP Dr OC	16.15	06-0101	S	SQUARE	2	48	36	16
Sha	N273-N5 CONNECTOR OC	18.48	06-0137G	N	SQUARE	2	48	36	25.5
Sha	N273-N5 CONNECTOR OC	18.48	06-0137G	S	SQUARE	2	48	36	20.5

CONSTRUCTION DETAILS
C-8

REVISED BY | DATE REVISED
MICHAEL WEBB | MICHAEL MOGEN
CALCULATED-DESIGNED BY | CHECKED BY
FUNCTIONAL SUPERVISOR
JULIE CASEY

STATE OF CALIFORNIA - DEPARTMENT OF TRANSPORTATION
Caltrans
DESIGN

p:\proj2\02\2e970_plans\pse\22e9701ga008.dgn

LAST REVISION | DATE PLOTTED => 15-JUL-2010 | TIME PLOTTED => 17:13
07-08-10

Dist	COUNTY	ROUTE	POST MILES TOTAL PROJECT	SHEET No.	TOTAL SHEETS
02	Sha,Teh	5	0.0/44.0, 0.0/42.1	10	77

Frank J. Rivas 07-08-10
REGISTERED CIVIL ENGINEER DATE

7-12-10
PLANS APPROVAL DATE

REGISTERED PROFESSIONAL ENGINEER FRANK RIVAS No. 53592 Exp. 6/30/11 CIVIL STATE OF CALIFORNIA

THE STATE OF CALIFORNIA OR ITS OFFICERS OR AGENTS SHALL NOT BE RESPONSIBLE FOR THE ACCURACY OR COMPLETENESS OF SCANNED COPIES OF THIS PLAN SHEET.

CONCRETE BARRIER (TYPE 60 MODIFIED) PAVING

Co	PM	STRUCTURE	DIRECTION	W	X	Y	PLACE HOT MIX ASPHALT (MISCELLANEOUS AREA)	HOT MIX ASPHALT	Co	PM	STRUCTURE	DIRECTION	W	X	Y	PLACE HOT MIX ASPHALT (MISCELLANEOUS AREA)	HOT MIX ASPHALT
			NB/SB	FT	FT	FT	SQYD	TON				NB/SB	FT	FT	FT	SQYD	TON
Teh	8.98	CORNING Rd OC	SB	9.7	52	8.9	52.4	8.8	Sha	0.91	FOURTH St OC	NB	1.7	54.6	0.9	6.4	1.1
Teh	19.78	FLORES Ave OC	NB	2.9	50	2.1	12.6	2.1	Sha	0.91	FOURTH St OC	SB	1.7	54.6	0.9	6.4	1.1
Teh	19.78	FLORES Ave OC	SB	2.9	50.2	2.1	12.7	2.1	Sha	9.77	KNIGHTON Rd OC	NB	1.9	58.5	1.1	8.1	1.4
Teh	28.36	N RED BLUFF Sep	SB	1.9	56.5	1.1	7.9	1.3	Sha	9.77	KNIGHTON Rd OC	SB	1.7	58.5	0.9	6.8	1.1
Teh	31.04	WILCOX Rd OC	NB	1.7	49.6	0.9	5.9	1.0	Sha	10.85	SMITH Rd OC	NB	1.9	55	1.1	7.7	1.3
Teh	31.04	WILCOX Rd OC	SB	0.8	49.6	0	1.0	0.2	Sha	10.85	SMITH Rd OC	SB	1.7	55	0.9	6.5	1.1
Teh	32.24	JELLYS FERRY Rd OC	SB	2.4	49.6	1.6	9.8	1.7	Sha	12.15	CHURN CREEK Rd OC	NB	1.9	130	1.1	16.9	2.9
Teh	36.37	NINE MILE HILL OC	NB	2.9	49.6	2.1	12.6	2.1	Sha	12.15	CHURN CREEK Rd OC	SB	1.9	130	1.1	16.9	2.9
Teh	36.37	NINE MILE HILL OC	SB	3.2	49.6	2.4	14.2	2.4	Sha	12.92	LOMA VISTA Rd OC	NB	1.4	57	0.6	4.8	0.8
Teh	38.72	SUNSET HILLS Dr OC	NB	2.3	49.6	1.5	9.2	1.6	Sha	12.92	LOMA VISTA Rd OC	SB	1.4	57	0.6	4.8	0.8
Teh	38.72	SUNSET HILLS Dr OC	SB	2.2	49.6	1.4	8.7	1.5	Sha	13.95	HARTNELL Ave OC	NB	1.8	90	1.1	11.9	2.0
Teh	41.53	BOWMAN Rd OC	NB	1.4	49.6	0.6	4.3	0.7	Sha	16.15	HILLTOP Dr OC	NB	1.9	51	1.1	7.2	1.2
Teh	41.53	BOWMAN Rd OC	SB	1.9	49.6	1.1	7.0	1.2	Sha	16.15	HILLTOP Dr OC	SB	1.9	51	1.1	7.2	1.2
Sha	0.66	FIRST St OC	NB	1.4	54.6	0.6	4.6	0.8	Sha	18.48	N Jct 273 OC	NB	3.2	60.5	2.4	17.1	2.9
Sha	0.66	FIRST St OC	SB	1.3	54.6	0.5	4.0	0.7	Sha	18.48	N Jct 273 OC	SB	3.2	55.5	2.4	15.8	2.7

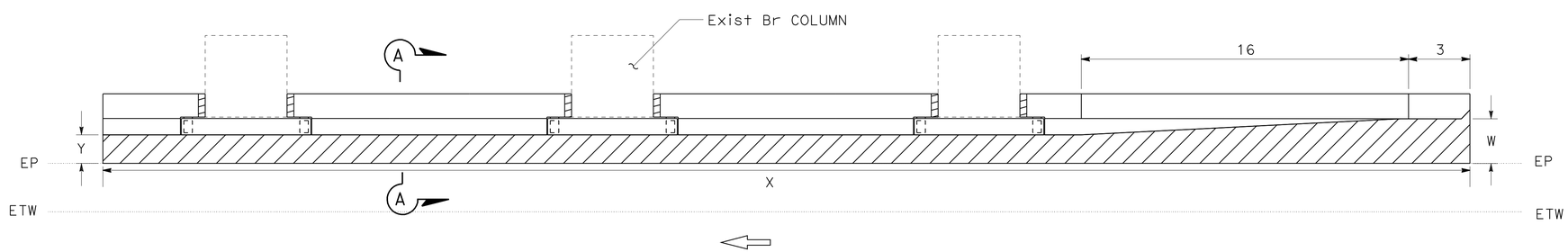

PLAN

CONCRETE BARRIER (TYPE 60 MODIFIED) PAVING

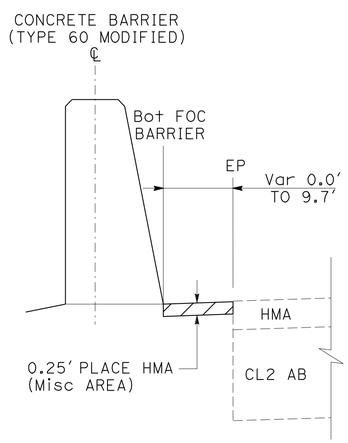

SECTION A-A

CONSTRUCTION DETAILS

NO SCALE

C-9

REVISED BY | DATE REVISED
FRANK RIVAS | CHECKER
CALCULATED-DESIGNED BY | CHECKED BY
FUNCTIONAL SUPERVISOR: ROB STINGER

Caltrans® TRAFFIC OPS
STATE OF CALIFORNIA - DEPARTMENT OF TRANSPORTATION

p:\proj2\02\2e970_plans\pse\22e9701ga009.dgn

LAST REVISION 07-08-10 | DATE PLOTTED => 15-JUL-2010 | TIME PLOTTED => 17:13

Dist	COUNTY	ROUTE	POST MILES TOTAL PROJECT	SHEET No.	TOTAL SHEETS
02	Sha,Teh	5	0.0/44.0, 0.0/42.1	11	77

Dwight D Winterlin 07-08-10
REGISTERED CIVIL ENGINEER DATE

7-12-10
PLANS APPROVAL DATE

REGISTERED PROFESSIONAL ENGINEER
DWIGHT WINTERLIN
No. C68438
Exp 09-30-11
CIVIL
STATE OF CALIFORNIA

THE STATE OF CALIFORNIA OR ITS OFFICERS OR AGENTS SHALL NOT BE RESPONSIBLE FOR THE ACCURACY OR COMPLETENESS OF SCANNED COPIES OF THIS PLAN SHEET.

NOTES:

1. FOR WB CONNECTION DETAILS NOT SHOWN, SEE Std PLANS A77J1, A77F1, A77F2.
2. DEPENDENT DIMENSIONS WILL BE VERIFIED IN THE FIELD BEFORE FABRICATING ANY END CONNECTION TO CONFORM WITH EXISTING PAVED CONDITIONS.
3. ALL PLATES AND BOLTS ARE GALVANIZED.

LEGEND:

- - - - - - INDICATES EXISTING STRUCTURE
——— INDICATES NEW CONSTRUCTION

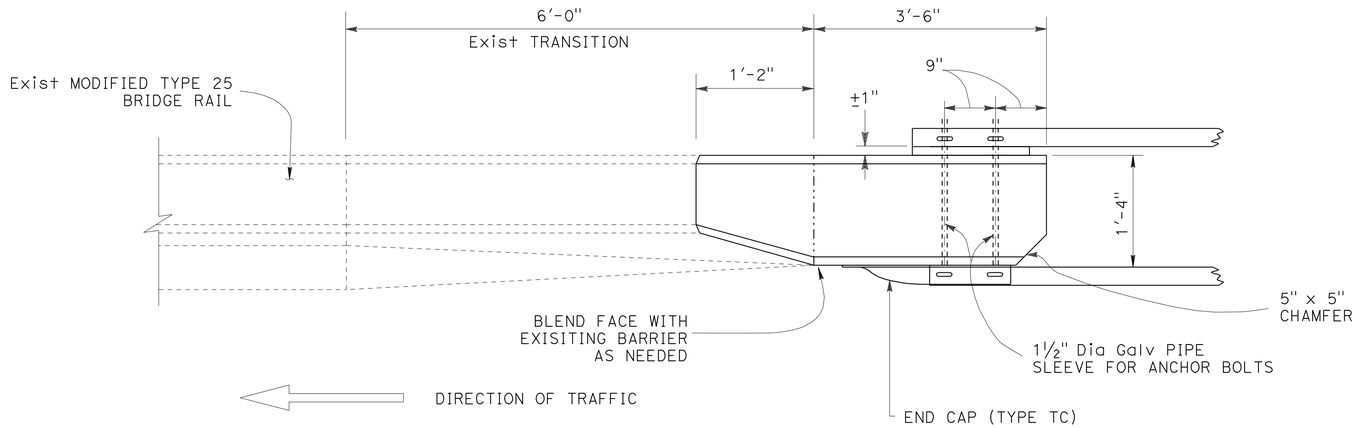

PLAN

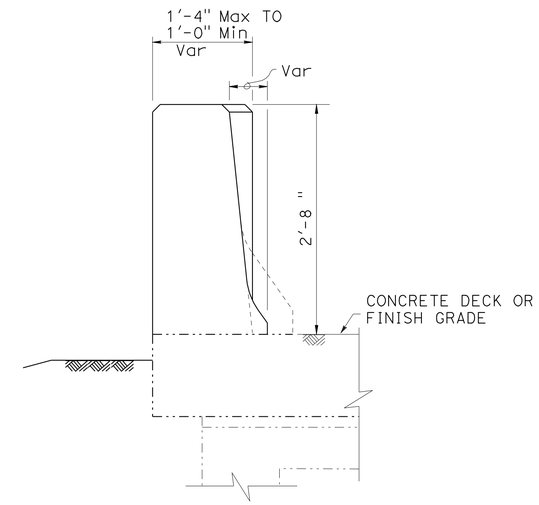

SECTION B-B

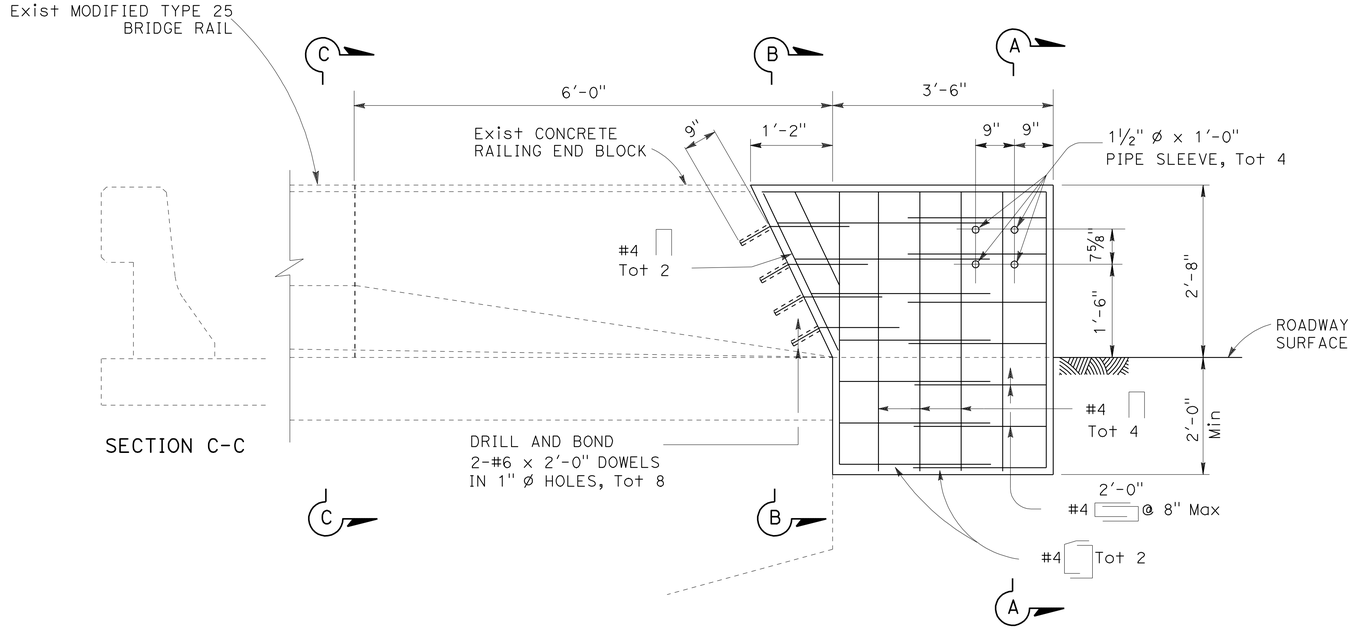

ELEVATION

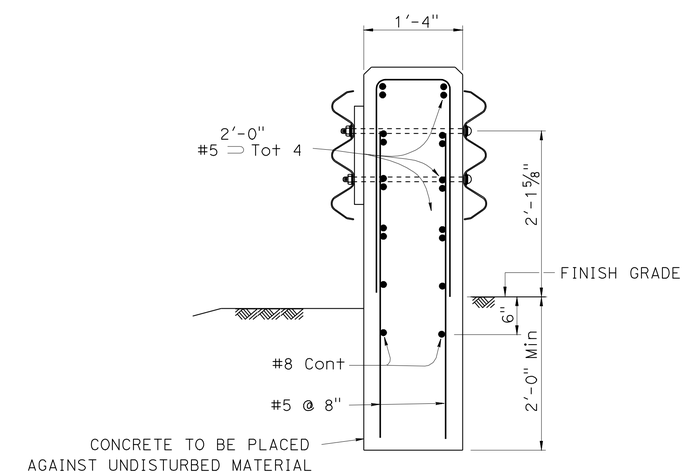

SECTION A-A

CONCRETE BARRIER (TRANSITION ANCHOR BLOCK)

TRANSITION BLOCK TYPE 25

CONSTRUCTION DETAILS

NO SCALE

C-10

REVISED BY	DATE REVISED
DWIGHT WINTERLIN	KRISTI WESTOBY
CALCULATED-DESIGNED BY	CHECKED BY
FUNCTIONAL SUPERVISOR	KRISTI WESTOBY

STATE OF CALIFORNIA - DEPARTMENT OF TRANSPORTATION
Caltrans®
DESIGN

p:\proj2\02\2e970_plans\pse\22e9701ga010.dgn

LAST REVISION 07-08-10 | DATE PLOTTED => 15-JUL-2010 | TIME PLOTTED => 17:47

Dist	COUNTY	ROUTE	POST MILES TOTAL PROJECT	SHEET No.	TOTAL SHEETS
02	Sha,Teh	5	0.0/44.0, 0.0/42.1	12	77

Dwight D Winterlin 07-08-10
REGISTERED CIVIL ENGINEER DATE

7-12-10
PLANS APPROVAL DATE

REGISTERED PROFESSIONAL ENGINEER
DWIGHT WINTERLIN
No. C68438
Exp 09-30-11
CIVIL
STATE OF CALIFORNIA

THE STATE OF CALIFORNIA OR ITS OFFICERS OR AGENTS SHALL NOT BE RESPONSIBLE FOR THE ACCURACY OR COMPLETENESS OF SCANNED COPIES OF THIS PLAN SHEET.

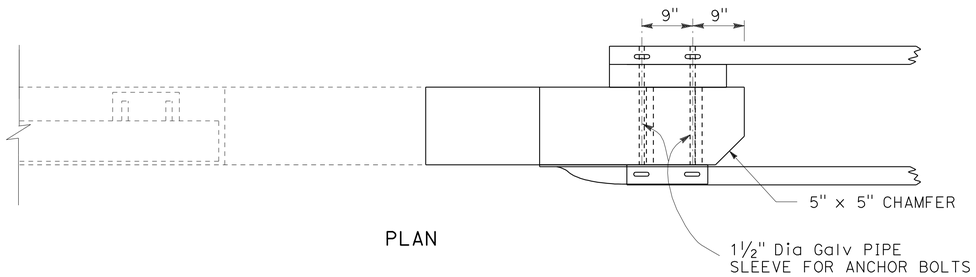

PLAN

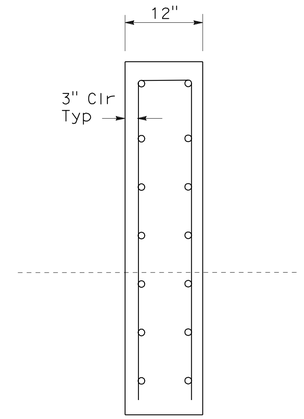

SECTION D-D

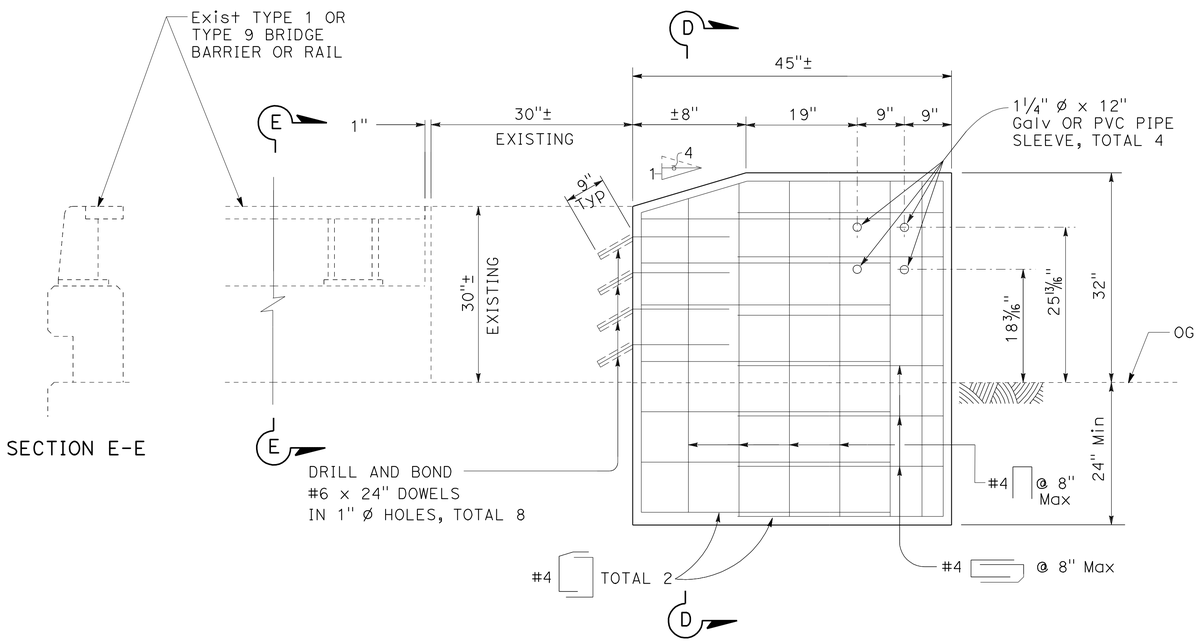

SECTION E-E

ELEVATION

CONCRETE BARRIER (TRANSITION ANCHOR BLOCK)

TRANSITION ANCHOR BLOCK TYPE 1 AND TYPE 9

CONCRETE BARRIER (TRANSITION ANCHOR BLOCK) LOCATIONS

COUNTY	STRUCTURE	PM	STRUCTURE No.	DIRECTION	SIDE OF ROADWAY	BRIDGE RAIL TYPE
Teh	WILLOW CREEK BRIDGE	R19.28	08-0110R	N	RT/LT	1
Teh	WILLOW CREEK BRIDGE	R19.31	08-0110L	S	RT/LT	1
Teh	OAT CREEK BRIDGE	R19.67	08-0117R	N	RT/LT	1
Teh	OAT CREEK BRIDGE	R19.70	08-0117L	S	RT/LT	1
Teh	COYOTE CREEK BRIDGE	R20.50	08-0111R	N	RT/LT	1
Teh	COYOTE CREEK BRIDGE	R20.52	08-0111L	S	RT/LT	1
Teh	S FORK BLUE TENT CREEK	31.78	08-0026L	S	RT/LT	1
Teh	COTTONWOOD CREEK BRIDGE	41.98	06-0204	N	RT	25
Sha	COTTONWOOD CREEK BRIDGE	0.14	06-0204	S	RT	25
Sha	S ANDERSON OH	R4.56	06-0098R	N	RT	1
Sha	S ANDERSON OH	R4.61	06-0098L	S	RT	1
Sha	ANDERSON CREEK BRIDGE	R5.04	06-0142R	N	RT	1
Sha	ANDERSON CREEK BRIDGE	R5.06	06-0142L	S	RT	1
Sha	BALLS FERRY UC	R5.29	06-0140R	N	RT	1
Sha	BALLS FERRY UC	R5.32	06-0140L	S	RT	1
Sha	NORTH STREET UC	R5.64	06-0141R	N	RT	1
Sha	NORTH STREET UC	R5.67	06-0141L	S	RT	1
Sha	TORMEY DRAIN BRIDGE	R5.89	06-0144R	N	RT	1
Sha	TORMEY DRAIN BRIDGE	R5.90	06-0144L	S	RT	1
Sha	TUNNEL GULCH VIADUCT	R30.55	06-0131R	N	RT/LT	9
Sha	ISLAND VIEW VIADUCT	R30.89	06-0133R	N	RT/LT	9
Sha	SIDE HILL VIADUCT	R29.72	06-0042L	S	RT/LT	9
Sha	POWER LINE ROAD UC	R30.23	06-0147L	S	RT/LT	9
Sha	O'BRIEN UC	R32.16	06-0148R	N	RT/LT	9
Sha	O'BRIEN UC	R32.06	06-0148L	S	RT/LT	9
Sha	UPPER SALT CREEK UC	R37.08	06-0159R	N	RT	1
Sha	UPPER SALT CREEK UC	R37.10	06-0159L	S	RT	1

CONSTRUCTION DETAILS

NO SCALE **C-11**

STATE OF CALIFORNIA - DEPARTMENT OF TRANSPORTATION
Caltrans DESIGN

DWIGHT WINTERLIN — CALCULATED-DESIGNED BY
KRISTI WESTOBY — CHECKED BY
KRISTI WESTOBY — FUNCTIONAL SUPERVISOR
DATE REVISED — REVISED BY

p:\proj2\02\2e970_plans\pse\22e9701ga011.dgn

LAST REVISION 07-08-10 | DATE PLOTTED => 15-JUL-2010 | TIME PLOTTED => 17:13

BORDER LAST REVISED 7/2/2010 | USERNAME => trstrk | DGN FILE => 22e9701ga011.dgn | RELATIVE BORDER SCALE IS IN INCHES 0 1 2 3 | UNIT 0147 | PROJECT NUMBER & PHASE 02000200121

Dist	COUNTY	ROUTE	POST MILES TOTAL PROJECT	SHEET No.	TOTAL SHEETS
02	Sha,Teh	5	0.0/44.0, 0.0/42.1	13	77

Michael R. Webb 07-08-10
REGISTERED CIVIL ENGINEER DATE

7-12-10
PLANS APPROVAL DATE

REGISTERED PROFESSIONAL ENGINEER MICHAEL R. WEBB No. C73986 Exp. 6-30-11 CIVIL STATE OF CALIFORNIA

THE STATE OF CALIFORNIA OR ITS OFFICERS OR AGENTS SHALL NOT BE RESPONSIBLE FOR THE ACCURACY OR COMPLETENESS OF SCANNED COPIES OF THIS PLAN SHEET.

NOTES:

1. EXACT SIGN LOCATION TO BE DETERMINED BY THE ENGINEER.
2. CALIFORNIA SIGN CODES ARE DESIGNATED (CA), OTHERWISE FEDERAL SIGN CODES ARE SHOWN.

LEGEND

CONSTRUCTION AREA SIGN (1 POST)

CONSTRUCTION AREA SIGN (2 POST)

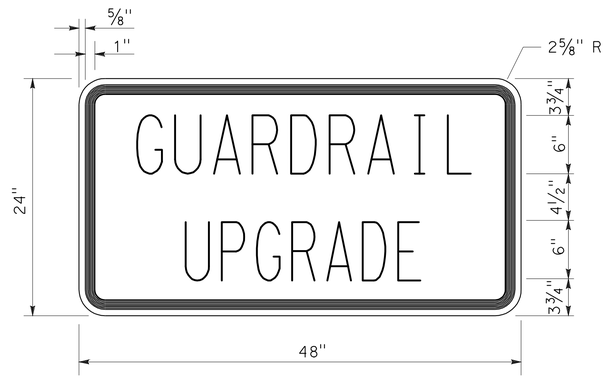

C23B SIGN PANEL DETAIL

CONSTRUCTION AREA SIGNS (STATIONARY MOUNTED)

SIGN	CODE	PANEL SIZE	POST SIZE	SIGN MESSAGE
A	G20-2	48" x 48"	2-4" x 6"	ROAD WORK AHEAD
B	C23B	42" x 24"		GUARDRAIL UPGRADE
C	W20-1	36" x 18"	1-4" x 4"	END ROAD WORK

NOTES: 1. SIGN B TO BE MOUNTED BELOW SIGN A.
2. SEE EXISTING BRIDGE COLUMN INFORMATION TABLE ON SHEET C-9 FOR LOCATIONS WITH CONSTRUCTION AREA SIGNS (STATIONARY MOUNTED)

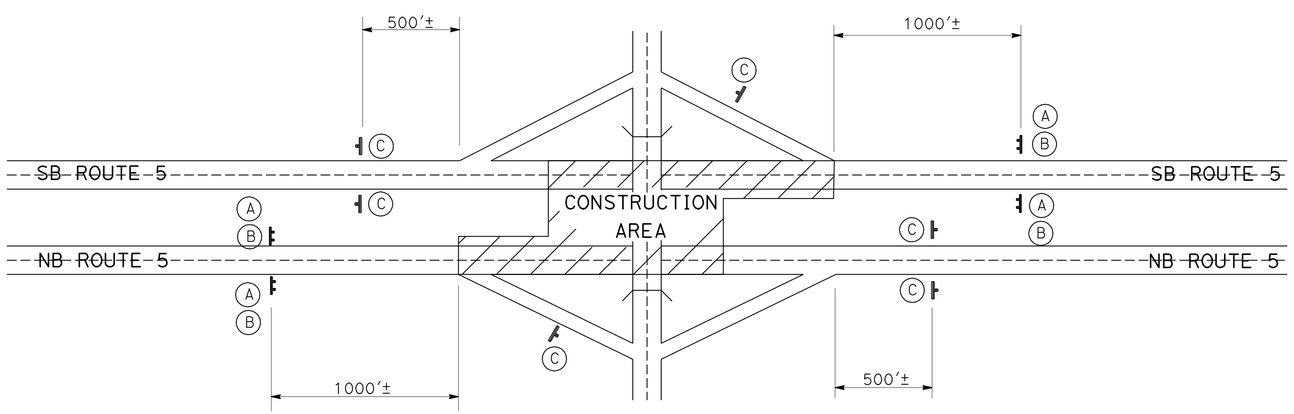

TYPICAL CONSTRUCTION AREA SIGN PLAN

CONSTRUCTION AREA SIGNS
NO SCALE
CS-1

REVISED BY | DATE REVISED
MICHAEL WEBB | MICHAEL MOGEN
CALCULATED-DESIGNED BY | CHECKED BY
FUNCTIONAL SUPERVISOR: JULIE CASEY
STATE OF CALIFORNIA - DEPARTMENT OF TRANSPORTATION
Caltrans® DESIGN
p:\proj\02\2e970_plans\pse\22e97011a001.dgn

LAST REVISION 07-08-10 | DATE PLOTTED => 15-JUL-2010 | TIME PLOTTED => 17:13

BORDER LAST REVISED 7/2/2010 | USERNAME => trstrk | DGN FILE => 22e97011a001.dgn | RELATIVE BORDER SCALE IS IN INCHES 0 1 2 3 | UNIT 0147 | PROJECT NUMBER & PHASE 02000200121

Dist	COUNTY	ROUTE	POST MILES TOTAL PROJECT	SHEET No.	TOTAL SHEETS
02	Sha,Teh	5	0.0/44.0, 0.0/42.1	14	77

Michael R. Webb 07-08-10
REGISTERED CIVIL ENGINEER DATE

7-12-10
PLANS APPROVAL DATE

REGISTERED PROFESSIONAL ENGINEER MICHAEL R. WEBB No. C73986 Exp. 6-30-11 CIVIL STATE OF CALIFORNIA

THE STATE OF CALIFORNIA OR ITS OFFICERS OR AGENTS SHALL NOT BE RESPONSIBLE FOR THE ACCURACY OR COMPLETENESS OF SCANNED COPIES OF THIS PLAN SHEET.

NOTE:

1. EXACT LOCATION OF TEMPORARY RAILING (TYPE K) AND TEMPORARY CRASH CUSHION (TS14) TO BE DETERMINED BY THE ENGINEER.

LEGEND:

⇦ DIRECTION OF TRAFFIC

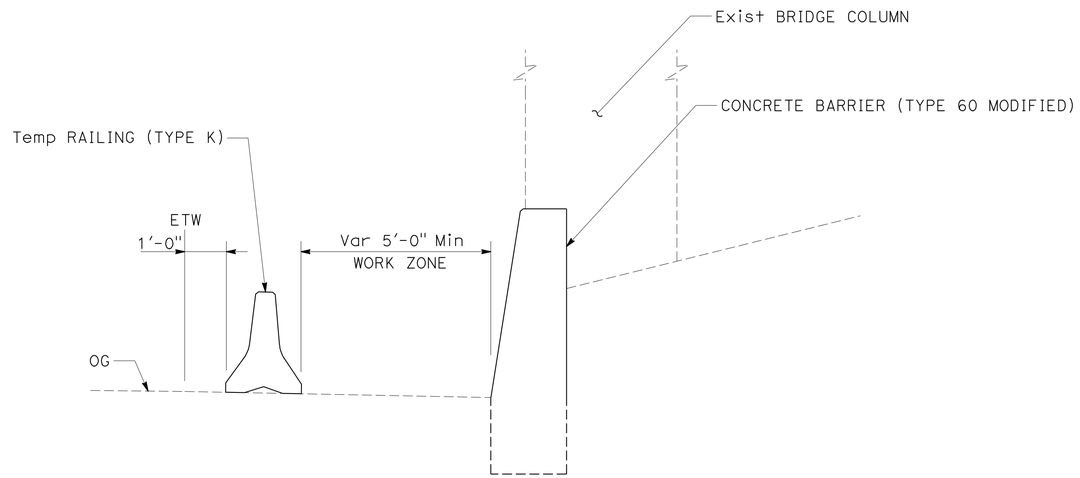

SECTION A-A

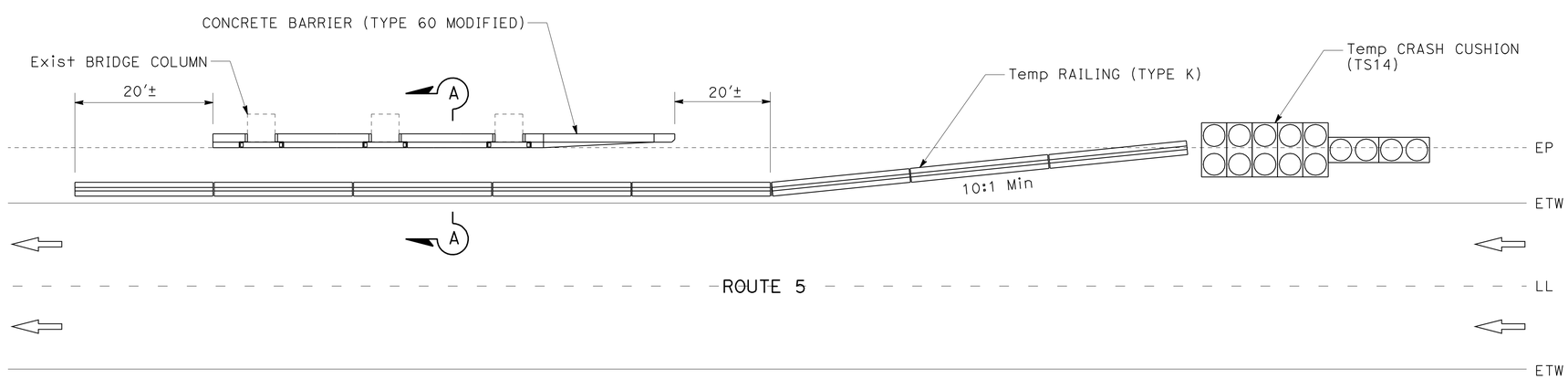

PLAN

TYPICAL TEMPORARY RAILING (TYPE K) LAYOUT FOR CONCRETE BARRIER (TYPE 60 MODIFIED)

TRAFFIC HANDLING DETAILS

NO SCALE **THD-1**

REVISED BY | DATE REVISED
MICHAEL WEBB | MICHAEL MOGEN
CALCULATED-DESIGNED BY | CHECKED BY
FUNCTIONAL SUPERVISOR: JULIE CASEY

STATE OF CALIFORNIA - DEPARTMENT OF TRANSPORTATION
Caltrans® DESIGN

p:\proj2\02\2e970_plans\pse\22e9701me001.dgn

LAST REVISION 07-08-10 | DATE PLOTTED => 15-JUL-2010 | TIME PLOTTED => 17:13

Dist	COUNTY	ROUTE	POST MILES TOTAL PROJECT	SHEET No.	TOTAL SHEETS
02	Sha,Teh	5	0.0/44.0, 0.0/42.1	15	77

Michael R. Webb 07-08-10
REGISTERED CIVIL ENGINEER DATE

7-12-10
PLANS APPROVAL DATE

REGISTERED PROFESSIONAL ENGINEER
MICHAEL R. WEBB
No. C73986
Exp. 6-30-11
CIVIL
STATE OF CALIFORNIA

THE STATE OF CALIFORNIA OR ITS OFFICERS OR AGENTS SHALL NOT BE RESPONSIBLE FOR THE ACCURACY OR COMPLETENESS OF SCANNED COPIES OF THIS PLAN SHEET.

TRAFFIC HANDLING QUANTITIES

COUNTY	STRUCTURE	PM	STRUCTURE No.	DIRECTION	TEMPORARY RAILING (TYPE K)	TEMPORARY CRASH CUSHION MODULE
					LF	EA
Teh	CORNING ROAD OC	8.98	08-0109	S	160	14
Teh	FLORES Ave OC	19.78	08-0118	N	160	14
Teh	FLORES Ave OC	19.78	08-0118	S	160	14
Teh	N RED BLUFF (36/5) Sep	28.38	08-0098E	S	160	14
Teh	WILCOX ROAD OC	31.04	08-0104	N	140	14
Teh	WILCOX ROAD OC	31.04	08-0104	S	140	14
Teh	JELLYS FERRY ROAD OC	32.24	08-0103	S	140	14
Teh	NINE MILE HILL OC	36.37	08-0101	N	140	14
Teh	NINE MILE HILL OC	36.37	08-0101	S	140	14
Teh	SUNSET HILLS Dr OC	38.72	08-0102	N	140	14
Teh	SUNSET HILLS Dr OC	38.72	08-0102	S	140	14
Teh	BOWMAN ROAD OC	41.53	08-0105	N	140	14
Teh	BOWMAN ROAD OC	41.53	08-0105	S	140	14
Sha	FIRST St OC	0.66	06-0016	N	160	14
Sha	FIRST St OC	0.66	06-0016	S	160	14
Sha	FOURTH St OC	0.91	06-0037	N	160	14
Sha	FOURTH St OC	0.91	06-0037	S	160	14
Sha	KNIGHTON ROAD OC	9.77	06-0134	N	160	14
Sha	KNIGHTON ROAD OC	9.77	06-0134	S	160	14
Sha	SMITH ROAD OC	10.85	06-0138	N	160	14
Sha	SMITH ROAD OC	10.85	06-0138	S	160	14
Sha	CHURN CREEK ROAD OC	12.15	06-0122	N	200	14
Sha	CHURN CREEK ROAD OC	12.15	06-0122	S	200	14
Sha	LOMA VISTA Dr OC	12.92	06-0123	N	160	14
Sha	LOMA VISTA Dr OC	12.92	06-0123	S	160	14
Sha	HARTNELL Ave OC	13.95	06-0124	N	180	14
Sha	HILLTOP Dr OC	16.15	06-0101	N	160	14
Sha	HILLTOP Dr OC	16.15	06-0101	S	160	14
Sha	N273-N5 CONNECTOR OC	18.48	06-0137G	N	160	14
Sha	N273-N5 CONNECTOR OC	18.48	06-0137G	S	160	14
				TOTALS	4720	420

REVISED BY | DATE REVISED
MICHAEL WEBB | MICHAEL MOGEN
CALCULATED-DESIGNED BY | CHECKED BY
FUNCTIONAL SUPERVISOR
JULIE CASEY

STATE OF CALIFORNIA - DEPARTMENT OF TRANSPORTATION
Caltrans
DESIGN

p:\proj2\02\2e970_plans\pse\22e9701mf001.dgn

TRAFFIC HANDLING QUANTITIES
THQ-1

LAST REVISION 07-08-10 | DATE PLOTTED => 15-JUL-2010 | TIME PLOTTED => 17:13

Dist	COUNTY	ROUTE	POST MILES TOTAL PROJECT	SHEET No.	TOTAL SHEETS
02	Sha,Teh	5	0.0/44.0, 0.0/42.1	16	77

REGISTERED CIVIL ENGINEER 07-08-10 DATE

7-12-10
PLANS APPROVAL DATE

REGISTERED PROFESSIONAL ENGINEER DANIEL E. NORRIS No. 68960 Exp. 12/31/11 CIVIL STATE OF CALIFORNIA

THE STATE OF CALIFORNIA OR ITS OFFICERS OR AGENTS SHALL NOT BE RESPONSIBLE FOR THE ACCURACY OR COMPLETENESS OF SCANNED COPIES OF THIS PLAN SHEET.

NOTES:

1. PRE-NOTIFICATION PCMS: PLACE NEAR RAMP AND ACTIVATE APPROXIMATELY 12 HOURS PRIOR TO RAMP CLOSURE.

EXIT WILL BE CLOSED	TODAY (or TONIGHT) 0 PM - 0 AM
FRAME 1	FRAME 2

2. RAMP CLOSED PCMS: MOVE PRE-NOTIFICATION PCMS APPROXIMATELY 1000 FEET BEFORE RAMP AND ACTIVATE DURING RAMP CLOSURE.

EXIT XXX CLOSED	FOLLOW DETOUR
FRAME 1	FRAME 2

3. PLACE 7 DAYS PRIOR TO RAMP CLOSURE.
4. ADD SIGN(S) ONLY IF SPACING BETWEEN INTERCHANGES IS MORE THAN 5 MILES SPACE SIGN(S) EQUALLY BETWEEN INTERCHANGES WITH MAXIMUM SPACING AT 5 MILES.
5. IF AVAILABLE, EXISTING ROUTE SHIELDS AND DIRECTIONS MAY BE USED IN PLACE OF SIGNS SHOWN.
6. RAMP CLOSED PCMS: PLACE BEFORE OPEN ON-RAMP AND ACTIVATE DURING RAMP CLOSURE.

NB (OR SB) I-5 ON RAMP CLOSED	FOLLOW DETOUR
FRAME 1	FRAME 2

7. EXIT NUMBER SHOWN AS FOLLOWS.

EXIT NAME	EXIT NUMBER
ADOBE Rd	650
WILCOX GOLF Rd	652
HOOKER CREEK	657
SUNSET HILLS	659
S BONNYVIEW Rd/CHURN CREEK Rd	675
EB44 TO NB I-5	2B
CYPRESS St	677
NB ON FROM 299	680
OASIS Rd	682
PINE GROVE Ave	684
FAWNDALE Rd	689
BRIDGE BAY Rd	690
O'BRIEN Rd	695

8. EXACT SIGN LOCATION TO BE DETERMINED BY THE ENGINEER.

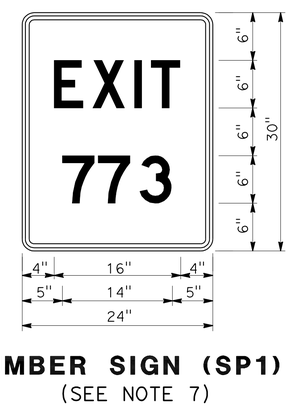

EXIT NUMBER SIGN (SP1) DETAIL
(SEE NOTE 7)

CONSTRUCTION AREA SIGNS (PORTABLE)

CODE	PANEL SIZE	SIGN MESSAGE
G27-2 (5) (CA)	24" x 24"	ROUTE SHIELD (5)
M3-1	24" x 12"	DIRECTION (NORTH)
M3-3	24" x 12"	DIRECTION (SOUTH)
M4-8A	24" x 18"	END DETOUR
M4-10L	48" x 18"	DETOUR (L† ARROW)
M4-10R	48" x 18"	DETOUR (R† ARROW)
SC3 (CA)	48" x 18"	DETOUR WITH UP ARROW
SC6-3 (CA)	48" x 48"	RAMP CLOSED - DATE TIME
SP1	24" x 30"	EXIT NUMBER (SEE NOTE 7)

LEGEND:

PORTABLE CHANGABLE MESSAGE SIGN

ABBREVIATION:

PCMS PORTABLE CHANGEABLE MESSAGE SIGN

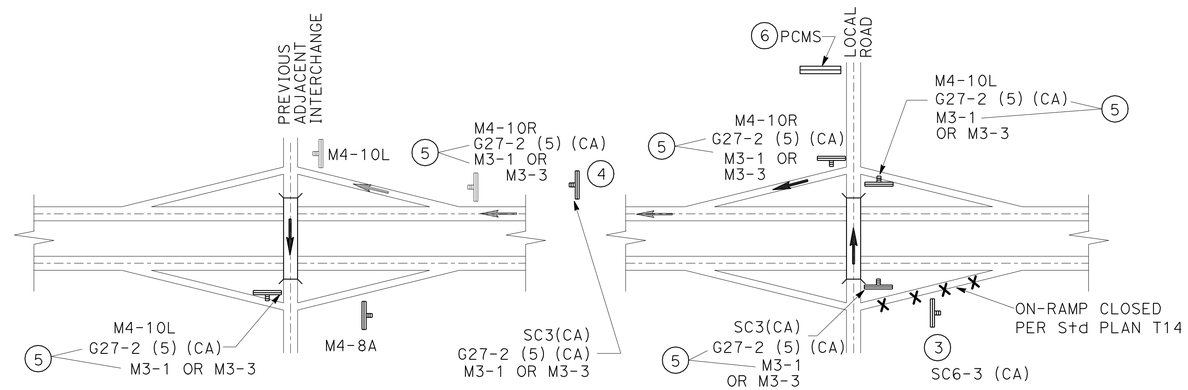

TYPICAL ENTRANCE RAMP DETOUR SIGNING

SB - FROM ADOBE Rd
SB - FROM HOOKER CREEK Rd
NB - FROM SUNSET HILLS
SB - FROM BONNYVIEW Rd
NB - FROM 299
SB - FROM OASIS Rd
NB - FROM PINE GROVE Rd
NB - FROM FAWNDALE Rd
SB - FROM BRIDGE BAY Rd

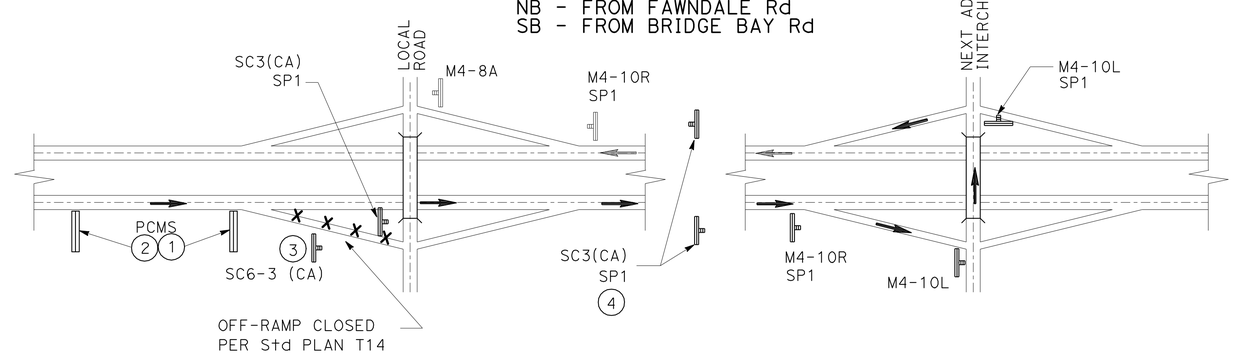

TYPICAL EXIT RAMP DETOUR SIGNING

NB - TO ADOBE Rd
SB - TO TO WILCOX GOLF Rd
SB - TO SUNSET HILLS
EB - TO NB I-5
NB - TO CYPRESS St
NB - TO TURNTABLE BAY Rd
NB - TO O'BRIEN

THIS PLAN ACCURATE FOR DETOUR CONSTRUCTION WORK ONLY.

DETOUR PLAN

NO SCALE **DE-1**

REVISED BY | DATE REVISED
DAN NORRIS | GERRY REYES
CALCULATED-DESIGNED BY | CHECKED BY
FUNCTIONAL SUPERVISOR
KRISTI WESTOBY

STATE OF CALIFORNIA - DEPARTMENT OF TRANSPORTATION
Caltrans
DESIGN

P:\proj2\02\2E970_plans\pse\22e9701mg001.dgn

LAST REVISION | DATE PLOTTED => 15-JUL-2010
07-08-10 | TIME PLOTTED => 17:14

Dist	COUNTY	ROUTE	POST MILES TOTAL PROJECT	SHEET No.	TOTAL SHEETS
02	Sha,Teh	5	0.0/44.0, 0.0/42.1	17	77

REGISTERED CIVIL ENGINEER 07-08-10 DATE

7-12-10
PLANS APPROVAL DATE

REGISTERED PROFESSIONAL ENGINEER DANIEL E. NORRIS No. 68960 Exp. 12/31/11 CIVIL STATE OF CALIFORNIA

THE STATE OF CALIFORNIA OR ITS OFFICERS OR AGENTS SHALL NOT BE RESPONSIBLE FOR THE ACCURACY OR COMPLETENESS OF SCANNED COPIES OF THIS PLAN SHEET.

NOTES:

1. PLACE 7 DAYS PRIOR TO RAMP CLOSURE.
2. RAMP CLOSED PCMS: PLACE BEFORE OPEN ON-RAMP AND ACTIVATE DURING RAMP CLOSURE.

SB I-5 ON RAMP CLOSED	FOLLOW DETOUR
FRAME 1	FRAME 2

3. EXACT SIGN LOCATION TO BE DETERMINED BY THE ENGINEER.
4. CALIFORNIA SIGN CODES ARE DESIGNATED BY (CA), OTHERWISE, FEDERAL MUTCD SIGN CODES ARE SHOWN.

CONSTRUCTION AREA SIGNS (PORTABLE)

SIGN No.	CODE	PANEL SIZE	REMARKS	No. (EA)
A	SC3(CA) G27-2(5)(CA) M3-3	48" x 18" 24" x 24" 24" x 12"	↑ "DETOUR" ROUTE SHIELD (5) DIRECTION (SOUTH)	1
B	M4-10 R G27-2(5)(CA) M3-3	48" x 18" 24" x 24" 24" x 12"	"DETOUR" → ROUTE SHIELD (5) DIRECTION (SOUTH)	2
C	M4-10 L G27-2(5)(CA) M3-3	48" x 18" 24" x 24" 24" x 12"	← "DETOUR" ROUTE SHIELD (5) DIRECTION (SOUTH)	4
D	M4-8A	24" x 18"	"END DETOUR"	1
E	SC6-3(CA)	48" x 48"	"RAMP CLOSED" DATE TIME	1
			TOTAL	9

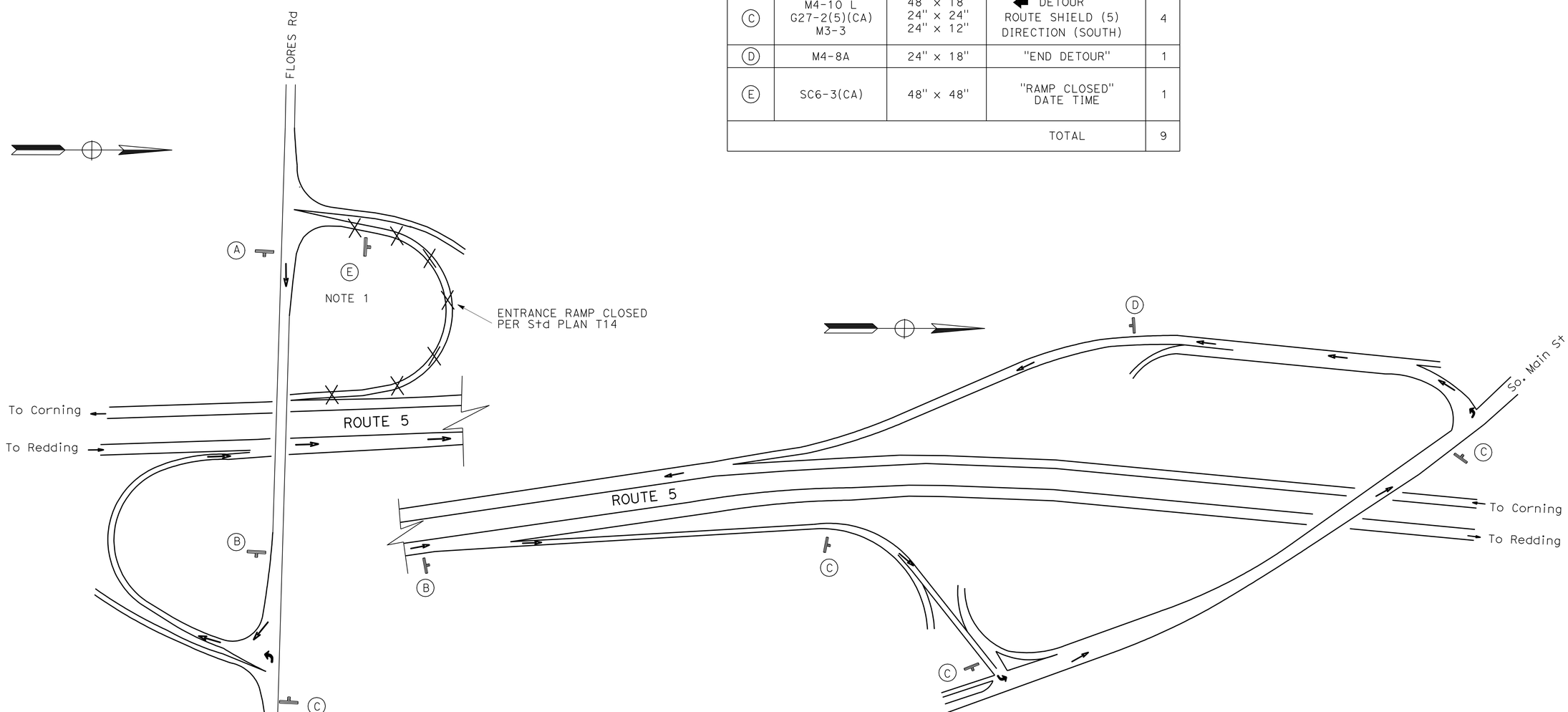

DETOUR FOR CLOSURE OF SB ROUTE 5 ENTRANCE RAMP FROM FLORES ROAD

THIS PLAN ACCURATE FOR DETOUR CONSTRUCTION WORK ONLY.

DETOUR PLAN

NO SCALE **DE-2**

STATE OF CALIFORNIA - DEPARTMENT OF TRANSPORTATION
Caltrans® DESIGN

FUNCTIONAL SUPERVISOR: KRISTI WESTOBY
CALCULATED-DESIGNED BY: DAN NORRIS
CHECKED BY: GERRY REYES
REVISED BY / DATE REVISED

P:\proj2\02\2E970_plans\pse\22e9701mg002.dgn

LAST REVISION 07-08-10
DATE PLOTTED => 15-JUL-2010
TIME PLOTTED => 17:50

Dist	COUNTY	ROUTE	POST MILES TOTAL PROJECT	SHEET No.	TOTAL SHEETS
02	Sha,Teh	5	0.0/44.0, 0.0/42.1	18	77

REGISTERED CIVIL ENGINEER 07-08-10 DATE

7-12-10
PLANS APPROVAL DATE

REGISTERED PROFESSIONAL ENGINEER DANIEL E. NORRIS No. 68960 Exp. 12/31/11 CIVIL STATE OF CALIFORNIA

THE STATE OF CALIFORNIA OR ITS OFFICERS OR AGENTS SHALL NOT BE RESPONSIBLE FOR THE ACCURACY OR COMPLETENESS OF SCANNED COPIES OF THIS PLAN SHEET.

NOTES:

1. PRE-NOTIFICATION PCMS: PLACE NEAR RAMP AND ACTIVATE APPROXIMATELY 12 HOURS PRIOR TO RAMP CLOSURE.

EXIT WILL BE CLOSED	TONIGHT (or TODAY) 0 PM - 0 AM
FRAME 1	FRAME 2

2. RAMP CLOSED PCMS: MOVE PRE-NOTIFICATION PCMS APPROXIMATELY 1000′ BEFORE RAMP AND ACTIVATE DURING RAMP CLOSURE.

EXIT 642 CLOSED	FOLLOW DETOUR
FRAME 1	FRAME 2

3. PLACE 7 DAYS PRIOR TO RAMP CLOSURE.
4. CALIFORNIA SIGN CODES ARE DESIGNATED BY (CA), OTHERWISE, FEDERAL MUTCD SIGN CODES ARE SHOWN.
5. EXACT SIGN LOCATIONS TO BE DETERMINED BY THE ENGINEER.

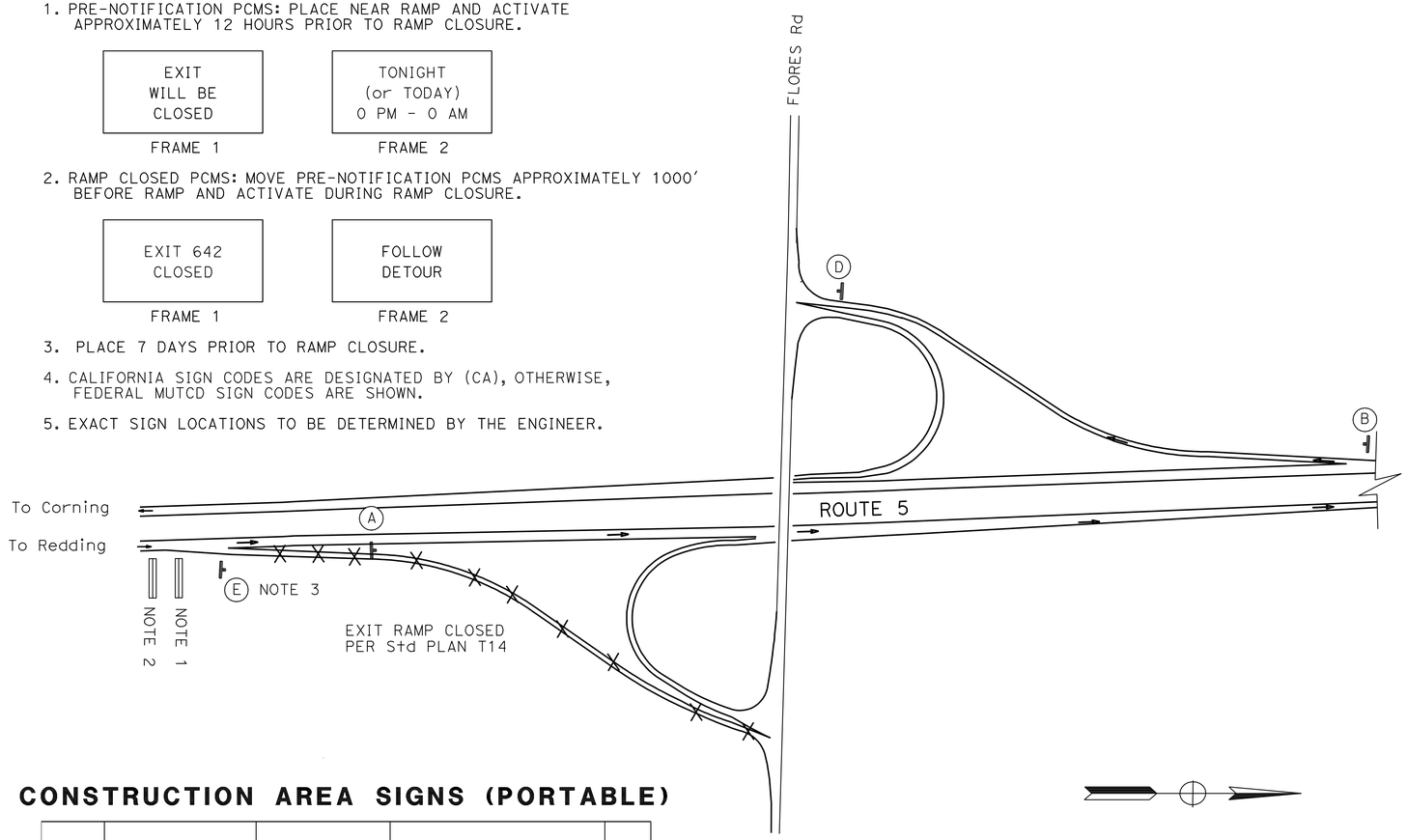

CONSTRUCTION AREA SIGNS (PORTABLE)

SIGN No.	CODE	PANEL SIZE	REMARKS	No. (EA)
A	SC3(CA) SP1	48" x 18" 24" x 30"	↑ "DETOUR" "EXIT 642"	1
B	M4-10 R SP1	48" x 18" 24" x 30"	"DETOUR" "EXIT 642" →	2
C	M4-10 L SP1	48" x 18" 24" x 30"	← "DETOUR" "EXIT 642"	3
D	M4-8A	24" X 18"	"END DETOUR"	1
E	SC6-3(CA)	48" x 48"	"RAMP CLOSED" DATE TIME	1
			TOTAL	8

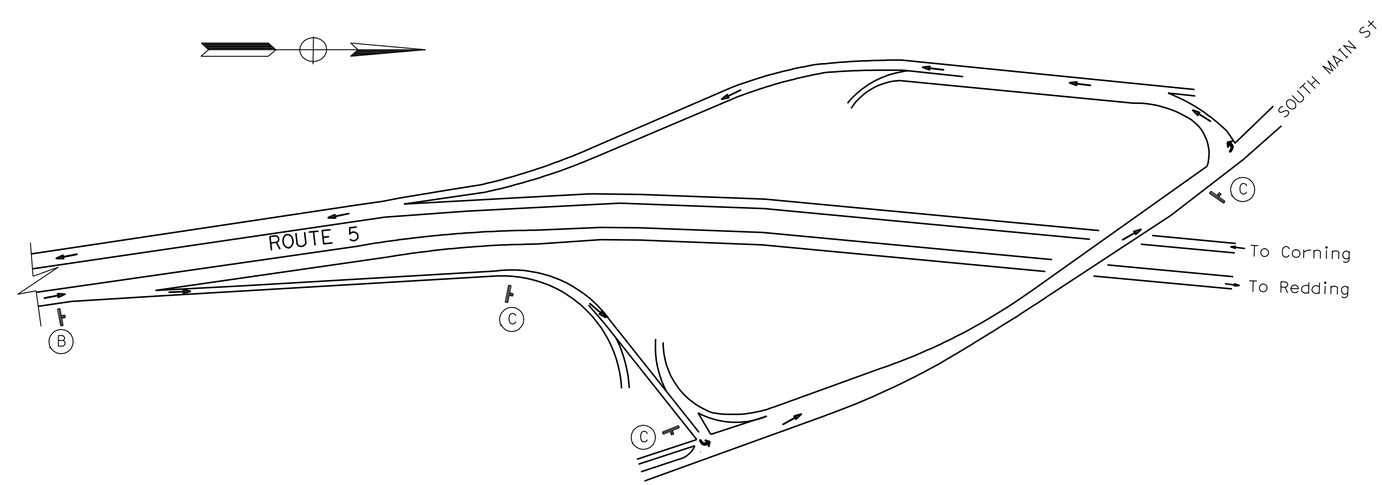

DETOUR FOR CLOSURE OF NB ROUTE 5 EXIT RAMP TO FLORES ROAD

THIS PLAN ACCURATE FOR DETOUR CONSTRUCTION WORK ONLY.

DETOUR PLAN
NO SCALE **DE-3**

STATE OF CALIFORNIA - DEPARTMENT OF TRANSPORTATION
Caltrans® DESIGN
FUNCTIONAL SUPERVISOR KRISTI WESTOBY
CALCULATED-DESIGNED BY DAN NORRIS CHECKED BY GERRY REYES
REVISED BY DATE REVISED

P:\proj2\02\2E970_plans\pse\22e9701mg003.dgn

LAST REVISION DATE PLOTTED => 15-JUL-2010
07-08-10 TIME PLOTTED => 17:52

Dist	COUNTY	ROUTE	POST MILES TOTAL PROJECT	SHEET No.	TOTAL SHEETS
02	Sha,Teh	5	0.0/44.0, 0.0/42.1	19	77

REGISTERED CIVIL ENGINEER 07-08-10 DATE

7-12-10
PLANS APPROVAL DATE

REGISTERED PROFESSIONAL ENGINEER DANIEL E. NORRIS No. 68960 Exp. 12/31/11 CIVIL STATE OF CALIFORNIA

THE STATE OF CALIFORNIA OR ITS OFFICERS OR AGENTS SHALL NOT BE RESPONSIBLE FOR THE ACCURACY OR COMPLETENESS OF SCANNED COPIES OF THIS PLAN SHEET.

NOTES:

1. RAMP CLOSED PCMS: PLACE IN EASTBOUND DIRECTION AND ACTIVATE DURING RAMP CLOSURE.

NB I-5 ON RAMP CLOSED	DETOUR TO 273/ NORTH ST
FRAME 1	FRAME 2

2. RAMP CLOSED PCMS: PLACE IN NORTHBOUND DIRECTION AND ACTIVATE DURING RAMP CLOSURE.

NB I-5 ON RAMP CLOSED	FOLLOW DETOUR
FRAME 1	FRAME 2

3. PLACE 7 DAYS PRIOR TO RAMP CLOSURE.
4. CALIFORNIA SIGN CODES ARE DESIGNATED BY (CA), OTHERWISE, FEDERAL MUTCD SIGN CODES ARE SHOWN.
5. EXACT SIGN LOCATIONS TO BE DETERMINED BY THE ENGINEER.

CONSTRUCTION AREA SIGNS (PORTABLE)

SIGN No.	CODE	PANEL SIZE	REMARKS	No. (EA)
A	SC3(CA) G27-2(5)(CA) M3-1	48" x 18" 24" x 24" 24" x 12"	↑ "DETOUR" ROUTE SHIELD (5) DIRECTION (NORTH)	3
B	M4-10 R G27-2(5)(CA) M3-1	48" x 18" 24" x 24" 24" x 12"	"DETOUR" → ROUTE SHIELD (5) DIRECTION (NORTH)	3
C	M4-10 L G27-2(5)(CA) M3-1	48" x 18" 24" x 24" 24" x 12"	← "DETOUR" ROUTE SHIELD (5) DIRECTION (NORTH)	3
D	M4-8A	24" x 18"	"END DETOUR"	1
E	SC6-3(CA)	48" x 48"	"RAMP CLOSED" DATE TIME	1
			TOTAL	11

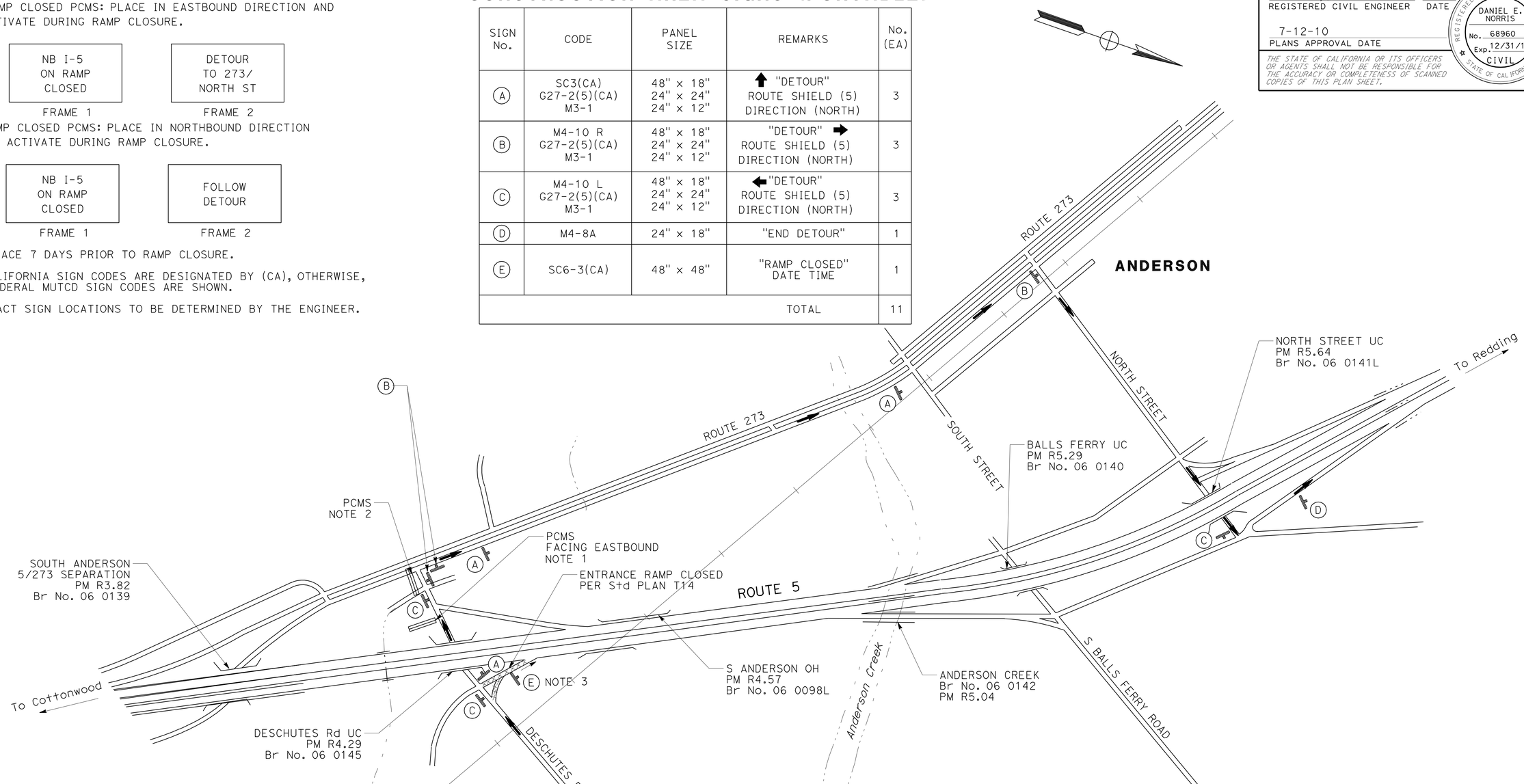

DETOUR FOR CLOSURE OF NB ROUTE 5 ENTRANCE RAMP FROM DESCHUTES ROAD

THIS PLAN ACCURATE FOR DETOUR CONSTRUCTION WORK ONLY.

DETOUR PLAN

NO SCALE

DE-4

REVISED BY	DATE REVISED

CALCULATED-DESIGNED BY	CHECKED BY
DAN NORRIS	GERRY REYES

FUNCTIONAL SUPERVISOR: KRISTI WESTOBY

STATE OF CALIFORNIA - DEPARTMENT OF TRANSPORTATION
Caltrans
DESIGN

P:\proj2\02\2E970_plans\pse\22e9701mg004.dgn

LAST REVISION 07-08-10 | DATE PLOTTED => 15-JUL-2010 | TIME PLOTTED => 17:14

Dist	COUNTY	ROUTE	POST MILES TOTAL PROJECT	SHEET No.	TOTAL SHEETS
02	Sha,Teh	5	0.0/44.0, 0.0/42.1	20	77

REGISTERED CIVIL ENGINEER 07-08-10 DATE

7-12-10
PLANS APPROVAL DATE

REGISTERED PROFESSIONAL ENGINEER DANIEL E. NORRIS No. 68960 Exp. 12/31/11 CIVIL STATE OF CALIFORNIA

THE STATE OF CALIFORNIA OR ITS OFFICERS OR AGENTS SHALL NOT BE RESPONSIBLE FOR THE ACCURACY OR COMPLETENESS OF SCANNED COPIES OF THIS PLAN SHEET.

NOTES:

1. PRE-NOTIFICATION PCMS: PLACE NEAR RAMP AND ACTIVATE APPROXIMATELY 12 HOURS PRIOR TO RAMP CLOSURE.

EXIT WILL BE CLOSED	TONIGHT (OR TODAY) 0 PM - 0 AM
FRAME 1	FRAME 2

2. RAMP CLOSED PCMS: MOVE PRE-NOTIFICATION PCMS APPROXIMATELY 1000′ BEFORE RAMP AND ACTIVATE DURING RAMP CLOSURE.

EXIT 667 CLOSED	FOLLOW DETOUR
FRAME 1	FRAME 2

3. PLACE 7 DAYS PRIOR TO RAMP CLOSURE.
4. CALIFORNIA SIGN CODES ARE DESIGNATED BY (CA), OTHERWISE, FEDERAL MUTCD SIGN CODES ARE SHOWN.
5. EXACT SIGN LOCATIONS TO BE DETERMINED BY THE ENGINEER.

CONSTRUCTION AREA SIGNS (PORTABLE)

SIGN No.	CODE	PANEL SIZE	REMARKS	No. (EA)
A	SC3(CA) SP1	48" x 18" 24" x 30"	↑ "DETOUR" "EXIT 667"	2
B	M4-10 R SP1	48" x 18" 24" x 30"	"DETOUR" "EXIT 667" →	2
C	M4-10 L SP1	48" x 18" 24" x 30"	← "DETOUR" "EXIT 667"	2
D	M4-8A	24" x 18"	"END DETOUR"	1
E	SC6-3(CA)	48" x 48"	"RAMP CLOSED" DATE TIME	1
			TOTAL	8

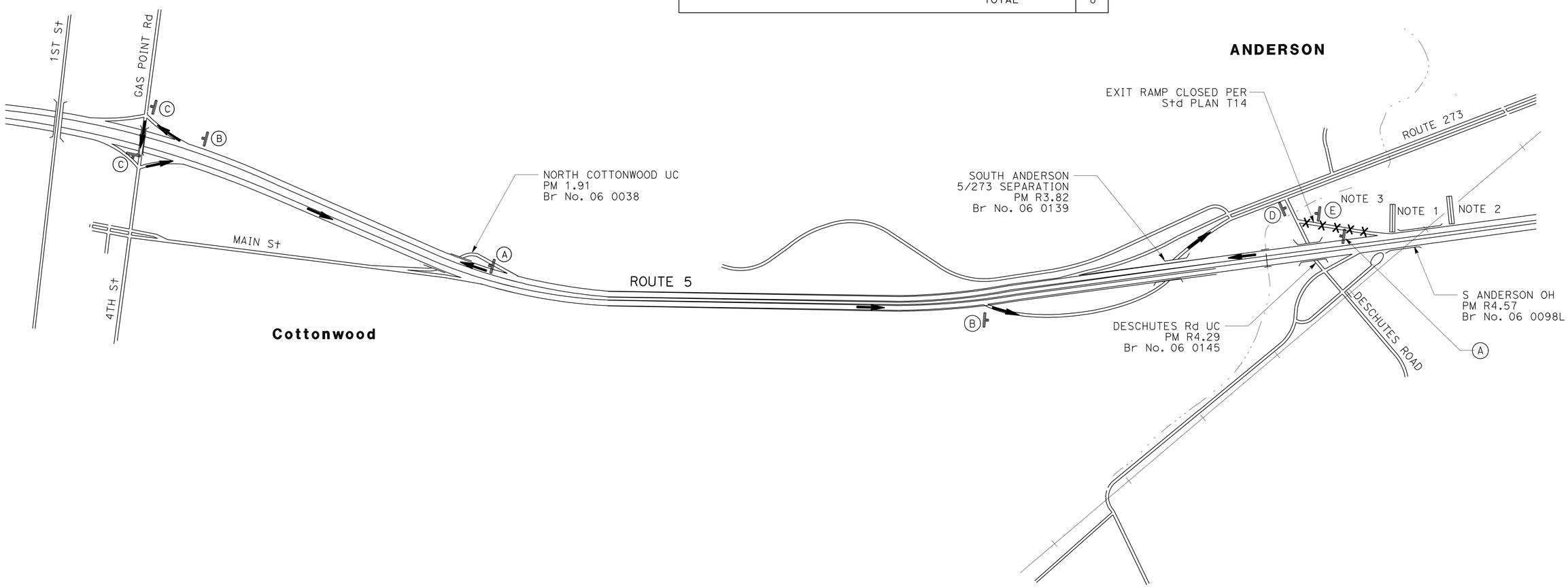

DETOUR FOR CLOSURE OF SB ROUTE 5 EXIT RAMP TO DESCHUTES ROAD / FACTORY OUTLETS

THIS PLAN ACCURATE FOR DETOUR CONSTRUCTION WORK ONLY.

DETOUR PLAN

NO SCALE **DE-5**

REVISED BY	DATE REVISED
DAN NORRIS	GERRY REYES

CALCULATED-DESIGNED BY / CHECKED BY

FUNCTIONAL SUPERVISOR: KRISTI WESTOBY

STATE OF CALIFORNIA - DEPARTMENT OF TRANSPORTATION

Caltrans® DESIGN

P:\proj2\02\2E970_plans\pse\22e9701mg005.dgn

LAST REVISION 07-08-10 | DATE PLOTTED => 15-JUL-2010 | TIME PLOTTED => 17:55

Dist	COUNTY	ROUTE	POST MILES TOTAL PROJECT	SHEET No.	TOTAL SHEETS
02	Sha,Teh	5	0.0/44.0, 0.0/42.1	21	77

REGISTERED CIVIL ENGINEER 07-08-10 DATE

7-12-10
PLANS APPROVAL DATE

REGISTERED PROFESSIONAL ENGINEER DANIEL E. NORRIS No. 68960 Exp. 12/31/11 CIVIL STATE OF CALIFORNIA

THE STATE OF CALIFORNIA OR ITS OFFICERS OR AGENTS SHALL NOT BE RESPONSIBLE FOR THE ACCURACY OR COMPLETENESS OF SCANNED COPIES OF THIS PLAN SHEET.

NOTES:

1. RAMP CLOSED PCMS: PLACE BEFORE SOUTH St AND ACTIVATE DURING RAMP CLOSURE.

I-5 SB ON RAMP CLOSED	FOLLOW DETOUR
FRAME 1	FRAME 2

2. PLACE 7 DAYS PRIOR TO RAMP CLOSURE.
3. CALIFORNIA SIGN CODES ARE DESIGNATED BY (CA), OTHERWISE, FEDERAL MUTCD SIGN CODES ARE SHOWN.
4. EXACT SIGN LOCATIONS TO BE DETERMINED BY THE ENGINEER.

CONSTRUCTION AREA SIGNS (PORTABLE)

SIGN No.	CODE	PANEL SIZE	REMARKS	No. (EA)
A	SC3(CA) G27-2(5)(CA) M3-3	48" x 18" 24" x 24" 24" x 12"	↑ "DETOUR" ROUTE SHIELD (5) DIRECTION (SOUTH)	6
B	M4-10 R G27-2(5)(CA) M3-3	48" x 18" 24" x 24" 24" x 12"	"DETOUR" → ROUTE SHIELD (5) DIRECTION (SOUTH)	7
C	M4-10 L G27-2(5)(CA) M3-3	48" x 18" 24" x 24" 24" x 12"	← "DETOUR" ROUTE SHIELD (5) DIRECTION (SOUTH)	5
D	M4-8A	24" x 18"	"END DETOUR"	1
E	SC6-3(CA)	48" x 48"	"RAMP CLOSED" DATE TIME	1
			TOTAL	20

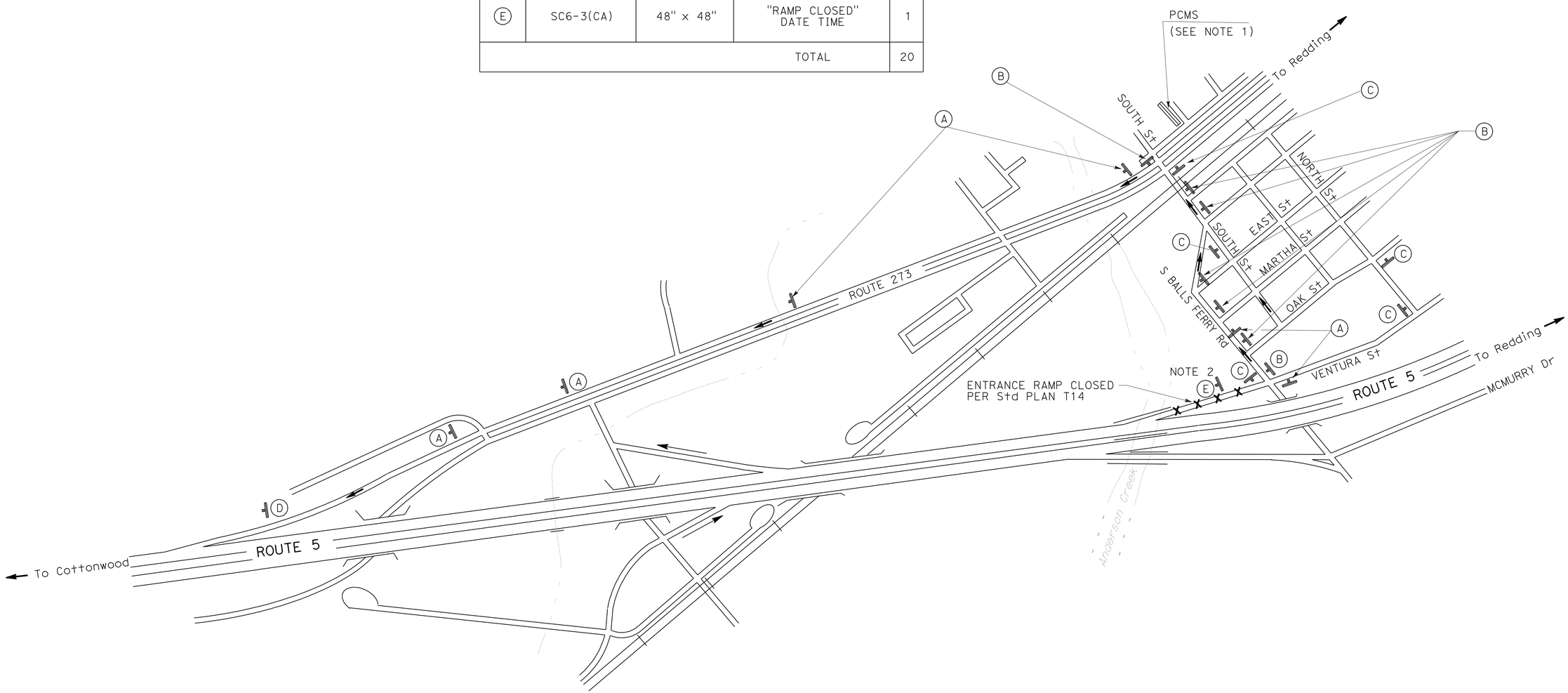

DETOUR FOR CLOSURE OF SB ROUTE 5 ENTRANCE RAMP FROM BALLS FERRY ROAD

THIS PLAN ACCURATE FOR DETOUR CONSTRUCTION WORK ONLY.

DETOUR PLAN

NO SCALE **DE-6**

STATE OF CALIFORNIA - DEPARTMENT OF TRANSPORTATION
Caltrans® **DESIGN**

FUNCTIONAL SUPERVISOR: KRISTI WESTOBY
CALCULATED-DESIGNED BY: DAN NORRIS
CHECKED BY: GERRY REYES
REVISED BY / DATE REVISED

P:\proj2\02\2E970_plans\pse\22e9701mg006.dgn

LAST REVISION 07-08-10 | DATE PLOTTED => 15-JUL-2010 | TIME PLOTTED => 17:43

Dist	COUNTY	ROUTE	POST MILES TOTAL PROJECT	SHEET No.	TOTAL SHEETS
02	Sha,Teh	5	0.0/44.0, 0.0/42.1	22	77

REGISTERED CIVIL ENGINEER 07-08-10 DATE

7-12-10
PLANS APPROVAL DATE

REGISTERED PROFESSIONAL ENGINEER DANIEL E. NORRIS No. 68960 Exp. 12/31/11 CIVIL STATE OF CALIFORNIA

THE STATE OF CALIFORNIA OR ITS OFFICERS OR AGENTS SHALL NOT BE RESPONSIBLE FOR THE ACCURACY OR COMPLETENESS OF SCANNED COPIES OF THIS PLAN SHEET.

CONSTRUCTION AREA SIGNS (PORTABLE)

NOTES:

1. RAMP CLOSED PCMS: PLACE BEFORE RAMP AND ACTIVATE DURING RAMP CLOSURE.

NB I-5 ON RAMP CLOSED	FOLLOW DETOUR
FRAME 1	FRAME 2

2. PLACE 7 DAYS PRIOR TO RAMP CLOSURE.
3. CALIFORNIA SIGN CODES ARE DESIGNATED BY (CA), OTHERWISE, FEDERAL MUTCD SIGN CODES ARE SHOWN.
4. EXACT SIGN LOCATIONS TO BE DETERMINED BY THE ENGINEER.

SIGN No.	CODE	PANEL SIZE	REMARKS	No. (EA)
A	SC3(CA) G27-2(5)(CA) M3-1	48" x 18" 24" x 24" 24" x 12"	↑ "DETOUR" ROUTE SHIELD (5) DIRECTION (NORTH)	3
B	M4-10 R G27-2(5)(CA) M3-1	48" x 18" 24" x 24" 24" x 12"	"DETOUR" → ROUTE SHIELD (5) DIRECTION (NORTH)	5
C	M4-10 L G27-2(5)(CA) M3-1	48" x 18" 24" x 24" 24" x 12"	← "DETOUR" ROUTE SHIELD (5) DIRECTION (NORTH)	6
D	M4-8A	24" x 18"	"END DETOUR"	1
E	SC6-3(CA)	48" x 48"	"RAMP CLOSED" DATE TIME	1
			TOTAL	16

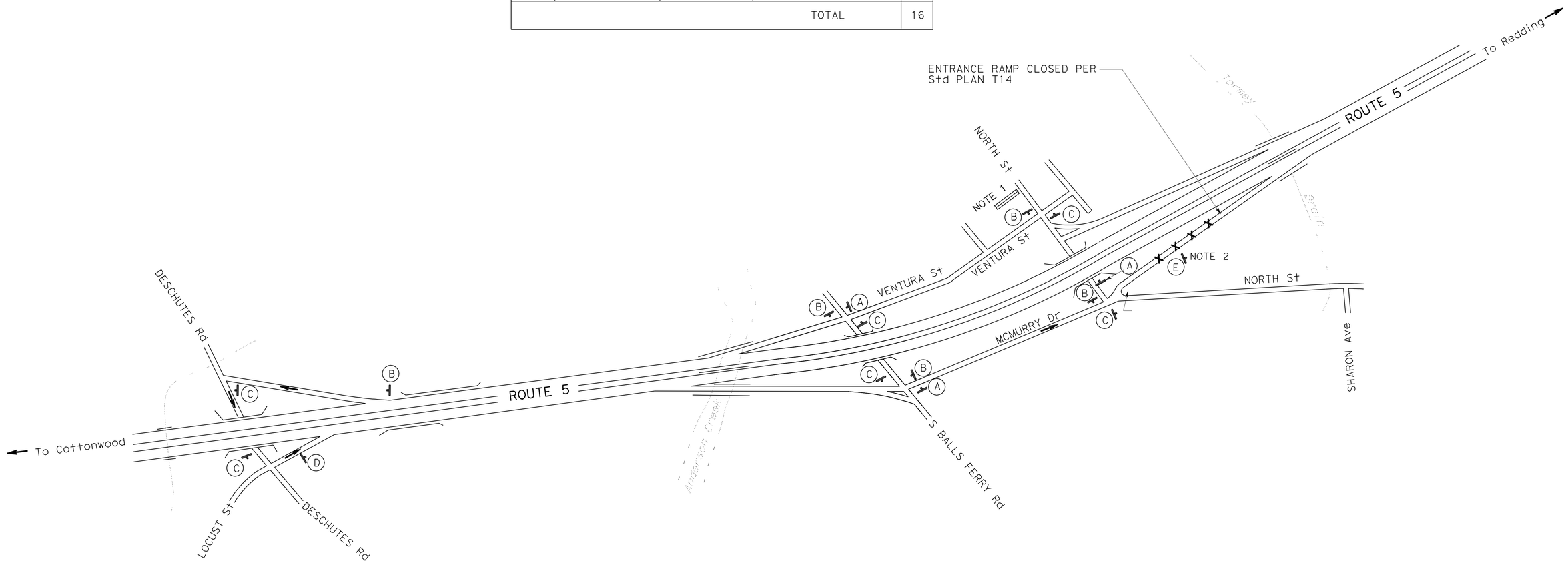

DETOUR FOR CLOSURE OF NB ROUTE 5 ENTRANCE RAMP FROM NORTH STREET

THIS PLAN ACCURATE FOR DETOUR CONSTRUCTION WORK ONLY.

DETOUR PLAN
NO SCALE **DE-7**

STATE OF CALIFORNIA - DEPARTMENT OF TRANSPORTATION
Caltrans® **DESIGN**

FUNCTIONAL SUPERVISOR: KRISTI WESTOBY
CALCULATED-DESIGNED BY: DAN NORRIS
CHECKED BY: GERRY REYES
REVISED BY / DATE REVISED

P:\proj\02\2E970_plans\pse\22e9701mg007.dgn

LAST REVISION DATE PLOTTED => 15-JUL-2010
07-08-10 TIME PLOTTED => 17:43

Dist	COUNTY	ROUTE	POST MILES TOTAL PROJECT	SHEET No.	TOTAL SHEETS
02	Sha,Teh	5	0.0/44.0, 0.0/42.1	23	77

REGISTERED CIVIL ENGINEER — DATE 07-08-10

PLANS APPROVAL DATE 7-12-10

REGISTERED PROFESSIONAL ENGINEER — DANIEL E. NORRIS — No. 68960 — Exp. 12/31/11 — CIVIL — STATE OF CALIFORNIA

THE STATE OF CALIFORNIA OR ITS OFFICERS OR AGENTS SHALL NOT BE RESPONSIBLE FOR THE ACCURACY OR COMPLETENESS OF SCANNED COPIES OF THIS PLAN SHEET.

NOTES:

1. PRE-NOTIFICATION PCMS: PLACE NEAR RAMP AND ACTIVATE APPROXIMATELY 12 HOURS PRIOR TO RAMP CLOSURE.

EXIT WILL BE CLOSED	TONIGHT (OR TODAY) 0 PM - 0 AM
FRAME 1	FRAME 2

2. RAMP CLOSED PCMS: MOVE PRE-NOTIFICATION PCMS APPROXIMATELY 1000′ BEFORE RAMP AND ACTIVATE DURING RAMP CLOSURE.

EXIT 668 CLOSED	FOLLOW DETOUR
FRAME 1	FRAME 2

3. PLACE 7 DAYS PRIOR TO RAMP CLOSURE.
4. CALIFORNIA SIGN CODES ARE DESIGNATED BY (CA), OTHERWISE, FEDERAL MUTCD SIGN CODES ARE SHOWN.
5. EXACT SIGN LOCATIONS TO BE DETERMINED BY THE ENGINEER.

CONSTRUCTION AREA SIGNS (PORTABLE)

SIGN No.	CODE	PANEL SIZE	REMARKS	No. (EA)
A	SC3(CA) SP1	48" x 18" 24" x 30"	↑ "DETOUR" "EXIT 668"	2
B	M4-10 R SP1	48" x 18" 24" x 30"	"DETOUR" "EXIT 668" →	2
C	M4-10 L SP1	48" x 18" 24" x 30"	← "DETOUR" "EXIT 668"	2
D	M4-8A	24" x 18"	"END DETOUR"	1
E	SC6-3(CA)	48" x 48"	"RAMP CLOSED" DATE TIME	1
			TOTAL	8

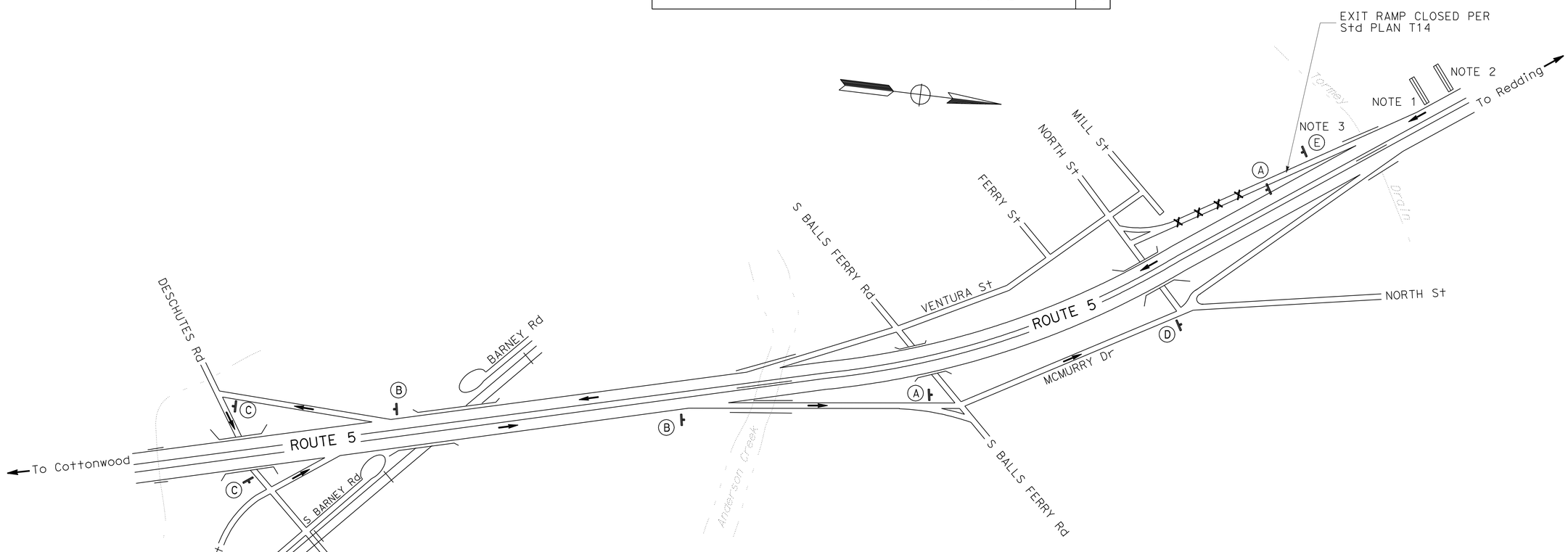

DETOUR FOR CLOSURE OF SB ROUTE 5 EXIT RAMP TO NORTH STREET

THIS PLAN ACCURATE FOR DETOUR CONSTRUCTION WORK ONLY.

DETOUR PLAN

NO SCALE **DE-8**

STATE OF CALIFORNIA - DEPARTMENT OF TRANSPORTATION — Caltrans® — DESIGN

FUNCTIONAL SUPERVISOR: KRISTI WESTOBY

CALCULATED-DESIGNED BY: DAN NORRIS — CHECKED BY: GERRY REYES — REVISED BY — DATE REVISED

P:\proj2\02\2E970_plans\pse\22e9701mg008.dgn

LAST REVISION 07-08-10 — DATE PLOTTED => 15-JUL-2010 — TIME PLOTTED => 17:57

BORDER LAST REVISED 7/2/2010 — USERNAME => trstrk — DGN FILE => 22e9701mg008.dgn — RELATIVE BORDER SCALE IS IN INCHES 0 1 2 3 — UNIT 0147 — PROJECT NUMBER & PHASE 02000200121

Dist	COUNTY	ROUTE	POST MILES TOTAL PROJECT	SHEET No.	TOTAL SHEETS
02	Sha,Teh	5	0.0/44.0, 0.0/42.1	24	77

REGISTERED CIVIL ENGINEER 07-08-10 DATE

7-12-10
PLANS APPROVAL DATE

REGISTERED PROFESSIONAL ENGINEER DANIEL E. NORRIS No. 68960 Exp. 12/31/11 CIVIL STATE OF CALIFORNIA

THE STATE OF CALIFORNIA OR ITS OFFICERS OR AGENTS SHALL NOT BE RESPONSIBLE FOR THE ACCURACY OR COMPLETENESS OF SCANNED COPIES OF THIS PLAN SHEET.

NOTES:

1. RAMP CLOSED PCMS: PLACE BEFORE RAMP AND ACTIVATE DURING RAMP CLOSURE.

NB I-5 ON RAMP CLOSED	FOLLOW DETOUR
FRAME 1	FRAME 2

2. PLACE 7 DAYS PRIOR TO RAMP CLOSURE.
3. CALIFORNIA SIGN CODES ARE DESIGNATED BY (CA), OTHERWISE, FEDERAL MUTCD SIGN CODES ARE SHOWN.
4. EXACT SIGN LOCATIONS TO BE DETERMINED BY THE ENGINEER.

CONSTRUCTION AREA SIGNS (PORTABLE)

SIGN No.	CODE	PANEL SIZE	REMARKS	No. (EA)
A	SC3(CA) G27-2(5)(CA) M3-1	48" x 18" 24" x 24" 24" x 12"	↑ "DETOUR" ROUTE SHIELD (5) DIRECTION (NORTH)	1
B	M4-10 R G27-2(5)(CA) M3-1	48" x 18" 24" x 24" 24" x 12"	"DETOUR" → ROUTE SHIELD (5) DIRECTION (NORTH)	3
C	M4-10 L G27-2(5)(CA) M3-1	48" x 18" 24" x 24" 24" x 12"	← "DETOUR" ROUTE SHIELD (5) DIRECTION (NORTH)	2
D	M4-8A	24" x 18"	"END DETOUR"	1
E	SC6-3(CA)	48" x 48"	"RAMP CLOSED" DATE TIME	1
			TOTAL	8

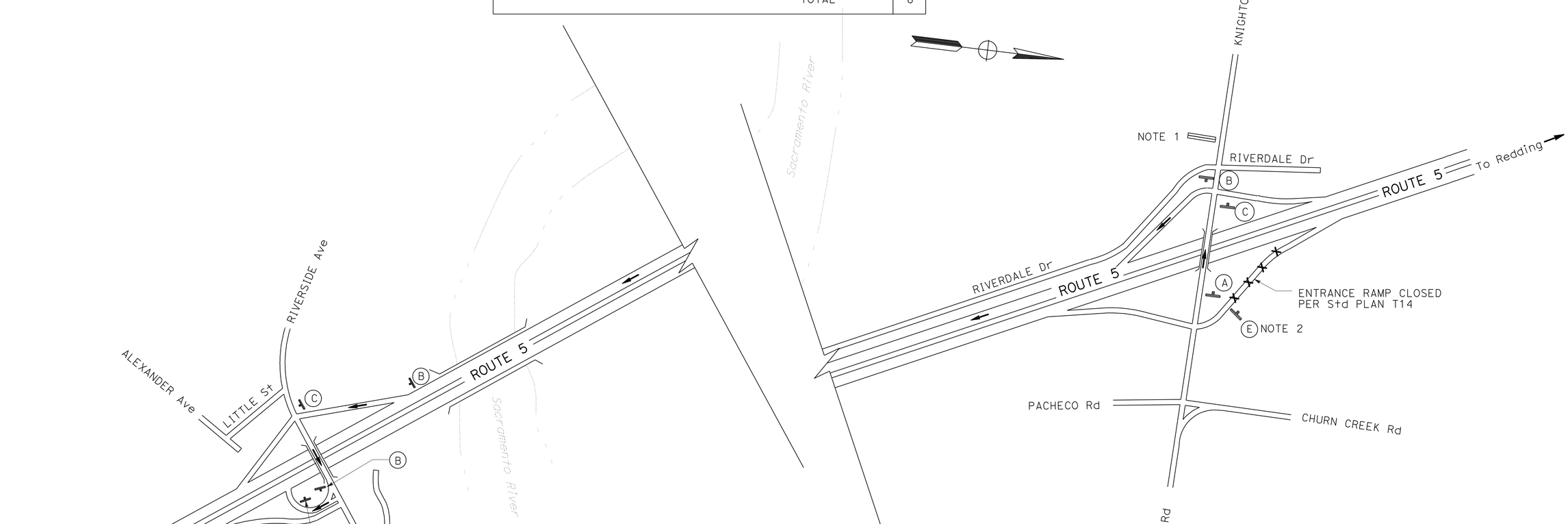

DETOUR FOR CLOSURE OF NB ROUTE 5 ENTRANCE RAMP FROM KNIGHTON ROAD

THIS PLAN ACCURATE FOR DETOUR CONSTRUCTION WORK ONLY.

DETOUR PLAN
NO SCALE **DE-9**

STATE OF CALIFORNIA - DEPARTMENT OF TRANSPORTATION
Caltrans® **DESIGN**
FUNCTIONAL SUPERVISOR: KRISTI WESTOBY
CALCULATED-DESIGNED BY: DAN NORRIS
CHECKED BY: GERRY REYES
REVISED BY
DATE REVISED

P:\proj2\02\2E970_plans\pse\22e9701mg009.dgn

LAST REVISION 07-08-10 | DATE PLOTTED => 15-JUL-2010 | TIME PLOTTED => 17:43

BORDER LAST REVISED 7/2/2010 | USERNAME => trstrk | DGN FILE => 22e9701mg009.dgn | RELATIVE BORDER SCALE IS IN INCHES 0 1 2 3 | UNIT 0147 | PROJECT NUMBER & PHASE 02000200121

Dist	COUNTY	ROUTE	POST MILES TOTAL PROJECT	SHEET No.	TOTAL SHEETS
02	Sha,Teh	5	0.0/44.0, 0.0/42.1	25	77

REGISTERED CIVIL ENGINEER 07-08-10 DATE

7-12-10
PLANS APPROVAL DATE

REGISTERED PROFESSIONAL ENGINEER DANIEL E. NORRIS No. 68960 Exp. 12/31/11 CIVIL STATE OF CALIFORNIA

THE STATE OF CALIFORNIA OR ITS OFFICERS OR AGENTS SHALL NOT BE RESPONSIBLE FOR THE ACCURACY OR COMPLETENESS OF SCANNED COPIES OF THIS PLAN SHEET.

NOTES:

1. PRE-NOTIFICATION PCMS: PLACE NEAR RAMP AND ACTIVATE APPROXIMATELY 12 HOURS PRIOR TO RAMP CLOSURE.

EXIT WILL BE CLOSED	TONIGHT (OR TODAY) 0 PM - 0 AM
FRAME 1	FRAME 2

2. RAMP CLOSED PCMS: MOVE PRE-NOTIFICATION PCMS APPROXIMATELY 1000′ BEFORE RAMP AND ACTIVATE DURING RAMP CLOSURE.

EXIT 2B CLOSED	FOLLOW DETOUR
FRAME 1	FRAME 2

3. PLACE 7 DAYS PRIOR TO RAMP CLOSURE.
4. CALIFORNIA SIGN CODES ARE DESIGNATED BY (CA), OTHERWISE, FEDERAL MUTCD SIGN CODES ARE SHOWN.
5. EXACT SIGN LOCATIONS TO BE DETERMINED BY THE ENGINEER.

CONSTRUCTION AREA SIGNS (PORTABLE)

SIGN No.	CODE	PANEL SIZE	REMARKS	No. (EA)
A	SC3(CA) G27-2(5)(CA) M3-1	48" x 18" 24" x 24" 24" x 12"	↑ "DETOUR" ROUTE SHIELD (5) DIRECTION (NORTH)	2
B	M4-10 R G27-2(5)(CA) M3-1	48" x 18" 24" x 24" 24" x 12"	"DETOUR" → ROUTE SHIELD (5) DIRECTION (NORTH)	2
C	M4-10 L G27-2(5)(CA) M3-1	48" x 18" 24" x 24" 24" x 12"	← "DETOUR" ROUTE SHIELD (5) DIRECTION (NORTH)	3
D	M4-8A	24" x 18"	"END DETOUR"	1
E	SC6-3(CA)	48" x 48"	"RAMP CLOSED" DATE TIME	1
			TOTAL	9

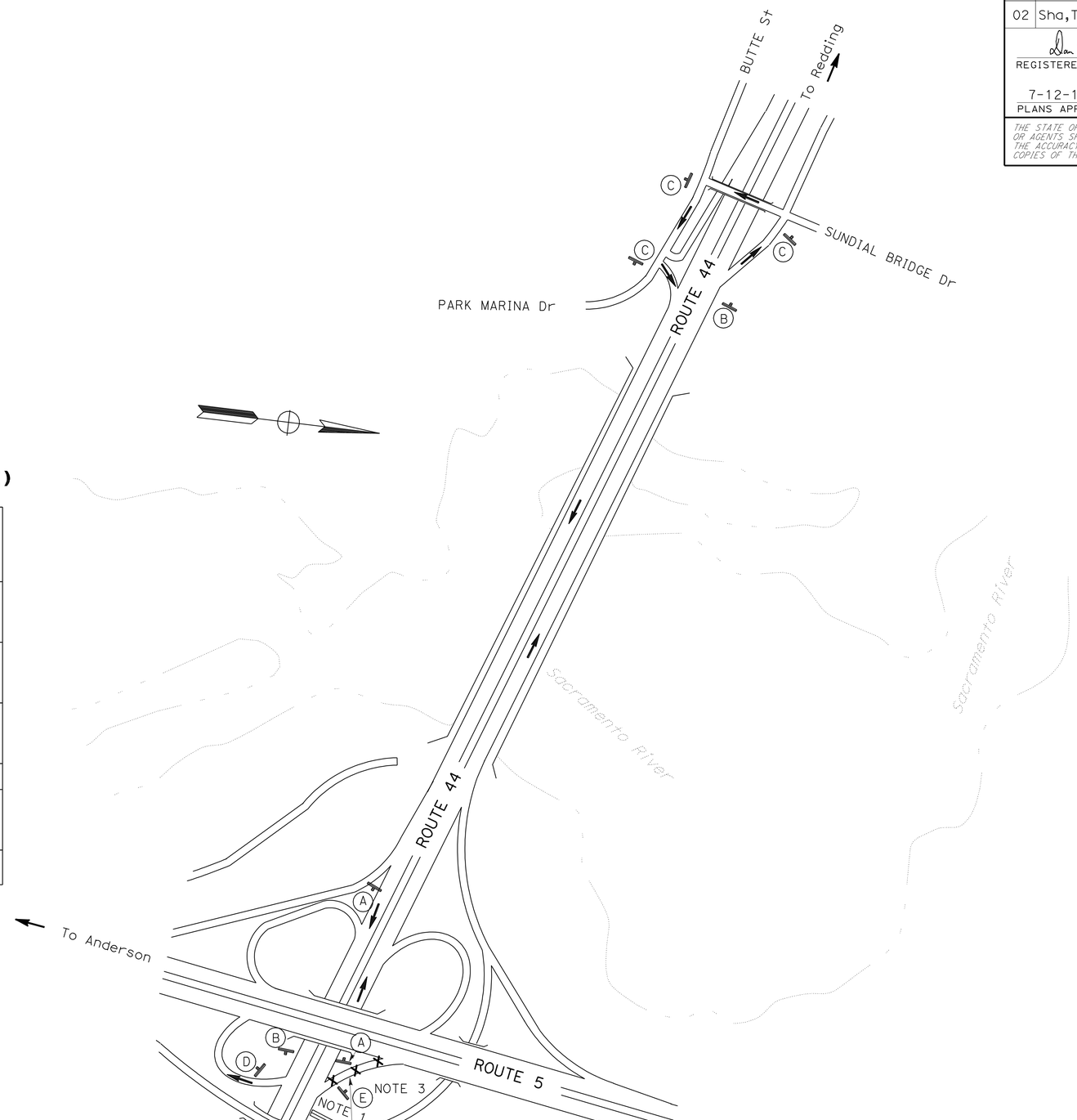

DETOUR FOR CLOSURE OF WB ROUTE 44 CONNECTOR RAMP TO NB ROUTE 5

THIS PLAN ACCURATE FOR DETOUR CONSTRUCTION WORK ONLY.

DETOUR PLAN
NO SCALE **DE-10**

STATE OF CALIFORNIA - DEPARTMENT OF TRANSPORTATION
Caltrans® DESIGN
FUNCTIONAL SUPERVISOR: KRISTI WESTOBY
CALCULATED-DESIGNED BY: DAN NORRIS
CHECKED BY: GERRY REYES
REVISED BY / DATE REVISED
P:\proj2\02\2E970_plans\pse\22e9701mg010.dgn

LAST REVISION DATE PLOTTED => 15-JUL-2010
TIME PLOTTED => 17:58
07-08-10

Dist	COUNTY	ROUTE	POST MILES TOTAL PROJECT	SHEET No.	TOTAL SHEETS
02	Sha,Teh	5	0.0/44.0, 0.0/42.1	26	77

REGISTERED CIVIL ENGINEER 07-08-10 DATE

7-12-10
PLANS APPROVAL DATE

REGISTERED PROFESSIONAL ENGINEER DANIEL E. NORRIS No. 68960 Exp. 12/31/11 CIVIL STATE OF CALIFORNIA

THE STATE OF CALIFORNIA OR ITS OFFICERS OR AGENTS SHALL NOT BE RESPONSIBLE FOR THE ACCURACY OR COMPLETENESS OF SCANNED COPIES OF THIS PLAN SHEET.

NOTES:

1. RAMP CLOSED PCMS: PLACE BEFORE RAMP AND ACTIVATE DURING RAMP CLOSURE.

NB I-5 ON RAMP CLOSED	FOLLOW DETOUR
FRAME 1	FRAME 2

2. PLACE 7 DAYS PRIOR TO RAMP CLOSURE.
3. CALIFORNIA SIGN CODES ARE DESIGNATED BY (CA), OTHERWISE, FEDERAL MUTCD SIGN CODES ARE SHOWN.
4. EXACT SIGN LOCATIONS TO BE DETERMINED BY THE ENGINEER.

CONSTRUCTION AREA SIGNS (PORTABLE)

SIGN No.	CODE	PANEL SIZE	REMARKS	No. (EA)
A	SC3(CA) G27-2(5)(CA) M3-1	48" x 18" 24" x 24" 24" x 12"	↑ "DETOUR" ROUTE SHIELD (5) DIRECTION (NORTH)	1
B	M4-10 R G27-2(5)(CA) M3-1	48" x 18" 24" x 24" 24" x 12"	"DETOUR" → ROUTE SHIELD (5) DIRECTION (NORTH)	1
C	M4-10 L G27-2(5)(CA) M3-1	48" x 18" 24" x 24" 24" x 12"	← "DETOUR" ROUTE SHIELD (5) DIRECTION (NORTH)	2
D	M4-8A	24" x 18"	"END DETOUR"	1
E	SC6-3(CA)	48" x 48"	"RAMP CLOSED" DATE TIME	1
			TOTAL	6

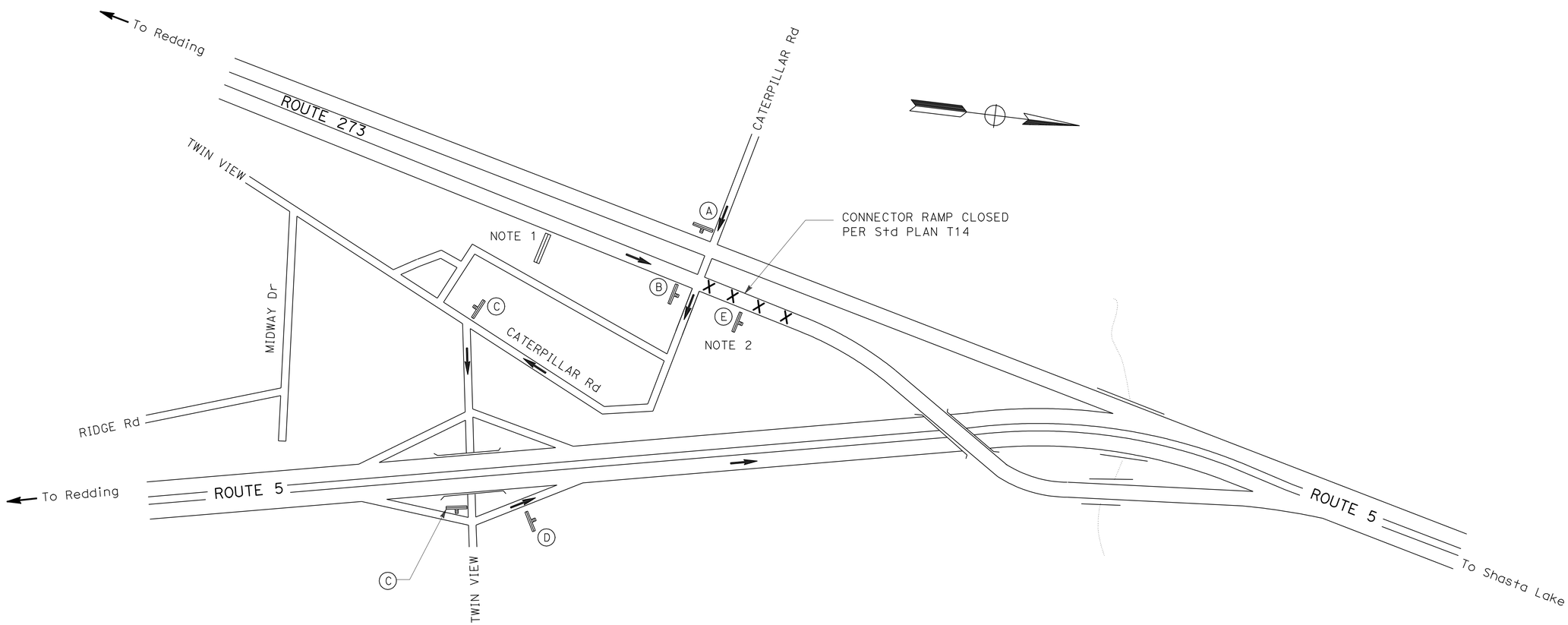

DETOUR FOR CLOSURE OF NB ROUTE 273 CONNECTOR RAMP TO NB ROUTE 5

THIS PLAN ACCURATE FOR DETOUR CONSTRUCTION WORK ONLY.

DETOUR PLAN
NO SCALE **DE-11**

STATE OF CALIFORNIA - DEPARTMENT OF TRANSPORTATION
Caltrans® **DESIGN**

FUNCTIONAL SUPERVISOR: KRISTI WESTOBY
CALCULATED-DESIGNED BY: DAN NORRIS
CHECKED BY: GERRY REYES
REVISED BY / DATE REVISED

P:\proj2\02\2E970_plans\pse\22e9701mg011.dgn

LAST REVISION: DATE PLOTTED => 15-JUL-2010 TIME PLOTTED => 17:43
07-08-10

Dist	COUNTY	ROUTE	POST MILES TOTAL PROJECT	SHEET No.	TOTAL SHEETS
02	Sha,Teh	5	0.0/44.0, 0.0/42.1	27	77

REGISTERED CIVIL ENGINEER 07-08-10 DATE

7-12-10
PLANS APPROVAL DATE

REGISTERED PROFESSIONAL ENGINEER DANIEL E. NORRIS No. 68960 Exp. 12/31/11 CIVIL STATE OF CALIFORNIA

THE STATE OF CALIFORNIA OR ITS OFFICERS OR AGENTS SHALL NOT BE RESPONSIBLE FOR THE ACCURACY OR COMPLETENESS OF SCANNED COPIES OF THIS PLAN SHEET.

NOTES:

1. RAMP CLOSED PCMS: PLACE BEFORE OPEN ON-RAMP AND ACTIVATE DURING RAMP CLOSURE.

I-5 SB ON RAMP CLOSED	FOLLOW DETOUR
FRAME 1	FRAME 2

2. PLACE 7 DAYS PRIOR TO RAMP CLOSURE.
3. CALIFORNIA SIGN CODES ARE DESIGNATED BY (CA), OTHERWISE, FEDERAL MUTCD SIGN CODES ARE SHOWN.
4. EXACT SIGN LOCATIONS TO BE DETERMINED BY THE ENGINEER.

CONSTRUCTION AREA SIGNS (PORTABLE)

SIGN No.	CODE	PANEL SIZE	REMARKS	No. (EA)
A	SC3(CA) G27-2(5)(CA) M3-3	48" x 18" 24" x 24" 24" x 12"	↑ "DETOUR" ROUTE SHIELD (5) DIRECTION (SOUTH)	1
B	M4-10 R G27-2(5)(CA) M3-3	48" x 18" 24" x 24" 24" x 12"	"DETOUR" → ROUTE SHIELD (5) DIRECTION (SOUTH)	2
C	M4-10 L G27-2(5)(CA) M3-3	48" x 18" 24" x 24" 24" x 12"	← "DETOUR" ROUTE SHIELD (5) DIRECTION (SOUTH)	3
D	M4-8A	24" x 18"	"END DETOUR"	1
E	SC6-3(CA)	48" x 48"	"RAMP CLOSED" DATE TIME	1
			TOTAL	8

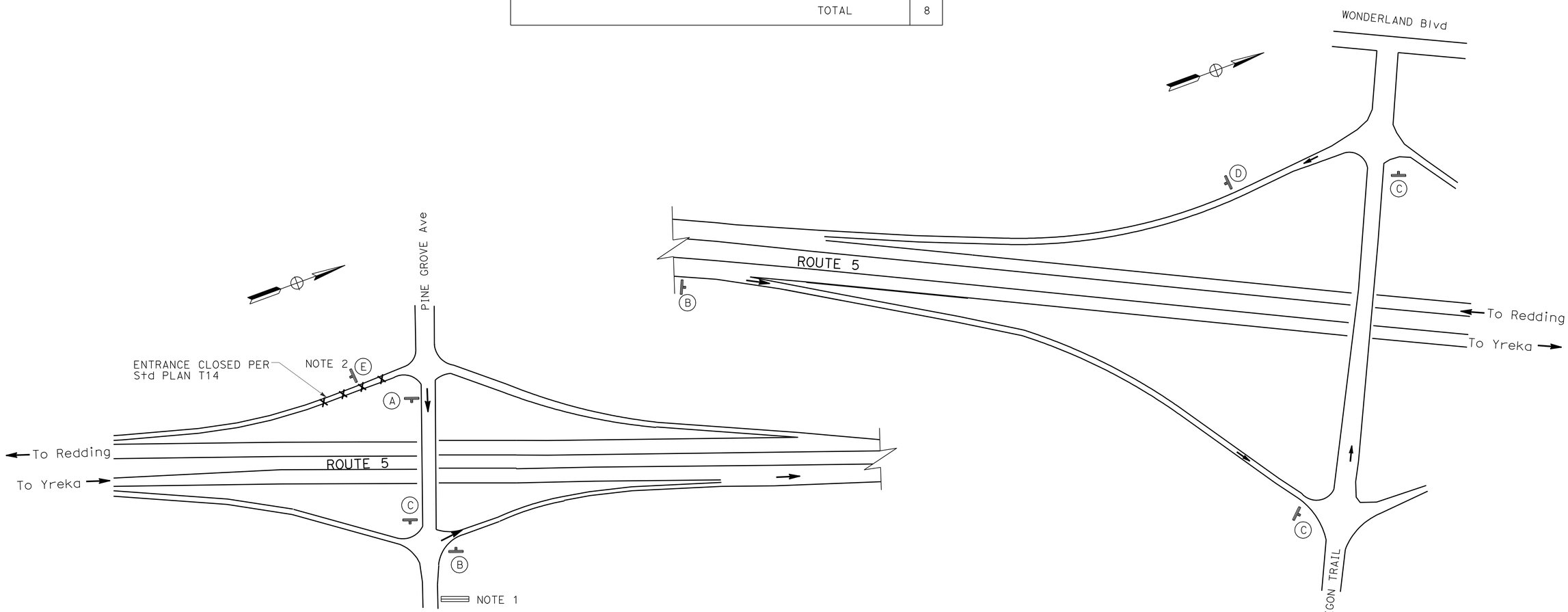

DETOUR FOR CLOSURE OF SB ROUTE 5 ENTRANCE RAMP FROM PINE GROVE AVE

THIS PLAN ACCURATE FOR DETOUR CONSTRUCTION WORK ONLY.

DETOUR PLAN

NO SCALE **DE-12**

STATE OF CALIFORNIA - DEPARTMENT OF TRANSPORTATION
Caltrans® **DESIGN**

FUNCTIONAL SUPERVISOR: KRISTI WESTOBY
CALCULATED-DESIGNED BY: DAN NORRIS
CHECKED BY: GERRY REYES
REVISED BY / DATE REVISED

P:\proj2\02\2E970_plans\pse\22e9701mg012.dgn

LAST REVISION 07-08-10 | DATE PLOTTED => 15-JUL-2010 | TIME PLOTTED => 17:43

Dist	COUNTY	ROUTE	POST MILES TOTAL PROJECT	SHEET No.	TOTAL SHEETS
02	Sha,Teh	5	0.0/44.0, 0.0/42.1	28	77

Dan Norris 07-08-10
REGISTERED CIVIL ENGINEER DATE

7-12-10
PLANS APPROVAL DATE

REGISTERED PROFESSIONAL ENGINEER DANIEL E. NORRIS No. 68960 Exp. 12/31/11 CIVIL STATE OF CALIFORNIA

THE STATE OF CALIFORNIA OR ITS OFFICERS OR AGENTS SHALL NOT BE RESPONSIBLE FOR THE ACCURACY OR COMPLETENESS OF SCANNED COPIES OF THIS PLAN SHEET.

NOTES:

1. PRE-NOTIFICATION PCMS: PLACE NEAR RAMP AND ACTIVATE APPROXIMATELY 12 HOURS PRIOR TO RAMP CLOSURE.

EXIT WILL BE CLOSED	TONIGHT (OR TODAY) 0 PM - 0 AM
FRAME 1	FRAME 2

2. RAMP CLOSED PCMS: MOVE PRE-NOTIFICATION PCMS APPROXIMATELY 1000′ BEFORE RAMP AND ACTIVATE DURING RAMP CLOSURE.

EXIT 684 CLOSED	FOLLOW DETOUR
FRAME 1	FRAME 2

3. PLACE 7 DAYS PRIOR TO RAMP CLOSURE.
4. CALIFORNIA SIGN CODES ARE DESIGNATED BY (CA), OTHERWISE, FEDERAL MUTCD SIGN CODES ARE SHOWN.
5. EXACT SIGN LOCATIONS TO BE DETERMINED BY THE ENGINEER.

CONSTRUCTION AREA SIGNS (PORTABLE)

SIGN No.	CODE	PANEL SIZE	REMARKS	No. (EA)
A	SC3(CA) SP1	48" x 18" 24" x 30"	↑ "DETOUR" "EXIT 684"	1
B	M4-10 R SP1	48" x 18" 24" x 30"	"DETOUR" "EXIT 684" →	2
C	M4-10 L SP1	48" x 18" 24" x 30"	← "DETOUR" "EXIT 684"	2
D	M4-8A	24" x 18"	"END DETOUR"	1
E	SC6-3(CA)	48" x 48"	"RAMP CLOSED" DATE TIME	1
			TOTAL	7

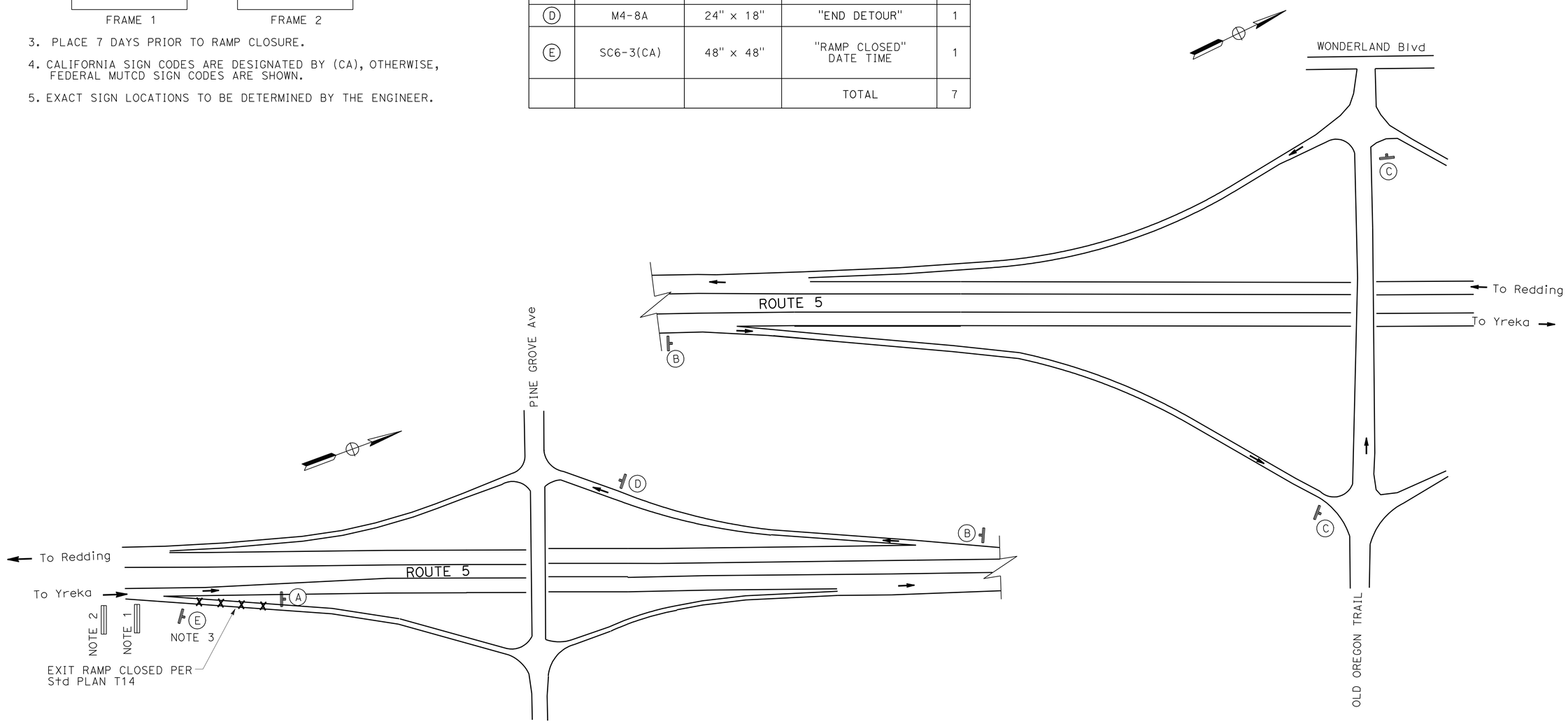

DETOUR FOR CLOSURE OF NB ROUTE 5 EXIT RAMP TO PINE GROVE AVE

THIS PLAN ACCURATE FOR DETOUR CONSTRUCTION WORK ONLY.

DETOUR PLAN
NO SCALE **DE-13**

STATE OF CALIFORNIA - DEPARTMENT OF TRANSPORTATION
Caltrans® **DESIGN**

FUNCTIONAL SUPERVISOR: KRISTI WESTOBY
CALCULATED-DESIGNED BY: DAN NORRIS
CHECKED BY: GERRY REYES
REVISED BY / DATE REVISED

LAST REVISION DATE PLOTTED => 15-JUL-2010 TIME PLOTTED => 17:59
07-08-10

P:\proj\02\2E970_plans\pse\22e9701mg013.dgn

Dist	COUNTY	ROUTE	POST MILES TOTAL PROJECT	SHEET No.	TOTAL SHEETS
02	Sha,Teh	5	0.0/44.0, 0.0/42.1	29	77

Dan Norris 07-08-10
REGISTERED CIVIL ENGINEER DATE

7-12-10
PLANS APPROVAL DATE

REGISTERED PROFESSIONAL ENGINEER DANIEL E. NORRIS No. 68960 Exp. 12/31/11 CIVIL STATE OF CALIFORNIA

THE STATE OF CALIFORNIA OR ITS OFFICERS OR AGENTS SHALL NOT BE RESPONSIBLE FOR THE ACCURACY OR COMPLETENESS OF SCANNED COPIES OF THIS PLAN SHEET.

NOTES:

1. RAMP CLOSED PCMS: PLACE BEFORE OPEN ON-RAMP AND ACTIVATE DURING RAMP CLOSURE.

NB I-5 ON-RAMP CLOSED	FOLLOW DETOUR
FRAME 1	FRAME 2

2. PLACE 7 DAYS PRIOR TO RAMP CLOSURE.
3. CALIFORNIA SIGN CODES ARE DESIGNATED BY (CA), OTHERWISE, FEDERAL MUTCD SIGN CODES ARE SHOWN.
4. EXACT SIGN LOCATIONS TO BE DETERMINED BY THE ENGINEER.

CONSTRUCTION AREA SIGNS (PORTABLE)

SIGN No.	CODE	PANEL SIZE	REMARKS	No. (EA)
A	SC3(CA) G27-2(5)(CA) M3-1	48" x 18" 24" x 24" 24" x 12"	↑ "DETOUR" ROUTE SHIELD (5) DIRECTION (NORTH)	1
B	M4-10 R G27-2(5)(CA) M3-1	48" x 18" 24" x 24" 24" x 12"	"DETOUR" → ROUTE SHIELD (5) DIRECTION (NORTH)	2
C	M4-10 L G27-2(5)(CA) M3-1	48" x 18" 24" x 24" 24" x 12"	← "DETOUR" ROUTE SHIELD (5) DIRECTION (NORTH)	3
D	M4-8A	24" x 18"	"END DETOUR"	1
E	SC6-3(CA)	48" x 48"	"RAMP CLOSED" DATE TIME	1
			TOTAL	8

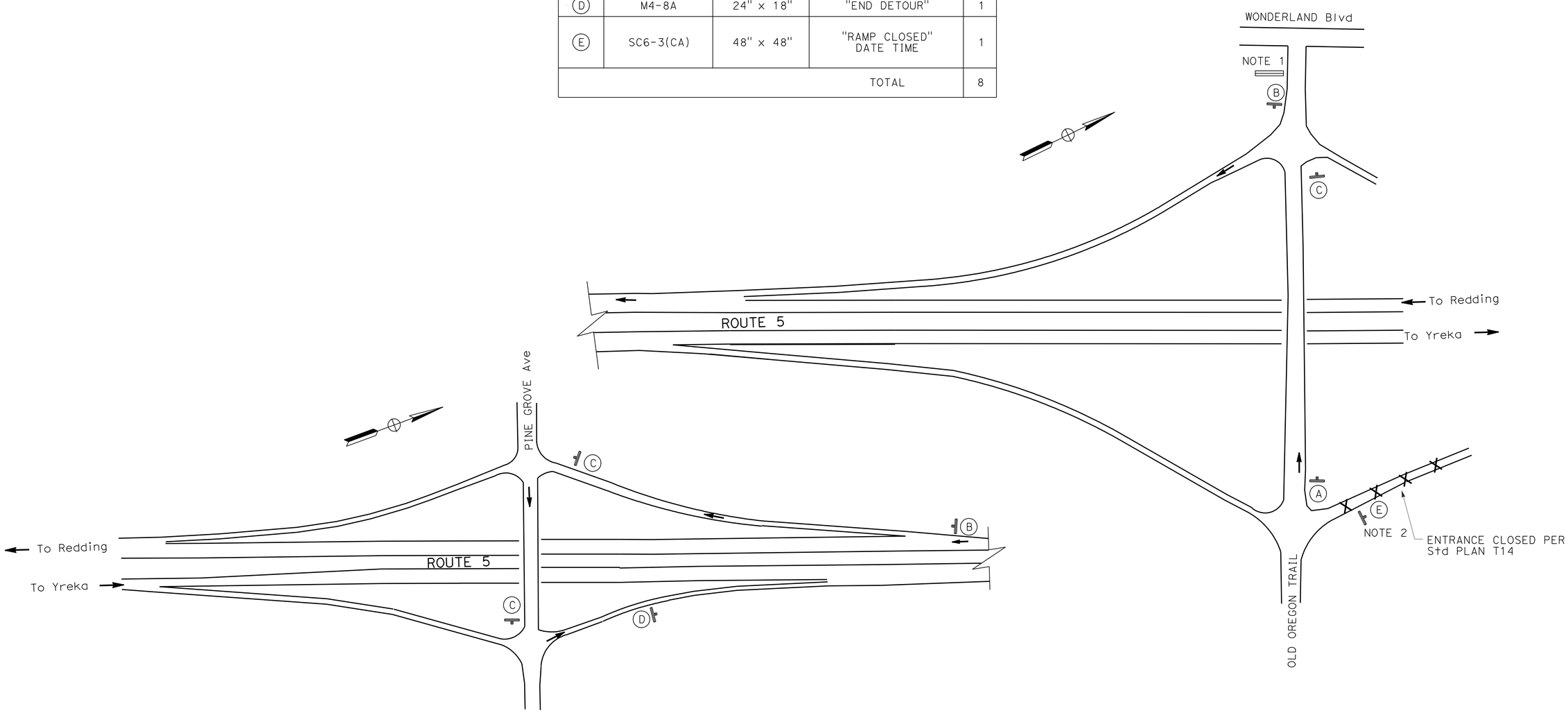

DETOUR FOR CLOSURE OF NB ROUTE 5 ENTRANCE RAMP FROM MOUNTAIN GATE

THIS PLAN ACCURATE FOR DETOUR CONSTRUCTION WORK ONLY.

DETOUR PLAN
NO SCALE **DE-14**

REVISED BY | DATE REVISED
DAN NORRIS | GERRY REYES
CALCULATED-DESIGNED BY | CHECKED BY
FUNCTIONAL SUPERVISOR
KRISTI WESTOBY

STATE OF CALIFORNIA - DEPARTMENT OF TRANSPORTATION
Caltrans
DESIGN

P:\proj2\02\2E970_plans\pse\22e9701mg014.dgn

LAST REVISION 07-08-10 | DATE PLOTTED => 15-JUL-2010 | TIME PLOTTED => 17:44

Dist	COUNTY	ROUTE	POST MILES TOTAL PROJECT	SHEET No.	TOTAL SHEETS
02	Sha,Teh	5	0.0/44.0, 0.0/42.1	30	77

REGISTERED CIVIL ENGINEER 07-08-10 DATE

7-12-10
PLANS APPROVAL DATE

REGISTERED PROFESSIONAL ENGINEER DANIEL E. NORRIS No. 68960 Exp. 12/31/11 CIVIL STATE OF CALIFORNIA

THE STATE OF CALIFORNIA OR ITS OFFICERS OR AGENTS SHALL NOT BE RESPONSIBLE FOR THE ACCURACY OR COMPLETENESS OF SCANNED COPIES OF THIS PLAN SHEET.

NOTES:

1. PLACE 7 DAYS PRIOR TO RAMP CLOSURE.
2. RAMP CLOSED PCMS: PLACE BEFORE OPEN ON-RAMP AND ACTIVATE DURING RAMP CLOSURE.

SB I-5 ON RAMP CLOSED	FOLLOW DETOUR
FRAME 1	FRAME 2

3. EXACT SIGN LOCATION TO BE DETERMINED BY THE ENGINEER.
4. CALIFORNIA SIGN CODES ARE DESIGNATED BY (CA), OTHERWISE, FEDERAL MUTCD SIGN CODES ARE SHOWN

CONSTRUCTION AREA SIGNS (PORTABLE)

SIGN No.	CODE	PANEL SIZE	REMARKS	No. (EA)
A	SC3(CA) G27-2(5)(CA) M3-3	48" x 18" 24" x 24" 24" x 12"	↑ "DETOUR" ROUTE SHIELD (5) DIRECTION (SOUTH)	1
B	M4-10 R G27-2(5)(CA) M3-3	48" x 18" 24" x 24" 24" x 12"	"DETOUR" → ROUTE SHIELD (5) DIRECTION (SOUTH)	2
C	M4-10 L G27-2(5)(CA) M3-3	48" x 18" 24" x 24" 24" x 12"	← "DETOUR" ROUTE SHIELD (5) DIRECTION (SOUTH)	3
D	M4-8A	24" x 18"	"END DETOUR"	1
E	SC6-3(CA)	48" x 48"	"RAMP CLOSED" DATE TIME	1
			TOTAL	8

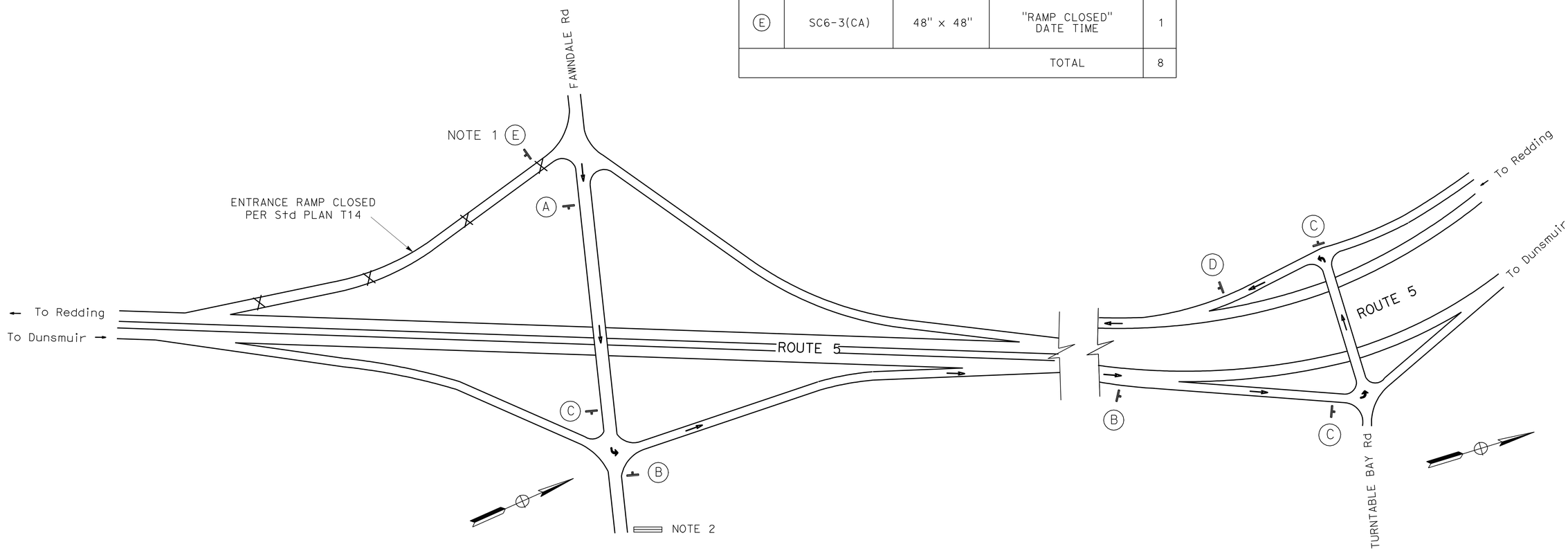

DETOUR FOR CLOSURE OF SB ROUTE 5 ENTRANCE RAMP FROM FAWNDALE

THIS PLAN ACCURATE FOR DETOUR CONSTRUCTION WORK ONLY.

DETOUR PLAN
NO SCALE **DE-15**

STATE OF CALIFORNIA - DEPARTMENT OF TRANSPORTATION
Caltrans® **DESIGN**

FUNCTIONAL SUPERVISOR: KRISTI WESTOBY
CALCULATED-DESIGNED BY: DAN NORRIS
CHECKED BY: GERRY REYES
REVISED BY / DATE REVISED

P:\proj2\02\2E970_plans\pse\22e9701mg015.dgn

LAST REVISION 07-08-10 | DATE PLOTTED => 15-JUL-2010 | TIME PLOTTED => 17:44

Dist	COUNTY	ROUTE	POST MILES TOTAL PROJECT	SHEET No.	TOTAL SHEETS
02	Sha,Teh	5	0.0/44.0, 0.0/42.1	31	77

REGISTERED CIVIL ENGINEER 07-08-10 DATE

7-12-10
PLANS APPROVAL DATE

REGISTERED PROFESSIONAL ENGINEER DANIEL E. NORRIS No. 68960 Exp. 12/31/11 CIVIL STATE OF CALIFORNIA

THE STATE OF CALIFORNIA OR ITS OFFICERS OR AGENTS SHALL NOT BE RESPONSIBLE FOR THE ACCURACY OR COMPLETENESS OF SCANNED COPIES OF THIS PLAN SHEET.

NOTES:

1. PLACE 7 DAYS PRIOR TO RAMP CLOSURE.
2. RAMP CLOSED PCMS: PLACE BEFORE OPEN ON-RAMP AND ACTIVATE DURING RAMP CLOSURE.

NB I-5 ON RAMP CLOSED	FOLLOW DETOUR
FRAME 1	FRAME 2

3. EXACT SIGN LOCATION TO BE DETERMINED BY THE ENGINEER.
4. CALIFORNIA SIGN CODES ARE DESIGNATED BY (CA), OTHERWISE, FEDERAL MUTCD SIGN CODES ARE SHOWN.

CONSTRUCTION AREA SIGNS (PORTABLE)

SIGN No.	CODE	PANEL SIZE	REMARKS	No. (EA)
A	SC3(CA) G27-2(5)(CA) M3-1	48" x 18" 24" x 24" 24" x 12"	↑ "DETOUR" ROUTE SHIELD (5) DIRECTION (NORTH)	2
B	M4-10 R G27-2(5)(CA) M3-1	48" x 18" 24" x 24" 24" x 12"	"DETOUR" → ROUTE SHIELD (5) DIRECTION (NORTH)	1
C	M4-10 L G27-2(5)(CA) M3-1	48" x 18" 24" x 24" 24" x 12"	← "DETOUR" ROUTE SHIELD (5) DIRECTION (NORTH)	3
D	M4-8A	24" x 18"	"END DETOUR"	1
E	SC6-3(CA)	48" x 48"	"RAMP CLOSED" DATE TIME	1
			TOTAL	8

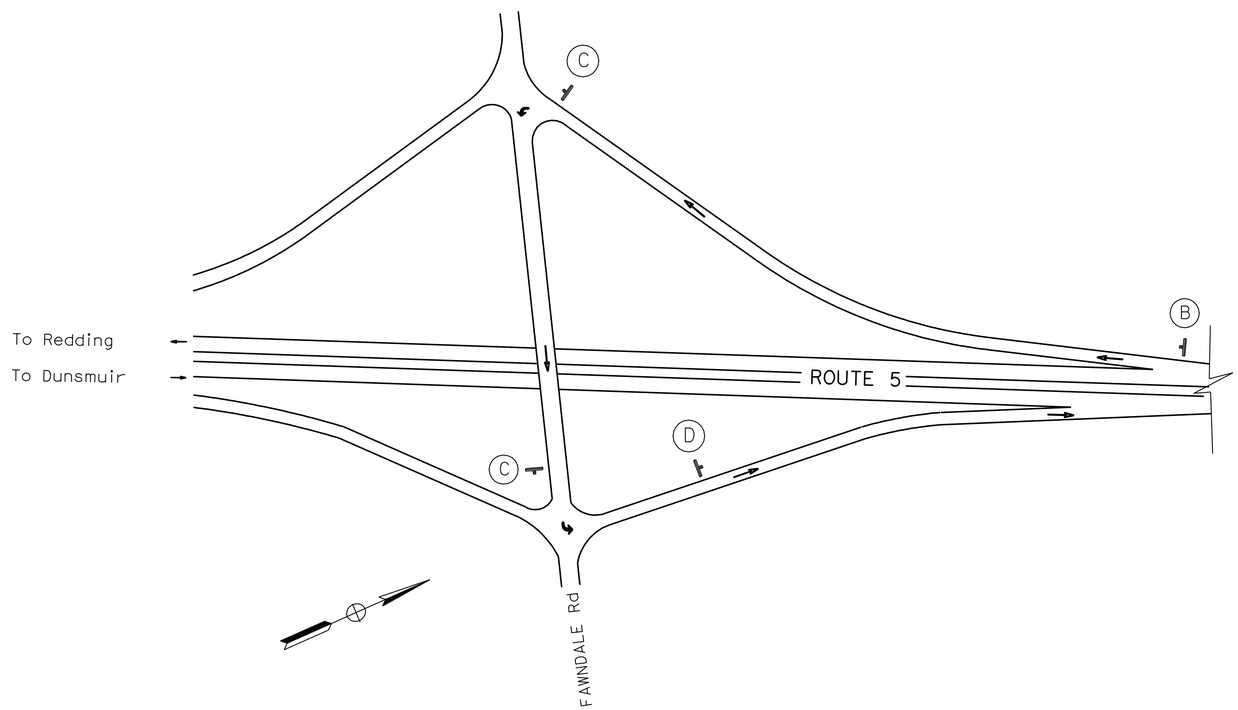

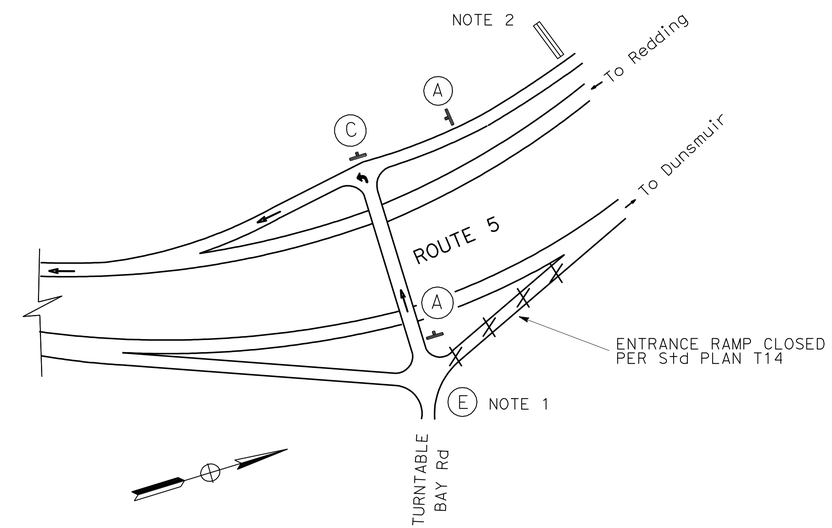

DETOUR FOR CLOSURE OF NB ROUTE 5 ENTRANCE RAMP FROM TURNTABLE BAY

THIS PLAN ACCURATE FOR DETOUR CONSTRUCTION WORK ONLY.

DETOUR PLAN
NO SCALE **DE-16**

STATE OF CALIFORNIA - DEPARTMENT OF TRANSPORTATION
Caltrans® **DESIGN**

FUNCTIONAL SUPERVISOR: KRISTI WESTOBY
CALCULATED-DESIGNED BY: DAN NORRIS
CHECKED BY: GERRY REYES
REVISED BY / DATE REVISED

P:\proj2\02\2E970_plans\pse\22e9701mg016.dgn

LAST REVISION 07-08-10
DATE PLOTTED => 16-JUL-2010
TIME PLOTTED => 09:27

Dist	COUNTY	ROUTE	POST MILES TOTAL PROJECT	SHEET No.	TOTAL SHEETS
02	Sha,Teh	5	0.0/44.0, 0.0/42.1	32	77

REGISTERED CIVIL ENGINEER 07-08-10 DATE

7-12-10
PLANS APPROVAL DATE

REGISTERED PROFESSIONAL ENGINEER DANIEL E. NORRIS No. 68960 Exp. 12/31/11 CIVIL STATE OF CALIFORNIA

THE STATE OF CALIFORNIA OR ITS OFFICERS OR AGENTS SHALL NOT BE RESPONSIBLE FOR THE ACCURACY OR COMPLETENESS OF SCANNED COPIES OF THIS PLAN SHEET.

NOTES:

1. PRE-NOTIFICATION PCMS: PLACE NEAR RAMP AND ACTIVATE APPROXIMATELY 12 HOURS PRIOR TO RAMP CLOSURE.

EXIT WILL BE CLOSED	TODAY (OR TONIGHT) 0 PM - 0 AM
FRAME 1	FRAME 2

2. RAMP CLOSED PCMS: MOVE PRE-NOTIFICATION PCMS APPROXIMATELY 1000' BEFORE RAMP AND ACTIVATE DURING RAMP CLOSURE.

EXIT 698 CLOSED	FOLLOW DETOUR
FRAME 1	FRAME 2

3. PLACE 7 DAYS PRIOR TO RAMP CLOSURE.
4. CALIFORNIA SIGN CODES ARE DESIGNATED BY (CA), OTHERWISE, FEDERAL MUTCD SIGN CODES ARE SHOWN.
5. EXACT SIGN LOCATIONS TO BE DETERMINED BY THE ENGINEER.

CONSTRUCTION AREA SIGNS (PORTABLE)

SIGN No.	CODE	PANEL SIZE	REMARKS	No. (EA)
A	SC3(CA) SP1	48" x 18" 24" x 30"	↑ "DETOUR" "EXIT 698"	1
B	M4-10 R SP1	48" x 18" 24" x 30"	"DETOUR" "EXIT 698" →	2
C	M4-10 L SP1	48" x 18" 24" x 30"	← "DETOUR" "EXIT 698"	3
D	M4-8A	24" x 18"	"END DETOUR"	1
E	SC6-3(CA)	48" x 48"	"RAMP CLOSED" DATE TIME	1
			TOTAL	8

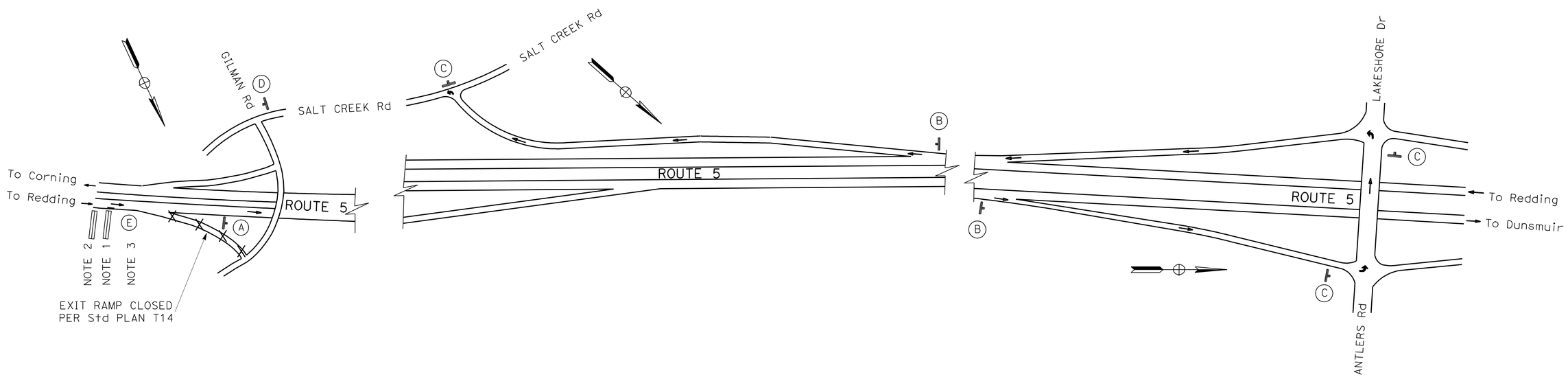

DETOUR FOR CLOSURE OF NB ROUTE 5 EXIT RAMP TO GILMAN ROAD/SALT CREEK ROAD

THIS PLAN ACCURATE FOR DETOUR CONSTRUCTION WORK ONLY.

DETOUR PLAN

NO SCALE **DE-17**

STATE OF CALIFORNIA - DEPARTMENT OF TRANSPORTATION
Caltrans® **DESIGN**

FUNCTIONAL SUPERVISOR: KRISTI WESTOBY
CALCULATED-DESIGNED BY: DAN NORRIS
CHECKED BY: GERRY REYES
REVISED BY / DATE REVISED

P:\proj2\02\2E970_plans\pse\22e9701mg017.dgn

LAST REVISION 07-08-10 | DATE PLOTTED => 16-JUL-2010 | TIME PLOTTED => 09:27

Dist	COUNTY	ROUTE	POST MILES TOTAL PROJECT	SHEET No.	TOTAL SHEETS
02	Sha,Teh	5	0.0/44.0, 0.0/42.1	33	77

REGISTERED CIVIL ENGINEER 07-08-10 DATE

7-12-10
PLANS APPROVAL DATE

REGISTERED PROFESSIONAL ENGINEER DANIEL E. NORRIS No. 68960 Exp. 12/31/11 CIVIL STATE OF CALIFORNIA

THE STATE OF CALIFORNIA OR ITS OFFICERS OR AGENTS SHALL NOT BE RESPONSIBLE FOR THE ACCURACY OR COMPLETENESS OF SCANNED COPIES OF THIS PLAN SHEET.

NOTES:

1. PRE-NOTIFICATION PCMS: PLACE NEAR RAMP AND ACTIVATE APPROXIMATELY 12 HOURS PRIOR TO RAMP CLOSURE.

EXIT WILL BE CLOSED	TODAY (OR TONIGHT) 0 PM - 0 AM
FRAME 1	FRAME 2

2. RAMP CLOSED PCMS: MOVE PRE-NOTIFICATION PCMS APPROXIMATELY 1000' BEFORE RAMP AND ACTIVATE DURING RAMP CLOSURE.

EXIT 698 CLOSED	FOLLOW DETOUR
FRAME 1	FRAME 2

3. PLACE 7 DAYS PRIOR TO RAMP CLOSURE.
4. CALIFORNIA SIGN CODES ARE DESIGNATED BY (CA), OTHERWISE, FEDERAL MUTCD SIGN CODES ARE SHOWN.
5. EXACT SIGN LOCATIONS TO BE DETERMINED BY THE ENGINEER.

CONSTRUCTION AREA SIGNS (PORTABLE)

SIGN No.	CODE	PANEL SIZE	REMARKS	No. (EA)
A	SC3(CA) SP1	48" x 18" 24" x 30"	↑ "DETOUR" "EXIT 698"	1
B	M4-10 R SP1	48" x 18" 24" x 30"	"DETOUR" "EXIT 698" →	2
C	M4-10 L SP1	48" x 18" 24" x 30"	← "DETOUR" "EXIT 698"	3
D	M4-8A	24" x 18"	"END DETOUR"	1
E	SC6-3(CA)	48" x 48"	"RAMP CLOSED" DATE TIME	1
			TOTAL	8

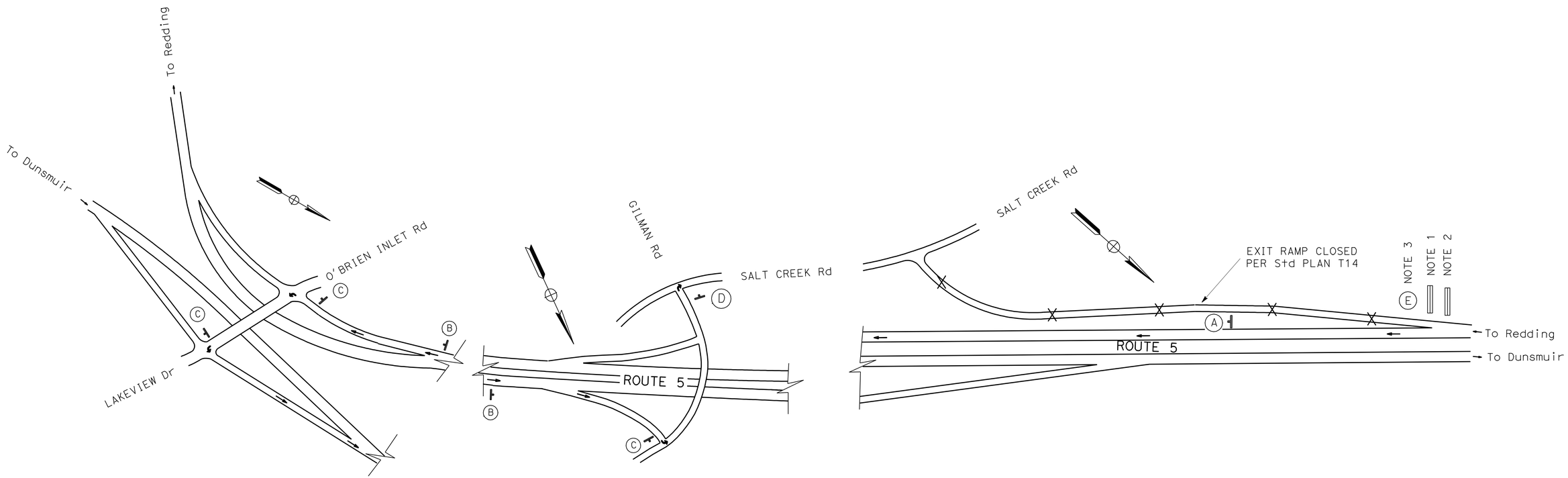

DETOUR FOR CLOSURE OF SB ROUTE 5 EXIT RAMP TO SALT CREEK ROAD

THIS PLAN ACCURATE FOR DETOUR CONSTRUCTION WORK ONLY.

DETOUR PLAN
NO SCALE **DE-18**

STATE OF CALIFORNIA - DEPARTMENT OF TRANSPORTATION
Caltrans® **DESIGN**

FUNCTIONAL SUPERVISOR: KRISTI WESTOBY
CALCULATED-DESIGNED BY: DAN NORRIS
CHECKED BY: GERRY REYES
REVISED BY / DATE REVISED

P:\proj2\02\2E970_plans\pse\22e9701mg018.dgn

LAST REVISION 07-08-10
DATE PLOTTED => 16-JUL-2010
TIME PLOTTED => 09:27

Dist	COUNTY	ROUTE	POST MILES TOTAL PROJECT	SHEET No.	TOTAL SHEETS
02	Sha,Teh	5	0.0/44.0, 0.0/42.1	34	77

REGISTERED CIVIL ENGINEER 07-08-10 DATE

7-12-10
PLANS APPROVAL DATE

REGISTERED PROFESSIONAL ENGINEER FRANK RIVAS No. 53592 Exp. 6/30/11 CIVIL STATE OF CALIFORNIA

THE STATE OF CALIFORNIA OR ITS OFFICERS OR AGENTS SHALL NOT BE RESPONSIBLE FOR THE ACCURACY OR COMPLETENESS OF SCANNED COPIES OF THIS PLAN SHEET.

NOTE:

1. (N) - NOT A SEPARATE PAY ITEM, FOR INFORMATION ONLY

METAL BEAM GUARD RAIL ITEMS

					METAL BEAM GUARD RAILING									TERMINAL SYSTEMS														
COUNTY	Beg PM	END PM	DIRECTION	R+/L+	REMOVE METAL BEAM GUARD RAILING	RELOCATE METAL BEAM GUARD RAILING	RECONSTRUCT METAL BEAM GUARD RAILING	RECONSTRUCT METAL BEAM GUARD RAILING (STEEL POST)	RECONSTRUCT METAL BEAM GUARD RAILING (7' STEEL POST)	METAL BEAM GUARD RAILING (STEEL POST)	METAL BEAM GUARD RAILING (WOOD POST)	METAL BEAM GUARD RAILING (7' WOOD POST)	METAL BEAM GUARD RAILING (7' STEEL POST)	REMOVE TERMINAL SYSTEM	RECONSTRUCT TERMINAL SYSTEM	ALTERNATIVE IN-LINE TERMINAL SYSTEM	ALTERNATIVE FLARED TERMINAL SYSTEM	(N) BURIED POST END ANCHOR	DOUBLE METAL BEAM GUARD RAILING (WOOD POST)	CRASH CUSHION (TYPE CAT)	SINGLE THRIE BEAM BARRIER	TRANSITION RAILING (TYPE STB)	END CAP (TYPE A)	CONVERT METAL BEAM GUARD RAILING	TRANSITION RAILING (TYPE WB)	RAIL TENSIONING ASSEMBLY	TERMINAL ANCHOR ASSEMBLY (TYPE SFT)	OBJECT MARKER (TYPE L-1)
					LF	LF	LF	LF	LF	LF	LF	LF	LF	EA	EA	EA	EA	EA	LF	EA	LF	EA	EA	LF	EA	EA	EA	EA
Teh	0.97	1.00	NB	R+							100				1													1
Teh	2.23	2.27	NB	R+							100				1													1
Teh	2.29	2.33	SB	R+							100				1													1
Teh	3.52		NB	L+	88														38	1	38	1				1	1	1
Teh	3.52		SB	L+	88														38	1	38	1				1	1	1
Teh	4.16	4.18	SB	R+							100					1												1
Teh	5.77		NB	L+	88														38	1	38	1				1	1	1
Teh	5.77		SB	L+	88														38	1	38	1				1	1	1
Teh	6.24		NB	R+							150					1												1
Teh	6.24		SB	R+							150					1												1
Teh	6.99		NB	L+	88														38	1	50	1				1	1	1
Teh	6.99		SB	L+	88														38	1	38	1				1	1	1
Teh	7.49		NB	L+	88														38	1	38	1				1	1	1
Teh	7.49		SB	L+	88														63	1	50	1				1	1	1
Teh	8.975		NB	L+	88														38	1	38	1				1	1	1
Teh	8.975		SB	L+	88														38	1	38	1				1	1	1
Teh	8.97	8.99	SB	R+	63										1										1			
Teh	9.97		NB	L+	88						38								38	1						1	1	1
Teh	9.97		SB	L+	88						38								38	1						1	1	1
Teh	10.65	10.77	SB	RT							150					1											1	
Teh	10.65	10.77	NB	R+							650					1											1	1
Teh	10.97		NB	L+	88						38								38	1						1	1	1
Teh	10.97		SB	L+	88						38								38	1						1	1	1
Teh	11.34		NB	L+	88						38								38	1						1	1	1
Teh	11.34		SB	L+	88						38								38	1						1	1	1
Teh	13.65		NB	R+							200					1											1	1
Teh	13.65		SB	R+							200					1											1	1
Teh	13.97		NB	L+	88						38								38	1						1	1	1
Teh	13.97		SB	L+	88						38								38	1						1	1	1
Teh		15.98	NB	L+	100						38								38	1						1	1	1
Teh		15.98	SB	L+	100						38								38	1						1	1	1
Teh	17.74	17.78	NB	R+							200					1											1	1
Teh	17.78	17.82	SB	R+							200					1											1	1
Teh	18.66	18.70	NB	R+							200					1											1	1
Teh	18.69	18.73	SB	R+							200					1											1	1
Teh		18.78	NB	LT	88						38								38	1						1	1	1
SHEET TOTAL					1935	0	0	0	0	0	3118	0	0	0	4	11	0	0	823	21	404	10	0	0	1	21	29	34

SUMMARY OF QUANTITIES

Q-1

REVISED BY | DATE REVISED
FRANK RIVAS | CHECKER
CALCULATED-DESIGNED BY | CHECKED BY
FUNCTIONAL SUPERVISOR: ROB STINGER

STATE OF CALIFORNIA - DEPARTMENT OF TRANSPORTATION
Caltrans® TRAFFIC OPS

P:\proj2\02\2E970_plans\pse\22e9701pa001.dgn

LAST REVISION 07-08-10 | DATE PLOTTED => 16-JUL-2010 TIME PLOTTED => 09:27

Dist	COUNTY	ROUTE	POST MILES TOTAL PROJECT	SHEET No.	TOTAL SHEETS
02	Sha,Teh	5	0.0/44.0, 0.0/42.1	35	77

Frank J. Rivas 07-08-10
REGISTERED CIVIL ENGINEER DATE

7-12-10
PLANS APPROVAL DATE

REGISTERED PROFESSIONAL ENGINEER FRANK RIVAS No. 53592 Exp. 6/30/11 CIVIL STATE OF CALIFORNIA

THE STATE OF CALIFORNIA OR ITS OFFICERS OR AGENTS SHALL NOT BE RESPONSIBLE FOR THE ACCURACY OR COMPLETENESS OF SCANNED COPIES OF THIS PLAN SHEET.

NOTE:

1. (N) - NOT A SEPARATE PAY ITEM, FOR INFORMATION ONLY

METAL BEAM GUARD RAIL ITEMS

					METAL BEAM GUARD RAILING									TERMINAL SYSTEMS														
COUNTY	Beg PM	END PM	DIRECTION	Rt/Lt	REMOVE METAL BEAM GUARD RAILING	RELOCATE METAL BEAM GUARD RAILING	RECONSTRUCT METAL BEAM GUARD RAILING	RECONSTRUCT METAL BEAM GUARD RAILING (STEEL POST)	RECONSTRUCT METAL BEAM GUARD RAILING (7' STEEL POST)	METAL BEAM GUARD RAILING (STEEL POST)	METAL BEAM GUARD RAILING (WOOD POST)	METAL BEAM GUARD RAILING (7' WOOD POST)	METAL BEAM GUARD RAILING (7' STEEL POST)	REMOVE TERMINAL SYSTEM	RECONSTRUCT TERMINAL SYSTEM	ALTERNATIVE IN-LINE TERMINAL SYSTEM	ALTERNATIVE FLARED TERMINAL SYSTEM	(N) BURIED POST END ANCHOR	DOUBLE METAL BEAM GUARD RAILING (WOOD POST)	CRASH CUSHION (TYPE CAT)	SINGLE THRIE BEAM BARRIER	TRANSITION RAILING (TYPE STB)	END CAP (TYPE A)	CONVERT METAL BEAM GUARD RAILING	TRANSITION RAILING (TYPE WB)	RAIL TENSIONING ASSEMBLY	TERMINAL ANCHOR ASSEMBLY (TYPE SFT)	OBJECT MARKER (TYPE L-1)
					LF	LF	LF	LF	LF	LF	LF	LF	LF	EA	EA	EA	EA	EA	LF	EA	LF	EA	EA	LF	EA	EA	EA	EA
Teh		18.78	SB	LT	88						38								38	1						1	1	1
Teh	19.31	19.32	SB	Rt	25		13				100				1										1			1
Teh	19.31	19.35	SB	Lt	25		13																	50	1			
Teh	19.24	19.28	NB	Rt	25		13				100				1										1			1
Teh	19.24	19.28	NB	Lt	25		13																	50	1			
Teh	19.63	19.67	NB	Rt	25		13																		1			
Teh			NB	Lt	25		13																	50	1			
Teh	19.69	19.71	SB	Rt	25		13				63				1										1			1
Teh	19.69	19.74	SB	Lt	25		13																		1			
Teh	19.76	19.78	NB	Rt	62										1										1			
Teh		19.78	NB	Lt	88						38								38	1						1	1	1
Teh		19.78	SB	Lt	88						38								38	1						1	1	1
Teh	19.77	19.79	SB	Rt	62										1										1			
Teh		20.50	SB	Rt	25		13				50				1										1			1
Teh			SB	Lt	25		13																	50	1			
Teh			NB	Rt	25		13				50				1										1			1
Teh			NB	Lt	25		13																	50	1			
Teh	27.1	27.30	NB	Rt							1100					1											1	1
Teh	27.1	27.30	SB	Rt							1200	600				1											1	1
Teh	28.35	28.37	SB	Rt	100						113						1								1			1
Teh	30.43	30.54	SB	Rt							750					1												1
Teh	30.38		NB	Lt						100					1													1
Teh	30.38		NB	Rt						200				1				1										1
Teh	31.04	31.01	NB	Rt	175						112			1				1							1			
Teh	31.03	31.08	SB	Rt	225						163				1													
Teh	31.26	31.31	SB	Rt							300					1											1	1
Teh	31.69	31.75	SB	Rt							300					1											1	1
Teh	31.77	31.92	SB	Rt	62						538			1			1								1			1
Teh	31.77	31.92	SB	Lt	62						538			1			1								1			1
Teh	32.22	32.24	SB	Rt	107						25			1				1							1			
Teh	33.12	33.01	SB	Lt			650				32			1				1										
Teh	33.46	33.82	SB	Lt							1900					1											1	1
Teh	33.48	33.51	SB	Rt							150						1										1	1
Teh	33.93	34.19	SB	Lt							1400						1										1	1
Teh	34.24	34.36	SB	Lt							633						1										1	1
SHEET TOTAL					1419	0	806	0	0	300	9731	600	0	6	9	6	6	4	114	3	0	0	0	250	19	3	11	22
SUBTOTAL					3354	0	806	0	0	300	12849	600	0	6	13	17	6	4	937	24	404	10	0	250	20	24	40	56

SUMMARY OF QUANTITIES

Q-2

REVISED BY | DATE REVISED
FRANK RIVAS | CHECKER
CALCULATED-DESIGNED BY | CHECKED BY
FUNCTIONAL SUPERVISOR
ROB STINGER

STATE OF CALIFORNIA - DEPARTMENT OF TRANSPORTATION
Caltrans® TRAFFIC OPS

P:\proj2\02\2E970_plans\pse\22e9701pa002.dgn

LAST REVISION 07-08-10 | DATE PLOTTED => 16-JUL-2010 | TIME PLOTTED => 10:09

Dist	COUNTY	ROUTE	POST MILES TOTAL PROJECT	SHEET No.	TOTAL SHEETS
02	Sha,Teh	5	0.0/44.0, 0.0/42.1	36	77

REGISTERED CIVIL ENGINEER DATE 07-08-10

7-12-10
PLANS APPROVAL DATE

REGISTERED PROFESSIONAL ENGINEER FRANK RIVAS No. 53592 Exp. 6/30/11 CIVIL STATE OF CALIFORNIA

THE STATE OF CALIFORNIA OR ITS OFFICERS OR AGENTS SHALL NOT BE RESPONSIBLE FOR THE ACCURACY OR COMPLETENESS OF SCANNED COPIES OF THIS PLAN SHEET.

NOTE:

1. (N) - NOT A SEPARATE PAY ITEM, FOR INFORMATION ONLY

METAL BEAM GUARD RAIL ITEMS

					METAL BEAM GUARD RAILING									TERMINAL SYSTEMS														
COUNTY	Beg PM	END PM	DIRECTION	R+/L+	REMOVE METAL BEAM GUARD RAILING	RELOCATE METAL BEAM GUARD RAILING	RECONSTRUCT METAL BEAM GUARD RAILING	RECONSTRUCT METAL BEAM GUARD RAILING (STEEL POST)	RECONSTRUCT METAL BEAM GUARD RAILING (7' STEEL POST)	METAL BEAM GUARD RAILING (STEEL POST)	METAL BEAM GUARD RAILING (WOOD POST)	METAL BEAM GUARD RAILING (7' WOOD POST)	METAL BEAM GUARD RAILING (7' STEEL POST)	REMOVE TERMINAL SYSTEM	RECONSTRUCT TERMINAL SYSTEM	ALTERNATIVE IN-LINE TERMINAL SYSTEM	ALTERNATIVE FLARED TERMINAL SYSTEM	(N) BURIED POST END ANCHOR	DOUBLE METAL BEAM GUARD RAILING (WOOD POST)	CRASH CUSHION (TYPE CAT)	SINGLE THRIE BEAM BARRIER	TRANSITION RAILING (TYPE STB)	END CAP (TYPE A)	CONVERT METAL BEAM GUARD RAILING	TRANSITION RAILING (TYPE WB)	RAIL TENSIONING ASSEMBLY	TERMINAL ANCHOR ASSEMBLY (TYPE SFT)	OBJECT MARKER (TYPE L-1)
					LF	LF	LF	LF	LF	LF	LF	LF	LF	EA	EA	EA	EA	EA	LF	EA	LF	EA	EA	LF	EA	EA	EA	EA
Teh	34.24	34.36	SB	R+							633						1											
Teh	34.3	34.33	NB	L+			75							1			1											
Teh	34.3	34.33	NB	R+			75							1			1											
Teh	35.74	35.81	SB	R+							350						1										1	1
Teh	36.11	36.14	SB	R+							125						1										1	1
Teh	36.21	36.37	NB	R+	75	38																			1			
Teh		36.4	SB	R+	87						13			1			1								1			1
Teh	38.7	38.73	SB	R+	75						25			1		1									1			
Teh	38.69	38.72	NB	R+	75									1			1								1			1
Teh	38.98	39.28	NB	L+			1550							1			1											1
Teh	38.99	39.28	NB	R+			1492							1			1											1
Teh	38.96	39.32	SB	R+			1900																					
Teh	39.54	39.57	NB	R+			150																					
Teh	39.92	40.21	SB	R+			1462				150			1			1											1
Teh	40.34	40.36	NB	R+			38							1			1											
Teh	40.45	40.48	SB	L+		25	50				138			1			1											1
Teh	40.47	40.5	SB	R+			75							1			1											
Teh	40.92	40.94	SB	R+		25	75							1			1											
Teh	41.5	41.52	NB	R+	75										1										1			
Teh	41.51		NB	L+	88						38								38	1						1	1	
Teh	41.51		SB	L+	88						38								38	1						1	1	
Teh	41.52	41.55	SB	R+	63	50					63			1		1									1			1
Teh	41.92	41.97	NB	R+	25		188				200			1			1											1
Sha	0.17	0.45	NB	R+			12				12																1	
Sha	0.17	0.45	SB	R+	25		12																		1			
Sha	0.64	0.66	NB	LT	38		50				38			1					38	1						1	1	
Sha	0.65	0.67	NB	R+	62		25			25				1		1									1			
Sha	0.65	0.67	SB	LT	38		50				38			1					38	1						1	1	
Sha	0.66	0.68	SB	R+	62		25			25				1		1									1			
Sha	0.89	0.92	NB	R+	62		25			25				1		1									1			
Sha	0.91	0.93	SB	R+	62		25			25				1		1									1			
Sha	4.289	4.31	SB	R+							500					1												
SHEET TOTAL					1000	138	7354	0	0	100	2361	0	0	20	1	7	15	0	152	4	0	0	0	0	11	4	8	11
SUBTOTAL					4354	138	8160	0	0	400	15210	600	0	26	14	24	21	4	1089	28	404	10	0	250	31	28	48	67

SUMMARY OF QUANTITIES

Q-3

FRANK RIVAS — REVISED BY — DATE REVISED
CHECKER — CALCULATED-DESIGNED BY — CHECKED BY
FUNCTIONAL SUPERVISOR: ROB STINGER

STATE OF CALIFORNIA - DEPARTMENT OF TRANSPORTATION
Caltrans® TRAFFIC OPS

P:\proj2\02\2E970_plans\pse\22e9701pa003.dgn

LAST REVISION 07-08-10 | DATE PLOTTED => 16-JUL-2010 | TIME PLOTTED => 10:09

Dist	COUNTY	ROUTE	POST MILES TOTAL PROJECT	SHEET No.	TOTAL SHEETS
02	Sha,Teh	5	0.0/44.0, 0.0/42.1	37	77

REGISTERED CIVIL ENGINEER 07-08-10 DATE

7-12-10
PLANS APPROVAL DATE

REGISTERED PROFESSIONAL ENGINEER FRANK RIVAS No. 53592 Exp. 6/30/11 CIVIL STATE OF CALIFORNIA

THE STATE OF CALIFORNIA OR ITS OFFICERS OR AGENTS SHALL NOT BE RESPONSIBLE FOR THE ACCURACY OR COMPLETENESS OF SCANNED COPIES OF THIS PLAN SHEET.

NOTE:

1. (N) - NOT A SEPARATE PAY ITEM, FOR INFORMATION ONLY

METAL BEAM GUARD RAIL ITEMS

					METAL BEAM GUARD RAILING									TERMINAL SYSTEMS														
COUNTY	Beg PM	END PM	DIRECTION	R+/L+	REMOVE METAL BEAM GUARD RAILING	RELOCATE METAL BEAM GUARD RAILING	RECONSTRUCT METAL BEAM GUARD RAILING	RECONSTRUCT METAL BEAM GUARD RAILING (STEEL POST)	RECONSTRUCT METAL BEAM GUARD RAILING (7' STEEL POST)	METAL BEAM GUARD RAILING (STEEL POST)	METAL BEAM GUARD RAILING (WOOD POST)	METAL BEAM GUARD RAILING (7' WOOD POST)	METAL BEAM GUARD RAILING (7' STEEL POST)	REMOVE TERMINAL SYSTEM	RECONSTRUCT TERMINAL SYSTEM	ALTERNATIVE IN-LINE TERMINAL SYSTEM	ALTERNATIVE FLARED TERMINAL SYSTEM	(N) BURIED POST END ANCHOR	DOUBLE METAL BEAM GUARD RAILING (WOOD POST)	CRASH CUSHION (TYPE CAT)	SINGLE THRIE BEAM BARRIER	TRANSITION RAILING (TYPE STB)	END CAP (TYPE A)	CONVERT METAL BEAM GUARD RAILING	TRANSITION RAILING (TYPE WB)	RAIL TENSIONING ASSEMBLY	TERMINAL ANCHOR ASSEMBLY (TYPE SFT)	OBJECT MARKER (TYPE L-1)
					LF	LF	LF	LF	LF	LF	LF	LF	LF	EA	EA	EA	EA	EA	LF	EA	LF	EA	EA	LF	EA	EA	EA	EA
Sha	4.42	4.56	SB	R+				475		300																	1	
Sha	4.48	4.56	NB	R+	62			312		300				1			1								1			1
Sha	4.60	5.04	SB	R+	38			1050		1050													1					
Sha	4.60	5.04	NB	R+	25			1100		1000				1											1			
Sha	5.06	5.08	SB	R+	25			25		350				1			1								1			1
Sha	5.22	5.28	SB	R+						350													1				1	
Sha	5.16	5.29	NB	R+	25			500		150					1										1			1
Sha	5.31	5.64	SB	R+	25				38	1550				1									1		1			
Sha	5.32	5.65	NB	R+	25			25		1000				1											1			
Sha	5.66	5.76	SB	R+	25			38		650				1			1								1			1
Sha	5.66	5.76	NB	R+						450													1				1	
Sha	5.84	5.89	NB	R+	12			50		88				1			1								1			1
Sha	5.90	5.93	SB	R+	25					50					1										1			1
Sha	6.92	6.97	NB	R+	25			38		150					1										1			1
Sha	7.09	7.20	SB	R+	25					475					1										1			1
Sha	7.09	7.25	NB	R+	0			50		800				1													1	
Sha	9.74	9.78	NB	R+	62		38				25			1			1								1			1
Sha	9.77	9.80	SB	R+	50		38				25			1			1								1			1
Sha	10.85	10.89	SB	R+	50		38				25			1			1								1			1
Sha	10.05	10.10	NB	R+						250							1										1	1
Sha	10.80	10.85	NB	R+	50		38				25			1			1								1			1
Sha	12.10	12.16	NB	R+	138		38				25			1			1								1			1
Sha	12.14	12.18	SB	R+	150		38				25			1			1								1			1
Sha	12.89	12.91	NB	R+	50		38				25			1			1								1			1
Sha	12.92	12.94	SB	R+	38		50				75			1				1							1			
Sha	13.34	13.43	NB	R+						475							1										1	1
Sha	13.94	13.98	NB	R+	112		25				25			1		1									1			
Sha	15.36	15.40	NB	R+	12			25		100					1										1			1
SHEET TOTAL					1049	0	341	3688	38	9538	275	0	0	17	5	1	13	1	0	0	0	0	4	0	21	0	6	18
SUBTOTAL					5403	138	8501	3688	38	9938	15485	600	0	43	19	25	34	5	1089	28	404	10	4	250	52	28	54	85

SUMMARY OF QUANTITIES

Q-4

FRANK RIVAS — REVISED BY — DATE REVISED
CHECKER — CALCULATED-DESIGNED BY — CHECKED BY
FUNCTIONAL SUPERVISOR: ROB STINGER
STATE OF CALIFORNIA - DEPARTMENT OF TRANSPORTATION
Caltrans® TRAFFIC OPS
P:\proj2\02\2E970_plans\pse\22e9701pa004.dgn

LAST REVISION DATE PLOTTED => 16-JUL-2010
07-08-10 TIME PLOTTED => 10:09

Dist	COUNTY	ROUTE	POST MILES TOTAL PROJECT	SHEET No.	TOTAL SHEETS
02	Sha,Teh	5	0.0/44.0, 0.0/42.1	38	77

REGISTERED CIVIL ENGINEER DATE 07-08-10

7-12-10
PLANS APPROVAL DATE

REGISTERED PROFESSIONAL ENGINEER FRANK RIVAS No. 53592 Exp. 6/30/11 CIVIL STATE OF CALIFORNIA

THE STATE OF CALIFORNIA OR ITS OFFICERS OR AGENTS SHALL NOT BE RESPONSIBLE FOR THE ACCURACY OR COMPLETENESS OF SCANNED COPIES OF THIS PLAN SHEET.

NOTE:

1. (N) - NOT A SEPARATE PAY ITEM, FOR INFORMATION ONLY

METAL BEAM GUARD RAIL ITEMS

					METAL BEAM GUARD RAILING									TERMINAL SYSTEMS														
COUNTY	Beg PM	END PM	DIRECTION	R+/L+	REMOVE METAL BEAM GUARD RAILING	RELOCATE METAL BEAM GUARD RAILING	RECONSTRUCT METAL BEAM GUARD RAILING	RECONSTRUCT METAL BEAM GUARD RAILING (STEEL POST)	RECONSTRUCT METAL BEAM GUARD RAILING (7' STEEL POST)	METAL BEAM GUARD RAILING (STEEL POST)	METAL BEAM GUARD RAILING (WOOD POST)	METAL BEAM GUARD RAILING (7' WOOD POST)	METAL BEAM GUARD RAILING (7' STEEL POST)	REMOVE TERMINAL SYSTEM	RECONSTRUCT TERMINAL SYSTEM	ALTERNATIVE IN-LINE TERMINAL SYSTEM	ALTERNATIVE FLARED TERMINAL SYSTEM	(N) BURIED POST END ANCHOR	DOUBLE METAL BEAM GUARD RAILING (WOOD POST)	CRASH CUSHION (TYPE CAT)	SINGLE THRIE BEAM BARRIER	TRANSITION RAILING (TYPE STB)	END CAP (TYPE A)	CONVERT METAL BEAM GUARD RAILING	TRANSITION RAILING (TYPE WB)	RAIL TENSIONING ASSEMBLY	TERMINAL ANCHOR ASSEMBLY (TYPE SFT)	OBJECT MARKER (TYPE L-1)
					LF	LF	LF	LF	LF	LF	LF	LF	LF	EA	EA	EA	EA	EA	LF	EA	LF	EA	EA	LF	EA	EA	EA	EA
Sha	15.51	15.56	NB	R+	12			25		150					1										1			1
Sha	15.70	15.76	NB	R+						600						1											1	
Sha	15.71	15.84	SB	R+					100	588			100				1										1	1
Sha	16.13	16.15	NB	R+	62		50				50			1				1							1			
Sha	16.140	16.16	SB	R+	25		50				50			1				1							1			
Sha	16.17	16.35	NB	R+						950								1									1	
Sha	16.22	16.45	SB	R+						1200								1									1	
Sha	16.91	16.98	NB	R+						350								1									1	
Sha	17.20	17.30	NB	R+				12		425					1													1
Sha	17.12	17.30	SB	R+						900			100										1				1	
Sha	17.34	17.40	SB	R+							150			1				1										
Sha	17.55	17.85	NB	R+						1500			200			1											1	
Sha	17.64	17.94	SB	R+				62		1300					1													1
Sha	18.01	18.07	NB	R+				50		150					1													1
Sha	18.09	18.14	SB	R+				12		200					1													1
Sha	18.09	18.14	NB	R+						250													1				1	
Sha	18.28	18.31	NB	R+						100			50				1										1	1
Sha	18.36	18.40	SB	R+						150								2										
Sha	18.38	18.43	NB	R+						175			100					2										
Sha	18.46	18.48	NB	R+	50		50							1				1							1			
Sha	18.47	18.50	SB	R+	50		62							1				1							1			
Sha	18.70	18.80	NB	R+						525							1										1	1
Sha	18.94	19.00	NB	R+						150					1													1
Sha	19.02	19.15	NB	R+						700													1				1	1
Sha	19.02	19.22	SB	R+				62		900					1													
Sha	20.29	20.86	SB	R+						2900							1										1	1
Sha	20.27	20.87	NB	R+						2500			675				1										1	1
SHEET TOTAL					199	0	212	223	100	16663	250	0	1225	5	7	2	5	12	0	0	0	0	3	0	5	0	13	12
SUBTOTAL					5602	138	8713	3911	138	26601	15735	600	1225	48	26	27	39	17	1089	28	404	10	7	250	57	28	67	97

SUMMARY OF QUANTITIES

Q-5

STATE OF CALIFORNIA - DEPARTMENT OF TRANSPORTATION
Caltrans® TRAFFIC OPS

FUNCTIONAL SUPERVISOR: ROB STINGER
FRANK RIVAS — CHECKER
CALCULATED-DESIGNED BY — CHECKED BY
REVISED BY — DATE REVISED

P:\proj2\02\2E970_plans\pse\22e9701pa005.dgn

LAST REVISION 07-08-10 | DATE PLOTTED => 16-JUL-2010 | TIME PLOTTED => 10:09

Dist	COUNTY	ROUTE	POST MILES TOTAL PROJECT	SHEET No.	TOTAL SHEETS
02	Sha,Teh	5	0.0/44.0, 0.0/42.1	39	77

REGISTERED CIVIL ENGINEER 07-08-10 DATE

7-12-10
PLANS APPROVAL DATE

REGISTERED PROFESSIONAL ENGINEER FRANK RIVAS No. 53592 Exp. 6/30/11 CIVIL STATE OF CALIFORNIA

THE STATE OF CALIFORNIA OR ITS OFFICERS OR AGENTS SHALL NOT BE RESPONSIBLE FOR THE ACCURACY OR COMPLETENESS OF SCANNED COPIES OF THIS PLAN SHEET.

NOTE:

1. (N) - NOT A SEPARATE PAY ITEM, FOR INFORMATION ONLY

METAL BEAM GUARD RAIL ITEMS

					METAL BEAM GUARD RAILING									TERMINAL SYSTEMS														
COUNTY	Beg PM	END PM	DIRECTION	R+/L+	REMOVE METAL BEAM GUARD RAILING	RELOCATE METAL BEAM GUARD RAILING	RECONSTRUCT METAL BEAM GUARD RAILING	RECONSTRUCT METAL BEAM GUARD RAILING (STEEL POST)	RECONSTRUCT METAL BEAM GUARD RAILING (7' STEEL POST)	METAL BEAM GUARD RAILING (STEEL POST)	METAL BEAM GUARD RAILING (WOOD POST)	METAL BEAM GUARD RAILING (7' WOOD POST)	METAL BEAM GUARD RAILING (7' STEEL POST)	REMOVE TERMINAL SYSTEM	RECONSTRUCT TERMINAL SYSTEM	ALTERNATIVE IN-LINE TERMINAL SYSTEM	ALTERNATIVE FLARED TERMINAL SYSTEM	(N) BURIED POST END ANCHOR	DOUBLE METAL BEAM GUARD RAILING (WOOD POST)	CRASH CUSHION (TYPE CAT)	SINGLE THRIE BEAM BARRIER	TRANSITION RAILING (TYPE STB)	END CAP (TYPE A)	CONVERT METAL BEAM GUARD RAILING	TRANSITION RAILING (TYPE WB)	RAIL TENSIONING ASSEMBLY	TERMINAL ANCHOR ASSEMBLY (TYPE SFT)	OBJECT MARKER (TYPE L-1)
					LF	LF	LF	LF	LF	LF	LF	LF	LF	EA	EA	EA	EA	EA	LF	EA	LF	EA	EA	LF	EA	EA	EA	EA
Sha	21.15	21.25	NB	R+						525						1											1	
Sha	21.30	21.35	NB	R+						275						1											1	
Sha	21.47	21.54	SB	R+						400								1									1	
Sha	21.85	21.95	SB	R+						450							1										1	1
Sha	22.15	22.32	NB	R+			12				75																1	
Sha	24.48	24.55	NB	R+						300						1											1	
Sha	24.89	25.05	NB	R+						850						1											1	
Sha	24.93	25.85	SB	R+				2200	100	2400					1												1	1
Sha	26.16	26.24	NB	R+						250			150					1									1	
Sha	26.34	26.63	SB	R+						1500							1										1	1
Sha	26.48	26.70	NB	R+						1000			100			1											1	
Sha	27.37	27.40	SB	R+						175							1										1	1
Sha	27.70	28.15	SB	R+	1600					1600				1													1	
Sha	28.82	29.30	NB	R+	2500					2000			500	1													1	
Sha	29.31	29.40	SB	R+	25			38		400					1										1			1
Sha	29.47	29.58	NB	R+						500								1									1	
Sha	29.31	29.60	SB	L+	1500					1000			500												1			
Sha	29.65	29.77	NB	R+	625					500			125														1	
Sha	29.68	29.77	NB	L+	550					500			50														1	
Sha	29.79	29.81	SB	R+	138					112															1			
Sha	29.79	29.90	SB	L+	25			212		125				1											1			
Sha	29.95	30.01	NB	L+	262					350					1	1											1	1
Sha	29.96	30.02	SB	L+							100				1													1
Sha	29.90	30.05	NB	R+	600			250		600				1				1									1	
Sha	30.04	30.22	SB	R+	600					800				1														
Sha	30.25	30.28	SB	R+	88			12		88															1			
Sha	30.25	30.30	SB	L+	25			12		100					1										1			1
Sha	30.16	30.30	NB	R+	512			175		500								1									1	
SHEET TOTAL					9050	0	12	2899	100	17300	175	0	1425	5	5	6	3	5	0	0	0	0	0	0	6	0	20	8
SUBTOTAL					14652	138	8725	6810	238	43901	15910	600	2650	53	31	33	42	22	1089	28	404	10	7	250	63	28	87	105

SUMMARY OF QUANTITIES

Q-6

STATE OF CALIFORNIA - DEPARTMENT OF TRANSPORTATION
Caltrans® TRAFFIC OPS

FRANK RIVAS — CHECKER — REVISED BY — DATE REVISED
CALCULATED-DESIGNED BY — CHECKED BY
FUNCTIONAL SUPERVISOR: ROB STINGER

P:\proj2\02\2E970_plans\pse\22e9701pa006.dgn

LAST REVISION 07-08-10 — DATE PLOTTED => 16-JUL-2010 — TIME PLOTTED => 10:09

Dist	COUNTY	ROUTE	POST MILES TOTAL PROJECT	SHEET No.	TOTAL SHEETS
02	Sha,Teh	5	0.0/44.0, 0.0/42.1	40	77

Frank J. Rivas 07-08-10
REGISTERED CIVIL ENGINEER DATE

7-12-10
PLANS APPROVAL DATE

REGISTERED PROFESSIONAL ENGINEER FRANK RIVAS No. 53592 Exp. 6/30/11 CIVIL STATE OF CALIFORNIA

THE STATE OF CALIFORNIA OR ITS OFFICERS OR AGENTS SHALL NOT BE RESPONSIBLE FOR THE ACCURACY OR COMPLETENESS OF SCANNED COPIES OF THIS PLAN SHEET.

NOTE:

1. (N) - NOT A SEPARATE PAY ITEM, FOR INFORMATION ONLY

METAL BEAM GUARD RAIL ITEMS

					METAL BEAM GUARD RAILING									TERMINAL SYSTEMS														
COUNTY	Beg PM	END PM	DIRECTION	R+/L+	REMOVE METAL BEAM GUARD RAILING	RELOCATE METAL BEAM GUARD RAILING	RECONSTRUCT METAL BEAM GUARD RAILING	RECONSTRUCT METAL BEAM GUARD RAILING (STEEL POST)	RECONSTRUCT METAL BEAM GUARD RAILING (7' STEEL POST)	METAL BEAM GUARD RAILING (STEEL POST)	METAL BEAM GUARD RAILING (WOOD POST)	METAL BEAM GUARD RAILING (7' WOOD POST)	METAL BEAM GUARD RAILING (7' STEEL POST)	REMOVE TERMINAL SYSTEM	RECONSTRUCT TERMINAL SYSTEM	ALTERNATIVE IN-LINE TERMINAL SYSTEM	ALTERNATIVE FLARED TERMINAL SYSTEM	(N) BURIED POST END ANCHOR	DOUBLE METAL BEAM GUARD RAILING (WOOD POST)	CRASH CUSHION (TYPE CAT)	SINGLE THRIE BEAM BARRIER	TRANSITION RAILING (TYPE STB)	END CAP (TYPE A)	CONVERT METAL BEAM GUARD RAILING	TRANSITION RAILING (TYPE WB)	RAIL TENSIONING ASSEMBLY	TERMINAL ANCHOR ASSEMBLY (TYPE SFT)	OBJECT MARKER (TYPE L-1)
					LF	LF	LF	LF	LF	LF	LF	LF	LF	EA	EA	EA	EA	EA	LF	EA	LF	EA	EA	LF	EA	EA	EA	EA
Sha	30.29	30.45	SB	R+	650					650				1		1											1	
Sha	30.50	30.55	NB	R+	50			88		75					1										1			1
Sha	30.53	30.55	NB	L+	88					175					1			1							1			
Sha	30.85	30.87	NB	L+	25			55		75															1			
Sha	30.85	30.87	NB	R+	25			25		125				1				1							1			
Sha	30.93	31.10	NB	R+	500			200		300			200														1	
Sha	30.75	31.32	SB	L+	3000					2500			500															
Sha	31.36	31.42	SB	L+	1012					750					1												1	1
Sha	31.32	31.44	NB	L+	500			88		500				2			1										1	1
Sha	31.20	31.50	NB	R+	1550					1300			250		1	1											1	1
Sha	31.58	31.67	SB	L+	400			62		400			25	2			1										1	1
Sha	31.57	31.93	NB	R+	1700			150		1500			200	1													1	
Sha	31.78	31.97	SB	L+	888					750				1			1										1	1
Sha	31.62	32.06	NB	L+	2200			150		2000			200	2													3	
Sha	32.06	32.11	SB	L+	25			100		50					1										1			1
Sha	32.06	32.11	SB	R+	25			125		100					1										1			1
Sha	32.11	32.16	NB	L+	88					200				1				1							1			
Sha	32.11	32.16	NB	R+	75					200				1				1							1			
Sha	32.33	32.39	SB	L+	200			25		200			12	1			1	1										1
Sha	32.35	32.45	SB	R+						400			125				1										1	1
Sha	32.44	32.54	NB	L+	500			38		300			200	1				1									1	
Sha	32.45	32.55	NB	R+	500			88		400			100	1				1									1	
Sha	32.55	32.60	SB	R+						300								1									1	
Sha	32.58	32.64	NB	L+						400			50					2										
Sha	32.68	32.72	NB	L+						150			75					2										
Sha	32.67	32.74	SB	R+						450							1	1										1
Sha	32.76	32.78	NB	L+						225								2										
SHEET TOTAL					14001	0	0	1194	0	14475	0	0	1937	15	6	2	6	15	0	0	0	0	0	0	8	0	15	11
SUBTOTAL					28653	138	8725	8004	238	58376	15910	600	4587	68	37	35	48	37	1089	28	404	10	7	250	71	28	102	116

SUMMARY OF QUANTITIES

Q-7

REVISED BY | DATE REVISED
FRANK RIVAS | CHECKER
CALCULATED-DESIGNED BY | CHECKED BY
FUNCTIONAL SUPERVISOR
ROB STINGER

STATE OF CALIFORNIA - DEPARTMENT OF TRANSPORTATION
Caltrans® TRAFFIC OPS

P:\proj2\02\2E970_plans\pse\22e9701pa007.dgn

LAST REVISION DATE PLOTTED => 16-JUL-2010
07-08-10 TIME PLOTTED => 10:09

Dist	COUNTY	ROUTE	POST MILES TOTAL PROJECT	SHEET No.	TOTAL SHEETS
02	Sha,Teh	5	0.0/44.0, 0.0/42.1	41	77

REGISTERED CIVIL ENGINEER 07-08-10 DATE

7-12-10
PLANS APPROVAL DATE

REGISTERED PROFESSIONAL ENGINEER FRANK RIVAS No. 53592 Exp. 6/30/11 CIVIL STATE OF CALIFORNIA

THE STATE OF CALIFORNIA OR ITS OFFICERS OR AGENTS SHALL NOT BE RESPONSIBLE FOR THE ACCURACY OR COMPLETENESS OF SCANNED COPIES OF THIS PLAN SHEET.

NOTE:

1. (N) - NOT A SEPARATE PAY ITEM, FOR INFORMATION ONLY

METAL BEAM GUARD RAIL ITEMS

					METAL BEAM GUARD RAILING									TERMINAL SYSTEMS														
COUNTY	Beg PM	END PM	DIRECTION	R+/L+	REMOVE METAL BEAM GUARD RAILING	RELOCATE METAL BEAM GUARD RAILING	RECONSTRUCT METAL BEAM GUARD RAILING	RECONSTRUCT METAL BEAM GUARD RAILING (STEEL POST)	RECONSTRUCT METAL BEAM GUARD RAILING (7' STEEL POST)	METAL BEAM GUARD RAILING (STEEL POST)	METAL BEAM GUARD RAILING (WOOD POST)	METAL BEAM GUARD RAILING (7' WOOD POST)	METAL BEAM GUARD RAILING (7' STEEL POST)	REMOVE TERMINAL SYSTEM	RECONSTRUCT TERMINAL SYSTEM	ALTERNATIVE IN-LINE TERMINAL SYSTEM	ALTERNATIVE FLARED TERMINAL SYSTEM	(N) BURIED POST END ANCHOR	DOUBLE METAL BEAM GUARD RAILING (WOOD POST)	CRASH CUSHION (TYPE CAT)	SINGLE THRIE BEAM BARRIER	TRANSITION RAILING (TYPE STB)	END CAP (TYPE A)	CONVERT METAL BEAM GUARD RAILING	TRANSITION RAILING (TYPE WB)	RAIL TENSIONING ASSEMBLY	TERMINAL ANCHOR ASSEMBLY (TYPE SFT)	OBJECT MARKER (TYPE L-1)
					LF	LF	LF	LF	LF	LF	LF	LF	LF	EA	EA	EA	EA	EA	LF	EA	LF	EA	EA	LF	EA	EA	EA	EA
Sha	32.80	32.99	NB	L+	1100			75		800			300					2										
Sha	32.89	33.03	SB	R+						600			150					2										
Sha	33.10	33.25	NB	R+	638			150		500			138	1		1		1										
Sha	33.05	33.33	SB	R+						1400								2										
Sha	33.01	33.40	NB	L+	1712			100		1500			212	1			1										1	1
Sha	33.42	33.56	SB	R+						750								1									1	
Sha	33.48	33.67	NB	R+	800			112		750			50	2			1										1	1
Sha	33.43	33.75	NB	L+	1525			100		1100			425	2			1										1	1
Sha	33.72	33.75	NB	R+	150			12		150				2			1										1	1
Sha	33.80	33.84	NB	L+	200					100			100	1				1									1	
Sha	33.81	33.85	NB	R+	100			75		100				2			1										1	1
Sha	33.81	33.90	SB	R+	250					300				1			1											1
Sha	33.91	34.02	NB	L+	300			75		200			100	1				1									1	
Sha	33.91	34.05	NB	R+	500			25		300			200	1				1									1	
Sha	33.94	34.07	SB	R+	562			0		500				1			1											1
Sha	34.09	34.15	NB	L+	200			75		100			100	1				1									1	
Sha	34.10	34.16	NB	R+	300			25		200			100	1				1									1	
Sha	34.17	34.20	NB	L+						100			100					1									1	
Sha	36.05	36.44	NB	R+	1700			162		1500					1													1
Sha	36.54	36.57	NB	R+						100			75					2										
Sha	36.60	36.76	NB	R+	700			125		500			200	1				1									1	
Sha	36.82	37.08	NB	R+	1300			75		1000			300					1							1			
Sha	36.91	37.08	SB	R+	900			50		750			150															
Sha	37.10	37.16	SB	R+	38			200		75					1	1									1			1
Sha	37.45	37.62	SB	R+				50		500					1	1											1	1
Sha	37.65	37.77	SB	R+	500			50		300			200															
Sha	37.64	37.85	NB	R+						1000			200					1									1	
Sha	37.96	38.06	SB	R+	500			25		300			200															
SHEET TOTAL					13975	0	0	1561	0	15475	0	0	3300	18	3	3	7	19	0	0	0	0	0	0	2	0	15	10
SUBTOTAL					42628	138	8725	9565	238	73851	15910	600	7887	86	40	38	55	56	1089	28	404	10	7	250	73	28	117	126

SUMMARY OF QUANTITIES

Q-8

FRANK RIVAS — REVISED BY — DATE REVISED
CHECKER — CALCULATED-DESIGNED BY — CHECKED BY
ROB STINGER — FUNCTIONAL SUPERVISOR

STATE OF CALIFORNIA - DEPARTMENT OF TRANSPORTATION
Caltrans® TRAFFIC OPS

P:\proj\02\2E970_plans\pse\22e9701pa008.dgn

LAST REVISION DATE PLOTTED => 16-JUL-2010
07-08-10 TIME PLOTTED => 11:21

Dist	COUNTY	ROUTE	POST MILES TOTAL PROJECT	SHEET No.	TOTAL SHEETS
02	Sha,Teh	5	0.0/44.0, 0.0/42.1	42	77

REGISTERED CIVIL ENGINEER 07-08-10 DATE

7-12-10
PLANS APPROVAL DATE

REGISTERED PROFESSIONAL ENGINEER FRANK RIVAS No. 53592 Exp. 6/30/11 CIVIL STATE OF CALIFORNIA

THE STATE OF CALIFORNIA OR ITS OFFICERS OR AGENTS SHALL NOT BE RESPONSIBLE FOR THE ACCURACY OR COMPLETENESS OF SCANNED COPIES OF THIS PLAN SHEET.

NOTE:

1. (N) - NOT A SEPARATE PAY ITEM, FOR INFORMATION ONLY

METAL BEAM GUARD RAIL ITEMS

					METAL BEAM GUARD RAILING									TERMINAL SYSTEMS														
COUNTY	Beg PM	END PM	DIRECTION	Rt/Lt	REMOVE METAL BEAM GUARD RAILING	RELOCATE METAL BEAM GUARD RAILING	RECONSTRUCT METAL BEAM GUARD RAILING	RECONSTRUCT METAL BEAM GUARD RAILING (STEEL POST)	RECONSTRUCT METAL BEAM GUARD RAILING (7' STEEL POST)	METAL BEAM GUARD RAILING (STEEL POST)	METAL BEAM GUARD RAILING (WOOD POST)	METAL BEAM GUARD RAILING (7' WOOD POST)	METAL BEAM GUARD RAILING (7' STEEL POST)	(N) REMOVE TERMINAL SYSTEM	RECONSTRUCT TERMINAL SYSTEM	ALTERNATIVE IN-LINE TERMINAL SYSTEM	ALTERNATIVE FLARED TERMINAL SYSTEM	(N) BURIED POST END ANCHOR	DOUBLE METAL BEAM GUARD RAILING (WOOD POST)	CRASH CUSHION (TYPE CAT)	SINGLE THRIE BEAM BARRIER	TRANSITION RAILING (TYPE STB)	END CAP (TYPE A)	CONVERT METAL BEAM GUARD RAILING	TRANSITION RAILING (TYPE WB)	RAIL TENSIONING ASSEMBLY	TERMINAL ANCHOR ASSEMBLY (TYPE SFT)	OBJECT MARKER (TYPE L-1)
					LF	LF	LF	LF	LF	LF	LF	LF	LF	EA	EA	EA	EA	EA	LF	EA	LF	EA	EA	LF	EA	EA	EA	EA
Sha	38.00	38.06	NB	Rt						350								2										
Sha	38.25	38.29	NB	Rt						250								2										
Sha	38.35	38.46	NB	Rt						500			100					2										
Sha	38.52	38.58	NB	Rt						200			150					2										
Sha	38.64	38.67	NB	Rt						150			50					2										
Sha	38.34	38.80	SB	Rt				1900	212	200					1													1
Sha	41.02	41.05	NB	Rt						138					1													1
Sha	41.07	41.12	SB	Rt						200					1													1
Sha	41.80	41.88	NB	Rt						300			150				1										1	1
Sha	42.20	42.31	NB	Rt						550					1													1
Sha	42.33	42.37	SB	Rt						150					1													1
Sha	42.34	42.44	NB	Rt						525													1				1	
Sha	42.65	42.72	NB	Rt						350								1									1	
Sha	42.82	42.94	NB	Rt						600							1										1	1
Sha	43.02	43.32	NB	Rt						1300			250					1									1	
Sha	43.60	43.71	NB	Rt				388		150					1												1	1
SHEET TOTAL					0	0	0	2288	212	5913	0	0	700	0	6	0	2	12	0	0	0	0	1	0	0	0	6	8
TOTAL					42628	138	8725	11853	450	79764	15910	600	8587	86	46	38	57	68	1089	28	404	10	8	250	73	28	123	134

SUMMARY OF QUANTITIES

Q-9

FRANK RIVAS — REVISED BY — DATE REVISED
CHECKER — CALCULATED-DESIGNED BY — CHECKED BY
ROB STINGER — FUNCTIONAL SUPERVISOR

STATE OF CALIFORNIA - DEPARTMENT OF TRANSPORTATION
Caltrans® TRAFFIC OPS

P:\proj2\02\2E970_plans\pse\22e9701pa009.dgn

LAST REVISION 07-08-10 | DATE PLOTTED => 25-AUG-2010 | TIME PLOTTED => 09:45

Dist	COUNTY	ROUTE	POST MILES TOTAL PROJECT	SHEET No.	TOTAL SHEETS
02	Sha,Teh	5	0.0/44.0, 0.0/42.1	43	77

Frank J. Rivas 07-08-10
REGISTERED CIVIL ENGINEER DATE

7-12-10
PLANS APPROVAL DATE

REGISTERED PROFESSIONAL ENGINEER
FRANK RIVAS
No. 53592
Exp. 6/30/11
CIVIL
STATE OF CALIFORNIA

THE STATE OF CALIFORNIA OR ITS OFFICERS OR AGENTS SHALL NOT BE RESPONSIBLE FOR THE ACCURACY OR COMPLETENESS OF SCANNED COPIES OF THIS PLAN SHEET.

EARTH RETAINING STRUCTURE ITEMS

COUNTY	Beg PM	END PM	DIRECTION	R+/L+	IMPORTED BORROW	EARTH RETAINING STRUCTURE (GUARD RAILING)
					TON	SQFT
Sha	4.60	5.04	NB	R+	70	100
Sha	5.32	5.65	NB	R+	40	200
Sha	15.71	15.84	SB	R+	50	75
Sha	17.12	17.30	SB	R+	50	50
Sha	17.55	17.85	NB	R+	100	100
Sha	18.28	18.31	NB	R+		25
Sha	18.38	18.43	NB	R+		50
Sha	20.27	20.87	NB	R+	200	200
Sha	21.15	21.25	NB	R+	50	
Sha	21.30	21.35	NB	R+	20	
Sha	22.15	22.32	NB	R+	50	50
Sha	26.16	26.24	NB	R+		50
Sha	26.34	26.63	SB	R+	25	
Sha	26.48	26.70	NB	R+	50	50
Sha	28.82	29.30	NB	R+	100	150
Sha	29.31	29.60	SB	L+	120	50
Sha	30.93	31.10	NB	R+	40	150
Sha	30.75	31.32	SB	L+	170	200
Sha	31.36	31.42	SB	L+	20	
Sha	31.58	31.67	SB	L+	15	100
Sha	31.78	31.97	SB	L+	50	150
Sha	31.62	32.06	NB	L+	150	
Sha	32.33	32.39	SB	L+		200
Sha	32.35	32.45	SB	R+		50
Sha	32.44	32.54	NB	L+	30	200
Sha	32.45	32.55	NB	R+	20	150
Sha	32.58	32.64	NB	L+	25	50
Sha	32.68	32.72	NB	L+		50
Sha	32.89	33.03	SB	R+		25
Sha	33.10	33.25	NB	R+		75
Sha	33.01	33.40	NB	L+	120	300
Sha	33.43	33.75	NB	L+	80	300
Sha	33.80	33.84	NB	L+		100
Sha	33.81	33.90	SB	R+	40	225
SUBTOTAL					1685	3475

EARTH RETAINING STRUCTURE ITEMS

COUNTY	Beg PM	END PM	DIRECTION	R+/L+	IMPORTED BORROW	EARTH RETAINING STRUCTURE (GUARD RAILING)
					TON	SQFT
Sha	33.91	34.02	NB	L+	20	100
Sha	33.91	34.05	NB	R+	30	
Sha	33.94	34.07	SB	R+	30	150
Sha	34.09	34.15	NB	L+	5	100
Sha	34.10	34.16	NB	R+	15	
Sha	34.17	34.20	NB	L+		50
Sha	36.05	36.44	NB	R+	120	300
Sha	36.54	36.57	NB	R+		25
Sha	36.60	36.76	NB	R+	50	100
Sha	36.82	37.08	NB	R+	100	
Sha	36.91	37.08	SB	R+	25	
Sha	37.45	37.62	SB	R+	50	250
Sha	37.65	37.77	SB	R+	20	100
Sha	37.64	37.85	NB	R+	75	50
Sha	37.96	38.06	SB	R+	30	50
Sha	38.35	38.46	NB	R+	30	50
Sha	38.52	38.58	NB	R+		50
Sha	38.64	38.67	NB	R+		50
Sha	38.34	38.80	SB	R+	120	300
Sha	41.80	41.88	NB	R+	20	50
Sha	43.02	43.32	NB	R+	100	50
Sha	43.60	43.71	NB	R+	40	
SUBTOTAL					880	1825
TOTAL					2565	5300

MISCELLANEOUS ITEMS

COUNTY	Beg PM	END PM	DIRECTION	R+/L+	CLEARING AND GRUBBING	REMOVE CRASH CUSHION	CRASH CUSHION, SAND FILLED	CABLE RAILING
					ACRE	EA	EA	LF
Teh	5.77		NB	L+	0.02			
Teh	5.77		SB	L+	0.03			
Teh	7.49		NB	L+	0.04			
Teh	7.49		SB	L+	0.01			
Teh	8.975		NB	L+	0.05			
Teh	8.975		SB	L+	0.02			
Teh	9.97		NB	L+	0.02			
Teh	9.97		SB	L+	0.04			
Teh	10.65	10.77	SB	RT				58
Teh	10.65	10.77	NB	R+				54
Teh	13.65		NB	R+				33
Teh	13.65		SB	R+				36
Teh	13.97		NB	L+	0.02			
Teh	13.97		SB	L+	0.01			
Teh	17.78	17.82	SB	R+				53
Teh	18.66	18.70	NB	R+				31
Teh	18.69	18.73	SB	R+				36
Teh	27.1	27.30	NB	R+				
Teh	27.1	27.30	SB	R+				
Teh	33.48	33.51	SB	R+				
Teh	34.24	34.36	SB	R+				
Teh	40.45	40.48	SB	L+				57
Teh	40.47	40.5	SB	R+				48
Teh	40.74					1	1	
Teh	40.92	40.94	SB	R+				48
TOTAL					0.26	1	1	454

SUMMARY OF QUANTITIES
Q-10

STATE OF CALIFORNIA - DEPARTMENT OF TRANSPORTATION
Caltrans® TRAFFIC OPS

FUNCTIONAL SUPERVISOR: ROB STINGER
CALCULATED-DESIGNED BY: FRANK RIVAS
CHECKED BY: CHECKER
REVISED BY: DATE REVISED:

P:\proj2\02\2E970_plans\pse\22e9701pa010.dgn

LAST REVISION 07-08-10 | DATE PLOTTED => 16-JUL-2010 | TIME PLOTTED => 11:22

Dist	COUNTY	ROUTE	POST MILES TOTAL PROJECT	SHEET No.	TOTAL SHEETS
02	Sha,Teh	5	0.0/44.0, 0.0/42.1	44	77

Frank J. Rivas 07-08-10
REGISTERED CIVIL ENGINEER DATE

7-12-10
PLANS APPROVAL DATE

REGISTERED PROFESSIONAL ENGINEER
FRANK RIVAS
No. 53592
Exp. 6/30/11
CIVIL
STATE OF CALIFORNIA

THE STATE OF CALIFORNIA OR ITS OFFICERS OR AGENTS SHALL NOT BE RESPONSIBLE FOR THE ACCURACY OR COMPLETENESS OF SCANNED COPIES OF THIS PLAN SHEET.

CONCRETE BARRIER ITEMS

COUNTY	Beg PM	END PM	DIRECTION	R+/L+	CONCRETE BARRIER (TYPE 60 MODIFIED)	CONCRETE BARRIER (TRANSITION ANCHOR BLOCK)
					LF	LF
Teh	8.97	8.99	SB	R+	52	
Teh	19.31	19.32	SB	R+		3.8
Teh	19.31	19.35	SB	L+		3.8
Teh	19.24	19.28	NB	R+		3.8
Teh	19.24	19.28	NB	L+		3.8
Teh	19.63	19.67	NB	R+		3.8
Teh			NB	L+		3.8
Teh	19.69	19.71	SB	R+		3.8
Teh	19.69	19.74	SB	L+		3.8
Teh	19.76	19.78	NB	R+	50	
Teh	19.77	19.79	SB	R+	50.2	
Teh		20.50	SB	R+		3.8
Teh			SB	L+		3.8
Teh			NB	R+		3.8
Teh			NB	L+		3.8
Teh	28.35	28.37	SB	R+	56.5	
Teh	31.04	31.01	NB	R+	49.6	
Teh	31.03	31.08	SB	R+	49.6	
Teh	31.77	31.92	SB	R+		3.8
Teh	31.77	31.92	SB	L+		3.8
Teh	32.22	32.24	SB	R+	49.6	
Teh	36.21	36.37	NB	R+	49.6	
Teh		36.4	SB	R+	49.6	
Teh	38.7	38.73	SB	R+	49.6	
Teh	38.69	38.72	NB	R+	49.6	
Teh	41.5	41.52	NB	R+	49.6	
Teh	41.52	41.55	SB	R+	49.6	
Teh	41.92	41.97	NB	R+		3.8
Sha	0.17	0.45	SB	R+		1
Sha	0.65	0.67	NB	R+	54.5	
Sha	0.66	0.68	SB	R+	54.5	
Sha	0.89	0.92	NB	R+	54.6	
Sha	0.91	0.93	SB	R+	54.6	
Sha	4.48	4.56	NB	R+		1
Sha	4.60	5.04	NB	R+		1
Sha	5.06	5.08	SB	R+		1
Sha	5.16	5.29	NB	R+		1
Sha	5.31	5.64	SB	R+		1
Sha	5.32	5.65	NB	R+		1
Sha	5.66	5.76	SB	R+		1
Sha	5.84	5.89	NB	R+		1
				SUBTOTAL	873	66

CONCRETE BARRIER ITEMS

COUNTY	Beg PM	END PM	DIRECTION	R+/L+	CONCRETE BARRIER (TYPE 60 MODIFIED)	CONCRETE BARRIER (TRANSITION ANCHOR BLOCK)
					LF	LF
Sha	5.90	5.93	SB	R+		1
Sha	6.92	6.97	NB	R+		
Sha	9.74	9.78	NB	R+	58.5	
Sha	9.77	9.80	SB	R+	58.5	
Sha	10.85	10.89	SB	R+	55	
Sha	10.80	10.85	NB	R+	55	
Sha	12.10	12.16	NB	R+	130	
Sha	12.14	12.18	SB	R+	130	
Sha	12.89	12.91	NB	R+	57	
Sha	12.92	12.94	SB	R+	57	
Sha	13.94	13.98	NB	R+	90	
Sha	16.13	16.15	NB	R+	51	
Sha	16.140	16.16	SB	R+	51	
Sha	18.46	18.48	NB	R+	60.5	
Sha	18.47	18.50	SB	R+	55.5	
Sha	29.31	29.40	SB	R+		1
Sha	29.31	29.60	SB	L+		1
Sha	29.79	29.81	SB	R+		1
Sha	29.79	29.90	SB	L+		1
Sha	30.25	30.28	SB	R+		1
Sha	30.25	30.30	SB	L+		1
Sha	30.50	30.55	NB	R+		1
Sha	30.53	30.55	NB	L+		1
Sha	30.85	30.87	NB	L+		1
Sha	30.85	30.87	NB	R+		1
Sha	32.06	32.11	SB	L+		1
Sha	32.06	32.11	SB	R+		1
Sha	32.11	32.16	NB	L+		1
Sha	32.11	32.16	NB	R+		1
Sha	36.82	37.08	NB	R+		1
Sha	36.91	37.08	SB	R+		
Sha	37.08	37.10				
Sha	37.10	37.16	SB	R+		1
				SUBTOTAL	909	17
				TOTAL	1782	83

MULCH

COUNTY	Beg PM	END PM	MULCH
			CY
Teh	0.0	42.0	125
Sha	0.0	44.0	125
		TOTAL	250

SUMMARY OF QUANTITIES

Q-11

REVISED BY | DATE REVISED
FRANK RIVAS | CHECKER
CALCULATED-DESIGNED BY | CHECKED BY
FUNCTIONAL SUPERVISOR: ROB STINGER

STATE OF CALIFORNIA - DEPARTMENT OF TRANSPORTATION
Caltrans® TRAFFIC OPS

P:\proj2\02\2E970_plans\pse\22e9701pa011.dgn

LAST REVISION 07-08-10 | DATE PLOTTED => 16-JUL-2010 | TIME PLOTTED => 11:22

Dist	COUNTY	ROUTE	POST MILES TOTAL PROJECT	SHEET No.	TOTAL SHEETS
02	Sha,Teh	5	0.0/44.0, 0.0/42.1	45	77

Frank J. Rivas 07-08-10
REGISTERED CIVIL ENGINEER DATE

7-12-10
PLANS APPROVAL DATE

REGISTERED PROFESSIONAL ENGINEER FRANK RIVAS No. 53592 Exp. 6/30/11 CIVIL STATE OF CALIFORNIA

THE STATE OF CALIFORNIA OR ITS OFFICERS OR AGENTS SHALL NOT BE RESPONSIBLE FOR THE ACCURACY OR COMPLETENESS OF SCANNED COPIES OF THIS PLAN SHEET.

HOT MIX ASPHALT ITEMS

COUNTY	Beg PM	END PM	DIRECTION	Rt/Lt	REMOVE ASPHALT CONCRETE DIKE	PLACE HOT MIX ASPHALT DIKE (TYPE C)	PLACE HOT MIX ASPHALT DIKE (TYPE F)	PLACE HMA (Misc AREA)	HOT MIX ASPHALT
					LF	LF	LF	SQYD	TON
Teh	27.1	27.30	NB	Rt	1150	100	1050		14.80
Teh	27.1	27.30	SB	Rt	1250	100	1150		16.14
Teh	31.69	31.75	SB	Rt	350	100	250		4.11
Teh	33.48	33.51	SB	Rt	200	100	100		2.11
Teh	34.24	34.36	SB	Rt	650	100	550		8.12
Teh	39.54	39.57	NB	Rt	200	100	100		2.11
Teh	40.34	40.36	NB	Rt	30		30		0.40
Teh	41.92	41.97	NB	Rt	600	100	500		7.45
Sha	0.17	0.45	NB	Rt	1500		1500		20.05
Sha	0.17	0.45	SB	Rt	1500		1500		20.05
Sha	4.42	4.56	SB	Rt	400	20	400		5.50
Sha	4.48	4.56	NB	Rt	260				
Sha	4.60	5.04	SB	Rt	1000		1050		14.03
Sha	4.60	5.04	NB	Rt	350		400		5.35
Sha	5.06	5.08	SB	Rt	300	50	250		3.73
Sha	5.32	5.65	NB	Rt	1000		1000		13.37
Sha	5.66	5.76	SB	Rt	50	50			
Sha	15.36	15.40	NB	Rt	100	100			
Sha	15.51	15.56	NB	Rt	150	62	88		1.65
Sha	15.71	15.84	SB	Rt	50	50			
Sha	17.55	17.85	NB	Rt	75	75			0.58
Sha	17.64	17.94	SB	Rt	75	75			0.58
Sha	18.28	18.31	NB	Rt	100		100		1.34
Sha	18.38	18.43	NB	Rt	200		200		2.67
Sha	18.70	18.80	NB	Rt	250		250		3.34
Sha	19.02	19.15	NB	Rt	700		700		9.36
Sha	19.02	19.22	SB	Rt	75	75			0.58
Sha	20.27	20.87	NB	Rt	3000		3000		40.10
Sha	21.15	21.25	NB	Rt	550	75	475		6.93
Sha	21.30	21.35	NB	Rt	300	75	300		4.59
Sha	21.47	21.54	SB	Rt	300		300		4.01
Sha	26.34	26.63	SB	Rt	250				
Sha	27.70	28.15	SB	Rt			750		10.02
Sha	30.53	30.55	NB	Lt			75		1.00
Sha	30.75	31.32	SB	Lt	1250		1200		16.04
Sha	31.20	31.50	NB	Rt	75	75			0.58
Sha	31.58	31.67	SB	Lt	50	50			0.38
				SUBTOTAL	18340	1532	17268	0	241.07

HOT MIX ASPHALT ITEMS

COUNTY	Beg PM	END PM	DIRECTION	Rt/Lt	REMOVE ASPHALT CONCRETE DIKE	PLACE HOT MIX ASPHALT DIKE (TYPE C)	PLACE HOT MIX ASPHALT DIKE (TYPE F)	PLACE HMA (Misc AREA)	MINOR HOT MIX ASPHALT
					LF	LF	LF	SQYD	TON
Sha	32.35	32.45	SB	Rt	200				
Sha	32.44	32.54	NB	Lt	525		525		7.02
Sha	32.55	32.60	SB	Rt	150				
Sha	32.67	32.74	SB	Rt	375				
Sha	32.89	33.03	SB	Rt	700		700		9.36
Sha	33.05	33.33	SB	Rt	1350	100	1300		18.14
Sha	33.42	33.56	SB	Rt	700		700		9.36
Sha	33.72	33.75	NB	Rt		15			0.12
Sha	33.81	33.85	NB	Rt	100		100		1.34
Sha	36.91	37.08	SB	Rt					
Sha	37.10	37.16	SB	Rt					
Sha	37.45	37.62	SB	Rt		75	800		11.27
Sha	37.65	37.77	SB	Rt			350		4.68
Sha	37.64	37.85	NB	Rt	1100		1100		14.70
Sha	38.00	38.06	NB	Rt	30				
Sha	38.25	38.29	NB	Rt	200		200		2.67
Sha	38.35	38.46	NB	Rt	600		500		6.68
Sha	38.52	38.58	NB	Rt	300		300		4.01
CONCRETE BARRIER (TYPE 60 MODIFIED) PAVING								312	52.70
SUBTOTAL					6330	190	6575	312	142.05
TOTAL					24670	1722	23843	312	383.12

SUMMARY OF QUANTITIES

Q-12

FRANK RIVAS — CHECKER
REVISED BY — DATE REVISED
CALCULATED-DESIGNED BY — CHECKED BY
FUNCTIONAL SUPERVISOR — ROB STINGER

STATE OF CALIFORNIA - DEPARTMENT OF TRANSPORTATION
Caltrans® TRAFFIC OPS

P:\proj2\02\2E970_plans\pse\22e9701pa012.dgn

LAST REVISION 07-08-10 | DATE PLOTTED => 16-JUL-2010 | TIME PLOTTED => 11:22

Dist	COUNTY	ROUTE	POST MILES TOTAL PROJECT	SHEET No.	TOTAL SHEETS
02	Sha,Teh	5	0.0/44.0, 0.0/42.1	46	77

ART 07-08-10
REGISTERED ELECTRICAL ENGINEER

7-12-10
PLANS APPROVAL DATE

REGISTERED PROFESSIONAL ENGINEER A.P. ROBLES No. E15293 Exp. 3/31/11 ELECTRICAL STATE OF CALIFORNIA

THE STATE OF CALIFORNIA OR ITS OFFICERS OR AGENTS SHALL NOT BE RESPONSIBLE FOR THE ACCURACY OR COMPLETENESS OF ELECTRONIC COPIES OF THIS PLAN SHEET.

NOTES (THIS SHEET)

1. AB Exist LOOP DETECTORS AND AXLE SENSORS.

2 Exist 2"C, 2 dlc, 4 stc.
RC 4 stc AND INSTALL 4 STC.

3 TO har fb (NOT PART OF THIS PROJECT).

4 RC Exist PULL BOX AND INSTALL NEW PULL BOX AS SHOWN.

LEGEND

——	PROPOSED AXLE SENSOR
- - -	Exist AXLE SENSOR
STC	SCREENED TRANSMISSION CABLE
stc	Exist SCREENED TRANSMISSION CABLE
(PB)	OBJECT MARKER (TYPE PB) AND PULL BOX PAVING
SRRA	SAFETY ROADSIDE REST AREA
TIF	TRUCK INSPECTION FACILITY
MVDS	MICROWAVE VEHICLE DETECTION SYSTEM

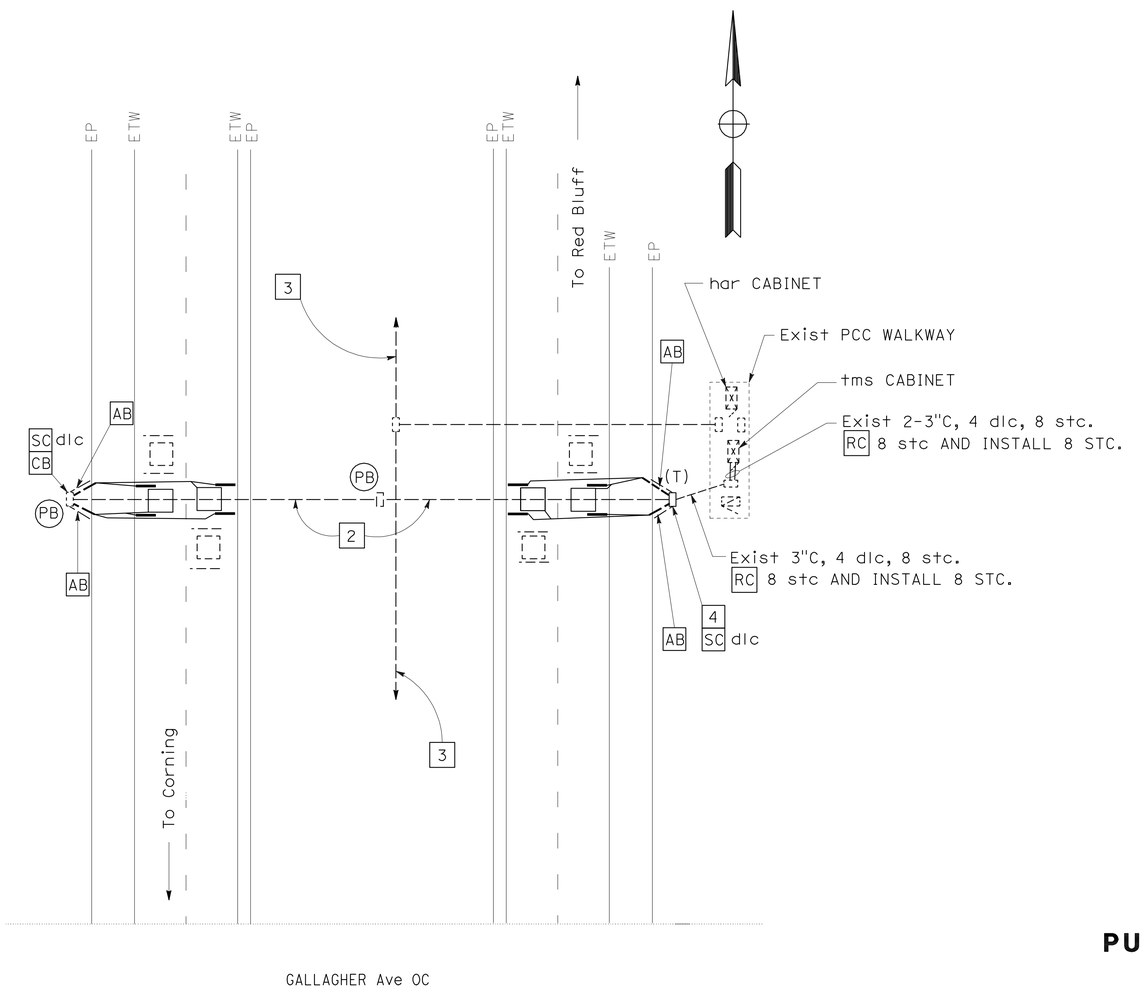

Teh-5-PM 10.0

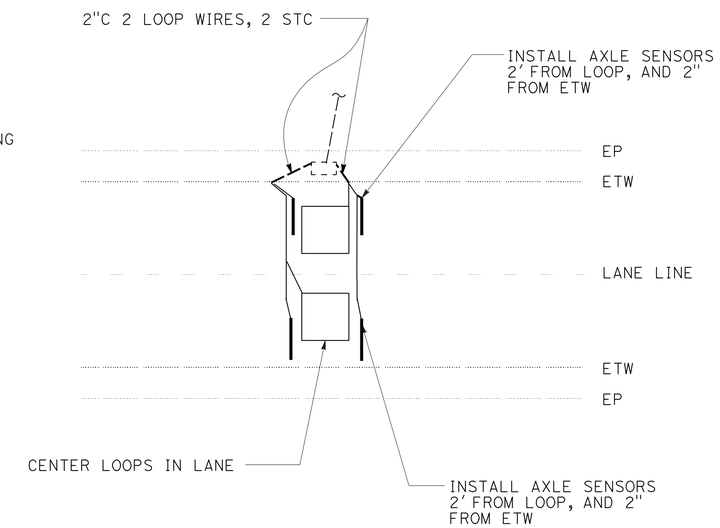

AXLE SENSOR INSTALLATION

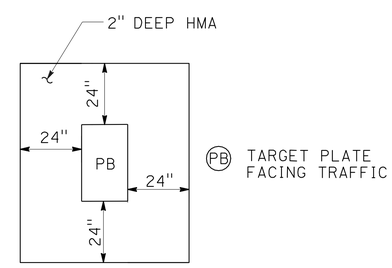

PULL BOX PAVING

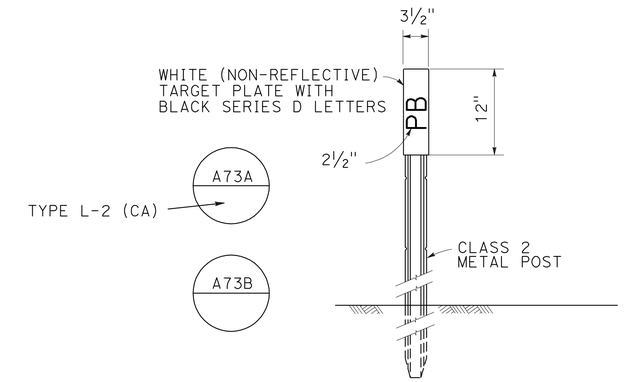

NOTE: MARKERS SHALL COMPLY WITH TYPE L-2 MARKER. PLACE MARKER 2" OUTSIDE PULL BOX PAVING ON SIDE AWAY FROM TRAFFIC. SEE PULL BOX PAVING DETAIL.

OBJECT MARKER (TYPE PB)

THIS PLAN ACCURATE FOR ELECTRICAL WORK ONLY.

TRAFFIC MONITORING STATION

NO SCALE

E-1

REVISED BY	DATE REVISED
ARTURO ROBLES	KAREN CARMO
CALCULATED-DESIGNED BY	CHECKED BY
FUNCTIONAL SUPERVISOR	ROB STINGER

STATE OF CALIFORNIA - DEPARTMENT OF TRANSPORTATION
Caltrans ELECTRICAL DESIGN

P:\proj2\02\2E970_plans\pse\22e9701ua001.dgn

LAST REVISION 07-08-10 | DATE PLOTTED => 16-JUL-2010 | TIME PLOTTED => 11:22

BORDER LAST REVISED 7/2/2010 | USERNAME => trstrk | DGN FILE => 22e9701ua001.dgn | RELATIVE BORDER SCALE IS IN INCHES 0 1 2 3 | UNIT 0147 | PROJECT NUMBER & PHASE 02000200121

Dist	COUNTY	ROUTE	POST MILES TOTAL PROJECT	SHEET No.	TOTAL SHEETS
02	Sha,Teh	5	0.0/44.0, 0.0/42.1	47	77

ART 07-08-10
REGISTERED ELECTRICAL ENGINEER

7-12-10
PLANS APPROVAL DATE

REGISTERED PROFESSIONAL ENGINEER A.P. ROBLES No. E15293 Exp.3/31/11 ELECTRICAL STATE OF CALIFORNIA

THE STATE OF CALIFORNIA OR ITS OFFICERS OR AGENTS SHALL NOT BE RESPONSIBLE FOR THE ACCURACY OR COMPLETENESS OF ELECTRONIC COPIES OF THIS PLAN SHEET.

EXISTING TRAFFIC MANAGEMENT SYSTEM ELEMENTS TO BE MAINTAINED

Co-Rte-PM	TYPE	DESCRIPTION
Teh-05-PM 3.51	har FLASHER	AT KIRKWOOD Rd OC FOR NB TRAFFIC
Teh-05-PM 3.52	cms	ON SOUR GRASS Rd OC FOR NB TRAFFIC
Teh-05-PM 9.91	har FLASHER	IN MEDIAN FOR NB TRAFFIC
Teh-05-PM 9.97	cms	AT GALLAGHER Ave FOR NB TRAFFIC
Teh-05-PM 10.02	har FLASHER	IN MEDIAN FOR SB TRAFFIC
Teh-05-PM 10.12	har	AT NB CORNING SRRA
Teh-05-PM R26.51	har FLASHER	AT DIAMOND Ave FOR NB TRAFFIC
Teh-05-PM R26.53	cctv	AT I-5/SR 36 Jct
Teh-05-PM 26.58	har	AT I-5/SR 36 Jct
Teh-05-PM 23.38	cms	ON RIVERSIDE Ave OC FOR NB TRAFFIC
Teh-05-PM 30.97	cctv	AT WILCOX Rd OC FOR NB TRAFFIC
Teh-05-PM 31.05	cms	ON WILCOX Rd OC FOR SB TRAFFIC
Teh-05-PM 31.06	cctv	AT WILCOX Rd OC FOR SB TRAFFIC
Teh-05-PM 36.78	cms	AT NINE-MILE HILL FOR NB TRAFFIC
Teh-05-PM 39.82	cms	AT COTTONWOOD TIF NB FOR NB TRAFFIC
Teh-05-PM 41.53	cms	AT BOWMAN Rd FOR SB TRAFFIC
Sha-05-PM 4.29	cctv	DESCHUTES Rd UC
Sha-05-PM 6.72	cctv	RIVERSIDE Dr OC
Sha-05-PM 6.74	har FLASHER	RIVERSIDE Dr OC
Sha-05-PM 7.40	tms	MVDS IN MEDIAN
Sha-05-PM 8.34	tms	MVDS IN MEDIAN
Sha-05-PM 9.33	tms	MVDS IN MEDIAN
Sha-05-PM 10.86	cms	ON SMITH Rd OC FOR NB TRAFFIC
Sha-05-PM 10.86	cms	ON SMITH Rd OC FOR SB TRAFFIC
Sha-05-PM 12.15	cctv	AT BONNYVIEW Rd OC
Sha-05-PM 15.42	cctv	AT I5/44 Jct IN MEDIAN
Sha-05-PM 16.13	har	WEST END OF HILLTOP Dr OC
Sha-05-PM 19.40	cms	ON OASIS Rd OC FOR NB TRAFFIC
Sha-05-PM 19.40	cms	ON OASIS Rd OC FOR SB TRAFFIC
Sha-05-PM 20.98	cctv	AT PINE GROVE OC
Sha-05-PM 20.98	cms	ON PINE GROVE OC FOR NB TRAFFIC
Sha-05-PM 21.00	har FLASHER	AT PINE GROVE OC FOR SB TRAFFIC
Sha-05-PM 26.02	cctv	AT FAWNDALE OC

EXISTING TRAFFIC MANAGEMENT SYSTEM ELEMENTS TO BE MAINTAINED

Co-Rte-PM	TYPE	DESCRIPTION
Sha-05-PM 28.2	cctv	AT SOUTH END OF PIT RIVER BRIDGE
Sha-05-PM 29.97	cctv	AT SIDEHILL VIADUCT PART OF CURVE WARNING SYSTEM FOR SB TRAFFIC
Sha-05-PM 29.97	cms	AT SIDEHILL VIADUCT PART OF CURVE WARNING SYSTEM FOR SB TRAFFIC
Sha-05-PM 32.22	cctv	O'BRIEN
Sha-05-PM 32.22	cms	O'BRIEN PART OF CURVE WARNING SYSTEM FOR SB TRAFFIC
Sha-05-PM 36.10	cms	SOUTH OF GILMAN Rd OC FOR NB TRAFFIC
Sha-05-PM 37.44	cctv	SALT CREEK/GILMAN Rd PART OF CURVE WARNING SYSTEM FOR SB TRAFFIC
Sha-05-PM 37.47	cms	SALT CREEK PART OF CURVE WARNING SYSTEM FOR SB TRAFFIC
Sha-05-PM 37.94	rwis	AT ANTLERS SUMMIT OC
		(1 NB ROADWAY SENSOR AT PM 37.93)
		(1 SB ROADWAY SENSOR AT PM 37.93)
		(1 SB ROADWAY SENSOR AT PM 37.93)
Sha-05-PM 39.17	cctv	SACRAMENTO HILL
Sha-05-PM 40.6	cctv	ANTLERS BRIDGE
Sha-05-PM 42.35	cctv	LAKEHEAD (RIVERSIDE UC)
Sha-05-PM 44.17	cms	AT LAKEHEAD SRRA FOR SB TRAFFIC

TRAFFIC MONITORING STATION

E-2

THIS PLAN ACCURATE FOR ELECTRICAL WORK ONLY.

STATE OF CALIFORNIA - DEPARTMENT OF TRANSPORTATION
Caltrans ELECTRICAL DESIGN

FUNCTIONAL SUPERVISOR: ROB STINGER
CALCULATED-DESIGNED BY: ARTURO ROBLES
CHECKED BY: KAREN CARMO
REVISED BY / DATE REVISED

P:\proj2\02\2E970_plans\pse\22e9701ua002.dgn

LAST REVISION DATE PLOTTED => 16-JUL-2010
TIME PLOTTED => 11:23
07-08-10

BORDER LAST REVISED 7/2/2010 | USERNAME => trstrk | DGN FILE => 22e9701ua002.dgn | RELATIVE BORDER SCALE IS IN INCHES 0 1 2 3 | UNIT 0147 | PROJECT NUMBER & PHASE 02000200121

Dist	COUNTY	ROUTE	POST MILES TOTAL PROJECT	SHEET No.	TOTAL SHEETS
02	Sha,Teh	5	0.0/44.0, 0.0/42.1	48	77

ART 07-08-10
REGISTERED ELECTRICAL ENGINEER

7-12-10
PLANS APPROVAL DATE

REGISTERED PROFESSIONAL ENGINEER A.P. ROBLES No. E15293 Exp.3/31/11 ELECTRICAL STATE OF CALIFORNIA

THE STATE OF CALIFORNIA OR ITS OFFICERS OR AGENTS SHALL NOT BE RESPONSIBLE FOR THE ACCURACY OR COMPLETENESS OF ELECTRONIC COPIES OF THIS PLAN SHEET.

EXISTING INDUCTIVE LOOP DETECTORS AND AXLE SENSORS

ID No.	LOCATION	TYPE	DESCRIPTION	EQUIPMENT
R127	Teh-05-PM 5.64	RAMP	LIBERAL Ave NB OFF-RAMP	1 LOOP 2 AXLE SENSORS
R128	Teh-05-PM 5.63	RAMP	LIBERAL Ave SB ON-RAMP 75′ SOUTH OF PAVED GORE	1 LOOP 2 AXLE SENSORS
R129	Teh-05-PM 5.91	RAMP	LIBERAL Ave NB ON-RAMP 92′ FROM MERGE SIGN	1 LOOP 2 AXLE SENSORS
R130	Teh-05-PM 5.90	RAMP	LIBERAL Ave SB OFF-RAMP	1 LOOP 2 AXLE SENSORS
R131	Teh-05-PM 7.28	RAMP	SOUTH Ave NB OFF-RAMP 129′ SOUTH OF PAVED GORE	1 LOOP 2 AXLE SENSORS
R132	Teh-05-PM 7.34	RAMP	SOUTH Ave SB ON-RAMP 43′ SOUTH OF PAVED GORE	1 LOOP 2 AXLE SENSORS
R133	Teh-05-PM 7.67	RAMP	SOUTH Ave NB ON-RAMP 267′ NORTH OF MERGE SIGN	1 LOOP 2 AXLE SENSORS
R134	Teh-05-PM 7.65	RAMP	SOUTH Ave SB OFF-RAMP	1 LOOP 2 AXLE SENSORS
R135	Teh-05-PM 8.82	RAMP	CORNING Rd NB OFF-RAMP 654′ FROM CORNING RdD CENTERLINE	1 LOOP
R136	Teh-05-PM 9.18	RAMP	CORNING Rd SB ON-RAMP 328′ FROM CORNING Rd CENTERLINE	1 LOOP
R137	Teh-05-PM 9.11	RAMP	CORNING Rd NB ON-RAMP 163′ FROM CORNING Rd CENTERLINE	1 LOOP
R138	Teh-05-PM 9.18	RAMP	CORNING Rd SB OFF-RAMP 328′ FROM CORNING Rd CENTERLINE	1 LOOP
271	Teh-05-PM 9.99	TREND	MAINLINE 108′ NORTH OF GALLAHER Ave OC	4 LOOPS 8 AXLE SENSORS

EXISTING INDUCTIVE LOOP DETECTORS AND AXLE SENSORS

ID No.	LOCATION	TYPE	DESCRIPTION	EQUIPMENT
RA1	Teh-05-PM 10.06	SRRA	CORNING NB SRRA RAMP AT OFF-RAMP GORE	1 LOOP
RA2	Teh-05-PM 10.49	SRRA	CORNING SB SRRA RAMP	1 LOOP
R139	Teh-05-PM 10.77	RAMP	FINNELL Ave NB OFF-RAMP	1 LOOP
R140	Teh-05-PM 10.78	RAMP	FINNELL Ave SB ON-RAMP 550′ FROM FINNELL Ave CENTERLINE	1 LOOP
R141	Teh-05-PM 11.13	RAMP	FINNELL Ave NB ON-RAMP 243′ FROM FINNELL Ave CENTERLINE	1 LOOP
R142	Teh-05-PM 11.15	RAMP	FINNELL Ave SB OFF-RAMP 1028′ FROM FINNELL Ave CENTERLINE	1 LOOP
R143	Teh-05-PM 13.76	RAMP	GYLE Rd NB OFF-RAMP AT STOP AHEAD SIGN	1 LOOP
R144	Teh-05-PM 13.81	RAMP	GYLE Rd SB ON-RAMP 500′ NORTH OF GYLE Rd CENTERLINE	1 LOOP
R145	Teh-05-PM 14.11	RAMP	GYLE Rd NB ON-RAMP 157′ FROM GYLE RD CENTERLINE	1 LOOP
R146	Teh-05-PM 14.12	RAMP	GYLE Rd SB OFF-RAMP 849′ NORTH OF GYLE Rd CENTERLINE	1 LOOP
R147	Teh-05-PM 19.73	RAMP	FLORES Ave NB OFF-RAMP 60′ SOUTH OF WRONG WAY SIGN	1 LOOP
R148	Teh-05-PM 19.73	RAMP	FLORES Ave NB ON-RAMP 60′ SOUTH OF WRONG WAY SIGN	1 LOOP
R149	Teh-05-PM 19.96	RAMP	FLORES Ave SB ON-RAMP 192′ FROM FLORES Ave CENTERLINE	1 LOOP
R150	Teh-05-PM 19.96	RAMP	FLORES Ave SB OFF-RAMP 192′ FROM FLORES Ave CENTERLINE	1 LOOP

TRAFFIC MONITORING STATION
E-3

THIS PLAN ACCURATE FOR ELECTRICAL WORK ONLY.

REVISED BY | DATE REVISED
ARTURO ROBLES | KAREN CARMO
CALCULATED-DESIGNED BY | CHECKED BY
FUNCTIONAL SUPERVISOR
ROB STINGER

STATE OF CALIFORNIA - DEPARTMENT OF TRANSPORTATION
Caltrans ELECTRICAL DESIGN

P:\proj2\02\2E970_plans\pse\22e9701ua003.dgn

LAST REVISION 07-08-10 | DATE PLOTTED => 16-JUL-2010 | TIME PLOTTED => 11:22

Dist	COUNTY	ROUTE	POST MILES TOTAL PROJECT	SHEET No.	TOTAL SHEETS
02	Sha,Teh	5	0.0/44.0, 0.0/42.1	49	77

ART 07-08-10
REGISTERED ELECTRICAL ENGINEER

7-12-10
PLANS APPROVAL DATE

REGISTERED PROFESSIONAL ENGINEER A.P. ROBLES No. E15293 Exp. 3/31/11 ELECTRICAL STATE OF CALIFORNIA

THE STATE OF CALIFORNIA OR ITS OFFICERS OR AGENTS SHALL NOT BE RESPONSIBLE FOR THE ACCURACY OR COMPLETENESS OF ELECTRONIC COPIES OF THIS PLAN SHEET.

EXISTING INDUCTIVE LOOP DETECTORS AND AXLE SENSORS

ID No.	LOCATION	TYPE	DESCRIPTION	EQUIPMENT
R151	Teh-05-PM 24.47	RAMP	SOUTH RED BLUFF NB OFF-RAMP 66′ NORTH OF EXIT SIGN	1 LOOP
R152	Teh-05-PM 24.57	RAMP	SOUTH RED BLUFF SB ON-RAMP 97′ OF MERGE SIGN	1 LOOP
R153	Teh-05-PM 24.71	RAMP	SOUTH RED BLUFF NB ON-RAMP 18′ SOUTH OF MERGE SIGN	1 LOOP
R154	Teh-05-PM 24.83	RAMP	SOUTH RED BLUFF SB OFF-RAMP 46′ SOUTH OF EXIT SIGN	1 LOOP
R155	Teh-05-PM 25.12	RAMP	DIAMOND Ave NB ON-RAMP 10′ NORTH OF MERGE SIGN	1 LOOP
R156	Teh-05-PM 25.15	RAMP	DIAMOND Ave SB OFF-RAMP 52′ SOUTH OF EXIT SIGN	1 LOOP
R157	Teh-05-PM 26.435	RAMP	I5/SR 36 Sep 141′ NORTH OF OH SIGN 26.490	2 LOOPS
R158	Teh-05-PM 26.509	RAMP	I5-SR 36 Sep SB ON FROM EB	1 LOOP
R160	Teh-05-PM 26.514	RAMP	I-5/SR 36 Sep NB ON FROM EB	1 LOOP
R162	Teh-05-PM 26.532	RAMP	I-5/SR 36 Sep SB ON FROM WB 14′ WEST OF GORE PT	1 LOOP
R163	Teh-05-PM 26.535	RAMP	I-5/SR 36 Sep NB ON FROM WB 71′ WEST OF GORE PT	1 LOOP
R164	Teh-05-PM 26.598	RAMP	I-5/SR 36 Sep SB OFF-RAMP 315′ SOUTH OF OH SIGN	2 LOOPS
R225	Teh-05-PM 27.28	RAMP	ADOBE Rd NB OFF-RAMP 48′ NORTH OF EXIT SIGN	1 LOOP

EXISTING INDUCTIVE LOOP DETECTORS AND AXLE SENSORS

ID No.	LOCATION	TYPE	DESCRIPTION	EQUIPMENT
R222	Teh-05-PM 27.444	RAMP	ADOBE Rd SB ON-RAMP 109′ SOUTH OF ADOBE Rd CENTERLINE	1 LOOP
R223	Teh-05-PM 27.485	RAMP	ADOBE Rd NB ON-RAMP 212′ NORTH OF ADOBE Rd CENTERLINE	1 LOOP
R224	Teh-05-PM 27.55	RAMP	ADOBE Rd SB OFF-RAMP 451′ NORTH OF ADOBE Rd CENTERLINE	1 LOOP
R166	Teh-05-PM 28.53	RAMP	HESS Rd SB OFF-RAP 35′ SOUTH OF EXIT SIGN	1 LOOP
R167	Teh-05-PM 28.589	RAMP	NORTH RED BLUFF NB ON-RAMP 1339′ NORTH OF NORTH RED BLUFF OH	1 LOOP
R168	Teh-05-PM 30.976	RAMP	WILCOX Rd SB ON-RAMP 354′ SOUTH OF WILCOX Rd CENTERLINE	1 LOOP
R169	Teh-05-PM 30.966	RAMP	WILCOX Rd NB OFF-RAMP 407′ SOUTH OF WILCOX Rd CENTERLINE	1 LOOP
202	Teh-05-PM 30.12	TREND	MAINLINE 1330′ NORTH OF NORTH RED BLUFF OC	6 LOOPS
R170	Teh-05-PM 31.114	RAMP	WILCOX Rd SB OFF-RAMP 373′ NORTH OF WILCOX Rd CENTERLINE	1 LOOP
R171	Teh-05-PM 31.099	RAMP	WILCOX Rd NB ON-RAMP 294′ NORTH OF WILCOX Rd CENTERLINE	1 LOOP
RA4	Teh-05-PM 34.92	SRRA	RED BLUFF SB SRRA OFF-RAMP	2 LOOPS
R176	Teh-05-PM 36.129	RAMP	HOOKER CREEK NB OFF-RAMP	1 LOOP
R177	Teh-05-PM 36.275	RAMP	HOOKER CREEK SB ON-RAMP	1 LOOP

TRAFFIC MONITORING STATION

THIS PLAN ACCURATE FOR ELECTRICAL WORK ONLY.

E-4

REVISED BY | DATE REVISED
ARTURO ROBLES | KAREN CARMO
CALCULATED-DESIGNED BY | CHECKED BY
FUNCTIONAL SUPERVISOR: ROB STINGER

STATE OF CALIFORNIA - DEPARTMENT OF TRANSPORTATION
Caltrans ELECTRICAL DESIGN

P:\proj2\02\2E970_plans\pse\22e9701ua004.dgn

LAST REVISION | DATE PLOTTED => 16-JUL-2010 | TIME PLOTTED => 11:22
07-08-10

Dist	COUNTY	ROUTE	POST MILES TOTAL PROJECT	SHEET No.	TOTAL SHEETS
02	Sha,Teh	5	0.0/44.0, 0.0/42.1	50	77

ART 07-08-10
REGISTERED ELECTRICAL ENGINEER

7-12-10
PLANS APPROVAL DATE

REGISTERED PROFESSIONAL ENGINEER A.P. ROBLES No. E15293 Exp.3/31/11 ELECTRICAL STATE OF CALIFORNIA

THE STATE OF CALIFORNIA OR ITS OFFICERS OR AGENTS SHALL NOT BE RESPONSIBLE FOR THE ACCURACY OR COMPLETENESS OF ELECTRONIC COPIES OF THIS PLAN SHEET.

EXISTING INDUCTIVE LOOP DETECTORS AND AXLE SENSORS

ID No.	LOCATION	TYPE	DESCRIPTION	EQUIPMENT
R178	Teh-05-PM 36.524	RAMP	HOOKER CREEK SB OFF-RAMP	1 LOOP
R179	Teh-05-PM 36.538	RAMP	HOOKER CREEK NB ON-RAMP	1 LOOP
313	Teh-05-PM 38.716	PROFILE	MAINLINE SUNSET HILLS Dr	2 LOOPS
R184	Teh-05-PM 41.33	RAMP	BOWMAN Rd NB OFF-RAMP	1 LOOP
R185	Teh-05-PM 41.389	RAMP	BOWMAN Rd SB ON-RAMP	1 LOOP
314	Teh-05-PM 41.525	TREND	MAINLINE BOWMAN Rd OC	2 LOOPS
R186	Teh-05-PM 41.66	RAMP	BOWMAN Rd NB ON-RAMP	1 LOOP
R187	Teh-05-PM 41.686	RAMP	BOWMAN Rd SB OFF-RAMP	1 LOOP
R194	Sha-05-PM 3.393	RAMP	I-5/SR 273 Sep NB OFF-RAMP 53′ NORTH OF PED/BIKE PROHIBITED SIGN	1 LOOP
R195	Sha-05-PM 3.564	RAMP	I-5/SR 273 SB ON-RAMP	1 LOOP
272	Sha-05-PM 3.46	CONTROL	Jct SR 273 N GORE AREA OF NB OFF-RAMP	7 LOOPS
R196	Sha-05-PM 4.43	RAMP	DESCHUTES NB ON-RAMP 22′ SOUTH OF PAVED GORE NOSE	1 LOOP
R197	Sha-05-PM 4.45	RAMP	DESCHUTES SB OFF-RAMP 155′ SOUTH OF PAVED GORE NOSE	1 LOOP
R198	Sha-05-PM 5.30	RAMP	BALLS FERRY NB OFF-RAMP 292′ FROM BACK OF SIDEWALK	3 LOOPS
R199	Sha-05-PM 5.27	RAMP	BALLS FERRY SB ON-RAMP 127′ FROM BACK OF SIDEWALK	1 LOOP

EXISTING INDUCTIVE LOOP DETECTORS AND AXLE SENSORS

ID No.	LOCATION	TYPE	DESCRIPTION	EQUIPMENT
R200	Sha-05-PM 5.71	RAMP	NORTH STREET NB ON-RAMP 215′ NORTH OF WB EP	1 LOOP
R201	Sha-05-PM 5.79	RAMP	NORTH St SB OFF-RAMP	1 LOOP
R202	Sha-05-PM 6.69	RAMP	RIVERSIDE NB OFF-RAMP	1 LOOP
R203	Sha-05-PM 6.72	RAMP	RIVERSIDE SB ON-RAMP	1 LOOP
R204	Sha-05-PM 6.69	RAMP	RIVERSIDE NB ON-RAMP	1 LOOP
R205	Sha-05-PM 6.78	RAMP	RIVERSIDE SB OFF-RAMP	1 LOOP
239	Sha-05-PM 7.8	TREND	MAINLINE 0.74 MILE NORTH OF SACTO RIVER Br	4 LOOPS
R206	Sha-05-PM 9.69	RAMP	KNIGHTON Rd NB OFF-RAMP	1 LOOP
R207	Sha-05-PM 9.77	RAMP	KNIGHTON Rd SB ON-RAMP	1 LOOP
R208	Sha-05-PM 9.8	RAMP	KNIGHTON Rd NB ON-RAMP	1 LOOP
R209	Sha-05-PM 9.9	RAMP	KNIGHTON Rd SB OFF-RAMP	1 LOOP
R210	Sha-05-PM 12.114	RAMP	SO BONNYVIEW Rd NB OFF-RAMP	2 LOOPS
298	Sha-05-PM 13.697	TREND	MAINLINE 78′ NORTH OF HARTNELL Rd OC	4 LOOPS 8 AXLE SENSORS
R214	Sha-05-PM 14.37	RAMP	CYPRESS St NB OFF-RAMP	3 LOOPS
R215	Sha-05-PM 14.31	RAMP	CYPRESS St SB ON-RAMP	1 LOOP
304	Sha-05-PM 14.94	TREND	MAINLINE	6 LOOPS
R216	Sha-05-PM 14.64	RAMP	CYPRESS St SB OFF-RAMP	1 LOOP
R217	Sha-05-PM 14.62	RAMP	CYPRESS St NB ON-RAMP	1 LOOP
R1	Sha-05-PM 15.71	RAMP	NB OFF TO WB 44	2 LOOPS
R3	Sha-05-PM 15.27	RAMP	HILLTOP Dr NB OFF-RAMP	2 LOOPS
R4	Sha-05-PM 15.59	RAMP	SB OFF TO EB 44 77′ SOUTH OF PAVED GORE	1 LOOP

TRAFFIC MONITORING STATION

THIS PLAN ACCURATE FOR ELECTRICAL WORK ONLY.

REVISED BY	DATE REVISED
ARTURO ROBLES	KAREN CARMO
CALCULATED-DESIGNED BY	CHECKED BY
FUNCTIONAL SUPERVISOR	ROB STINGER

STATE OF CALIFORNIA - DEPARTMENT OF TRANSPORTATION
Caltrans ELECTRICAL DESIGN

P:\proj2\02\2E970_plans\pse\22e9701ua005.dgn

Dist	COUNTY	ROUTE	POST MILES TOTAL PROJECT	SHEET No.	TOTAL SHEETS
02	Sha,Teh	5	0.0/44.0, 0.0/42.1	51	77

ART 07-08-10
REGISTERED ELECTRICAL ENGINEER

7-12-10
PLANS APPROVAL DATE

REGISTERED PROFESSIONAL ENGINEER A.P. ROBLES No. E15293 Exp. 3/31/11 ELECTRICAL STATE OF CALIFORNIA

THE STATE OF CALIFORNIA OR ITS OFFICERS OR AGENTS SHALL NOT BE RESPONSIBLE FOR THE ACCURACY OR COMPLETENESS OF ELECTRONIC COPIES OF THIS PLAN SHEET.

EXISTING INDUCTIVE LOOP DETECTORS AND AXLE SENSORS

ID No.	LOCATION	TYPE	DESCRIPTION	EQUIPMENT
R5	Sha-05-PM 15.71	RAMP	SB OFF TO WB 44	1 LOOP
R6	Sha-05-PM 17.231	RAMP	SR 299/LAKE Blvd SB ON-RAMP	2 LOOPS
R8	Sha-05-PM 17.534	RAMP	SR 299/LAKE Blvd SB OFF-RAMP	1 LOOP
R11	Sha-05-PM 17.905	RAMP	TWINVIEW NB OFF-RAMP 114′ SOUTH OF EXIT SIGN IN GORE	1 LOOP
R12	Sha-05-PM 18.21	RAMP	TWINVIEW SB OFF-RAMP 4′ SOUTH OF DIRECTION SIGN	1 LOOP
R13	Sha-05-PM 18.02	RAMP	TWINVIEW Blvd NB ON-RAMP 3′ NORTH OF PED PROHIBITED SIGN	1 LOOP
R14	Sha-05-PM 18.734	RAMP	SR 273 SB OFF-RAMP	2 LOOPS
R15	Sha-05-PM 18.781	RAMP	SR 273 NB ON-RAMP	2 LOOPS
R16	Sha-05-PM 19.25	RAMP	OASIS Rd SB ON-RAMP 180′ FROM OASIS Rd CENTERLINE	1 LOOP
R17	Sha-05-PM 19.25	RAMP	OASIS Rd NB OFF-RAMP 183 FROM OASIS Rd CENTERLINE	1 LOOP
312	Sha-05-PM 19.08	TREND	MAINLINE-SB 291′ NORTH OF CHURN CREEK BR	6 LOOPS 12 AXLE SENSORS
R18	Sha-05-PM 19.53	RAMP	OASIS Rd NB ON-RAMP 185′ FROM OASIS CENTERLINE	1 LOOP
R19	Sha-05-PM 19.67	RAMP	OASIS Rd SB OFF-RAMP 156′ FROM OASIS Rd CENTERLINE	1 LOOP
R20	Sha-05-PM 20.86	RAMP	PINE GROVE SB ON-RAMP 173′ SOUTH OF PINE GROVE CENTERLINE	1 LOOP

EXISTING INDUCTIVE LOOP DETECTORS AND AXLE SENSORS

ID No.	LOCATION	TYPE	DESCRIPTION	EQUIPMENT
R21	Sha-05-PM 20.86	RAMP	PINE GROVE NB OFF-RAMP 186′ SOUTH OF PINE GROVE CENTERLINE	1 LOOP
R22	Sha-05-PM 21.09	RAMP	PINE GROVE NB ON-RAMP 125′ FROM PINE GROVE CENTERLINE	1 LOOP
R23	Sha-05-PM 21.12	RAMP	PINE GROVE SB OFF-RAMP 87′ NORTH OF PINE GROVE CENTERLINE	1 LOOP
R24	Sha-05-PM 22.00	RAMP	SR 151 NB OFF-RAMP	2 LOOPS
R25	Sha-05-22.02	RAMP	SR 151 SB ON-RAMP	1 LOOP
R27	Sha-05-PM 22.34	RAMP	SR 151 SB OFF-RAMP	1 LOOP
R28	Sha-05-PM 23.91	RAMP	MOUNTAIN GATE NB OFF-RAMP	1 LOOP
R29	Sha-05-PM 23.92	RAMP	MOUNTAIN GATE SB ON-RAMP	1 LOOP
309	Sha-05-PM 24.88	WEIGHT -IN -MOTION	MAINLINE 0.8 MILE NORTH OF MOUNTAIN GATE OC	8 LOOPS
R30	Sha-05-PM 24.24	RAMP	MOUNTAIN GATE SB OFF-RAMP	1 LOOP
			166′ FROM MT GATE CENTERLINE	
R31	Sha-05-PM 24.26	RAMP	MOUNTAIN GATE NB ON-RAMP	1 LOOP
			170′ FROM MOUNTAIN GATE CENTERLINE	
R32	Sha-05-PM 25.86	RAMP	FAWNDALE SB ON-RAMP	1 LOOP
R33	Sha-05-PM 25.88	RAMP	FAWNDALE NB OFF-RAMP	1 LOOP
273	Sha-05-PM 26.035	TREND	MAINLINE SOUTH OF FAWNDALE OC	6 LOOPS
R34	Sha-05-PM 26.22	RAMP	FAWNDALE NB ON-RAMP 190′ FROM FAWNDALE CENTERLINE	1 LOOP
R35	Sha-05-PM 26.23	RAMP	FAWNDALE SB OFF-RAMP 156′ FROM FAWNDALE CENTERLINE	1 LOOP

TRAFFIC MONITORING STATION

E-6

THIS PLAN ACCURATE FOR ELECTRICAL WORK ONLY.

REVISED BY | DATE REVISED
ARTURO ROBLES | KAREN CARMO
CALCULATED-DESIGNED BY | CHECKED BY
FUNCTIONAL SUPERVISOR: ROB STINGER
STATE OF CALIFORNIA - DEPARTMENT OF TRANSPORTATION
Caltrans ELECTRICAL DESIGN

P:\proj2\02\2E970_plans\pse\22e9701ua006.dgn

LAST REVISION 07-08-10 | DATE PLOTTED => 16-JUL-2010 | TIME PLOTTED => 11:27

Dist	COUNTY	ROUTE	POST MILES TOTAL PROJECT	SHEET No.	TOTAL SHEETS
02	Sha,Teh	5	0.0/44.0, 0.0/42.1	52	77

ART 07-08-10
REGISTERED ELECTRICAL ENGINEER

7-12-10
PLANS APPROVAL DATE

REGISTERED PROFESSIONAL ENGINEER A.P. ROBLES No. E15293 Exp.3/31/11 ELECTRICAL STATE OF CALIFORNIA

THE STATE OF CALIFORNIA OR ITS OFFICERS OR AGENTS SHALL NOT BE RESPONSIBLE FOR THE ACCURACY OR COMPLETENESS OF ELECTRONIC COPIES OF THIS PLAN SHEET.

EXISTING INDUCTIVE LOOP DETECTORS AND AXLE SENSORS

ID No.	LOCATION	TYPE	DESCRIPTION	EQUIPMENT
R36	Sha-05-PM 27.62	RAMP	BRIDGE BAY NB OFF-RAMP AT END OF PAVED GORE	1 LOOP
R37	Sha-05-PM 27.60	RAMP	BRIDGE BAY SB ON-RAMP	1 LOOP
R38	Sha-05-PM 27.62	RAMP	BRIDGE BAY NB ON-RAMP	1 LOOP
R39	Sha-05-PM 27.77	RAMP	BRIDGE BAY SB OFF-RAMP	1 LOOP
R52	Sha-05-PM 36.95	RAMP	SALT CREEK NB ON-RAMP	1 LOOP
R53	Sha-05-PM 36.95	RAMP	SALT CREEK SB OFF-RAMP	1 LOOP
R54	Sha-05-PM 40.897	RAMP	ANTLERS SB ON-RAMP	1 LOOP
R55	Sha-05-PM 40.903	RAMP	ANTLERS NB OFF-RAMP	1 LOOP
R56	Sha-05-PM 41.268	RAMP	ANTLERS NB ON-RAMP	1 LOOP
R57	Sha-05-PM 41.318	RAMP	ANTLERS SB OFF-RAMP	1 LOOP
R58	Sha-05-PM 42.092	RAMP	LAKEHEAD NB OFF-RAMP	1 LOOP
R59	Sha-05-PM 42.188	RAMP	LAKEHEAD SB ON-RAMP	1 LOOP
R60	Sha-05-PM 42.529	RAMP	LAKEHEAD SB OFF-RAMP	1 LOOP
R61	Sha-05-PM 42.549	RAMP	LAKEHEAD NB ON-RAMP	1 LOOP
RA6	Sha-05-PM 43.11	SRRA	LAKEHEAD SRRA	1 LOOP

THIS PLAN ACCURATE FOR ELECTRICAL WORK ONLY.

TRAFFIC MONITORING STATION
E-7

REVISED BY | DATE REVISED
ARTURO ROBLES | KAREN CARMO
CALCULATED-DESIGNED BY | CHECKED BY
FUNCTIONAL SUPERVISOR: ROB STINGER

STATE OF CALIFORNIA - DEPARTMENT OF TRANSPORTATION
Caltrans ELECTRICAL DESIGN

P:\proj2\02\2E970_plans\pse\22e9701ua007.dgn

LAST REVISION 07-08-10 | DATE PLOTTED => 16-JUL-2010 | TIME PLOTTED => 11:31

DIST	COUNTY	ROUTE	POST MILES TOTAL PROJECT	SHEET NO.	TOTAL SHEETS
02	Sha,Teh	5	0.0/44.0, 0.0/42.1	53	77

Randell D. Hiatt
REGISTERED CIVIL ENGINEER

June 6, 2008
PLANS APPROVAL DATE

REGISTERED PROFESSIONAL ENGINEER
Randell D. Hiatt
No. C50200
Exp. 6-30-09
CIVIL
STATE OF CALIFORNIA

The State of California or its officers or agents shall not be responsible for the accuracy or completeness of electronic copies of this plan sheet.

To accompany plans dated 7-12-10

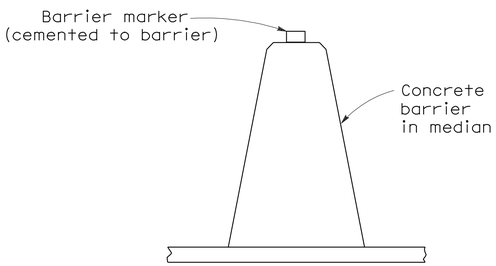

CONCRETE BARRIER TYPE 60 DELINEATION

See Notes 7 and 8

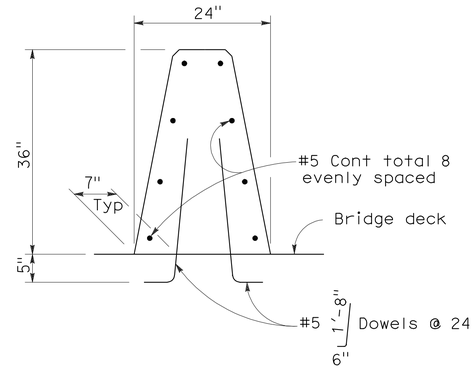

CONCRETE BARRIER TYPE 60A

Details similar to Type 60 except as noted.

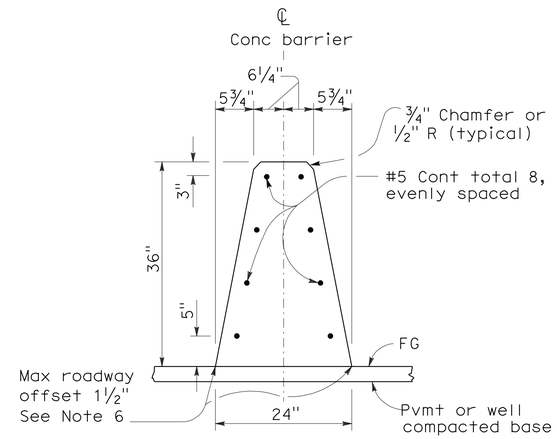

CONCRETE BARRIER TYPE 60

NOTES:

1. See Standard Plan A76B for details of Concrete Barrier Type 60 end anchors, connection to structures and transitions to Concrete Barrier Type 50 and Concrete Barrier Type 60S.
2. See Standard Plan A76C for Concrete Barrier Type 60 transitions at bridge column and sign pedestals.
3. Where glare screen is required on Concrete Barrier Type 60, use Concrete Barrier Type 60G.
4. Where the concrete barrier is added to the face of existing concrete structure, match existing weep holes.
5. Expansion joints in concrete barrier shall be located at all deck, pavement and principal wall joints. Expansion joint filler material shall be the same size as joint or ½" minimum.
6. Where roadway offset is greater than 1½", see Concrete Barrier Type 60C.
7. Barrier delineation to be used when required by the Special Provisions.
8. Spacing of barrier markers to match spacing of raised pavement markers on the adjacent median edgeline pavement delineation.
9. Reinforcing stirrup not required for roadway offsets less than 1'-0".
10. For roadway surfaces offset greater than 1½" to 3", no rebars required. For roadway surfaces offset greater than 3" to 8" use two #4 rebars at 3" above the lower roadway surface. For roadway surfaces offset greater than 8" to 12", use two #4 rebars at 3" above the lower roadway surface and two #4 rebars at 8" above the lower roadway surface. For roadway surfaces offset greater than 12" to 36", use two #4 rebars at 3" above the lower roadway surface and two #4 rebars at every 8" increment vertical spacing above the first two #4 rebars.

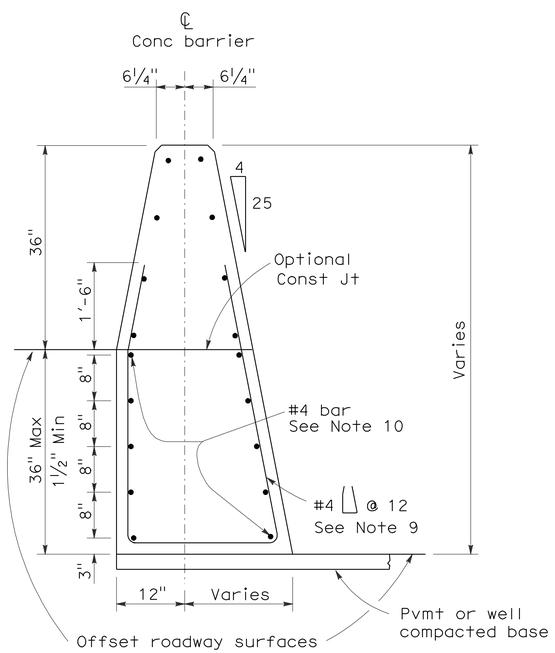

CONCRETE BARRIER TYPE 60C

Details similar to Type 60 except as noted.
Concrete barrier end anchor when necessary.
36" roadway surfaces offset shown.

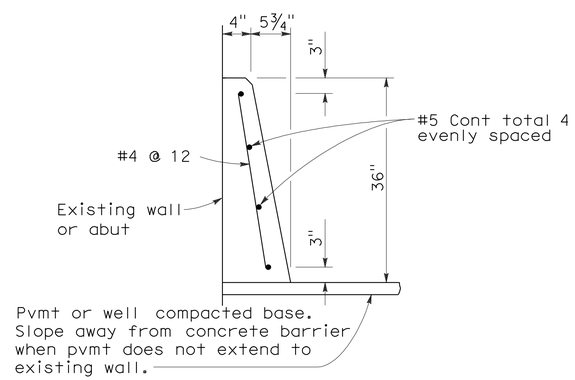

CONCRETE BARRIER TYPE 60D

STATE OF CALIFORNIA
DEPARTMENT OF TRANSPORTATION

CONCRETE BARRIER TYPE 60

NO SCALE

RSP A76A DATED JUNE 6, 2008 SUPERSEDES STANDARD PLAN A76A
DATED MAY 1, 2006 - PAGE 29 OF THE STANDARD PLANS BOOK DATED MAY 2006.

REVISED STANDARD PLAN RSP A76A

2006 REVISED STANDARD PLAN RSP A76A

5-21-08

DIST	COUNTY	ROUTE	POST MILES TOTAL PROJECT	SHEET NO.	TOTAL SHEETS
02	Sha,Teh	5	0.0/44.0, 0.0/42.1	54	77

Randell D. Hiatt
REGISTERED CIVIL ENGINEER

June 6, 2008
PLANS APPROVAL DATE

REGISTERED PROFESSIONAL ENGINEER
Randell D. Hiatt
No. C50200
Exp. 6-30-09
CIVIL
STATE OF CALIFORNIA

The State of California or its officers or agents shall not be responsible for the accuracy or completeness of electronic copies of this plan sheet.

To accompany plans dated 7-12-10

NOTES:

1. When necessary to place dike in front of face of guard railing, only Type C dike may be used. For dike details, see Standard Plan A87B.
2. For standard railing post embedment, see Standard Plans A77C3.
3. Guard railing delineation to be used where shown on the Project Plans.
4. When dike or curb is placed under guard railing, the maximum height of the dike or curb shall be 4". Mountable dike should not be used. For dike and curb details, see Revised Standard Plans RSP A87A and Standard Plan A87B.
5. For details of typical distance between the face of rail and hinge point, see Standard Plan A77C3.

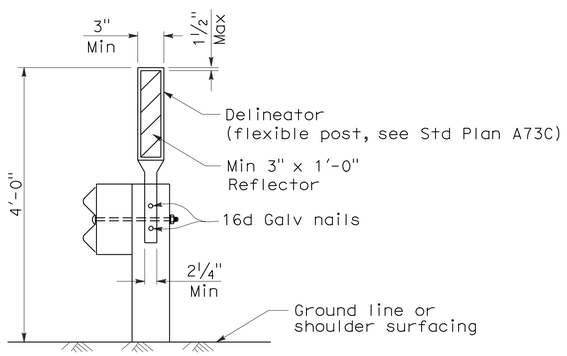

GUARD RAILING DELINEATION

See Note 3

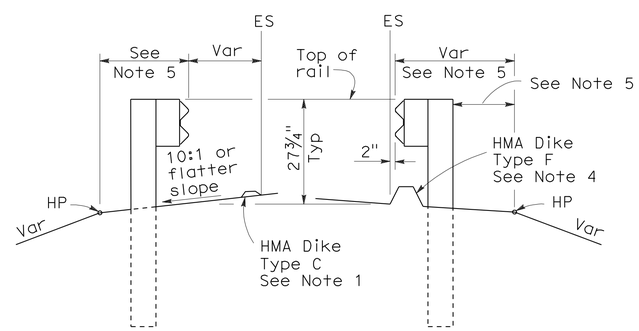

DIKE POSITIONING

See Note 1

STATE OF CALIFORNIA
DEPARTMENT OF TRANSPORTATION

METAL BEAM GUARD RAILING TYPICAL RAILING DELINEATION AND DIKE POSITIONING DETAILS

NO SCALE

RSP A77C4 DATED JUNE 6, 2008 SUPERSEDES STANDARD PLAN A77C4
DATED MAY 1, 2006 - PAGE 47 OF THE STANDARD PLANS BOOK DATED MAY 2006.

REVISED STANDARD PLAN RSP A77C4

2006 REVISED STANDARD PLAN RSP A77C4

12-10-07

DIST	COUNTY	ROUTE	POST MILES TOTAL PROJECT	SHEET NO.	TOTAL SHEETS
02	Sha,Teh	5	0.0/44.0, 0.0/42.1	55	77

Randell D. Hiatt
REGISTERED CIVIL ENGINEER

June 6, 2008
PLANS APPROVAL DATE

REGISTERED PROFESSIONAL ENGINEER
Randell D. Hiatt
No. C50200
Exp. 6-30-09
CIVIL
STATE OF CALIFORNIA

The State of California or its officers or agents shall not be responsible for the accuracy or completeness of electronic copies of this plan sheet.

To accompany plans dated 7-12-10

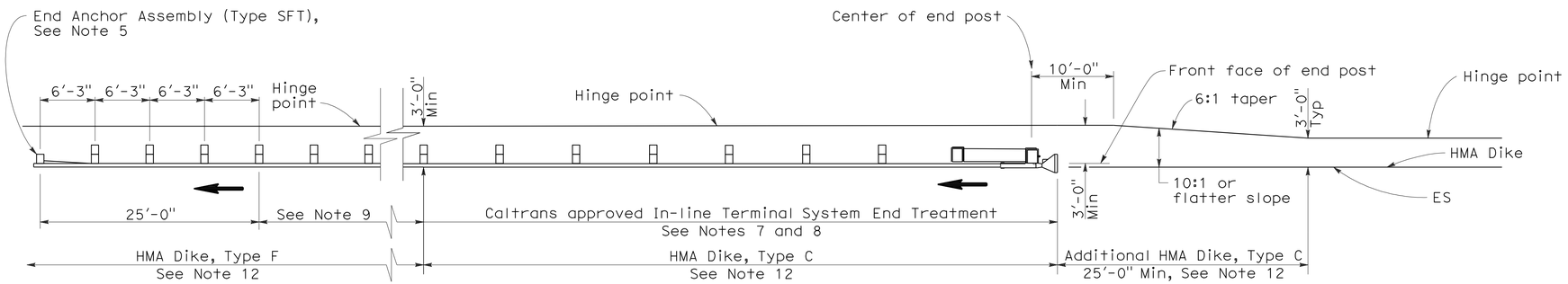

TYPE 11A LAYOUT

(EMBANKMENT GUARD INSTALLATION WITH IN-LINE END TREATMENT AT TRAFFIC APPROACH END OF RAILING)
See Note 6

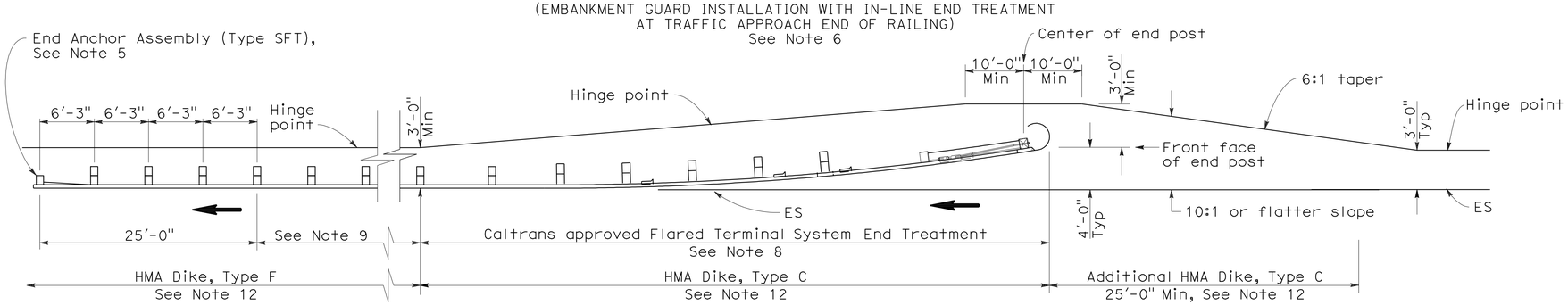

TYPE 11B LAYOUT

(EMBANKMENT GUARD RAILING INSTALLATION WITH FLARED END TREATMENT AT TRAFFIC APPROACH END OF RAILING)
See Note 6

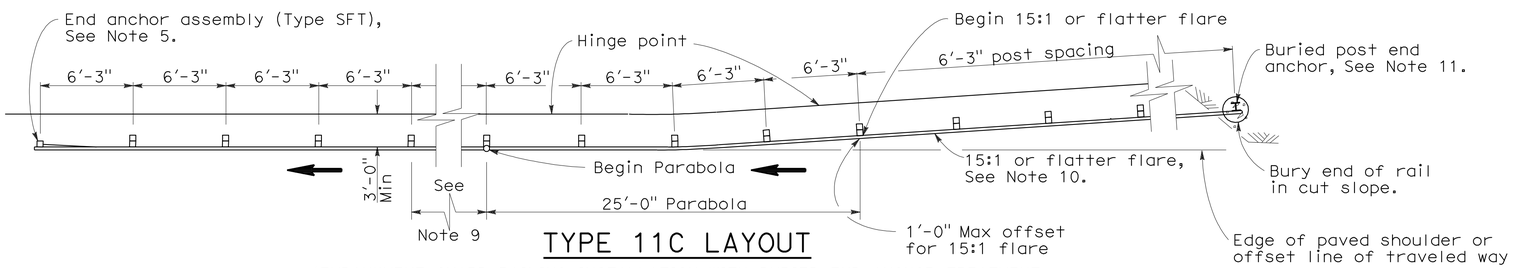

TYPE 11C LAYOUT

(EMBANKMENT GUARD RAILING INSTALLATION WITH BURIED END ANCHOR TREATMENT AT TRAFFIC APPROACH END OF RAILING)
See Notes 6 and 12

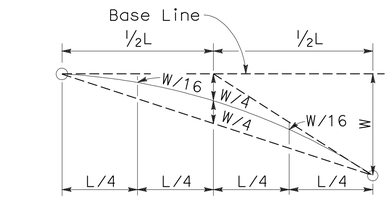

TYPICAL PARABOLIC LAYOUT

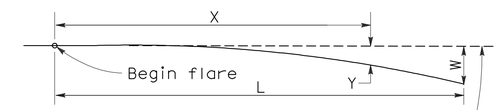

Base Line (Edge of paved shoulder or offset line of edge of traveled way)

$$Y = \frac{WX^2}{L^2}$$

Y = Offset from base line
W = Maximum offset
X = Distance along base line
L = Length of flare

PARABOLIC FLARE OFFSETS

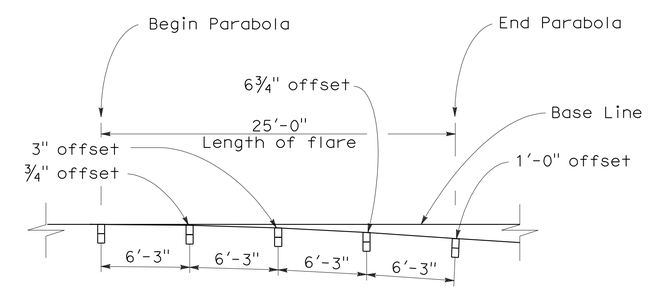

TYPICAL FLARE OFFSETS FOR 1 FOOT MAX END OFFSET

NOTES:

1. Line post, blocks and hardware to be used are shown on Standard Plans A77A1, A77A2, A77B1, A77C1, and A77C2.
2. Guard rail post spacing to be 6'-3" center to center, except as otherwise noted.
3. Except as noted, line posts are 6" x 8" x 6'-0" wood with 6" x 8" x 1'-2" wood blocks. W6 x 9 steel posts, 6'-0" in length, with 6" x 8" x 1'-2" notched wood blocks or recycled plastic blocks may be used for 6" x 8" x 6'-0" wood post with 6" x 8" x 1'-2" wood blocks where applicable and when specified.
4. Direction of adjacent traffic indicated by ⟶.
5. For End Anchor Assembly (Type SFT) details, see Standard Plan A77H1.
6. Layout Types 11A, 11B or 11C are typically used where guard railing is recommended to shield embankment slopes and a crashworthy end treatment is required for only one direction of traffic.
7. In-line Terminal System End Treatments are used where site conditions will not accommodate a flared end treatment.
8. The type of terminal system end treatment to be used will be shown on the Project Plans.
9. Dependent on site conditions (embankment height and side slope), construction of additional guard railing (length equal to multiples of 12'-6" with 6'-3" post spacing) may be advisable.
10. The 15:1 or flatter flare used with buried end anchors is based on the edge of the paved shoulder or offset line of edge of the traveled way. The length of guard railing within the 15:1 or flatter flare is based on site conditions and should be a length equal to multiples of 12'-6".
11. For details of the buried post end anchor used with Type 11C Layout, see Standard Plan A77I2.
12. Where placement of dike is required with guard railing installations, see Revised Standard Plan RSP A77C4 for dike positioning details.

STATE OF CALIFORNIA
DEPARTMENT OF TRANSPORTATION

METAL BEAM GUARD RAILING TYPICAL LAYOUTS FOR EMBANKMENTS

NO SCALE

RSP A77E1 DATED JUNE 6, 2008 SUPERSEDES STANDARD PLAN A77E1 DATED MAY 1, 2006 - PAGE 48 OF THE STANDARD PLANS BOOK DATED MAY 2006.

REVISED STANDARD PLAN RSP A77E1

2006 REVISED STANDARD PLAN RSP A77E1

12-10-07

DIST	COUNTY	ROUTE	POST MILES TOTAL PROJECT	SHEET NO.	TOTAL SHEETS
02	Sha,Teh	5	0.0/44.0, 0.0/42.1	56	77

Randell D. Hiatt
REGISTERED CIVIL ENGINEER

June 6, 2008
PLANS APPROVAL DATE

REGISTERED PROFESSIONAL ENGINEER
Randell D. Hiatt
No. C50200
Exp. 6-30-09
CIVIL
STATE OF CALIFORNIA

The State of California or its officers or agents shall not be responsible for the accuracy or completeness of electronic copies of this plan sheet.

To accompany plans dated 7-12-10

2006 REVISED STANDARD PLAN RSP A77E2

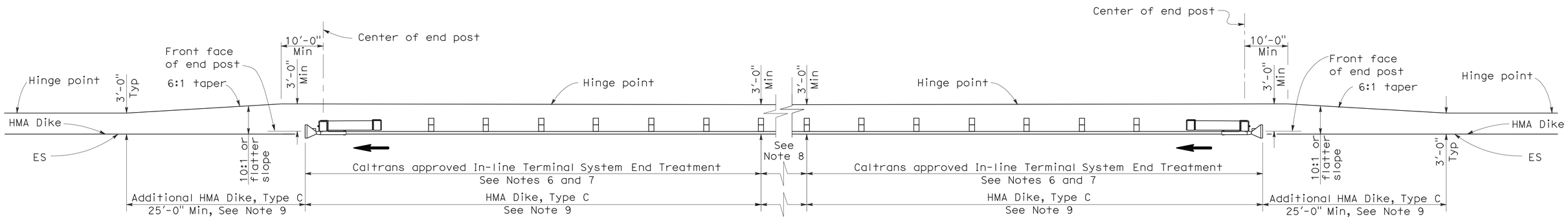

TYPE 11D LAYOUT

(EMBANKMENT GUARD RAILING INSTALLATION WITH IN-LINE END TREATMENT AT EACH END OF RAILING)
See Note 5

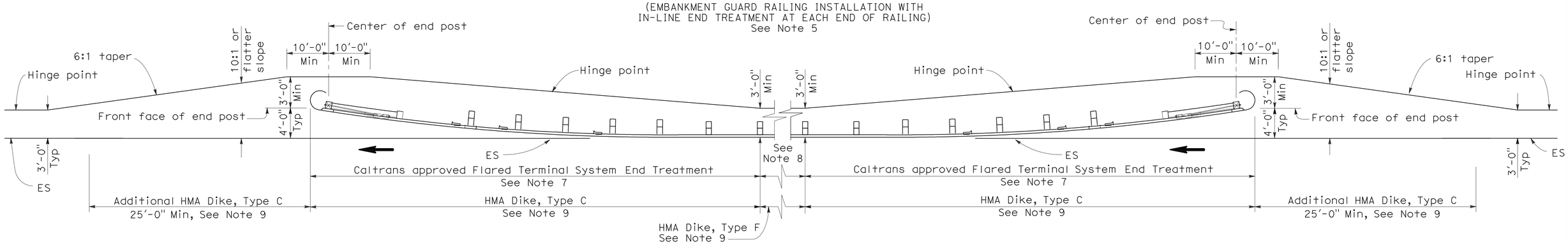

TYPE 11E LAYOUT

(EMBANKMENT GUARD RAILING INSTALLATION WITH FLARED END TREATMENT AT EACH END OF RAILING)
See Note 5

NOTES:

1. Line post, blocks and hardware to be used are shown on Standard Plans A77A1, A77A2, A77B1, A77C1 and A77C2.
2. Guard rail post spacing to be 6'-3" center to center, except as otherwise noted.
3. Except as noted, line posts are 6" x 8" x 6'-0" wood with 6" x 8" x 1'-2" wood blocks. W6 x 9 steel posts, 6'-0" in length, with 6" x 8" x 1'-2" notched wood blocks or plastic blocks may be used for 6" x 8" x 6'-0" wood post with 6" x 8" x 1'-2" wood blocks where applicable and when specified.
4. Direction of adjacent traffic indicated by ⟶.
5. Layout Types 11D through 11L, shown on the A77E Series of Revised Standard Plans, are typically used where guard railing is recommended to shield embankment slopes and a crashworthy end treatment is required for both directions of traffic.
6. In-line Terminal System End Treatments are used where site conditions will not accommodate a flared end treatment.
7. The type of terminal system end treatment to be used will be shown on the Project Plans.
8. Dependent on site conditions (embankment height and side slope), construction of additional guard railing (length equal to multiples of 12'-6" with 6'-3" post spacing) may be advisable.
9. Where placement of dike is required with guard railing installations, see Revised Standard Plan RSP A77C4 for dike positioning details.

STATE OF CALIFORNIA
DEPARTMENT OF TRANSPORTATION

METAL BEAM GUARD RAILING TYPICAL LAYOUTS FOR EMBANKMENTS

NO SCALE

RSP A77E2 DATED JUNE 6, 2008 SUPERSEDES STANDARD PLAN A77E2
DATED MAY 1, 2006 - PAGE 49 OF THE STANDARD PLANS BOOK DATED MAY 2006.

REVISED STANDARD PLAN RSP A77E2

12-10-07

DIST	COUNTY	ROUTE	POST MILES TOTAL PROJECT	SHEET NO.	TOTAL SHEETS
02	Sha,Teh	5	0.0/44.0, 0.0/42.1	57	77

Randell D. Hiatt
REGISTERED CIVIL ENGINEER

June 6, 2008
PLANS APPROVAL DATE

REGISTERED PROFESSIONAL ENGINEER
Randell D. Hiatt
No. C50200
Exp. 6-30-09
CIVIL
STATE OF CALIFORNIA

The State of California or its officers or agents shall not be responsible for the accuracy or completeness of electronic copies of this plan sheet.

To accompany plans dated 7-12-10

2006 REVISED STANDARD PLAN RSP A77E3

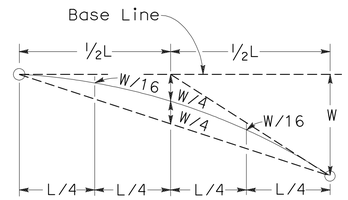

TYPICAL PARABOLIC LAYOUT

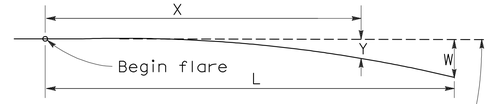

Base Line (Edge of paved shoulder or offset line of edge of traveled way)

$$Y = \frac{WX^2}{L^2}$$

Y = Offset from base line
W = Maximum offset
X = Distance along base line
L = Length of flare

PARABOLIC FLARE OFFSETS

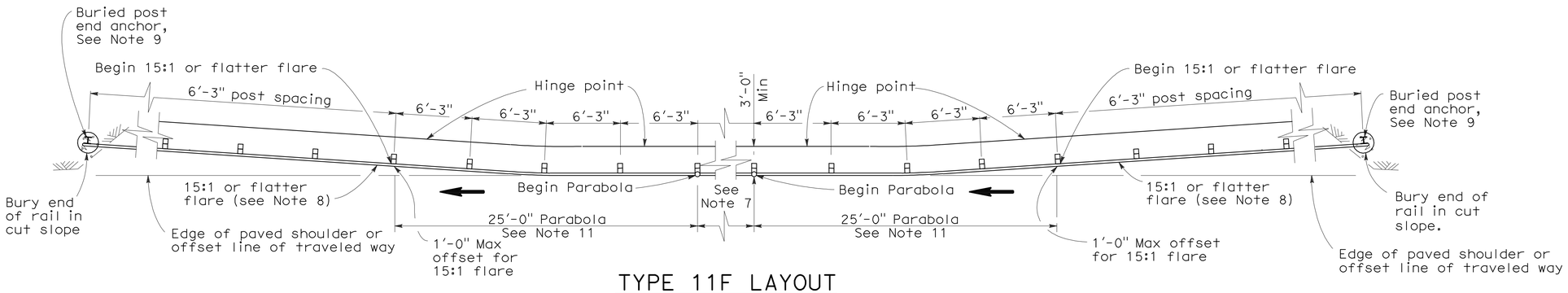

TYPE 11F LAYOUT

(EMBANKMENT GUARD RAILING INSTALLATION WITH A
BURIED END ANCHOR TREATMENT AT EACH END OF RAILING)
See Notes 5 and 10

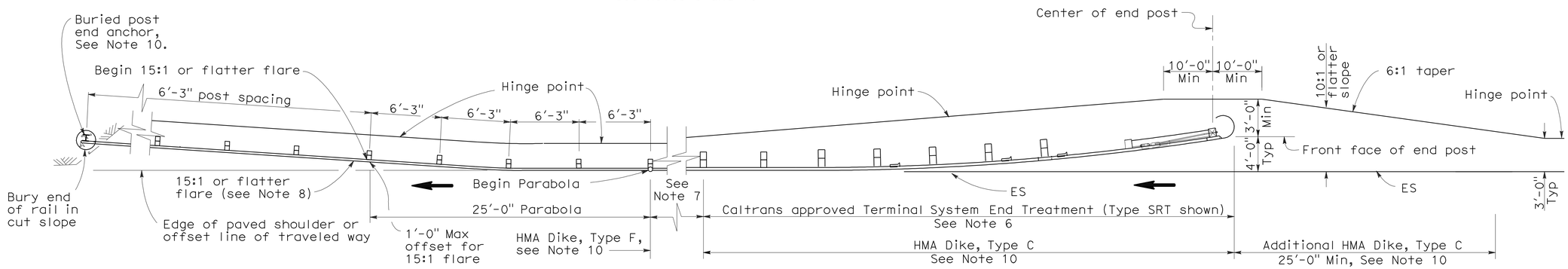

TYPE 11G LAYOUT

(EMBANKMENT GUARD RAILING INSTALLATION WITH FLARED END TREATMENT
AND A BURIED END ANCHOR TREATMENT AT THE ENDS OF RAILING)
See Notes 5 and 10

NOTES:

1. Line post, blocks and hardware to be used are shown on Standard Plans A77A1, A77A2, A77B1, A77C1 and A77C2.
2. Guard rail post spacing to be 6'-3" center to center, except as otherwise noted.
3. Except as noted, line posts are 6" x 8" x 6'-0" wood with 6" x 8" x 1'-2" wood blocks. W6 x 9 steel posts, 6'-0" in length, with 6" x 8" x 1'-2" notched wood blocks or plastic blocks may be used for 6" x 8" x 6'-0" wood post with 6" x 8" x 1'-2" wood blocks where applicable and when specified.
4. Direction of adjacent traffic indicated by ⟶.
5. Layout Types 11D through 11L, shown on the A77E Series of Revised Standard Plans, are typically used where guard railing is recommended to shield embankment slopes and a crashworthy end treatment is required for both directions of traffic.
6. The type of terminal system end treatment to be used will be shown on the Project Plans.
7. Dependent on site conditions (embankment height and side slope), construction of additional guard railing (length equal to multiples of 12'-6" with 6'-3" post spacing) may be advisable.
8. The 15:1 or flatter flare used with buried end anchors is based on the edge of the paved shoulder or offset line of edge of the traveled way. The length of guard railing within the 15:1 or flatter flare is based on site conditions and should be a length equal to multiples of 12'-6".
9. For details of the buried post end anchor used with Type 11F and 11G Layouts, see Standard Plan A77I2.
10. Where placement of dike is required with guard railing installations, see Revised Standard Plan RSP A77C4 for dike positioning details.
11. For typical flare offsets for 25'-0" length parabola with maximum offset of 1'-0", see Revised Standard Plan RSP A77E1.

STATE OF CALIFORNIA
DEPARTMENT OF TRANSPORTATION

METAL BEAM GUARD RAILING TYPICAL LAYOUTS FOR EMBANKMENTS

NO SCALE

RSP A77E3 DATED JUNE 6, 2008 SUPERSEDES STANDARD PLAN A77E3
DATED MAY 1, 2006 - PAGE 50 OF THE STANDARD PLANS BOOK DATED MAY 2006.

REVISED STANDARD PLAN RSP A77E3

12-10-07

DIST	COUNTY	ROUTE	POST MILES TOTAL PROJECT	SHEET NO.	TOTAL SHEETS
02	Sha,Teh	5	0.0/44.0, 0.0/42.1	58	77

Randell D. Hiatt
REGISTERED CIVIL ENGINEER

June 6, 2008
PLANS APPROVAL DATE

REGISTERED PROFESSIONAL ENGINEER
Randell D. Hiatt
No. C50200
Exp. 6-30-09
CIVIL
STATE OF CALIFORNIA

The State of California or its officers or agents shall not be responsible for the accuracy or completeness of electronic copies of this plan sheet.

To accompany plans dated 7-12-10

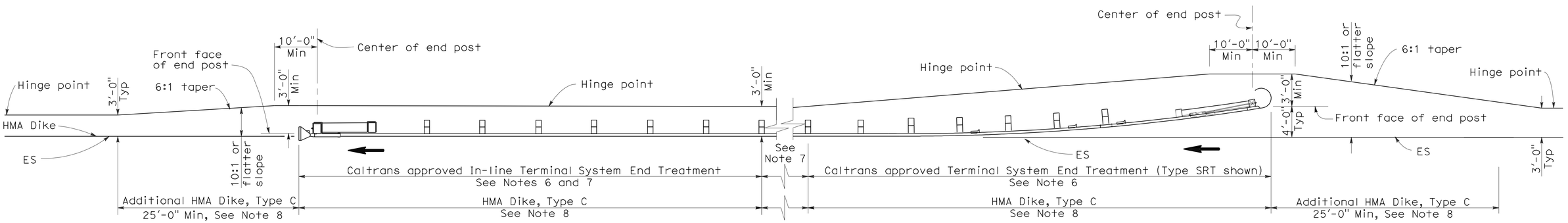

TYPE 11H LAYOUT

(EMBANKMENT GUARD RAILING INSTALLATION WITH FLARED END TREATMENT
AND AN IN-LINE TREATMENT AT THE ENDS OF RAILING)
See Notes 5 and 8

NOTES:

1. Line post, blocks and hardware to be used are shown on Standard Plans A77A1, A77A2, A77B1, A77C1 and A77C2.
2. Guard rail post spacing to be 6'-3" center to center, except as otherwise noted.
3. Except as noted, line posts are 6" x 8" x 6'-0" wood with 6" x 8" x 1'-2" wood blocks. W6 x 9 steel posts, 6'-0" in length, with 6" x 8" x 1'-2" notched wood blocks or plastic blocks may be used for 6" x 8" x 6'-0" wood post with 6" x 8" x 1'-2" wood blocks where applicable and when specified.
4. Direction of adjacent traffic indicated by ➡.
5. Layout Types 11D through 11L, shown on the A77E Series of Revised Standard Plans, are typically used where guard railing is recommended to shield embankment slopes and a crashworthy end treatment is required for both directions of traffic.
6. The type of terminal system end treatment to be used will be shown on the Project Plans.
7. Dependent on site conditions (embankment height and side slope), construction of additional guard railing (length equal to multiples of 12'-6" with 6'-3" post spacing) may be advisable.
8. Where placement of dike is required with guard railing installations, see Revised Standard Plan RSP A77C4 for dike positioning details.

STATE OF CALIFORNIA
DEPARTMENT OF TRANSPORTATION

METAL BEAM GUARD RAILING TYPICAL LAYOUTS FOR EMBANKMENTS

NO SCALE

RSP A77E4 DATED JUNE 6, 2008 SUPERSEDES STANDARD PLAN A77E4
DATED MAY 1, 2006 - PAGE 51 OF THE STANDARD PLANS BOOK DATED MAY 2006.

REVISED STANDARD PLAN RSP A77E4

2006 REVISED STANDARD PLAN RSP A77E4

DIST	COUNTY	ROUTE	POST MILES TOTAL PROJECT	SHEET NO.	TOTAL SHEETS
02	Sha,Teh	5	0.0/44.0, 0.0/42.1	59	77

Randell D. Hiatt
REGISTERED CIVIL ENGINEER

June 6, 2008
PLANS APPROVAL DATE

REGISTERED PROFESSIONAL ENGINEER
Randell D. Hiatt
No. C50200
Exp. 6-30-09
CIVIL
STATE OF CALIFORNIA

The State of California or its officers or agents shall not be responsible for the accuracy or completeness of electronic copies of this plan sheet.

To accompany plans dated 7-12-10

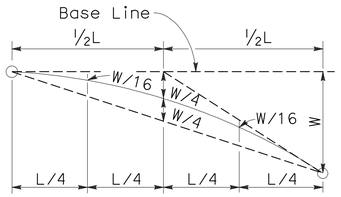

TYPICAL PARABOLIC LAYOUT

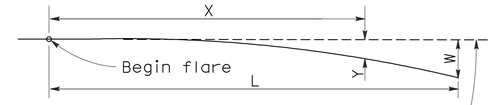

Base Line (Edge of paved shoulder or offset line of edge of traveled way)

$$Y = \frac{WX^2}{L^2}$$

Y = Offset from base line
W = Maximum offset
X = Distance along base line
L = Length of flare

PARABOLIC FLARE OFFSETS

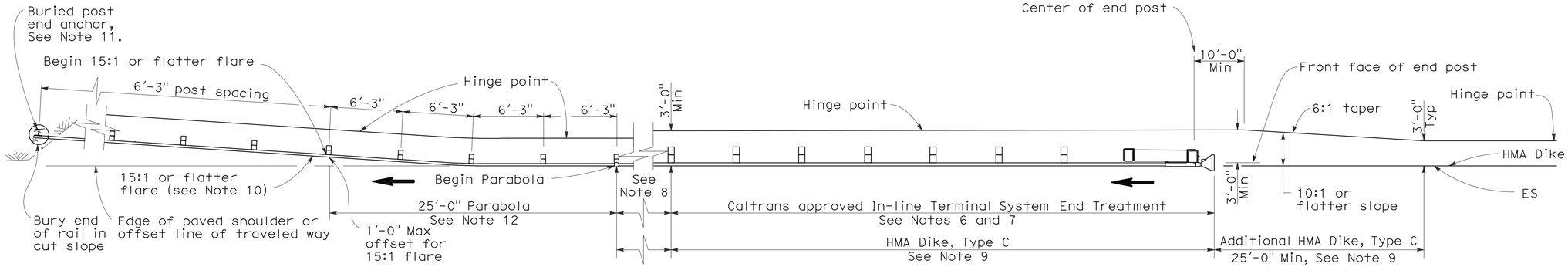

TYPE 11I LAYOUT

(EMBANKMENT GUARD RAILING INSTALLATION WITH IN-LINE END TREATMENT AND A BURIED END ANCHOR TREATMENT AT THE ENDS OF RAILING)
See Note 5

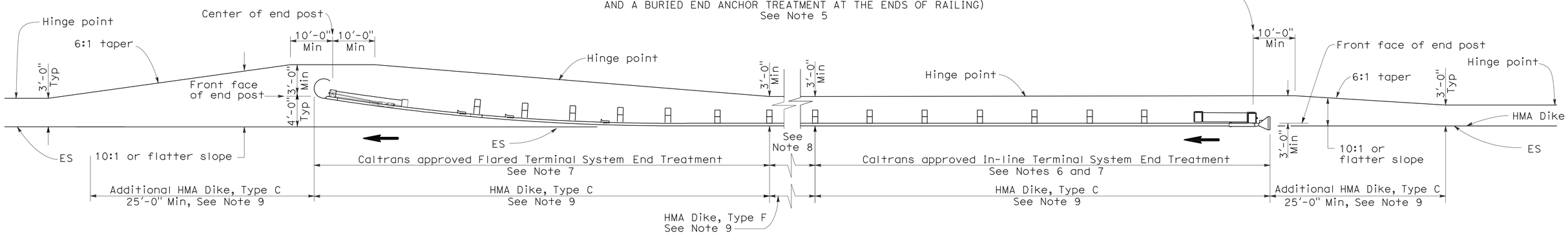

TYPE 11J LAYOUT

(EMBANKMENT GUARD RAILING INSTALLATION WITH IN-LINE END TREATMENT AND FLARED END TREATMENT AT THE ENDS OF RAILING)
See Note 5

NOTES:

1. Line post, blocks and hardware to be used are shown on Standard Plans A77A1, A77A2, A77B1, A77C1 and A77C2.
2. Guard rail post spacing to be 6'-3" center to center, except as otherwise noted.
3. Except as noted, line posts are 6" x 8" x 6'-0" wood with 6" x 8" x 1'-2" wood blocks. W6 x 9 steel posts, 6'-0" in length, with 6" x 8" x 1'-2" notched wood blocks or plastic blocks may be used for 6" x 8" x 6'-0" wood post with 6" x 8" x 1'-2" wood blocks where applicable and when specified.
4. Direction of adjacent traffic indicated by ⟶.
5. Layout Types 11D through 11L, shown on the A77E Series of Revised Standard Plans, are typically used where guard railing is recommended to shield embamkment slopes and a crashworthy end treatment is required for both directions of traffic.
6. In-line Terminal System End Treatments are used where site conditions will not accommodate a flared end treatment.
7. The type of terminal system end treatment to be used will be shown on the Project Plans.
8. Dependent on site conditions (embankment height and side slope), construction of additional guard railing (length equal to multiples of 12'-6" with 6'-3" post spacing) may be advisable.
9. Where placement of dike is required with guard railing installations, see Revised Standard Plan RSP A77C4 for dike positioning details.
10. The 15:1 or flatter flare used with buried end anchors is based on the edge of the paved shoulder or offset line of edge of the traveled way. The length of guard railing within the 15:1 or flatter flare is based on site conditions and should be a length equal to multiples of 12'-6".
11. For details of the buried post end anchor used with Type 11I Layout, see Standard Plan A77I2.
12. For typical flare offsets for 25'-0" length parabola with maximum offset of 1'-0", see Revised Standard Plan RSP A77E1.

STATE OF CALIFORNIA
DEPARTMENT OF TRANSPORTATION

METAL BEAM GUARD RAILING TYPICAL LAYOUTS FOR EMBANKMENTS

NO SCALE

RSP A77E5 DATED JUNE 6, 2008 SUPERSEDES STANDARD PLAN A77E5 DATED MAY 1, 2006 - PAGE 52 OF THE STANDARD PLANS BOOK DATED MAY 2006.

REVISED STANDARD PLAN RSP A77E5

2006 REVISED STANDARD PLAN RSP A77E5

12-10-07

DIST	COUNTY	ROUTE	POST MILES TOTAL PROJECT	SHEET NO.	TOTAL SHEETS
02	Sha,Teh	5	0.0/44.0, 0.0/42.1	60	77

Randell D. Hiatt
REGISTERED CIVIL ENGINEER

June 6, 2008
PLANS APPROVAL DATE

REGISTERED PROFESSIONAL ENGINEER
Randell D. Hiatt
No. C50200
Exp. 6-30-09
CIVIL
STATE OF CALIFORNIA

The State of California or its officers or agents shall not be responsible for the accuracy or completeness of electronic copies of this plan sheet.

To accompany plans dated 7-12-10

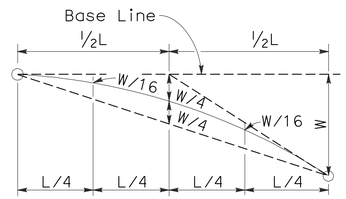

TYPICAL PARABOLIC LAYOUT

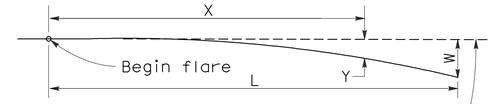

Base Line (Edge of paved shoulder or offset line of edge of traveled way)

$$Y = \frac{WX^2}{L^2}$$

Y = Offset from base line
W = Maximum offset
X = Distance along base line
L = Length of flare

PARABOLIC FLARE OFFSETS

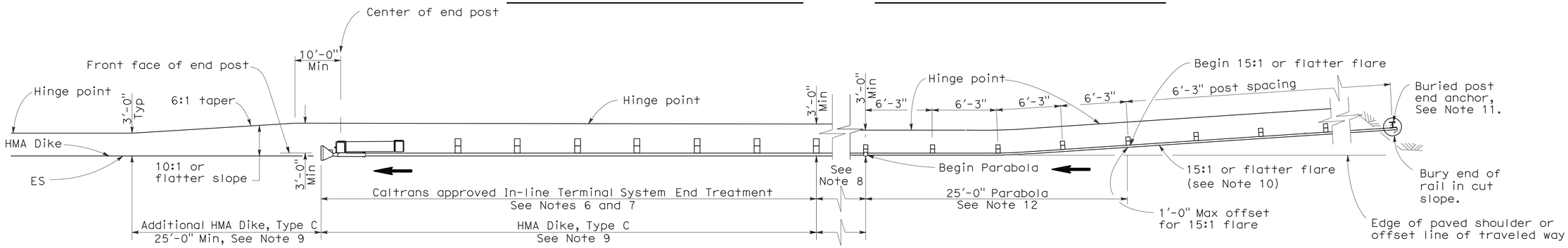

TYPE 11K LAYOUT

(EMBANKMENT GUARD RAILING INSTALLATION WITH A BURIED END ANCHOR TREATMENT
AND AN IN-LINE END TREATMENT AT THE ENDS OF RAILING)
See Note 5

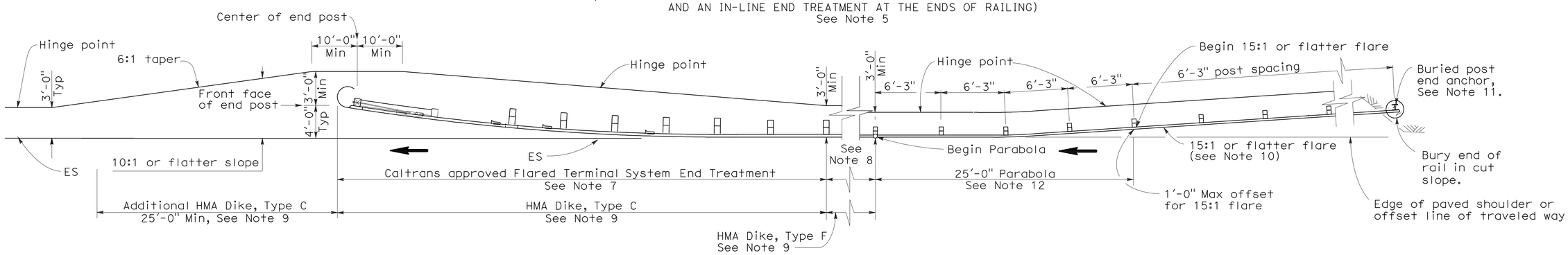

TYPE 11L LAYOUT

(EMBANKMENT GUARD RAILING INSTALLATION WITH A BURIED END ANCHOR TREATMENT
AND A FLARED END TREATMENT AT THE ENDS OF RAILING)
See Note 5

NOTES:

1. Line post, blocks and hardware to be used are shown on Standard Plans A77A1, A77A2, A77B1, A77C1 and A77C2.
2. Guard rail post spacing to be 6'-3" center to center, except as otherwise noted.
3. Except as noted, line posts are 6" x 8" x 6'-0" wood with 6" x 8" x 1'-2" wood blocks. W6 x 9 steel posts, 6'-0" in length, with 6" x 8" x 1'-2" notched wood blocks or plastic blocks may be used for 6" x 8" x 6'-0" wood post with 6" x 8" x 1'-2" wood blocks where applicable and when specified.
4. Direction of adjacent traffic indicated by ⟶.
5. Layout Types 11D through 11L, shown on the A77E Series of Revised Standard Plans, are typically used where guard railing is recommended to shield embamkment slopes and a crashworthy end treatment is required for both directions of traffic.
6. In-line Terminal System End Treatments are used where site conditions will not accommodate a flared end treatment.
7. The type of terminal system end treatment to be used will be shown on the Project Plans.
8. Dependent on site conditions (embankment height and side slope), construction of additional guard railing (length equal to multiples of 12'-6" with 6'-3" post spacing) may be advisable.
9. Where placement of dike is required with guard railing installations, see Revised Standard Plan RSP A77C4 for dike positioning details.
10. The 15:1 or flatter flare used with buried end anchors is based on the edge of the paved shoulder or offset line of edge of the traveled way. The length of guard railing within the 15:1 or flatter flare is based on site conditions and should be a length equal to multiples of 12'-6".
11. For details of the buried post end anchor used with Type 11K and 11L Layouts, see Standard Plan A77I2.
12. For typical flare offsets for 25'-0" length parabola with maximum offset of 1'-0", see Revised Standard Plan RSP A77E1.

STATE OF CALIFORNIA
DEPARTMENT OF TRANSPORTATION

METAL BEAM GUARD RAILING TYPICAL LAYOUTS FOR EMBANKMENTS

NO SCALE

RSP A77E6 DATED JUNE 6, 2008 SUPERSEDES STANDARD PLAN A77E6
DATED MAY 1, 2006 - PAGE 53 OF THE STANDARD PLANS BOOK DATED MAY 2006.

REVISED STANDARD PLAN RSP A77E6

2006 REVISED STANDARD PLAN RSP A77E6

12-10-07

DIST	COUNTY	ROUTE	POST MILES TOTAL PROJECT	SHEET NO.	TOTAL SHEETS
02	Sha,Teh	5	0.0/44.0, 0.0/42.1	61	77

Randell D. Hiatt
REGISTERED CIVIL ENGINEER

June 6, 2008
PLANS APPROVAL DATE

REGISTERED PROFESSIONAL ENGINEER
Randell D. Hiatt
No. C50200
Exp. 6-30-09
CIVIL
STATE OF CALIFORNIA

The State of California or its officers or agents shall not be responsible for the accuracy or completeness of electronic copies of this plan sheet.

To accompany plans dated 7-12-10

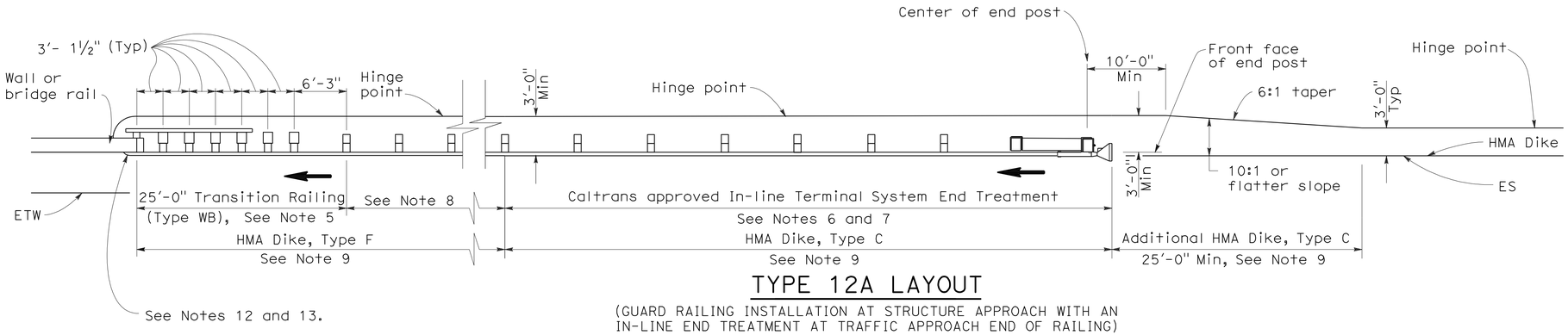

TYPE 12A LAYOUT

(GUARD RAILING INSTALLATION AT STRUCTURE APPROACH WITH AN IN-LINE END TREATMENT AT TRAFFIC APPROACH END OF RAILING)
See Notes 10

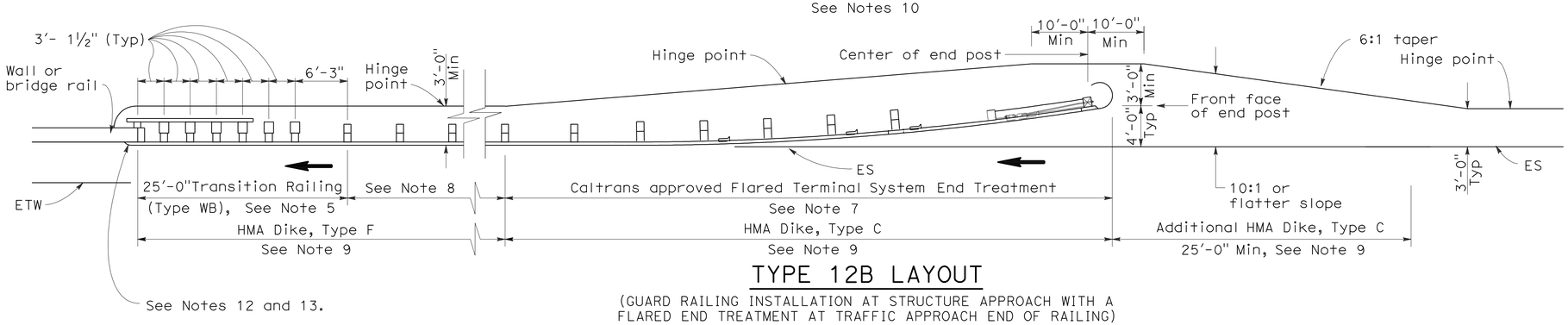

TYPE 12B LAYOUT

(GUARD RAILING INSTALLATION AT STRUCTURE APPROACH WITH A FLARED END TREATMENT AT TRAFFIC APPROACH END OF RAILING)
See Notes 10

NOTES:

1. Line post, blocks and hardware to be used are shown on Standard Plans A77A1, A77A2, A77B1, A77C1 and A77C2.
2. Guard rail post spacing to be 6'-3" center to center, except as otherwise noted.
3. Except as noted, line posts are 6" x 8" x 6'-0" wood with 6" x 8" x 1'-2" wood blocks. W6 x 9 steel posts, 6'-0" in length, with 6" x 8" x 1'-2" notched wood blocks or plastic blocks may be used for 6" x 8" x 6'-0" wood posts with 6" x 8" x 1'-2" wood blocks where applicable and when specified.
4. Direction of adjacent traffic indicated by ➡.
5. For Transition Railing (Type WB) details for Types 12A and 12B Layouts, see Standard Plan A77J4.
6. In-line Terminal System End Treatments are used where site conditions will not accommodate a flared end treatment.
7. The type of terminal system end treatment to be used will be shown on the Project Plans.
8. Dependent on site conditions (embankment height, side slopes, or other fixed objects), it may be advisable to construct additional guard railing (a length equal to multiples of 12'-6" with 6'-3" post spacing) between the transition railing and end treatment.
9. Where placement of dike is required with guard railing installations, see Revised Standard Plan RSP A77C4 for dike positioning details.
10. Type 12A or Type 12B Layouts are typically used:
    a. To the right of approaching traffic, at the end of a structure, on two-lane conventional highway where the roadbed width across the structure is less than 40 feet.
    b. To the left of approaching traffic, at the end of a structure, on two-lane conventional highway where the roadbed width across the structure is less than 40 feet.
    c. To the right of approaching traffic at the end of each structure on multilane freeways or expressways with separate adjacent or parallel bridges.
    d. To the right of approaching traffic at the end of the structure on multilane freeways or expressways with decked median on the bridge.
11. See Revised Standard Plan RSP A77F3 for typical layout used left of approaching traffic at the ends of each structure on multilane freeways or expressways with separate adjacent or parallel bridges.
12. For additional details of typical connections to bridge rail, see Connection Detail AA on Revised Standard Plans RSP A77J1 and RSP A77J2 and Connection Detail FF on Standard Plans A77K1 and A77K2.
13. For additional details of a typical connection to walls or abutments, see Standard Plan A77J3.

STATE OF CALIFORNIA
DEPARTMENT OF TRANSPORTATION

METAL BEAM GUARD RAILING TYPICAL LAYOUTS FOR STRUCTURE APPROACH

NO SCALE

RSP A77F1 DATED JUNE 6, 2008 SUPERSEDES STANDARD PLAN A77F1
DATED MAY 1, 2006 - PAGE 54 OF THE STANDARD PLANS BOOK DATED MAY 2006.

REVISED STANDARD PLAN RSP A77F1

2006 REVISED STANDARD PLAN RSP A77F1

12-10-07

DIST	COUNTY	ROUTE	POST MILES TOTAL PROJECT	SHEET NO.	TOTAL SHEETS
02	Sha,Teh	5	0.0/44.0, 0.0/42.1	62	77

Randell D. Hiatt
REGISTERED CIVIL ENGINEER

June 6, 2008
PLANS APPROVAL DATE

REGISTERED PROFESSIONAL ENGINEER
Randell D. Hiatt
No. C50200
Exp. 6-30-09
CIVIL
STATE OF CALIFORNIA

The State of California or its officers or agents shall not be responsible for the accuracy or completeness of electronic copies of this plan sheet.

To accompany plans dated 7-12-10

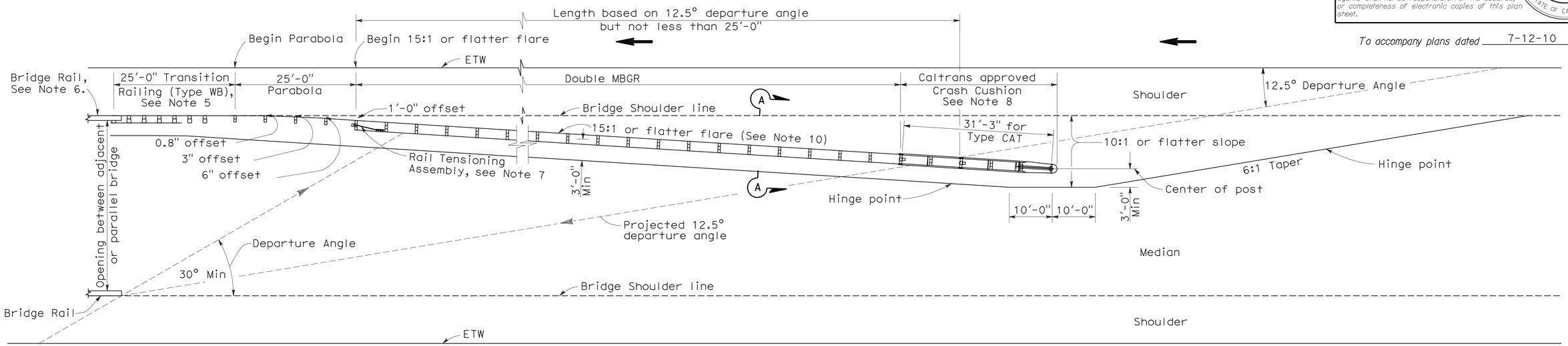

TYPE 12E LAYOUT

See Note 10

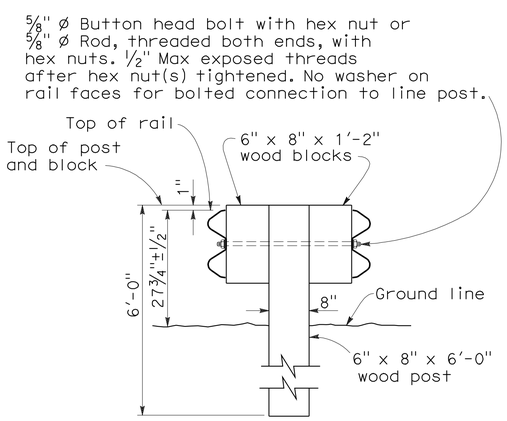

SECTION A-A

TYPICAL DOUBLE METAL BEAM GUARD RAILING

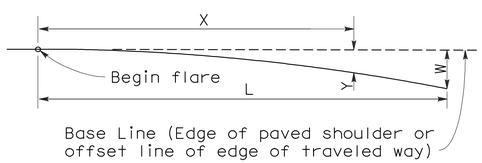

$$Y = \frac{WX^2}{L^2}$$

Y = Offset from base line
W = Maximum offset
X = Distance along base line
L = Length of flare

PARABOLIC FLARE OFFSETS

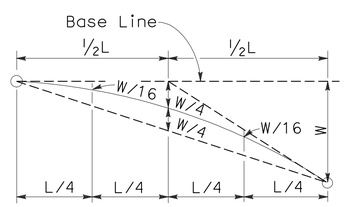

TYPICAL PARABOLIC LAYOUT

NOTES:

1. Line post, blocks and hardware to be used are shown on Standard Plans A77A1, A77A2, A77B1, A77C1 and A77C2.
2. Guard railing post spacing to be 6'-3" center to center, except as otherwise noted.
3. Except as noted, line posts are 6" x 8" x 6'-0" wood with 6" x 8" x 1'-2" wood blocks. W6 x 9 steel posts, 6'-0" in length, with 6" x 8" x 1'-2" notched wood blocks or notched recycled plastic blocks may be used for 6" x 8" x 6'-0" wood line posts with 6" x 8" x 1'-2" wood blocks where applicable and when specified.
4. Direction of adjacent traffic indicated by ⟶.
5. For Transition Railing (Type WB) details, see Standard Plan A77J4.
6. For additional details of a typical connection to bridge rail, see Connection Detail AA on Revised Standard Plan RSP A77J1.
7. For Rail Tensioning Assembly details, see Standard Plan A77H2.
8. The type of Crash Cushion to be used will be shown on the Project Plans.
9. Type 12E Layout is typically used left of approaching traffic at the end of each structure on multilane freeways or expressways where a median type barrier is not constructed between separated roadbeds.
10. The 15:1 or flatter flare is measured off of the edge of traveled way.

STATE OF CALIFORNIA
DEPARTMENT OF TRANSPORTATION

METAL BEAM GUARD RAILING TYPICAL LAYOUTS FOR STRUCTURE APPROACH

NO SCALE

RSP A77F3 DATED JUNE 6, 2008 SUPERSEDES STANDARD PLAN A77F3
DATED MAY 1, 2006 - PAGE 56 OF THE STANDARD PLANS BOOK DATED MAY 2006.

REVISED STANDARD PLAN RSP A77F3

2006 REVISED STANDARD PLAN RSP A77F3

12-10-07

DIST	COUNTY	ROUTE	POST MILES TOTAL PROJECT	SHEET NO.	TOTAL SHEETS
02	Sha,Teh	5	0.0/44.0, 0.0/42.1	63	77

Randell D. Hiatt
REGISTERED CIVIL ENGINEER

June 6, 2008
PLANS APPROVAL DATE

REGISTERED PROFESSIONAL ENGINEER Randell D. Hiatt No. C50200 Exp. 6-30-09 CIVIL STATE OF CALIFORNIA

The State of California or its officers or agents shall not be responsible for the accuracy or completeness of electronic copies of this plan sheet.

To accompany plans dated 7-12-10

NOTES:

1. Line post, blocks and hardware to be used are shown on Standard Plans A77A1, A77A2, A77B1, A77C1 and A77C2.
2. Guard railing post spacing to be 6′-3″ center to center, except as otherwise noted.
3. Except as noted, line posts are 6″ x 8″ x 6′-0″ wood with 6″ x 8″ x 1′-2″ wood blocks. W6 x 9 steel posts, 6′-0″ in length, with 6″ x 8″ x 1′-2″ notched wood blocks or notched recycled plastic blocks may be used for 6″ x 8″ x 6′-0″ wood line posts with 6″ x 8″ x 1′-2″ wood blocks where applicable and when specified.
4. A 4′-0″ minimum clearance is required between the face of the railing and the face of a fixed object located directly behind standard guard railing sections with post spacing of 6′-3″. Construct guard railing as shown in the detail "Strengthened Railing Sections for Fixed Objects" on this plan, where the clearance between the face of the railing and the face of a fixed object is less than 4′-0″, but not less than 2′-3″. Where the clearance is less than 2′-3″, a concrete wall or barrier should be constructed to shield the fixed object(s).
5. Direction of adjacent traffic indicated by ➡.
6. For End Anchor Assembly (Type SFT) details, see Standard Plan A77H1.
7. For details of Rail Tensioning Assembly, see Standard Plan A77H2.
8. The type of crash cushion to be used will be shown on the Project Plans.
9. Type 14A layout is typically used on multilane freeways or expressways to shield fixed objects where a median type barrier is not constructed between the separated roadbeds.
10. For typical flare offsets for 25′-0″ length parabola with maximum offset of 1′-0″, see Revised Standard Plan RSP A77E1.
11. The 15:1 or flatter flare is measured off of the edge of traveled way.
12. W6 x 15 steel post, 8′-0″ in length, with 8″ x 8″ x 1′-2″ notched wood block or notched recycled plastic block may be used in place of the 10″ x 10″ x 8′-0″ wood post with 8″ x 8″ x 1′-2″ wood block shown in the "Strengthened Railing Sections Detail".

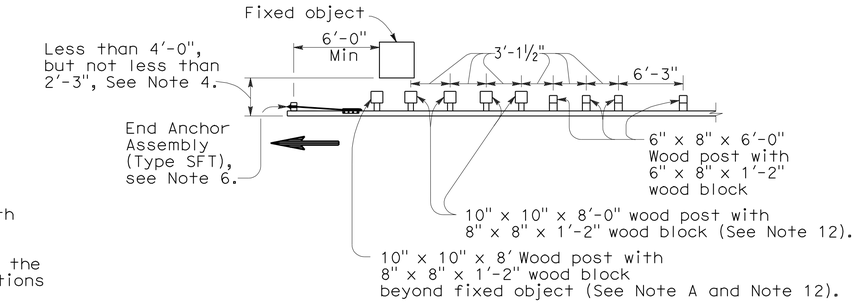

NOTE A: For a series of fixed objects (bridge columns, overhead sign supports, etc.) additional 10″ x 10″ x 8′-0″ wood post with 8″ x 8″ x 1′-2″ wood blocks at 3′-1½″ center to center spacing are to be used between fixed objects.

STRENGTHENED RAILING SECTIONS FOR FIXED OBJECT

Use strengthened railing sections with Type 14A layout where minimum clearance between the face of the guard railing and fixed object(s) is less than 4′-0″, but not less than 2′-3″, See Note 4.

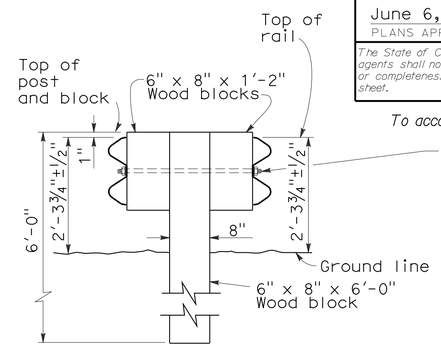

SECTION A-A
TYPICAL DOUBLE METAL BEAM GUARD RAILING

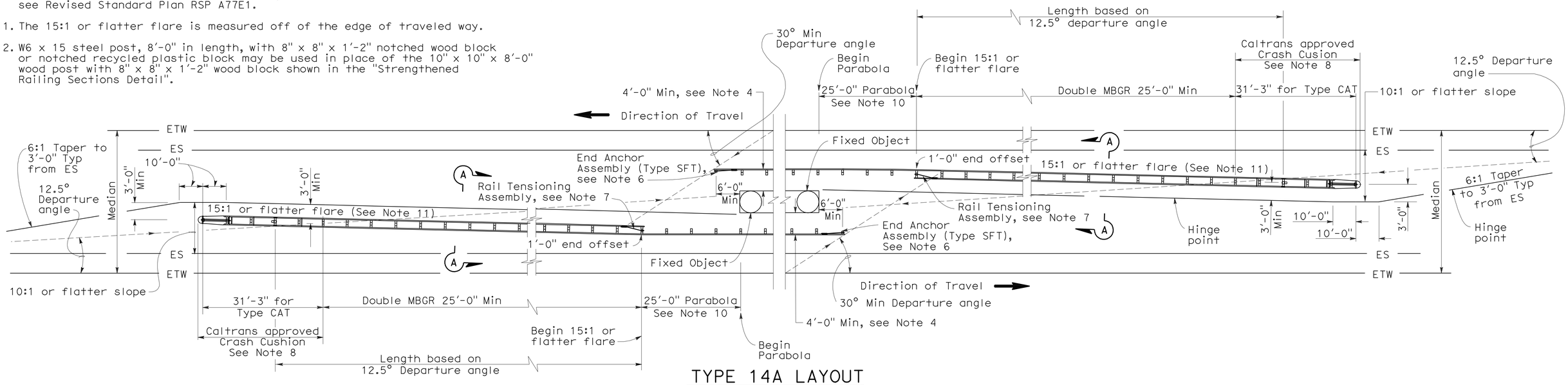

TYPE 14A LAYOUT

See Note 9

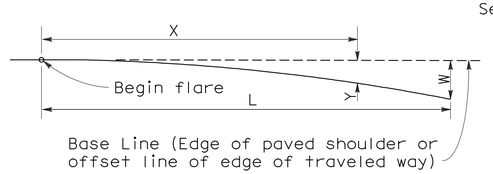

$$Y = \frac{WX^2}{L^2}$$

Y = Offset from base line
W = Maximum offset
X = Distance along base line
L = Length of flare

PARABOLIC FLARE OFFSETS

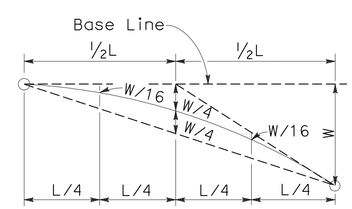

TYPICAL PARABOLIC LAYOUT

STATE OF CALIFORNIA
DEPARTMENT OF TRANSPORTATION

METAL BEAM GUARD RAILING TYPICAL LAYOUTS FOR FIXED OBJECTS BETWEEN SEPARATE ROADBEDS (TWO-WAY TRAFFIC)

NO SCALE

RSP A77G1 DATED JUNE 6, 2008 SUPERSEDES STANDARD PLAN A77G1 DATED MAY 1, 2006 - PAGE 59 OF THE STANDARD PLANS BOOK DATED MAY 2006.

REVISED STANDARD PLAN RSP A77G1

2006 REVISED STANDARD PLAN RSP A77G1

12-10-07

DIST	COUNTY	ROUTE	POST MILES TOTAL PROJECT	SHEET NO.	TOTAL SHEETS
02	Sha,Teh	5	0.0/44.0, 0.0/42.1	64	77

Randell D. Hiatt
REGISTERED CIVIL ENGINEER

June 6, 2008
PLANS APPROVAL DATE

REGISTERED PROFESSIONAL ENGINEER
Randell D. Hiatt
No. C50200
Exp. 6-30-09
CIVIL
STATE OF CALIFORNIA

The State of California or its officers or agents shall not be responsible for the accuracy or completeness of electronic copies of this plan sheet.

To accompany plans dated 7-12-10

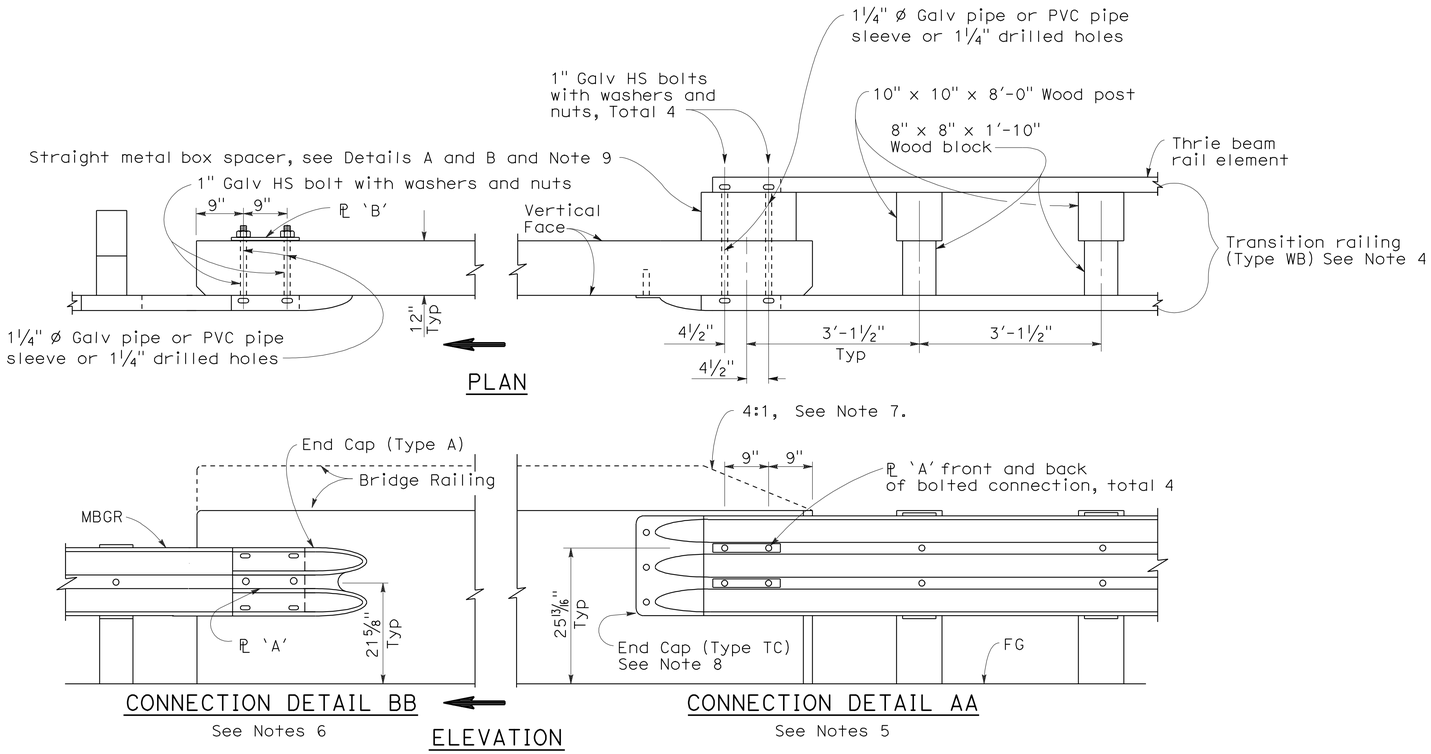

GUARD RAILING CONNECTION TO BRIDGE RAILING WITHOUT SIDEWALK

NOTES:

1. See Revised Standard Plan RSP A77J2 for additional connection details to bridges without sidewalks.
2. Additional details of posts, blocks and hardware are shown on Standard Plan A77B1, A77C1 and A77C2.
3. Direction of adjacent traffic indicated by ➡.
4. For additional details of Transition Railing (Type WB), see Standard Plan A77J4. Transition Railing (Type WB) transitions the 12 gage w-beam standard railing section of guard railing to a heavier gage nested thrie beam railing section which is connected to the concrete bridge railing.
5. For typical use of Connection Detail AA, see Layout Types 12A and 12B on Revised Standard Plan RSP A77F1, Layout Types 12C and 12D on Standard Plan A77F2, and Layout Type 12E on Revised Standard Plan RSP A77F3.
6. For typical use of Connection Detail BB, see Layout Type 12D (structure departure railing connection) on Standard Plan A77F2 and Layout Type 12DD on Standard Plan A77F5.
7. Where the height of the bridge railing exceeds the height of the thrie beam railing by more than 1" at Connection Detail AA, taper the top of the end of the bridge railing at 4:1 to match the top elevation of the thrie beam rail.
8. For details of End Cap (Type TC), see Standard Plan A77J4.
9. See Standard Plan A77J4 for additional details regarding depth dimension for straight metal box spacer.

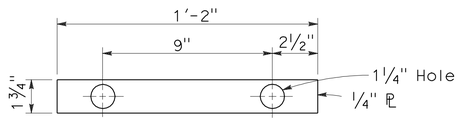

PLATE 'A'

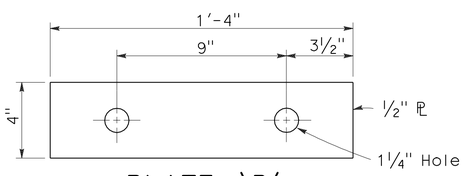

PLATE 'B'
(For backside of connection BB)

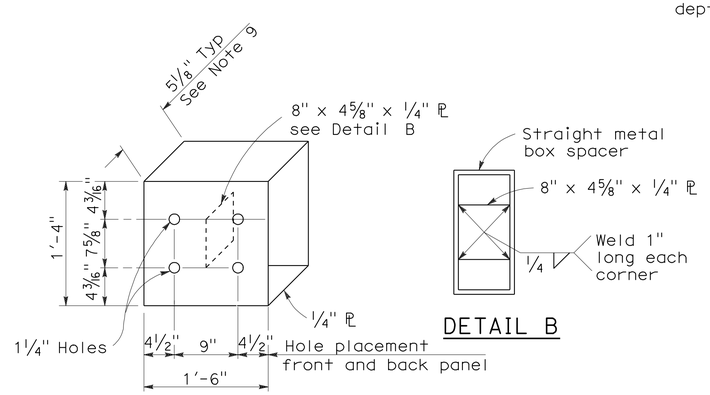

DETAIL B

DETAIL A

STRAIGHT METAL BOX SPACER

STATE OF CALIFORNIA
DEPARTMENT OF TRANSPORTATION

METAL BEAM GUARD RAILING CONNECTIONS TO BRIDGE RAILINGS WITHOUT SIDEWALKS DETAILS No.1

NO SCALE

RSP A77J1 DATED JUNE 6, 2008 SUPERSEDES STANDARD PLAN A77J1 DATED MAY 1, 2006 - PAGE 72 OF THE STANDARD PLANS BOOK DATED MAY 2006.

REVISED STANDARD PLAN RSP A77J1

2006 REVISED STANDARD PLAN RSP A77J1

12-10-07

DIST	COUNTY	ROUTE	POST MILES TOTAL PROJECT	SHEET NO.	TOTAL SHEETS
02	Sha,Teh	5	0.0/44.0, 0.0/42.1	65	77

Randell D. Hiatt
REGISTERED CIVIL ENGINEER

June 5, 2009
PLANS APPROVAL DATE

REGISTERED PROFESSIONAL ENGINEER Randell D. Hiatt No. C50200 Exp. 6-30-09 CIVIL STATE OF CALIFORNIA

The State of California or its officers or agents shall not be responsible for the accuracy or completeness of electronic copies of this plan sheet.

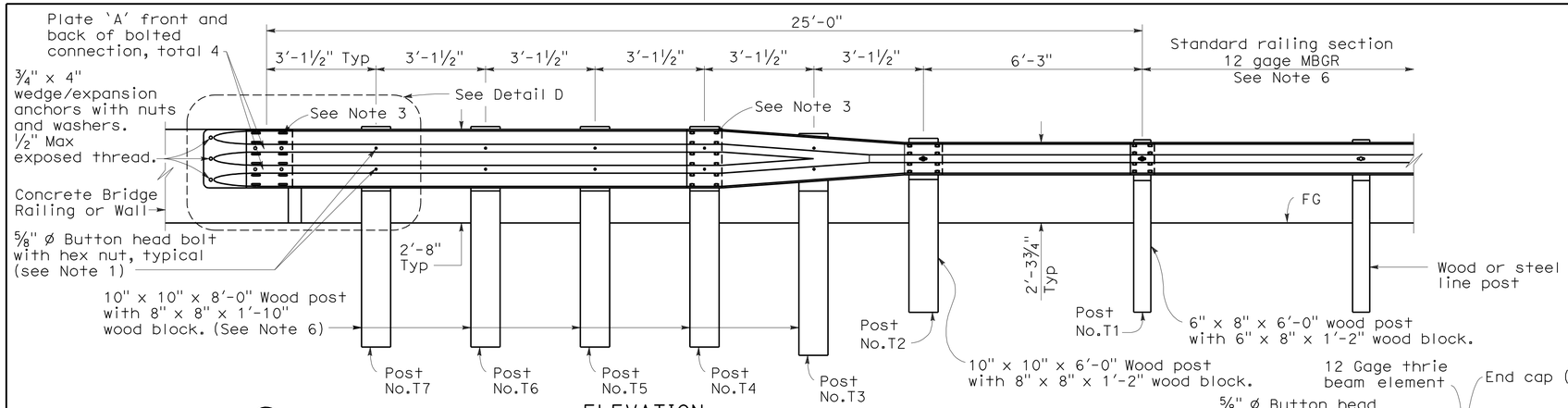

ELEVATION

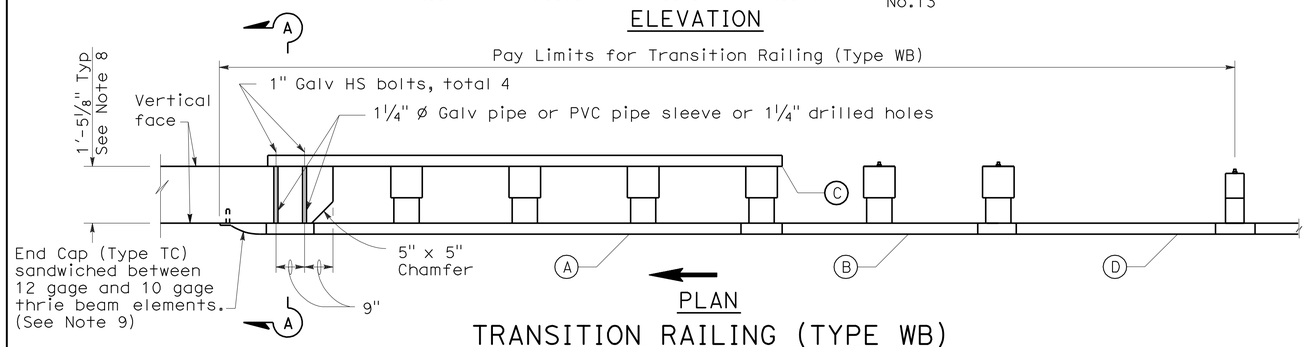

PLAN

TRANSITION RAILING (TYPE WB)

(No Blockout Attachment)

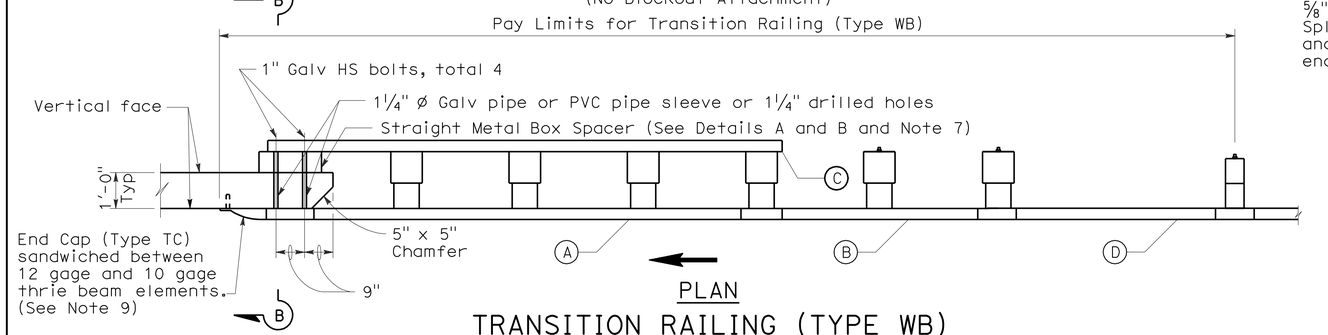

PLAN

TRANSITION RAILING (TYPE WB)

(Blockout Attachment)

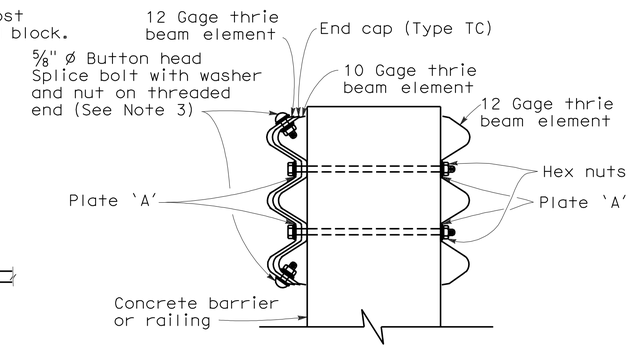

SECTION A-A

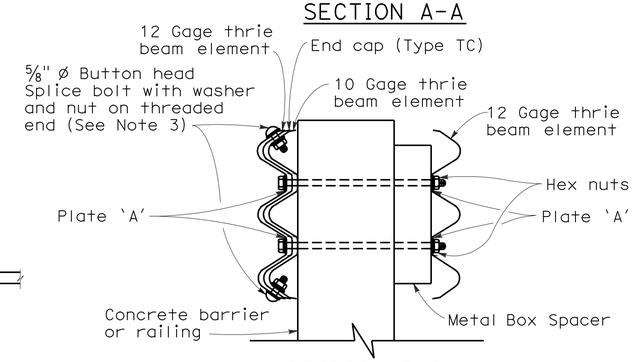

SECTION B-B

LEGEND

(A) Nested thrie beam elements (one 12 gage element nested over one 10 gage element).

(B) One 10 gage "W" beam to thrie beam element.

(C) One 12 gage thrie beam element.

(D) One 10 gage "W" beam rail element (7'-3½" length)

10 gage = 0.135" thick

12 gage = 0.108" thick

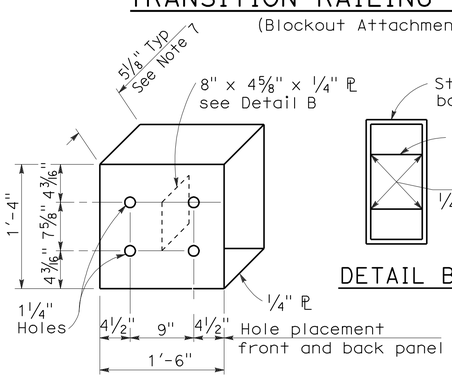

DETAIL A

STRAIGHT METAL BOX SPACER

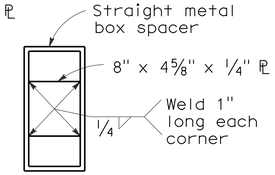

DETAIL B

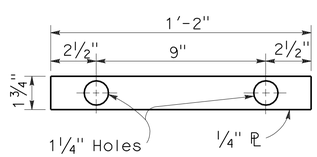

DETAIL C

PLATE 'A'

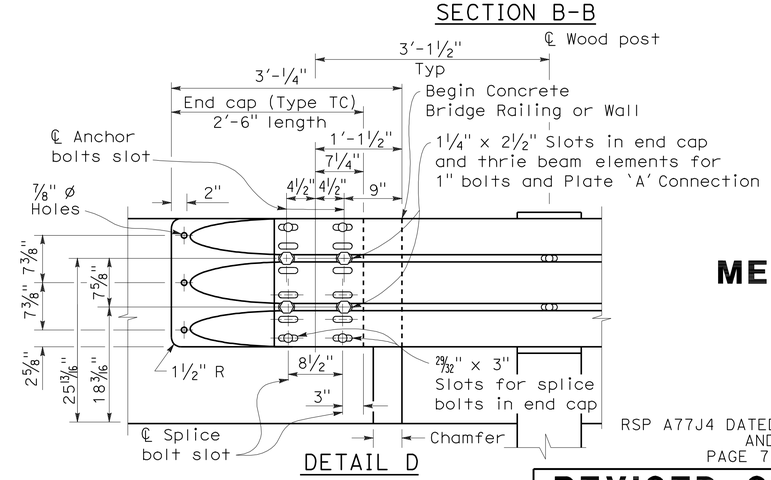

DETAIL D

NOTES:

To accompany plans dated 7-12-10

1. Use 5/8 " ø Button head bolts and hex nuts for connections to posts. No washer on rail face for bolted connections to post.
2. The nested rail elements, end cap, and 'W' beam to thrie beam element may be spliced together prior to bolting the elements to the wood post and concrete barrier or railing.
3. Exterior splice bolt holes for rail element splices at Post No.T4 and the connection to the concrete barrier or railing shall be the standard 29/32 " x 1 1/8 " slot size. Interior splice bolt holes at these locations may be increased up to 1 1/4 " ø. Only the top 2 and the bottom 2 splice bolts with washers and nuts are required for rail splices at Post No.T4 and the connection to the concrete barrier or railing.
4. Direction of adjacent traffic indicated by →.
5. The top elevation of Post Nos.T2 through T7 shall not project more than 1" above the top elevation of the rail element.
6. Typically, the railing connected to Transition Railing (Type WB) will be either standard railing section of metal beam guard railing or an approved Caltrans end treatment attached to Post No.T1.
7. The depth of the metal box spacer varies from the 5 1/8 " to 1 1/2 " and is dependent on the width of the concrete railing or wall. The combined dimension for the depth of the metal box spacer plus the width of railing or wall is typically 17 1/8 ". Where the space between the backside of the concrete railing or wall and the rear thrie beam element is less than 1 1/2 ", metal plates similar to Plate 'A' are to be used as spacers.
8. Where the width of the concrete railing or wall is greater than 17 1/8 ", wood blocks are to be used to fill the space created between the backside of Posts No.4 through No.7 and the rear thrie beam element. These wood blocks shall be 8" in width and 1'-2" in length. The dimension between the front thrie beam element and the rear thrie beam element is to match the width of the concrete railing or wall.
9. End cap may be installed over 12 gage and 10 gage thrie beam elements where transition railing is installed on the departure end of bridge railing.

STATE OF CALIFORNIA
DEPARTMENT OF TRANSPORTATION

METAL BEAM GUARD RAILING TRANSITION RAILING (TYPE WB)

NO SCALE

RSP A77J4 DATED JUNE 5, 2009 SUPERSEDES RSP A77J4 DATED JUNE 6, 2008 AND STANDARD PLAN A77J4 DATED MAY 1, 2006 - PAGE 75 OF THE STANDARD PLANS BOOK DATED MAY 2006.

REVISED STANDARD PLAN RSP A77J4

2006 REVISED STANDARD PLAN RSP A77J4

5-14-09

DIST	COUNTY	ROUTE	POST MILES TOTAL PROJECT	SHEET NO.	TOTAL SHEETS
02	Sha,Teh	5	0.0/44.0, 0.0/42.1	66	77

Randell D. Hiatt
REGISTERED CIVIL ENGINEER

June 6, 2008
PLANS APPROVAL DATE

REGISTERED PROFESSIONAL ENGINEER
Randell D. Hiatt
No. C50200
Exp. 6-30-09
CIVIL
STATE OF CALIFORNIA

The State of California or its officers or agents shall not be responsible for the accuracy or completeness of electronic copies of this plan sheet.

To accompany plans dated 7-12-10

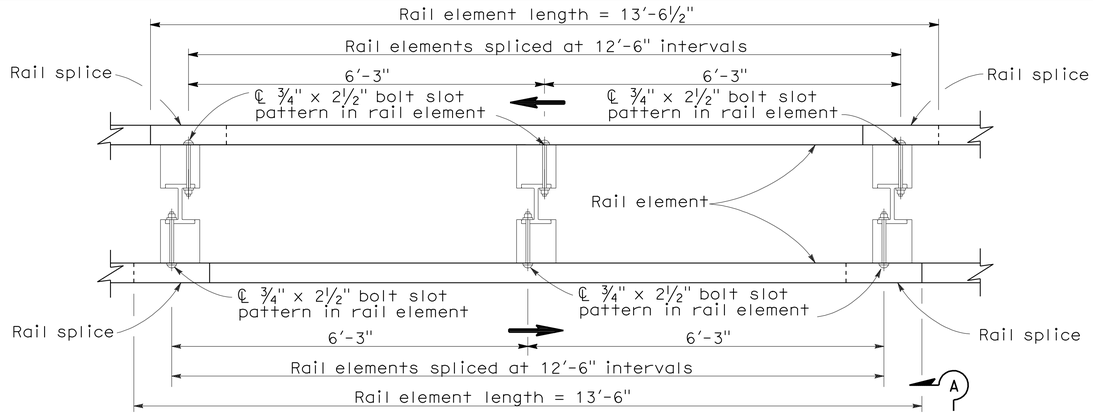

PLAN

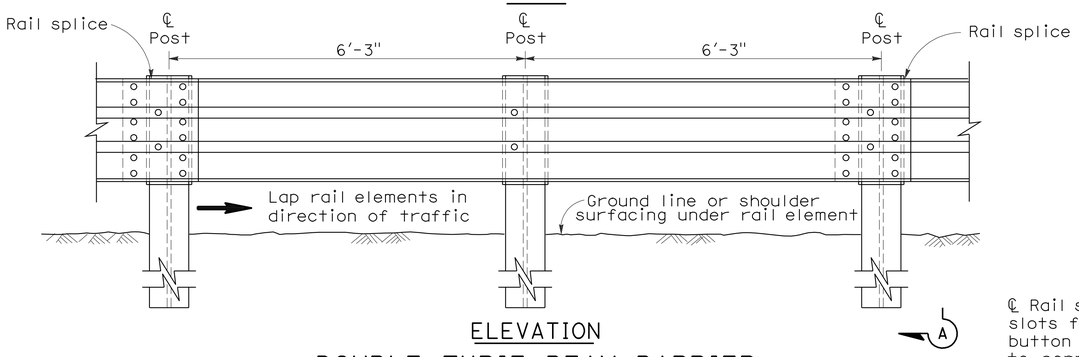

ELEVATION

DOUBLE THRIE BEAM BARRIER

(Steel post with notched wood or notched plastic blocks)
See Note 1

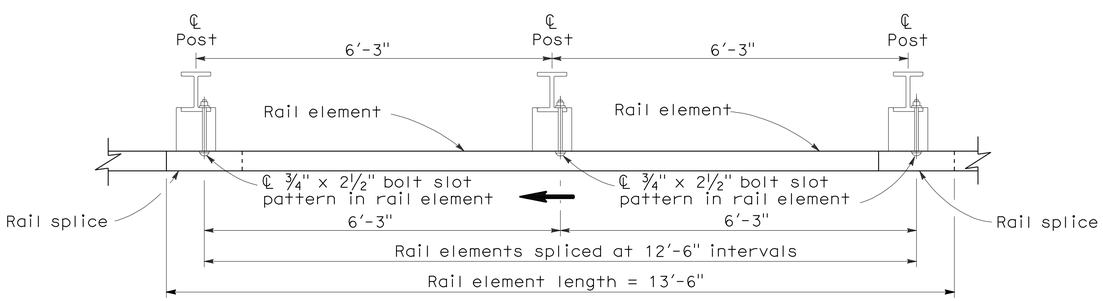

PLAN

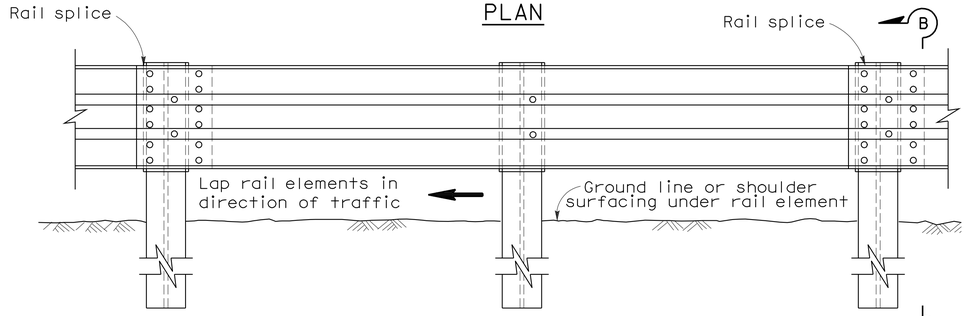

ELEVATION

SINGLE THRIE BEAM BARRIER

(Steel post with notched wood or notched plastic blocks)
See Note 1

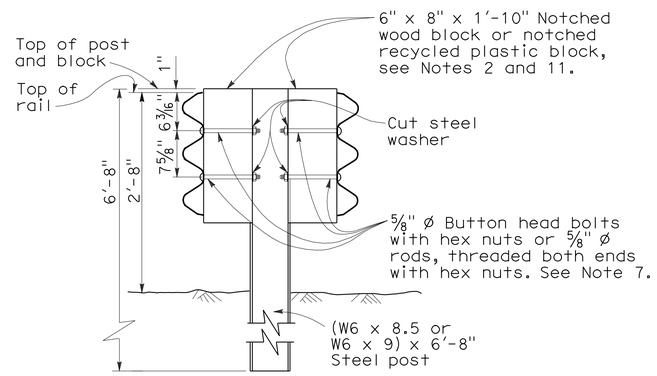

SECTION A-A

TYPICAL STEEL LINE POST INSTALLATION

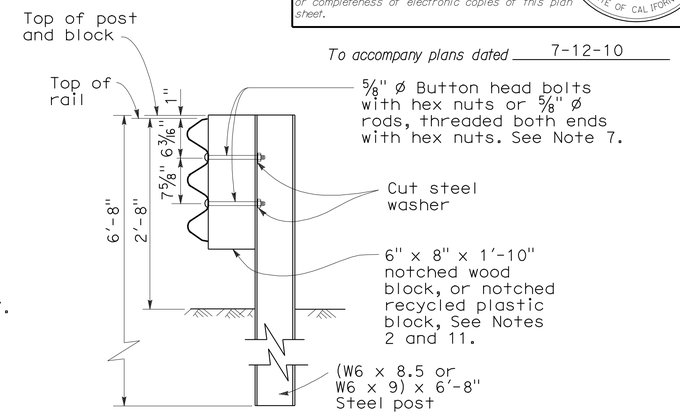

SECTION B-B

TYPICAL STEEL LINE POST INSTALLATION

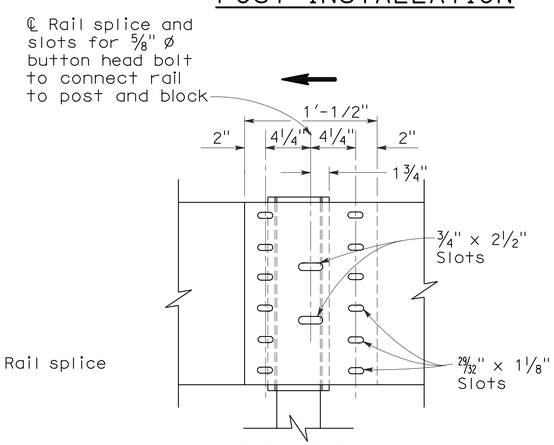

ELEVATION

RAIL ELEMENT SPLICE DETAIL

a) Connect the overlapped ends of the thrie beam rail elements with ⅝" Ø x 1⅛" button head oval shoulder bolts inserted into the 29/32" x 1⅛" slots and bolted together with ⅝" Ø x 1⅛" recessed hex nuts. Recess of hex nut points toward rail element. A total of 12 bolts and nuts are to be used at each rail splice connection.

b) The ends of the rail elements are to be overlapped in the direction of traffic (see details).

c) Where end cap is to be attached to the end of a rail element, a total of 4 of the above described splice bolts and nuts are to be used. Where a return cap is to be attached to the ends of rail elements, a total of 8 of the above described splice bolts and nuts are to be used.

NOTES:

1. For details of the cross section of the thrie beam rail element and details for wood post with wood block installations, see Standard Plan A78A.
2. For details of standard hardware, posts and blocks used to construct thrie beam barrier, see Revised Standard Plan RSP A78C1 and Standard Plan A78C2.
3. Thrie beam barrier post spacing to be 6'-3" center to center, except as otherwise noted.
4. Top of barrier rail to be 2'-8" above ground line or shoulder surfacing under the rail element.
5. For barrier end treatments and barrier connections, see Standard Plans A78E1, A78E2 and A78E3, Revised Standard Plans RSPs A78F1 and A78F2, Standard Plan A78G and Revised Standard Plan RSP A78H.
6. For connection to Concrete Barrier, see Revised Standard Plan RSP A78I.
7. Attach rail element to block and steel post with 2 bolts or rods on approaching traffic side of block and post web. No washer on rail face for rod or bolted connections to line post.
8. For details of thrie beam barrier on bridges, see Standard Plan A78D2. For details of thrie beam barrier at fixed objects, see Standard Plan A78D1.
9. Direction of traffic indicated by ⟶.
10. Notched face of block faces steel post.

STATE OF CALIFORNIA
DEPARTMENT OF TRANSPORTATION

THRIE BEAM BARRIER STANDARD BARRIER RAILING SECTION (STEEL POST WITH NOTCHED WOOD BLOCK OR NOTCHED RECYCLED PLASTIC BLOCK)

NO SCALE

RSP A78B DATED JUNE 6, 2008 SUPERSEDES STANDARD PLAN A78B DATED MAY 1, 2006 - PAGE 84 OF THE STANDARD PLANS BOOK DATED MAY 2006.

REVISED STANDARD PLAN RSP A78B

2006 REVISED STANDARD PLAN RSP A78B

5-14-08

DIST	COUNTY	ROUTE	POST MILES TOTAL PROJECT	SHEET No.	TOTAL SHEETS
02	Sha,Teh	5	0.0/44.0, 0.0/42.1	67	77

Randell D. Hiatt
REGISTERED CIVIL ENGINEER

June 6, 2008
PLANS APPROVAL DATE

REGISTERED PROFESSIONAL ENGINEER
Randell D. Hiatt
No. C50200
Exp. 6-30-09
CIVIL
STATE OF CALIFORNIA

The State of California or its officers or agents shall not be responsible for the accuracy or completeness of electronic copies of this plan sheet.

To accompany plans dated 7-12-10

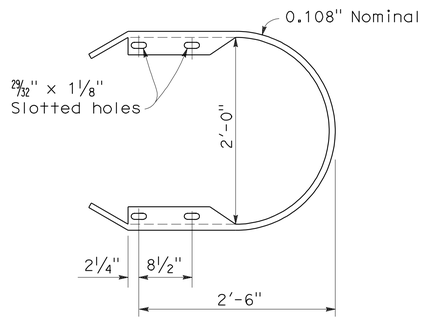

RETURN CAP
(TYPE TA)

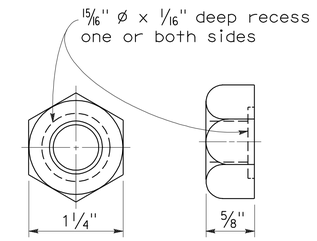

5/8" ø RECESS NUT

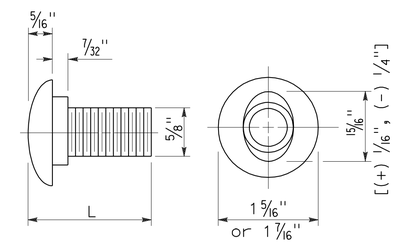

5/8" ø BUTTON HEAD BOLT

L	THREAD LENGTH
1 1/4"	full thread length
2"	full thread length
9 1/2"	4" Min thread length
18"	4" Min thread length

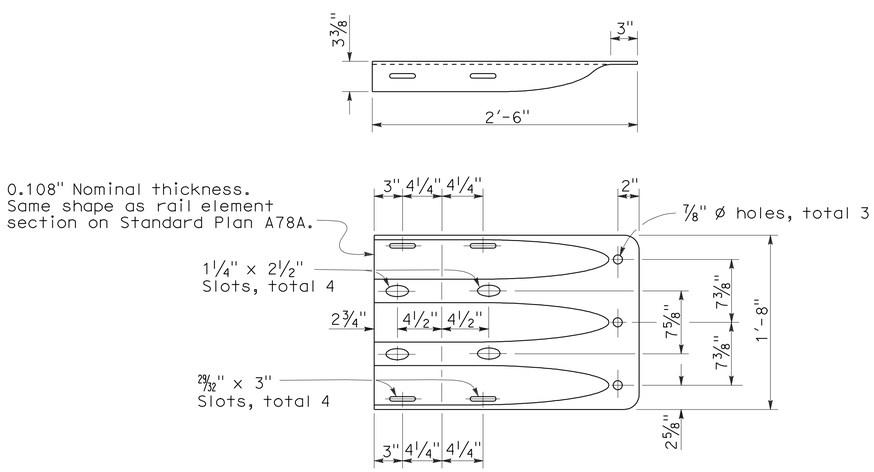

END CAP
(TYPE TC)

STATE OF CALIFORNIA
DEPARTMENT OF TRANSPORTATION

THRIE BEAM BARRIER STANDARD HARDWARE DETAILS

NO SCALE

RSP A78C1 DATED JUNE 6, 2008 SUPERSEDES STANDARD PLAN A78C1
DATED MAY 1, 2006 - PAGE 85 OF THE STANDARD PLANS BOOK DATED MAY 2006.

REVISED STANDARD PLAN RSP A78C1

2006 REVISED STANDARD PLAN RSP A78C1

4-21-08

DIST	COUNTY	ROUTE	POST MILES TOTAL PROJECT	SHEET NO.	TOTAL SHEETS
02	Sha,Teh	5	0.0/44.0, 0.0/42.1	68	77

Randell D. Hiatt
REGISTERED CIVIL ENGINEER

June 6, 2008
PLANS APPROVAL DATE

REGISTERED PROFESSIONAL ENGINEER
Randell D. Hiatt
No. C50200
Exp. 6-30-09
CIVIL
STATE OF CALIFORNIA

The State of California or its officers or agents shall not be responsible for the accuracy or completeness of electronic copies of this plan sheet.

To accompany plans dated 7-12-10

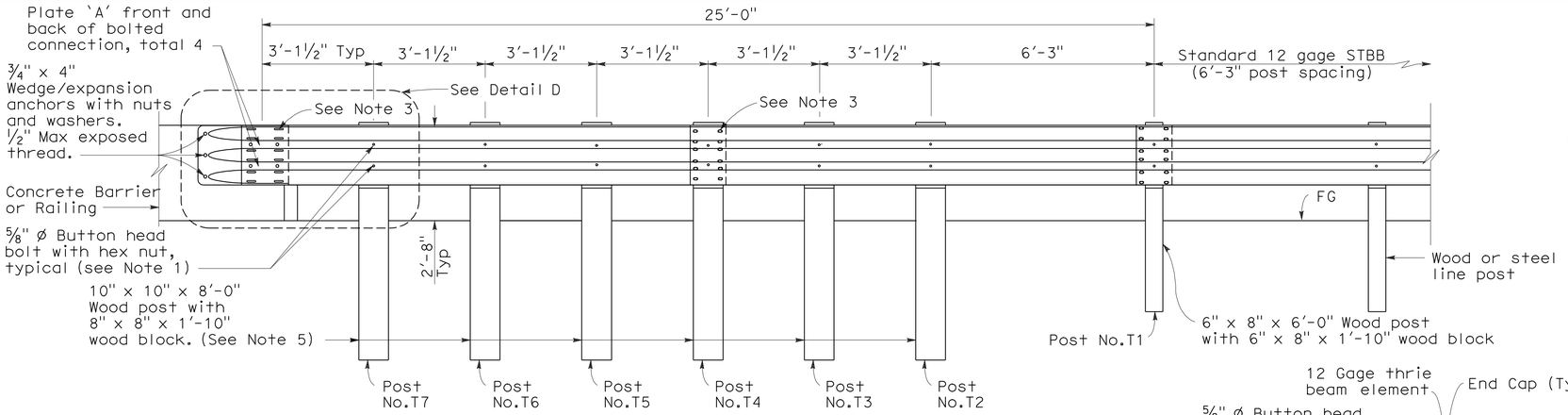

ELEVATION

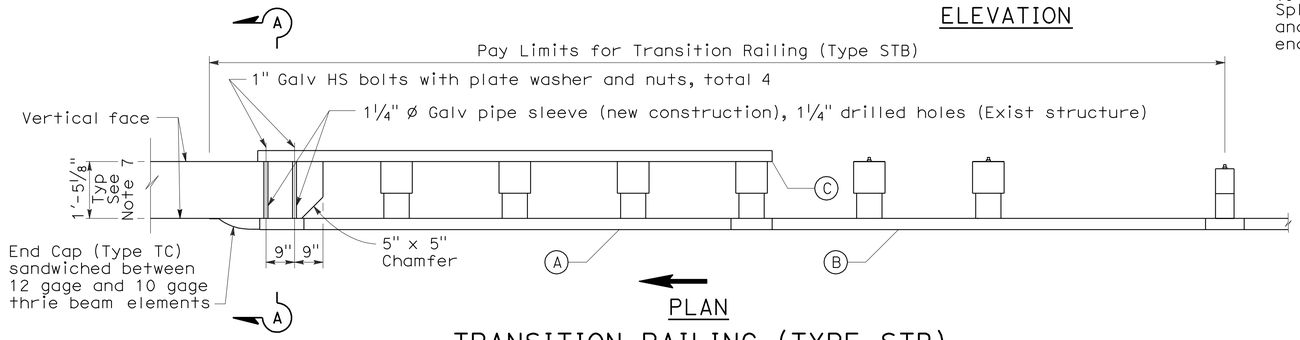

PLAN

TRANSITION RAILING (TYPE STB)

(No Blockout Attachment)

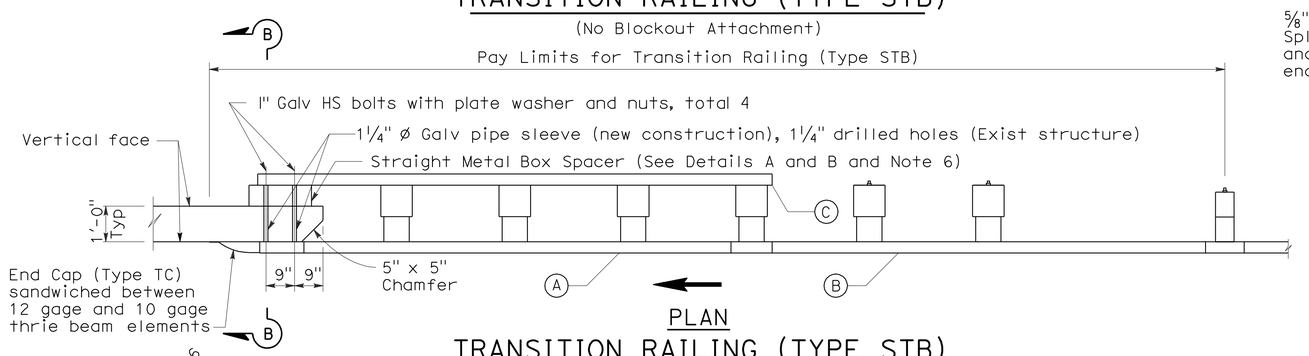

PLAN

TRANSITION RAILING (TYPE STB)

(Blockout Attachment)

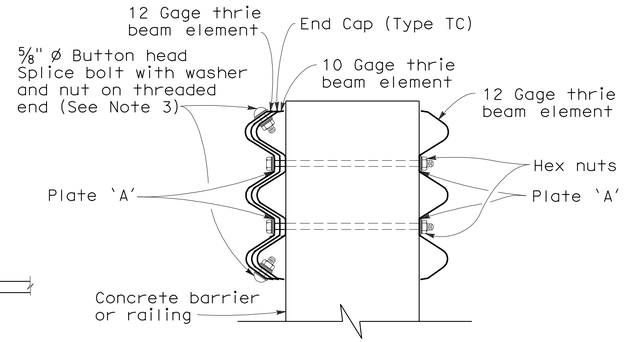

SECTION A-A

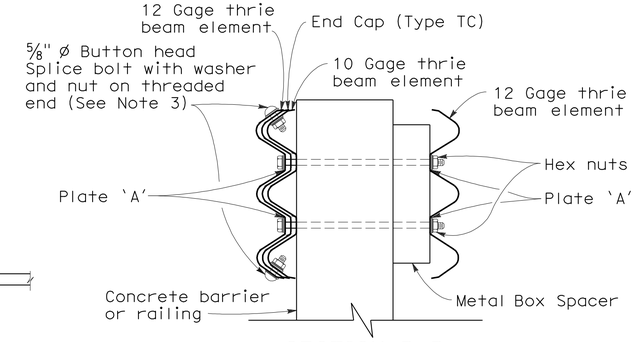

SECTION B-B

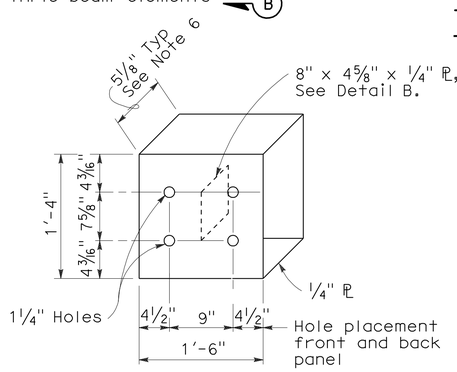

DETAIL A

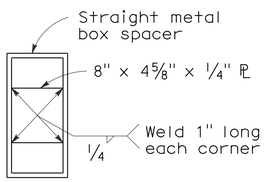

DETAIL B

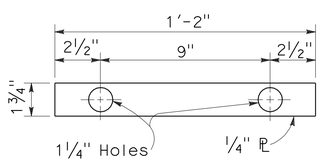

DETAIL C

STRAIGHT METAL BOX SPACER

PLATE 'A'

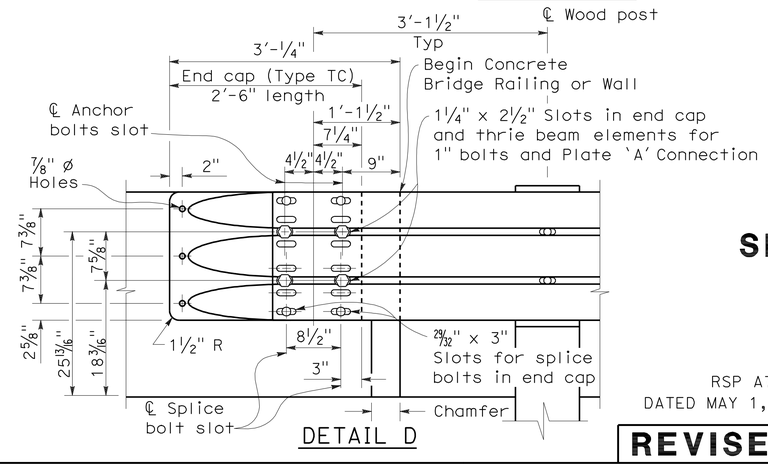

DETAIL D

LEGEND

(A) Nested thrie beam elements (one 12 gage element nested over one 10 gage element).

(B) One 10 gage thrie beam element.

(C) One 12 gage thrie beam element.

10 gage = 0.135" thick

12 gage = 0.108" thick

NOTES:

1. Use ⅝" ø Button head bolts and hex nuts for connection to posts. No washer on rail face for bolted connections to post.
2. The nested rail elements, end cap and single 10 gage thrie beam element, may be spliced together prior to bolting the elements to the wood post and concrete barrier or railing.
3. Exterior splice bolt holes for rail element splices at Post No.T4 and the connection to the concrete barrier or railing shall be the standard 29⁄32" x 1⅛" slot size. Interior splice bolt holes at these locations may be increased up to 1¼" ø. Only the top 2 and the bottom 2 splice bolts with washers and nuts are required for rail splices at Post No.T4 and the connection to the concrete barrier or railing.
4. Direction of adjacent traffic indicated by ⟶.
5. The top elevation of Post Nos.T2 through T7 shall not project more than 1" above the top elevation of the rail element.
6. The depth of the metal box spacer varies from the 5⅛" to 1½" and is dependent on the width of the concrete railing or wall. The combined dimension for the depth of the metal box spacer plus the width of railing or wall is typically 17⅛". Where the space between the backside of the concrete railing or wall and the rear thrie beam element is less than 1½" metal plates similar to Plate 'A' are to be used as spacers.
7. Where the width of the concrete railing or wall is greater than 17⅛", wood blocks are to be used to fill the space created between the backside of Post No.4 through No.7 and the rear thrie beam element. These wood blocks shall be 8" in width and 1'-2" in length. The dimension between the front thrie beam element and the rear thrie beam element is to match the width of the concrete railing or wall.
8. For details of End Cap (Type TC), see Revised Standard Plan RSP A78C1.

STATE OF CALIFORNIA
DEPARTMENT OF TRANSPORTATION

SINGLE THRIE BEAM BARRIER TRANSITION RAILING (TYPE STB)

NO SCALE

RSP A78J DATED JUNE 6, 2008 SUPERSEDES STANDARD PLAN A78J DATED MAY 1, 2006 - PAGE 97 OF THE STANDARD PLANS BOOK DATED MAY 2006.

REVISED STANDARD PLAN RSP A78J

2006 REVISED STANDARD PLAN RSP A78J

5-1-08

DIST	COUNTY	ROUTE	POST MILES TOTAL PROJECT	SHEET NO.	TOTAL SHEETS
02	Sha,Teh	5	0.0/44.0, 0.0/42.1	69	77

Randell D. Hiatt
REGISTERED CIVIL ENGINEER

June 6, 2008
PLANS APPROVAL DATE

REGISTERED PROFESSIONAL ENGINEER
Randell D. Hiatt
No. C50200
Exp. 6-30-09
CIVIL
STATE OF CALIFORNIA

The State of California or its officers or agents shall not be responsible for the accuracy or completeness of electronic copies of this plan sheet.

To accompany plans dated 7-12-10

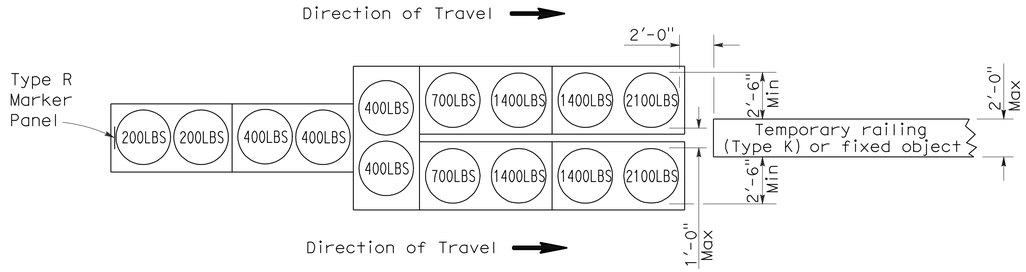

ARRAY 'TU14'

Approach speed 45 mph or more

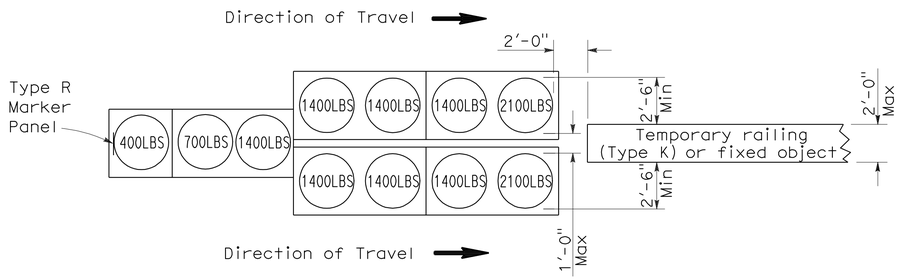

ARRAY 'TU11'

Approach speed less than 45 mph

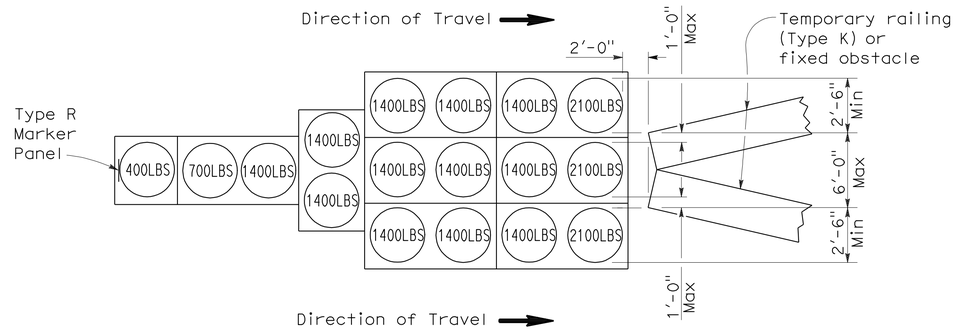

ARRAY 'TU17'

Approach speed less than 45 mph

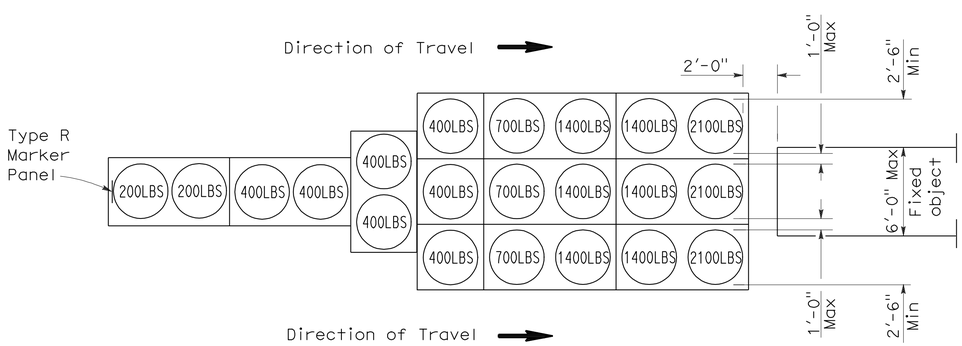

ARRAY 'TU21'

Approach speed 45 mph or more

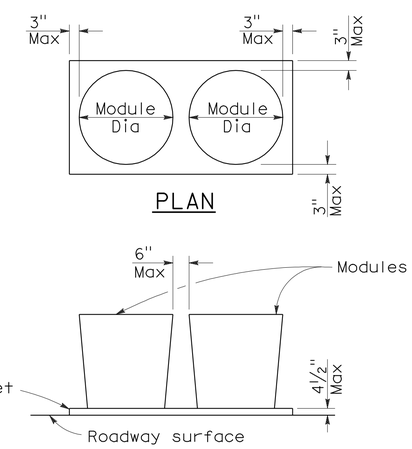

PLAN

ELEVATION

CRASH CUSHION PALLET DETAIL

See Note 7

NOTES:

1. (XXX) Indicates sand filled module location and weight of sand in pounds for each module. Module spacing is based on the greater diameter of the module.
2. All sand weights are nominal.
3. Temporary crash cushion arrays shall not encroach on the traveled way.
4. Place the top of Type R marker panel 1" below the module lid.
5. Refer to Standard Plan A73B for marker details.
6. Approach speeds indicated conform to NCHRP 350 Report criteria.
7. Use of pallets is optional.

STATE OF CALIFORNIA
DEPARTMENT OF TRANSPORTATION

TEMPORARY CRASH CUSHION, SAND FILLED (UNIDIRECTIONAL)

NO SCALE

RSP T1A DATED JUNE 6, 2008 SUPERSEDES STANDARD PLAN T1A
DATED MAY 1, 2006 - PAGE 211 OF THE STANDARD PLANS BOOK DATED MAY 2006.

REVISED STANDARD PLAN RSP T1A

2006 REVISED STANDARD PLAN RSP T1A

DIST	COUNTY	ROUTE	POST MILES TOTAL PROJECT	SHEET NO.	TOTAL SHEETS
02	Sha,Teh	5	0.0/44.0, 0.0/42.1	70	77

Randell D. Hiatt
REGISTERED CIVIL ENGINEER

June 6, 2008
PLANS APPROVAL DATE

REGISTERED PROFESSIONAL ENGINEER
Randell D. Hiatt
No. C50200
Exp. 6-30-09
CIVIL
STATE OF CALIFORNIA

The State of California or its officers or agents shall not be responsible for the accuracy or completeness of electronic copies of this plan sheet.

To accompany plans dated 7-12-10

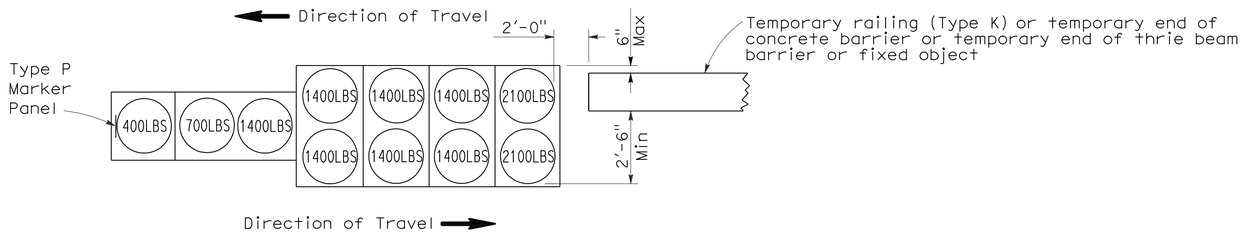

ARRAY 'TB11'

Approach speed less than 45 mph

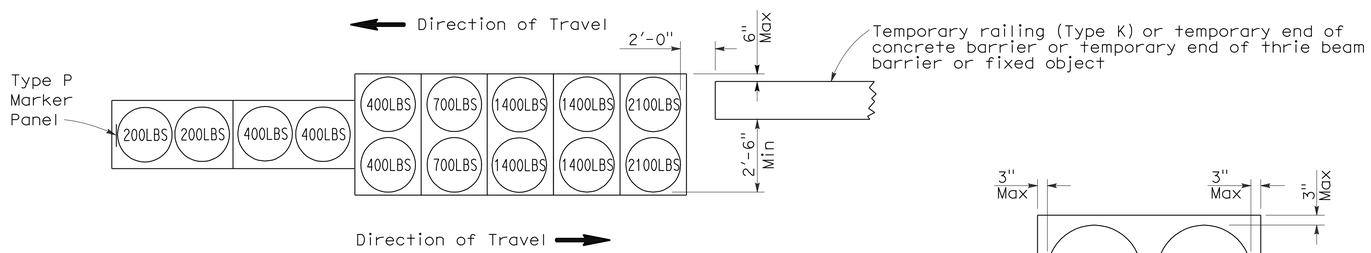

ARRAY 'TB14'

Approach speed 45 mph or more

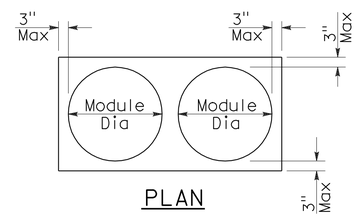

PLAN

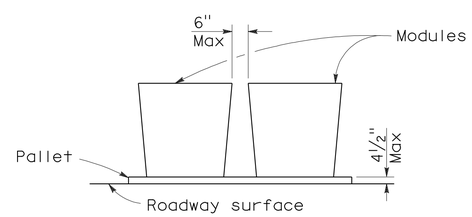

ELEVATION

CRASH CUSHION PALLET DETAIL

See Note 7

NOTES:

1. (XXX) Indicates sand filled module location and weight of sand in pounds for each module. Module spacing is based on the greater diameter of the module.
2. All sand weights are nominal.
3. Temporary crash cushion arrays shall not encroach on the traveled way.
4. Place the Type P marker panel so that the bottom of the panel rests upon the pallet.
5. Refer to Standard Plan A73B for marker details.
6. Approach speeds indicated conform to NCHRP 350 Report criteria.
7. Use of pallets is optional.

STATE OF CALIFORNIA
DEPARTMENT OF TRANSPORTATION

TEMPORARY CRASH CUSHION, SAND FILLED (BIDIRECTIONAL)

NO SCALE

RSP T1B DATED JUNE 6, 2008 SUPERSEDES STANDARD PLAN T1B
DATED MAY 1, 2006 - PAGE 212 OF THE STANDARD PLANS BOOK DATED MAY 2006.

REVISED STANDARD PLAN RSP T1B

2006 REVISED STANDARD PLAN RSP T1B

5-15-08

DIST	COUNTY	ROUTE	POST MILES TOTAL PROJECT	SHEET NO.	TOTAL SHEETS
02	Sha,Teh	5	0.0/44.0, 0.0/42.1	71	77

Randell D. Hiatt
REGISTERED CIVIL ENGINEER

June 6, 2008
PLANS APPROVAL DATE

REGISTERED PROFESSIONAL ENGINEER
Randell D. Hiatt
No. C50200
Exp. 6-30-09
CIVIL
STATE OF CALIFORNIA

The State of California or its officers or agents shall not be responsible for the accuracy or completeness of electronic copies of this plan sheet.

To accompany plans dated 7-12-10

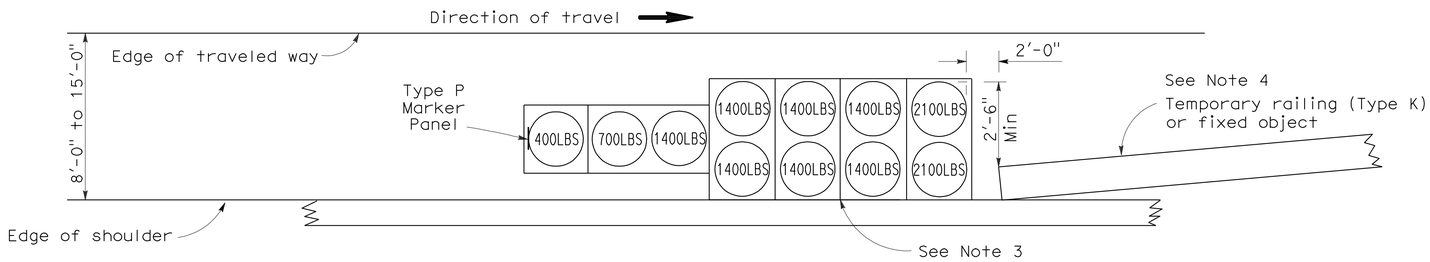

ARRAY 'TS11'

Approach speed less than 45 mph
See Note 9

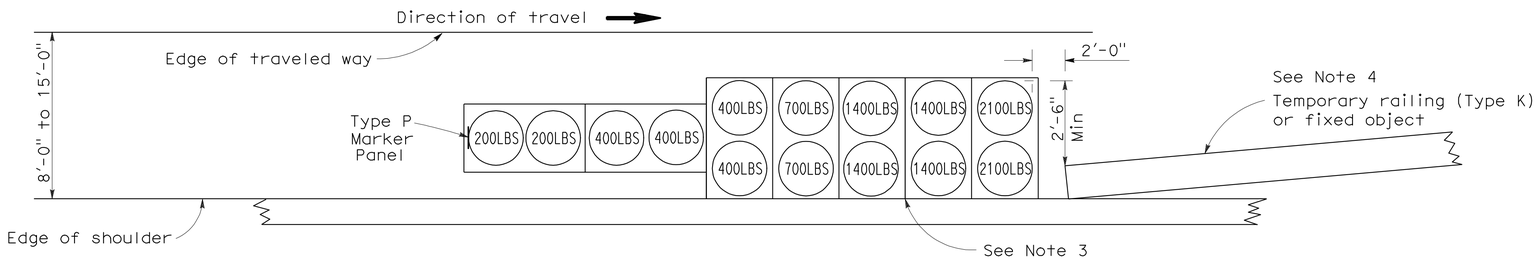

ARRAY 'TS14'

Approach speed 45 mph or more
See Note 9

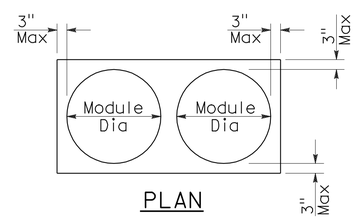

PLAN

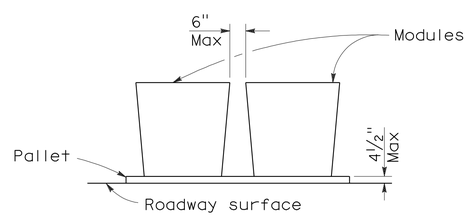

ELEVATION

CRASH CUSHION PALLET DETAIL

See Note 11

NOTES:

1. (XXX) Indicates sand filled module location and weight of sand in pounds for each module. Module spacing is based on the greater diameter of the module.
2. All sand weights are nominal.
3. The temporary crash cushion arrays shown on this plan shall be used only in locations where there will be traffic on one side of the temporary crash cushion array.
4. If the fixed object or approach end of the temporary railing is less than 15'-0" from the edge of traveled way, a temporary crash cushion is required in a construction or work zone.
5. Temporary crash cushion arrays shall not encroach on the traveled way.
6. Arrays for median shoulders shall conform to details shown on this plan for outside shoulders.
7. Place the Type P marker panel so that the bottom of the panel rests upon the pallet and faces traffic.
8. Refer to Standard Plan A73B for marker details.
9. For shoulder widths less than 8'-0", appropriate approved crash cushion protection, other than sand filled modules, shall be provided at fixed objects and at approach ends of temporary railing. The specific type of crash cushion shall be as shown on the project plans or as specified in the Special Provisions, or if not shown on the project plans or specified in the Special Provisions, shall be as approved by the Engineer.
10. Approach speeds indicated conform to NCHRP 350 Report criteria.
11. Use of pallets is optional.

STATE OF CALIFORNIA
DEPARTMENT OF TRANSPORTATION

TEMPORARY CRASH CUSHION, SAND FILLED (SHOULDER INSTALLATIONS)

NO SCALE

RSP T2 DATED JUNE 6, 2008 SUPERSEDES STANDARD PLAN T2
DATED MAY 1, 2006 - PAGE 213 OF THE STANDARD PLANS BOOK DATED MAY 2006.

REVISED STANDARD PLAN RSP T2

2006 REVISED STANDARD PLAN RSP T2

5-15-08

DIST	COUNTY	ROUTE	POST MILES TOTAL PROJECT	SHEET NO.	TOTAL SHEETS
02	Sha,Teh	5	0.0/44.0, 0.0/42.1	72	77

Greg W. Edwards
REGISTERED CIVIL ENGINEER

November 17, 2006
PLANS APPROVAL DATE

REGISTERED PROFESSIONAL ENGINEER
Greg W. Edwards
No. C36386
Exp. 6-30-08
CIVIL
STATE OF CALIFORNIA

The State of California or its officers or agents shall not be responsible for the accuracy or completeness of electronic copies of this plan sheet.

To accompany plans dated 7-12-10

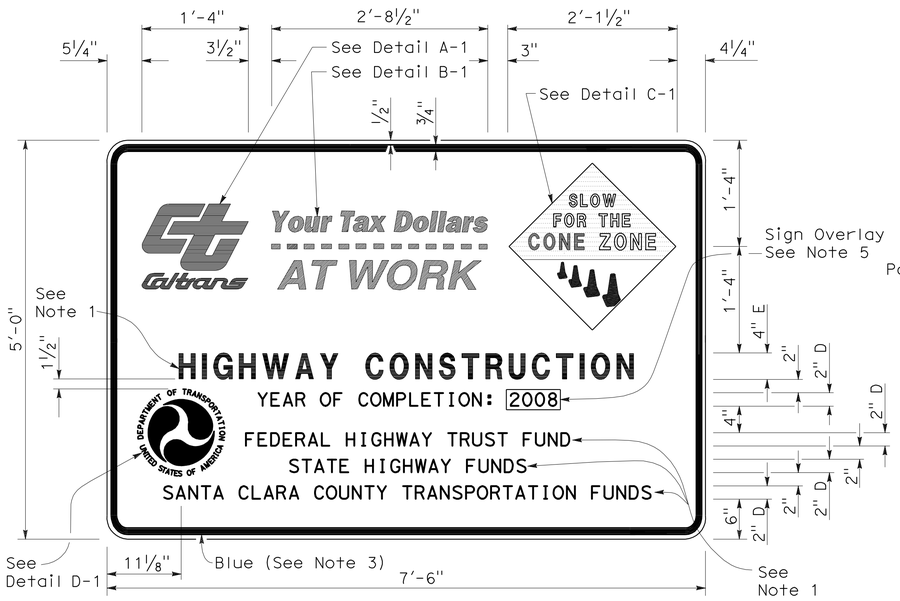

TYPE 1

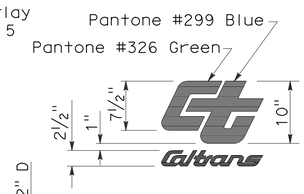

DETAIL A-1

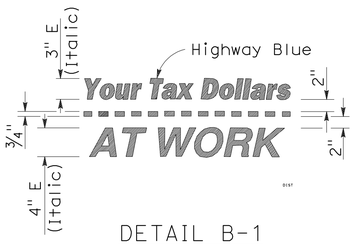

DETAIL B-1
(See Note 3)

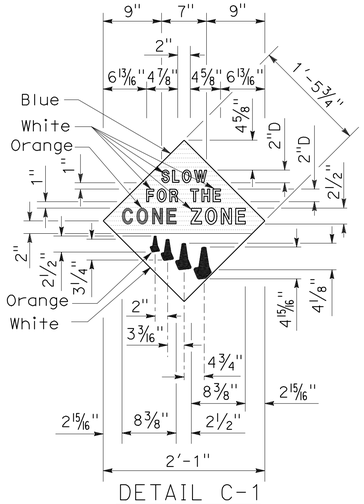

DETAIL C-1
(See Note 4)

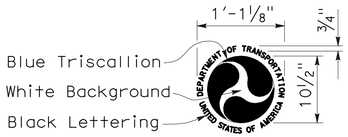

DETAIL D-1
(See Note 6)

NOTES:

1. The sign messages shown for type of project and fund types are examples only. See the Special Provisions for the applicable type of project and fund type messages to be used.
2. Except as otherwise shown, the legend of sign shall be black on a white background (non-reflective).
3. The border of the signs and details "B-1" and "B-2" shall be blue (non-reflective).
4. The diamond in details "C-1" and "C-2" shall be blue for the background of message, " SLOW FOR THE CONE ZONE", and white background for the orange cones. The color and type of font for the "SLOW FOR THE CONE ZONE" message shall be: "SLOW" white D; "FOR THE" white D; "CONE" orange Arial font; "ZONE" white Arial font.
5. Year of completion of project construction shown on the overlay is an example only. See the Special Provisions.
6. Use when the Project involves Federal Highway Trust Fund.

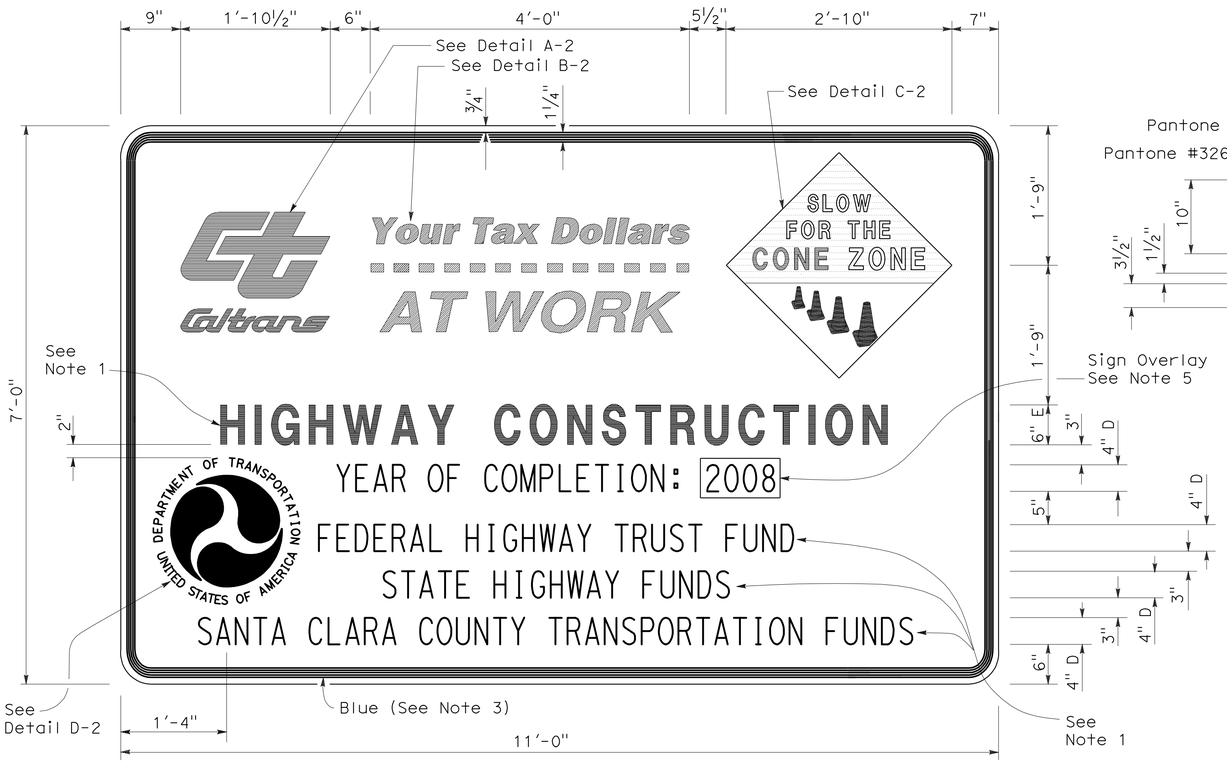

TYPE 2

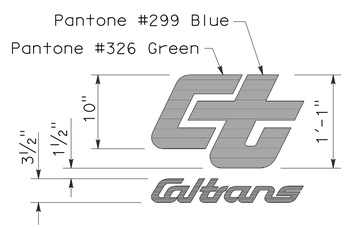

DETAIL A-2

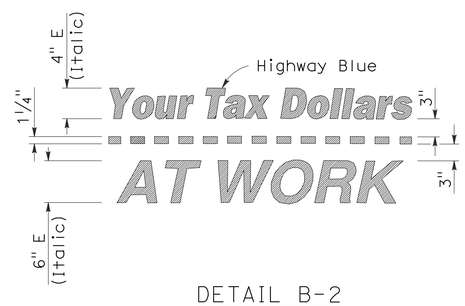

DETAIL B-2
(See Note 3)

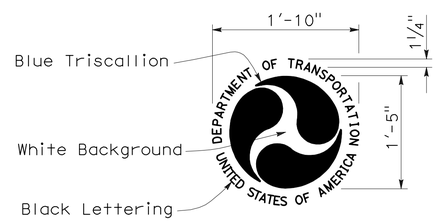

DETAIL D-2
(See Note 6)

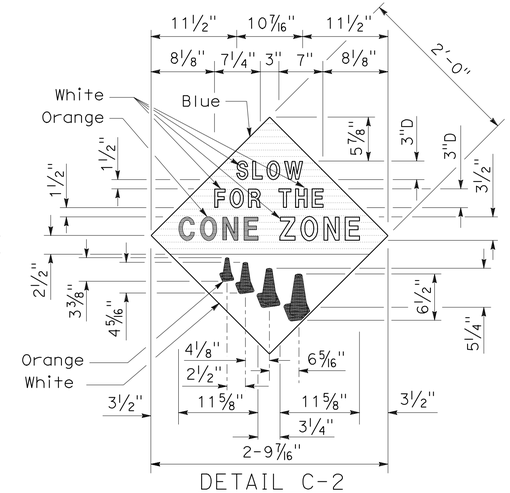

DETAIL C-2
(See Note 4)

STATE OF CALIFORNIA
DEPARTMENT OF TRANSPORTATION

CONSTRUCTION PROJECT FUNDING IDENTIFICATION SIGNS

NO SCALE

RSP T7 DATED NOVEMBER 17, 2006 SUPERSEDES STANDARD PLAN T7
DATED MAY 1, 2006 - PAGE 217 OF THE STANDARD PLANS BOOK DATED MAY 2006.

REVISED STANDARD PLAN RSP T7

2006 REVISED STANDARD PLAN RSP T7

5-15-08

DIST	COUNTY	ROUTE	POST MILES TOTAL PROJECT	SHEET NO.	TOTAL SHEETS
02	Sha,Teh	5	0.0/44.0, 0.0/42.1	73	77

LICENSED LANDSCAPE ARCHITECT

April 3, 2009
PLANS APPROVAL DATE

LICENSED LANDSCAPE ARCHITECT — Robert B. Schott — Signature — 11-30-10 Renewal Date — 2-25-09 Date — STATE OF CALIFORNIA

The State of California or its officers or agents shall not be responsible for the accuracy or completeness of electronic copies of this plan sheet.

To accompany plans dated 7-12-10

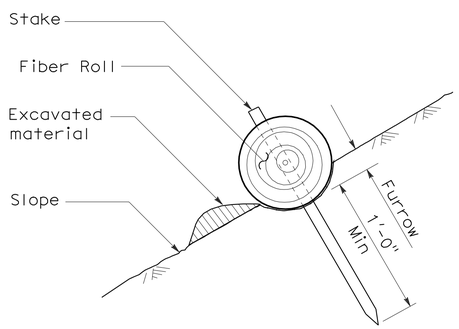

SECTION

TEMPORARY FIBER ROLL (TYPE 1)

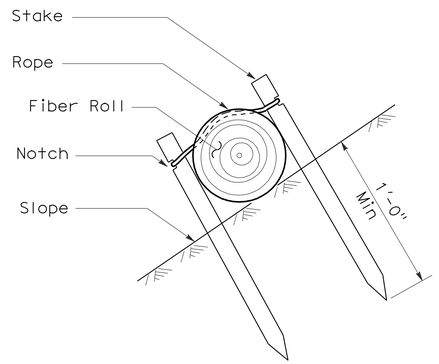

SECTION

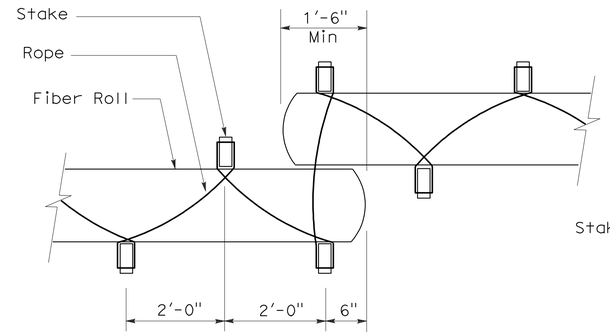

PLAN

TEMPORARY FIBER ROLL (TYPE 2)

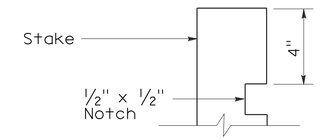

ELEVATION

STAKE NOTCH DETAIL

NOTES:

1. Temporary fiber roll spacing varies depending upon slope inclination.
2. Installations shown in the perspectives are for slope inclination of 10:1 and steeper.

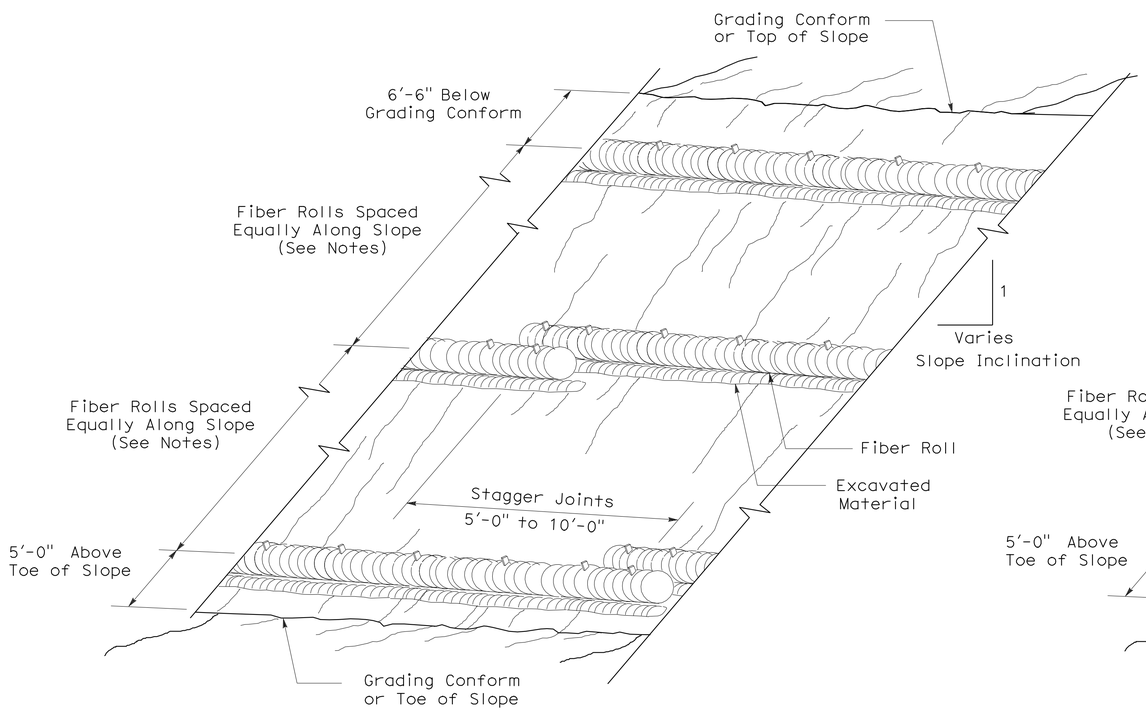

PERSPECTIVE

TEMPORARY FIBER ROLL (TYPE 1)

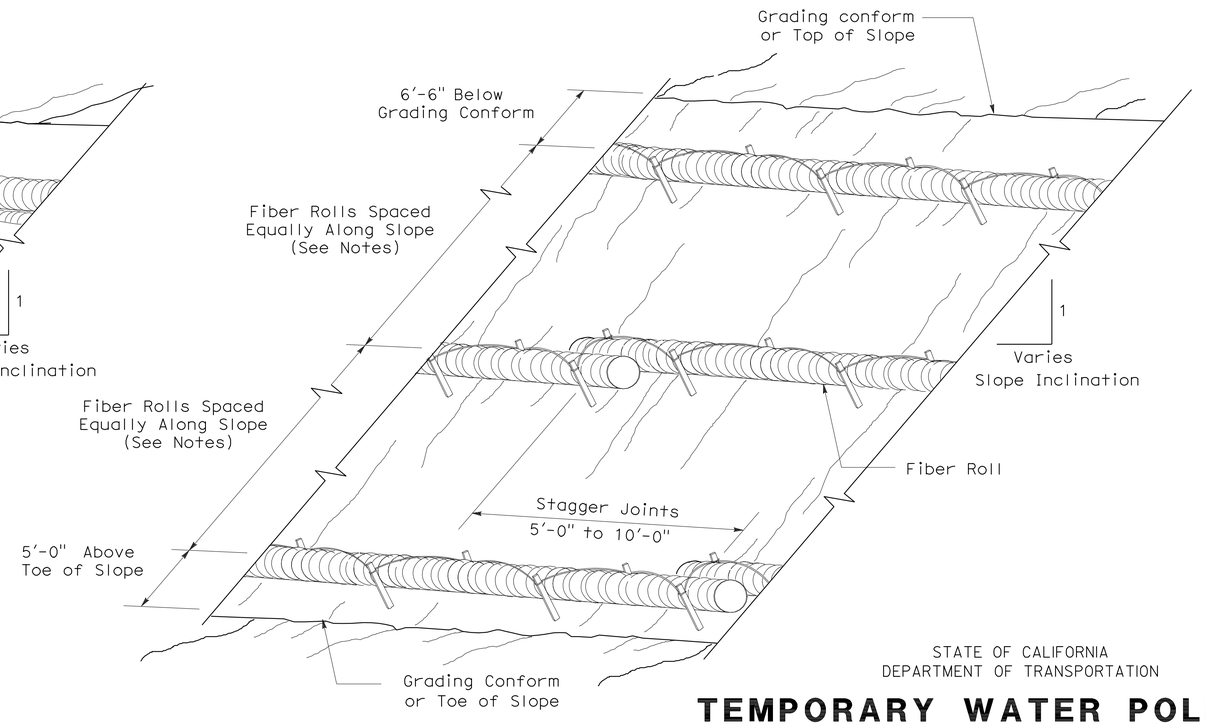

PERSPECTIVE

TEMPORARY FIBER ROLL (TYPE 2)

STATE OF CALIFORNIA
DEPARTMENT OF TRANSPORTATION

TEMPORARY WATER POLLUTION CONTROL DETAILS (TEMPORARY FIBER ROLL)

NO SCALE

RSP T56 DATED APRIL 3, 2009 SUPERSEDES STANDARD PLAN T56
DATED MAY 1, 2006 - PAGE 232 OF THE STANDARD PLANS BOOK DATED MAY 2006.

REVISED STANDARD PLAN RSP T56

2006 REVISED STANDARD PLAN RSP T56

2-23-09

DIST	COUNTY	ROUTE	POST MILES TOTAL PROJECT	SHEET NO.	TOTAL SHEETS
02	Sha,Teh	5	0.0/44.0, 0.0/42.1	74	77

REGISTERED ELECTRICAL ENGINEER

October 5, 2007
PLANS APPROVAL DATE

REGISTERED PROFESSIONAL ENGINEER Jeffery G. McRae No. E14512 Exp. 6-30-08 ELECTRICAL STATE OF CALIFORNIA

The State of California or its officers or agents shall not be responsible for the accuracy or completeness of electronic copies of this plan sheet.

To accompany plans dated 7-12-10

2006 REVISED STANDARD PLAN RSP ES-1A

ELECTROLIERS

STANDARD TYPES
15, 15D
15 STRUCTURE
21, 21D STRUCTURE
30
31
32
35
36-20A

High mast light pole

Double Arm lighting standard

Existing electrolier

Electrolier foundation (Future installation)

NOTES:

1. Luminaires shall be 310 W HPS when installed on Type 21, 21D, 30, 31, 32, 35 and 36-20A Standards, unless otherwise specified. Luminaires shall be 200 W HPS when installed on other type standards or poles, unless otherwise specified.
2. Luminaires shall be the cutoff type, ANSI Type Ⅲ medium cutoff lighting distribution, unless otherwise specified.
3. Variations noted adjacent to symbol on project plans.

Electrolier (see project notes or project plans)

Luminaire on wood pole

STANDARD NOTES:

- AB Abandon. If applied to conduit, remove conductors.
- BC Install pull box in existing conduit run.
- BP Pedestrian barricade, type as indicated on plan.
- CB Install conduit into existing pull box.
- CC Connect new and existing conduit. Remove existing conductors and install conductors as indicated.
- CF Conduit to remain for future use. Remove conductors. Install pull wire or rope.
- DH Detector handhole.
- FA Foundation to be abandoned.
- IS Install sign on signal mast arm.
- NS No slip base on standard.
- PEC Photoelectric control.
- PEU Photoelectric unit.
- RC Equipment or material to be removed and become the property of the Contractor.
- RE Remove electrolier, fuses and ballast. Tape ends of conductors.
- RL Relocate equipment.
- RR Remove and reuse equipment.
- RS Remove and salvage equipment.
- SC Splice new to existing conductors.
- SD Service disconnect.
- SF Standard to remain for future use. Remove luminaire, pole conductors, fuses and ballast.
- TSP Telephone service point.

ABBREVIATIONS AND EQUIPMENT DESIGNATIONS

PROPOSED	EXISTING	
BBS	bbs	Battery backup system
BC	bc	Bolt circle
C	C	Conduit
CCTV	cctv	Closed circuit television
CKT	ckt	Circuit
CMS	cms	Changeable message sign
DLC	dlc	Loop detector lead-in cable
EMS	ems	Extinguishable message sign
EVC	evc	Emergency vehicle cable
EVD	evd	Emergency vehicle detector
FB	fb	Flashing beacon
FBCA	fbca	Flashing beacon control assembly
FBS	fbs	Flashing beacon with slip base
FO	fo	Fiber optic
G	G	Ground (Equipment Grounding Conductor)
GFCI	GFCI	Ground fault circuit interrupt
HAR	har	Highway advisory radio
HEX	hex	Hexagonal
HPS	hps	High pressure sodium
IISNS	iisns	Internally illuminated street name sign
ISL	isl	Induction sign lighting
LED	led	Light emitting diode
LMA	lma	Luminaire mast arm
LPS	lps	Low pressure sodium
LTG	ltg	Lighting
LUM	lum	Luminaire
MAT	mat	Mast arm mounting vehicle signal faces, top attachment
MAS	mas	Mast arm mounting vehicle signal faces, side attachment
MAS-4A	mas-4A	Mast arm mounting vehicle signal faces, side attachment - 4 signal section
MAS-4B	mas-4B	
MAS-4C	mas-4C	
MAS-5A	mas-5A	Mast arm mounting vehicle signal faces, side attachment - 5 signal section
MAS-5B	mas-5B	
MC	mc	Mercury contactor
M/M	m/m	Multiple to multiple transformer
MT	mt	Conduit with pull wire or rope only
MTG	mtg	Mounting
	mv	Mercury vapor lighting fixture
N	N	Neutral (Grounded Conductor)
NC	NC	Normally closed
NO	NO	Normally open
PB	pb	Pull box
PEC	pec	Photoelectric control (Type Ⅰ, Ⅱ, Ⅲ, Ⅳ or Ⅴ as shown)
PED	ped	Pedestrian
PEU	peu	Photoelectric unit
PPB	ppb	Pedestrian push button
RL		Relocated equipment
RM	rm	Ramp metering
SB	sb	Slip base
SIC	sic	Signal interconnect cable
SIG	sig	Signal
SMA	sma	Signal mast arm
SNS	sns	Street name sign
SP	sp	Service point
TDC	tdc	Telephone demarcation cabinet
TMS	tms	Traffic monitoring station
TOS	tos	Traffic Operations System
VEH	veh	Vehicle
XFMR	xfmr	Transformer
COMM	comm	Communication
RWIS	rwis	Roadway weather information system

SOFFIT AND WALL MOUNTED LUMINAIRES

Pendant, 70 W HPS unless otherwise specified.

Flush, 70 W HPS unless otherwise specified.

Wall surface, 70 W HPS unless otherwise specified.

Existing soffit or wall luminaire to remain unmodified.

Existing soffit or wall luminaire to be modified as specified.

NOTE:

Arrow indicates "street side" of luminaire.

STATE OF CALIFORNIA
DEPARTMENT OF TRANSPORTATION

ELECTRICAL SYSTEMS (SYMBOLS AND ABBREVIATIONS)

NO SCALE

RSP ES-1A DATED OCTOBER 5, 2007 SUPERSEDES STANDARD PLAN ES-1A DATED MAY 1, 2006 - PAGE 400 OF THE STANDARD PLANS BOOK DATED MAY 2006.

REVISED STANDARD PLAN RSP ES-1A

DIST	COUNTY	ROUTE	POST MILES TOTAL PROJECT	SHEET NO.	TOTAL SHEETS
02	Sha,Teh	5	0.0/44.0, 0.0/42.1	75	77

REGISTERED ELECTRICAL ENGINEER

October 5, 2007
PLANS APPROVAL DATE

REGISTERED PROFESSIONAL ENGINEER Jeffery G. McRae No. E14512 Exp. 6-30-08 ELECTRICAL STATE OF CALIFORNIA

The State of California or its officers or agents shall not be responsible for the accuracy or completeness of electronic copies of this plan sheet.

To accompany plans dated 7-12-10

CONDUIT

PROPOSED	EXISTING	
		Lighting Conduit, unless otherwise indicated or noted
		Traffic signal conduit
C	c	Communication conduit
T	t	Telephone conduit
F	f	Fire alarm conduit
FO	fo	Fiber optic conduit
		Conduit termination (RSP ES-9A C)
R	r	Conduit riser in/on structure or service pole

SERVICE EQUIPMENT

PROPOSED	EXISTING	
OH	oh	Overhead lines
U	U	Wood pole "U" indicates utility owned
		Pole guy with anchor
		Utility transformer - ground mounted
III		Service equipment enclosure type
		Service equipment enclosure door indicates front of enclosure
T	t	Telephone demarcation cabinet

POLE-MOUNTED SERVICE DESIGNATION

Type of installation

TYPE H SERVICE - 28'-10" ← Pole height above grade

ILLUMINATED OVERHEAD SIGN

PROPOSED	EXISTING	
		Overhead sign - Single post
		Overhead sign - Two post
		Overhead sign - Mounted on structure
		Overhead sign with electrolier

SIGNAL EQUIPMENT

PROPOSED	EXISTING	
		Pedestrian signal face
		Pedestrian push button post
		Pedestrian barricade
		Vehicle signal face (with backplate, 3-Section: red, yellow and green)
		Vehicle signal face with angle visors
PV	PV	Modifications of basic symbols: "L" indicates all non-arrow sections louvered "LG" indicates louvered green section only "PV" indicates 12" programmed visibility sections "8" indicates all 8" sections (only when specified)
		Type 15TS and Vehicle signal face
		Vehicle signal face with red, yellow and green left arrow sections
		Vehicle signal face with red and yellow sections and up green arrow
		Vehicle signal face (5 Section) with red, yellow and green sections and yellow and green right arrows
		Type 1 Standard and attached vehicle signal faces
		Standard with signal mast arm only and attached vehicle signal faces and internally illuminated street name sign
		Type 33 Standard, Left-turn vehicle signal face and sign
		Standard with luminaire and signal mast arms and attached vehicle signal faces
		Cantilever flashing beacon Type 9 Frame, with a sign unless otherwise specified or indicated
		Type 15-FBS Standard with two vehicle signal face sections with lens, backplate and visor with a sign
R	Y	Flashing beacon. One vehicle signal face section with lens, backplate and visor. "R" indicates red indication, "Y" indicates yellow indication
		Controller assembly. Door indicates front of cabinet

SIGNAL EQUIPMENT Cont

PROPOSED	EXISTING	
		Guard post
		Type 1 Standard with "Meter On" sign
		Emergency Vehicle detector

NOTES:

1. All signal sections shall be 12" unless shown otherwise.
2. Signal heads shall be provided with backplates unless shown otherwise.
3. Signal indication shall be LED.

STATE OF CALIFORNIA
DEPARTMENT OF TRANSPORTATION

ELECTRICAL SYSTEMS (SYMBOLS AND ABBREVIATIONS)

NO SCALE

RSP ES-1B DATED OCTOBER 5, 2007 SUPERCEDES STANDARD PLAN ES-1B DATED MAY 1, 2006 - PAGE 401 OF THE STANDARD PLANS BOOK DATED MAY 2006.

REVISED STANDARD PLAN RSP ES-1B

2006 REVISED STANDARD PLAN RSP ES-1B

7-10-07

DIST	COUNTY	ROUTE	POST MILES TOTAL PROJECT	SHEET NO.	TOTAL SHEETS
02	Sha,Teh	5	0.0/44.0, 0.0/42.1	76	77

REGISTERED ELECTRICAL ENGINEER

October 5, 2007
PLANS APPROVAL DATE

REGISTERED PROFESSIONAL ENGINEER Jeffery G. McRae No. E14512 Exp. 6-30-08 ELECTRICAL STATE OF CALIFORNIA

The State of California or its officers or agents shall not be responsible for the accuracy or completeness of electronic copies of this plan sheet.

To accompany plans dated 7-12-10

EQUIPMENT IDENTIFICATION

ILLUMINATED SIGN IDENTIFICATION NUMBER:

Sign No. 12345

10 ISL SCI 1.0

- Sign number - Place on post or structure
- Transformer rating (kVA)
- Lighting control type
- Number and type of fixtures

Do NOT place on standard or structure

ELECTROLIER OR EQUIPMENT IDENTIFICATION NUMBER:

12345 - 15'-0"

- Mast arm length, if shown. Do not place on standard or structure.
- Equipment number - Place on standard or structure. Existing equipment numbers are shown in parenthesis

CONDUIT AND CONDUCTOR IDENTIFICATION:

1½"C, 2#10, 15#14, 2 DLC

- Number and size of conductors and cables
- Size of conduit in inches

Ø1, Ø2, Ø2P, etc.	Traffic phase identification for signal faces, detectors and phase diagrams
1 2 3	Project note numbers
A B C	Equipment description, installation or item numbers
1 2 3	Conduit run numbers

SIGNAL AND LIGHTING STANDARD (TYPICAL DESIGNATION):

19A - 3 - 100

- Wind velocity = 100 mph
- Case 3 arm loading
- Standard type
- Standard Plan sheet number
- Detail number or letter

MISCELLANEOUS EQUIPMENT

PROPOSED	EXISTING	
CMS	cms	Changeable message sign
		Closed circuit television camera
		Highway advisory radio pole and antenna
EMS	ems	Extinguishable message sign
M V	m v	Detection device M = Microwave sensor V = Video image sensor

WIRING DIAGRAM LEGEND

P	Pole
CB	Circuit breaker
A	Ampere
V	Volt
M	Metered
UM	Unmetered
NB	Neutral bus
GB	Ground bus
G	Equipment grounding conductor
N	Grounded conductor (Neutral)

- External conductor
- Conductor or bus
- Tie point
- Contactor coil
- Contactor, Contact NO
- Terminal blocks
- Contactor, Contact NC
- Enclosure bond
- Grounding electrode
- Circuit breaker
- Receptacle

PULL BOXES

PROPOSED EXISTING

Pull box-No. 5 unless otherwise indicated or noted.

3 9A(21)

Pull box-Additional designations or descriptions

3	= No. 3½ pull box
5	= No. 5 pull box
6	= No. 6 pull box
7	= No. 7 (Ceiling pull box)
8	= No. 8 (Pendant soffit pull box)
9	= No. 9 pull box
9A	= No. 9A pull box

(C)	= Communications pull box
(E)	= Pull box with extension
(S)	= Sprinkler control pull box
(21)	= Anchor bolts and conduit for future installation of Type 21 Standard
(T)	= Traffic pull box

VEHICLE DETECTORS

5 J 9 U

- Vehicle detector designation
- U = Upper
- L = Lower
- Slot number in input file
- Input file (I or J)
- Phase

PROPOSED EXISTING

	Type A detector loop. Outline of sawcut shown.
	Type B detector loop. Outline of sawcut shown.
	Type C detector loop. Outline of sawcut shown.
	Type D detector loop. Outline of sawcut shown.
	Type E detector loop. Outline of sawcut shown.
	Type Q detector loop. Outline of sawcut shown.
	Magnetic detector
DH dh	Detector handhole
	Microwave or video detection zone

STATE OF CALIFORNIA
DEPARTMENT OF TRANSPORTATION

ELECTRICAL SYSTEMS (SYMBOLS AND ABBREVIATIONS)

NO SCALE

RSP ES-1C DATED OCTOBER 5, 2007 SUPERCEDES STANDARD PLAN ES-1C DATED MAY 1, 2006 - PAGE 402 OF THE STANDARD PLANS BOOK DATED MAY 2006.

REVISED STANDARD PLAN RSP ES-1C

2006 REVISED STANDARD PLAN RSP ES-1C

DIST	COUNTY	ROUTE	POST MILES TOTAL PROJECT	SHEET NO.	TOTAL SHEETS
02	Sha,Teh	5	0.0/44.0, 0.0/42.1	77	77

REGISTERED ELECTRICAL ENGINEER

October 5, 2007
PLANS APPROVAL DATE

REGISTERED PROFESSIONAL ENGINEER Jeffery G. McRae No. E14512 Exp. 6-30-08 ELECTRICAL STATE OF CALIFORNIA

The State of California or its officers or agents shall not be responsible for the accuracy or completeness of electronic copies of this plan sheet.

To accompany plans dated 7-12-10

2006 REVISED STANDARD PLAN RSP ES-5A

LOOP INSTALLATION PROCEDURE

1. Loops shall be centered in lanes.
2. Saw slots in pavement for loop conductors as shown in details.
3. Distance between side of loop and a lead-in saw cut from adjacent detectors shall be 2'-0" minimum. Distance between lead-in saw cuts shall be 6" minimum.
4. Bottom of saw slot shall be smooth with no sharp edges.
5. Slots shall be washed until clean, blown out and thoroughly dried before installing loop conductors.
6. Adjacent loops on the same sensor unit channel shall be wound in opposite directions.
7. Identify and tag loop circuit pairs in the pull box with loop number, start (S) and finish (F) of conductor. Identify and tag lead-in-cable with sensor number and phase.
8. Install loop conductor in slot using a 3/16" to 1/4" thick wood paddle. Hold loop conductors with wood paddles (at the bottom of the sawed slot) during sealant placement.
9. No more than 2 twisted pairs shall be installed in one sawed slot.
10. Allow additional 5'-0" of slack length of conductor for the lead-in run to pull box.
11. The additional length of each conductor for each loop shall be twisted together into a pair (6 turns per 3'-4" minimum) before being placed in the slot and conduit leading to pull box.
12. Test each loop circuit for continuity, circuit resistance and insulation resistance at the pull box before filling slots.
13. Fill slots as shown in details.
14. Splice loop conductors to lead-in-cable. Splices shall be soldered.
15. End of lead-in-cable and Type 2 loop conductor shall be waterproofed prior to installing in conduit to prevent moisture from entering the cable.
16. Lead-in-cable shall not be spliced between the pull box and the controller cabinet terminals.
17. Test each loop circuit for continuity, circuit resistance and insulation resistance at the controller cabinet location.
18. Where loop conductors are not to be spliced to a lead-in-cable, the ends of the conductors shall be taped and waterproofed with electrical insulating coating.

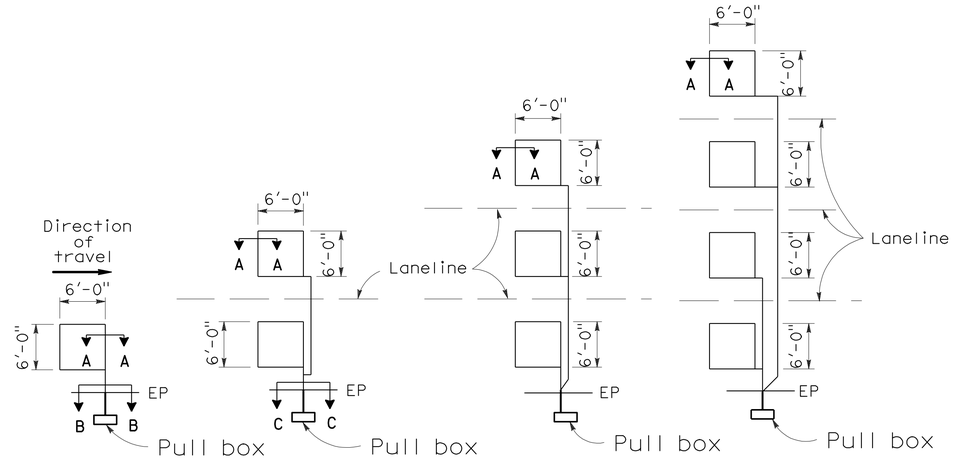

TYPE 1A INSTALLATION | TYPE 2A INSTALLATION | TYPE 3A INSTALLATION | TYPE 4A INSTALLATION

SAWCUT DETAILS

(Type A loop detector configurations illustrated)

1. 1A thru 4A = 1 Type A loop configuration in each lane.
2. 1B thru 4B = 1 Type B loop configuration in each lane.
3. 1C = 1 Type C loop configuration entering lanes as required.
4. 1D thru 4D = 1 Type D loop configuration in each lane.
5. 1E thru 4E = 1 Type E loop configuration in each lane.
6. 1Q thru 4Q = 1 Type Q loop configuration in each lane.
   (Use Type A, B, C, D, E or Q loop detector configurations only when specified or shown on plans)

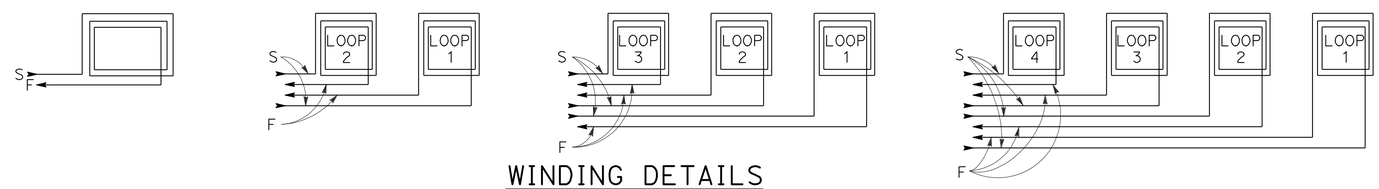

WINDING DETAILS

See Notes 6 and 7

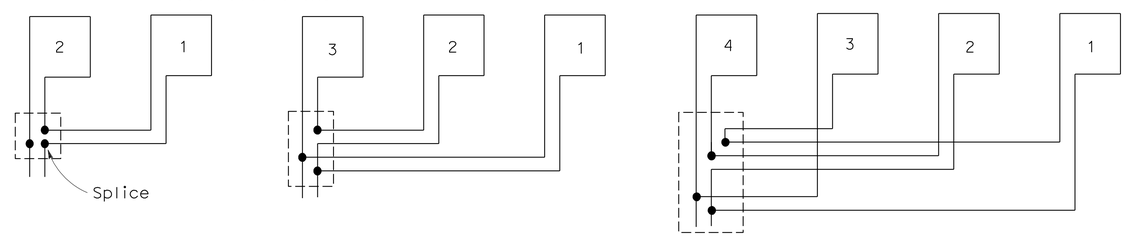

TYPICAL LOOP CONNECTIONS

(Dashed lines represent the pull box)

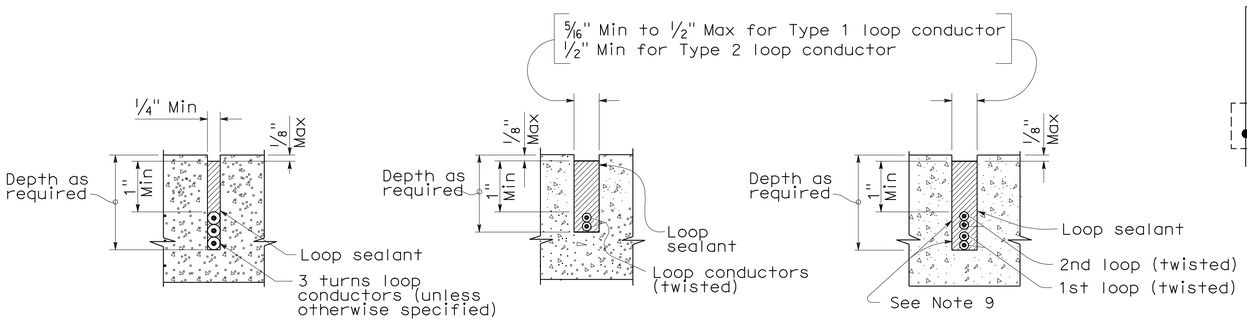

SECTION A-A | SECTION B-B | SECTION C-C

SLOT DETAILS - TYPE 1 AND TYPE 2 LOOP CONDUCTOR

STATE OF CALIFORNIA
DEPARTMENT OF TRANSPORTATION

ELECTRICAL SYSTEMS (DETECTORS)

NO SCALE

RSP ES-5A DATED OCTOBER 5, 2007 SUPERCEDES STANDARD PLAN ES-5A DATED MAY 1, 2006 - PAGE 423 OF THE STANDARD PLANS BOOK DATED MAY 2006.

REVISED STANDARD PLAN RSP ES-5A

8-17-07