Dist	COUNTY	ROUTE	POST MILES TOTAL PROJECT	SHEET No.	TOTAL SHEETS
02	Las	395	R61.1/61.5	1	51

STATE OF CALIFORNIA

DEPARTMENT OF TRANSPORTATION

PROJECT PLANS FOR CONSTRUCTION ON

STATE HIGHWAY

IN LASSEN COUNTY
AT JOHNSTONVILLE FROM ROUTE 36 TO
0.3 MILE NORTH OF JOHNSTONVILLE ROAD

TO BE SUPPLEMENTED BY STANDARD PLANS DATED MAY 2006

INDEX OF PLANS

SHEET No.	DESCRIPTION
1	TITLE AND LOCATION MAP
2-4	TYPICAL CROSS SECTIONS
5-7	LAYOUTS
8-9	PROFILES
10-11	CONSTRUCTION DETAILS
12-16	DRAINAGE PLANS, PROFILES, DETAILS AND QUANTITIES
17-19	UTILITY PLANS
20	CONSTRUCTION AREA SIGNS
21-25	PAVEMENT DELINEATION PLANS, DETAILS AND QUANTITIES
26-28	SIGN DETAILS AND QUANTITIES
29	SUMMARY OF QUANTITIES
30-32	ELECTRICAL PLANS
33-51	REVISED AND NEW STANDARD PLANS

THE STANDARD PLANS LIST APPLICABLE TO THIS CONTRACT IS INCLUDED IN THE NOTICE TO BIDDERS AND SPECIAL PROVISIONS BOOK.

LOCATION MAP

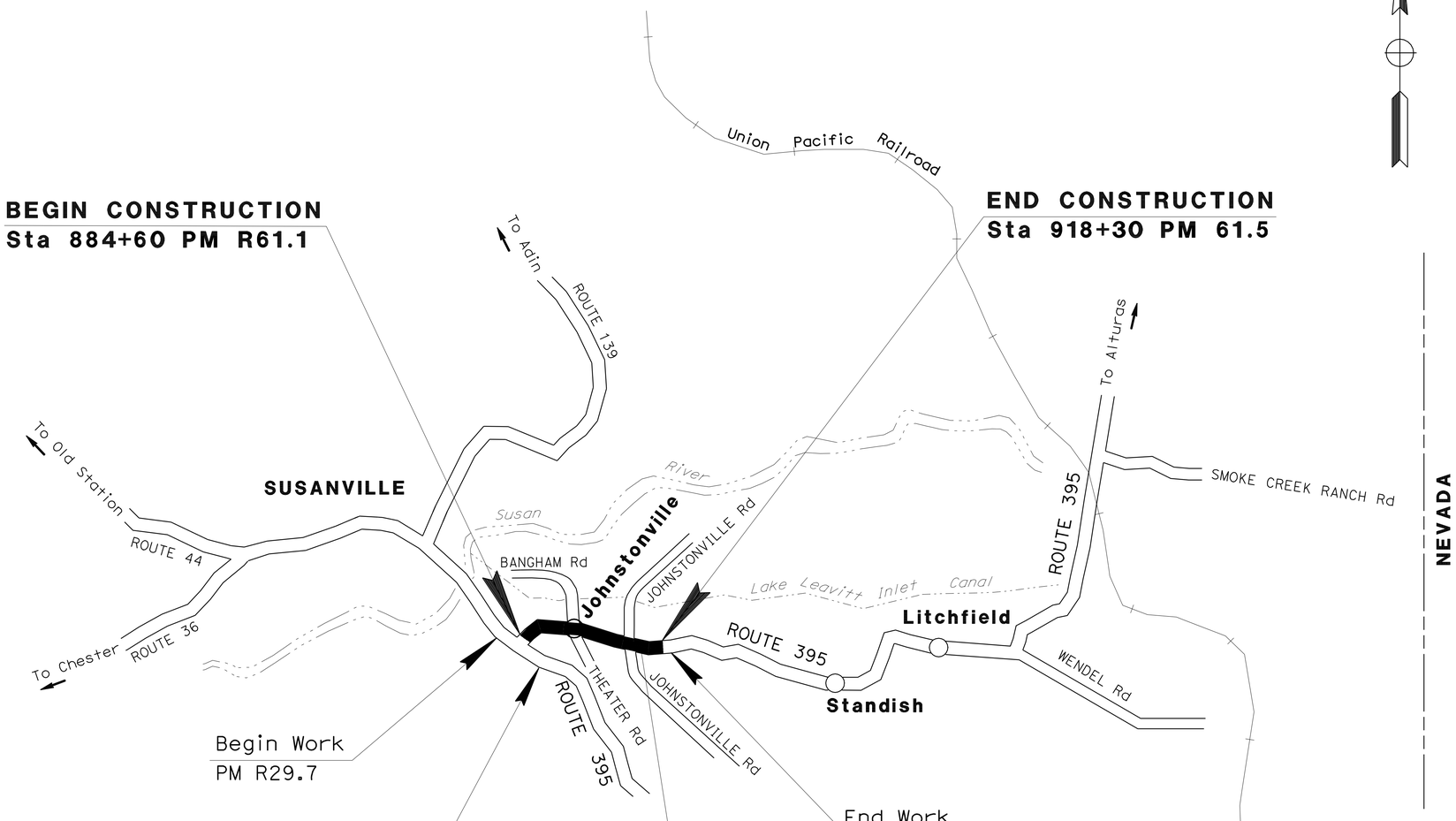

THE CONTRACTOR SHALL POSSESS THE CLASS (OR CLASSES) OF LICENSE AS SPECIFIED IN THE "NOTICE TO BIDDERS."

NO SCALE

PROJECT MANAGER: ERIC ORR
DESIGN ENGINEER: JULIE CASEY

P:\proj1\02\39090\pse\239090ab001.dgn

12-19-08
PROJECT ENGINEER DATE
REGISTERED CIVIL ENGINEER

February 23, 2009
PLANS APPROVAL DATE

REGISTERED PROFESSIONAL ENGINEER
MIKE MOGEN
No. C67018
Exp. 9/30/10
CIVIL
STATE OF CALIFORNIA

THE STATE OF CALIFORNIA OR ITS OFFICERS OR AGENTS SHALL NOT BE RESPONSIBLE FOR THE ACCURACY OR COMPLETENESS OF ELECTRONIC COPIES OF THIS PLAN SHEET.

LAST REVISION 12-19-08
DATE PLOTTED => 20-OCT-2009
TIME PLOTTED => 10:33

CONTRACT No. **02-390904**

Dist	COUNTY	ROUTE	POST MILES TOTAL PROJECT	SHEET No.	TOTAL SHEETS
02	Las	395	R61.1/61.5	2	51

REGISTERED CIVIL ENGINEER DATE 12-19-08

2-23-09
PLANS APPROVAL DATE

REGISTERED PROFESSIONAL ENGINEER MIKE MOGEN No. C67018 Exp. 9/30/10 CIVIL STATE OF CALIFORNIA

THE STATE OF CALIFORNIA OR ITS OFFICERS OR AGENTS SHALL NOT BE RESPONSIBLE FOR THE ACCURACY OR COMPLETENESS OF ELECTRONIC COPIES OF THIS PLAN SHEET.

NOTES:

1. DIMENSIONS OF THE PAVEMENT STRUCTURE (STRUCTURAL SECTIONS) ARE SUBJECT TO TOLERANCES SPECIFIED IN THE STANDARD SPECIFICATIONS.
2. SUPERELEVATIONS AS SHOWN OR AS DIRECTED BY THE ENGINEER.

ABBREVIATIONS

CP	CATCH POINT
LL	LANE LINE
Super	SUPERELEVATION

DESIGN DESIGNATION (ROUTE 395)

2000	ADT = 4500	D = 54%
2025	ADT = 9300	T = 20%
	DHV = 830	V = 55 MPH

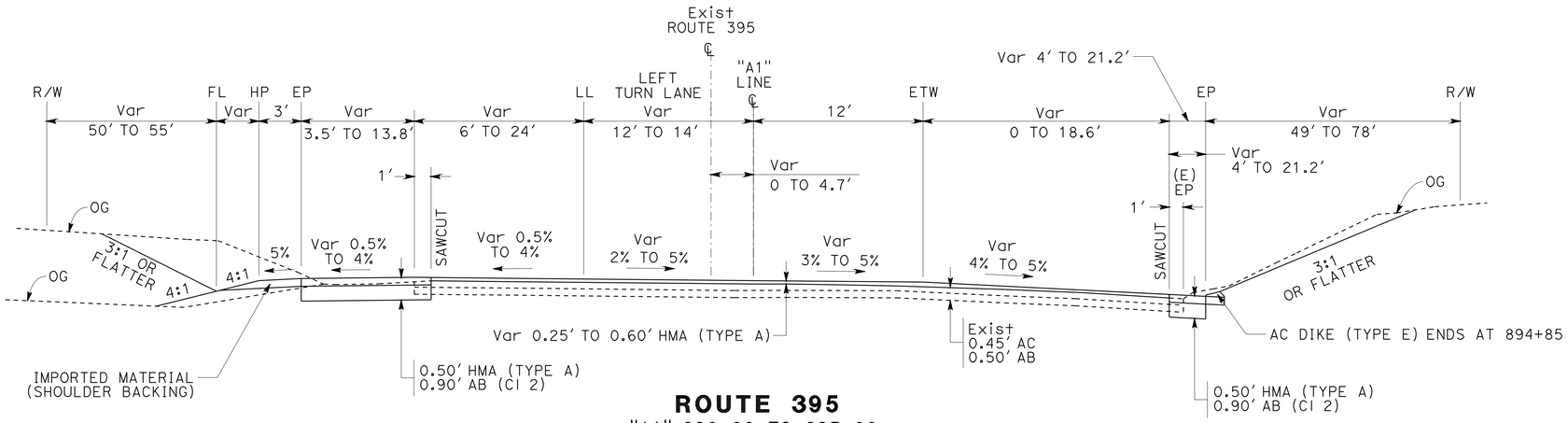

ROUTE 395
"A1" 890+00 TO 895+00

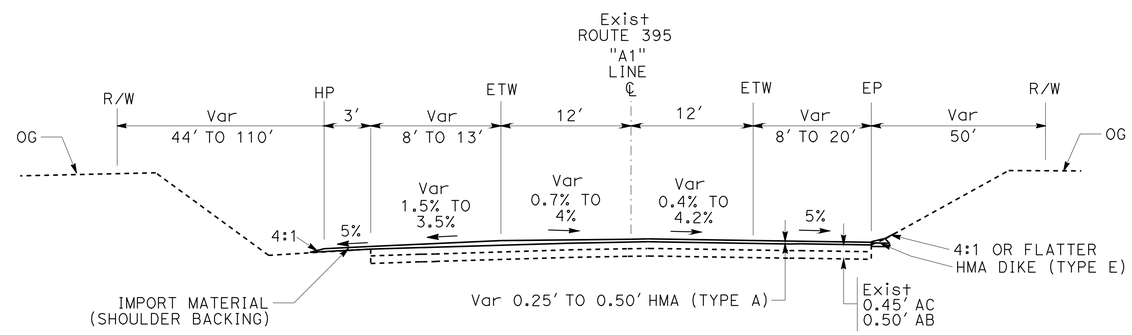

ROUTE 395
"A1" 887+00 TO 890+00

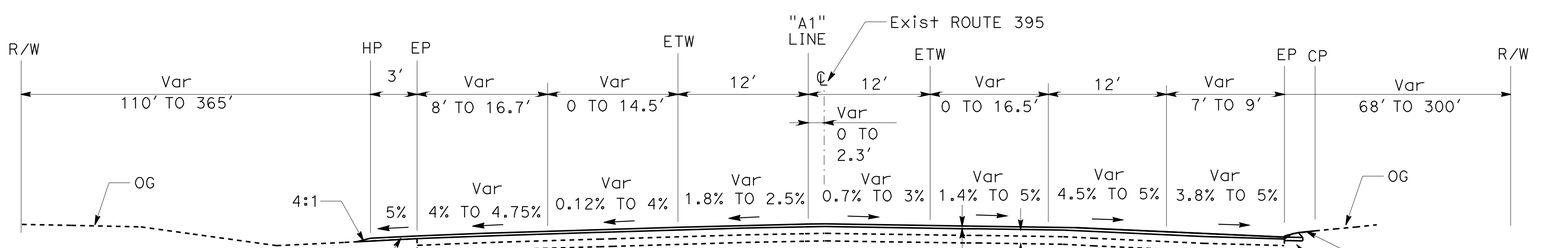

ROUTE 395
"A1" 885+68 TO 887+00

TYPICAL CROSS SECTIONS

NO SCALE

X-1

STATE OF CALIFORNIA - DEPARTMENT OF TRANSPORTATION
Caltrans **DESIGN**

FUNCTIONAL SUPERVISOR: JULIE CASEY
CALCULATED-DESIGNED BY: MIKE MOGEN
CHECKED BY: DANIEL FISHER
REVISED BY
DATE REVISED

LAST REVISION 12-19-08
DATE PLOTTED => 20-OCT-2009
TIME PLOTTED => 10:34

Dist	COUNTY	ROUTE	POST MILES TOTAL PROJECT	SHEET No.	TOTAL SHEETS
02	Las	395	R61.1/61.5	3	51

REGISTERED CIVIL ENGINEER DATE 12-19-08

2-23-09
PLANS APPROVAL DATE

REGISTERED PROFESSIONAL ENGINEER MIKE MOGEN No. C67018 Exp. 9/30/10 CIVIL STATE OF CALIFORNIA

THE STATE OF CALIFORNIA OR ITS OFFICERS OR AGENTS SHALL NOT BE RESPONSIBLE FOR THE ACCURACY OR COMPLETENESS OF ELECTRONIC COPIES OF THIS PLAN SHEET.

DESIGN DESIGNATION (ROUTE 395)

2000 ADT = 4500 D = 54%
2025 ADT = 9300 T = 20%
DHV = 830 V = 55 MPH

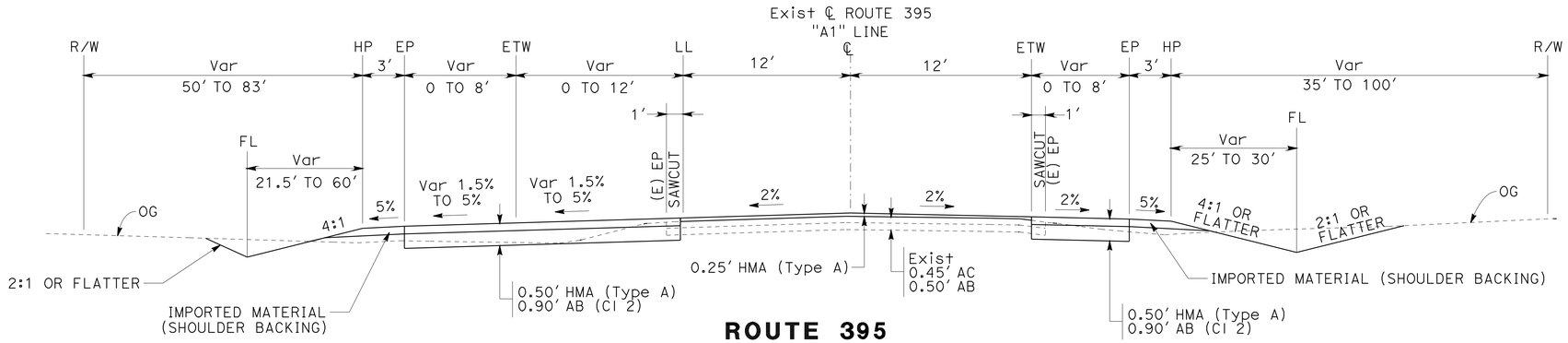

ROUTE 395
"A1" 910+50 TO 918+24

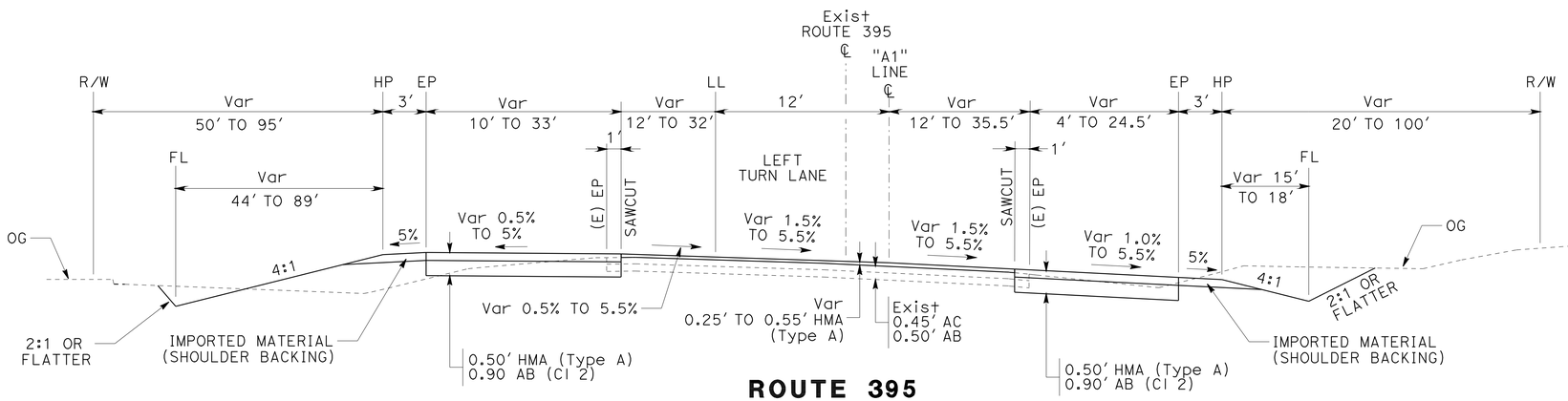

ROUTE 395
"A1" 895+84.89 TO 902+40
"A1" 903+00 TO 910+50

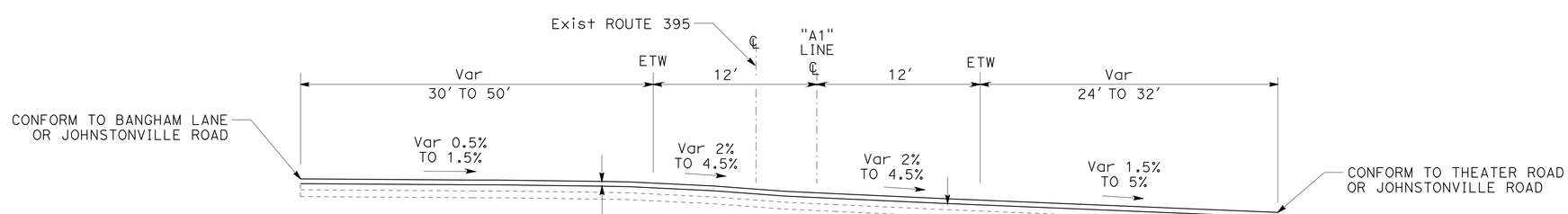

ROUTE 395
"A1" 895+00 TO 895+84.89
"A1" 902+40 TO 903+00

TYPICAL CROSS SECTIONS

NO SCALE

X-2

REVISED BY	DATE REVISED
MIKE MOGEN	DANIEL FISHER
CALCULATED-DESIGNED BY	CHECKED BY
FUNCTIONAL SUPERVISOR	JULIE CASEY

STATE OF CALIFORNIA - DEPARTMENT OF TRANSPORTATION
Caltrans **DESIGN**

LAST REVISION 12-19-08 DATE PLOTTED => 20-OCT-2009 TIME PLOTTED => 10:34

Dist	COUNTY	ROUTE	POST MILES TOTAL PROJECT	SHEET No.	TOTAL SHEETS
02	Las	395	R61.1/61.5	4	51

REGISTERED CIVIL ENGINEER DATE 12-19-08

2-23-09
PLANS APPROVAL DATE

REGISTERED PROFESSIONAL ENGINEER MIKE MOGEN No. C67018 Exp. 9/30/10 CIVIL STATE OF CALIFORNIA

THE STATE OF CALIFORNIA OR ITS OFFICERS OR AGENTS SHALL NOT BE RESPONSIBLE FOR THE ACCURACY OR COMPLETENESS OF ELECTRONIC COPIES OF THIS PLAN SHEET.

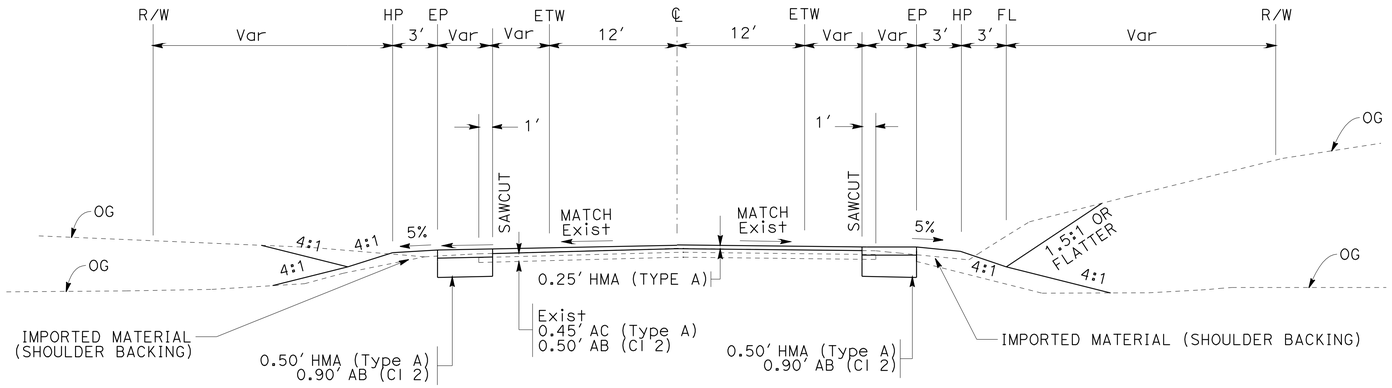

BANGHAM LANE
"B1" 1+46.38 TO 2+00

THEATER ROAD
"T1" 1+41.67 TO 2+25

JOHNSTONVILLE ROAD
"J1" 234+50 TO 235+38.67
"J1" 236+22.49 TO 237+00

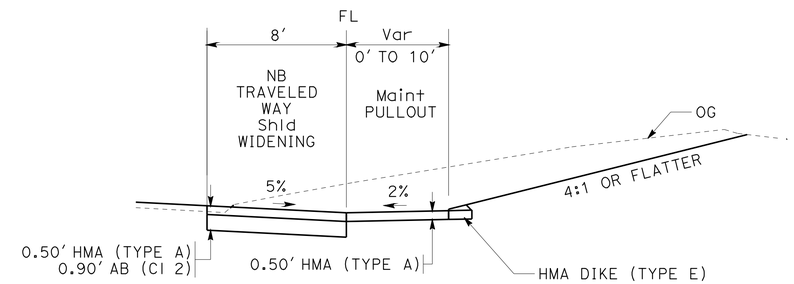

ROUTE 395
"A1" 891+35 TO 892+25

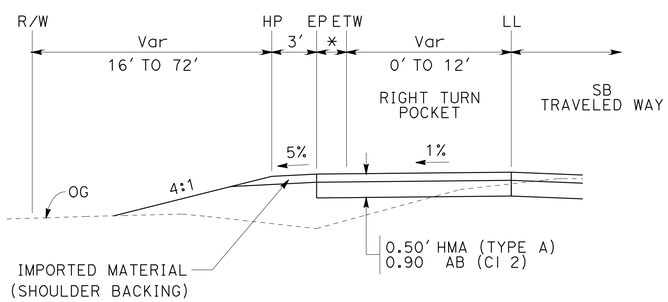

ROUTE 395
"A1" 895+06.48 TO 896+79 *2′
"A1" 902+50 TO 908+40 *8′

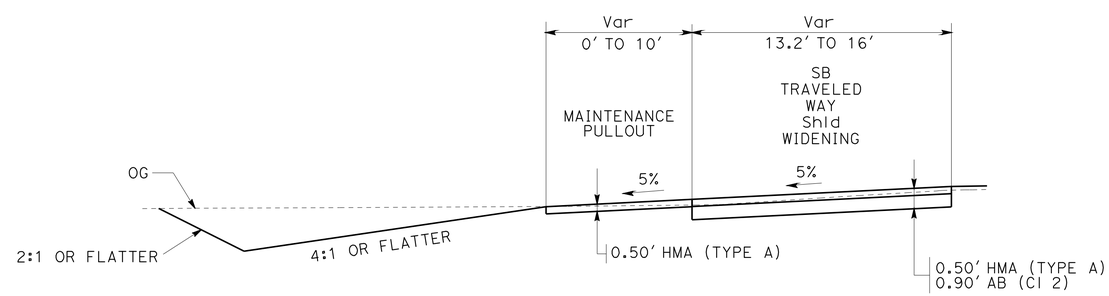

ROUTE 395
"A1" 911+82 TO 912+92

TYPICAL CROSS SECTIONS
NO SCALE

X-3

STATE OF CALIFORNIA - DEPARTMENT OF TRANSPORTATION
Caltrans
DESIGN

FUNCTIONAL SUPERVISOR: JULIE CASEY
CALCULATED-DESIGNED BY: MIKE MOGEN
CHECKED BY: DANIEL FISHER
REVISED BY
DATE REVISED

LAST REVISION 12-19-08
DATE PLOTTED => 20-OCT-2009
TIME PLOTTED => 10:34

Dist	COUNTY	ROUTE	POST MILES TOTAL PROJECT	SHEET No.	TOTAL SHEETS
02	Las	395	R61.1/61.5	5	51

REGISTERED CIVIL ENGINEER DATE 12-19-08

PLANS APPROVAL DATE 2-23-09

REGISTERED PROFESSIONAL ENGINEER MIKE MOGEN No. C67018 Exp. 9/30/10 CIVIL STATE OF CALIFORNIA

THE STATE OF CALIFORNIA OR ITS OFFICERS OR AGENTS SHALL NOT BE RESPONSIBLE FOR THE ACCURACY OR COMPLETENESS OF ELECTRONIC COPIES OF THIS PLAN SHEET.

NOTE:

1. FOR COMPLETE RIGHT OF WAY DATA, SEE RIGHT OF WAY RECORD MAPS AT DISTRICT OFFICE.

ABBREVIATION:

PEC PERMIT TO ENTER AND CONSTRUCT

LEGEND:

- DRIVEWAY (SEE CONSTRUCTION DETAILS)
- CONFORM (SEE CONSTRUCTION DETAILS)
- DRAINAGE SYSTEM No.
- DRAINAGE UNIT No.
- FLOW DIRECTION
- PLACE HMA (Misc AREA)

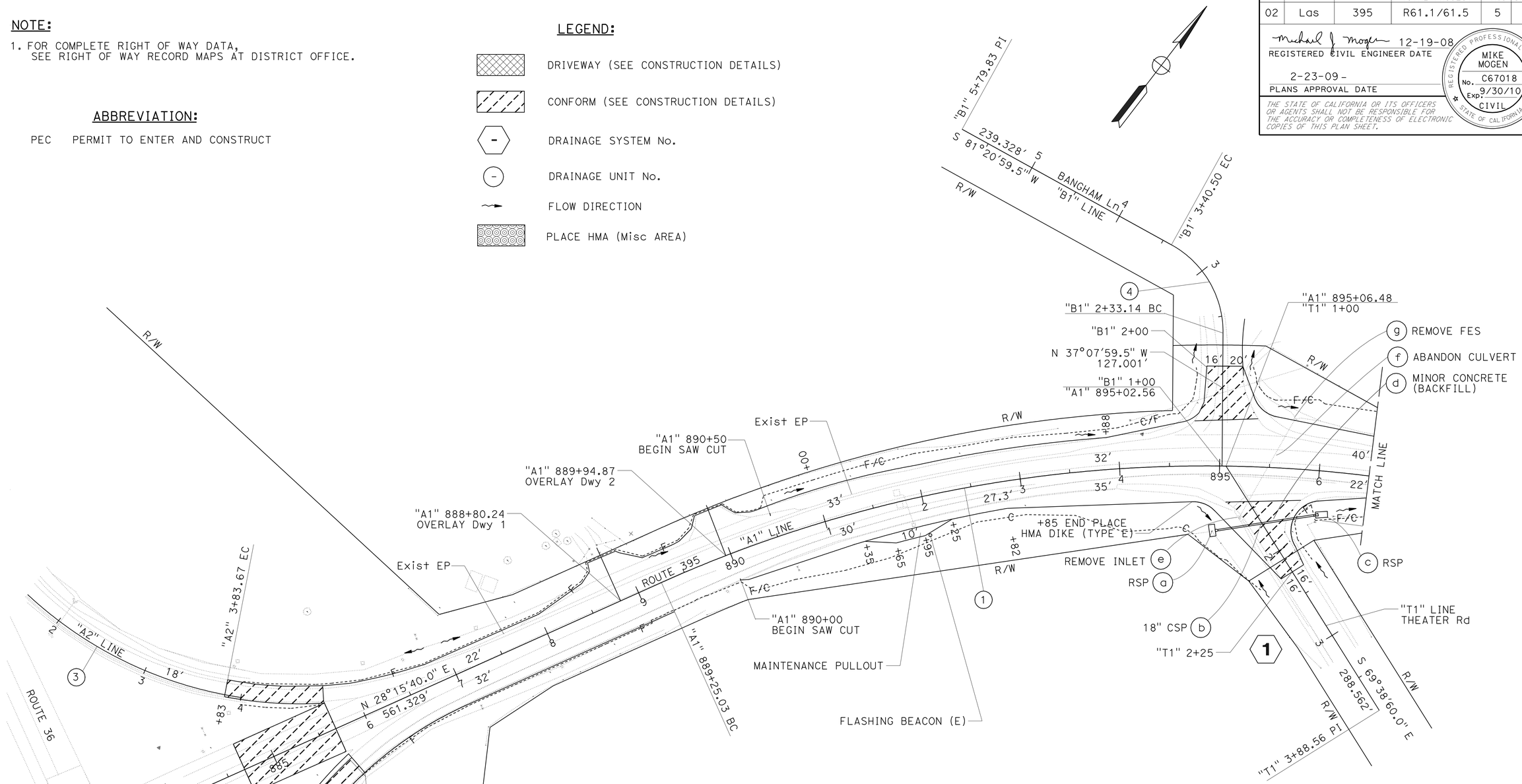

CURVE DATA

No.	R	Δ	T	L
1	1330.00	70°36'14"	941.76	1638.92
2	400.00	90°0'0"	400.00	628.32
3	400.00	54°57'23"	400.00	628.32
4	100.00	61°31'1"	59.51	107.37

LAYOUT

SCALE: 1" = 50'

L-1

STATE OF CALIFORNIA - DEPARTMENT OF TRANSPORTATION

Caltrans DESIGN

FUNCTIONAL SUPERVISOR: JULIE CASEY

CALCULATED-DESIGNED BY: MIKE MOGEN

CHECKED BY: DANIEL FISHER

REVISED BY / DATE REVISED

LAST REVISION: DATE PLOTTED => 20-OCT-2009 TIME PLOTTED => 10:34

12-19-08

BORDER LAST REVISED 3/1/2007

RELATIVE BORDER SCALE IS IN INCHES 0 1 2 3

USERNAME => trienard

DGN FILE => 239090ea001.dgn

CU 03 246

EA 390901

Dist	COUNTY	ROUTE	POST MILES TOTAL PROJECT	SHEET No.	TOTAL SHEETS
02	Las	395	R61.1/61.5	6	51

REGISTERED CIVIL ENGINEER DATE 12-19-08

2-23-09
PLANS APPROVAL DATE

REGISTERED PROFESSIONAL ENGINEER MIKE MOGEN No. C67018 Exp. 9/30/10 CIVIL STATE OF CALIFORNIA

THE STATE OF CALIFORNIA OR ITS OFFICERS OR AGENTS SHALL NOT BE RESPONSIBLE FOR THE ACCURACY OR COMPLETENESS OF ELECTRONIC COPIES OF THIS PLAN SHEET.

NOTE:

1. FOR COMPLETE RIGHT OF WAY DATA, SEE RIGHT OF WAY RECORD MAPS AT DISTRICT OFFICE.

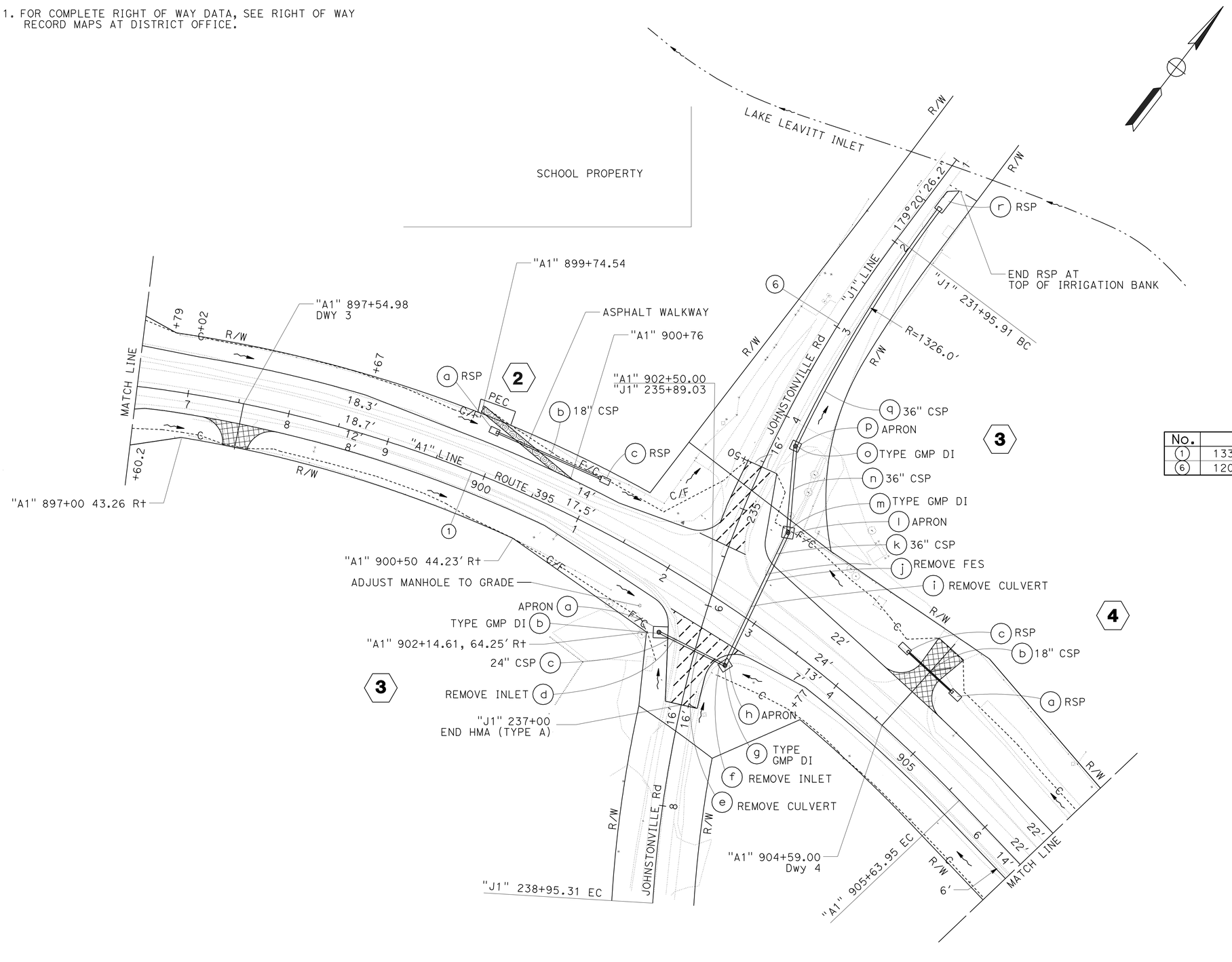

CURVE DATA

No.	R	Δ	T	L
1	1330.00	70°36'14"	941.76	1638.92
6	1200.00	33°23'37"	359.94	699.40

LAYOUT

SCALE: 1" = 50'

L-2

STATE OF CALIFORNIA - DEPARTMENT OF TRANSPORTATION
Caltrans DESIGN

FUNCTIONAL SUPERVISOR: JULIE CASEY
CALCULATED-DESIGNED BY: MIKE MOGEN
CHECKED BY: DANIEL FISHER
REVISED BY
DATE REVISED

LAST REVISION 12-19-08
DATE PLOTTED => 20-OCT-2009
TIME PLOTTED => 10:34

Dist	COUNTY	ROUTE	POST MILES TOTAL PROJECT	SHEET No.	TOTAL SHEETS
02	Las	395	R61.1/61.5	7	51

REGISTERED CIVIL ENGINEER DATE 12-19-08

PLANS APPROVAL DATE 2-23-09

REGISTERED PROFESSIONAL ENGINEER MIKE MOGEN No. C67018 Exp. 9/30/10 CIVIL STATE OF CALIFORNIA

THE STATE OF CALIFORNIA OR ITS OFFICERS OR AGENTS SHALL NOT BE RESPONSIBLE FOR THE ACCURACY OR COMPLETENESS OF ELECTRONIC COPIES OF THIS PLAN SHEET.

NOTE:

1. FOR COMPLETE RIGHT OF WAY DATA, SEE RIGHT OF WAY RECORD MAPS AT DISTRICT OFFICE.

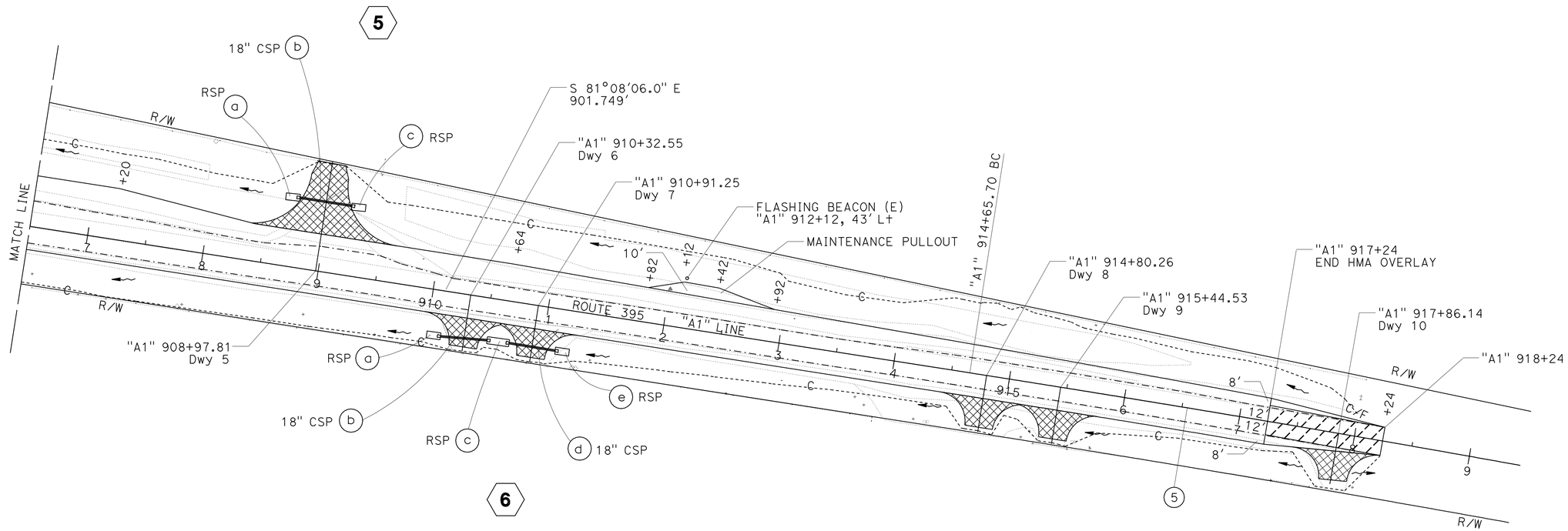

CURVE DATA

No.	R	Δ	T	L
(5)	20000	3°2'30"	531.00	1061.74

LAYOUT

SCALE: 1" = 50'

L-3

STATE OF CALIFORNIA - DEPARTMENT OF TRANSPORTATION

Caltrans **DESIGN**

FUNCTIONAL SUPERVISOR: JULIE CASEY

CALCULATED-DESIGNED BY: MIKE MOGEN

CHECKED BY: DANIEL FISHER

REVISED BY

DATE REVISED

LAST REVISION 12-19-08 DATE PLOTTED => 20-OCT-2009 TIME PLOTTED => 10:34

Dist	COUNTY	ROUTE	POST MILES TOTAL PROJECT	SHEET No.	TOTAL SHEETS
02	Las	395	R61.1/61.5	8	51

Michael J Mogen 12-19-08
REGISTERED CIVIL ENGINEER DATE

2-23-09
PLANS APPROVAL DATE

REGISTERED PROFESSIONAL ENGINEER
MIKE MOGEN
No. C67018
Exp. 9/30/10
CIVIL
STATE OF CALIFORNIA

THE STATE OF CALIFORNIA OR ITS OFFICERS OR AGENTS SHALL NOT BE RESPONSIBLE FOR THE ACCURACY OR COMPLETENESS OF ELECTRONIC COPIES OF THIS PLAN SHEET.

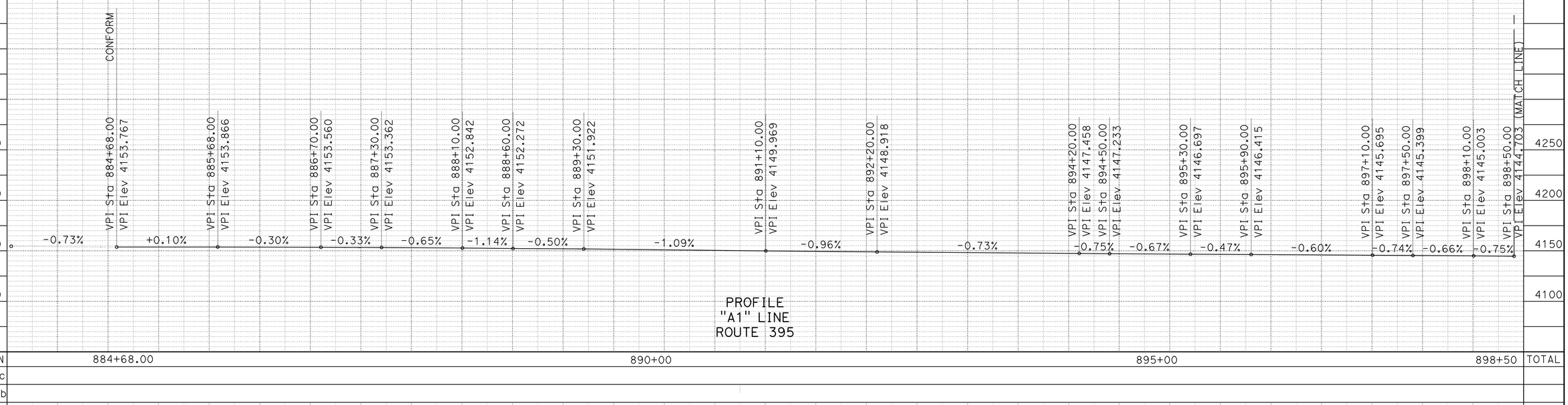

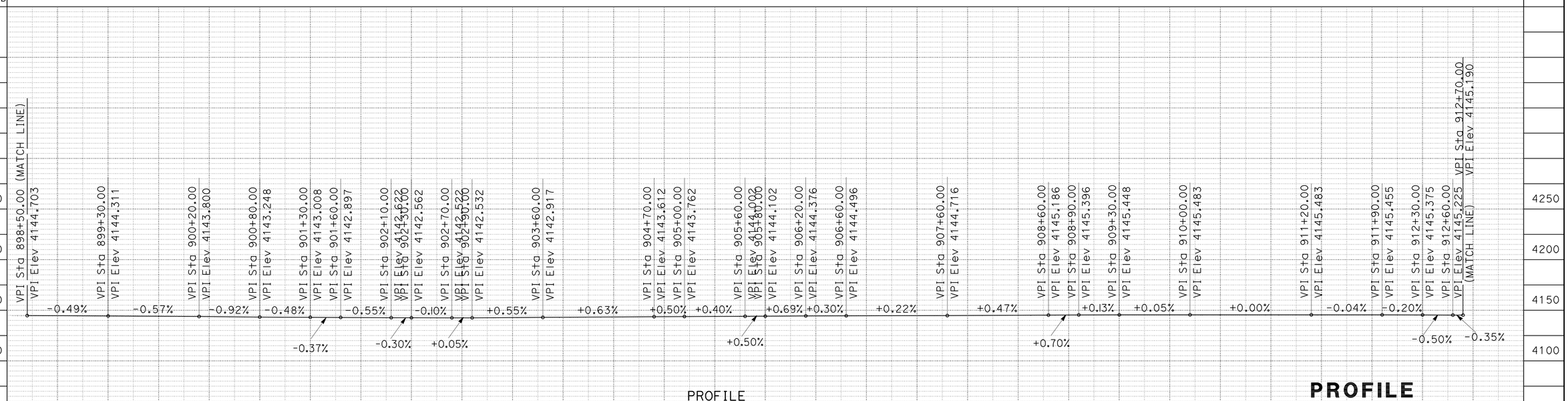

PROFILE

SCALE: 1" = 50' Horiz
1" = 5' Vert

P-1

REVISED BY	
DATE REVISED	
MIKE MOGEN	DANIEL FISHER
CALCULATED-DESIGNED BY	CHECKED BY
FUNCTIONAL SUPERVISOR	JULIE CASEY

STATE OF CALIFORNIA - DEPARTMENT OF TRANSPORTATION
Caltrans **DESIGN**

LAST REVISION 12-19-08
DATE PLOTTED => 20-OCT-2009
TIME PLOTTED => 10:34

Dist	COUNTY	ROUTE	POST MILES TOTAL PROJECT	SHEET No.	TOTAL SHEETS
02	Las	395	R61.1/61.5	9	51

Michael J Mogen 12-19-08
REGISTERED CIVIL ENGINEER DATE

2-23-09
PLANS APPROVAL DATE

REGISTERED PROFESSIONAL ENGINEER
MIKE MOGEN
No. C67018
Exp. 9/30/10
CIVIL
STATE OF CALIFORNIA

THE STATE OF CALIFORNIA OR ITS OFFICERS OR AGENTS SHALL NOT BE RESPONSIBLE FOR THE ACCURACY OR COMPLETENESS OF ELECTRONIC COPIES OF THIS PLAN SHEET.

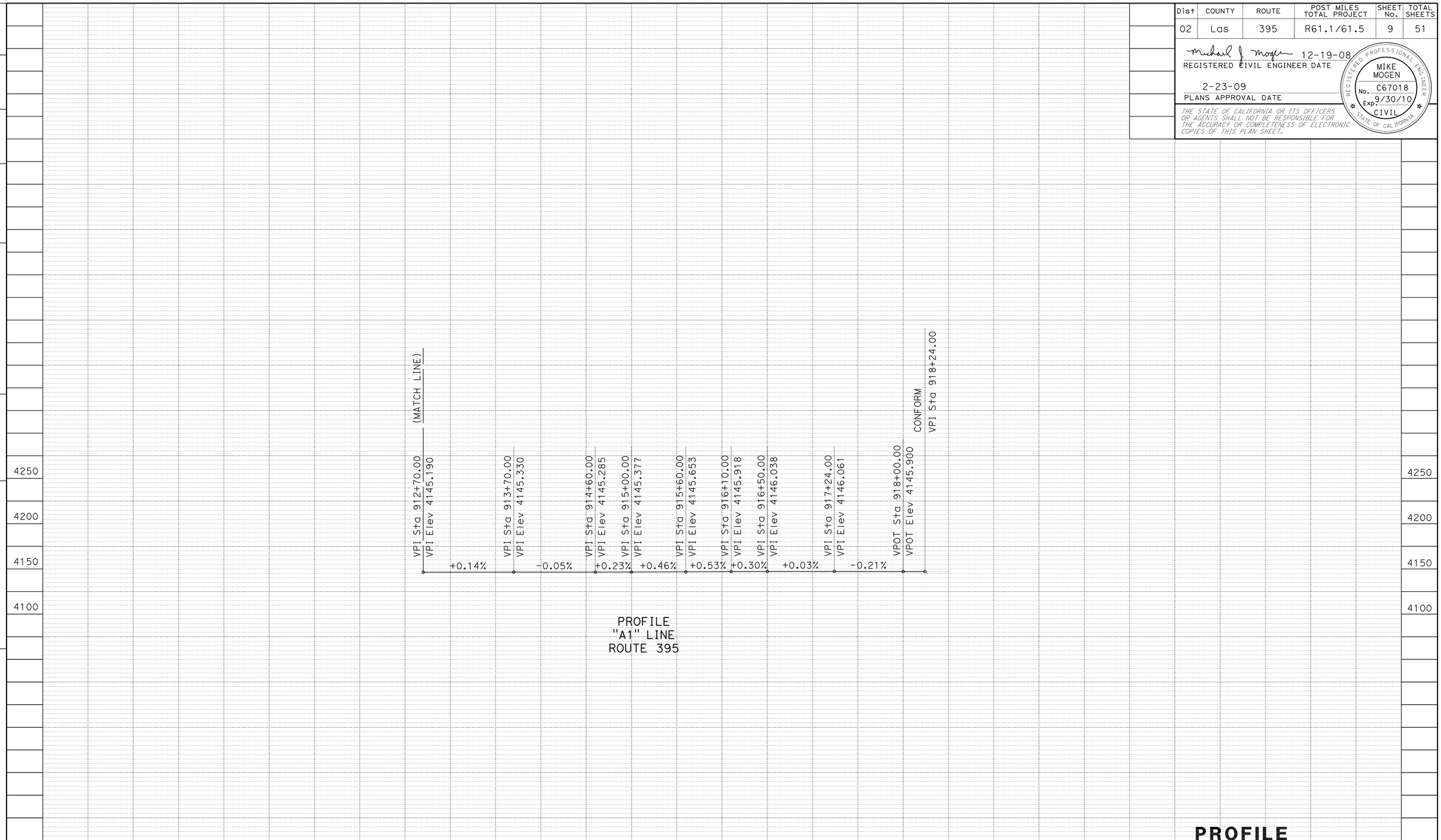

PROFILE
"A1" LINE
ROUTE 395

PROFILE
SCALE: 1" = 50' Horiz
1" = 5' Vert

P-2

STATION	912+50	918+00	TOTAL
CY Exc			
CY Emb			

STATE OF CALIFORNIA - DEPARTMENT OF TRANSPORTATION
Caltrans **DESIGN**

FUNCTIONAL SUPERVISOR: JULIE CASEY
CALCULATED-DESIGNED BY: MIKE MOGEN
CHECKED BY: DANIEL FISHER
REVISED BY
DATE REVISED

LAST REVISION 12-19-08
DATE PLOTTED => 20-OCT-2009
TIME PLOTTED => 10:34

Dist	COUNTY	ROUTE	POST MILES TOTAL PROJECT	SHEET No.	TOTAL SHEETS
02	Las	395	R61.1/61.5	10	51

REGISTERED CIVIL ENGINEER DATE 12-19-08

PLANS APPROVAL DATE 2-23-09

REGISTERED PROFESSIONAL ENGINEER MIKE MOGEN No. C67018 Exp. 9/30/10 CIVIL STATE OF CALIFORNIA

THE STATE OF CALIFORNIA OR ITS OFFICERS OR AGENTS SHALL NOT BE RESPONSIBLE FOR THE ACCURACY OR COMPLETENESS OF ELECTRONIC COPIES OF THIS PLAN SHEET.

LEGEND:

DRIVEWAY

DRIVEWAY DIMENSION TABLE

DRIVEWAY	LINE	CL Sta	W	BC (a)			RP (b)			EC (c)		
				STATION	OFFSET	Elev	STATION	OFFSET	RADIUS	STATION	OFFSET	Elev
1	"A1"	888+80.24										
2	"A1"	889+94.87										
3	"A1"	897+54.98	24.14′	897+18.22	20.00′ Rt	4144.64′	897+17.20	43.74′ Rt	24.80′	897+42.50	48.00′ Rt	4144.61′
4	"A1"	904+59.00	32.00′	904+23.03	44.71′ Lt	4142.76′	904+23.85	69.69′ Lt	25.00′	904+47.60	69.26′ Lt	4141.04′
5	"A1"	908+97.81	32.00′	908+37.43	32.32′ Lt	4143.99′	908+31.82	93.00′ Lt	50.00′	908+81.82	93.00′ Lt	4143.20′
6	"A1"	910+32.55	24.50′	909+95.55	20.00′ Rt	4144.58′	909+95.55	45.00′ Rt	25.00′	910+20.55	48.00′ Rt	4144.93′
7	"A1"	910+91.25	24.40′	910+61.90	20.00′ Rt	4144.93′	910+54.25	45.00′ Rt	25.00′	910+79.07	48.00′ Rt	4144.90′
8	"A1"	914+80.26	24.40′	914+43.29	20.00′ Rt	4144.64′	914+43.23	45.00′ Rt	25.00′	914+68.06	48.00′ Rt	4143.71′
9	"A1"	915+44.53	24.30′	915+11.68	20.00′ Rt	4144.67′	915+07.44	45.00′ Rt	25.00′	915+32.32	48.00′ Rt	4144.79′
10	"A1"	917+86.14	26.00′	917+49.24	18.14′ Rt	4145.46′	917+50.94	42.98′ Rt	25.00′	917+75.43	48.00′ Rt	4145.66′

DRIVEWAY DIMENSION TABLE

DRIVEWAY	LINE	CL Sta	W	EC (f)			RP (e)			BC (d)		
				STATION	OFFSET	Elev	STATION	OFFSET	RADIUS	STATION	OFFSET	Elev
1	"A1"	888+80.24										
2	"A1"	889+94.87										
3	"A1"	897+54.99	24.14′	897+67.45	42.00′ Rt	4144.35′	897+93.29	44.79′ Rt	25.00′	897+93.95	20.00′ Rt	4144.01′
4	"A1"	904+59.00	32.00′	904+70.42	69.00′ Lt	4141.27′	904+94.12	69.26′ Lt	25.20′	904+93.63	44.00′ Lt	4142.90′
5	"A1"	908+97.81	32.00′	909+13.82	93.00′ Lt	4143.50′	908+63.82	82.00′ Lt	50.00′	909+63.86	32.00′ Lt	4144.39′
6	"A1"	910+32.55	24.50′	910+45.09	48.00′ Rt	4144.93′	910+91.25	45.00′ Rt	25.00′	910+61.90	20.00′ Rt	4144.93′
7	"A1"	910+91.25	24.40′	911+03.25	48.00′ Rt	4145.11′	911+28.25	45.00′ Rt	25.00′	911+28.25	20.00′ Rt	4145.18′
8	"A1"	914+80.26	24.40′	914+92.48	48.00′ Rt	4144.50′	915+17.35	45.00′ Rt	25.00′	915+11.68	20.00′ Rt	4144.67′
9	"A1"	915+44.53	24.30′	915+56.68	48.00′ Rt	4144.91′	915+81.61	45.00′ Rt	25.00′	915+81.30	20.00′ Rt	4145.13′
10	"A1"	917+86.14	26.00′	918+02.17	48.00′ Rt	4145.13′	918+27.73	39.34′ Rt	25.00′	918+24.57	12.53′ Rt	4145.38′

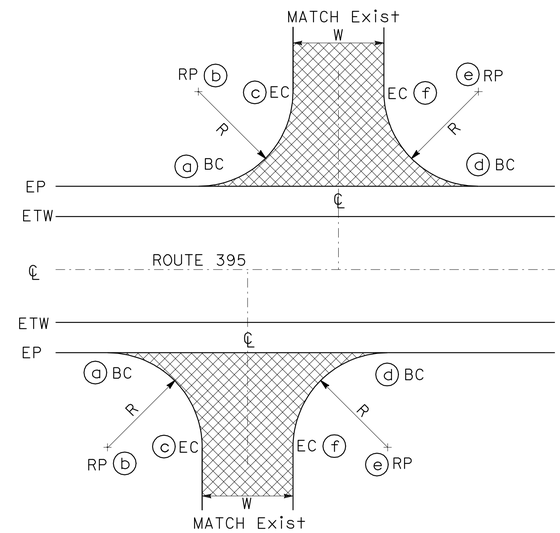

TYPICAL DRIVEWAY

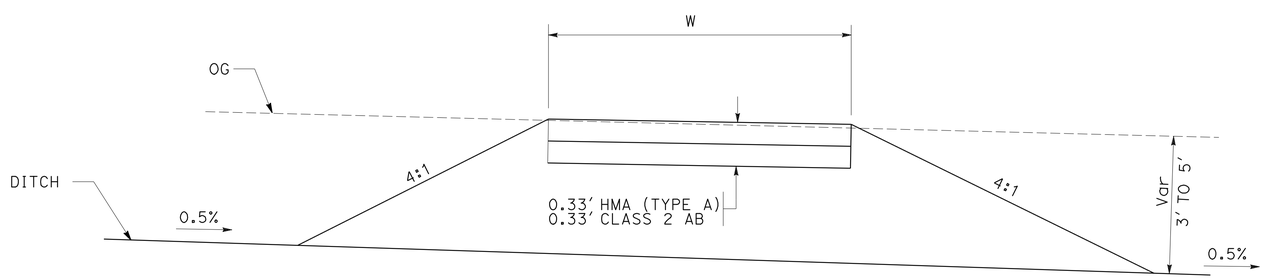

CROSS SECTIONS
(Dwy 3 THROUGH 10)

DRIVEWAY

"A1" 897+54.98,904+59.00,908+97.81,
"A1" 910+32.55,910+91.25,914.80.26,
"A1" 915+44.53,917+86.14

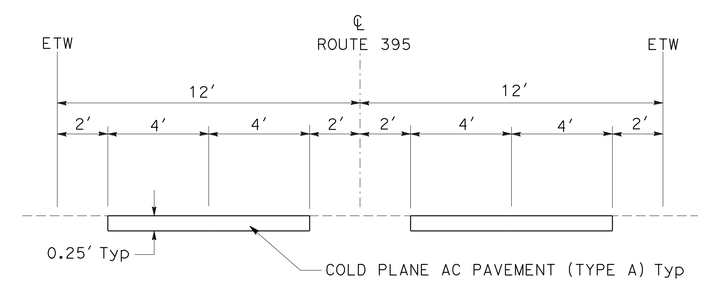

REPLACE ASPHALT CONCRETE SURFACING

CONSTRUCTION DETAILS

NO SCALE

C-1

STATE OF CALIFORNIA - DEPARTMENT OF TRANSPORTATION

Caltrans DESIGN

FUNCTIONAL SUPERVISOR: JULIE CASEY

CALCULATED-DESIGNED BY: MIKE MOGEN

CHECKED BY: DANIEL FISHER

REVISED BY / DATE REVISED

LAST REVISION 12-19-08

DATE PLOTTED => 20-OCT-2009

TIME PLOTTED => 10:35

Dist	COUNTY	ROUTE	POST MILES TOTAL PROJECT	SHEET No.	TOTAL SHEETS
02	Las	395	R61.1/61.5	11	51

Michael J Mogen 12-19-08
REGISTERED CIVIL ENGINEER DATE

2-23-09
PLANS APPROVAL DATE

REGISTERED PROFESSIONAL ENGINEER
MIKE MOGEN
No. C67018
Exp. 9/30/10
CIVIL
STATE OF CALIFORNIA

THE STATE OF CALIFORNIA OR ITS OFFICERS OR AGENTS SHALL NOT BE RESPONSIBLE FOR THE ACCURACY OR COMPLETENESS OF ELECTRONIC COPIES OF THIS PLAN SHEET.

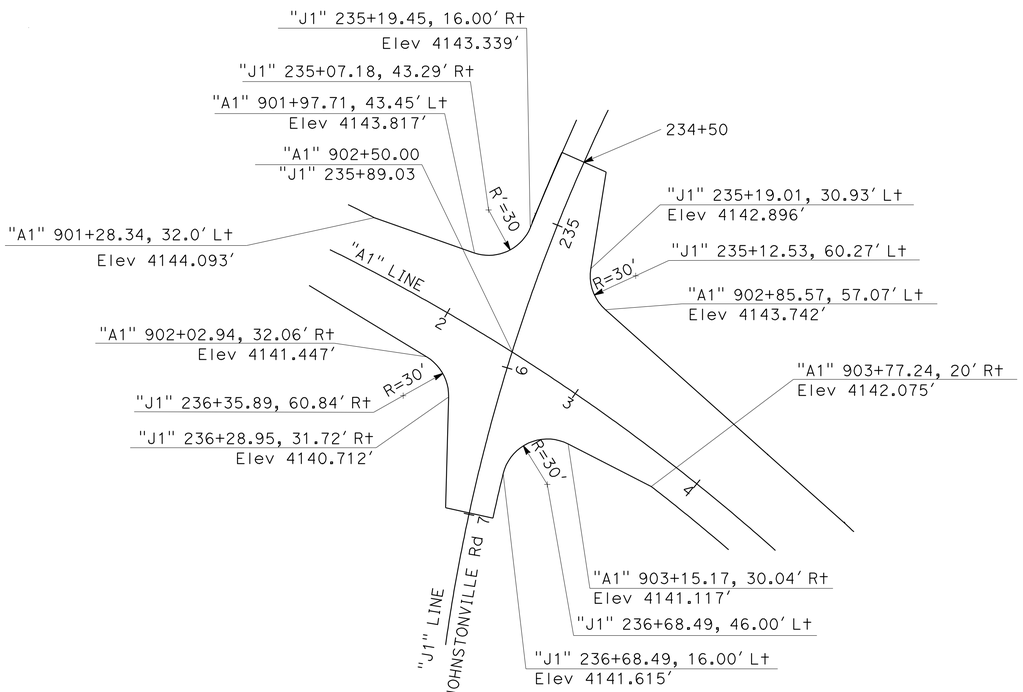

JOHNSTONVILLE Rd CONNECTION

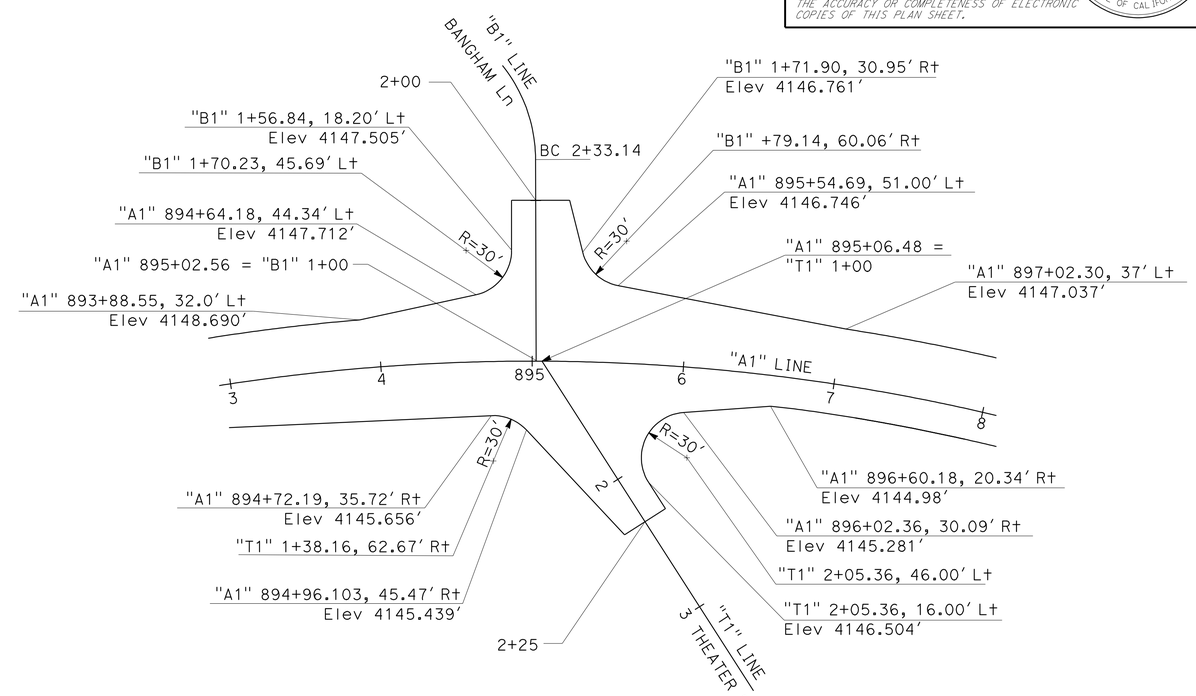

BANGHAM Rd & THEATER Rd CONNECTION

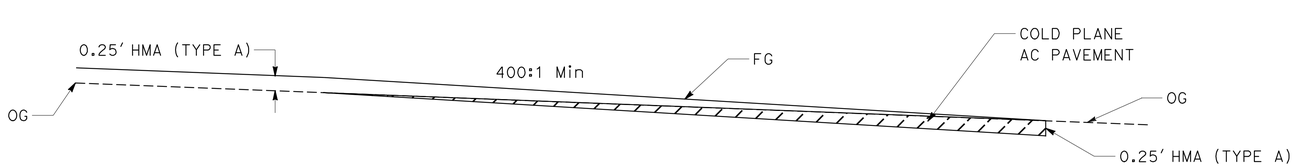

CONFORM

"A1" 884+68 TO 885+68, "A1" 917+24 TO 918+24
"A2" 3+83.67 TO 4+84, "A3" 4+08 TO 5+08
"B1" 1+46.38 TO 2+00, "J1" 234+50 TO 235+38.67
"T1" 1+46.38 TO 2+00, "J1" 236+22.49 TO 237+00

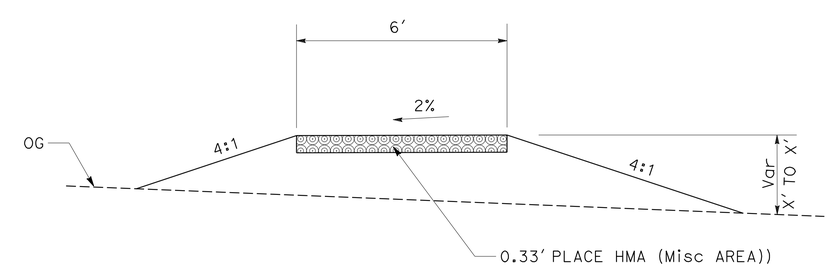

ASPHALT WALKWAY

"A1" 899+74.54 TO 900+76 Lt

CONSTRUCTION DETAILS

NO SCALE

C-2

STATE OF CALIFORNIA - DEPARTMENT OF TRANSPORTATION
Caltrans DESIGN
FUNCTIONAL SUPERVISOR: JULIE CASEY
MIKE MOGEN | DANIEL FISHER
CALCULATED-DESIGNED BY | CHECKED BY
REVISED BY | DATE REVISED

LAST REVISION 12-19-08 | DATE PLOTTED => 20-OCT-2009 | TIME PLOTTED => 10:35

Dist	COUNTY	ROUTE	POST MILES TOTAL PROJECT	SHEET No.	TOTAL SHEETS
02	Las	395	R61.1/61.5	12	51

REGISTERED CIVIL ENGINEER DATE 12-19-08

PLANS APPROVAL DATE 2-23-09

REGISTERED PROFESSIONAL ENGINEER MIKE MOGEN No. C67018 Exp. 9/30/10 CIVIL STATE OF CALIFORNIA

THE STATE OF CALIFORNIA OR ITS OFFICERS OR AGENTS SHALL NOT BE RESPONSIBLE FOR THE ACCURACY OR COMPLETENESS OF ELECTRONIC COPIES OF THIS PLAN SHEET.

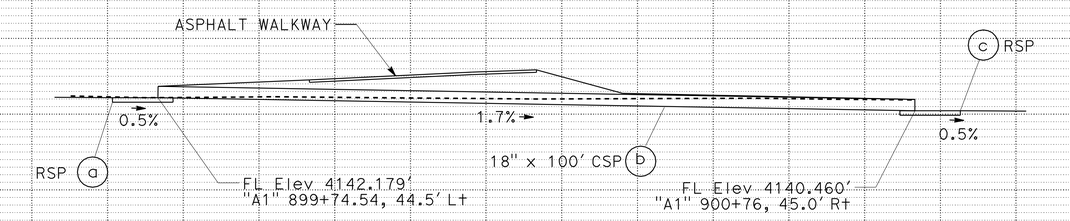

DRAINAGE SYSTEM No. 2

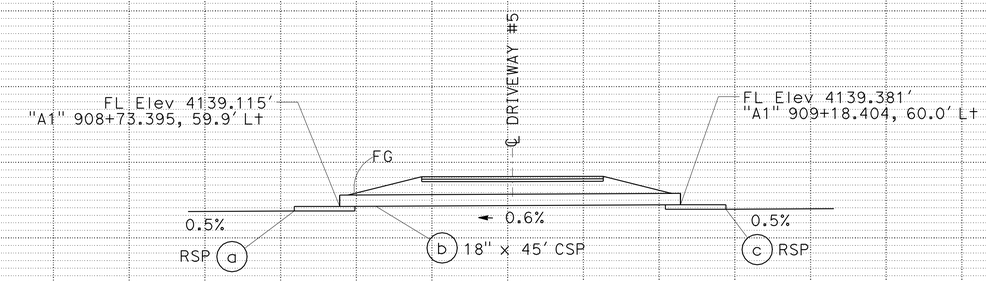

DRAINAGE SYSTEM No. 5

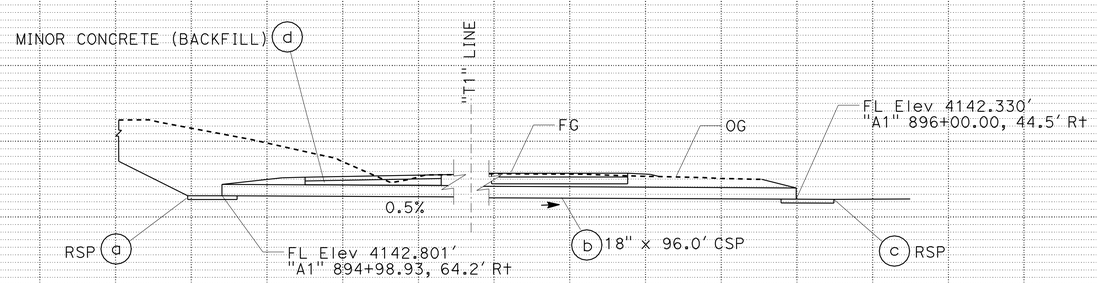

DRAINAGE SYSTEM No. 1

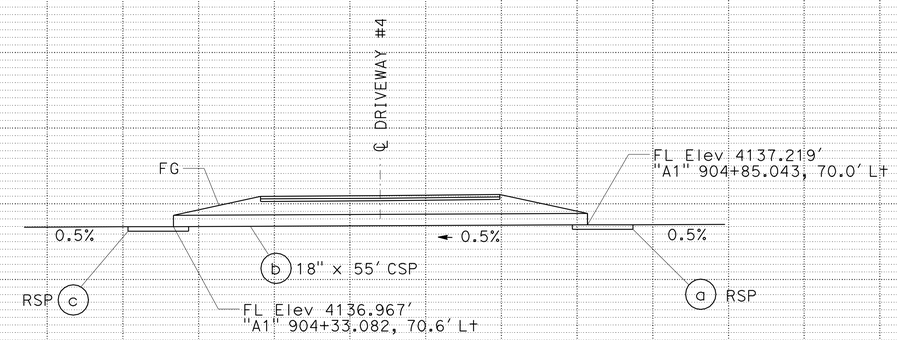

DRAINAGE SYSTEM No. 4

DRAINAGE PROFILES

NO SCALE

DP-1

STATE OF CALIFORNIA - DEPARTMENT OF TRANSPORTATION
Caltrans **DESIGN**

FUNCTIONAL SUPERVISOR: JULIE CASEY
CALCULATED-DESIGNED BY: MIKE MOGEN
CHECKED BY: DANIEL FISHER
REVISED BY / DATE REVISED

LAST REVISION 12-19-08 | DATE PLOTTED => 20-OCT-2009 | TIME PLOTTED => 10:35

Dist	COUNTY	ROUTE	POST MILES TOTAL PROJECT	SHEET No.	TOTAL SHEETS
02	Las	395	R61.1/61.5	13	51

Michael J Mogen 12-19-08
REGISTERED CIVIL ENGINEER DATE

2-23-09
PLANS APPROVAL DATE

REGISTERED PROFESSIONAL ENGINEER
MIKE MOGEN
No. C67018
Exp. 9/30/10
CIVIL
STATE OF CALIFORNIA

THE STATE OF CALIFORNIA OR ITS OFFICERS OR AGENTS SHALL NOT BE RESPONSIBLE FOR THE ACCURACY OR COMPLETENESS OF ELECTRONIC COPIES OF THIS PLAN SHEET.

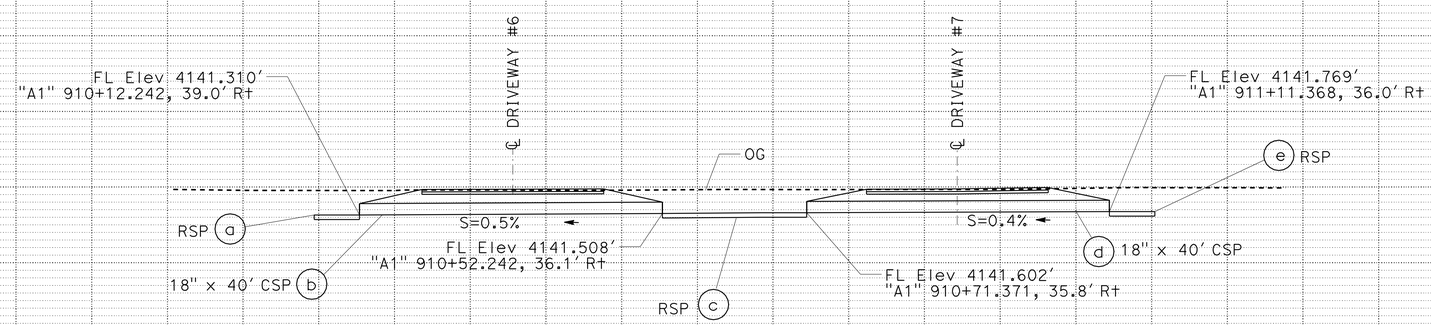

DRAINAGE SYSTEM No. 6

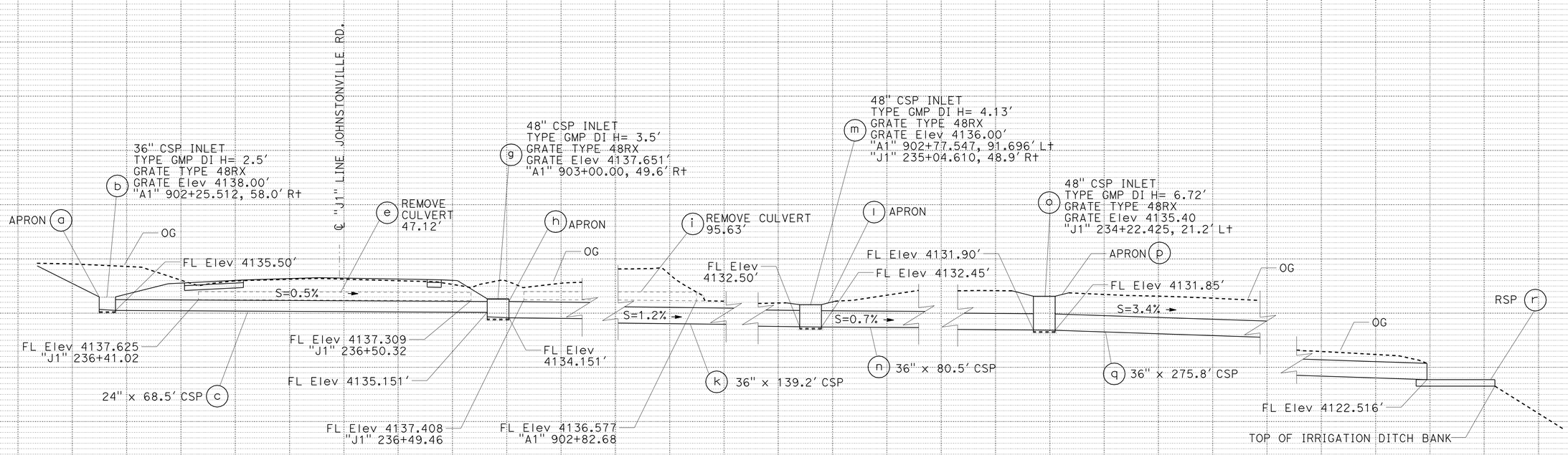

DRAINAGE SYSTEM No. 3

DRAINAGE PROFILES

NO SCALE

DP-2

STATE OF CALIFORNIA - DEPARTMENT OF TRANSPORTATION
Caltrans
DESIGN

FUNCTIONAL SUPERVISOR: JULIE CASEY
CALCULATED-DESIGNED BY: MIKE MOGEN
CHECKED BY: DANIEL FISHER
REVISED BY
DATE REVISED

LAST REVISION 12-19-08
DATE PLOTTED => 20-OCT-2009
TIME PLOTTED => 10:35

Dist	COUNTY	ROUTE	POST MILES TOTAL PROJECT	SHEET No.	TOTAL SHEETS
02	Las	395	R61.1/61.5	14	51

Michael J. Mogen 12-19-08
REGISTERED CIVIL ENGINEER DATE

2-23-09
PLANS APPROVAL DATE

REGISTERED PROFESSIONAL ENGINEER
MIKE MOGEN
No. C67018
Exp. 9/30/10
CIVIL
STATE OF CALIFORNIA

THE STATE OF CALIFORNIA OR ITS OFFICERS OR AGENTS SHALL NOT BE RESPONSIBLE FOR THE ACCURACY OR COMPLETENESS OF ELECTRONIC COPIES OF THIS PLAN SHEET.

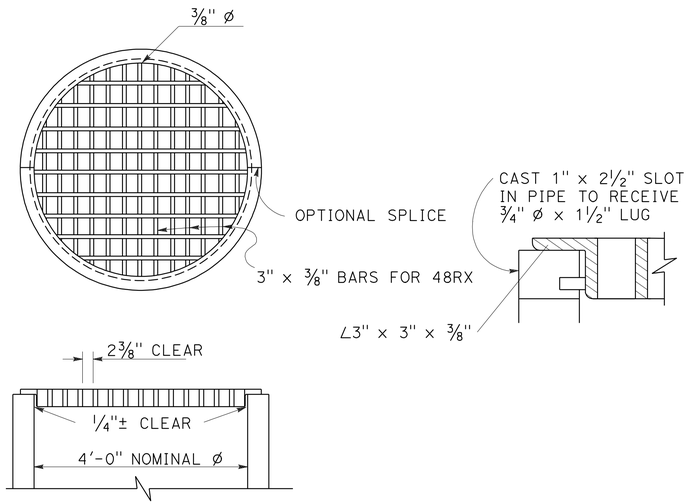

TYPE 48RX GRATE DETAILS

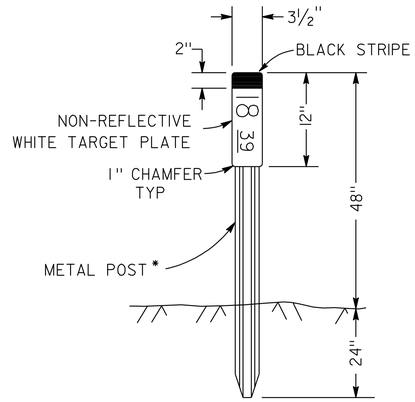

* SEE STANDARD PLAN A73B FOR METAL POST DETAILS

CULVERT MARKER

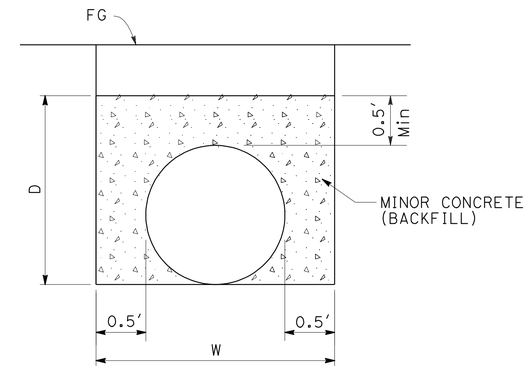

DIMENSION TABLE
(FEET)

DS	L	W	D
1g	62.0	2.5	2.0

MINOR CONCRETE (BACKFILL)

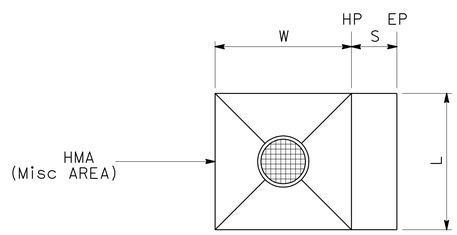

PLAN

DIMENSION TABLE
(FEET)

DS	L	W	S
3a	9.00	9.00	3.00
3h	9.00	9.00	0
3l	9.00	9.00	0
3p	9.00	9.00	0

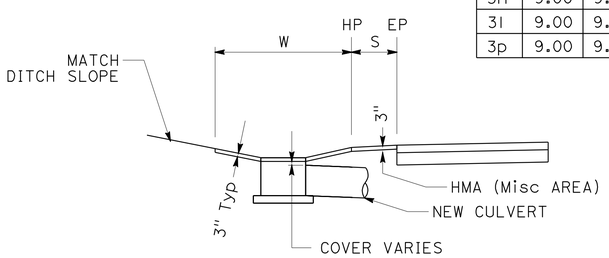

ELEVATION

APRON

FOR GRATE DETAILS NOT SHOWN, SEE STANDARD PLANS

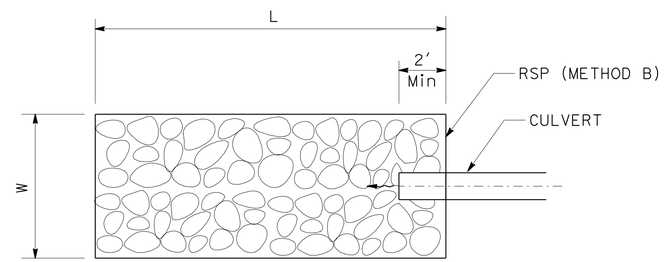

PLAN

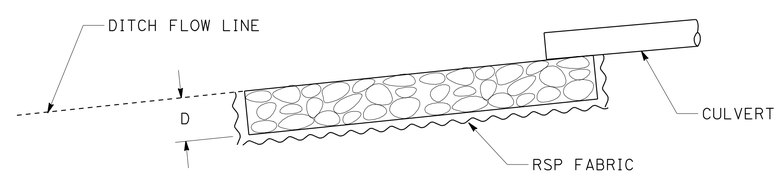

PROFILE

ROCK SLOPE PROTECTION

DIMENSION TABLE
(FEET)

DS	L	W	D	RSP
1a	4.5	11.0	0.7	BACKING #3
1c	11.0	4.5	0.7	BACKING #3
2a	11.0	4.5	0.7	BACKING #3
2c	11.0	4.5	0.7	BACKING #3
3r	20.0	9.0	1.8	BACKING #1
4a	11.0	4.5	0.7	BACKING #3
4c	11.0	4.5	0.7	BACKING #3
5a	11.0	4.5	0.7	BACKING #3
5c	11.0	4.5	0.7	BACKING #3
6a	11.0	4.5	0.7	BACKING #3
6c	11.0	4.5	0.7	BACKING #3
6e	11.0	4.5	0.7	BACKING #3

DRAINAGE DETAILS

NO SCALE

DD-1

STATE OF CALIFORNIA - DEPARTMENT OF TRANSPORTATION
Caltrans **DESIGN**

FUNCTIONAL SUPERVISOR: JULIE CASEY
CALCULATED-DESIGNED BY: MIKE MOGEN
CHECKED BY: DANIEL FISHER
REVISED BY
DATE REVISED

LAST REVISION 12-19-08
DATE PLOTTED => 20-OCT-2009
TIME PLOTTED => 10:35

Dist	COUNTY	ROUTE	POST MILES TOTAL PROJECT	SHEET No.	TOTAL SHEETS
02	Las	395	R61.1/61.5	15	51

Michael J. Mogen 12-19-08
REGISTERED CIVIL ENGINEER DATE

2-23-09
PLANS APPROVAL DATE

REGISTERED PROFESSIONAL ENGINEER
MIKE MOGEN
No. C67018
Exp. 9/30/10
CIVIL
STATE OF CALIFORNIA

THE STATE OF CALIFORNIA OR ITS OFFICERS OR AGENTS SHALL NOT BE RESPONSIBLE FOR THE ACCURACY OR COMPLETENESS OF ELECTRONIC COPIES OF THIS PLAN SHEET.

NOTE:

1. (N) - NOT A SEPARATE PAY ITEM, FOR INFORMATION ONLY.

DRAINAGE QUANTITIES

DRAINAGE PROFILE SHEET No.	DRAINAGE SYSTEM No. ⬡	DRAINAGE UNIT No. ◯	ABANDON CULVERT	REMOVE FES	REMOVE CULVERT	REMOVE INLET	SAND BACKFILL	MINOR CONCRETE (BACKFILL)	18" CORRUGATED STEEL PIPE (0.109" THICK)	24" CORRUGATED STEEL PIPE (0.109" THICK)	36" CORRUGATED STEEL PIPE (0.109" THICK)	36" CORRUGATED STEEL PIPE INLET (0.109" THICK)	48" CORRUGATED STEEL PIPE INLET (0.109" THICK)	INSTALL MARKER (CULVERT)	PLACE HOT MIX ASPHALT (Misc AREA)	ROCK SLOPE PROTECTION (BACKING No. 3, METHOD B)	ROCK SLOPE PROTECTION (BACKING No. 1, METHOD B)	ROCK SLOPE PROTECTION FABRIC	Misc IRON AND STEEL	(N) "H" DIMENSION	DESCRIPTION	STATION	DRAINAGE SYSTEM No. ⬡	DRAINAGE UNIT ◯
			EA	EA	LF	EA	CY	CY	LF	LF	LF	LF	LF	EA	SQYD	CY	CY	SQYD	LB	LF				
DP-1	1	a												1		1.3		7.9			RSP	"A1" 894+98.93	1	a
DP-1	1	b							96.0												18" CSP		1	b
DP-1	1	c												1		1.3		7.9			RSP		1	c
DP-1	1	d						11.0													CONCRETE BACKFILL		1	d
DP-1	1	e				1															REMOVE INLET		1	e
DP-1	1	f	1				13.0														Exist 18" x 110.4' CSP		1	f
DP-1	1	g		1																	REMOVE FES		1	g
DP-1	2	a												1		1.3		7.9			RSP	"A1" 899+85.803	2	a
DP-1	2	b							100												18" CSP		2	b
DP-1	2	c												1		1.3		7.9			RSP		2	c
DP-2	3	a													11.3						APRON		3	a
DP-2	3	b										3.0							215	2.5	TYPE GMP DI 36"	"A1" 902+25.512	3	b
DP-2	3	c								68.5											24" CSP		3	c
DP-2	3	d				1															REMOVE INLET		3	d
DP-2	3	e			50																REMOVE CULVERT		3	e
DP-2	3	f				1															REMOVE INLET		3	f
DP-2	3	g											4.0						225	3.5	TYPE GMP DI 48"	"A1" 903+00.00	3	g
DP-2	3	h													7.6						APRON		3	h
DP-2	3	i			97																REMOVE CULVERT		3	i
DP-2	3	j		1																	REMOVE FES		3	j
DP-2	3	k									139.2										36" CSP		3	k
DP-2	3	l													7.6						APRON		3	l
DP-2	3	m											4.6						225	4.13	TYPE GMP DI 48"	"J1" 235+04.610	3	m
DP-2	3	n									80.5										36" CSP		3	n
DP-2	3	o											7.2						225	6.72	TYPE GMP DI 48"	"J1" 234+22.425	3	o
DP-2	3	p													7.6						APRON		3	p
DP-2	3	q									275.8										36" CSP		3	q
DP-2	3	r															12	31.6			RSP		3	r
TOTAL			1	2	147	3	13.0	11.0	196.0	68.5	495.5	3.0	15.8	4	34.1	5.2	12	63.2	890.0					

DRAINAGE QUANTITIES
DQ-1

STATE OF CALIFORNIA - DEPARTMENT OF TRANSPORTATION
Caltrans DESIGN

FUNCTIONAL SUPERVISOR: JULIE CASEY
CALCULATED-DESIGNED BY: MIKE MOGEN
CHECKED BY: DANIEL FISHER
REVISED BY
DATE REVISED

LAST REVISION DATE PLOTTED => 20-OCT-2009
12-19-08 TIME PLOTTED => 10:35

Dist	COUNTY	ROUTE	POST MILES TOTAL PROJECT	SHEET No.	TOTAL SHEETS
02	Las	395	R61.1/61.5	16	51

REGISTERED CIVIL ENGINEER DATE 12-19-08

2-23-09
PLANS APPROVAL DATE

REGISTERED PROFESSIONAL ENGINEER MIKE MOGEN No. C67018 Exp. 9/30/10 CIVIL STATE OF CALIFORNIA

THE STATE OF CALIFORNIA OR ITS OFFICERS OR AGENTS SHALL NOT BE RESPONSIBLE FOR THE ACCURACY OR COMPLETENESS OF ELECTRONIC COPIES OF THIS PLAN SHEET.

NOTE:

1. (N) - NOT A SEPARATE PAY ITEM, FOR INFORMATION ONLY.

DRAINAGE QUANTITIES

DRAINAGE PROFILE SHEET No.	DRAINAGE SYSTEM No. ⬡	DRAINAGE UNIT No. ◯	ABANDON CULVERT	REMOVE FES	REMOVE CULVERT	REMOVE INLET	SAND BACKFILL	MINOR CONCRETE (BACKFILL)	18" CORRUGATED STEEL PIPE (0.109" THICK)	24" CORRUGATED STEEL PIPE (0.109" THICK)	36" CORRUGATED STEEL PIPE (0.109" THICK)	36" CORRUGATED STEEL PIPE INLET (0.109" THICK)	48" CORRUGATED STEEL PIPE INLET (0.109" THICK)	INSTALL MARKER (CULVERT)	PLACE HOT MIX ASPHALT (Misc AREA)	ROCK SLOPE PROTECTION (BACKING No. 3, METHOD B)	ROCK SLOPE PROTECTION (BACKING No. 1, METHOD B)	ROCK SLOPE PROTECTION FABRIC	Misc IRON AND STEEL	(N) "H" DIMENSION	DESCRIPTION	STATION	DRAINAGE SYSTEM No. ⬡	DRAINAGE UNIT No. ◯
			EA	EA	LF	EA	CY	CY	LF	LF	LF	LF	LF	EA	SQYD	CY	CY	SQYD	LB	LF				
DP-1	4	a												1		1.3		7.9			RSP	"A1" 904+85.04	4	a
DP-1	4	b							55												18" CSP		4	b
DP-1	4	c												1		1.3		7.9			RSP		4	c
DP-1	5	a												1		1.3		7.9			RSP	"A1" 908+73.4	5	a
DP-1	5	b							45												18" CSP		5	b
DP-1	5	c												1		1.3		7.9			RSP		5	c
DP-2	6	a												1		1.3		7.9			RSP	"A1" 910+12.2	6	a
DP-2	6	b							40												18" CSP		6	b
DP-2	6	c														1.3		7.9			RSP		6	c
DP-2	6	d							40												18" CSP		6	d
DP-2	6	e												1		1.3		7.9			RSP		6	e
SUBTOTAL									180.0					6		9.1		55.3						
FROM SHEET DQ-1			1	2	147	3	13.0	11.0	196.0	68.5	495.5	3.0	15.8	4	34.1	5.2	12.0	63.2	890.0					
TOTAL			1	2	147	3	13.0	11.0	376.0	68.5	495.5	3.0	15.8	10	34.1	14.3	12.0	118.5	890.0					

DRAINAGE QUANTITIES
DQ-2

CALCULATED-DESIGNED BY MIKE MOGEN
CHECKED BY DANIEL FISHER
REVISED BY
DATE REVISED
FUNCTIONAL SUPERVISOR JULIE CASEY

STATE OF CALIFORNIA - DEPARTMENT OF TRANSPORTATION
Caltrans DESIGN

LAST REVISION 12-19-08
DATE PLOTTED => 20-OCT-2009
TIME PLOTTED => 10:35

Dist	COUNTY	ROUTE	POST MILES TOTAL PROJECT	SHEET No.	TOTAL SHEETS
02	Las	395	R61.1/61.5	17	51

Michael J. Mogen 12-19-08
REGISTERED CIVIL ENGINEER DATE

2-23-09
PLANS APPROVAL DATE

REGISTERED PROFESSIONAL ENGINEER
MIKE MOGEN
No. C67018
Exp. 9/30/10
CIVIL
STATE OF CALIFORNIA

THE STATE OF CALIFORNIA OR ITS OFFICERS OR AGENTS SHALL NOT BE RESPONSIBLE FOR THE ACCURACY OR COMPLETENESS OF ELECTRONIC COPIES OF THIS PLAN SHEET.

LEGEND

—— e ——— ——(oh)——	(E) ELECTRICAL (OH)
—— t ——— ——— t ——	(E) TELEPHONE (UG)
—— tv ——— ——— (oh)——	(E) CABLE-TV (OH)
→	FLOW DIRECTION

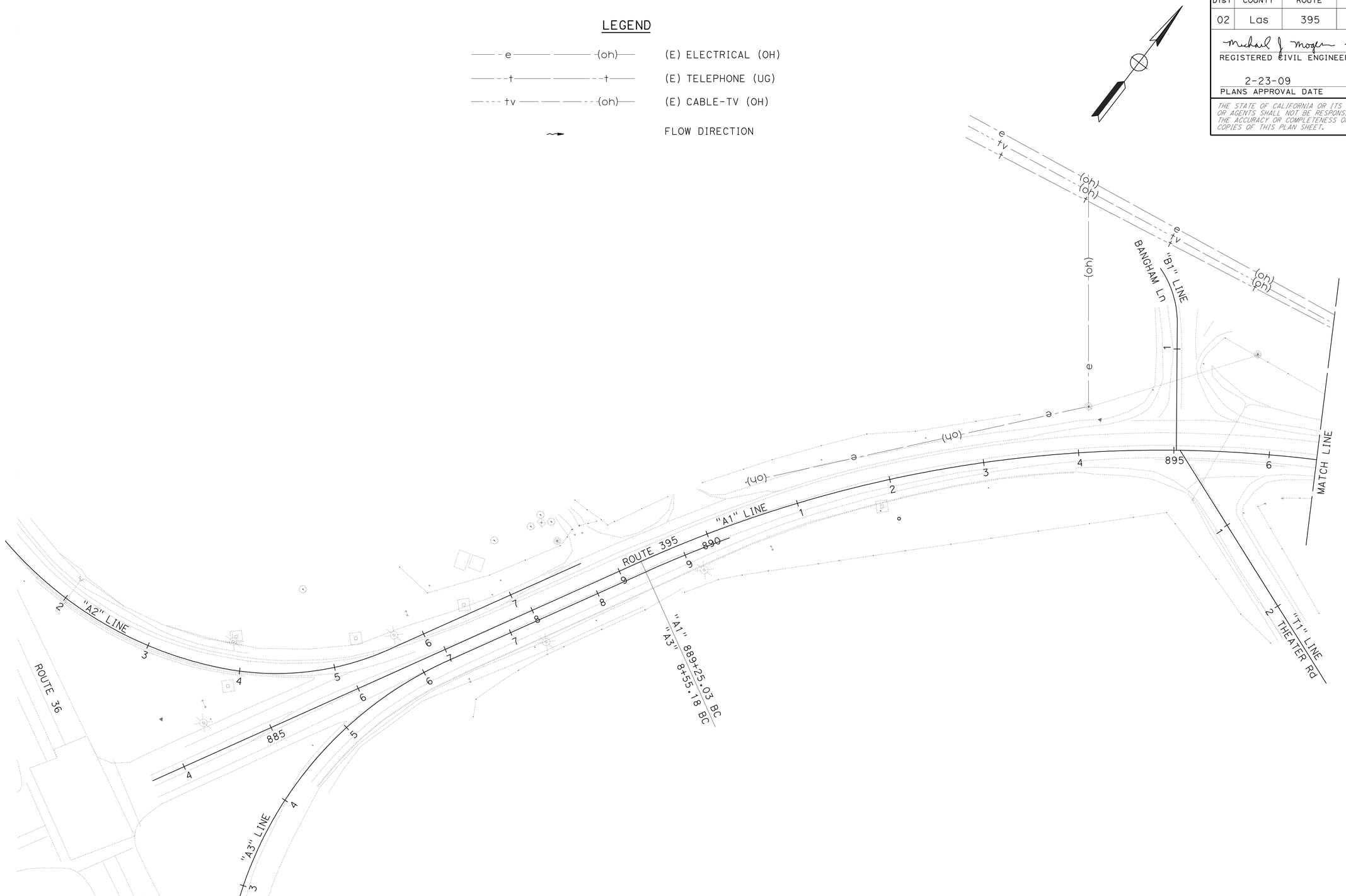

UTILITY PLAN

SCALE: 1" = 50'

U-1

THIS PLAN ACCURATE FOR UTILITY WORK ONLY.

STATE OF CALIFORNIA - DEPARTMENT OF TRANSPORTATION
Caltrans **DESIGN**

FUNCTIONAL SUPERVISOR: JULIE CASEY
CALCULATED-DESIGNED BY: MIKE MOGEN
CHECKED BY: DANIEL FISHER
REVISED BY
DATE REVISED

LAST REVISION 12-19-08
DATE PLOTTED => 20-OCT-2009
TIME PLOTTED => 10:35

Dist	COUNTY	ROUTE	POST MILES TOTAL PROJECT	SHEET No.	TOTAL SHEETS
02	Las	395	R61.1/61.5	18	51

Michael J Mogen 12-19-08
REGISTERED CIVIL ENGINEER DATE

2-23-09
PLANS APPROVAL DATE

REGISTERED PROFESSIONAL ENGINEER
MIKE MOGEN
No. C67018
Exp. 9/30/10
CIVIL
STATE OF CALIFORNIA

THE STATE OF CALIFORNIA OR ITS OFFICERS OR AGENTS SHALL NOT BE RESPONSIBLE FOR THE ACCURACY OR COMPLETENESS OF ELECTRONIC COPIES OF THIS PLAN SHEET.

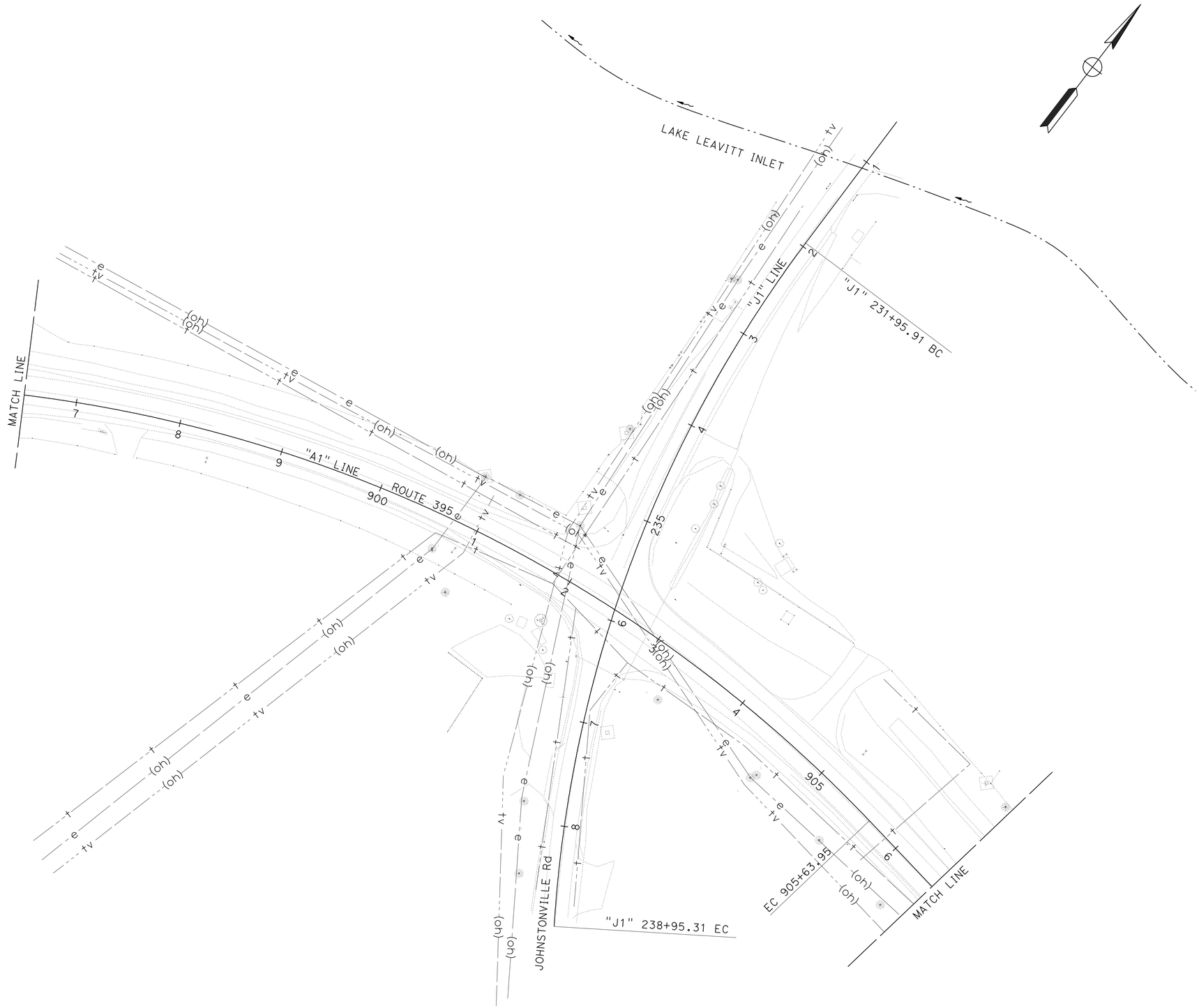

UTILITY PLAN

SCALE: 1" = 50'

U-2

THIS PLAN ACCURATE FOR UTILITY WORK ONLY

STATE OF CALIFORNIA - DEPARTMENT OF TRANSPORTATION
Caltrans
DESIGN

FUNCTIONAL SUPERVISOR: JULIE CASEY
CALCULATED-DESIGNED BY: MIKE MOGEN
CHECKED BY: DANIEL FISHER
REVISED BY
DATE REVISED

LAST REVISION DATE PLOTTED => 20-OCT-2009
12-19-08 TIME PLOTTED => 10:35

Dist	COUNTY	ROUTE	POST MILES TOTAL PROJECT	SHEET No.	TOTAL SHEETS
02	Las	395	R61.1/61.5	19	51

Michael J. Mogen 12-19-08
REGISTERED CIVIL ENGINEER DATE

2-23-09
PLANS APPROVAL DATE

REGISTERED PROFESSIONAL ENGINEER
MIKE MOGEN
No. C67018
Exp. 9/30/10
CIVIL
STATE OF CALIFORNIA

THE STATE OF CALIFORNIA OR ITS OFFICERS OR AGENTS SHALL NOT BE RESPONSIBLE FOR THE ACCURACY OR COMPLETENESS OF ELECTRONIC COPIES OF THIS PLAN SHEET.

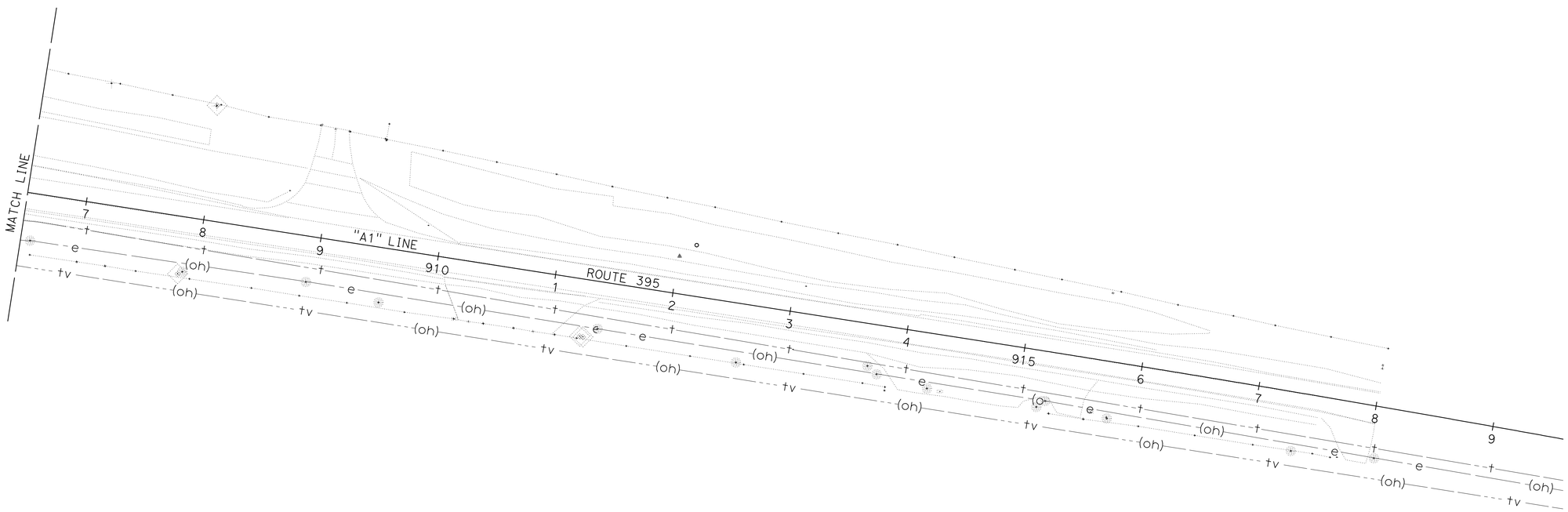

UTILITY PLAN

SCALE: 1" = 50'

U-3

THIS PLAN ACCURATE FOR UTILITY WORK ONLY.

STATE OF CALIFORNIA - DEPARTMENT OF TRANSPORTATION
Caltrans
DESIGN

FUNCTIONAL SUPERVISOR: JULIE CASEY
CALCULATED-DESIGNED BY: MIKE MOGEN
CHECKED BY: DANIEL FISHER
REVISED BY
DATE REVISED

LAST REVISION 12-19-08
DATE PLOTTED => 20-OCT-2009
TIME PLOTTED => 10:36

Dist	COUNTY	ROUTE	POST MILES TOTAL PROJECT	SHEET No.	TOTAL SHEETS
02	Las	395	R61.1/61.5	20	51

REGISTERED CIVIL ENGINEER DATE 12-19-08

2-23-09
PLANS APPROVAL DATE

REGISTERED PROFESSIONAL ENGINEER MIKE MOGEN No. C67018 Exp. 9/30/10 CIVIL STATE OF CALIFORNIA

THE STATE OF CALIFORNIA OR ITS OFFICERS OR AGENTS SHALL NOT BE RESPONSIBLE FOR THE ACCURACY OR COMPLETENESS OF ELECTRONIC COPIES OF THIS PLAN SHEET.

PORTABLE CHANGEABLE MESSAGE SIGN

LOCATION	EA
TOTAL	4

CONSTRUCTION AREA SIGNS (STATIONARY MOUNTED)

TYPE	CODE	PANEL SIZE	SIGN MESSAGE	No. AND SIZE OF POSTS	No. OF SIGNS
A	W20-1 C23B(CA)	48" x 48" 48" x 24"	ROAD WORK AHEAD ROAD WIDENING	1-6" x 6"	4
B	G20-2	60" x 24"	END ROAD WORK	2-4" x 4"	4
C	C40	72" x 36"	TRAFFIC FINES DOUBLED IN CONSTRUCTION ZONES	2-4" x 4"	4
D	Spec	90" x 60"	CONSTRUCTION PROJECT FUNDING IDENTIFICATION	1-4" x 6"	2
E	W20-1	36" x 36"	ROAD WORK AHEAD	1-4" x 4"	4
F	G20-2	36" x 18"	END ROAD WORK	1-4" x 4"	4

NOTE: EXACT LOCATION OF SIGNS TO BE DETERMINED BY THE ENGINEER.

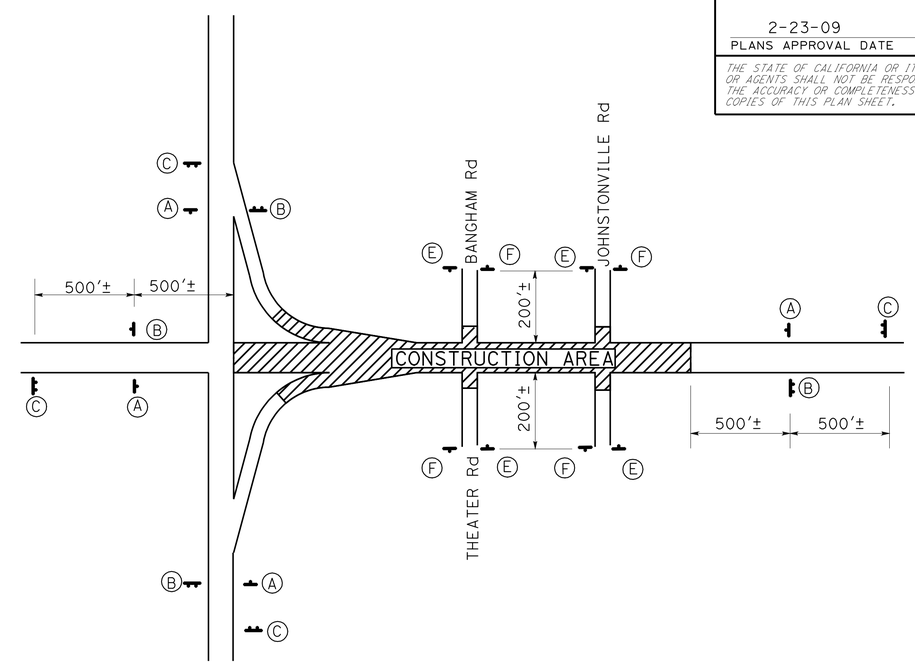

TYPICAL CONSTRUCTION AREA SIGNING PLAN

C23B (CA) SIGN PANEL DETAIL

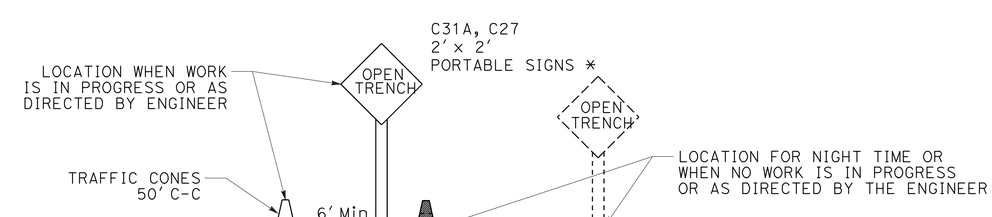

OPEN TRENCH SIGNING AND MARKING

* PLACE AT 500' INTERVALS THROUGH THE OPEN TRENCH AREA ALTERNATING C27 (OPEN TRENCH) AND C31A (NO SHOULDER) SIGNS

CONSTRUCTION AREA SIGNS

NO SCALE

CS-1

STATE OF CALIFORNIA - DEPARTMENT OF TRANSPORTATION
Caltrans DESIGN

FUNCTIONAL SUPERVISOR: JULIE CASEY
CALCULATED-DESIGNED BY: MIKE MOGEN
CHECKED BY: DANIEL FISHER
REVISED BY
DATE REVISED

LAST REVISION 12-19-08
DATE PLOTTED => 20-OCT-2009
TIME PLOTTED => 10:36

Dist	COUNTY	ROUTE	POST MILES TOTAL PROJECT	SHEET No.	TOTAL SHEETS
02	Las	395	R61.1/61.5	21	51

REGISTERED CIVIL ENGINEER DATE 12-19-08

PLANS APPROVAL DATE 2-23-09

REGISTERED PROFESSIONAL ENGINEER MIKE MOGEN No. C67018 Exp. 9/30/10 CIVIL STATE OF CALIFORNIA

THE STATE OF CALIFORNIA OR ITS OFFICERS OR AGENTS SHALL NOT BE RESPONSIBLE FOR THE ACCURACY OR COMPLETENESS OF ELECTRONIC COPIES OF THIS PLAN SHEET.

LEGEND

- REMOVE ROADSIDE SIGN
- ROADSIDE SIGN (ONE POST)
- ROADSIDE SIGN (TWO POST)
- ROADSIDE SIGN (WITH NUMBERS)
- STRIPE CHANGE LOCATION
- DELINEATOR TYPE F-1
- DELINEATOR TYPE E-1
- DELINEATOR TYPE G-1
- OBJECT MARKER (TYPE L-1)
- MILEPOST MARKER
- CHANNELIZER (SURFACE MOUNTED)
- STRIPE DETAIL
- FLASHING BEACON

NOTE:

1. FOR COMPLETE RIGHT OF WAY DATA, SEE RIGHT OF WAY RECORD MAPS AT DISTRICT OFFICE.

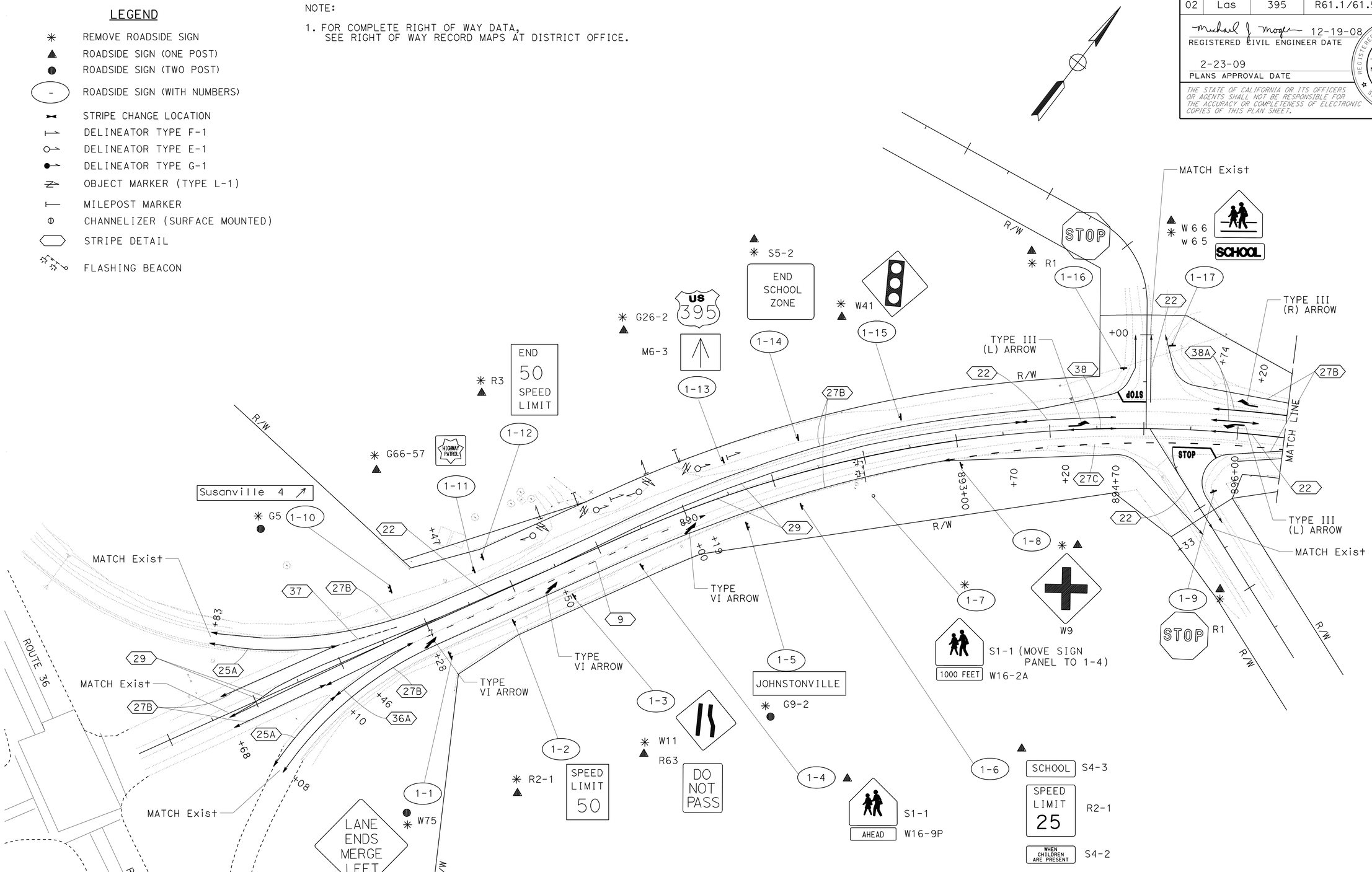

PAVEMENT DELINEATION PLAN

SCALE: 1" = 50'

PD-1

THIS PLAN ACCURATE FOR PAVEMENT DELINEATION WORK ONLY.

STATE OF CALIFORNIA - DEPARTMENT OF TRANSPORTATION

Caltrans **DESIGN**

FUNCTIONAL SUPERVISOR: JULIE CASEY

CALCULATED-DESIGNED BY: MIKE MOGEN

CHECKED BY: DANIEL FISHER

REVISED BY / DATE REVISED

LAST REVISION 12-19-08

DATE PLOTTED => 20-OCT-2009

TIME PLOTTED => 10:36

Dist	COUNTY	ROUTE	POST MILES TOTAL PROJECT	SHEET No.	TOTAL SHEETS
02	Las	395	R61.1/61.5	22	51

REGISTERED CIVIL ENGINEER DATE 12-19-08

2-23-09
PLANS APPROVAL DATE

REGISTERED PROFESSIONAL ENGINEER MIKE MOGEN No. C67018 Exp. 9/30/10 CIVIL STATE OF CALIFORNIA

THE STATE OF CALIFORNIA OR ITS OFFICERS OR AGENTS SHALL NOT BE RESPONSIBLE FOR THE ACCURACY OR COMPLETENESS OF ELECTRONIC COPIES OF THIS PLAN SHEET.

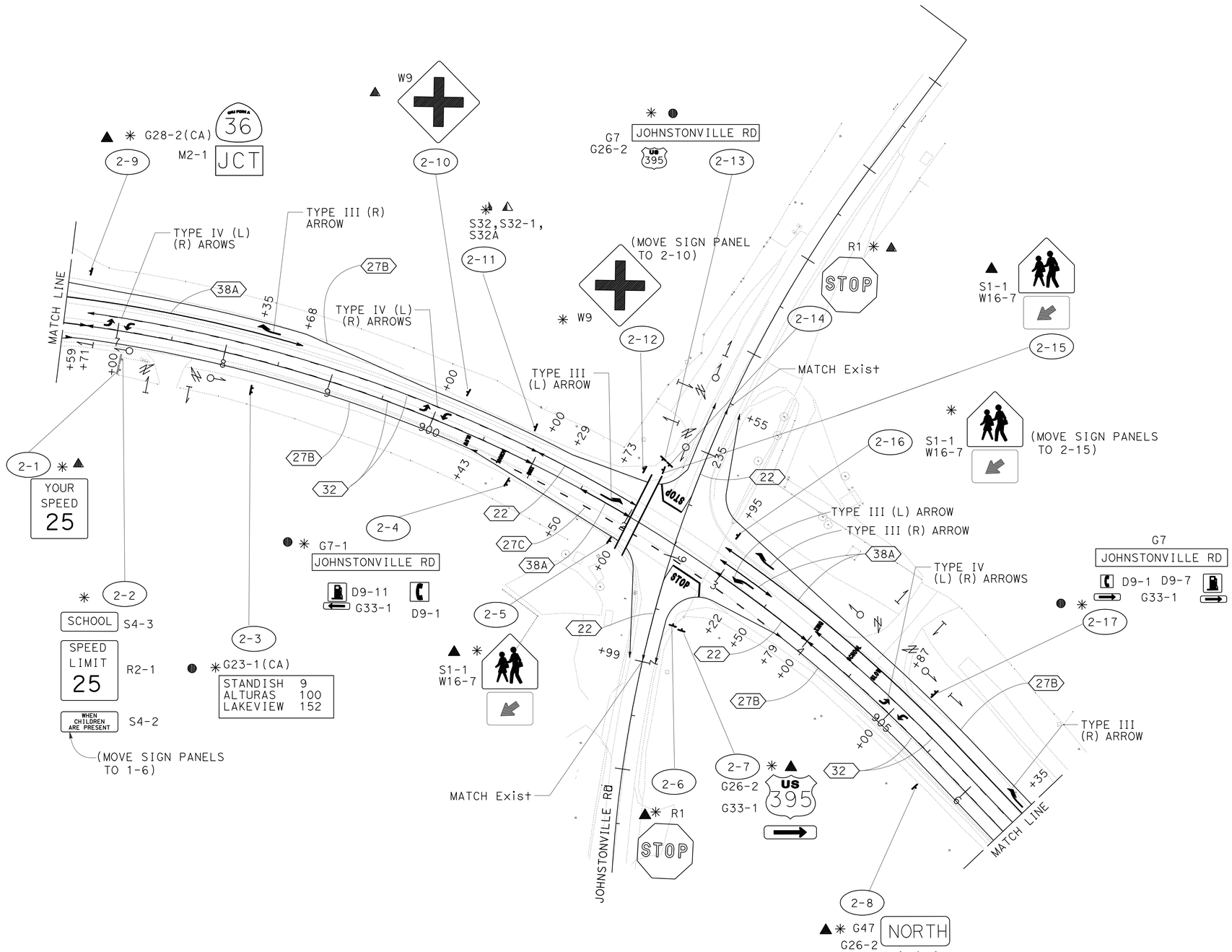

PAVEMENT DELINEATION PLAN

SCALE: 1" = 50'

PD-2

THIS PLAN ACCURATE FOR PAVEMENT DELINEATION WORK ONLY.

REVISED BY	DATE REVISED
MIKE MOGEN	DANIEL FISHER
CALCULATED-DESIGNED BY	CHECKED BY
FUNCTIONAL SUPERVISOR	JULIE CASEY

STATE OF CALIFORNIA - DEPARTMENT OF TRANSPORTATION

Caltrans **DESIGN**

LAST REVISION 12-19-08 | DATE PLOTTED => 20-OCT-2009 | TIME PLOTTED => 10:36

Dist	COUNTY	ROUTE	POST MILES TOTAL PROJECT	SHEET No.	TOTAL SHEETS
02	Las	395	R61.1/61.5	23	51

Michael J. Mogen 12-19-08
REGISTERED CIVIL ENGINEER DATE

2-23-09
PLANS APPROVAL DATE

REGISTERED PROFESSIONAL ENGINEER
MIKE MOGEN
No. C67018
Exp. 9/30/10
CIVIL
STATE OF CALIFORNIA

THE STATE OF CALIFORNIA OR ITS OFFICERS OR AGENTS SHALL NOT BE RESPONSIBLE FOR THE ACCURACY OR COMPLETENESS OF ELECTRONIC COPIES OF THIS PLAN SHEET.

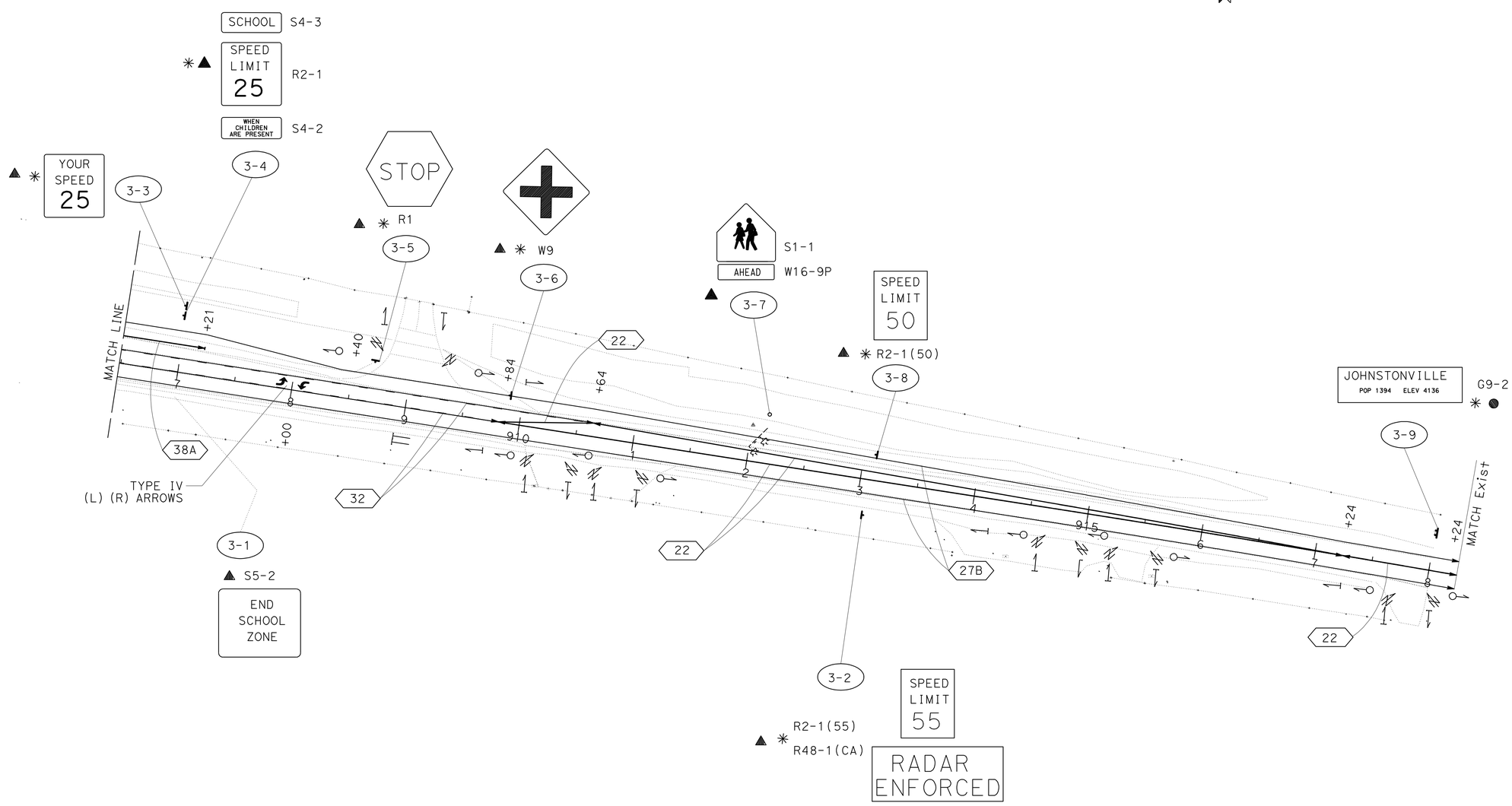

PAVEMENT DELINEATION PLAN

SCALE: 1" = 50'

PD-3

THIS PLAN ACCURATE FOR PAVEMENT DELINEATION WORK ONLY.

REVISED BY	DATE REVISED

CALCULATED-DESIGNED BY: MIKE MOGEN
CHECKED BY: DANIEL FISHER
FUNCTIONAL SUPERVISOR: JULIE CASEY

STATE OF CALIFORNIA - DEPARTMENT OF TRANSPORTATION
Caltrans **DESIGN**

LAST REVISION 12-19-08 | DATE PLOTTED => 20-OCT-2009 | TIME PLOTTED => 10:36

Dist	COUNTY	ROUTE	POST MILES TOTAL PROJECT	SHEET No.	TOTAL SHEETS
02	Las	395	R61.1/61.5	24	51

REGISTERED CIVIL ENGINEER DATE 12-19-08

2-23-09
PLANS APPROVAL DATE

REGISTERED PROFESSIONAL ENGINEER MIKE MOGEN No. C67018 Exp. 9/30/10 CIVIL STATE OF CALIFORNIA

THE STATE OF CALIFORNIA OR ITS OFFICERS OR AGENTS SHALL NOT BE RESPONSIBLE FOR THE ACCURACY OR COMPLETENESS OF ELECTRONIC COPIES OF THIS PLAN SHEET.

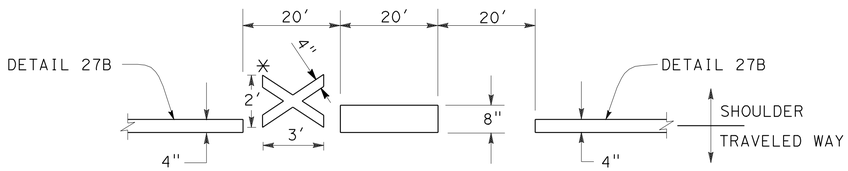

TYPICAL MILE POST STRIPE

ON RIGHT EDGELINES AT EACH WHOLE POST MILE
* 4" SOLID WHITE "X" TO BE PLACED ONLY
AT BOTH ENDS OF A FRACTIONAL MILE

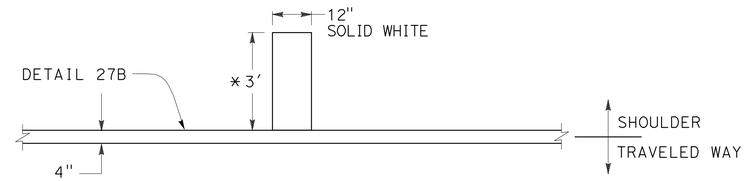

TYPICAL HALF MILE POST STRIPE

ON EDGE LINES AT EACH HALF POST MILE
NOT TO BE USED WITHIN FRACTIONAL MILE SEGMENT
* LENGTH MAY VARY DUE TO PAVEMENT WIDTH

THERMOPLASTIC PAVEMENT MARKING

SHEET No.	LOCATION	"STOP" WHITE SQFT	"SLOW" YELLOW SQFT	"SCHOOL" YELLOW SQFT	"XING" YELLOW SQFT	STOP BAR WHITE SQFT	CROSSWALK YELLOW SQFT	TYPE IV WHITE SQFT	TYPE VI WHITE SQFT	TYPE III WHITE SQFT
PD-1	"A1" 887+00								42	
PD-1	"A1" 888+50								42	
PD-1	"A1" 890+00								42	
PD-1	"A1" 894+33									42
PD-1	"A1" 895+00 L†	22				38				
PD-1	"A1" 895+00 R†	22				53				
PD-1	"A1" 896+00									42
PD-2	"A1" 897+00							30		
PD-2	"A1" 896+20									42
PD-2	"A1" 898+35									42
PD-2	"A1" 897+00									
PD-2	"A1" 900+00							30		
PD-2	"A1" 900+29 R†		23							
PD-2	"A1" 900+75 R†			35						
PD-2	"A1" 901+00 R†				21					
PD-2	"A1" 901+73									42
PD-2	"A1" 904+00 L†				21					
PD-2	"A1" 902+05						158			
PD-2	"A1" 902+50 L†	22				37				
PD-2	"A1" 902+60 L†	22				43				
PD-2	"A1" 904+35 L†			35						
PD-2	"A1" 903+21 R†									42
PD-2	"A1" 903+21 L†									42
PD-2	"A1" 903+00 L†		23							
PD-2	"A1" 905+00							30		
PD-2	"A1" 906+37									42
PD-3	"A1" 908+00							30		
SUBTOTALS		88	46	70	42	171	158	120	126	336
TOTAL		1157								

REMOVE PAVEMEMT MARKINGS

LOCATION	CROSSWALK YELLOW SQFT	"SLOW" YELLOW SQFT	"SCHOOL" YELLOW SQFT	"XING" YELLOW SQFT	TYPE VI ARROW WHITE SQFT
"A1" 902+50	104				
"A1" 914+00 L†		23			
"A1" 888+50 R†		23			
"A1" 913+50 L†			35		
"A1" 892+00 R†			35		
"A1" 895+00 R†				21	
"A1" 913+00 L†				21	
"A1" 887+00 R†					42
"A1" 888+50 R†					42
"A1" 890+00 R†					42
SUBTOTALS	104	46	70	42	126
YELLOW TOTAL	262				
WHITE TOTAL	126				

PAVEMENT DELINEATION DETAILS AND QUANTITIES

NO SCALE

PDD-1

STATE OF CALIFORNIA - DEPARTMENT OF TRANSPORTATION
Caltrans
DESIGN

FUNCTIONAL SUPERVISOR: JULIE CASEY
CALCULATED-DESIGNED BY: MIKE MOGEN
CHECKED BY: DANIEL FISHER
REVISED BY
DATE REVISED

LAST REVISION 12-19-08
DATE PLOTTED => 20-OCT-2009
TIME PLOTTED => 10:36

Dist	COUNTY	ROUTE	POST MILES TOTAL PROJECT	SHEET No.	TOTAL SHEETS
02	Las	395	R61.1/61.5	25	51

REGISTERED CIVIL ENGINEER DATE 12-19-08

PLANS APPROVAL DATE 2-23-09

REGISTERED PROFESSIONAL ENGINEER MIKE MOGEN No. C67018 Exp. 9/30/10 CIVIL STATE OF CALIFORNIA

THE STATE OF CALIFORNIA OR ITS OFFICERS OR AGENTS SHALL NOT BE RESPONSIBLE FOR THE ACCURACY OR COMPLETENESS OF ELECTRONIC COPIES OF THIS PLAN SHEET.

PAVEMENT DELINEATION QUANTITIES

SHEET No.	LOCATION	THERMOPLASTIC TRAFFIC STRIPE (SPRAYABLE) DETAIL										PAVEMENT MARKER (RETROREFLECTIVE-RECESSED) MARKER TYPE, DETAIL						
		9	22	25A	27B	27C	29	32	36A	37	38	G,9	D,22	H,25A	D,32	D,36A	D,37	C,38
		LF	LF	LF	LF	LF	LF	LF	LF	LF	LF	EA	EA	EA	EA	EA	EA	EA
DP-1	"A2" 3+83 TO "B1" 2+00 L†				1074													
DP-1	"A2" 3+83 TO "A1" 886+00.38 L†			134										6				
DP-1	"A1"885+75.59 TO "A1"886+77.84 R†								195							2		
DP-1	"A1"886+00.67 TO "A1"886+69.86 R†									70							4	
DP-1	"A1" 884+68 TO 887+17 CI						500						42					
DP-1	"A1" 888+50 TO 893+70.32 CI						1041						86					
DP-1	"A3" 4+08 TO "T1"2+25.64 R†				1105													
DP-1	"A3" 4+08 TO "A3" 5+10 L†			102										5				
DP-1	"A1" 884+67.94 TO 886+00.70 L†				133													
DP-1	"A1" 884+67.94 TO 885+75.28 R†				107													
DP-1	"A1" 886+70 TO 890+19 CI	349										8						
DP-1	"A1" 887+17 TO 888+50 CI		133										12					
DP-1	"A1" 893+70.32 TO 894+70.4 CI		101										10					
DP-1	"A1" 894+20 TO 894+70 CI										50							2
DP-1,2	"A1" 892+83.26 TO 896+59 R†					376												
DP-1	"B1" 1+27.78 TO 2+00 CI		73										6					
DP-1	"T1" 1+29.73 TO 2+26 CL		98										8					
DP-1,2	"T1" 2+26 TO "J1" 236+99 R†				810													
DP-1,2	"B1" 2+00 TO "J1" 234+55 L†				840													
DP-1	"A1" 895+74 TO 896+20 CI										50							2
DP-1,2	"A1" 895+74 TO 898+68 CI										294							12
DP-1,2	"A1" 895+74 TO 896+71 CI		97										8					
DP-2	"A1" 896+71 TO 901+00 CI							858							46			
DP-2	"A1" 901+00 TO 902+00 CI		100										8					
DP-2	"A1" 901+50 TO 902+00 CI										50							2
DP-2	"A1" 900+43 TO 903+79 R†					336												
DP-2	"J1" 234+55 TO 235+60 CI		105										8					
DP-2	"J1" 236+07 TO 236+99 CI		92										6					
DP-2	"A1" 902+95 TO 904+00 CI		105										8					
DP-2	"A1" 902+95 TO 903+50 CI										55							2
DP-2,3	"A1" 902+95 TO 907+21 CI										426							18
DP-2,3	"J1" 234+55 TO "A1" 918+24 L†				1650													
DP-2,3	"J1" 236+99 TO "A1" 918+24 R†				1607													
DP-3	"A1" 904+00 TO 910+64 CI							1328							140			
DP-3	"A1" 909+84 TO 918+24 CI		840										72					
DP-3	"A1" 910+64 TO 917+24 CI		660										58					
DP-3	"A1" 909+84 TO 910+64 CI		80										10					
	SUBTOTALS	349	2484	236	7326	712	1541	2186	195	70	925	8	342	11	186	2	4	38
	TOTALS	16,024										591						

STATE OF CALIFORNIA - DEPARTMENT OF TRANSPORTATION

Caltrans DESIGN

FUNCTIONAL SUPERVISOR: JULIE CASEY

CALCULATED-DESIGNED BY: MIKE MOGEN

CHECKED BY: DANIEL FISHER

REVISED BY

DATE REVISED

PAVEMENT DELINEATION QUANTITIES PDQ-1

LAST REVISION 12-19-08

DATE PLOTTED => 20-OCT-2009

TIME PLOTTED => 10:36

Dist	COUNTY	ROUTE	POST MILES TOTAL PROJECT	SHEET No.	TOTAL SHEETS
02	Las	395	R61.1/61.5	26	51

REGISTERED CIVIL ENGINEER DATE 12-19-08

2-23-09
PLANS APPROVAL DATE

REGISTERED PROFESSIONAL ENGINEER MIKE MOGEN No. C67018 Exp. 9/30/10 CIVIL STATE OF CALIFORNIA

THE STATE OF CALIFORNIA OR ITS OFFICERS OR AGENTS SHALL NOT BE RESPONSIBLE FOR THE ACCURACY OR COMPLETENESS OF ELECTRONIC COPIES OF THIS PLAN SHEET.

NOTES:

1. USE A 3" Sq TUBE x 3' LONG, 3/16" THICK ANCHOR FOR 2-1/2 " POSTS.
2. USE A 5/16" CORNER BOLT OR TWO DRIVE RIVETS TO FASTEN ASSEMBLED SIGN AND POST INTO ANCHOR. INSTALL CORNER BOLT OR DRIVE RIVETS INTO THE SIDES BACKING #1 TRAFFIC.
3. REMOVE EXISTING AC OR PCC, DRIVE ANCHOR SLEEVE INTO SOIL AND RECAP WITH LIKE MATERIAL, MATCHING EXISTING THICKNESS.
4. 2-1/2" POSTS ARE TO BE 1/8" THICK, PERFORATIONS OF 7/16" IN DIAMETER ARE 1" ON CENTER ON ALL SIDES, 2-1/2" POSTS ARE 12' AND 14' IN LENGTH.
5. FOR DETAILS NOT SHOWN, REFER TO THE STANDARD PLANS.
6. 2-1/2" POSTS SHALL BE USED IN SIDEWALK AND HIGH PEDESTRIAN USE PLACEMENTS.
7. ALL ANCHOR SLEEVES SHALL BE EMBEDDED IN PCC.

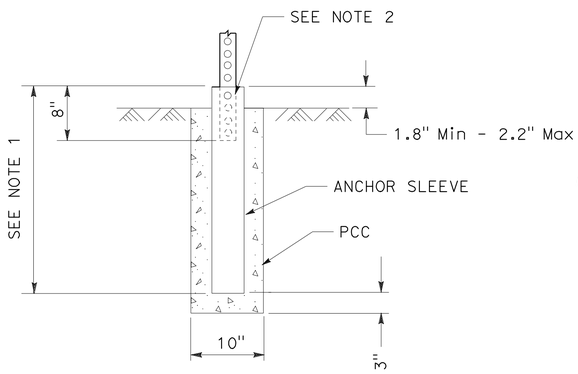

INSTALLATION IN SOIL (PCC)
(SEE NOTE 7)

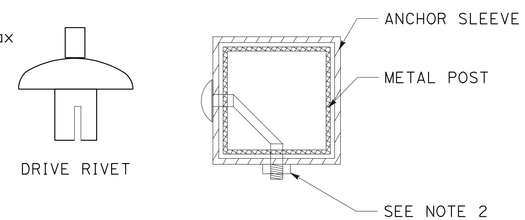

FASTENER DETAILS

METAL SIGN POST INSTALLATION DETAILS

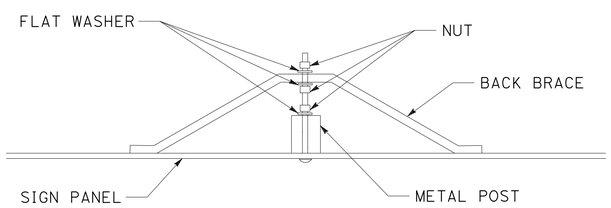

BACK BRACE MOUNTING DETAIL

METAL SIGN POST DETAIL

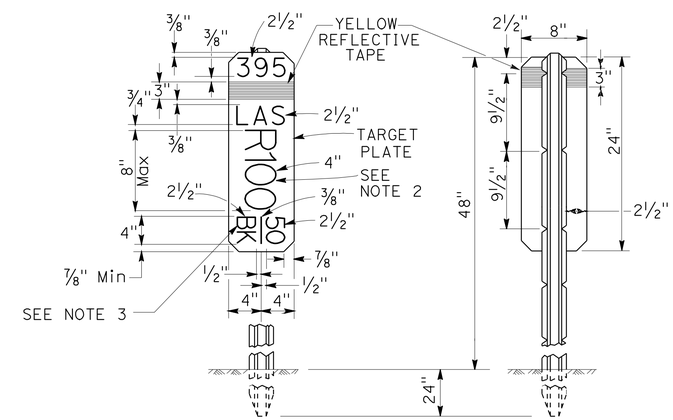

NOTES:

1. THE MARKER SHALL BE WHITE (NON-REFLECTIVE) TARGET PLATE WITH BLACK SERIES D NUMERALS AND LETTERS.
2. A POST MILE PREFIX, SUCH AS "R", SHALL APPLY ONLY WHEN DIRECTED BY THE ENGINEER.
3. "BK" (BACK), "AH" (AHEAD), OR A BLANK SPACE SHALL APPLY AS DIRECTED BY THE ENGINEER.
4. ALL INFORMATION SHALL BE IN ENGLISH UNITS (MILES).

POST MILE MARKER DETAIL

SIGN DETAILS

SD-1

REVISED BY | DATE REVISED
MIKE MOGEN | DANIEL FISHER
CALCULATED-DESIGNED BY | CHECKED BY
FUNCTIONAL SUPERVISOR: JULIE CASEY
STATE OF CALIFORNIA - DEPARTMENT OF TRANSPORTATION
Caltrans DESIGN

LAST REVISION 12-19-08 | DATE PLOTTED => 20-OCT-2009 | TIME PLOTTED => 10:36

Dist	COUNTY	ROUTE	POST MILES TOTAL PROJECT	SHEET No.	TOTAL SHEETS
02	Las	395	R61.1/61.5	27	51

Michael J. Mogen 12-19-08
REGISTERED CIVIL ENGINEER DATE

2-23-09
PLANS APPROVAL DATE

REGISTERED PROFESSIONAL ENGINEER
MIKE MOGEN
No. C67018
Exp. 9/30/10
CIVIL
STATE OF CALIFORNIA

THE STATE OF CALIFORNIA OR ITS OFFICERS OR AGENTS SHALL NOT BE RESPONSIBLE FOR THE ACCURACY OR COMPLETENESS OF ELECTRONIC COPIES OF THIS PLAN SHEET.

MARKER (CULVERT)

SHEET No.	LOCATION	PM
PD-1	T1	BLANK
PD-1	T1	BLANK
PD-2	897+22	61.15
PD-2	897+87	61.16
PD-2	J1	BLANK
PD-2	J1	BLANK
PD-2	J1	BLANK
PD-2	J1	BLANK
PD-2	J1	BLANK
PD-2	904+42	61.28
PD-2	904+83	61.29
PD-3	908+70	61.36
PD-3	909+30	61.37
PD-3	910+12	61.57
PD-3	910+54	61.56
PD-3	910+71	61.56
PD-3	911+12	61.55

MILEPOST MARKER

SHEET No.	LOCATION	PM	EA
PD-3	"A1" 909+00 R†	61.37/ R61.59	2
		TOTAL	2

DELINEATOR (CLASS 2)

SHEET No.	LOCATION	TYPE E EA	TYPE F EA
PD-1/2	"A1" 887+15 TO 905+64 L†		19
PD-1	"A1" 888+80 L†	2	3
PD-1	"A1" 889+95 L†	2	3
PD-2	"A1" 897+55 R†	2	3
PD-2	"J1" 234+68 R†	2	3
PD-2	"A1" 904+59 L†	2	3
PD-3	"A1" 908+98 L†	2	3
PD-3	"A1" 910+33 R†	2	3
PD-3	"A1" 910+91 R†	1	2
PD-3	"A1" 914+80 R†	2	3
PD-3	"A1" 915+45 R†	1	2
PD-3	"A1" 917+86 R†	2	3
	SUBTOTALS	20	50
	TOTAL	70	

OBJECT MARKER (TYPE L-1)

SHEET No.	LOCATION	EA
PD-1	"A1" 888+80 L†	2
PD-1	"A1" 889+95 L†	2
PD-2	"A1" 897+55 R†	2
PD-2	"A1" 904+59 L†	2
PD-3	"A1" 908+98 L†	2
PD-3	"A1" 910+33 R†	2
PD-3	"A1" 910+91 R†	2
PD-3	"A1" 914+80 R†	2
PD-3	"A1" 915+45 R†	2
PD-3	"A1" 917+86 R†	2
	TOTAL	20

ROADSIDE SIGNS

SHEET No.	LOCATION	SIGN No. (X-X)	SIGN CODE	REMOVE ROADSIDE SIGN (EA)
PD-1	"A1" 887+00 R†	1-1	W75	1
PD-1	"A1" 887+90 R†	1-2	R2-1 (50)	1
PD-1	"A1" 888+50 R†	1-3	W11, R63	1
PD-1	"A1" 890+50 R†	1-5	G9-2	1
PD-1	"A1" 892+00 R†	1-7	S1-1,W16-2A	1
PD-1	"A1" 893+00 R†	1-8	W9	1
PD-1	"T1" 1+75 L†	1-9	R1	1
PD-1	"A1" 886+80 L†	1-10	G5	1
PD-1	"A1" 887+70 L†	1-11	G66-57	1
PD-1	"A1" 887+90 L†	1-12	R3	1
PD-1	"A1" 890+50 L†	1-13	G26-2,M6-3	1
PD-1	"A2" 891+40 L†	1-14	S5-2	1
PD-1	"A1" 892+50 L†	1-15	W41	1
PD-1	"B1" 1+50 R†	1-16	R1	1
PD-1	"B1" 1+90 L†	1-17	W66,W65	1
PD-2	"A1" 897+00 R†	2-1	RADAR	1
PD-2	"A1" 897+00 R†	2-2	S4-3,R2-1,S4-2	1
PD-2	"A1" 898+30 R†	2-3	G23-1(CA)	1
PD-2	"A1" 900+90 R†	2-4	G7-1,D9-11,G33-1,D9-1	1
PD-2	"A1" 902+00 R†	2-5	S1-1,W16-7	1
PD-2	"J1" 236+50 L†	2-6	R1	1
PD-2	"J1" 236+50 L†	2-7	G26-2,G33-1	1
PD-2	"A1" 905+70 R†	2-8	G47,G26-2	1
PD-2	"A1" 896+70 L†	2-9	G28-2(CA),M2-1	1
PD-2	"A1" 900+90 L†	2-11	S32,S32-1,S32A	1
PD-2	"A1" 901+90 L†	2-12	W9	1
PD-2	"J1" 235+25 R†	2-13	G7,G26-2	1
PD-2	"J1" 235+25 R†	2-14	R1	1
PD-2	"A1" 903+00 L†	2-16	S1-1,W16-7	1
PD-2	"A1" 905+20 L†	2-17	G7,D9-1,D9-7,G33-1	1
PD-3	"A1" 913+00 R†	3-2	R2-1(55),R48-1 (CA)	1
PD-3	"A1" 907+00 L†	3-3	RADAR	1
PD-3	"A1" 908+75 L†	3-4	S4-3,R2-1,S4-2	1
PD-3	"A1" 908+70 L†	3-5	R1	1
PD-3	"A1" 909+90 L†	3-6	W9	1
PD-3	"A1" 912+20 L†	3-7	W16-2A	1
PD-3	"A1" 913+10 L†	3-8	R2-1 (50)	1
PD-3	"A1" 918+00 L†	3-9	G9-2	1
			TOTAL	38

SIGN QUANTITIES

SQ-1

STATE OF CALIFORNIA - DEPARTMENT OF TRANSPORTATION
Caltrans DESIGN

FUNCTIONAL SUPERVISOR: JULIE CASEY
CALCULATED-DESIGNED BY: MIKE MOGEN
CHECKED BY: DANIEL FISHER
REVISED BY
DATE REVISED

LAST REVISION 12-19-08 DATE PLOTTED => 20-OCT-2009 TIME PLOTTED => 10:37

Dist	COUNTY	ROUTE	POST MILES TOTAL PROJECT	SHEET No.	TOTAL SHEETS
02	Las	395	R61.1/61.5	28	51

Michael J. Mogen 12-19-08
REGISTERED CIVIL ENGINEER DATE

2-23-09
PLANS APPROVAL DATE

REGISTERED PROFESSIONAL ENGINEER MIKE MOGEN No. C67018 Exp. 9/30/10 CIVIL STATE OF CALIFORNIA

THE STATE OF CALIFORNIA OR ITS OFFICERS OR AGENTS SHALL NOT BE RESPONSIBLE FOR THE ACCURACY OR COMPLETENESS OF ELECTRONIC COPIES OF THIS PLAN SHEET.

NOTES:

1. CALIFORNIA SIGN CODES ARE DESIGNATED BY (CA), OTHERWISE, FEDERAL MUTCD SIGN CODES ARE SHOWN.
2. (N) NOT A SEPARATE PAY ITEM, FOR INFORMATION ONLY.

ABBREVIATIONS

FYG	FLUORESCENT YELLOW-GREEN
L	LENGTH OF SIGN
D	DEPTH OF SIGN

CONTRACTOR FURNISHED SIGNS

No.	SIGN CODE	SIGN SIZE L x D (In x In)	SINGLE FACED	DOUBLE FACED	SIGN FACING MATERIAL						SIGN PANEL SUBSTRATE MATERIAL (SQFT) ROADSIDE SINGLE-SHEET				DESCRIPTION (REMARKS)
					BACKGROUND		LEGEND		PROTECTIVE FILM		FRAMED ALUMINUM		UNFRAMED ALUMINUM		
					SHEETING COLOR	RETROREFLECTIVE ASTM TYPE	SHEETING COLOR	RETROREFLECTIVE ASTM TYPE	STANDARD	PREMIUM	0.063"	0.080"	0.063"	0.080"	
1-4	W16-9P	24 x 12	X		FYG	4	BLACK	2	X				2		REPLACE Exist 1000 FEET SIGN FROM 1-7
2-3	G23-1 (CA)	78 x 42	X		GREEN	3	WHITE	3	X		22.8				MATCH EXISTING SIGN
3-1	S5-2	24 x 30	X		FYG	4	BLACK	2	X				5		
3-7	W16-9P	24 x 12	X		FYG	4	BLACK	2	X				2		REPLACE Exist 1000 FEET SIGN
										TOTAL (SQFT)	22.8		9		

ROADSIDE SIGN INSTALLATION QUANTITIES

SIGN NUMBER	SIGN CODE FEDERAL	SIGN CODE CALIFORNIA	(N) PANEL SIZE (In x In)	(N) POST SIZE AND LENGTH 2"	(N) POST SIZE AND LENGTH 2.5"	ROADSIDE SIGN ONE POST (EA)	ROADSIDE SIGN TWO POST (EA)
1-1	SEE SHEET PD-1		USE Exist		12'		1
1-2	SEE SHEET PD-1		USE Exist	10'		1	
1-3	SEE SHEET PD-1		USE Exist		12'	1	
1-4	W16-9P		24 x 12		12'	1	
1-5	SEE SHEET PD-1		USE Exist	10'			1
1-6	SEE SHEET PD-1		USE Exist		12'	1	
1-8	SEE SHEET PD-1		USE Exist		12'	1	
1-9	SEE SHEET PD-1		USE Exist	10'		1	
1-10	SEE SHEET PD-1		USE Exist	10'			1
1-11	SEE SHEET PD-1		USE Exist	10'		1	
1-12	SEE SHEET PD-1		USE Exist	10'		1	
1-13	SEE SHEET PD-1		USE Exist	10'		1	
1-14	SEE SHEET PD-1		USE Exist	10'		1	
1-15	SEE SHEET PD-1		USE Exist	12'		1	
1-16	SEE SHEET PD-1		USE Exist	10'		1	
1-17	SEE SHEET PD-1		USE Exist	12'		1	
2-1	SEE SHEET PD-2		USE Exist		12'	1	
2-3		G23-1	78 x 42		12'		1
SUBTOTAL						14	4
					TOTAL	30	8

SIGN NUMBER	SIGN CODE FEDERAL	SIGN CODE CALIFORNIA	(N) PANEL SIZE (In x In)	(N) POST SIZE AND LENGTH 2"	(N) POST SIZE AND LENGTH 2.5"	ROADSIDE SIGN ONE POST (EA)	ROADSIDE SIGN TWO POST (EA)
2-4	SEE SHEET PD-2		USE Exist	10'			1
2-5	SEE SHEET PD-2		USE Exist	12'		1	
2-6	SEE SHEET PD-2		USE Exist	10'		1	
2-7	SEE SHEET PD-2		USE Exist	10'		1	
2-8	SEE SHEET PD-2		USE Exist	10'		1	
2-9	SEE SHEET PD-2		USE Exist	10'		1	
2-10	SEE SHEET PD-2		USE Exist		12'	1	
2-11	SEE SHEET PD-2		USE Exist		12'	1	
2-13	SEE SHEET PD-2		USE Exist	10'			1
2-14	SEE SHEET PD-2		USE Exist	10'		1	
2-15	SEE SHEET PD-2		USE Exist	12'		1	
2-17	SEE SHEET PD-2		USE Exist	10'			1
3-1	S5-2		24 x 30	10'		1	
3-2	SEE SHEET PD-3		USE Exist		12'	1	
3-3	SEE SHEET PD-3		USE Exist		12'	1	
3-4	SEE SHEET PD-3		USE Exist		12'	1	
3-5	SEE SHEET PD-3		USE Exist	10'		1	
3-6	SEE SHEET PD-3		USE Exist		12'	1	
3-8	SEE SHEET PD-3		USE Exist	10'		1	
3-9	SEE SHEET PD-3		USE Exist	10'			1
						16	4

NOTE: EXACT SIGN LOCATION TO BE DETERMINED BY THE ENGINEER.

SIGN QUANTITIES

SQ-2

STATE OF CALIFORNIA - DEPARTMENT OF TRANSPORTATION
Caltrans DESIGN

FUNCTIONAL SUPERVISOR: JULIE CASEY
CALCULATED-DESIGNED BY: MIKE MOGEN
CHECKED BY: DANIEL FISHER
REVISED BY
DATE REVISED

LAST REVISION 12-19-08
DATE PLOTTED => 20-OCT-2009
TIME PLOTTED => 10:37

Dist	COUNTY	ROUTE	POST MILES TOTAL PROJECT	SHEET No.	TOTAL SHEETS
02	Las	395	R61.1/61.5	29	51

REGISTERED CIVIL ENGINEER DATE 12-19-08

2-23-09
PLANS APPROVAL DATE

REGISTERED PROFESSIONAL ENGINEER MIKE MOGEN No. C67018 Exp. 9/30/10 CIVIL STATE OF CALIFORNIA

THE STATE OF CALIFORNIA OR ITS OFFICERS OR AGENTS SHALL NOT BE RESPONSIBLE FOR THE ACCURACY OR COMPLETENESS OF ELECTRONIC COPIES OF THIS PLAN SHEET.

NOTE:

1. (N) NOT A SEPARATE PAY ITEM, FOR INFORMATION ONLY

EROSION CONTROL (TYPE D)

SHEET No.	LOCATION	EROSION CONTROL (TYPE D)	(N) FIBER	(N) COMPOST	(N) PURE LIVE SEED	(N) COMMERCIAL FERTILIZER	(N) STABILIZING EMULSION
		SQ YD	LB	CY	LB	LB	LB
L-1, 3	"A1" 884+60 TO 916+30 Lt/Rt	23 400	7500	3	246	900	600
	TOTAL	23 400	7500	3	246	900	600

ROADWAY QUANTITIES

SHEET No.	LOCATION	COLD PLANE ASPHALT CONCRETE PAVEMENT	ROADWAY EXCAVATION	EMBANKMENT	(N) IMPORTED MATERIAL (SHOULDER BACKING)	CLASS 2 AGGREGATE BASE	HOT MIX ASPHALT (TYPE A)	PLACE HMA (Misc AREA)
		SQYD	CY	CY	TON	CY	TON	SQYD
L1, 3	"A1" 884+60 TO 918+30 Lt/Rt	890	7400	1300	300	2200	5218	
L-1	"A2" 3+84 TO 4+84 Lt/Rt	190			10		40	
L-1	"A3" 3+08 TO 4+08 Lt/Rt	250					50	
L-1	"B1" 0+00 TO 0+93 Lt/Rt	270	20	20	10	25	100	
L-1	"T1" 0+07 TO 0+33 Lt/Rt	320	340	2	5	60	90	
L-2	"J1" 239+99 TO 235+55 Lt/Rt	580	270	120	15	90	210	
L-1	"DWY1" 888+80 Lt							
L-1	"DWY2" 889+95 Lt							
L-2	"DWY3" 897+55 Rt				3.9	11	22	
L-2	"DWY4" 234+68 Lt				3.9	22	45	
L-2	"DWY5" 904+59 Lt				3.9	38	75	
L-3	"DWY6" 909+03 Lt				3.9	60	22	
L-3	"DWY7" 245+16 Rt				3.9	10	22	
L-3	"DWY8" 910+91 Rt				3.9	11	22	
L-3	"DWY9" 914+80 Rt				3.9	11	22	
L-3	"DWY10" 915+45 Rt				3.9	11	22	
	WALKWAY						15	68
	DIKE						24	
	Misc AREA FROM DRAINAGE						1	34
	TOTAL	2500	8030	1442	371.2	2549	6000	102

PLACE HOT MIX ASPHALT DIKE (TYPE E)

SHEET No.	LOCATION	LF
L-1	"A1" 885+68 Rt TO "A1" 894+85 Rt	920
	TOTAL	920

TEMPORARY EROSION CONTROL

SHEET No.	LOCATION	TEMPORARY FIBER ROLL	TEMPORARY DRAINAGE INLET PROTECTION	TEMPORARY CHECK DAM
		LF	EA	LF
L-1, 3	"A1" 884+60 TO 916+30 Lt/Rt	1000	4	50
	TOTAL	1000	4	50

REPLACE ASPHALT CONCRETE SURFACING

STATION	(N) LANE	(N) AVERAGE LENGTH	(N) WIDTH	(N) DEPTH	REPLACE ASPHALT CONCRETE SURFACING	COMMENTS
	NB/SB	LF	LF	LF	CY	
"A1" 888+00 TO 894+00	NB	600	4	0.25	22.2	RIGHT WHEELPATH
"A1" 888+00 TO 894+00	NB	600	4	0.25	22.2	LEFT WHEELPATH
"A1" 888+00 TO 894+00	SB	600	4	0.25	22.2	RIGHT WHEELPATH
"A1" 888+00 TO 894+00	SB	600	4	0.25	22.2	LEFT WHEELPATH
"A1" 896+00 TO 902+00	NB	600	4	0.25	22.2	RIGHT WHEELPATH
"A1" 903+00 TO 906+00	NB	300	4	0.25	11.1	RIGHT WHEELPATH
"A1" 903+00 TO 906+00	NB	300	4	0.25	11.1	LEFT WHEELPATH
"A1" 903+00 TO 906+00	SB	300	4	0.25	11.1	RIGHT WHEELPATH
"A1" 903+00 TO 906+00	SB	300	4	0.25	11.1	LEFT WHEELPATH
				TOTAL	155.4	

SUMMARY OF QUANTITIES

Q-1

STATE OF CALIFORNIA - DEPARTMENT OF TRANSPORTATION
Caltrans DESIGN

FUNCTIONAL SUPERVISOR: JULIE CASEY
CALCULATED-DESIGNED BY: MIKE MOGEN
CHECKED BY: DANIEL FISHER
REVISED BY
DATE REVISED

LAST REVISION 12-19-08
DATE PLOTTED => 20-OCT-2009
TIME PLOTTED => 10:37

Dist	COUNTY	ROUTE	POST MILES TOTAL PROJECT	SHEET No.	TOTAL SHEETS
02	Las	395	R61.1/61.5	30	51

ART 12-19-08
REGISTERED ELECTRICAL ENGINEER

2-23-09
PLANS APPROVAL DATE

REGISTERED PROFESSIONAL ENGINEER A. P. ROBLES No. E15293 Exp. 3/31/09 ELECTRICAL STATE OF CALIFORNIA

THE STATE OF CALIFORNIA OR ITS OFFICERS OR AGENTS SHALL NOT BE RESPONSIBLE FOR THE ACCURACY OR COMPLETENESS OF ELECTRONIC COPIES OF THIS PLAN SHEET.

NOTE:

1. FOR COMPLETE RIGHT OF WAY AND DATA, SEE RIGHT OF WAY RECORD MAPS AT DISTRICT OFFICE.

LEGEND

(PB) OBJECT MARKER (TYPE PB) AND PULL BOX PAVING

[ ] PAD MOUNTED FB CABINET

ABBREVIATIONS

PEC PERMIT TO ENTER AND CONSTRUCT

PROJECT NOTES:

1 RS SOLAR ARRAY, BATTERY AND CONTROLLER. CONNECT TIMER FOR 120 V(AC) OPERATION AND PROVIDE FB CONTROLLER. SEE FB CABINET DETAIL, AND SHEET E-3.

2 PROVIDE SIGN LIGHTING FIXTURE WITH 50 W MERCURY VAPOR BULB (MEDIUM BASE). SEE DETAIL FOR TYPE 9A, Std PLAN RSP ES-7L. REPLACE EXIST FLASHING SIGNAL WITH NEW LED SIGNAL MODULES.

3 1½"C, 2#8 (FB CONTROLLER), 1#8G.

4 1½"C (TYPE 1), 2#8, 1#8G.

5 SEE PULL BOX PAVING DETAIL

EXISTING TRAFFIC MANAGEMENT SYSTEM ELEMENTS TO BE MAINTAINED

PM (L+)	DESCRIPTION
R61.09	CCTV - AT JUNCTION SR 36/395

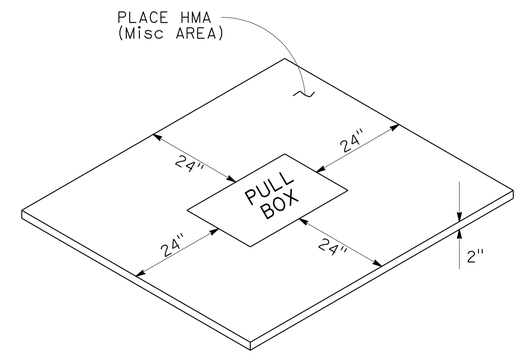

PULL BOX PAVING DETAIL

NO SCALE

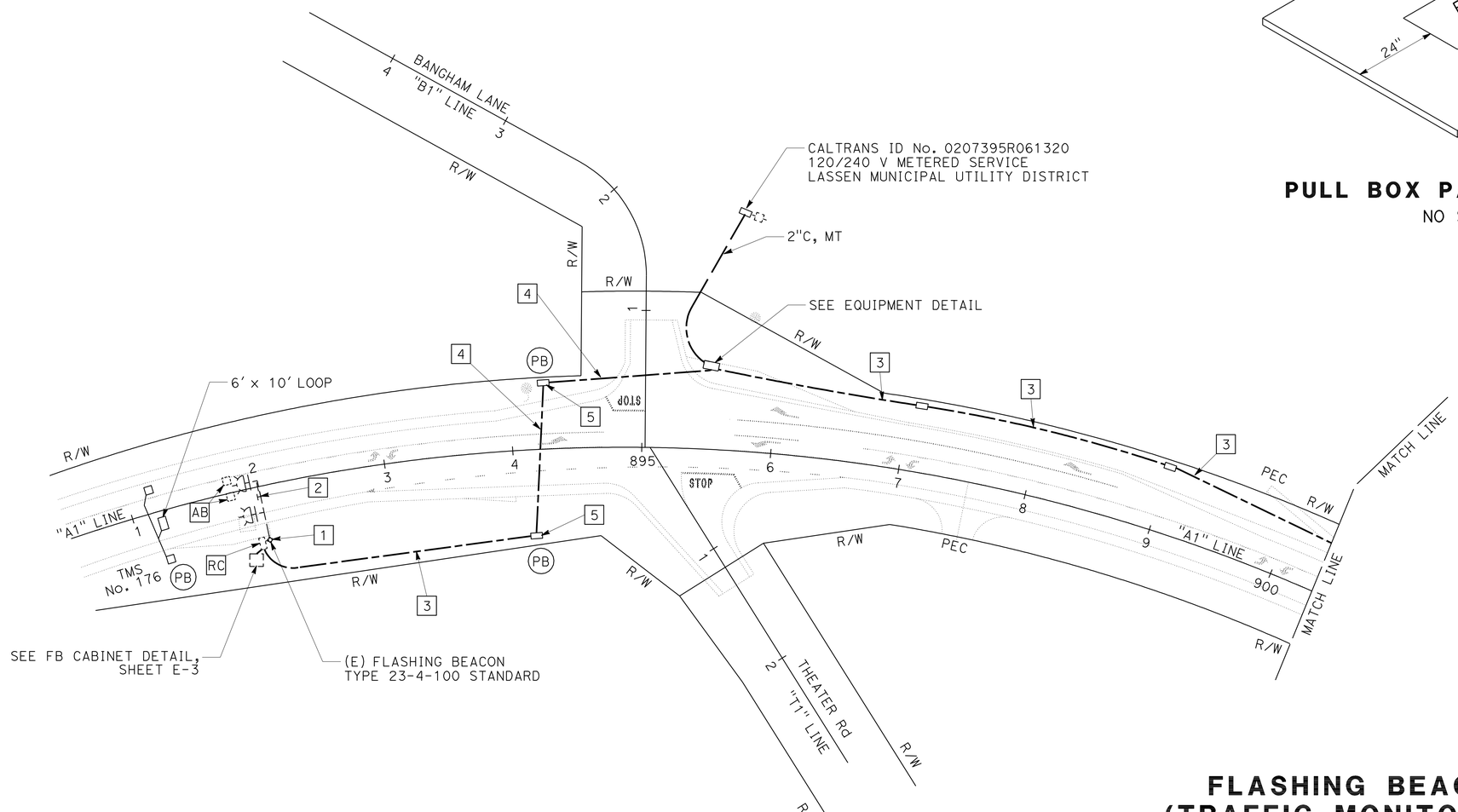

FLASHING BEACON SYSTEM (TRAFFIC MONITORING STATION)

SCALE: 1" = 50'

E-1

THIS PLAN IS ACCURATE FOR ELECTRICAL WORK ONLY.

STATE OF CALIFORNIA - DEPARTMENT OF TRANSPORTATION
Caltrans ELECTRICAL DESIGN

FUNCTIONAL SUPERVISOR: ROB STINGER
CALCULATED-DESIGNED BY: ARTURO ROBLES
CHECKED BY: JIM HANNIGAN
REVISED BY / DATE REVISED

LAST REVISION 12-19-08
DATE PLOTTED => 20-OCT-2009
TIME PLOTTED => 10:37

Dist	COUNTY	ROUTE	POST MILES TOTAL PROJECT	SHEET No.	TOTAL SHEETS
02	Las	395	R61.1/61.5	31	51

ART 12-19-08
REGISTERED ELECTRICAL ENGINEER

2-23-09
PLANS APPROVAL DATE

REGISTERED PROFESSIONAL ENGINEER A. P. ROBLES No. E15293 Exp. 3/31/09 ELECTRICAL STATE OF CALIFORNIA

THE STATE OF CALIFORNIA OR ITS OFFICERS OR AGENTS SHALL NOT BE RESPONSIBLE FOR THE ACCURACY OR COMPLETENESS OF ELECTRONIC COPIES OF THIS PLAN SHEET.

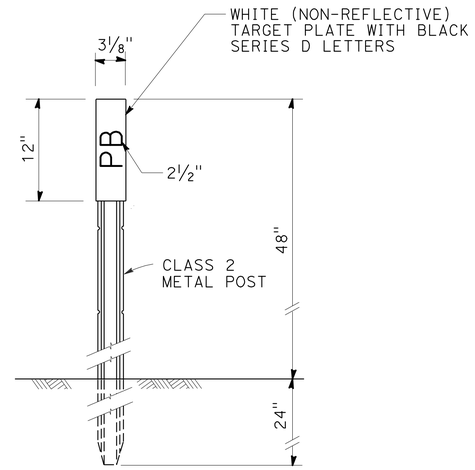

OBJECT MARKER (TYPE PB)
SEE Std PLAN A73B

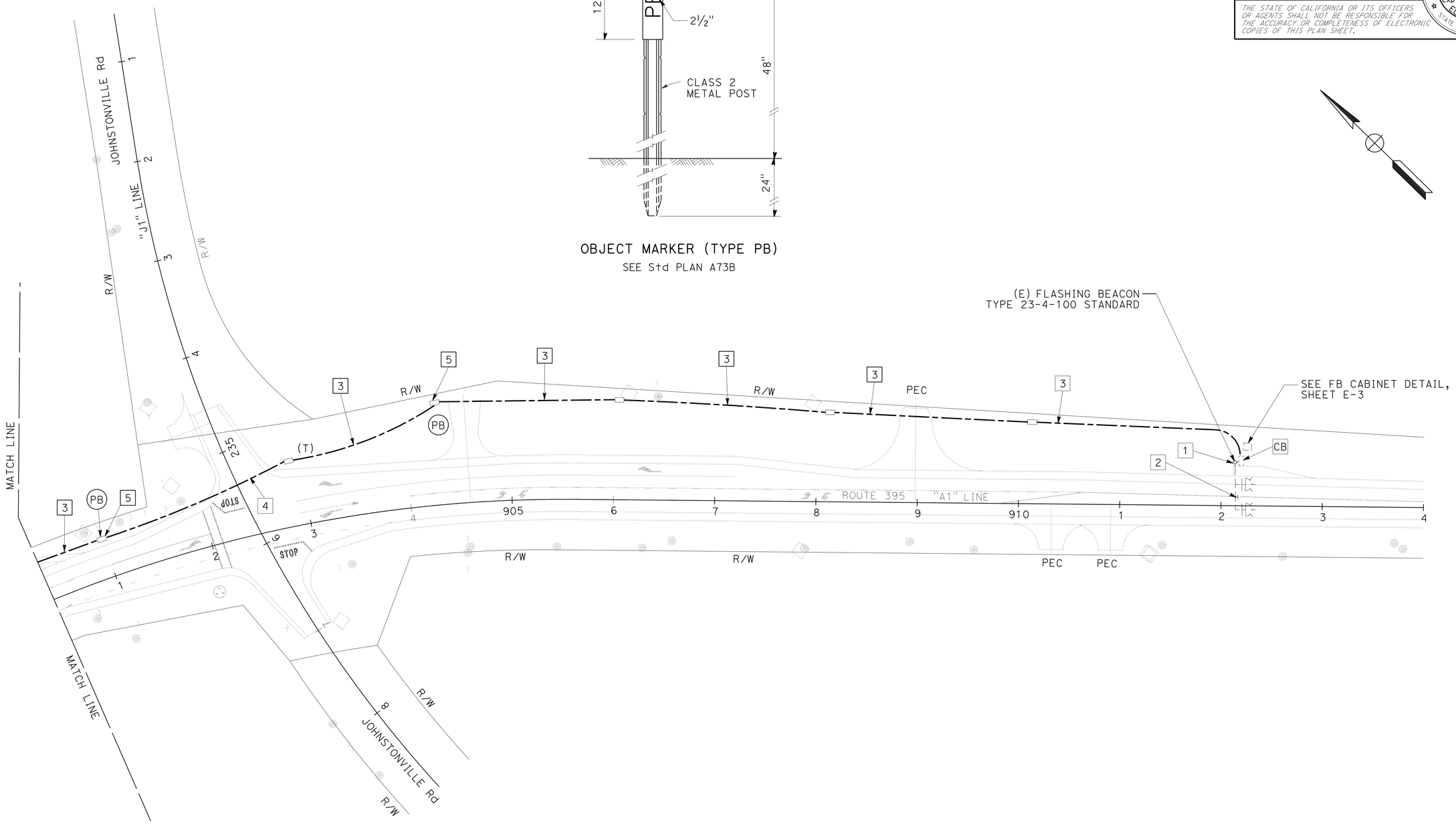

FLASHING BEACON SYSTEM

SCALE: 1" = 50'

E-2

THIS PLAN IS ACCURATE FOR ELECTRICAL WORK ONLY.

STATE OF CALIFORNIA - DEPARTMENT OF TRANSPORTATION
Caltrans ELECTRICAL DESIGN

FUNCTIONAL SUPERVISOR: ROB STINGER
CALCULATED-DESIGNED BY: JIM HANNIGAN
CHECKED BY: ARTURO ROBLES
REVISED BY
DATE REVISED

LAST REVISION 12-19-08 | DATE PLOTTED => 20-OCT-2009 | TIME PLOTTED => 10:37

Dist	COUNTY	ROUTE	POST MILES TOTAL PROJECT	SHEET No.	TOTAL SHEETS
02	Las	395	R61.1/61.5	32	51

ART 12-19-08
REGISTERED ELECTRICAL ENGINEER

2-23-09
PLANS APPROVAL DATE

REGISTERED PROFESSIONAL ENGINEER A. P. ROBLES No. E15293 Exp. 3/31/09 ELECTRICAL STATE OF CALIFORNIA

THE STATE OF CALIFORNIA OR ITS OFFICERS OR AGENTS SHALL NOT BE RESPONSIBLE FOR THE ACCURACY OR COMPLETENESS OF ELECTRONIC COPIES OF THIS PLAN SHEET.

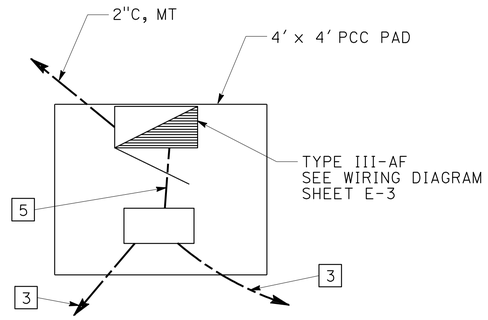

EQUIPMENT DETAIL

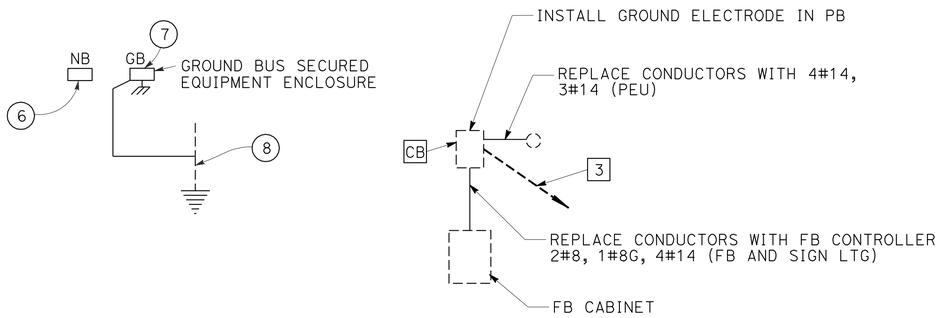

FLASHING BEACON CABINET DETAIL

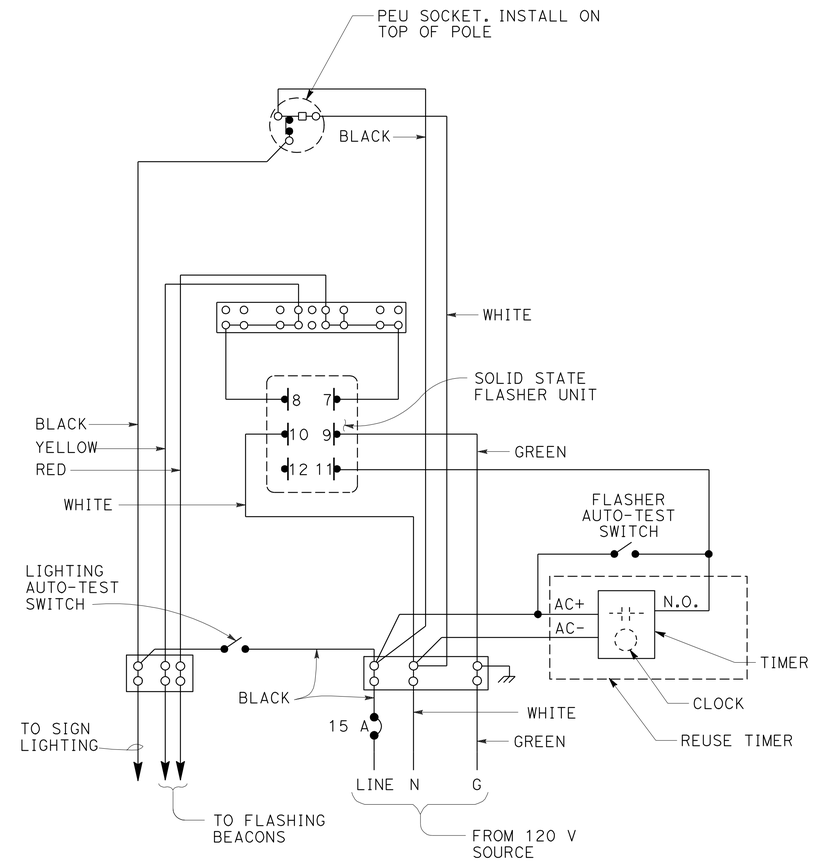

WIRING DIAGRAM
FLASHING BEACON CONTROLLER

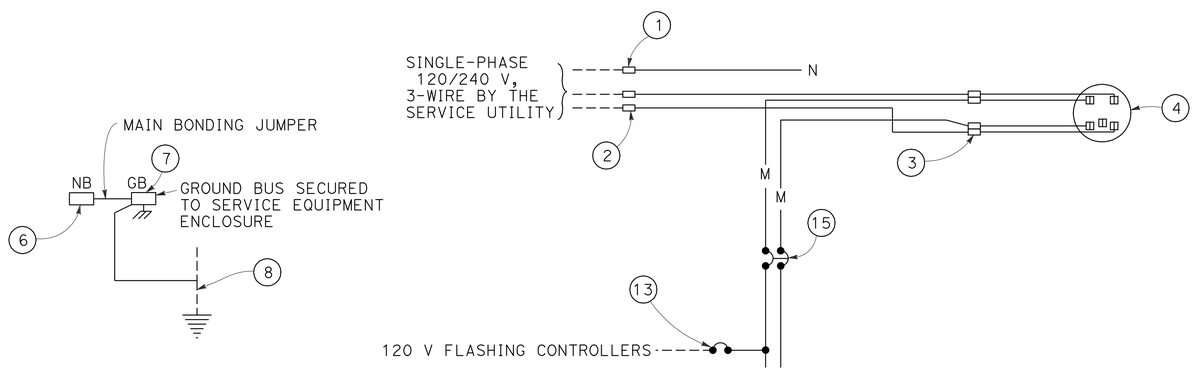

SERVICE WIRING DIAGRAM

FLASHING BEACON SYSTEM (ELECTRICAL DETAILS AND WIRING DIAGRAMS)

NO SCALE

E-3

THIS PLAN IS ACCURATE FOR ELECTRICAL WORK ONLY.

STATE OF CALIFORNIA - DEPARTMENT OF TRANSPORTATION
Caltrans ELECTRICAL DESIGN

FUNCTIONAL SUPERVISOR: ROB STINGER
CALCULATED-DESIGNED BY: ARTURO ROBLES
CHECKED BY: JIM HANNIGAN
REVISED BY
DATE REVISED

LAST REVISION 12-19-08 DATE PLOTTED => 20-OCT-2009 TIME PLOTTED => 10:37

DIST	COUNTY	ROUTE	POST MILES TOTAL PROJECT	SHEET NO.	TOTAL SHEETS
02	Las	395	R61.1/61.5	33	51

REGISTERED CIVIL ENGINEER

June 6, 2008
PLANS APPROVAL DATE

REGISTERED PROFESSIONAL ENGINEER Donald E. Howe No. C46402 Exp. 3-31-09 CIVIL STATE OF CALIFORNIA

The State of California or its officers or agents shall not be responsible for the accuracy or completeness of electronic copies of this plan sheet.

To accompany plans dated 2-23-09

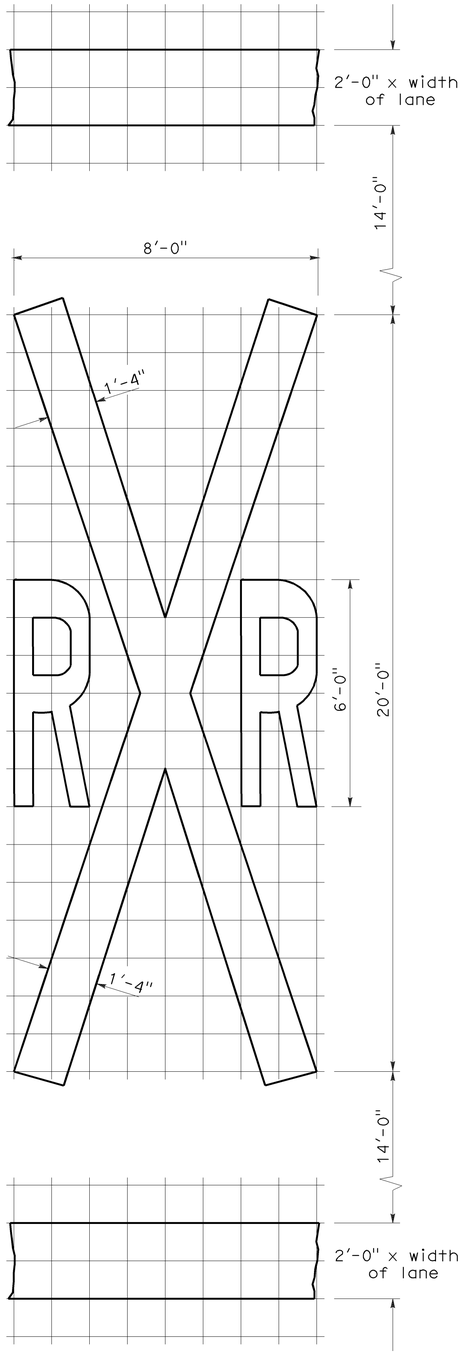

1'-0" GRID
A=70 sq ft ✳

RAILROAD CROSSING SYMBOL

✳70 sq ft DOES NOT INCLUDE THE 2'-0" x VARIABLE WIDTH TRANSVERSE LINES.

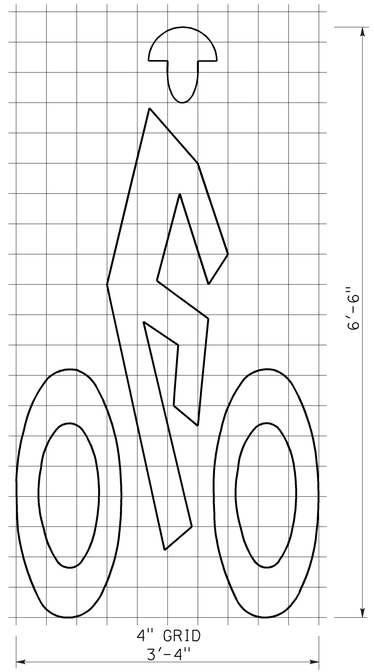

A=7 sq ft

BIKE LANE SYMBOL

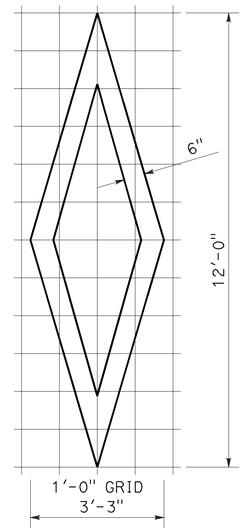

A=11 sq ft

DIAMOND SYMBOL

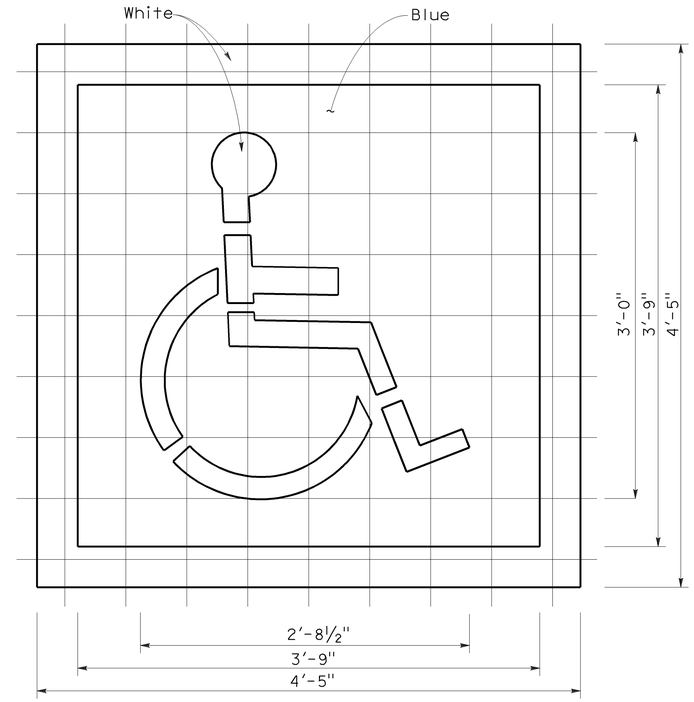

6" GRID
A (White) =9 sq ft
A (Blue) =14 sq ft

INTERNATIONAL SYMBOL OF ACCESSIBILITY MARKING

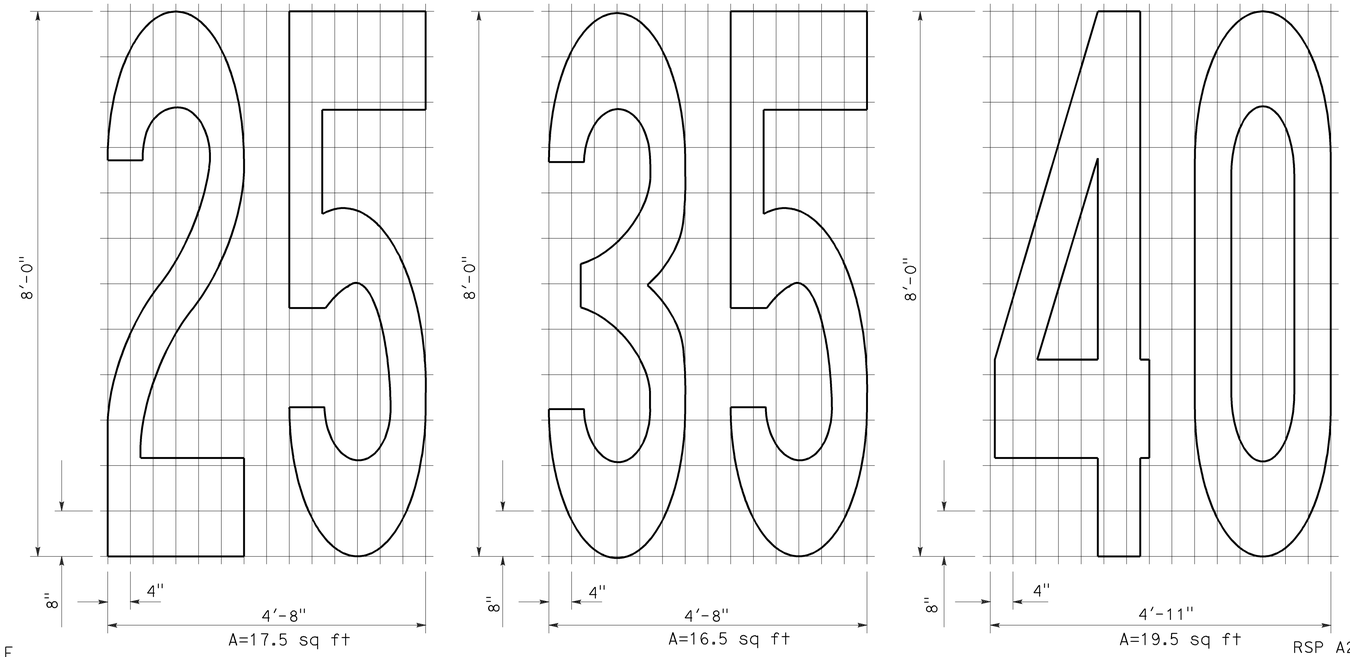

A=17.5 sq ft
A=16.5 sq ft
A=19.5 sq ft

NUMERALS

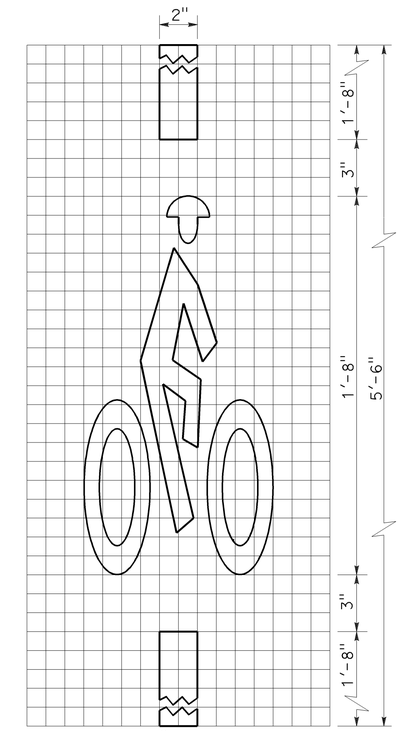

A=2 sq ft

BICYCLE LOOP DETECTOR SYMBOL

NOTE:

1. Minor variations in dimensions may be accepted by the Engineer.

STATE OF CALIFORNIA
DEPARTMENT OF TRANSPORTATION

PAVEMENT MARKINGS SYMBOLS AND NUMERALS

NO SCALE

RSP A24C DATED JUNE 6, 2008 SUPERSEDES STANDARD PLAN A24C DATED MAY 1, 2006 - PAGE 11 OF THE STANDARD PLANS BOOK DATED MAY 2006.

REVISED STANDARD PLAN RSP A24C

2006 REVISED STANDARD PLAN RSP A24C

5-27-08

DIST	COUNTY	ROUTE	POST MILES TOTAL PROJECT	SHEET NO.	TOTAL SHEETS
02	Las	395	R61.1/61.5	34	51

Raymond Don Tsztoo
REGISTERED CIVIL ENGINEER

January 18, 2008
PLANS APPROVAL DATE

REGISTERED PROFESSIONAL ENGINEER
Raymond Don Tsztoo
No. C37332
Exp. 6-30-08
CIVIL
STATE OF CALIFORNIA

The State of California or its officers or agents shall not be responsible for the accuracy or completeness of electronic copies of this plan sheet.

To accompany plans dated 2-23-09

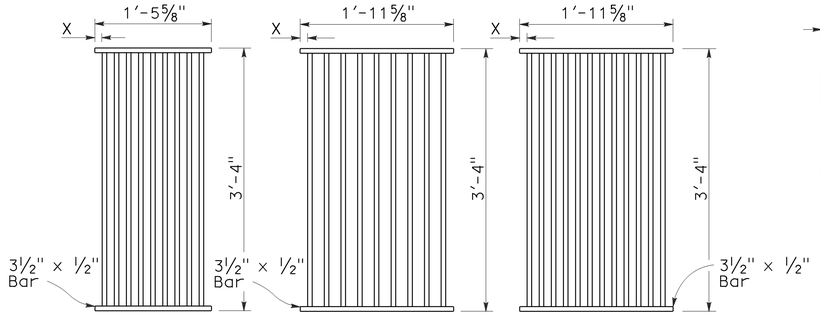

TYPE 18-9

1⅜" Clear spacing. Use within the roadbed on highways where bicycles and pedestrians are excluded.

TYPE 24-9

2" Clear spacing. Use in locations off the roadbed on all types of highways.

TYPE 24-12

1⅜" Clear spacing. Use within the roadbed on highways where bicycles and pedestrians are excluded.

RECTANGULAR GRATE DETAILS

(See table below)

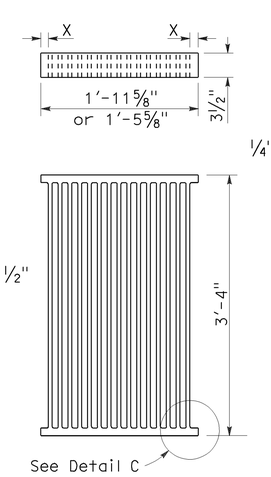

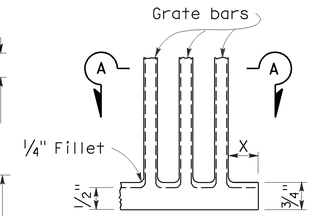

DETAIL C

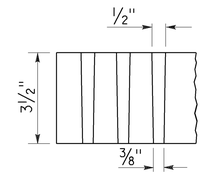

SECTION A-A

ALTERNATIVE CAST NODULAR IRON GRATE OR CAST STEEL GRATE

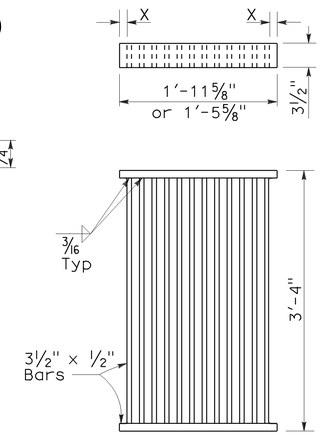

ALTERNATIVE WELDED GRATE

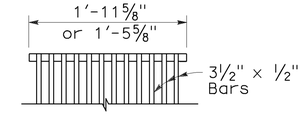

CAST END BLOCK

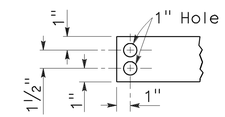

END OF BAR

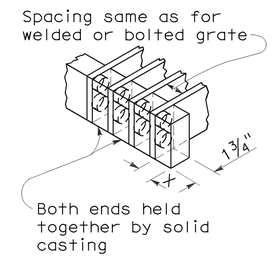

ALTERNATIVE CAST NODULAR IRON OR CAST STEEL END BLOCK GRATE

NOTES:

1. Grate type numbers refer to approximate width of grate in inches and number of bars, respectively.
2. Contractor has the option of using cast nodular iron, cast steel, welded, bolted, or cast end block grate.
3. See Special Provisions for requirements pertaining to galvanizing or asphalt dipping of grates and frames.
4. Rounded top of bars optional on all grates.
5. Pipe inlets with a grate shall be placed so that bars parallel direction of principle surface flow.
6. Full penetration butt welds may be substituted for the fillet welds on all anchors.
7. Standard square, hexagon, round or equivalent headed anchors may be substituted for the right angle hooks on the anchors shown on this plan.
8. Grate and frame weights are based on welded grates (weights of face angles, steps, protection bars, etc. are not included).

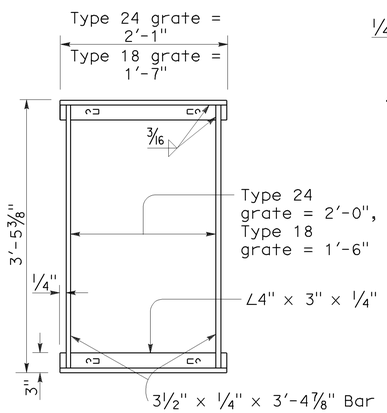

TYPICAL FRAME

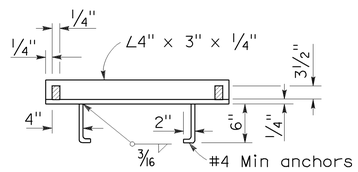

CROSS SECTION

(Thru frame)

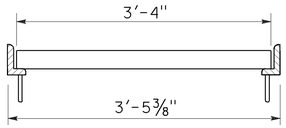

LONGITUDINAL SECTION

(Thru frame and grate)

RECTANGULAR FRAME DETAILS

(For all rectangular grates)

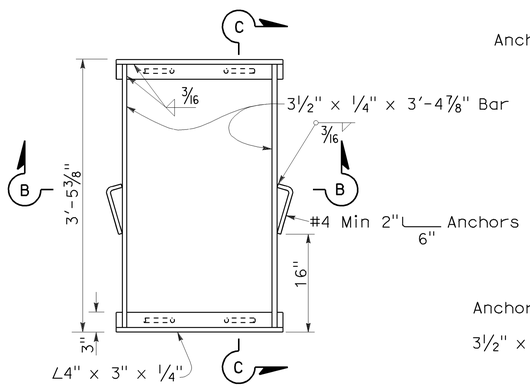

TYPICAL FRAME

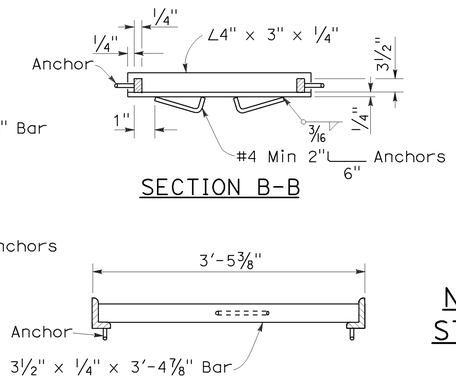

SECTION B-B

SECTION C-C

ALTERNATIVE ANCHOR FOR RECTANGULAR FRAME

(For details not shown, See Rectangular Frame Details)

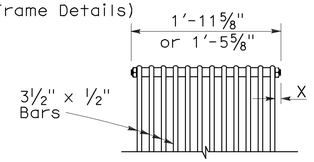

BOLTED END BLOCK

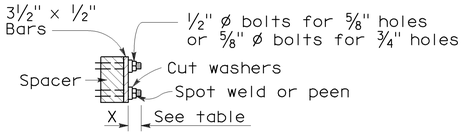

BOLTING DETAIL

ALTERNATIVE BOLTED GRATE

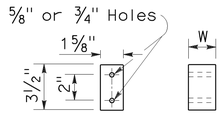

BAR SPACER

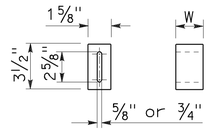

ALTERNATIVE SPACER

W = 1⅜" or 2"

GRATE BAR SPACING TABLE

TYPE	No. OF BARS	CLEAR BAR SPACING	X
18-9	9	1⅜"	1 1/16"
24-9	9	2"	1 9/16"
24-12	12	1⅜"	1¼"

INLET TYPE	COVER TYPE	WEIGHT LB
OS	PLATE	174
OL-7	PLATE	170
OL-10	PLATE	170
OL-14	PLATE	170
OL-21	PLATE	170
OCP	PLATE	112
OCPI	PLATE	112
OCPI	REDWOOD	42
OMP	PLATE	177
OMPI	PLATE	177

INLET TYPE	GRATE TYPE	No. OF GRATES	WEIGHT LB
GDO	24-12	2	634
GOL-7	24-12	1	326
GOL-10	24-12	1	326
GO,G1,G2,G3,G4 (TYPE 24)	24-9	1	263
	24-12	1	326
G4 (TYPE 18),G5,G6	18-9	1	249
GT1	18-9	2	498
GT2	18-9	2	498
GT3	24-12	2	652
GT4	24-12	2	652
TRASH RACK			22

BASIS FOR MISC IRON & STEEL FINAL PAY WEIGHTS FOR DRAINAGE INLETS

(See General Notes, No 8)

STATE OF CALIFORNIA
DEPARTMENT OF TRANSPORTATION

GRATE DETAILS

NO SCALE

RSP D77A DATED JANUARY 18, 2008 SUPERSEDES STANDARD PLAN D77A DATED MAY 1, 2006 - PAGE 155 OF THE STANDARD PLANS BOOK DATED MAY 2006.

REVISED STANDARD PLAN RSP D77A

2006 REVISED STANDARD PLAN RSP D77A

12-14-07

DIST	COUNTY	ROUTE	POST MILES TOTAL PROJECT	SHEET NO.	TOTAL SHEETS
02	Las	395	R61.1/61.5	35	51

Raymond Don Tsztoo
REGISTERED CIVIL ENGINEER

June 6, 2008
PLANS APPROVAL DATE

REGISTERED PROFESSIONAL ENGINEER Raymond Don Tsztoo No. C37332 Exp. 6-30-08 CIVIL STATE OF CALIFORNIA

The State of California or its officers or agents shall not be responsible for the accuracy or completeness of electronic copies of this plan sheet.

ANNULAR AND HELICAL PROFILE

COUPLING TYPE	PIPE CORRUGATION	PIPE SIZE	W OR A	PIPE WALL THICKNESS CSP	PIPE WALL THICKNESS CAP	BAND THICKNESS CSP	BAND THICKNESS CAP	BAR AND STRAP (CSP ONLY) STRAP THICKNESS	BOLTS Dia	BAR Dia	BAR YIELD STRENGTH	ANGLE DIMENSIONS CSP	ANGLE DIMENSIONS CAP	BOLTS (No.- Dia) CSP	BOLTS (No.- Dia) CAP	RIVETS ANGLE TO BAND CSP	RIVETS ANGLE TO BAND CAP	SPOT WELDS ANGLE TO BAND CSP
TWO PIECE INTEGRAL FLANGE	1½′ × ¼"	6"-10"	7"	0.052"-0.079"	0.048"-0.060"	0.052"	0.060"							2-⅜"	2-⅜"			
		12"-18"	7"	0.052"-0.079"		0.064"								2-½"				
	2⅔" × ½"	12"-24"	7"	0.052"-0.079"	0.060"-0.105"	0.064"	0.060"							2-½"	2-½"			
UNIVERSAL	2⅔" × ½"	THROUGH 36"	12"	0.052"-0.138"	0.060"-0.135"	0.052"	0.060"					2" × 2" × 3/16"	2" × 2" × 3/16"	3-½"	3-½"	3-⅜"	3-⅜"	3-½"
		42"-60"	12"	0.052"-0.168"	0.075"-0.164"	0.052"	0.060"					2" × 2" × 3/16"	2" × 2" × 3/16"	3-½"	3-½"	3-⅜"	3-⅜"	5-½"
		THROUGH 72"	12"	0.052"-0.168"	0.164"	0.052"	0.105"	0.079"	½"	⅞"	32 ksi	2" × 2" × 3/16"	2" × 2" × 3/16"	3-½"	3-½"	3-⅜"	3-⅜"	5-½"
		78"-84"	16¼"	0.168"		0.079"		DOUBLE 0.079"	½"	⅞"	32 ksi							
ANNULAR	2⅔" × ½"	THROUGH 36"	7"	0.064"-0.138"	0.060"-0.135"	0.052"	0.060"	0.079"	½"	⅞"	32 ksi	2" × 2" × 3/16"	2" × 2" × 3/16"	2-½"	2-½"	3-⅜"	3-⅜"	3-½"
		42"-72"	12"	0.064"-0.168"	0.075"-0.164"	0.052"	0.105"	0.079"	½"	⅞"	32 ksi	2" × 2" × 3/16"	2" × 2" × 3/16"	3-½"	3-½"	3-⅜"	3-⅜"	5-½"
		78"-84"	12"	0.168"		0.079"		0.109"	½"	⅞"	45 ksi	2" × 2" × 3/16"		3-½"		3-⅜"		5-½"
	3" × 1"	48"-90"	14"	0.064"-0.109"		0.052"		0.079"	½"	⅞"	32 ksi	2" × 2" × 3/16"		3-½"		3-⅜"		5-½"
		96"-120"	14"	0.079"-0.109"		0.052"		0.109"	½"	⅞"	45 ksi	2" × 2" × 3/16"		3-½"		4-⅜"		
		42"-108"	14"		0.060"-0.135"		0.060"						2" × 2" × 3/16"		3-½"		3-⅜"	
HELICAL	2⅔" × ½"	THROUGH 36"	12"	0.052"-0.138"	0.060"-0.135"	0.052"	0.060"	0.079"	½"	⅞"	32 ksi	2" × 2" × 3/16"	2" × 2" × 3/16"	3-½"	3-½"	3-⅜"	3-⅜"	3-½"
		42"-72"	12"	0.052"-0.168"	0.075"-0.164"	0.052"	0.060"	0.079"	½"	⅞"	32 ksi	2" × 2" × 3/16"	2" × 2" × 3/16"	3-½"	3-½"	3-⅜"	3-⅜"	5-½"
		78"-84"	12"	0.168"		0.079"		0.109"	½"	⅞"	45 ksi	2" × 2" × 3/16"		3-½"		3-⅜"		5-½"
	3" × 1"	48"-90"	14"	0.064"-0.109"		0.052"		0.079"	½"	⅞"	32 ksi	2" × 2" × 3/16"		3-½"		3-⅜"		5-½"
		96"-120"	14"	0.079"-0.109"		0.052"		0.109"	½"	⅞"	45 ksi	2" × 2" × 3/16"		3-½"		4-⅜"		
		42"-108"	14"		0.060"-0.135"		0.060"						2" × 2" × 3/16"		3-½"		3-⅜"	
HUGGER	2⅔" × ½" REROLLED END	12"-54"	4"	0.052"-0.109"		0.052"						2½" × 1½" × 3/16"	2½" × 1½" × 3/16"	1-½"				3-½"
		60"-66"	4"	0.109"		0.064"						2½" × 1½" × 3/16"	2½" × 1½" × 3/16"	1-½"				3-½"
		36"-48"	4"	0.138"		0.064"						2½" × 1½" × 3/16"	2½" × 1½" × 3/16"	1-½"				3-½"
		THROUGH 72"	10½"	0.052"-0.168"		0.052"		0.079"	½"	⅞"	32 ksi							
		78"-84"	10½"	0.168"		0.079"		0.109"	½"	⅞"	45 ksi							
	3" × 1" REROLLED END	48"-90"	10½"	0.064"-0.109"		0.052"		0.079"	½"	⅞"	32 ksi							
		96"-120"	10½"	0.079"-0.109"		0.052"		0.109"	½"	⅞"	45 ksi							
	5" × 1" REROLLED END	48"-66"	7½"	0.064"-0.109"		0.064"		0.079"	½"	⅞"	32 ksi	2½" × 1½" × 3/16"	2½" × 1½" × 3/16"	1-½"				3-½"
		72"-90"	7½"	0.064"-0.079"		0.064"		0.079"	½"	⅞"	32 ksi	2½" × 1½" × 3/16"	2½" × 1½" × 3/16"	1-½"				3-½"
		48"-90"	7½"	0.064"-0.138"		0.064"		0.079"	½"	⅞"	32 ksi							
		48"-120"	12" SEE	0.064"-0.109"		0.064"		0.079"	½"	⅞"	32 ksi							
		48"-84"	12" NOTE	0.138"		0.064"		0.079"	½"	⅞"	32 ksi							
		90"-120"	12" 11	0.138"		0.064"		DOUBLE 0.079"	½"	⅞"	32 ksi							

SPIRAL RIB PROFILE

COUPLING TYPE	PIPE CORRUGATION	PIPE SIZE	W	PIPE WALL THICKNESS SSRP	PIPE WALL THICKNESS ASRP	BAND THICKNESS SSRP	BAND THICKNESS ASRP	BAR AND STRAP (SSRP ONLY) STRAP THICKNESS	BOLTS Dia	BAR Dia	BAR YIELD STRENGTH	ANGLE DIMENSIONS SSRP	ANGLE DIMENSIONS ASRP	BOLTS (No.- Dia) SSRP	BOLTS (No.- Dia) ASRP	RIVETS ANGLE TO BAND SSRP	RIVETS ANGLE TO BAND ASRP	SPOT WELDS ANGLE TO BAND SSRP
ANNULAR	2⅔" × ½" * REROLLED END	24"-36"	12"	0.064"-0.109"	0.060"-0.105"	0.052"	0.060"	0.079"	½"	⅞"	32 ksi	2" × 2" × 3/16"	2" × 2" × 3/16"	3-½"	3-½"	3-⅜"	3-⅜"	5-½"
		42"-60"	12"	0.064"-0.109"	0.075"-0.105"	0.052"	0.105"	0.079"	½"	⅞"	32 ksi	2" × 2" × 3/16"	2" × 2" × 3/16"	3-½"	3-½"	3-⅜"	3-⅜"	5-½"
		66"-72"	12"	0.064"-0.109"		0.052"		0.079"	½"	⅞"	32 ksi	2" × 2" × 3/16"	2" × 2" × 3/16"	3-½"	3-½"	3-⅜"	3-⅜"	5-½"
		78"-114"	12"	0.079"-0.109"		0.079"		0.109"	½"	⅞"	45 ksi	2" × 2" × 3/16"	2" × 2" × 3/16"	3-½"	3-½"	3-⅜"	3-⅜"	5-½"
HUGGER	2⅔" × ½" * REROLLED END	24"-72"	10½"	0.064"-0.109"		0.052"		0.079"	½"	⅞"	32 ksi							
		78"-84"	10½"	0.109"		0.079"		0.109"	½"	⅞"	45 ksi							

* See Note 14.

14. All profiles of Spiral Rib Pipe (¾" × ¾" ribs at 7½" pitch and ¾" × 1" ribs at 11½" pitch in both steel and aluminum and ¾" × 1" ribs at 8½" pitch in steel only) shall be manufactured with rerolled ends. Corrugation profile of the rerolled ends shall be 2⅔" × ½" annual corrugations with a minimum of two full corrugations at each end.

NOTES:

To accompany plans dated 2-23-09

1. All ferrous metal coupling band connection hardware shall be galvanized or electro-plated in accordance with the Standard Specifications.
2. For helically corrugated coupling bands, the connection angles may be oriented parallel to the pipe axis, provided connecting holes are slotted lengthwise sufficiently to allow adjustment for the helix angle.
3. Tension strap may be connected to band with either spot welds or fillet welds that develop minimum required strength of strap.
4. Use 1¼" gage line dimension on attached angle leg for rivets and spot welds.
5. Band thickness shall not be less than:
   a. 3 standard thicknesses lighter than the thickness of the pipe for Corrugated Steel Pipe.
   b. 2 standard thicknesses lighter than the thickness of the pipe and in no case lighter than 0.060" for Corrugated Aluminum Pipe.
6. Dimensions, thicknesses and strengths shown are minimum.
7. For pipe arches use same width band as for round pipe of equal periphery.
8. Fillet welds of equivalent strenght may be substituted for spot welds or rivets.
9. Spot welds shall develop minimum required strength of strap.
10. Pipe with rerolled ends having at least two 2⅔" × ½" annular corrugations at each end with or without an upturned flange may be connected with any of the annular coupling bands shown for pipe of the same diameter and wall thickness and having 2⅔" × ½" corrugations.
11. In the case of H-12 huggerbands, two piece bands are required for diameters through 96" and three piece bands are required for diameters 102" through 120".
12. Two piece bands are required for pipes greater than 42" diameter.
13. The 2¼" × 2" × 0.109" thick galvanized die-formed angle connector may be used in lieu of the 2" × 2" × 3/16" angle connector for standard joints only on pipes through 72" diameter.

STATE OF CALIFORNIA
DEPARTMENT OF TRANSPORTATION

CORRUGATED METAL PIPE COUPLING DETAILS No. 5 STANDARD JOINT

NO SCALE

RSP D97E DATED JUNE 6, 2008 SUPERSEDES STANDARD PLAN D97E DATED MAY 1, 2006 - PAGE 187 OF THE STANDARD PLANS BOOK DATED MAY 2006.

REVISED STANDARD PLAN RSP D97E

2006 REVISED STANDARD PLAN RSP D97E

4-2-08

DIST	COUNTY	ROUTE	POST MILES TOTAL PROJECT	SHEET NO.	TOTAL SHEETS
02	Las	395	R61.1/61.5	36	51

Randell D. Hiatt
REGISTERED CIVIL ENGINEER

June 6, 2008
PLANS APPROVAL DATE

REGISTERED PROFESSIONAL ENGINEER
Randell D. Hiatt
No. C50200
Exp. 6-30-09
CIVIL
STATE OF CALIFORNIA

The State of California or its officers or agents shall not be responsible for the accuracy or completeness of electronic copies of this plan sheet.

To accompany plans dated 2-23-09

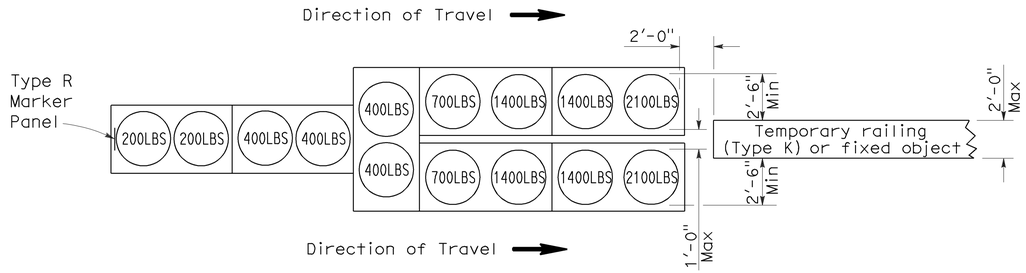

ARRAY 'TU14'

Approach speed 45 mph or more

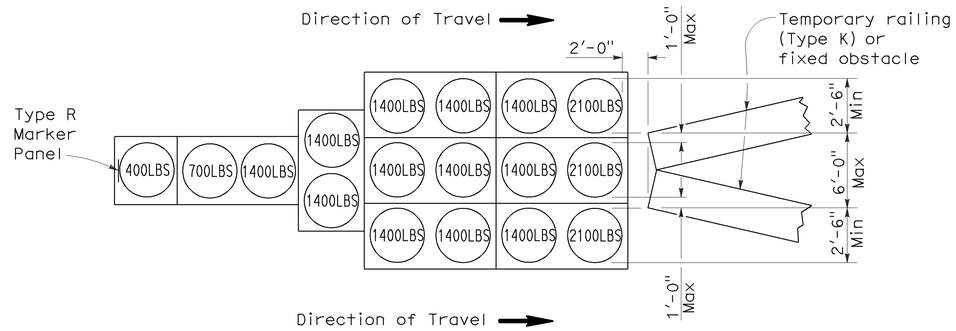

ARRAY 'TU17'

Approach speed less than 45 mph

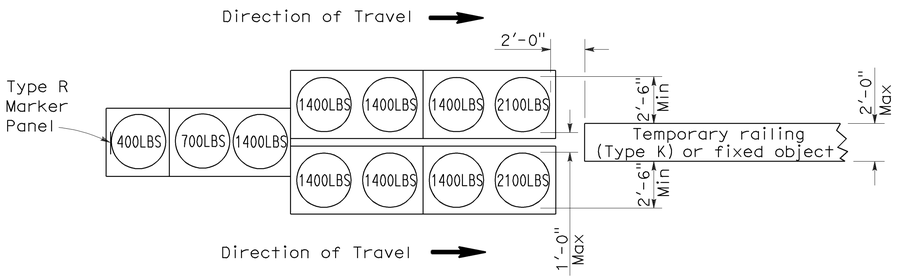

ARRAY 'TU11'

Approach speed less than 45 mph

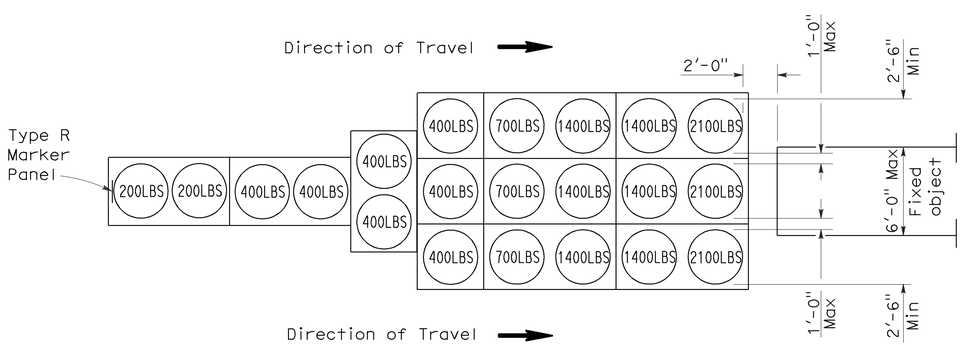

ARRAY 'TU21'

Approach speed 45 mph or more

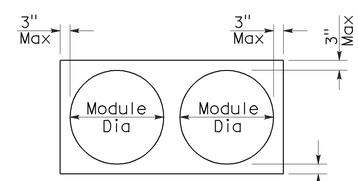

PLAN

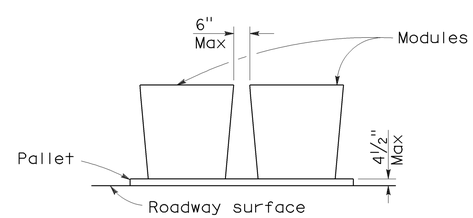

ELEVATION

CRASH CUSHION PALLET DETAIL

See Note 7

NOTES:

1. (XXX) Indicates sand filled module location and weight of sand in pounds for each module. Module spacing is based on the greater diameter of the module.
2. All sand weights are nominal.
3. Temporary crash cushion arrays shall not encroach on the traveled way.
4. Place the top of Type R marker panel 1" below the module lid.
5. Refer to Standard Plan A73B for marker details.
6. Approach speeds indicated conform to NCHRP 350 Report criteria.
7. Use of pallets is optional.

STATE OF CALIFORNIA
DEPARTMENT OF TRANSPORTATION

TEMPORARY CRASH CUSHION, SAND FILLED (UNIDIRECTIONAL)

NO SCALE

RSP T1A DATED JUNE 6, 2008 SUPERSEDES STANDARD PLAN T1A
DATED MAY 1, 2006 - PAGE 211 OF THE STANDARD PLANS BOOK DATED MAY 2006.

REVISED STANDARD PLAN RSP T1A

2006 REVISED STANDARD PLAN RSP T1A

5-15-08

DIST	COUNTY	ROUTE	POST MILES TOTAL PROJECT	SHEET NO.	TOTAL SHEETS
02	Las	395	R61.1/61.5	37	51

Randell D. Hiatt
REGISTERED CIVIL ENGINEER

June 6, 2008
PLANS APPROVAL DATE

REGISTERED PROFESSIONAL ENGINEER
Randell D. Hiatt
No. C50200
Exp. 6-30-09
CIVIL
STATE OF CALIFORNIA

The State of California or its officers or agents shall not be responsible for the accuracy or completeness of electronic copies of this plan sheet.

To accompany plans dated 2-23-09

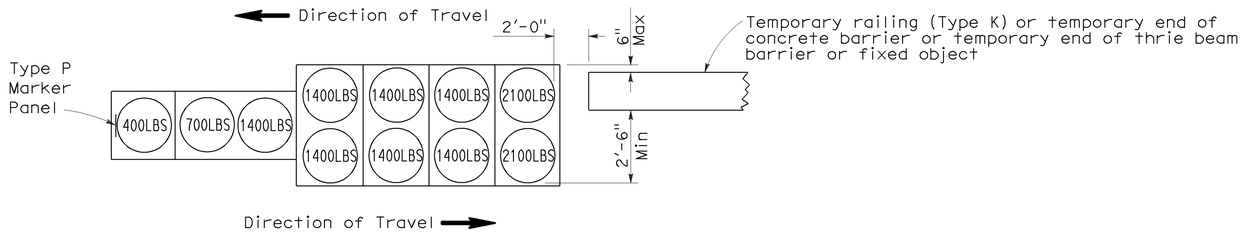

ARRAY 'TB11'

Approach speed less than 45 mph

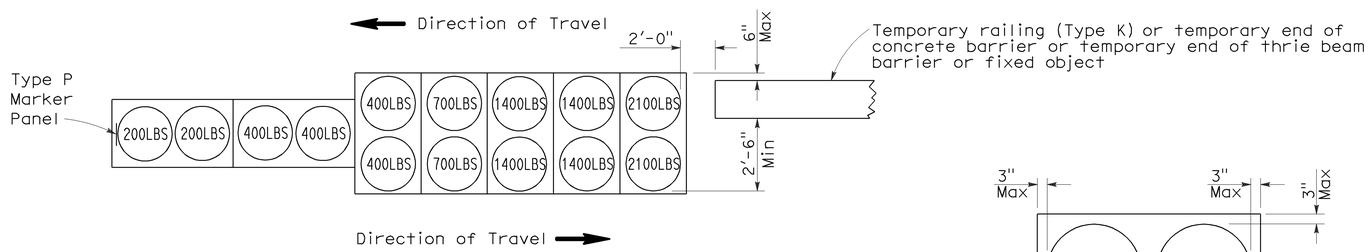

ARRAY 'TB14'

Approach speed 45 mph or more

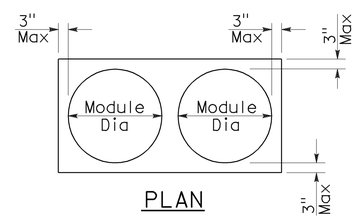

PLAN

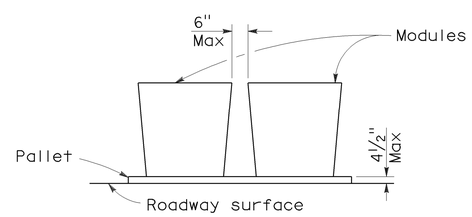

ELEVATION

CRASH CUSHION PALLET DETAIL

See Note 7

NOTES:

1. (XXX) Indicates sand filled module location and weight of sand in pounds for each module. Module spacing is based on the greater diameter of the module.
2. All sand weights are nominal.
3. Temporary crash cushion arrays shall not encroach on the traveled way.
4. Place the Type P marker panel so that the bottom of the panel rests upon the pallet.
5. Refer to Standard Plan A73B for marker details.
6. Approach speeds indicated conform to NCHRP 350 Report criteria.
7. Use of pallets is optional.

STATE OF CALIFORNIA
DEPARTMENT OF TRANSPORTATION

TEMPORARY CRASH CUSHION, SAND FILLED (BIDIRECTIONAL)

NO SCALE

RSP T1B DATED JUNE 6, 2008 SUPERSEDES STANDARD PLAN T1B
DATED MAY 1, 2006 - PAGE 212 OF THE STANDARD PLANS BOOK DATED MAY 2006.

REVISED STANDARD PLAN RSP T1B

2006 REVISED STANDARD PLAN RSP T1B

5-15-08

DIST	COUNTY	ROUTE	POST MILES TOTAL PROJECT	SHEET NO.	TOTAL SHEETS
02	Las	395	R61.1/61.5	38	51

Randell D. Hiatt
REGISTERED CIVIL ENGINEER

June 6, 2008
PLANS APPROVAL DATE

REGISTERED PROFESSIONAL ENGINEER
Randell D. Hiatt
No. C50200
Exp. 6-30-09
CIVIL
STATE OF CALIFORNIA

The State of California or its officers or agents shall not be responsible for the accuracy or completeness of electronic copies of this plan sheet.

To accompany plans dated 2-23-09

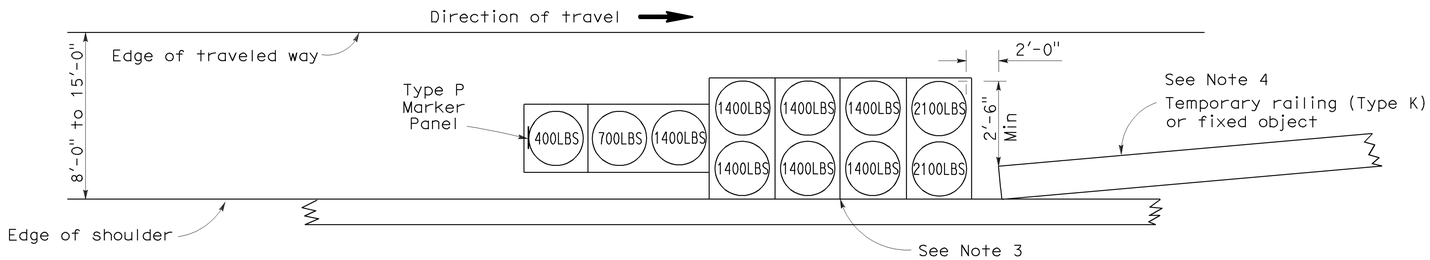

ARRAY 'TS11'

Approach speed less than 45 mph
See Note 9

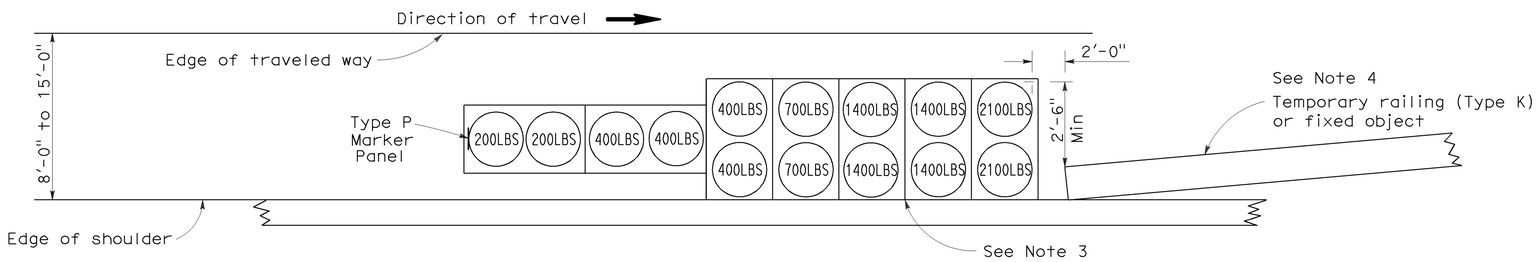

ARRAY 'TS14'

Approach speed 45 mph or more
See Note 9

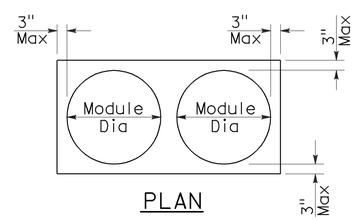

PLAN

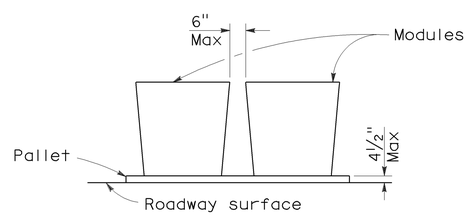

ELEVATION

CRASH CUSHION PALLET DETAIL

See Note 11

NOTES:

1. (XXX) Indicates sand filled module location and weight of sand in pounds for each module. Module spacing is based on the greater diameter of the module.
2. All sand weights are nominal.
3. The temporary crash cushion arrays shown on this plan shall be used only in locations where there will be traffic on one side of the temporary crash cushion array.
4. If the fixed object or approach end of the temporary railing is less than 15'-0" from the edge of traveled way, a temporary crash cushion is required in a construction or work zone.
5. Temporary crash cushion arrays shall not encroach on the traveled way.
6. Arrays for median shoulders shall conform to details shown on this plan for outside shoulders.
7. Place the Type P marker panel so that the bottom of the panel rests upon the pallet and faces traffic.
8. Refer to Standard Plan A73B for marker details.
9. For shoulder widths less than 8'-0", appropriate approved crash cushion protection, other than sand filled modules, shall be provided at fixed objects and at approach ends of temporary railing. The specific type of crash cushion shall be as shown on the project plans or as specified in the Special Provisions, or if not shown on the project plans or specified in the Special Provisions, shall be as approved by the Engineer.
10. Approach speeds indicated conform to NCHRP 350 Report criteria.
11. Use of pallets is optional.

STATE OF CALIFORNIA
DEPARTMENT OF TRANSPORTATION

TEMPORARY CRASH CUSHION, SAND FILLED (SHOULDER INSTALLATIONS)

NO SCALE

RSP T2 DATED JUNE 6, 2008 SUPERSEDES STANDARD PLAN T2
DATED MAY 1, 2006 - PAGE 213 OF THE STANDARD PLANS BOOK DATED MAY 2006.

REVISED STANDARD PLAN RSP T2

2006 REVISED STANDARD PLAN RSP T2

5-15-08

DIST	COUNTY	ROUTE	POST MILES TOTAL PROJECT	SHEET NO.	TOTAL SHEETS
02	Las	395	R61.1/61.5	39	51

REGISTERED CIVIL ENGINEER

November 17, 2006
PLANS APPROVAL DATE

REGISTERED PROFESSIONAL ENGINEER — Greg W. Edwards — No. C36386 — Exp. 6-30-08 — CIVIL — STATE OF CALIFORNIA

The State of California or its officers or agents shall not be responsible for the accuracy or completeness of electronic copies of this plan sheet.

To accompany plans dated 2-23-09

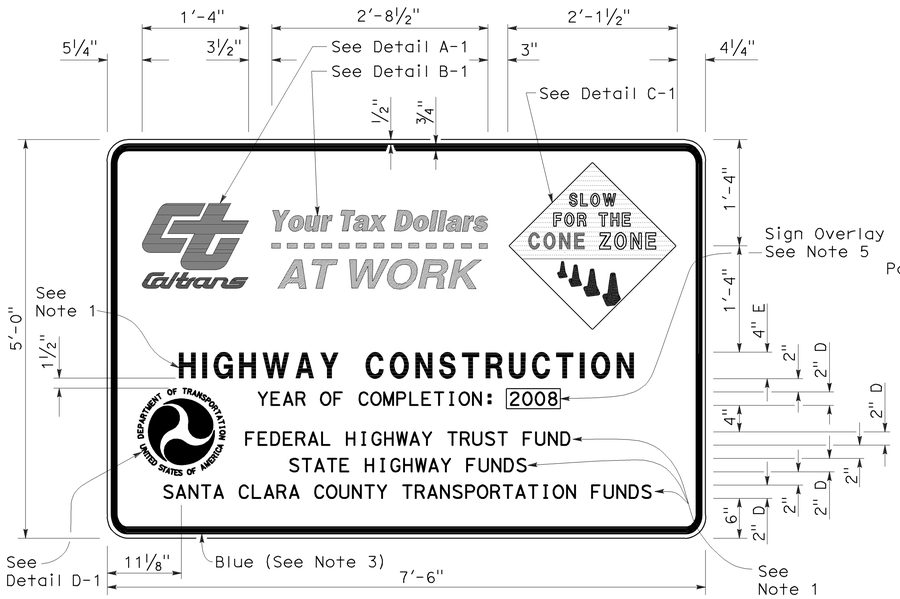

TYPE 1

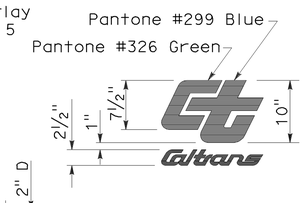

DETAIL A-1

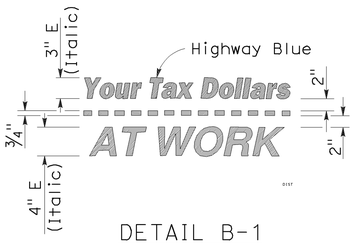

DETAIL B-1
(See Note 3)

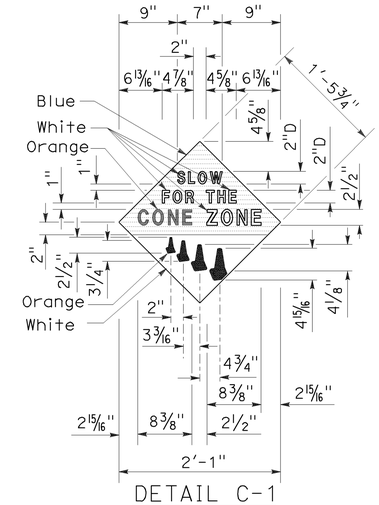

DETAIL C-1
(See Note 4)

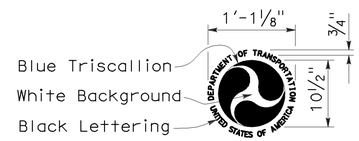

DETAIL D-1
(See Note 6)

NOTES:

1. The sign messages shown for type of project and fund types are examples only. See the Special Provisions for the applicable type of project and fund type messages to be used.
2. Except as otherwise shown, the legend of sign shall be black on a white background (non-reflective).
3. The border of the signs and details "B-1" and "B-2" shall be blue (non-reflective).
4. The diamond in details "C-1" and "C-2" shall be blue for the background of message, " SLOW FOR THE CONE ZONE", and white background for the orange cones. The color and type of font for the "SLOW FOR THE CONE ZONE" message shall be: "SLOW" white D; "FOR THE" white D; "CONE" orange Arial font; "ZONE" white Arial font.
5. Year of completion of project construction shown on the overlay is an example only. See the Special Provisions.
6. Use when the Project involves Federal Highway Trust Fund.

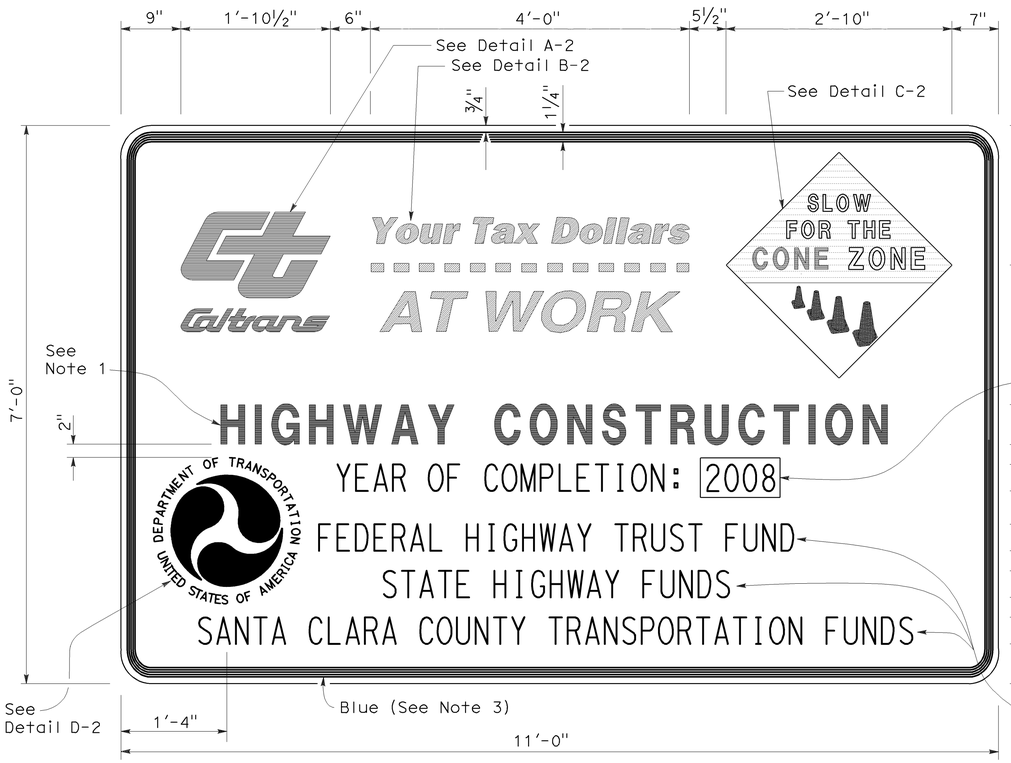

TYPE 2

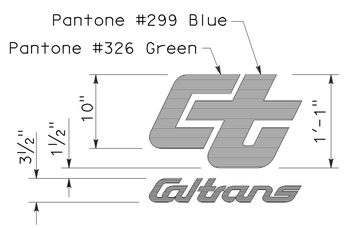

DETAIL A-2

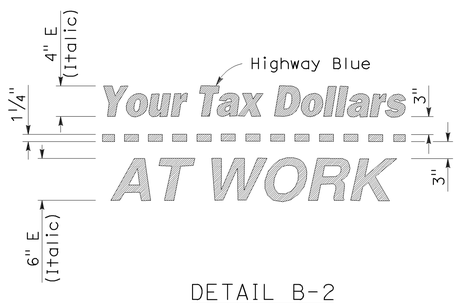

DETAIL B-2
(See Note 3)

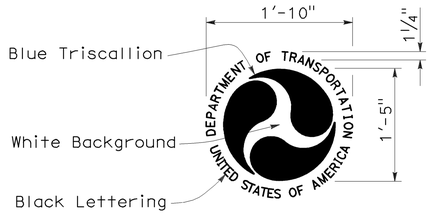

DETAIL D-2
(See Note 6)

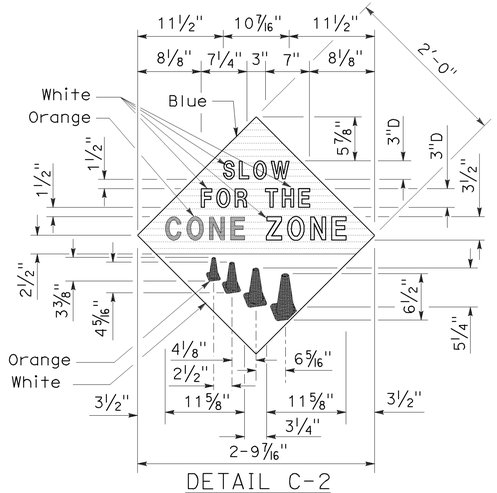

DETAIL C-2
(See Note 4)

STATE OF CALIFORNIA
DEPARTMENT OF TRANSPORTATION

CONSTRUCTION PROJECT FUNDING IDENTIFICATION SIGNS

NO SCALE

RSP T7 DATED NOVEMBER 17, 2006 SUPERSEDES STANDARD PLAN T7 DATED MAY 1, 2006 - PAGE 217 OF THE STANDARD PLANS BOOK DATED MAY 2006.

REVISED STANDARD PLAN RSP T7

2006 REVISED STANDARD PLAN RSP T7

9-7-06

DIST	COUNTY	ROUTE	POST MILES TOTAL PROJECT	SHEET NO.	TOTAL SHEETS
02	Las	395	R61.1/61.5	40	51

LICENSED LANDSCAPE ARCHITECT

August 15, 2008
PLANS Approval DATE

The State of California or its officers or agents shall not be responsible for the accuracy or completeness of electronic copies of this plan sheet.

LICENSED LANDSCAPE ARCHITECT Robert B. Schott 3625 Signature 11-04-08 Renewal Date 08-11-08 Date STATE OF CALIFORNIA

To accompany plans dated 2-23-09

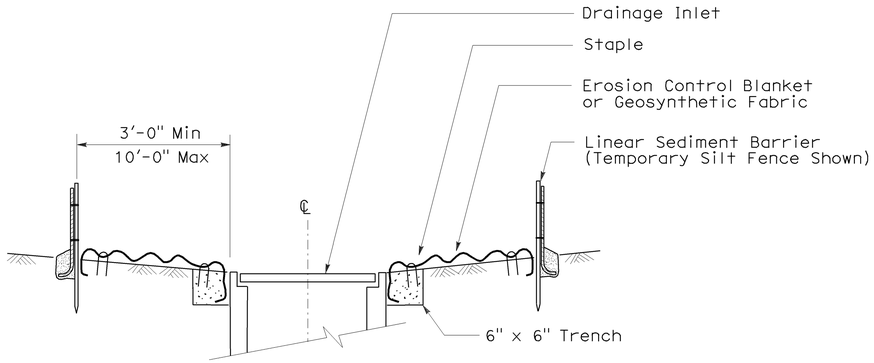

SECTION A-A

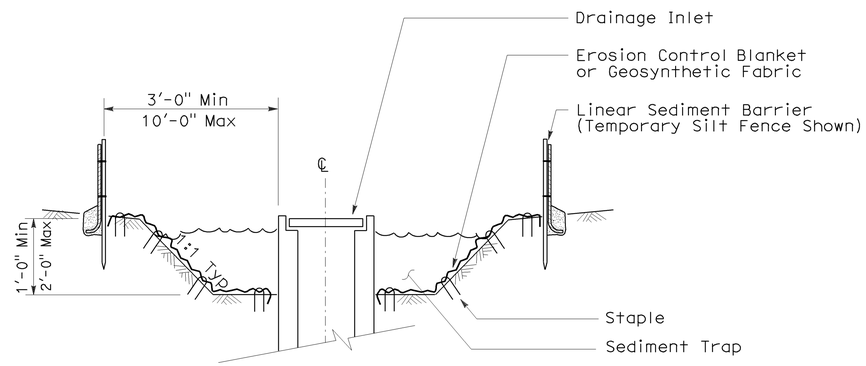

SECTION B-B

NOTES:

1. See Standard Plan T51 for Temporary Silt Fence.
2. Dimensions may vary to fit field conditions.

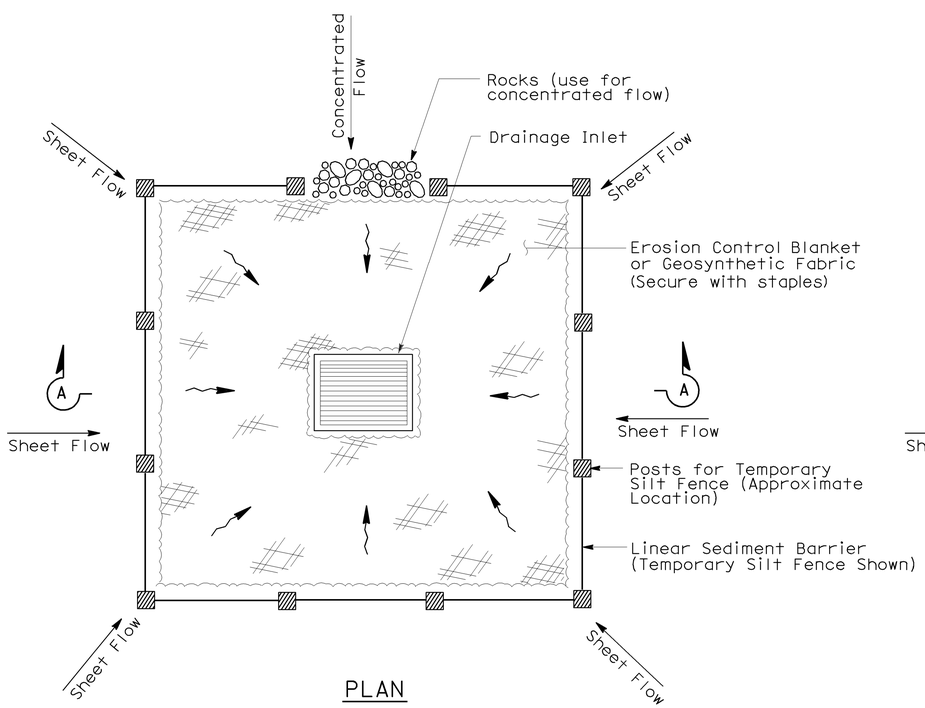

PLAN

TEMPORARY DRAINAGE INLET PROTECTION (TYPE 1)

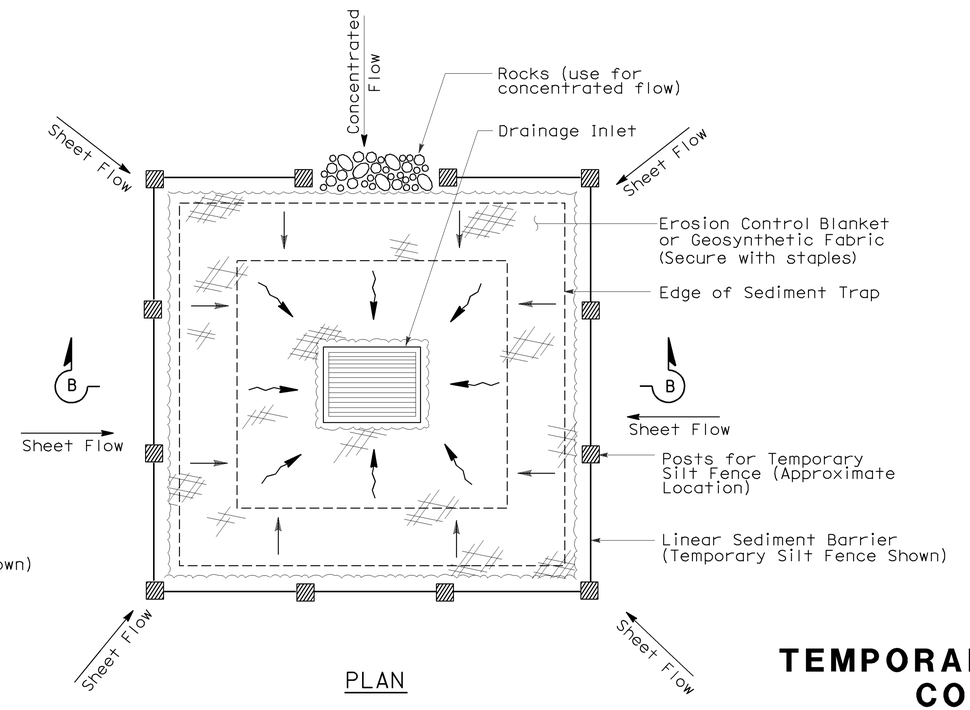

PLAN

TEMPORARY DRAINAGE INLET PROTECTION (TYPE 2) (EXCAVATED SEDIMENT TRAP)

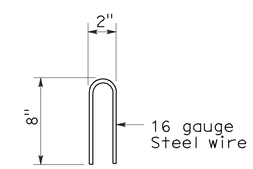

STAPLE DETAIL

STATE OF CALIFORNIA
DEPARTMENT OF TRANSPORTATION

TEMPORARY WATER POLLUTION CONTROL DETAILS (TEMPORARY DRAINAGE INLET PROTECTION)

NO SCALE

NSP T61 DATED AUGUST 15, 2008 SUPPLEMENTS THE STANDARD PLANS BOOK DATED MAY 2006.

NEW STANDARD PLAN NSP T61

2006 NEW STANDARD PLAN NSP T61

7-11-08

DIST	COUNTY	ROUTE	POST MILES TOTAL PROJECT	SHEET NO.	TOTAL SHEETS
02	Las	395	R61.1/61.5	41	51

LICENSED LANDSCAPE ARCHITECT

August 15, 2008
PLANS APPROVAL DATE

The State of California or its officers or agents shall not be responsible for the accuracy or completeness of electronic copies of this plan sheet.

LICENSED LANDSCAPE ARCHITECT — Robert B. Schott 3625 — Signature — 11-04-08 Renewal Date — 08-11-08 Date — STATE OF CALIFORNIA

To accompany plans dated 2-23-09

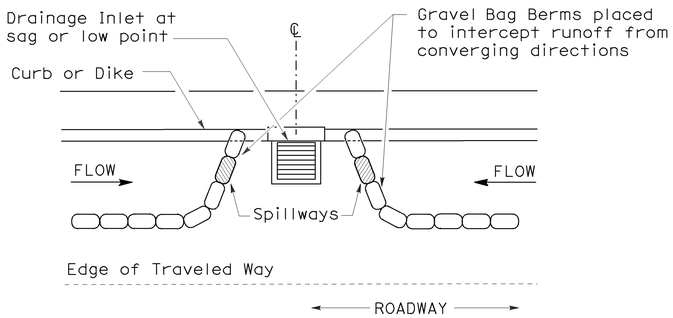

PLAN

CONFIGURATION FOR SAG POINT INLET (GRAVEL BAG BERM)

GRAVEL BAG BERM (TYPE 3A) SPACING TABLE

SLOPE OF ROADWAY (PERCENT)	1 to 3.9	4 to 5.9	6 to 7.9	8 to 10	10+
INTERVAL BETWEEN BERM	100′	75′	50′	25′	12′

For slope of less than 1%, install barriers only if erosion/sediment is prevalent

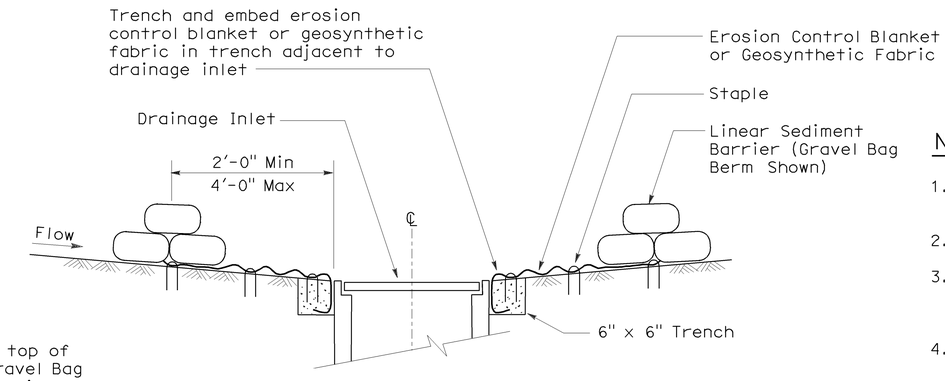

SECTION A-A

NOTES:

1. Place safety cones adjacent to drainage inlet protection.
2. Dimensions may vary to fit field conditions.
3. Install a minimum of 3 gravel bag berms upstream of each drainage inlet to be protected.
4. Position erosion control blanket or geosynthetic fabric at edge of concrete apron and secure in trench.
5. Erosion control blanket or geosynthetic fabric is not required if the area adjacent to the drainage inlet is vegetated or paved.

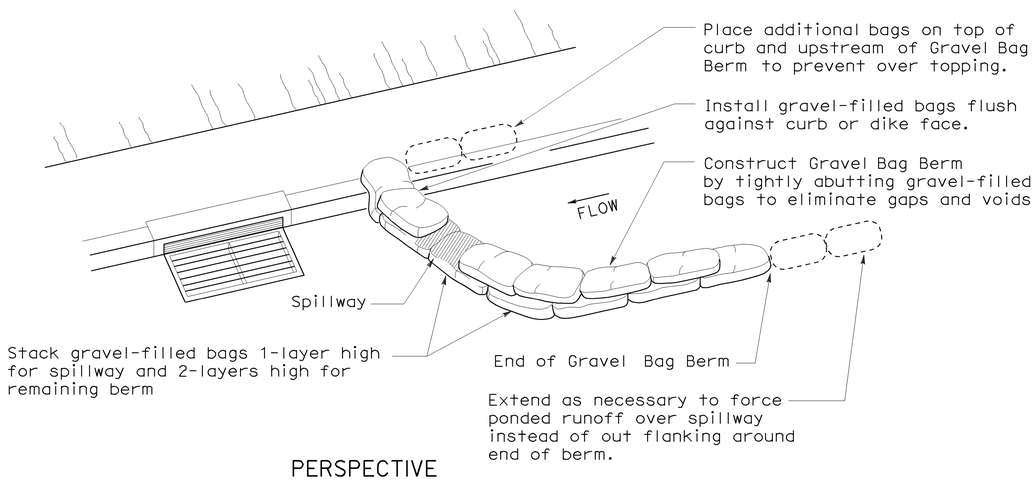

PERSPECTIVE

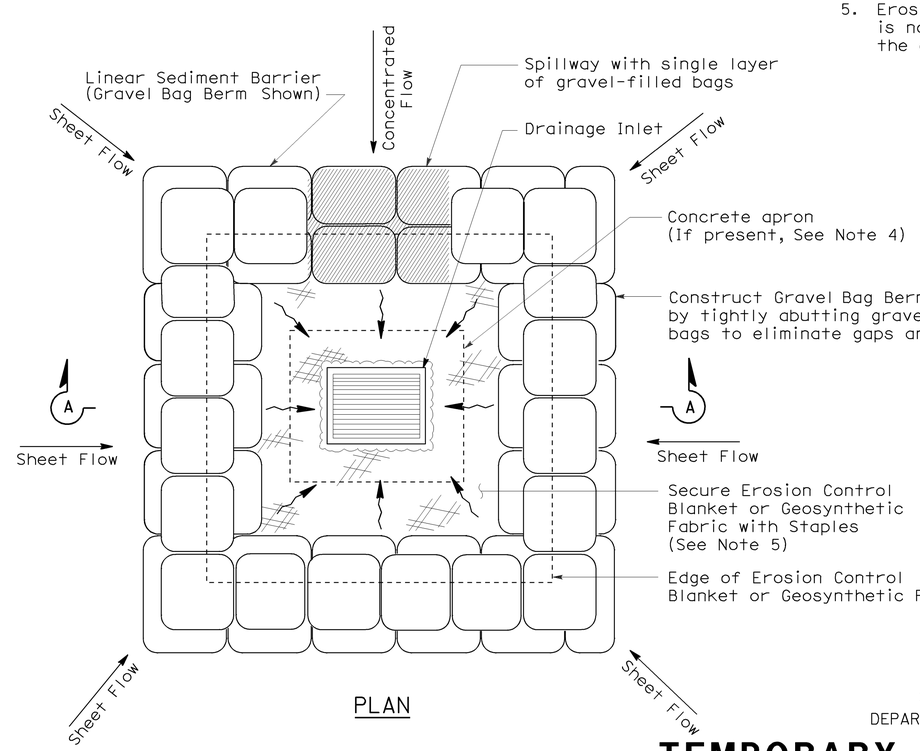

PLAN

TEMPORARY DRAINAGE INLET PROTECTION (TYPE 3B)

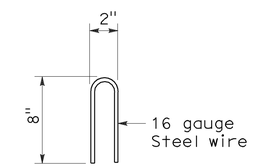

STAPLE DETAIL

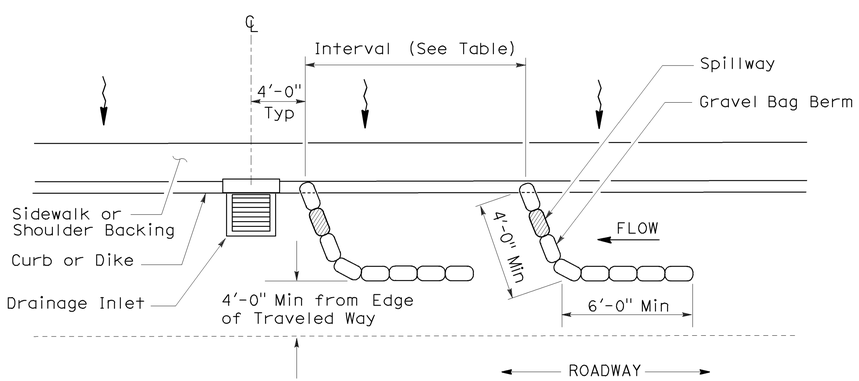

PLAN

TEMPORARY DRAINAGE INLET PROTECTION (TYPE 3A) (GRAVEL BAG BERM)

STATE OF CALIFORNIA
DEPARTMENT OF TRANSPORTATION

TEMPORARY WATER POLLUTION CONTROL DETAILS (TEMPORARY DRAINAGE INLET PROTECTION)

NO SCALE

NSP T62 DATED AUGUST 15, 2008 SUPPLEMENTS THE STANDARD PLANS BOOK DATED MAY 2006.

NEW STANDARD PLAN NSP T62

2006 NEW STANDARD PLAN NSP T62

7-11-08

DIST	COUNTY	ROUTE	POST MILES TOTAL PROJECT	SHEET NO.	TOTAL SHEETS
02	Las	395	R61.1/61.5	42	51

LICENSED LANDSCAPE ARCHITECT

August 15, 2008
PLANS APPROVAL DATE

The State of California or its officers or agents shall not be responsible for the accuracy or completeness of electronic copies of this plan sheet.

LICENSED LANDSCAPE ARCHITECT — Robert B. Schott — 3625 — Signature — 11-04-08 Renewal Date — 08-11-08 Date — STATE OF CALIFORNIA

To accompany plans dated 2-23-09

FLEXIBLE SEDIMENT BARRIER SPACING TABLE

SLOPE OF ROADWAY (PERCENT)	0 to 0.9	1 to 1.9	2 to 2.9	3 to 4	5+
INTERVAL BETWEEN BARRIERS	50′	35′	30′	25′	20′
ANGLE FROM FACE OF CURB	70°	70°	70°	45°	45°
SUGGESTED BARRIER LENGTH	6′	6′	6′	6′	6′

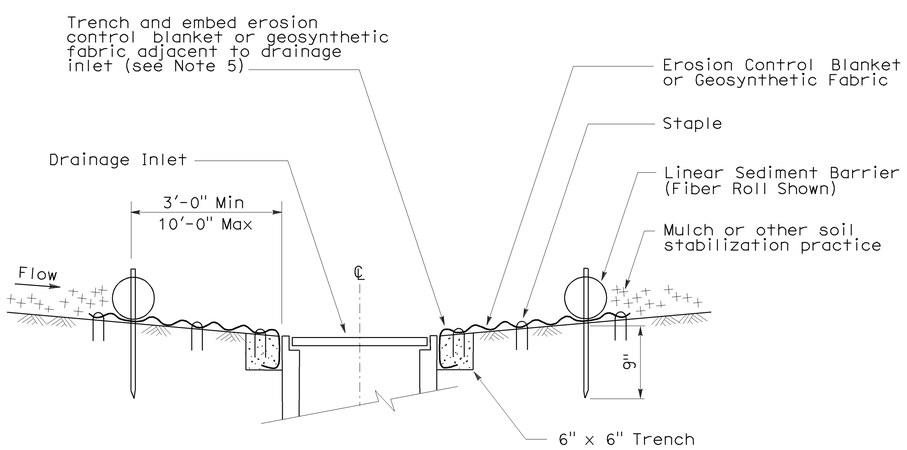

SECTION A-A

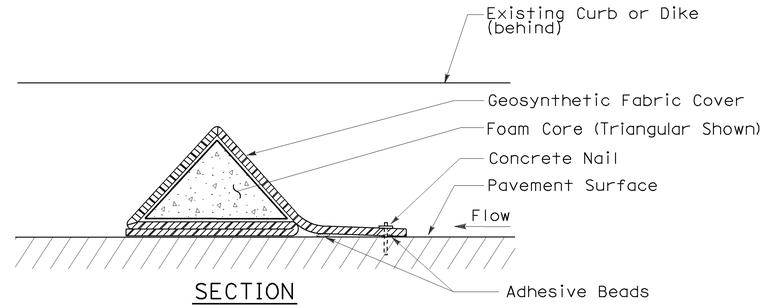

SECTION

FLEXIBLE SEDIMENT BARRIER DETAIL (FOAM BARRIER SHOWN)

NOTES:

1. See Standard Plan T51 for Temporary Silt Fence.
2. Dimensions may vary to fit field conditions.
3. Install a minimum of 3 flexible sediment barriers upstream of each drainage inlet to be protected.
4. Position erosion control blanket or geosynthetic fabric at edge of concrete apron and secure in trench.
5. Erosion control blanket or geosynthetic fabric is not required if the area adjacent to the drainage inlet is vegetated.

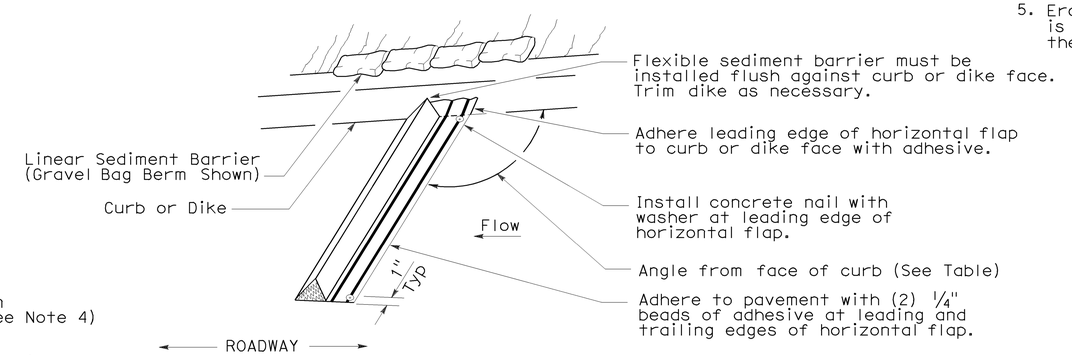

PERSPECTIVE

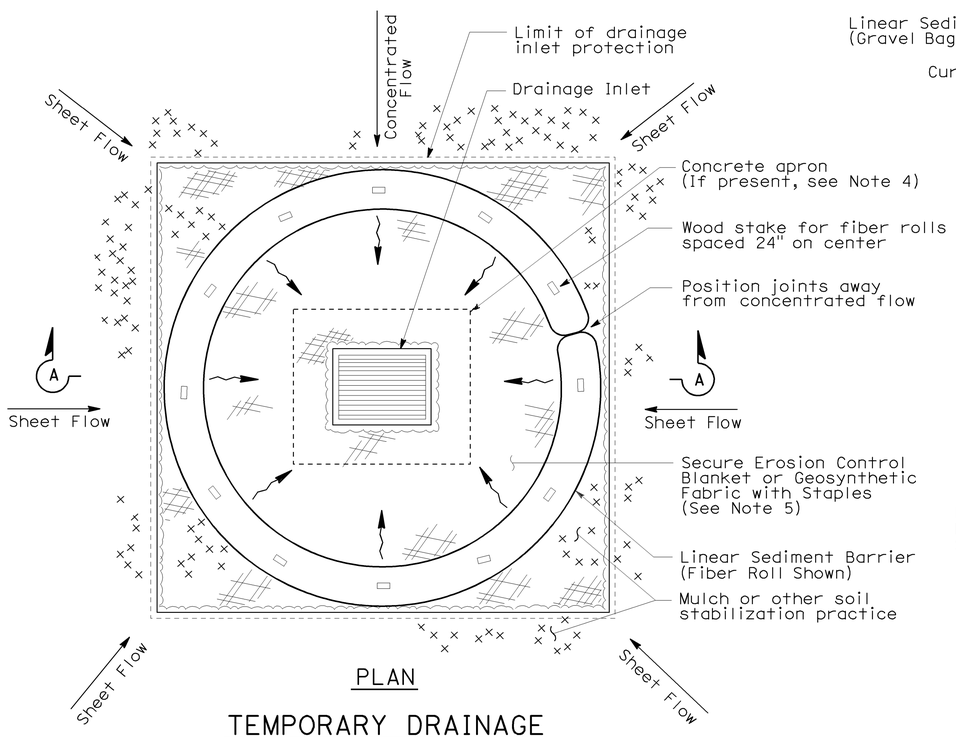

PLAN

TEMPORARY DRAINAGE INLET PROTECTION (TYPE 4A)

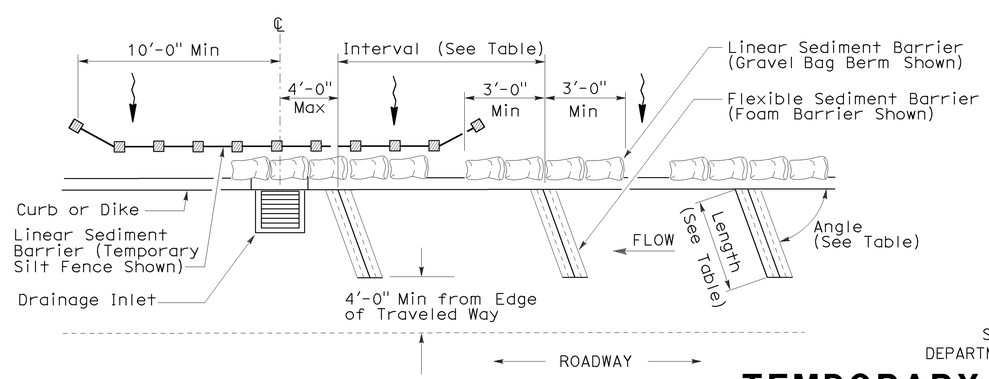

PLAN

TEMPORARY DRAINAGE INLET PROTECTION (TYPE 4B) FLEXIBLE SEDIMENT BARRIER

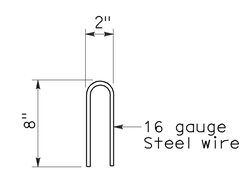

STAPLE DETAIL

STATE OF CALIFORNIA
DEPARTMENT OF TRANSPORTATION

TEMPORARY WATER POLLUTION CONTROL DETAILS (TEMPORARY DRAINAGE INLET PROTECTION)

NO SCALE

NSP T63 DATED AUGUST 15, 2008 SUPPLEMENTS THE STANDARD PLANS BOOK DATED MAY 2006.

NEW STANDARD PLAN NSP T63

2006 NEW STANDARD PLAN NSP T63

7-11-08

DIST	COUNTY	ROUTE	POST MILES TOTAL PROJECT	SHEET NO.	TOTAL SHEETS
02	Las	395	R61.1/61.5	43	51

LICENSED LANDSCAPE ARCHITECT

August 15, 2008
PLANS APPROVAL DATE

LICENSED LANDSCAPE ARCHITECT Robert B. Schott 3625 Signature 11-04-08 Renewal Date 08-11-08 Date STATE OF CALIFORNIA

The State of California or its officers or agents shall not be responsible for the accuracy or completeness of electronic copies of this plan sheet.

To accompany plans dated 2-23-09

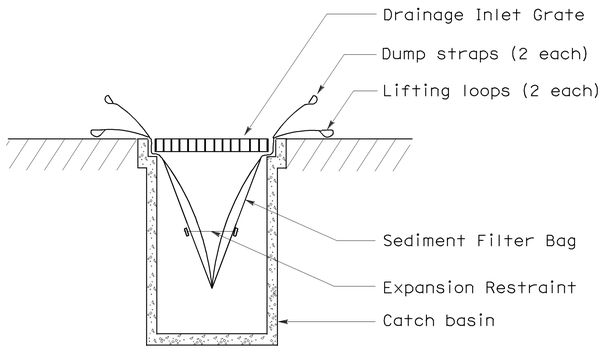

SECTION B-B

SEDIMENT FILTER BAG DETAIL

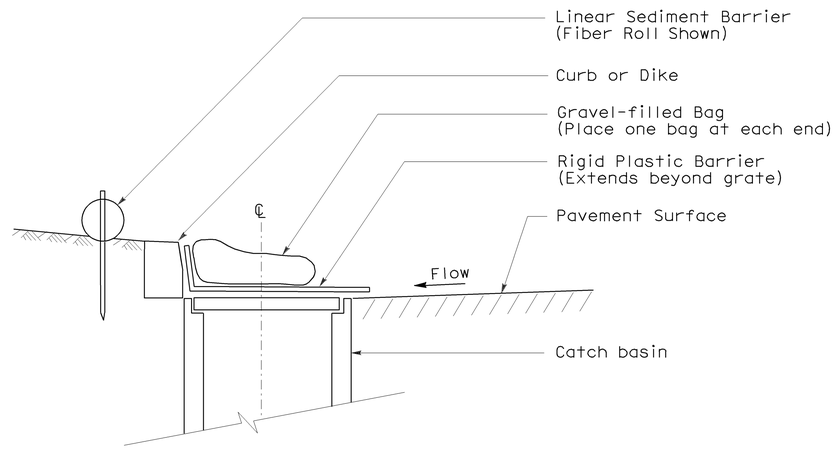

SECTION

TEMPORARY DRAINAGE INLET PROTECTION (TYPE 6A) (CATCH BASIN WITH GRATE)

NOTES:

1. See Standard Plan T51 for Temporary Silt Fence.
2. Dimensions may vary to fit field conditions.

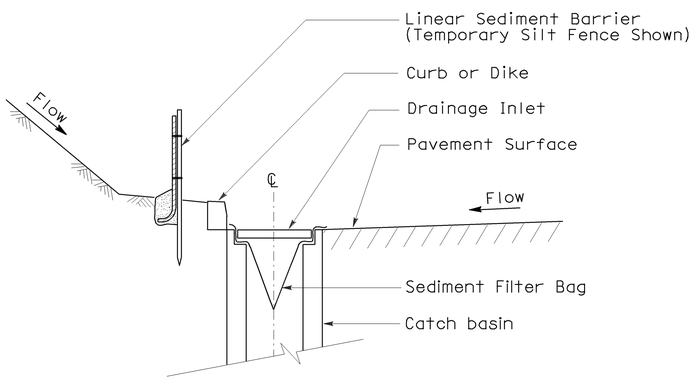

SECTION A-A

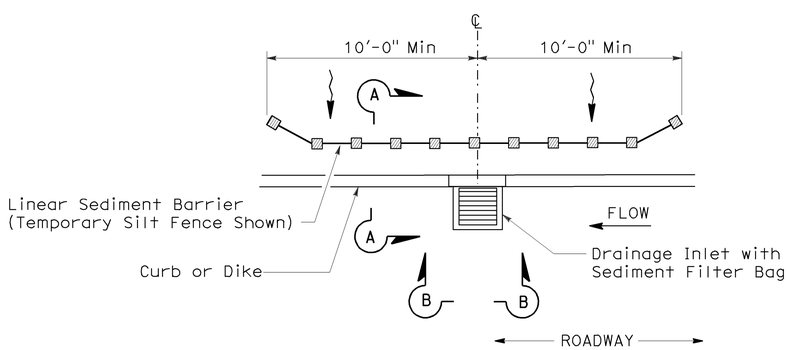

PLAN

TEMPORARY DRAINAGE INLET PROTECTION (TYPE 5) (SEDIMENT FILTER BAG)

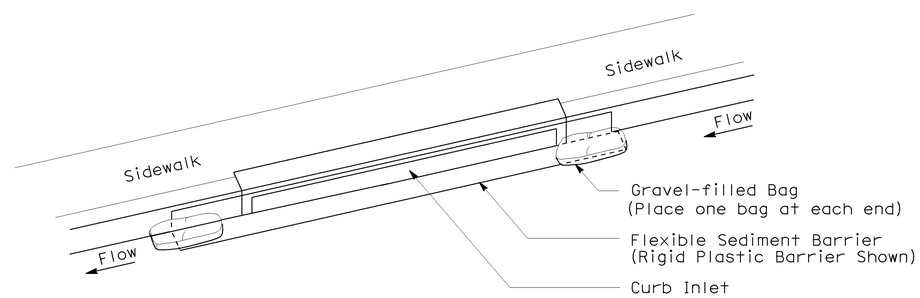

PERSPECTIVE

TEMPORARY DRAINAGE INLET PROTECTION (TYPE 6B) (CURB INLET WITHOUT GRATE)

STATE OF CALIFORNIA
DEPARTMENT OF TRANSPORTATION

TEMPORARY WATER POLLUTION CONTROL DETAILS (TEMPORARY DRAINAGE INLET PROTECTION)

NO SCALE

NSP T64 DATED AUGUST 15, 2008 SUPPLEMENTS
THE STANDARD PLANS BOOK DATED MAY 2006.

NEW STANDARD PLAN NSP T64

2006 NEW STANDARD PLAN NSP T64

7-11-08

DIST	COUNTY	ROUTE	POST MILES TOTAL PROJECT	SHEET NO.	TOTAL SHEETS
02	Las	395	R61.1/61.5	44	51

REGISTERED ELECTRICAL ENGINEER

October 5, 2007
PLANS APPROVAL DATE

REGISTERED PROFESSIONAL ENGINEER Jeffery G. McRae No. E14512 Exp. 6-30-08 ELECTRICAL STATE OF CALIFORNIA

The State of California or its officers or agents shall not be responsible for the accuracy or completeness of electronic copies of this plan sheet.

To accompany plans dated 2-23-09

ELECTROLIERS

STANDARD TYPES
15, 15D
15 STRUCTURE
21, 21D STRUCTURE
30
31
32
35
36-20A

High mast light pole

Double Arm lighting standard

Existing electrolier

Electrolier foundation (Future installation)

NOTES:

1. Luminaires shall be 310 W HPS when installed on Type 21, 21D, 30, 31, 32, 35 and 36-20A Standards, unless otherwise specified. Luminaires shall be 200 W HPS when installed on other type standards or poles, unless otherwise specified.
2. Luminaires shall be the cutoff type, ANSI Type Ⅲ medium cutoff lighting distribution, unless otherwise specified.
3. Variations noted adjacent to symbol on project plans.

Electrolier (see project notes or project plans)

Luminaire on wood pole

STANDARD NOTES:

- AB — Abandon. If applied to conduit, remove conductors.
- BC — Install pull box in existing conduit run.
- BP — Pedestrian barricade, type as indicated on plan.
- CB — Install conduit into existing pull box.
- CC — Connect new and existing conduit. Remove existing conductors and install conductors as indicated.
- CF — Conduit to remain for future use. Remove conductors. Install pull wire or rope.
- DH — Detector handhole.
- FA — Foundation to be abandoned.
- IS — Install sign on signal mast arm.
- NS — No slip base on standard.
- PEC — Photoelectric control.
- PEU — Photoelectric unit.
- RC — Equipment or material to be removed and become the property of the Contractor.
- RE — Remove electrolier, fuses and ballast. Tape ends of conductors.
- RL — Relocate equipment.
- RR — Remove and reuse equipment.
- RS — Remove and salvage equipment.
- SC — Splice new to existing conductors.
- SD — Service disconnect.
- SF — Standard to remain for future use. Remove luminaire, pole conductors, fuses and ballast.
- TSP — Telephone service point.

ABBREVIATIONS AND EQUIPMENT DESIGNATIONS

PROPOSED	EXISTING	
BBS	bbs	Battery backup system
BC	bc	Bolt circle
C	C	Conduit
CCTV	cctv	Closed circuit television
CKT	ckt	Circuit
CMS	cms	Changeable message sign
DLC	dlc	Loop detector lead-in cable
EMS	ems	Extinguishable message sign
EVC	evc	Emergency vehicle cable
EVD	evd	Emergency vehicle detector
FB	fb	Flashing beacon
FBCA	fbca	Flashing beacon control assembly
FBS	fbs	Flashing beacon with slip base
FO	fo	Fiber optic
G	G	Ground (Equipment Grounding Conductor)
GFCI	GFCI	Ground fault circuit interrupt
HAR	har	Highway advisory radio
HEX	hex	Hexagonal
HPS	hps	High pressure sodium
IISNS	iisns	Internally illuminated street name sign
ISL	isl	Induction sign lighting
LED	led	Light emitting diode
LMA	lma	Luminaire mast arm
LPS	lps	Low pressure sodium
LTG	ltg	Lighting
LUM	lum	Luminaire
MAT	mat	Mast arm mounting vehicle signal faces, top attachment
MAS	mas	Mast arm mounting vehicle signal faces, side attachment
MAS-4A	mas-4A	Mast arm mounting vehicle signal faces, side attachment - 4 signal section
MAS-4B	mas-4B	
MAS-4C	mas-4C	
MAS-5A	mas-5A	Mast arm mounting vehicle signal faces, side attachment - 5 signal section
MAS-5B	mas-5B	
MC	mc	Mercury contactor
M/M	m/m	Multiple to multiple transformer
MT	mt	Conduit with pull wire or rope only
MTG	mtg	Mounting
	mv	Mercury vapor lighting fixture
N	N	Neutral (Grounded Conductor)
NC	NC	Normally closed
NO	NO	Normally open
PB	pb	Pull box
PEC	pec	Photoelectric control (Type Ⅰ, Ⅱ, Ⅲ, Ⅳ or Ⅴ as shown)
PED	ped	Pedestrian
PEU	peu	Photoelectric unit
PPB	ppb	Pedestrian push button
RL		Relocated equipment
RM	rm	Ramp metering
SB	sb	Slip base
SIC	sic	Signal interconnect cable
SIG	sig	Signal
SMA	sma	Signal mast arm
SNS	sns	Street name sign
SP	sp	Service point
TDC	tdc	Telephone demarcation cabinet
TMS	tms	Traffic monitoring station
TOS	tos	Traffic Operations System
VEH	veh	Vehicle
XFMR	xfmr	Transformer
COMM	comm	Communication
RWIS	rwis	Roadway weather information system

SOFFIT AND WALL MOUNTED LUMINAIRES

Pendant, 70 W HPS unless otherwise specified.

Flush, 70 W HPS unless otherwise specified.

Wall surface, 70 W HPS unless otherwise specified.

Existing soffit or wall luminaire to remain unmodified.

Existing soffit or wall luminaire to be modified as specified.

NOTE:

Arrow indicates "street side" of luminaire.

STATE OF CALIFORNIA
DEPARTMENT OF TRANSPORTATION

ELECTRICAL SYSTEMS (SYMBOLS AND ABBREVIATIONS)

NO SCALE

RSP ES-1A DATED OCTOBER 5, 2007 SUPERSEDES STANDARD PLAN ES-1A DATED MAY 1, 2006 - PAGE 400 OF THE STANDARD PLANS BOOK DATED MAY 2006.

REVISED STANDARD PLAN RSP ES-1A

2006 REVISED STANDARD PLAN RSP ES-1A

DIST	COUNTY	ROUTE	POST MILES TOTAL PROJECT	SHEET NO.	TOTAL SHEETS
02	Las	395	R61.1/61.5	45	51

REGISTERED ELECTRICAL ENGINEER

October 5, 2007
PLANS APPROVAL DATE

REGISTERED PROFESSIONAL ENGINEER Jeffery G. McRae No. E14512 Exp. 6-30-08 ELECTRICAL STATE OF CALIFORNIA

The State of California or its officers or agents shall not be responsible for the accuracy or completeness of electronic copies of this plan sheet.

To accompany plans dated 2-23-09

CONDUIT

PROPOSED	EXISTING	
		Lighting Conduit, unless otherwise indicated or noted
		Traffic signal conduit
C	c	Communication conduit
T	t	Telephone conduit
F	f	Fire alarm conduit
FO	fo	Fiber optic conduit
		Conduit termination (RSP ES-9A C)
R	r	Conduit riser in/on structure or service pole

SERVICE EQUIPMENT

PROPOSED	EXISTING	
OH	oh	Overhead lines
U	U	Wood pole "U" indicates utility owned
		Pole guy with anchor
		Utility transformer - ground mounted
III		Service equipment enclosure type
		Service equipment enclosure door indicates front of enclosure
T	t	Telephone demarcation cabinet

POLE-MOUNTED SERVICE DESIGNATION

Type of installation

TYPE H SERVICE - 28'-10" ← Pole height above grade

ILLUMINATED OVERHEAD SIGN

PROPOSED	EXISTING	
		Overhead sign - Single post
		Overhead sign - Two post
		Overhead sign - Mounted on structure
		Overhead sign with electrolier

SIGNAL EQUIPMENT

PROPOSED	EXISTING	
		Pedestrian signal face
		Pedestrian push button post
		Pedestrian barricade
		Vehicle signal face (with backplate, 3-Section: red, yellow and green)
		Vehicle signal face with angle visors
PV	PV	Modifications of basic symbols: "L" Indicates all non-arrow sections louvered "LG" Indicates louvered green section only "PV" indicates 12" programmed visibility sections "8" indicates all 8" sections (only when specified)
		Type 15TS and Vehicle signal face
		Vehicle signal face with red, yellow and green left arrow sections
		Vehicle signal face with red and yellow sections and up green arrow
		Vehicle signal face (5 Section) with red, yellow and green sections and yellow and green right arrows
		Type 1 Standard and attached vehicle signal faces
		Standard with signal mast arm only and attached vehicle signal faces and internally illuminated street name sign
		Type 33 Standard, Left-turn vehicle signal face and sign
		Standard with luminaire and signal mast arms and attached vehicle signal faces
		Cantilever flashing beacon Type 9 Frame, with a sign unless otherwise specified or indicated
		Type 15-FBS Standard with two vehicle signal face sections with lens, backplate and visor with a sign
R	Y	Flashing beacon. One vehicle signal face section with lens, backplate and visor. "R" indicates red indication, "Y" indicates yellow indication
		Controller assembly. Door indicates front of cabinet

SIGNAL EQUIPMENT Cont

PROPOSED	EXISTING	
		Guard post
		Type 1 Standard with "Meter On" sign
		Emergency Vehicle detector

NOTES:

1. All signal sections shall be 12" unless shown otherwise.
2. Signal heads shall be provided with backplates unless shown otherwise.
3. Signal indication shall be LED.

STATE OF CALIFORNIA
DEPARTMENT OF TRANSPORTATION

ELECTRICAL SYSTEMS (SYMBOLS AND ABBREVIATIONS)

NO SCALE

RSP ES-1B DATED OCTOBER 5, 2007 SUPERCEDES STANDARD PLAN ES-1B DATED MAY 1, 2006 - PAGE 401 OF THE STANDARD PLANS BOOK DATED MAY 2006.

REVISED STANDARD PLAN RSP ES-1B

2006 REVISED STANDARD PLAN RSP ES-1B

7-10-07

DIST	COUNTY	ROUTE	POST MILES TOTAL PROJECT	SHEET NO.	TOTAL SHEETS
02	Las	395	R61.1/61.5	46	51

REGISTERED ELECTRICAL ENGINEER

October 5, 2007
PLANS APPROVAL DATE

The State of California or its officers or agents shall not be responsible for the accuracy or completeness of electronic copies of this plan sheet.

REGISTERED PROFESSIONAL ENGINEER
Jeffery G. McRae
No. E14512
Exp. 6-30-08
ELECTRICAL
STATE OF CALIFORNIA

To accompany plans dated 2-23-09

EQUIPMENT IDENTIFICATION

ILLUMINATED SIGN IDENTIFICATION NUMBER:

Sign No. 12345
10 ISL SCI 1.0

- Sign number - Place on post or structure
- Transformer rating (kVA)
- Lighting control type
- Number and type of fixtures

Do NOT place on standard or structure

ELECTROLIER OR EQUIPMENT IDENTIFICATION NUMBER:

12345 - 15'-0"

- Mast arm length, if shown. Do not place on standard or structure.
- Equipment number - Place on standard or structure. Existing equipment numbers are shown in parenthesis

CONDUIT AND CONDUCTOR IDENTIFICATION:

1½"C, 2#10, 15#14, 2 DLC

- Number and size of conductors and cables
- Size of conduit in inches

Ø1, Ø2, Ø2P, etc.	Traffic phase identification for signal faces, detectors and phase diagrams
1 2 3	Project note numbers
A B C	Equipment description, installation or item numbers
1 2 3	Conduit run numbers

SIGNAL AND LIGHTING STANDARD (TYPICAL DESIGNATION):

19A - 3 - 100

- Wind velocity = 100 mph
- Case 3 arm loading
- Standard type
- Standard Plan sheet number
- Detail number or letter

MISCELLANEOUS EQUIPMENT

PROPOSED	EXISTING	
CMS	cms	Changeable message sign
		Closed circuit television camera
		Highway advisory radio pole and antenna
EMS	ems	Extinguishable message sign
M V	m v	Detection device M = Microwave sensor V = Video image sensor

WIRING DIAGRAM LEGEND

P	Pole
CB	Circuit breaker
A	Ampere
V	Volt
M	Metered
UM	Unmetered
NB	Neutral bus
GB	Ground bus
G	Equipment grounding conductor
N	Grounded conductor (Neutral)

- External conductor
- Conductor or bus
- Tie point
- Contactor coil
- Contactor, Contact NO
- Terminal blocks
- Contactor, Contact NC
- Enclosure bond
- Grounding electrode
- Circuit breaker
- Receptacle

PULL BOXES

PROPOSED EXISTING

Pull box-No. 5 unless otherwise indicated or noted.

3 9A(21)

Pull box-Additional designations or descriptions

3 = No. 3½ pull box
5 = No. 5 pull box
6 = No. 6 pull box
7 = No. 7 (Ceiling pull box)
8 = No. 8 (Pendant soffit pull box)
9 = No. 9 pull box
9A = No. 9A pull box

(C) = Communications pull box
(E) = Pull box with extension
(S) = Sprinkler control pull box
(21) = Anchor bolts and conduit for future installation of Type 21 Standard
(T) = Traffic pull box

VEHICLE DETECTORS

5 J 9 U

- U = Upper
- L = Lower
- Slot number in input file
- Input file (I or J)
- Phase

PROPOSED	EXISTING	
		Type A detector loop. Outline of sawcut shown.
		Type B detector loop. Outline of sawcut shown.
		Type C detector loop. Outline of sawcut shown.
		Type D detector loop. Outline of sawcut shown.
		Type E detector loop. Outline of sawcut shown.
		Type Q detector loop. Outline of sawcut shown.
		Magnetic detector
DH	dh	Detector handhole
		Microwave or video detection zone

STATE OF CALIFORNIA
DEPARTMENT OF TRANSPORTATION

ELECTRICAL SYSTEMS (SYMBOLS AND ABBREVIATIONS)

NO SCALE

RSP ES-1C DATED OCTOBER 5, 2007 SUPERCEDES STANDARD PLAN ES-1C DATED MAY 1, 2006 - PAGE 402 OF THE STANDARD PLANS BOOK DATED MAY 2006.

REVISED STANDARD PLAN RSP ES-1C

2006 REVISED STANDARD PLAN RSP ES-1C

DIST	COUNTY	ROUTE	POST MILES TOTAL PROJECT	SHEET NO.	TOTAL SHEETS
02	Las	395	R61.1/61.5	47	51

REGISTERED ELECTRICAL ENGINEER

October 5, 2007
PLANS APPROVAL DATE

REGISTERED PROFESSIONAL ENGINEER Jeffery G. McRae No. E14512 Exp. 6-30-08 ELECTRICAL STATE OF CALIFORNIA

The State of California or its officers or agents shall not be responsible for the accuracy or completeness of electronic copies of this plan sheet.

To accompany plans dated 2-23-09

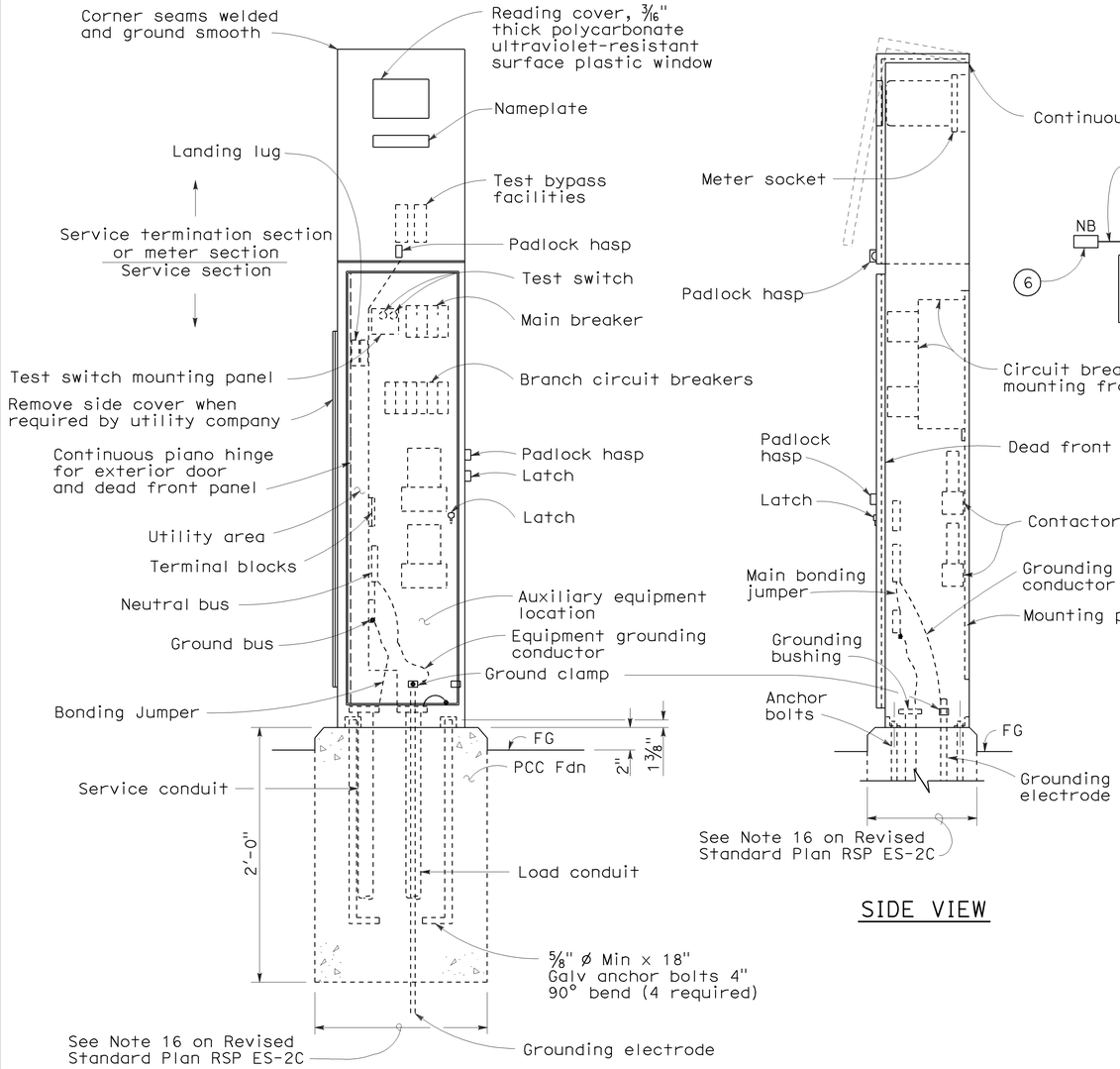

TYPE III-AF SERVICE EQUIPMENT ENCLOSURE (TYPICAL)

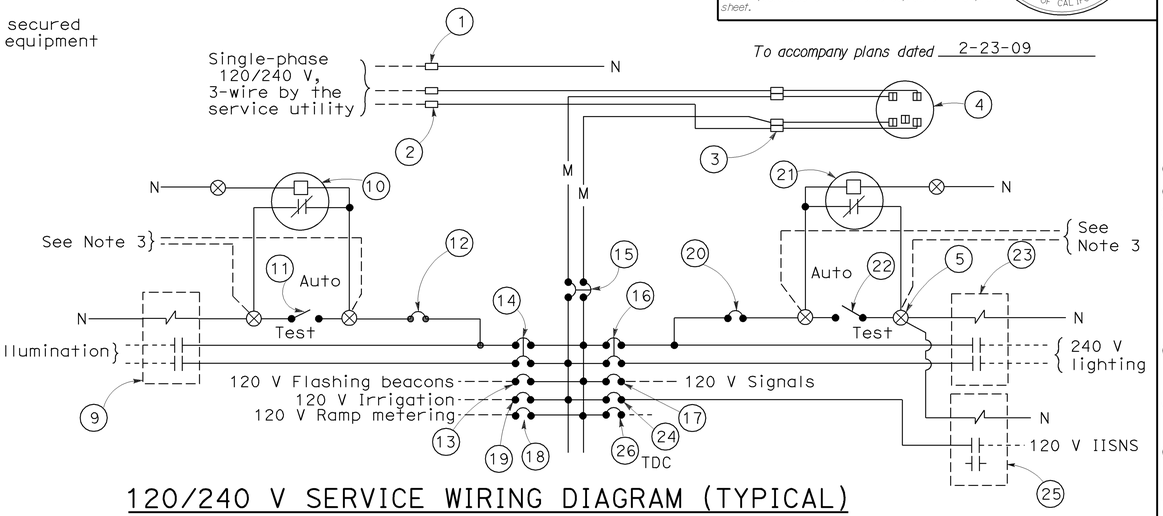

120/240 V SERVICE WIRING DIAGRAM (TYPICAL)

TYPE III-A SERVICE (120/240 V) EQUIPMENT LEGEND

ITEM No.	COMPONENT	NAME PLATE DESCRIPTION	ITEM No.	COMPONENT	NAME PLATE DESCRIPTION
1	Neutral lug		14	30 A, 240 V, 2P, CB	Sign Illumination
2	Landing lug (Note 6)		15	100 A, 240 V, 2P, CB	Main Breaker
3	Test bypass facility		16	30 A, 240 V, 2P, CB	Lighting
4	Meter socket and support		17	50 A, 120 V, 1P, CB	Signals
5	Terminal blocks		18	30 A, 120 V, 1P, CB	Ramp Metering
6	Neutral bus		19	20 A, 120 V, 1P, CB	Irrigation
7	Ground bus		20	15 A, 120 V, 1P, CB	Lighting Control
8	Grounding electrode		21	Photoelectric unit (Note 7)	
9	30 A, 2PNO Contactor	Sign Illumination	22	15 A, 1P, Test switch	Lighting Test Switch
10	Photoelectric unit (Note 7)		23	60 A, 2PNO Contactor	Lighting
11	15 A, 1P, Test switch	Sign Illumination Test Switch	24	15 A, 120 V, 1P, CB	IISNS
12	15 A, 120 V, 1P, CB	Sign Illumination Control	25	30 A, 2PNO Contactor	IISNS
13	15 A, 120 V, 1P, CB	Flashing Beacon	26	20 A, 120 V, 1P, CB	Telephone Demarcation Cabinet

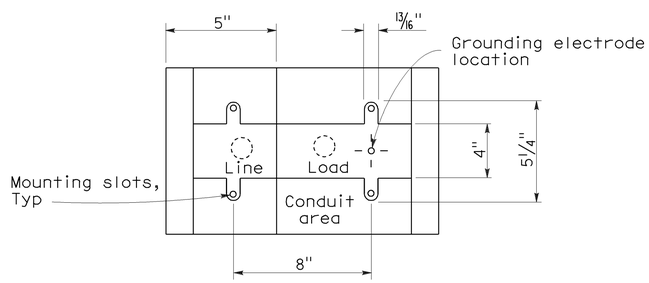

BASE FOR TYPE III-A SERVICE EQUIPMENT ENCLOSURE

NOTES: (FOR SERVICE EQUIPMENT ENCLOSURE)

1. Voltage ratings of service equipment shall conform to the service voltages indicated on the plans.
2. Unless otherwise indicated on the plans, service equipment items shall be provided for each service equipment enclosure as shown.
3. Connect to remote test switch mounted on lighting standards, sign post or structure when required.
4. Items No. 1 and 6 shall be isolated from the service equipment enclosure.
5. Meter sockets shall be 5 clip type.
6. The landing lug shall be suitable for multiple conductors.
7. Type V photoelectric control shall be used unless otherwise indicated on the plans.

STATE OF CALIFORNIA
DEPARTMENT OF TRANSPORTATION

ELECTRICAL SYSTEMS (SERVICE EQUIPMENT AND TYPICAL WIRING DIAGRAM, TYPE III-A SERIES)

NO SCALE

RSP ES-2D DATED OCTOBER 5, 2007 SUPERCEDES STANDARD PLAN ES-2D DATED MAY 1, 2006 - PAGE 406 OF THE STANDARD PLANS BOOK DATED MAY 2006.

REVISED STANDARD PLAN RSP ES-2D

2006 REVISED STANDARD PLAN RSP ES-2D

DIST	COUNTY	ROUTE	POST MILES TOTAL PROJECT	SHEET NO.	TOTAL SHEETS
02	Las	395	R61.1/61.5	48	51

REGISTERED ELECTRICAL ENGINEER

October 5, 2007
PLANS APPROVAL DATE

REGISTERED PROFESSIONAL ENGINEER Jeffery G. McRae No. E14512 Exp. 6-30-08 ELECTRICAL STATE OF CALIFORNIA

The State of California or its officers or agents shall not be responsible for the accuracy or completeness of electronic copies of this plan sheet.

To accompany plans dated 2-23-09

LOOP INSTALLATION PROCEDURE

1. Loops shall be centered in lanes.
2. Saw slots in pavement for loop conductors as shown in details.
3. Distance between side of loop and a lead-in saw cut from adjacent detectors shall be 2'-0" minimum. Distance between lead-in saw cuts shall be 6" minimum.
4. Bottom of saw slot shall be smooth with no sharp edges.
5. Slots shall be washed until clean, blown out and thoroughly dried before installing loop conductors.
6. Adjacent loops on the same sensor unit channel shall be wound in opposite directions.
7. Identify and tag loop circuit pairs in the pull box with loop number, start (S) and finish (F) of conductor. Identify and tag lead-in-cable with sensor number and phase.
8. Install loop conductor in slot using a 3/16" to 1/4" thick wood paddle. Hold loop conductors with wood paddles (at the bottom of the sawed slot) during sealant placement.
9. No more than 2 twisted pairs shall be installed in one sawed slot.
10. Allow additional 5'-0" of slack length of conductor for the lead-in run to pull box.
11. The additional length of each conductor for each loop shall be twisted together into a pair (6 turns per 3'-4" minimum) before being placed in the slot and conduit leading to pull box.
12. Test each loop circuit for continuity, circuit resistance and insulation resistance at the pull box before filling slots.
13. Fill slots as shown in details.
14. Splice loop conductors to lead-in-cable. Splices shall be soldered.
15. End of lead-in-cable and Type 2 loop conductor shall be waterproofed prior to installing in conduit to prevent moisture from entering the cable.
16. Lead-in-cable shall not be spliced between the pull box and the controller cabinet terminals.
17. Test each loop circuit for continuity, circuit resistance and insulation resistance at the controller cabinet location.
18. Where loop conductors are not to be spliced to a lead-in-cable, the ends of the conductors shall be taped and waterproofed with electrical insulating coating.

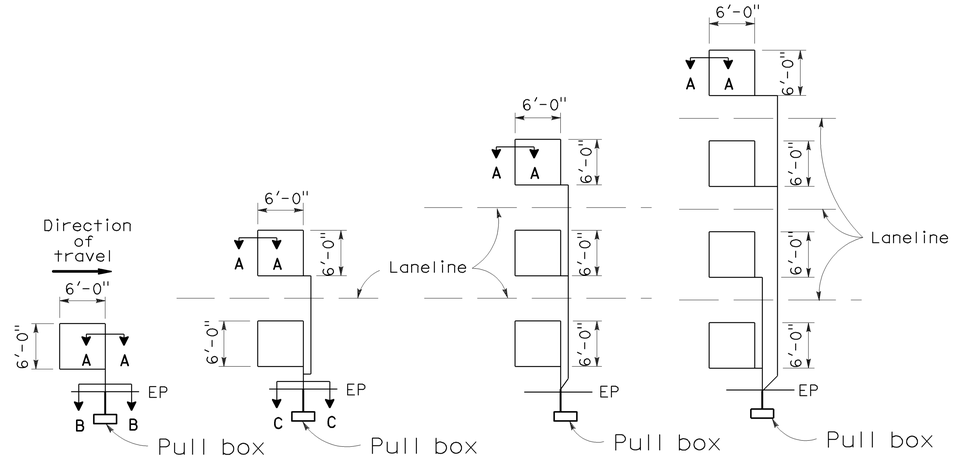

TYPE 1A INSTALLATION | TYPE 2A INSTALLATION | TYPE 3A INSTALLATION | TYPE 4A INSTALLATION

SAWCUT DETAILS

(Type A loop detector configurations illustrated)

1. 1A thru 4A = 1 Type A loop configuration in each lane.
2. 1B thru 4B = 1 Type B loop configuration in each lane.
3. 1C = 1 Type C loop configuration entering lanes as required.
4. 1D thru 4D = 1 Type D loop configuration in each lane.
5. 1E thru 4E = 1 Type E loop configuration in each lane.
6. 1Q thru 4Q = 1 Type Q loop configuration in each lane. (Use Type A, B, C, D, E or Q loop detector configurations only when specified or shown on plans)

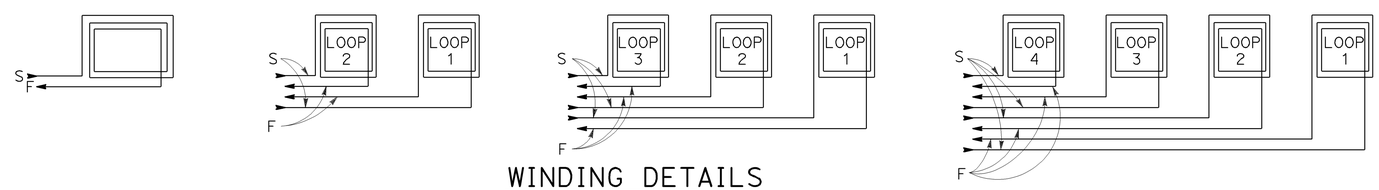

WINDING DETAILS

See Notes 6 and 7

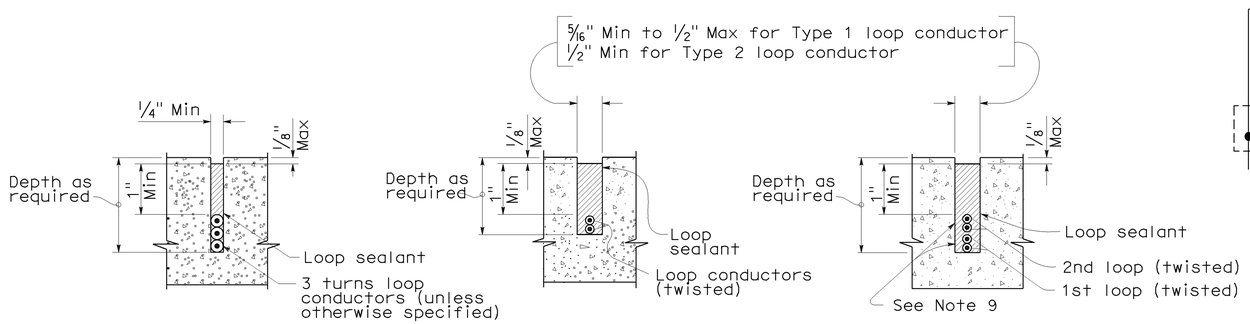

SECTION A-A | SECTION B-B | SECTION C-C

SLOT DETAILS - TYPE 1 AND TYPE 2 LOOP CONDUCTOR

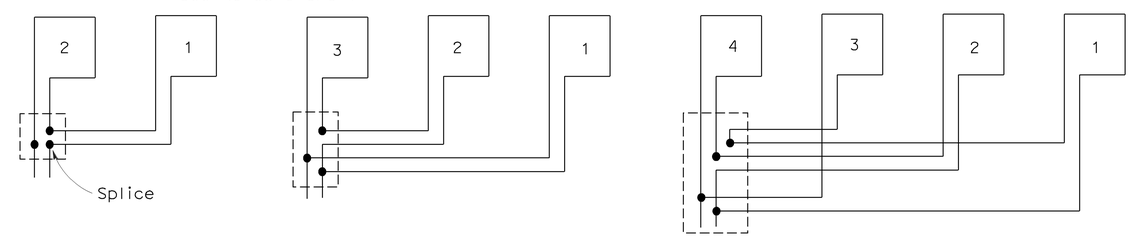

TYPICAL LOOP CONNECTIONS

(Dashed lines represent the pull box)

STATE OF CALIFORNIA
DEPARTMENT OF TRANSPORTATION

ELECTRICAL SYSTEMS (DETECTORS)

NO SCALE

RSP ES-5A DATED OCTOBER 5, 2007 SUPERCEDES STANDARD PLAN ES-5A DATED MAY 1, 2006 - PAGE 423 OF THE STANDARD PLANS BOOK DATED MAY 2006.

REVISED STANDARD PLAN RSP ES-5A

2006 REVISED STANDARD PLAN RSP ES-5A

8-17-07

DIST	COUNTY	ROUTE	POST MILES TOTAL PROJECT	SHEET NO.	TOTAL SHEETS
02	Las	395	R61.1/61.5	49	51

REGISTERED CIVIL ENGINEER

October 5, 2007
PLANS APPROVAL DATE

REGISTERED PROFESSIONAL ENGINEER Stanley P. Johnson No. C57793 Exp. 3-31-08 CIVIL STATE OF CALIFORNIA

The State of California or its officers or agents shall not be responsible for the accuracy or completeness of electronic copies of this plan sheet.

To accompany plans dated 2-23-09

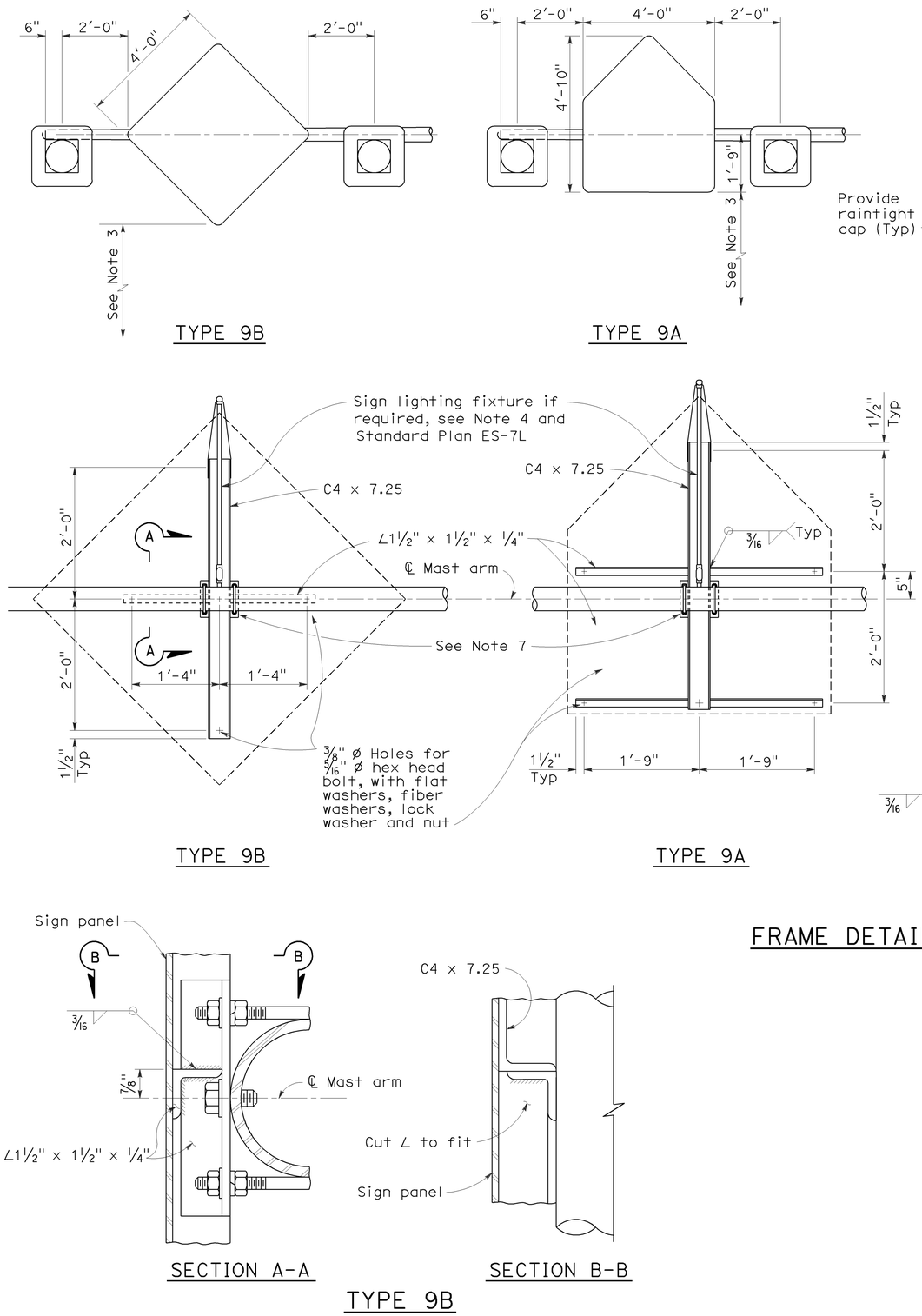

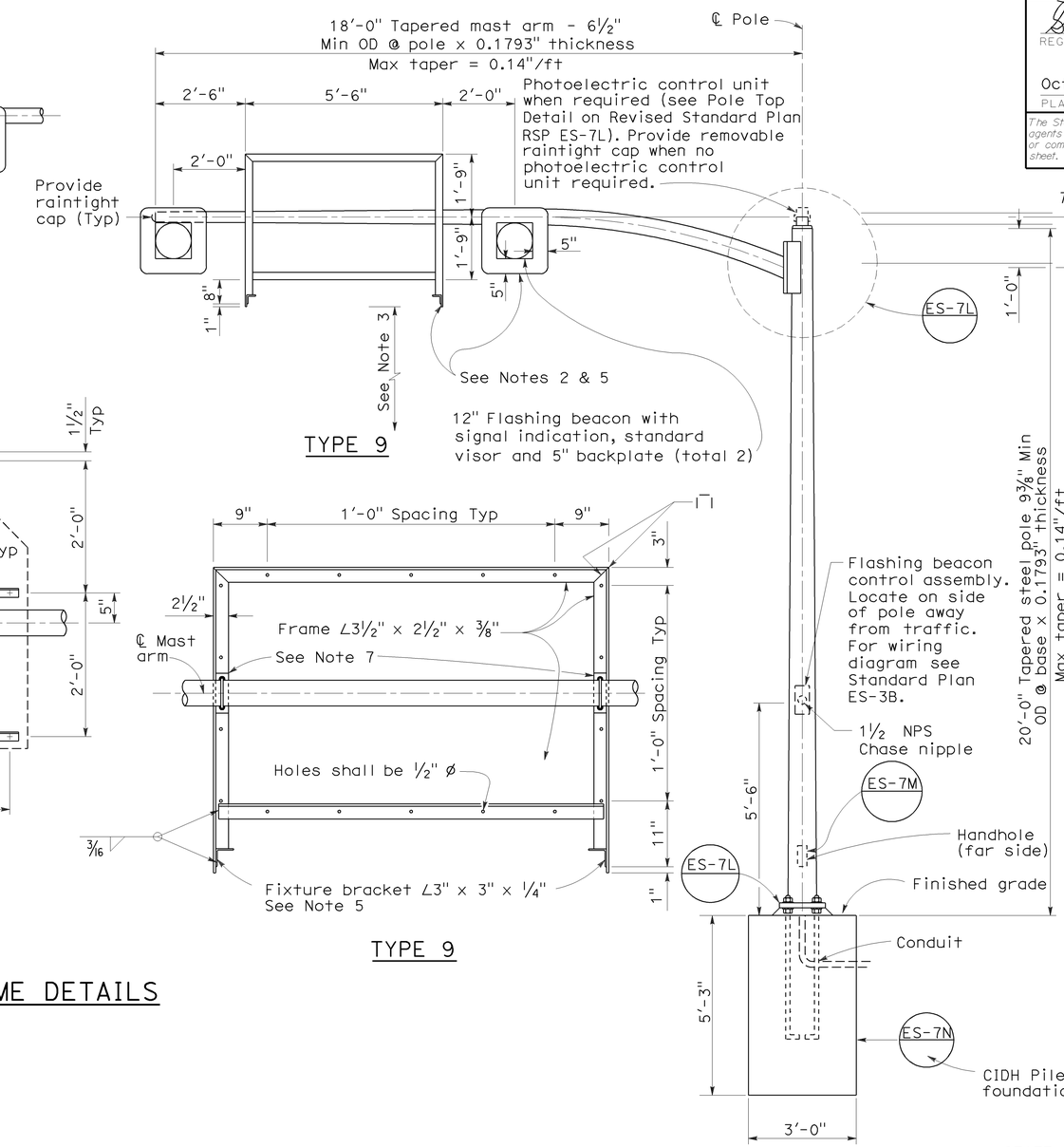

NOTES:

1. Splices between fluorescent fixture sockets shall be waterproof.
2. Install flashing beacons and sign frame. Flashing beacons shall be MAT mounted on pipe tenon. (See Standard Plan ES-7M, Detail S).
3. Vertical clearance to be 17'-0" minimum between roadway and bottom of signal panel or lighting fixture bracket.
4. Special provisions or plans will indicate when sign lighting fixture is required on Type 9A or 9B sign frames.
5. Type 9 sign frames shall be provided with a 3'-0" fluorescent fixture. For fluorescent lighting details see Standard Plan ES-15B.
6. Anchor bolts shall be ASTM A-307.
7. See Revised Standard Plan RSP ES-7L for sign frame mounting details.

FRAME DETAILS

TYPE 9B

STATE OF CALIFORNIA
DEPARTMENT OF TRANSPORTATION

ELECTRICAL SYSTEMS (SIGNAL AND LIGHTING STANDARD CANTILEVER FLASHING BEACON TYPES 9, 9A AND 9B)

NO SCALE

RSP ES-7K DATED OCTOBER 5, 2007 SUPERCEDES STANDARD PLAN ES-7K DATED MAY 1, 2006 - PAGE 447 OF THE STANDARD PLANS BOOK DATED MAY 2006.

REVISED STANDARD PLAN RSP ES-7K

2006 REVISED STANDARD PLAN RSP ES-7K

7-10-07

DIST	COUNTY	ROUTE	POST MILES TOTAL PROJECT	SHEET NO.	TOTAL SHEETS
02	Las	395	R61.1/61.5	50	51

REGISTERED CIVIL ENGINEER

October 5, 2007
PLANS APPROVAL DATE

REGISTERED PROFESSIONAL ENGINEER Stanley P. Johnson No. C57793 Exp. 3-31-08 CIVIL STATE OF CALIFORNIA

The State of California or its officers or agents shall not be responsible for the accuracy or completeness of electronic copies of this plan sheet.

To accompany plans dated 2-23-09

2006 REVISED STANDARD PLAN RSP ES-7L

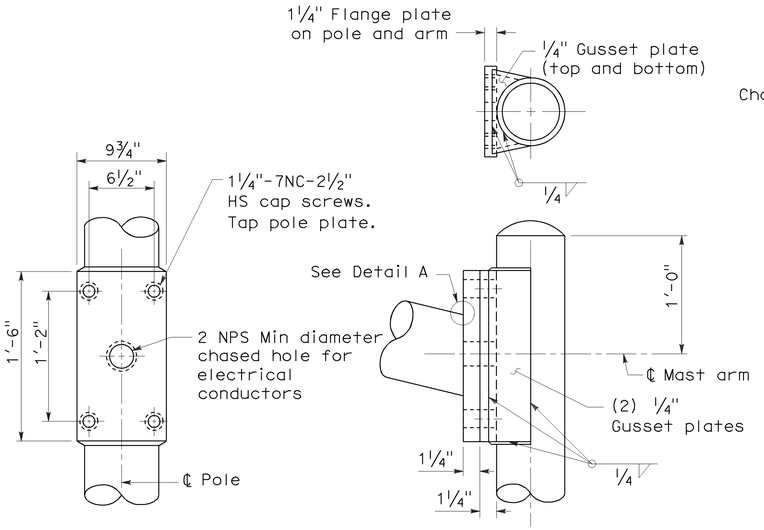

MAST ARM CONNECTION DETAILS

NOTE:

Lighting details not shown see Note 5 on Revised Standard Plan RSP ES-7K. Mounting to channel shown, mounting to angle similar.

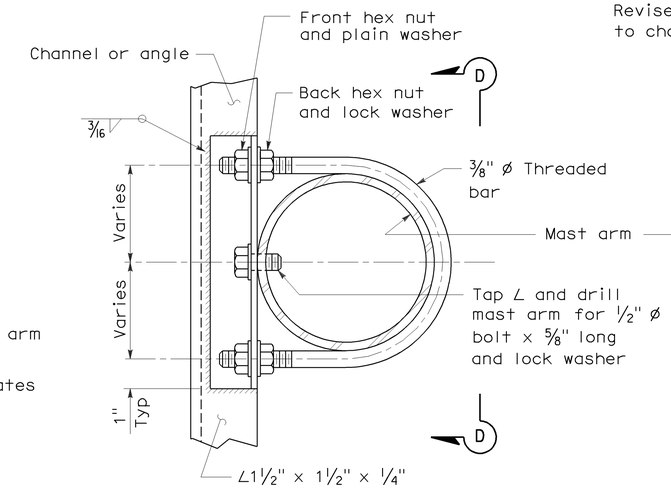

NOTE:

Tighten front hex nuts first, then tighten back hex nuts.

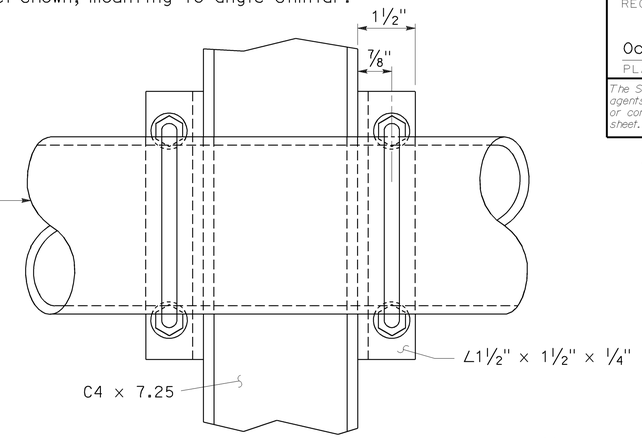

VIEW D-D

SIGN FRAME MOUNTING DETAILS

All types

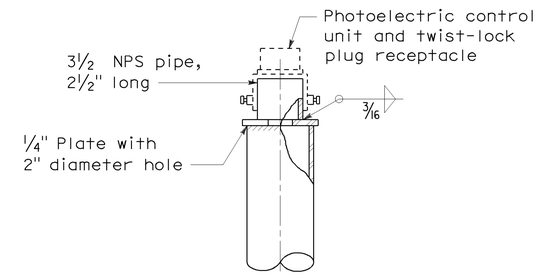

POLE TOP DETAIL

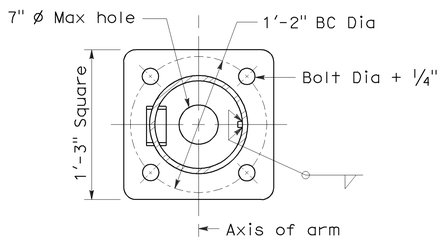

PLAN

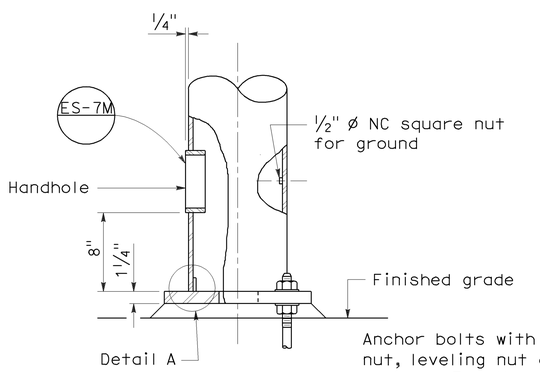

ELEVATION

BASE PLATE AND ANCHORAGE DETAILS

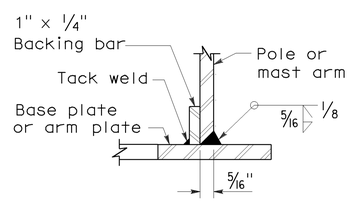

DETAIL A

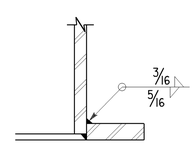

ALTERNATIVE DETAIL A

For pole-base plate only.

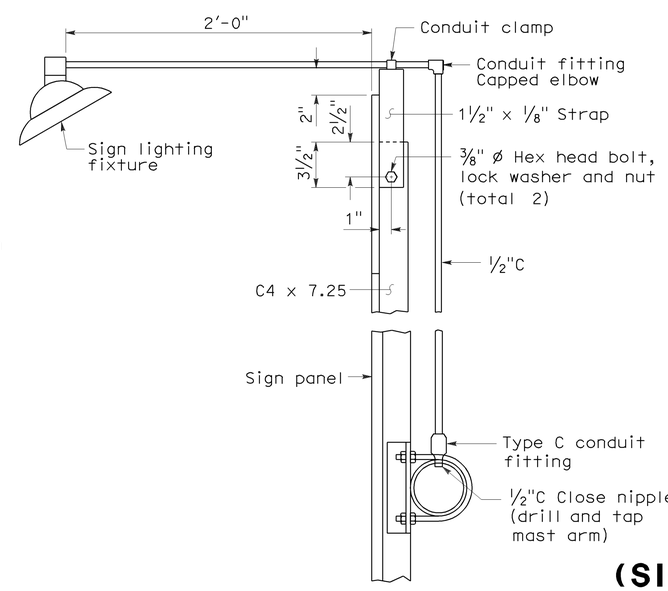

SIGN LIGHTING FIXTURE TYPES 9A AND 9B

See Note 4 on Revised Standard Plan RSP ES-7K.

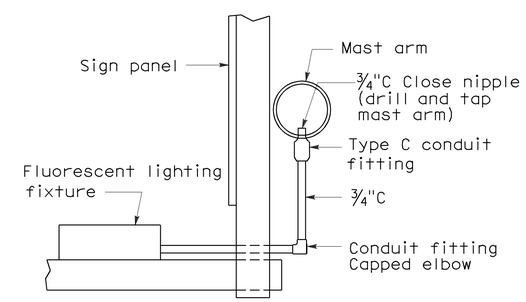

SIGN LIGHTING FIXTURE TYPE 9 FRAME

STATE OF CALIFORNIA
DEPARTMENT OF TRANSPORTATION

ELECTRICAL SYSTEMS (SIGNAL AND LIGHTING STANDARD CANTILEVER FLASHING BEACON TYPES 9, 9A AND 9B)

NO SCALE

RSP ES-7L DATED OCTOBER 5, 2007 SUPERCEDES STANDARD PLAN ES-7L DATED MAY 1, 2006 - PAGE 448 OF THE STANDARD PLANS BOOK DATED MAY 2006.

REVISED STANDARD PLAN RSP ES-7L

7-10-07

DIST	COUNTY	ROUTE	POST MILES TOTAL PROJECT	SHEET NO.	TOTAL SHEETS
02	Las	395	R61.1/61.5	51	51

REGISTERED ELECTRICAL ENGINEER

October 5, 2007
PLANS APPROVAL DATE

REGISTERED PROFESSIONAL ENGINEER Jeffery G. McRae No. E14512 Exp. 6-30-08 ELECTRICAL STATE OF CALIFORNIA

The State of California or its officers or agents shall not be responsible for the accuracy or completeness of electronic copies of this plan sheet.

To accompany plans dated 2-23-09

2006 REVISED STANDARD PLAN RSP ES-15D

NOTES: (FOR LIGHTING AND SIGN ILLUMINATION CONTROL)

1. The ballast voltages of lighting fixtures and luminaires shall match line service voltages.
2. Voltage rating of photoelectric controls shall conform to the service voltage indicated on the plans.
3. Terminal strip shall be provided for wiring to fixtures.
4. Type SC1A, SC2A, SC3A controls are similar to Types SC1, SC2 and SC3 controls respectively except test switch and wiring are not required.

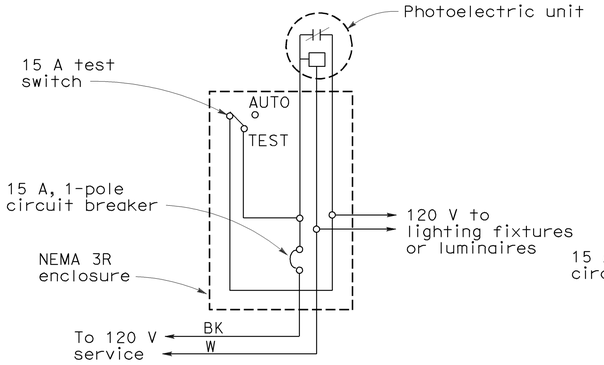

TYPE LC1 CONTROL

For 120 V unswitched circuit with no more than 800 W load.

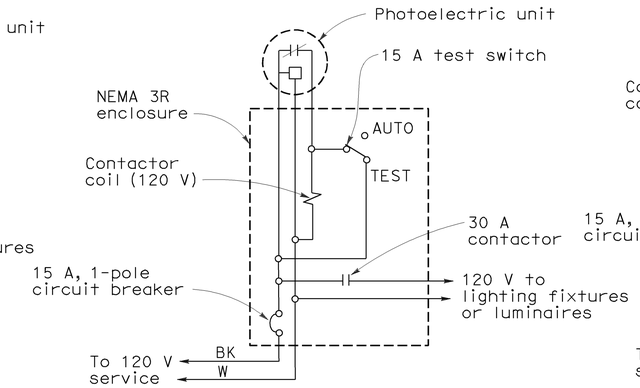

TYPE LC2 CONTROL

For 120 V unswitched circuit

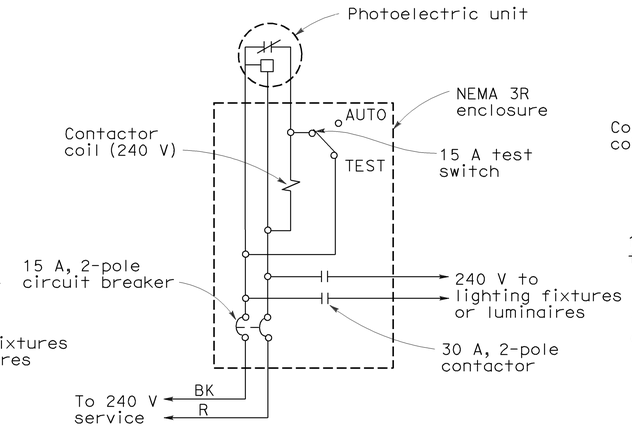

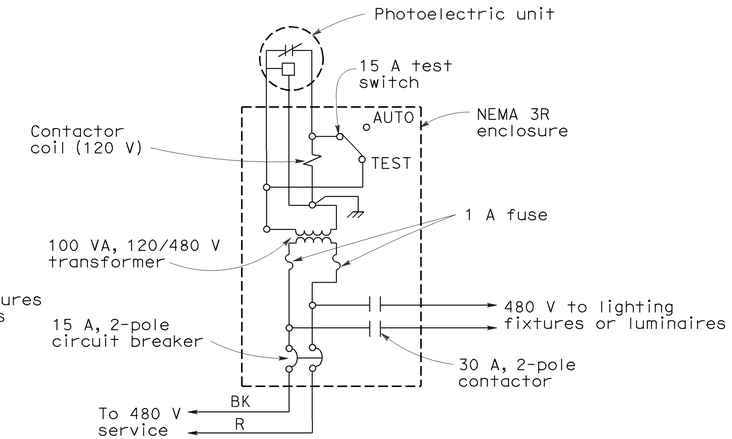

TYPE LC3 CONTROL

For 240 V and 480 V unswitched circuits

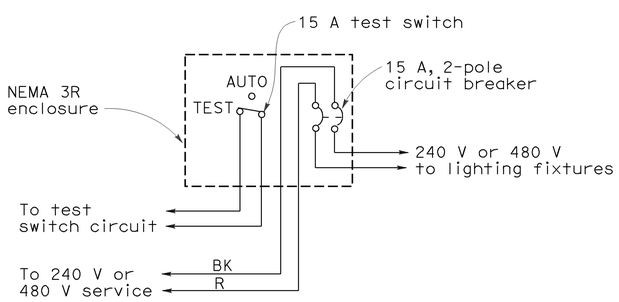

TYPE SC1 CONTROL

For 240 V or 480 V switched circuit, see Note 4 for Type SC1A

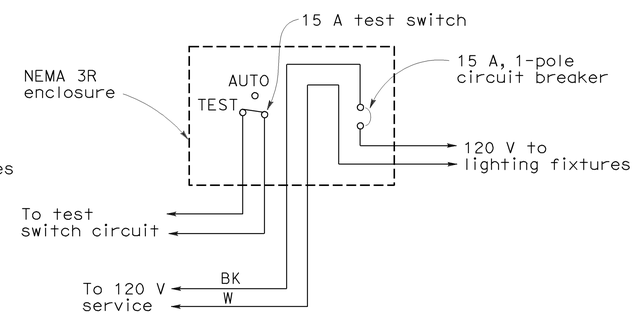

TYPE SC2 CONTROL

For 120 V switched circuit, see Note 4 for Type SC2A

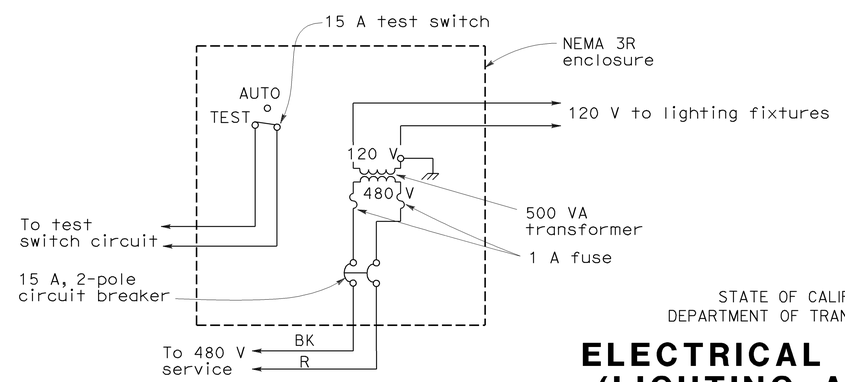

TYPE SC3 CONTROL

For 480 V switched sign circuit, see Note 4 for Type SC3A

STATE OF CALIFORNIA
DEPARTMENT OF TRANSPORTATION

ELECTRICAL SYSTEMS (LIGHTING AND SIGN ILLUMINATION CONTROL)

NO SCALE

RSP ES-15D DATED OCTOBER 5, 2007 SUPERCEDES STANDARD PLAN ES-15D DATED MAY 1, 2006 - PAGE 472 OF THE STANDARD PLANS BOOK DATED MAY 2006.

REVISED STANDARD PLAN RSP ES-15D

9-10-07