IM-BRIM-005-8(340)E

| Dist | COUNTY | ROUTE | POST MILES TOTAL PROJECT | SHEET No. | TOTAL SHEETS |
|---|---|---|---|---|---|
| 02 | Sha | 5 | R14.9/R16.2 | 1 | 165 |

STATE OF CALIFORNIA
# DEPARTMENT OF TRANSPORTATION

## PROJECT PLANS FOR CONSTRUCTION ON
# STATE HIGHWAY
## IN SHASTA COUNTY
## IN REDDING
## FROM 1.3 MILES SOUTH TO 0.1 MILE NORTH OF HILLTOP DRIVE OVERCROSSING

TO BE SUPPLEMENTED BY STANDARD PLANS DATED MAY 2006

INDEX OF SHEETS


| SHEET No. | DESCRIPTION |
|---|---|
| 1 | TITLE AND LOCATION MAP |
| 2-5 | TYPICAL CROSS SECTIONS |
| 6-10 | LAYOUTS |
| 11 | PROFILE |
| 12-14 | PROFILES AND SUPERELEVATION DIAGRAM |
| 15-20 | CONSTRUCTION DETAILS |
| 21-27 | DRAINAGE PLANS, PROFILES, DETAILS AND QUANTITIES |
| 28-29 | CONSTRUCTION AREA SIGNS |
| 30-51 | STAGE CONSTRUCTION AND TRAFFIC HANDLING PLANS, DETAILS AND QUANTITIES |
| 52 | TRAFFIC HANDLING PLAN |
| 53-62 | DETOUR PLANS AND QUANTITIES |
| 63-67 | PAVEMENT DELINEATION AND SIGN PLANS |
| 68 | PAVEMENT DELINEATION QUANTITIES |
| 69-71 | SIGN DETAILS |
| 72 | SIGN QUANTITIES |
| 73-74 | SUMMARY OF QUANTITIES |
| 75-83 | ELECTRICAL PLANS |
| 84-116 | REVISED AND NEW STANDARD PLANS |

STRUCTURE PLANS

| | |
|---|---|
| 117-142 | EAST REDDING SEPARATION (WIDEN) Br No. 06-0126L |
| 143-165 | WESTBOUND CONNECTOR UC (WIDEN) Br No. 06-0127L |


THE STANDARD PLANS LIST APPLICABLE TO THIS CONTRACT IS INCLUDED IN THE NOTICE TO BIDDERS AND SPECIAL PROVISIONS BOOK.

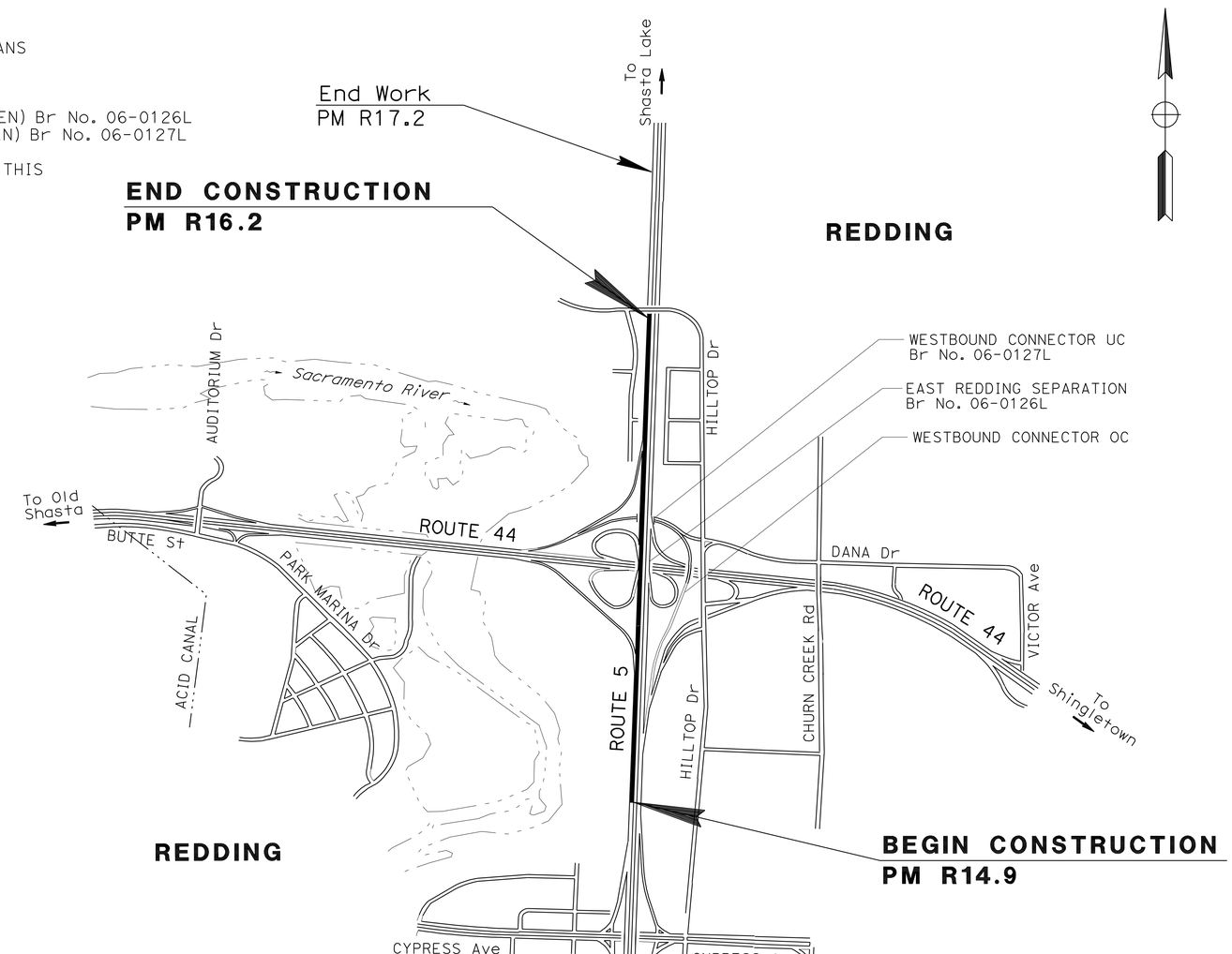


NO SCALE

LOCATION MAP

THE CONTRACTOR SHALL POSSESS THE CLASS (OR CLASSES) OF LICENSE AS SPECIFIED IN THE "NOTICE TO BIDDERS."

02-11-10
PROJECT ENGINEER REGISTERED CIVIL ENGINEER — DATE

May 10, 2010
PLANS APPROVAL DATE

REGISTERED PROFESSIONAL ENGINEER — ANDREW P. STECKLEIN — No. C67148 — Exp. 9-30-10 — CIVIL — STATE OF CALIFORNIA

*THE STATE OF CALIFORNIA OR ITS OFFICERS OR AGENTS SHALL NOT BE RESPONSIBLE FOR THE ACCURACY OR COMPLETENESS OF ELECTRONIC COPIES OF THIS PLAN SHEET.*

| CONTRACT No. | 02-3C0004 |
|---|---|
| PROJECT ID | 0200000309 |

LAST REVISION 02-11-10 — DATE PLOTTED => 21-JUL-2010 — TIME PLOTTED => 05:58

PROJECT MANAGER: PHIL BAKER
DESIGN ENGINEER: ANDREW STECKLEIN

P:\proj2\02\3c000\pse\23c000ab001.dgn

| Dist | COUNTY | ROUTE | POST MILES TOTAL PROJECT | SHEET No. | TOTAL SHEETS |
|---|---|---|---|---|---|
| 02 | Sha | 5 | R14.9/R16.2 | 2 | 165 |

REGISTERED CIVIL ENGINEER 02-11-10 DATE

5-10-10
PLANS APPROVAL DATE

REGISTERED PROFESSIONAL ENGINEER ANDREW P. STECKLEIN No. C67148 Exp. 9-30-10 CIVIL STATE OF CALIFORNIA

*THE STATE OF CALIFORNIA OR ITS OFFICERS OR AGENTS SHALL NOT BE RESPONSIBLE FOR THE ACCURACY OR COMPLETENESS OF SCANNED COPIES OF THIS PLAN SHEET.*

NOTES:

1. DIMENSIONS OF THE PAVEMENT STRUCTURES (STRUCTURAL SECTIONS) ARE SUBJECT TO TOLERANCES SPECIFIED IN THE STANDARD SPECIFICATIONS.
2. SUPERELEVATIONS AS SHOWN OR AS DETERMINED BY THE ENGINEER.
3. SEE LAYOUTS FOR INFORMATION ABOUT PLACEMENT OF CABLE BARRIER AND METAL BEAM GUARD RAILING.
4. 0.10′ HOT MIX ASPHALT (OPEN GRADED) TO BE PLACED DURING STAGE 4.
5. REFER TO LAYOUTS FOR LOCATIONS OF RUMBLE STRIP.

## ABBREVIATIONS

| | |
|---|---|
| DES | DESIGN EDGE OF SHOULDER |
| EPAD | EDGE OF BARRIER GUARD 800 HMA PAD |
| HMA(OG) | HOT MIX ASPHALT (OPEN GRADED) |
| HTCB | HIGH TENSION CABLE BARRIER |
| SB | SHOULDER BACKING |
| SEG | SUBGRADE ENHANCEMENT GEOTEXTILE |
| SRS | RUMBLE STRIP |

## DESIGN DESIGNATION

| | | |
|---|---|---|
| ADT | (2007) | 68000 |
| ADT | (2010) | 72000 |
| DHV | (2020) | 8500 |
| D | (2007) | 53% |
| T | (2007) | 10% |

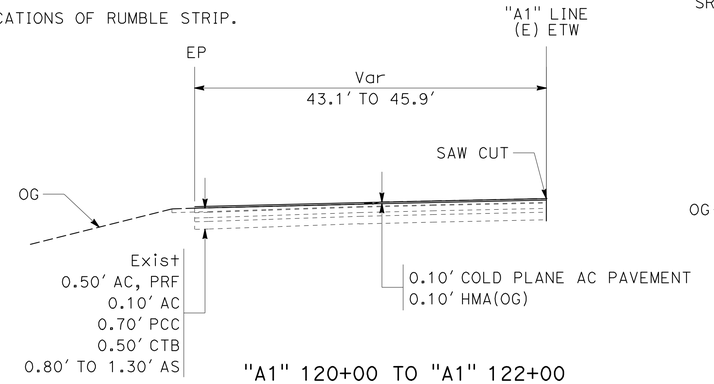


"A1" 120+00 TO "A1" 122+00

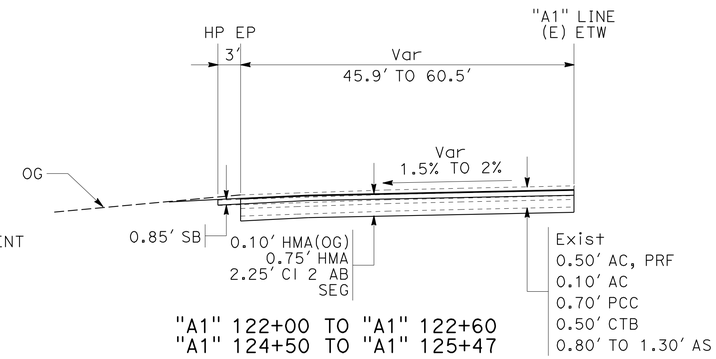


"A1" 122+00 TO "A1" 122+60
"A1" 124+50 TO "A1" 125+47

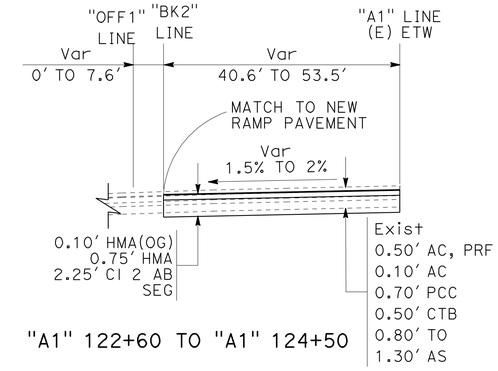


"A1" 122+60 TO "A1" 124+50

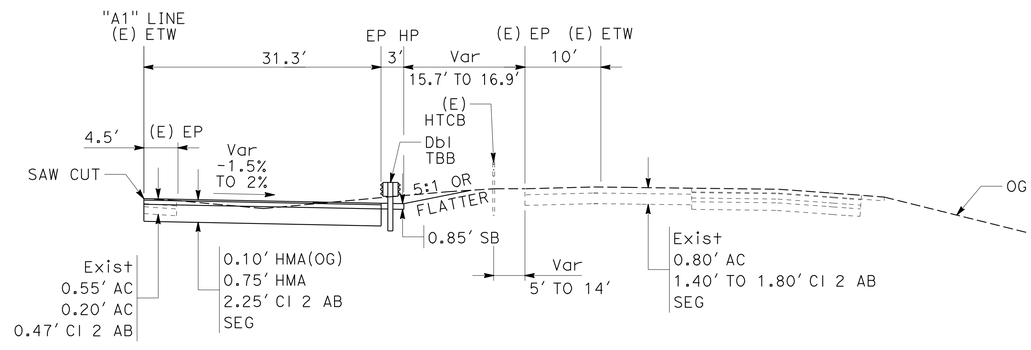


"A1" 120+50 TO "A1" 124+00

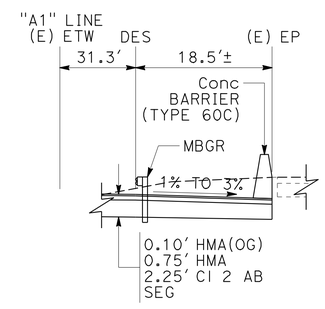


"A1" 124+00 TO "A1" 125+54

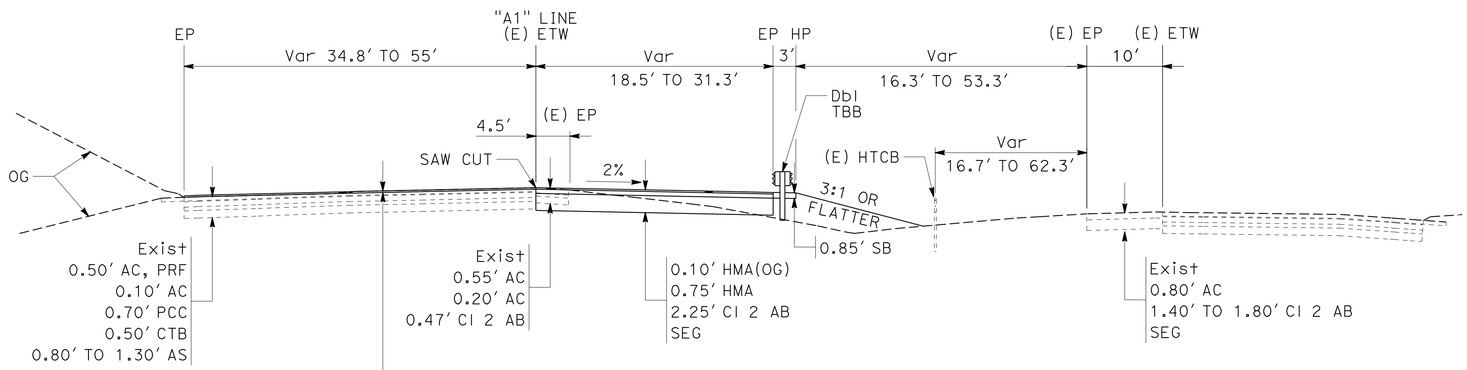


"A1" 101+00 TO "A1" 120+50

**ROUTE 5**

# TYPICAL CROSS SECTIONS

NO SCALE

**X-1**

REVISED BY | DATE REVISED
ANDREW STECKLEIN | BOB WEBER
CALCULATED-DESIGNED BY | CHECKED BY
FUNCTIONAL SUPERVISOR: STEVE TOPAL

STATE OF CALIFORNIA - DEPARTMENT OF TRANSPORTATION
Caltrans® DESIGN

P:\proj2\02\3c000\pse\23c000ca001.dgn

LAST REVISION 01-20-10 | DATE PLOTTED => 10-MAY-2010 | TIME PLOTTED => 13:48

| Dist | COUNTY | ROUTE | POST MILES TOTAL PROJECT | SHEET No. | TOTAL SHEETS |
|---|---|---|---|---|---|
| 02 | Sha | 5 | R14.9/R16.2 | 3 | 165 |

REGISTERED CIVIL ENGINEER 02-11-10 DATE

5-10-10
PLANS APPROVAL DATE

REGISTERED PROFESSIONAL ENGINEER
ANDREW P. STECKLEIN
No. C67148
Exp. 9-30-10
CIVIL
STATE OF CALIFORNIA

*THE STATE OF CALIFORNIA OR ITS OFFICERS OR AGENTS SHALL NOT BE RESPONSIBLE FOR THE ACCURACY OR COMPLETENESS OF SCANNED COPIES OF THIS PLAN SHEET.*

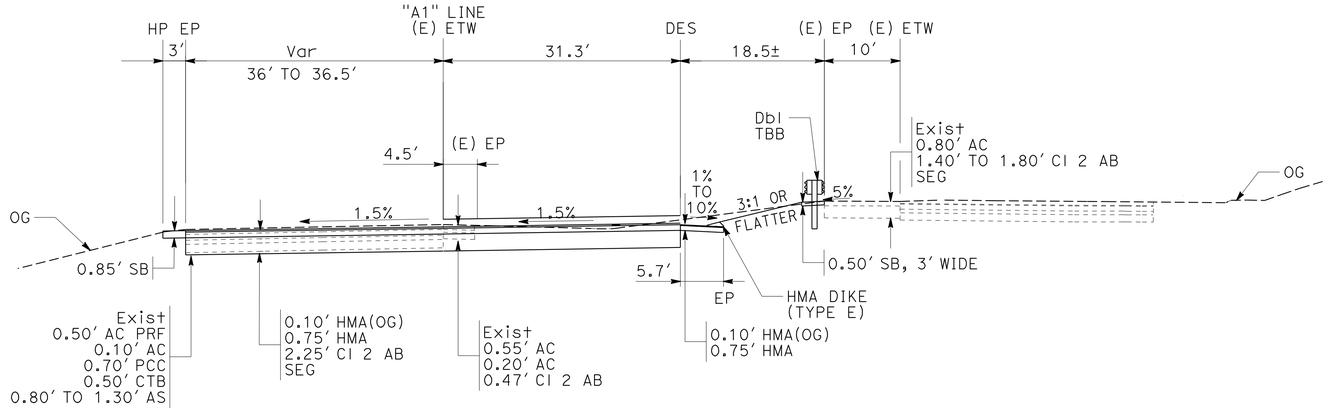


"A1" 131+45 TO "A1" 132+53

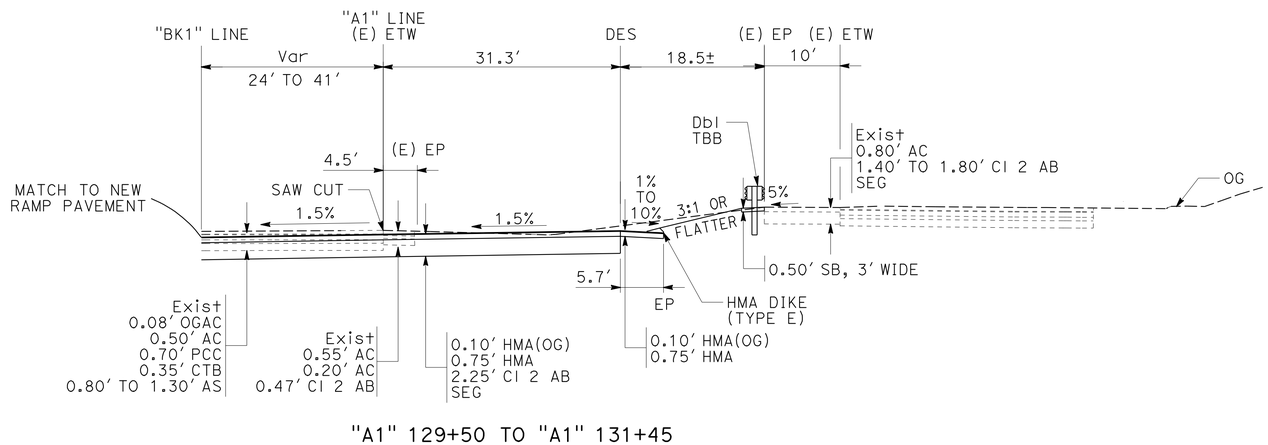


"A1" 129+50 TO "A1" 131+45

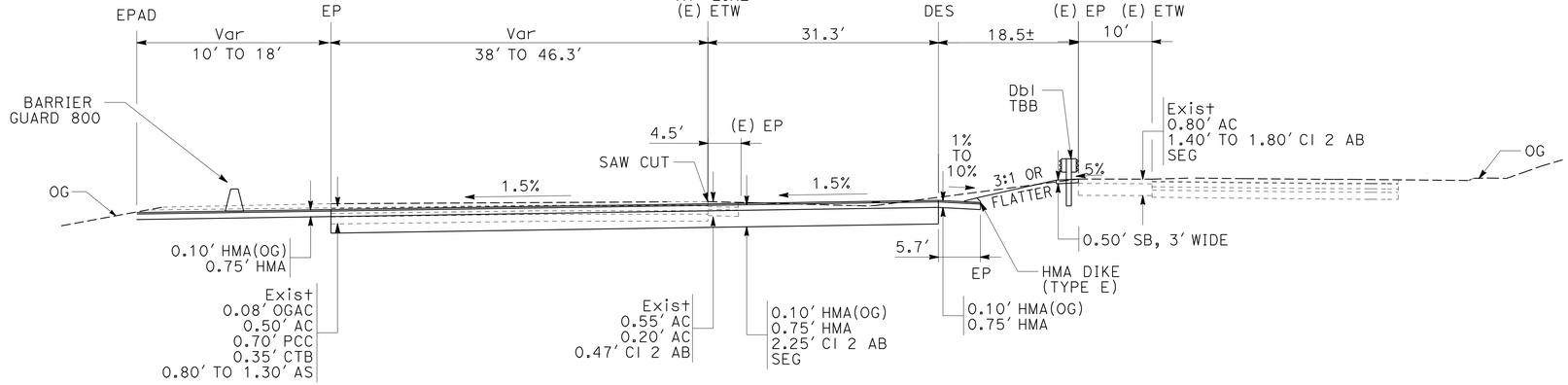


"A1" 128+05.2 TO "A1" 129+50

**ROUTE 5**

# TYPICAL CROSS SECTIONS

NO SCALE

**X-2**

STATE OF CALIFORNIA - DEPARTMENT OF TRANSPORTATION
**DESIGN**

FUNCTIONAL SUPERVISOR: STEVE TOPAL
CALCULATED-DESIGNED BY: BOB WEBER
CHECKED BY: ANDREW STECKLEIN
REVISED BY / DATE REVISED

P:\proj2\02\3c000\pse\23c000ca002.dgn

LAST REVISION DATE PLOTTED => 10-MAY-2010
TIME PLOTTED => 13:48

BORDER LAST REVISED 4/11/2008 | RELATIVE BORDER SCALE IS IN INCHES 0 1 2 3 | USERNAME => trmariak | DGN FILE => 23c000ca002.dgn | CU 03 247 | EA 3C0001

| Dist | COUNTY | ROUTE | POST MILES TOTAL PROJECT | SHEET No. | TOTAL SHEETS |
|---|---|---|---|---|---|
| 02 | Sha | 5 | R14.9/R16.2 | 4 | 165 |

REGISTERED CIVIL ENGINEER 02-11-10 DATE

5-10-10
PLANS APPROVAL DATE

REGISTERED PROFESSIONAL ENGINEER ANDREW P. STECKLEIN No. C67148 Exp. 9-30-10 CIVIL STATE OF CALIFORNIA

*THE STATE OF CALIFORNIA OR ITS OFFICERS OR AGENTS SHALL NOT BE RESPONSIBLE FOR THE ACCURACY OR COMPLETENESS OF SCANNED COPIES OF THIS PLAN SHEET.*

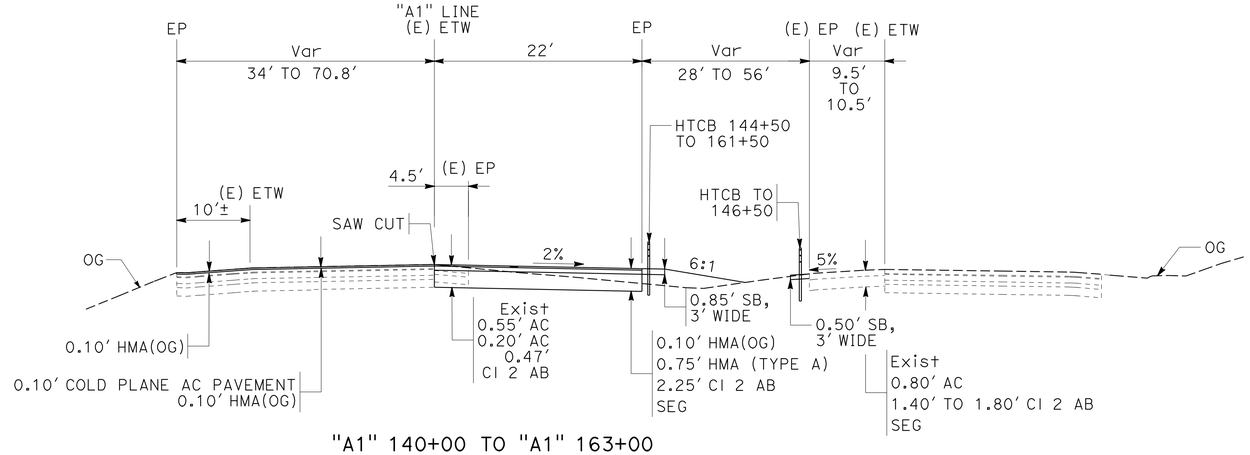


"A1" 140+00 TO "A1" 163+00

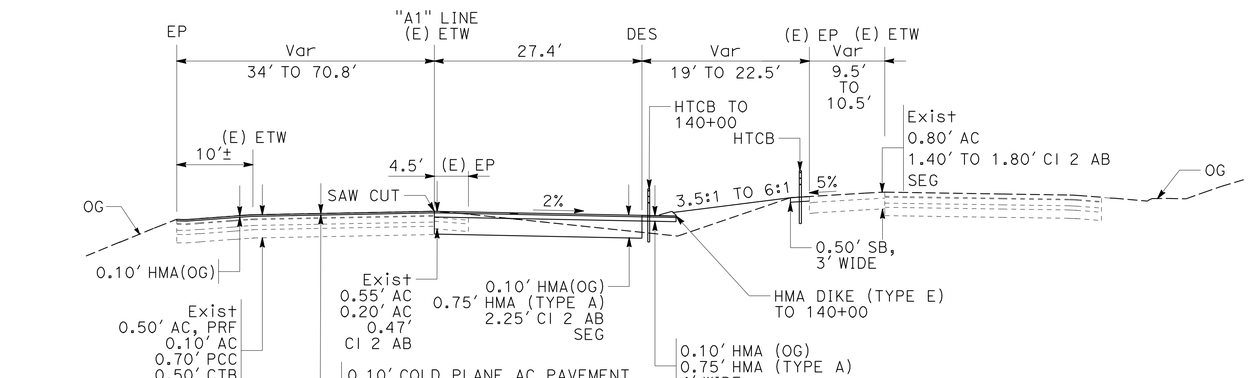


"A1" 136+50 TO "A1" 140+00

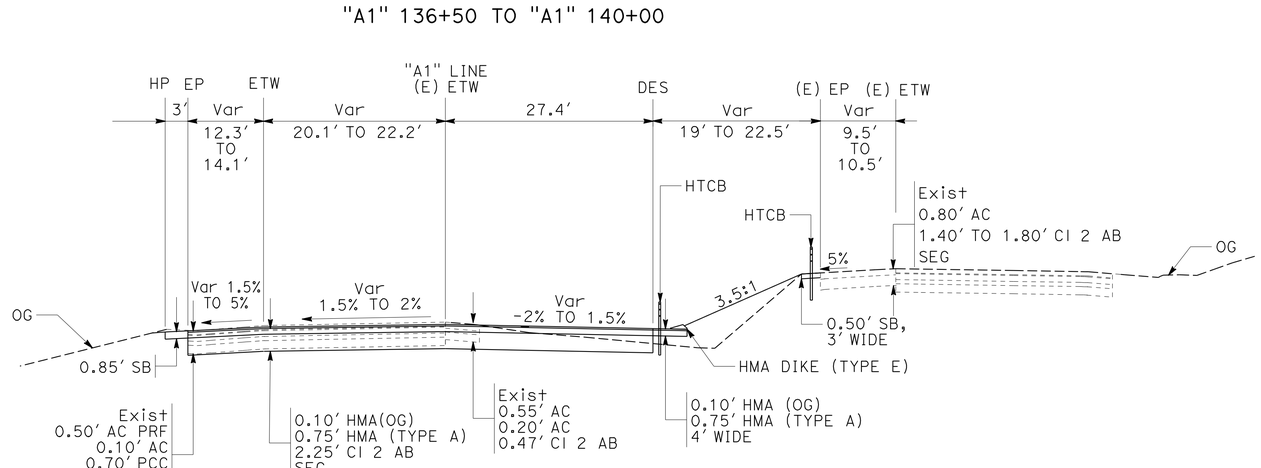


"A1" 134+45 TO "A1" 136+50

**ROUTE 5**

# TYPICAL CROSS SECTIONS

NO SCALE

**X-3**

REVISED BY | DATE REVISED

RUSSELL FLOOD | ANDREW STECKLEIN

CALCULATED-DESIGNED BY | CHECKED BY

FUNCTIONAL SUPERVISOR: STEVE TOPAL

STATE OF CALIFORNIA - DEPARTMENT OF TRANSPORTATION

Caltrans® **DESIGN**

P:\proj2\02\3c000\pse\23c000ca003.dgn

LAST REVISION 01-20-10 | DATE PLOTTED => 10-MAY-2010 | TIME PLOTTED => 13:48

| Dist | COUNTY | ROUTE | POST MILES TOTAL PROJECT | SHEET No. | TOTAL SHEETS |
|---|---|---|---|---|---|
| 02 | Sha | 5 | R14.9/R16.2 | 5 | 165 |

REGISTERED CIVIL ENGINEER 02-11-10 DATE

5-10-10
PLANS APPROVAL DATE

REGISTERED PROFESSIONAL ENGINEER ANDREW P. STECKLEIN No. C67148 Exp. 9-30-10 CIVIL STATE OF CALIFORNIA

*THE STATE OF CALIFORNIA OR ITS OFFICERS OR AGENTS SHALL NOT BE RESPONSIBLE FOR THE ACCURACY OR COMPLETENESS OF SCANNED COPIES OF THIS PLAN SHEET.*

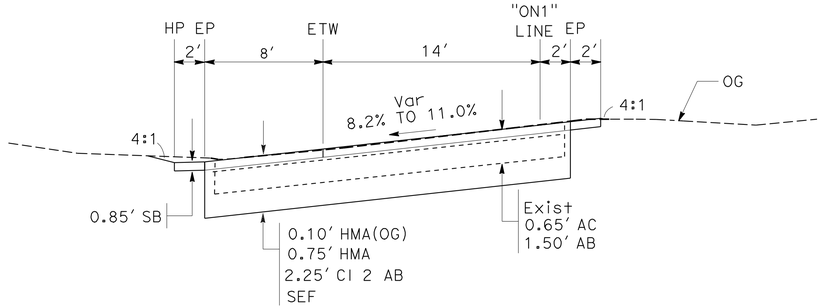


"ON1" 231+28 TO "ON1" 232+20

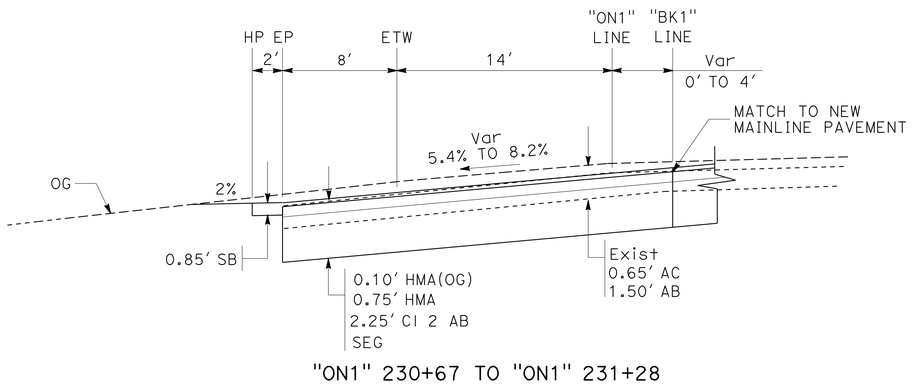


"ON1" 230+67 TO "ON1" 231+28

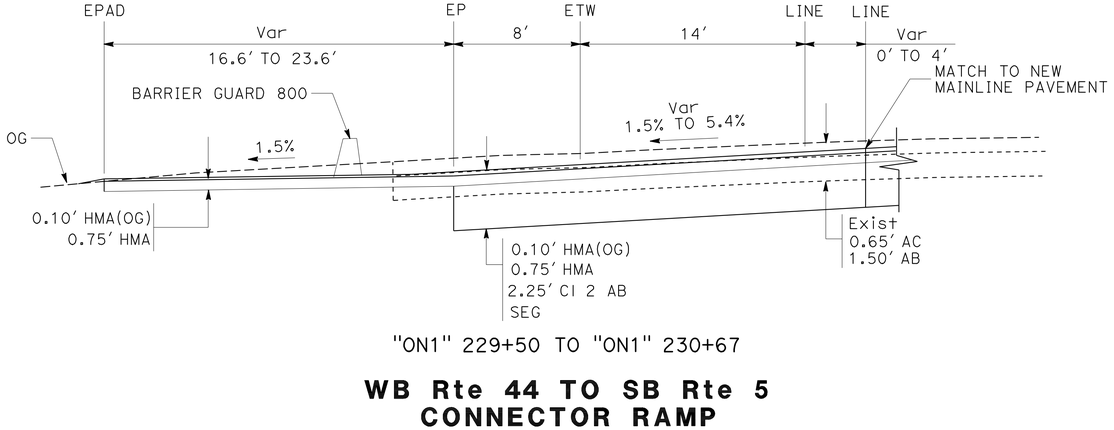


"ON1" 229+50 TO "ON1" 230+67

**WB Rte 44 TO SB Rte 5 CONNECTOR RAMP**

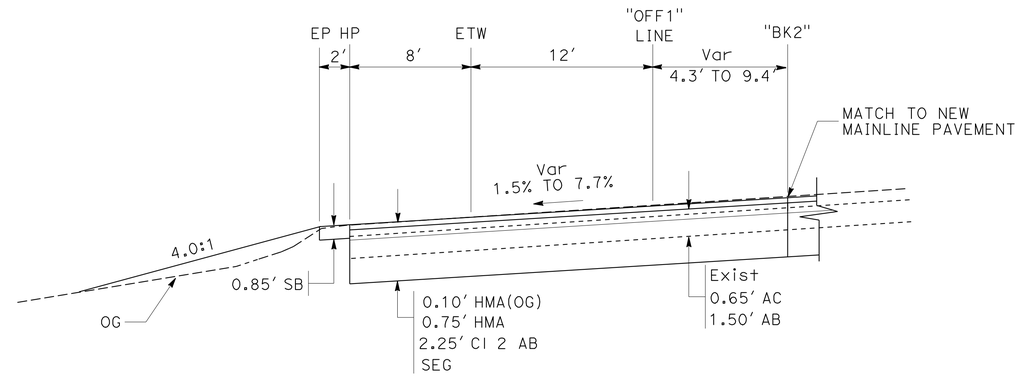


"OFF1" 322+60 TO "OFF1" 324+50

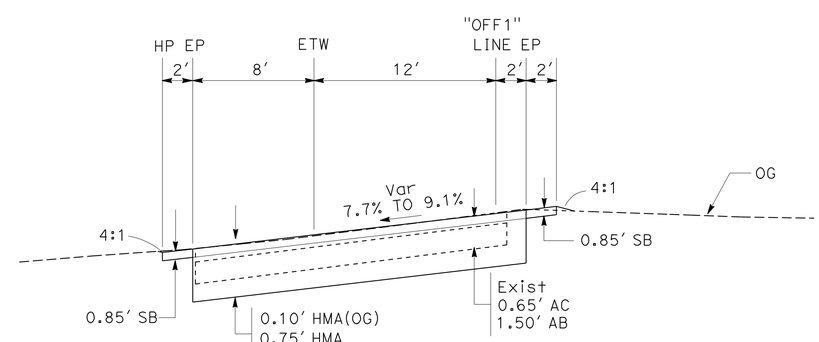


"OFF1" 320+80 TO "OFF1" 322+50

**SB Rte 5 TO EB Rte 44 CONNECTOR RAMP**

# TYPICAL CROSS SECTIONS

NO SCALE

**X-4**

STATE OF CALIFORNIA - DEPARTMENT OF TRANSPORTATION
Caltrans®
DESIGN
FUNCTIONAL SUPERVISOR: STEVE TOPAL
CALCULATED-DESIGNED BY: BYRON STANLEY
CHECKED BY: ANDREW STECKLEIN
REVISED BY
DATE REVISED

P:\proj2\02\3c000\pse\23c000ca004.dgn

LAST REVISION 01-21-10
DATE PLOTTED => 10-MAY-2010
TIME PLOTTED => 13:48

| Dist | COUNTY | ROUTE | POST MILES TOTAL PROJECT | SHEET No. | TOTAL SHEETS |
|---|---|---|---|---|---|
| 02 | Sha | 5 | R14.9/R16.2 | 6 | 165 |

REGISTERED CIVIL ENGINEER 02-11-10 DATE

5-10-10
PLANS APPROVAL DATE

REGISTERED PROFESSIONAL ENGINEER ANDREW P. STECKLEIN No. C67148 Exp. 9-30-10 CIVIL STATE OF CALIFORNIA

*THE STATE OF CALIFORNIA OR ITS OFFICERS OR AGENTS SHALL NOT BE RESPONSIBLE FOR THE ACCURACY OR COMPLETENESS OF SCANNED COPIES OF THIS PLAN SHEET.*

NOTES:

1. REFER TO THE MANUFACTURER GUIDELINES AND SPECIFICATIONS FOR CABLE BARRIER TERMINAL SYSTEMS.
2. A 30:1 OR FLATTER TAPER SHALL BE USED WHEN ADJUSTING THE ALIGNMENT OF THE CABLE BARRIER.
3. FOR COMPLETE RIGHT OF WAY AND ACCURATE ACCESS DATA, SEE RIGHT OF WAY RECORD MAPS AT DISTRICT OFFICE.

## LEGEND

- DIRECTION OF TRAFFIC
- DRAINAGE SYSTEM No.
- HIGH TENSION CABLE BARRIER
- SHOULDER RUMBLE STRIP

## ABBREVIATIONS

| | |
|---|---|
| AFTS | ALTERNATE FLARED TERMINAL SECTION |
| HMA(OG) | HOT MIX ASPHALT (OPEN GRADED) |
| HTCB | HIGH TENSION CABLE BARRIER |
| Recnst | RECONSTRUCT |
| SRS | RUMBLE STRIP |
| SS | STRUCTURAL SECTION |
| TRWB | TRANSITION RAILING (TYPE WB) |
| Tr | Dbl TBB END TRANSITION |
| SFT | END ANCHOR ASSEMBLY (TYPE SFT) |

## MBGR PLACEMENT DATA

| No. | LINE | BEGIN AFTS | BEGIN MBGR | END MBGR | SFT |
|---|---|---|---|---|---|
| 1 | "A1" | 100+85, 48′ Rt | 101+22.5, 52′ Rt | 101+60, 52′ Rt | X |
| 2 | "A1" | 102+95, 48′ Rt | 103+32.5, 52′ Rt | 103+70, 52′ Rt | X |
| 3 | "A1" | 106+85, 48′ Rt | 107+22.5, 52′ Rt | 107+60, 52′ Rt | X |

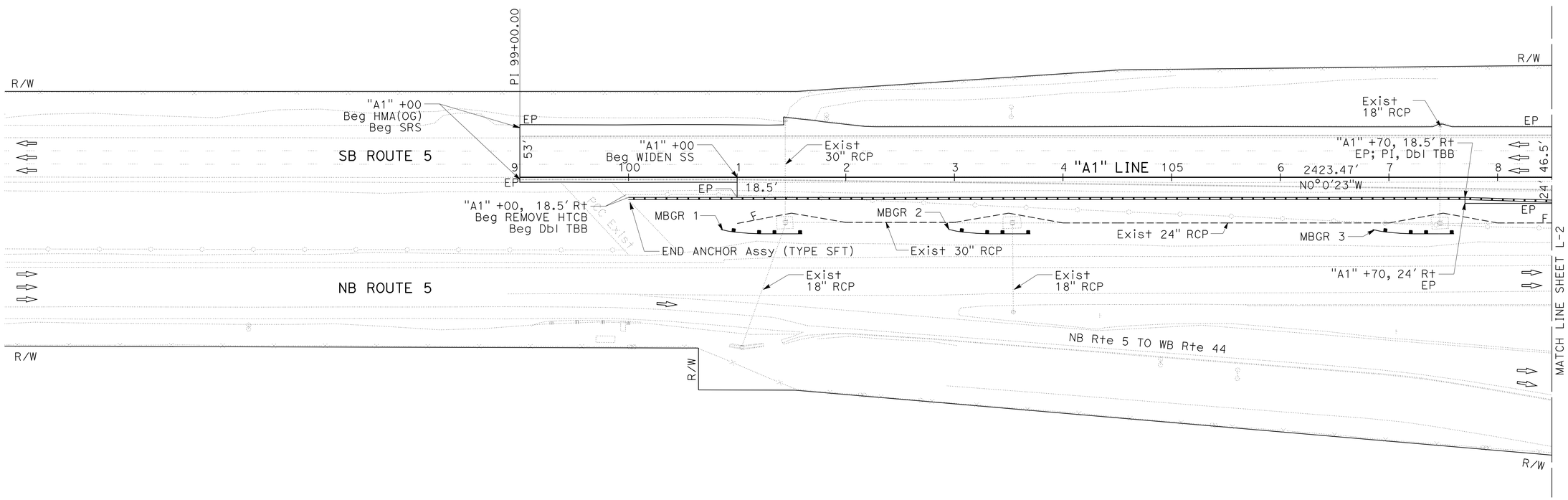


# LAYOUT

SCALE: 1" = 50′

L-1

STATE OF CALIFORNIA - DEPARTMENT OF TRANSPORTATION
DESIGN
Caltrans
FUNCTIONAL SUPERVISOR: STEVE TOPAL
CALCULATED-DESIGNED BY
CHECKED BY
REVISED BY
DATE REVISED

\\Sv02s01\CAD\PSESubmit\02-3c0001\23c000ea001.dgn

LAST REVISION 01-12-01
DATE PLOTTED => 10-MAY-2010
TIME PLOTTED => 13:55

BORDER LAST REVISED 4/11/2008
RELATIVE BORDER SCALE IS IN INCHES 0 1 2 3
USERNAME => trmariak
DGN FILE => 23c000ea001.dgn
CU 03 247
EA 3C0001

| Dist | COUNTY | ROUTE | POST MILES TOTAL PROJECT | SHEET No. | TOTAL SHEETS |
|---|---|---|---|---|---|
| 02 | Sha | 5 | R14.9/R16.2 | 7 | 165 |

REGISTERED CIVIL ENGINEER 02-11-10 DATE

5-10-10
PLANS APPROVAL DATE

REGISTERED PROFESSIONAL ENGINEER ANDREW P. STECKLEIN No. C67148 Exp. 9-30-10 CIVIL STATE OF CALIFORNIA

*THE STATE OF CALIFORNIA OR ITS OFFICERS OR AGENTS SHALL NOT BE RESPONSIBLE FOR THE ACCURACY OR COMPLETENESS OF SCANNED COPIES OF THIS PLAN SHEET.*

NOTE:

1. FOR COMPLETE RIGHT OF WAY AND ACCURATE ACCESS DATA, SEE RIGHT OF WAY RECORD MAPS AT DISTRICT OFFICE.

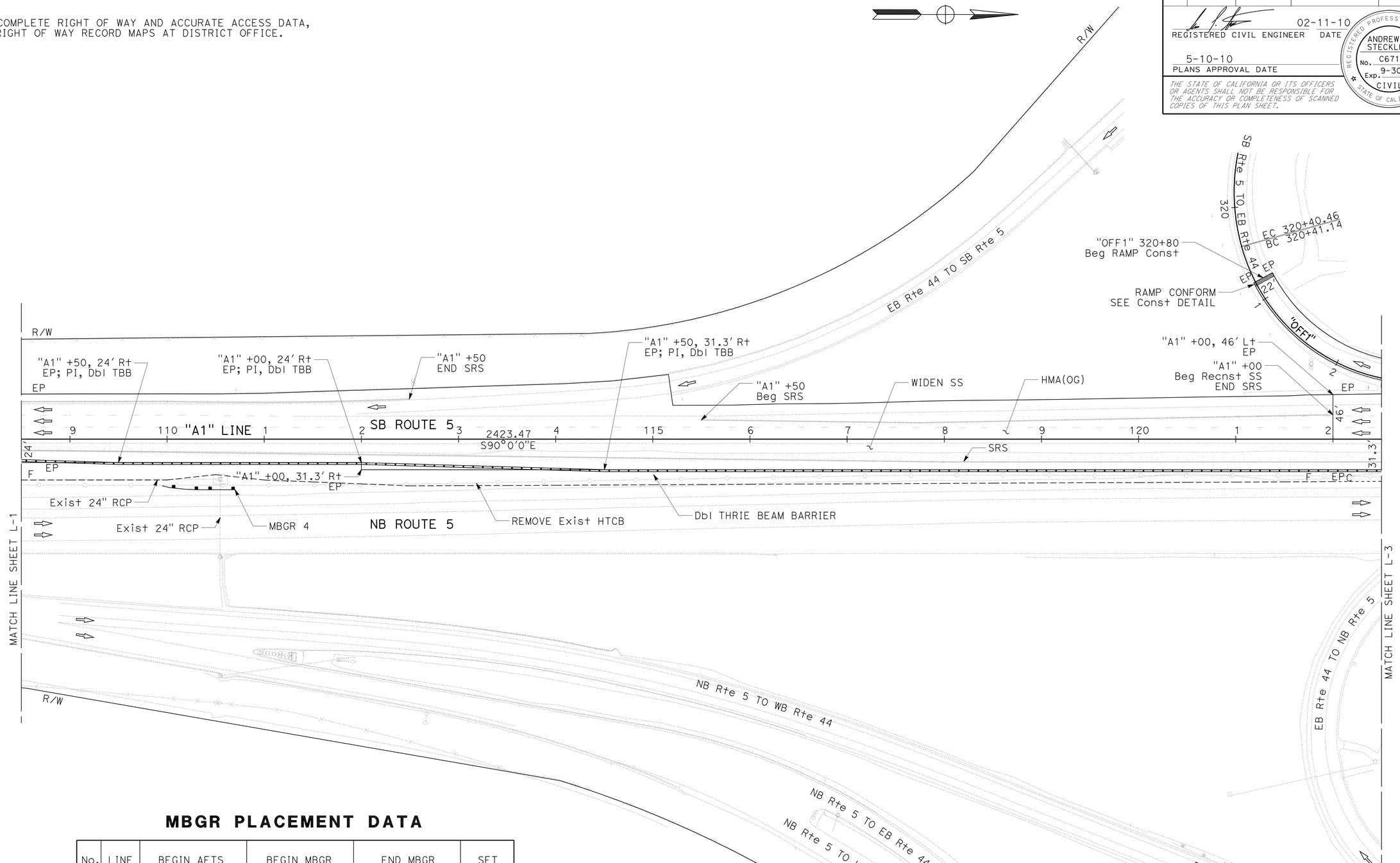


## MBGR PLACEMENT DATA

| No. | LINE | BEGIN AFTS | BEGIN MBGR | END MBGR | SFT |
|---|---|---|---|---|---|
| 4 | "A1" | 109+95, 48' Rt | 110+32.5, 52' Rt | 110+70, 52' Rt | X |

# LAYOUT

SCALE: 1" = 50' **L-2**

| REVISED BY | DATE REVISED |
|---|---|
| ANDREW STECKLEIN | |
| CALCULATED-DESIGNED BY | CHECKED BY |
| BOB WEBER | |
| FUNCTIONAL SUPERVISOR | |
| STEVE TOPAL | |

STATE OF CALIFORNIA - DEPARTMENT OF TRANSPORTATION
Caltrans
DESIGN

P:\proj2\02\3c000\pse\23c000ea002.dgn

LAST REVISION 01-12-10 | DATE PLOTTED => 10-MAY-2010 | TIME PLOTTED => 13:49

| Dist | COUNTY | ROUTE | POST MILES TOTAL PROJECT | SHEET No. | TOTAL SHEETS |
|---|---|---|---|---|---|
| 02 | Sha | 5 | R14.9/R16.2 | 8 | 165 |

REGISTERED CIVIL ENGINEER 02-11-10 DATE

5-10-10
PLANS APPROVAL DATE

REGISTERED PROFESSIONAL ENGINEER ANDREW P. STECKLEIN No. C67148 Exp. 9-30-10 CIVIL STATE OF CALIFORNIA

*THE STATE OF CALIFORNIA OR ITS OFFICERS OR AGENTS SHALL NOT BE RESPONSIBLE FOR THE ACCURACY OR COMPLETENESS OF SCANNED COPIES OF THIS PLAN SHEET.*

NOTE:

1. FOR COMPLETE RIGHT OF WAY AND ACCURATE ACCESS DATA, SEE RIGHT OF WAY RECORD MAPS AT DISTRICT OFFICE.

## MBGR PLACEMENT DATA

| No. | LINE | BEGIN AFTS | BEGIN MBGR | END MBGR | Beg TRWB | SFT |
|---|---|---|---|---|---|---|
| 5 | "A1" | 122+86.6, 46.2′ Rt | 123+26.1, 50.2′ Rt | 123+76.1, 50.2′ Rt | 123+76.1, 50.2′ Rt | |
| 6 | "A1" | | 125+35, 31.3′ Rt | 125+60, 31.3′ Rt | | X |
| 7 | "C1" | | 98+70, 54.8′ Rt | 100+20, 60.6′ Rt | | |
| 8 | "C1" | | 99+15, 53.2′ Lt | 99+77, 49.7′ Lt | | |
| 9 | "A1" | 129+11.2, 31.3′ Rt | 128+11.2, 31.3′ Rt | 129+11.2, 31.3′ Rt | 127+86.2, 31.3′ Rt | |
| 10 | "A1" | 135+00, 27.4′ Rt | 134+50, 27.4′ Rt | 135+00, 27.4′ Rt | 134+25, 27.4′ Rt | |

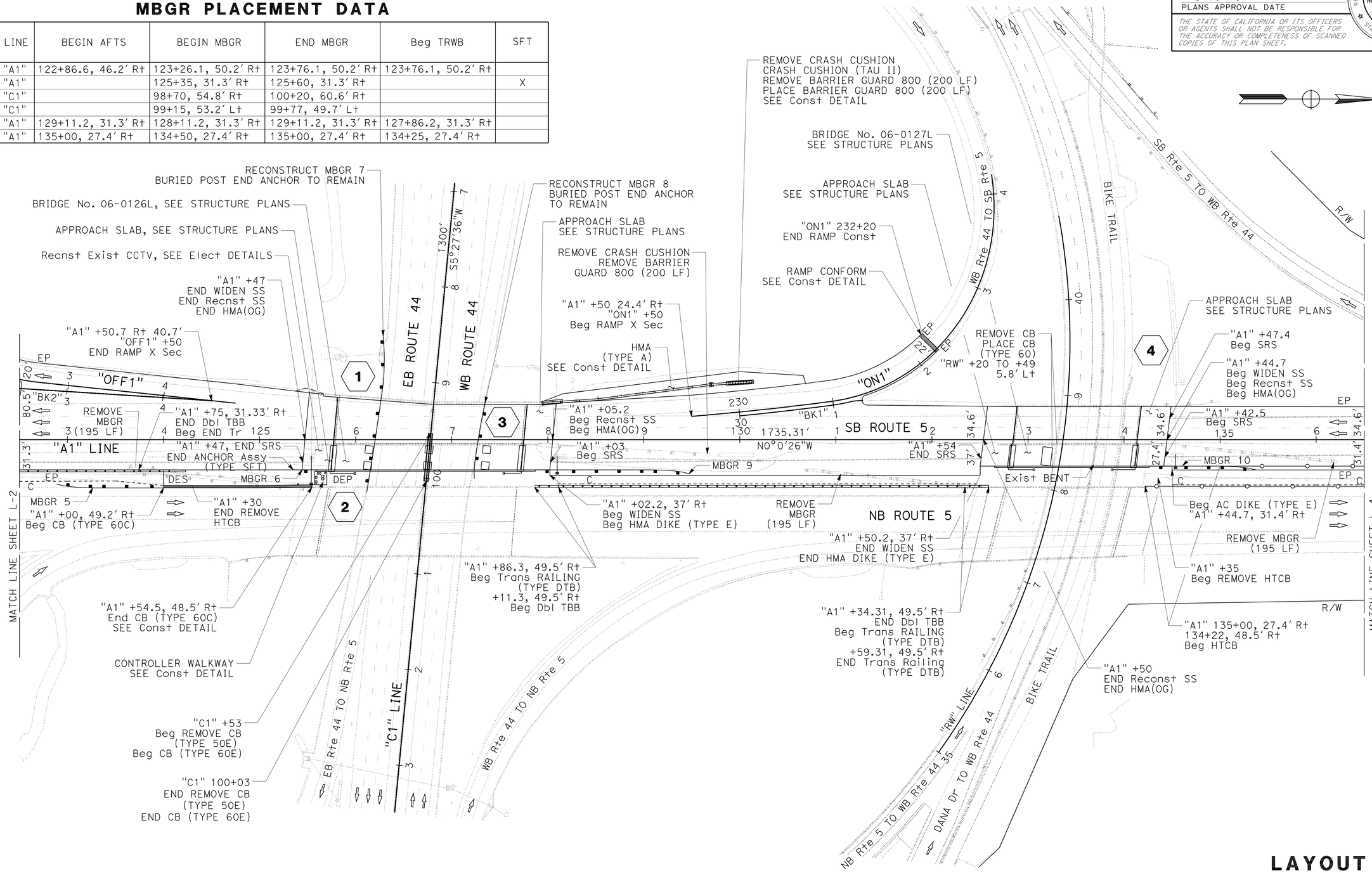


## LAYOUT

SCALE: 1" = 50′

L-3

| REVISED BY | DATE REVISED | CALCULATED-DESIGNED BY | CHECKED BY | FUNCTIONAL SUPERVISOR |
|---|---|---|---|---|
| ANDREW STECKLEIN | BOB WEBER | | | STEVE TOPAL |

STATE OF CALIFORNIA - DEPARTMENT OF TRANSPORTATION

Caltrans® DESIGN

P:\proj2\02\3c000\pse\23c000ea003.dgn

LAST REVISION 01-19-10 | DATE PLOTTED => 11-MAY-2010 TIME PLOTTED => 06:28

| Dist | COUNTY | ROUTE | POST MILES TOTAL PROJECT | SHEET No. | TOTAL SHEETS |
|---|---|---|---|---|---|
| 02 | Sha | 5 | R14.9/R16.2 | 9 | 165 |

REGISTERED CIVIL ENGINEER 02-11-10 DATE

5-10-10
PLANS APPROVAL DATE

REGISTERED PROFESSIONAL ENGINEER ANDREW P. STECKLEIN No. C67148 Exp. 9-30-10 CIVIL STATE OF CALIFORNIA

*THE STATE OF CALIFORNIA OR ITS OFFICERS OR AGENTS SHALL NOT BE RESPONSIBLE FOR THE ACCURACY OR COMPLETENESS OF SCANNED COPIES OF THIS PLAN SHEET.*

NOTE:

1. FOR COMPLETE RIGHT OF WAY AND ACCURATE ACCESS DATA, SEE RIGHT OF WAY RECORD MAPS AT DISTRICT OFFICE.

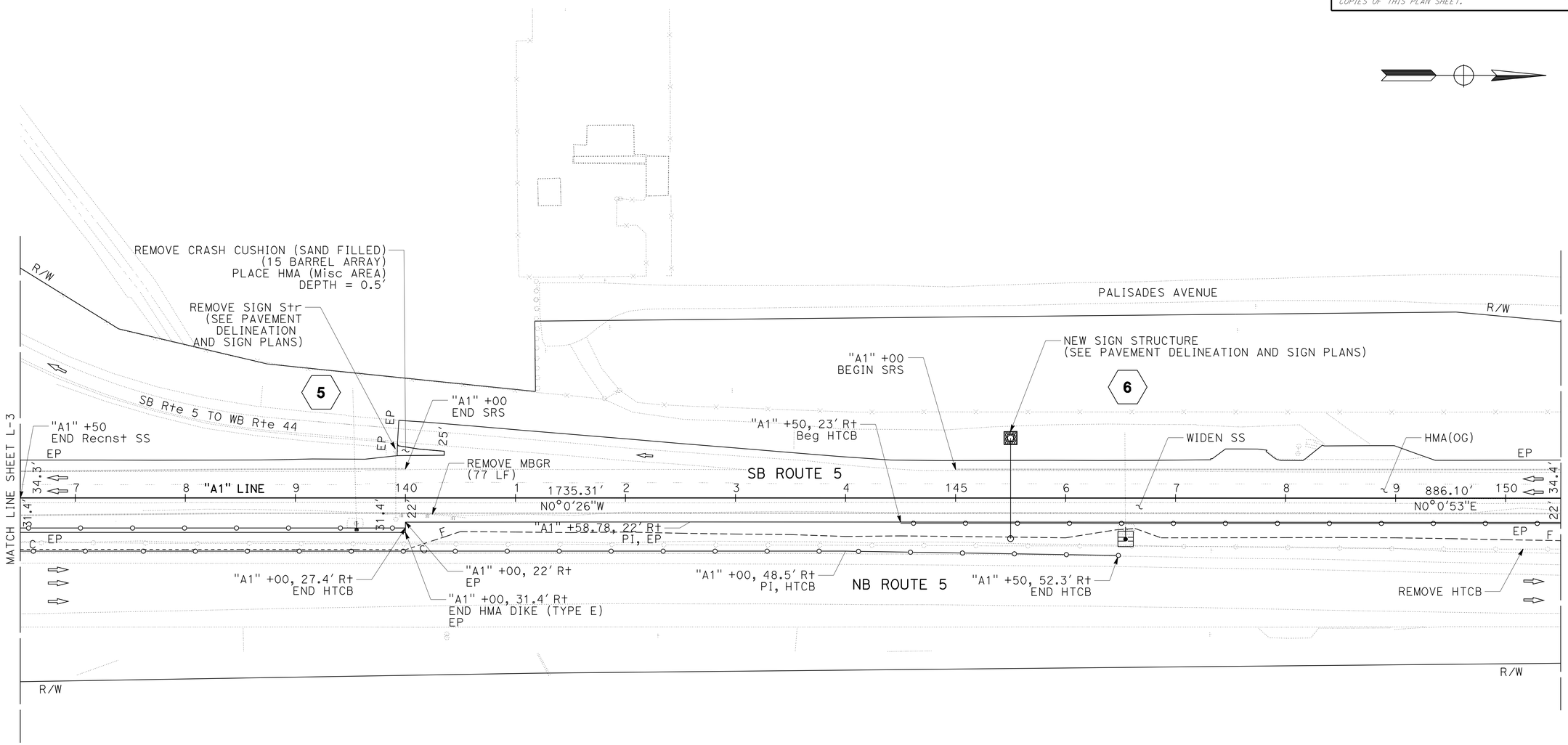


**LAYOUT**

SCALE: 1" = 50'

**L-4**

| REVISED BY | DATE REVISED |
|---|---|
| BYRON STANLEY | ANDREW STECKLEIN |

CALCULATED-DESIGNED BY | CHECKED BY

FUNCTIONAL SUPERVISOR: STEVE TOPAL

STATE OF CALIFORNIA - DEPARTMENT OF TRANSPORTATION

Caltrans

**DESIGN**

P:\proj2\02\3c000\pse\23c000ea004.dgn

LAST REVISION 01-12-10 | DATE PLOTTED => 11-MAY-2010 TIME PLOTTED => 06:44

| Dist | COUNTY | ROUTE | POST MILES TOTAL PROJECT | SHEET No. | TOTAL SHEETS |
|---|---|---|---|---|---|
| 02 | Sha | 5 | R14.9/R16.2 | 10 | 165 |

REGISTERED CIVIL ENGINEER 02-11-10 DATE

5-10-10
PLANS APPROVAL DATE

REGISTERED PROFESSIONAL ENGINEER
ANDREW P. STECKLEIN
No. C67148
Exp. 9-30-10
CIVIL
STATE OF CALIFORNIA

*THE STATE OF CALIFORNIA OR ITS OFFICERS OR AGENTS SHALL NOT BE RESPONSIBLE FOR THE ACCURACY OR COMPLETENESS OF SCANNED COPIES OF THIS PLAN SHEET.*

NOTE:

1. FOR COMPLETE RIGHT OF WAY AND ACCURATE ACCESS DATA, SEE RIGHT OF WAY RECORD MAPS AT DISTRICT OFFICE.

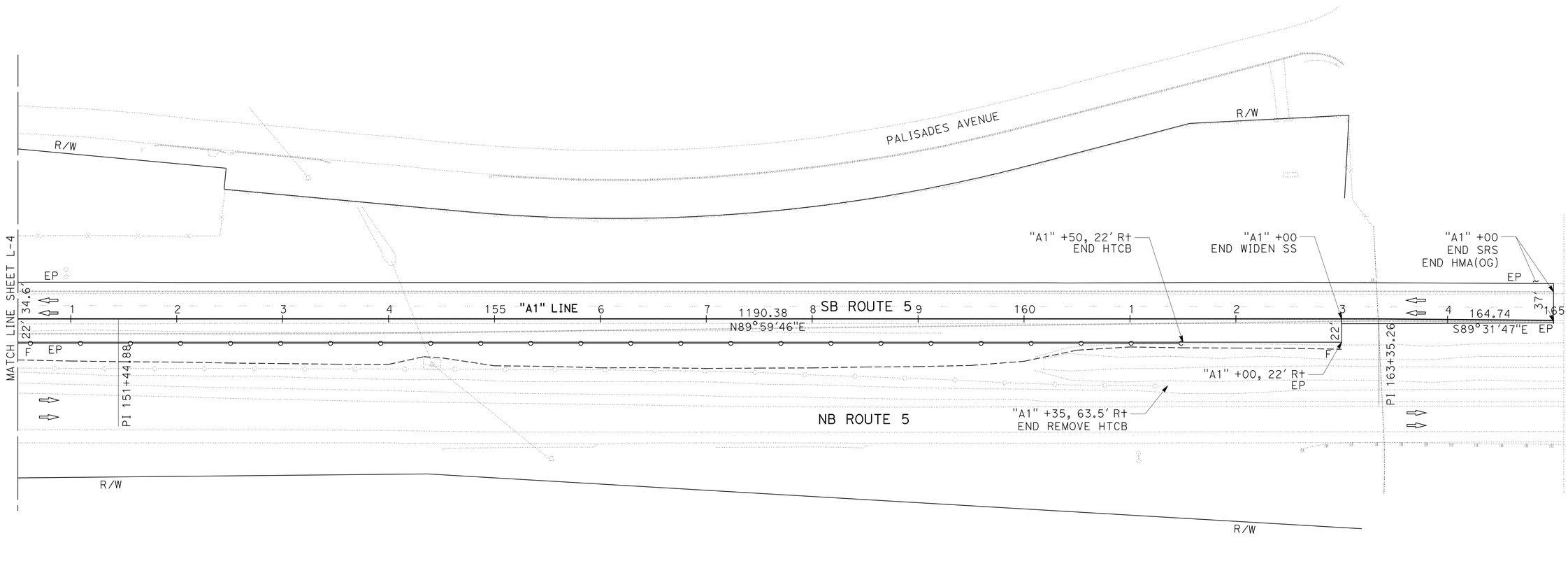


# LAYOUT

SCALE: 1" = 50'

**L-5**

| REVISED BY | DATE REVISED |
|---|---|
| | |

CALCULATED-DESIGNED BY: RUSSELL FLOOD
CHECKED BY: ANDREW STECKLEIN
FUNCTIONAL SUPERVISOR: STEVE TOPAL

STATE OF CALIFORNIA - DEPARTMENT OF TRANSPORTATION
Caltrans
DESIGN

P:\proj2\02\3c000\pse\23c000ea005.dgn

LAST REVISION 01-12-10 | DATE PLOTTED => 11-MAY-2010 | TIME PLOTTED => 96:28

| Dist | COUNTY | ROUTE | POST MILES TOTAL PROJECT | SHEET No. | TOTAL SHEETS |
|---|---|---|---|---|---|
| 02 | Sha | 5 | R14.9/R16.2 | 11 | 165 |

REGISTERED CIVIL ENGINEER 02-11-10 DATE

5-10-10
PLANS APPROVAL DATE

REGISTERED PROFESSIONAL ENGINEER
ANDREW P. STECKLEIN
No. C67148
Exp. 9-30-10
CIVIL
STATE OF CALIFORNIA

*THE STATE OF CALIFORNIA OR ITS OFFICERS OR AGENTS SHALL NOT BE RESPONSIBLE FOR THE ACCURACY OR COMPLETENESS OF SCANNED COPIES OF THIS PLAN SHEET.*

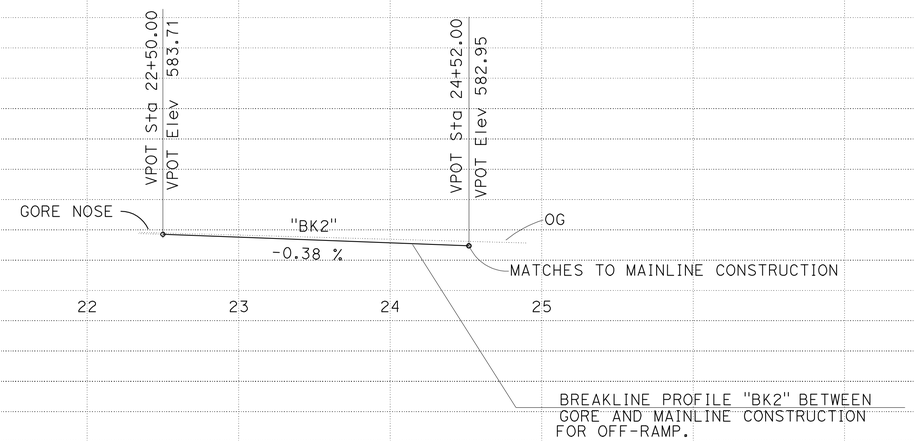


## BREAKLINE PROFILE "BK2"

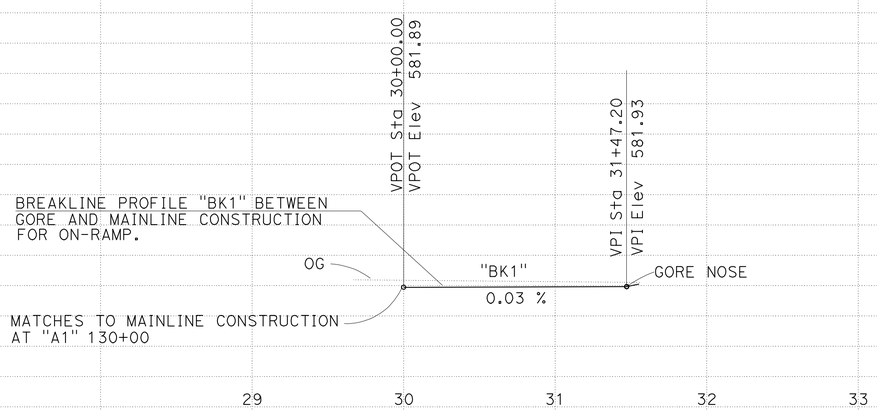


## BREAKLINE PROFILE "BK1"

## PROFILE

SCALE: 1" = 50' Horiz
1" = 5' Vert

**P-1**

| STATION | | |
|---|---|---|
| CY | Exc | |
| | Emb | |

TOTAL

REVISED BY | DATE REVISED

BYRON STANLEY | ANDREW STECKLEIN

CALCULATED-DESIGNED BY | CHECKED BY

FUNCTIONAL SUPERVISOR: STEVE TOPAL

STATE OF CALIFORNIA - DEPARTMENT OF TRANSPORTATION
Caltrans
DESIGN

P:\proj2\02\3c000\pse\23c000fa001.dgn

LAST REVISION | DATE PLOTTED => 10-MAY-2010 | TIME PLOTTED => 13:49

| Dist | COUNTY | ROUTE | POST MILES TOTAL PROJECT | SHEET No. | TOTAL SHEETS |
|---|---|---|---|---|---|
| 02 | Sha | 5 | R14.9/R16.2 | 12 | 165 |

REGISTERED CIVIL ENGINEER 02-11-10 DATE

5-10-10
PLANS APPROVAL DATE

REGISTERED PROFESSIONAL ENGINEER ANDREW P. STECKLEIN No. C67148 Exp. 9-30-10 CIVIL STATE OF CALIFORNIA

*THE STATE OF CALIFORNIA OR ITS OFFICERS OR AGENTS SHALL NOT BE RESPONSIBLE FOR THE ACCURACY OR COMPLETENESS OF SCANNED COPIES OF THIS PLAN SHEET.*

REVISED BY | DATE REVISED

ANDREW STECKLEIN | STEVE TOPAL

CALCULATED-DESIGNED BY | CHECKED BY

FUNCTIONAL SUPERVISOR: STEVE TOPAL

STATE OF CALIFORNIA - DEPARTMENT OF TRANSPORTATION
Caltrans® DESIGN

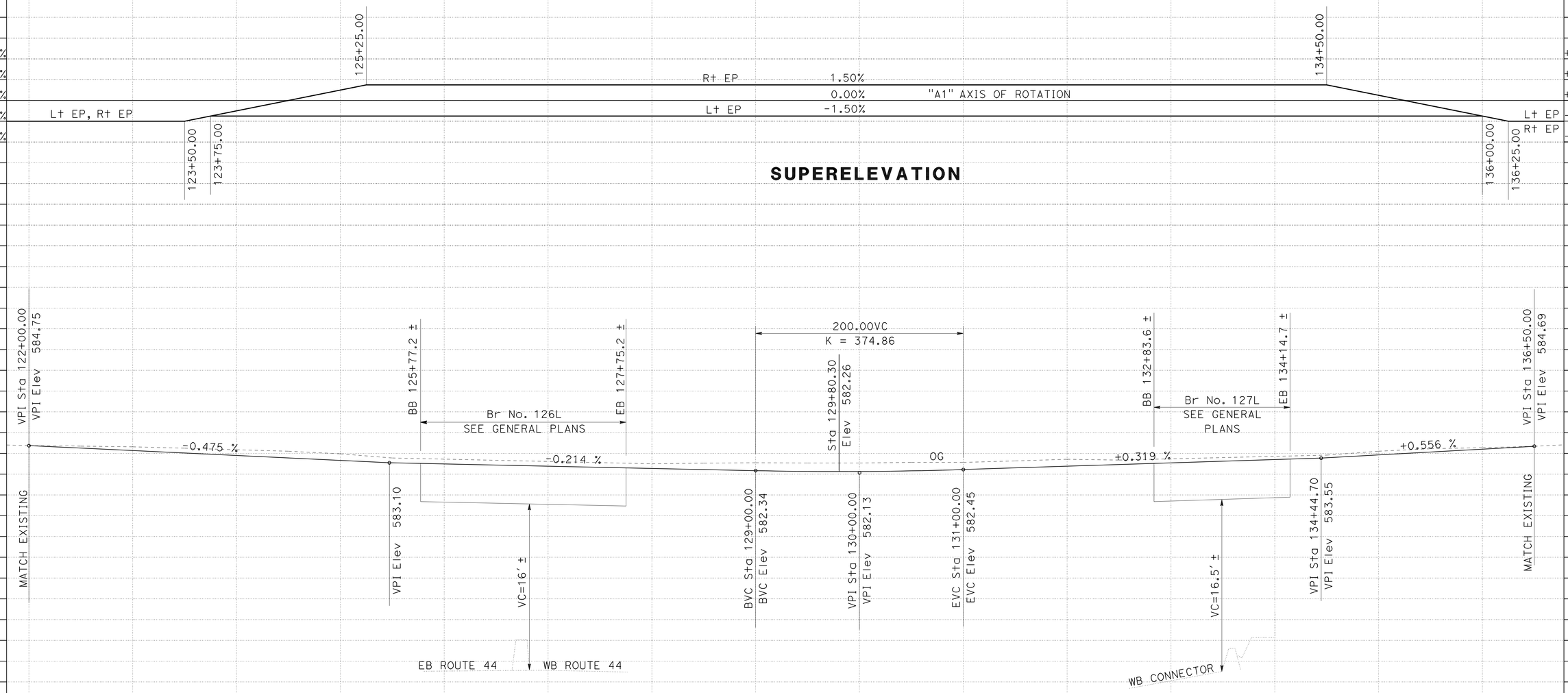


**PROFILE**
"A1" MAINLINE

# PROFILE AND SUPERELEVATION DIAGRAM

SCALE: 1" = 50' Horiz
1" = 5' Vert

**PS-1**

| STATION | 122 | 123 | 124 | 125 | 126 | 127 | 128 | 129 | 130 | 131 | 132 | 133 | 134 | 135 | 136 | TOTAL |
|---|---|---|---|---|---|---|---|---|---|---|---|---|---|---|---|---|
| CY Exc | | 880.4 | 960.2 | 1271.2 | 629.4 | BRIDGE STRUCTURE | | 1005.1 | 1158.7 | 830.2 | 1083.1 | 549.3 | BRIDGE STRUCTURE | 395.9 | 765.7 | 9912.8 |
| CY Emb | | | | | | | | | | | | | | | | |

P:\proj2\02\3c000\pse\23c000fb001.dgn

LAST REVISION | DATE PLOTTED => 10-MAY-2010 | TIME PLOTTED => 13:49

| Dist | COUNTY | ROUTE | POST MILES TOTAL PROJECT | SHEET No. | TOTAL SHEETS |
|---|---|---|---|---|---|
| 02 | Sha | 5 | R14.9/R16.2 | 13 | 165 |

REGISTERED CIVIL ENGINEER 02-11-10 DATE

5-10-10
PLANS APPROVAL DATE

REGISTERED PROFESSIONAL ENGINEER
ANDREW P. STECKLEIN
No. C67148
Exp. 9-30-10
CIVIL
STATE OF CALIFORNIA

*THE STATE OF CALIFORNIA OR ITS OFFICERS OR AGENTS SHALL NOT BE RESPONSIBLE FOR THE ACCURACY OR COMPLETENESS OF SCANNED COPIES OF THIS PLAN SHEET.*

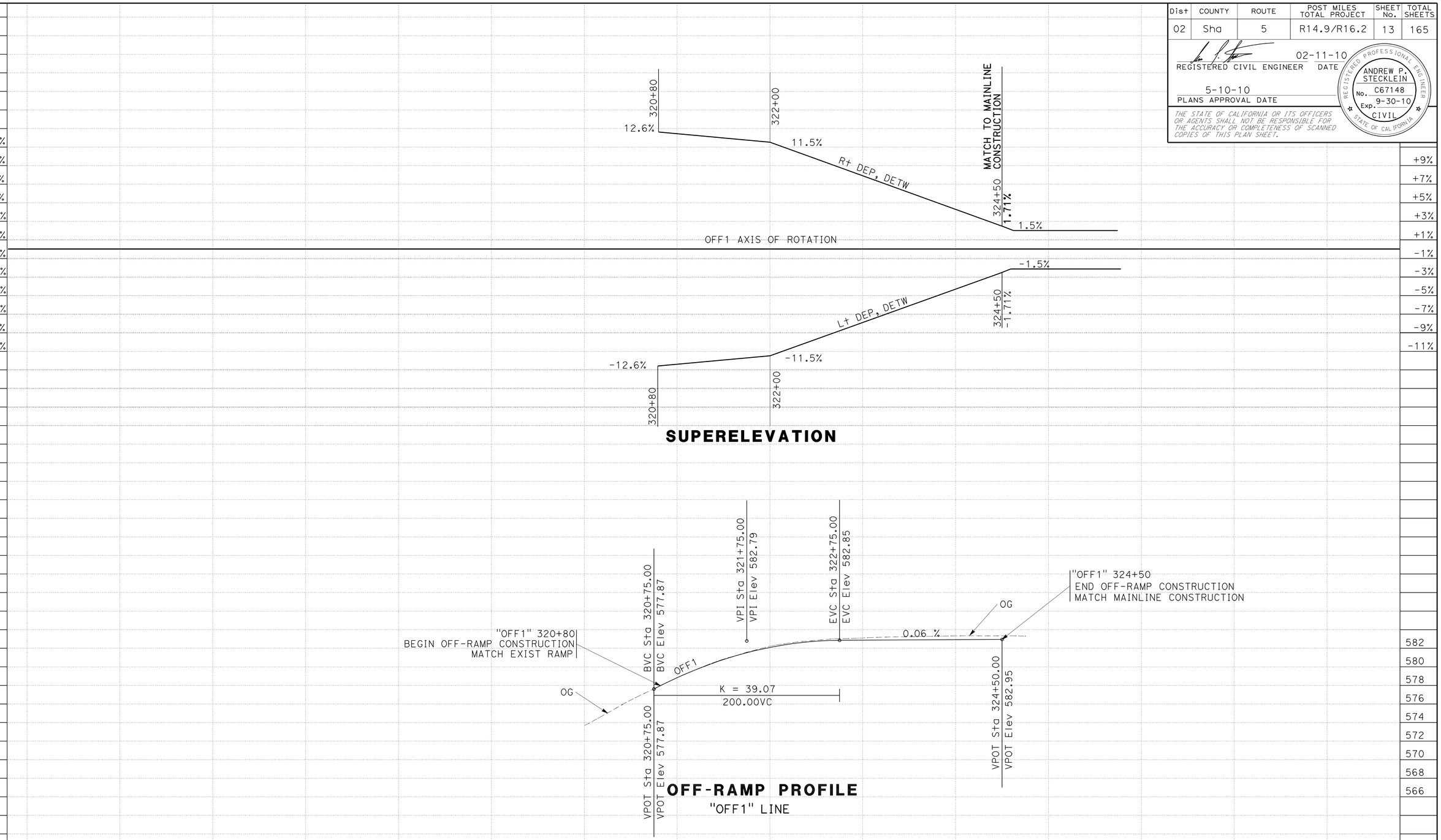


| STATION | 314 | 315 | 316 | 317 | 318 | 319 | 320 | 321 | 322 | 323 | 324 | 325 | TOTAL |
|---|---|---|---|---|---|---|---|---|---|---|---|---|---|
| CY Exc | | | | | | | | 320 | 302 | 288 | 125 | | 1035 |
| CY Emb | | | | | | | | | | | | | |

# PROFILE AND SUPERELEVATION DIAGRAM

SCALE: 1" = 50' Horiz
1" = 10' Vert

**PS-2**

REVISED BY | DATE REVISED
BYRON STANLEY | ANDREW STECKLEIN
CALCULATED-DESIGNED BY | CHECKED BY
FUNCTIONAL SUPERVISOR: STEVE TOPAL

STATE OF CALIFORNIA - DEPARTMENT OF TRANSPORTATION
Caltrans
DESIGN

P:\proj2\02\3c000\pse\23c000fb002.dgn

DATE PLOTTED => 10-MAY-2010
TIME PLOTTED => 13:38

LAST REVISION

BORDER LAST REVISED 4/11/2008 | RELATIVE BORDER SCALE IS IN INCHES 0 1 2 3 | USERNAME => trrene | DGN FILE => 23c000fb002.dgn | CU 03 247 | EA 3C0001

| Dist | COUNTY | ROUTE | POST MILES TOTAL PROJECT | SHEET No. | TOTAL SHEETS |
|---|---|---|---|---|---|
| 02 | Sha | 5 | R14.9/R16.2 | 14 | 165 |

REGISTERED CIVIL ENGINEER 02-11-10 DATE

5-10-10
PLANS APPROVAL DATE

REGISTERED PROFESSIONAL ENGINEER ANDREW P. STECKLEIN No. C67148 Exp. 9-30-10 CIVIL STATE OF CALIFORNIA

*THE STATE OF CALIFORNIA OR ITS OFFICERS OR AGENTS SHALL NOT BE RESPONSIBLE FOR THE ACCURACY OR COMPLETENESS OF SCANNED COPIES OF THIS PLAN SHEET.*

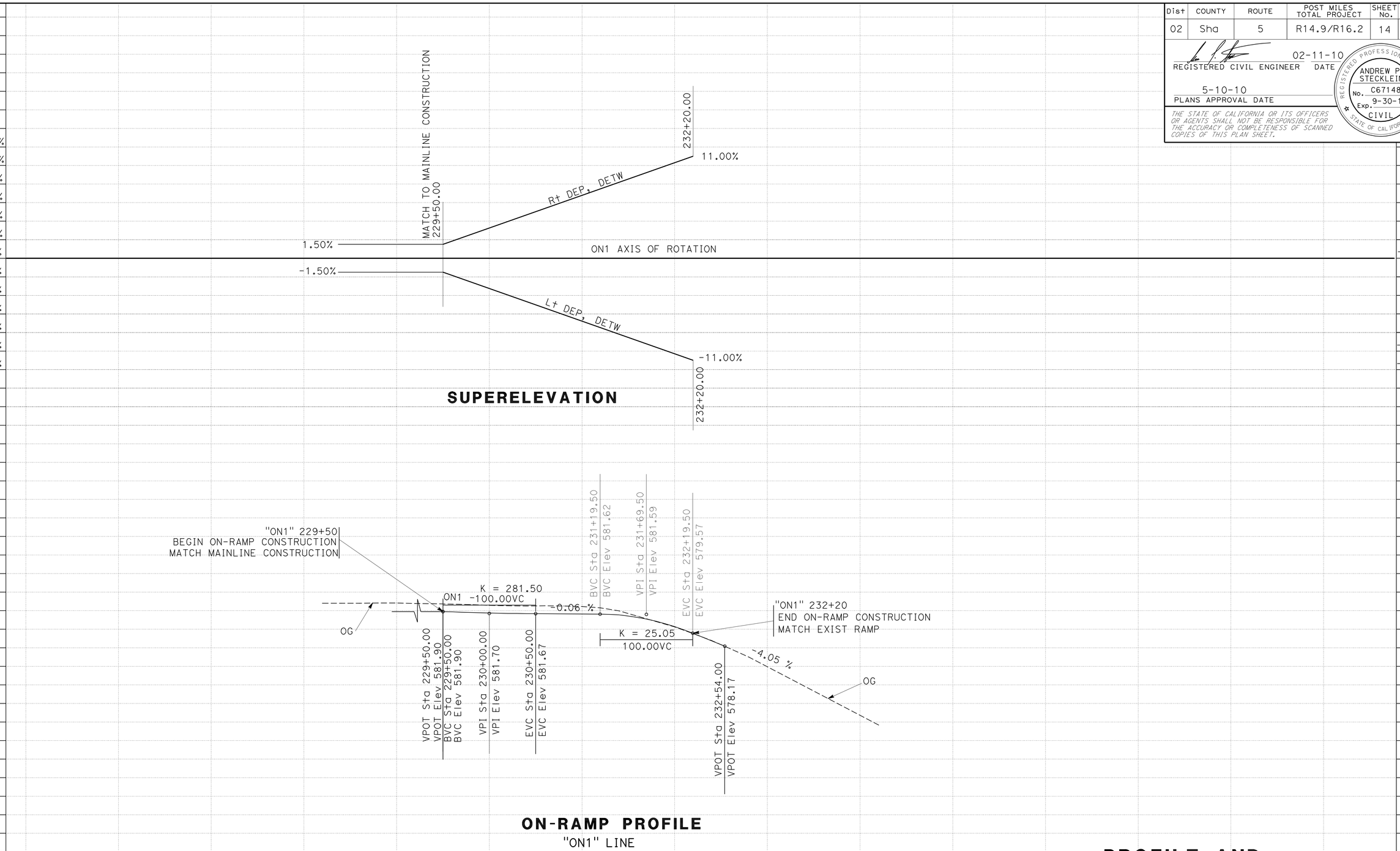


| STATION | | 228 | 229 | 230 | 231 | 232 | 233 | 234 | 235 | TOTAL |
|---|---|---|---|---|---|---|---|---|---|---|
| CY | Exc | | 156 | 318 | 285 | 55 | | | | 814 |
| | Emb | | | | | | | | | |

# PROFILE AND SUPERELEVATION DIAGRAM

SCALE: 1" = 50' Horiz
1" = 5' Vert

**PS-3**

| REVISED BY | DATE REVISED |
|---|---|
| BYRON STANLEY | ANDREW STECKLEIN |

| CALCULATED-DESIGNED BY | CHECKED BY |
|---|---|
| | |

FUNCTIONAL SUPERVISOR: STEVE TOPAL

STATE OF CALIFORNIA - DEPARTMENT OF TRANSPORTATION
Caltrans
DESIGN

P:\proj2\02\3c000\pse\23c000fb003.dgn

DATE PLOTTED => 10-MAY-2010
TIME PLOTTED => 13:38

LAST REVISION

| Dist | COUNTY | ROUTE | POST MILES TOTAL PROJECT | SHEET No. | TOTAL SHEETS |
|---|---|---|---|---|---|
| 02 | Sha | 5 | R14.9/R16.2 | 15 | 165 |

REGISTERED CIVIL ENGINEER 02-11-10 DATE

5-10-10
PLANS APPROVAL DATE

REGISTERED PROFESSIONAL ENGINEER ANDREW P. STECKLEIN No. C67148 Exp. 9-30-10 CIVIL STATE OF CALIFORNIA

*THE STATE OF CALIFORNIA OR ITS OFFICERS OR AGENTS SHALL NOT BE RESPONSIBLE FOR THE ACCURACY OR COMPLETENESS OF SCANNED COPIES OF THIS PLAN SHEET.*

NOTES:

1. SEE STANDARD PLAN FOR ADDITIONAL INFORMATION.
2. SEE STANDARD PLAN FOR CONCRETE BARRIER TYPE 60C AND TYPE 732.
3. FOOTING MONOLITHIC OR DOWELED WITH 2-#8 x 8" @ 2'-0" C-C. THE FOOTING IS REQUIRED AT CONCRETE BARRIER ENDS AND AT INTERRUPTIONS IN CONCRETE BARRIER.
4. 10" CONCRETE BARRIER FOOTING EXTENDS 10' BACK FROM STRUCTURE.
5. ELEVATIONS AND OFFSETS SHOWN ARE TOP CENTERLINE OF BARRIER.

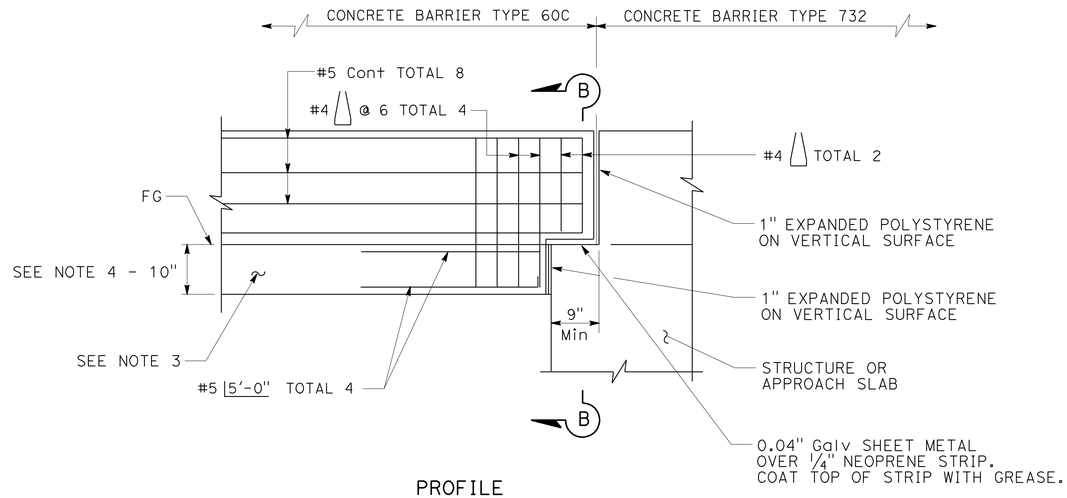


PROFILE

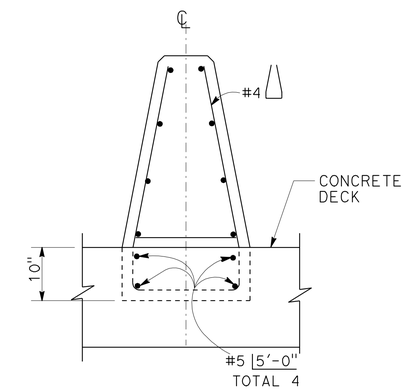


SECTION B-B

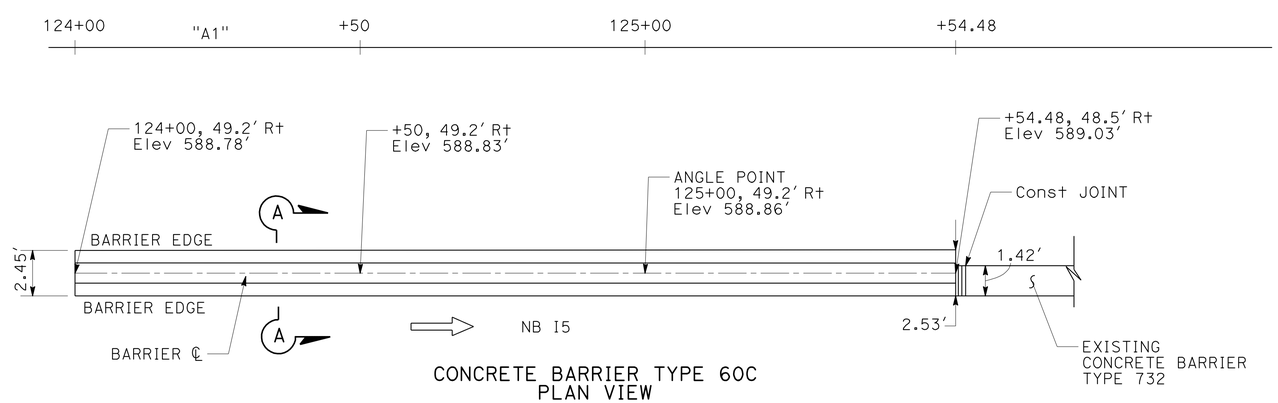


CONCRETE BARRIER TYPE 60C
PLAN VIEW

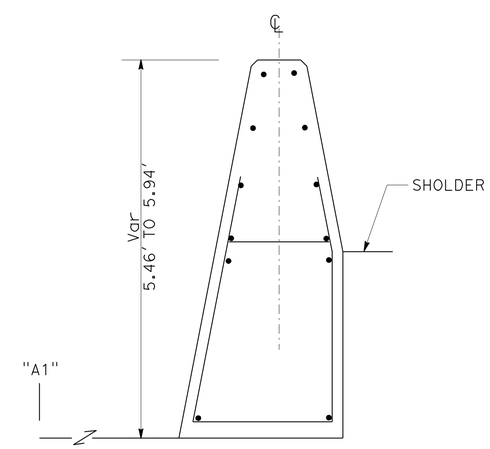


SECTION A-A
REFER TO Std PLAN FOR STEEL DETAILS

**TRANSITION CONCRETE BARRIER TYPE 60C TO CONCRETE BARRIER TYPE 732 BRIDGE 06-126L**

**CONSTRUCTION DETAILS**
NO SCALE

**C-1**

REVISED BY | DATE REVISED
ANDREW STECKLEIN | BOB WEBER
CALCULATED-DESIGNED BY | CHECKED BY
FUNCTIONAL SUPERVISOR | STEVE TOPAL
STATE OF CALIFORNIA - DEPARTMENT OF TRANSPORTATION
Caltrans® DESIGN
P:\proj2\02\3c000\pse\23c000ga001.dgn

LAST REVISION 06-29-09 | DATE PLOTTED => 10-MAY-2010 | TIME PLOTTED => 13:38

BORDER LAST REVISED 4/11/2008 | RELATIVE BORDER SCALE IS IN INCHES 0 1 2 3 | USERNAME => trrene | DGN FILE => 23c000ga001.dgn | CU 03 247 | EA 3C0001

| Dist | COUNTY | ROUTE | POST MILES TOTAL PROJECT | SHEET No. | TOTAL SHEETS |
|---|---|---|---|---|---|
| 02 | Sha | 5 | R14.9/R16.2 | 16 | 165 |

REGISTERED CIVIL ENGINEER 02-11-10 DATE

5-10-10
PLANS APPROVAL DATE

REGISTERED PROFESSIONAL ENGINEER ANDREW P. STECKLEIN No. C67148 Exp. 9-30-10 CIVIL STATE OF CALIFORNIA

*THE STATE OF CALIFORNIA OR ITS OFFICERS OR AGENTS SHALL NOT BE RESPONSIBLE FOR THE ACCURACY OR COMPLETENESS OF SCANNED COPIES OF THIS PLAN SHEET.*

NOTE:

1. REFER TO DETAIL A WHEN THRIE BEAM BARRIER IS PLACED WITHIN HMA LIMITS.

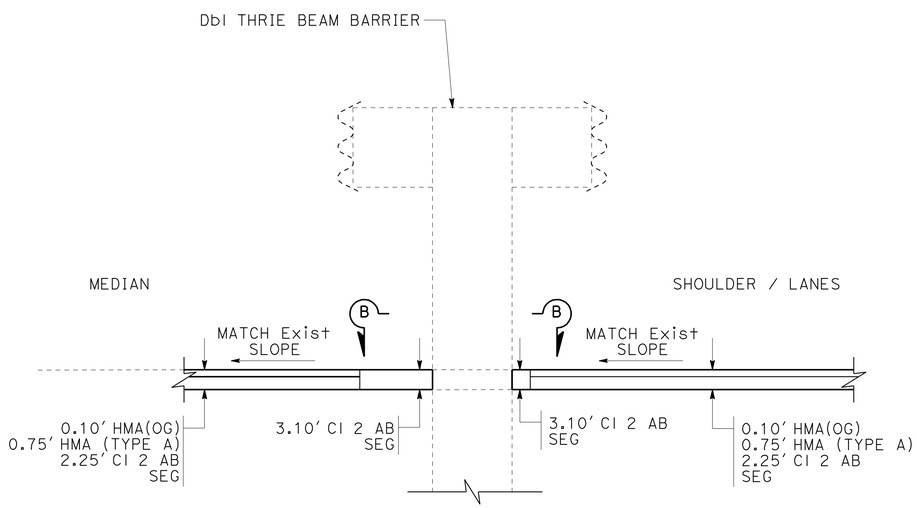


**DETAIL A**

"A1" 107+70 TO 108+00
"A1" 112+00 TO 112+80
"A1" 128+02 TO 129+47
"A1" 134+44 TO 135+20

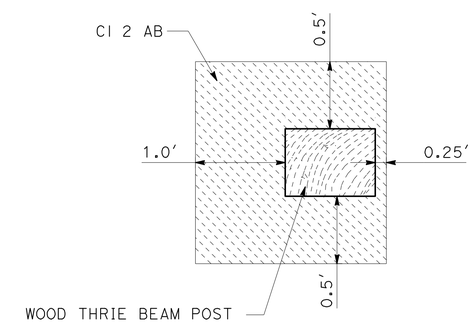


**SECTION B-B**

**THRIE BEAM BARRIER WITHIN HMA LIMITS**

**CONSTRUCTION DETAILS**
NO SCALE

**C-2**

REVISED BY | DATE REVISED
RUSSELL FLOOD | ANDREW STECKLEIN
CALCULATED-DESIGNED BY | CHECKED BY
FUNCTIONAL SUPERVISOR | STEVE TOPAL

STATE OF CALIFORNIA - DEPARTMENT OF TRANSPORTATION
Caltrans
DESIGN

P:\proj2\02\3c000\pse\23c000ga002.dgn

LAST REVISION 06-29-09 | DATE PLOTTED => 10-MAY-2010 | TIME PLOTTED => 13:38

BORDER LAST REVISED 4/11/2008 | RELATIVE BORDER SCALE IS IN INCHES 0 1 2 3 | USERNAME => trrene | DGN FILE => 23c000ga002.dgn | CU 03 247 | EA 3C0001

| Dist | COUNTY | ROUTE | POST MILES TOTAL PROJECT | SHEET No. | TOTAL SHEETS |
|---|---|---|---|---|---|
| 02 | Sha | 5 | R14.9/R16.2 | 17 | 165 |

REGISTERED CIVIL ENGINEER 02-11-10 DATE

5-10-10
PLANS APPROVAL DATE

REGISTERED PROFESSIONAL ENGINEER
ANDREW P. STECKLEIN
No. C67148
Exp. 9-30-10
CIVIL
STATE OF CALIFORNIA

*THE STATE OF CALIFORNIA OR ITS OFFICERS OR AGENTS SHALL NOT BE RESPONSIBLE FOR THE ACCURACY OR COMPLETENESS OF SCANNED COPIES OF THIS PLAN SHEET.*

NOTE:

1. OFF-RAMP IS 12′ WIDE. ON-RAMP IS 14′ WIDE.

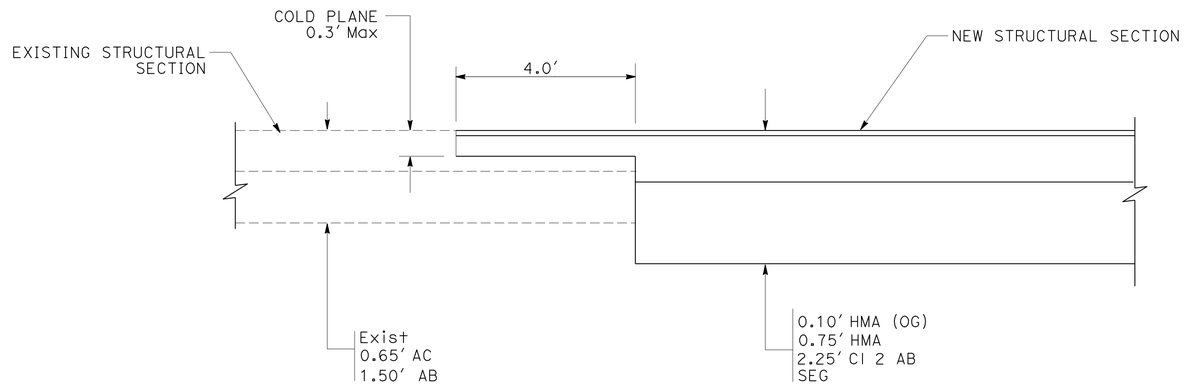


## SECTION A-A

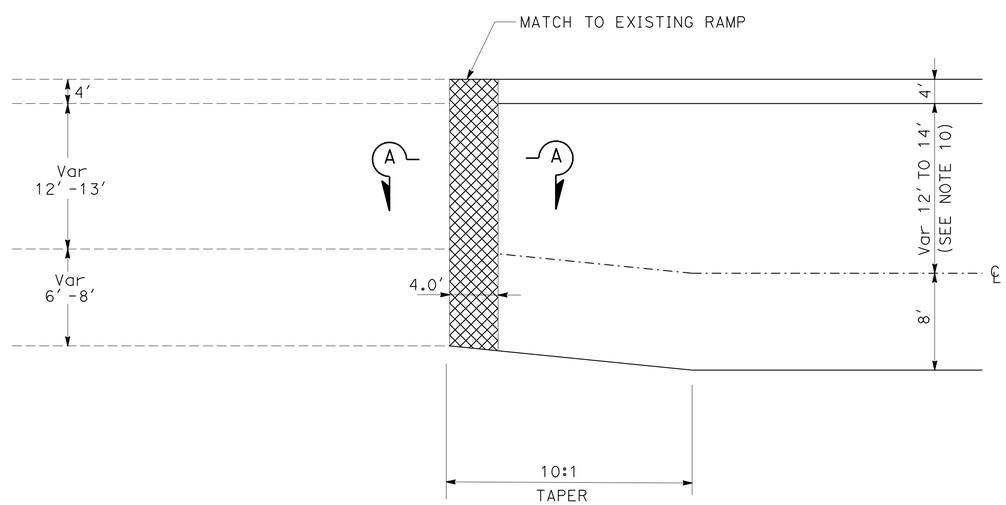


PLAN

## RAMP CONFORM

# CONSTRUCTION DETAILS

NO SCALE

C-3

REVISED BY | DATE REVISED

BYRON STANLEY | ANDREW STECKLEIN

CALCULATED-DESIGNED BY | CHECKED BY

FUNCTIONAL SUPERVISOR: STEVE TOPAL

STATE OF CALIFORNIA - DEPARTMENT OF TRANSPORTATION

Caltrans® DESIGN

P:\proj2\02\3c000\pse\23c000ga003.dgn

LAST REVISION 06-29-09 | DATE PLOTTED => 10-MAY-2010 | TIME PLOTTED => 13:38

| Dist | COUNTY | ROUTE | POST MILES TOTAL PROJECT | SHEET No. | TOTAL SHEETS |
|---|---|---|---|---|---|
| 02 | Sha | 5 | R14.9/R16.2 | 18 | 165 |

REGISTERED CIVIL ENGINEER 02-11-10 DATE

5-10-10
PLANS APPROVAL DATE

REGISTERED PROFESSIONAL ENGINEER
ANDREW P. STECKLEIN
No. C67148
Exp. 9-30-10
CIVIL
STATE OF CALIFORNIA

*THE STATE OF CALIFORNIA OR ITS OFFICERS OR AGENTS SHALL NOT BE RESPONSIBLE FOR THE ACCURACY OR COMPLETENESS OF SCANNED COPIES OF THIS PLAN SHEET.*

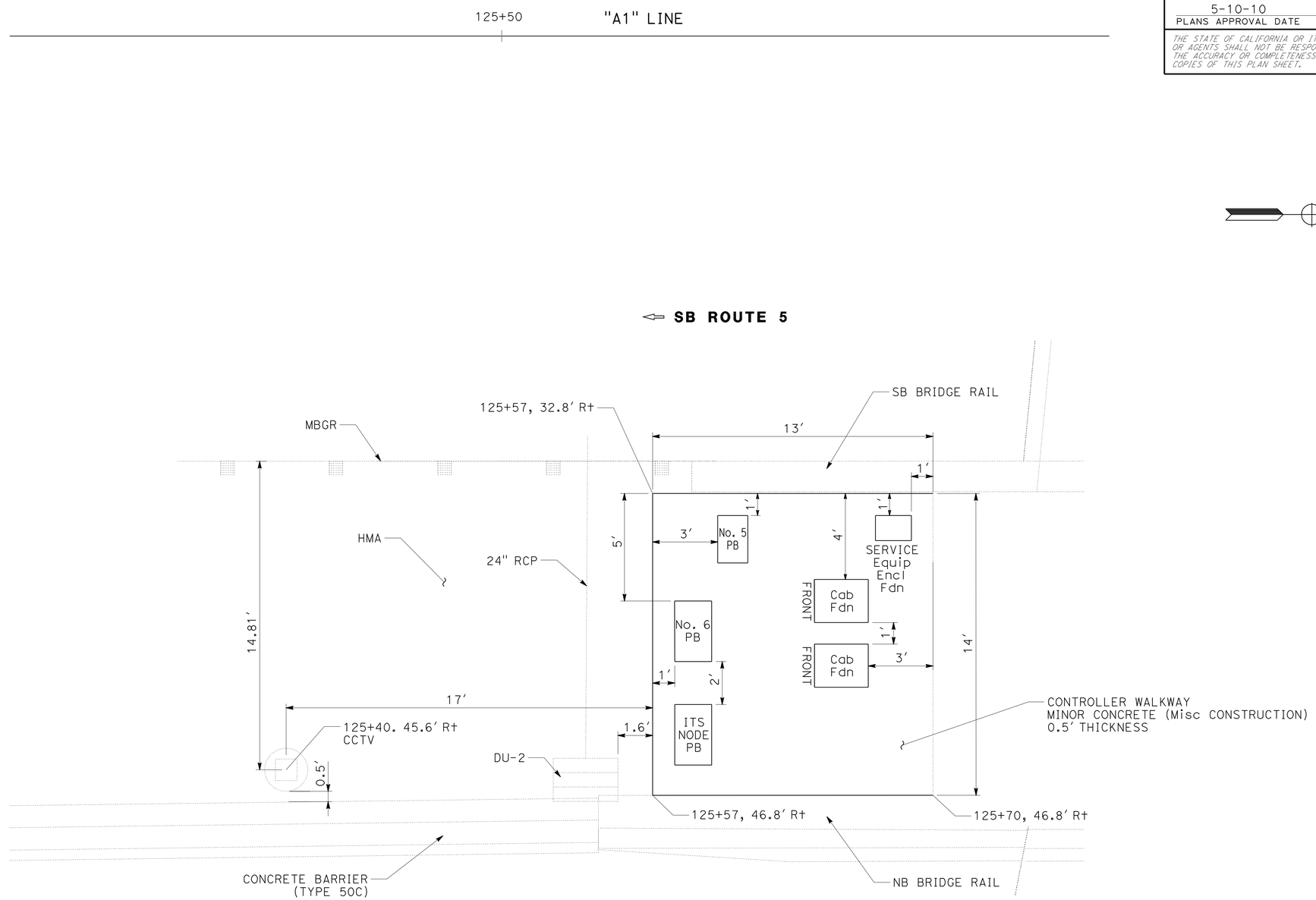


## CONTROLLER WALKWAY

# CONSTRUCTION DETAILS
NO SCALE

C-4

STATE OF CALIFORNIA - DEPARTMENT OF TRANSPORTATION
Caltrans® DESIGN

FUNCTIONAL SUPERVISOR: STEVE TOPAL
CALCULATED-DESIGNED BY: GINNY SEIBERT
CHECKED BY: ANDREW STECKLEIN
REVISED BY
DATE REVISED

P:\proj2\02\3c000\pse\23c000ga004.dgn

LAST REVISION 06-29-09
DATE PLOTTED => 10-MAY-2010
TIME PLOTTED => 13:38

| Dist | COUNTY | ROUTE | POST MILES TOTAL PROJECT | SHEET No. | TOTAL SHEETS |
|---|---|---|---|---|---|
| 02 | Sha | 5 | R14.9/R16.2 | 19 | 165 |

REGISTERED CIVIL ENGINEER 02-11-10 DATE

5-10-10
PLANS APPROVAL DATE

REGISTERED PROFESSIONAL ENGINEER
ANDREW P. STECKLEIN
No. C67148
Exp. 9-30-10
CIVIL
STATE OF CALIFORNIA

*THE STATE OF CALIFORNIA OR ITS OFFICERS OR AGENTS SHALL NOT BE RESPONSIBLE FOR THE ACCURACY OR COMPLETENESS OF SCANNED COPIES OF THIS PLAN SHEET.*

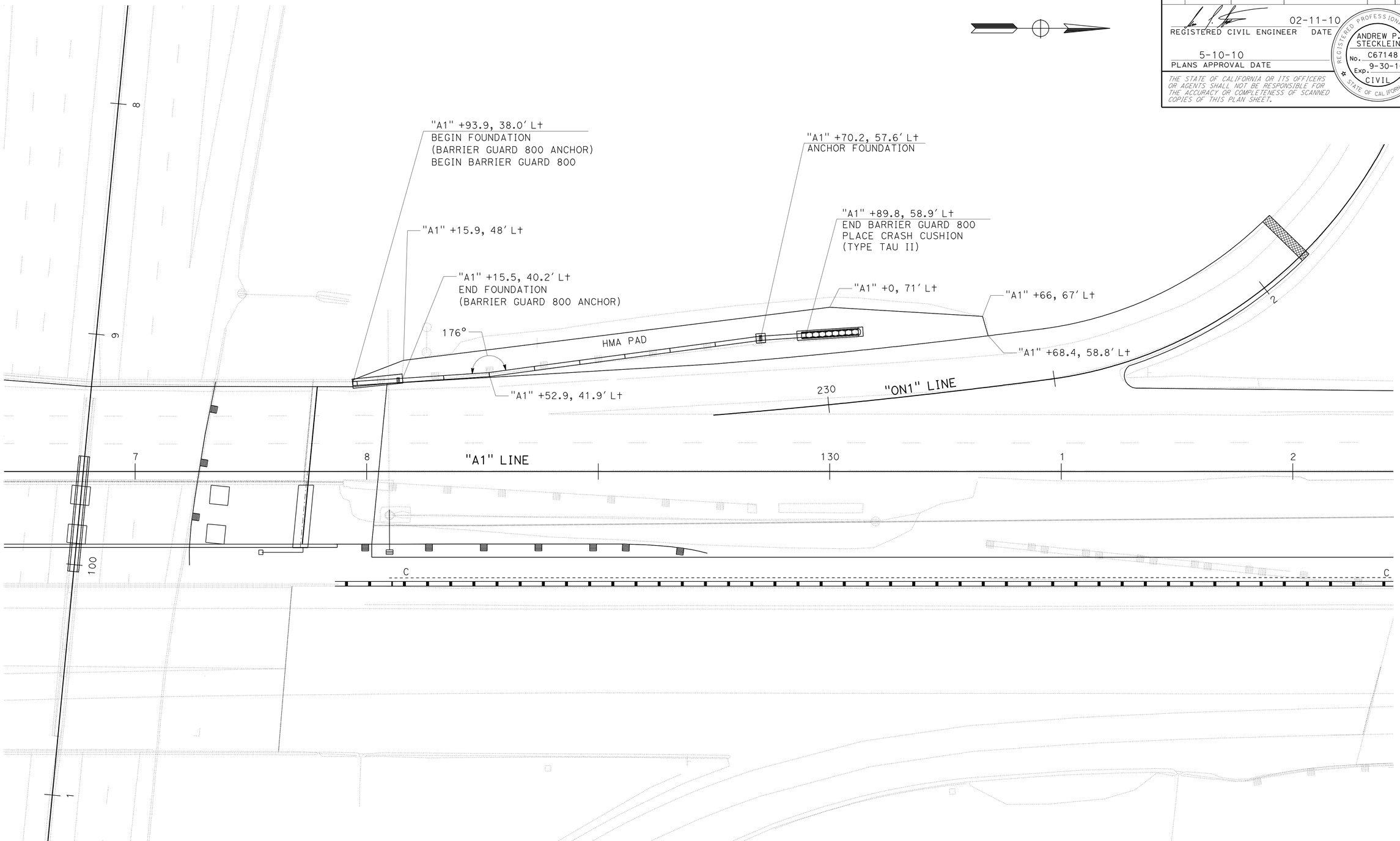


# CONSTRUCTION DETAILS

SCALE: 1" = 20′

C-5

REVISED BY | DATE REVISED

BOB WEBER | ANDREW STECKLEIN

CALCULATED-DESIGNED BY | CHECKED BY

FUNCTIONAL SUPERVISOR

STEVE TOPAL

STATE OF CALIFORNIA - DEPARTMENT OF TRANSPORTATION

Caltrans

DESIGN

P:\proj2\02\3c000\pse\23c000ga005.dgn

LAST REVISION 01-11-10 | DATE PLOTTED => 10-MAY-2010 | TIME PLOTTED => 13:39

BORDER LAST REVISED 4/11/2008

RELATIVE BORDER SCALE IS IN INCHES 0 1 2 3

USERNAME => trrene
DGN FILE => 23c000ga005.dgn

CU 03 247

EA 3C0001

| Dist | COUNTY | ROUTE | POST MILES TOTAL PROJECT | SHEET No. | TOTAL SHEETS |
|---|---|---|---|---|---|
| 02 | Sha | 5 | R14.9/R16.2 | 20 | 165 |

REGISTERED CIVIL ENGINEER 02-11-10 DATE

5-10-10
PLANS APPROVAL DATE

REGISTERED PROFESSIONAL ENGINEER
ANDREW P. STECKLEIN
No. C67148
Exp. 9-30-10
CIVIL
STATE OF CALIFORNIA

*THE STATE OF CALIFORNIA OR ITS OFFICERS OR AGENTS SHALL NOT BE RESPONSIBLE FOR THE ACCURACY OR COMPLETENESS OF SCANNED COPIES OF THIS PLAN SHEET.*

NOTES:

1. TAU-II SYSTEM TO BE INSTALLED PER MANUFACTURER'S INSTRUCTIONS. REFER TO INSTALLATION AND ASSEMBLY MANUAL.
2. SYSTEM SHOWN INSTALLED ON BARRIER GUARD 800.
3. ALL ANCHORS INTO CONCRETE FOR CRASH CUSHION, BRACKETS, AND BARRIER TO BE IN ACCORDANCE WITH SPECIFICATIONS FOR PCC FOUNDATIONS. REFER TO INSTALLATION AND ASSEMBLY MANUAL.

## FOUNDATIONS

| BEGINNING STATION | FOUNDATION LENGTHS (L) | COMMENTS |
|---|---|---|
| "A1" 127+93.9, 38.0' L+ | 21.7' | BARRIER GUARD 800 ANCHOR |
| "A1" 129+70.2, 57.6' L+ | 4.0' | ANCHOR FOUNDATION |
| "A1" 129+89.9, 58.9' L+ | 28.5' | TAU II (8 BAY) |

LEGEND

Reinf Conc FOUNDATION

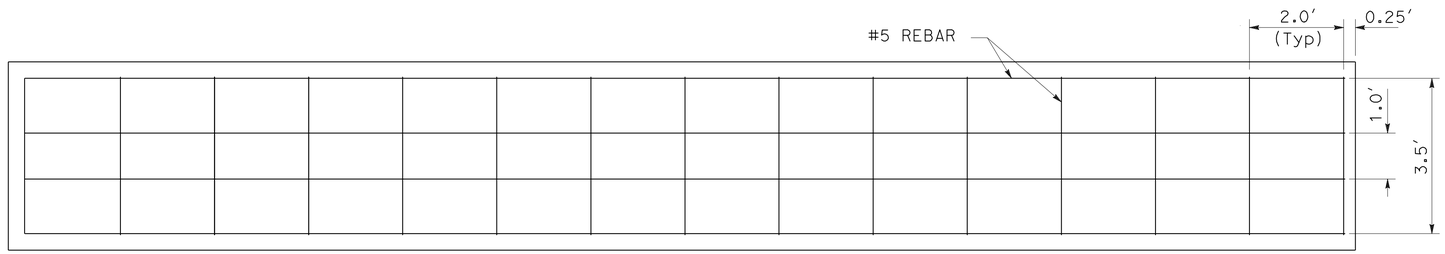


## TYPICAL FOUNDATION DETAIL

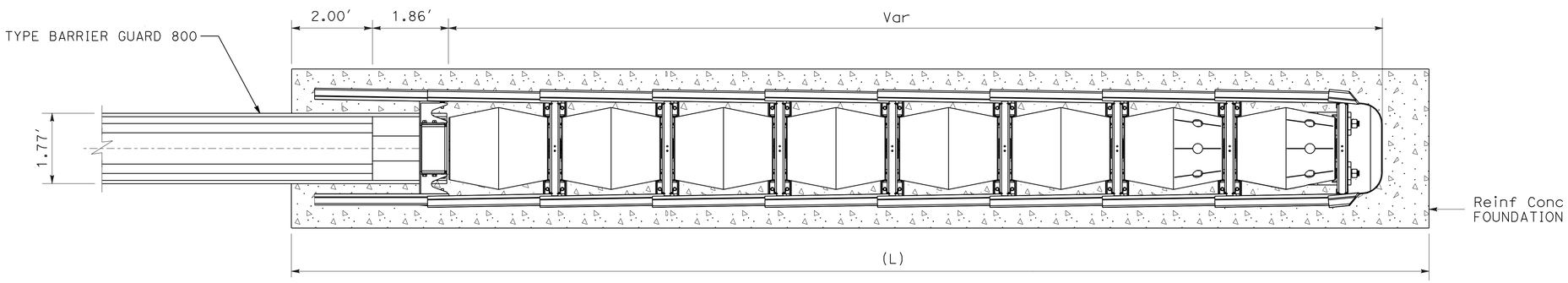


PLAN

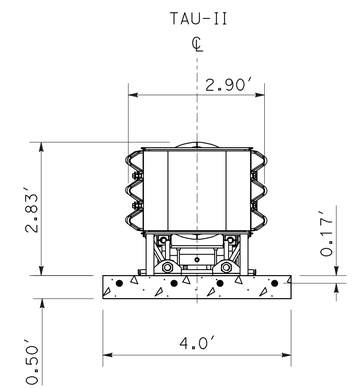


END

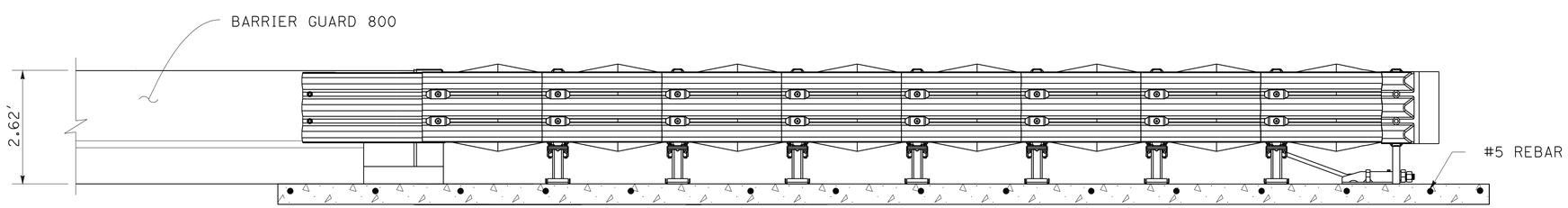


ELEVATION

## TYPICAL CRASH CUSHION (TAU-II SYSTEM)

8 BAY SYSTEM SHOWN

## CONSTRUCTION DETAILS

NO SCALE

C-6

STATE OF CALIFORNIA - DEPARTMENT OF TRANSPORTATION
Caltrans DESIGN

FUNCTIONAL SUPERVISOR: STEVE TOPAL
CALCULATED-DESIGNED BY: ANDREW STECKLEIN
CHECKED BY: BOB WEBER
REVISED BY
DATE REVISED

P:\proj2\02\3c000\pse\23c000ga006.dgn

LAST REVISION 01-11-10 | DATE PLOTTED => 10-MAY-2010 | TIME PLOTTED => 13:39

| Dist | COUNTY | ROUTE | POST MILES TOTAL PROJECT | SHEET No. | TOTAL SHEETS |
|---|---|---|---|---|---|
| 02 | Sha | 5 | R14.9/R16.2 | 21 | 165 |

REGISTERED CIVIL ENGINEER 02-11-10 DATE

5-10-10
PLANS APPROVAL DATE

REGISTERED PROFESSIONAL ENGINEER
ANDREW P. STECKLEIN
No. C67148
Exp. 9-30-10
CIVIL
STATE OF CALIFORNIA

*THE STATE OF CALIFORNIA OR ITS OFFICERS OR AGENTS SHALL NOT BE RESPONSIBLE FOR THE ACCURACY OR COMPLETENESS OF SCANNED COPIES OF THIS PLAN SHEET.*

NOTE:

1. FOR COMPLETE RIGHT OF WAY AND ACCURATE ACCESS DATA, SEE RIGHT OF WAY RECORD MAPS AT DISTRICT OFFICE.

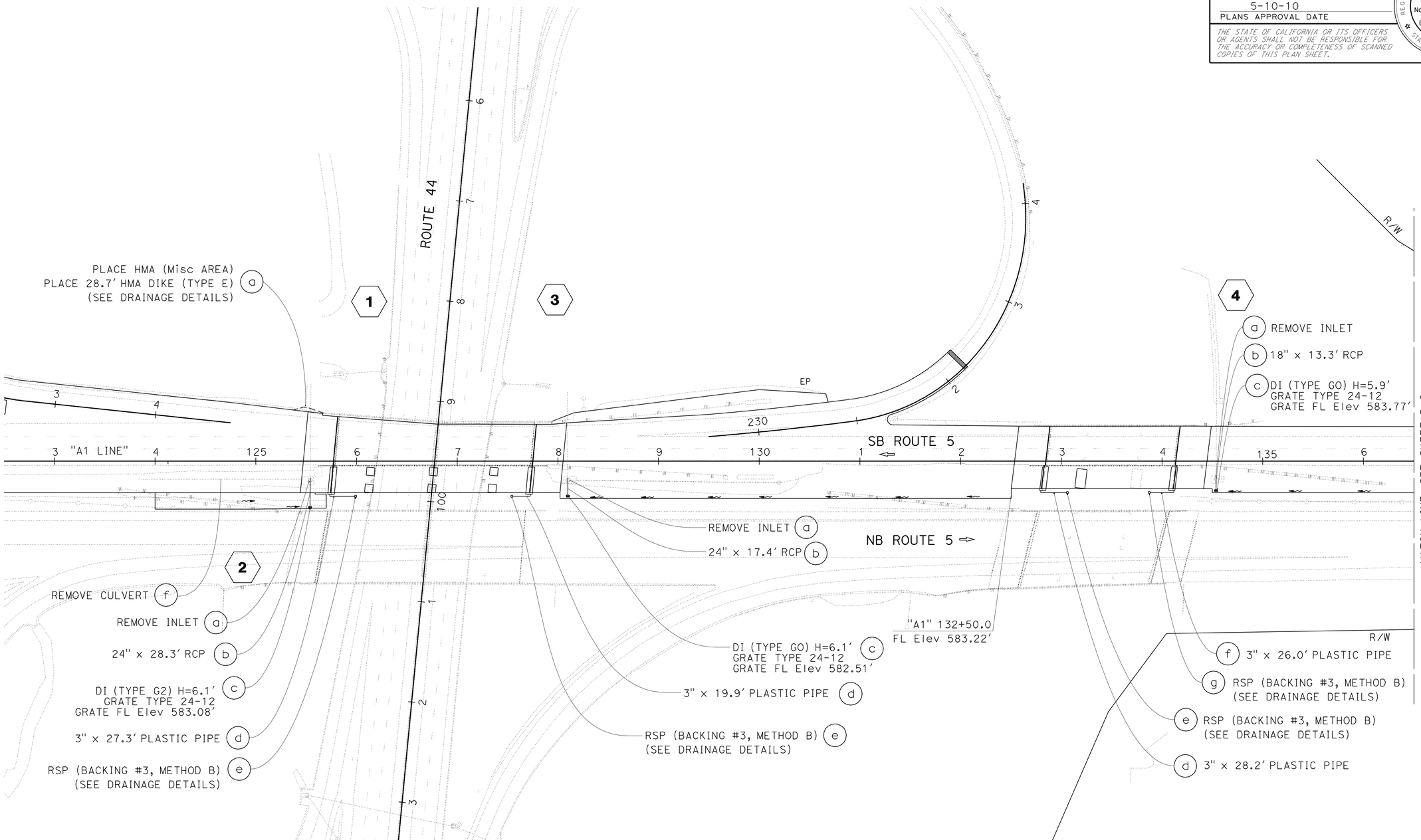


# DRAINAGE PLAN

SCALE: 1" = 50'

D-1

THIS SHEET ACCURATE FOR DRAINAGE WORK ONLY.

REVISED BY | DATE REVISED

RUSSELL FLOOD | ANDREW STECKLEIN

CALCULATED-DESIGNED BY | CHECKED BY

FUNCTIONAL SUPERVISOR: STEVE TOPAL

STATE OF CALIFORNIA - DEPARTMENT OF TRANSPORTATION

Caltrans DESIGN

P:\proj2\02\3c000\pse\23c0001a001.dgn

LAST REVISION 06-29-09 | DATE PLOTTED => 10-MAY-2010 | TIME PLOTTED => 13:39

| Dist | COUNTY | ROUTE | POST MILES TOTAL PROJECT | SHEET No. | TOTAL SHEETS |
|---|---|---|---|---|---|
| 02 | Sha | 5 | R14.9/R16.2 | 22 | 165 |

REGISTERED CIVIL ENGINEER 02-11-10 DATE

5-10-10
PLANS APPROVAL DATE

REGISTERED PROFESSIONAL ENGINEER
ANDREW P. STECKLEIN
No. C67148
Exp. 9-30-10
CIVIL
STATE OF CALIFORNIA

*THE STATE OF CALIFORNIA OR ITS OFFICERS OR AGENTS SHALL NOT BE RESPONSIBLE FOR THE ACCURACY OR COMPLETENESS OF SCANNED COPIES OF THIS PLAN SHEET.*

NOTE:

1. FOR COMPLETE RIGHT OF WAY AND ACCURATE ACCESS DATA, SEE RIGHT OF WAY RECORD MAPS AT DISTRICT OFFICE.

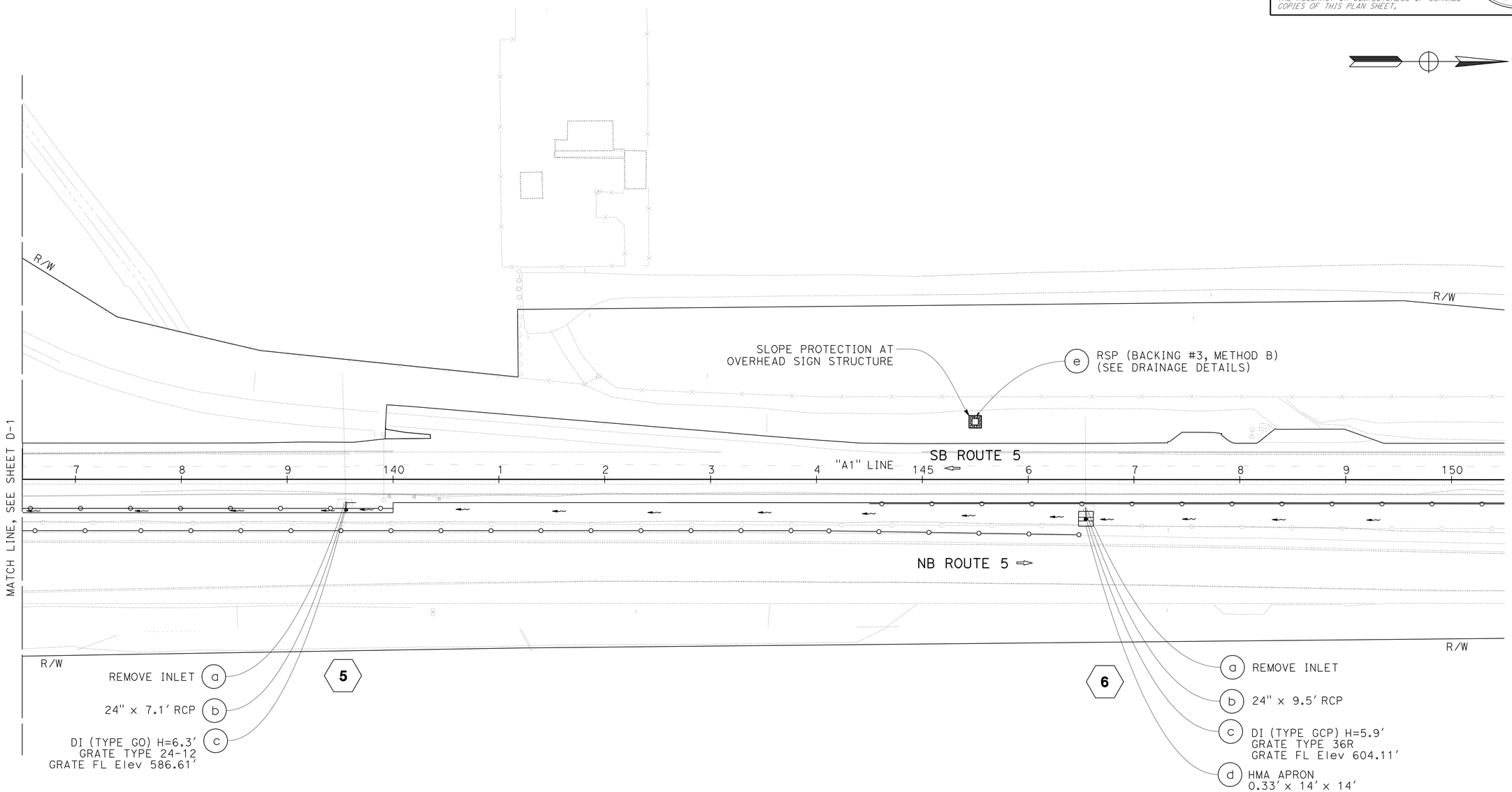


# DRAINAGE PLAN

SCALE: 1" = 50'

D-2

THIS SHEET ACCURATE FOR DRAINAGE WORK ONLY.

| | |
|---|---|
| REVISED BY | |
| DATE REVISED | |
| CALCULATED-DESIGNED BY | RUSSELL FLOOD |
| CHECKED BY | ANDREW STECKLEIN |
| FUNCTIONAL SUPERVISOR | STEVE TOPAL |

STATE OF CALIFORNIA - DEPARTMENT OF TRANSPORTATION
Caltrans
DESIGN

P:\proj2\02\3c000\pse\23c000ia002.dgn

LAST REVISION 06-29-09
DATE PLOTTED => 10-MAY-2010
TIME PLOTTED => 13:39

| Dist | COUNTY | ROUTE | POST MILES TOTAL PROJECT | SHEET No. | TOTAL SHEETS |
|---|---|---|---|---|---|
| 02 | Sha | 5 | R14.9/R16.2 | 23 | 165 |

REGISTERED CIVIL ENGINEER 02-11-10 DATE

5-10-10
PLANS APPROVAL DATE

REGISTERED PROFESSIONAL ENGINEER ANDREW P. STECKLEIN No. C67148 Exp. 9-30-10 CIVIL STATE OF CALIFORNIA

*THE STATE OF CALIFORNIA OR ITS OFFICERS OR AGENTS SHALL NOT BE RESPONSIBLE FOR THE ACCURACY OR COMPLETENESS OF SCANNED COPIES OF THIS PLAN SHEET.*

NOTES:
1. VERIFY IN FIELD ELEVATION AND BEARING OF EXISTING ABUTMENT OUTLET.
2. SEE STANDARD PLANS FOR EDGE DRAIN DETAILS OF TYPE D OUTLET ABUTMENT CONNECTION TO DRAINAGE INLET.

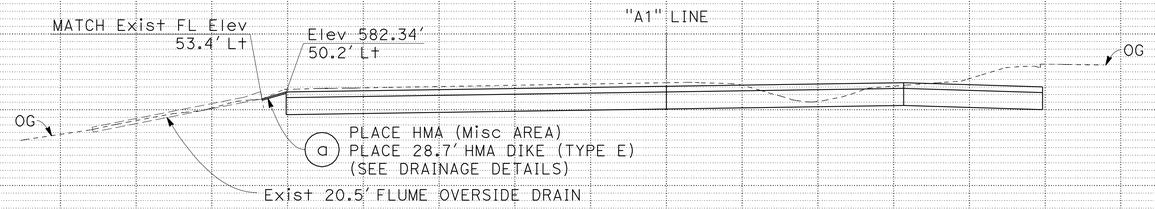


## DRAINAGE SYSTEM No. 1
Sta 125+49.55

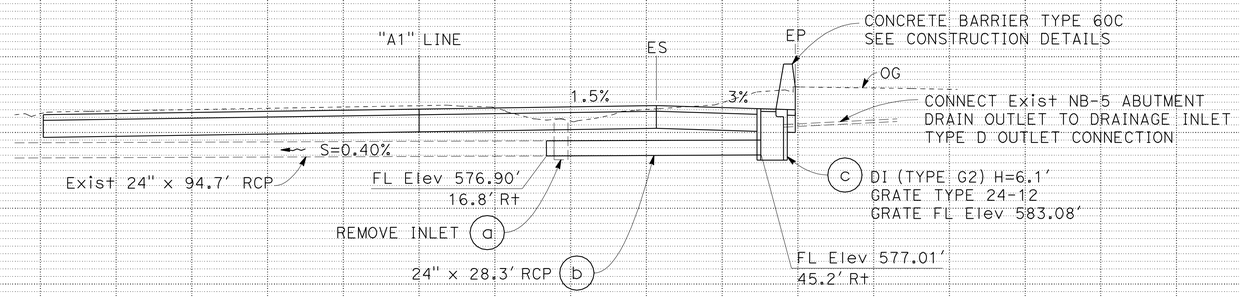


## DRAINAGE SYSTEM No. 2
Sta 125+54.10

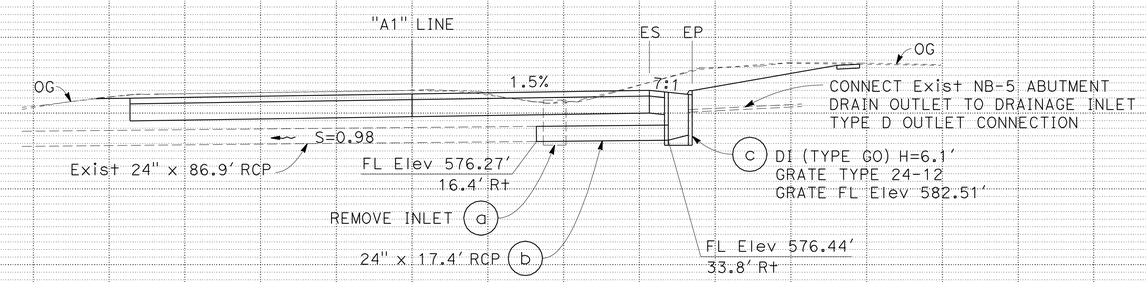


## DRAINAGE SYSTEM No. 3
Sta 128+09.85

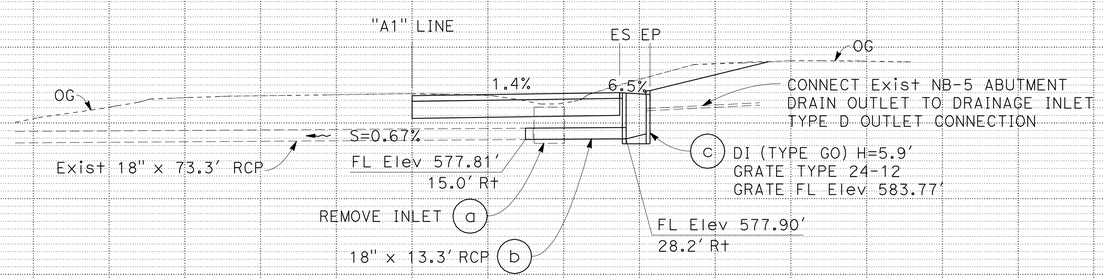


## DRAINAGE SYSTEM No. 4
Sta 134+53.50

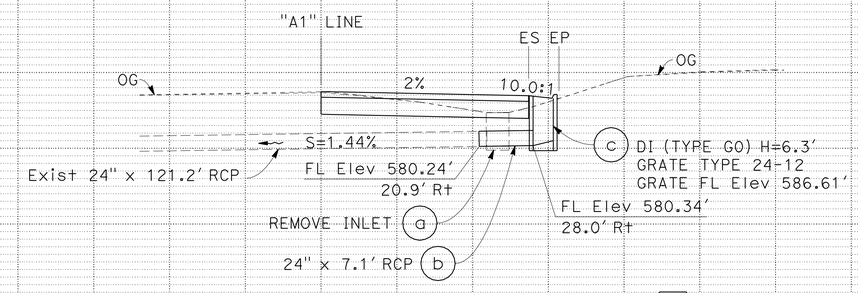


## DRAINAGE SYSTEM No. 5
Sta 139+55.40

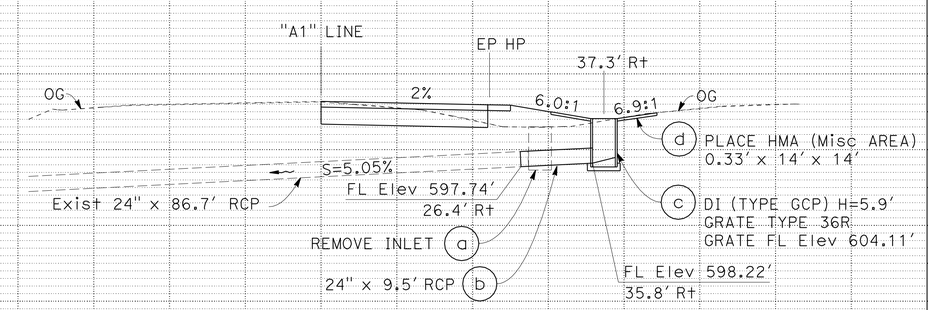


## DRAINAGE SYSTEM No. 6
Sta 146+54.50

# DRAINAGE PROFILES
SCALE: 1" = 10'

**DP-1**

REVISED BY | DATE REVISED
RUSSELL FLOOD | ANDREW STECKLEIN
CALCULATED-DESIGNED BY | CHECKED BY
FUNCTIONAL SUPERVISOR | STEVE TOPAL

STATE OF CALIFORNIA - DEPARTMENT OF TRANSPORTATION
Caltrans
DESIGN

P:\proj2\02\3c000\pse\23c0001b001.dgn

LAST REVISION | DATE PLOTTED => 10-MAY-2010
09-08-09 | TIME PLOTTED => 13:03

| Dist | COUNTY | ROUTE | POST MILES TOTAL PROJECT | SHEET No. | TOTAL SHEETS |
|---|---|---|---|---|---|
| 02 | Sha | 5 | R14.9/R16.2 | 24 | 165 |

REGISTERED CIVIL ENGINEER 02-11-10 DATE

5-10-10
PLANS APPROVAL DATE

REGISTERED PROFESSIONAL ENGINEER
ANDREW P. STECKLEIN
No. C67148
Exp. 9-30-10
CIVIL
STATE OF CALIFORNIA

*THE STATE OF CALIFORNIA OR ITS OFFICERS OR AGENTS SHALL NOT BE RESPONSIBLE FOR THE ACCURACY OR COMPLETENESS OF SCANNED COPIES OF THIS PLAN SHEET.*

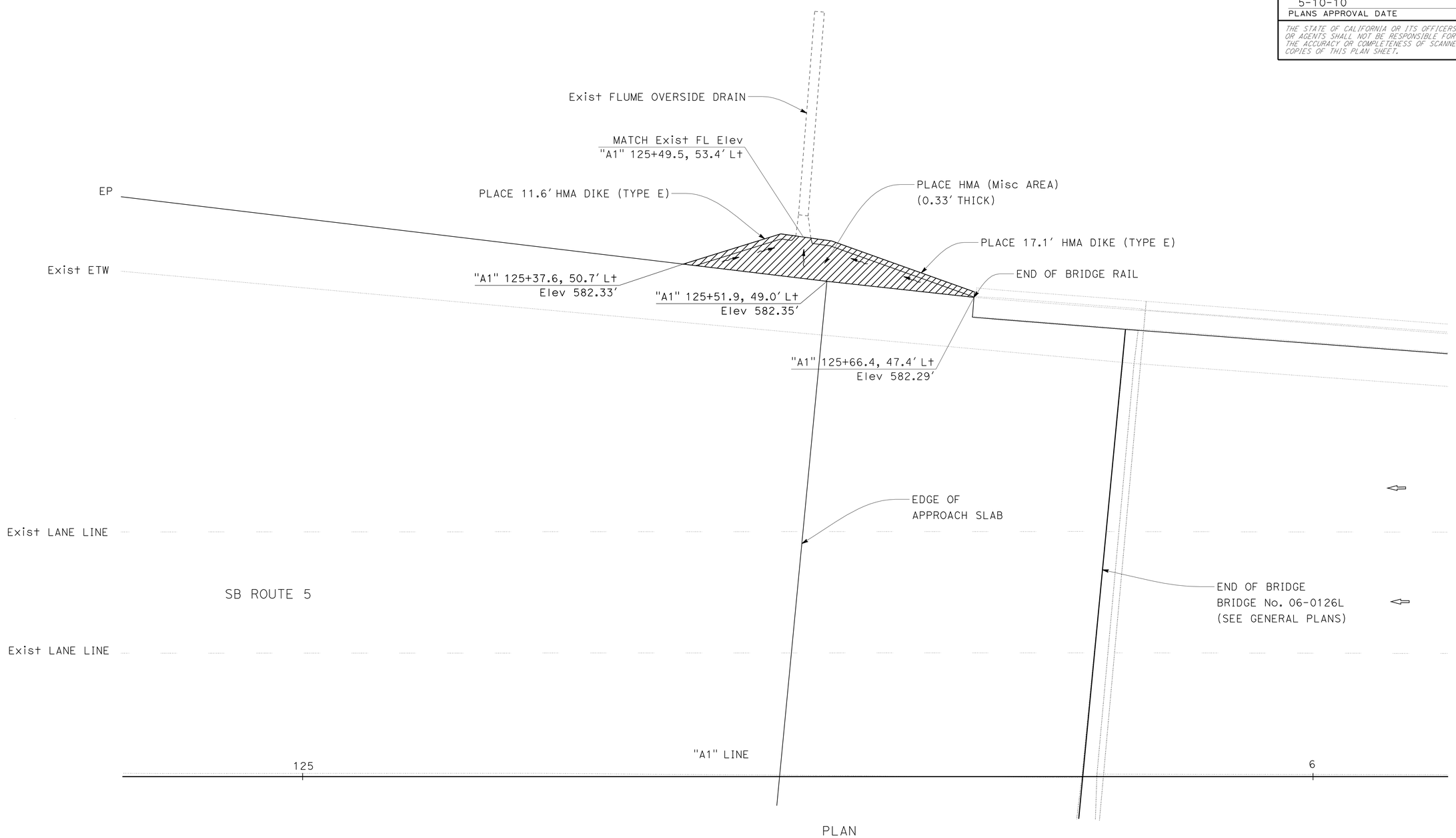


PLAN

## PLACE HMA (Misc AREA)

DRAINAGE SYSTEM No. 1

# DRAINAGE DETAILS

NO SCALE

DD-1

| REVISED BY | DATE REVISED |
|---|---|
| | |

RUSSELL FLOOD — ANDREW STECKLEIN

CALCULATED-DESIGNED BY / CHECKED BY

FUNCTIONAL SUPERVISOR: STEVE TOPAL

STATE OF CALIFORNIA - DEPARTMENT OF TRANSPORTATION
Caltrans® DESIGN

P:\proj2\02\3c000\pse\23c000ic001.dgn

LAST REVISION 11-17-09 | DATE PLOTTED => 10-MAY-2010 | TIME PLOTTED => 13:03

| Dist | COUNTY | ROUTE | POST MILES TOTAL PROJECT | SHEET No. | TOTAL SHEETS |
|---|---|---|---|---|---|
| 02 | Sha | 5 | R14.9/R16.2 | 25 | 165 |

REGISTERED CIVIL ENGINEER 02-11-10 DATE

5-10-10
PLANS APPROVAL DATE

REGISTERED PROFESSIONAL ENGINEER
ANDREW P. STECKLEIN
No. C67148
Exp. 9-30-10
CIVIL
STATE OF CALIFORNIA

*THE STATE OF CALIFORNIA OR ITS OFFICERS OR AGENTS SHALL NOT BE RESPONSIBLE FOR THE ACCURACY OR COMPLETENESS OF SCANNED COPIES OF THIS PLAN SHEET.*

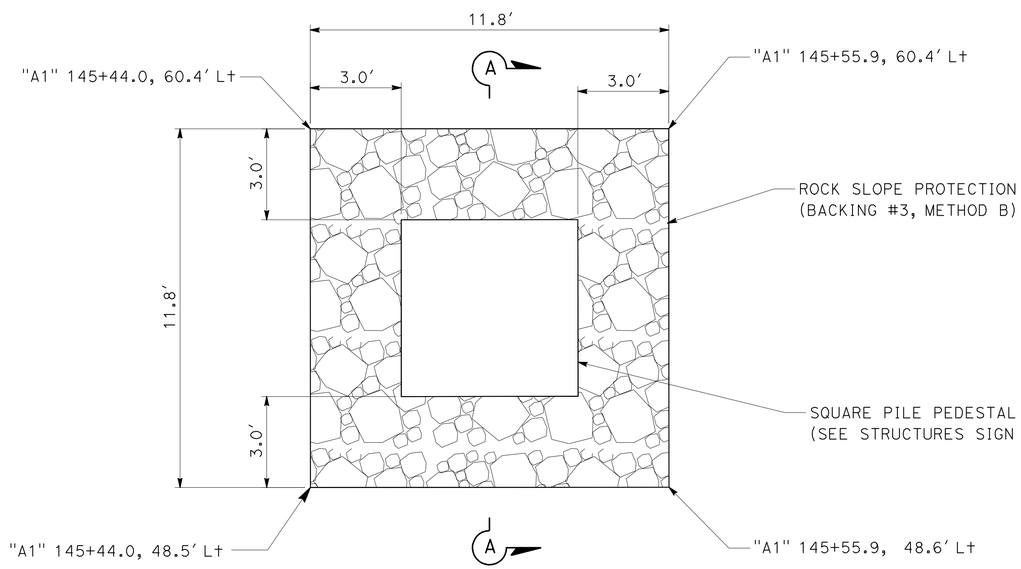


PLAN

**ROCK SLOPE PROTECTION (BACKING #3, METHOD B)**

DRAINAGE SYSTEM No. 6

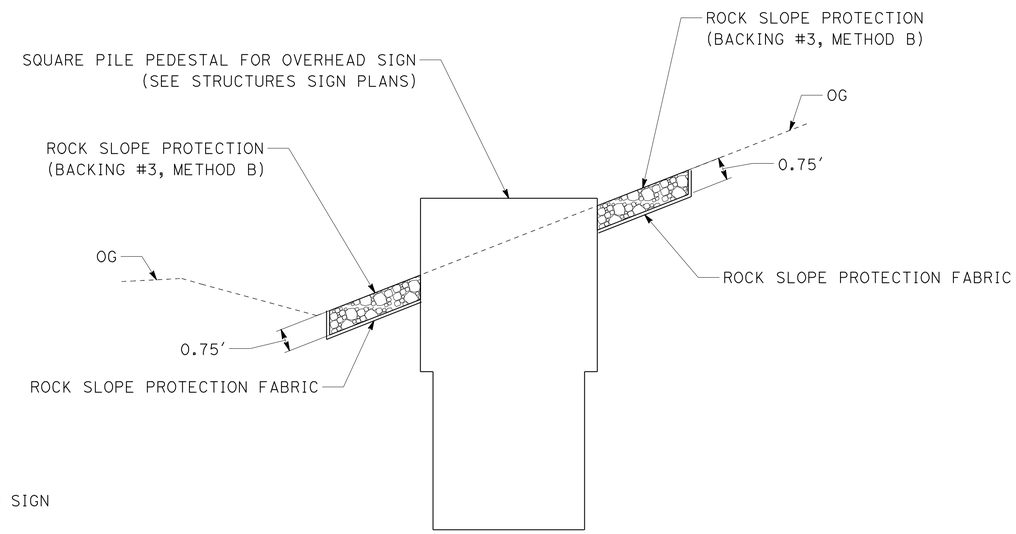


**SECTION A-A**

## SLOPE PROTECTION AT OVERHEAD SIGN STRUCTURE

## DRAINAGE DETAILS

NO SCALE

**DD-2**

| REVISED BY | DATE REVISED |
|---|---|
| | |

RUSSELL FLOOD — CALCULATED-DESIGNED BY
ANDREW STECKLEIN — CHECKED BY
FUNCTIONAL SUPERVISOR: STEVE TOPAL

STATE OF CALIFORNIA - DEPARTMENT OF TRANSPORTATION
Caltrans
DESIGN

P:\proj2\02\3c000\pse\23c0001c002.dgn

LAST REVISION 09-28-09 | DATE PLOTTED => 10-MAY-2010 | TIME PLOTTED => 13:16

| Dist | COUNTY | ROUTE | POST MILES TOTAL PROJECT | SHEET No. | TOTAL SHEETS |
|---|---|---|---|---|---|
| 02 | Sha | 5 | R14.9/R16.2 | 26 | 165 |

REGISTERED CIVIL ENGINEER 02-11-10 DATE

5-10-10
PLANS APPROVAL DATE

REGISTERED PROFESSIONAL ENGINEER ANDREW P. STECKLEIN No. C67148 Exp. 9-30-10 CIVIL STATE OF CALIFORNIA

*THE STATE OF CALIFORNIA OR ITS OFFICERS OR AGENTS SHALL NOT BE RESPONSIBLE FOR THE ACCURACY OR COMPLETENESS OF SCANNED COPIES OF THIS PLAN SHEET.*

NOTES:

1. SEE DRAINAGE QUANTITY SHEET FOR TOTAL LENGTH OF 3" PLASTIC PIPE MEASURED FROM ABUTMENT DRAIN OUTLET TO DAYLIGHT POINT.
2. SEE DRAINAGE PLANS FOR ABUTMENT DRAIN OUTLET PLACEMENT ORIENTATION.
3. SEE STRUCTURES PLANS FOR ABUTMENT DETAILS.

## ABUTMENT DRAIN OUTLET

| DRAINAGE SYSTEM # | DRAINAGE UNIT | ABUTMENT DRAIN OUTLET | | | OUTLET DAYLIGHT POINT | | |
|---|---|---|---|---|---|---|---|
| | | STATION "A1" LINE | OFFSET (R+) FT | ELEVATION FT | STATION "A1" LINE | OFFSET (R+) FT | ELEVATION FT |
| 2 | d | 125+73.5 | 33.1 | 574.62 | 125+98.8 | 35.1 | 574.49 |
| 3 | d | 127+72.6 | 32.9 | 574.62 | 127+54.7 | 34.9 | 574.53 |
| 4 | d | 132+79.5 | 29.3 | 573.00 | 133+05.7 | 31.3 | 572.87 |
| | f | 134+11.6 | 29.1 | 573.00 | 133+87.6 | 31.1 | 572.88 |
| | | | | | | | |

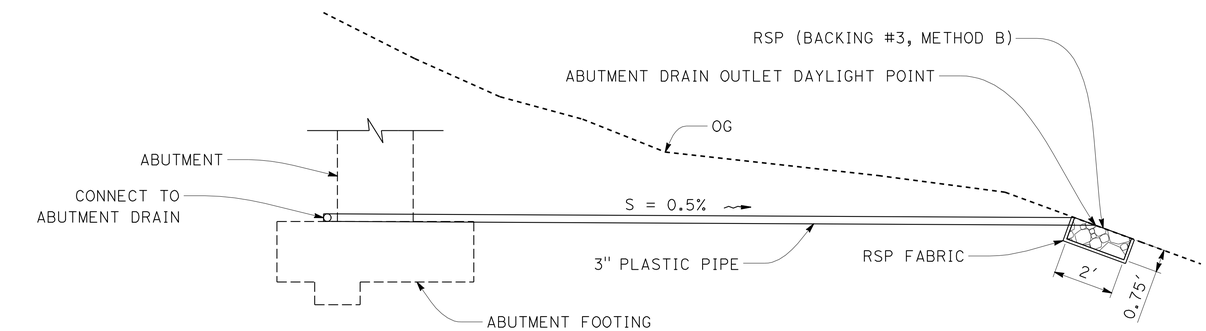


## SECTION A-A

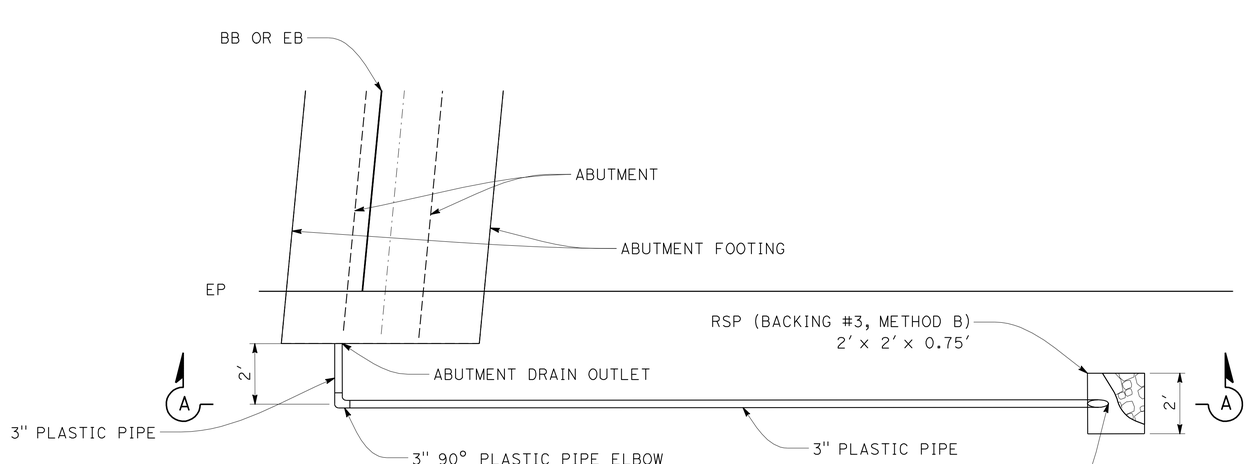


PLAN

## TYPICAL ABUTMENT DRAIN OUTLET

DRAINAGE SYSTEM No. 2 3 4

## DRAINAGE DETAILS

NO SCALE

**DD-3**

REVISED BY | DATE REVISED

RUSSELL FLOOD | ANDREW STECKLEIN

CALCULATED-DESIGNED BY | CHECKED BY

FUNCTIONAL SUPERVISOR: STEVE TOPAL

STATE OF CALIFORNIA - DEPARTMENT OF TRANSPORTATION

Caltrans® DESIGN

P:\proj2\02\3c000\pse\23c000ic003.dgn

LAST REVISION 11-04-09 | DATE PLOTTED => 10-MAY-2010 | TIME PLOTTED => 13:04

BORDER LAST REVISED 4/11/2008 | RELATIVE BORDER SCALE IS IN INCHES 0 1 2 3 | USERNAME => s135318 | DGN FILE => 23c000ic003.dgn | CU 03 247 | EA 3C0001

| Dist | COUNTY | ROUTE | POST MILES TOTAL PROJECT | SHEET No. | TOTAL SHEETS |
|---|---|---|---|---|---|
| 02 | Sha | 5 | R14.9/R16.2 | 27 | 165 |

REGISTERED CIVIL ENGINEER 02-11-10 DATE

5-10-10
PLANS APPROVAL DATE

REGISTERED PROFESSIONAL ENGINEER ANDREW P. STECKLEIN No. C67148 Exp. 9-30-10 CIVIL STATE OF CALIFORNIA

*THE STATE OF CALIFORNIA OR ITS OFFICERS OR AGENTS SHALL NOT BE RESPONSIBLE FOR THE ACCURACY OR COMPLETENESS OF SCANNED COPIES OF THIS PLAN SHEET.*

NOTES:

1. (N) - NOT A SEPARATE PAY ITEM, FOR INFORMATION ONLY.
2. CULVERT JOINTS ARE STANDARD.

# DRAINAGE QUANTITIES

| DRAINAGE PLAN SHEET No. | DRAINAGE SYSTEM No. ⬡ | DRAINAGE UNIT ○ | REMOVE INLET | REMOVE CULVERT | PLACE HMA DIKE (TYPE E) * | PLACE HMA (Misc AREA) * | MINOR CONCRETE (MINOR STRUCTURE) | HEIGHT OF INLET (N) | 18" REINFORCED CONCRETE PIPE | 24" REINFORCED CONCRETE PIPE | 3" PLASTIC PIPE (N) | 36" PRECAST CONCRETE PIPE INLET | ROCK SLOPE PROTECTION (BACKING #3, METHOD B) | ROCK SLOPE PROTECTION FABRIC | Misc IRON AND STEEL | DESCRIPTION | STATION | DRAINAGE UNIT No. ○ | DRAINAGE SYSTEM No. ⬡ | DRAINAGE SHEET No. |
|---|---|---|---|---|---|---|---|---|---|---|---|---|---|---|---|---|---|---|---|---|
| | | | EA | EA | LF | SQYD | CY | FT | LF | LF | LF | LF | TON | SQYD | LB | | | | | |
| D-1 | 1 | a | | | 28.7 | 8.1 | | | | | | | | | | CONFORM EP TO Exist OVERSIDE DRAIN | "A1" 125+49.55 | a | 1 | D-1 |
| | 2 | a | 1 | | | | | | | | | | | | | REMOVE INLET | "A1" 125+54.10 | a | 2 | |
| | | b | | | | | | | | 28.3 | | | | | | 24" x 28.3' RCP | | b | | |
| | | c | | | | | 2.10 | 6.1 | | | | | | | 326 | G2 INLET WITH 24-12 GRATE | | c | | |
| | | d | | | | | | | | | 27.3 | | | | | ABUTMENT DRAIN OUTLET TO DAYLIGHT | | d | | |
| | | e | | | | | | | | | | | 0.2 | 1.1 | | RSP PAD AT DAYLIGHT POINT | | e | | |
| | | f | | 1 | | | | | | | | | | | | REMOVE Exist 12" PLASTIC CULVERT | | f | | |
| | 3 | a | 1 | | | | | | | | | | | | | REMOVE INLET | "A1" 128+09.85 | a | 3 | |
| | | b | | | | | | | | 17.4 | | | | | | 24" x 17.4' RCP | | b | | |
| | | c | | | | | 2.00 | 6.1 | | | | | | | 326 | GO INLET WITH 24-12 GRATE | | c | | |
| | | d | | | | | | | | | 19.9 | | | | | ABUTMENT DRAIN OUTLET TO DAYLIGHT | | d | | |
| | | e | | | | | | | | | | | 0.2 | 1.1 | | RSP PAD AT DAYLIGHT POINT | | e | | |
| | 4 | a | 1 | | | | | | | | | | | | | REMOVE INLET | "A1" 134+53.50 | a | 4 | |
| | | b | | | | | | | 13.3 | | | | | | | 18" x 13.3' RCP | | b | | |
| | | c | | | | | 1.95 | 5.9 | | | | | | | 326 | GO INLET WITH 24-12 GRATE | | c | | |
| | | d | | | | | | | | | 28.2 | | | | | ABUTMENT DRAIN OUTLET TO DAYLIGHT | | d | | |
| | | e | | | | | | | | | | | 0.2 | 1.1 | | RSP PAD AT DAYLIGHT POINT | | e | | |
| | | f | | | | | | | | | 26.0 | | | | | ABUTMENT DRAIN OUTLET TO DAYLIGHT | | f | | |
| | | g | | | | | | | | | | | 0.2 | 1.1 | 326 | RSP PAD AT DAYLIGHT POINT | | g | | |
| D-2 | | | | | | | | | | | | | | | | | | | | |
| | 5 | a | 1 | | | | | | | | | | | | | REMOVE INLET | "A1" 139+55.40 | a | 5 | D-2 |
| | | b | | | | | | | | 7.1 | | | | | | 24" x 7.1' RCP | | b | | |
| | | c | | | | | 2.05 | 6.3 | | | | | | | | GO INLET WITH 24-12 GRATE | | c | | |
| | 6 | a | 1 | | | | | | | | | | | | | REMOVE INLET | "A1" 146+54.50 | a | 6 | |
| | | b | | | | | | | | 9.5 | | | | | | 24" x 9.5' RCP | | b | | |
| | | c | | | | 20.7 | 0.75 | 5.9 | | | | 6.4 | | | 236 | GCP INLET WITH 36R GRATE | | c | | |
| | | d | | | | | | | | | | | | | | HMA APRON | | d | | |
| | | e | | | | | | | | | | | 5.9 | 15.7 | | OVERHEAD SIGN POST PROTECTION | "A1" 145+50.00 | e | | |
| | TOTALS | | 5 | 1 | 28.7 | 28.8 | 8.85 | | 13.3 | 62.3 | 101.4 | 6.4 | 6.7 | 20.1 | 1540 | | | | | |

* QUANTITY INCLUDED ON Q-1 SHEET

## DRAINAGE QUANTITIES
## DQ-1

RUSSELL FLOOD — REVISED BY
ANDREW STECKLEIN — DATE REVISED
CALCULATED-DESIGNED BY
CHECKED BY
FUNCTIONAL SUPERVISOR
STEVE TOPAL

STATE OF CALIFORNIA - DEPARTMENT OF TRANSPORTATION
Caltrans
DESIGN

P:\proj2\02\3c000\pse\23c0001d001.dgn

LAST REVISION 06-29-09 | DATE PLOTTED => 11-MAY-2010 | TIME PLOTTED => 09:36

| Dist | COUNTY | ROUTE | POST MILES TOTAL PROJECT | SHEET No. | TOTAL SHEETS |
|---|---|---|---|---|---|
| 02 | Sha | 5 | R14.9/R16.2 | 28 | 165 |

REGISTERED CIVIL ENGINEER 02-11-10 DATE

5-10-10
PLANS APPROVAL DATE

REGISTERED PROFESSIONAL ENGINEER ANDREW P. STECKLEIN No. C67148 Exp. 9-30-10 CIVIL STATE OF CALIFORNIA

*THE STATE OF CALIFORNIA OR ITS OFFICERS OR AGENTS SHALL NOT BE RESPONSIBLE FOR THE ACCURACY OR COMPLETENESS OF SCANNED COPIES OF THIS PLAN SHEET.*

NOTES:

1. SIGN LOCATIONS SHOWN ARE APPROXIMATE. EXACT SIGN LOCATIONS ARE TO BE DETERMINED BY THE ENGINEER.
2. ALL SIGNS TO BE BLACK ON ORANGE EXCEPT C40(CA), WHICH IS BLACK ON WHITE.
3. CALIFORNIA CODES ARE DESIGNATED BY (CA), OTHERWISE FEDERAL CODES ARE SHOWN.

LEGEND

ONE POST STATIONARY MOUNTED SIGN

TWO POST STATIONARY MOUNTED SIGN

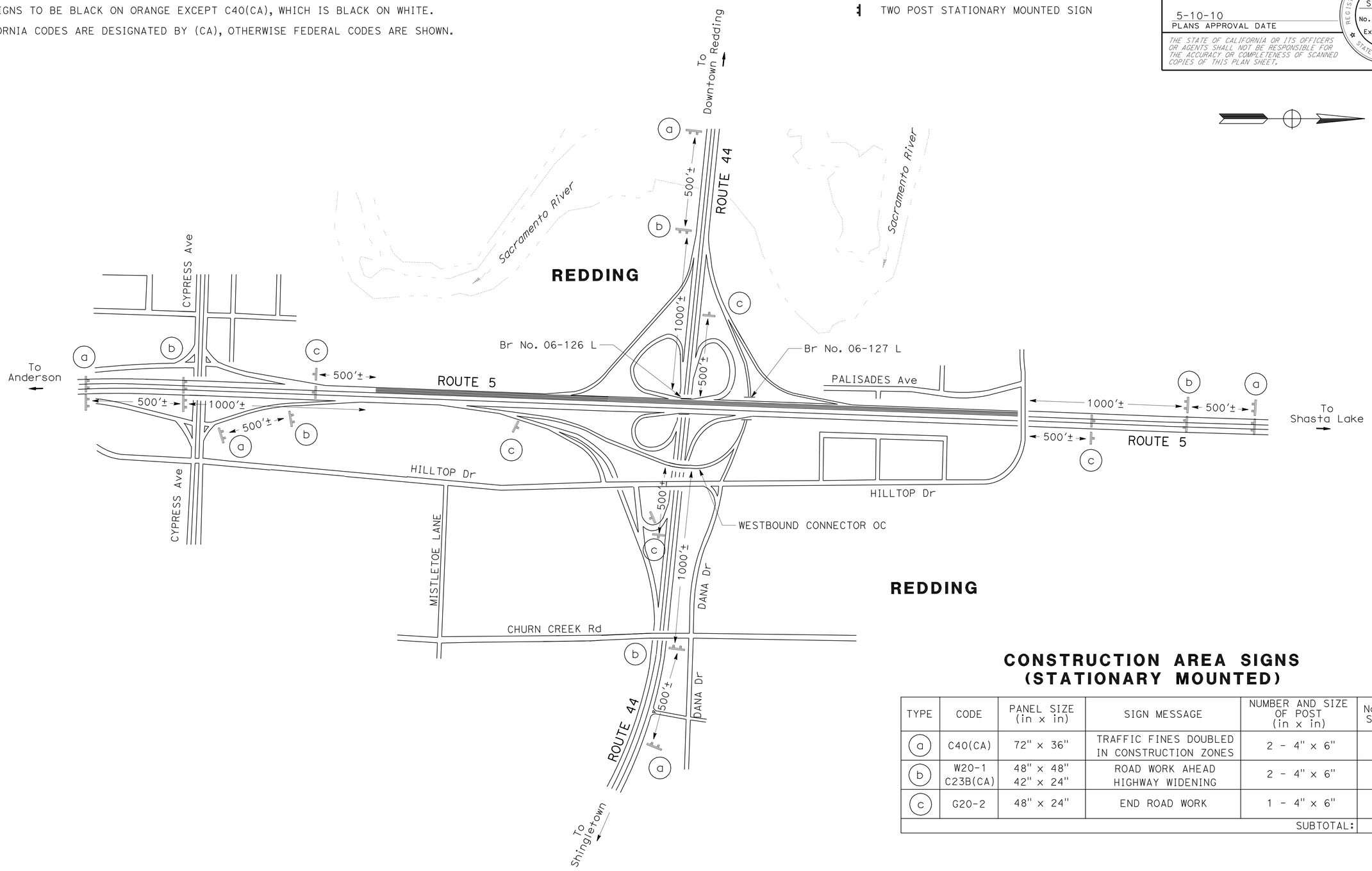


REDDING

## CONSTRUCTION AREA SIGNS (STATIONARY MOUNTED)

| TYPE | CODE | PANEL SIZE (in x in) | SIGN MESSAGE | NUMBER AND SIZE OF POST (in x in) | No. OF SIGNS |
|---|---|---|---|---|---|
| a | C40(CA) | 72" x 36" | TRAFFIC FINES DOUBLED IN CONSTRUCTION ZONES | 2 - 4" x 6" | 7 |
| b | W20-1<br>C23B(CA) | 48" x 48"<br>42" x 24" | ROAD WORK AHEAD<br>HIGHWAY WIDENING | 2 - 4" x 6" | 7 |
| c | G20-2 | 48" x 24" | END ROAD WORK | 1 - 4" x 6" | 8 |
| | | | | SUBTOTAL: | 22 |

# CONSTRUCTION AREA SIGNS

NO SCALE

CS-1

THIS PLAN ACCURATE FOR CONSTRUCTION AREA SIGN WORK ONLY

REVISED BY | DATE REVISED

BOB WEBER | ANDREW STECKLEIN

CALCULATED-DESIGNED BY | CHECKED BY

FUNCTIONAL SUPERVISOR: STEVE TOPAL

STATE OF CALIFORNIA - DEPARTMENT OF TRANSPORTATION

Caltrans DESIGN

P:\proj2\02\3c000\pse\23c0001a001.dgn

LAST REVISION 12-31-09 | DATE PLOTTED => 10-MAY-2010 | TIME PLOTTED => 13:04

| Dist | COUNTY | ROUTE | POST MILES TOTAL PROJECT | SHEET No. | TOTAL SHEETS |
|---|---|---|---|---|---|
| 02 | Sha | 5 | R14.9/R16.2 | 29 | 165 |

REGISTERED CIVIL ENGINEER 02-11-10 DATE

5-10-10
PLANS APPROVAL DATE

REGISTERED PROFESSIONAL ENGINEER ANDREW P. STECKLEIN No. C67148 Exp. 9-30-10 CIVIL STATE OF CALIFORNIA

*THE STATE OF CALIFORNIA OR ITS OFFICERS OR AGENTS SHALL NOT BE RESPONSIBLE FOR THE ACCURACY OR COMPLETENESS OF SCANNED COPIES OF THIS PLAN SHEET.*

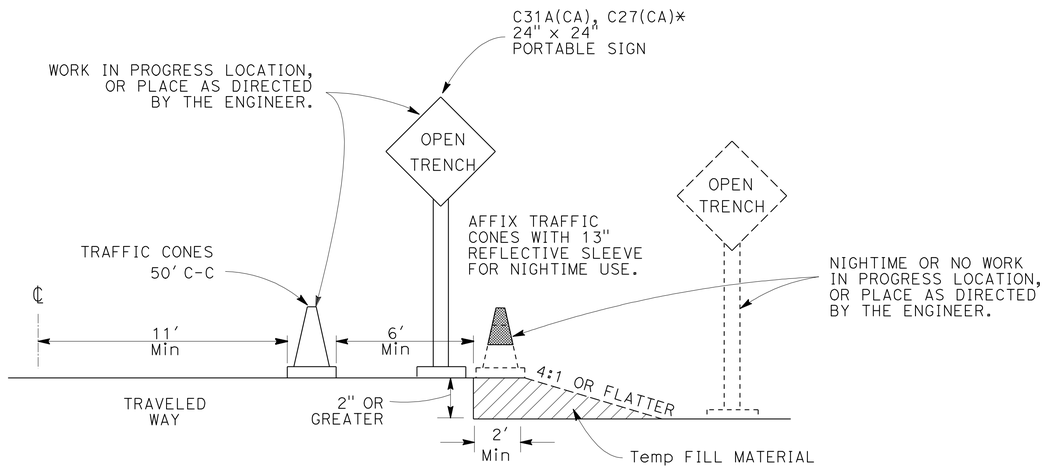


## OPEN TRENCH SIGNING AND MARKING

* PLACE AT 250' INTERVALS THROUGH THE OPEN TRENCH AREA-ALTERNATE C27(CA) (OPEN TRENCH) AND C31A(CA) (NO SHOULDER) SIGNS

## C23B(CA) SIGN PANEL DETAIL

# CONSTRUCTION AREA SIGNS

NO SCALE

**CS-2**

| REVISED BY | DATE REVISED |
|---|---|
| | |

CALCULATED-DESIGNED BY: BOB WEBER
CHECKED BY: ANDREW STECKLEIN
FUNCTIONAL SUPERVISOR: STEVE TOPAL

STATE OF CALIFORNIA - DEPARTMENT OF TRANSPORTATION
Caltrans® DESIGN

P:\proj2\02\3c000\pse\23c0001a002.dgn

LAST REVISION 07-13-09 | DATE PLOTTED => 10-MAY-2010 | TIME PLOTTED => 13:04

| Dist | COUNTY | ROUTE | POST MILES TOTAL PROJECT | SHEET No. | TOTAL SHEETS |
|---|---|---|---|---|---|
| 02 | Sha | 5 | R14.9/R16.2 | 30 | 165 |

REGISTERED CIVIL ENGINEER 02-11-10 DATE

5-10-10
PLANS APPROVAL DATE

REGISTERED PROFESSIONAL ENGINEER ANDREW P. STECKLEIN No. C67148 Exp. 9-30-10 CIVIL STATE OF CALIFORNIA

*THE STATE OF CALIFORNIA OR ITS OFFICERS OR AGENTS SHALL NOT BE RESPONSIBLE FOR THE ACCURACY OR COMPLETENESS OF SCANNED COPIES OF THIS PLAN SHEET.*

NOTES:

1. USE Std PLAN T10 FOR ROUTE 5 AND 44 LANE CLOSURES AS NEEDED TO IMPLEMENT TRAFFIC HANDLING MEASURES.
2. MAXIMUM TAPER FOR FLARED SECTIONS OF TEMPORARY RAILING (TYPE K) TO BE 10:1.
3. MODIFICATIONS TO STAGING AND TRAFFIC HANDLING MAY BE MADE WITH APPROVAL OF THE ENGINEER.

## LEGEND

- CHANNELIZER (SURFACE MOUNTED)
- DIRECTION OF TRAVEL
- NEW CONSTRUCTION
- STRIPE CHANGE
- nn — Temp PAVEMENT DELINEATION STRIPE DETAIL No.
- Temp RAILING (TYPE K)

## ABBREVIATIONS

| | |
|---|---|
| BK | BASE OF K-RAIL |
| CPACP | COLD PLANE ASPHALT CONCRETE PAVEMENT |
| HMA (OG) | HOT MIX ASPHALT (OPEN GRADED |
| LS | LANE STRIPE |

## STAGE 1A WORK ITEMS:

1. IMPLEMENT STAGE 1A TRAFFIC HANDLING MEASURES
2. CONSTRUCT BRIDGE ABUTMENTS, BENTS AND DRAINS
3. REMOVE STAGE 1A TRAFFIC HANDLING MEASURES
4. RECONSTRUCT MBGR UNDER BRIDGE 06-0126L

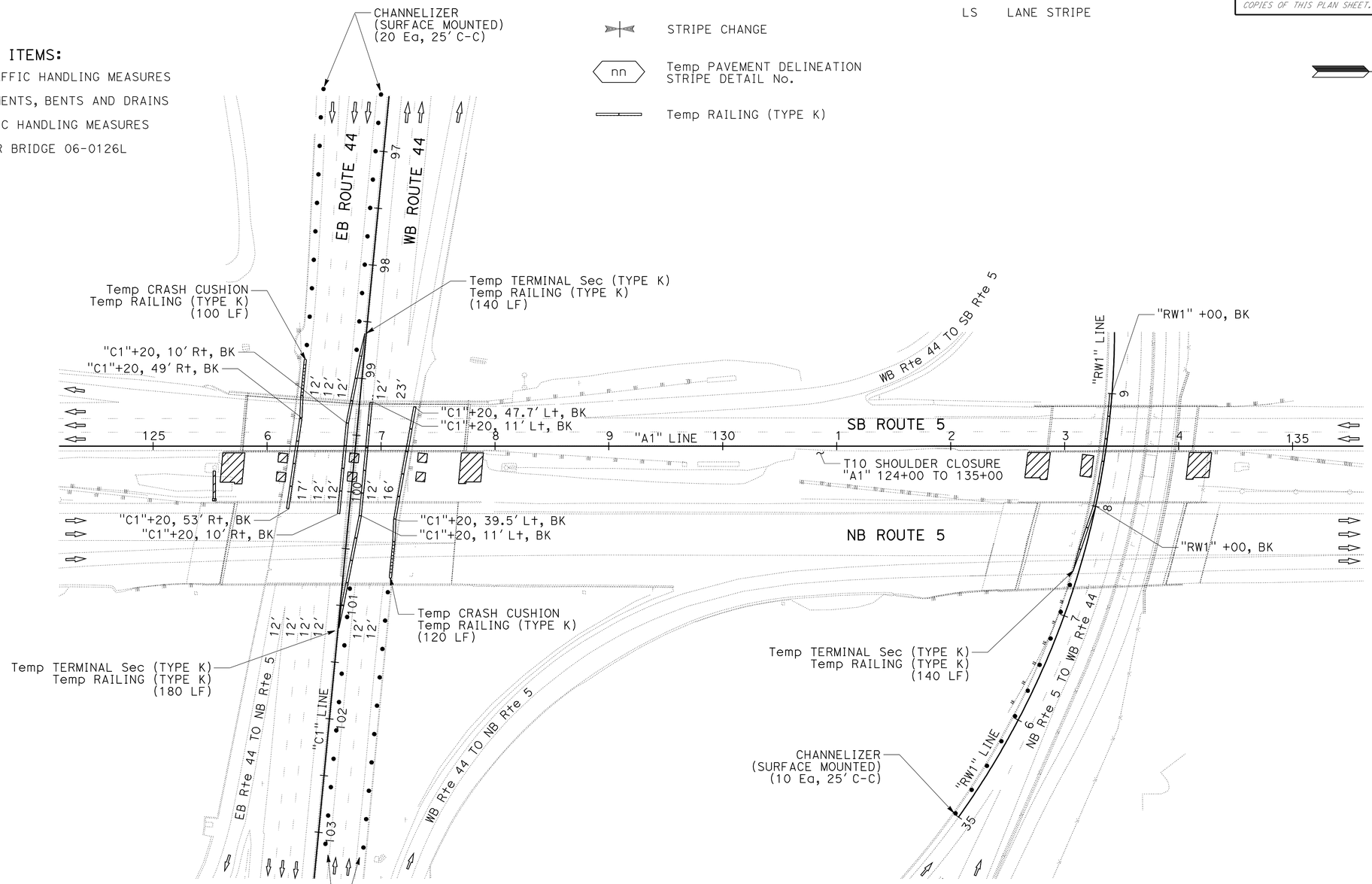


## STAGE 1A
## BRIDGE ABUTMENTS AND BENTS

# STAGE CONSTRUCTION AND TRAFFIC HANDLING PLAN

SCALE: 1" = 50'

**SC-1**

THIS PLAN ACCURATE FOR STAGE CONSTRUCTION AND TRAFFIC HANDLING WORK ONLY

REVISED BY | DATE REVISED

BOB WEBER | ANDREW STECKLEIN

CALCULATED-DESIGNED BY | CHECKED BY

FUNCTIONAL SUPERVISOR: STEVE TOPAL

STATE OF CALIFORNIA - DEPARTMENT OF TRANSPORTATION

Caltrans DESIGN

P:\proj2\02\3c000\pse\23c000ma001.dgn

LAST REVISION | DATE PLOTTED => 10-MAY-2010 | TIME PLOTTED => 13:04

01-20-10

| Dist | COUNTY | ROUTE | POST MILES TOTAL PROJECT | SHEET No. | TOTAL SHEETS |
|---|---|---|---|---|---|
| 02 | Sha | 5 | R14.9/R16.2 | 31 | 165 |

REGISTERED CIVIL ENGINEER 02-11-10 DATE

5-10-10
PLANS APPROVAL DATE

REGISTERED PROFESSIONAL ENGINEER ANDREW P. STECKLEIN No. C67148 Exp. 9-30-10 CIVIL STATE OF CALIFORNIA

*THE STATE OF CALIFORNIA OR ITS OFFICERS OR AGENTS SHALL NOT BE RESPONSIBLE FOR THE ACCURACY OR COMPLETENESS OF SCANNED COPIES OF THIS PLAN SHEET.*

NOTES:

1. TEMPORARY RAILING AND STRIPING PLACED DURING STAGE 1B WILL BE USED DURING STAGE 2.
2. SEE STAGE 2 SHEETS FOR REMAINDER OF TEMPORARY RAILING AND STRIPING LAYOUT.
3. WHEN OVERHEAD WORK REQUIRES ROADWAY CLOSURES ROUTE TRAFFIC PER DETOUR PLANS.

## STAGE 1B WORK ITEMS:

1. IMPLEMENT STAGE 1B TRAFFIC HANDLING MEASURES
2. CONSTRUCT BRIDGE DECKS AND RAILINGS

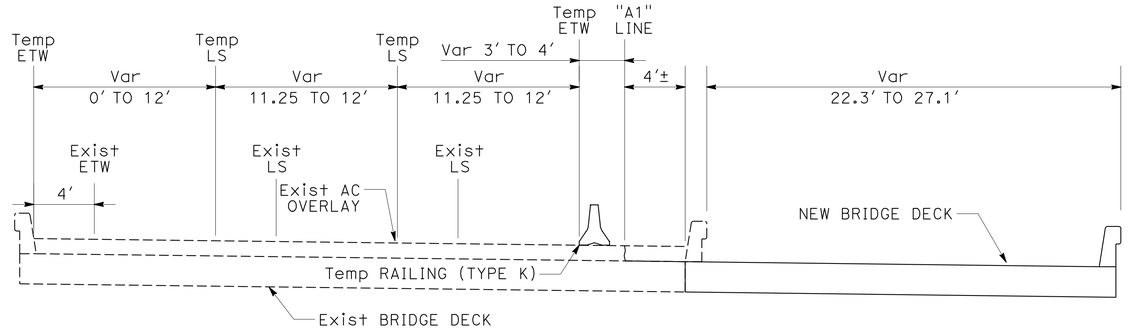


"A1" 125+77 TO "A1" 127+75 AND "A1" 132+80 TO "A1" 134+15

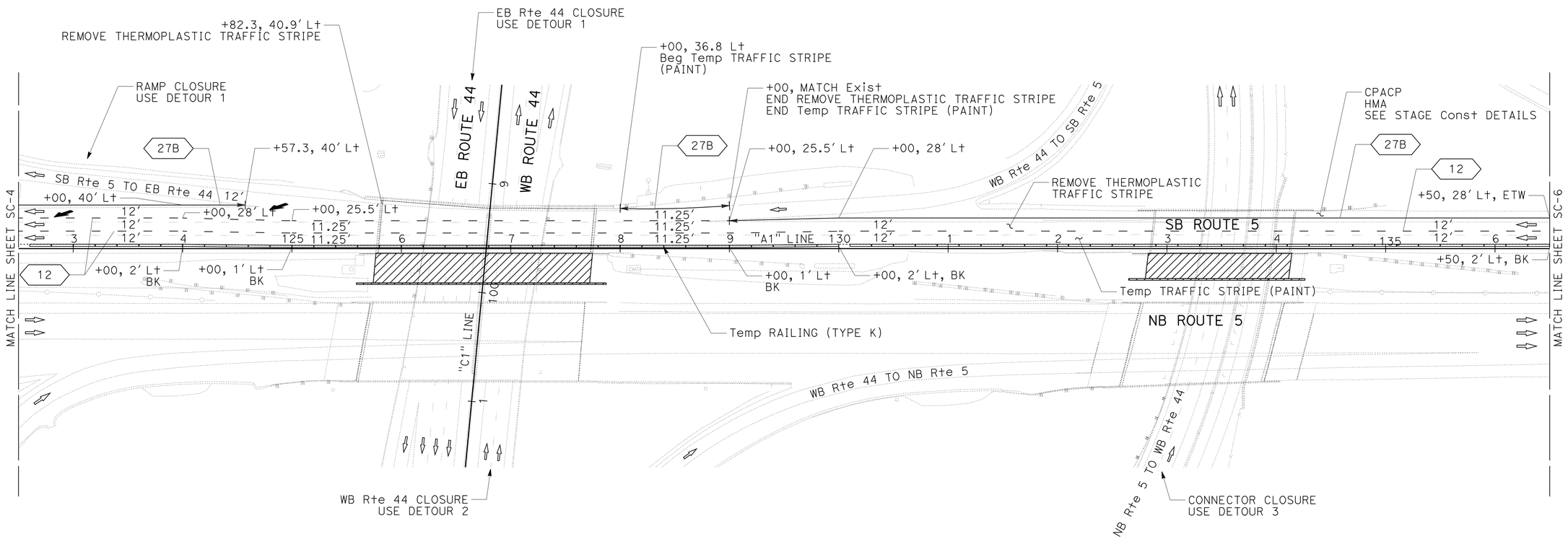


## STAGE 1B
## BRIDGE DECKS AND RAILINGS

THIS PLAN ACCURATE FOR STAGE CONSTRUCTION AND TRAFFIC HANDLING WORK ONLY

# STAGE CONSTRUCTION AND TRAFFIC HANDLING PLAN

SCALE: 1" = 50'

**SC-2**

REVISED BY | DATE REVISED
BOB WEBER | ANDREW STECKLEIN
CALCULATED-DESIGNED BY | CHECKED BY
FUNCTIONAL SUPERVISOR: STEVE TOPAL

STATE OF CALIFORNIA - DEPARTMENT OF TRANSPORTATION
Caltrans
DESIGN

P:\proj2\02\3c000\pse\23c000ma002.dgn

LAST REVISION 01-12-10 | DATE PLOTTED => 10-MAY-2010 | TIME PLOTTED => 13:19

| Dist | COUNTY | ROUTE | POST MILES TOTAL PROJECT | SHEET No. | TOTAL SHEETS |
|---|---|---|---|---|---|
| 02 | Sha | 5 | R14.9/R16.2 | 32 | 165 |

REGISTERED CIVIL ENGINEER 02-11-10 DATE

5-10-10
PLANS APPROVAL DATE

REGISTERED PROFESSIONAL ENGINEER ANDREW P. STECKLEIN No. C67148 Exp. 9-30-10 CIVIL STATE OF CALIFORNIA

*THE STATE OF CALIFORNIA OR ITS OFFICERS OR AGENTS SHALL NOT BE RESPONSIBLE FOR THE ACCURACY OR COMPLETENESS OF SCANNED COPIES OF THIS PLAN SHEET.*

NOTES:

1. CPACP, HMA (TYPE A) ON SHOULDERS, AND TEMPORARY RAILING AND STRIPING USED DURING STAGE 2 TO BE COMPLETED DURING STAGE 1B.
2. GAPS MAY BE LEFT IN THE TEMPORARY RAILING TO PROVIDE CONSTRUCTION ACCESS, LOCATION MUST BE APPROVED BY THE ENGINEER. ENDS MUST BE PROTECTED BY STANDARD CRASH CUSHIONS.

## STAGE 2 WORK ITEMS:

1. WIDEN STRUCTURAL SECTION
2. CONSTRUCT MEDIAN IMPROVEMENTS
3. REMOVE STAGE 2 TRAFFIC HANDLING MEASURES

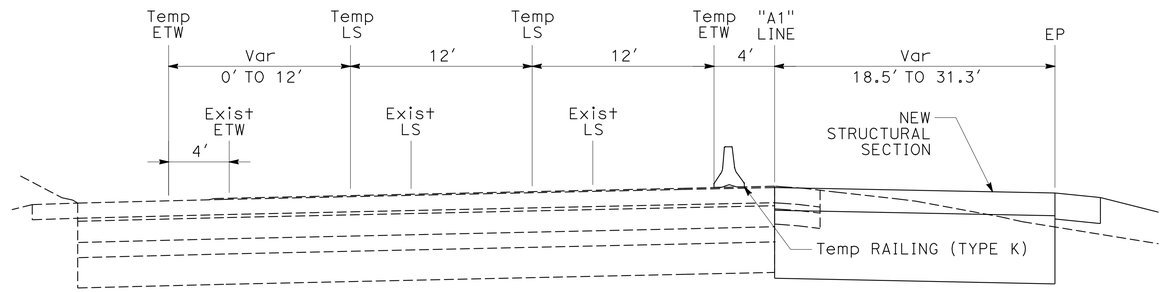


"A1" 101+00 TO "A1" 122+00

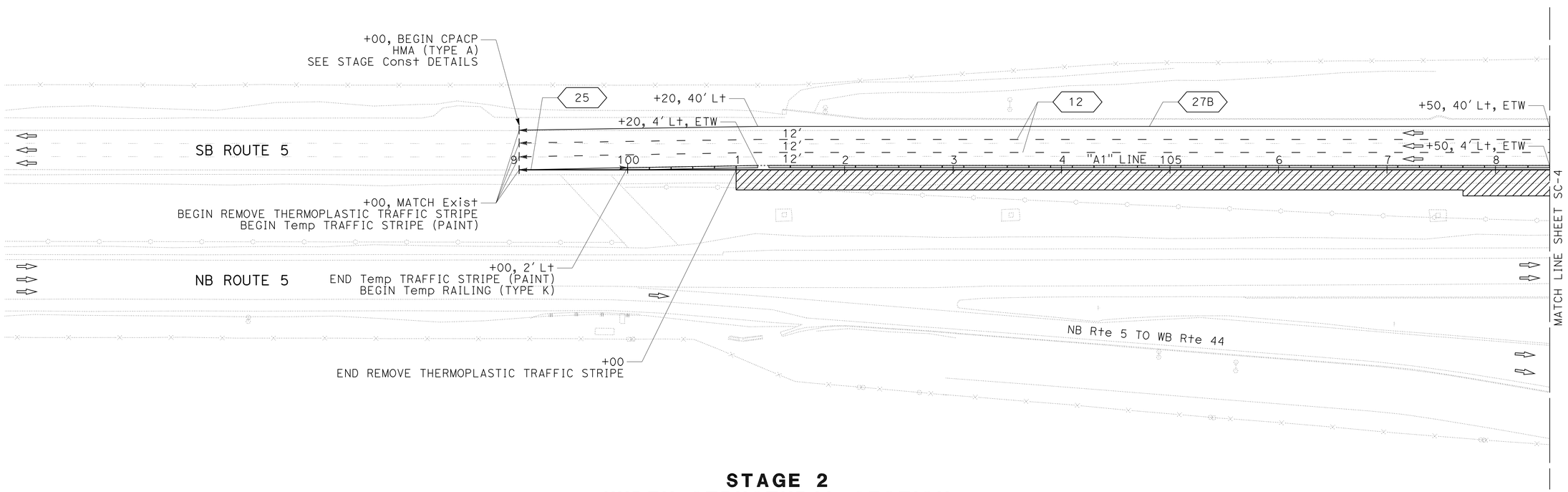


## STAGE 2
## WIDEN STRUCTURAL SECTION

# STAGE CONSTRUCTION AND TRAFFIC HANDLING PLAN

SCALE: 1" = 50'

**SC-3**

THIS PLAN ACCURATE FOR STAGE CONSTRUCTION AND TRAFFIC HANDLING WORK ONLY

REVISED BY | DATE REVISED
BOB WEBER | ANDREW STECKLEIN
CALCULATED-DESIGNED BY | CHECKED BY
FUNCTIONAL SUPERVISOR: STEVE TOPAL

STATE OF CALIFORNIA - DEPARTMENT OF TRANSPORTATION
Caltrans
DESIGN

P:\proj2\02\3c000\pse\23c000ma003.dgn

LAST REVISION 01-12-10 | DATE PLOTTED => 10-MAY-2010 | TIME PLOTTED => 13:19

| Dist | COUNTY | ROUTE | POST MILES TOTAL PROJECT | SHEET No. | TOTAL SHEETS |
|---|---|---|---|---|---|
| 02 | Sha | 5 | R14.9/R16.2 | 33 | 165 |

REGISTERED CIVIL ENGINEER 02-11-10 DATE

5-10-10
PLANS APPROVAL DATE

REGISTERED PROFESSIONAL ENGINEER
ANDREW P. STECKLEIN
No. C67148
Exp. 9-30-10
CIVIL
STATE OF CALIFORNIA

*THE STATE OF CALIFORNIA OR ITS OFFICERS OR AGENTS SHALL NOT BE RESPONSIBLE FOR THE ACCURACY OR COMPLETENESS OF SCANNED COPIES OF THIS PLAN SHEET.*

STAGE 2 WORK ITEMS:

1. WIDEN STRUCTURAL SECTION
2. CONSTRUCT MEDIAN IMPROVEMENTS
3. REMOVE STAGE 2 TRAFFIC HANDLING MEASURES

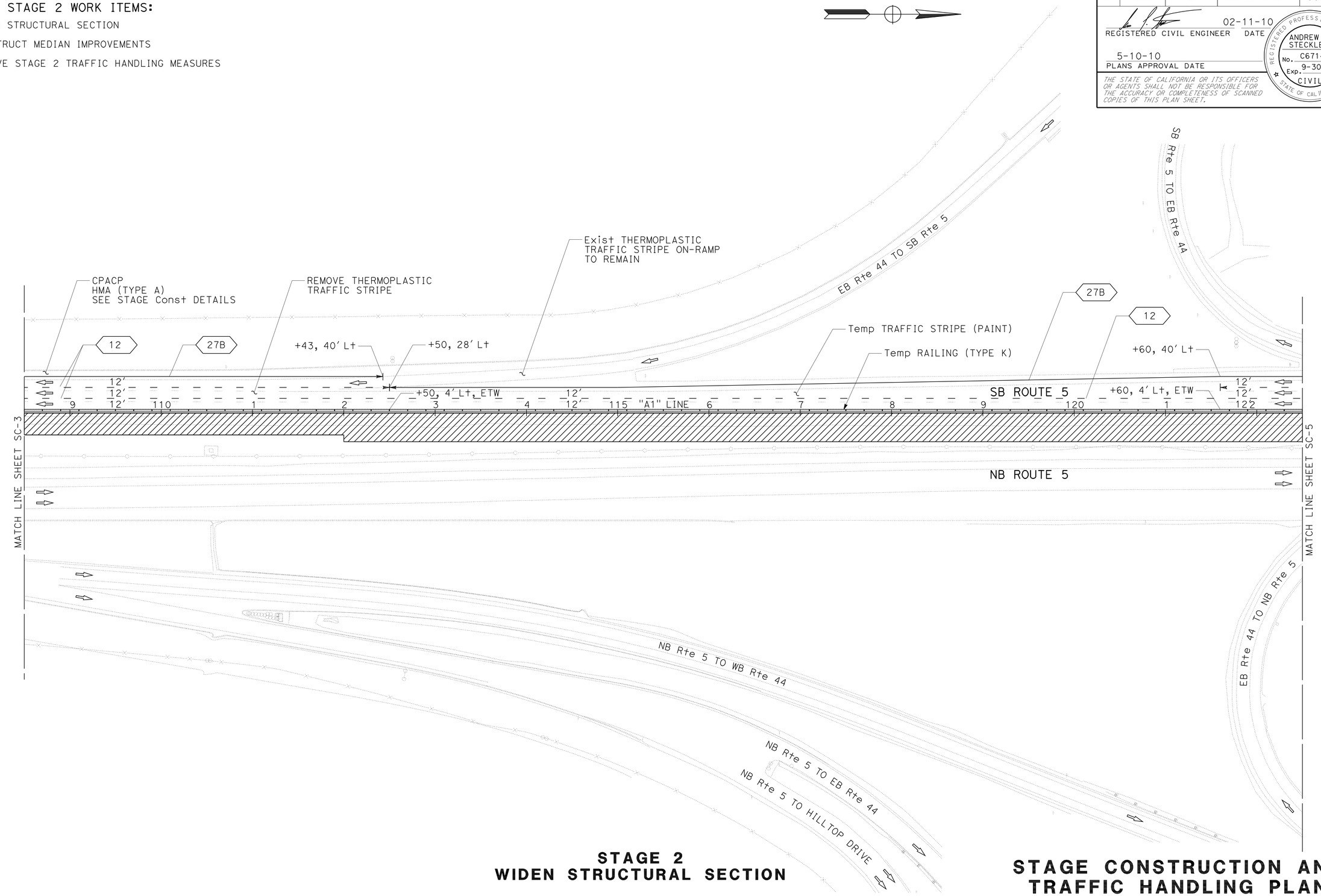


## STAGE 2
## WIDEN STRUCTURAL SECTION

THIS PLAN ACCURATE FOR STAGE CONSTRUCTION AND TRAFFIC HANDLING WORK ONLY

# STAGE CONSTRUCTION AND TRAFFIC HANDLING PLAN

SCALE: 1" = 50'

**SC-4**

STATE OF CALIFORNIA - DEPARTMENT OF TRANSPORTATION
Caltrans
**DESIGN**

FUNCTIONAL SUPERVISOR: STEVE TOPAL
CALCULATED-DESIGNED BY: BOB WEBER
CHECKED BY: ANDREW STECKLEIN
REVISED BY
DATE REVISED

P:\proj2\02\3c000\pse\23c000ma004.dgn

LAST REVISION 01-12-10
DATE PLOTTED => 10-MAY-2010
TIME PLOTTED => 13:19

BORDER LAST REVISED 4/11/2008
RELATIVE BORDER SCALE IS IN INCHES 0 1 2 3
USERNAME => trstrk
DGN FILE => 23c000ma004.dgn
CU 03 247
EA 3C0001

| Dist | COUNTY | ROUTE | POST MILES TOTAL PROJECT | SHEET No. | TOTAL SHEETS |
|---|---|---|---|---|---|
| 02 | Sha | 5 | R14.9/R16.2 | 34 | 165 |

REGISTERED CIVIL ENGINEER 02-11-10 DATE

5-10-10
PLANS APPROVAL DATE

REGISTERED PROFESSIONAL ENGINEER ANDREW P. STECKLEIN No. C67148 Exp. 9-30-10 CIVIL STATE OF CALIFORNIA

*THE STATE OF CALIFORNIA OR ITS OFFICERS OR AGENTS SHALL NOT BE RESPONSIBLE FOR THE ACCURACY OR COMPLETENESS OF SCANNED COPIES OF THIS PLAN SHEET.*

NOTE:

1. THIS SHEET REPEATS INFORMATION PRESENTED ON SHEET SC-2 PERTAINING TO TEMPORARY STRIPING AND RAILING CONFIGURATION.

## STAGE 2 WORK ITEMS:

1. WIDEN STRUCTURAL SECTION
2. CONSTRUCT MEDIAN IMPROVEMENTS
3. REMOVE STAGE 2 TRAFFIC HANDLING MEASURES

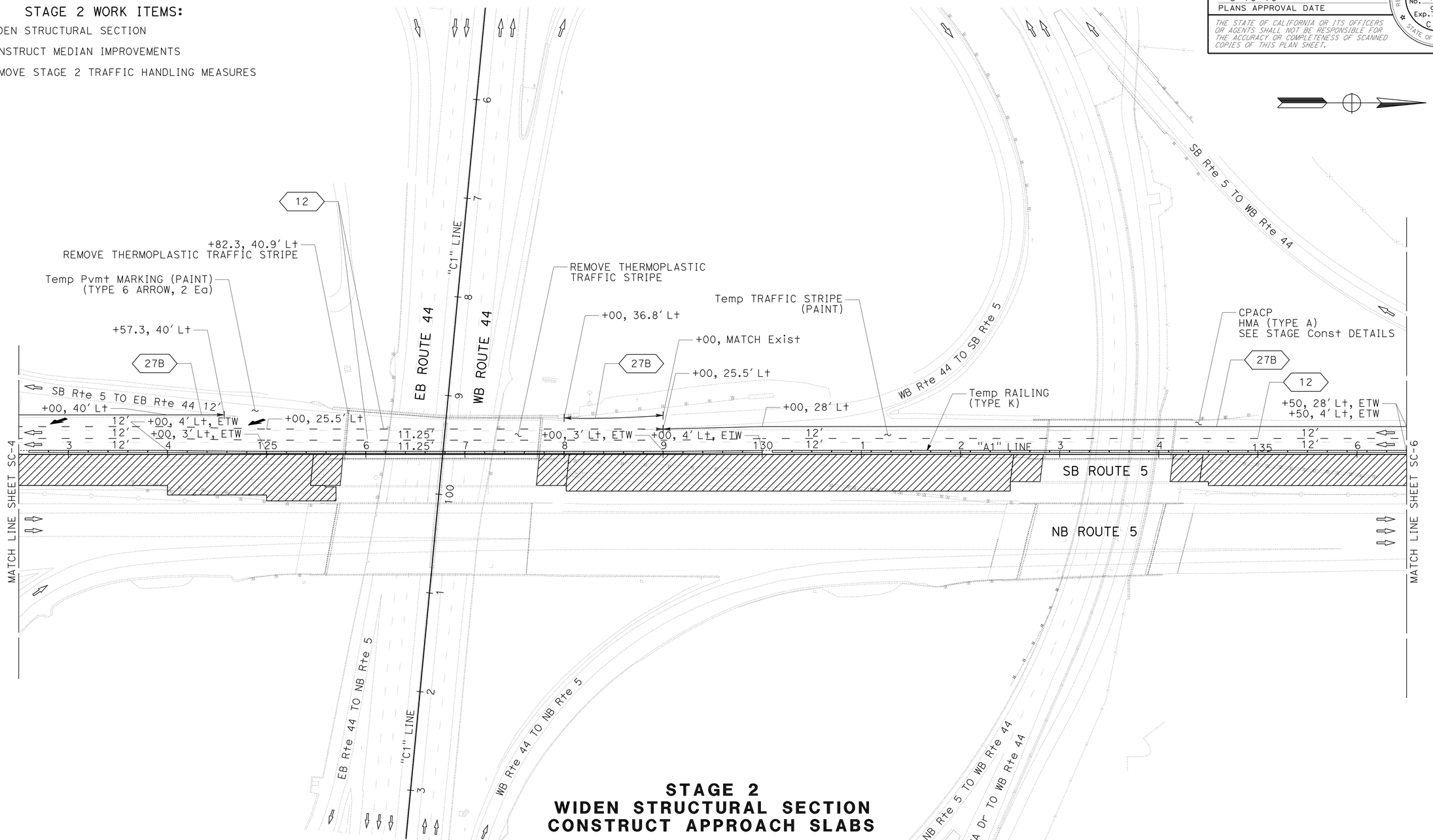


**STAGE 2**
**WIDEN STRUCTURAL SECTION**
**CONSTRUCT APPROACH SLABS**

# STAGE CONSTRUCTION AND TRAFFIC HANDLING PLAN

SCALE: 1" = 50′

**SC-5**

THIS PLAN ACCURATE FOR STAGE CONSTRUCTION AND TRAFFIC HANDLING WORK ONLY

REVISED BY | DATE REVISED
BOB WEBER | ANDREW STECKLEIN
CALCULATED-DESIGNED BY | CHECKED BY
FUNCTIONAL SUPERVISOR: STEVE TOPAL

STATE OF CALIFORNIA - DEPARTMENT OF TRANSPORTATION
Caltrans® **DESIGN**

P:\proj2\02\3c000\pse\23c000ma005.dgn

LAST REVISION 01-12-10 | DATE PLOTTED => 10-MAY-2010 | TIME PLOTTED => 13:19

| Dist | COUNTY | ROUTE | POST MILES TOTAL PROJECT | SHEET No. | TOTAL SHEETS |
|---|---|---|---|---|---|
| 02 | Sha | 5 | R14.9/R16.2 | 35 | 165 |

REGISTERED CIVIL ENGINEER 02-11-10 DATE

5-10-10
PLANS APPROVAL DATE

REGISTERED PROFESSIONAL ENGINEER ANDREW P. STECKLEIN No. C67148 Exp. 9-30-10 CIVIL STATE OF CALIFORNIA

*THE STATE OF CALIFORNIA OR ITS OFFICERS OR AGENTS SHALL NOT BE RESPONSIBLE FOR THE ACCURACY OR COMPLETENESS OF SCANNED COPIES OF THIS PLAN SHEET.*

## STAGE 2 WORK ITEMS:

1. WIDEN STRUCTURAL SECTION
2. CONSTRUCT MEDIAN IMPROVEMENTS
3. REMOVE STAGE 2 TRAFFIC HANDLING MEASURES

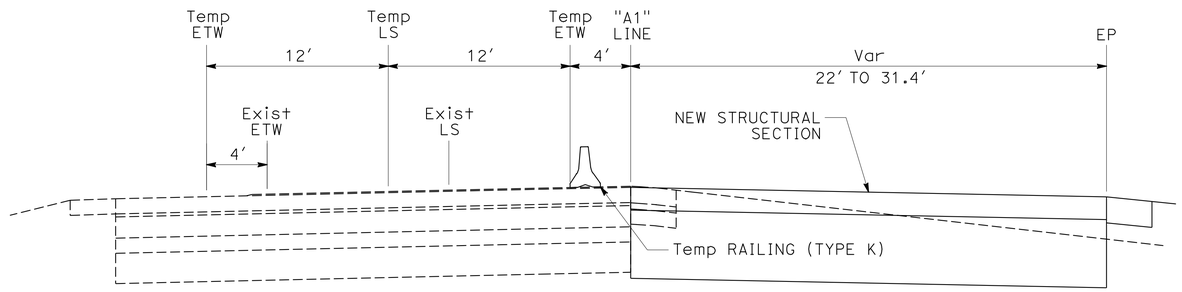


"A1" 136+50 TO "A1" 163+00

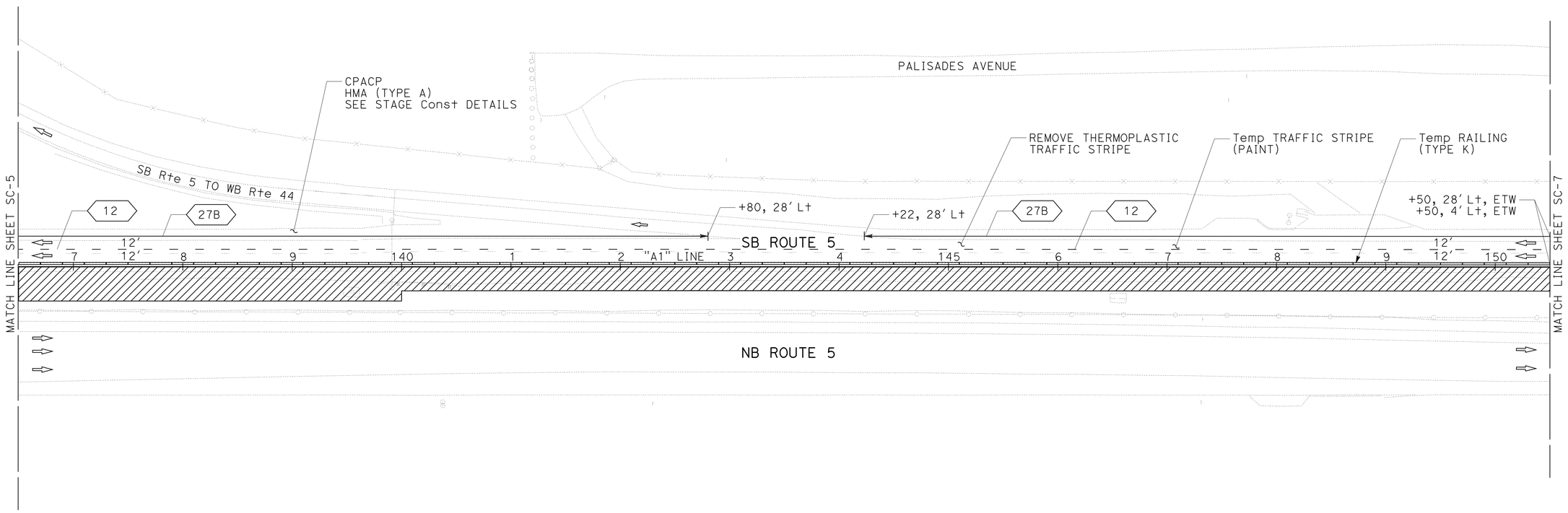


## STAGE 2
## WIDEN STRUCTURAL SECTION

# STAGE CONSTRUCTION AND TRAFFIC HANDLING PLAN

SCALE: 1" = 50′

**SC-6**

THIS PLAN ACCURATE FOR STAGE CONSTRUCTION AND TRAFFIC HANDLING WORK ONLY

REVISED BY | DATE REVISED

BOB WEBER | ANDREW STECKLEIN

CALCULATED-DESIGNED BY | CHECKED BY

FUNCTIONAL SUPERVISOR: STEVE TOPAL

STATE OF CALIFORNIA - DEPARTMENT OF TRANSPORTATION
Caltrans
DESIGN

P:\proj\02\3c000\pse\23c000ma006.dgn

LAST REVISION 01-12-10 | DATE PLOTTED => 10-MAY-2010 | TIME PLOTTED => 13:19

| Dist | COUNTY | ROUTE | POST MILES TOTAL PROJECT | SHEET No. | TOTAL SHEETS |
|---|---|---|---|---|---|
| 02 | Sha | 5 | R14.9/R16.2 | 36 | 165 |

REGISTERED CIVIL ENGINEER 02-11-10 DATE

5-10-10
PLANS APPROVAL DATE

REGISTERED PROFESSIONAL ENGINEER
ANDREW P. STECKLEIN
No. C67148
Exp. 9-30-10
CIVIL
STATE OF CALIFORNIA

*THE STATE OF CALIFORNIA OR ITS OFFICERS OR AGENTS SHALL NOT BE RESPONSIBLE FOR THE ACCURACY OR COMPLETENESS OF SCANNED COPIES OF THIS PLAN SHEET.*

STAGE 2 WORK ITEMS:

1. WIDEN STRUCTURAL SECTION
2. CONSTRUCT MEDIAN IMPROVEMENTS
3. REMOVE STAGE 2 TRAFFIC HANDLING MEASURES

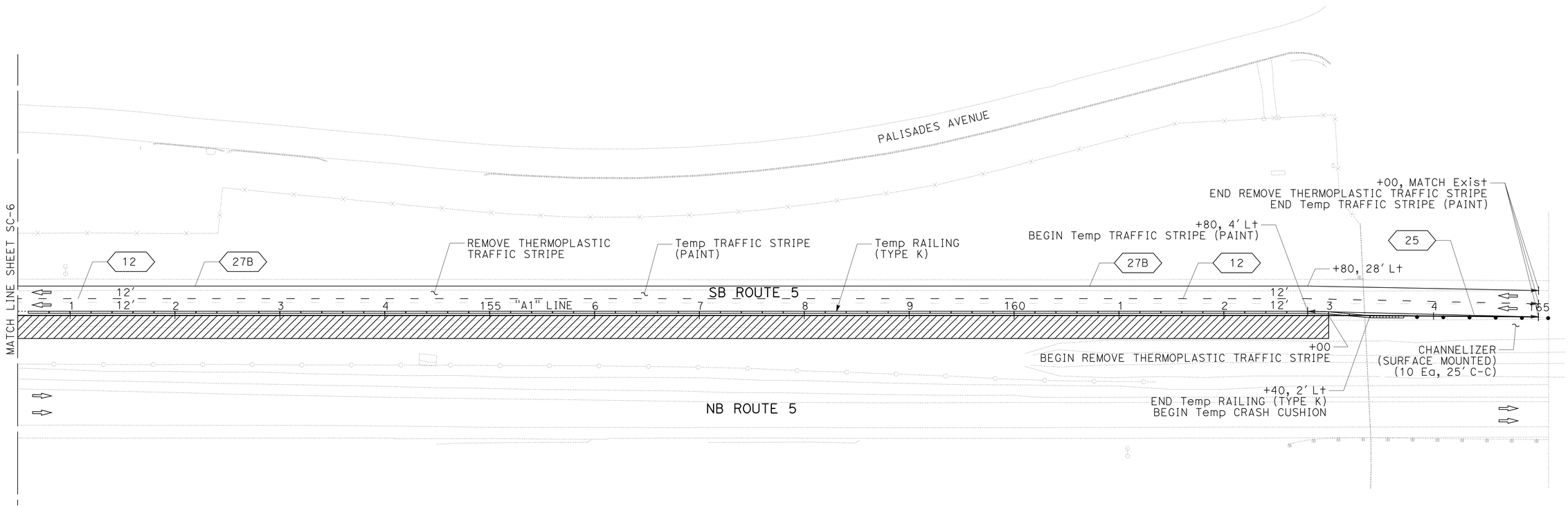


## STAGE 2
## WIDEN STRUCTURAL SECTION

# STAGE CONSTRUCTION AND TRAFFIC HANDLING PLAN

SCALE: 1" = 50'

**SC-7**

THIS PLAN ACCURATE FOR STAGE CONSTRUCTION AND TRAFFIC HANDLING WORK ONLY

| | |
|---|---|
| REVISED BY | BOB WEBER |
| DATE REVISED | ANDREW STECKLEIN |
| CALCULATED-DESIGNED BY | |
| CHECKED BY | |
| FUNCTIONAL SUPERVISOR | STEVE TOPAL |

STATE OF CALIFORNIA - DEPARTMENT OF TRANSPORTATION
Caltrans
DESIGN

P:\proj2\02\3c000\pse\23c000ma007.dgn

LAST REVISION 01-12-10
DATE PLOTTED => 10-MAY-2010
TIME PLOTTED => 13:19

BORDER LAST REVISED 4/11/2008
RELATIVE BORDER SCALE IS IN INCHES 0 1 2 3
USERNAME => trstrk
DGN FILE => 23c000ma007.dgn
CU 03 247
EA 3C0001

| Dist | COUNTY | ROUTE | POST MILES TOTAL PROJECT | SHEET No. | TOTAL SHEETS |
|---|---|---|---|---|---|
| 02 | Sha | 5 | R14.9/R16.2 | 37 | 165 |

REGISTERED CIVIL ENGINEER 02-11-10 DATE

5-10-10
PLANS APPROVAL DATE

REGISTERED PROFESSIONAL ENGINEER ANDREW P. STECKLEIN No. C67148 Exp. 9-30-10 CIVIL STATE OF CALIFORNIA

*THE STATE OF CALIFORNIA OR ITS OFFICERS OR AGENTS SHALL NOT BE RESPONSIBLE FOR THE ACCURACY OR COMPLETENESS OF SCANNED COPIES OF THIS PLAN SHEET.*

NOTE:

1. TEMPORARY SB No. 3 LANE DELINEATED DURING STAGE 1B TO BE USED DURING STAGE 3.

## STAGE 3A WORK ITEMS:

1. IMPLEMENT STAGE 3A TRAFFIC HANDLING MEASURES
2. REMOVE AC FROM EXISTING BRIDGE DECKS
3. EXCAVATE ROADWAY STRUCTURAL SECTION BETWEEN Sta 122+00 AND 136+50
4. CONSTRUCT APPROACH SLABS AT EXISTING BRIDGE DECKS
5. CONSTRUCT NEW STRUCTURAL SECTION BETWEEN Sta 122+00 AND 136+50
6. PLACE POLYESTER CONCRETE OVERLAY ON EXISTING BRIDGE DECKS

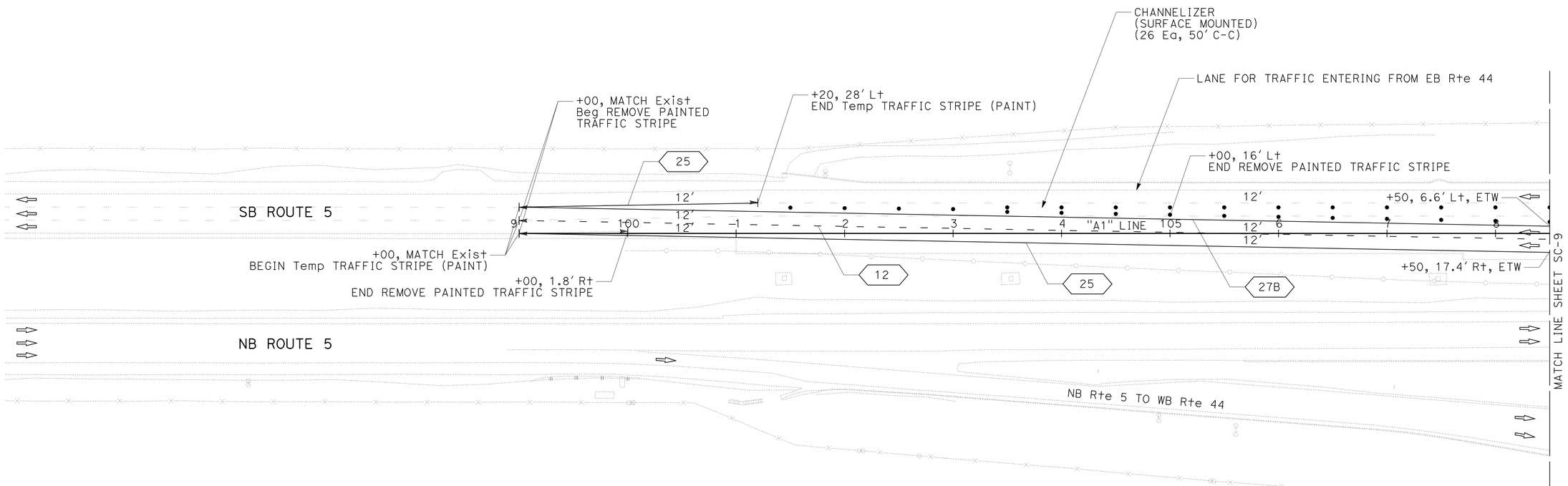


**STAGE 3A**
**INTERBRIDGE AREA**
**REPLACE STRUCTURAL SECTION**

# STAGE CONSTRUCTION AND TRAFFIC HANDLING PLAN

SCALE: 1" = 50'

**SC-8**

THIS PLAN ACCURATE FOR STAGE CONSTRUCTION AND TRAFFIC HANDLING WORK ONLY

| REVISED BY | DATE REVISED |
|---|---|
| | |

CALCULATED-DESIGNED BY: BOB WEBER
CHECKED BY: ANDREW STECKLEIN
FUNCTIONAL SUPERVISOR: STEVE TOPAL

STATE OF CALIFORNIA - DEPARTMENT OF TRANSPORTATION
Caltrans
DESIGN

P:\proj2\02\3c000\pse\23c000ma008.dgn

LAST REVISION 01-12-10 | DATE PLOTTED => 10-MAY-2010 | TIME PLOTTED => 13:19

| Dist | COUNTY | ROUTE | POST MILES TOTAL PROJECT | SHEET No. | TOTAL SHEETS |
|---|---|---|---|---|---|
| 02 | Sha | 5 | R14.9/R16.2 | 38 | 165 |

REGISTERED CIVIL ENGINEER 02-11-10 DATE

5-10-10
PLANS APPROVAL DATE

REGISTERED PROFESSIONAL ENGINEER ANDREW P. STECKLEIN No. C67148 Exp. 9-30-10 CIVIL STATE OF CALIFORNIA

*THE STATE OF CALIFORNIA OR ITS OFFICERS OR AGENTS SHALL NOT BE RESPONSIBLE FOR THE ACCURACY OR COMPLETENESS OF SCANNED COPIES OF THIS PLAN SHEET.*

NOTE:

1. TEMPORARY SB No. 3 LANE PLACED DURING STAGE 1B TO BE USED DURING STAGE 3.

## STAGE 3A WORK ITEMS:

1. IMPLEMENT STAGE 3A TRAFFIC HANDLING MEASURES
2. REMOVE AC FROM EXISTING BRIDGE DECKS
3. EXCAVATE ROADWAY STRUCTURAL SECTION BETWEEN Sta 122+00 AND 136+50
4. CONSTRUCT APPROACH SLABS AT EXISTING BRIDGE DECKS
5. CONSTRUCT NEW STRUCTURAL SECTION BETWEEN Sta 122+00 AND 136+50
6. PLACE POLYESTER CONCRETE OVERLAY ON EXISTING BRIDGE DECKS

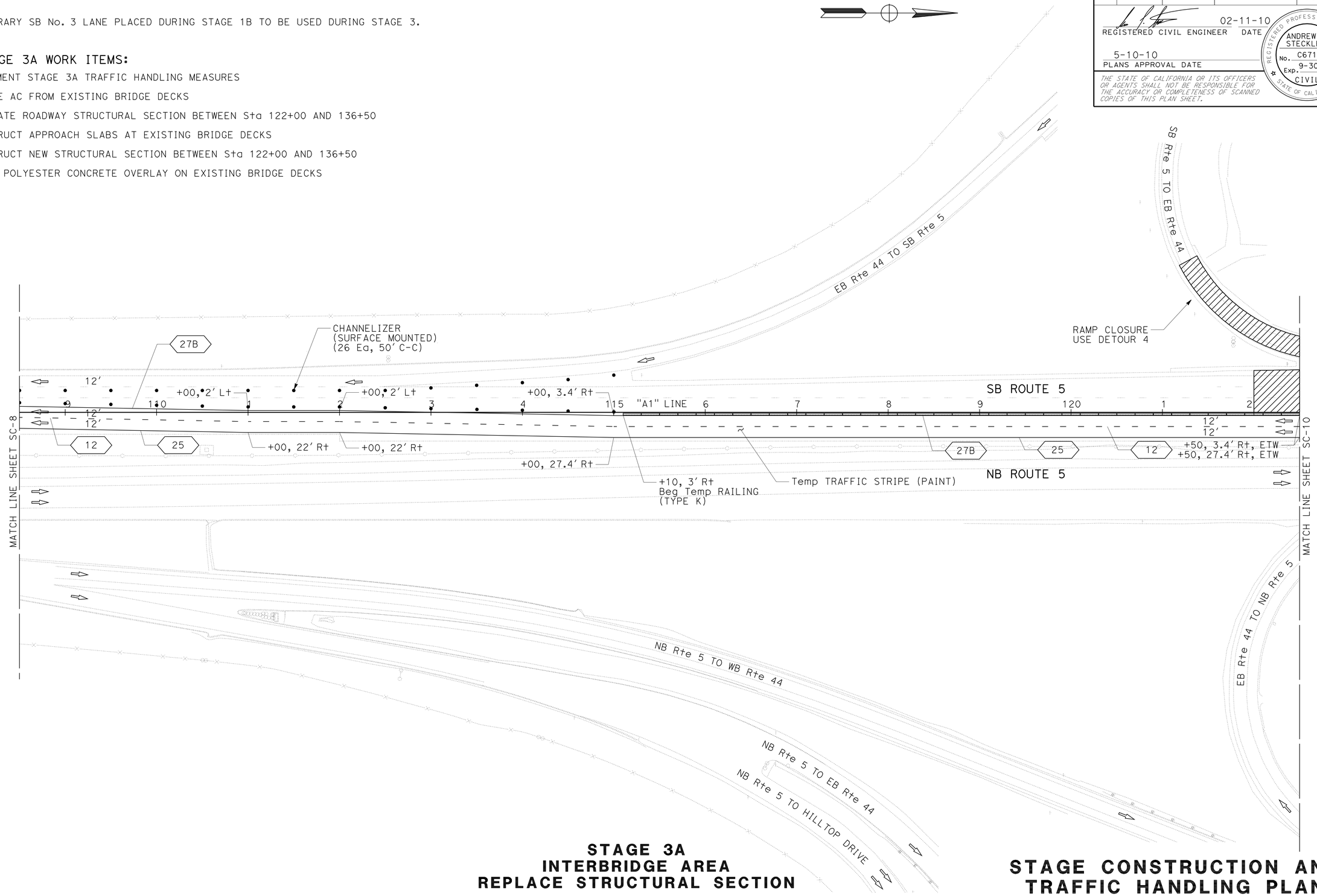


**STAGE 3A**
**INTERBRIDGE AREA**
**REPLACE STRUCTURAL SECTION**

THIS PLAN ACCURATE FOR STAGE CONSTRUCTION AND TRAFFIC HANDLING WORK ONLY

# STAGE CONSTRUCTION AND TRAFFIC HANDLING PLAN

SCALE: 1" = 50'

**SC-9**

| REVISED BY | DATE REVISED |
|---|---|
| | |

| CALCULATED-DESIGNED BY | CHECKED BY |
|---|---|
| BOB WEBER | ANDREW STECKLEIN |

FUNCTIONAL SUPERVISOR: STEVE TOPAL

STATE OF CALIFORNIA - DEPARTMENT OF TRANSPORTATION
Caltrans
DESIGN

P:\proj\02\3c000\pse\23c000ma009.dgn

LAST REVISION 01-12-10 | DATE PLOTTED => 10-MAY-2010 | TIME PLOTTED => 13:19

BORDER LAST REVISED 4/11/2008 | RELATIVE BORDER SCALE IS IN INCHES 0 1 2 3 | USERNAME => trstrk | DGN FILE => 23c000ma009.dgn | CU 03 247 | EA 3C0001

| Dist | COUNTY | ROUTE | POST MILES TOTAL PROJECT | SHEET No. | TOTAL SHEETS |
|---|---|---|---|---|---|
| 02 | Sha | 5 | R14.9/R16.2 | 39 | 165 |

REGISTERED CIVIL ENGINEER 02-11-10 DATE

5-10-10
PLANS APPROVAL DATE

REGISTERED PROFESSIONAL ENGINEER ANDREW P. STECKLEIN No. C67148 Exp. 9-30-10 CIVIL STATE OF CALIFORNIA

*THE STATE OF CALIFORNIA OR ITS OFFICERS OR AGENTS SHALL NOT BE RESPONSIBLE FOR THE ACCURACY OR COMPLETENESS OF SCANNED COPIES OF THIS PLAN SHEET.*

NOTE:

1. GAP SHOWN IN STRIPE (DETAIL 25) BETWEEN Sta 131+64.7 AND 133+82.1 WILL BE PART OF TEMPORARY EXIT STRIPING FROM SB Rte 5 TO EB Rte 44 DURING STAGE 3B.

## STAGE 3A WORK ITEMS:

1. IMPLEMENT STAGE 3A TRAFFIC HANDLING MEASURES
2. REMOVE AC FROM EXISTING BRIDGE DECKS
3. EXCAVATE ROADWAY STRUCTURAL SECTION BETWEEN Sta 122+00 AND 136+50
4. CONSTRUCT APPROACH SLABS AT EXISTING BRIDGE DECKS
5. CONSTRUCT NEW STRUCTURAL SECTION BETWEEN Sta 122+00 AND 136+50
6. PLACE POLYESTER CONCRETE OVERLAY ON EXISTING BRIDGE DECKS

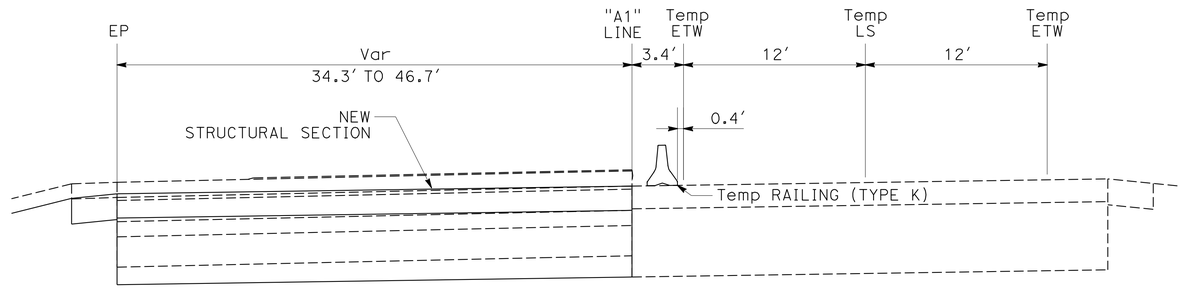


"A1" 122+00 TO "A1" 136+50

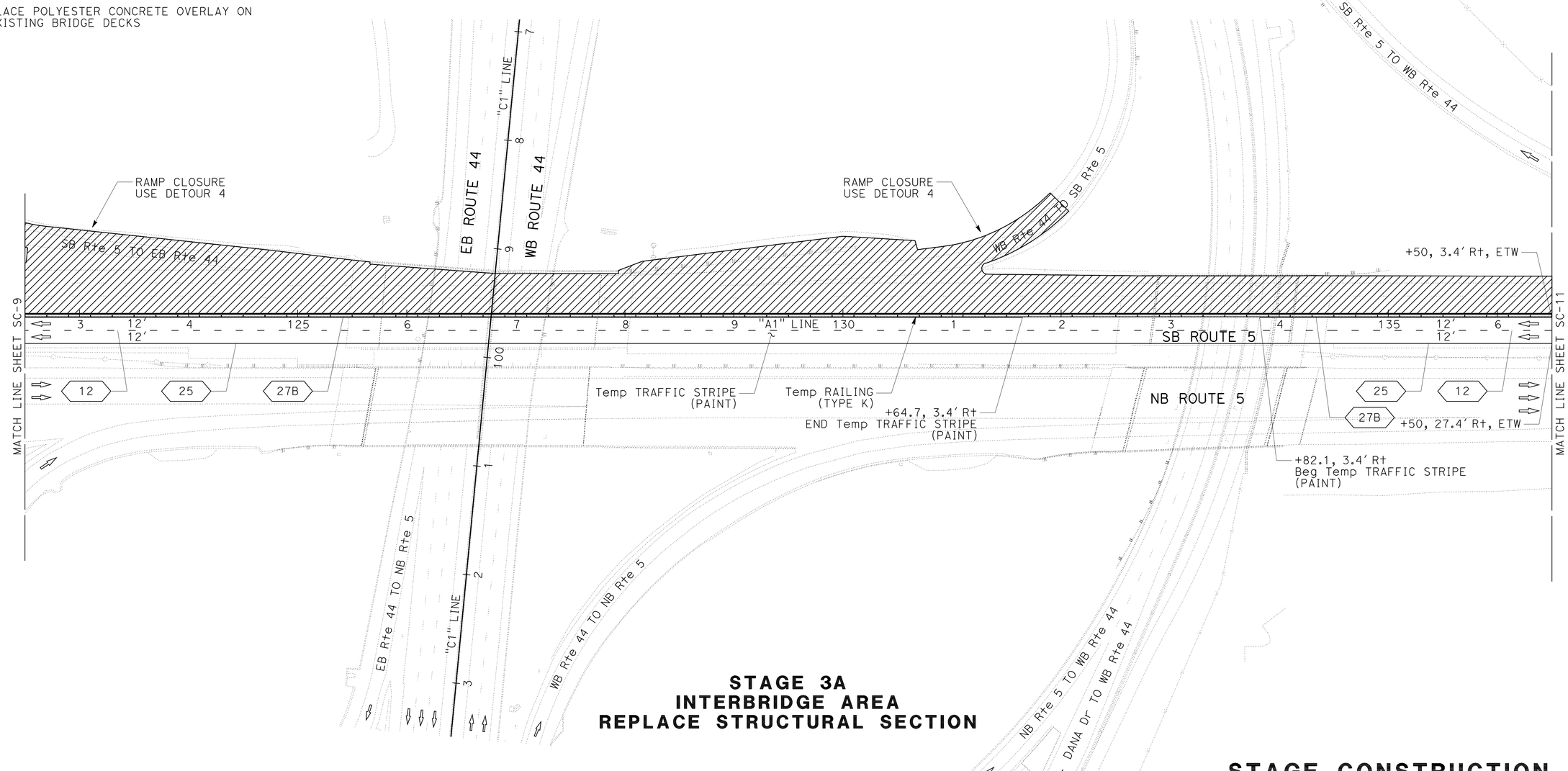


**STAGE 3A**
**INTERBRIDGE AREA**
**REPLACE STRUCTURAL SECTION**

# STAGE CONSTRUCTION AND TRAFFIC HANDLING PLAN

SCALE: 1" = 50'

**SC-10**

THIS PLAN ACCURATE FOR STAGE CONSTRUCTION AND TRAFFIC HANDLING WORK ONLY

REVISED BY | DATE REVISED
BOB WEBER | ANDREW STECKLEIN
CALCULATED-DESIGNED BY | CHECKED BY
FUNCTIONAL SUPERVISOR: STEVE TOPAL

STATE OF CALIFORNIA - DEPARTMENT OF TRANSPORTATION
Caltrans® DESIGN

P:\proj2\02\3c000\pse\23c000ma010.dgn

LAST REVISION 01-12-10 | DATE PLOTTED => 10-MAY-2010 | TIME PLOTTED => 13:20

| Dist | COUNTY | ROUTE | POST MILES TOTAL PROJECT | SHEET No. | TOTAL SHEETS |
|---|---|---|---|---|---|
| 02 | Sha | 5 | R14.9/R16.2 | 40 | 165 |

REGISTERED CIVIL ENGINEER 02-11-10 DATE

5-10-10
PLANS APPROVAL DATE

REGISTERED PROFESSIONAL ENGINEER
ANDREW P. STECKLEIN
No. C67148
Exp. 9-30-10
CIVIL
STATE OF CALIFORNIA

*THE STATE OF CALIFORNIA OR ITS OFFICERS OR AGENTS SHALL NOT BE RESPONSIBLE FOR THE ACCURACY OR COMPLETENESS OF SCANNED COPIES OF THIS PLAN SHEET.*

NOTES:

1. TO ACCOMODATE CONSTRUCTION TRAFFIC PROCEEDING SOUTH OF THE WB Rte 44 EXIT, SPACING OF THE CHANNELIZERS MAY BE ADJUSTED AND/OR CONES MAY BE SUBSTITUED, AS APPROVED BY THE ENGINEER.
2. TEMPORARY RAILING AND STRIPING SHOWN ON THIS SHEET WILL BE USED DURING STAGE 3B.

## STAGE 3A WORK ITEMS:

1. IMPLEMENT STAGE 3A TRAFFIC HANDLING MEASURES
2. REMOVE AC FROM EXISTING BRIDGE DECKS
3. EXCAVATE ROADWAY STRUCTURAL SECTION BETWEEN Sta 122+00 AND 136+50
4. CONSTRUCT APPROACH SLABS AT EXISTING BRIDGE DECKS
5. CONSTRUCT NEW STRUCTURAL SECTION BETWEEN Sta 122+00 AND 136+50
6. PLACE POLYESTER CONCRETE OVERLAY ON EXISTING BRIDGE DECKS

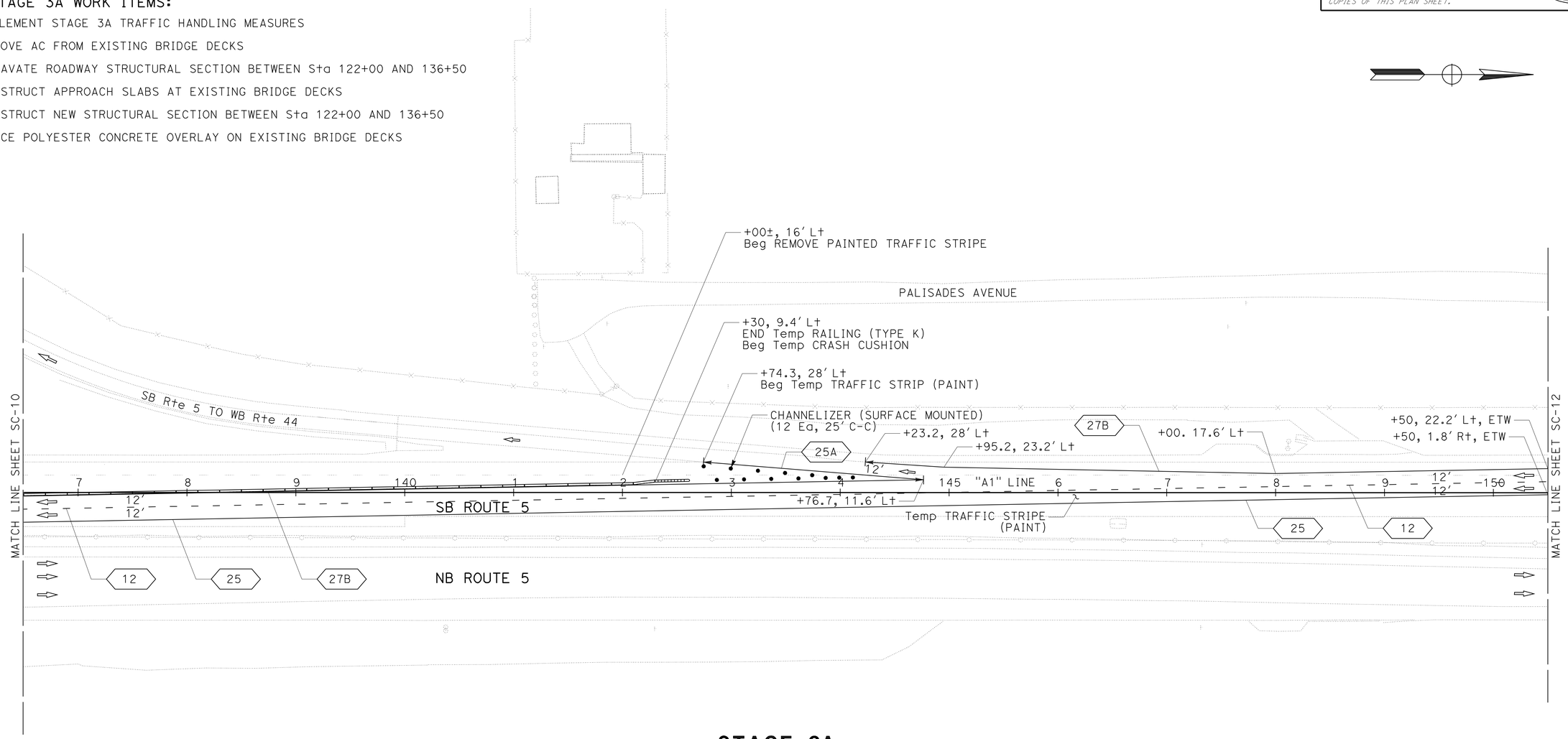


# STAGE 3A
# INTERBRIDGE AREA
# REPLACE STRUCTURAL SECTION

THIS PLAN ACCURATE FOR STAGE CONSTRUCTION AND TRAFFIC HANDLING WORK ONLY

# STAGE CONSTRUCTION AND TRAFFIC HANDLING PLAN

SCALE: 1" = 50′

**SC-11**

| REVISED BY | DATE REVISED |
|---|---|
| | |

CALCULATED-DESIGNED BY: BOB WEBER
CHECKED BY: ANDREW STECKLEIN
FUNCTIONAL SUPERVISOR: STEVE TOPAL

STATE OF CALIFORNIA - DEPARTMENT OF TRANSPORTATION
Caltrans
DESIGN

P:\proj2\02\3c000\pse\23c000ma011.dgn

LAST REVISION 01-12-10
DATE PLOTTED => 10-MAY-2010
TIME PLOTTED => 13:20

| Dist | COUNTY | ROUTE | POST MILES TOTAL PROJECT | SHEET No. | TOTAL SHEETS |
|---|---|---|---|---|---|
| 02 | Sha | 5 | R14.9/R16.2 | 41 | 165 |

REGISTERED CIVIL ENGINEER 02-11-10 DATE

5-10-10
PLANS APPROVAL DATE

REGISTERED PROFESSIONAL ENGINEER ANDREW P. STECKLEIN No. C67148 Exp. 9-30-10 CIVIL STATE OF CALIFORNIA

*THE STATE OF CALIFORNIA OR ITS OFFICERS OR AGENTS SHALL NOT BE RESPONSIBLE FOR THE ACCURACY OR COMPLETENESS OF SCANNED COPIES OF THIS PLAN SHEET.*

NOTE:

1. TEMPORARY STRIPING SHOWN ON THIS SHEET WILL BE USED DURING STAGE 3B.

## STAGE 3A WORK ITEMS:

1. IMPLEMENT STAGE 3A TRAFFIC HANDLING MEASURES
2. REMOVE AC FROM EXISTING BRIDGE DECKS
3. EXCAVATE ROADWAY STRUCTURAL SECTION BETWEEN Sta 122+00 AND 136+50
4. CONSTRUCT APPROACH SLABS AT EXISTING BRIDGE DECKS
5. CONSTRUCT NEW STRUCTURAL SECTION BETWEEN Sta 122+00 AND 136+50
6. PLACE POLYESTER CONCRETE OVERLAY ON EXISTING BRIDGE DECKS

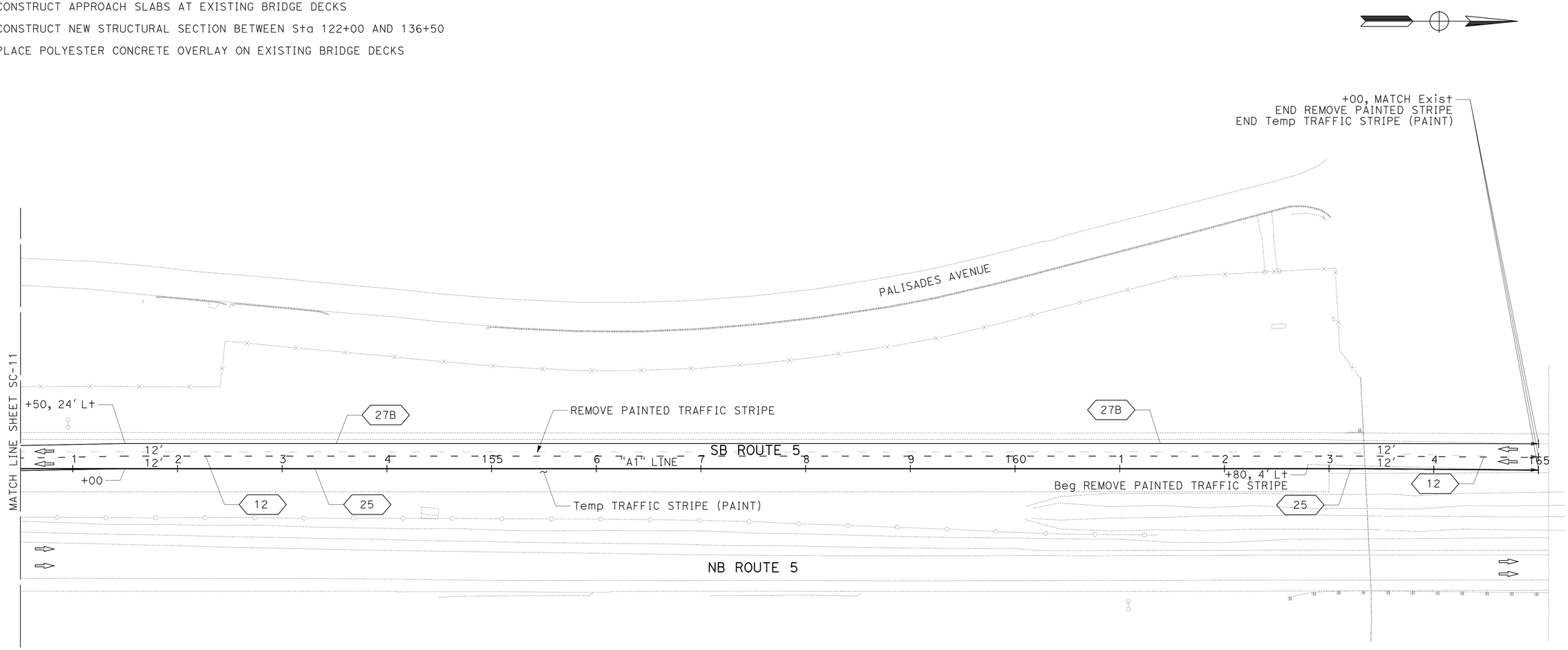


**STAGE 3A**
**INTERBRIDGE AREA**
**REPLACE STRUCTURAL SECTION**

THIS PLAN ACCURATE FOR STAGE CONSTRUCTION AND TRAFFIC HANDLING WORK ONLY

# STAGE CONSTRUCTION AND TRAFFIC HANDLING PLAN

SCALE: 1" = 50'

**SC-12**

| REVISED BY | DATE REVISED |
|---|---|
| | |

CALCULATED-DESIGNED BY: BOB WEBER
CHECKED BY: ANDREW STECKLEIN
FUNCTIONAL SUPERVISOR: STEVE TOPAL

STATE OF CALIFORNIA - DEPARTMENT OF TRANSPORTATION
Caltrans® DESIGN

P:\proj2\02\3c000\pse\23c000ma012.dgn

LAST REVISION 01-12-10
DATE PLOTTED => 10-MAY-2010
TIME PLOTTED => 14:25

| Dist | COUNTY | ROUTE | POST MILES TOTAL PROJECT | SHEET No. | TOTAL SHEETS |
|---|---|---|---|---|---|
| 02 | Sha | 5 | R14.9/R16.2 | 42 | 165 |

REGISTERED CIVIL ENGINEER 02-11-10 DATE

5-10-10
PLANS APPROVAL DATE

REGISTERED PROFESSIONAL ENGINEER ANDREW P. STECKLEIN No. C67148 Exp. 9-30-10 CIVIL STATE OF CALIFORNIA

*THE STATE OF CALIFORNIA OR ITS OFFICERS OR AGENTS SHALL NOT BE RESPONSIBLE FOR THE ACCURACY OR COMPLETENESS OF SCANNED COPIES OF THIS PLAN SHEET.*

NOTE:

1. MODIFICATION AND/OR REPLACEMENT OF THE TEMPORARY STRIPING ENABLES THE REOPENING OF THE EB AND WB Rte 44 RAMPS PRIOR TO PLACEMENT OF THE HMA (OPEN GRADED) OVERLAY AND FINAL STRIPING.

## STAGE 3B WORK ITEMS:

1. MODIFY AND/OR REPLACE REPLACE TEMPORARY CHANNELIZERS, PAVEMENT MARKING AND STRIPING
2. REMOVE TEMPORARY RAILING TO Sta 133+90±
3. OPEN Rte 44 RAMPS

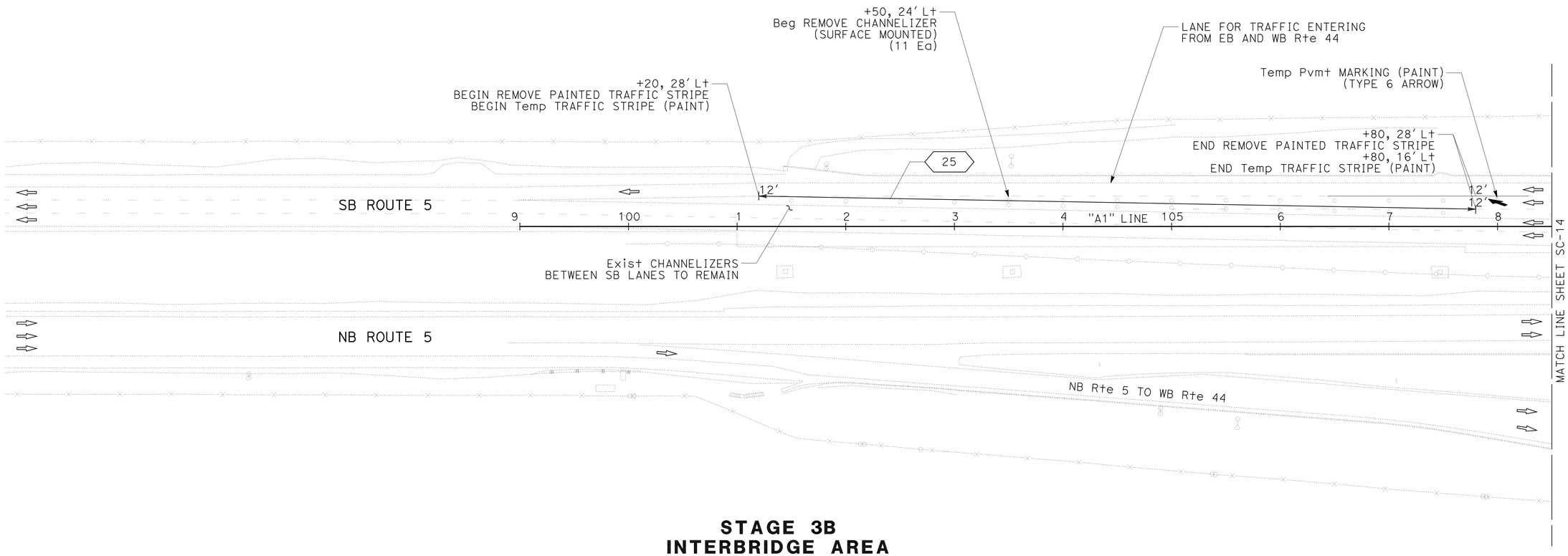


**STAGE 3B**
**INTERBRIDGE AREA**
**MODIFY/REPLACE TEMPORARY STRIPING**

# STAGE CONSTRUCTION AND TRAFFIC HANDLING PLAN

SCALE: 1" = 50'

**SC-13**

THIS PLAN ACCURATE FOR STAGE CONSTRUCTION AND TRAFFIC HANDLING WORK ONLY

REVISED BY | DATE REVISED
BOB WEBER | ANDREW STECKLEIN
CALCULATED-DESIGNED BY | CHECKED BY
FUNCTIONAL SUPERVISOR: STEVE TOPAL

STATE OF CALIFORNIA - DEPARTMENT OF TRANSPORTATION
Caltrans
DESIGN

P:\proj\02\3c000\pse\23c000ma013.dgn

LAST REVISION 01-12-10 | DATE PLOTTED => 11-MAY-2010 | TIME PLOTTED => 09:36

| Dist | COUNTY | ROUTE | POST MILES TOTAL PROJECT | SHEET No. | TOTAL SHEETS |
|---|---|---|---|---|---|
| 02 | Sha | 5 | R14.9/R16.2 | 43 | 165 |

REGISTERED CIVIL ENGINEER 02-11-10 DATE

5-10-10
PLANS APPROVAL DATE

REGISTERED PROFESSIONAL ENGINEER ANDREW P. STECKLEIN No. C67148 Exp. 9-30-10 CIVIL STATE OF CALIFORNIA

*THE STATE OF CALIFORNIA OR ITS OFFICERS OR AGENTS SHALL NOT BE RESPONSIBLE FOR THE ACCURACY OR COMPLETENESS OF SCANNED COPIES OF THIS PLAN SHEET.*

## STAGE 3B WORK ITEMS:

1. MODIFY AND/OR REPLACE TEMPORARY CHANNELIZERS, PAVEMENT MARKING AND STRIPING
2. REMOVE TEMPORARY RAILING TO Sta 133+90±
3. OPEN Rte 44 RAMPS

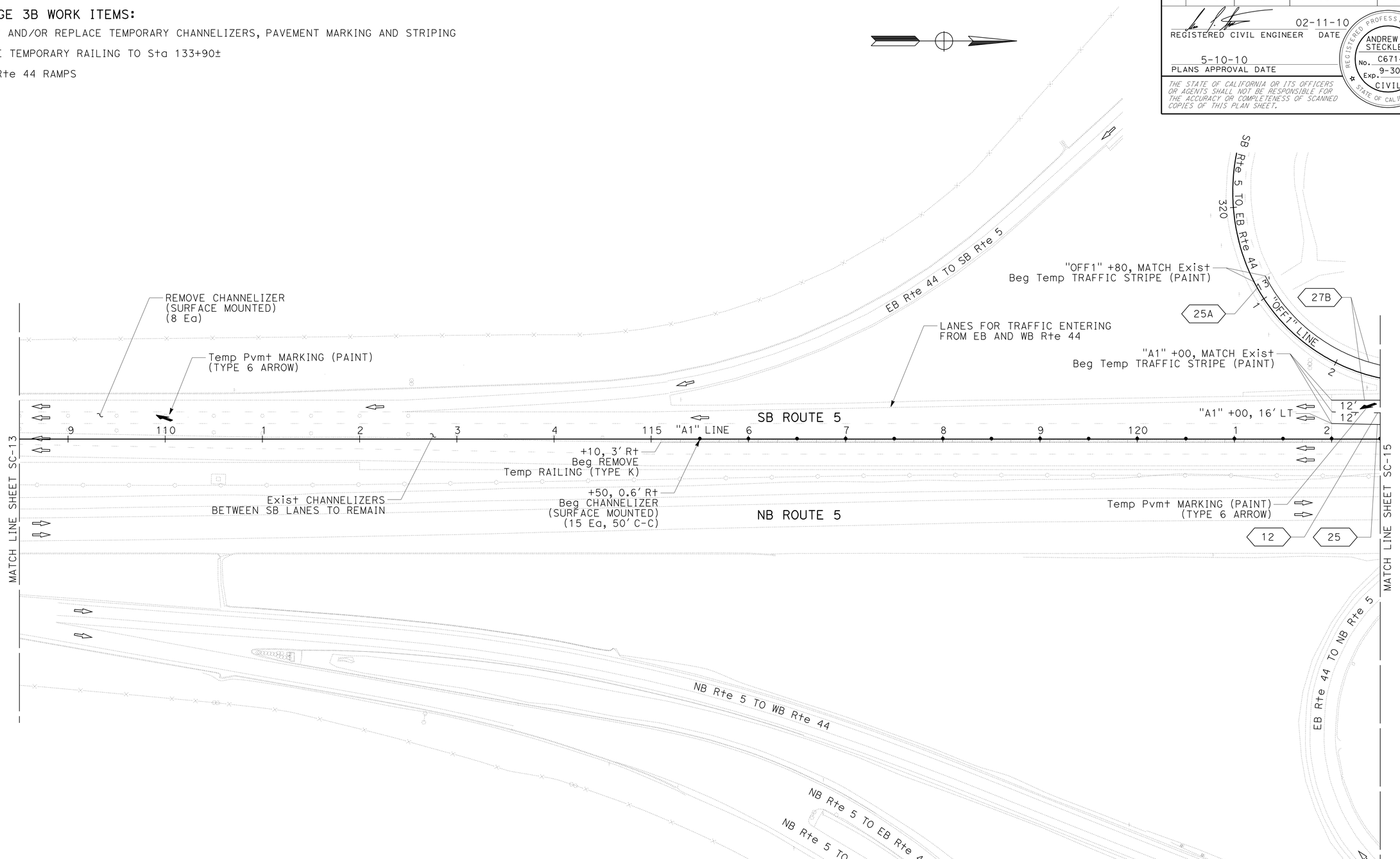


**STAGE 3B**
**INTERBRIDGE AREA**
**MODIFY/REPLACE TEMPORARY STRIPING**

THIS PLAN ACCURATE FOR STAGE CONSTRUCTION AND TRAFFIC HANDLING WORK ONLY

# STAGE CONSTRUCTION AND TRAFFIC HANDLING PLAN

SCALE: 1" = 50'

**SC-14**

| REVISED BY | DATE REVISED |
|---|---|
| | |

CALCULATED-DESIGNED BY: BOB WEBER
CHECKED BY: ANDREW STECKLEIN
FUNCTIONAL SUPERVISOR: STEVE TOPAL

STATE OF CALIFORNIA - DEPARTMENT OF TRANSPORTATION
Caltrans® DESIGN

P:\proj2\02\3c000\pse\23c000ma014.dgn

LAST REVISION 01-12-10 | DATE PLOTTED => 10-MAY-2010 | TIME PLOTTED => 14:25

BORDER LAST REVISED 4/11/2008 | RELATIVE BORDER SCALE IS IN INCHES 0 1 2 3 | USERNAME => trlim | DGN FILE => 23c000ma014.dgn | CU 03 247 | EA 3C0001

| Dist | COUNTY | ROUTE | POST MILES TOTAL PROJECT | SHEET No. | TOTAL SHEETS |
|---|---|---|---|---|---|
| 02 | Sha | 5 | R14.9/R16.2 | 44 | 165 |

REGISTERED CIVIL ENGINEER 02-11-10 DATE

5-10-10
PLANS APPROVAL DATE

REGISTERED PROFESSIONAL ENGINEER ANDREW P. STECKLEIN No. C67148 Exp. 9-30-10 CIVIL STATE OF CALIFORNIA

*THE STATE OF CALIFORNIA OR ITS OFFICERS OR AGENTS SHALL NOT BE RESPONSIBLE FOR THE ACCURACY OR COMPLETENESS OF SCANNED COPIES OF THIS PLAN SHEET.*

NOTE:

1. EXISTING STAGE 3A TRAFFIC HANDLING MEASURES NORTH OF Sta 133+90 TO REMAIN DURING STAGE 3B.

## STAGE 3B WORK ITEMS:

1. MODIFY AND/OR REPLACE REPLACE TEMPORARY CHANNELIZERS, PAVEMENT MARKING AND STRIPING
2. REMOVE TEMPORARY RAILING TO Sta 133+90±
3. OPEN Rte 44 RAMPS

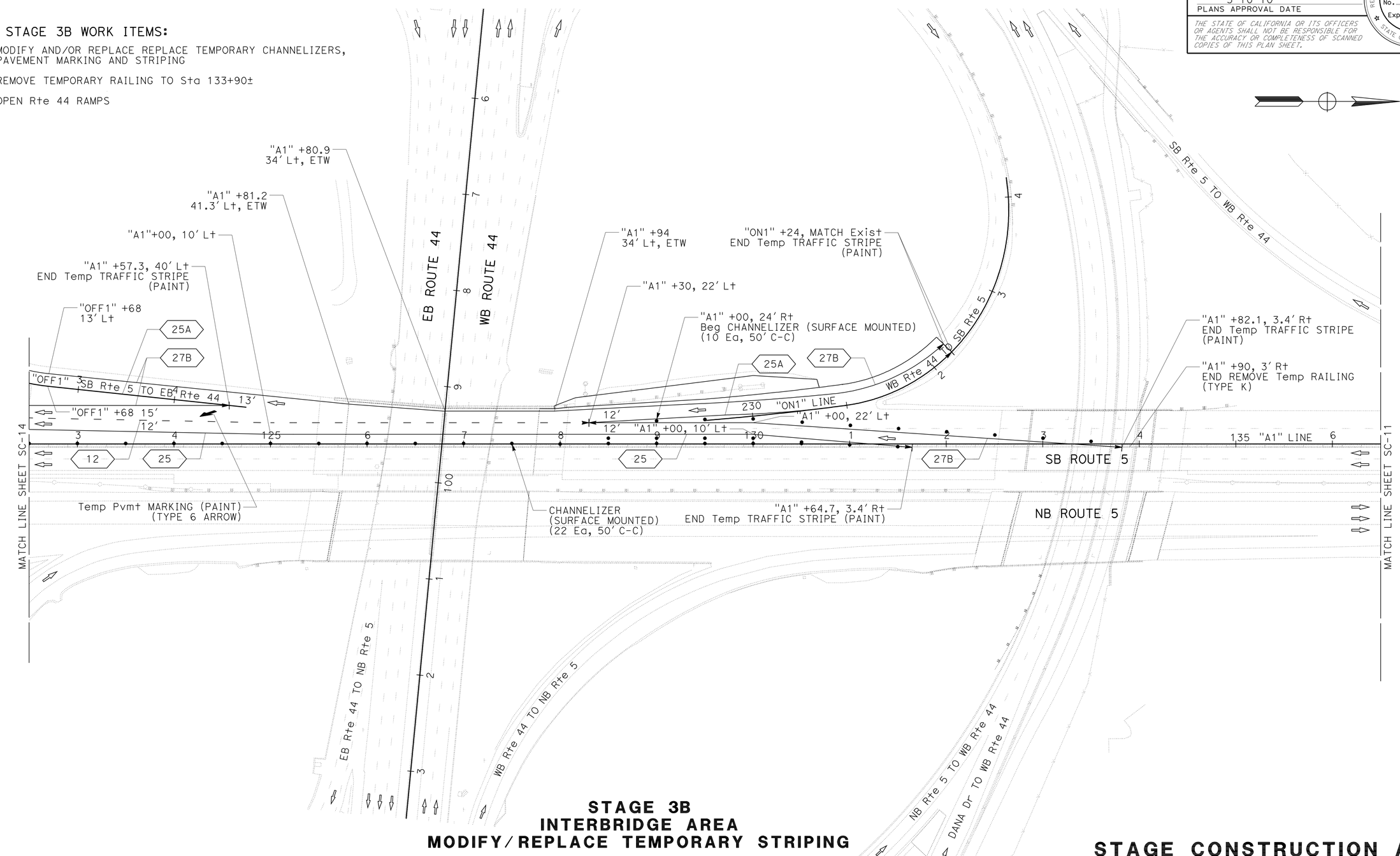


**STAGE 3B**
**INTERBRIDGE AREA**
**MODIFY/REPLACE TEMPORARY STRIPING**

THIS PLAN ACCURATE FOR STAGE CONSTRUCTION AND TRAFFIC HANDLING WORK ONLY

# STAGE CONSTRUCTION AND TRAFFIC HANDLING PLAN

SCALE: 1" = 50'

**SC-15**

| REVISED BY | DATE REVISED |
|---|---|
| | |

CALCULATED-DESIGNED BY: BOB WEBER
CHECKED BY: ANDREW STECKLEIN
FUNCTIONAL SUPERVISOR: STEVE TOPAL

STATE OF CALIFORNIA - DEPARTMENT OF TRANSPORTATION
Caltrans® DESIGN

P:\proj2\02\3c000\pse\23c000ma015.dgn

LAST REVISION 01-12-10 | DATE PLOTTED => 10-MAY-2010 | TIME PLOTTED => 14:25

| Dist | COUNTY | ROUTE | POST MILES TOTAL PROJECT | SHEET No. | TOTAL SHEETS |
|---|---|---|---|---|---|
| 02 | Sha | 5 | R14.9/R16.2 | 45 | 165 |

REGISTERED CIVIL ENGINEER 02-11-10 DATE

5-10-10
PLANS APPROVAL DATE

REGISTERED PROFESSIONAL ENGINEER ANDREW P. STECKLEIN No. C67148 Exp. 9-30-10 CIVIL STATE OF CALIFORNIA

*THE STATE OF CALIFORNIA OR ITS OFFICERS OR AGENTS SHALL NOT BE RESPONSIBLE FOR THE ACCURACY OR COMPLETENESS OF SCANNED COPIES OF THIS PLAN SHEET.*

NOTE:

1. STAGE 4 WORK TO BE EXECUTED USING STANDARD PLAN LANE AND RAMP CLOSURES AS APPROVED BY THE ENGINEER.

## STAGE 4 WORK ITEMS:

1. REMOVE STAGE 3B TRAFFIC HANDLING MEASURES
2. COLD PLANE OGAC
3. PLACE HMA (OPEN GRADED) OVERLAY
4. PLACE TRAFFIC STRIPING

## LEGEND

PLACE HMA(OG) OVERLAY

COLD PLANE AND PLACE HMA(OG) OVERLAY

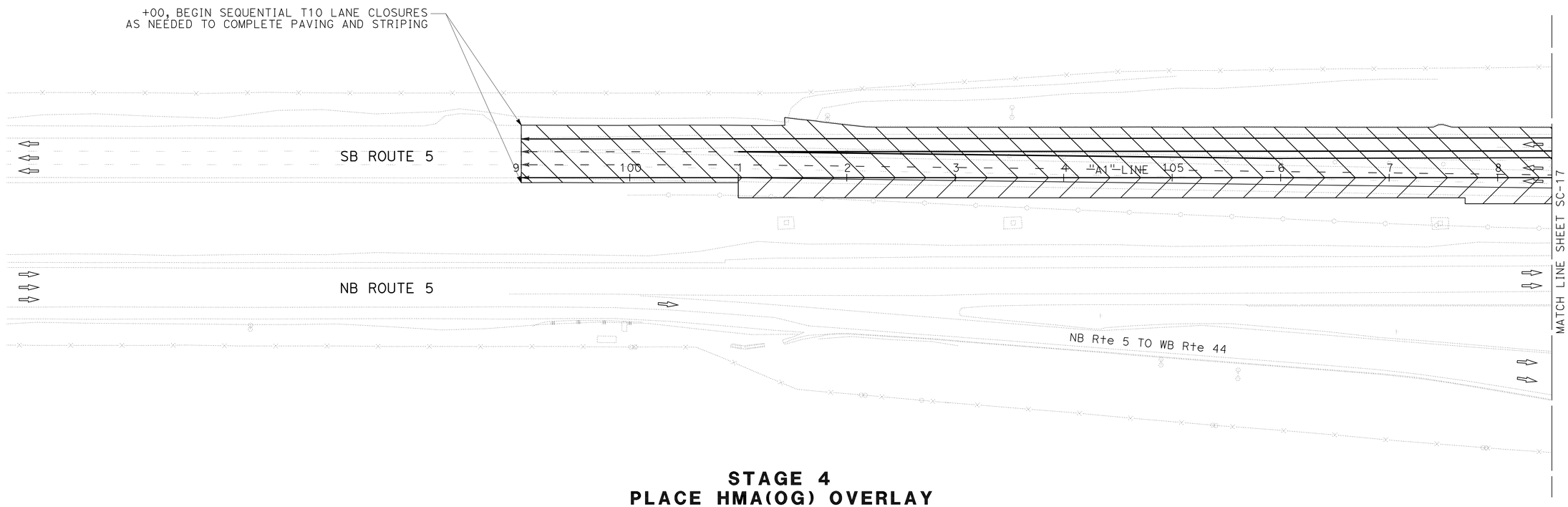


**STAGE 4**
**PLACE HMA(OG) OVERLAY**
**AND TRAFFIC STRIPING**

THIS PLAN ACCURATE FOR STAGE CONSTRUCTION AND TRAFFIC HANDLING WORK ONLY

# STAGE CONSTRUCTION AND TRAFFIC HANDLING PLAN

SCALE: 1" = 50'

**SC-16**

REVISED BY | DATE REVISED
BOB WEBER | ANDREW STECKLEIN
CALCULATED-DESIGNED BY | CHECKED BY
FUNCTIONAL SUPERVISOR
STEVE TOPAL

STATE OF CALIFORNIA - DEPARTMENT OF TRANSPORTATION
Caltrans
DESIGN

P:\proj2\02\3c000\pse\23c000ma016.dgn

LAST REVISION 12-30-09 | DATE PLOTTED => 11-MAY-2010 | TIME PLOTTED => 06:28

BORDER LAST REVISED 4/11/2008 | RELATIVE BORDER SCALE IS IN INCHES 0 1 2 3 | USERNAME => trmikesl | DGN FILE => 23c000ma016.dgn | CU 03 247 | EA 3C0001

| Dist | COUNTY | ROUTE | POST MILES TOTAL PROJECT | SHEET No. | TOTAL SHEETS |
|---|---|---|---|---|---|
| 02 | Sha | 5 | R14.9/R16.2 | 46 | 165 |

REGISTERED CIVIL ENGINEER 02-11-10 DATE

5-10-10
PLANS APPROVAL DATE

REGISTERED PROFESSIONAL ENGINEER
ANDREW P. STECKLEIN
No. C67148
Exp. 9-30-10
CIVIL
STATE OF CALIFORNIA

*THE STATE OF CALIFORNIA OR ITS OFFICERS OR AGENTS SHALL NOT BE RESPONSIBLE FOR THE ACCURACY OR COMPLETENESS OF SCANNED COPIES OF THIS PLAN SHEET.*

STAGE 4 WORK ITEMS:

1. REMOVE STAGE 3B TRAFFIC HANDLING MEASURES
2. COLD PLANE OGAC
3. PLACE HMA (OPEN GRADED) OVERLAY
4. PLACE TRAFFIC STRIPING

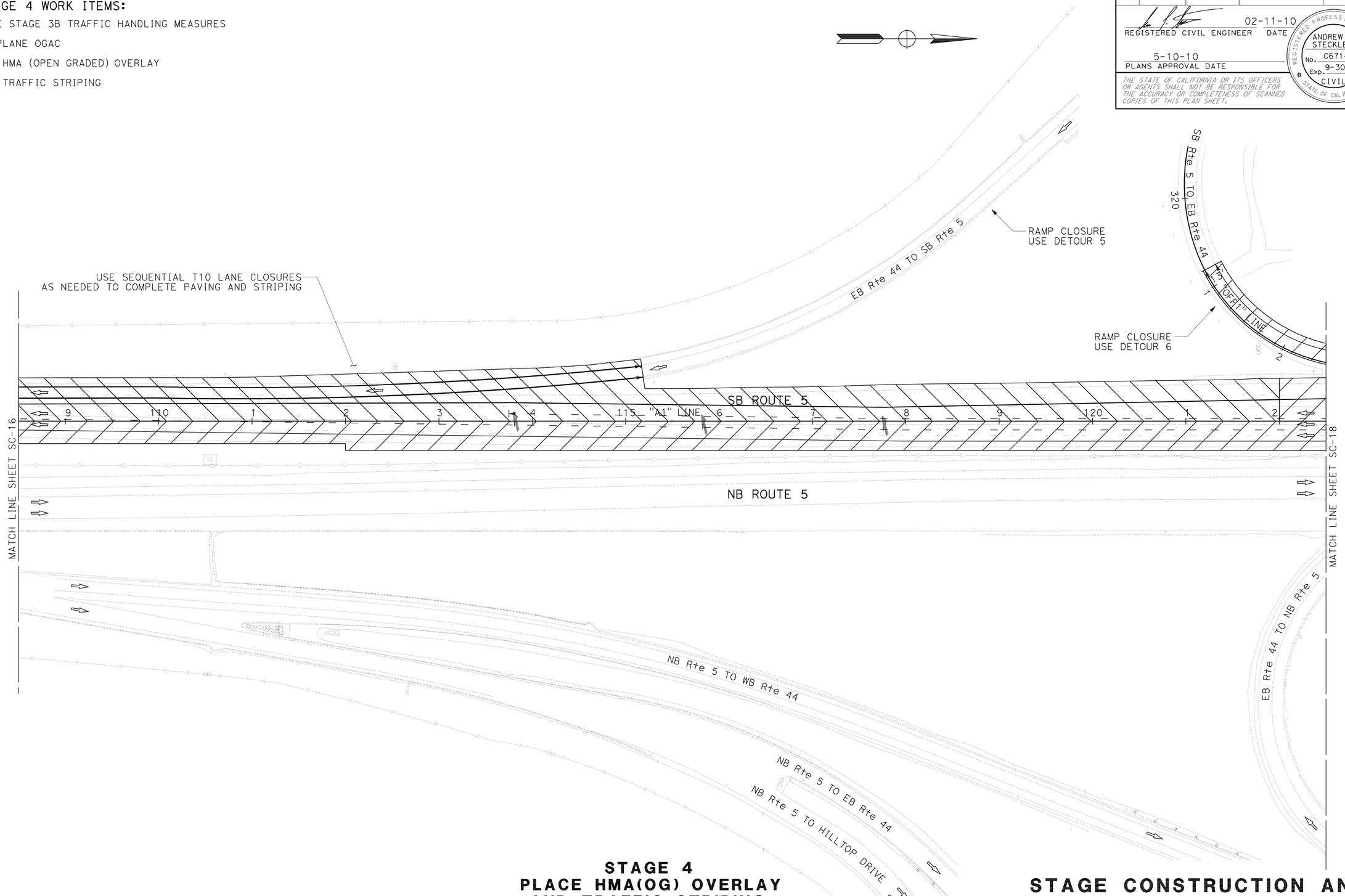


**STAGE 4**
**PLACE HMA(OG) OVERLAY**
**AND TRAFFIC STRIPING**

THIS PLAN ACCURATE FOR STAGE CONSTRUCTION AND TRAFFIC HANDLING WORK ONLY

# STAGE CONSTRUCTION AND TRAFFIC HANDLING PLAN

SCALE: 1" = 50'

**SC-17**

| REVISED BY | DATE REVISED |
|---|---|
| | |

CALCULATED-DESIGNED BY: BOB WEBER
CHECKED BY: ANDREW STECKLEIN
FUNCTIONAL SUPERVISOR: STEVE TOPAL

STATE OF CALIFORNIA - DEPARTMENT OF TRANSPORTATION
Caltrans
**DESIGN**

P:\proj2\02\3c000\pse\23c000ma017.dgn

LAST REVISION 12-30-09
DATE PLOTTED => 10-MAY-2010
TIME PLOTTED => 14:25

BORDER LAST REVISED 4/11/2008
RELATIVE BORDER SCALE IS IN INCHES 0 1 2 3
USERNAME => trlim
DGN FILE => 23c000ma017.dgn
CU 03 247
EA 3C0001

| Dist | COUNTY | ROUTE | POST MILES TOTAL PROJECT | SHEET No. | TOTAL SHEETS |
|---|---|---|---|---|---|
| 02 | Sha | 5 | R14.9/R16.2 | 47 | 165 |

REGISTERED CIVIL ENGINEER 02-11-10 DATE

5-10-10
PLANS APPROVAL DATE

REGISTERED PROFESSIONAL ENGINEER ANDREW P. STECKLEIN No. C67148 Exp. 9-30-10 CIVIL STATE OF CALIFORNIA

*THE STATE OF CALIFORNIA OR ITS OFFICERS OR AGENTS SHALL NOT BE RESPONSIBLE FOR THE ACCURACY OR COMPLETENESS OF SCANNED COPIES OF THIS PLAN SHEET.*

## STAGE 4 WORK ITEMS:

1. REMOVE STAGE 3B TRAFFIC HANDLING MEASURES
2. COLD PLANE OGAC
3. PLACE HMA (OPEN GRADED) OVERLAY
4. PLACE TRAFFIC STRIPING

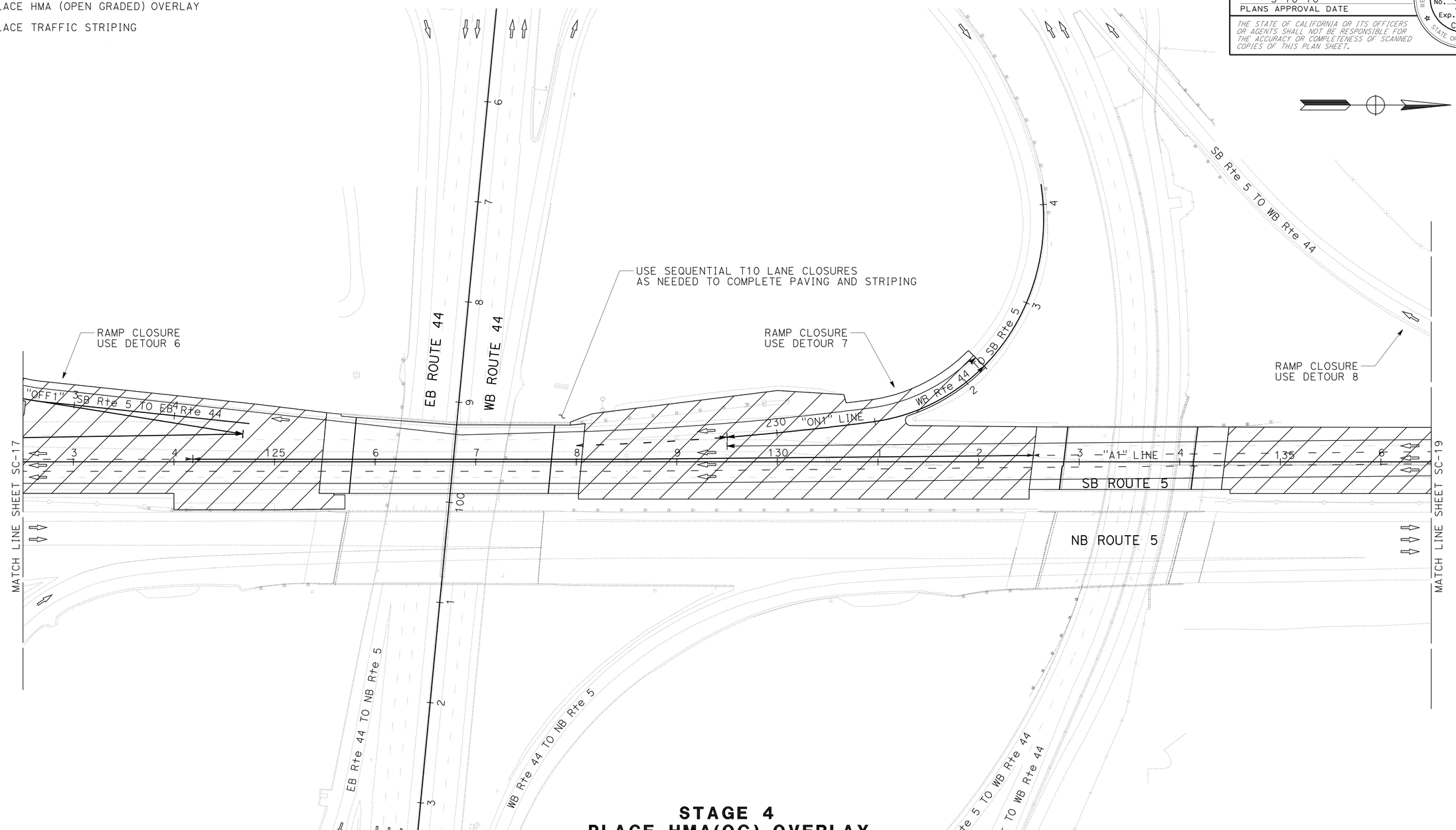


**STAGE 4**
**PLACE HMA(OG) OVERLAY**
**AND TRAFFIC STRIPING**

# STAGE CONSTRUCTION AND TRAFFIC HANDLING PLAN

SCALE: 1" = 50'

**SC-18**

THIS PLAN ACCURATE FOR STAGE CONSTRUCTION AND TRAFFIC HANDLING WORK ONLY

| | |
|---|---|
| REVISED BY | |
| DATE REVISED | |
| CALCULATED-DESIGNED BY | BOB WEBER |
| CHECKED BY | ANDREW STECKLEIN |
| FUNCTIONAL SUPERVISOR | STEVE TOPAL |

STATE OF CALIFORNIA - DEPARTMENT OF TRANSPORTATION
Caltrans
**DESIGN**

P:\proj2\02\3c000\pse\23c000ma018.dgn

LAST REVISION 12-30-09 | DATE PLOTTED => 10-MAY-2010 | TIME PLOTTED => 14:26

| Dist | COUNTY | ROUTE | POST MILES TOTAL PROJECT | SHEET No. | TOTAL SHEETS |
|---|---|---|---|---|---|
| 02 | Sha | 5 | R14.9/R16.2 | 48 | 165 |

REGISTERED CIVIL ENGINEER 02-11-10 DATE

5-10-10
PLANS APPROVAL DATE

REGISTERED PROFESSIONAL ENGINEER
ANDREW P. STECKLEIN
No. C67148
Exp. 9-30-10
CIVIL
STATE OF CALIFORNIA

*THE STATE OF CALIFORNIA OR ITS OFFICERS OR AGENTS SHALL NOT BE RESPONSIBLE FOR THE ACCURACY OR COMPLETENESS OF SCANNED COPIES OF THIS PLAN SHEET.*

## STAGE 4 WORK ITEMS:

1. REMOVE STAGE 3B TRAFFIC HANDLING MEASURES
2. COLD PLANE OGAC
3. PLACE HMA (OPEN GRADED) OVERLAY
4. PLACE TRAFFIC STRIPING

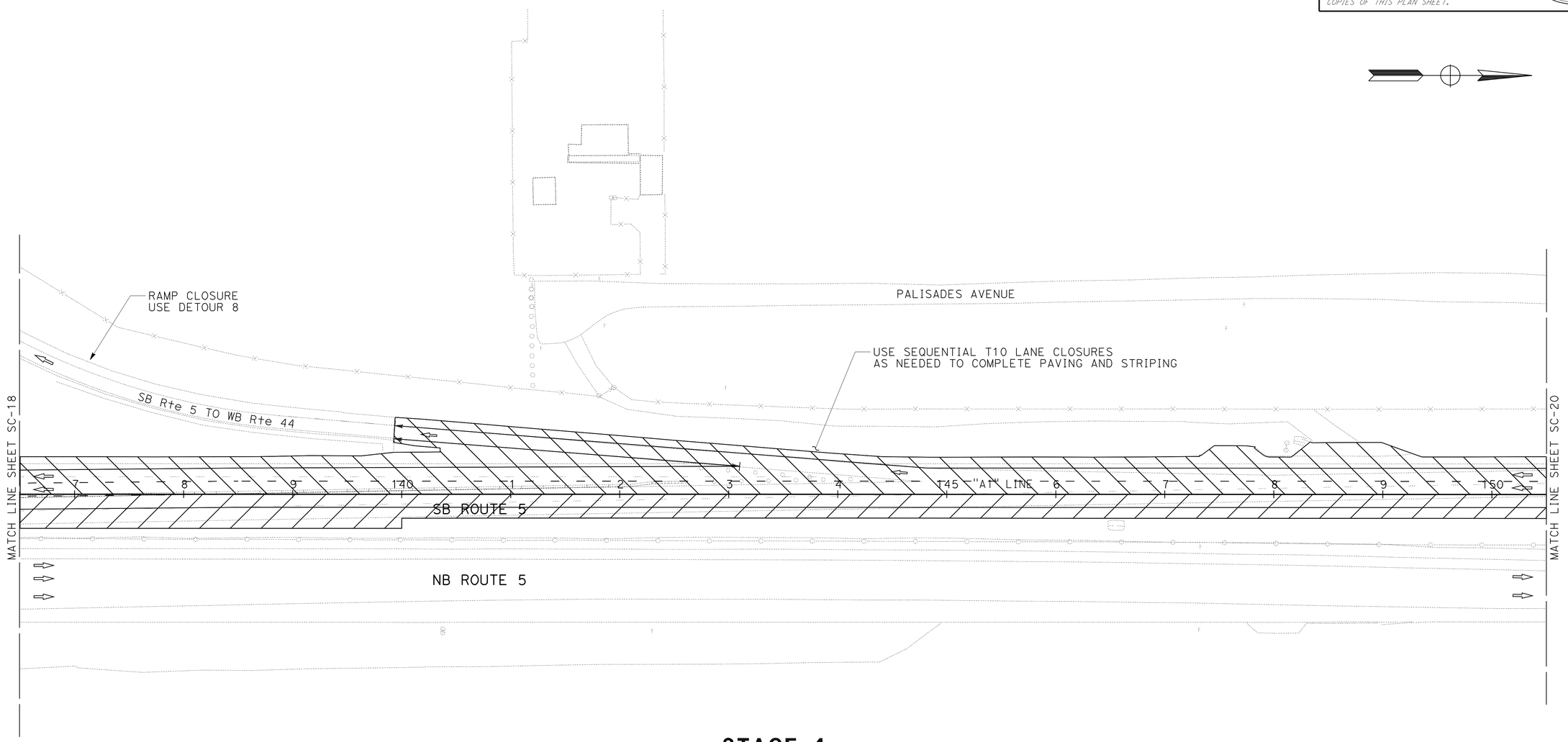


**STAGE 4**
**PLACE HMA(OG) OVERLAY**
**AND TRAFFIC STRIPING**

THIS PLAN ACCURATE FOR STAGE CONSTRUCTION AND TRAFFIC HANDLING WORK ONLY

# STAGE CONSTRUCTION AND TRAFFIC HANDLING PLAN

SCALE: 1" = 50'

**SC-19**

REVISED BY | DATE REVISED
BOB WEBER | ANDREW STECKLEIN
CALCULATED-DESIGNED BY | CHECKED BY
FUNCTIONAL SUPERVISOR: STEVE TOPAL

STATE OF CALIFORNIA - DEPARTMENT OF TRANSPORTATION
Caltrans
DESIGN

P:\proj2\02\3c000\pse\23c000ma019.dgn

LAST REVISION | DATE PLOTTED => 10-MAY-2010 | TIME PLOTTED => 14:26
12-30-09

BORDER LAST REVISED 4/11/2008 | RELATIVE BORDER SCALE IS IN INCHES 0 1 2 3 | USERNAME => trliim | DGN FILE => 23c000ma019.dgn | CU 03 247 | EA 3C0001

| Dist | COUNTY | ROUTE | POST MILES TOTAL PROJECT | SHEET No. | TOTAL SHEETS |
|---|---|---|---|---|---|
| 02 | Sha | 5 | R14.9/R16.2 | 49 | 165 |

REGISTERED CIVIL ENGINEER 02-11-10 DATE

5-10-10
PLANS APPROVAL DATE

REGISTERED PROFESSIONAL ENGINEER
ANDREW P. STECKLEIN
No. C67148
Exp. 9-30-10
CIVIL
STATE OF CALIFORNIA

*THE STATE OF CALIFORNIA OR ITS OFFICERS OR AGENTS SHALL NOT BE RESPONSIBLE FOR THE ACCURACY OR COMPLETENESS OF SCANNED COPIES OF THIS PLAN SHEET.*

## STAGE 4 WORK ITEMS:

1. REMOVE STAGE 3B TRAFFIC HANDLING MEASURES
2. COLD PLANE OGAC
3. PLACE HMA (OPEN GRADED) OVERLAY
4. PLACE PERMANENT TRAFFIC STRIPING

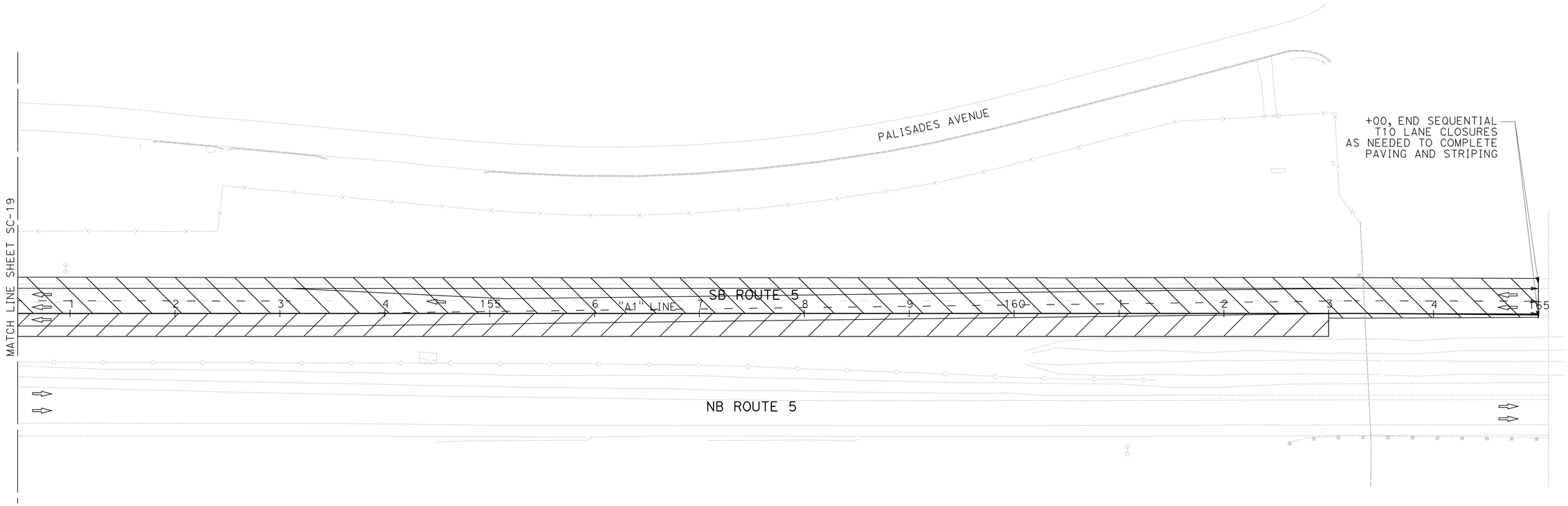


**STAGE 4**
**PLACE HMA(OG) OVERLAY**
**AND TRAFFIC STRIPING**

THIS PLAN ACCURATE FOR STAGE CONSTRUCTION AND TRAFFIC HANDLING WORK ONLY

# STAGE CONSTRUCTION AND TRAFFIC HANDLING PLAN

SCALE: 1" = 50'

**SC-20**

REVISED BY | DATE REVISED
CALCULATED-DESIGNED BY | CHECKED BY
FUNCTIONAL SUPERVISOR: STEVE TOPAL

STATE OF CALIFORNIA - DEPARTMENT OF TRANSPORTATION
Caltrans
**DESIGN**

P:\proj2\02\3c000\pse\23c000ma020.dgn

LAST REVISION 12-30-09 | DATE PLOTTED => 10-MAY-2010 | TIME PLOTTED => 14:26

BORDER LAST REVISED 4/11/2008 | RELATIVE BORDER SCALE IS IN INCHES 0 1 2 3 | USERNAME => trlim | DGN FILE => 23c000ma020.dgn | CU 03 247 | EA 3C0001

| Dist | COUNTY | ROUTE | POST MILES TOTAL PROJECT | SHEET No. | TOTAL SHEETS |
|---|---|---|---|---|---|
| 02 | Sha | 5 | R14.9/R16.2 | 50 | 165 |

REGISTERED CIVIL ENGINEER 02-11-10 DATE

5-10-10
PLANS APPROVAL DATE

REGISTERED PROFESSIONAL ENGINEER
ANDREW P. STECKLEIN
No. C67148
Exp. 9-30-10
CIVIL
STATE OF CALIFORNIA

*THE STATE OF CALIFORNIA OR ITS OFFICERS OR AGENTS SHALL NOT BE RESPONSIBLE FOR THE ACCURACY OR COMPLETENESS OF SCANNED COPIES OF THIS PLAN SHEET.*

NOTES:

1. THIS SHEET DISPLAYS TYPICAL SECTIONS FOR THE REMOVAL OF RUMBLE STRIP AND RESTORATION OF THE PAVEMENT TO ACCOMODATE TRAFFIC.
2. THE TABLE PROVIDED SUMMARIZES THE LINEAL EXTENT OF THE STAGE 1B WORK, AREA AND VOLUME ARE SHOWN IN THE SUMMARY OF QUANTITIES.

## STAGE 1B
## COLD PLANE AC PAVMENT
## (SEE NOTE 2)

| STATION RANGE | OFFSET | LENGTH |
|---|---|---|
| | | LF |
| "A1" 99+00 TO 112+50 | Lt | 1350 |
| "A1" 115+50 TO 122+00 | Lt | 650 |
| "A1" 134+45 TO 140+00 | Lt | 555 |
| "A1" 145+00 TO 165+00 | Lt | 2000 |

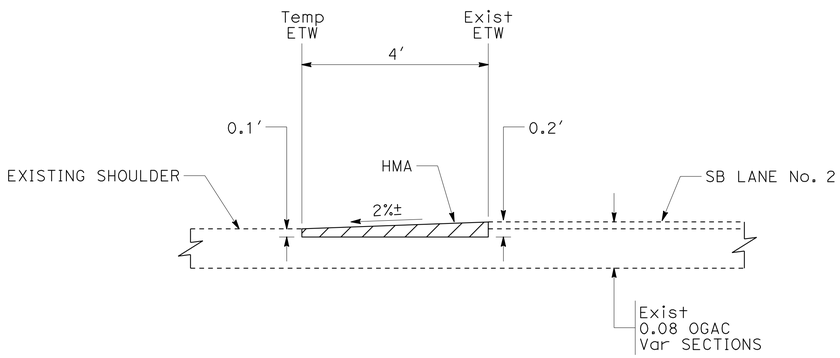


**STAGE 1B**
**HMA (TYPE A)**

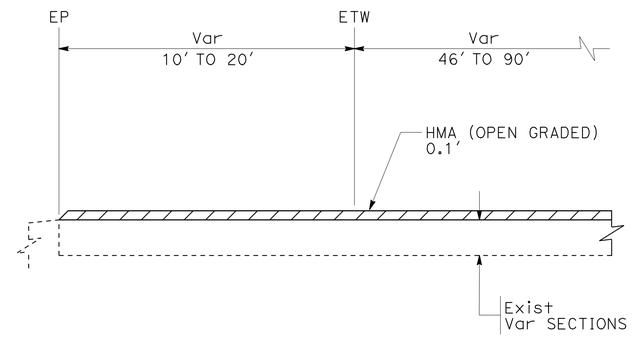


**STAGE 4**
**HMA (OPEN GRADED)**

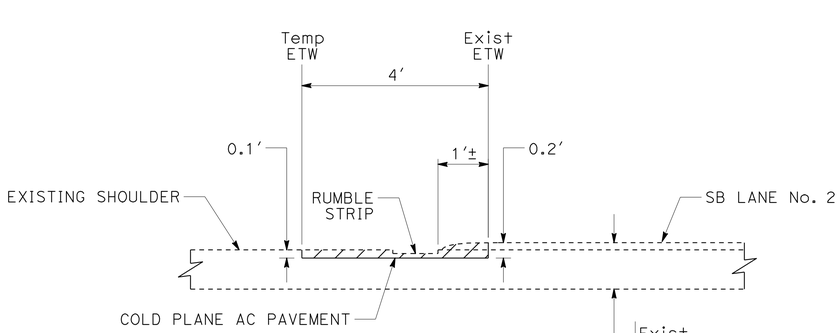


**STAGE 1B**
**COLD PLANE AC PAVEMENT**

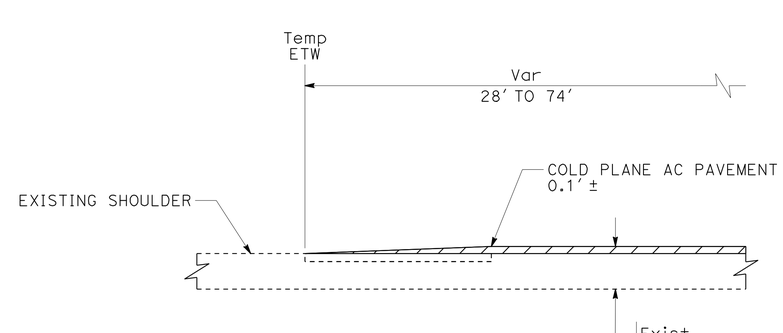


**STAGE 4**
**COLD PLANE AC PAVEMENT**

# STAGE CONSTRUCTION DETAILS

NO SCALE

**SCD-1**

THIS PLAN ACCURATE FOR STAGE CONSTRUCTION AND TRAFFIC HANDLING WORK ONLY

| REVISED BY | DATE REVISED |
|---|---|
| RUSSELL FLOOD | ANDREW STECKLEIN |
| CALCULATED-DESIGNED BY | CHECKED BY |
| FUNCTIONAL SUPERVISOR | STEVE TOPAL |

STATE OF CALIFORNIA - DEPARTMENT OF TRANSPORTATION
Caltrans
DESIGN

P:\proj2\02\3c000\pse\23c000mb001.dgn

LAST REVISION 12-30-09 | DATE PLOTTED => 10-MAY-2010 | TIME PLOTTED => 14:26

| Dist | COUNTY | ROUTE | POST MILES TOTAL PROJECT | SHEET No. | TOTAL SHEETS |
|---|---|---|---|---|---|
| 02 | Sha | 5 | R14.9/R16.2 | 51 | 165 |

REGISTERED CIVIL ENGINEER 02-11-10 DATE

5-10-10
PLANS APPROVAL DATE

REGISTERED PROFESSIONAL ENGINEER ANDREW P. STECKLEIN No. C67148 Exp. 9-30-10 CIVIL STATE OF CALIFORNIA

*THE STATE OF CALIFORNIA OR ITS OFFICERS OR AGENTS SHALL NOT BE RESPONSIBLE FOR THE ACCURACY OR COMPLETENESS OF SCANNED COPIES OF THIS PLAN SHEET.*

NOTE:

1. (N) - NOT A SEPARATE PAY ITEM, FOR INFORMATION ONLY

## TEMPORARY TRAFFIC CONTROL ITEMS

| STAGE AND SHEET No. | TEMPORARY PAVEMENT MARKING (PAINT) | TEMPORARY TRAFFIC STRIPE (PAINT) | | | | CHANNELIZER (SURFACE MOUNTED) | TEMPORARY PAVEMENT MARKER | | TEMPORARY TERMINAL SECTION (TYPE K) | TEMPORARY RAILING (TYPE K) | ALTERNATIVE TEMPORARY CRASH CUSHION | OBJECT MARKER (TYPE P) (N) | LOCATION |
|---|---|---|---|---|---|---|---|---|---|---|---|---|---|
| | | DETAIL 12 | DETAIL 25 | DETAIL 25A | DETAIL 27B | | DETAIL 12 (TYPE G) | DETAIL 25/25A (TYPE H) | | | | | |
| | SQFT | LF | LF | LF | LF | EA | EA | EA | EA | LF | EA | EA | |
| STAGE 1A | | | | | | | | | | | | | |
| SC-1 | | | | | | 40 | | | 2 | 540 | 2 | 4 | "C1" 98+60 - 101+20 |
| SC-1 | | | | | | 10 | | | 1 | 140 | | 1 | "RW1" 37+40 - 39+00 |
| STAGE 1B | | | | | | | | | | | | | |
| SEE STAGE 2 | | | | | | | | | | | | | |
| STAGE 2 | | | | | | | | | | | | | |
| SC-3 | | 1900 | 100 | | 950 | | 41 | 3 | | 850 | | 1 | "A1" 99+00 - 108+50 |
| SC-4 | | 1890 | | | 1393 | | 41 | | | 1400 | | | "A1" 108+50 - 122+50 |
| SC-5 | 84 | 2050 | | | 1057 | | 44 | | | 1400 | | 4 | "A1" 122+50 - 136+50 |
| SC-6 | | 1400 | | | 1258 | | 30 | | | 1400 | | | "A1" 136+50 - 150+50 |
| SC-7 | | 1450 | 220 | | 1450 | 10 | 31 | 6 | | 1290 | 1 | 1 | "A1" 150+50 - 165+00 |
| STAGE 3A | | | | | | | | | | | | | |
| SC-8 | | 950 | 1170 | | 950 | 26 | 21 | 25 | | | | | "A1" 99+00 - 108+50 |
| SC-9 | | 1400 | 1400 | | 1400 | 26 | 30 | 30 | | 740 | | | "A1" 108+50 - 122+50 |
| SC-10 | | 1400 | 1400 | | 1183 | | 30 | 30 | | 1400 | | | "A1" 122+50 - 136+50 |
| SC-11 | | 1400 | 1400 | 203 | 1454 | 12 | 30 | 40 | | 580 | 1 | 1 | "A1" 136+50 - 150+50 |
| SC-12 | | 1450 | 1450 | | 1450 | | 31 | 31 | | | | | "A1" 150+50 - 165+00 |
| STAGE 3B | | | | | | | | | | | | | |
| SC-13 | 42 | | 660 | | | | | 15 | | | | | "A1" 99+00 - 108+50 |
| SC-14 | 84 | 50 | 50 | 169 | 206 | 15 | 2 | 10 | | | | | "A1" 108+50 - 122+50 |
| SC-15 | 42 | 580 | 915 | 601 | 1724 | 32 | 13 | 45 | | | | | "A1" 122+50 - 134+00 |
| Const ACCESS NOT SHOWN | | | | | | | | | | | 6 | 6 | "A1" 99+00 - 165+00 |
| SUBTOTAL: | | 15,920 | 8,765 | 973 | 14,475 | | 344 | 235 | | | | | |
| TOTAL: | 252 | 40,133 | | | | 171 | 579 | | 3 | 9,740 | 10 | 18 | |

## INTERIM REMOVAL OF TEMPORARY TRAFFIC CONTROL ITEMS

| STAGE AND SHEET No. | REMOVE PAINTED TRAFFIC STRIPE | | | REMOVE CHANNELIZER (SURFACE MOUNTED) (N) | REMOVE PAVEMENT MARKER | | REMOVE Temp RAILING (TYPE K) (N) | LOCATION |
|---|---|---|---|---|---|---|---|---|
| | DETAIL 12 | DETAIL 25 | DETAIL 27B | | DETAIL 12 (TYPE G) | DETAIL 25 (TYPE H) | | |
| STAGE 3A | LF | LF | LF | EA | EA | EA | LF | |
| SC-8 | 600 | | 100 | | 14 | | | "A1" 99+00 - 105+00 |
| SC-11 | 850 | | | | 18 | | | "A1" 142+00 - 150+50 |
| SC-12 | 1450 | 220 | | | 31 | 6 | | "A1" 150+50 - 165+00 |
| STAGE 3B | | | | | | | | |
| SC-13 | 660 | | | 11 | 15 | | | "A1" 101+20 - 108+50 |
| SC-14 | | | | 8 | | | 740 | "A1" 108+50 - 122+50 |
| SC-15 | | | | | | | 1140 | "A1" 122+50 - 103+90 |
| TOTAL: | 3560 | 220 | 100 | 19 | 78 * | 6 * | 1880 | |

* SUBTOTAL, SEE TABLE BELOW FOR TOTAL.

## REMOVE TRAFFIC STRIPES AND PAVEMENT MARKERS

| STAGE AND SHEET No. | REMOVE YELLOW THERMOPLASTIC TRAFFIC STRIPE | REMOVE THERMOPLASTIC TRAFFIC STRIPE | REMOVE PAVEMENT MARKER |
|---|---|---|---|
| | LF | LF | EA |
| STAGE 2 | | | |
| SC-3 | 200 | 2850 | 44 |
| SC-4 | | 3900 | 66 |
| SC-5 | | 2903 | 54 |
| SC-6 | | 3050 | 56 |
| SC-7 | 200 | 2900 | 35 |
| STAGE 3A AND 3B | | | 84 |
| TOTAL: | 400 | 15,603 | 339 |

# STAGE CONSTRUCTION AND TRAFFIC HANDLING QUANTITIES

## SCQ-1

REVISED BY | DATE REVISED

BOB WEBER | ANDREW STECKLEIN

CALCULATED-DESIGNED BY | CHECKED BY

FUNCTIONAL SUPERVISOR: STEVE TOPAL

STATE OF CALIFORNIA - DEPARTMENT OF TRANSPORTATION

Caltrans DESIGN

P:\proj2\02\3c000\pse\23c000mc001.dgn

LAST REVISION 01-20-10 | DATE PLOTTED => 10-MAY-2010 | TIME PLOTTED => 14:26

| Dist | COUNTY | ROUTE | POST MILES TOTAL PROJECT | SHEET No. | TOTAL SHEETS |
|---|---|---|---|---|---|
| 02 | Sha | 5 | R14.9/R16.2 | 52 | 165 |

REGISTERED CIVIL ENGINEER 02-11-10 DATE

5-10-10
PLANS APPROVAL DATE

REGISTERED PROFESSIONAL ENGINEER
ANDREW P. STECKLEIN
No. C67148
Exp. 9-30-10
CIVIL
STATE OF CALIFORNIA

*THE STATE OF CALIFORNIA OR ITS OFFICERS OR AGENTS SHALL NOT BE RESPONSIBLE FOR THE ACCURACY OR COMPLETENESS OF SCANNED COPIES OF THIS PLAN SHEET.*

NOTES:

1. SIGN LOCATIONS SHOWN ARE APPROXIMATE. EXACT LOCATIONS TO BE DETERMINED BY THE ENGINEER.
2. SEE STANDARD PLANS FOR LANE CLOSURE REQUIREMENTS.
3. COVER EXISTING 65 MPH SPEED LIMIT SIGNS WITHIN THE REDUCED SPEED ZONE.
4. ADDITIONAL SPEED LIMIT SIGNS SHALL BE PLACED AT ENDS OF ON-RAMPS.

## LEGEND

- CONSTRUCTION AREA SIGN (PORTABLE)
- DIRECTION OF TRAVEL
- PORTABLE CHANGABLE MESSAGE SIGN (PCMS)
- TRAFFIC CONE

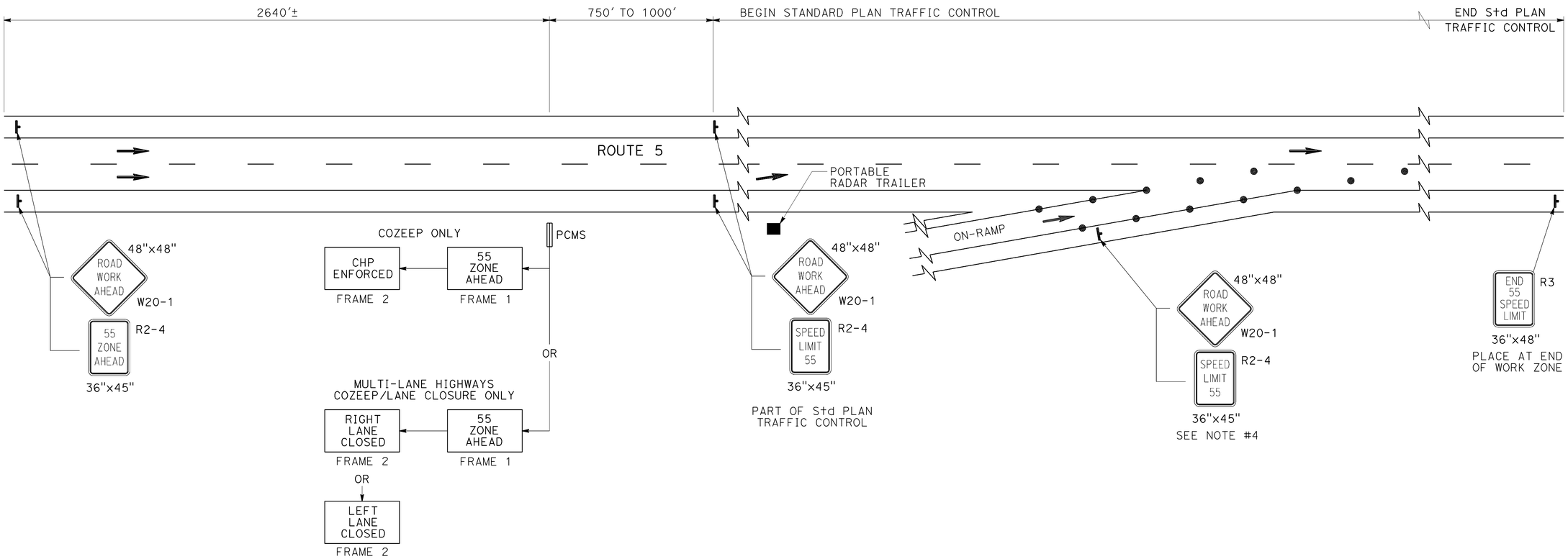


**TYPICAL SIGNING FOR 1 STAGE REDUCED SPEED ZONE**

# TRAFFIC HANDLING PLAN

NO SCALE

**TH-1**

THIS PLAN ACCURATE FOR TRAFFIC HANDLING WORK ONLY

| REVISED BY | DATE REVISED |
|---|---|
| BOB WEBER | ANDREW STECKLEIN |

CALCULATED-DESIGNED BY / CHECKED BY

FUNCTIONAL SUPERVISOR: STEVE TOPAL

STATE OF CALIFORNIA - DEPARTMENT OF TRANSPORTATION

Caltrans® **DESIGN**

P:\proj\02\3c000\pse\23c000md001.dgn

LAST REVISION 01-13-10 | DATE PLOTTED => 10-MAY-2010 | TIME PLOTTED => 14:26

| Dist | COUNTY | ROUTE | POST MILES TOTAL PROJECT | SHEET No. | TOTAL SHEETS |
|---|---|---|---|---|---|
| 02 | Sha | 5 | R14.9/R16.2 | 53 | 165 |

REGISTERED CIVIL ENGINEER 02-11-10 DATE

5-10-10
PLANS APPROVAL DATE

REGISTERED PROFESSIONAL ENGINEER ANDREW P. STECKLEIN No. C67148 Exp. 9-30-10 CIVIL STATE OF CALIFORNIA

*THE STATE OF CALIFORNIA OR ITS OFFICERS OR AGENTS SHALL NOT BE RESPONSIBLE FOR THE ACCURACY OR COMPLETENESS OF SCANNED COPIES OF THIS PLAN SHEET.*

NOTES:

1. SIGN LOCATIONS SHOWN ARE APPROXIMATE. EXACT LOCATIONS TO BE DETERMINED BY THE ENGINEER.
2. ALL SIGNS TO BE BLACK ON ORANGE EXCEPT C40(CA), WHICH IS BLACK ON WHITE.
3. CALIFORNIA CODES ARE DESIGNATED BY (CA), OTHERWISE FEDERAL CODES ARE SHOWN.
4. SEE STAGE CONSTRUCTION AND TRAFFIC HANDLING PLANS FOR ADDITIONAL TRAFFIC CONTROL INFORMATION.
5. EXISTING ROUTE SHIELDS AND GUIDE SIGNS MAY BE SUBSTITUTED FOR SIGNS SHOWN IF APPROVED BY THE ENGINEER.
6. EXISTING SIGNS THAT CONFLICT WITH DETOUR ROUTING SHALL BE COVERED WHEN A DETOUR IS BEING UTILIZED.

## LEGEND

- CONSTRUCTION AREA SIGN
- DIRECTION OF TRAFFIC
- PORTABLE CHANGEABLE MESSAGE SIGN (PCMS)
- XXX ROADWAY CLOSURE
- WORK AREA

## ABBREVIATIONS

PCMS PORTABLE CHANGEABLE MESSAGE SIGN

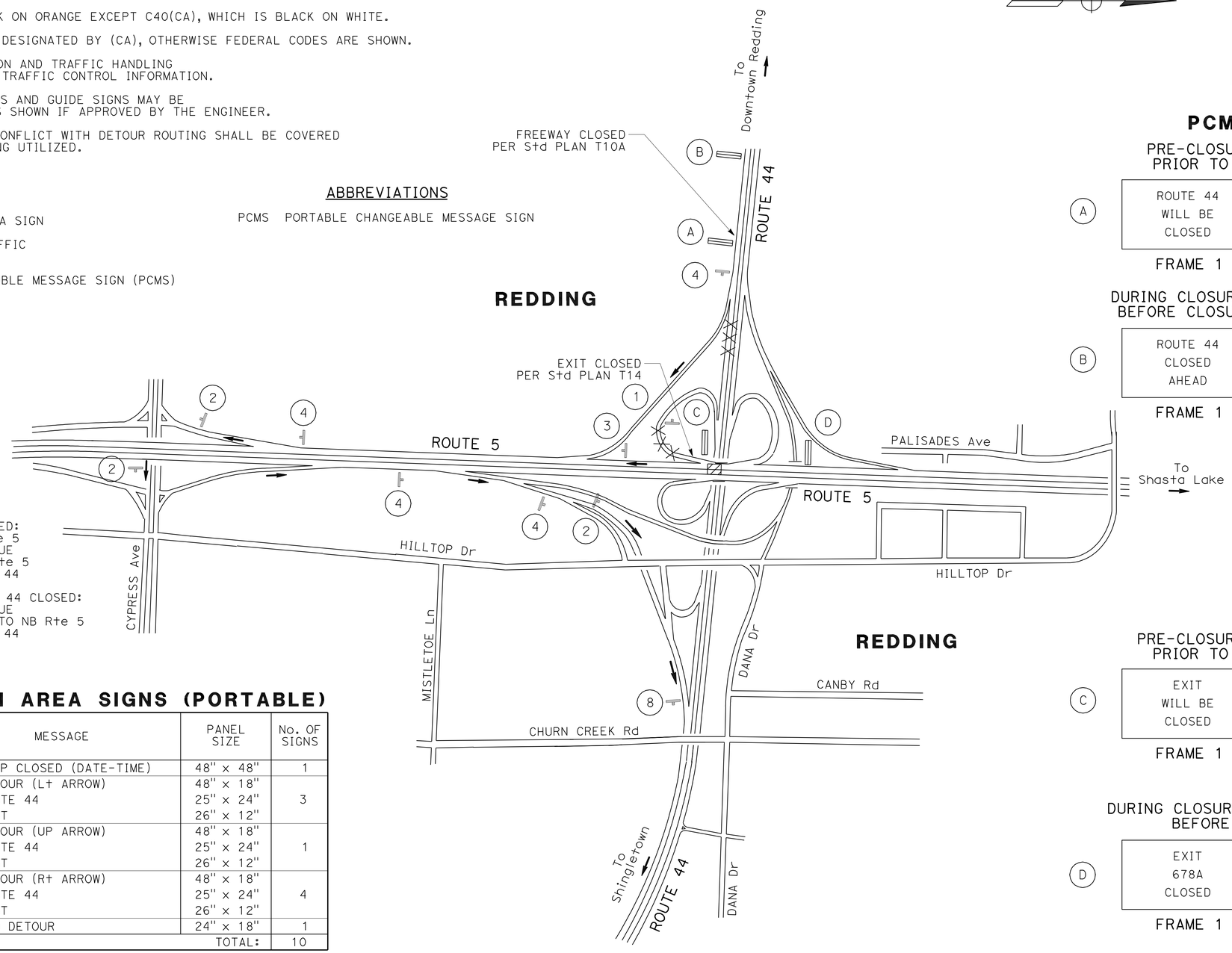


## DETOUR ROUTING

EB Rte 44 AT Rte 5 CLOSED:
EXIT EB Rte 44 TO SB Rte 5
PROCEED TO CYPRESS AVENUE
TAKE EB CYPRESS TO NB Rte 5
EXIT NB Rte 5 TO EB Rte 44

SB Rte 5 RAMP TO EB Rte 44 CLOSED:
PROCEED TO CYPRESS AVENUE
TAKE EB CYPRESS AVENUE TO NB Rte 5
EXIT NB Rte 5 TO EB Rte 44

## CONSTRUCTION AREA SIGNS (PORTABLE)

| SIGN TYPE ○ | SIGN CODE | MESSAGE | PANEL SIZE | No. OF SIGNS |
|---|---|---|---|---|
| 1* | SC6-3(CA) | RAMP CLOSED (DATE-TIME) | 48" x 48" | 1 |
| 2 | M4-10(Lt)<br>G28-2(44)(CA)<br>G49(CA) | DETOUR (Lt ARROW)<br>ROUTE 44<br>EAST | 48" x 18"<br>25" x 24"<br>26" x 12" | 3 |
| 3 | SC3(CA)<br>G28-2(44)(CA)<br>G49(CA) | DETOUR (UP ARROW)<br>ROUTE 44<br>EAST | 48" x 18"<br>25" x 24"<br>26" x 12" | 1 |
| 4 | M4-10(Rt)<br>G28-2(44)(CA)<br>G49(CA) | DETOUR (Rt ARROW)<br>ROUTE 44<br>EAST | 48" x 18"<br>25" x 24"<br>26" x 12" | 4 |
| 8 | M4-8a | END DETOUR | 24" x 18" | 1 |
| | | | TOTAL: | 10 |

* PLACE SIGN SEVEN DAYS PRIOR TO RAMP CLOSURE.

## PCMS MESSAGES

PRE-CLOSURE: PLACE PCMS 7 DAYS PRIOR TO CLOSURE AND ACTIVATE

| | FRAME 1 | FRAME 2 |
|---|---|---|
| A | ROUTE 44<br>WILL BE<br>CLOSED | DAY<br>DATE<br>X PM - Y AM |

DURING CLOSURE: MOVE PCMS Approx 1000' BEFORE CLOSURE LOCATION AND ACTIVATE

| | FRAME 1 | FRAME 2 |
|---|---|---|
| B | ROUTE 44<br>CLOSED<br>AHEAD | FOLLOW<br>DETOUR |

PRE-CLOSURE: PLACE PCMS 12 HOURS PRIOR TO CLOSURE AND ACTIVATE

| | FRAME 1 | FRAME 2 |
|---|---|---|
| C | EXIT<br>WILL BE<br>CLOSED | TONIGHT<br>X PM - Y AM |

DURING CLOSURE: MOVE PCMS Approx 1000' BEFORE RAMP AND ACTIVATE

| | FRAME 1 | FRAME 2 |
|---|---|---|
| D | EXIT<br>678A<br>CLOSED | FOLLOW<br>DETOUR |

# DETOUR 1
# CLOSURE OF EB ROUTE 44 AND SB ROUTE 5 CONNECTOR RAMP TO EB ROUTE 44 DURING STAGE 1B

THIS PLAN ACCURATE FOR DETOUR WORK ONLY

## DETOUR PLAN
NO SCALE

DE-1

REVISED BY | DATE REVISED
BOB WEBER | ANDREW STECKLEIN
CALCULATED-DESIGNED BY | CHECKED BY
FUNCTIONAL SUPERVISOR | STEVE TOPAL

STATE OF CALIFORNIA - DEPARTMENT OF TRANSPORTATION
Caltrans DESIGN

P:\proj2\02\3c000\pse\23c000mg001.dgn

LAST REVISION 01-14-10 | DATE PLOTTED => 10-MAY-2010 | TIME PLOTTED => 14:26

BORDER LAST REVISED 4/11/2008 | RELATIVE BORDER SCALE IS IN INCHES 0 1 2 3 | USERNAME => trlim | DGN FILE => 23c000mg001.dgn | CU 03 247 | EA 3C0001

| Dist | COUNTY | ROUTE | POST MILES TOTAL PROJECT | SHEET No. | TOTAL SHEETS |
|---|---|---|---|---|---|
| 02 | Sha | 5 | R14.9/R16.2 | 54 | 165 |

REGISTERED CIVIL ENGINEER 02-11-10 DATE

5-10-10
PLANS APPROVAL DATE

REGISTERED PROFESSIONAL ENGINEER ANDREW P. STECKLEIN No. C67148 Exp. 9-30-10 CIVIL STATE OF CALIFORNIA

*THE STATE OF CALIFORNIA OR ITS OFFICERS OR AGENTS SHALL NOT BE RESPONSIBLE FOR THE ACCURACY OR COMPLETENESS OF SCANNED COPIES OF THIS PLAN SHEET.*

## CONSTRUCTION AREA SIGNS (PORTABLE)

| SIGN TYPE ○ | SIGN CODE | MESSAGE | PANEL SIZE | No. OF SIGNS |
|---|---|---|---|---|
| 2 | M4-10(Lt)<br>G28-2(44)(CA)<br>G50(CA) | DETOUR (Lt ARROW)<br>ROUTE 44<br>WEST | 48" x 18"<br>25" x 24"<br>26" x 12" | 2 |
| 4 | M4-10(Rt)<br>G28-2(44)(CA)<br>G50(CA) | DETOUR (Rt ARROW)<br>ROUTE 44<br>WEST | 48" x 18"<br>25" x 24"<br>26" x 12" | 3 |
| 8 | M4-8a | END DETOUR | 24" x 18" | 1 |
| | | | TOTAL: | 6 |

## DETOUR ROUTING

WB Rte 44 AT Rte 5 CLOSED:
EXIT WB Rte 44 TO NB Rte 5
PROCEED TO Rte 299
TAKE WB Rte 299 TO SB Rte 5
EXIT SB Rte 5 TO WB Rte 44

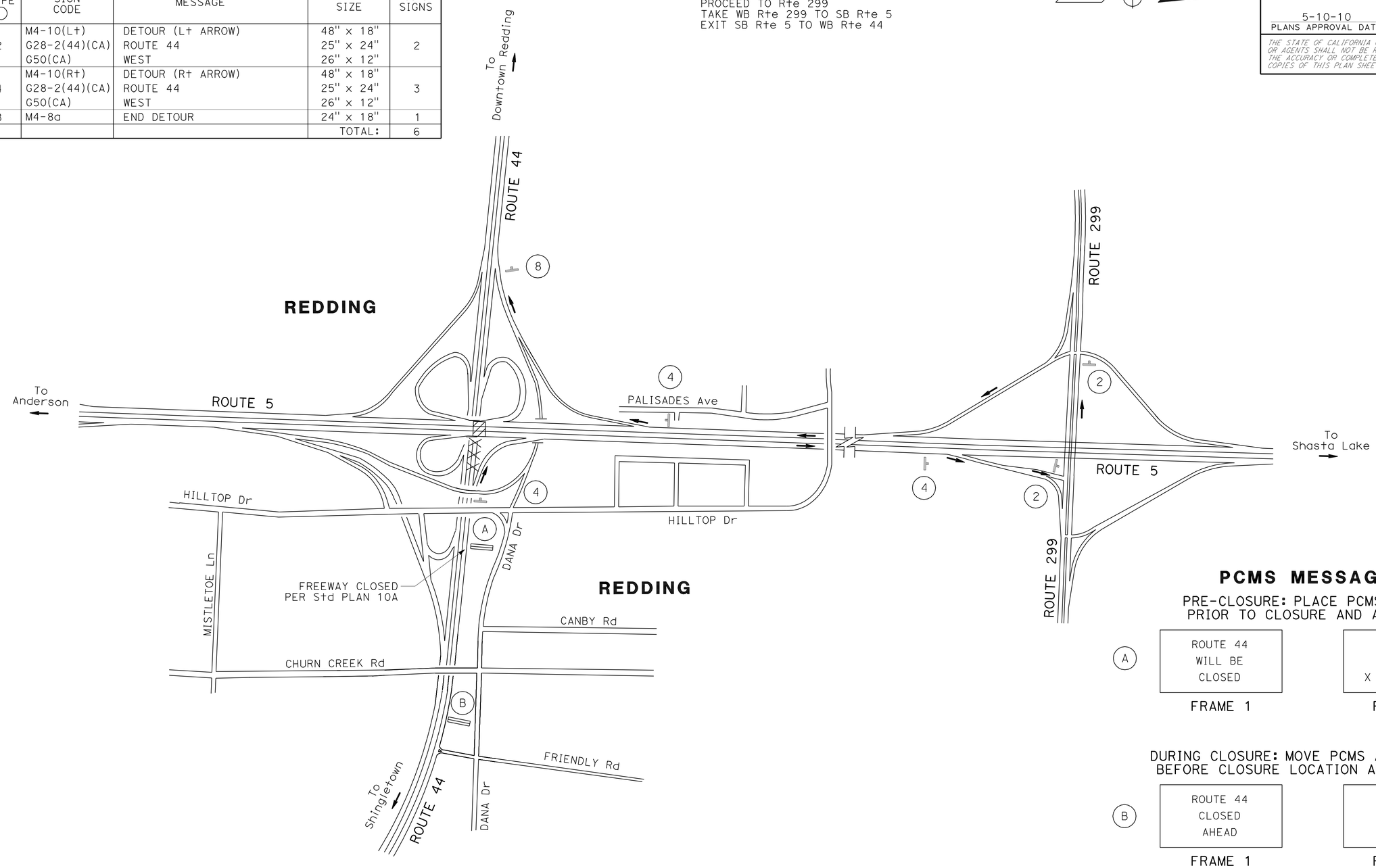


## PCMS MESSAGES

PRE-CLOSURE: PLACE PCMS 7 DAYS PRIOR TO CLOSURE AND ACTIVATE

| | FRAME 1 | FRAME 2 |
|---|---|---|
| A | ROUTE 44<br>WILL BE<br>CLOSED | DAY<br>DATE<br>X PM - Y AM |

DURING CLOSURE: MOVE PCMS Approx 1000' BEFORE CLOSURE LOCATION AND ACTIVATE

| | FRAME 1 | FRAME 2 |
|---|---|---|
| B | ROUTE 44<br>CLOSED<br>AHEAD | FOLLOW<br>DETOUR |

## DETOUR 2
## CLOSURE OF WB ROUTE 44 DURING STAGE 1B

THIS PLAN ACCURATE FOR DETOUR WORK ONLY

# DETOUR PLAN
NO SCALE

**DE-2**

REVISED BY | DATE REVISED
BOB WEBER | ANDREW STECKLEIN
CALCULATED-DESIGNED BY | CHECKED BY
FUNCTIONAL SUPERVISOR: STEVE TOPAL

STATE OF CALIFORNIA - DEPARTMENT OF TRANSPORTATION
Caltrans® DESIGN

P:\proj2\02\3c000\pse\23c000mg002.dgn

LAST REVISION 01-14-10 | DATE PLOTTED => 10-MAY-2010 | TIME PLOTTED => 14:26

| Dist | COUNTY | ROUTE | POST MILES TOTAL PROJECT | SHEET No. | TOTAL SHEETS |
|---|---|---|---|---|---|
| 02 | Sha | 5 | R14.9/R16.2 | 55 | 165 |

REGISTERED CIVIL ENGINEER 02-11-10 DATE

5-10-10
PLANS APPROVAL DATE

REGISTERED PROFESSIONAL ENGINEER ANDREW P. STECKLEIN No. C67148 Exp. 9-30-10 CIVIL STATE OF CALIFORNIA

*THE STATE OF CALIFORNIA OR ITS OFFICERS OR AGENTS SHALL NOT BE RESPONSIBLE FOR THE ACCURACY OR COMPLETENESS OF SCANNED COPIES OF THIS PLAN SHEET.*

## CONSTRUCTION AREA SIGNS (PORTABLE)

| SIGN TYPE ◯ | SIGN CODE | MESSAGE | PANEL SIZE | No. OF SIGNS |
|---|---|---|---|---|
| 1* | SC6-3(CA) OR<br>SC6-4(CA) | RAMP CLOSED (DATE-TIME)<br>RAMP CLOSED (DATE-DATE) | 48" x 48"<br>48" x 60" | 2 |
| 2 | M4-10(Lt)<br>G28-2(44)(CA)<br>G50(CA) | DETOUR (Lt ARROW)<br>ROUTE 44<br>WEST | 48" x 18"<br>25" x 24"<br>26" x 12" | 6 |
| 3 | SC3(CA)<br>G28-2(44)(CA)<br>G50(CA) | DETOUR (UP ARROW)<br>ROUTE 44<br>WEST | 48" x 18"<br>25" x 24"<br>26" x 12" | 4 |
| 4 | M4-10(Rt)<br>G28-2(44)(CA)<br>G50(CA) | DETOUR (Rt ARROW)<br>ROUTE 44<br>WEST | 48" x 18"<br>25" x 24"<br>26" x 12" | 7 |
| 8 | M4-8a | END DETOUR | 24" x 18" | 2 |
| | | | TOTAL: | 21 |

* PLACE SIGN SEVEN DAYS PRIOR TO RAMP CLOSURE.
USE SC6-4 FOR CLOSURES GREATER THAN 24 HOURS.

## DETOUR ROUTING

NB Rte 5 RAMP TO WB Rte 44 CLOSED:
PROCEED TO Rte 299
TAKE WB Rte 299 TO SB Rte 5
EXIT SB Rte 5 TO WB Rte 44

WB DANA Dr RAMP TO WB Rte 44 CLOSED:
PROCEED TO FRIENDLY DRIVE
ENTER WB Rte 44
OR PROCEED TO CYPRESS AVENUE
TURN RIGHT, TAKE NB Rte 5 ONRAMP
PROCEED TO Rte 299
TAKE WB Rte 299 TO SB Rte 5
EXIT SB Rte 5 TO WB Rte 44

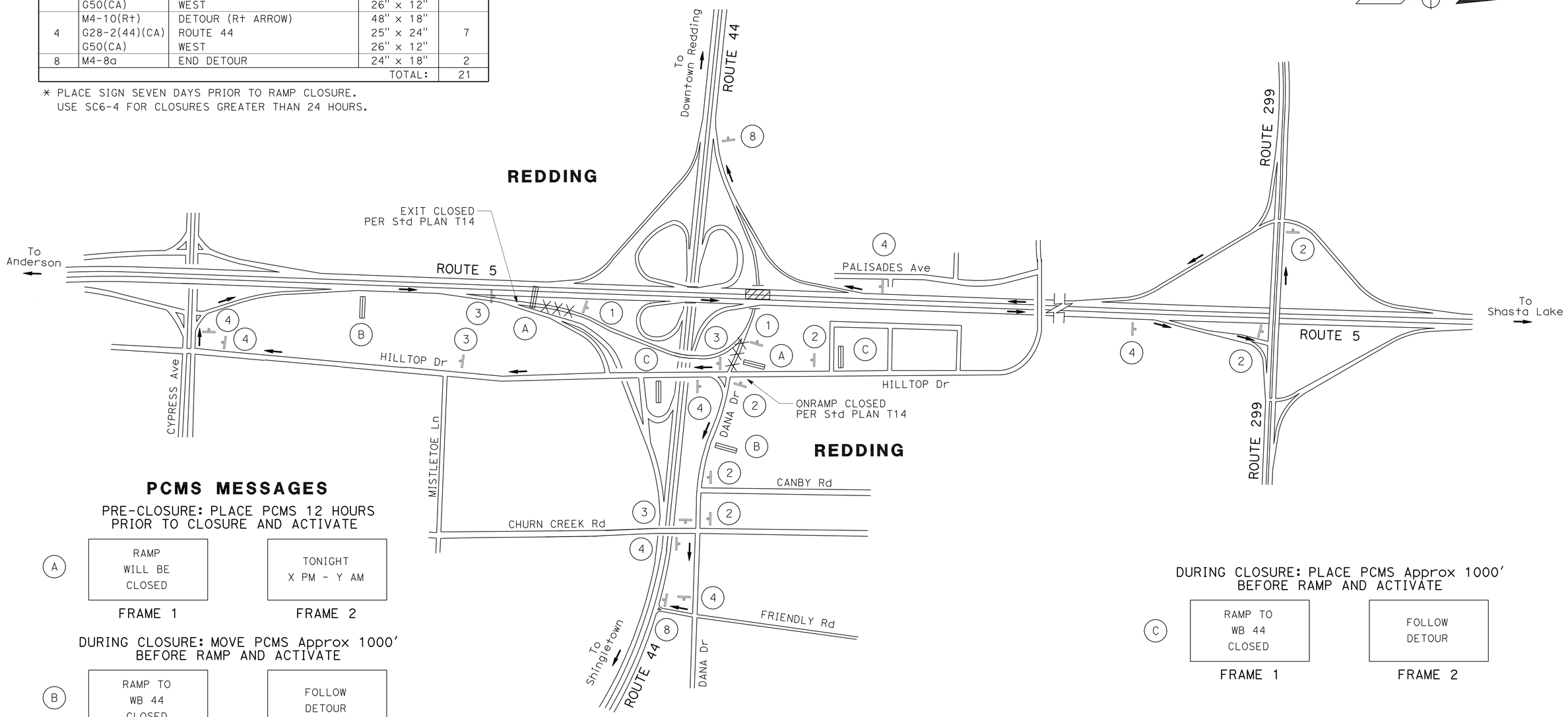


## PCMS MESSAGES

PRE-CLOSURE: PLACE PCMS 12 HOURS PRIOR TO CLOSURE AND ACTIVATE

(A)

| RAMP WILL BE CLOSED | TONIGHT X PM - Y AM |
|---|---|
| FRAME 1 | FRAME 2 |

DURING CLOSURE: MOVE PCMS Approx 1000' BEFORE RAMP AND ACTIVATE

(B)

| RAMP TO WB 44 CLOSED | FOLLOW DETOUR |
|---|---|
| FRAME 1 | FRAME 2 |

DURING CLOSURE: PLACE PCMS Approx 1000' BEFORE RAMP AND ACTIVATE

(C)

| RAMP TO WB 44 CLOSED | FOLLOW DETOUR |
|---|---|
| FRAME 1 | FRAME 2 |

## DETOUR 3
## CLOSURE OF NB ROUTE 5 CONNECTOR RAMP TO WB ROUTE 44 AND DANA RAMP TO WB ROUTE 44 DURING STAGE 1B

THIS PLAN ACCURATE FOR DETOUR WORK ONLY

## DETOUR PLAN
NO SCALE

**DE-3**

| REVISED BY | DATE REVISED |
|---|---|
| BOB WEBER | ANDREW STECKLEIN |

| CALCULATED-DESIGNED BY | CHECKED BY |
|---|---|

FUNCTIONAL SUPERVISOR: STEVE TOPAL

STATE OF CALIFORNIA - DEPARTMENT OF TRANSPORTATION
Caltrans
DESIGN

P:\proj2\02\3c000\pse\23c000mg003.dgn

LAST REVISION 01-14-10 | DATE PLOTTED => 10-MAY-2010 | TIME PLOTTED => 14:26

| Dist | COUNTY | ROUTE | POST MILES TOTAL PROJECT | SHEET No. | TOTAL SHEETS |
|---|---|---|---|---|---|
| 02 | Sha | 5 | R14.9/R16.2 | 56 | 165 |

REGISTERED CIVIL ENGINEER 02-11-10 DATE

5-10-10
PLANS APPROVAL DATE

REGISTERED PROFESSIONAL ENGINEER ANDREW P. STECKLEIN No. C67148 Exp. 9-30-10 CIVIL STATE OF CALIFORNIA

*THE STATE OF CALIFORNIA OR ITS OFFICERS OR AGENTS SHALL NOT BE RESPONSIBLE FOR THE ACCURACY OR COMPLETENESS OF SCANNED COPIES OF THIS PLAN SHEET.*

NOTES:

1. STAGE 3A TRAFFIC CONTROL WILL REQUIRE UTILIZING MULTIPLE DETOUR ROUTES IN ORDER TO MINIMIZE CONGESTION ALONG EACH ROUTE.
2. REFER TO CHART No. 8 IN THE SPECIFICATIONS FOR FLAGGING AND TRAFFIC CONTROL SURVEILLANCE REQUIREMENTS.
3. PLACE PCMS TO THE EAST OF THE VICTOR AVENUE EXIT AT A LOCATION APPROVED BY THE ENGINEER.

## CONSTRUCTION AREA SIGNS (PORTABLE)

| SIGN TYPE ○ | SIGN CODE | MESSAGE | PANEL SIZE | No. OF SIGNS |
|---|---|---|---|---|
| 2 | M4-10(L+)<br>G28-2(44)(CA)<br>G49(CA) | DETOUR (L+ ARROW)<br>ROUTE 44<br>EAST | 48" x 18"<br>25" x 24"<br>26" x 12" | 7 |
| 4 | M4-10(R+)<br>G28-2(44)(CA)<br>G49(CA) | DETOUR (R+ ARROW)<br>ROUTE 44<br>EAST | 48" x 18"<br>25" x 24"<br>26" x 12" | 2 |
| 5 | M4-10(L+)<br>G27-2(5)(CA)<br>M3-3 | DETOUR (L+ ARROW)<br>INTERSTATE 5<br>SOUTH | 48" x 18"<br>24" x 24"<br>26" x 12" | 6 |
| 6 | SC3(CA)<br>G27-2(5)(CA)<br>M3-3 | DETOUR (UP ARROW)<br>INTERSTATE 5<br>SOUTH | 48" x 18"<br>24" x 24"<br>24" x 12" | 2 |
| 7 | M4-10(R+)<br>G27-2(5)(CA)<br>M3-3 | DETOUR (R+ ARROW)<br>INTERSTATE 5<br>SOUTH | 48" x 18"<br>24" x 24"<br>24" x 12" | 1 |
| 8 | M4-8a | END DETOUR | 24" x 18" | 4 |
| | | | TOTAL: | 22 |

### LEGEND

DETOUR MANAGEMENT PCMS

FLAGGER

TRAFFIC CONTROL SURVEILLANCE QUE WARNING UNIT

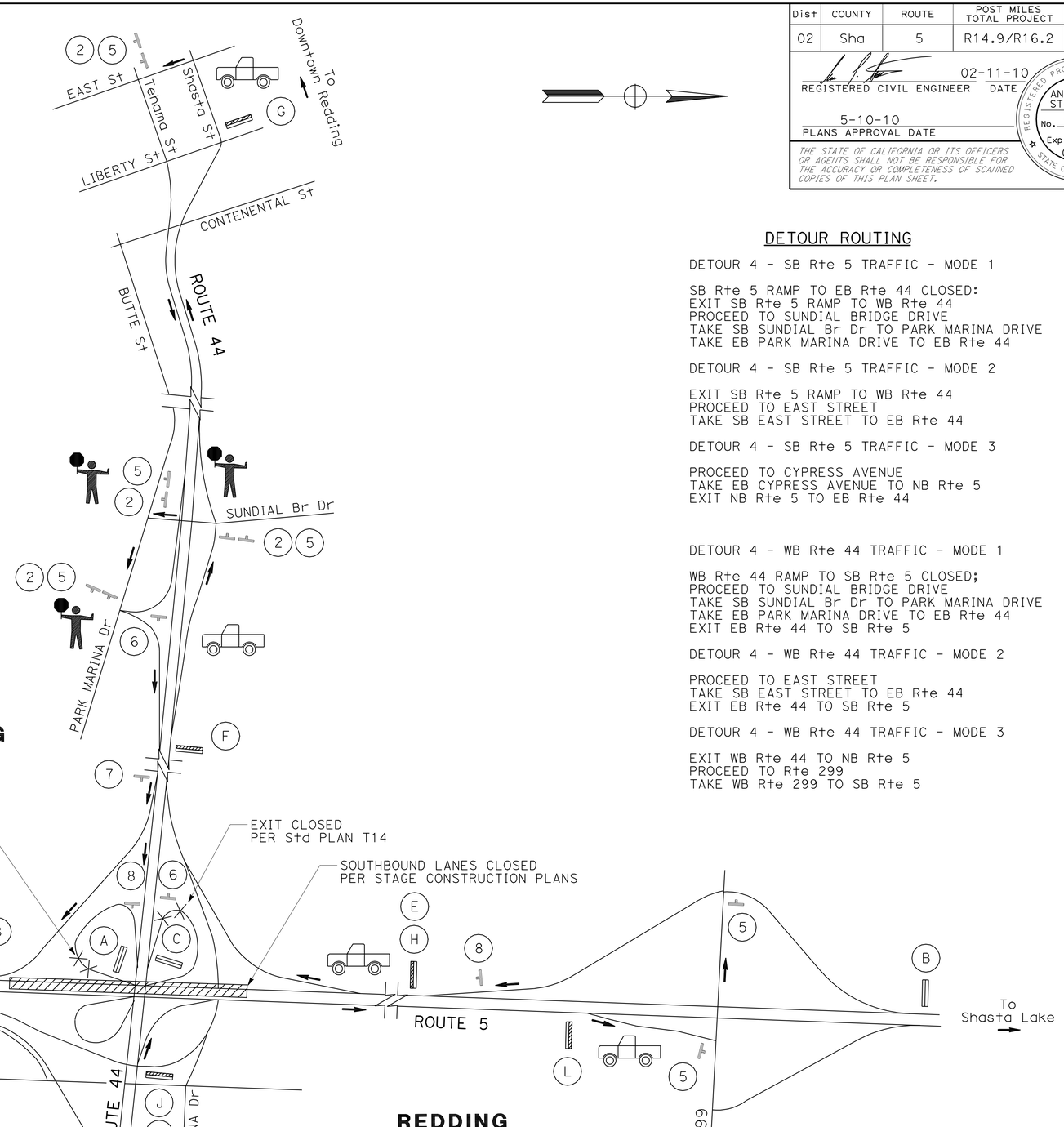


### DETOUR ROUTING

DETOUR 4 - SB Rte 5 TRAFFIC - MODE 1

SB Rte 5 RAMP TO EB Rte 44 CLOSED:
EXIT SB Rte 5 RAMP TO WB Rte 44
PROCEED TO SUNDIAL BRIDGE DRIVE
TAKE SB SUNDIAL Br Dr TO PARK MARINA DRIVE
TAKE EB PARK MARINA DRIVE TO EB Rte 44

DETOUR 4 - SB Rte 5 TRAFFIC - MODE 2

EXIT SB Rte 5 RAMP TO WB Rte 44
PROCEED TO EAST STREET
TAKE SB EAST STREET TO EB Rte 44

DETOUR 4 - SB Rte 5 TRAFFIC - MODE 3

PROCEED TO CYPRESS AVENUE
TAKE EB CYPRESS AVENUE TO NB Rte 5
EXIT NB Rte 5 TO EB Rte 44

DETOUR 4 - WB Rte 44 TRAFFIC - MODE 1

WB Rte 44 RAMP TO SB Rte 5 CLOSED;
PROCEED TO SUNDIAL BRIDGE DRIVE
TAKE SB SUNDIAL Br Dr TO PARK MARINA DRIVE
TAKE EB PARK MARINA DRIVE TO EB Rte 44
EXIT EB Rte 44 TO SB Rte 5

DETOUR 4 - WB Rte 44 TRAFFIC - MODE 2

PROCEED TO EAST STREET
TAKE SB EAST STREET TO EB Rte 44
EXIT EB Rte 44 TO SB Rte 5

DETOUR 4 - WB Rte 44 TRAFFIC - MODE 3

EXIT WB Rte 44 TO NB Rte 5
PROCEED TO Rte 299
TAKE WB Rte 299 TO SB Rte 5

## DETOUR 4
## CONCURRENT CLOSURE OF CONNECTOR RAMPS FROM SB ROUTE 5 TO EB ROUTE 44 AND FROM WB ROUTE 44 TO SB ROUTE 5 DURING STAGES 3A AND 3B

THIS PLAN ACCURATE FOR DETOUR WORK ONLY

## DETOUR PLAN
NO SCALE

**DE-4**

REVISED BY | DATE REVISED
BOB WEBER | ANDREW STECKLEIN
CALCULATED-DESIGNED BY | CHECKED BY
FUNCTIONAL SUPERVISOR: STEVE TOPAL

STATE OF CALIFORNIA - DEPARTMENT OF TRANSPORTATION
Caltrans DESIGN

P:\proj2\02\3c000\pse\23c000mg004.dgn

LAST REVISION 01-14-10 | DATE PLOTTED => 10-MAY-2010 | TIME PLOTTED => 14:27

| Dist | COUNTY | ROUTE | POST MILES TOTAL PROJECT | SHEET No. | TOTAL SHEETS |
|---|---|---|---|---|---|
| 02 | Sha | 5 | R14.9/R16.2 | 57 | 165 |

REGISTERED CIVIL ENGINEER 02-11-10 DATE

5-10-10
PLANS APPROVAL DATE

REGISTERED PROFESSIONAL ENGINEER ANDREW P. STECKLEIN No. C67148 Exp. 9-30-10 CIVIL STATE OF CALIFORNIA

*THE STATE OF CALIFORNIA OR ITS OFFICERS OR AGENTS SHALL NOT BE RESPONSIBLE FOR THE ACCURACY OR COMPLETENESS OF SCANNED COPIES OF THIS PLAN SHEET.*

NOTES:

1. DETOUR MANAGEMENT PCMS MESSAGES SHALL BE CONTROLLED EXCLUSIVELY BY THE DISTRICT 2 TRAFFIC MANAGEMENT CENTER. ACTUAL MESSAGES DISPLAYED MAY VARY.
2. DURING THE HOURS THAT TRAFFIC IS NOT ACTIVELY ROUTED, DETOUR MODE 1 WILL BE UTILIZED.

## PCMS MESSAGES DETOUR 4

PRE-CLOSURE: PLACE PCMS 5 DAYS PRIOR TO CLOSURE AND ACTIVATE

| | FRAME 1 | FRAME 2 |
|---|---|---|
| A | EXIT WILL BE CLOSED | DATE TO DATE |
| C | EXIT WILL BE CLOSED | DATE TO DATE |

DURING CLOSURE: LOCATE PCMS AS SHOWN ON SHEET DE-4 AND ACTIVATE

| | FRAME 1 | FRAME 2 |
|---|---|---|
| B | RAMP TO EB 44 CLOSED | EXPECT DELAYS |
| D | RAMP TO SB I-5 CLOSED | EXPECT DELAYS |

## DETOUR MANAGEMENT PCMS MESSAGES DETOUR 4

DURING CLOSURE: LOCATE PCMS AS SHOWN ON SHEET DE-4

| | FRAME 1 | FRAME 2 | | FRAME 2 |
|---|---|---|---|---|
| E | RAMP TO EB 44 CLOSED | DETOUR NEXT RIGHT | | |
| F | SB I-5 AND EB 44 | DETOUR NEXT RIGHT | OR | USE EAST STREET |
| G | SB I-5 AND EB 44 | DETOUR NEXT LEFT | | |
| H | RAMP TO EB 44 CLOSED | USE CYPRESS AVENUE | | |
| I | EB 44 DETOUR | NEXT RIGHT | | |

## DETOUR MANAGEMENT PCMS MESSAGES DETOUR 4

DURING CLOSURE: LOCATE PCMS AS SHOWN ON SHEET DE-4

| | FRAME 1 | FRAME 2 |
|---|---|---|
| J | RAMP TO SB I-5 CLOSED | FOLLOW DETOUR |
| K | RAMP TO SB I-5 CLOSED | DETOUR NEXT RIGHT |
| L | SB I-5 DETOUR | DETOUR NEXT RIGHT |

## DETOUR 4
## CONCURRENT CLOSURE OF CONNECTOR RAMPS FROM SB ROUTE 5 TO EB ROUTE 44 AND FROM WB ROUTE 44 TO SB ROUTE 5 DURING STAGES 3A AND 3B

THIS PLAN ACCURATE FOR DETOUR WORK ONLY

# DETOUR PLAN

DE-5

REVISED BY | DATE REVISED
BOB WEBER | ANDREW STECKLEIN
CALCULATED-DESIGNED BY | CHECKED BY
FUNCTIONAL SUPERVISOR: STEVE TOPAL
STATE OF CALIFORNIA - DEPARTMENT OF TRANSPORTATION
Caltrans DESIGN

P:\proj2\02\3c000\pse\23c000mg005.dgn

LAST REVISION 01-14-10 | DATE PLOTTED => 10-MAY-2010 | TIME PLOTTED => 14:27

BORDER LAST REVISED 4/11/2008 | RELATIVE BORDER SCALE IS IN INCHES 0 1 2 3 | USERNAME => trliim | DGN FILE => 23c000mg005.dgn | CU 03 247 | EA 3C0001

| Dist | COUNTY | ROUTE | POST MILES TOTAL PROJECT | SHEET No. | TOTAL SHEETS |
|---|---|---|---|---|---|
| 02 | Sha | 5 | R14.9/R16.2 | 58 | 165 |

REGISTERED CIVIL ENGINEER 02-11-10 DATE

5-10-10
PLANS APPROVAL DATE

REGISTERED PROFESSIONAL ENGINEER ANDREW P. STECKLEIN No. C67148 Exp. 9-30-10 CIVIL STATE OF CALIFORNIA

*THE STATE OF CALIFORNIA OR ITS OFFICERS OR AGENTS SHALL NOT BE RESPONSIBLE FOR THE ACCURACY OR COMPLETENESS OF SCANNED COPIES OF THIS PLAN SHEET.*

## CONSTRUCTION AREA SIGNS (PORTABLE)

| SIGN TYPE ◯ | SIGN CODE | MESSAGE | PANEL SIZE | No. OF SIGNS |
|---|---|---|---|---|
| 1* | SC6-3(CA) | RAMP CLOSED (DATE-TIME) | 48" x 48" | 1 |
| 5 | M4-10(L†)<br>G27-2(5)(CA)<br>M3-3 | DETOUR (L† ARROW)<br>INTERSTATE 5<br>SOUTH | 48" x 18"<br>24" x 24"<br>24" x 12" | 2 |
| 6 | SC3(CA)<br>G27-2(5)(CA)<br>M3-3 | DETOUR (UP ARROW)<br>INTERSTATE 5<br>SOUTH | 48" x 18"<br>24" x 24"<br>24" x 12" | 1 |
| 7 | M4-10(R†)<br>G27-2(5)(CA)<br>M3-3 | DETOUR (R† ARROW)<br>INTERSTATE 5<br>SOUTH | 48" x 18"<br>24" x 24"<br>24" x 12" | 2 |
| 8 | M4-8a | END DETOUR | 24" x 18" | 1 |
| | | TOTAL: | | 7 |

* PLACE SIGN SEVEN DAYS PRIOR TO RAMP CLOSURE.

## DETOUR ROUTING

EB Rte 44 RAMP TO SB Rte 5 CLOSED:
EXIT EB Rte 44 TO NB Rte 5
PROCEED TO Rte 299
TAKE WB Rte 299 TO SB Rte 5

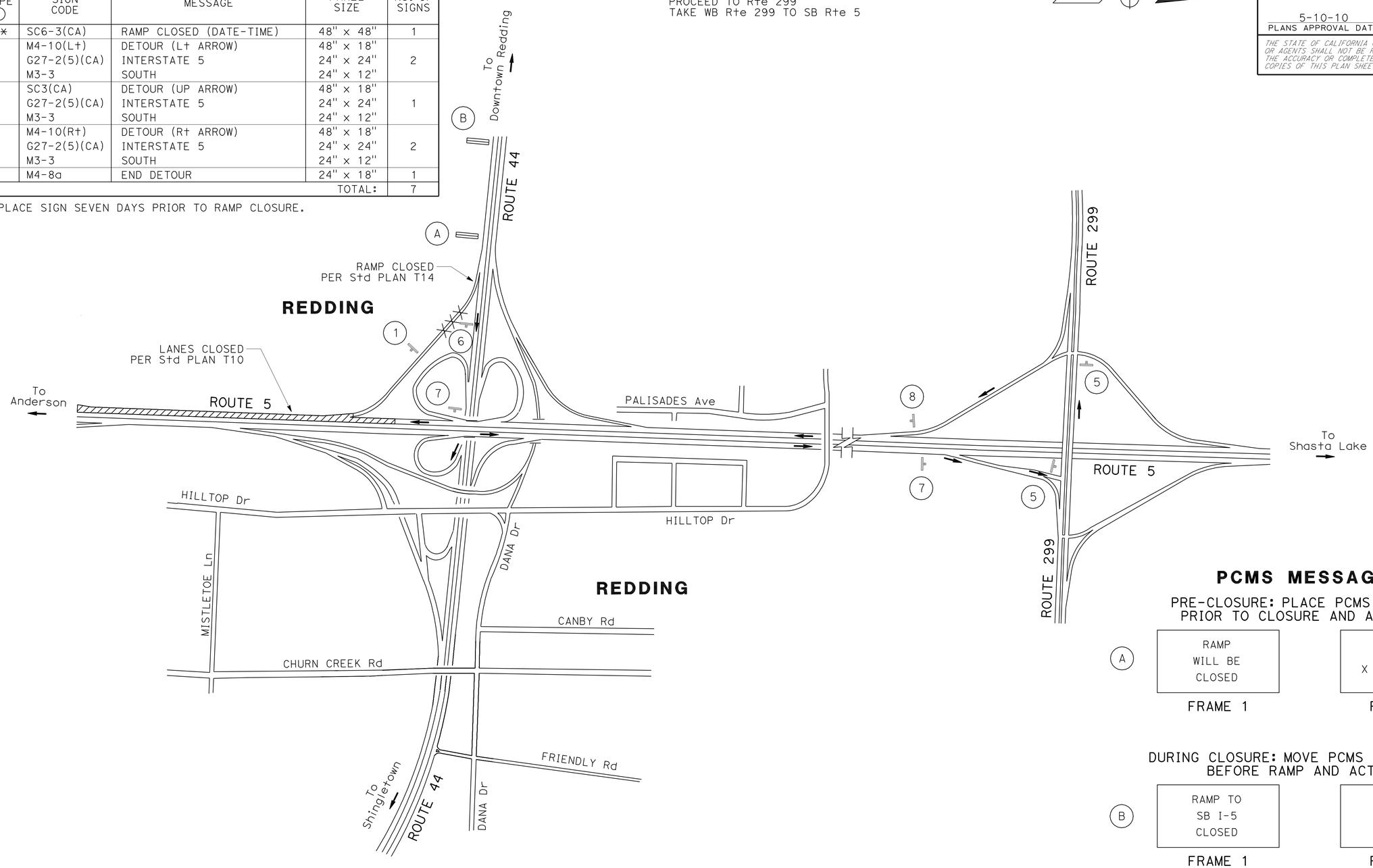


## PCMS MESSAGES

PRE-CLOSURE: PLACE PCMS 12 HOURS PRIOR TO CLOSURE AND ACTIVATE

| | | |
|---|---|---|
| A | RAMP<br>WILL BE<br>CLOSED | TONIGHT<br>X PM - Y AM |
| | FRAME 1 | FRAME 2 |

DURING CLOSURE: MOVE PCMS Approx 1000' BEFORE RAMP AND ACTIVATE

| | | |
|---|---|---|
| B | RAMP TO<br>SB I-5<br>CLOSED | FOLLOW<br>DETOUR |
| | FRAME 1 | FRAME 2 |

## DETOUR 5
## CLOSURE OF EB ROUTE 44 CONNECTOR RAMP TO SB ROUTE 5 DURING STAGE 4

THIS PLAN ACCURATE FOR DETOUR WORK ONLY

## DETOUR PLAN
NO SCALE

DE-6

REVISED BY | DATE REVISED
BOB WEBER | ANDREW STECKLEIN
CALCULATED-DESIGNED BY | CHECKED BY
FUNCTIONAL SUPERVISOR
STEVE TOPAL

STATE OF CALIFORNIA - DEPARTMENT OF TRANSPORTATION
Caltrans DESIGN

P:\proj2\02\3c000\pse\23c000mg006.dgn

LAST REVISION | DATE PLOTTED => 10-MAY-2010
01-13-10 | TIME PLOTTED => 14:27

| Dist | COUNTY | ROUTE | POST MILES TOTAL PROJECT | SHEET No. | TOTAL SHEETS |
|---|---|---|---|---|---|
| 02 | Sha | 5 | R14.9/R16.2 | 59 | 165 |

REGISTERED CIVIL ENGINEER 02-11-10 DATE

5-10-10
PLANS APPROVAL DATE

REGISTERED PROFESSIONAL ENGINEER
ANDREW P. STECKLEIN
No. C67148
Exp. 9-30-10
CIVIL
STATE OF CALIFORNIA

*THE STATE OF CALIFORNIA OR ITS OFFICERS OR AGENTS SHALL NOT BE RESPONSIBLE FOR THE ACCURACY OR COMPLETENESS OF SCANNED COPIES OF THIS PLAN SHEET.*

## CONSTRUCTION AREA SIGNS (PORTABLE)

| SIGN TYPE ○ | SIGN CODE | MESSAGE | PANEL SIZE | No. OF SIGNS |
|---|---|---|---|---|
| 1* | SC6-3(CA) | RAMP CLOSED (DATE-TIME) | 48" x 48" | 1 |
| 2 | M4-10(Lt)<br>G28-2(44)(CA)<br>G49(CA) | DETOUR (Lt ARROW)<br>ROUTE 44<br>EAST | 48" x 18"<br>25" x 24"<br>26" x 12" | 3 |
| 3 | SC3(CA)<br>G28-2(44)(CA)<br>G49(CA) | DETOUR (UP ARROW)<br>ROUTE 44<br>EAST | 48" x 18"<br>25" x 24"<br>26" x 12" | 1 |
| 4 | M4-10(Rt)<br>G28-2(44)(CA)<br>G49(CA) | DETOUR (Rt ARROW)<br>ROUTE 44<br>EAST | 48" x 18"<br>25" x 24"<br>26" x 12" | 3 |
| 8 | M4-8a | END DETOUR | 24" x 18" | 1 |
| | | | TOTAL: | 9 |

* PLACE SIGN SEVEN DAYS PRIOR TO RAMP CLOSURE.

### DETOUR ROUTING

SB Rte 5 RAMP TO EB Rte 44 CLOSED:
PROCEED TO CYPRESS AVENUE
TAKE EB CYPRESS AVENUE TO NB Rte 5
EXIT NB Rte 5 TO EB Rte 44

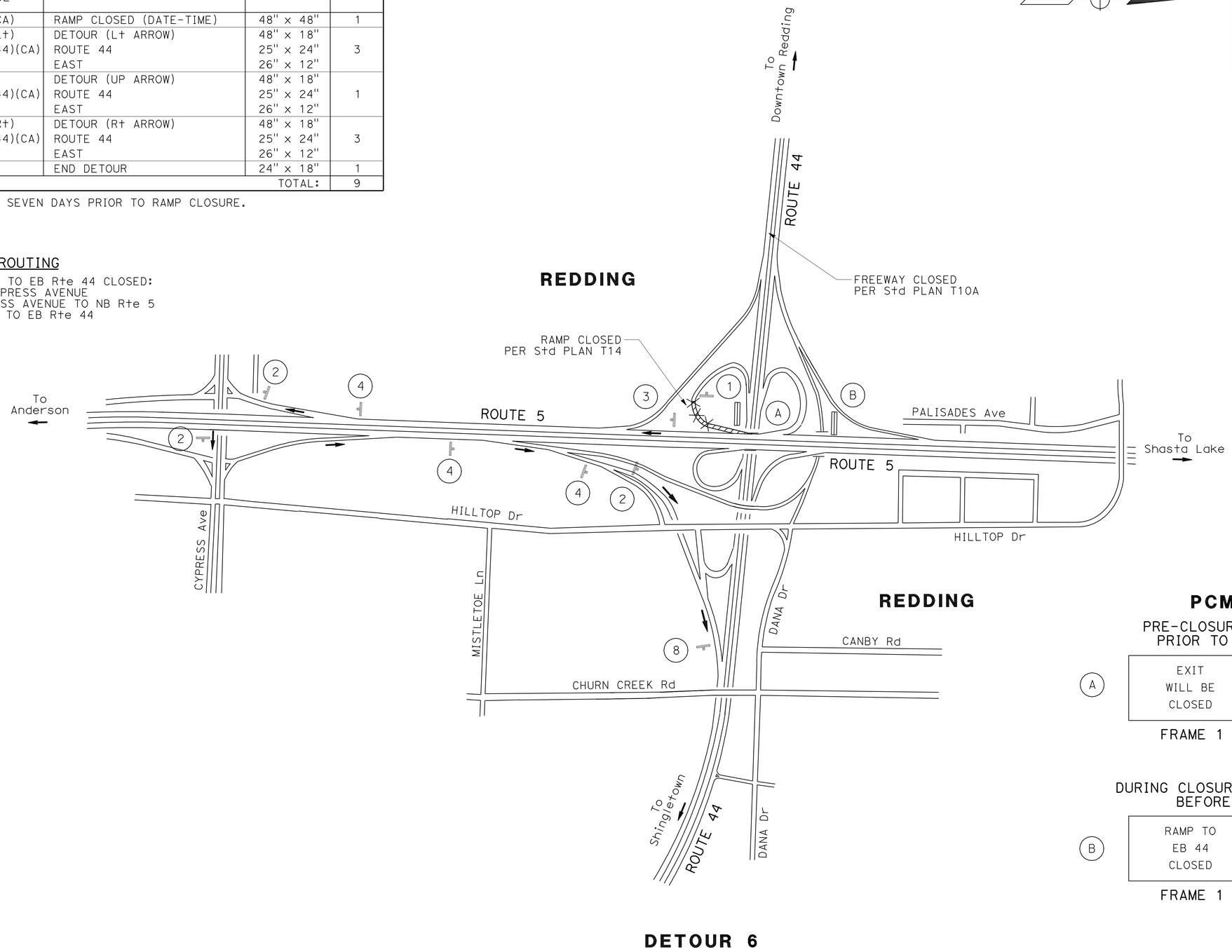


## PCMS MESSAGES

PRE-CLOSURE: PLACE PCMS 12 HOURS PRIOR TO CLOSURE AND ACTIVATE

(A)

| EXIT WILL BE CLOSED | TONIGHT X PM - Y AM |
|---|---|
| FRAME 1 | FRAME 2 |

DURING CLOSURE: MOVE PCMS Approx 1000' BEFORE RAMP AND ACTIVATE

(B)

| RAMP TO EB 44 CLOSED | FOLLOW DETOUR |
|---|---|
| FRAME 1 | FRAME 2 |

## DETOUR 6
## CLOSURE OF SB ROUTE 5 CONNECTOR RAMP TO EB ROUTE 44 DURING STAGE 4

THIS PLAN ACCURATE FOR DETOUR WORK ONLY

## DETOUR PLAN
NO SCALE

**DE-7**

REVISED BY | DATE REVISED
BOB WEBER | ANDREW STECKLEIN
CALCULATED-DESIGNED BY | CHECKED BY
FUNCTIONAL SUPERVISOR
STEVE TOPAL

STATE OF CALIFORNIA - DEPARTMENT OF TRANSPORTATION
Caltrans
DESIGN

P:\proj2\02\3c000\pse\23c000mg007.dgn

LAST REVISION | DATE PLOTTED => 10-MAY-2010
01-14-10 | TIME PLOTTED => 14:27

BORDER LAST REVISED 4/11/2008
RELATIVE BORDER SCALE IS IN INCHES 0 1 2 3
USERNAME => trlim
DGN FILE => 23c000mg007.dgn
CU 03 247
EA 3C0001

| Dist | COUNTY | ROUTE | POST MILES TOTAL PROJECT | SHEET No. | TOTAL SHEETS |
|---|---|---|---|---|---|
| 02 | Sha | 5 | R14.9/R16.2 | 60 | 165 |

REGISTERED CIVIL ENGINEER 02-11-10 DATE

5-10-10
PLANS APPROVAL DATE

REGISTERED PROFESSIONAL ENGINEER ANDREW P. STECKLEIN No. C67148 Exp. 9-30-10 CIVIL STATE OF CALIFORNIA

*THE STATE OF CALIFORNIA OR ITS OFFICERS OR AGENTS SHALL NOT BE RESPONSIBLE FOR THE ACCURACY OR COMPLETENESS OF SCANNED COPIES OF THIS PLAN SHEET.*

## CONSTRUCTION AREA SIGNS (PORTABLE)

| SIGN TYPE ◯ | SIGN CODE | MESSAGE | PANEL SIZE | No. OF SIGNS |
|---|---|---|---|---|
| 1* | SC6-3(CA) | RAMP CLOSED (DATE-TIME) | 48" x 48" | 1 |
| 5 | M4-10(L+)<br>G27-2(5)(CA)<br>M3-3 | DETOUR (L+ ARROW)<br>ROUTE 5<br>SOUTH | 48" x 18"<br>24" x 24"<br>24" x 12" | 3 |
| 6 | SC3(CA)<br>G27-2(5)(CA)<br>M3-3 | DETOUR (UP ARROW)<br>ROUTE 5<br>SOUTH | 48" x 18"<br>24" x 24"<br>24" x 12" | 1 |
| 7 | M4-10(R+)<br>G27-2(5)(CA)<br>M3-3 | DETOUR (R+ ARROW)<br>ROUTE 5<br>SOUTH | 48" x 18"<br>24" x 24"<br>24" x 12" | 2 |
| 8 | M4-8a | END DETOUR | 24" x 12" | 1 |
| | | | TOTAL: | 7 |

* PLACE SIGN SEVEN DAYS PRIOR TO RAMP CLOSURE.

### DETOUR ROUTING

WB Rte 44 RAMP TO SB Rte 5 CLOSED:
PROCEED TO SUNDIAL BRIDGE DRIVE
EXIT WB Rte 44 TO SUNDIAL BRIDGE DRIVE
TAKE SB SUNDIAL BRIDGE DRIVE TO PARK MARINA DRIVE
TAKE EB PARK MARINA DRIVE TO EB Rte 44
PROCEED TO SB Rte 5

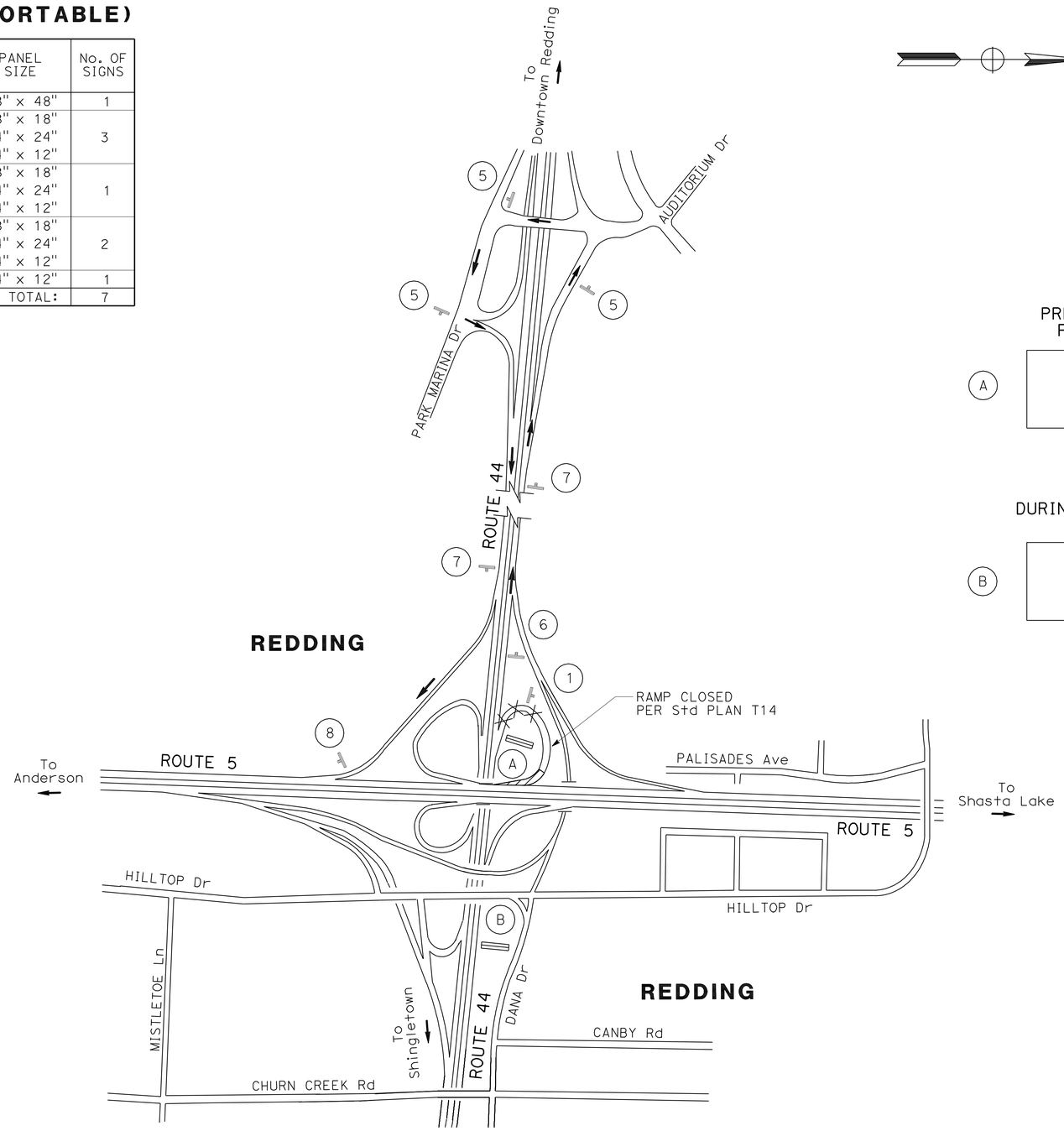


## PCMS MESSAGES

PRE-CLOSURE: PLACE PCMS 12 HOURS PRIOR TO CLOSURE AND ACTIVATE

(A)

| EXIT WILL BE CLOSED | TONIGHT X PM - Y AM |
|---|---|
| FRAME 1 | FRAME 2 |

DURING CLOSURE: MOVE PCMS Approx 1000' BEFORE RAMP AND ACTIVATE

(B)

| RAMP TO SB I-5 CLOSED | FOLLOW DETOUR |
|---|---|
| FRAME 1 | FRAME 2 |

## DETOUR 7
## CLOSURE OF WB ROUTE 44 CONNECTOR RAMP TO SB ROUTE 5 DURING STAGE 4

THIS PLAN ACCURATE FOR DETOUR WORK ONLY

## DETOUR PLAN
NO SCALE

**DE-8**

STATE OF CALIFORNIA - DEPARTMENT OF TRANSPORTATION
Caltrans
DESIGN

FUNCTIONAL SUPERVISOR: STEVE TOPAL
CALCULATED-DESIGNED BY: BOB WEBER
CHECKED BY: ANDREW STECKLEIN
REVISED BY
DATE REVISED

P:\proj2\02\3c000\pse\23c000mg008.dgn

LAST REVISION DATE PLOTTED => 10-MAY-2010
01-14-10 TIME PLOTTED => 14:27

| Dist | COUNTY | ROUTE | POST MILES TOTAL PROJECT | SHEET No. | TOTAL SHEETS |
|---|---|---|---|---|---|
| 02 | Sha | 5 | R14.9/R16.2 | 61 | 165 |

REGISTERED CIVIL ENGINEER 02-11-10 DATE

5-10-10
PLANS APPROVAL DATE

REGISTERED PROFESSIONAL ENGINEER ANDREW P. STECKLEIN No. C67148 Exp. 9-30-10 CIVIL STATE OF CALIFORNIA

*THE STATE OF CALIFORNIA OR ITS OFFICERS OR AGENTS SHALL NOT BE RESPONSIBLE FOR THE ACCURACY OR COMPLETENESS OF SCANNED COPIES OF THIS PLAN SHEET.*

## CONSTRUCTION AREA SIGNS (PORTABLE)

| SIGN TYPE ◯ | SIGN CODE | MESSAGE | PANEL SIZE | No. OF SIGNS |
|---|---|---|---|---|
| 1* | SC6-3(CA) | RAMP CLOSED (DATE-TIME) | 48" x 48" | 1 |
| 2 | M4-10(L+)<br>G28-2(44)(CA)<br>G50(CA) | DETOUR (L+ ARROW)<br>ROUTE 44<br>WEST | 48" x 18"<br>25" x 24"<br>26" x 12" | 3 |
| 3 | SC3(CA)<br>G28-2(44)(CA)<br>G50(CA) | DETOUR (UP ARROW)<br>ROUTE 44<br>WEST | 48" x 18"<br>25" x 24"<br>26" x 12" | 1 |
| 4 | M4-10(R+)<br>G28-2(44)(CA)<br>G50(CA) | DETOUR (R+ ARROW)<br>ROUTE 44<br>WEST | 48" x 18"<br>25" x 24"<br>26" x 12" | 2 |
| 8 | M4-8a | END DETOUR | 24" x 18" | 1 |
| | | | TOTAL | 8 |

* PLACE SIGN SEVEN DAYS PRIOR TO RAMP CLOSURE.

## DETOUR ROUTING

SB Rte 5 RAMP TO WB Rte 44 CLOSED:
PROCEED TO CYPRESS AVENUE
TAKE EB CYPRESS AVENUE TO NB Rte 5
EXIT NB Rte 5 TO WB Rte 44

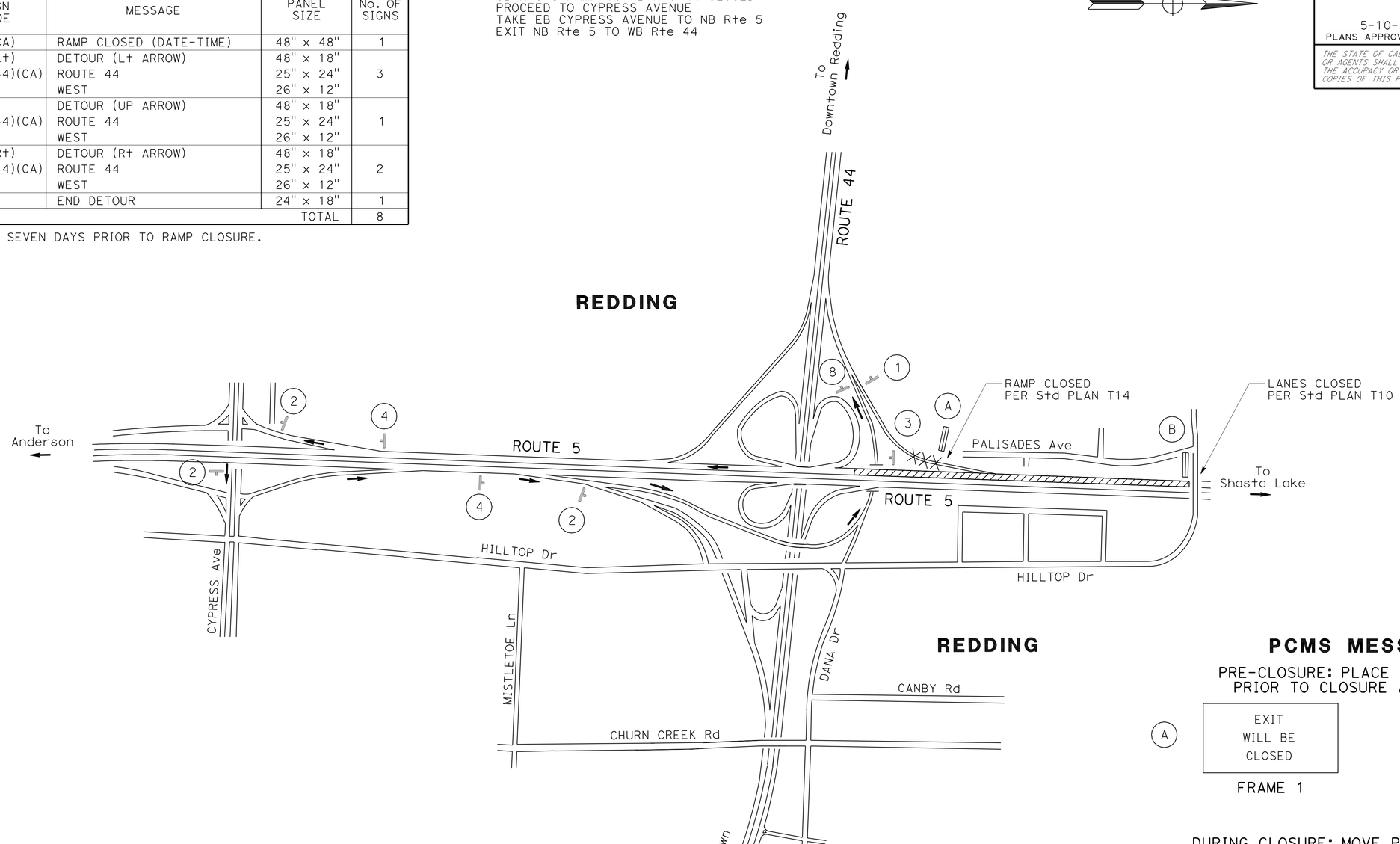


## PCMS MESSAGES

PRE-CLOSURE: PLACE PCMS 12 HOURS PRIOR TO CLOSURE AND ACTIVATE

(A)

| EXIT WILL BE CLOSED | TONIGHT X PM - Y AM |
|---|---|
| FRAME 1 | FRAME 2 |

DURING CLOSURE: MOVE PCMS Approx 1000' BEFORE RAMP AND ACTIVATE

(B)

| RAMP TO WB 44 CLOSED | FOLLOW DETOUR |
|---|---|
| FRAME 1 | FRAME 2 |

## DETOUR 8
## CLOSURE OF SB ROUTE 5 CONNECTOR RAMP TO WB ROUTE 44 DURING STAGE 4

THIS PLAN ACCURATE FOR DETOUR WORK ONLY

## DETOUR PLAN
NO SCALE

**DE-9**

STATE OF CALIFORNIA - DEPARTMENT OF TRANSPORTATION
Caltrans® DESIGN

BOB WEBER | ANDREW STECKLEIN | STEVE TOPAL | REVISED BY | DATE REVISED | CALCULATED-DESIGNED BY | CHECKED BY | FUNCTIONAL SUPERVISOR

P:\proj2\02\3c000\pse\23c000mg009.dgn

LAST REVISION 01-14-10 | DATE PLOTTED => 10-MAY-2010 | TIME PLOTTED => 14:27

| Dist | COUNTY | ROUTE | POST MILES TOTAL PROJECT | SHEET No. | TOTAL SHEETS |
|---|---|---|---|---|---|
| 02 | Sha | 5 | R14.9/R16.2 | 62 | 165 |

REGISTERED CIVIL ENGINEER 02-11-10 DATE

5-10-10
PLANS APPROVAL DATE

REGISTERED PROFESSIONAL ENGINEER ANDREW P. STECKLEIN No. C67148 Exp. 9-30-10 CIVIL STATE OF CALIFORNIA

*THE STATE OF CALIFORNIA OR ITS OFFICERS OR AGENTS SHALL NOT BE RESPONSIBLE FOR THE ACCURACY OR COMPLETENESS OF SCANNED COPIES OF THIS PLAN SHEET.*

NOTES:

1. (N) - NOT A SEPARATE PAY ITEM, FOR INFORMATION ONLY.
2. CALIFORNIA CODES ARE DESIGNATED BY (CA), OTHERWISE FEDERAL CODES ARE SHOWN.

## CONSTRUCTION AREA SIGNS (PORTABLE)

| DETOUR NUMBER | (N) No. OF SIGNS PER DETOUR |
|---|---|
| 1 | 10 |
| 2 | 6 |
| 3 | 21 |
| 4 | 22 |
| 5 | 7 |
| 6 | 9 |
| 7 | 7 |
| 8 | 8 |
| TOTAL: | 90 |

## PORTABLE CHANGEABLE MESSAGE SIGNS

| DETOUR NUMBER | (N) No. OF PCMS PER DETOUR |
|---|---|
| 1 | 2 |
| 2 | 1 |
| 3 | 3 |
| 4 | 2 |
| 5 | 1 |
| 6 | 1 |
| 7 | 1 |
| 8 | 1 |

## DETOUR MANAGEMENT PCMS

| DETOUR NUMBER | (N) No. OF PCMS PER DETOUR |
|---|---|
| 4 (SB 5 TO EB 44) | 4 |
| 4 (WB 44 TO SB 5) | 2 |
| TOTAL: | 6 |

## CONSTRUCTION AREA SIGN PANELS (PORTABLE)

| SIGN TYPE | SIGN CODE | DETOUR APPLICATION | MESSAGE/Symbol | PANEL SIZE | (N) MINIMUM No. OF PANELS NEEDED[1] | (N) MAXIMUM No. OF PANELS NEEDED[2] |
|---|---|---|---|---|---|---|
| 1 | SC6-3(CA) | 1, 3, 5-8 | RAMP CLOSED (DATE-TIME) | 48" x 48" | 1 | 7 |
| 1 | SC6-4(CA) | 3 | RAMP CLOSED (DATE-DATE) | 48" x 60" | 2 | 2 |
| 2, 5 | M4-10 (L+) | 1-4, 6, 8 | DETOUR (L+ ARROW) | 48" x 18" | 13 | 35 |
| 5-7 | G27-2 | 4, 5, 7 | INTERSTATE 5 (SHIELD) | 25" x 24" | 9 | 20 |
| 2-4 | G28-2 | 1-4, 6-8 | ROUTE 44 (SHIELD) | 25" x 24" | 17 | 54 |
| 2-4 | G49(CA) | 1, 4, 6 | EAST | 26" x 12" | 9 | 15 |
| 2-4 | G50(CA) | 2, 3, 8 | WEST | 26" x 12" | 13 | 28 |
| 5-7 | M3-3 | 4, 5, 7 | SOUTH | 24" x 12" | 9 | 20 |
| 3, 6 | SC3(CA) | 1, 3-8 | DETOUR (UP ARROW) | 48" x 18" | 4 | 11 |
| 4, 7 | M4-10 (R+) | 1-8 | DETOUR (R+ ARROW) | 48" x 18" | 7 | 28 |
| 8 | M4-8a | 1-8 | END DETOUR | 24" x 18" | 4 | 13 |
| | | | | TOTAL: | 88 | 233 |

1. THE MINIMUM NUMBER OF PANELS NEEDED TO SET UP ALL DETOURS ASSUMING MULTIPLE USE OF PANELS.
2. THE MAXIMUM NUMBER OF PANELS NEEDED TO SET UP ALL DETOURS ASSUMING SINGLE USE OF PANELS.

# DETOUR QUANTITIES

# DEQ-1

REVISED BY | DATE REVISED
BOB WEBER | ANDREW STECKLEIN
CALCULATED-DESIGNED BY | CHECKED BY
FUNCTIONAL SUPERVISOR: STEVE TOPAL

STATE OF CALIFORNIA - DEPARTMENT OF TRANSPORTATION
Caltrans® DESIGN

P:\proj2\02\3c000\pse\23c000mh001.dgn

LAST REVISION 01-14-10 | DATE PLOTTED => 10-MAY-2010 TIME PLOTTED => 14:27

| Dist | COUNTY | ROUTE | POST MILES TOTAL PROJECT | SHEET No. | TOTAL SHEETS |
|---|---|---|---|---|---|
| 02 | Sha | 5 | R14.9/R16.2 | 63 | 165 |

REGISTERED CIVIL ENGINEER 02-11-10 DATE

5-10-10
PLANS APPROVAL DATE

REGISTERED PROFESSIONAL ENGINEER
ANDREW P. STECKLEIN
No. C67148
Exp. 9-30-10
CIVIL
STATE OF CALIFORNIA

*THE STATE OF CALIFORNIA OR ITS OFFICERS OR AGENTS SHALL NOT BE RESPONSIBLE FOR THE ACCURACY OR COMPLETENESS OF SCANNED COPIES OF THIS PLAN SHEET.*

NOTES:

1. EXACT LOCATION AND POSITION OF ROADSIDE SIGNS TO BE DETERMINED BY THE ENGINEER.
2. CALIFORNIA CODES ARE DESIGNATED BY (CA), OTHERWISE FEDERAL CODES ARE SHOWN.
3. FIELD VERIFY VERTICAL CLEARANCE PRIOR TO MANUFACTURING VERTICAL CLEARANCE SIGNS.

## LEGEND

- ##-## ROADSIDE SIGN NUMBER
- # OVERHEAD SIGN NUMBER
- ▲ EXISTING SIGN TO REMAIN
- ■ RELOCATE ROADSIDE SIGN
- □ RELOCATE SIGN PANEL
- ✳ RESET ROADSIDE SIGN
- BRIDGE MOUNTED SIGN
- STRIPING LIMITS
- EXISTING ROADSIDE SIGN (1 POST)
- EXISTING ROADSIDE SIGN (2 POST)
- NEW ROADSIDE SIGN (1 POST)

## ABBREVIATIONS

Spl SPECIAL
(E) EXISTING

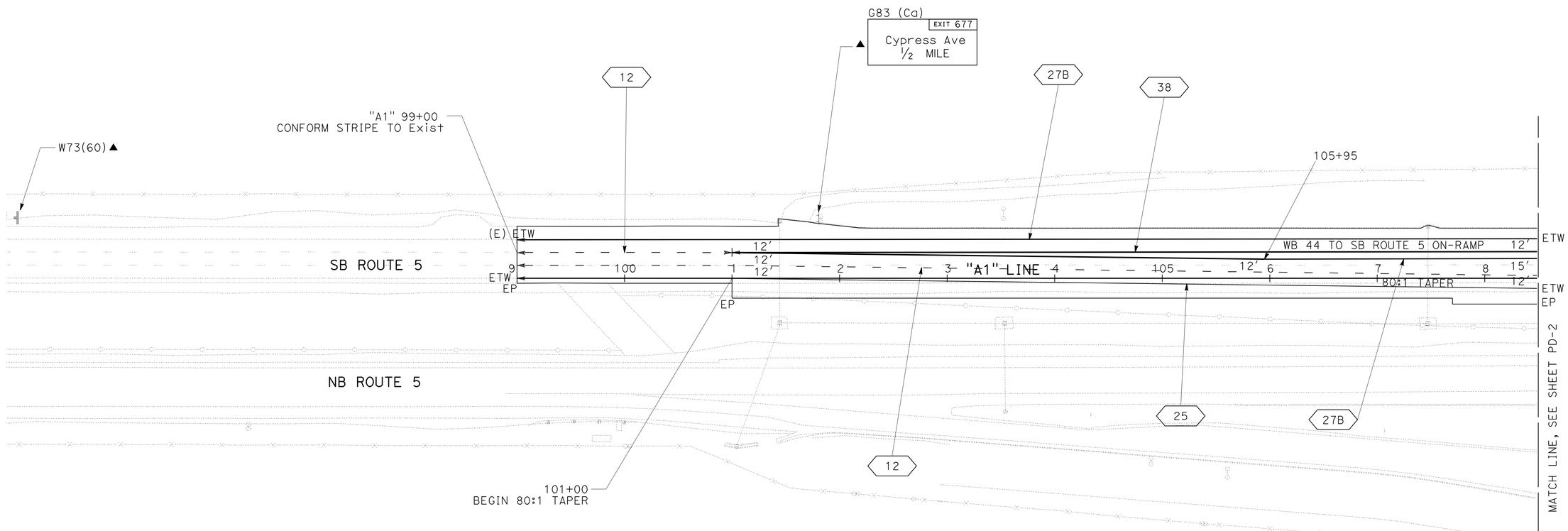


# PAVEMENT DELINEATION AND SIGN PLAN

SCALE: 1" = 50'

**PD-1**

THIS PLAN ACCURATE FOR PAVEMENT DELINEATION AND SIGN WORK ONLY

REVISED BY | DATE REVISED
CALCULATED-DESIGNED BY | CHECKED BY
FUNCTIONAL SUPERVISOR: STEVE TOPAL

STATE OF CALIFORNIA - DEPARTMENT OF TRANSPORTATION
Caltrans
DESIGN

P:\proj2\02\3c000\pse\23c000na001.dgn

LAST REVISION 11-16-09 | DATE PLOTTED => 10-MAY-2010 | TIME PLOTTED => 14:27

BORDER LAST REVISED 4/11/2008 | RELATIVE BORDER SCALE IS IN INCHES 0 1 2 3 | USERNAME => trlim | DGN FILE => 23c000na001.dgn | CU 03 247 | EA 3C0001

| Dist | COUNTY | ROUTE | POST MILES TOTAL PROJECT | SHEET No. | TOTAL SHEETS |
|---|---|---|---|---|---|
| 02 | Sha | 5 | R14.9/R16.2 | 64 | 165 |

REGISTERED CIVIL ENGINEER 02-11-10 DATE

5-10-10
PLANS APPROVAL DATE

REGISTERED PROFESSIONAL ENGINEER
ANDREW P. STECKLEIN
No. C67148
Exp. 9-30-10
CIVIL
STATE OF CALIFORNIA

*THE STATE OF CALIFORNIA OR ITS OFFICERS OR AGENTS SHALL NOT BE RESPONSIBLE FOR THE ACCURACY OR COMPLETENESS OF SCANNED COPIES OF THIS PLAN SHEET.*

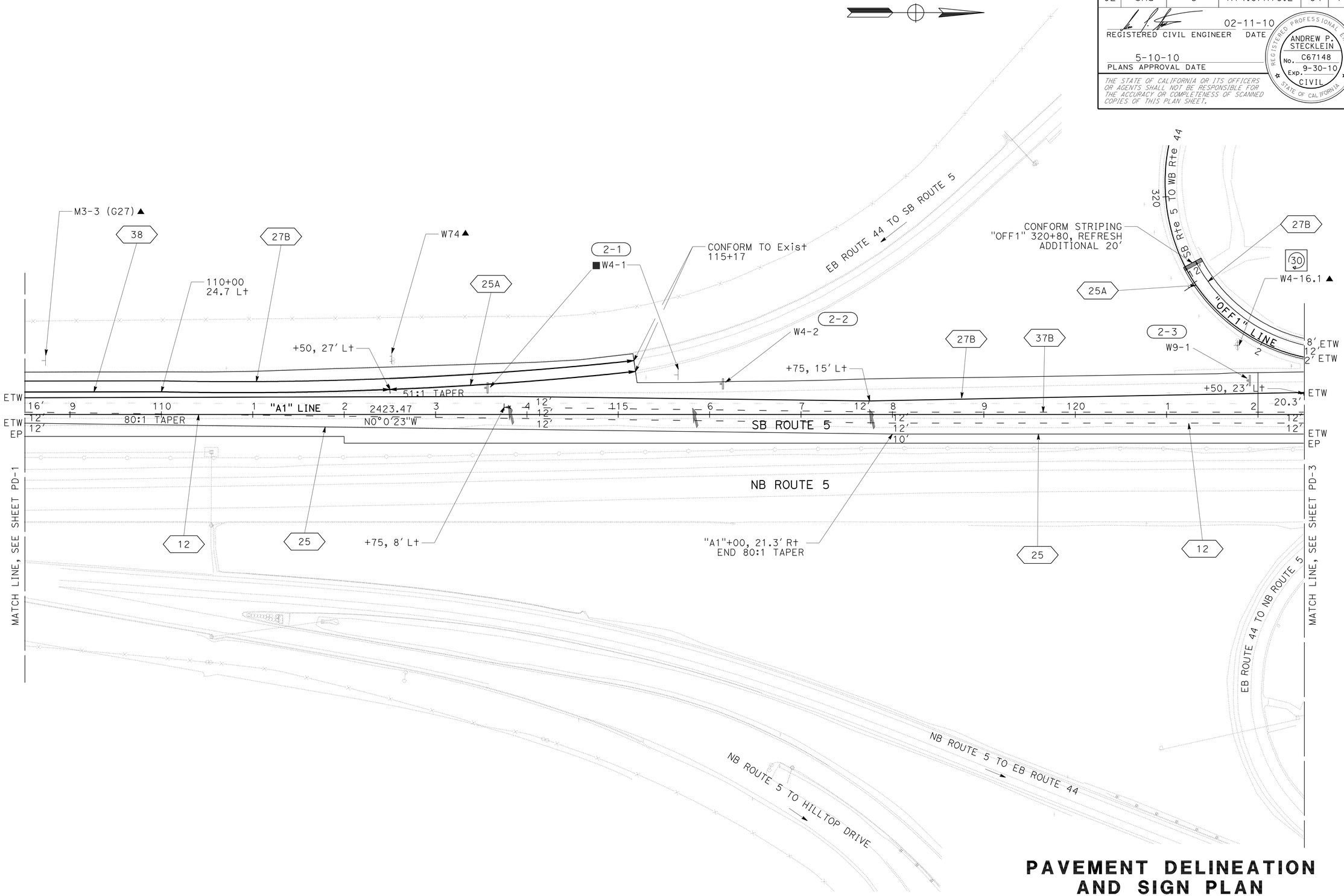


# PAVEMENT DELINEATION AND SIGN PLAN

SCALE: 1" = 50'

**PD-2**

THIS PLAN ACCURATE FOR PAVEMENT DELINEATION AND SIGN WORK ONLY

REVISED BY | DATE REVISED

CALCULATED-DESIGNED BY | CHECKED BY

FUNCTIONAL SUPERVISOR: STEVE TOPAL

STATE OF CALIFORNIA - DEPARTMENT OF TRANSPORTATION

Caltrans

**DESIGN**

P:\proj2\02\3c000\pse\23c000na002.dgn

LAST REVISION 11-16-09 | DATE PLOTTED => 10-MAY-2010 | TIME PLOTTED => 14:28

BORDER LAST REVISED 4/11/2008 | RELATIVE BORDER SCALE IS IN INCHES 0 1 2 3 | USERNAME => trlim | DGN FILE => 23c000na002.dgn | CU 03 247 | EA 3C0001

| Dist | COUNTY | ROUTE | POST MILES TOTAL PROJECT | SHEET No. | TOTAL SHEETS |
|---|---|---|---|---|---|
| 02 | Sha | 5 | R14.9/R16.2 | 65 | 165 |

REGISTERED CIVIL ENGINEER 02-11-10 DATE

5-10-10
PLANS APPROVAL DATE

REGISTERED PROFESSIONAL ENGINEER
ANDREW P. STECKLEIN
No. C67148
Exp. 9-30-10
CIVIL
STATE OF CALIFORNIA

*THE STATE OF CALIFORNIA OR ITS OFFICERS OR AGENTS SHALL NOT BE RESPONSIBLE FOR THE ACCURACY OR COMPLETENESS OF SCANNED COPIES OF THIS PLAN SHEET.*

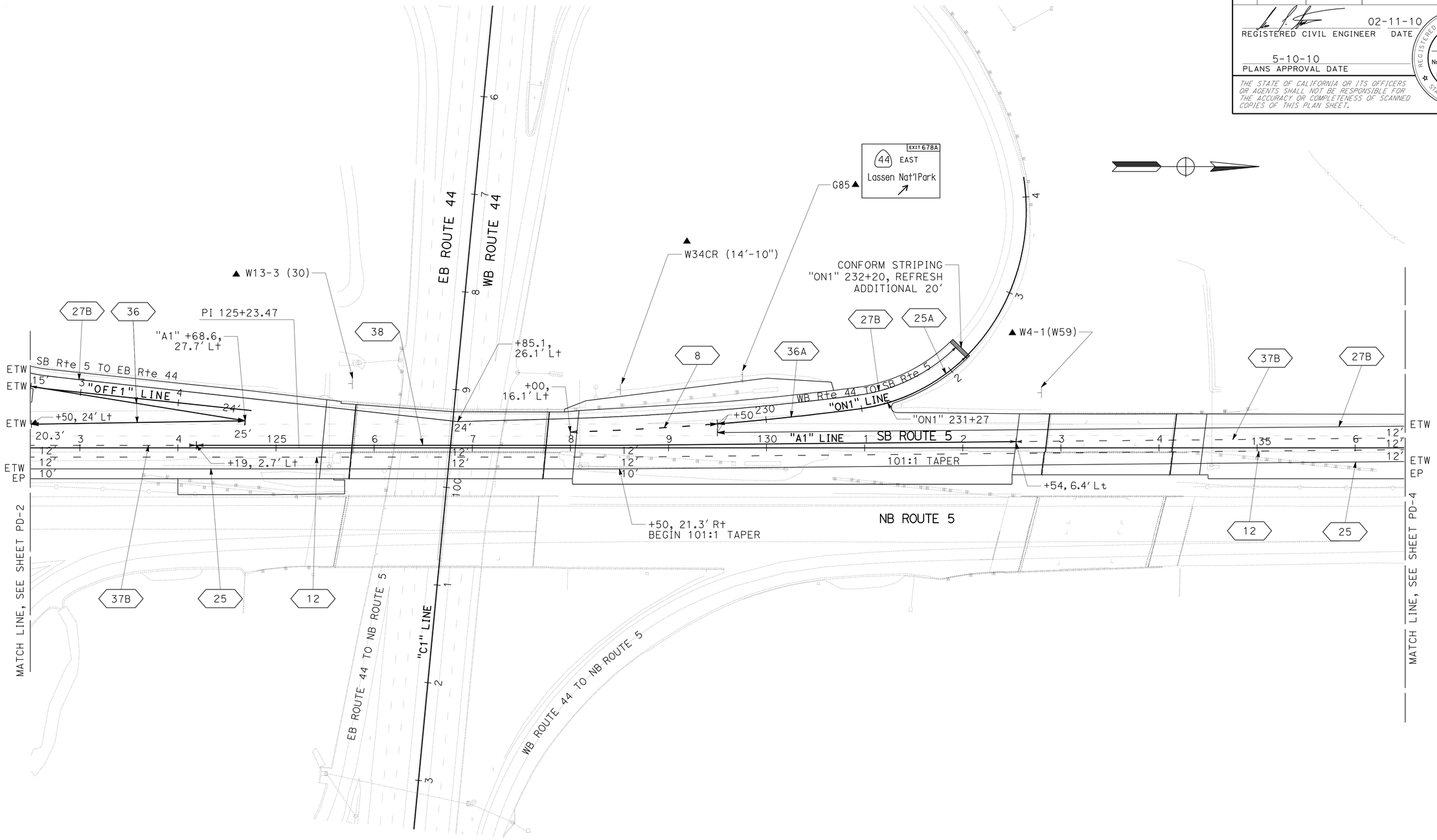


# PAVEMENT DELINEATION AND SIGN PLAN

SCALE: 1" = 50'

**PD-3**

THIS PLAN ACCURATE FOR PAVEMENT DELINEATION AND SIGN WORK ONLY

| REVISED BY | DATE REVISED |
|---|---|
| | |

CALCULATED-DESIGNED BY | CHECKED BY

FUNCTIONAL SUPERVISOR: STEVE TOPAL

STATE OF CALIFORNIA - DEPARTMENT OF TRANSPORTATION
Caltrans
DESIGN

P:\proj2\02\3c000\pse\23c000na003.dgn

LAST REVISION 11-16-09 | DATE PLOTTED => 10-MAY-2010 | TIME PLOTTED => 14:28

BORDER LAST REVISED 4/11/2008 | RELATIVE BORDER SCALE IS IN INCHES 0 1 2 3 | USERNAME => trlim | DGN FILE => 23c000na003.dgn | CU 03 247 | EA 3C0001

| Dist | COUNTY | ROUTE | POST MILES TOTAL PROJECT | SHEET No. | TOTAL SHEETS |
|---|---|---|---|---|---|
| 02 | Sha | 5 | R14.9/R16.2 | 66 | 165 |

REGISTERED CIVIL ENGINEER 02-11-10 DATE

5-10-10
PLANS APPROVAL DATE

REGISTERED PROFESSIONAL ENGINEER
ANDREW P. STECKLEIN
No. C67148
Exp. 9-30-10
CIVIL
STATE OF CALIFORNIA

*THE STATE OF CALIFORNIA OR ITS OFFICERS OR AGENTS SHALL NOT BE RESPONSIBLE FOR THE ACCURACY OR COMPLETENESS OF SCANNED COPIES OF THIS PLAN SHEET.*

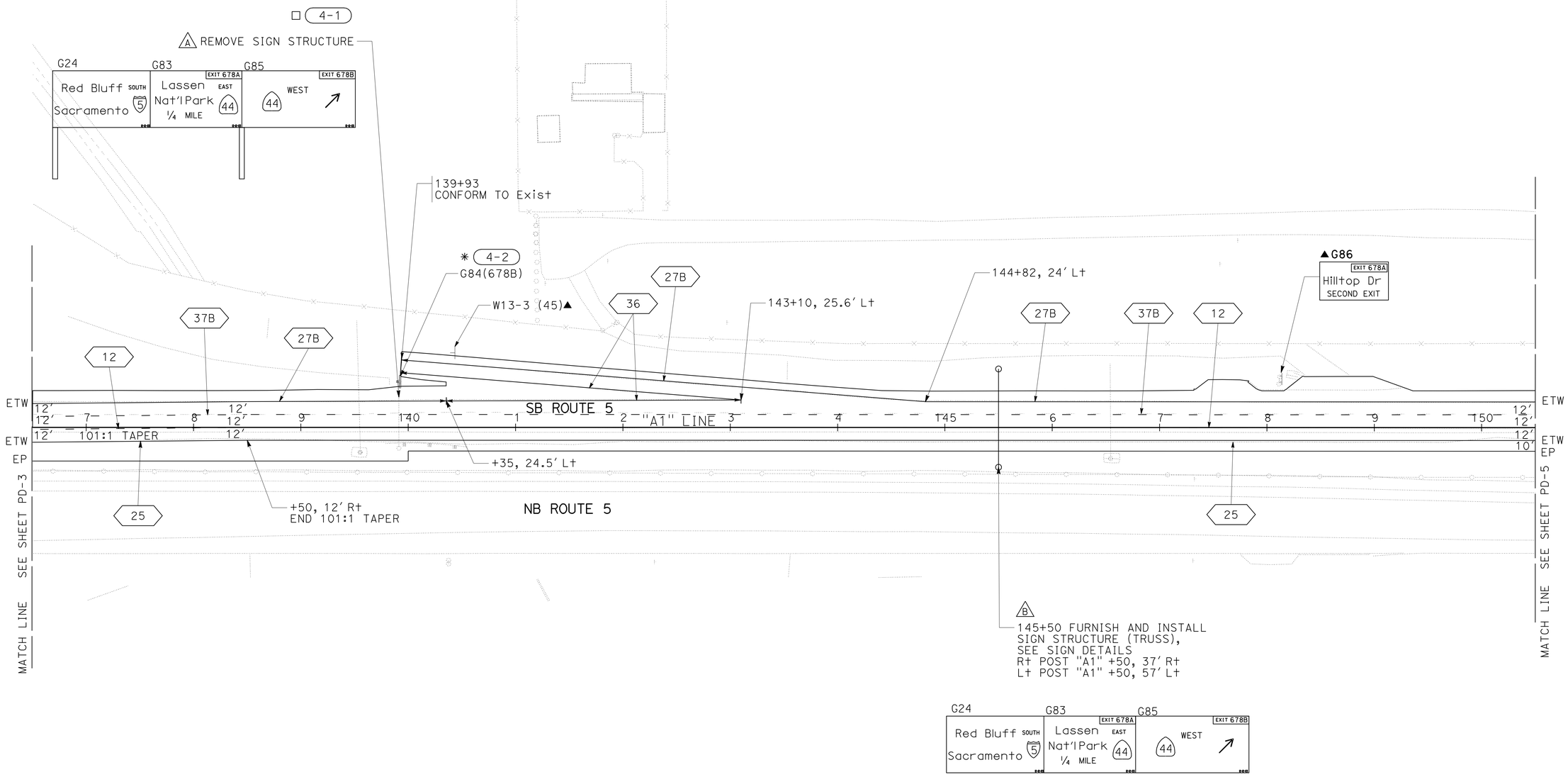


# PAVEMENT DELINEATION AND SIGN PLAN

SCALE: 1" = 50′

**PD-4**

THIS PLAN ACCURATE FOR PAVEMENT DELINEATION AND SIGN WORK ONLY

REVISED BY | DATE REVISED
GINNY SEIBERT | ANDREW STECKLEIN
CALCULATED-DESIGNED BY | CHECKED BY
FUNCTIONAL SUPERVISOR
STEVE TOPAL

STATE OF CALIFORNIA - DEPARTMENT OF TRANSPORTATION
Caltrans
DESIGN

P:\proj2\02\3c000\pse\23c000na004.dgn

LAST REVISION 11-16-09 | DATE PLOTTED => 10-MAY-2010 | TIME PLOTTED => 14:11

| Dist | COUNTY | ROUTE | POST MILES TOTAL PROJECT | SHEET No. | TOTAL SHEETS |
|---|---|---|---|---|---|
| 02 | Sha | 5 | R14.9/R16.2 | 67 | 165 |

REGISTERED CIVIL ENGINEER 02-11-10 DATE

5-10-10
PLANS APPROVAL DATE

REGISTERED PROFESSIONAL ENGINEER
ANDREW P. STECKLEIN
No. C67148
Exp. 9-30-10
CIVIL
STATE OF CALIFORNIA

*THE STATE OF CALIFORNIA OR ITS OFFICERS OR AGENTS SHALL NOT BE RESPONSIBLE FOR THE ACCURACY OR COMPLETENESS OF SCANNED COPIES OF THIS PLAN SHEET.*

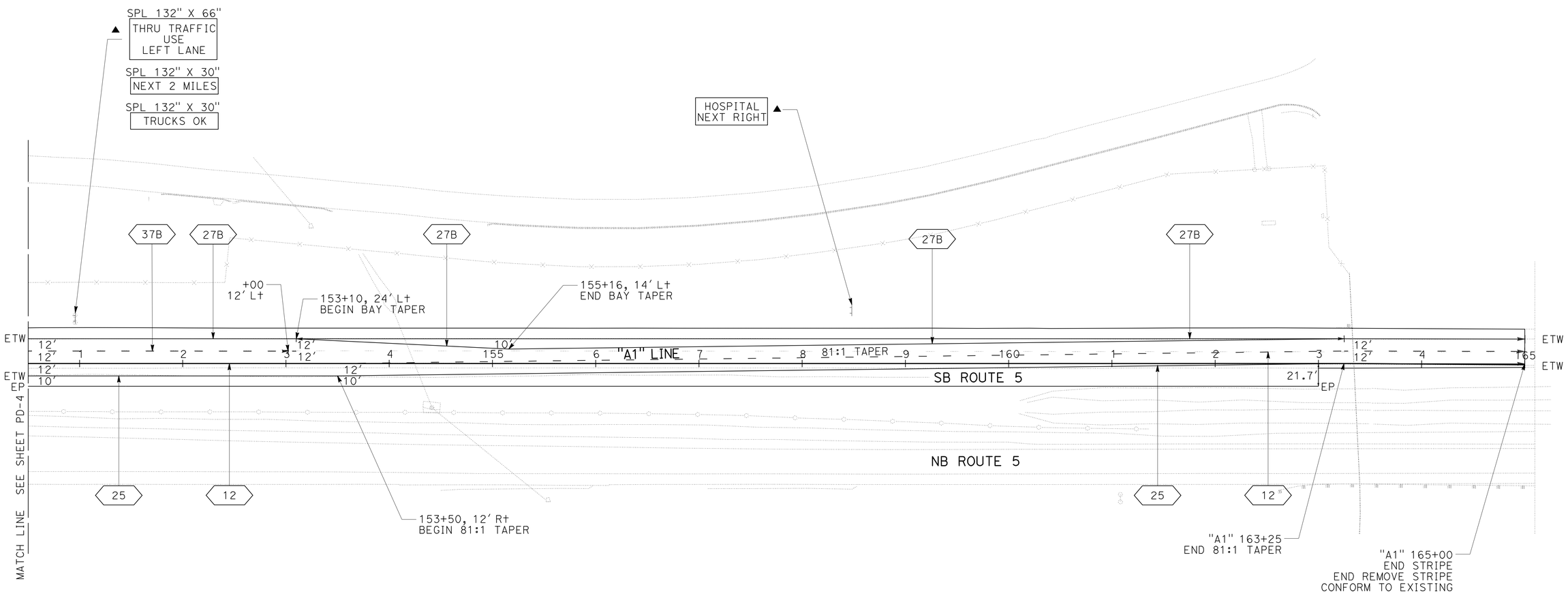


# PAVEMENT DELINEATION AND SIGN PLAN

SCALE: 1" = 50'

**PD-5**

THIS PLAN ACCURATE FOR PAVEMENT DELINEATION AND SIGN WORK ONLY

| REVISED BY | DATE REVISED |
|---|---|
| GINNY SEIBERT | ANDREW STECKLEIN |
| CALCULATED-DESIGNED BY | CHECKED BY |

FUNCTIONAL SUPERVISOR: STEVE TOPAL

STATE OF CALIFORNIA - DEPARTMENT OF TRANSPORTATION

Caltrans

**DESIGN**

P:\proj2\02\3c000\pse\23c000na005.dgn

LAST REVISION 11-16-09 | DATE PLOTTED => 10-MAY-2010 | TIME PLOTTED => 14:11

| Dist | COUNTY | ROUTE | POST MILES TOTAL PROJECT | SHEET No. | TOTAL SHEETS |
|---|---|---|---|---|---|
| 02 | Sha | 5 | R14.9/R16.2 | 68 | 165 |

REGISTERED CIVIL ENGINEER 02-11-10 DATE

5-10-10
PLANS APPROVAL DATE

REGISTERED PROFESSIONAL ENGINEER
ANDREW P. STECKLEIN
No. C67148
Exp. 9-30-10
CIVIL
STATE OF CALIFORNIA

*THE STATE OF CALIFORNIA OR ITS OFFICERS OR AGENTS SHALL NOT BE RESPONSIBLE FOR THE ACCURACY OR COMPLETENESS OF SCANNED COPIES OF THIS PLAN SHEET.*

NOTES:
1. (N) - NOT A SEPARATE PAY ITEM, FOR INFORMATION ONLY.
2. EXACT LOCATION AND POSITION OF ROADSIDE SIGNS TO BE DETERMINED BY THE ENGINEER.

## THERMOPLASTIC PAVEMENT MARKING

| PD SHEET No. | Sta LIMITS | L† | M | R† | DESCRIPTION/MESSAGE | EA | SQFT |
|---|---|---|---|---|---|---|---|
| 2 | "A1" 114+00 | X | | | TYPE VI ARROW | 1 | 42 |
| 2 | "A1" 116+00 | X | | | TYPE VI ARROW | 1 | 42 |
| 2 | "A1" 118+00 | X | | | TYPE VI ARROW | 1 | 42 |
| | | | | | TOTAL | | 126 |

## THERMOPLASTIC TRAFFIC STRIPES

| SHEET No. | STRIPE DETAIL NUMBER | PAVEMENT MARKER (EA) RETROREFLECTIVE TYPE G | PAVEMENT MARKER (EA) RETROREFLECTIVE TYPE H | THERMOPLASTIC TRAFFIC STRIPE (LF) YELLOW 4" | WHITE 4" | WHITE 8" | WHITE 4" (BROKEN 17-7) | WHITE 4" (BROKEN 36-12) | WHITE 8" (BROKEN 12-3) | REMARKS |
|---|---|---|---|---|---|---|---|---|---|---|
| | DETAIL | | | | | | | | | |
| PD-1 | 12 | 26 | | | | | | 1150 | | |
| | 25 | | 21 | 950 | | | | | | |
| | 27B | | | | 1700 | | | | | |
| | 38 | 32 | | | | 750 | | | | |
| PD-2 | 12 | 30 | | | | | | 1400 | | |
| | 25 | | 30 | 1400 | | | | | | |
| | 25A | | 20 | 438 | | | | | | |
| | 27B | | | | 2223 | | | | | |
| | 37B | 60 | | | | | | | 875 | |
| | 38 | 18 | | | | 400 | | | | |
| PD-3 | 8 | | | | | | 150 | | | |
| | 12 | 30 | | | | | | 1400 | | |
| | 25 | | 30 | 1400 | | | | | | |
| | 25A | | 5 | 98 | | | | | | |
| | 27B | | | | 1663 | | | | | |
| | 36 | 20 | | | | 436 | | | | EXIT RAMP GORE |
| | 36A | 8 | | | | 177 | | | | ENTRANCE RAMP GORE |
| | 37B | 40 | | | | | | | 565 | |
| | 38 | 36 | | | | 835 | | | | |
| PD-4 | 12 | 30 | | | | | | 1400 | | |
| | 25 | | 30 | 1400 | | | | | | |
| | 27B | | | | 1442 | | | | | |
| | 36 | 27 | | | | 593 | | | | EXIT RAMP GORE |
| | 37B | 96 | | | | | | | 1400 | |
| PD-5 | 12 | 31 | | | | | | 1450 | | |
| | 25 | | 31 | 1450 | | | | | | |
| | 27B | | | | 2519 | | | | | |
| | 37B | 18 | | | | | | | 250 | |
| SUBTOTAL | | 502 | 167 | 7136 | 9547 | | | | | |
| TOTAL | | 669 | | 16,683 | | 3191 | 150 | 6800 | 3090 | |

# PAVEMENT DELINEATION QUANTITIES

PDQ-1

STATE OF CALIFORNIA - DEPARTMENT OF TRANSPORTATION
Caltrans DESIGN

FUNCTIONAL SUPERVISOR: STEVE TOPAL
CALCULATED-DESIGNED BY: GINNY SEIBERT
CHECKED BY: ANDREW STECKLEIN
REVISED BY / DATE REVISED

P:\proj2\02\3c000\pse\23c000nc001.dgn

LAST REVISION DATE PLOTTED => 10-MAY-2010
10-01-09 TIME PLOTTED => 14:11

| DIST | COUNTY | ROUTE | POST MILE TOTAL PROJECT | SHEET No | TOTAL SHEETS |
|---|---|---|---|---|---|
| 02 | Sha | 5 | R14.9/R16.2 | 69 | 165 |

REGISTERED CIVIL ENGINEER 8-25-09 DATE

5-10-10
PLANS APPROVAL DATE

REGISTERED PROFESSIONAL ENGINEER ANDREW BUI No. C63560 Exp. 9/30/10 CIVIL STATE OF CALIFORNIA

*The State of California or its officers or agents shall not be responsible for the accuracy or completeness of electronic copies of this plan sheet.*

| Sign | Sta | Post Type | Span (Ft) | Post height H1 (Ft) | Post height H2 (Ft) | Bottom of Base plate Elev Left Post (Ft) | Bottom of Base plate Elev Right Post (Ft) |
|---|---|---|---|---|---|---|---|
| SB I-5 "A1" | 145+50 | VI-S | 94′ | 32.6 | 25.75 | 595.01 | 601.84 |

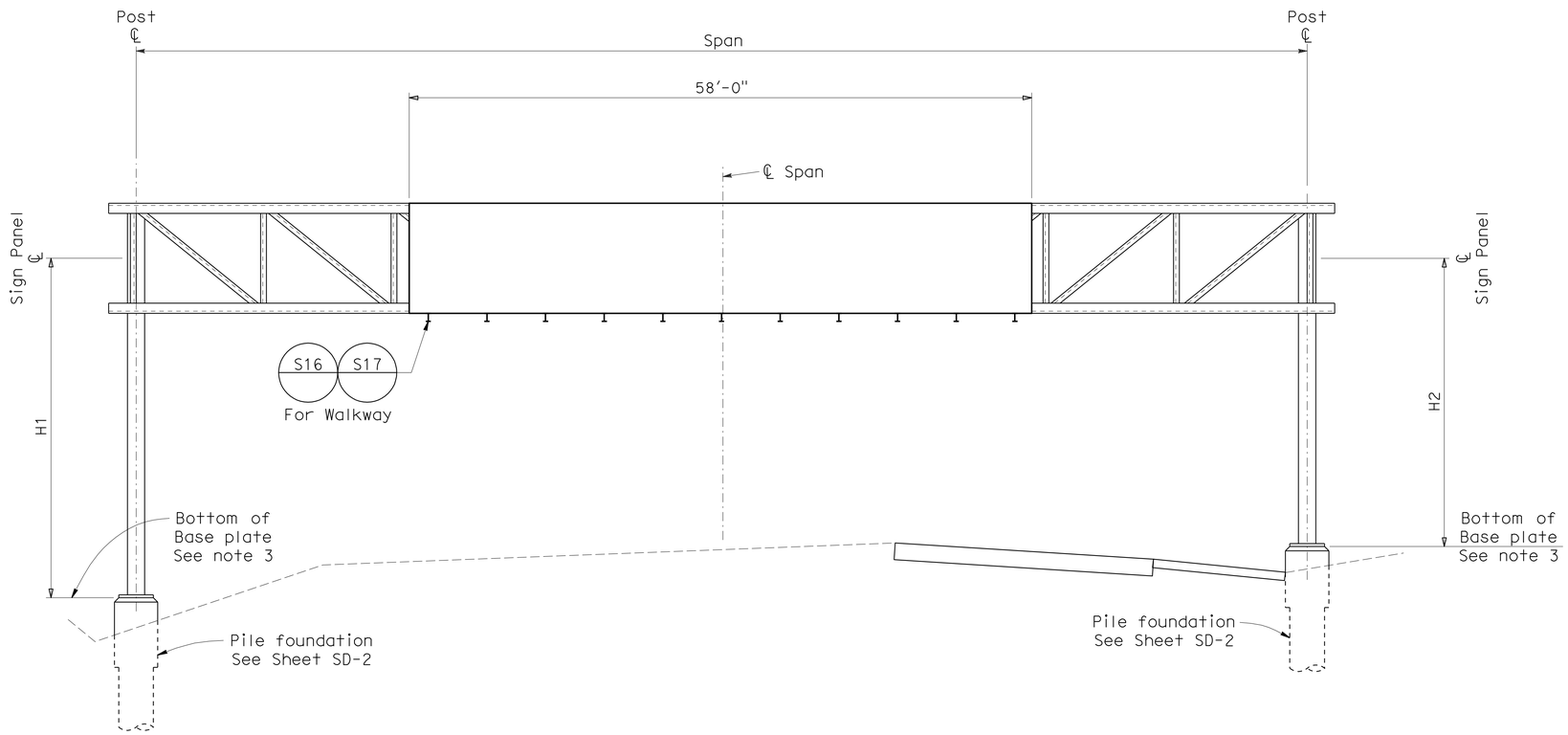


**SB I-5 "A1" Sta 145+50**
**OVERHEAD SIGN-TRUSS TWO POST**
**SIGN PANEL DEPTH = 100"**

## GENERAL NOTES

DESIGN:
AASHTO Specifications for Structural Supports for Highway Signs, Luminaries and Traffic Signals, dated 2001

CONSTRUCTION:
Standard Specifications and the Special Provisions State of California Department of Transportation Dated July 1999 and May 2006
Standard Plans State of California Department of Transportation Dated May 2006 and current Revised Plans

LOADING:
WIND LOADING:
40 psf applied load combinations per 3.9 AASHTO Specifications for Structural Supports for Hightway Signs, Luminaries and Traffic Signals, dated 2001

WALKWAY LOADING:
Dead load +500 Lbs concentrated live loading

UNIT STRESSES:
Structural steel: fy = 36000 psi
Reinforced concrete fy = 60000 psi
$f'_c$ = 3600 psi

MINIMUM CLEARANCE:
Vertical roadway clearance shall be 18′-6" above roadway and shoulders, otherwise noted on plans.

WELDING:
All welding continous unless otherwise noted on plans.

## STANDARD PLANS DATED MAY 2006

| | |
|---|---|
| A10A | ACRONYMS AND ABBREVIATIONS (A-L) |
| A10B | ACRONYMS AND ABBREVIATIONS (M-Z) |
| S9 | OVERHEAD SIGNS-TRUSS TWO POST TYPE POST TYPES I-S TRHOUGH VII-S |
| S10 | OVERHEAD SIGNS-TRUSS TWO POST TYPE STRUCTURE FRAME MEMBER |
| S11 | OVERHEAD SIGNS-TRUSS TWO POST TYPE STRUCTURE FRAME DETAILS |
| S10 | OVERHEAD SIGNS-TRUSS FRAME JUNCTURE DETAILS |
| S16 | OVERHEAD SIGNS WALKWAY DETAILS NO.1 |
| S17 | OVERHEAD SIGNS WALKWAY DETAILS NO.2 |
| S17 | OVERHEAD SIGNS WALKWAY DETAILS NO.3 |
| S18 | OVERHEAD SIGNS WALKWAY SAFETY RAIL DETAILS |

## NOTES:

1. For details not shown, see "2006 STANDARD PLANS" and "2006 REVISED STANDARD PLANS".
2. For sign laminated Type A sign panel and sign stucture location see "PROJECT PLANS".
3. See "PROJECT PLANS"

NOTE:
THE CONTRACTOR SHALL VERIFY ALL CONTROLLING FIELD DIMENSIONS BEFORE ORDERING OR FABRICATING ANY MATERIAL.

# MODIFIED POST TYPE VI-S OVERHEAD - SIGN TRUSS 2 POST LAYOUT I-5 "A1" Sta 145+50

**SD-1**

| CALCULATED/ DESIGNED BY | T MARCHANKO | DETAILS | D W JUSTICE Jr |
|---|---|---|---|
| CHECKED BY | A BUI | QUANTITIES | T MARCHENKO |

DATE 5-21-09 8-111-09

PROJECT ENGINEER ANDREW BUI

STATE OF CALIFORNIA - DEPARTMENT OF TRANSPORTATION
Caltrans SPECIAL DESIGNS BRANCH

LAST REVISION 8-27-09
DATE PLOTTED => 10-MAY-2010
TIME PLOTTED => 14:12

ORIGINAL SCALE IN INCHES FOR REDUCED PLANS 0 1 2 3

USERNAME => trpierce
DGN FILE =>spec_des_br_prj/2009sd/02-3C0001/ 02-3c0001_sd1.dgn

CU 02 EA 3C0001

| DIST | COUNTY | ROUTE | POST MILE TOTAL PROJECT | SHEET No | TOTAL SHEETS |
|---|---|---|---|---|---|
| 02 | Sha | 5 | R14.9/R16.2 | 70 | 165 |

REGISTERED CIVIL ENGINEER 8-25-09 DATE

5-10-10
PLANS APPROVAL DATE

REGISTERED PROFESSIONAL ENGINEER ANDREW BUI No. C63560 Exp. 9/30/10 CIVIL STATE OF CALIFORNIA

*The State of California or its officers or agents shall not be responsible for the accuracy or completeness of electronic copies of this plan sheet.*

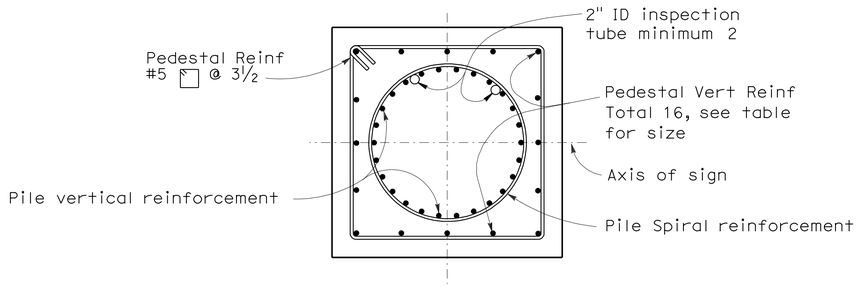


SECTION B-B

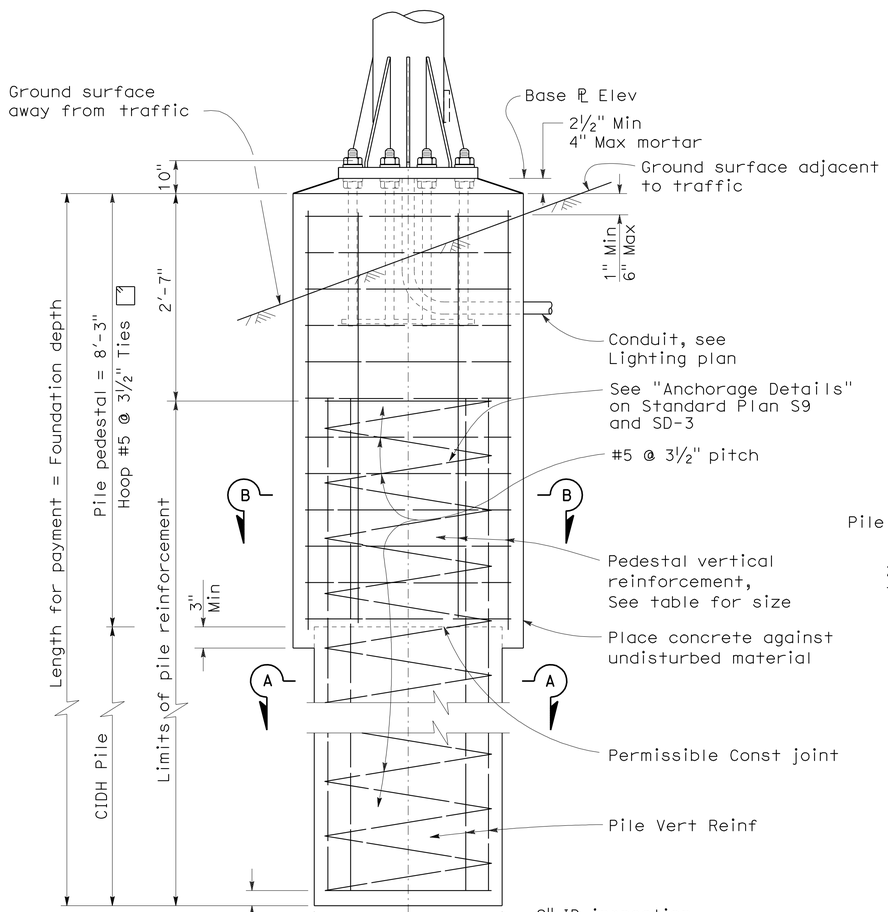


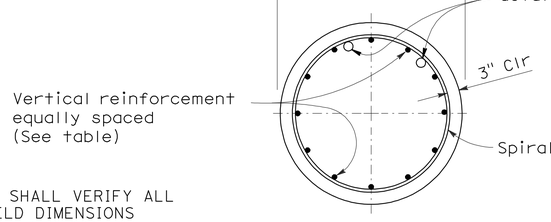


SECTION A-A

| Post Type | Anchor Bolts | | | | Square Pile Pedestal | | | | | | CIDH Pile | | | | | Foundation Depth |
|---|---|---|---|---|---|---|---|---|---|---|---|---|---|---|---|---|
| | Total | Dia | Bolt Circle | Total Length | Pedestal Square one side | Vertical Reinforcing | | | Hoop | | Pile Dia | Vertical Reinforcing | | Spiral | | |
| | | | | | | Total | Bar Size | # of bars each face | Bar Size | Spacing | | Total | Bar Size | Bar Size | Pitch | |
| VI-S | 16 | 2¾" | 3'-6" | 5'-0" | 5'-10" | 16 | #11 | 5 | #5 | 3½" | 5'-0" | 28 | #11 | #5 | 3½" | 35'-0" |

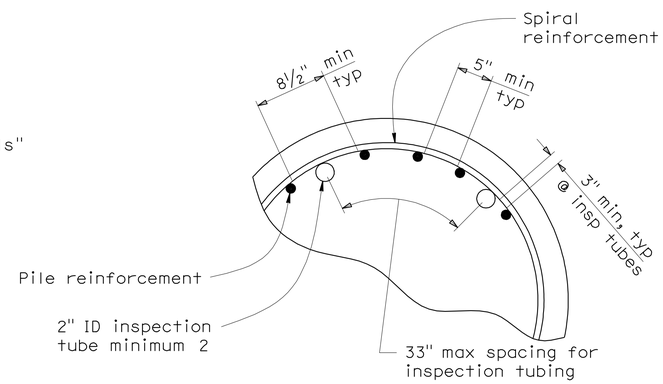


CIDH INSPECTION TUBE DETAIL

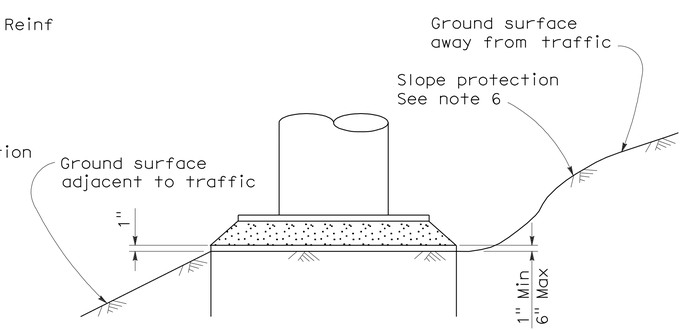


DETAIL C

## NOTES:

1. For anchor bolt layout, see SD-3.
2. For "Base ℄ elevation" see Project Plans.
3. Longer side of post shall be normal to axis of sign.
4. Prior to erection of the post, backfill which is equivalent to the surrounding material, shall be in place.
5. Pedestal shall be formed 6" Min below ground surface. Remainder to be placed against undisturbed material.
6. Slope protection required when indicated on the Project Plans.
7. Actual soil conditions shall be verified before piling.

NOTE:
THE CONTRACTOR SHALL VERIFY ALL CONTROLLING FIELD DIMENSIONS BEFORE ORDERING OR FABRICATING ANY MATERIAL.

# MODIFIED POST TYPE VI-S SQUARE PEDESTAL PILE FOUNDATION TWO POST SIGN TRUSS I-5 "A1" Sta 145+50

SD-2

| | | | |
|---|---|---|---|
| D W JUSTICE Jr | T MARCHENKO | DETAILS | QUANTITIES |
| T MARCHANKO | A BUI | DATE 5-21-09 | 8-11-09 |
| CALCULATED/DESIGNED BY | CHECKED BY | | |

PROJECT ENGINEER ANDREW BUI

STATE OF CALIFORNIA - DEPARTMENT OF TRANSPORTATION
Caltrans
SPECIAL DESIGNS BRANCH

LAST REVISION 8-12-09
DATE PLOTTED => 10-MAY-2010
TIME PLOTTED => 14:12

ORIGINAL SCALE IN INCHES FOR REDUCED PLANS 0 1 2 3

USERNAME => trpierce
DGN FILE =>spec_des_br_prj/2009sd/02-3C0001/ 02-3c0001_sd2.dgn

CU 02 EA 3C0001

| DIST | COUNTY | ROUTE | POST MILE TOTAL PROJECT | SHEET No | TOTAL SHEETS |
|---|---|---|---|---|---|
| 02 | Sha | 5 | R14.9/R16.2 | 71 | 165 |

REGISTERED CIVIL ENGINEER 8-27-09 DATE

5-10-10
PLANS APPROVAL DATE

REGISTERED PROFESSIONAL ENGINEER ANDREW BUI No. C63560 Exp. 9/30/10 CIVIL STATE OF CALIFORNIA

*The State of California or its officers or agents shall not be responsible for the accuracy or completeness of electronic copies of this plan sheet.*

## TWO POST TRUSS

| Post Type | Pipe | | | Base PL OD and Thickness | Anchor | | |
|---|---|---|---|---|---|---|---|
| | NPS | Thickness | Split | | Bolt Circle | Bolt totals and Dia | Length |
| VI-S | 24 | 1" | 10" | 4'-2" x 2¾" | 3'-6" | 16-2¾" | 5'-0" |

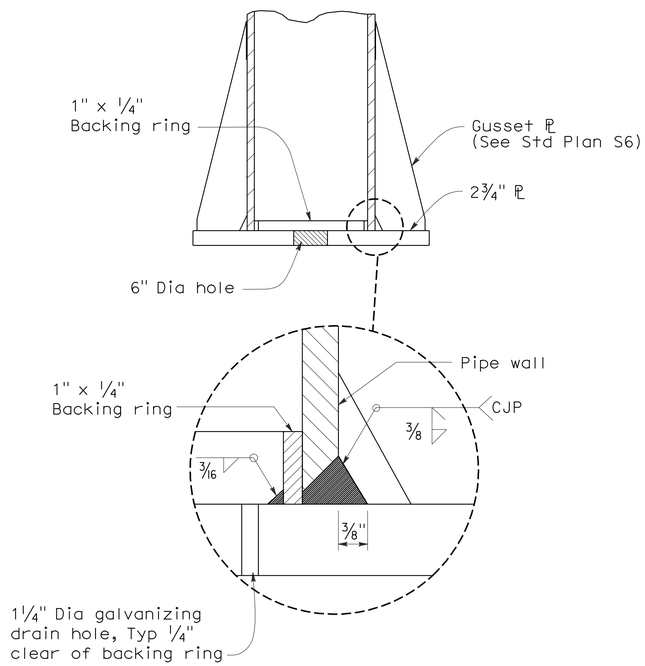


POST TO BASE PLATE CONNECTION DETAIL

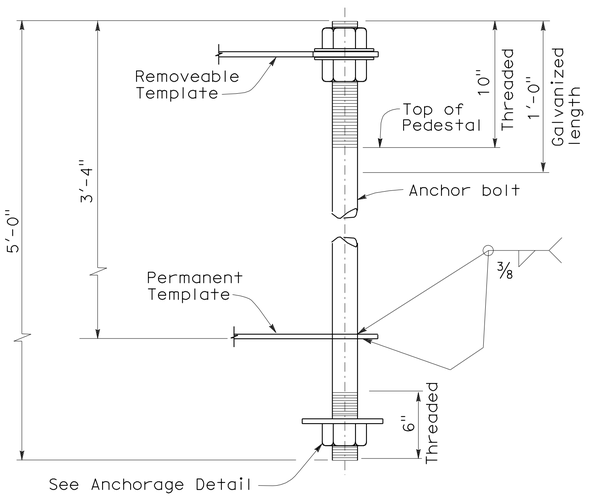


ANCHOR BOLT TEMPLATE ASSEMBLY

NOTE: One bolt shown only. Other bolts same configuration around pipe sleeve. Template to match base plate anchor bolt pattern.

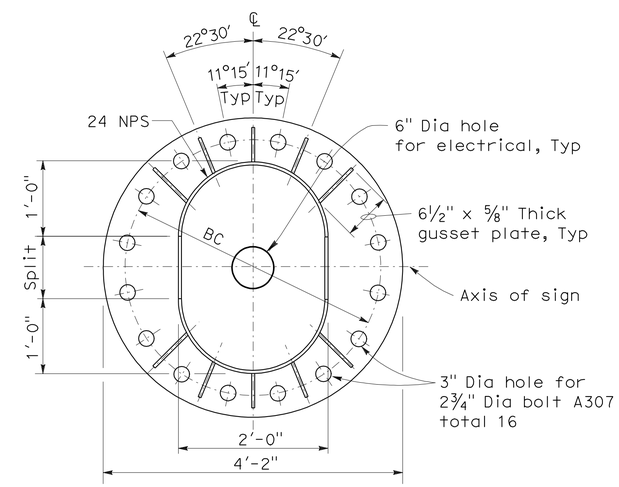


16 BOLTS

Type VI-S Modified

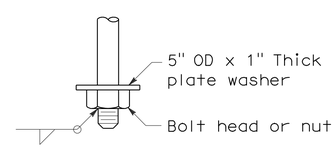


ANCHORAGE DETAIL

NOTE:
THE CONTRACTOR SHALL VERIFY ALL CONTROLLING FIELD DIMENSIONS BEFORE ORDERING OR FABRICATING ANY MATERIAL.

**MODIFIED POST TYPE VI-S BASEPLATE AND ANCHORAGE DETAILS TWO POST SIGN TRUSS I-5 "A1" Sta 145+50**

**SD-3**

| | | | |
|---|---|---|---|
| PROJECT ENGINEER | ANDREW BUI | CALCULATED/DESIGNED BY | T MARCHANKO |
| | | CHECKED BY | A BUI |
| DETAILS | D W JUSTICE Jr | DATE | 5-21-09 |
| QUANTITIES | T MARCHENKO | | 8-11-09 |

STATE OF CALIFORNIA - DEPARTMENT OF TRANSPORTATION
Caltrans
SPECIAL DESIGNS BRANCH

LAST REVISION 8-10-09
DATE PLOTTED => 10-MAY-2010
TIME PLOTTED => 14:12

ORIGINAL SCALE IN INCHES FOR REDUCED PLANS 0 1 2 3

USERNAME => trpierce
DGN FILE =>spec_des_br_prj/2009sd/02-3C0001/ 02-3c0001_sd3.dgn

CU 02 EA 3C0001

| Dist | COUNTY | ROUTE | POST MILES TOTAL PROJECT | SHEET No. | TOTAL SHEETS |
|---|---|---|---|---|---|
| 02 | Sha | 5 | R14.9/R16.2 | 72 | 165 |

REGISTERED CIVIL ENGINEER 02-11-10 DATE

5-10-10
PLANS APPROVAL DATE

REGISTERED PROFESSIONAL ENGINEER ANDREW P. STECKLEIN No. C67148 Exp. 9-30-10 CIVIL STATE OF CALIFORNIA

*THE STATE OF CALIFORNIA OR ITS OFFICERS OR AGENTS SHALL NOT BE RESPONSIBLE FOR THE ACCURACY OR COMPLETENESS OF SCANNED COPIES OF THIS PLAN SHEET.*

NOTES:

1. (N) - NOT A SEPARATE PAY ITEM, FOR INFORMATION ONLY.
2. EXACT LOCATION AND POSITION OF ROADSIDE SIGNS TO BE DETERMINED BY THE ENGINEER.
3. CALIFORNIA SIGN CODES ARE DESIGNATED BY (CA). OTHERWISE, FEDERAL SIGN CODES ARE SHOWN.

## LEGEND

| | |
|---|---|
| FRP | FIBERGLASS REINFORCED PLASTIC |
| L | LENGTH OF SIGN |
| D | DEPTH OF SIGN |
| RSPF | REMOVABLE SIGN PANEL FRAME |

## MATERIAL SUMMARY CONTRACTOR FURNISHED SIGNS

| No. | SIGN CODE | SIGN SIZE L x D (in x in) | SIGN AREA ($in^2$) | SINGLE FACED | DOUBLE FACED | BACKGROUND | | ROADSIDE SINGLE-SHEET UNFRAMED ALUMINUM | DESCRIPTION (REMARKS) |
|---|---|---|---|---|---|---|---|---|---|
| | | | | | | SHEETING COLOR | RETROREFLECTIVE ASTM TYPE | .080" | |
| 2-2 | W4-2R | 48" x 48" | 2304 | X | | YELLOW | III | 16 | LANE ENDS (GRAPHIC) |
| 2-3 | W9-1R | 48" x 48" | 2304 | X | | YELLOW | III | 16 | RIGHT LANE ENDS |
| | | | | | | TOTAL | | 32 | |

## OVERHEAD SIGN QUANTITIES

| SIGN No. △ | REMOVE SIGN STRUCTURE | FURNISH SIGN STRUCTURE (TRUSS) | INSTALL SIGN STRUCTURE (TRUSS) | 60" CIDH CONCRETE PILE (SIGN FOUNDATION) (Rt) | 60" CIDH CONCRETE PILE (SIGN FOUNDATION) (Lt) |
|---|---|---|---|---|---|
| | EA | LB | LB | Ft | Ft |
| A | 1 | | | | |
| B | | 51,900 | 51,900 | 35 | 35 |
| TOTAL | 1 | 51,900 | 51,900 | 70 | |

## ROADSIDE SIGNS

| SIGN No. #-# | SIGN CODE | PANEL SIZE (INCH x INCH) | (N) POST SIZE AND LENGTH (Ft) WOOD POST 6" x 6" | ROADSIDE SIGN ONE POST | RESET ROADSIDE SIGN | RELOCATE ROADSIDE SIGN | RELOCATE SIGN PANEL | DESCRIPTION/REMARKS |
|---|---|---|---|---|---|---|---|---|
| | | | | EA | EA | EA | EA | |
| 2-1 | W4-1 | 48" x 48" | | | | 1 | | SEE Sht PD-2 |
| 2-2 | W4-2R | 48" x 48" | 16 | 1 | | | | |
| 2-3 | W9-1R | 48" x 48" | 16 | 1 | | | | |
| 4-1 | G24 | 240" x 100" | | | | | 1 | RELOCATE PANELS TO NEW OVERHEAD STRUCTURE AT Sta 145+50 |
| | G83 | 240" x 100" | | | | | 1 | |
| | G85 | 216" x 100" | | | | | 1 | |
| 4-2 | G84(678B)(Ca) | 54" x 48" | 18 | 1 | 1 | | | RESET PANEL ON NEW POST |
| | | | TOTAL | 3 | 1 | 1 | 3 | |

(N) - NOT A SEPARATE PAY ITEM, FOR INFORMATION ONLY

# SIGN QUANTITIES
# SQ-1

REVISED BY | DATE REVISED
GINNY SEIBERT | ANDREW STECKLEIN
CALCULATED-DESIGNED BY | CHECKED BY
FUNCTIONAL SUPERVISOR: STEVE TOPAL
STATE OF CALIFORNIA - DEPARTMENT OF TRANSPORTATION
Caltrans DESIGN
P:\proj2\02\3c000\pse\23c000oc001.dgn

LAST REVISION 11-16-09 | DATE PLOTTED => 11-MAY-2010 | TIME PLOTTED => 06:29

| Dist | COUNTY | ROUTE | POST MILES TOTAL PROJECT | SHEET No. | TOTAL SHEETS |
|---|---|---|---|---|---|
| 02 | Sha | 5 | R14.9/R16.2 | 73 | 165 |

REGISTERED CIVIL ENGINEER 02-11-10 DATE

5-10-10
PLANS APPROVAL DATE

REGISTERED PROFESSIONAL ENGINEER ANDREW P. STECKLEIN No. C67148 Exp. 9-30-10 CIVIL STATE OF CALIFORNIA

*THE STATE OF CALIFORNIA OR ITS OFFICERS OR AGENTS SHALL NOT BE RESPONSIBLE FOR THE ACCURACY OR COMPLETENESS OF SCANNED COPIES OF THIS PLAN SHEET.*

NOTE:
1. (N) - NOT A SEPARATE PAY ITEM, FOR INFORMATION ONLY.

## RUMBLE STRIP

| STATION RANGE | SIDE | LENGTH | LENGTH |
|---|---|---|---|
| | | LF | STA |
| "A1" 99+00 TO 112+50 | SB-L† | 1350 | 13.50 |
| "A1" 115+50 TO 122+00 | SB-L† | 650 | 6.50 |
| "A1" 134+45 TO 140+00 | SB-L† | 555 | 5.55 |
| "A1" 145+00 TO 165+00 | SB-L† | 2000 | 20.00 |
| "A1" 99+00 TO 125+47 | SB-R† | 2647 | 26.47 |
| "A1" 128+05 TO 132+54 | SB-R† | 449 | 4.49 |
| "A1" 134+45 TO 165+00 | SB-R† | 3055 | 30.55 |
| TOTAL | | | 107.06 |

## PLACE HOT MIX ASPHALT DIKE

| STATION RANGE | SIDE | TYPE E |
|---|---|---|
| | | LF |
| "A1" 128+02.2 TO 132+50.2 | SB-R† | 448 |
| "A1" 134+44.7 TO 140+00 | SB-R† | 555.3 |
| FROM DQ-1 | | 28.7 |
| TOTAL | | 1032.0 |

## MINOR CONCRETE (Misc CONSTRUCTION)

| STATION RANGE | SIDE | |
|---|---|---|
| CONTROLLER WALKWAY | | CY |
| "A1" 125+57 TO 125+70 | MEDIAN | 3.37 |

## ROADWAY QUANTITIES

| STATION RANGE | COLD PLANE AC PAVEMENT | ROADWAY EXCAVATION | EMBANKMENT (N) | IMPORTED MATERIAL (SHOULDER BACKING) | SUBGRADE ENHANCEMENT GEOTEXTILE | CLASS 2 AGGREGATE BASE | HOT MIX ASPHALT | HOT MIX ASPHALT (OPEN GRADED) | PLACE HMA (MISC AREA) | TACK COAT | DESCRIPTION |
|---|---|---|---|---|---|---|---|---|---|---|---|
| | SQYD | CY | CY | TON | SQYD | CY | TON | TON | SQYD | TON | |
| "A1" 99+00 TO 122+00 | 1069.5 | | | | | | 96.3 | | | 0.17 | BEFORE STAGE 2 |
| "A1" 134+45 TO 165+00 | 1414.8 | | | | | | 127.3 | | | 0.23 | |
| "A1" 101+00 TO 122+00 | | 3936.4 | 1755.3 | 400.6 | 7479.7 | 4496.1 | 3440.7 | | | 3.59 | STAGE 2 |
| "A1" 122+00 TO 125+50 | | 1328.6 | | 25.8 | 1558.4 | 1128.4 | 910.5 | | | 0.75 | |
| "A1" 128+05 TO 132+54 | | 2143.7 | | | 1963.9 | 1080.9 | 1055.8 | | | 0.94 | |
| "A1" 134+45 TO 136+50 | | 700.5 | | | 756.0 | 428.1 | 403.6 | | | 0.36 | |
| "A1" 136+50 TO 163+00 | | 5282.6 | 1548.1 | 476.1 | 7569.0 | 5098.9 | 3960.2 | | | 3.63 | |
| "A1" 122+00 TO 125+50 | | 2412.6 | | 26.8 | 2130.9 | 1598.1 | 1150.7 | | | 1.02 | STAGE 3 |
| "A1" 128+05 TO 132+54 | | 2482.5 | | 70.8 | 2121.1 | 1435.1 | 1142.3 | | | 1.02 | |
| "A1" 134+45 TO 136+50 | | 844.8 | | 30.2 | 800.4 | 603.2 | 432.3 | | | 0.38 | |
| "OFF1" 320+60 TO 324+75 | 11.7 | 1034.8 | | 67.4 | 975.6 | 698.7 | 558.4 | | | 0.47 | EB 44 OFF-RAMP |
| "ON1" 229+50 TO 232+20 | 11.7 | 814.4 | | 30.5 | 652.2 | 527.0 | 596.3 | | | 0.31 | WB 44 ON-RAMP |
| "A1" 99+00 TO 122+00 | 11379.0 | | | | | | | 1442.6 | | 3.21 | AFTER STAGE 3 |
| "A1" 122+00 TO 125+50 | | | | | | | | 274.8 | | 0.59 | |
| "A1" 128+05 TO 132+54 | | | | | | | | 274.0 | | 0.65 | |
| "A1" 134+45 TO 136+50 | | | | | | | | 110.7 | | 0.25 | |
| "A1" 136+50 TO 165+00 | 11028.0 | | | | | | | 1470.7 | | 3.27 | |
| "A1" 139+92 TO 140+35 | | | | | | | 10.9 | | 30.2 | | WB 44 OFF-RAMP GORE AREA |
| "OFF1" 320+60 TO 324+75 | | | | | | | | 40.3 | | 0.09 | EB 44 OFF-RAMP |
| "ON1" 229+50 TO 232+20 | | | | | | | | 28.1 | | 0.06 | WB 44 ON-RAMP |
| FROM DQ-1 | | | | | | | 7.2 | | 28.8 | | PLACE HMA (Misc AREA) |
| FROM HMA DIKE | | | | | | | 30.4 | | | | |
| | 24914.7 | 20980.9 | 3303.4 | 1128.2 | 26007.2 | 17094.5 | 13922.9 | 3641.2 | 59.0 | 20.99 | |

## TEMPORARY WATER POLLUTION CONTROL

| | TEMPORARY HYDRAULIC MULCH (POLYMER STABILIZED MATRIX) | TEMPORARY MULCH | TEMPORARY FIBER ROLL | TEMPORARY SILT FENCE | TEMPORARY DRAINAGE INLET PROTECTION |
|---|---|---|---|---|---|
| | SQYD | SQYD | LF | LF | EA |
| TOTAL | 41372.6 | 1005.3 | 660 | 250 | 10 |

## EROSION CONTROL

| | EROSION CONTROL (HYDROSEED) |
|---|---|
| | ACRE |
| TOTAL | 6.0 |

## SUMMARY OF QUANTITIES

Q-1

REVISED BY | DATE REVISED
RUSSELL FLOOD | ANDREW STECKLEIN
CALCULATED-DESIGNED BY | CHECKED BY
FUNCTIONAL SUPERVISOR: STEVE TOPAL
STATE OF CALIFORNIA - DEPARTMENT OF TRANSPORTATION
Caltrans DESIGN
P:\proj2\02\3c000\pse\23c000pa001.dgn

LAST REVISION | DATE PLOTTED => 11-MAY-2010
07-10-09 | TIME PLOTTED => 06:29

| Dist | COUNTY | ROUTE | POST MILES TOTAL PROJECT | SHEET No. | TOTAL SHEETS |
|---|---|---|---|---|---|
| 02 | Sha | 5 | R14.9/R16.2 | 74 | 165 |

REGISTERED CIVIL ENGINEER 02-11-10 DATE

5-10-10
PLANS APPROVAL DATE

REGISTERED PROFESSIONAL ENGINEER ANDREW P. STECKLEIN No. C67148 Exp. 9-30-10 CIVIL STATE OF CALIFORNIA

*THE STATE OF CALIFORNIA OR ITS OFFICERS OR AGENTS SHALL NOT BE RESPONSIBLE FOR THE ACCURACY OR COMPLETENESS OF SCANNED COPIES OF THIS PLAN SHEET.*

NOTE:

1. (N) - NOT A SEPARATE PAY ITEM, FOR INFORMATION ONLY.

## BARRIER AND METAL BEAM GUARD RAIL

| STATION RANGE | REMOVE MBGR | RECONSTRUCT MBGR | REMOVE BARRIER GUARD 800 | REMOVE CONCRETE BARRIER | REMOVE CRASH CUSHION | REMOVE CRASH CUSHION (SAND FILLED) | PLACE BARRIER GUARD 800 | BARRIER GUARD 800 (N) FOUNDATION | ANCHOR FOUNDATION (N) | METAL BEAM GUARD RAILING (WOOD POST) | DOUBLE THRIE BEAM BARRIER (WOOD POST) | TRANSITION RAILING (TYPE WB) | TRANSITION RAILING (TYPE DTB) | END ANCHOR ASSEMBLY (TYPE SFT) | ALTERNATIVE FLARED TERMINAL SYSTEM | CRASH CUSHION (TYPE CAT) | CRASH CUSHION (TYPE CAT BACKKUP) | CRASH CUSHION (TAU II) | TAU II (8 BAY) (N) FOUNDATION | CONCRETE BARRIER (TYPE 60) | CONCRETE BARRIER (TYPE 60C) | CONCRETE BARRIER (TYPE 60E) | LOCATION |
|---|---|---|---|---|---|---|---|---|---|---|---|---|---|---|---|---|---|---|---|---|---|---|---|
| | LF | LF | LF | LF | EA | EA | LF | CY | CY | LF | LF | EA | EA | EA | EA | EA | EA | EA | CY | LF | LF | LF | |
| "C1" 99+20 - 99+95 | | 62.5 | | | | | | | | | | | | | | | | | | | | | SR 44 WB SHLD |
| "C1" 98+70 - 100+20 | | 150 | | | | | | | | | | | | | | | | | | | | | SR 44 EB SHLD |
| "C1" 99+15 - 99+77 | | | | 50 | | | | | | | | | | | | | | | | | | 50 | SR 44 MEDIAN |
| "A1" 100+00 - 123+75 | | | | | | | | | | | 2375 | 2 | | 1 | | 1 | 1 | | | | | | SB MEDIAN |
| "A1" 100+85 - 101+60 | | | | | | | | | | 37.5 | | | | 1 | 1 | | | | | | | | NB MEDIAN |
| "A1" 102+95 - 103+70 | | | | | | | | | | 37.5 | | | | 1 | 1 | | | | | | | | NB MEDIAN |
| "A1" 106+85 - 107+60 | | | | | | | | | | 37.5 | | | | 1 | 1 | | | | | | | | NB MEDIAN |
| "A1" 109+95 - 110+70 | | | | | | | | | | 37.5 | | | | 1 | 1 | | | | | | | | NB MEDIAN |
| "A1" 122+86.6 - 125+54.5 | | | | | | | | | | 50 | | 1 | | | 1 | | | | | | 155 | | NB MEDIAN |
| "A1" 123+60 - 125+55 | 195 | | | | | | | | | | | | | | | | | | | | | | NB MEDIAN |
| "A1" 125+35 - 125+60 | | | | | | | | | | 25 | | | | 1 | | | | | | | | | SB MEDIAN |
| BRIDGE No. 06-0126 L&R | | | | | | | | | | | | | | | | | | | | | | | |
| "A1" 127+86.2 - 129+47.1 | | | | | | | | | | 100 | | 1 | | | 1 | | | | | | | | SB MEDIAN |
| "A1" 127+86.3 - 132+59.3 | | | | | | | | | | | 448 | | 2 | | | | | | | | | | NB MEDIAN |
| "A1" 127+80 - 129+80 | | | 200 | | 1 | | | | | | | | | | | | | | | | | | SB MEDIAN |
| "A1" 128+00 - 130+00 | | | 200 | | 1 | | 200 | 1.6 | 0.3 | | | | | | | | | 1 | 2.1 | | | | ON-RAMP SHLD |
| "A1" 130+65 - 132+60 | 195 | | | | | | | | | | | | | | | | | | | | | | NB MEDIAN |
| BRIDGE No. 06-0127 L&R | | | | | | | | | | | | | | | | | | | | | | | |
| "A1" 134+27 - 136+22 | 195 | | | | | | | | | | | | | | | | | | | | | | SB MEDIAN |
| "A1" 134+25.0 - 135+37.5 | | | | | | | | | | 50 | | 1 | | | 1 | | | | | | | | SB MEDIAN |
| "A1" 139+78 - 140+55 | 77 | | | | | | | | | | | | | | | | | | | | | | SB MEDIAN |
| "A1" 140+00 | | | | | | 1 | | | | | | | | | | | | | | | | | OFF-RAMP SHLD |
| "RW" 38+20 TO 38+29 | | | | 29 | | | | | | | | | | | | | | | | 29 | | | OFF-RAMP SHLD |
| TOTAL | 662 | 212.5 | 400 | 79 | 2 | 1 | 200 | 1.6 | 0.3 | 375 | 2823 | 5 | 2 | 6 | 7 | 1 | 1 | 1 | 2.1 | 29 | 155 | 50 | |

## HIGH TENSION CABLE BARRIER

| STATION | REMOVE CABLE BARRIER | HIGH TENSION CABLE BARRIER | CABLE BARRIER TERMINAL | LOCATION |
|---|---|---|---|---|
| | LF | LF | EA | |
| "A1" 100+00.0 - 124+30.0 | 2430 | | | MEDIAN |
| "A1" 134+22.0 - 161+35.0 | 2713 | | | MEDIAN |
| "A1" 134+22.0 - 146+50.0 | | 1228 | 2 | NB MEDIAN |
| "A1" 135+00.0 - 140+00.0 | | 500 | 1 | SB MEDIAN |
| "A1" 144+50.0 - 161+50.0 | | 1700 | 2 | SB MEDIAN |
| TOTAL | 5143 | 3428 | 5 | |

# SUMMARY OF QUANTITIES
# Q-2

REVISED BY | DATE REVISED
RUSSELL FLOOD | ANDREW STECKLEIN
CALCULATED-DESIGNED BY | CHECKED BY
FUNCTIONAL SUPERVISOR
STEVE TOPAL

STATE OF CALIFORNIA - DEPARTMENT OF TRANSPORTATION
Caltrans
DESIGN

P:\proj2\02\3c000\pse\23c000pa002.dgn

LAST REVISION 01-19-10 | DATE PLOTTED => 10-MAY-2010 | TIME PLOTTED => 14:12

| Dist | COUNTY | ROUTE | POST MILES TOTAL PROJECT | SHEET No. | TOTAL SHEETS |
|---|---|---|---|---|---|
| 02 | Sha | 5 | R14.9/R16.2 | 75 | 165 |

ART 02-11-10
REGISTERED ELECTRICAL ENGINEER

5-10-10
PLANS APPROVAL DATE

REGISTERED PROFESSIONAL ENGINEER A. P. ROBLES No. E15293 Exp. 3-31-11 ELECTRICAL STATE OF CALIFORNIA

*THE STATE OF CALIFORNIA OR ITS OFFICERS OR AGENTS SHALL NOT BE RESPONSIBLE FOR THE ACCURACY OR COMPLETENESS OF ELECTRONIC COPIES OF THIS PLAN SHEET.*

NOTES:

1. FOR COMPLETE RIGHT OF WAY AND ACCURATE ACCESS DATA, SEE RIGHT OF WAY RECORD MAPS AT DISTRICT OFFICE.
2. SEE SHEET E-5 FOR ELECTRICAL DETAILS.

## LEGEND

(PB) OBJECT MARKER (TYPE PB) AND PB PAVING

## ABBREVIATIONS

| | |
|---|---|
| TC | TELEPHONE CABLE |
| Cab | CABINET |
| I/C | INTERCHANGE |
| ITS | INTELLIGENT TRANSPORTATION SYSTEMS |
| COR | CITY OF REDDING |
| REU | REDDING ELECTRIC UTILITY |
| JB | JUNCTION BOX |

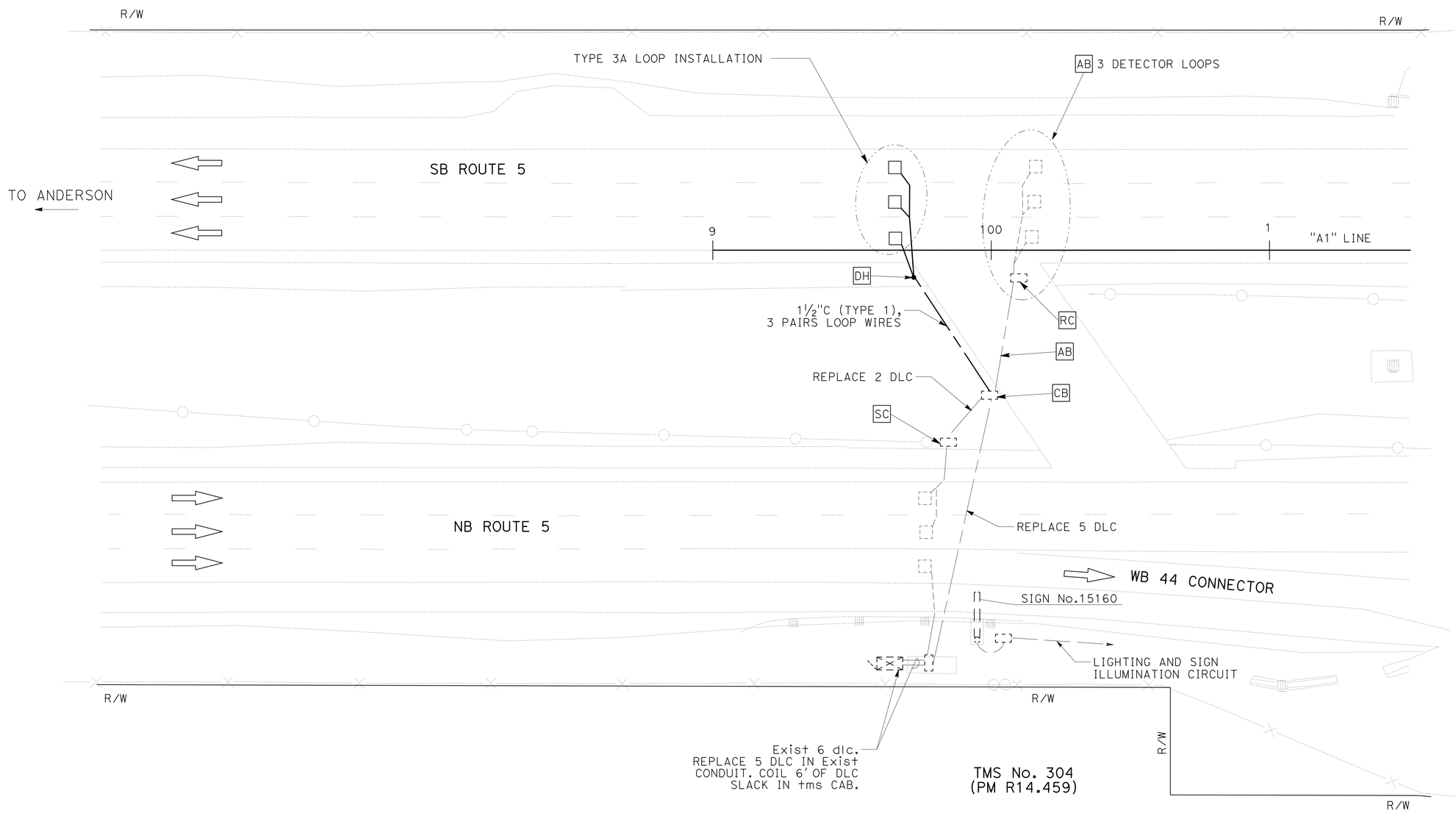


# TRAFFIC MONITORING STATION

SCALE: 1" = 20'

E-1

THIS PLAN IS ACCURATE FOR ELECTRICAL WORK ONLY.

REVISED BY | DATE REVISED
ARTURO ROBLES | JAMES M. HANNIGAN
CALCULATED-DESIGNED BY | CHECKED BY
FUNCTIONAL SUPERVISOR: ROB STINGER

STATE OF CALIFORNIA - DEPARTMENT OF TRANSPORTATION
Caltrans ELECTRICAL DESIGN

P:\proj2\02\3c000\pse\23c000ua001.dgn

LAST REVISION 02-11-10 | DATE PLOTTED => 10-MAY-2010 | TIME PLOTTED => 14:12

| Dist | COUNTY | ROUTE | POST MILES TOTAL PROJECT | SHEET No. | TOTAL SHEETS |
|---|---|---|---|---|---|
| 02 | Sha | 5 | R14.9/R16.2 | 76 | 165 |

ART 02-11-10
REGISTERED ELECTRICAL ENGINEER

5-10-10
PLANS APPROVAL DATE

REGISTERED PROFESSIONAL ENGINEER A. P. ROBLES No. E15293 Exp. 3-31-11 ELECTRICAL STATE OF CALIFORNIA

*THE STATE OF CALIFORNIA OR ITS OFFICERS OR AGENTS SHALL NOT BE RESPONSIBLE FOR THE ACCURACY OR COMPLETENESS OF ELECTRONIC COPIES OF THIS PLAN SHEET.*

## NOTES (THIS SHEET):

1. Exist 2"C, REPLACE 2#8 (CCTV) WITH 3#4, 1#2 G (ITS NODE).
2. Exist 2"C, TC.
3. Exist 1½"C, 2#2 (LTG) 1#6 G.
4. 2"C, 2#1/0 (LTG), 1#1 G.
5. 2"C, 2#4.
6. 2"C, 2#4, 1#6 G.
7. LOCATE AND REMOVE BURIED PB. INSTALL No. 5 (T) PB AFTER EXTENDING CONDUITS. SPLICE CONDUCTORS.
8. FOR PROJECT NOTES, ABBREVIATIONS AND LEGEND, SEE SHEET E-1.

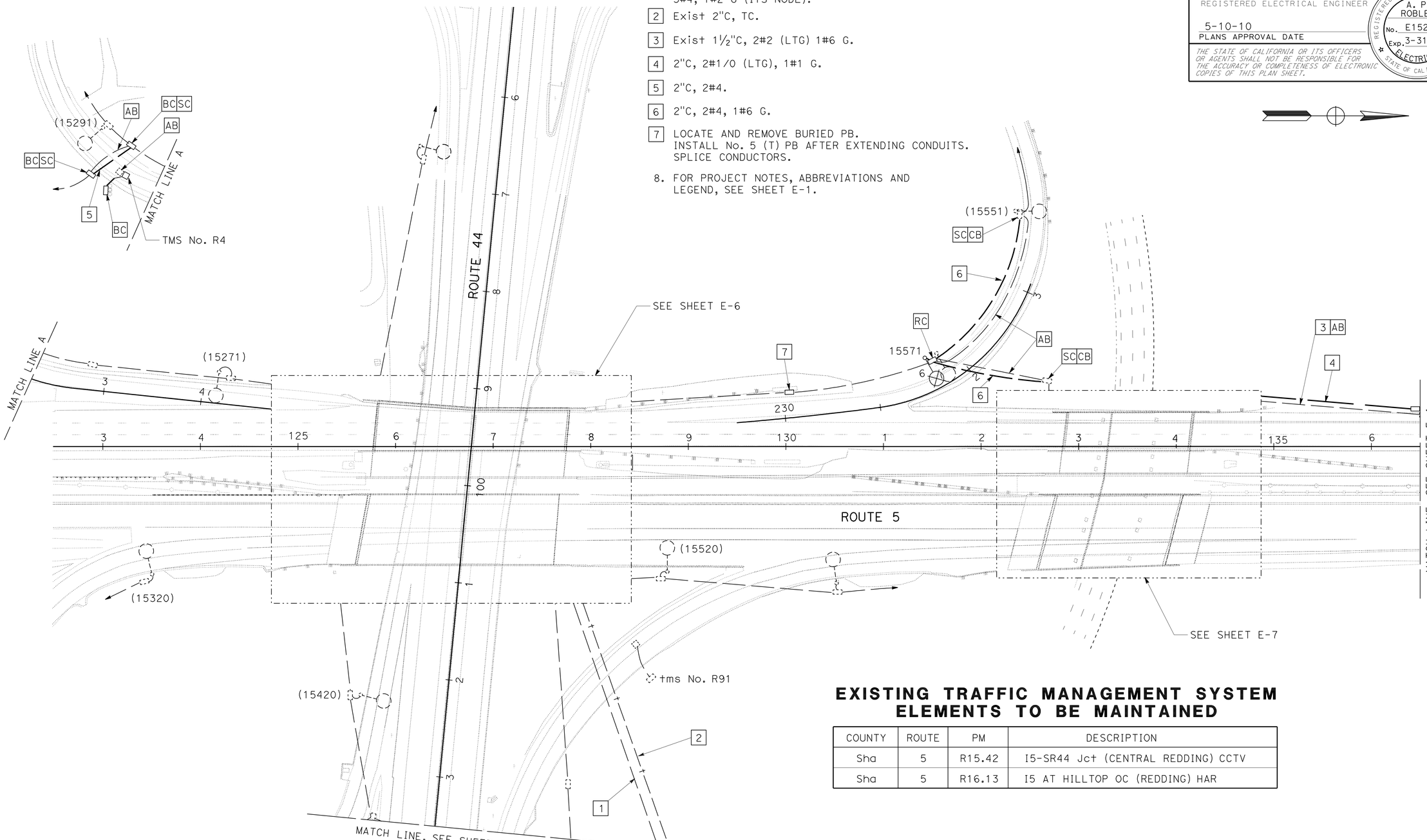


## EXISTING TRAFFIC MANAGEMENT SYSTEM ELEMENTS TO BE MAINTAINED

| COUNTY | ROUTE | PM | DESCRIPTION |
|---|---|---|---|
| Sha | 5 | R15.42 | I5-SR44 Jct (CENTRAL REDDING) CCTV |
| Sha | 5 | R16.13 | I5 AT HILLTOP OC (REDDING) HAR |

# LIGHTING
# CLOSED CIRCUIT TELEVISION SYSTEM

SCALE: 1" = 50'

**E-2**

THIS PLAN IS ACCURATE FOR ELECTRICAL WORK ONLY.

ARTURO ROBLES — CALCULATED-DESIGNED BY
JAMES M. HANNIGAN — CHECKED BY
ROB STINGER — FUNCTIONAL SUPERVISOR
REVISED BY — DATE REVISED

STATE OF CALIFORNIA - DEPARTMENT OF TRANSPORTATION
Caltrans ELECTRICAL DESIGN

P:\proj2\02\3c000\pse\23c000ua002.dgn

LAST REVISION 02-11-10 — DATE PLOTTED => 10-MAY-2010 — TIME PLOTTED => 13:42

| Dist | COUNTY | ROUTE | POST MILES TOTAL PROJECT | SHEET No. | TOTAL SHEETS |
|---|---|---|---|---|---|
| 02 | Sha | 5 | R14.9/R16.2 | 77 | 165 |

ART 02-11-10
REGISTERED ELECTRICAL ENGINEER

5-10-10
PLANS APPROVAL DATE

REGISTERED PROFESSIONAL ENGINEER A. P. ROBLES No. E15293 Exp. 3-31-11 ELECTRICAL STATE OF CALIFORNIA

*THE STATE OF CALIFORNIA OR ITS OFFICERS OR AGENTS SHALL NOT BE RESPONSIBLE FOR THE ACCURACY OR COMPLETENESS OF ELECTRONIC COPIES OF THIS PLAN SHEET.*

## NOTES (THIS SHEET):

1. Exist 2"C, 2#2 (ltg), 2#8 (cctv), 1#2 G. REPLACE 2#8 (CCTV) WITH 3#4 (ITS NODE).
2. Exist 2"C, REPLACE 2#8 (CCTV) WITH 3#4, 1#2 G (ITS NODE).
3. Exist 2"C, TC.
4. Exist 2"C, 2#2 (ltg), 1#2 G.
5. Exist TYPE III-AF SERVICE EQUIPMENT ENCLOSURE, CALTRANS ID No. 0206005R015500M. REPLACE 20 A, 1P, CB (CCTV) WITH 50 A, 240 V, 2P, CB (ITS NODE).
6. FOR PROJECT NOTES, ABBREVIATIONS AND LEGEND, SEE SHEET E-1.

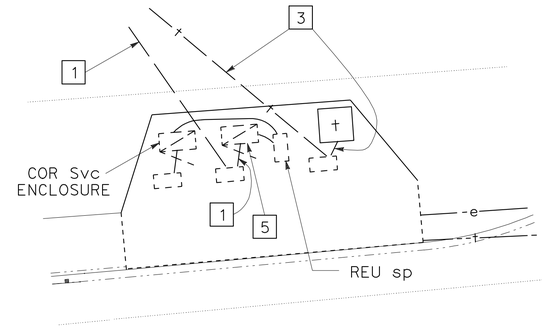


**DETAIL B**
NO SCALE

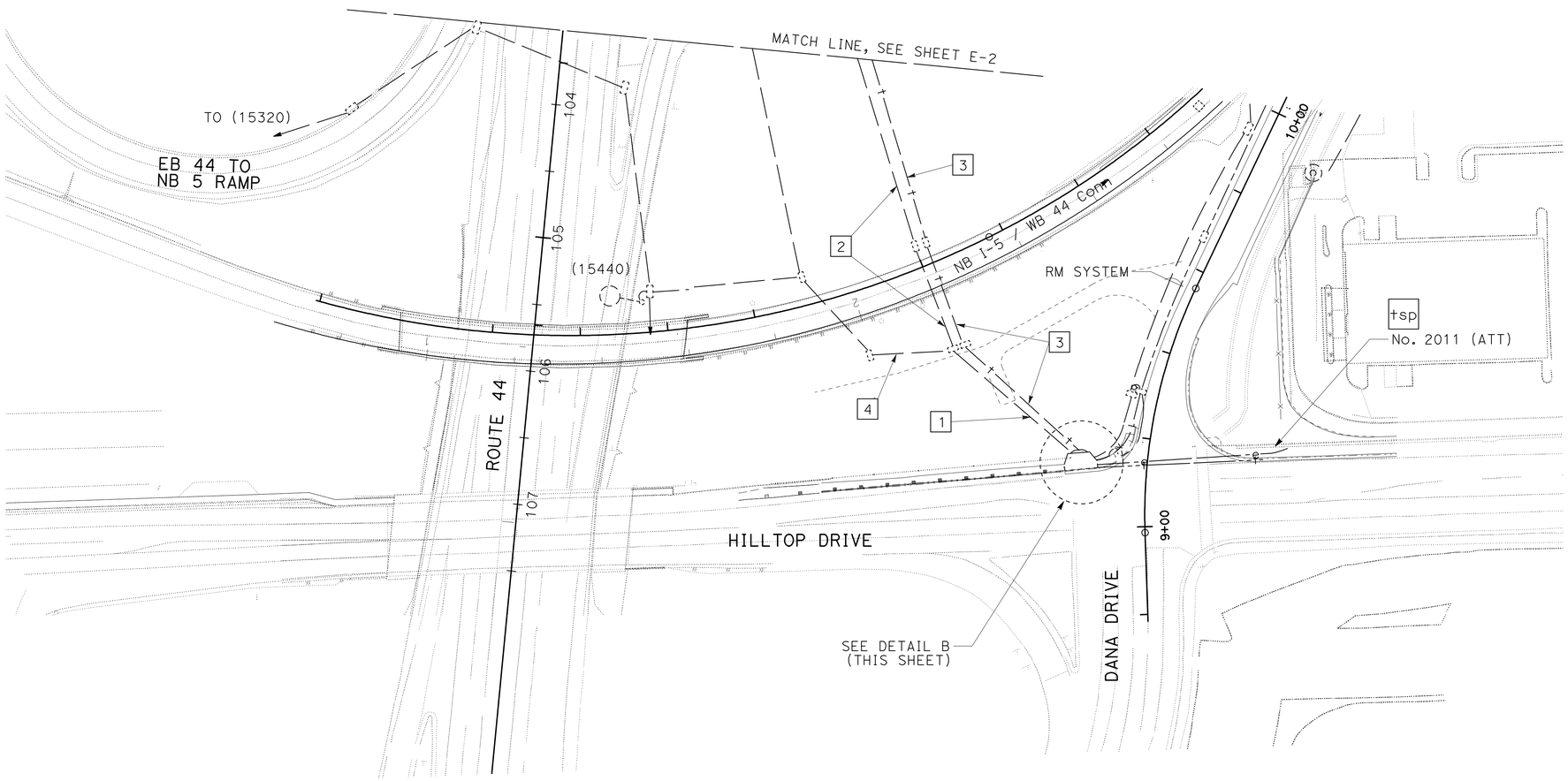


# CLOSED CIRCUIT TELEVISION SYSTEM

SCALE: 1" = 50'

**E-3**

THIS PLAN IS ACCURATE FOR ELECTRICAL WORK ONLY.

ARTURO ROBLES — REVISED BY
JAMES M. HANNIGAN — DATE REVISED
CALCULATED-DESIGNED BY
CHECKED BY
FUNCTIONAL SUPERVISOR
ROB STINGER

STATE OF CALIFORNIA - DEPARTMENT OF TRANSPORTATION
Caltrans **ELECTRICAL DESIGN**

P:\proj2\02\3c000\pse\23c000ua003.dgn

LAST REVISION 02-11-10 | DATE PLOTTED => 10-MAY-2010 | TIME PLOTTED => 13:42

| Dist | COUNTY | ROUTE | POST MILES TOTAL PROJECT | SHEET No. | TOTAL SHEETS |
|---|---|---|---|---|---|
| 02 | Sha | 5 | R14.9/R16.2 | 78 | 165 |

ART 02-11-10
REGISTERED ELECTRICAL ENGINEER

5-10-10
PLANS APPROVAL DATE

REGISTERED PROFESSIONAL ENGINEER A. P. ROBLES No. E15293 Exp. 3-31-11 ELECTRICAL STATE OF CALIFORNIA

*THE STATE OF CALIFORNIA OR ITS OFFICERS OR AGENTS SHALL NOT BE RESPONSIBLE FOR THE ACCURACY OR COMPLETENESS OF ELECTRONIC COPIES OF THIS PLAN SHEET.*

## NOTES (THIS SHEET):

1. TYPE III-AF SERVICE EQUIPMENT ENCLOSURE (20" WIDE).
2. 3"C, 2#14 (TEST SWITCH), 2#8 (TMS), 2#2/0 (LIGHTING),1#1/0 G.
3. 1½"C, 2#8 (LTG), 2#14 (TEST SWITCH), 2#8 (TMS), 1#8 G.
4. Exist 2½"C, 2#2/0, 1#1/0 G.
5. 2"C, 2#2/0, 1#1/0 G (Ltg AND SIGN ILLUMINATION).
6. 2"C, 2#1/0 (LTG), 1#1 G.
7. FOR PROJECT NOTES, ABBREVIATIONS, AND LEGEND, SEE SHEET E-1.

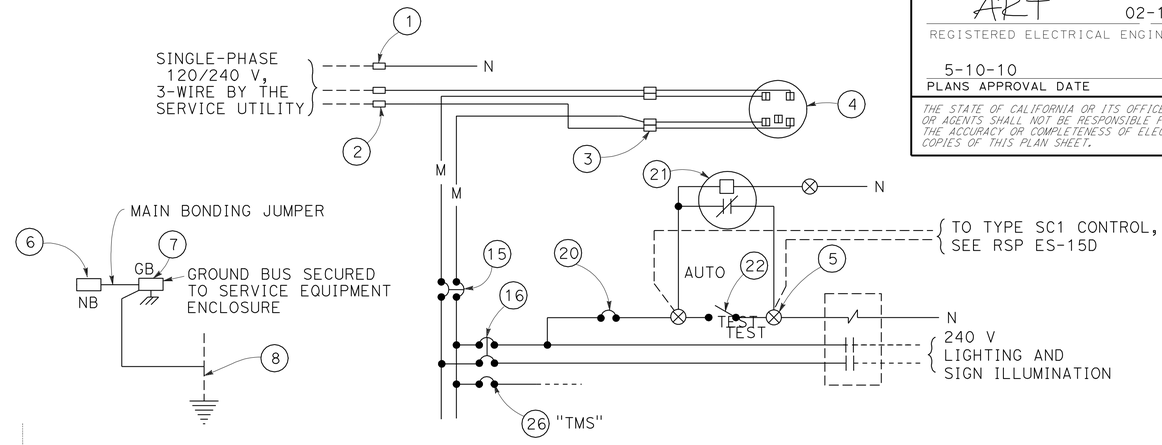


**120/240 V SERVICE WIRING DIAGRAM**

SEE RSP ES-2D FOR OTHER DETAILS.

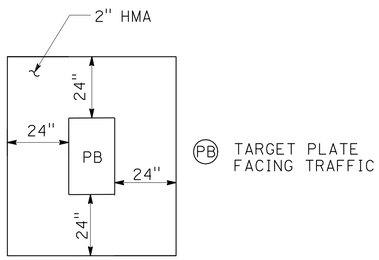


**PULL BOX PAVING**

NO SCALE

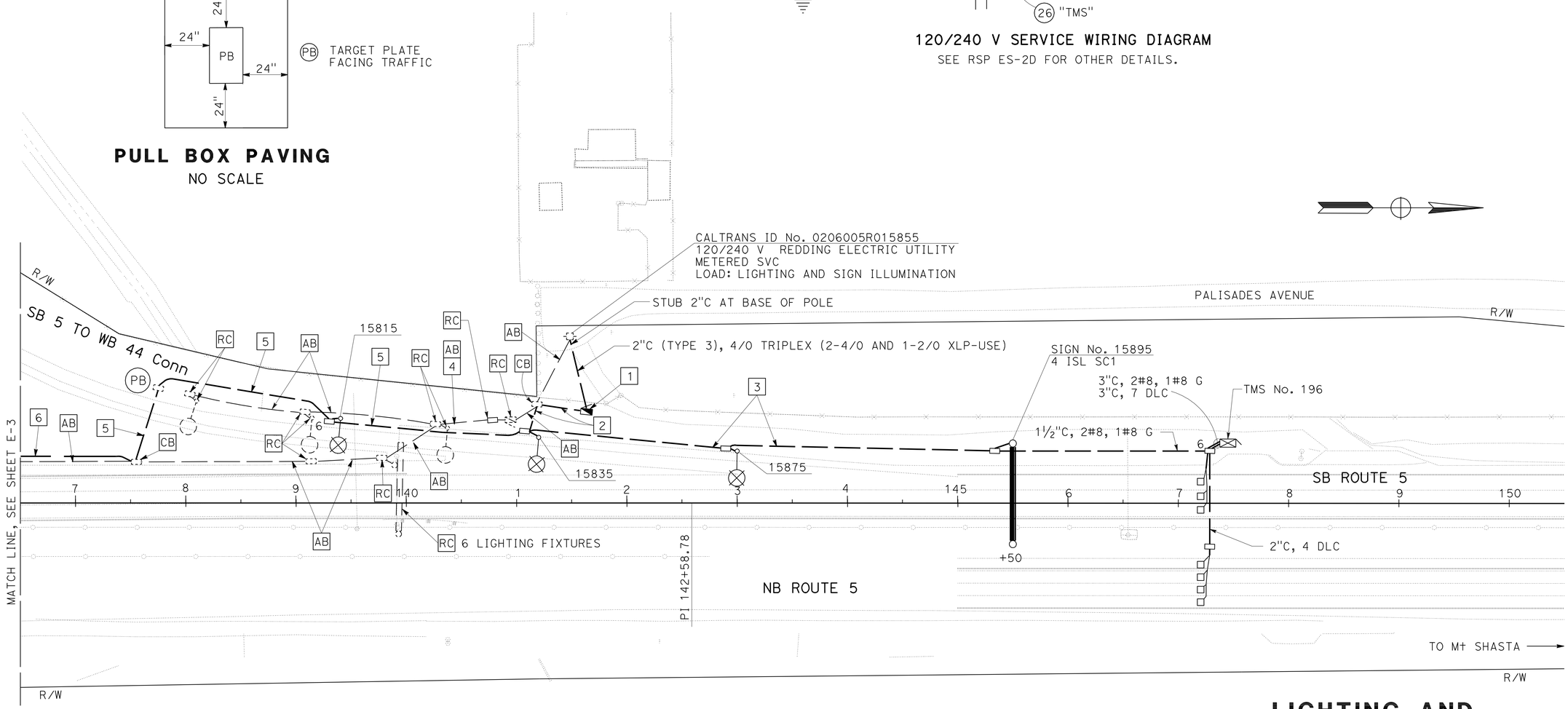


# LIGHTING AND SIGN ILLUMINATION TRAFFIC MONITORING STATION

SCALE: 1" = 50'

**E-4**

THIS PLAN IS ACCURATE FOR ELECTRICAL WORK ONLY.

STATE OF CALIFORNIA - DEPARTMENT OF TRANSPORTATION
Caltrans ELECTRICAL DESIGN

ARTURO ROBLES | JAMES M. HANNIGAN | ROB STINGER | REVISED BY | DATE REVISED | CALCULATED-DESIGNED BY | CHECKED BY | FUNCTIONAL SUPERVISOR

P:\proj2\02\3c000\pse\23c000ua004.dgn

LAST REVISION 02-11-10 | DATE PLOTTED => 10-MAY-2010 | TIME PLOTTED => 14:59

| Dist | COUNTY | ROUTE | POST MILES TOTAL PROJECT | SHEET No. | TOTAL SHEETS |
|---|---|---|---|---|---|
| 02 | Sha | 5 | R14.9/R16.2 | 79 | 165 |

ART 02-11-10
REGISTERED ELECTRICAL ENGINEER

5-10-10
PLANS APPROVAL DATE

REGISTERED PROFESSIONAL ENGINEER A. P. ROBLES No. E15293 Exp. 3-31-11 ELECTRICAL STATE OF CALIFORNIA

*THE STATE OF CALIFORNIA OR ITS OFFICERS OR AGENTS SHALL NOT BE RESPONSIBLE FOR THE ACCURACY OR COMPLETENESS OF ELECTRONIC COPIES OF THIS PLAN SHEET.*

## NOTES (THIS SHEET):

1. 2"C, 3#4, 1#2 G (120/240 V SUBPANEL).
2. TYPE III-AF SERVICE EQUIPMENT ENCLOSURE (48" TALL) WITHOUT METERING SECTION. SEE WIRING DIAGRAM.
3. 2"C, 2#8, (BBS Cab), 1#8 G, 2"C, MT.
4. 3"C, 2#8 1#8G (BBS Cab), 2#12 (UTILITY POWER). 2#12 (BBS POWER). SEE ITS NODE INSULATION COLOR CODE.
5. 3"C, (REUSE) TC, INSTALL STATE-FURNISHED CCTV CABLE.
6. 3"C, 2#12 (UTILITY POWER), 2#12 (BBS POWER). SEE ITS NODE INSULATION COLOR CODE.
7. INSTALL STATE-FURNISHED ITS NODE CABINET.
8. INSTALL STATE-FURNISHED BBS CABINET.
9. COIL 6 FEET OF CABLES/CONDUCTORS AT BOTTOM OF CABINET.
10. 2"C, INSTALL STATE-FURNISHED CCTV CABLE. FROM ITS NODE PB TO CCTV POLE.
11. FOR PROJECT NOTES, ABBREVIATIONS, AND LEGEND, SEE SHEET E-1.

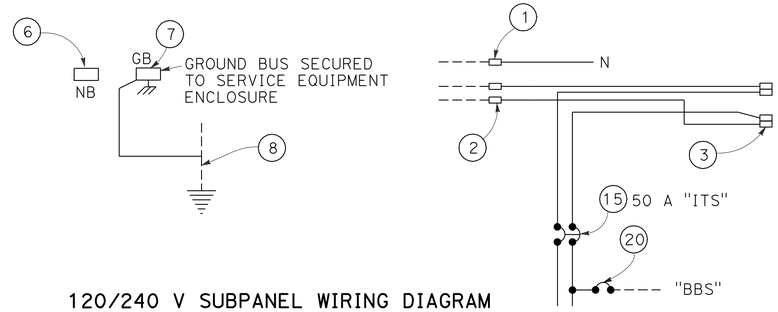


**120/240 V SUBPANEL WIRING DIAGRAM**
SEE RSP ES-2D FOR OTHER DETAILS

### ITS NODE INSULATION COLOR CODE

| CIRCUIT | CONDUCTOR | INSULATION |
|---|---|---|
| BETWEEN BBS Cab AND ITS NODE Cab | UNGROUNDED UTILITY POWER | BLACK |
| | GROUNDED UTILITY POWER | WHITE |
| | UNGROUNDED BBS POWER | BLUE |
| | GROUNDED BBS POWER | WHITE |

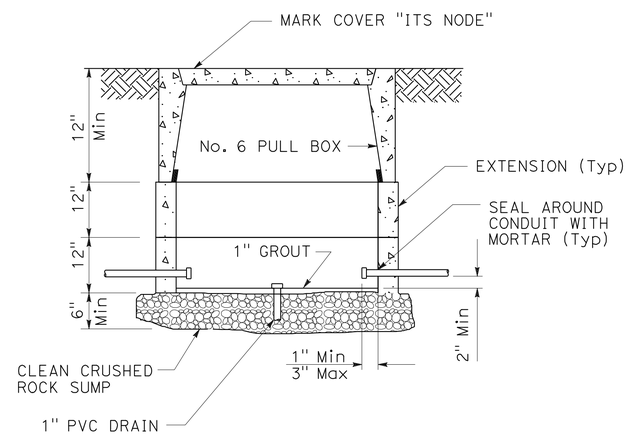


**ITS NODE PULL BOX**

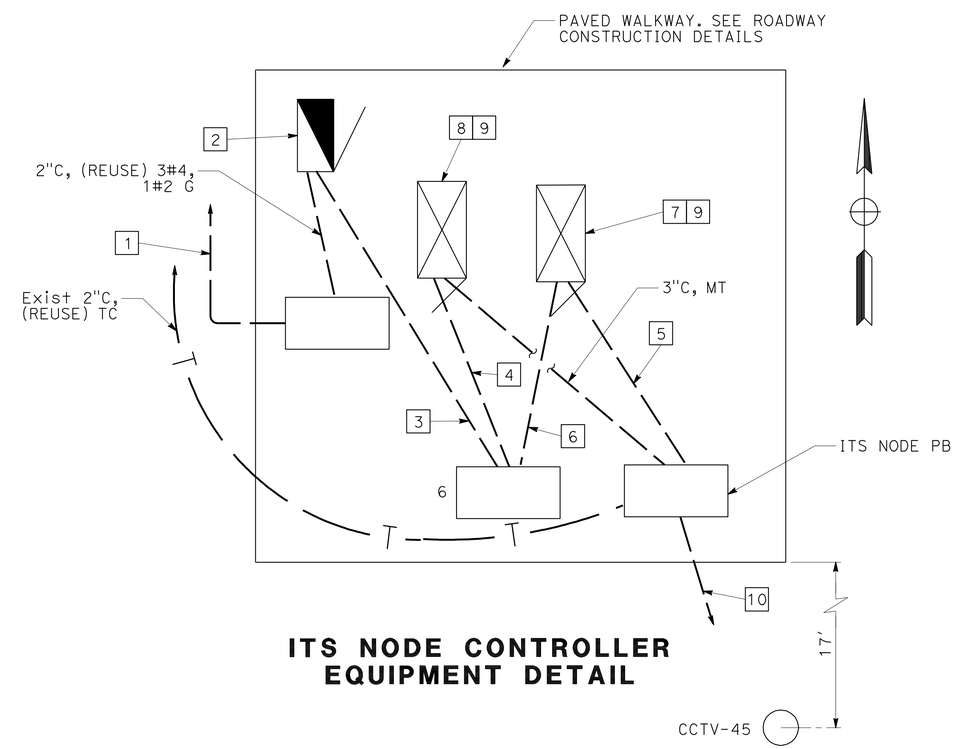


**ITS NODE CONTROLLER EQUIPMENT DETAIL**

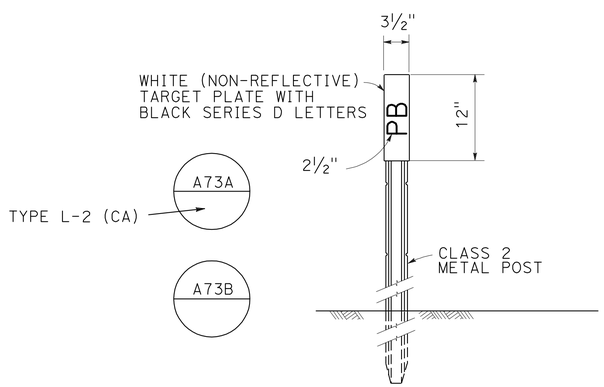


NOTE: MARKERS SHALL COMPLY WITH TYPE L-2 MODIFIED WITH A SNOW POLE BRACKET. PLACE MARKER 2" OUTSIDE PULL BOX PAVING ON SIDE AWAY FROM TRAFFIC. SEE PULL BOX PAVING DETAIL.

**OBJECT MARKER (TYPE PB)**

# CLOSED CIRCUIT TELEVISION SYSTEM (ELECTRICAL DETAILS)

NO SCALE

**E-5**

THIS PLAN IS ACCURATE FOR ELECTRICAL WORK ONLY.

STATE OF CALIFORNIA - DEPARTMENT OF TRANSPORTATION
Caltrans ELECTRICAL DESIGN

FUNCTIONAL SUPERVISOR: ROB STINGER
CALCULATED-DESIGNED BY: ARTURO ROBLES
CHECKED BY: JAMES M. HANNIGAN
REVISED BY / DATE REVISED

P:\proj\02\3c000\pse\23c000ua005.dgn

LAST REVISION 02-11-10 | DATE PLOTTED => 11-MAY-2010 | TIME PLOTTED => 06:29

BORDER LAST REVISED 3/1/2007 | RELATIVE BORDER SCALE IS IN INCHES 0 1 2 3 | USERNAME => trmikesl | DGN FILE => 23c000ua005.dgn | CU 02 365 | EA 3C0001

| Dist | COUNTY | ROUTE | POST MILES TOTAL PROJECT | SHEET No. | TOTAL SHEETS |
|---|---|---|---|---|---|
| 02 | Sha | 5 | R14.9/R16.2 | 80 | 165 |

ART 02-11-10
REGISTERED ELECTRICAL ENGINEER

5-10-10
PLANS APPROVAL DATE

REGISTERED PROFESSIONAL ENGINEER A. P. ROBLES No. E15293 Exp. 3-31-11 ELECTRICAL STATE OF CALIFORNIA

*THE STATE OF CALIFORNIA OR ITS OFFICERS OR AGENTS SHALL NOT BE RESPONSIBLE FOR THE ACCURACY OR COMPLETENESS OF ELECTRONIC COPIES OF THIS PLAN SHEET.*

## NOTES (THIS SHEET):

1. Exist 2"C, 3#4, 1#2 G.
2. Exist 2"C, TC.
3. Exist 2"C, REINSTALL TC. Exist 2"C, 3#4, 1#2G.
4. FOR PROJECT NOTES, ABBREVIATIONS, AND LEGEND, SEE SHEET E-1.

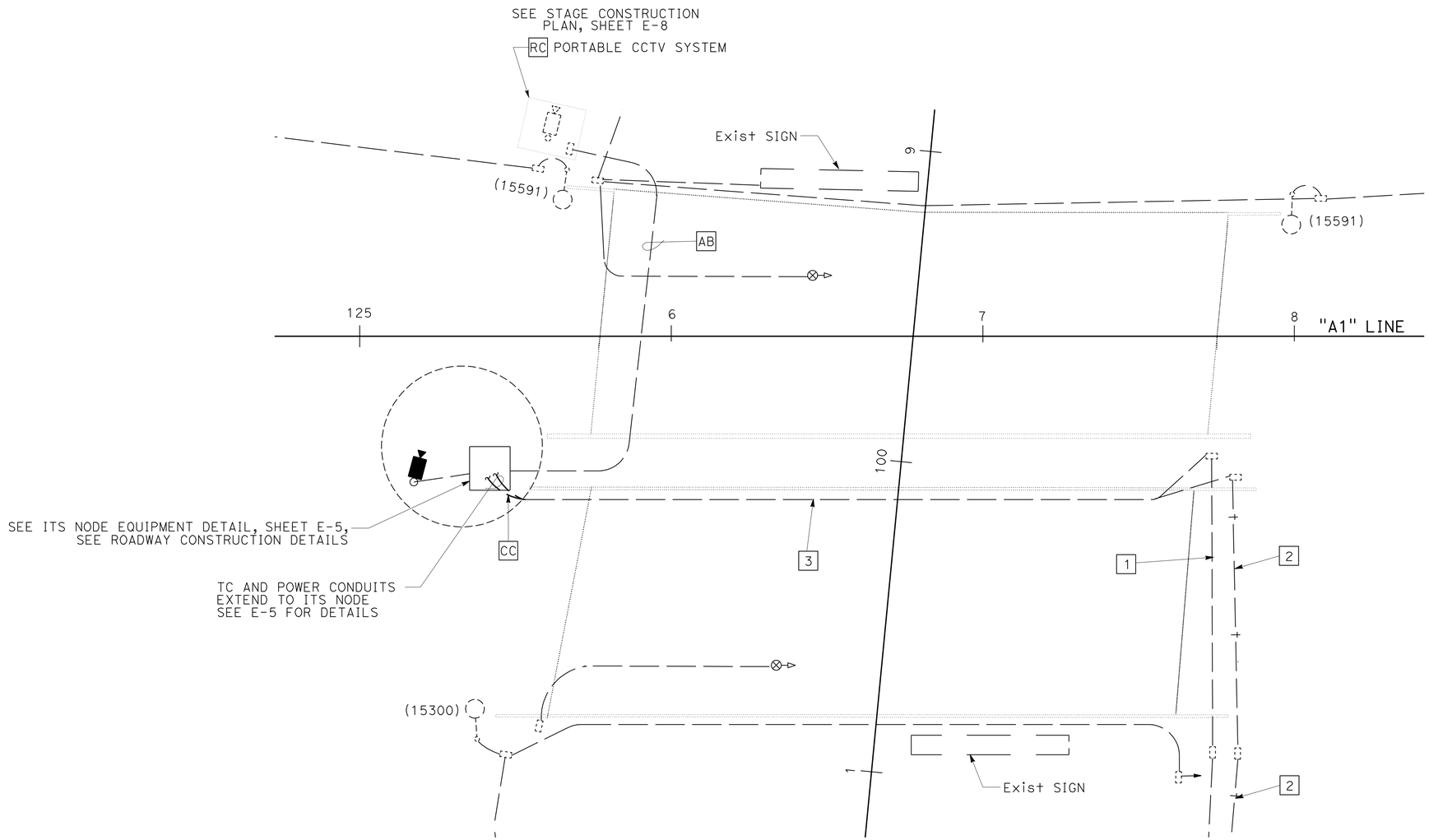


PLAN

# CLOSED CIRCUIT TELEVISION SYSTEM

SCALE: 1" = 20'

E-6

THIS PLAN IS ACCURATE FOR ELECTRICAL WORK ONLY.

| REVISED BY | DATE REVISED |
|---|---|
| ARTURO ROBLES | JAMES M. HANNIGAN |
| CALCULATED-DESIGNED BY | CHECKED BY |
| FUNCTIONAL SUPERVISOR | ROB STINGER |

STATE OF CALIFORNIA - DEPARTMENT OF TRANSPORTATION
Caltrans ELECTRICAL DESIGN

P:\proj2\02\3c000\pse\23c000ua006.dgn

LAST REVISION 02-11-10 | DATE PLOTTED => 10-MAY-2010 TIME PLOTTED => 15:06

| Dist | COUNTY | ROUTE | POST MILES TOTAL PROJECT | SHEET No. | TOTAL SHEETS |
|---|---|---|---|---|---|
| 02 | Sha | 5 | R14.9/R16.2 | 81 | 165 |

ART 02-11-10
REGISTERED ELECTRICAL ENGINEER

5-10-10
PLANS APPROVAL DATE

REGISTERED PROFESSIONAL ENGINEER A. P. ROBLES No. E15293 Exp. 3-31-11 ELECTRICAL STATE OF CALIFORNIA

*THE STATE OF CALIFORNIA OR ITS OFFICERS OR AGENTS SHALL NOT BE RESPONSIBLE FOR THE ACCURACY OR COMPLETENESS OF ELECTRONIC COPIES OF THIS PLAN SHEET.*

## NOTES (THIS SHEET):

1. INSTALL 2-2"C IN BRIDGE RAIL, MT.
2. 2"C, 2#1/0, 1#1/0 G.
3. INSTALL CONDUIT ON EXISTING GIRDER.
4. 1"C, 2#10, 1#10 G.
5. FOR PROJECT NOTES, ABBREVIATIONS, AND LEGEND, SEE SHEET E-1.

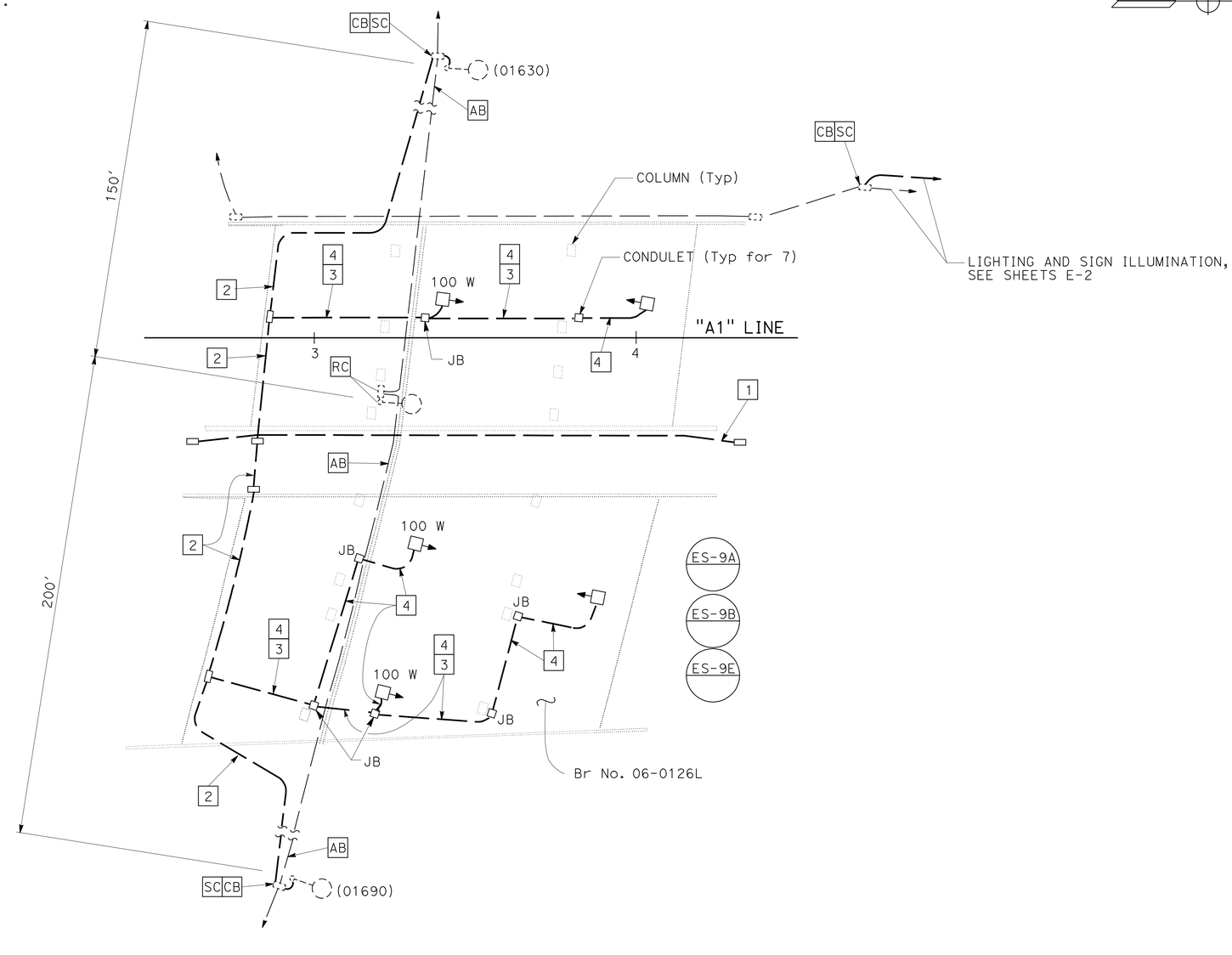


## DETAIL A

THIS PLAN IS ACCURATE FOR ELECTRICAL WORK ONLY.

# LIGHTING
SCALE: 1" = 20'

E-7

STATE OF CALIFORNIA - DEPARTMENT OF TRANSPORTATION
Caltrans ELECTRICAL DESIGN

FUNCTIONAL SUPERVISOR: ROB STINGER
CALCULATED-DESIGNED BY: ARTURO ROBLES
CHECKED BY: JAMES M. HANNIGAN
REVISED BY / DATE REVISED

P:\proj2\02\3c000\pse\23c000ua007.dgn

LAST REVISION 02-11-10 | DATE PLOTTED => 11-MAY-2010 | TIME PLOTTED => 07:06

BORDER LAST REVISED 3/1/2007 | RELATIVE BORDER SCALE IS IN INCHES 0 1 2 3 | USERNAME => trmikesl | DGN FILE => 23c000ua007.dgn | CU 02 365 | EA 3C0001

| Dist | COUNTY | ROUTE | POST MILES TOTAL PROJECT | SHEET No. | TOTAL SHEETS |
|---|---|---|---|---|---|
| 02 | Sha | 5 | R14.9/R16.2 | 82 | 165 |

ART 02-11-10
REGISTERED ELECTRICAL ENGINEER

5-10-10
PLANS APPROVAL DATE

REGISTERED PROFESSIONAL ENGINEER A. P. ROBLES No. E15293 Exp. 3-31-11 ELECTRICAL STATE OF CALIFORNIA

*THE STATE OF CALIFORNIA OR ITS OFFICERS OR AGENTS SHALL NOT BE RESPONSIBLE FOR THE ACCURACY OR COMPLETENESS OF ELECTRONIC COPIES OF THIS PLAN SHEET.*

## NOTES (THIS SHEET):

1. Exist 2"C, 2#8, REPLACE WITH 3#4, 1#2 G.
2. Exist 2"C, REUSE TC.
3. 2"C, MT, 2"C, 3#4, 1#2 G. SURFACE-MOUNT CONDUITS TO OUTSIDE OF BRIDGE.
4. 2"C, 3#4, 1#2 G IN EXISTING EMBANKMENT.
5. FOR PROJECT NOTES, ABBREVIATIONS, AND LEGEND, SEE SHEET E-1.

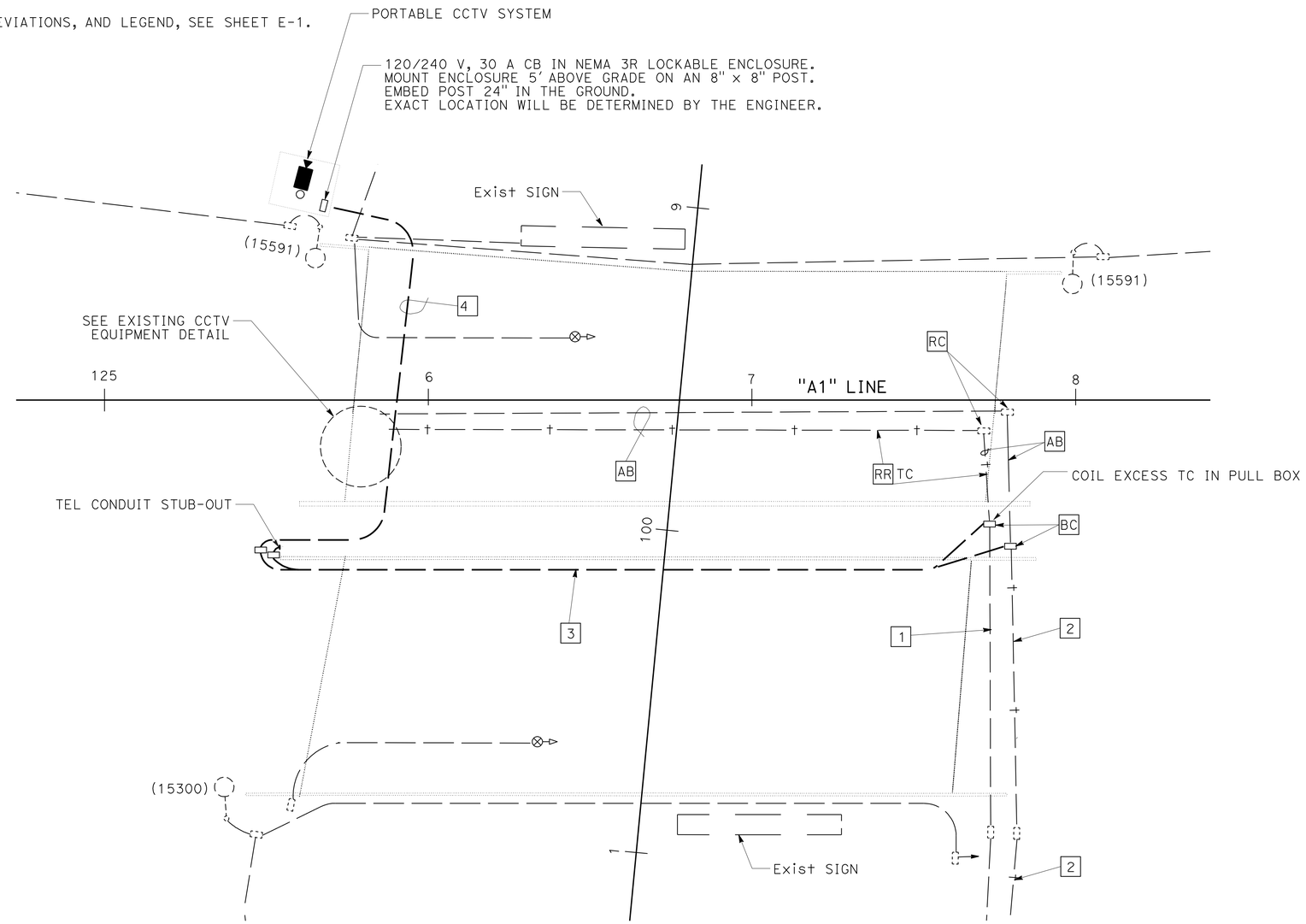


PLAN

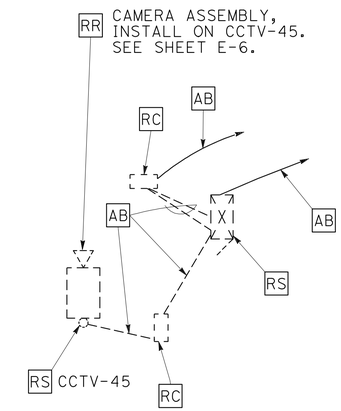


EXISTING CCTV EQUIPMENT DETAIL
NO SCALE

# CLOSED CIRCUIT TELEVISION SYSTEM (STAGE CONSTRUCTION)

SCALE: 1" = 20'

**E-8**

THIS PLAN IS ACCURATE FOR ELECTRICAL WORK ONLY.

REVISED BY | DATE REVISED
ARTURO ROBLES | JAMES M. HANNIGAN
CALCULATED-DESIGNED BY | CHECKED BY
FUNCTIONAL SUPERVISOR: ROB STINGER

STATE OF CALIFORNIA - DEPARTMENT OF TRANSPORTATION
Caltrans ELECTRICAL DESIGN

P:\proj2\02\3c000\pse\23c000ua008.dgn

LAST REVISION 02-11-10 | DATE PLOTTED => 11-MAY-2010 | TIME PLOTTED => 07:06

| DIST | COUNTY | ROUTE | POST MILES TOTAL PROJECT | SHEET No | TOTAL SHEETS |
|---|---|---|---|---|---|
| 02 | Sha | 5 | R14.9/R16.2 | 83 | 165 |

REGISTERED CIVIL ENGINEER DATE

5-10-10
PLANS APPROVAL DATE

REGISTERED PROFESSIONAL ENGINEER JEFFREY B. WOODY No. C41260 Exp. 3/31/11 CIVIL STATE OF CALIFORNIA

*The State of California or its officers or agents shall not be responsible for the accuracy or completeness of electronic copies of this plan sheet.*

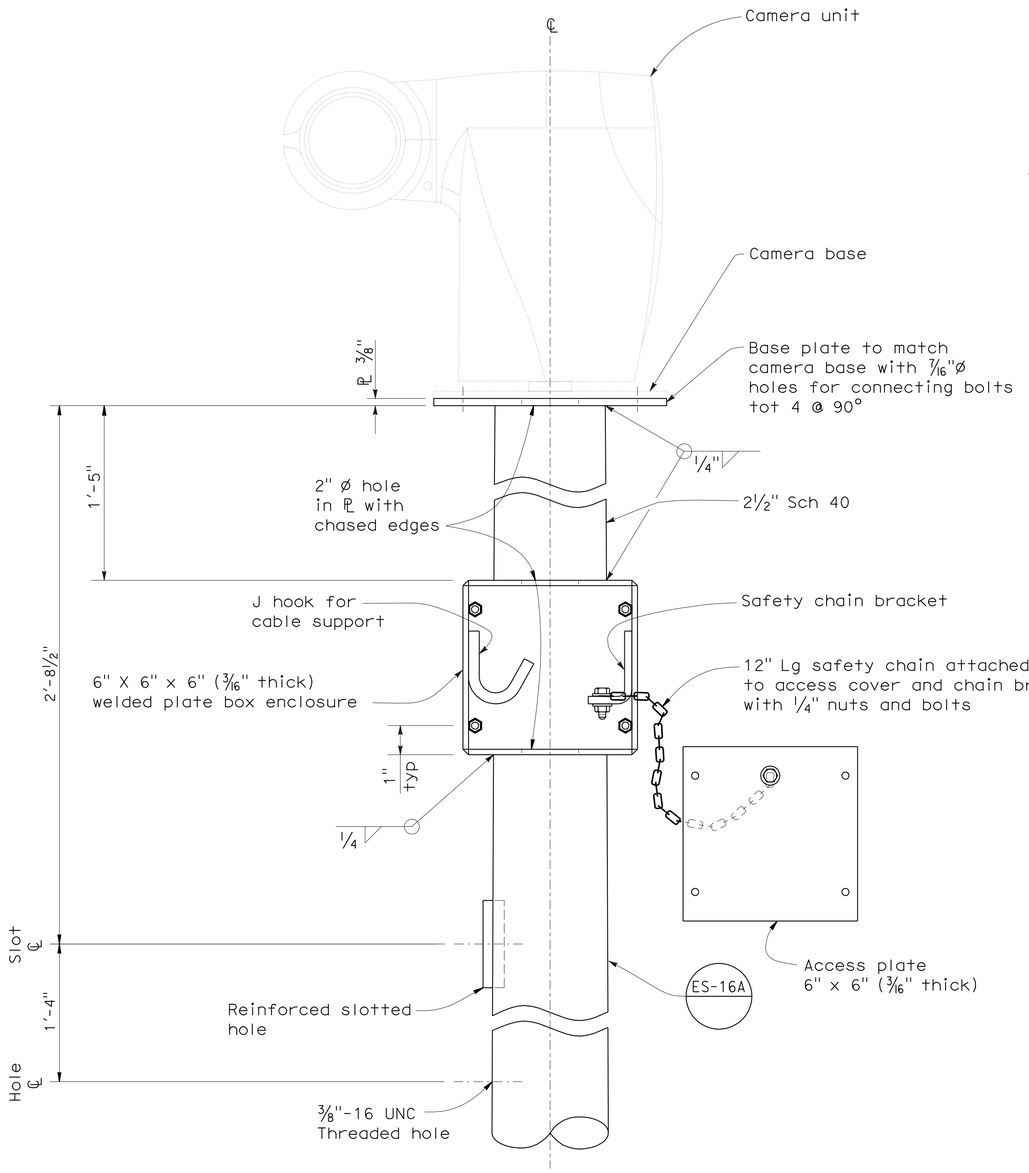


**DETAIL A**
**CCTV POLE MOUNTING WITH ADAPTER**

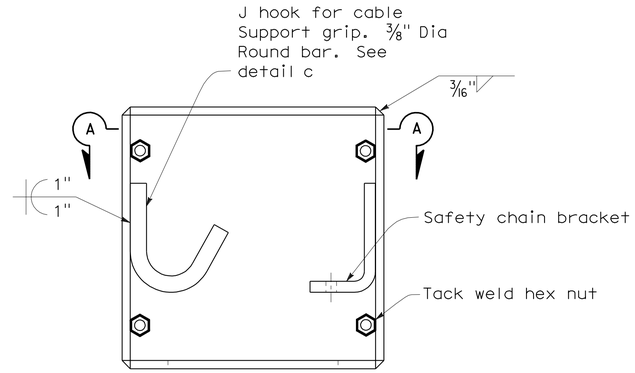


**DETAIL B**
**BOX ENCLOSURE**

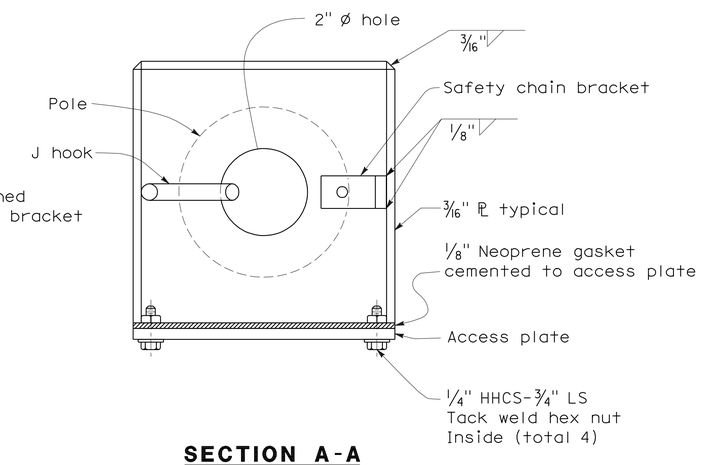


**SECTION A-A**

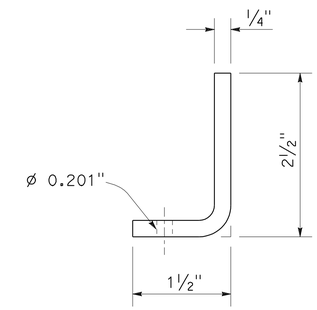


**DETAIL D**
**SAFETY CHAIN BRACKET**

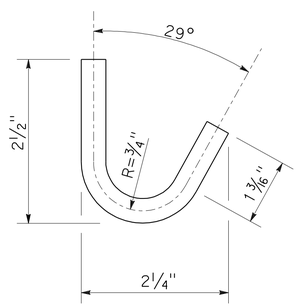


**DETAIL C**
**J HOOK**

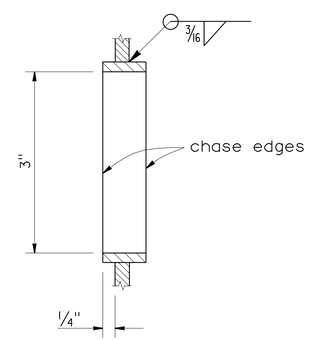


**REINFORCED SLOTTED HOLE DETAIL**

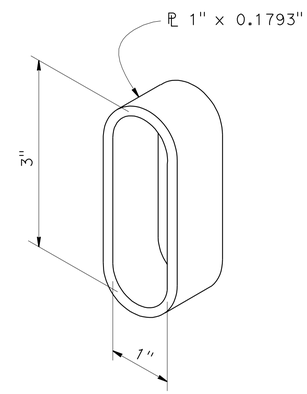


**REINFORCING RING**

NOTE:
THE CONTRACTOR SHALL VERIFY ALL CONTROLLING FIELD DIMENSIONS BEFORE ORDERING OR FABRICATING ANY MATERIAL.

E-9

| BRANCH CHIEF | DESIGN | BY J WOODY | CHECKED |
|---|---|---|---|
| | DETAILS | BY D W JUSTICE Jr | CHECKED J WOODY |
| | QUANTITIES | BY | CHECKED |

STATE OF CALIFORNIA
DEPARTMENT OF TRANSPORTATION

DIVISION OF ENGINEERING SERVICES
DESIGN AND TECHNICAL SERVICES
SPECIAL DESIGNS BRANCH
A

BRIDGE NO. N/A
POST MILE

# ELECTRICAL DETAILS
# CAMERA MOUNTING DETAILS

SES-1

(ENGLISH) SPECIAL DESIGNS BRANCH BORDER SHEET (REV. 7-1-09)

ORIGINAL SCALE IN INCHES FOR REDUCED PLANS 0 1 2 3

CU 02
EA 3C0001

DISREGARD PRINTS BEARING EARLIER REVISION DATES 4-13-10 5-6-10

REVISION DATES | SHEET | OF

FILE => spec_des_br_prj/2009sd/02-3C0001/02-3c0001_ses1.dgn

USERNAME => ttmmguye DATE PLOTTED => 10-MAY-2010 TIME PLOTTED => 14:26

| DIST | COUNTY | ROUTE | POST MILES TOTAL PROJECT | SHEET NO. | TOTAL SHEETS |
|---|---|---|---|---|---|
| 02 | Sha | 5 | R14.9/R16.2 | 84 | 165 |

REGISTERED CIVIL ENGINEER

November 17, 2006
PLANS APPROVAL DATE

REGISTERED PROFESSIONAL ENGINEER Dallas Forester No. C37765 Exp. 12-31-06 CIVIL STATE OF CALIFORNIA

*The State of California or its officers or agents shall not be responsible for the accuracy or completeness of electronic copies of this plan sheet.*

*To accompany plans dated* 5-10-10

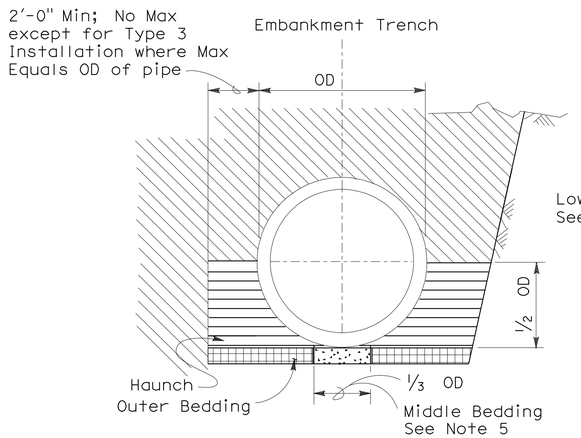


BACKFILL

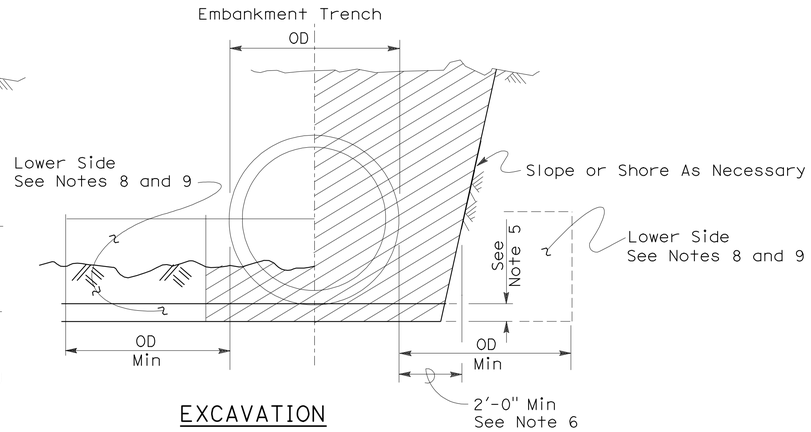


EXCAVATION

Roadway Embankment

Structure Backfill (Culvert) See Note 6

Structure Backfill (Culvert) See Note 6

Loose Backfill

Excavation Structure (Culvert)

## TYPE 1 INSTALLATION:

The haunch and outer bedding shall be compacted to a minimum 90 percent relative compaction. In addition, the minimum sand equivalent in these areas shall be 30 and the maximum percentage passing the 75 $\mu$m sieve size shall be 12.

## TYPE 2 INSTALLATION:

The haunch and outer bedding shall be compacted to a minimum 90 percent relative compaction. In addition, the minimum sand equivalent in these areas shall be 25.

## TYPE 3 INSTALLATION:

The haunch and outer bedding shall be compacted to a minimum 85 percent relative compaction. 90 percent relative compaction will be required where the fill over the pipe is less than 4'-0" or 1/2 OD.

## NOTES:

1. Unless otherwise shown on the plans or specified in the special provision, the Contractor shall have the option of selecting the class of RCP and the type of installation to be used, provided the height of cover does not exceed the value shown for the RCP selected.
   Example: 24" RCP culvert with maximum cover of 19'-0" the options are:
   a) Class III or stronger with Installation Type 1.
   b) Class III Special or stronger with Installation Type 2.
   c) Class IV Special or stronger with Installation Type 3.
   Cover is defined as the maximum vertical distance from top of the pipe to finished grade within the length of any given culvert.
2. The class of RCP and Installation Type selected shall be the same throughout the length of any given culvert.
3. The "length of any culvert" is defined as the culvert between:
   a) Successive drainage structure (inlets, junction boxes, headwalls, etc.).
   b) A drainage structure and the inlet or outlet end of the culvert.
   c) The inlet and outlet end of the culvert when there are no intervening drainage structures.
4. Oval and arch shaped RCP shall not be used.
5. 1/25 OD Min, not less than 3".
6. Slurry cement backfill may be substituted for backfill in the outer bedding and haunch areas. If slurry is used the outer and middle beddings shall be omitted. Prior to installation the soil under the middle 1/3 of the outside diameter of the pipe shall be softened by scarifying or other means to a minimum depth of 1/25 OD, but not less than 3". Where slurry cement backfill is used clear distance to trench wall may be reduced as set forth in Section 19-3.062 of the Standard Specifications.
7. Backfill shall be placed full width of excavation except where dimensions are shown for backfill width or thickness. Dimensions shown are minimums.
8. Lower side shall be suitable material as determined by the Engineer. Otherwise it shall be considered unsuitable as set forth in Section 19-2.02 of the Standard Specifications. See Note 9.
9. Where the pipe is placed in a trench, if the trench walls are sloped at 5 vertical to 1 horizontal or steeper for at least 90 percent of the trench height or up to not less than 12" from the grading plane, the firmness of the soil in the lower side need not be considered.
10. Non-reinforced precast concrete pipe sizes 3'-0" or smaller may be placed under installation Types 1, 2 or 3.

### INSTALLATION TYPE 1

| MINIMUM CLASS AND D-LOAD | COVER | |
|---|---|---|
| | 108" Dia AND SMALLER | OVER 108" Dia |
| Class II 1000D | 14.9' | 12.9' |
| Class III 1350D | 15.0' - 20.9' | 13.0' - 18.9' |
| Class III Special 1700D | 21.0' - 26.9' | 19.0' - 24.9' |
| Class IV 2000D | 27.0' - 31.9' | 25.0' - 29.9' |
| Class IV Special 2500D | 32.0' - 40.9' | 30.0' - 38.9' |
| Class V 3000D | 41.0' - 49.9' | 39.0' - 46.9' |
| Class V Special 3600D | 50.0' - 59.0' | 47.0' - 58.0' |

### INSTALLATION TYPE 2

| MINIMUM CLASS AND D-LOAD | COVER |
|---|---|
| Class II 1000D | 9.9' |
| Class III 1350D | 10.0'- 14.9' |
| Class III Special 1700D | 15.0' - 19.9' |
| Class IV 2000D | 20.0' - 24.9' |
| Class IV Special 2500D | 25.0' - 31.9' |
| Class V 3000D | 32.0' - 38.9' |
| Class V Special 3600D | 39.0' - 47.0' |

### INSTALLATION TYPE 3

| MINIMUM CLASS AND D-LOAD | COVER | |
|---|---|---|
| | 48" Dia AND SMALLER | OVER 48" Dia |
| Class II 1000D | 7.9' | 5.9' |
| Class III 1350D | 8.0' - 10.9' | 6.0' - 8.9' |
| Class III Special 1700D | 11.0' - 14.9' | 9.0' - 12.9' |
| Class IV 2000D | 15.0' - 17.9' | 13.0' - 15.9' |
| Class IV Special 2500D | 18.0' - 21.9' | 16.0' - 19.9' |
| Class V 3000D | 22.0' - 26.9' | 20.0' - 24.9' |
| Class V Special 3600D | 30.0' - 33.0' | 25.0' - 31.0' |

STATE OF CALIFORNIA
DEPARTMENT OF TRANSPORTATION

# EXCAVATION AND BACKFILL CONCRETE PIPE CULVERTS

NO SCALE

RSP A62DA DATED NOVEMBER 17, 2006 SUPERSEDES STANDARD PLAN A62DA DATED MAY 1, 2006 - PAGE 20 OF THE STANDARD PLANS BOOK DATED MAY 2006.

**REVISED STANDARD PLAN RSP A62DA**

**2006 REVISED STANDARD PLAN RSP A62DA**

10-26-06

| DIST | COUNTY | ROUTE | POST MILES TOTAL PROJECT | SHEET NO. | TOTAL SHEETS |
|---|---|---|---|---|---|
| 02 | Sha | 5 | R14.9/R16.2 | 85 | 165 |

Randell D. Hiatt
REGISTERED CIVIL ENGINEER

June 6, 2008
PLANS APPROVAL DATE

REGISTERED PROFESSIONAL ENGINEER
Randell D. Hiatt
No. C50200
Exp. 6-30-09
CIVIL
STATE OF CALIFORNIA

*The State of California or its officers or agents shall not be responsible for the accuracy or completeness of electronic copies of this plan sheet.*

*To accompany plans dated* 5-10-10

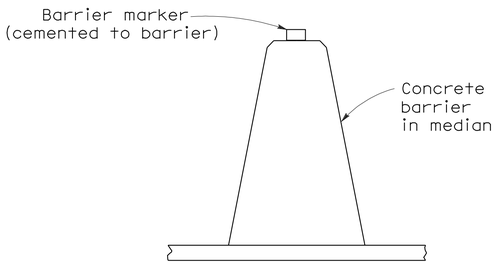


## CONCRETE BARRIER TYPE 60 DELINEATION

See Notes 7 and 8

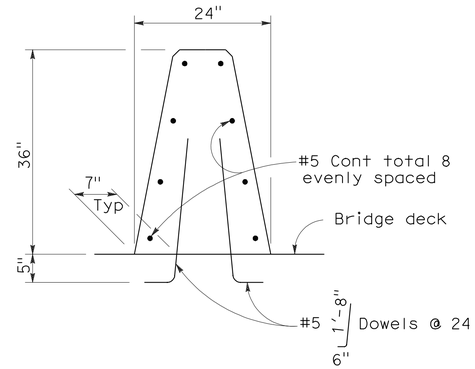


## CONCRETE BARRIER TYPE 60A

Details similar to Type 60 except as noted.

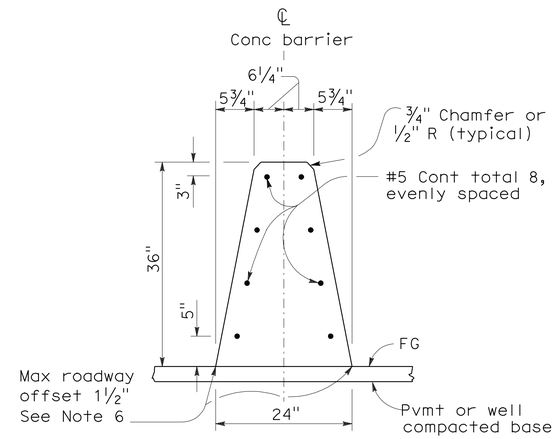


## CONCRETE BARRIER TYPE 60

### NOTES:

1. See Standard Plan A76B for details of Concrete Barrier Type 60 end anchors, connection to structures and transitions to Concrete Barrier Type 50 and Concrete Barrier Type 60S.
2. See Standard Plan A76C for Concrete Barrier Type 60 transitions at bridge column and sign pedestals.
3. Where glare screen is required on Concrete Barrier Type 60, use Concrete Barrier Type 60G.
4. Where the concrete barrier is added to the face of existing concrete structure, match existing weep holes.
5. Expansion joints in concrete barrier shall be located at all deck, pavement and principal wall joints. Expansion joint filler material shall be the same size as joint or ½" minimum.
6. Where roadway offset is greater than 1½", see Concrete Barrier Type 60C.
7. Barrier delineation to be used when required by the Special Provisions.
8. Spacing of barrier markers to match spacing of raised pavement markers on the adjacent median edgeline pavement delineation.
9. Reinforcing stirrup not required for roadway offsets less than 1'-0".
10. For roadway surfaces offset greater than 1½" to 3", no rebars required. For roadway surfaces offset greater than 3" to 8" use two #4 rebars at 3" above the lower roadway surface. For roadway surfaces offset greater than 8" to 12", use two #4 rebars at 3" above the lower roadway surface and two #4 rebars at 8" above the lower roadway surface. For roadway surfaces offset greater than 12" to 36", use two #4 rebars at 3" above the lower roadway surface and two #4 rebars at every 8" increment vertical spacing above the first two #4 rebars.

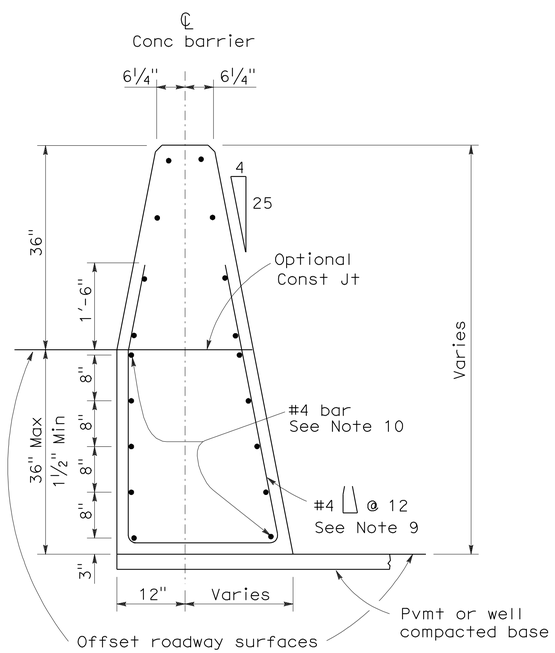


## CONCRETE BARRIER TYPE 60C

Details similar to Type 60 except as noted.
Concrete barrier end anchor when necessary.
36" roadway surfaces offset shown.

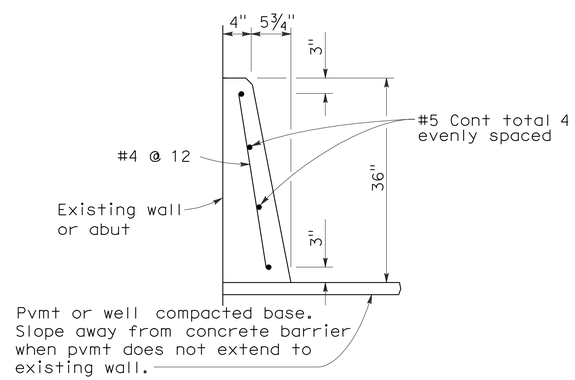


## CONCRETE BARRIER TYPE 60D

STATE OF CALIFORNIA
DEPARTMENT OF TRANSPORTATION

# CONCRETE BARRIER TYPE 60

NO SCALE

RSP A76A DATED JUNE 6, 2008 SUPERSEDES STANDARD PLAN A76A
DATED MAY 1, 2006 - PAGE 29 OF THE STANDARD PLANS BOOK DATED MAY 2006.

**REVISED STANDARD PLAN RSP A76A**

**2006 REVISED STANDARD PLAN RSP A76A**

5-21-08

| DIST | COUNTY | ROUTE | POST MILES TOTAL PROJECT | SHEET NO. | TOTAL SHEETS |
|---|---|---|---|---|---|
| 02 | Sha | 5 | R14.9/R16.2 | 86 | 165 |

Randell D. Hiatt
REGISTERED CIVIL ENGINEER

June 6, 2008
PLANS APPROVAL DATE

REGISTERED PROFESSIONAL ENGINEER
Randell D. Hiatt
No. C50200
Exp. 6-30-09
CIVIL
STATE OF CALIFORNIA

*The State of California or its officers or agents shall not be responsible for the accuracy or completeness of electronic copies of this plan sheet.*

*To accompany plans dated* 5-10-10

## NOTES:

1. When necessary to place dike in front of face of guard railing, only Type C dike may be used. For dike details, see Standard Plan A87B.
2. For standard railing post embedment, see Standard Plans A77C3.
3. Guard railing delineation to be used where shown on the Project Plans.
4. When dike or curb is placed under guard railing, the maximum height of the dike or curb shall be 4". Mountable dike should not be used. For dike and curb details, see Revised Standard Plans RSP A87A and Standard Plan A87B.
5. For details of typical distance between the face of rail and hinge point, see Standard Plan A77C3.

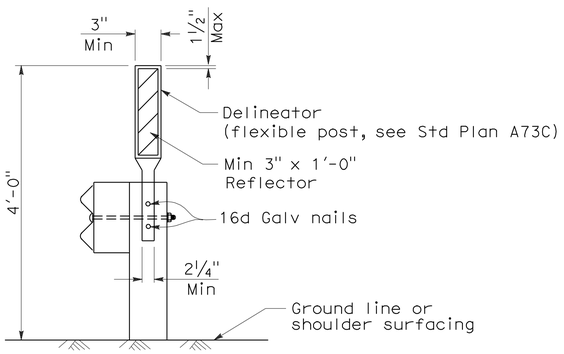


GUARD RAILING DELINEATION

See Note 3

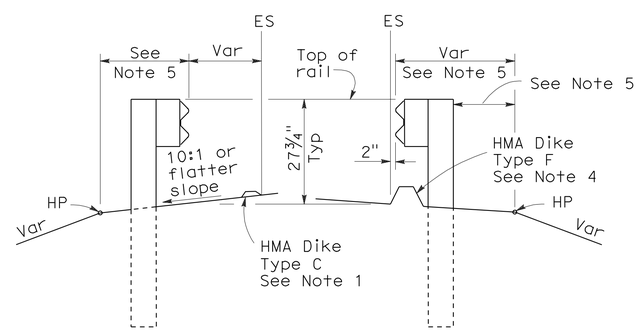


DIKE POSITIONING

See Note 1

2006 REVISED STANDARD PLAN RSP A77C4

STATE OF CALIFORNIA
DEPARTMENT OF TRANSPORTATION

# METAL BEAM GUARD RAILING TYPICAL RAILING DELINEATION AND DIKE POSITIONING DETAILS

NO SCALE

RSP A77C4 DATED JUNE 6, 2008 SUPERSEDES STANDARD PLAN A77C4
DATED MAY 1, 2006 - PAGE 47 OF THE STANDARD PLANS BOOK DATED MAY 2006.

**REVISED STANDARD PLAN RSP A77C4**

12-10-07

| DIST | COUNTY | ROUTE | POST MILES TOTAL PROJECT | SHEET NO. | TOTAL SHEETS |
|---|---|---|---|---|---|
| 02 | Sha | 5 | R14.9/R16.2 | 87 | 165 |

Randell D. Hiatt
REGISTERED CIVIL ENGINEER

June 6, 2008
PLANS APPROVAL DATE

REGISTERED PROFESSIONAL ENGINEER
Randell D. Hiatt
No. C50200
Exp. 6-30-09
CIVIL
STATE OF CALIFORNIA

*The State of California or its officers or agents shall not be responsible for the accuracy or completeness of electronic copies of this plan sheet.*

*To accompany plans dated* 5-10-10

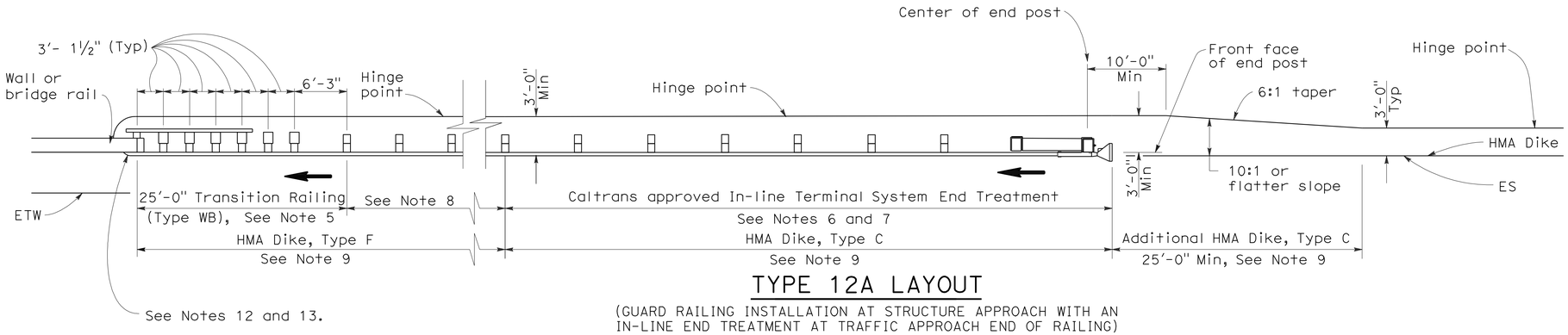


## TYPE 12A LAYOUT

(GUARD RAILING INSTALLATION AT STRUCTURE APPROACH WITH AN IN-LINE END TREATMENT AT TRAFFIC APPROACH END OF RAILING)
See Notes 10

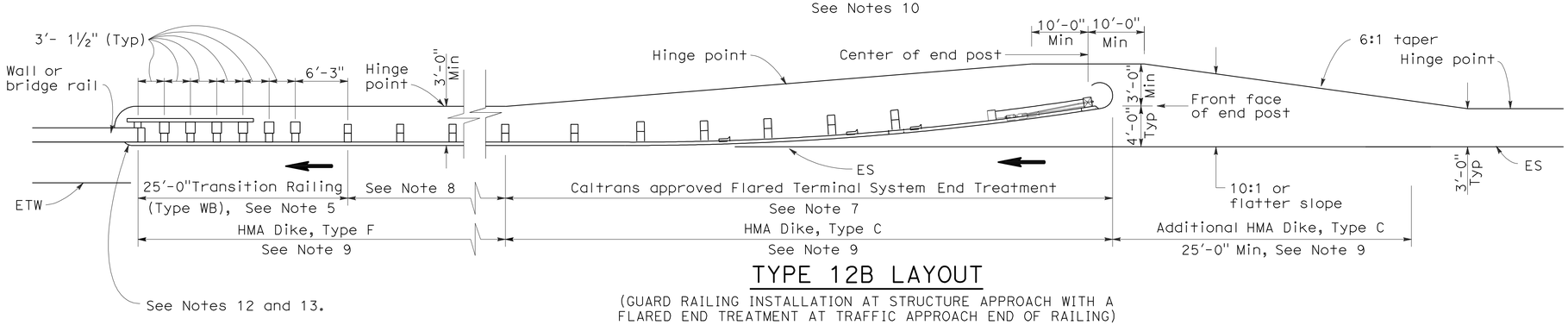


## TYPE 12B LAYOUT

(GUARD RAILING INSTALLATION AT STRUCTURE APPROACH WITH A FLARED END TREATMENT AT TRAFFIC APPROACH END OF RAILING)
See Notes 10

## NOTES:

1. Line post, blocks and hardware to be used are shown on Standard Plans A77A1, A77A2, A77B1, A77C1 and A77C2.
2. Guard rail post spacing to be 6'-3" center to center, except as otherwise noted.
3. Except as noted, line posts are 6" x 8" x 6'-0" wood with 6" x 8" x 1'-2" wood blocks. W6 x 9 steel posts, 6'-0" in length, with 6" x 8" x 1'-2" notched wood blocks or plastic blocks may be used for 6" x 8" x 6'-0" wood posts with 6" x 8" x 1'-2" wood blocks where applicable and when specified.
4. Direction of adjacent traffic indicated by ⟶.
5. For Transition Railing (Type WB) details for Types 12A and 12B Layouts, see Standard Plan A77J4.
6. In-line Terminal System End Treatments are used where site conditions will not accommodate a flared end treatment.
7. The type of terminal system end treatment to be used will be shown on the Project Plans.
8. Dependent on site conditions (embankment height, side slopes, or other fixed objects), it may be advisable to construct additional guard railing (a length equal to multiples of 12'-6" with 6'-3" post spacing) between the transition railing and end treatment.
9. Where placement of dike is required with guard railing installations, see Revised Standard Plan RSP A77C4 for dike positioning details.
10. Type 12A or Type 12B Layouts are typically used:
    a. To the right of approaching traffic, at the end of a structure, on two-lane conventional highway where the roadbed width across the structure is less than 40 feet.
    b. To the left of approaching traffic, at the end of a structure, on two-lane conventional highway where the roadbed width across the structure is less than 40 feet.
    c. To the right of approaching traffic at the end of each structure on multilane freeways or expressways with separate adjacent or parallel bridges.
    d. To the right of approaching traffic at the end of the structure on multilane freeways or expressways with decked median on the bridge.
11. See Revised Standard Plan RSP A77F3 for typical layout used left of approaching traffic at the ends of each structure on multilane freeways or expressways with separate adjacent or parallel bridges.
12. For additional details of typical connections to bridge rail, see Connection Detail AA on Revised Standard Plans RSP A77J1 and RSP A77J2 and Connection Detail FF on Standard Plans A77K1 and A77K2.
13. For additional details of a typical connection to walls or abutments, see Standard Plan A77J3.

STATE OF CALIFORNIA
DEPARTMENT OF TRANSPORTATION

# METAL BEAM GUARD RAILING TYPICAL LAYOUTS FOR STRUCTURE APPROACH

NO SCALE

RSP A77F1 DATED JUNE 6, 2008 SUPERSEDES STANDARD PLAN A77F1
DATED MAY 1, 2006 - PAGE 54 OF THE STANDARD PLANS BOOK DATED MAY 2006.

**REVISED STANDARD PLAN RSP A77F1**

**2006 REVISED STANDARD PLAN RSP A77F1**

12-10-07

| DIST | COUNTY | ROUTE | POST MILES TOTAL PROJECT | SHEET NO. | TOTAL SHEETS |
|---|---|---|---|---|---|
| 02 | Sha | 5 | R14.9/R16.2 | 88 | 165 |

Randell D. Hiatt
REGISTERED CIVIL ENGINEER

June 6, 2008
PLANS APPROVAL DATE

REGISTERED PROFESSIONAL ENGINEER
Randell D. Hiatt
No. C50200
Exp. 6-30-09
CIVIL
STATE OF CALIFORNIA

*The State of California or its officers or agents shall not be responsible for the accuracy or completeness of electronic copies of this plan sheet.*

*To accompany plans dated* 5-10-10

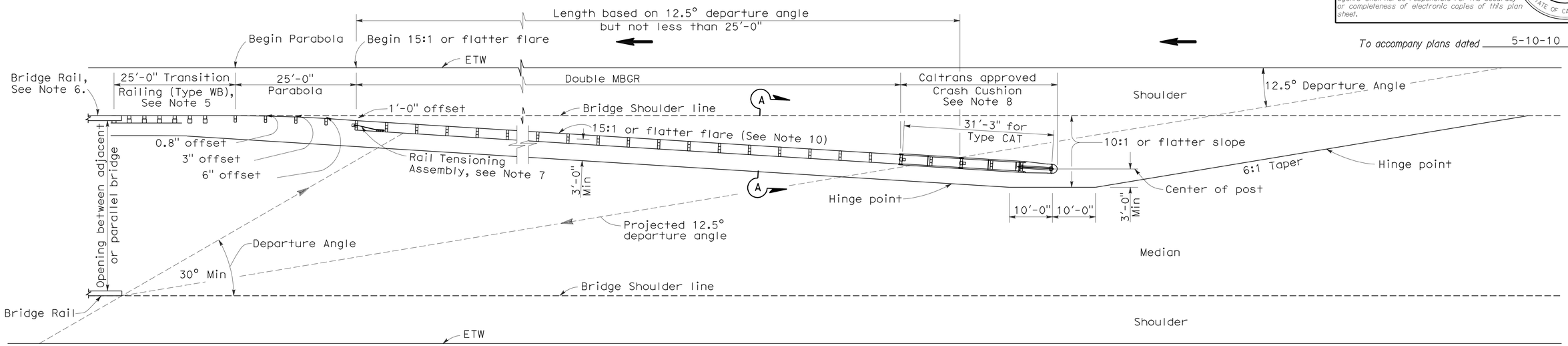


## TYPE 12E LAYOUT

See Note 10

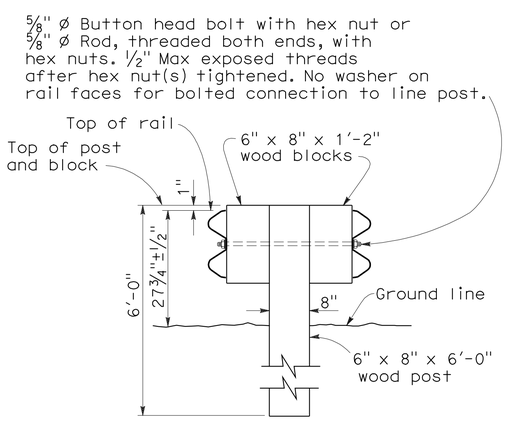


SECTION A-A

## TYPICAL DOUBLE METAL BEAM GUARD RAILING

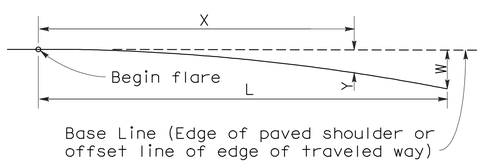


$$Y = \frac{WX^2}{L^2}$$

Y = Offset from base line
W = Maximum offset
X = Distance along base line
L = Length of flare

## PARABOLIC FLARE OFFSETS

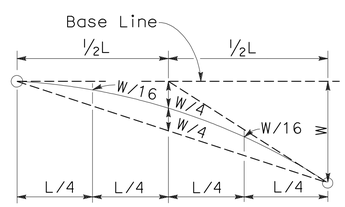


## TYPICAL PARABOLIC LAYOUT

## NOTES:

1. Line post, blocks and hardware to be used are shown on Standard Plans A77A1, A77A2, A77B1, A77C1 and A77C2.
2. Guard railing post spacing to be 6'-3" center to center, except as otherwise noted.
3. Except as noted, line posts are 6" x 8" x 6'-0" wood with 6" x 8" x 1'-2" wood blocks. W6 x 9 steel posts, 6'-0" in length, with 6" x 8" x 1'-2" notched wood blocks or notched recycled plastic blocks may be used for 6" x 8" x 6'-0" wood line posts with 6" x 8" x 1'-2" wood blocks where applicable and when specified.
4. Direction of adjacent traffic indicated by ⟶.
5. For Transition Railing (Type WB) details, see Standard Plan A77J4.
6. For additional details of a typical connection to bridge rail, see Connection Detail AA on Revised Standard Plan RSP A77J1.
7. For Rail Tensioning Assembly details, see Standard Plan A77H2.
8. The type of Crash Cushion to be used will be shown on the Project Plans.
9. Type 12E Layout is typically used left of approaching traffic at the end of each structure on multilane freeways or expressways where a median type barrier is not constructed between separated roadbeds.
10. The 15:1 or flatter flare is measured off of the edge of traveled way.

STATE OF CALIFORNIA
DEPARTMENT OF TRANSPORTATION

# METAL BEAM GUARD RAILING TYPICAL LAYOUTS FOR STRUCTURE APPROACH

NO SCALE

RSP A77F3 DATED JUNE 6, 2008 SUPERSEDES STANDARD PLAN A77F3
DATED MAY 1, 2006 - PAGE 56 OF THE STANDARD PLANS BOOK DATED MAY 2006.

**REVISED STANDARD PLAN RSP A77F3**

**2006 REVISED STANDARD PLAN RSP A77F3**

12-10-07

| DIST | COUNTY | ROUTE | POST MILES TOTAL PROJECT | SHEET NO. | TOTAL SHEETS |
|---|---|---|---|---|---|
| 02 | Sha | 5 | R14.9/R16.2 | 89 | 165 |

Randell D. Hiatt
REGISTERED CIVIL ENGINEER

June 6, 2008
PLANS APPROVAL DATE

REGISTERED PROFESSIONAL ENGINEER
Randell D. Hiatt
No. C50200
Exp. 6-30-09
CIVIL
STATE OF CALIFORNIA

*The State of California or its officers or agents shall not be responsible for the accuracy or completeness of electronic copies of this plan sheet.*

*To accompany plans dated* 5-10-10

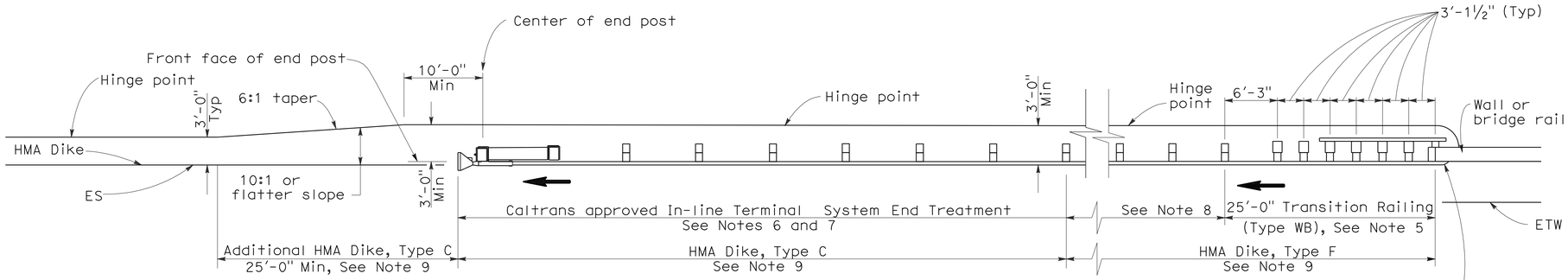


## TYPE 12AA LAYOUT

(GUARD RAILING INSTALLATION AT STRUCTURE DEPARTURE WITH AN IN-LINE END TREATMENT AT TRAILING END OF RAILING)
See Notes 9 and 10

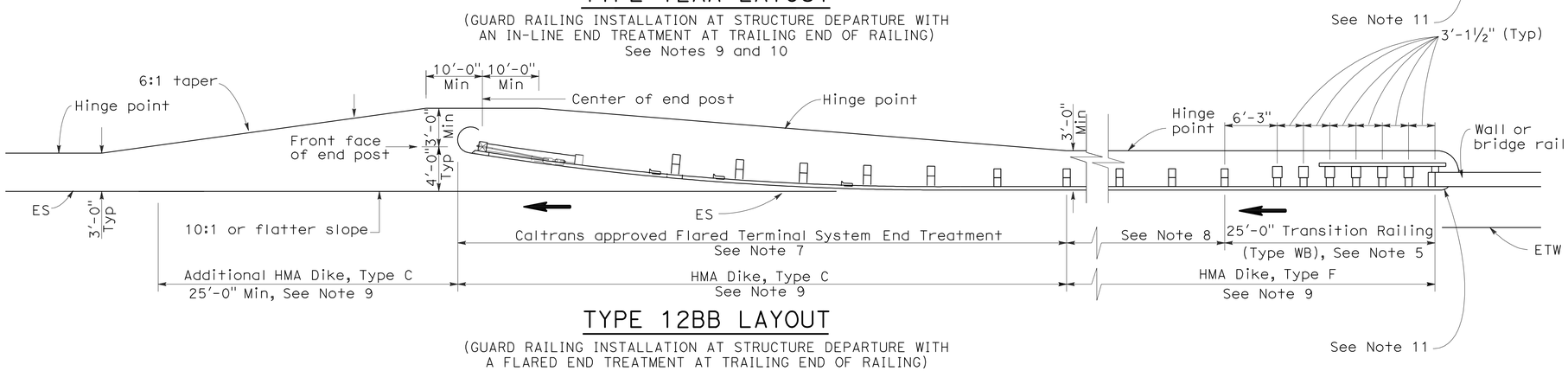


## TYPE 12BB LAYOUT

(GUARD RAILING INSTALLATION AT STRUCTURE DEPARTURE WITH A FLARED END TREATMENT AT TRAILING END OF RAILING)
See Notes 9 and 10

## NOTES:

1. Line post, blocks and hardware to be used are shown on Standard Plans A77A1, A77A2, A77B1, A77C1 and A77C2.
2. Guard rail post spacing to be 6'-3" center to center, except as otherwise noted.
3. Except as noted, line posts are 6" x 8" x 6'-0" wood with 6" x 8" x 1'-2" wood blocks. W6 x 9 steel posts, 6'-0" in length, with 6" x 8" x 1-2" notched wood blocks or notched recycled plastic blocks may be used for 6" x 8" x 6'-0" wood posts with 6" x 8" x 1'-2" wood blocks where applicable and when specified.
4. Direction of adjacent traffic indicated by ➡.
5. For Transition Railing (Type WB) details for Types 12AA and 12BB Layouts, see Standard Plan A77J4.
6. In-line Terminal System Treatments are used where site conditions will not accommodate a flared end treatment.
7. The type of terminal system to be used will be shown on the Project Plans.
8. Dependent on site conditions (embankment height, side slopes, other fixed objects), it may be advisable to construct additional guard railing (a length equal to multiples of 12'-6" with 6'-3" post spacing) between the transition railing and end treatments.
9. Where placement of dike is required with guard railing installations, see Revised Standard Plan RSP A77C4 for dike positioning details.
10. Type 12AA or Type 12BB Layouts are typically used to the right of traffic departing a structure on two-way conventional highways where the roadbed width across the structure is less than 40 feet.
11. For additional details of typical connections to bridge rail, see Connection Detail CC on Revised Standard Plan RSP A77J2 and Connection Detail HH on Standard Plans A77k2.

STATE OF CALIFORNIA
DEPARTMENT OF TRANSPORTATION

# METAL BEAM GUARD RAILING TYPICAL LAYOUTS FOR STRUCTURE DEPARTURE

NO SCALE

RSP A77F4 DATED JUNE 6, 2008 SUPERSEDES STANDARD PLAN A77F4
DATED MAY 1, 2006 - PAGE 57 OF THE STANDARD PLANS BOOK DATED MAY 2006.

**REVISED STANDARD PLAN RSP A77F4**

**2006 REVISED STANDARD PLAN RSP A77F4**

12-10-07

| DIST | COUNTY | ROUTE | POST MILES TOTAL PROJECT | SHEET NO. | TOTAL SHEETS |
|---|---|---|---|---|---|
| 02 | Sha | 5 | R14.9/R16.2 | 90 | 165 |

Randell D. Hiatt
REGISTERED CIVIL ENGINEER

June 6, 2008
PLANS APPROVAL DATE

REGISTERED PROFESSIONAL ENGINEER
Randell D. Hiatt
No. C50200
Exp. 6-30-09
CIVIL
STATE OF CALIFORNIA

*The State of California or its officers or agents shall not be responsible for the accuracy or completeness of electronic copies of this plan sheet.*

*To accompany plans dated* 5-10-10

## NOTES:

1. Line post, blocks and hardware to be used are shown on Standard Plans A77A1, A77A2, A77B1, A77C1 and A77C2.
2. Guard railing post spacing to be 6'-3" center to center, except as otherwise noted.
3. Except as noted, line posts are 6" x 8" x 6'-0" wood with 6" x 8" x 1'-2" wood blocks. W6 x 9 steel posts, 6'-0" in length, with 6" x 8" x 1'-2" notched wood blocks or notched recycled plastic blocks may be used for 6" x 8" x 6'-0" wood line posts with 6" x 8" x 1'-2" wood blocks where applicable and when specified.
4. A 4'-0" minimum clearance is required between the face of the railing and the face of a fixed object located directly behind standard guard railing sections with post spacing of 6'-3". Construct guard railing as shown in the detail "Strengthened Railing Sections for Fixed Objects" on this plan, where the clearance between the face of the railing and the face of a fixed object is less than 4'-0", but not less than 2'-3". Where the clearance is less than 2'-3", a concrete wall or barrier should be constructed to shield the fixed object(s).
5. Direction of adjacent traffic indicated by ➡.
6. For End Anchor Assembly (Type SFT) details, see Standard Plan A77H1.
7. For details of Rail Tensioning Assembly, see Standard Plan A77H2.
8. The type of crash cushion to be used will be shown on the Project Plans.
9. Type 14A layout is typically used on multilane freeways or expressways to shield fixed objects where a median type barrier is not constructed between the separated roadbeds.
10. For typical flare offsets for 25'-0" length parabola with maximum offset of 1'-0", see Revised Standard Plan RSP A77E1.
11. The 15:1 or flatter flare is measured off of the edge of traveled way.
12. W6 x 15 steel post, 8'-0" in length, with 8" x 8" x 1'-2" notched wood block or notched recycled plastic block may be used in place of the 10" x 10" x 8'-0" wood post with 8" x 8" x 1'-2" wood block shown in the "Strengthened Railing Sections Detail".

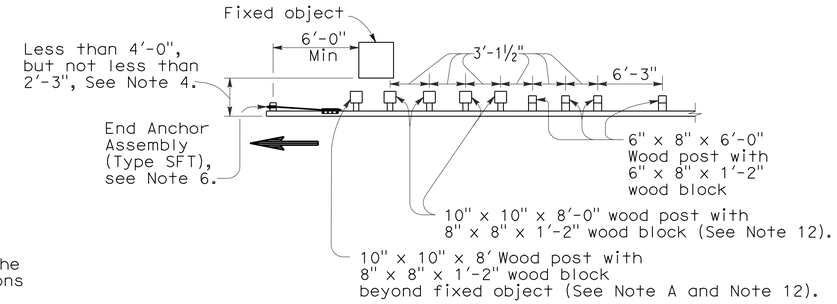


**NOTE A:** For a series of fixed objects (bridge columns, overhead sign supports, etc.) additional 10" x 10" x 8'-0" wood post with 8" x 8" x 1'-2" wood blocks at 3'-1½" center to center spacing are to be used between fixed objects.

## STRENGTHENED RAILING SECTIONS FOR FIXED OBJECT

Use strengthened railing sections with Type 14A layout where minimum clearance between the face of the guard railing and fixed object(s) is less than 4'-0", but not less than 2'-3", See Note 4.

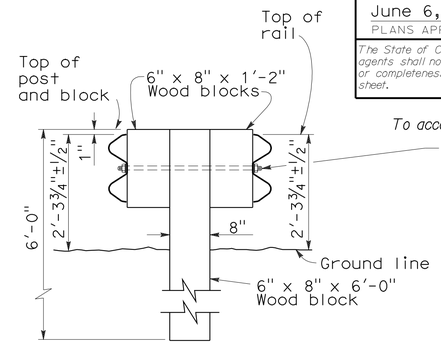


⅝" ø button head bolt with hex nut or ⅝" ø Rod, threaded both ends, with hex nuts. ½" Max exposed threads after hex nut(s) tightened. No washer on rail faces for bolted connection to line post.

## SECTION A-A
## TYPICAL DOUBLE METAL BEAM GUARD RAILING

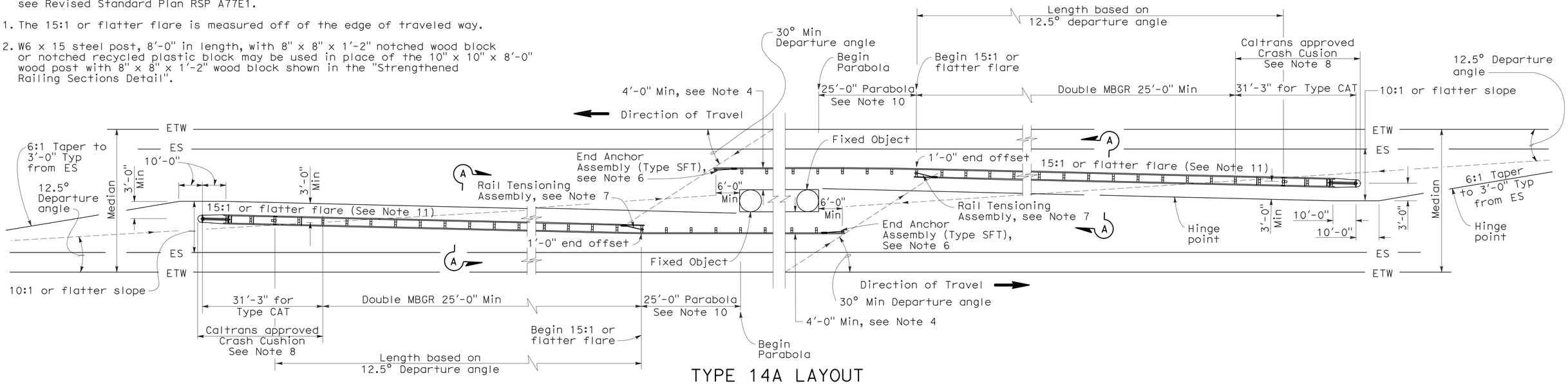


## TYPE 14A LAYOUT

See Note 9

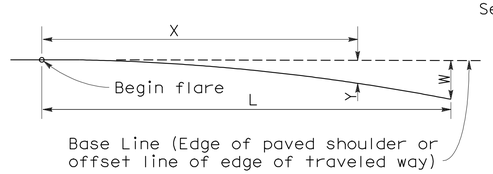


Base Line (Edge of paved shoulder or offset line of edge of traveled way)

$$Y = \frac{WX^2}{L^2}$$

Y = Offset from base line
W = Maximum offset
X = Distance along base line
L = Length of flare

## PARABOLIC FLARE OFFSETS

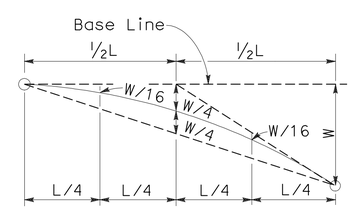


## TYPICAL PARABOLIC LAYOUT

STATE OF CALIFORNIA
DEPARTMENT OF TRANSPORTATION

# METAL BEAM GUARD RAILING TYPICAL LAYOUTS FOR FIXED OBJECTS BETWEEN SEPARATE ROADBEDS (TWO-WAY TRAFFIC)

NO SCALE

RSP A77G1 DATED JUNE 6, 2008 SUPERSEDES STANDARD PLAN A77G1 DATED MAY 1, 2006 - PAGE 59 OF THE STANDARD PLANS BOOK DATED MAY 2006.

**REVISED STANDARD PLAN RSP A77G1**

**2006 REVISED STANDARD PLAN RSP A77G1**

12-10-07

| DIST | COUNTY | ROUTE | POST MILES TOTAL PROJECT | SHEET NO. | TOTAL SHEETS |
|---|---|---|---|---|---|
| 02 | Sha | 5 | R14.9/R16.2 | 91 | 165 |

Randell D. Hiatt
REGISTERED CIVIL ENGINEER

June 6, 2008
PLANS APPROVAL DATE

REGISTERED PROFESSIONAL ENGINEER
Randell D. Hiatt
No. C50200
Exp. 6-30-09
CIVIL
STATE OF CALIFORNIA

*The State of California or its officers or agents shall not be responsible for the accuracy or completeness of electronic copies of this plan sheet.*

*To accompany plans dated* 5-10-10

## NOTES:

1. Line post, blocks and hardware to be used are shown on Standard Plans A77A1, A77A2, A77B1, A77C1 and A77C2.
2. Guard railing post spacing to be 6′-3″ center to center, except as otherwise noted.
3. Except as noted, line posts are 6″ x 8″ x 6′-0″ wood with 6″ x 8″ x 1′-2″ wood blocks. W6 x 9 steel posts, 6′-0″ in length, with 6″ x 8″ x 1′-2″ notched wood blocks or notched recycled plastic blocks may be used for 6″ x 8″ x 6′-0″ wood line posts with 6″ x 8″ x 1′-2″ wood blocks where applicable and when specified.
4. A 4′-0″ minimum clearance is required between the face of the railing and the face of a fixed object located directly behind standard guard railing section with post spacing of 6′-3″. Construct guard railing as shown in the detail "Strengthened Railing Sections for Fixed Objects" on this plan, where the clearance between the face of the railing and the face of a fixed object is less than 4′-0″, but not less than 2′-3″. Where the clearance is less than 2′-3″, a concrete wall or barrier should be constructed to shield the fixed object(s).
5. Direction of adjacent traffic indicated by ➡.
6. For End Anchor Assembly (Type SFT) details, see Standard Plan A77H1.
7. Type of crash cushion to be used will be shown on the Project Plans.
8. Type 15A layout is typically used on multilane freeways or expressways to shield fixed objects in the area between separated one-way roadbeds.
9. For typical flare offsets for 25′-0″ length parabola with maximum offset of 1′-0″, see Revised Standard Plan RSP A77E1.
10. The 15:1 or flatter flare is measured off of the edge of the traveled way.
11. W6 x 15 steel post, 8′-0″ in length, with 8″ x 8″ x 1′-2″ notched wood block or notched recycled plastic blocks may be used in place of the 10″ x 10″ x 8′-0″ wood post with 8″ x 8″ x 1′-2″ wood block shown in the "Strengthened Railing Sections Detail".

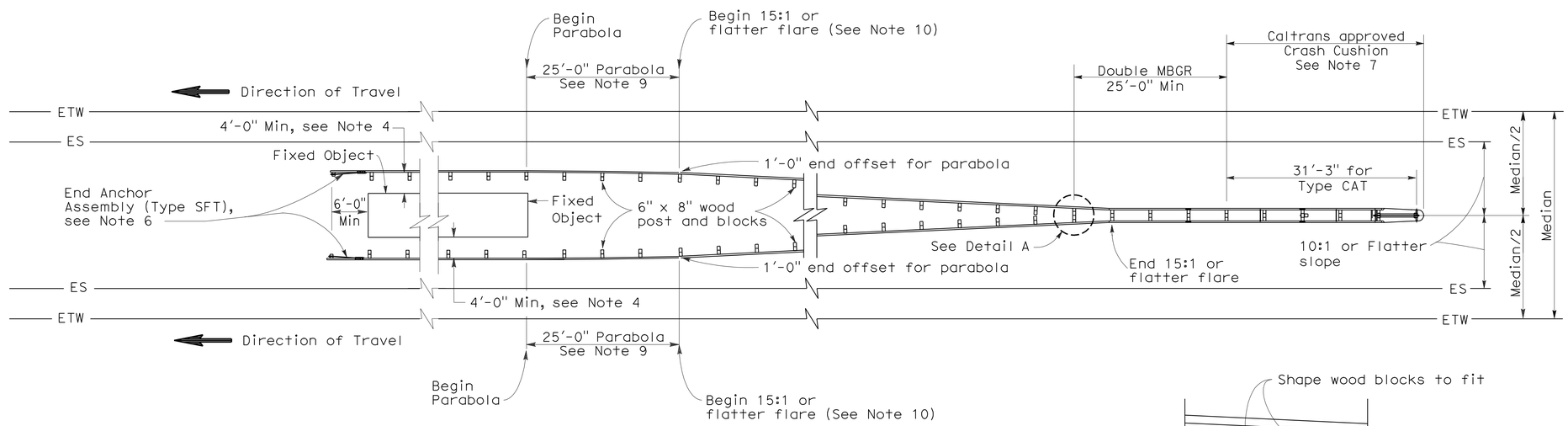


## TYPE 15A LAYOUT

See Note 9

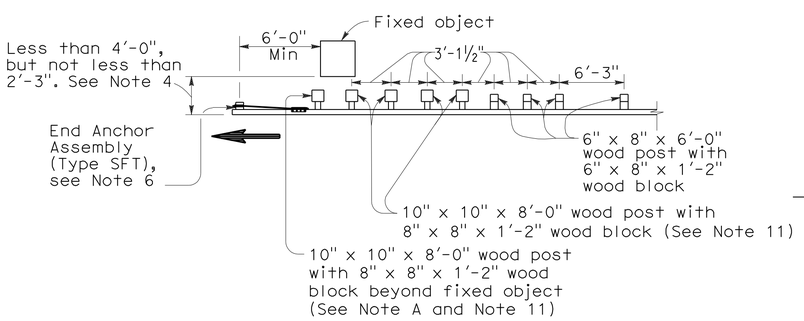


**NOTE A:** For a series of fixed objects (bridge columns, overhead sign supports, etc.) additional 10″ x 10″ x 8′-0″ wood post with 8″ x 8″ x 1′-2″ wood blocks at 3′-1½″ center to center spacing are to be used between fixed objects.

## STRENGTHENED RAILING SECTIONS FOR FIXED OBJECT

Use strengthened railing sections with Type 15A layout where minimum clearance between the face of the guard railing and the fixed object(s) is less than 4′-0″, but not less than 2′-3″. See Note 4.

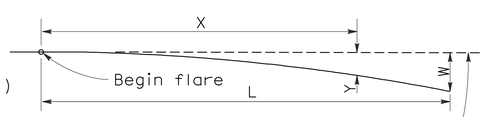


Base Line (Edge of paved shoulder or offset line of edge of traveled way)

$$Y = \frac{WX^2}{L^2}$$

Y = Offset from base line
W = Maximum offset
X = Distance along base line
L = Length of flare

## PARABOLIC FLARE OFFSETS

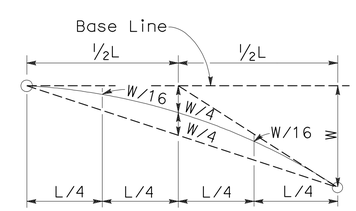


## TYPICAL PARABOLIC LAYOUT

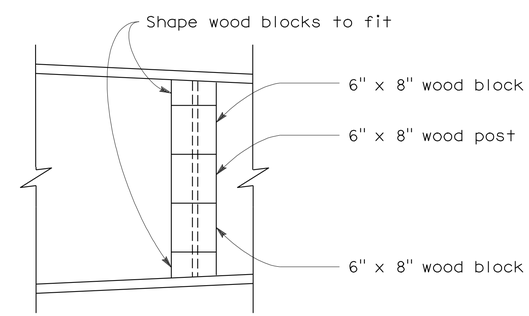


## DETAIL A

STATE OF CALIFORNIA
DEPARTMENT OF TRANSPORTATION

# METAL BEAM GUARD RAILING TYPICAL LAYOUTS FOR FIXED OBJECTS BETWEEN SEPARATE ROADBEDS (ONE-WAY TRAFFIC)

NO SCALE

RSP A77G2 DATED JUNE 6, 2008 SUPERSEDES STANDARD PLAN A77G2
DATED MAY 1, 2006 - PAGE 60 OF THE STANDARD PLANS BOOK DATED MAY 2006.

**REVISED STANDARD PLAN RSP A77G2**

**2006 REVISED STANDARD PLAN RSP A77G2**

12-10-07

| DIST | COUNTY | ROUTE | POST MILES TOTAL PROJECT | SHEET NO. | TOTAL SHEETS |
|---|---|---|---|---|---|
| 02 | Sha | 5 | R14.9/R16.2 | 92 | 165 |

Randell D. Hiatt
REGISTERED CIVIL ENGINEER

June 6, 2008
PLANS APPROVAL DATE

REGISTERED PROFESSIONAL ENGINEER
Randell D. Hiatt
No. C50200
Exp. 6-30-09
CIVIL
STATE OF CALIFORNIA

*The State of California or its officers or agents shall not be responsible for the accuracy or completeness of electronic copies of this plan sheet.*

*To accompany plans dated* 5-10-10

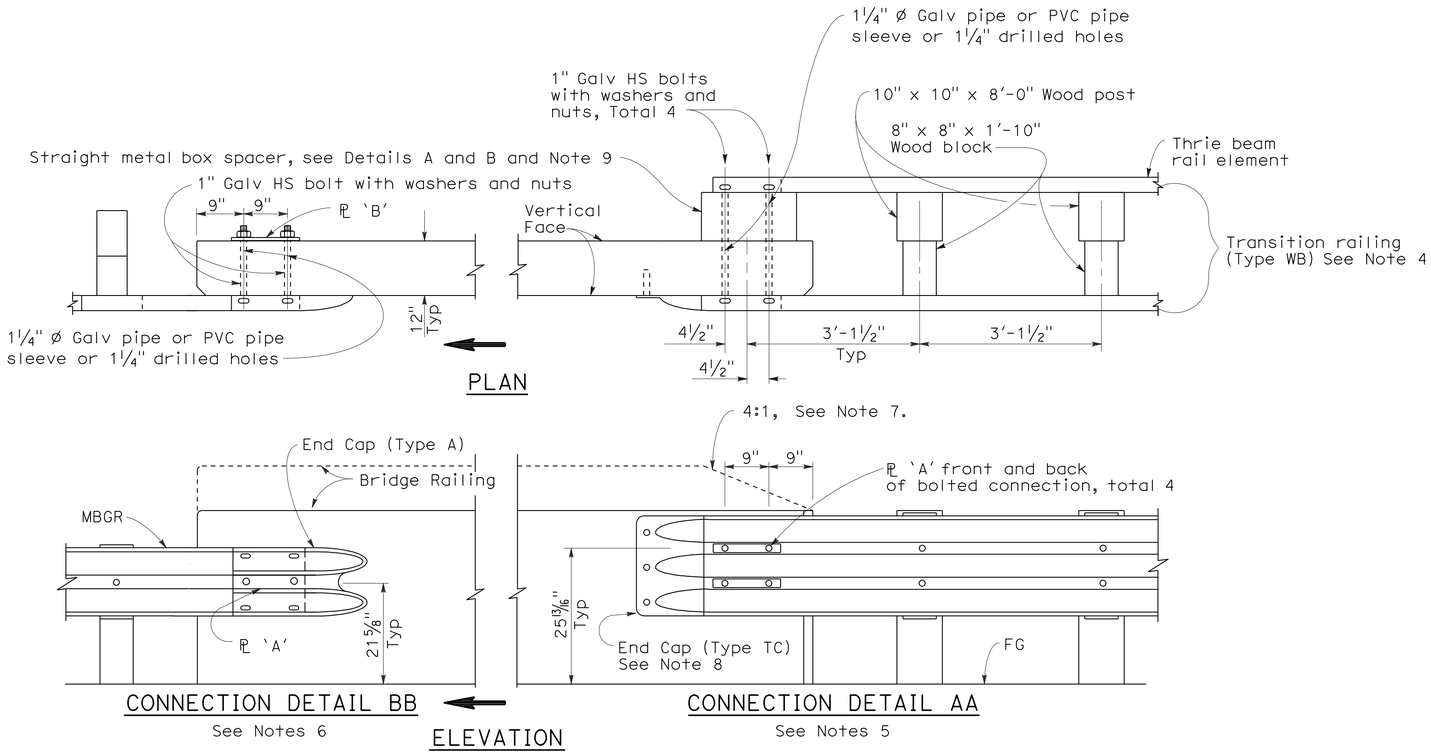


GUARD RAILING CONNECTION TO BRIDGE RAILING WITHOUT SIDEWALK

## NOTES:

1. See Revised Standard Plan RSP A77J2 for additional connection details to bridges without sidewalks.
2. Additional details of posts, blocks and hardware are shown on Standard Plan A77B1, A77C1 and A77C2.
3. Direction of adjacent traffic indicated by ➡.
4. For additional details of Transition Railing (Type WB), see Standard Plan A77J4. Transition Railing (Type WB) transitions the 12 gage w-beam standard railing section of guard railing to a heavier gage nested thrie beam railing section which is connected to the concrete bridge railing.
5. For typical use of Connection Detail AA, see Layout Types 12A and 12B on Revised Standard Plan RSP A77F1, Layout Types 12C and 12D on Standard Plan A77F2, and Layout Type 12E on Revised Standard Plan RSP A77F3.
6. For typical use of Connection Detail BB, see Layout Type 12D (structure departure railing connection) on Standard Plan A77F2 and Layout Type 12DD on Standard Plan A77F5.
7. Where the height of the bridge railing exceeds the height of the thrie beam railing by more than 1" at Connection Detail AA, taper the top of the end of the bridge railing at 4:1 to match the top elevation of the thrie beam rail.
8. For details of End Cap (Type TC), see Standard Plan A77J4.
9. See Standard Plan A77J4 for additional details regarding depth dimension for straight metal box spacer.

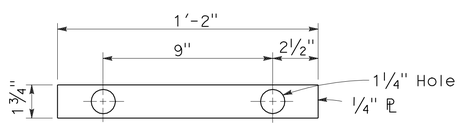


PLATE 'A'

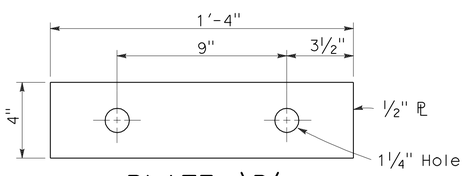


PLATE 'B'
(For backside of connection BB)

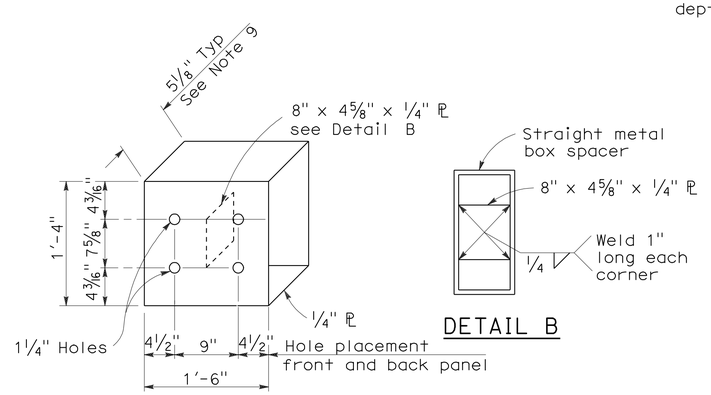


DETAIL A

DETAIL B

STRAIGHT METAL BOX SPACER

STATE OF CALIFORNIA
DEPARTMENT OF TRANSPORTATION

# METAL BEAM GUARD RAILING CONNECTIONS TO BRIDGE RAILINGS WITHOUT SIDEWALKS DETAILS No.1

NO SCALE

RSP A77J1 DATED JUNE 6, 2008 SUPERSEDES STANDARD PLAN A77J1 DATED MAY 1, 2006 - PAGE 72 OF THE STANDARD PLANS BOOK DATED MAY 2006.

**REVISED STANDARD PLAN RSP A77J1**

**2006 REVISED STANDARD PLAN RSP A77J1**

12-10-07

| DIST | COUNTY | ROUTE | POST MILES TOTAL PROJECT | SHEET NO. | TOTAL SHEETS |
|---|---|---|---|---|---|
| 02 | Sha | 5 | R14.9/R16.2 | 93 | 165 |

Randell D. Hiatt
REGISTERED CIVIL ENGINEER

June 6, 2008
PLANS APPROVAL DATE

REGISTERED PROFESSIONAL ENGINEER
Randell D. Hiatt
No. C50200
Exp. 6-30-09
CIVIL
STATE OF CALIFORNIA

*The State of California or its officers or agents shall not be responsible for the accuracy or completeness of electronic copies of this plan sheet.*

*To accompany plans dated* 5-10-10

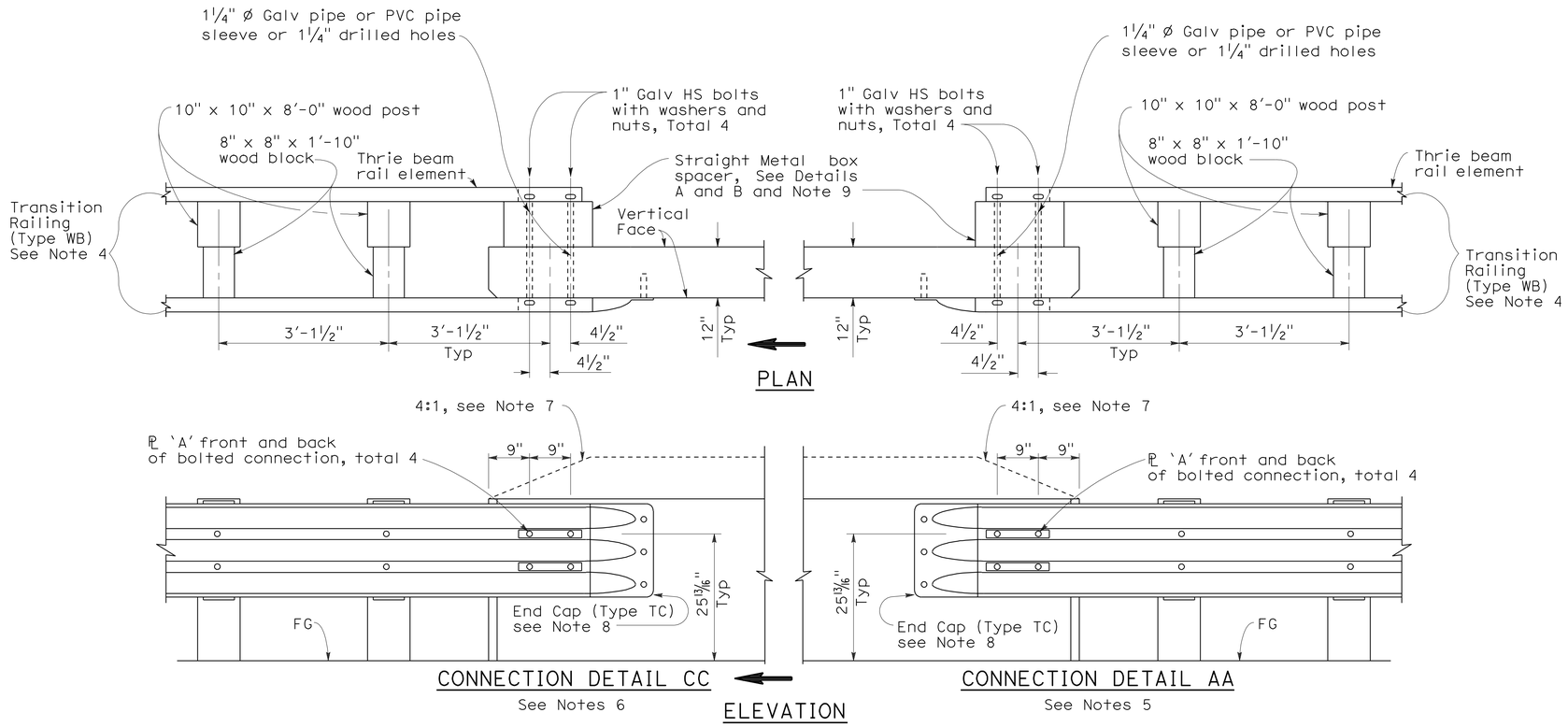


GUARD RAILING CONNECTION TO BRIDGE RAILING WITHOUT SIDEWALK

## NOTES:

1. See Revised Standard Plan RSP A77J1 for additional connection details to bridges without sidewalks.
2. Additional details of posts, blocks and hardware are shown on Standard Plan A77B1, A77C1 and A77C2.
3. Direction of adjacent traffic indicated by ⟹.
4. For additional details of Transition Railing (Type WB), see Standard Plan A77J4. Transition Railing (Type WB) transitions the 12 gage w-beam standard railing section of guard railing to a heavier gage nested thrie beam railing section which is connected to the concrete bridge railing.
5. For typical use of Connection Detail AA, see Layout Types 12A and 12B on Revised Standard Plan RSP A77F1, Layout Types 12C and 12D on Standard Plan A77F2, and Layout Type 12E on Revised Standard Plan RSP A77F3.
6. For typical use of Connection Detail CC, see Layout Types 12AA and 12BB on Standard Plan A77F4 and Layout Type 12CC on Standard Plan A77F5.
7. Where the height of the bridge railing exceeds the height of the thrie beam railing by more than 1" at Connection Detail AA and connection Detail CC, taper the top of the end of the bridge railing at 4:1 to match the top elevation of the thrie beam railing.
8. For details of End Cap (Type TC), see Standard Plans A77J4.
9. See Standard Plans A77J4 for additional details regarding depth dimension for straight metal box spacer.

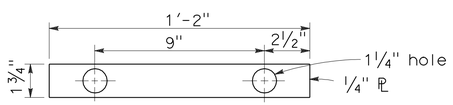


PLATE 'A'

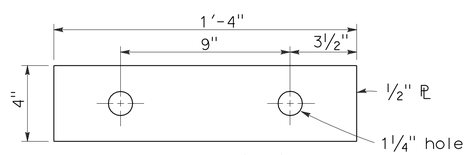


PLATE 'B'
(For backside of connection BB)

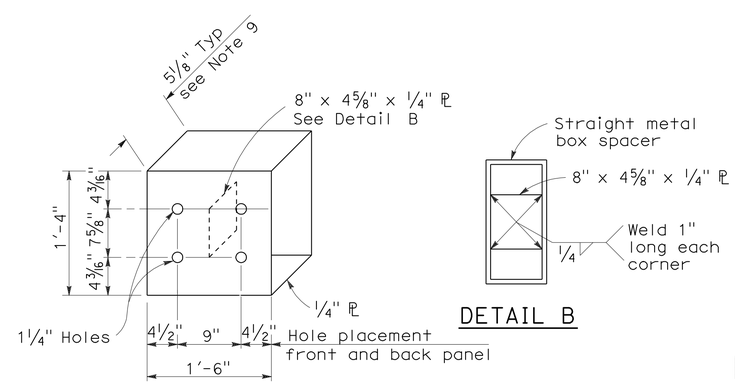


DETAIL A

DETAIL B

STRAIGHT METAL BOX SPACER

STATE OF CALIFORNIA
DEPARTMENT OF TRANSPORTATION

# METAL BEAM GUARD RAILING CONNECTIONS TO BRIDGE RAILINGS WITHOUT SIDEWALKS DETAILS No.2

NO SCALE

RSP A77J2 DATED JUNE 6, 2008 SUPERSEDES STANDARD PLAN A77J2 DATED MAY 1, 2006 - PAGE 73 OF THE STANDARD PLANS BOOK DATED MAY 2006.

**REVISED STANDARD PLAN RSP A77J2**

**2006 REVISED STANDARD PLAN RSP A77J2**

12-10-07

| DIST | COUNTY | ROUTE | POST MILES TOTAL PROJECT | SHEET NO. | TOTAL SHEETS |
|---|---|---|---|---|---|
| 02 | Sha | 5 | R14.9/R16.2 | 94 | 165 |

Randell D. Hiatt
REGISTERED CIVIL ENGINEER

June 5, 2009
PLANS APPROVAL DATE

REGISTERED PROFESSIONAL ENGINEER
Randell D. Hiatt
No. C50200
Exp. 6-30-09
CIVIL
STATE OF CALIFORNIA

*The State of California or its officers or agents shall not be responsible for the accuracy or completeness of electronic copies of this plan sheet.*

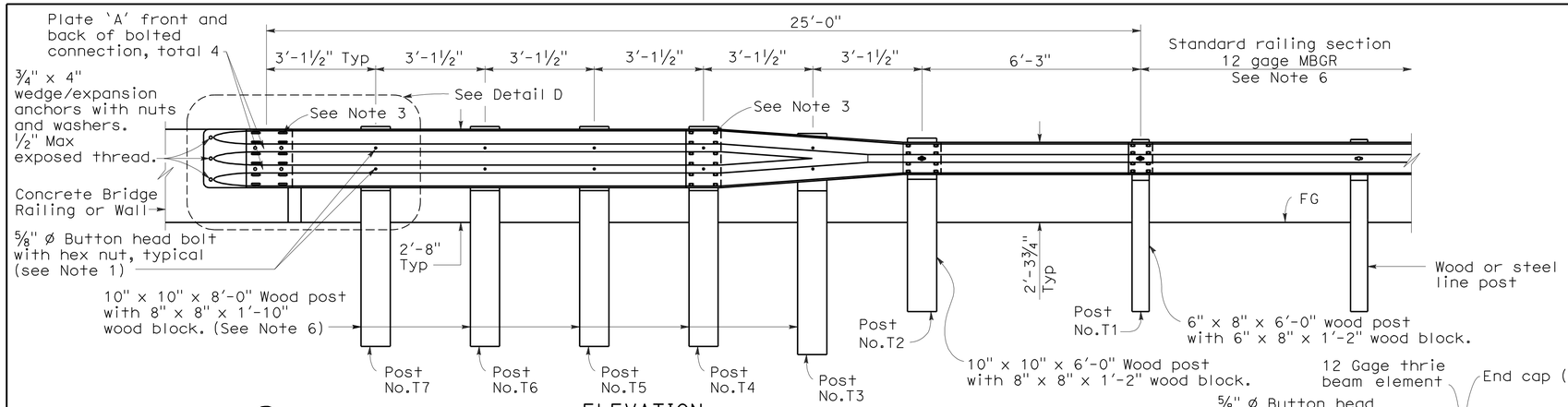


ELEVATION

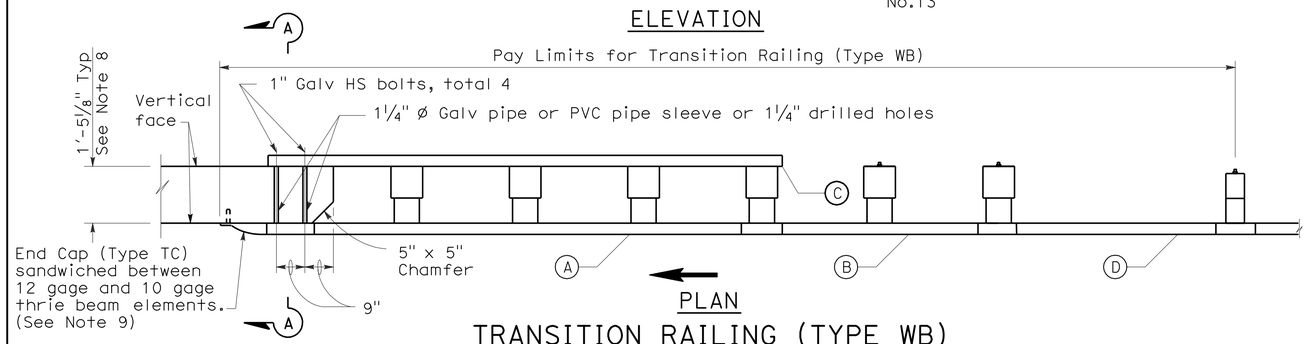


PLAN

TRANSITION RAILING (TYPE WB)

(No Blockout Attachment)

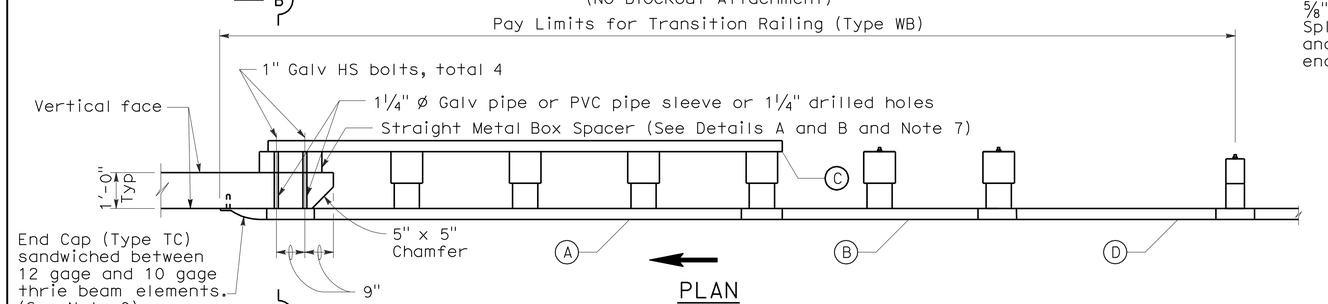


PLAN

TRANSITION RAILING (TYPE WB)

(Blockout Attachment)

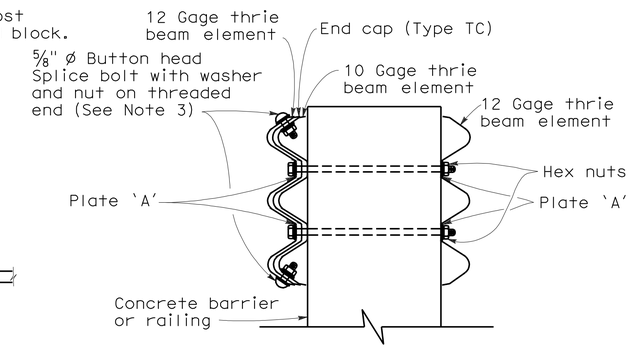


SECTION A-A

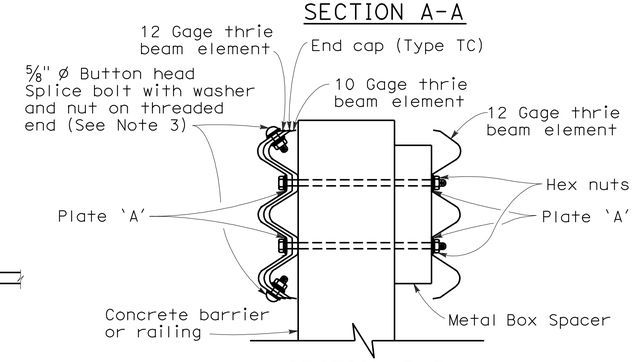


SECTION B-B

## LEGEND

(A) Nested thrie beam elements (one 12 gage element nested over one 10 gage element).

(B) One 10 gage "W" beam to thrie beam element.

(C) One 12 gage thrie beam element.

(D) One 10 gage "W" beam rail element (7'-3½" length)

10 gage = 0.135" thick

12 gage = 0.108" thick

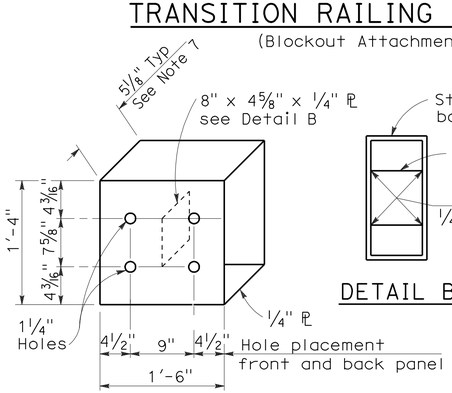


DETAIL A

STRAIGHT METAL BOX SPACER




DETAIL B

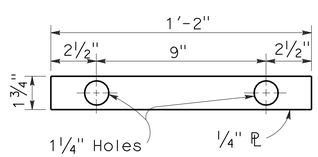


DETAIL C

PLATE 'A'

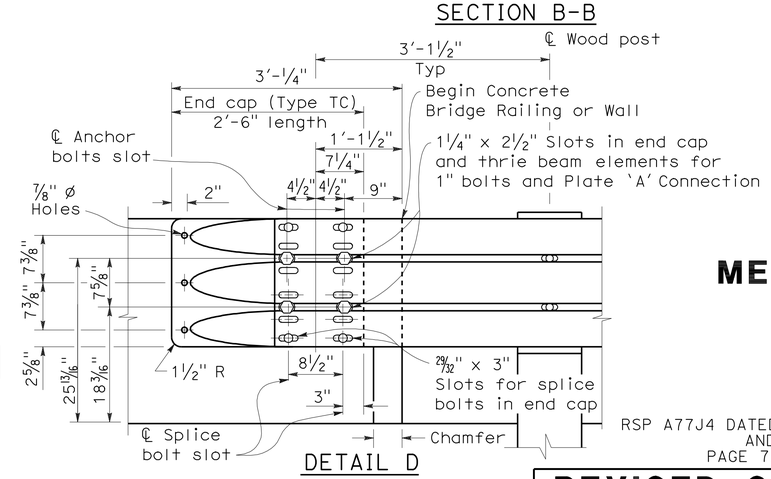


DETAIL D

## NOTES:

*To accompany plans dated* 5-10-10

1. Use 5/8 " Ø Button head bolts and hex nuts for connections to posts. No washer on rail face for bolted connections to post.
2. The nested rail elements, end cap, and 'W' beam to thrie beam element may be spliced together prior to bolting the elements to the wood post and concrete barrier or railing.
3. Exterior splice bolt holes for rail element splices at Post No.T4 and the connection to the concrete barrier or railing shall be the standard 29/32 " x 1 1/8 " slot size. Interior splice bolt holes at these locations may be increased up to 1 1/4 " Ø. Only the top 2 and the bottom 2 splice bolts with washers and nuts are required for rail splices at Post No.T4 and the connection to the concrete barrier or railing.
4. Direction of adjacent traffic indicated by →.
5. The top elevation of Post Nos.T2 through T7 shall not project more than 1" above the top elevation of the rail element.
6. Typically, the railing connected to Transition Railing (Type WB) will be either standard railing section of metal beam guard railing or an approved Caltrans end treatment attached to Post No.T1.
7. The depth of the metal box spacer varies from the 5 1/8 " to 1 1/2 " and is dependent on the width of the concrete railing or wall. The combined dimension for the depth of the metal box spacer plus the width of railing or wall is typically 17 1/8 ". Where the space between the backside of the concrete railing or wall and the rear thrie beam element is less than 1 1/2 ", metal plates similar to Plate 'A' are to be used as spacers.
8. Where the width of the concrete railing or wall is greater than 17 1/8 ", wood blocks are to be used to fill the space created between the backside of Posts No.4 through No.7 and the rear thrie beam element. These wood blocks shall be 8" in width and 1'-2" in length. The dimension between the front thrie beam element and the rear thrie beam element is to match the width of the concrete railing or wall.
9. End cap may be installed over 12 gage and 10 gage thrie beam elements where transition railing is installed on the departure end of bridge railing.

STATE OF CALIFORNIA
DEPARTMENT OF TRANSPORTATION

# METAL BEAM GUARD RAILING TRANSITION RAILING (TYPE WB)

NO SCALE

RSP A77J4 DATED JUNE 5, 2009 SUPERSEDES RSP A77J4 DATED JUNE 6, 2008 AND STANDARD PLAN A77J4 DATED MAY 1, 2006 - PAGE 75 OF THE STANDARD PLANS BOOK DATED MAY 2006.

**REVISED STANDARD PLAN RSP A77J4**

**2006 REVISED STANDARD PLAN RSP A77J4**

5-14-09

| DIST | COUNTY | ROUTE | POST MILES TOTAL PROJECT | SHEET No. | TOTAL SHEETS |
|---|---|---|---|---|---|
| 02 | Sha | 5 | R14.9/R16.2 | 95 | 165 |

Randell D. Hiatt
REGISTERED CIVIL ENGINEER

June 6, 2008
PLANS APPROVAL DATE

REGISTERED PROFESSIONAL ENGINEER
Randell D. Hiatt
No. C50200
Exp. 6-30-09
CIVIL
STATE OF CALIFORNIA

*The State of California or its officers or agents shall not be responsible for the accuracy or completeness of electronic copies of this plan sheet.*

*To accompany plans dated* 5-10-10

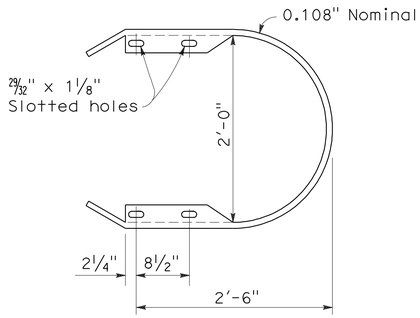


RETURN CAP
(TYPE TA)

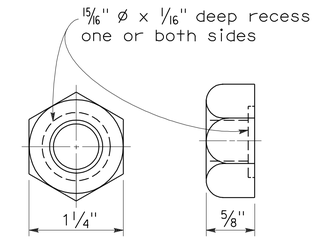


5/8" ø RECESS NUT

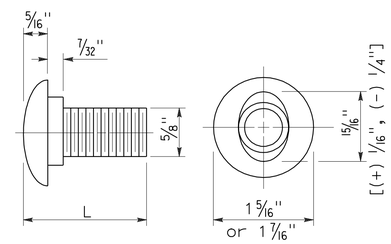


5/8" ø BUTTON HEAD BOLT

| L | THREAD LENGTH |
|---|---|
| 1 1/4" | full thread length |
| 2" | full thread length |
| 9 1/2" | 4" Min thread length |
| 18" | 4" Min thread length |

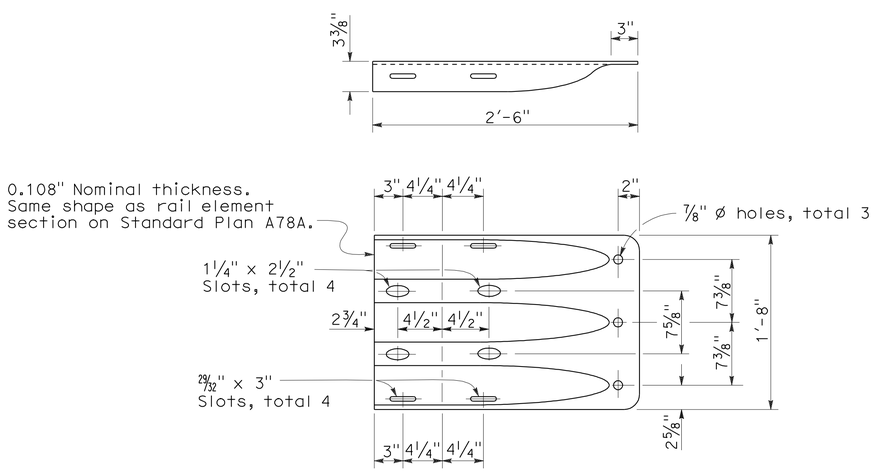


END CAP
(TYPE TC)

STATE OF CALIFORNIA
DEPARTMENT OF TRANSPORTATION

# THRIE BEAM BARRIER STANDARD HARDWARE DETAILS

NO SCALE

RSP A78C1 DATED JUNE 6, 2008 SUPERSEDES STANDARD PLAN A78C1
DATED MAY 1, 2006 - PAGE 85 OF THE STANDARD PLANS BOOK DATED MAY 2006.

**REVISED STANDARD PLAN RSP A78C1**

**2006 REVISED STANDARD PLAN RSP A78C1**

4-21-08

| DIST | COUNTY | ROUTE | POST MILES TOTAL PROJECT | SHEET NO. | TOTAL SHEETS |
|---|---|---|---|---|---|
| 02 | Sha | 5 | R14.9/R16.2 | 96 | 165 |

REGISTERED CIVIL ENGINEER

June 5, 2009
PLANS APPROVAL DATE

REGISTERED PROFESSIONAL ENGINEER Glenn DeCou No. C34547 Exp. 9-30-09 CIVIL STATE OF CALIFORNIA

*The State of California or its officers or agents shall not be responsible for the accuracy or completeness of electronic copies of this plan sheet.*

*To accompany plans dated* 5-10-10

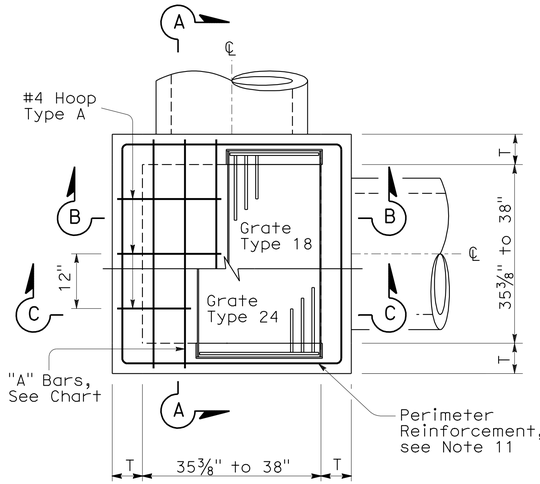


STANDARD TYPE G2 OR G4

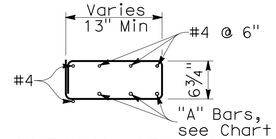


TYPICAL SECTION
(HOOP TYPE A)

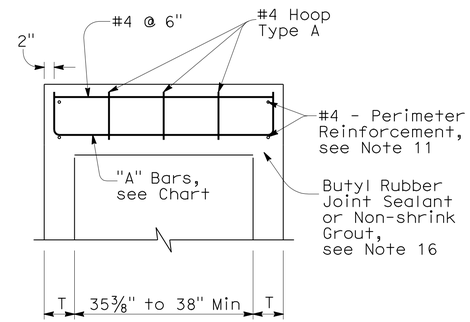


SECTION A-A

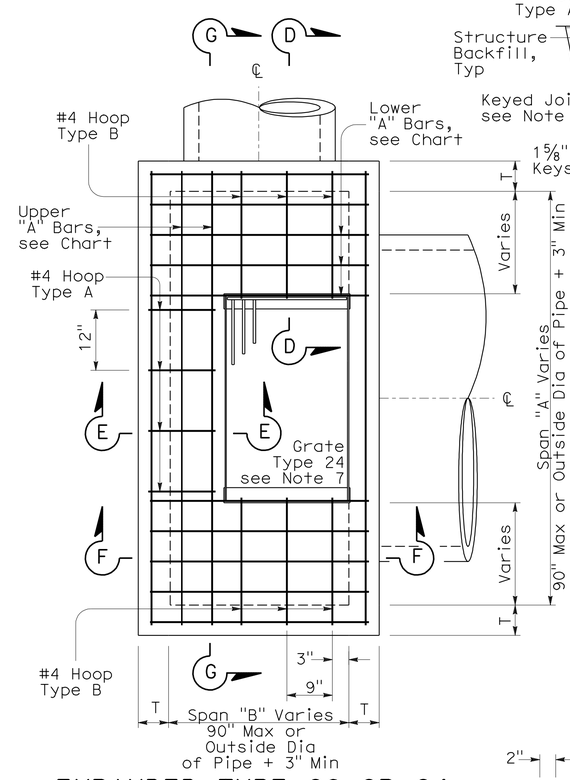


EXPANDED TYPE G2 OR G4
(Top Rebar Not Shown)

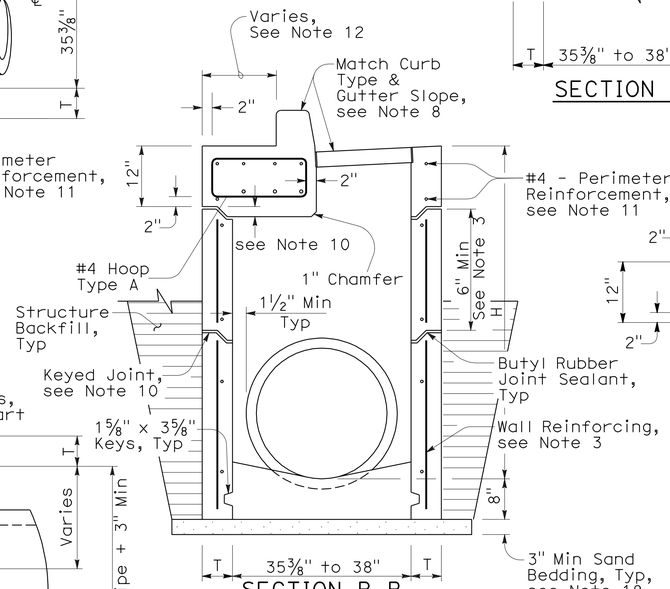


SECTION B-B
(with G4 Top)

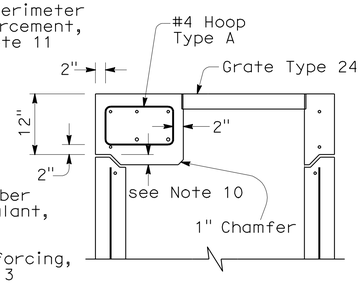


SECTION C-C
(with G2 Top)

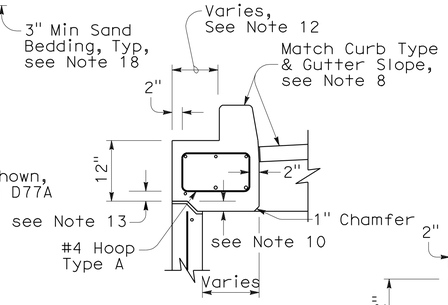


SECTION E-E
(with G4 Top)

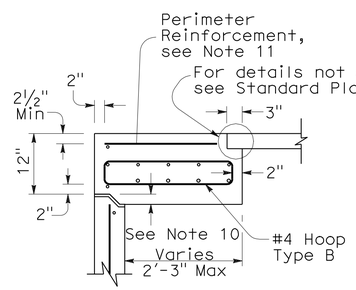


SECTION D-D

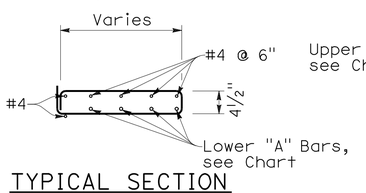


TYPICAL SECTION
(HOOP TYPE B)

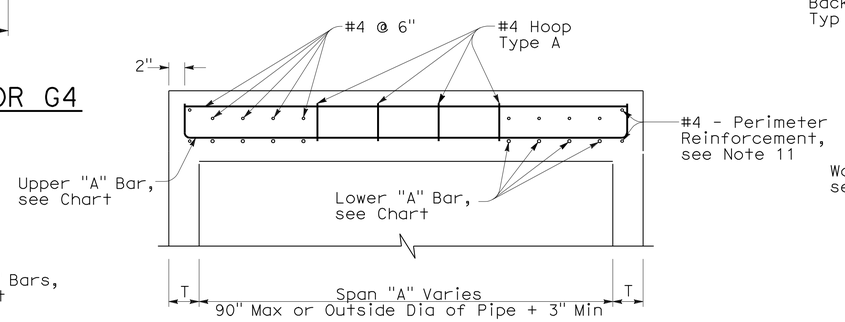


SECTION G-G

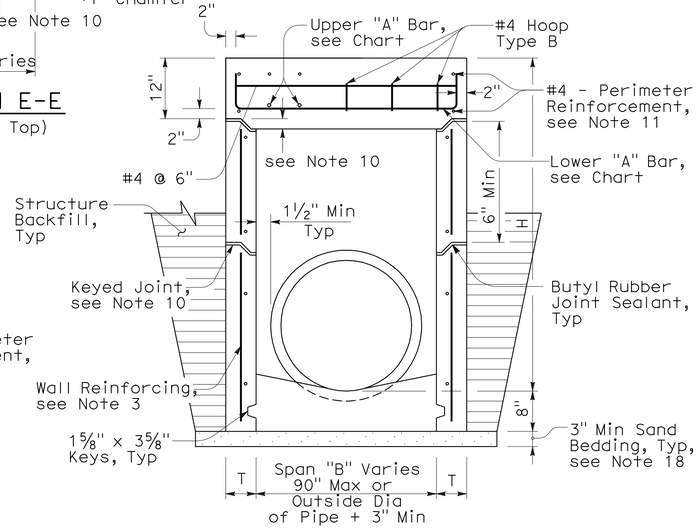


SECTION F-F
(with G2 Top)

## NOTES:

1. "H" is the difference in elevation between the outlet pipe flow line and the normal gutter grade line undepressed.
2. For "T" wall thickness: T=6" when "H" is 8' or less. T=8" when "H" is over 8'.
3. Wall reinforcing not required when "H" is 8' or less and the unsupported width or length is 6'-0" or less. Reinforce wall exceeding these limits with #4 bars @ 1'-6" ± centers placed 2" clear to the inside of inlet unless otherwise shown. Short independent wall sections or height adjustment rings 6" to 24" high must have a minimum of two #4 horizontal bars.
4. Seal pre-cast inlets connection openings between wall and pipe with non-shrink grout or resilient connectors as specified in the Special Provisions.
5. Steps - None required where "H" is less than 2'-6". Where "H" is 2'-6" or more, install steps with lowest rung 1'-0" above the floor and highest rung not more than 6" below bottom of lid. The distance between steps must not exceed 1'-0" and be uniform throughout the length of the wall. Place steps in the wall without an opening. Steps inserts may be substituted for the bar steps. Step inserts must comply with State Industrial Safety Requirements. See Standard Plan D74C for step details.
6. Pipe(s) can be placed in any wall.
7. Set inlet so that grate bars are parallel to direction of principal surface flow.
8. Type G4 inlet can use Grate Type 18 or 24. Type G2 inlet uses Grate Type 24. See Revised Standard Plan RSP D77A and Standard Plan D77B for grate and frame details and weights of miscellaneous Iron and Steel.
9. G4 inlet details are the same as the G2 with the addition of a curb and sloped grate that matches the adjacent curb and gutter depression. See Standard Plans D78A & D78B for gutter and inlet depresssion details. See Revised Standard Plan RSP A87A & Standard Plan A87B for Curb and Dike Details.
10. Provide pre-cast inlets with separate top sections for final grade adjustment under Standard Specifcation Section 51-1.02. Provide keyed joints between the top and wall and multiple wall sections. Joint design may vary but must be 1" to 3" in depth.
11. Perimeter reinforcement serves as a rigid frame to position and attach the required structural reinforcement and may be tack welded at outer corners when using ASTM A706 weldable bars.
12. This dimension will vary with different grates, curbs types, box width and wall thickness.
13. 2" unless inlet is expanded in the Span "A" direction, then clearance is 2" plus the diameter of the lower "A" bar.
14. Place "A" Bars at an angle so hooked ends will maintain 2" clear coverage.
15. Refer to Standard Plan D73, Table A for concrete quantities.
16. Non-shrink grout can be used for upper most joint to facilitate final top grade adjustment.
17. Slope inlet floors 4:1 towards the outlet pipe. Pre-cast inlets may have monolithic sloped floors, flat floors, or no floors in which case a sloped floor must be cast in the field. Inlet floors do not require reinforcing.
18. Extend sand bedding under all structure backfill.

### TOP REINFORCEMENT CHART

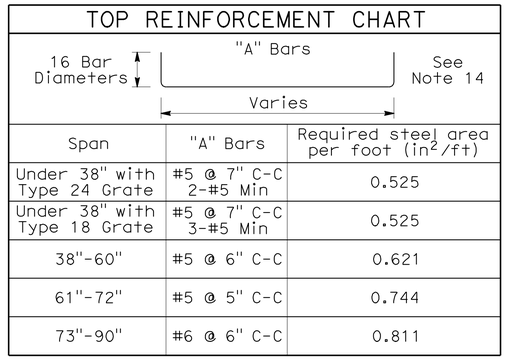


| Span | "A" Bars | Required steel area per foot ($in^2/ft$) |
|---|---|---|
| Under 38" with Type 24 Grate | #5 @ 7" C-C 2-#5 Min | 0.525 |
| Under 38" with Type 18 Grate | #5 @ 7" C-C 3-#5 Min | 0.525 |
| 38"-60" | #5 @ 6" C-C | 0.621 |
| 61"-72" | #5 @ 5" C-C | 0.744 |
| 73"-90" | #6 @ 6" C-C | 0.811 |

STATE OF CALIFORNIA
DEPARTMENT OF TRANSPORTATION

# DRAINAGE INLETS (PRECAST)

NO SCALE

NSP D73A DATED JUNE 5, 2009 SUPPLEMENTS THE STANDARD PLANS BOOK DATED MAY 2006.

**NEW STANDARD PLAN NSP D73A**

**2006 NEW STANDARD PLAN NSP D73A**

3-16-09

| DIST | COUNTY | ROUTE | POST MILES TOTAL PROJECT | SHEET NO. | TOTAL SHEETS |
|---|---|---|---|---|---|
| 02 | Sha | 5 | R14.9/R16.2 | 97 | 165 |

Raymond Don Tsztoo
REGISTERED CIVIL ENGINEER

June 6, 2008
PLANS APPROVAL DATE

REGISTERED PROFESSIONAL ENGINEER
Raymond Don Tsztoo
No. C37332
Exp. 6-30-08
CIVIL
STATE OF CALIFORNIA

*The State of California or its officers or agents shall not be responsible for the accuracy or completeness of electronic copies of this plan sheet.*

*To accompany plans dated* 5-10-10

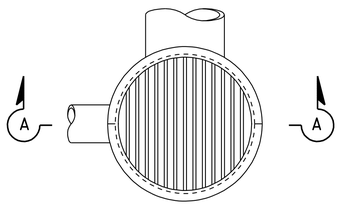


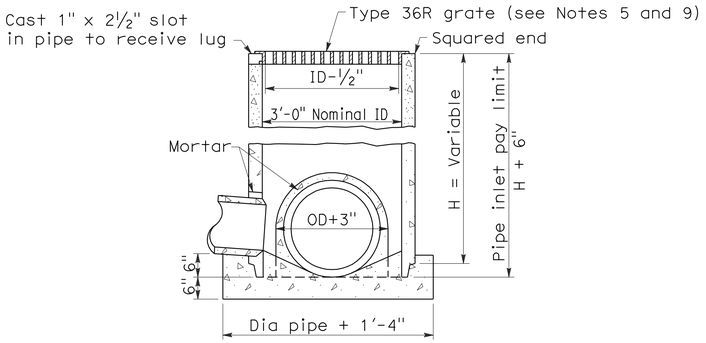


SECTION A-A

TYPE GCP

CONCRETE PIPE INLET WITH GRATE

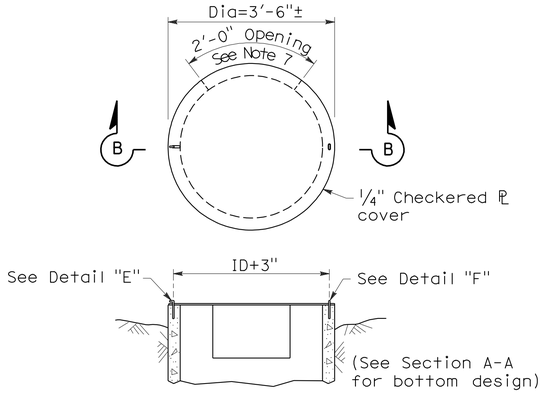


SECTION B-B

TYPE OCP or OCPI

CONCRETE PIPE INLET WITH STEEL COVER
(See Note 6)

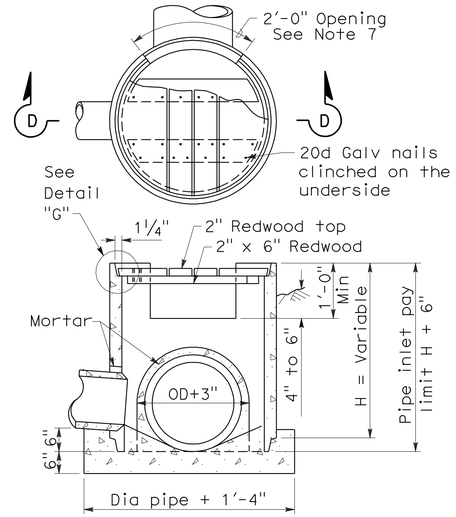


SECTION D-D

TYPE OCP or OCPI

CONCRETE PIPE INLET WITH REDWOOD COVER
(See Notes 6 and 10)

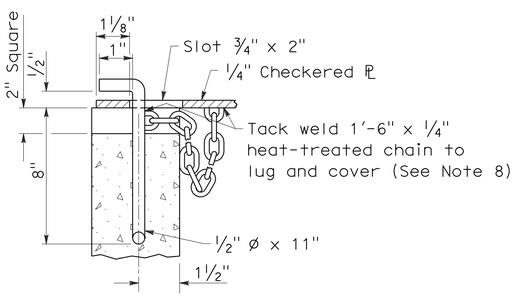


DETAIL "E"

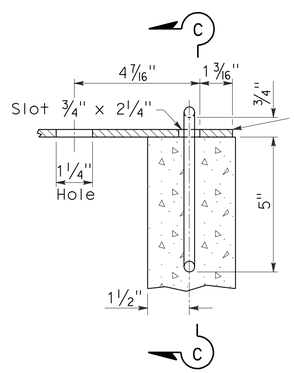


DETAIL "F"

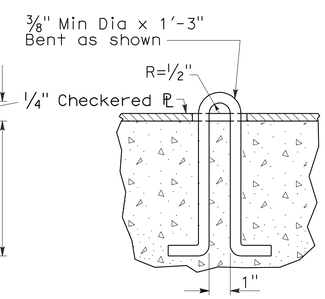


SECTION C-C

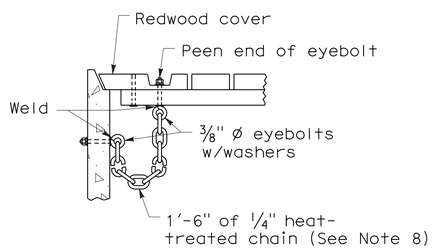


DETAIL "G"

## NOTES:

1. For details of steel pipe inlets, see Standard Plan D75A.
2. For details of ladder and steps and when ladder or steps are required, see Standard Plan D75C.
3. Inlet pipes shall not protrude into basin.
4. Except for inlets used for junction boxes, basin floors shall have minimum slope of 4:1 from all directions toward outlet pipe, and a wood trowel finish.
5. See Revised Standard Plan RSP D77A and Standard Plan D77B for Grate and Frame Details and Weights of Miscellaneous Iron and Steel.
6. Designation of Type OCPI pipe inlets on plans indicates trash racks are to be furnished and installed on all side openings. See Standard Plan D75C for Trash Rack details.
7. More than one side opening may be required. Location and number as ordered by the Engineer. Opening may be cast in pipe.
8. Chain to be provided when specified.
9. Place pipe so bars of grate will be parallel with main surface flow.
10. Redwood covers shall only be placed at locations designated on the plans.

STATE OF CALIFORNIA
DEPARTMENT OF TRANSPORTATION

# CONCRETE PIPE INLETS

NO SCALE

RSP D75B DATED JUNE 6, 2008 SUPERSEDES STANDARD PLAN D75B
DATED MAY 1, 2006 - PAGE 153 OF THE STANDARD PLANS BOOK DATED MAY 2006.

**REVISED STANDARD PLAN RSP D75B**

**2006 REVISED STANDARD PLAN RSP D75B**

| DIST | COUNTY | ROUTE | POST MILES TOTAL PROJECT | SHEET NO. | TOTAL SHEETS |
|---|---|---|---|---|---|
| 02 | Sha | 5 | R14.9/R16.2 | 98 | 165 |

Raymond Don Tsztoo
REGISTERED CIVIL ENGINEER

January 18, 2008
PLANS APPROVAL DATE

REGISTERED PROFESSIONAL ENGINEER
Raymond Don Tsztoo
No. C37332
Exp. 6-30-08
CIVIL
STATE OF CALIFORNIA

*The State of California or its officers or agents shall not be responsible for the accuracy or completeness of electronic copies of this plan sheet.*

*To accompany plans dated* 5-10-10

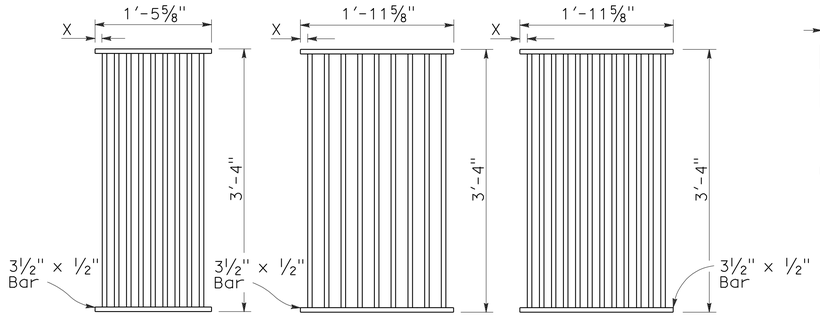


TYPE 18-9

1⅜" Clear spacing. Use within the roadbed on highways where bicycles and pedestrians are excluded.

TYPE 24-9

2" Clear spacing. Use in locations off the roadbed on all types of highways.

TYPE 24-12

1⅜" Clear spacing. Use within the roadbed on highways where bicycles and pedestrians are excluded.

## RECTANGULAR GRATE DETAILS

(See table below)

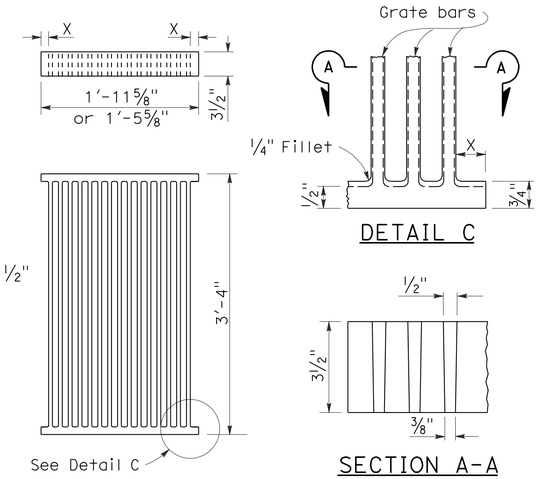


DETAIL C

SECTION A-A

## ALTERNATIVE CAST NODULAR IRON GRATE OR CAST STEEL GRATE

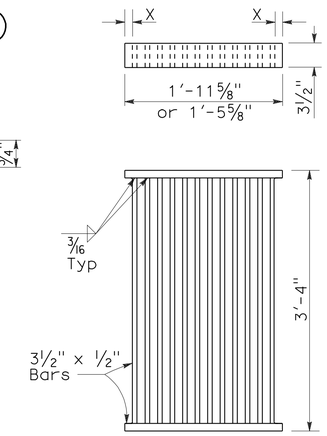


## ALTERNATIVE WELDED GRATE

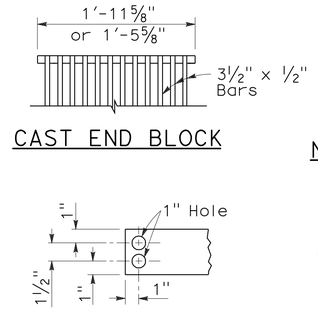


CAST END BLOCK

END OF BAR

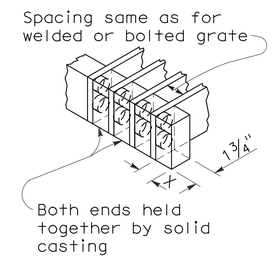


## ALTERNATIVE CAST NODULAR IRON OR CAST STEEL END BLOCK GRATE

## NOTES:

1. Grate type numbers refer to approximate width of grate in inches and number of bars, respectively.
2. Contractor has the option of using cast nodular iron, cast steel, welded, bolted, or cast end block grate.
3. See Special Provisions for requirements pertaining to galvanizing or asphalt dipping of grates and frames.
4. Rounded top of bars optional on all grates.
5. Pipe inlets with a grate shall be placed so that bars parallel direction of principle surface flow.
6. Full penetration butt welds may be substituted for the fillet welds on all anchors.
7. Standard square, hexagon, round or equivalent headed anchors may be substituted for the right angle hooks on the anchors shown on this plan.
8. Grate and frame weights are based on welded grates (weights of face angles, steps, protection bars, etc. are not included).

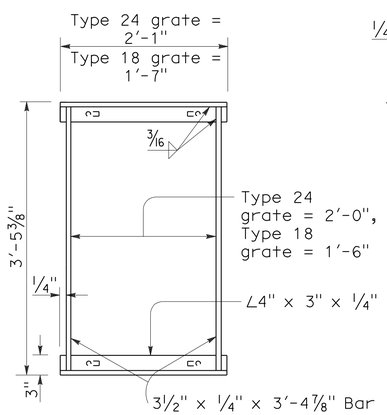


TYPICAL FRAME

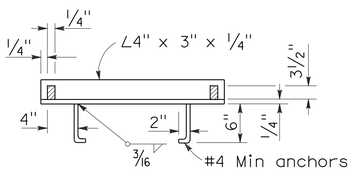


CROSS SECTION

(Thru frame)

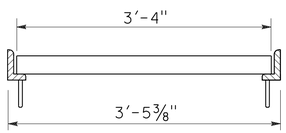


LONGITUDINAL SECTION

(Thru frame and grate)

## RECTANGULAR FRAME DETAILS

(For all rectangular grates)

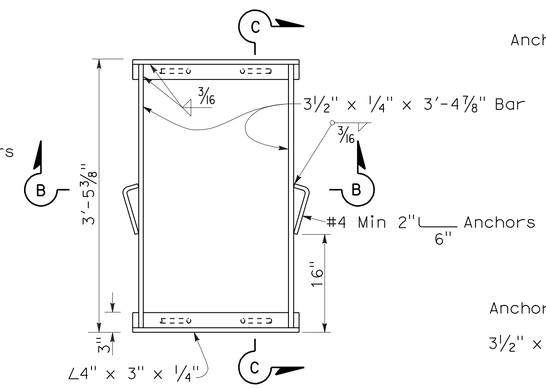


TYPICAL FRAME

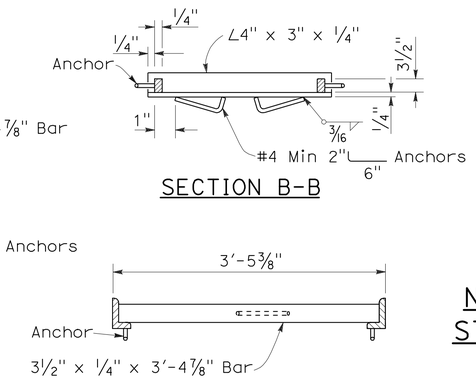


SECTION B-B

SECTION C-C

## ALTERNATIVE ANCHOR FOR RECTANGULAR FRAME

(For details not shown, See Rectangular Frame Details)

| INLET TYPE | GRATE TYPE | No. OF GRATES | WEIGHT LB |
|---|---|---|---|
| GDO | 24-12 | 2 | 634 |
| | | | |
| GOL-7 | 24-12 | 1 | 326 |
| | | | |
| GOL-10 | 24-12 | 1 | 326 |
| | | | |
| GO,G1,G2,G3,G4 (TYPE 24) | 24-9 | 1 | 263 |
| | 24-12 | 1 | 326 |
| | | | |
| G4 (TYPE 18),G5,G6 | 18-9 | 1 | 249 |
| GT1 | 18-9 | 2 | 498 |
| GT2 | 18-9 | 2 | 498 |
| GT3 | 24-12 | 2 | 652 |
| | | | |
| GT4 | 24-12 | 2 | 652 |
| | | | |
| TRASH RACK | | | 22 |

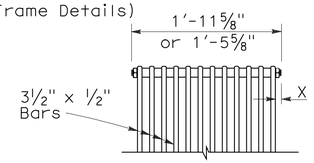


BOLTED END BLOCK

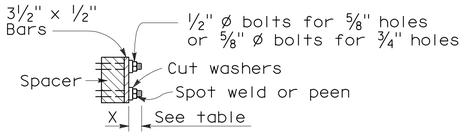


BOLTING DETAIL

## ALTERNATIVE BOLTED GRATE

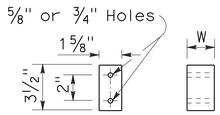


BAR SPACER

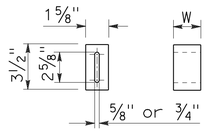


ALTERNATIVE SPACER

W = 1⅜" or 2"

GRATE BAR SPACING TABLE

| TYPE | No. OF BARS | CLEAR BAR SPACING | X |
|---|---|---|---|
| 18-9 | 9 | 1⅜" | 1 1/16" |
| 24-9 | 9 | 2" | 1 9/16" |
| 24-12 | 12 | 1⅜" | 1¼" |

| INLET TYPE | COVER TYPE | WEIGHT LB |
|---|---|---|
| OS | PLATE | 174 |
| OL-7 | PLATE | 170 |
| OL-10 | PLATE | 170 |
| OL-14 | PLATE | 170 |
| OL-21 | PLATE | 170 |
| OCP | PLATE | 112 |
| OCPI | PLATE | 112 |
| OCPI | REDWOOD | 42 |
| OMP | PLATE | 177 |
| OMPI | PLATE | 177 |

## BASIS FOR MISC IRON & STEEL FINAL PAY WEIGHTS FOR DRAINAGE INLETS

(See General Notes, No 8)

STATE OF CALIFORNIA
DEPARTMENT OF TRANSPORTATION

# GRATE DETAILS

NO SCALE

RSP D77A DATED JANUARY 18, 2008 SUPERSEDES STANDARD PLAN D77A DATED MAY 1, 2006 - PAGE 155 OF THE STANDARD PLANS BOOK DATED MAY 2006.

**REVISED STANDARD PLAN RSP D77A**

**2006 REVISED STANDARD PLAN RSP D77A**

12-14-07

| DIST | COUNTY | ROUTE | POST MILES TOTAL PROJECT | SHEET NO. | TOTAL SHEETS |
|---|---|---|---|---|---|
| 02 | Sha | 5 | R14.9/R16.2 | 99 | 165 |

Randell D. Hiatt
REGISTERED CIVIL ENGINEER

June 6, 2008
PLANS APPROVAL DATE

REGISTERED PROFESSIONAL ENGINEER
Randell D. Hiatt
No. C50200
Exp. 6-30-09
CIVIL
STATE OF CALIFORNIA

*The State of California or its officers or agents shall not be responsible for the accuracy or completeness of electronic copies of this plan sheet.*

*To accompany plans dated* 5-10-10

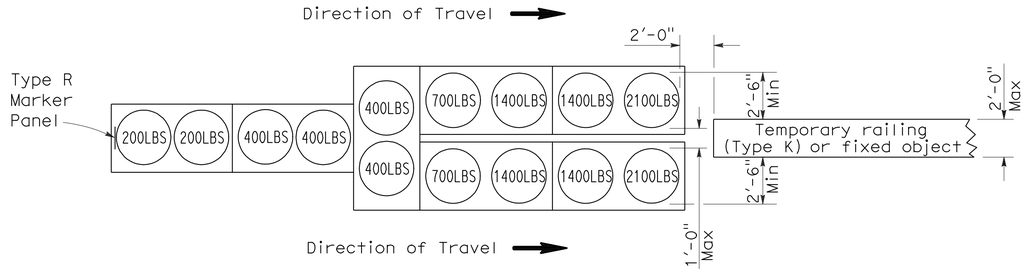


## ARRAY 'TU14'

Approach speed 45 mph or more

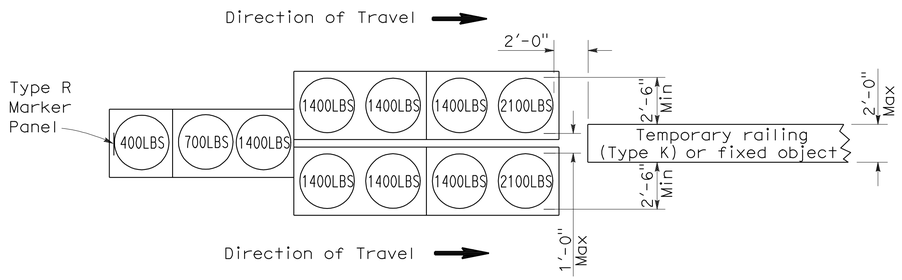


## ARRAY 'TU11'

Approach speed less than 45 mph

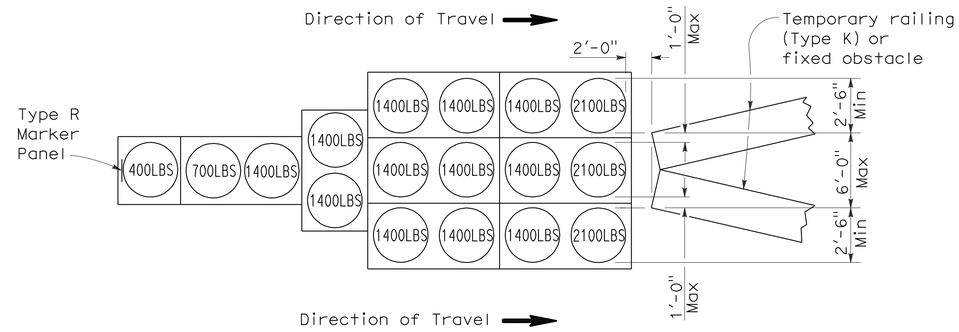


## ARRAY 'TU17'

Approach speed less than 45 mph

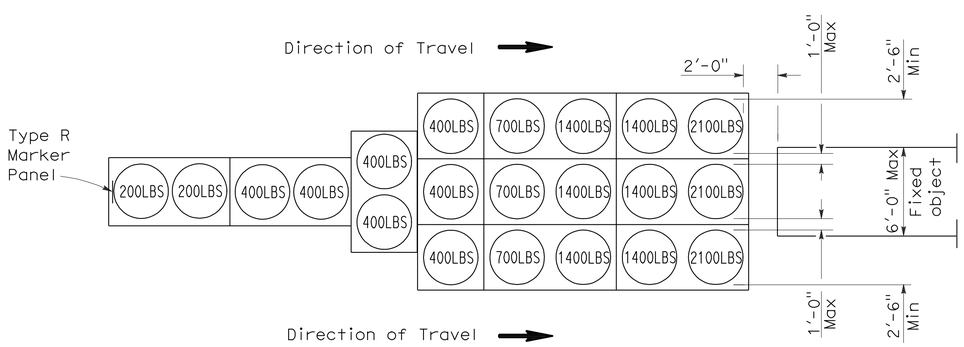


## ARRAY 'TU21'

Approach speed 45 mph or more

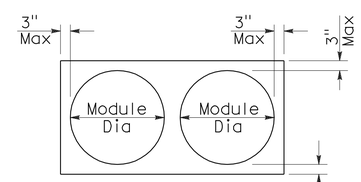


## PLAN

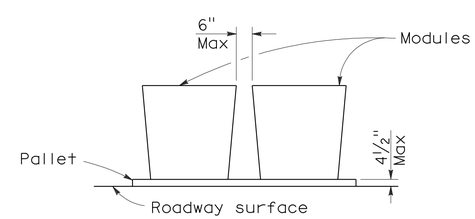


## ELEVATION

## CRASH CUSHION PALLET DETAIL

See Note 7

## NOTES:

1. (XXX) Indicates sand filled module location and weight of sand in pounds for each module. Module spacing is based on the greater diameter of the module.
2. All sand weights are nominal.
3. Temporary crash cushion arrays shall not encroach on the traveled way.
4. Place the top of Type R marker panel 1" below the module lid.
5. Refer to Standard Plan A73B for marker details.
6. Approach speeds indicated conform to NCHRP 350 Report criteria.
7. Use of pallets is optional.

STATE OF CALIFORNIA
DEPARTMENT OF TRANSPORTATION

# TEMPORARY CRASH CUSHION, SAND FILLED (UNIDIRECTIONAL)

NO SCALE

RSP T1A DATED JUNE 6, 2008 SUPERSEDES STANDARD PLAN T1A
DATED MAY 1, 2006 - PAGE 211 OF THE STANDARD PLANS BOOK DATED MAY 2006.

**REVISED STANDARD PLAN RSP T1A**

**2006 REVISED STANDARD PLAN RSP T1A**

| DIST | COUNTY | ROUTE | POST MILES TOTAL PROJECT | SHEET NO. | TOTAL SHEETS |
|---|---|---|---|---|---|
| 02 | Sha | 5 | R14.9/R16.2 | 100 | 165 |

Randell D. Hiatt
REGISTERED CIVIL ENGINEER

June 6, 2008
PLANS APPROVAL DATE

REGISTERED PROFESSIONAL ENGINEER
Randell D. Hiatt
No. C50200
Exp. 6-30-09
CIVIL
STATE OF CALIFORNIA

*The State of California or its officers or agents shall not be responsible for the accuracy or completeness of electronic copies of this plan sheet.*

*To accompany plans dated* 5-10-10

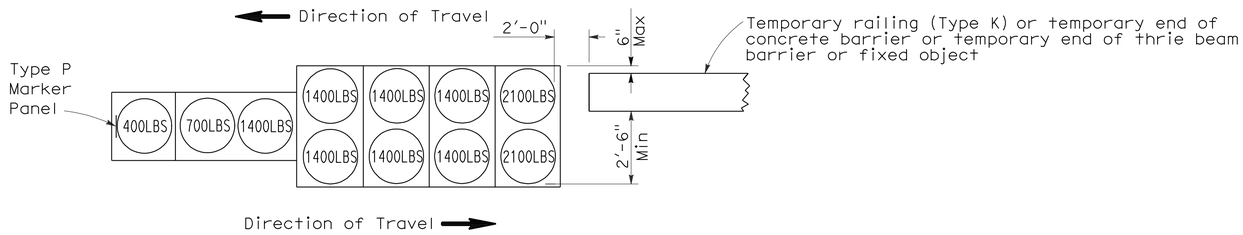


## ARRAY 'TB11'

Approach speed less than 45 mph

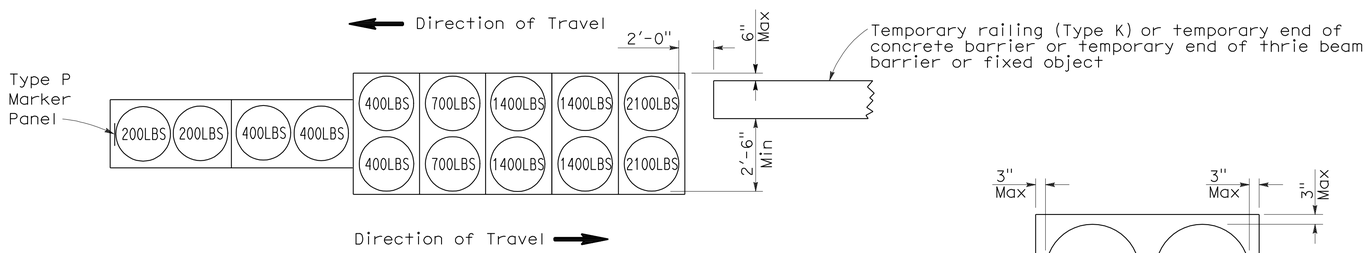


## ARRAY 'TB14'

Approach speed 45 mph or more

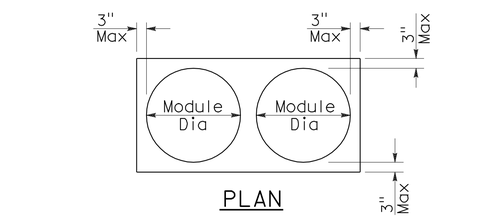


## PLAN

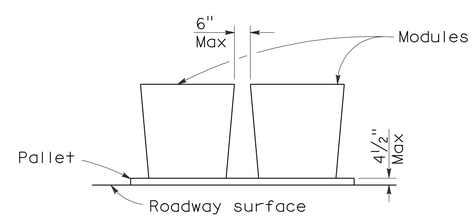


## ELEVATION

## CRASH CUSHION PALLET DETAIL

See Note 7

## NOTES:

1. (XXX) Indicates sand filled module location and weight of sand in pounds for each module. Module spacing is based on the greater diameter of the module.
2. All sand weights are nominal.
3. Temporary crash cushion arrays shall not encroach on the traveled way.
4. Place the Type P marker panel so that the bottom of the panel rests upon the pallet.
5. Refer to Standard Plan A73B for marker details.
6. Approach speeds indicated conform to NCHRP 350 Report criteria.
7. Use of pallets is optional.

STATE OF CALIFORNIA
DEPARTMENT OF TRANSPORTATION

# TEMPORARY CRASH CUSHION, SAND FILLED (BIDIRECTIONAL)

NO SCALE

RSP T1B DATED JUNE 6, 2008 SUPERSEDES STANDARD PLAN T1B
DATED MAY 1, 2006 - PAGE 212 OF THE STANDARD PLANS BOOK DATED MAY 2006.

**REVISED STANDARD PLAN RSP T1B**

**2006 REVISED STANDARD PLAN RSP T1B**

5-15-08