Dist	COUNTY	ROUTE	POST MILES TOTAL PROJECT	SHEET No.	TOTAL SHEETS
02	Las	395	56.5/R61.0	1	24

ACNH-S395(240)E

STATE OF CALIFORNIA
DEPARTMENT OF TRANSPORTATION

PROJECT PLANS FOR CONSTRUCTION ON
STATE HIGHWAY
IN LASSEN COUNTY AT AND NEAR JOHNSTONVILLE FROM 0.1 MILE NORTH OF SUNNYSIDE ROAD TO 0.1 MILE SOUTH OF ROUTE 36

TO BE SUPPLEMENTED BY STANDARD PLANS DATED 2010

INDEX OF PLANS

SHEET No.	DESCRIPTION
1	TITLE SHEET
2	TYPICAL CROSS SECTIONS
3-10	CONSTRUCTION DETAILS
11	CONSTRUCTION AREA SIGNS
12-13	PAVEMENT DELINEATION
14	PAVEMENT DELINEATION QUANTITIES
15-16	SUMMARY OF QUANTITIES
17-18	TRAFFIC CONTROL SYSTEM
19-24	REVISED STANDARD PLANS

THE STANDARD PLANS LIST APPLICABLE TO THIS CONTRACT IS INCLUDED IN THE NOTICE TO BIDDERS AND SPECIAL PROVISIONS BOOK.

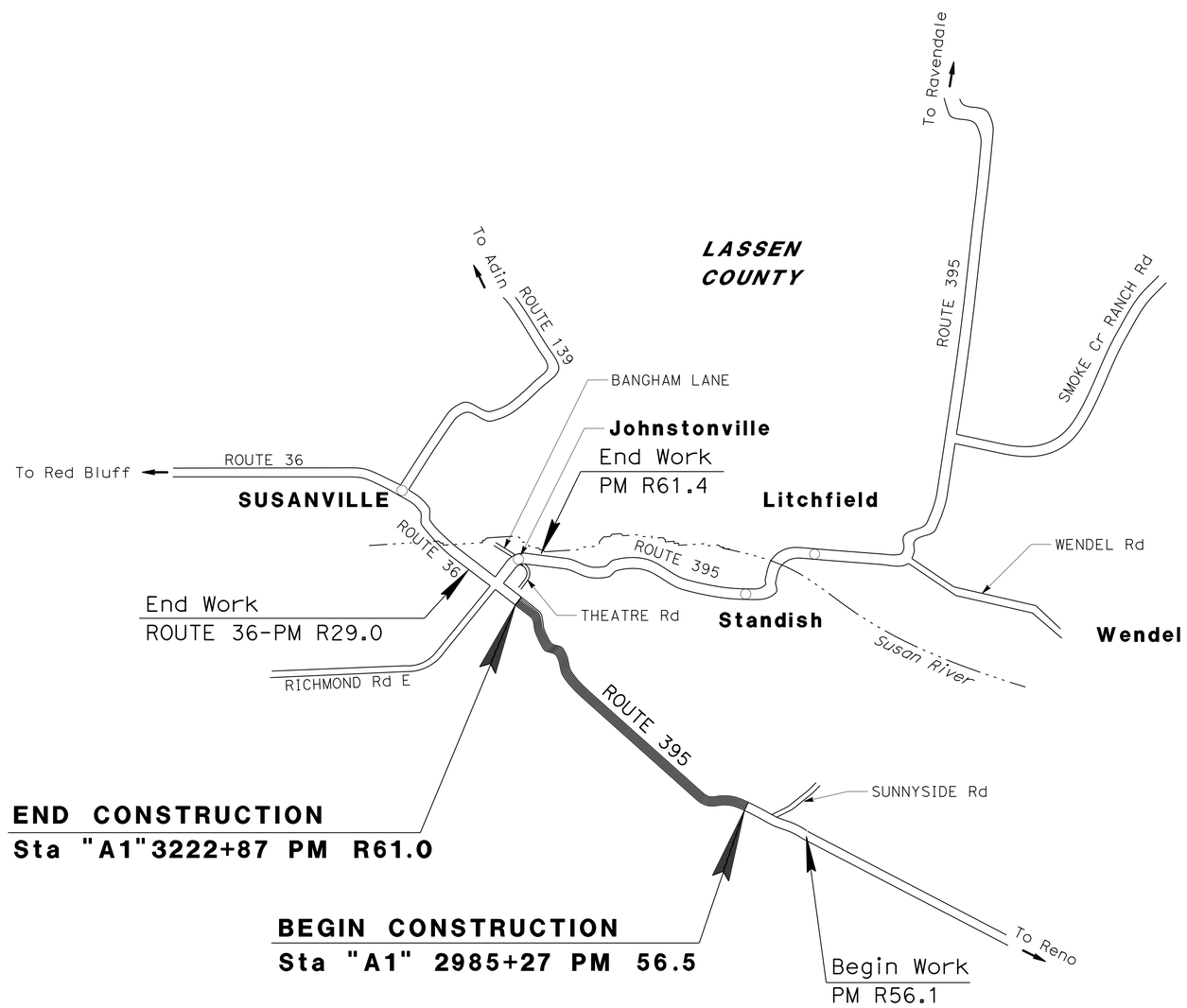

THE CONTRACTOR SHALL POSSESS THE CLASS (OR CLASSES) OF LICENSE AS SPECIFIED IN THE "NOTICE TO BIDDERS."

NO SCALE

PROJECT MANAGER: ERIC ORR
DESIGN ENGINEER: STEVE TOPAL

PROJECT ENGINEER REGISTERED CIVIL ENGINEER — DATE 01-22-13

January 22, 2013
PLANS APPROVAL DATE

REGISTERED PROFESSIONAL ENGINEER — BYRON STANLEY — No. C60161 — Exp. 06-30-14 — CIVIL — STATE OF CALIFORNIA

THE STATE OF CALIFORNIA OR ITS OFFICERS OR AGENTS SHALL NOT BE RESPONSIBLE FOR THE ACCURACY OR COMPLETENESS OF SCANNED COPIES OF THIS PLAN SHEET.

CONTRACT No.	02-3C0724
PROJECT ID	0212000038

LAST REVISION 03-12-13 | DATE PLOTTED => 12-MAR-2013 | TIME PLOTTED => 14:03

P:\proj2\02\3c072_plans\pse\23c072ab001.dgn

Dist	COUNTY	ROUTE	POST MILES TOTAL PROJECT	SHEET No.	TOTAL SHEETS
02	Las	395	56.5/R61.0	2	24

REGISTERED CIVIL ENGINEER 01-22-13 DATE

01-22-13
PLANS APPROVAL DATE

REGISTERED PROFESSIONAL ENGINEER BYRON STANLEY No. C60161 Exp. 6-30-14 CIVIL STATE OF CALIFORNIA

THE STATE OF CALIFORNIA OR ITS OFFICERS OR AGENTS SHALL NOT BE RESPONSIBLE FOR THE ACCURACY OR COMPLETENESS OF SCANNED COPIES OF THIS PLAN SHEET.

NOTES:

1. DIMENSIONS OF THE PAVEMENT STRUCTURES (STRUCTURAL SECTIONS) ARE SUBJECT TO TOLERANCES SPECIFIED IN THE STANDARD SPECIFICATIONS.
2. FOR ACCURATE RIGHT OF WAY DATA, CONTACT RIGHT OF WAY ENGINEERING AT THE DISTRICT OFFICE.
3. SEE SUMMARY OF QUANTITES AND CONSTRUCTION DETAILS FOR PLACEMENT AND TYPE OF HMA DIKE.
4. LOCATIONS OF REPLACE ASPHALT CONCRETE SURFACING TO BE DETERMINED IN THE FIELD BY THE ENGINEER.
5. BEGIN AND END SHOULDER RUMBLE STRIP 50′ FROM PRIVATE DRIVEWAYS AND 150′ FROM LOCAL ROAD CONNECTIONS.
6. EXISTING UTILITY FACILITIES HAVE NOT BEEN PLOTTED ON THESE PLANS.
7. SEE REVISED STANDARD PLAN FOR PAVEMENT SAFETY EDGE TREATMENT.

ABBREVIATIONS:

RHMA-G	RUBBERIZED HOT MIX ASPHALT (GAP GRADED)
CRS	CENTERLINE RUMBLE STRIP (HMA, GROUND-IN INDENTATIONS)
SRS	SHOULDER RUMBLE STRIP (HMA, GROUND-IN INDENTATIONS)

DESIGN DESIGNATION

PM R56.5 TO R61.0

ADT (2012)	8014	D	57%
ADT (2032)	8774	T	10%
DHV	866	V	65 MPH
ESAL	6,439,300	TI_{20}	11.0

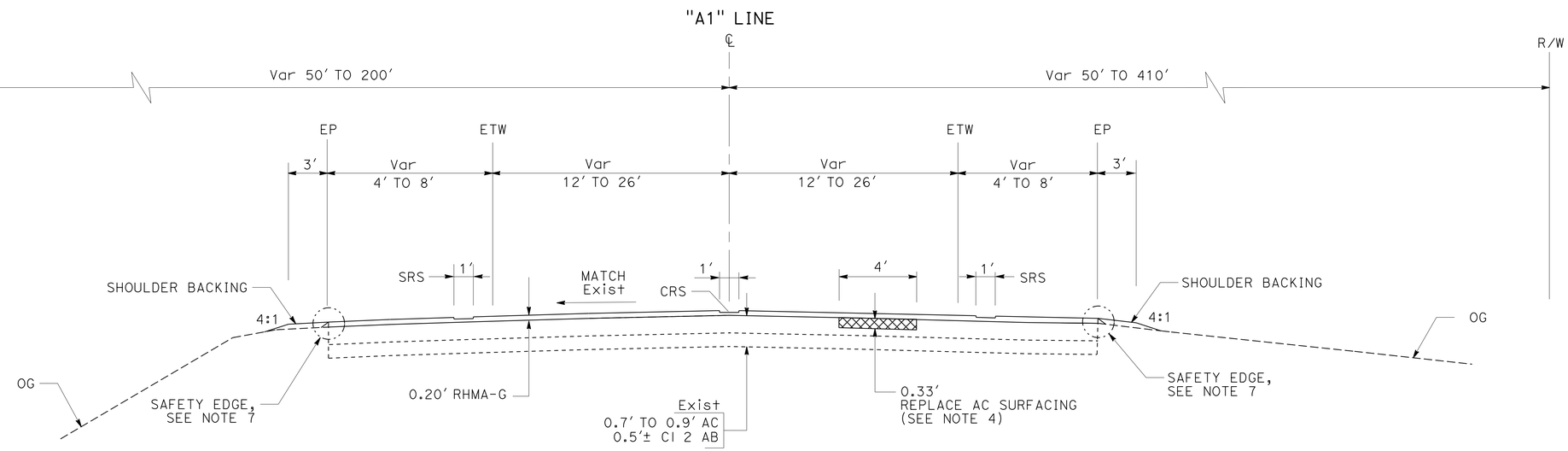

ROUTE 395

TYPICAL CROSS SECTION

"A1" 2985+27 TO 3222+87

TYPICAL CROSS SECTIONS

NO SCALE

X-1

REVISED BY | DATE REVISED

BYRON STANLEY | RUSSELL FLOOD

CALCULATED-DESIGNED BY | CHECKED BY

FUNCTIONAL SUPERVISOR: STEVEN TOPAL

STATE OF CALIFORNIA - DEPARTMENT OF TRANSPORTATION

Caltrans® **DESIGN**

P:\proj2\02\3c072_plans\pse\23c072ca001.dgn

LAST REVISION 01-22-13 | DATE PLOTTED => 12-MAR-2013 | TIME PLOTTED => 14:03

Dist	COUNTY	ROUTE	POST MILES TOTAL PROJECT	SHEET No.	TOTAL SHEETS
02	Las	395	56.5/R61.0	3	24

REGISTERED CIVIL ENGINEER 01-22-13 DATE

01-22-13
PLANS APPROVAL DATE

REGISTERED PROFESSIONAL ENGINEER
BYRON STANLEY
No. C60161
Exp. 6-30-14
CIVIL
STATE OF CALIFORNIA

THE STATE OF CALIFORNIA OR ITS OFFICERS OR AGENTS SHALL NOT BE RESPONSIBLE FOR THE ACCURACY OR COMPLETENESS OF SCANNED COPIES OF THIS PLAN SHEET.

NOTE:

1. FOR ACCURATE RIGHT OF WAY DATA, CONTACT RIGHT OF WAY ENGINEERING AT THE DISTRICT OFFICE.

CURVE DATA

No. ⊕	R	△	T	L
1	2059′	41°40′11"	783.60′	1497.51′
2	2049′	21°31′43"	389.54′	769.89′
3	1500′	86°37′23"	1414.10′	2267.79′

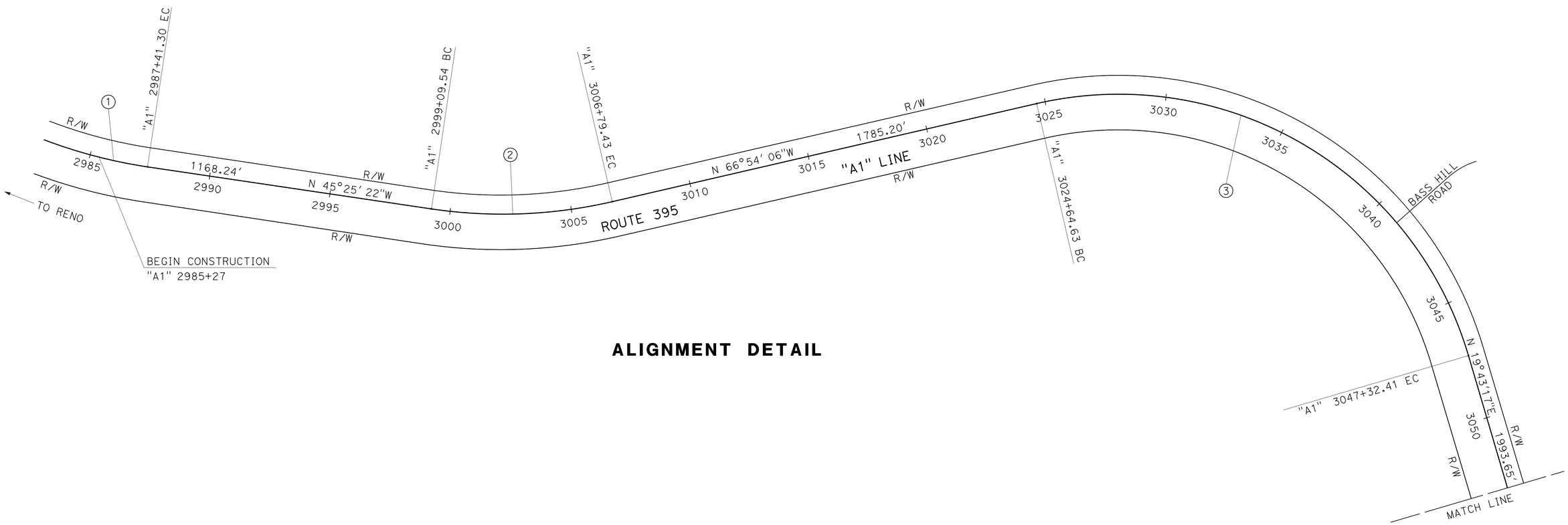

ALIGNMENT DETAIL

CONSTRUCTION DETAILS

NO SCALE

C-1

REVISED BY | DATE REVISED
BYRON STANLEY | WILL LESLIE
CALCULATED-DESIGNED BY | CHECKED BY
FUNCTIONAL SUPERVISOR

STATE OF CALIFORNIA - DEPARTMENT OF TRANSPORTATION
Caltrans
DESIGN

P:\proj\02\3c072_plans\pse\23c072ga001.dgn

LAST REVISION 01-22-13 | DATE PLOTTED => 12-MAR-2013 | TIME PLOTTED => 14:03

Dist	COUNTY	ROUTE	POST MILES TOTAL PROJECT	SHEET No.	TOTAL SHEETS
02	Las	395	56.5/R61.0	4	24

REGISTERED CIVIL ENGINEER 01-22-13 DATE

01-22-13
PLANS APPROVAL DATE

REGISTERED PROFESSIONAL ENGINEER BYRON STANLEY No. C60161 Exp. 6-30-14 CIVIL STATE OF CALIFORNIA

THE STATE OF CALIFORNIA OR ITS OFFICERS OR AGENTS SHALL NOT BE RESPONSIBLE FOR THE ACCURACY OR COMPLETENESS OF SCANNED COPIES OF THIS PLAN SHEET.

NOTE:

1. FOR ACCURATE RIGHT OF WAY DATA, CONTACT RIGHT OF WAY ENGINEERING AT THE DISTRICT OFFICE.

CURVE DATA

No. #	R	Δ	T	L
4	2000′	51°58′07″	974.79′	1814.05′

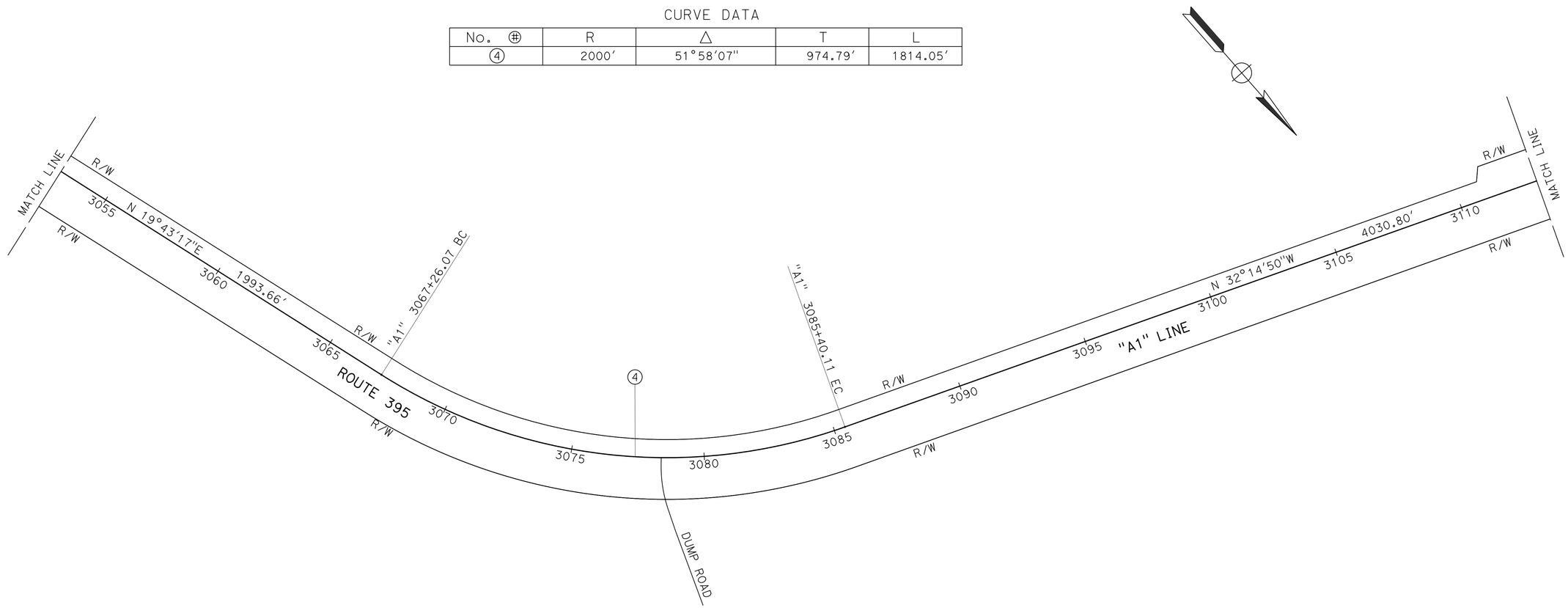

ALIGNMENT DETAIL

CONSTRUCTION DETAILS

NO SCALE

C-2

STATE OF CALIFORNIA - DEPARTMENT OF TRANSPORTATION
Caltrans DESIGN

FUNCTIONAL SUPERVISOR: STEVEN TOPAL
CALCULATED-DESIGNED BY: BYRON STANLEY
CHECKED BY: DAN BROWN
REVISED BY
DATE REVISED

P:\proj2\02\3c072_plans\pse\23c072ga002.dgn

LAST REVISION 01-22-13
DATE PLOTTED => 12-MAR-2013
TIME PLOTTED => 14:03

BORDER LAST REVISED 7/2/2010
USERNAME => s115152
DGN FILE => 23c072ga002.dgn
RELATIVE BORDER SCALE IS IN INCHES 0 1 2 3
UNIT 0319
PROJECT NUMBER & PHASE 02120000381

Dist	COUNTY	ROUTE	POST MILES TOTAL PROJECT	SHEET No.	TOTAL SHEETS
02	Las	395	56.5/R61.0	5	24

REGISTERED CIVIL ENGINEER 01-22-13 DATE

01-22-13
PLANS APPROVAL DATE

REGISTERED PROFESSIONAL ENGINEER BYRON STANLEY No. C60161 Exp. 6-30-14 CIVIL STATE OF CALIFORNIA

THE STATE OF CALIFORNIA OR ITS OFFICERS OR AGENTS SHALL NOT BE RESPONSIBLE FOR THE ACCURACY OR COMPLETENESS OF SCANNED COPIES OF THIS PLAN SHEET.

NOTE:

1. FOR ACCURATE RIGHT OF WAY DATA, CONTACT RIGHT OF WAY ENGINEERING AT THE DISTRICT OFFICE.

CURVE DATA

No. ⊕	R	Δ	T	L
⑤	6172′	5°29′41"	296.16′	591.87
⑥	5322′	12°13′08"	569.68′	1135.05′

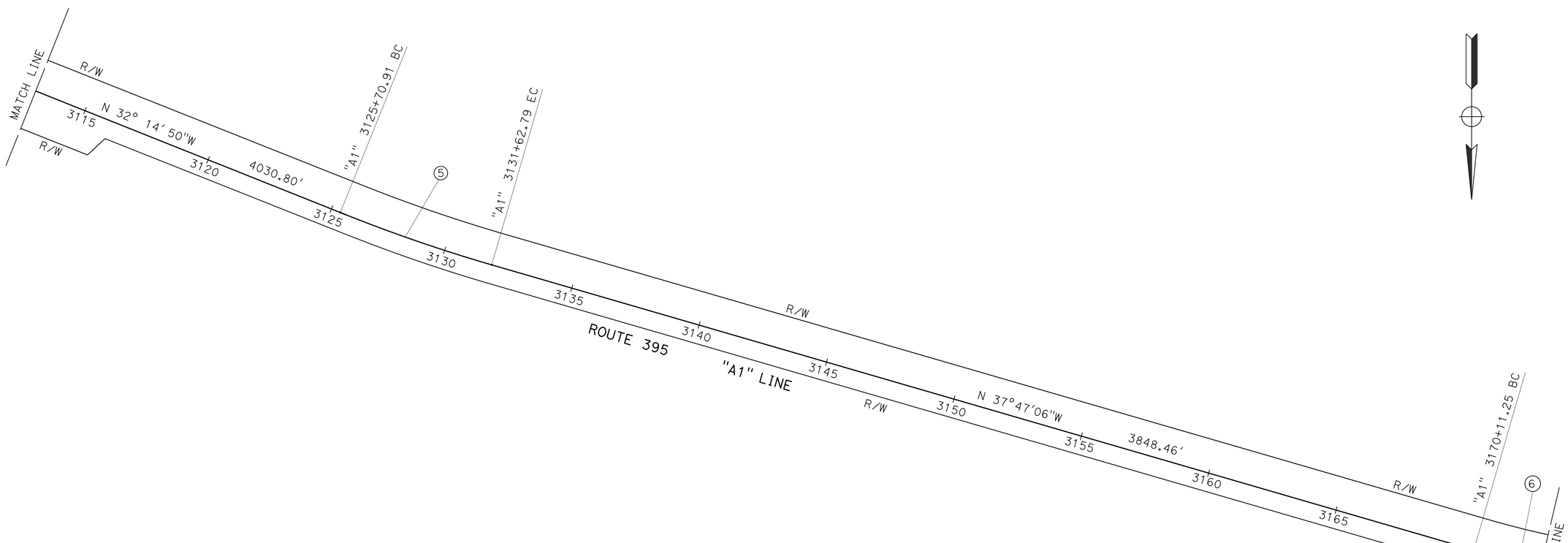

ALIGNMENT DETAIL

CONSTRUCTION DETAILS

NO SCALE

C-3

BYRON STANLEY | REVISED BY
WILL LESLIE | DATE REVISED
CALCULATED-DESIGNED BY
CHECKED BY
FUNCTIONAL SUPERVISOR
STEVEN TOPAL

STATE OF CALIFORNIA - DEPARTMENT OF TRANSPORTATION
Caltrans
DESIGN

P:\proj2\02\3c072_plans\pse\23c072ga003.dgn

LAST REVISION 01-22-13 | DATE PLOTTED => 12-MAR-2013 | TIME PLOTTED => 14:03

Dist	COUNTY	ROUTE	POST MILES TOTAL PROJECT	SHEET No.	TOTAL SHEETS
02	Las	395	56.5/R61.0	6	24

REGISTERED CIVIL ENGINEER 01-22-13 DATE

01-22-13
PLANS APPROVAL DATE

REGISTERED PROFESSIONAL ENGINEER
BYRON STANLEY
No. C60161
Exp. 6-30-14
CIVIL
STATE OF CALIFORNIA

THE STATE OF CALIFORNIA OR ITS OFFICERS OR AGENTS SHALL NOT BE RESPONSIBLE FOR THE ACCURACY OR COMPLETENESS OF SCANNED COPIES OF THIS PLAN SHEET.

NOTE:

1. FOR ACCURATE RIGHT OF WAY DATA, CONTACT RIGHT OF WAY ENGINEERING AT THE DISTRICT OFFICE.

CURVE DATA

No. ⊕	R	Δ	T	L
6	5322′	12°13′08″	569.68′	1135.05′
7	4164′	11°49′44″	431.40′	859.73′

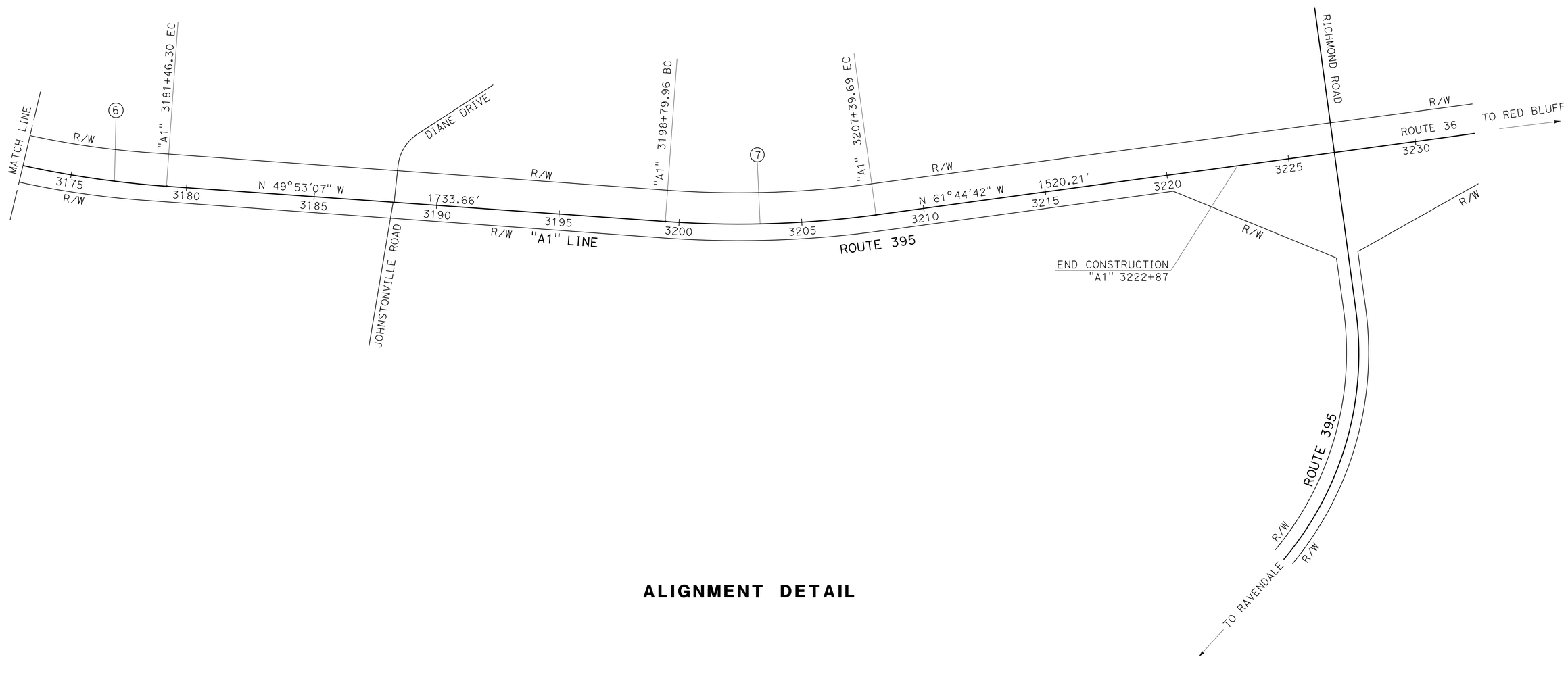

ALIGNMENT DETAIL

CONSTRUCTION DETAILS

NO SCALE

C-4

REVISED BY | DATE REVISED

BYRON STANLEY | DAN BROWN

CALCULATED-DESIGNED BY | CHECKED BY

FUNCTIONAL SUPERVISOR: STEVEN TOPAL

STATE OF CALIFORNIA - DEPARTMENT OF TRANSPORTATION
Caltrans
DESIGN

P:\proj2\02\3c072_plans\pse\23c072ga004.dgn

LAST REVISION | DATE PLOTTED => 12-MAR-2013 | TIME PLOTTED => 14:03
01-22-13

Dist	COUNTY	ROUTE	POST MILES TOTAL PROJECT	SHEET No.	TOTAL SHEETS
02	Las	395	56.5/R61.0	7	24

REGISTERED CIVIL ENGINEER 01-22-13 DATE

01-22-13
PLANS APPROVAL DATE

REGISTERED PROFESSIONAL ENGINEER BYRON STANLEY No. C60161 Exp. 6-30-14 CIVIL STATE OF CALIFORNIA

THE STATE OF CALIFORNIA OR ITS OFFICERS OR AGENTS SHALL NOT BE RESPONSIBLE FOR THE ACCURACY OR COMPLETENESS OF SCANNED COPIES OF THIS PLAN SHEET.

NOTES:

1. REMOVE EXISTING MATERIAL AS NECESSARY TO CAP HMA DIKE. SEE STANDARD PLANS FOR DETAILS NOT SHOWN.
2. CONFORM TO EXISTING CONFIGURATION AT EACH OVERSIDE DRAIN LOCATION.

LEGEND

COLD PLANE AC PAVEMENT

ABBREVIATIONS:

RHMA-G RUBBERIZED HOT MIX ASPHALT (GAP GRADED)

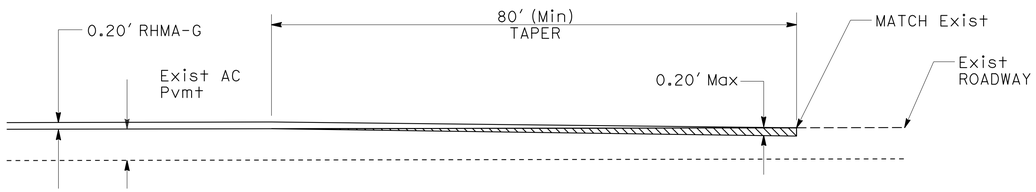

MAINLINE CONFORM TAPER

PM 56.5, R61.0

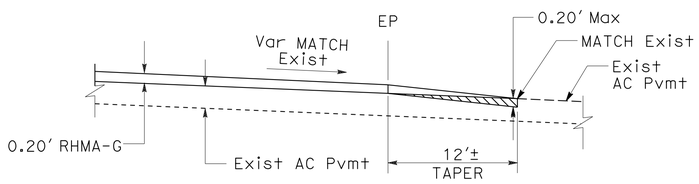

SECTION A-A

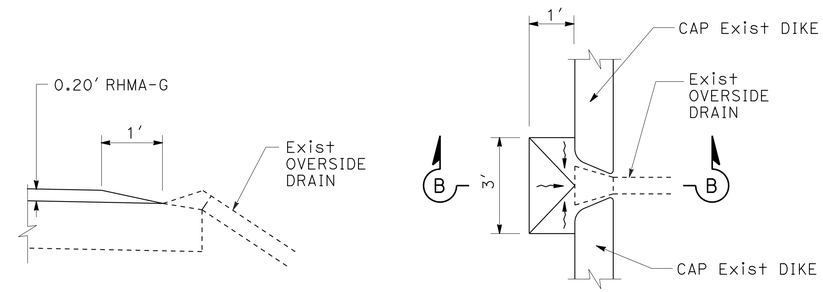

SECTION B-B

PLAN

TYPICAL OVERSIDE DRAIN AND DOWNDRAIN CONFORM

(SEE NOTE 2)

SOUTHBOUND 56.92, 57.00, 57.09, 57.16, 58.68, 58.77, 58.89, 58.97, 59.01
NORTHBOUND 57.22, 58.04, 58.77, 58.87, 58.95, 59.01

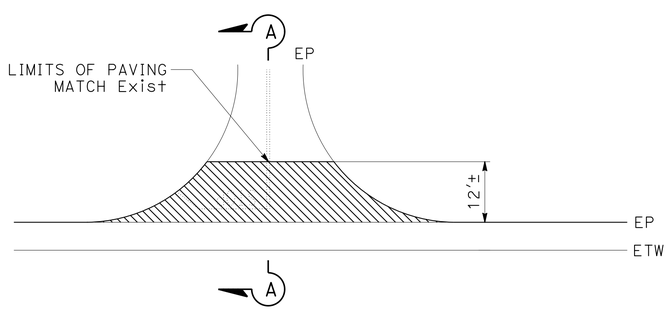

ROAD CONNECTIONS CONFORM TAPER

DRIVEWAY PM 57.08
BASS HILL ROAD 57.56
JOHNSTONVILLE DUMP ROAD 58.26
DRIVEWAY PM 58.97
DRIVEWAY PM 58.61
DRIVEWAY PM 59.26
DRIVEWAY PM R60.12
DIANE DRIVE/JOHNSTONVILLE RD PM R60.36
TRUCK SCALES PM R60.7

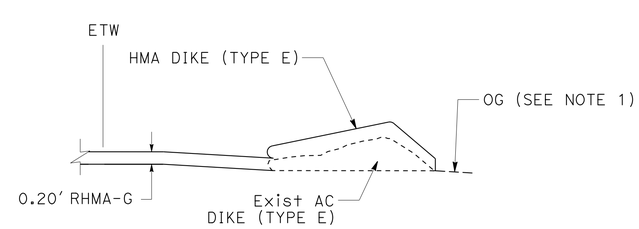

TYPE E

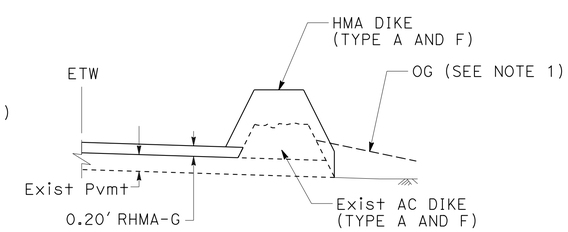

TYPE A AND F

TYPICAL CAP EXISTING ASPHALT CONCRETE DIKE

CONSTRUCTION DETAILS

NO SCALE

C-5

REVISED BY	DATE REVISED
GINNY SEIBERT	BYRON STANLEY

CALCULATED-DESIGNED BY / CHECKED BY

FUNCTIONAL SUPERVISOR: STEVEN TOPAL

STATE OF CALIFORNIA - DEPARTMENT OF TRANSPORTATION
Caltrans DESIGN

P:\proj\2\02\3c072_plans\pse\23c072ga005.dgn

LAST REVISION 01-22-13 | DATE PLOTTED => 12-MAR-2013 | TIME PLOTTED => 14:03

Dist	COUNTY	ROUTE	POST MILES TOTAL PROJECT	SHEET No.	TOTAL SHEETS
02	Las	395	56.5/R61.0	8	24

REGISTERED CIVIL ENGINEER 01-22-13 DATE

01-22-13
PLANS APPROVAL DATE

REGISTERED PROFESSIONAL ENGINEER BYRON STANLEY No. C60161 Exp. 6-30-14 CIVIL STATE OF CALIFORNIA

THE STATE OF CALIFORNIA OR ITS OFFICERS OR AGENTS SHALL NOT BE RESPONSIBLE FOR THE ACCURACY OR COMPLETENESS OF SCANNED COPIES OF THIS PLAN SHEET.

NOTES:

1. CENTERLINE RUMBLE STRIP AS SHOWN ON THE PLANS WILL CONTINUE THROUGH LOCATIONS WITH PRIVATE DRIVEWAYS UNLESS OTHERWISE NOTED ON THE PLANS.
2. CENTERLINE RUMBLE STRIP MUST BE CONSTRUCTED PRIOR TO INSTALLING THERMOPLASTIC TRAFFIC STRIPING AND MARKERS.

LEGEND:

- DIRECTION OF TRAVEL
- PAVEMENT MARKER (RETROREFLECTIVE), TYPE D, YELLOW
- PAVEMENT MARKER (RETROREFLECTIVE), TYPE H, YELLOW
- RUMBLE STRIP

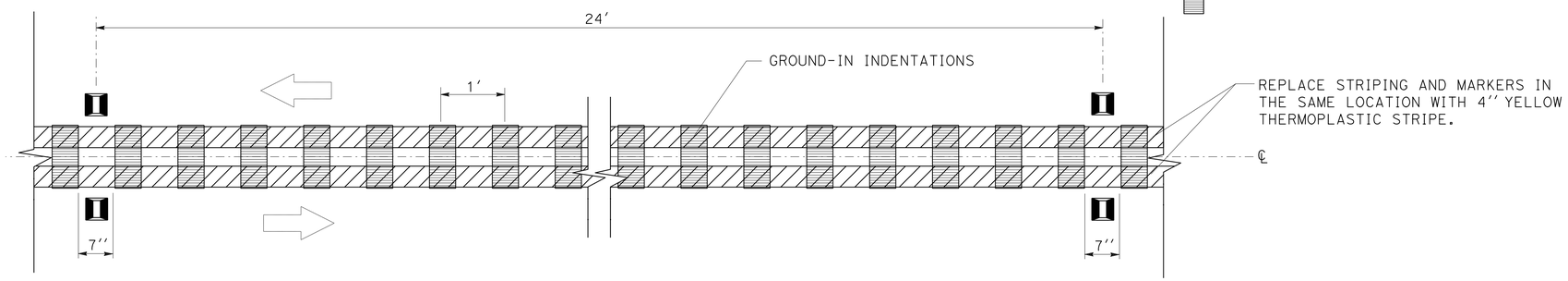

CENTERLINE RUMBLE STRIP WITH DETAIL 22

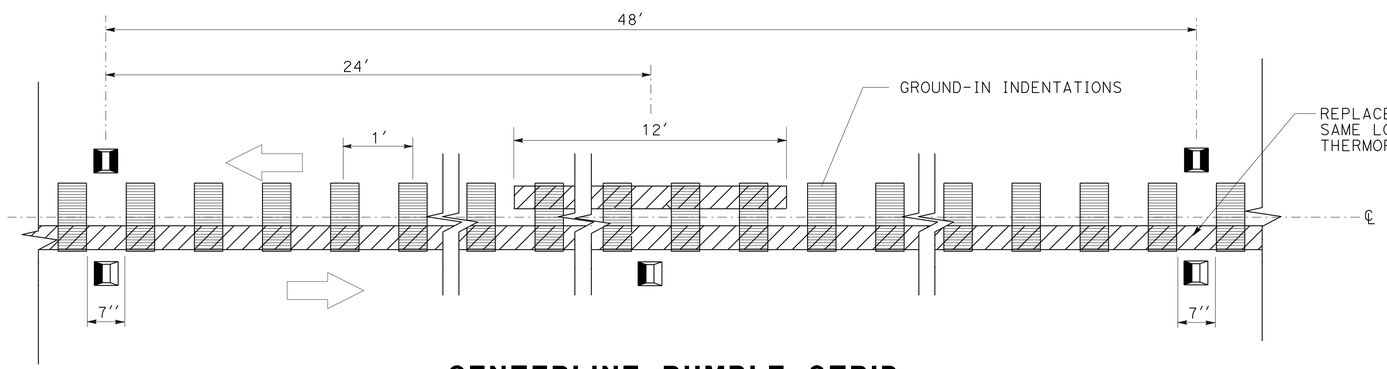

CENTERLINE RUMBLE STRIP WITH DETAIL 19

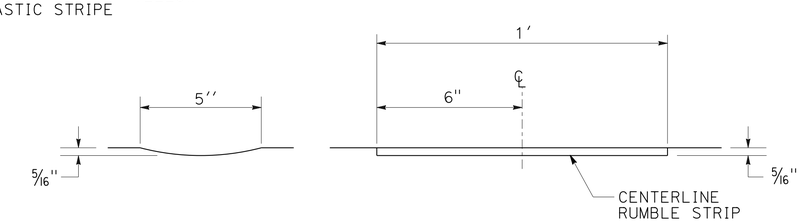

SECTION A-A SECTION B-B

GROUND-IN INDENTATIONS

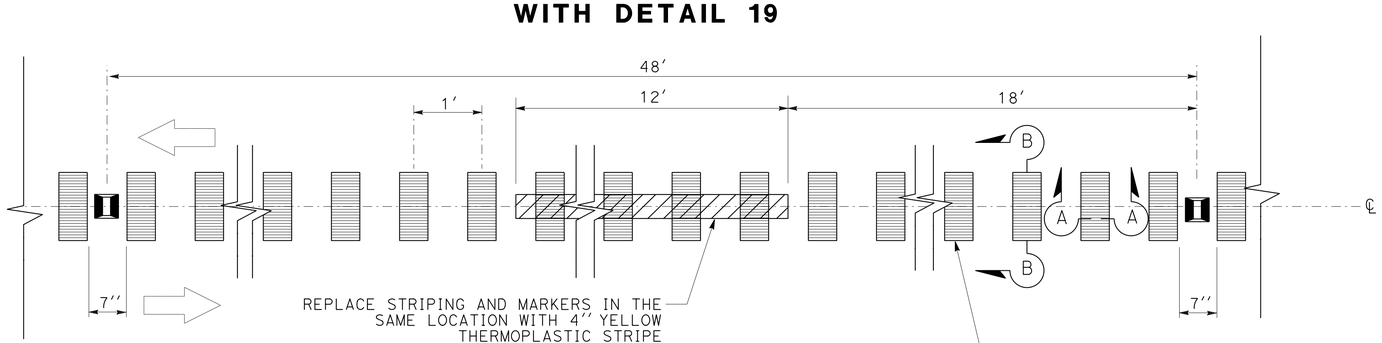

CENTERLINE RUMBLE STRIP WITH DETAIL 6

CONSTRUCTION DETAILS

NO SCALE

C-6

REVISED BY | DATE REVISED
GINNY SEIBERT | BYRON STANLEY
CALCULATED-DESIGNED BY | CHECKED BY
FUNCTIONAL SUPERVISOR | STEVEN TOPAL

STATE OF CALIFORNIA - DEPARTMENT OF TRANSPORTATION
Caltrans® DESIGN

P:\proj2\02\3c072_plans\pse\23c072ga006.dgn

LAST REVISION 01-22-13 | DATE PLOTTED => 12-MAR-2013 | TIME PLOTTED => 14:03

Dist	COUNTY	ROUTE	POST MILES TOTAL PROJECT	SHEET No.	TOTAL SHEETS
02	Las	395	56.5/R61.0	9	24

REGISTERED CIVIL ENGINEER 01-22-13 DATE

01-22-13
PLANS APPROVAL DATE

REGISTERED PROFESSIONAL ENGINEER BYRON STANLEY No. C60161 Exp. 6-30-14 CIVIL STATE OF CALIFORNIA

THE STATE OF CALIFORNIA OR ITS OFFICERS OR AGENTS SHALL NOT BE RESPONSIBLE FOR THE ACCURACY OR COMPLETENESS OF SCANNED COPIES OF THIS PLAN SHEET.

NOTES:

1. RUMBLE STRIP SHALL NOT BE PLACED ON PCC BRIDGE DECKS OR PCC APPROACH SLABS

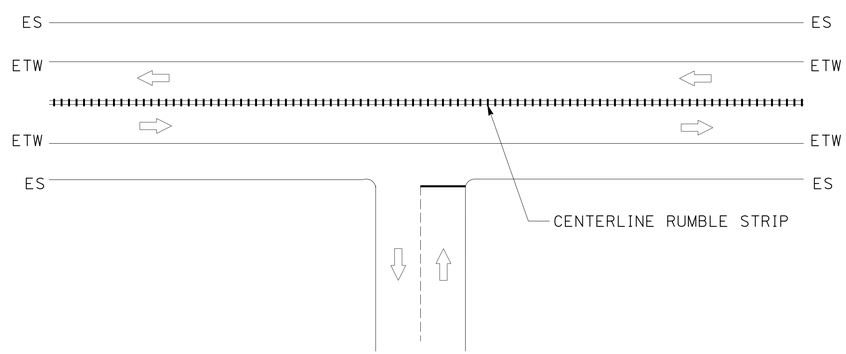

CENTERLINE RUMBLE STRIP AT DRIVEWAY/PRIVATE ROAD APPROACH

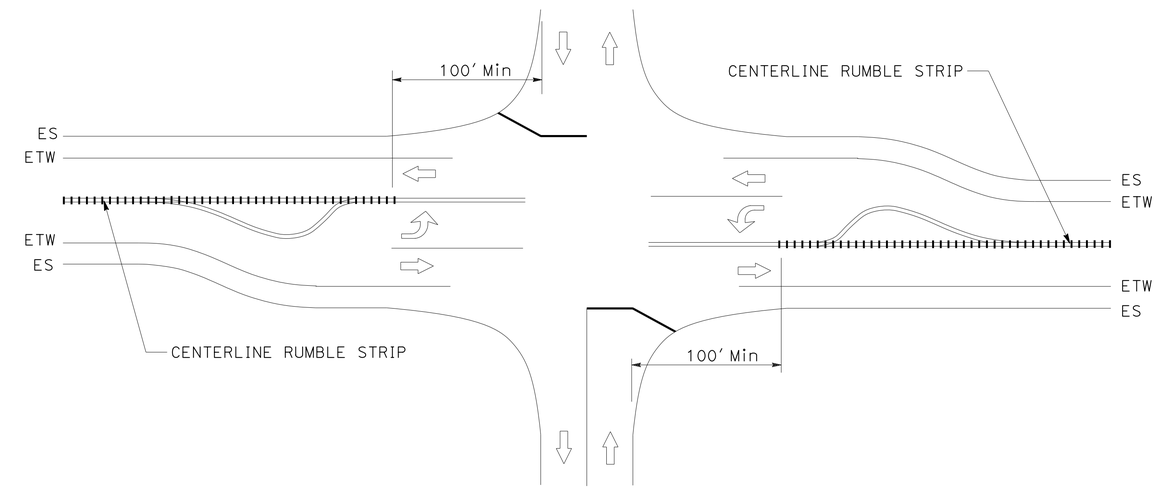

CENTERLINE RUMBLE STRIP AT INTERSECTION WITH LEFT TURN POCKETS

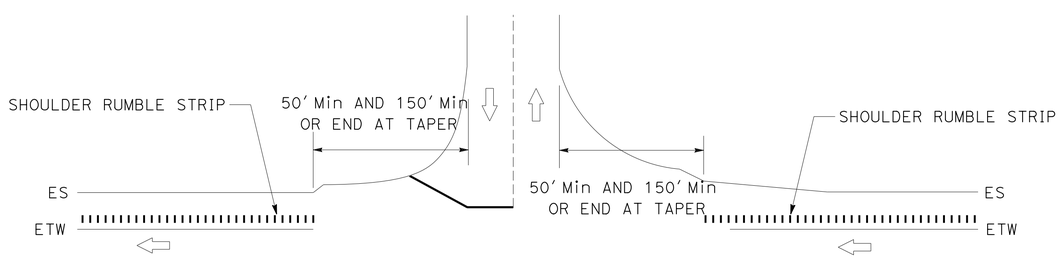

SHOULDER RUMBLE STRIP AT DRIVEWAY/PRIVATE ROAD APPROACH/LOCAL ROAD CONNECTIONS

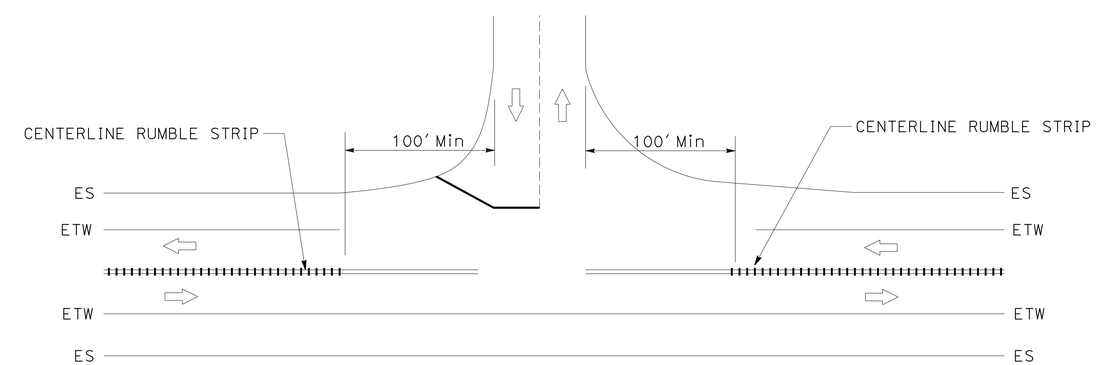

CENTERLINE RUMBLE STRIP AT PUBLIC ROAD T-INTERSECTION

CONSTRUCTION DETAILS

NO SCALE

C-7

REVISED BY	DATE REVISED
GINNY SEIBERT	BYRON STANLEY
CALCULATED-DESIGNED BY	CHECKED BY
FUNCTIONAL SUPERVISOR	STEVEN TOPAL

STATE OF CALIFORNIA - DEPARTMENT OF TRANSPORTATION
Caltrans® DESIGN

P:\proj2\02\3c072_plans\pse\23c072ga007.dgn

LAST REVISION 01-22-13 | DATE PLOTTED => 12-MAR-2013 TIME PLOTTED => 14:03

Dist	COUNTY	ROUTE	POST MILES TOTAL PROJECT	SHEET No.	TOTAL SHEETS
02	Las	395	56.5/R61.0	10	24

REGISTERED CIVIL ENGINEER 01-22-13 DATE

01-22-13
PLANS APPROVAL DATE

REGISTERED PROFESSIONAL ENGINEER BYRON STANLEY No. C60161 Exp. 6-30-14 CIVIL STATE OF CALIFORNIA

THE STATE OF CALIFORNIA OR ITS OFFICERS OR AGENTS SHALL NOT BE RESPONSIBLE FOR THE ACCURACY OR COMPLETENESS OF SCANNED COPIES OF THIS PLAN SHEET.

NOTES:

1. THIS DETAIL FOR CENTERLINE RUMBLE STRIP IN 4′ MEDIAN ("SOFT BARRIER").
2. SEE STANDARD PLANS FOR DIMENSIONS OF GROUND-IN INDENTATIONS.

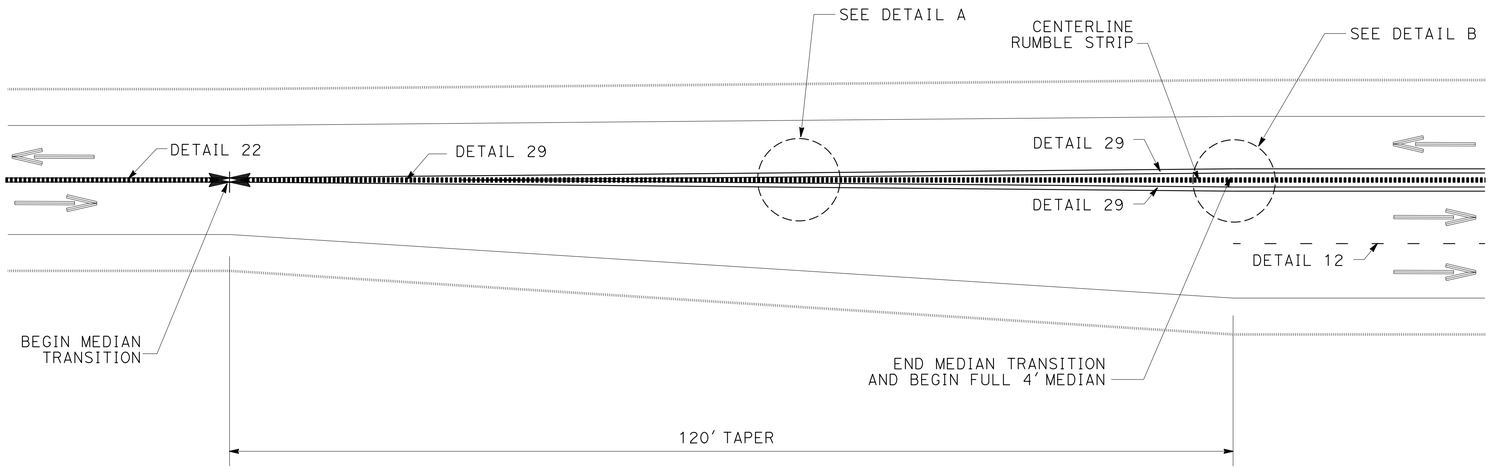

CENTERLINE RUMBLE STRIP AT BEGINNING OF PASSING LANE

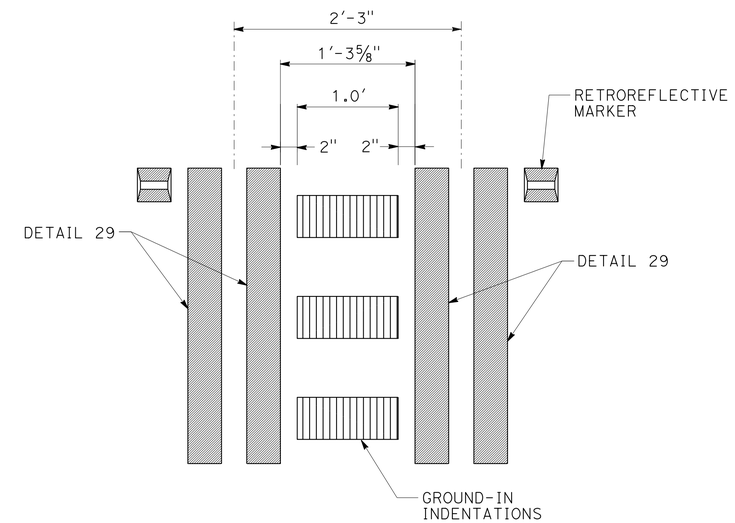

DETAIL A

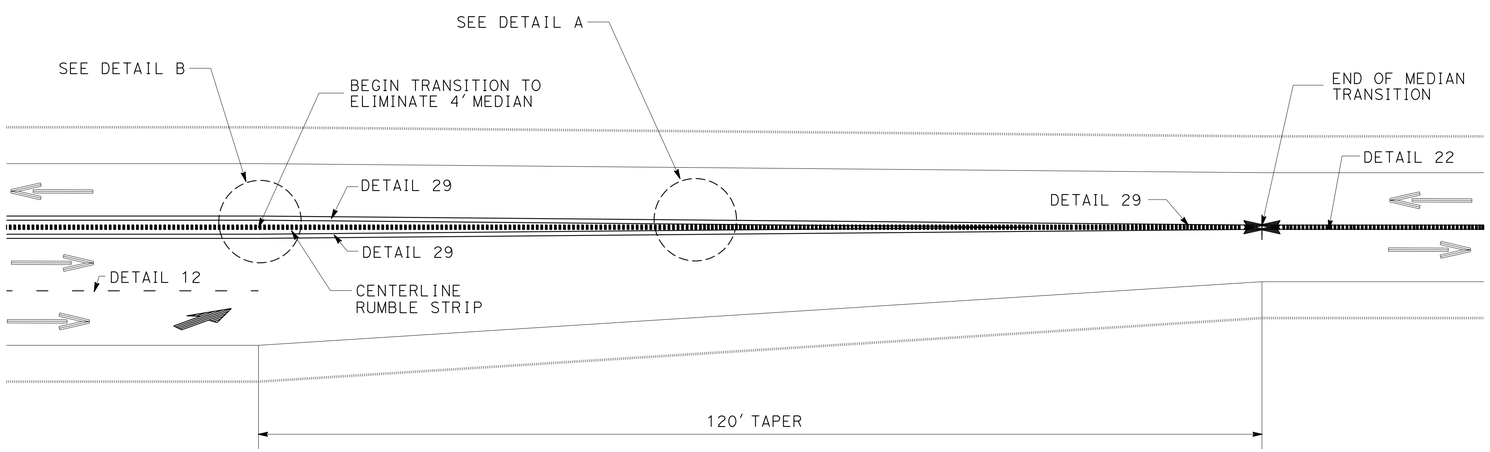

CENTERLINE RUMBLE STRIP AT END OF PASSING LANE

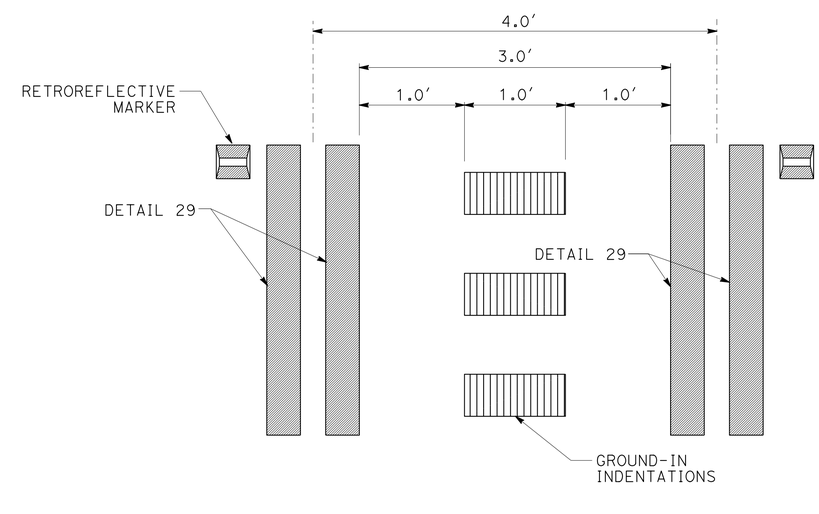

DETAIL B

CONSTRUCTION DETAILS

NO SCALE

C-8

REVISED BY | DATE REVISED
GINNY SEIBERT | BYRON STANLEY
CALCULATED-DESIGNED BY | CHECKED BY
FUNCTIONAL SUPERVISOR: STEVEN TOPAL

STATE OF CALIFORNIA - DEPARTMENT OF TRANSPORTATION
Caltrans® DESIGN

P:\proj2\02\3c072_plans\pse\23c072ga008.dgn

LAST REVISION 01-22-13 | DATE PLOTTED => 12-MAR-2013 | TIME PLOTTED => 14:03

Dist	COUNTY	ROUTE	POST MILES TOTAL PROJECT	SHEET No.	TOTAL SHEETS
02	Las	395	56.5/R61.0	11	24

REGISTERED CIVIL ENGINEER 01-22-13 DATE

01-22-13
PLANS APPROVAL DATE

REGISTERED PROFESSIONAL ENGINEER BYRON STANLEY No. C60161 Exp. 6-30-14 CIVIL STATE OF CALIFORNIA

THE STATE OF CALIFORNIA OR ITS OFFICERS OR AGENTS SHALL NOT BE RESPONSIBLE FOR THE ACCURACY OR COMPLETENESS OF SCANNED COPIES OF THIS PLAN SHEET.

NOTES:

1. EXACT SIGN AND PCMS LOCATIONS TO BE DETERMINED BY ENGINEER.
2. CALIFORNIA CODES ARE DESIGNATED BY (CA), OTHERWISE FEDERAL CODES ARE SHOWN.

LEGEND:

- SIGN
- DIRECTION OF TRAVEL
- PORTABLE CHANGEABLE MESSAGE SIGN

ABBREVIATIONS:

PCMS PORTABLE CHANGEABLE MESSAGE SIGN

CONSTRUCTION AREA SIGNS (STATIONARY MOUNTED)

TYPE	CODE	PANEL SIZE	SIGN MESSAGE	NUMBER AND SIZE OF POST	No. OF SIGNS
A	W20-1	48" x 48"	ROAD WORK AHEAD	1-4" x 6"	3
B	G20-1 C23B(CA)	36" x 18" 36" x 18"	ROAD WORK NEXT 5 MILES PAVEMENT MAINTENANCE	1-4" x 6"	2
C	W20-1	36" x 36"	ROAD WORK AHEAD	1-4" x 4"	5
D	G20-2	36" x 18"	END ROAD WORK	1-4" x 4"	8

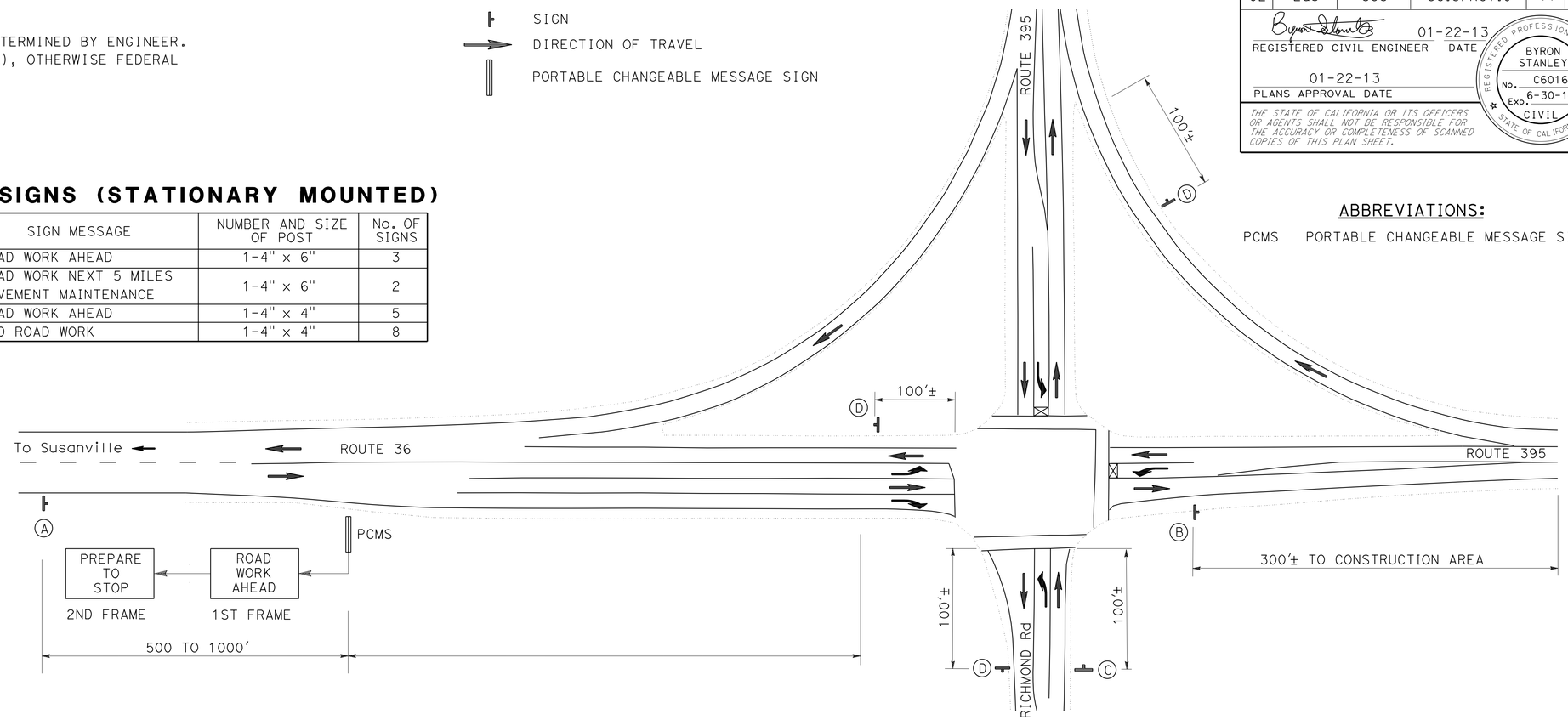

DETAIL A
ROUTE 36 - 395 JUNCTION

ROAD CONNECTIONS

PM	LOCATION
57.55	BASS HILL Rd
58.25	JOHNSTONVILLE DUMP Rd
60.13	DIANE Dr
60.14	JOHNSTONVILLE Rd
60.14	RICHMOND Rd

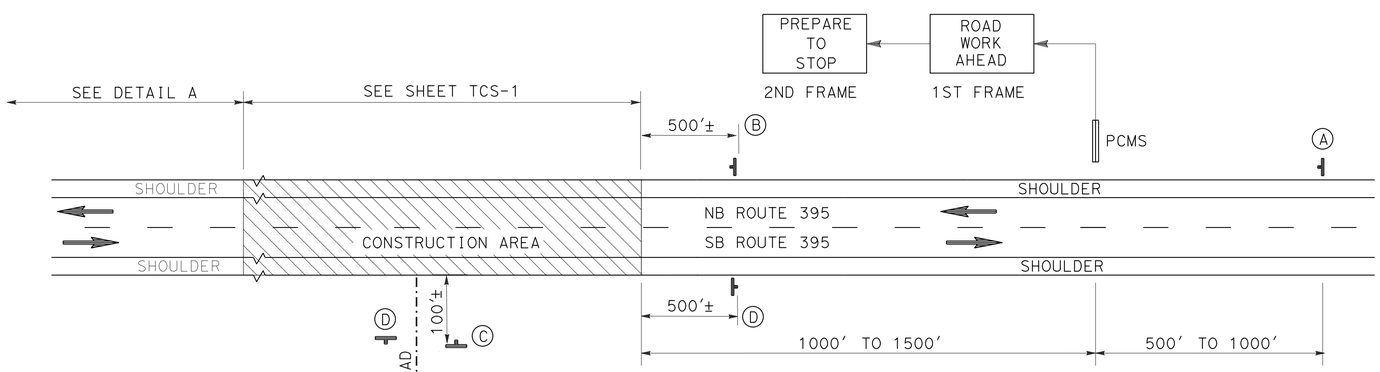

TYPICAL SIGNING

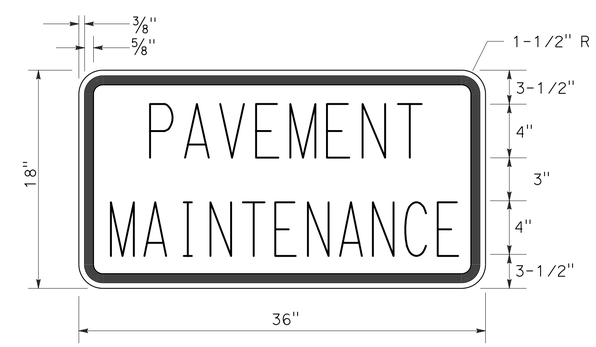

C23B(CA) SIGN PANEL DETAIL

CONSTRUCTION AREA SIGNS
NO SCALE

CS-1

REVISED BY | DATE REVISED
BYRON STANLEY | RUSSELL FLOOD
CALCULATED-DESIGNED BY | CHECKED BY
FUNCTIONAL SUPERVISOR: STEVEN TOPAL
STATE OF CALIFORNIA - DEPARTMENT OF TRANSPORTATION
DESIGN
Caltrans
P:\proj2\02\3c072_plans\pse\23c0721a001.dgn

LAST REVISION 01-22-13 | DATE PLOTTED => 12-MAR-2013 | TIME PLOTTED => 14:03

Dist	COUNTY	ROUTE	POST MILES TOTAL PROJECT	SHEET No.	TOTAL SHEETS
02	Las	395	56.5/R61.0	12	24

REGISTERED CIVIL ENGINEER 01-22-13 DATE

01-22-13
PLANS APPROVAL DATE

REGISTERED PROFESSIONAL ENGINEER BYRON STANLEY No. C60161 Exp. 6-30-14 CIVIL STATE OF CALIFORNIA

THE STATE OF CALIFORNIA OR ITS OFFICERS OR AGENTS SHALL NOT BE RESPONSIBLE FOR THE ACCURACY OR COMPLETENESS OF SCANNED COPIES OF THIS PLAN SHEET.

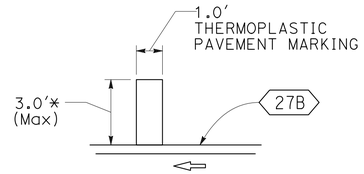

DETAIL A

* ACTUAL LENGTH MAY VARY DUE TO PAVEMENT WIDTH

LEGEND

- DIRECTION OF TRAFFIC
- XXX TRAFFIC STRIPE DETAIL No.
- WHITE LINE
- YELLOW LINE

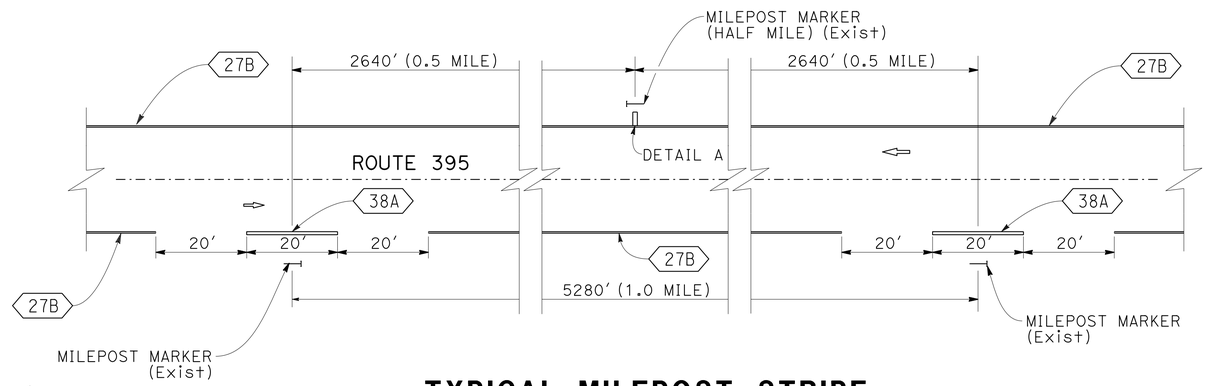

TYPICAL MILEPOST STRIPE

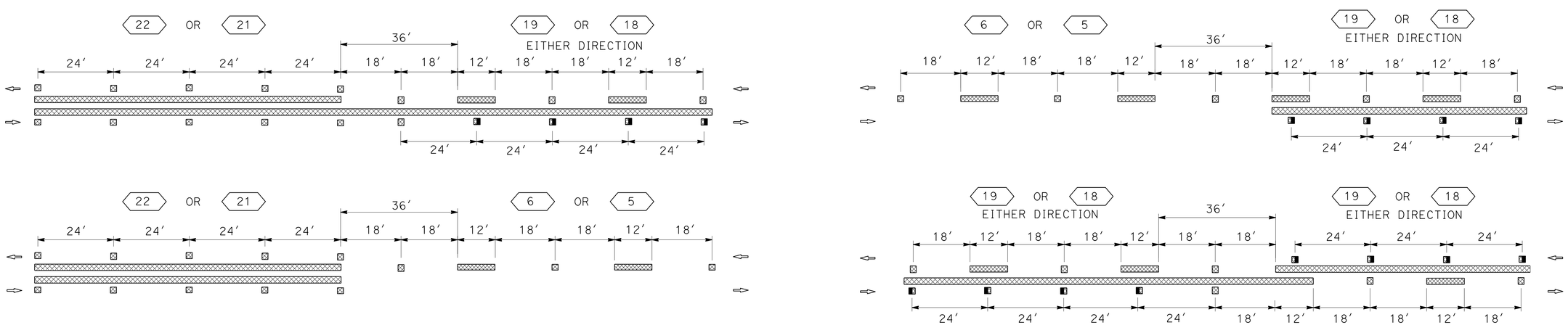

TYPICAL STRIPE TRANSITION DETAILS

PAVEMENT DELINEATION DETAILS (CONVENTIONAL ROADWAY)

NO SCALE

PDD-1

REVISED BY	DATE REVISED

BYRON STANLEY — CALCULATED-DESIGNED BY
GINNY SEIBERT — CHECKED BY
STEVEN TOPAL — FUNCTIONAL SUPERVISOR

STATE OF CALIFORNIA - DEPARTMENT OF TRANSPORTATION
Caltrans® DESIGN

P:\proj2\02\3c072_plans\pse\23c072nb001.dgn

LAST REVISION 01-22-13 | DATE PLOTTED => 12-MAR-2013 | TIME PLOTTED => 14:03

Dist	COUNTY	ROUTE	POST MILES TOTAL PROJECT	SHEET No.	TOTAL SHEETS
02	Las	395	56.5/R61.0	13	24

REGISTERED CIVIL ENGINEER 01-22-13 DATE

01-22-13
PLANS APPROVAL DATE

REGISTERED PROFESSIONAL ENGINEER BYRON STANLEY No. C60161 Exp. 6-30-14 CIVIL STATE OF CALIFORNIA

THE STATE OF CALIFORNIA OR ITS OFFICERS OR AGENTS SHALL NOT BE RESPONSIBLE FOR THE ACCURACY OR COMPLETENESS OF SCANNED COPIES OF THIS PLAN SHEET.

NOTE:

1. THIS DETAIL FOR PASSING LANE, 4' MEDIAN ("SOFT BARRIER").

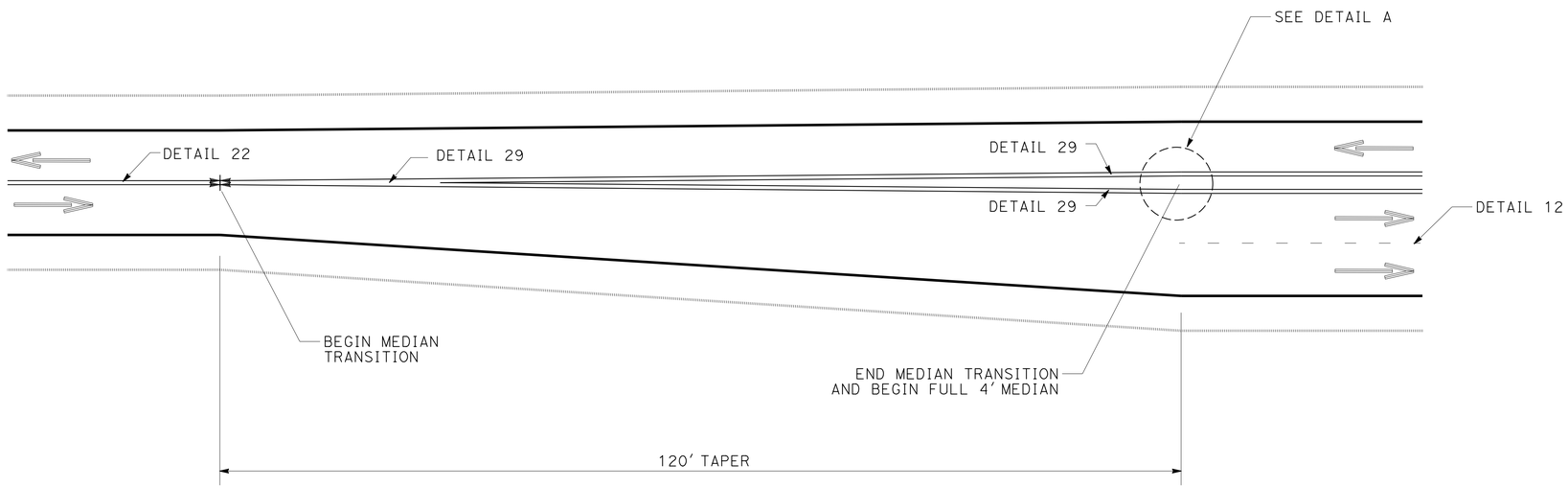

BEGINNING OF PASSING LANE

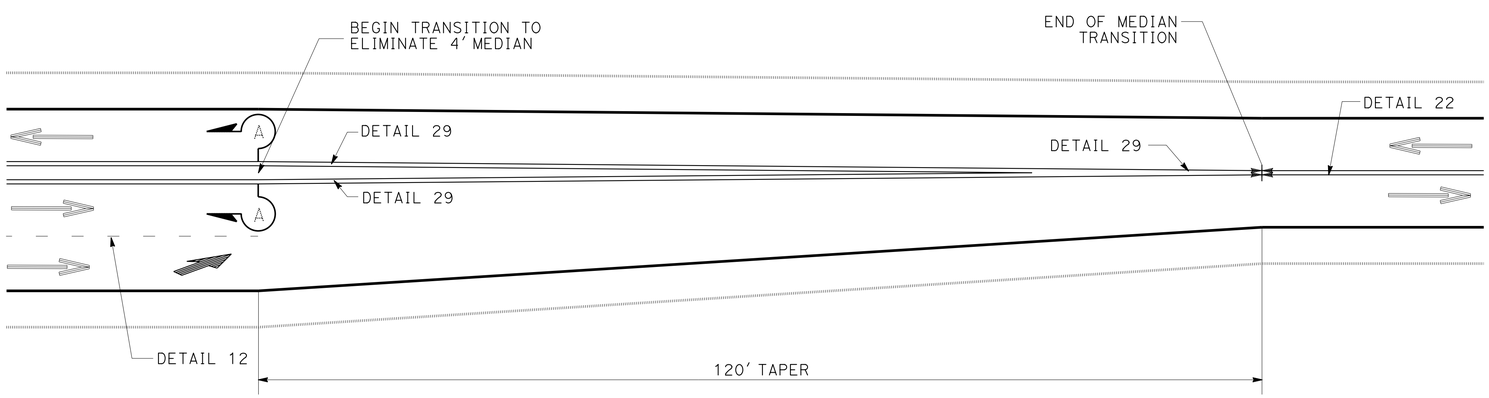

END OF PASSING LANE

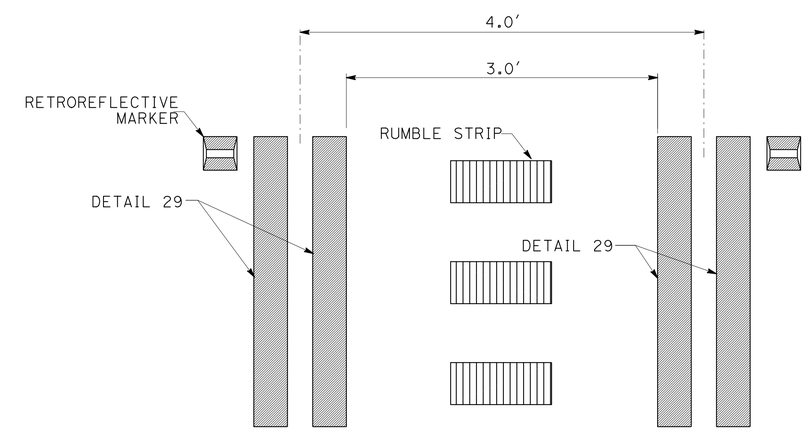

DETAIL A

PASSING LANE - 4' MEDIAN ("SOFT BARRIER") DETAIL

PAVEMENT DELINEATION DETAILS (CONVENTIONAL ROADWAY)

NO SCALE

PDD-2

REVISED BY	DATE REVISED
RUSSELL FLOOD	GINNY SEIBERT

CALCULATED-DESIGNED BY / CHECKED BY

FUNCTIONAL SUPERVISOR: STEVEN TOPAL

STATE OF CALIFORNIA - DEPARTMENT OF TRANSPORTATION

Caltrans® DESIGN

P:\proj2\02\3c072_plans\pse\23c072nb002.dgn

LAST REVISION 01-22-13 | DATE PLOTTED => 12-MAR-2013 TIME PLOTTED => 14:03

Dist	COUNTY	ROUTE	POST MILES TOTAL PROJECT	SHEET No.	TOTAL SHEETS
02	Las	395	56.5/R61.0	14	24

REGISTERED CIVIL ENGINEER 01-22-13 DATE

01-22-13
PLANS APPROVAL DATE

REGISTERED PROFESSIONAL ENGINEER
BYRON STANLEY
No. C60161
Exp. 6-30-14
CIVIL
STATE OF CALIFORNIA

THE STATE OF CALIFORNIA OR ITS OFFICERS OR AGENTS SHALL NOT BE RESPONSIBLE FOR THE ACCURACY OR COMPLETENESS OF SCANNED COPIES OF THIS PLAN SHEET.

PAVEMENT DELINEATION QUANTITIES

POSTMILE		STATION (+/-) "A1" LINE		NORTHBOUND	CENTER STRIPE	SOUTHBOUND	PAVEMENT MARKER (RETROREFLECTIVE RECESSED)			THERMO PLASTIC TRAFFIC STRIPE (SPRAYABLE) WHITE					THERMO PLASTIC TRAFFIC STRIPE (SPRAYABLE) YELLOW				
												8"							
							TYPE			DETAIL	DETAIL	DETAIL	DETAIL	DETAIL	DETAIL	DETAIL	DETAIL	DETAIL	DETAIL
							D	G	H	12	27B	38	38A	27C	6	18	19	22	29
BEGIN	END	BEGIN	END				EA	EA	EA	LF	LF	LF	LF	LF	LF	LF	LF	LF	LF
56.5	56.6	2984+25	2988+13	X	X		17				205								400
56.6	56.7	2988+13	2994+38	X	X		14		27		625						625		
56.7	57.0	2994+38	3014+00	X	X		41				1970		10		1965				
57.0	57.1	3014+00	3016+50	X	X		6		11		250		10				250		
57.1	57.1	3016+50	3017+00	X	X		10				50							100	100
57.1	57.2	3017+00	3020+00	X	X		25				300					300		600	
57.2	57.5	3020+00	3039+60	X	X		164	41		1946	1935								3925
57.5	57.6	3039+60	3040+84	X	X		11	8		122	125	120						250	
57.6	57.6	3040+84	3041+34	X	X			5		55	55	55							
57.6	57.7	3041+34	3050+25	X	X		75	20		881	880								1780
57.7	58.1	3050+25	3067+28	X	X		144				1705		20						3410
58.1	58.3	3067+28	3078+60	X	X		90				1080			150				2150	
58.3	58.4	3078+60	3085+42	X	X		58				690								1380
58.4	58.6	3085+42	3094+61	X	X		20		40		920						920		
58.6	R60.0	3094+61	3168+00	X	X		153				7335		10		7335				
R60.0	R60.0	3168+00	3170+40	X	X		5		10		240		10				240		
R60.0	R60.1	3170+40	3176+50	X	X		51				610							1220	
R60.1	R60.2	3176+50	3181+81	X	X		45				530								1070
R60.2	R60.3	3181+81	3188+00	X	X		52	61			620	1460		182				1240	
R60.3	R60.6	3188+39	3199+44	X	X		93				1105							950	1270
R60.6	R61.0	3199+44	3224+10	X	X		206	14			2470	315	20					4930	
56.5	56.5	2986+13	2987+41			X					2955			75					
57.1	57.6	3016+50	3041+34			X					2480			150					
57.2	58.1	3024+64	3067+28			X		90		4306									
57.6	58.1	3041+34	3068+50			X					2725					120			
58.1	58.3	3068+50	3080+68			X		15			1210	360							
58.3	R60.3	3080+68	3188+00			X					10715								
R60.3	R60.6	3188+39	3199+44			X		60			1110	1425		175					
R60.6	R61.0	3199+44	3223+00			X					2464								
SUBTOTAL							1280	314	88	7310	47,359	3735	80	732	9300	420	2035	11,440	13,335
TOTAL							1682			95,746									

THERMOPLASTIC PAVEMENT MARKING

PM	STATION "A1" LINE	L†	R†	DESCRIPTION/ MESSAGE	REMOVE THERMOPLASTIC PAVEMENT MARKING	THERMOPLASTIC PAVEMENT MARKING	LOCATION
					SQFT	SQFT	
57.1	3015+55	X		"STOP"	22	22	DRIVEWAY STOP BAR
	3015+50	X		LIMIT LINE	40	40	
57.3	3027+99	X		TYPE VI ARROW (3)	126	126	END SB PASSING LANE
57.6	3040+45		X	TYPE IV (L) ARROW	15	15	BASS HILL ROAD
	3040+95	X		"STOP"	22	22	
	3040+75	X		LIMIT LINE	40	40	
57.7	3046+15		X	TYPE VI ARROW (3)	126	126	END NB PASSING LANE
58.3	3078+42		X	"STOP"	22	22	JOHNSTONVILLE DUMP ROAD
	3078+42		X	LIMIT LINE	32	32	
	3079+00	X		TYPE IV (L) ARROW	15	15	
	3080+50	X		TYPE IV (L) ARROW	15	15	
R60.2 TO R60.4	3182+15		X	TYPE III (L) ARROW	42	42	DIANE DRIVE
	3184+73		X	TYPE III (L) ARROW	42	42	
	3184+73		X	TYPE III (R) ARROW	42	42	
	3184+73		X	TYPE I ARROW	31	31	
	3184+73	X		TYPE I ARROW	31	31	
	3186+96		X	TYPE III (R) ARROW	42	42	
	3187+60		X	TYPE III (L) ARROW	42	42	
	3187+60		X	TYPE I ARROW	31	31	
	3187+99	X		LIMIT LINE	40	40	
	3187+99	X		"STOP"	22	22	
	3188+42		X	"STOP"	22	22	
	3188+42		X	LIMIT LINE	42	42	JOHNSTONVILLE ROAD
	3188+82	X		TYPE I ARROW	31	31	
	3188+82	X		TYPE III (L) ARROW	42	42	
	3190+44	X		TYPE III (R) ARROW	42	42	
	3190+44	X		TYPE III (L) ARROW	42	42	
	3190+44	X		TYPE I ARROW	31	31	
	3190+44		X	TYPE I ARROW	31	31	
	3192+85	X		TYPE III (L) ARROW	42	42	
	3192+85	X		TYPE I ARROW	31	31	
	3192+85	X		TYPE III (R) ARROW	42	42	
R60.9	3220+00		X	TYPE III (L) ARROW	42	42	NB R† TURN LANE SR 395
56.5 TO R60.5	Var	X		MILEPOST STRIPE (HALF MILE)	27	27	IN SB LANE AT MILEPOST MARKERS
				TOTAL	1307	1307	

PAVEMENT DELINEATION QUANTITIES

PDQ-1

REVISED BY | DATE REVISED
GINNY SEIBERT | RUSSELL FLOOD
CALCULATED-DESIGNED BY | CHECKED BY
FUNCTIONAL SUPERVISOR
STEVEN TOPAL

STATE OF CALIFORNIA - DEPARTMENT OF TRANSPORTATION
Caltrans
DESIGN

P:\proj2\02\3c072_plans\pse\23c072nc001.dgn

LAST REVISION 01-22-13 | DATE PLOTTED => 12-MAR-2013 | TIME PLOTTED => 14:03

Dist	COUNTY	ROUTE	POST MILES TOTAL PROJECT	SHEET No.	TOTAL SHEETS
02	Las	395	56.5/R61.0	15	24

REGISTERED CIVIL ENGINEER 01-22-13 DATE

01-22-13
PLANS APPROVAL DATE

REGISTERED PROFESSIONAL ENGINEER BYRON STANLEY No. C60161 Exp. 6-30-14 CIVIL STATE OF CALIFORNIA

THE STATE OF CALIFORNIA OR ITS OFFICERS OR AGENTS SHALL NOT BE RESPONSIBLE FOR THE ACCURACY OR COMPLETENESS OF SCANNED COPIES OF THIS PLAN SHEET.

NOTE:

1. (N) - NOT A SEPARATE PAY ITEM, FOR INFORMATION ONLY

ROADWAY QUANTITIES

POSTMILE		STATION "A1" LINE		LENGTH (N)	BEGIN WIDTH (N)	END WIDTH (N)	SHOULDER BACKING	RUBBERIZED HOT MIX ASPHALT (GAP GRADED)	TACK COAT	REPLACE ASHALT CONCRETE SURFACING
BEGIN	END	BEGIN	END	FT	FT	FT	TON	TON	TON	CY
56.50	57.00	2985+26.9	3011+66.9	2640	40	40	238	1680	3.0	55
57.00	57.10	3011+66.9	3017+10.0	543	40	42	49	348	0.6	60
57.10	57.17	3017+10.0	3020+75.0	365	42	57	33	287	0.5	35
57.17	57.24	3020+75.0	3024+42.3	367	57	60	33	350	0.6	50
57.24	57.47	3024+42.3	3036+60.0	1218	60	61	110	1165	2.1	50
57.47	57.50	3036+60.0	3038+06.9	147	61	65	13	146	0.3	35
57.50	57.56	3038+06.9	3041+10.0	303	65	74	27	336	0.6	30
57.56	57.73	3041+10.0	3050+20.0	910	74	60	82	914	1.6	40
57.73	58.00	3050+20.0	3064+46.9	1427	60	50	128	1181	2.1	60
58.00	58.04	3064+46.9	3066+50.0	203	50	48	18	160	0.3	55
58.04	58.09	3066+50.0	3069+10.0	260	48	39	23	181	0.3	35
58.09	58.10	3069+10.0	3070+00.0	90	39	39	8	56	0.1	50
58.10	58.24	3070+00.0	3077+16.0	716	39	54	64	476	0.8	50
58.24	58.31	3077+16.0	3080+70.0	354	54	51	32	310	0.5	55
58.31	58.38	3080+70.0	3084+42.0	372	51	40	33	271	0.5	30
58.38	58.50	3084+42.0	3090+86.9	645	40	39	58	406	0.7	35
58.50	59.00	3090+86.9	3117+26.9	2640	39	40	238	1676	3.0	55
59.00	59.50	3117+26.9	3143+66.9	2640	40	40	238	1643	2.9	50
59.50	R60.00	3143+66.9	3170+06.9	2640	40	39	238	1669	3.0	50
R60.00	R60.12	3170+06.9	3176+50.0	643	39	42	58	403	0.7	70
R60.12	R60.19	3176+50.0	3180+00.0	350	42	50	32	257	0.5	65
R60.19	R60.33	3180+00.0	3187+25.0	725	50	77	65	681	1.2	60
R60.33	R60.43	3187+25.0	3193+00.0	575	77	63	52	612	1.1	55
R60.43	R60.50	3193+00.0	3196+46.9	347	63	46	31	295	0.5	50
R60.50	R60.56	3196+46.9	3199+48.0	301	46	39	27	197	0.3	50
R60.56	R60.88	3199+48.0	3216+70.0	1722	39	40	155	1088	1.9	35
R60.88	R60.94	3216+70.0	3219+85.0	315	40	51	28	230	0.4	40
R60.94	R61.00	3219+85.0	3222+86.9	302	51	54	27	254	0.5	30
						TOTAL	2138	17,272	30.6	1335

PLACE ASPHALT CONCRETE DIKE

POSTMILE		STATION "A1" LINE		NORTHBOUND	SOUTHBOUND	HOT MIX ASPHALT DIKE			MINOR HOT MIX ASPHALT
						TYPE A	TYPE E	TYPE F	
BEGIN	END	BEGIN	END			LF	LF	LF	TON
56.92	56.96	3007+39.6	3009+80.5		X		241		3.4
56.96	56.99	3009+80.5	3011+17.1		X			137	1.1
56.99	57.00	3011+17.1	3011+62.3		X	45			0.7
57.00	57.07	3011+79.8	3015+42.8		X		363		5.1
57.08	57.09	3015+93.7	3016+58.5		X			65	0.4
57.10	57.16	3016+72.6	3020+09.7		X		337		4.8
57.16	57.25	3020+24.0	3024+63.7		X		440		6.3
57.23	57.25	3023+59.1	3024+88.1	X		129			1.9
57.98	58.05	3063+27.1	3067+18.7	X				392	2.8
58.20	58.33	3075+12.4	3082+06.0		X		694		9.9
58.61	58.77	3096+77.6	3104+86.9		X		809		11.5
58.72	58.86	3102+59.9	3110+14.0	X			754		10.8
58.77	58.80	3105+01.4	3106+85.3		X			184	1.3
58.80	58.90	3106+85.3	3111+73.5		X		488		7.0
58.87	58.93	3110+30.8	3113+32.1	X				301	2.2
58.90	58.92	3111+73.5	3113+18.0		X			145	1.0
58.92	59.01	3113+18.0	3117+85.7		X		468		6.7
58.93	58.97	3113+32.1	3115+46.1	X			214		3.1
58.98	59.03	3115+99.1	3118+69.0	X			270		3.8
R60.53	R60.55	3198+01.4	3199+28.0	X				127	0.9
R60.54	R60.56	3198+46.0	3199+77.2		X			131	0.9
					TOTAL	174	5078	1482	85.6

TREATED WOOD WASTE

POSTMILE		TREATED WOOD WASTE
BEGIN	END	LB
56.96	R60.58	18,200

METAL BEAM GUARD RAILING QUANTITIES

POSTMILE		STATION "A1" LINE		NORTHBOUND	SOUTHBOUND	REMOVE MBGR	MBGR (STEEL POST)	ALTERNATIVE FLARED TERMINAL SYSTEM	ALTERNATIVE IN-LINE TERMINAL SYSTEM
BEGIN	END	BEGIN	END			LF	LF	EA	EA
56.96	56.99	3009+80.5	3011+20.2	X		137.5	62.5	2	
56.96	56.99	3009+82.0	3011+17.1		X	137.5	62.5	2	
57.25	57.45	3024+66.2	3035+44.2		X	1100.0	1050		1
57.97	58.26	3063+10.5	3078+10.3	X		1512.5	1437.5	2	
58.77	58.80	3105+04.0	3106+81.7		X	175.0	100	2	
58.88	58.93	3110+69.0	3113+33.8	X		262.5	187.5	2	
58.90	58.92	3111+75.1	3112+86.9		X	112.5	37.5	2	
R60.53	R60.57	3198+17.8	3200+29.5	X		200.0	125	2	
R60.54	R60.58	3198+65.7	3200+78.7		X	200.0	125	2	
					TOTAL	3837.5	3187.5	16	1

COLD PLANE ASPHALT CONCRETE PAVEMENT

POSTMILE		STATION "A1" LINE		NORTHBOUND	SOUTHBOUND	COLD PLANE ASPHALT CONCRETE PAVEMENT	DESCRIPTION
BEGIN	END	BEGIN	END			SQYD	
56.50	56.52	2985+26.9	2986+06.9	X	X	356	MAINLINE CONFORM
57.06	57.09	3015+08.0	3016+22.0		X	92	DRIVEWAY
57.55	57.58	3040+46.0	3042+24.0		X	152	BASS HILL Rd
58.25	58.28	3077+52.0	3079+04.0	X		120	DUMP Rd
58.60	58.62	3096+10.0	3097+03.0		X	92	DRIVEWAY
58.96	58.98	3115+26.0	3116+25.0	X		92	DRIVEWAY
59.26	59.27	3130+87.0	3131+55.0		X	68	DRIVEWAY
R60.11	R60.13	3176+10.0	3176+94.0		X	66	DRIVEWAY
R60.13	R60.17	3177+12.0	3179+15.0		X	187	DIANE Dr
R60.14	R60.18	3177+25.0	3179+36.0	X		190	JOHNSTONVILLE Rd
R60.67	R60.70	3205+34.0	3207+00.0	X		170	TO SCALES
R60.83	R60.86	3214+00.0	3215+61.0	X		117	FROM SCALES
R60.98	R61.00	3222+06.9	3222+86.9	X	X	480	MAINLINE CONFORM
					TOTAL	2182	

MAINTAING EXISTING TRAFFIC MANAGEMENT SYSTEM ELEMENTS DURING CONSTRUCTION

POSTMILE	SYSTEM ELEMENT
R60.03	Hwy ADVISORY RADIO FLASHER
R60.06	Hwy ADVISORY RADIO

POSTMILE	EXISTING CENSUS LOOP DETECTORS
R60.75	TRAFFIC MONITORING STATIONS

TO BE PROTECTED IN-PLACE

SUMMARY OF QUANTITIES

Q-1

REVISED BY | DATE REVISED
RUSSELL FLOOD | GINNY SEIBERT
CALCULATED-DESIGNED BY | CHECKED BY
FUNCTIONAL SUPERVISOR | STEVEN TOPAL

STATE OF CALIFORNIA - DEPARTMENT OF TRANSPORTATION
Caltrans DESIGN

P:\proj2\02\3c072_plans\pse\23c072pa001.dgn

LAST REVISION 01-22-13 | DATE PLOTTED => 12-MAR-2013 | TIME PLOTTED => 14:03

Dist	COUNTY	ROUTE	POST MILES TOTAL PROJECT	SHEET No.	TOTAL SHEETS
02	Las	395	56.5/R61.0	16	24

REGISTERED CIVIL ENGINEER 01-22-13 DATE

01-22-13
PLANS APPROVAL DATE

REGISTERED PROFESSIONAL ENGINEER BYRON STANLEY No. C60161 Exp. 6-30-14 CIVIL STATE OF CALIFORNIA

THE STATE OF CALIFORNIA OR ITS OFFICERS OR AGENTS SHALL NOT BE RESPONSIBLE FOR THE ACCURACY OR COMPLETENESS OF SCANNED COPIES OF THIS PLAN SHEET.

RUMBLE STRIP

SHOULDER RUMBLE STRIP (HMA, GROUND-IN INDENTATIONS)

POSTMILE		STATION "A1" LINE		NORTHBOUND	SOUTHBOUND	(N) LENGTH	LENGTH
BEGIN	END	BEGIN	END			LF	STA
56.50	58.27	2985+26.9	3078+72.5	X		9346	93.5
58.29	58.96	3079+78.1	3115+15.7	X		3538	35.4
58.98	60.22	3116+21.3	3181+68.5	X		6547	65.5
60.38	60.64	3190+13.3	3204+00.0	X		1387	13.9
60.70	60.83	3207+00.0	3214+00.0	X		700	7.0
56.50	56.93	2985+26.9	3007+97.3		X	2270	22.7
56.95	57.55	3009+02.9	3040+70.9		X	3168	31.7
57.58	58.60	3042+29.3	3096+14.9		X	5386	53.9
58.61	59.26	3096+67.7	3130+99.7		X	3432	34.3
59.27	R60.11	3131+52.5	3175+87.7		X	4435	44.4
R60.13	R60.33	3176+93.3	3187+49.3		X	1056	10.6
R60.50	R60.96	3196+46.9	3220+75.7		X	2429	24.3
					TOTAL	43,694	437.2

CENTERLINE RUMBLE STRIP (HMA, GROUND-IN INDENTATIONS)

POSTMILE		STATION "A1" LINE		DETAIL 6	DETAIL 18	DETAIL 19	DETAIL 22	DETAIL 29
BEGIN	END	BEGIN	END	LF	LF	LF	LF	LF
56.5	56.6	2986+13	2988+13					200
56.6	56.7	2988+13	2994+38			625		
56.7	57.0	2994+38	3014+00	1965				
57.0	57.1	3014+00	3016+50			250		
57.1	57.1	3016+50	3017+00					50
57.1	57.2	3017+00	3020+00		300		300	
57.2	57.5	3020+00	3039+60					1963
57.5	57.6	3039+60	3040+84				125	
57.6	57.7	3041+34	3050+25					890
57.7	58.1	3050+25	3067+28					1705
58.1	58.3	3067+28	3078+60				1075	
58.3	58.4	3078+60	3085+42					690
58.4	58.6	3085+42	3094+61			920		
58.6	R60.0	3094+61	3168+00	7335				
R60.0	R60.0	3168+00	3170+40			240		
R60.0	R60.1	3170+40	3176+50				610	
R60.1	R60.2	3176+50	3181+81					535
R60.2	R60.3	3181+81	3188+00				620	
R60.3	R60.6	3188+39	3199+44					635
R60.6	R61.0	3199+44	3224+10				2465	
57.6	58.1	3041+34	3068+50		120			
			SUBTOTAL (LF)	9300	420	2035	5,195	6,667
			TOTAL (STA)			237		

SUMMARY OF QUANTITIES

Q-2

REVISED BY | DATE REVISED
RUSSELL FLOOD | GINNY SEIBERT
CALCULATED-DESIGNED BY | CHECKED BY
FUNCTIONAL SUPERVISOR
STEVEN TOPAL

STATE OF CALIFORNIA - DEPARTMENT OF TRANSPORTATION
Caltrans
DESIGN

P:\proj\02\3c072_plans\pse\23c072pa002.dgn

LAST REVISION 01-22-13 | DATE PLOTTED => 12-MAR-2013 | TIME PLOTTED => 14:03

Dist	COUNTY	ROUTE	POST MILES TOTAL PROJECT	SHEET No.	TOTAL SHEETS
02	Las	395	56.5/R61.0	17	24

REGISTERED CIVIL ENGINEER 12-7-12 DATE

01-22-13
PLANS APPROVAL DATE

REGISTERED PROFESSIONAL ENGINEER Gurinderpal Bhullar No. C48815 Exp. 9-30-14 CIVIL STATE OF CALIFORNIA

THE STATE OF CALIFORNIA OR ITS OFFICERS OR AGENTS SHALL NOT BE RESPONSIBLE FOR THE ACCURACY OR COMPLETENESS OF SCANNED COPIES OF THIS PLAN SHEET.

NOTES:

Unless otherwise specified in the special provisions, all temporary warning signs shall have black legend on orange background.

California code are designated by (CA). Otherwise, Federal (MUTCD) codes are shown.

TYPICAL LANE CLOSURE WITH REVERSIBLE CONTROL

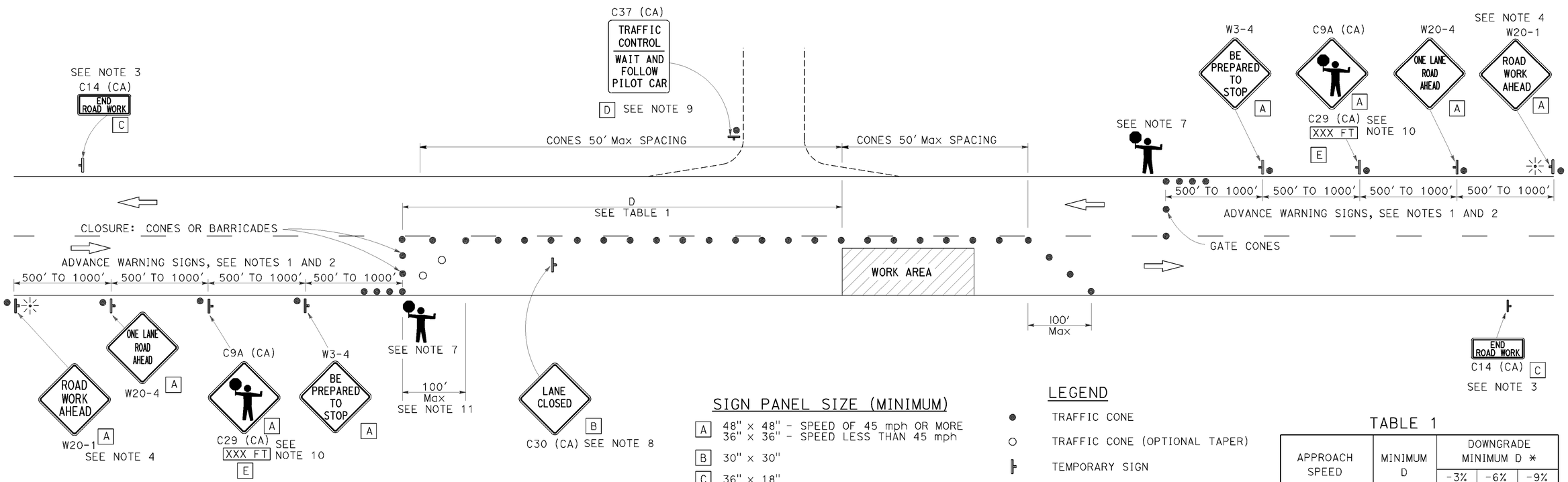

SIGN PANEL SIZE (MINIMUM)

- A — 48" x 48" - SPEED OF 45 mph OR MORE; 36" x 36" - SPEED LESS THAN 45 mph
- B — 30" x 30"
- C — 36" x 18"
- D — 36" x 42"
- E — 36" x 9"

LEGEND

- TRAFFIC CONE
- TRAFFIC CONE (OPTIONAL TAPER)
- TEMPORARY SIGN
- PORTABLE FLASHING BEACON
- FLAGGER

TABLE 1

APPROACH SPEED	MINIMUM D	DOWNGRADE MINIMUM D *		
		-3%	-6%	-9%
mph	ft	ft	ft	ft
25 AND BELOW	155	158	165	173
30	200	205	215	227
35	250	257	271	287
40	305	315	333	354
45	360	378	400	427
50	425	446	474	507
55	495	520	553	593
60	570	598	638	686
65	645	682	728	785

* USE ON SUSTAINED DOWNGRADE STEEPER THAN -3 PERCENT AND LONGER THAN 1 MILE.

NOTES:

1. Where approach speeds are low, advance warning signs may be placed at 300' spacing, and closer in urban areas.
2. Each advance warning sign in each direction of travel shall be equipped with at least two flags for daytime closure. Each flag shall be at least 16" x 16" in size and shall be orange or fluorescent red-orange in color. Flashing beacons shall be placed at the locations indicated for lane closure during hours of darkness.
3. A C14 (CA) "END ROAD WORK" sign, as appropriate, shall be placed at the end of the lane control unless the end of work area is obvious, or ends within a larger project's limits.
4. If the W20-1 sign would follow within 2000' of a stationary W20-1 or C11 (CA) "ROAD WORK NEXT _____MILES", use a W20-4 sign for the first advance warning sign.
5. All cones used for lane closures during the hours of darkness shall be fitted with retroreflective bands (or sleeves) as specified in the specifications.
6. Portable delineators, placed at one-half the spacing indicated for traffic cones, may be used instead of cones for daytime closures only.
7. Additional advance flaggers may be required. Flagger should stand in a conspicuous place, be visible to approaching traffic as well as approaching vehicles after the first vehicle has stopped. During the hours of darkness, the flagging-station and flagger shall be illuminated and clearly visible to approaching traffic. The illumination footprint of the lighting on the ground shall be at least 20' in diameter. Place a minimum of four cones at 50' intervals in advance of flagger station as shown.
8. Place C30 (CA) "LANE CLOSED" sign at 500' to 1000' intervals throughout extended work areas. They are optional if the work area is visible from the flagger station.
9. When a pilot car is used, place a C37 (CA) "TRAFFIC CONTROL-WAIT AND FOLLOW PILOT CAR" sign at all intersections within traffic control area. Signs shall be clean and visible at all times.
10. An optional C29 (CA) sign may be placed below the C9A (CA) sign.
11. Traffic cones or barricades may be placed on the optional taper as shown, barricades shall be Type I, II, or III.

STATE OF CALIFORNIA
DEPARTMENT OF TRANSPORTATION

TRAFFIC CONTROL SYSTEM FOR LANE CLOSURE ON TWO LANE CONVENTIONAL HIGHWAYS

NO SCALE

TCS-1

STATE OF CALIFORNIA - DEPARTMENT OF TRANSPORTATION
DESIGN
FUNCTIONAL SUPERVISOR: ERIC ORR
CALCULATED-DESIGNED BY: GURINDERPAL BHULLAR
CHECKED BY: BYRON STANLEY
REVISED BY
DATE REVISED

P:\proj2\02\3c072_plans\pse\23c072uj001.dgn

LAST REVISION 01-07-13 | DATE PLOTTED => 10-DEC-2012 | TIME PLOTTED => 09:45

Dist	COUNTY	ROUTE	POST MILES TOTAL PROJECT	SHEET No.	TOTAL SHEETS
02	Las	395	56.5/R61.0	18	24

REGISTERED CIVIL ENGINEER 12-7-12 DATE

01-22-13
PLANS APPROVAL DATE

REGISTERED PROFESSIONAL ENGINEER Gurinderpal Bhullar No. C48815 Exp. 9-30-14 CIVIL STATE OF CALIFORNIA

THE STATE OF CALIFORNIA OR ITS OFFICERS OR AGENTS SHALL NOT BE RESPONSIBLE FOR THE ACCURACY OR COMPLETENESS OF SCANNED COPIES OF THIS PLAN SHEET.

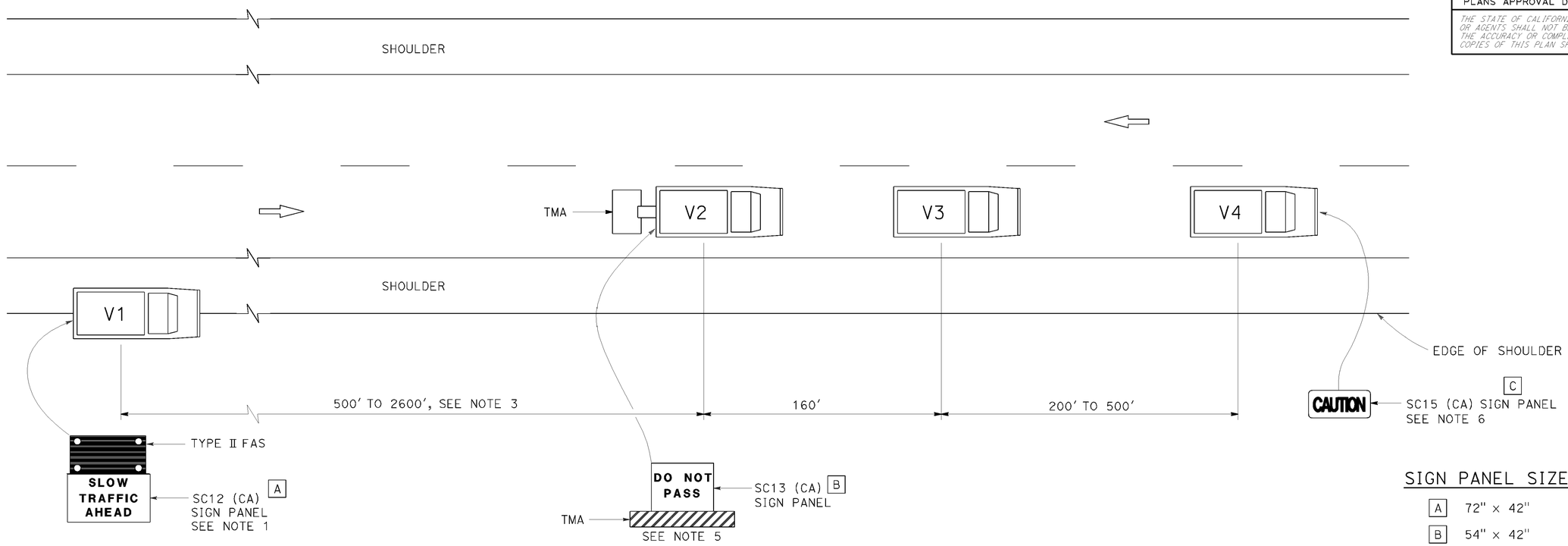

SIGN PANEL SIZE (Min)

A	72" x 42"
B	54" x 42"
C	54" x 24"

LEGEND

V1	SIGN VEHICLE
V2	SHADOW VEHICLE
V3	WORK/APPLICATION VEHICLE
V4	SIGN VEHICLE
TMA	TRUCK-MOUNTED ATTENUATOR
	FLASHING ARROW SIGN (FAS) IN FLASHING CAUTION MODE

NOTES:

1. Either a changeable message sign or a SC12 (CA) "SLOW TRAFFIC AHEAD" sign shall be mounted on the rear of sign vehicle V1. A Type II flashing arrow sign may be used with the SC12 (CA) sign panel.
2. Sign vehicle V1 should be positioned where highly visible when shoulders are not available.
3. If traffic queues develop, sign vehicle V1 should be positioned upstream from the end of queue.
4. Vehicle-mounted sign panels shall be Type III, IV VII, VIII or IX retroreflective sheeting, black on white, black on orange, or black on fluorescent orange, with 6" minimum series D letters per Caltrans sign specifications.
5. Gross Vehicle Weight of shadow vehicle shall be a minimum of 20,000 pounds and shall be equipped with a truck-mounted attenuator. The sign panel shown shall be mounted on the rear of shadow vehicle V2. The message "LANE CLOSED" may be used in place of the "DO NOT PASS" message.
6. The sign panel shown shall be mounted on the front of sign vehicle V4, facing opposing traffic.
7. All vehicles shall be equipped with flashing or rotating amber lights.
8. Sign vehicle V4 will not be required when the work and vehicles V2 and V3 are 2' or more from the centerline of the highway during the work or application operations.
9. All vehicles used for lane closures shall be equipped with two-way radios and the vehicle operators shall maintain communication during the work or application operation.
10. When multiple work vehicles are used in close proximity to each other, only one shadow vehicle is required and spacing between work vehicles shall be minimized in order to deter traffic from entering the closed lane.

STATE OF CALIFORNIA
DEPARTMENT OF TRANSPORTATION

TRAFFIC CONTROL SYSTEM FOR MOVING LANE CLOSURE ON TWO LANE HIGHWAYS

NO SCALE

TCS-2

LAST REVISION 01-07-13

CALCULATED-DESIGNED BY GURINDERPAL BHULLAR
CHECKED BY BYRON STANLEY
REVISED BY
DATE REVISED
FUNCTIONAL SUPERVISOR ERIC ORR

STATE OF CALIFORNIA - DEPARTMENT OF TRANSPORTATION
Caltrans DESIGN

P:\proj2\02\3c072_plans\pse\23c072uj002.dgn

Dist	COUNTY	ROUTE	POST MILES TOTAL PROJECT	SHEET No.	TOTAL SHEETS
02	Las	395	56.5/R61.0	19	24

REGISTERED CIVIL ENGINEER

April 20, 2012
PLANS APPROVAL DATE

REGISTERED PROFESSIONAL ENGINEER
Roberta L. McLaughlin
No. C40375
Exp. 3-31-13
CIVIL
STATE OF CALIFORNIA

THE STATE OF CALIFORNIA OR ITS OFFICERS OR AGENTS SHALL NOT BE RESPONSIBLE FOR THE ACCURACY OR COMPLETENESS OF SCANNED COPIES OF THIS PLAN SHEET.

TO ACCOMPANY PLANS DATED 01-22-13

2010 REVISED STANDARD PLAN RSP A24A

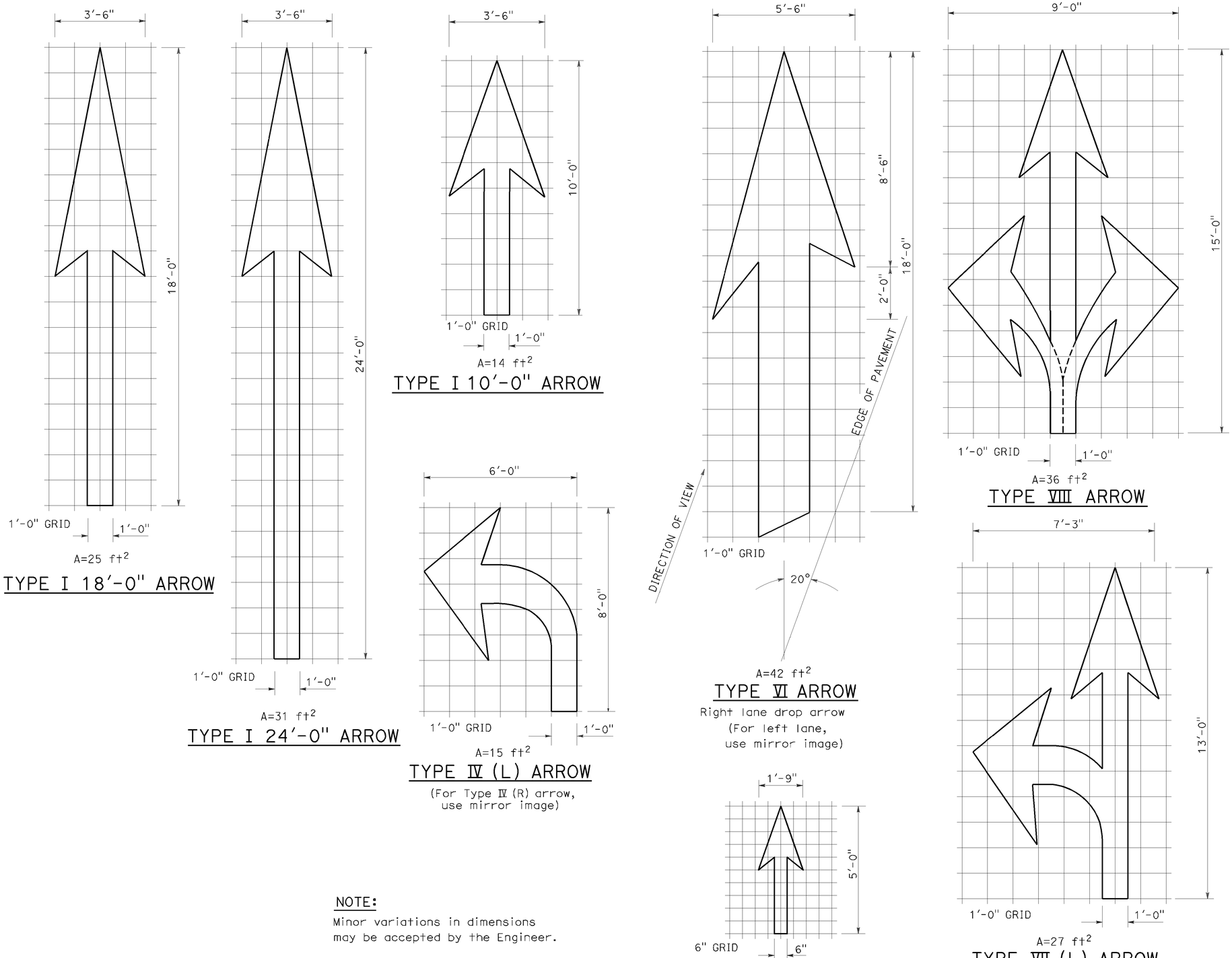

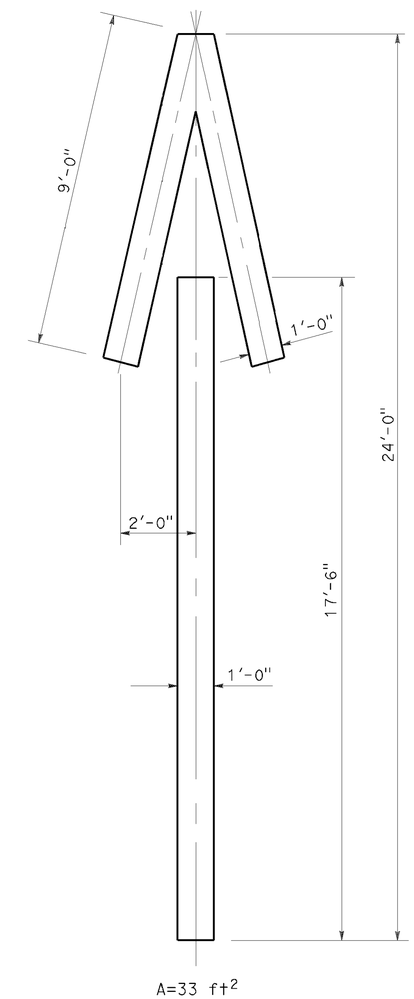

NOTE:
Minor variations in dimensions may be accepted by the Engineer.

STATE OF CALIFORNIA
DEPARTMENT OF TRANSPORTATION

PAVEMENT MARKINGS ARROWS

NO SCALE

RSP A24A DATED APRIL 20, 2012 SUPERSEDES STANDARD PLAN A24A DATED MAY 20, 2011 - PAGE 13 OF THE STANDARD PLANS BOOK DATED 2010.

REVISED STANDARD PLAN RSP A24A

P:\proj2\02\3c072_plans\pse\23c072va001.dgn

3-14-12

Dist	COUNTY	ROUTE	POST MILES TOTAL PROJECT	SHEET No.	TOTAL SHEETS
02	Las	395	56.5/R61.0	20	24

REGISTERED CIVIL ENGINEER

October 19, 2012
PLANS APPROVAL DATE

REGISTERED PROFESSIONAL ENGINEER Roberta L. McLaughlin No. C40375 Exp. 3-31-13 CIVIL STATE OF CALIFORNIA

THE STATE OF CALIFORNIA OR ITS OFFICERS OR AGENTS SHALL NOT BE RESPONSIBLE FOR THE ACCURACY OR COMPLETENESS OF SCANNED COPIES OF THIS PLAN SHEET.

NOTE: TO ACCOMPANY PLANS DATED 01-22-13

Minor variations in dimensions may be accepted by the Engineer.

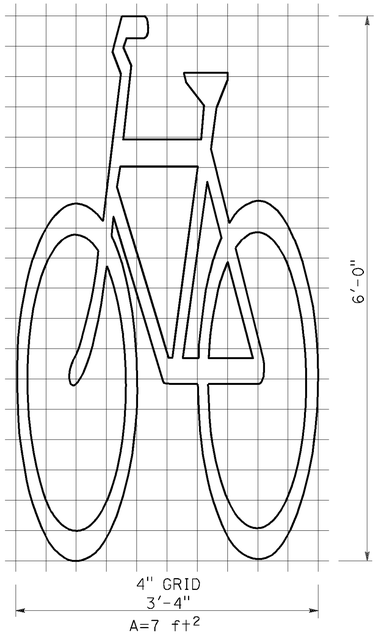

BIKE LANE SYMBOL WITHOUT PERSON

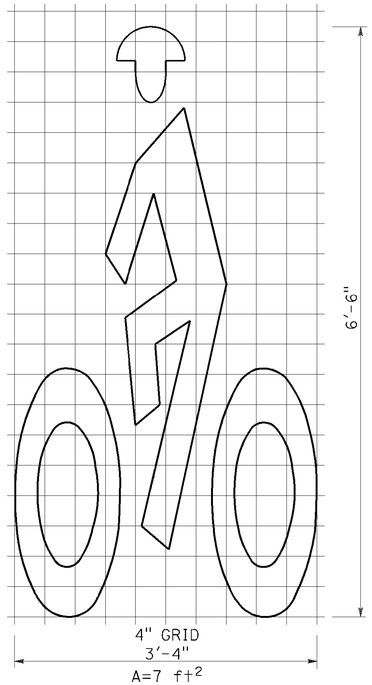

BIKE LANE SYMBOL WITH PERSON

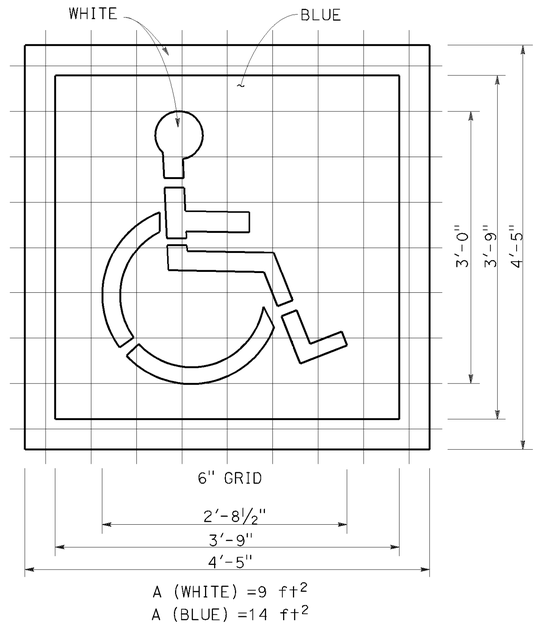

INTERNATIONAL SYMBOL OF ACCESSIBILITY (ISA) MARKING

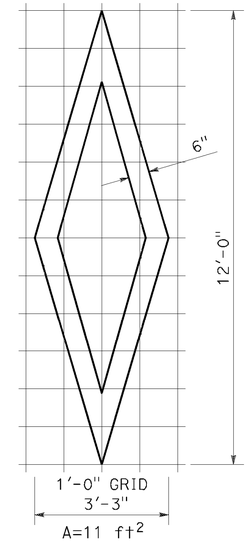

DIAMOND SYMBOL

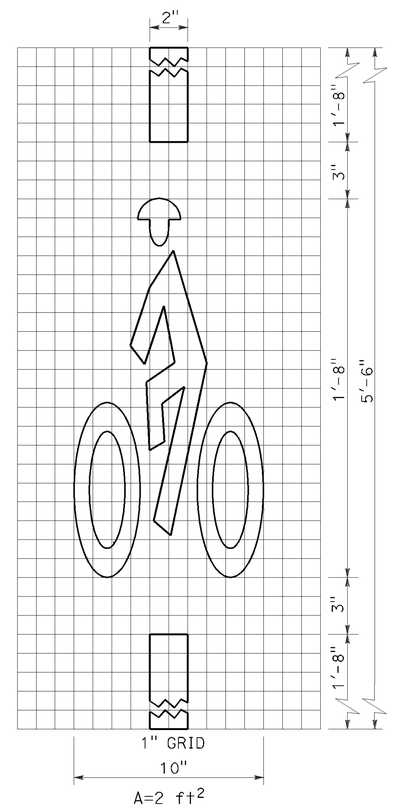

BICYCLE LOOP DETECTOR SYMBOL

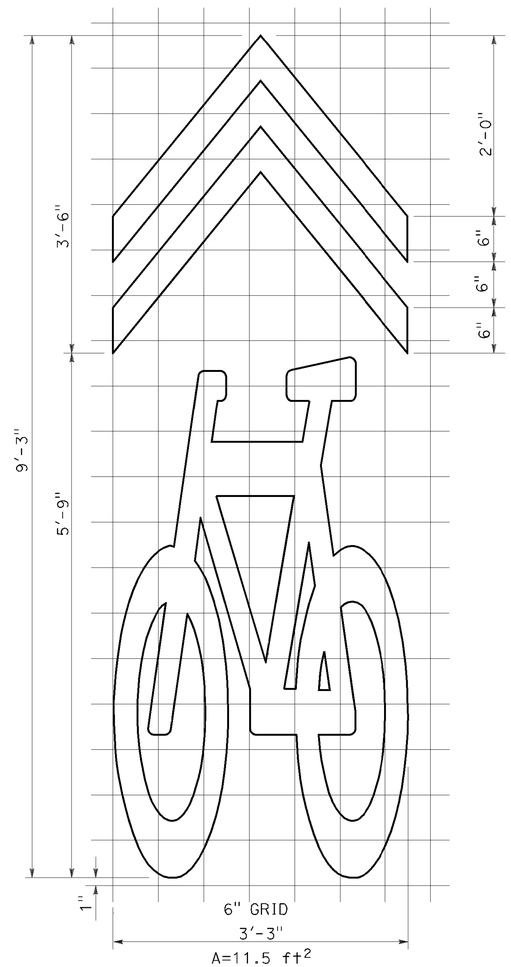

SHARED ROADWAY BICYCLE MARKING

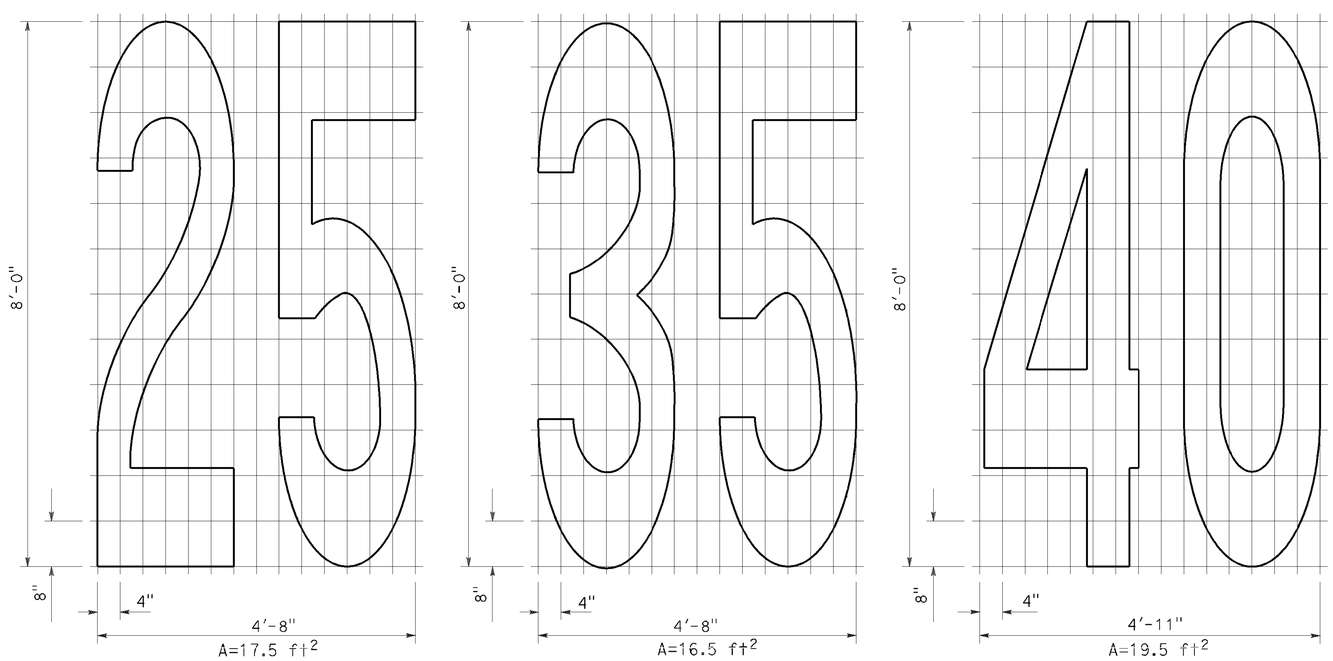

NUMERALS

STATE OF CALIFORNIA
DEPARTMENT OF TRANSPORTATION

PAVEMENT MARKINGS SYMBOLS AND NUMERALS

NO SCALE

RSP A24C DATED OCTOBER 19, 2012 SUPERSEDES STANDARD PLAN A24C DATED MAY 20, 2011 - PAGE 15 OF THE STANDARD PLANS BOOK DATED 2010.

REVISED STANDARD PLAN RSP A24C

2010 REVISED STANDARD PLAN RSP A24C

P:\proj2\02\3c072_plans\pse\23c072va002.dgn

6-28-12

Dist	COUNTY	ROUTE	POST MILES TOTAL PROJECT	SHEET No.	TOTAL SHEETS
02	Las	395	56.5/R61.0	21	24

REGISTERED CIVIL ENGINEER

July 20, 2012
PLANS APPROVAL DATE

REGISTERED PROFESSIONAL ENGINEER
Roberta L. McLaughlin
No. C40375
Exp. 3-31-13
CIVIL
STATE OF CALIFORNIA

THE STATE OF CALIFORNIA OR ITS OFFICERS OR AGENTS SHALL NOT BE RESPONSIBLE FOR THE ACCURACY OR COMPLETENESS OF SCANNED COPIES OF THIS PLAN SHEET.

TO ACCOMPANY PLANS DATED 01-22-13

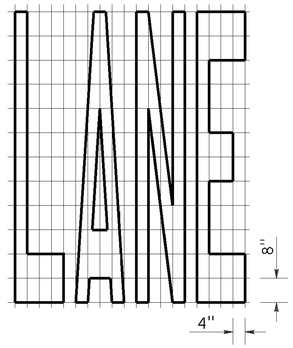

A=24 ft²

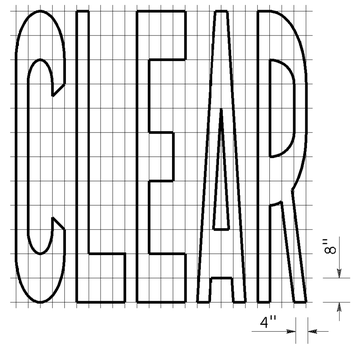

A=27 ft²

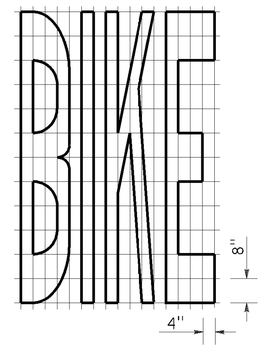

A=21 ft²

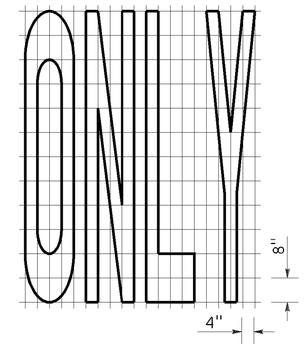

A=22 ft²

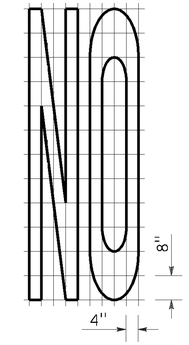

A=14 ft²

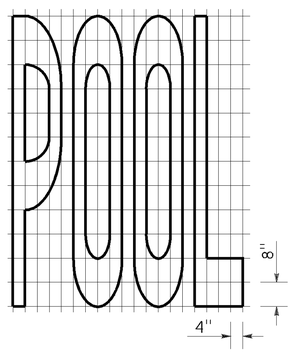

A=23 ft²

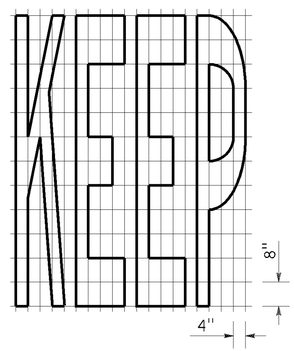

A=24 ft²

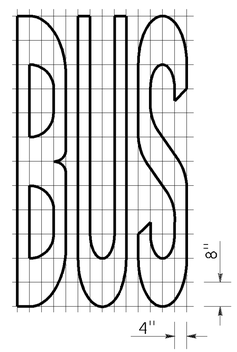

A=20 ft²

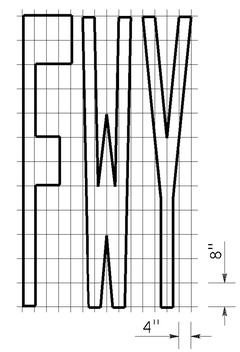

A=16 ft²

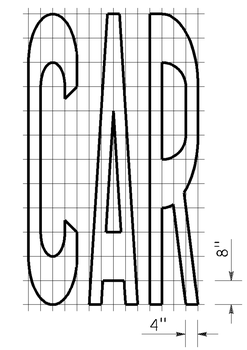

A=17 ft²

WORD MARKINGS			
ITEM	ft²	ITEM	ft²
LANE	24	NO	14
POOL	23	BIKE	21
CAR	17	BUS	20
CLEAR	27	ONLY	22
KEEP	24	FWY	16

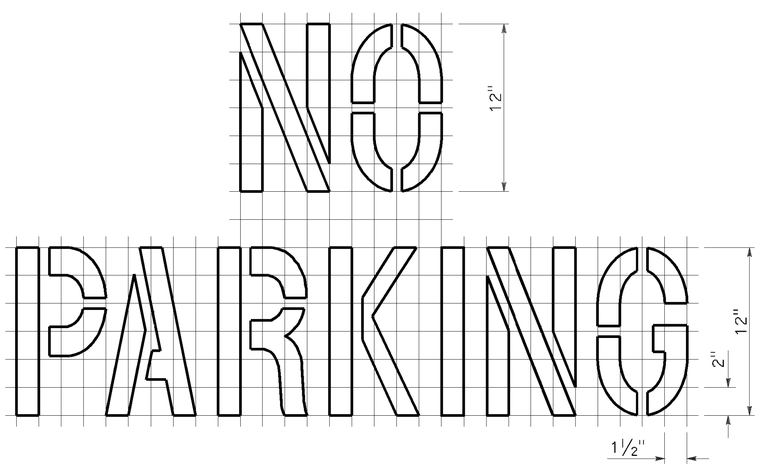

A=2 ft²
See Notes 6 and 7

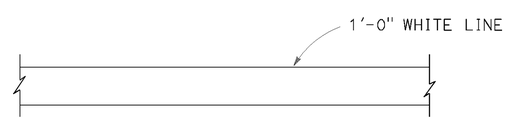

LIMIT LINE (STOP LINE)

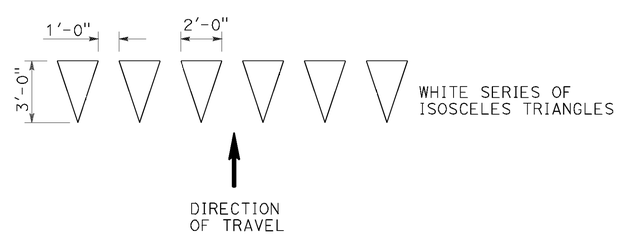

YIELD LINE

NOTES:

1. If a message consists of more than one word, it should read "UP", i.e., the first word should be nearest the driver.
2. The space between words should be at least four times the height of the characters for low speed roads, but not more than ten times the height of the characters. The space may be reduced appropriately where there is limited space because of local conditions.
3. Minor variations in dimensions may be accepted by the Engineer.
4. Portions of a letter, number or symbol may be separated by connecting segments not to exceed 2" in width.
5. The words "NO PARKING" pavement marking is to be used for parking facilities. For typical locations of markings, see Standard Plans A90A and A90B.
6. The words "NO PARKING", shall be painted in white letters no less than 1'-0" high on a contrasting background and located so that it is visible to traffic enforcement officials.

STATE OF CALIFORNIA
DEPARTMENT OF TRANSPORTATION

PAVEMENT MARKINGS WORDS, LIMIT AND YIELD LINES

NO SCALE

RSP A24E DATED JULY 20, 2012 SUPERSEDES STANDARD PLAN A24E DATED MAY 20, 2011 - PAGE 17 OF THE STANDARD PLANS BOOK DATED 2010.

REVISED STANDARD PLAN RSP A24E

2010 REVISED STANDARD PLAN RSP A24E

P:\proj2\02\3c072_plans\pse\23c072va003.dgn

6-12-12

Dist	COUNTY	ROUTE	POST MILES TOTAL PROJECT	SHEET No.	TOTAL SHEETS
02	Las	395	56.5/R61.0	22	24

REGISTERED CIVIL ENGINEER

July 20, 2012
PLANS APPROVAL DATE

REGISTERED PROFESSIONAL ENGINEER
Roberta L. McLaughlin
No. C40375
Exp. 3-31-13
CIVIL
STATE OF CALIFORNIA

THE STATE OF CALIFORNIA OR ITS OFFICERS OR AGENTS SHALL NOT BE RESPONSIBLE FOR THE ACCURACY OR COMPLETENESS OF SCANNED COPIES OF THIS PLAN SHEET.

TO ACCOMPANY PLANS DATED 01-22-13

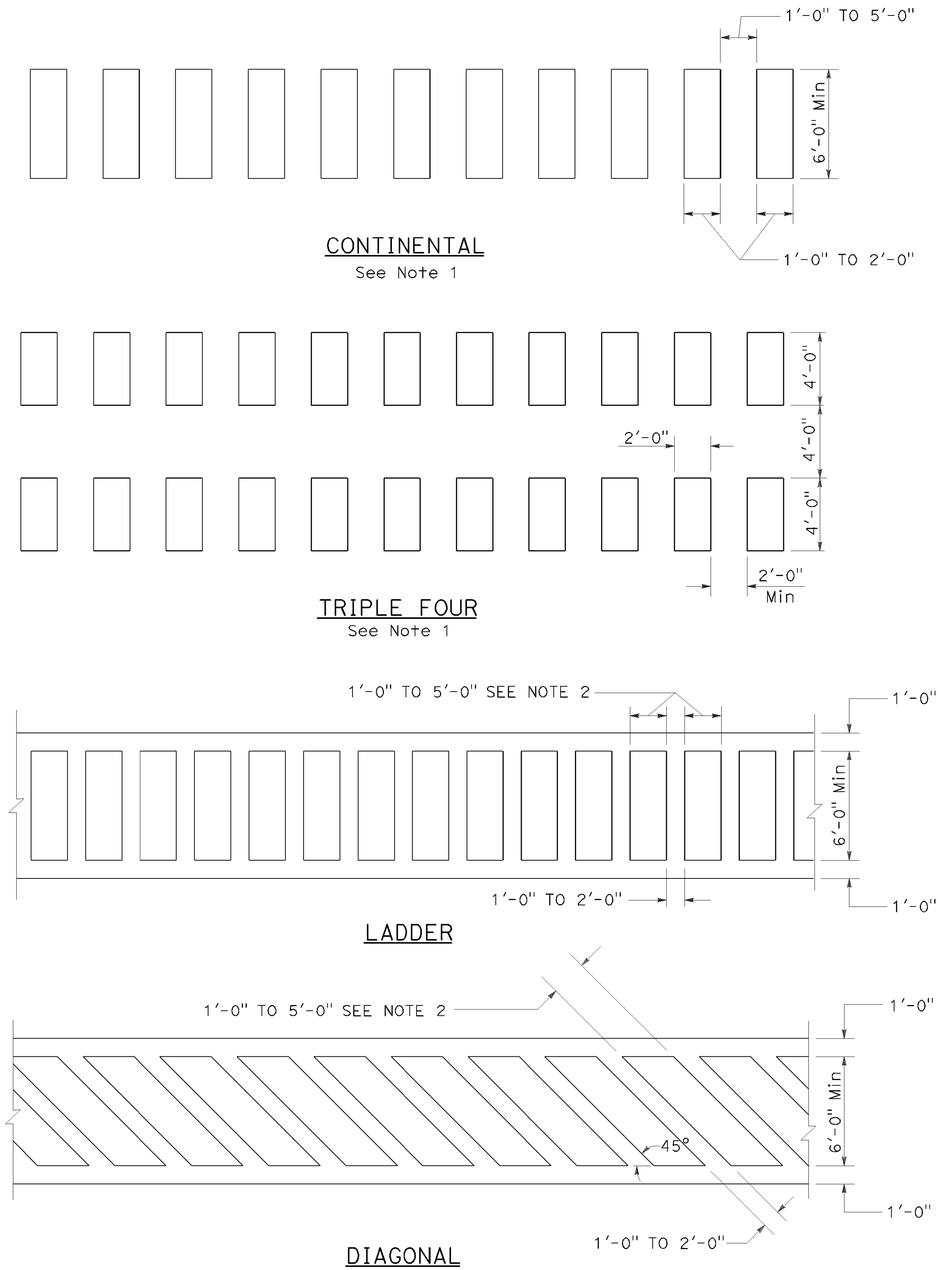

HIGHER VISIBILITY CROSSWALKS

NOTES:

1. Spaces between markings should be placed in wheel tracks of each lane.
2. Spacings not to exceed 2.5 times width of longitudinal line.
3. All crosswalk markings must be white except for those near schools must be yellow.

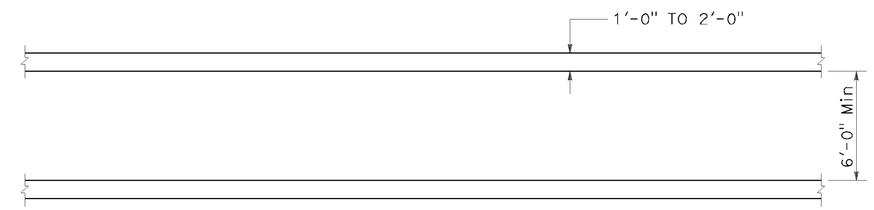

BASIC

STATE OF CALIFORNIA
DEPARTMENT OF TRANSPORTATION

PAVEMENT MARKINGS CROSSWALKS

NO SCALE

RSP A24F DATED JULY 20, 2012 SUPPLEMENTS THE STANDARD PLANS BOOK DATED 2010.

REVISED STANDARD PLAN RSP A24F

2010 REVISED STANDARD PLAN RSP A24F

P:\proj2\02\3c072_plans\pse\23c072va004.dgn

6-28-12

DIST	COUNTY	ROUTE	POST MILES TOTAL PROJECT	SHEET No.	TOTAL SHEETS
02	Las	395	56.5/R61.0	23	24

REGISTERED CIVIL ENGINEER

January 20, 2012
PLANS APPROVAL DATE

REGISTERED PROFESSIONAL ENGINEER
Cornelis M. Hakim
No. C55610
Exp. 12-31-12
CIVIL
STATE OF CALIFORNIA

THE STATE OF CALIFORNIA OR ITS OFFICERS OR AGENTS SHALL NOT BE RESPONSIBLE FOR THE ACCURACY OR COMPLETENESS OF SCANNED COPIES OF THIS PLAN SHEET.

TO ACCOMPANY PLANS DATED 01-22-13

ABBREVIATIONS:

SE SAFETY EDGE

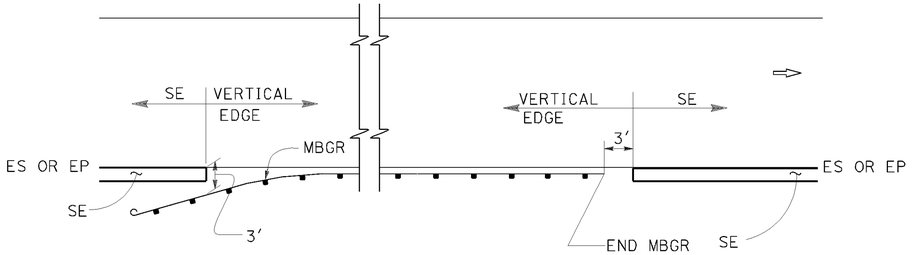

MBGR

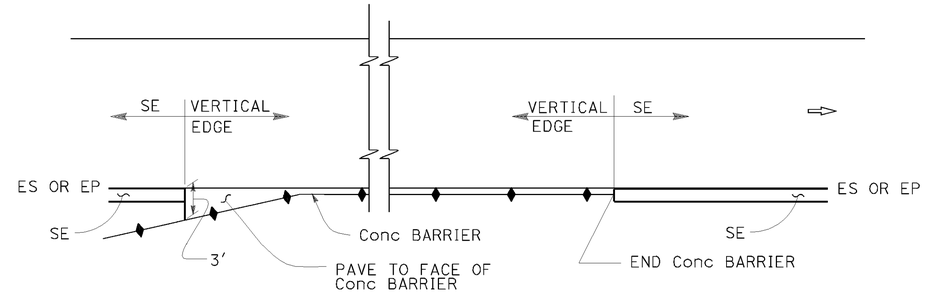

CONCRETE BARRIER

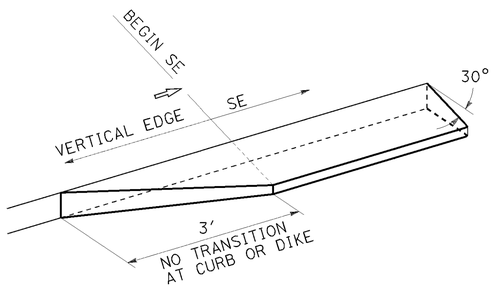

TRANSITION DETAIL
FOR CONCRETE ONLY

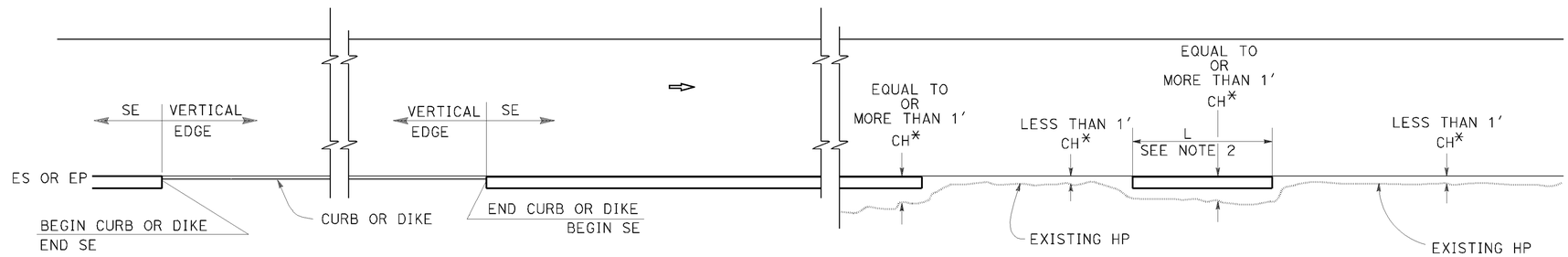

CURB OR DIKE

NARROW SIDE SLOPE

* CH = Distance from ES or EP to existing HP.

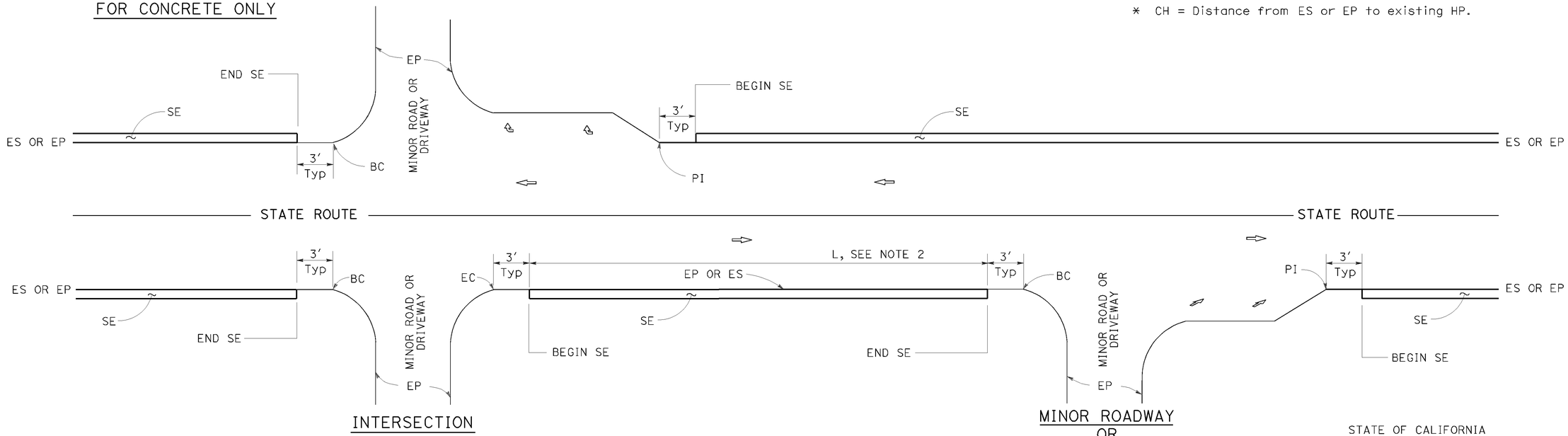

INTERSECTION

MINOR ROADWAY OR DRIVEWAY

DRIVEWAY AND INTERSECTION

NOTES:

1. For details not shown, see Revised Standard Plans RSP P75 and RSP P76.
2. Safety edge is optional when L is less than 30'.

STATE OF CALIFORNIA
DEPARTMENT OF TRANSPORTATION

PAVEMENT EDGE TREATMENTS

NO SCALE

RSP P74 DATED JANUARY 20, 2012 SUPPLEMENTS THE STANDARD PLANS BOOK DATED 2010.

REVISED STANDARD PLAN RSP P74

2010 REVISED STANDARD PLAN RSP P74

P:\proj2\02\3c072_plans\pse\23c072va005.dgn

01-05-12

DIST	COUNTY	ROUTE	POST MILES TOTAL PROJECT	SHEET No.	TOTAL SHEETS
02	Las	395	56.5/R61.0	24	24

REGISTERED CIVIL ENGINEER

January 20, 2012
PLANS APPROVAL DATE

REGISTERED PROFESSIONAL ENGINEER Cornelis M. Hakim No. C55610 Exp. 12-31-12 CIVIL STATE OF CALIFORNIA

THE STATE OF CALIFORNIA OR ITS OFFICERS OR AGENTS SHALL NOT BE RESPONSIBLE FOR THE ACCURACY OR COMPLETENESS OF SCANNED COPIES OF THIS PLAN SHEET.

TO ACCOMPANY PLANS DATED 01-22-13

2010 REVISED STANDARD PLAN RSP P75

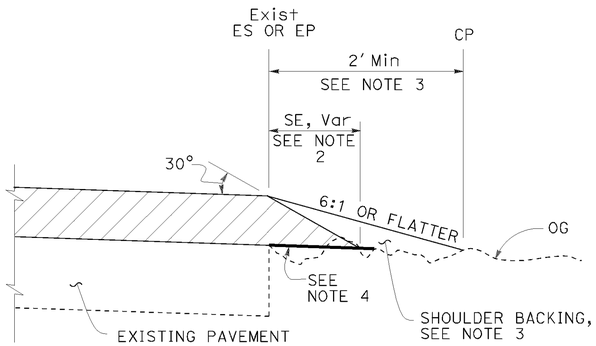

CASE A
Safety Edge

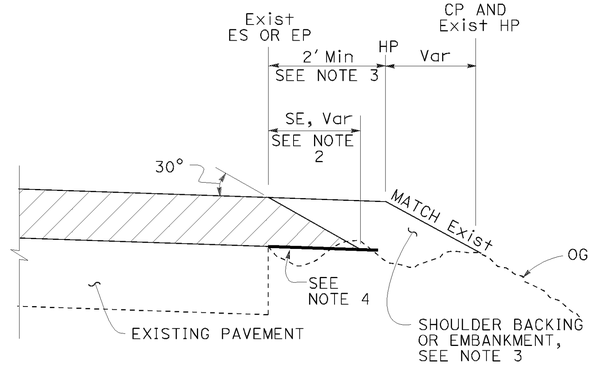

CASE B
Safety Edge

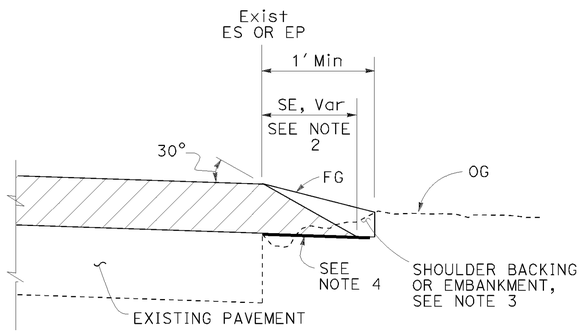

CASE C
Safety Edge

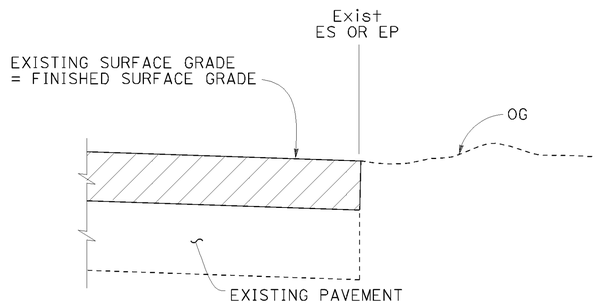

CASE D
Vertical Edge

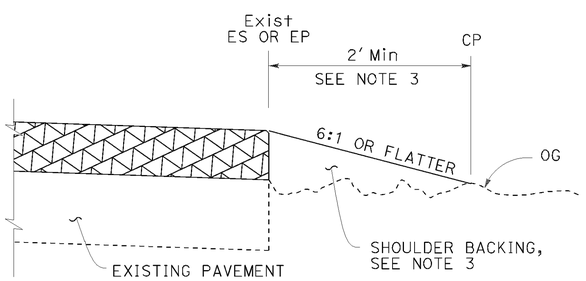

CASE E
Vertical Edge

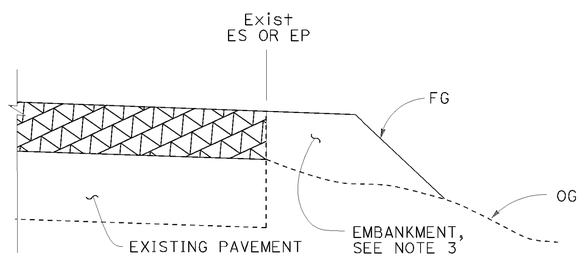

CASE F
Vertical Edge
* See Table A and Revised Std Plan RSP P74

LEGEND:

- HMA OVERLAY
- HMA OR CONCRETE OVERLAY
- CONCRETE OVERLAY

ABBREVIATIONS:

SE SAFETY EDGE
TT TOTAL THICKNESS OF SE

TABLE A
EDGE TREATMENT FOR VARIOUS OVERLAY THICKNESS AND CONDITIONS

	OVERLAY THICKNESS	
FIELD CONDITION	LESS THAN 0.15'	0.15' OR MORE
Exist SLOPE 6:1 OR FLATTER	CASE E	CASE A
Exist SLOPE 3:1 TO 6:1	CASE E	CASE B
Exist SLOPE STEEPER THAN 3:1	CASE F	CASE F
CUT SECTION (REPLACE, COLD PLANE, MILL PAVEMENT)	CASE D	CASE C

ADDITIONAL HMA OR CONCRETE QUANTITIES FOR SE/SIDE/MILE

TYPICAL CROSS SECTION	TT	TOTAL ADDITIONAL MATERIAL FOR SE/SIDE/MILE		
		HMA (TON)	CONCRETE (CY)*	CONCRETE (CY)**
TT	0.15'	NA	NA	NA
	0.20'	13.7	NA	NA
	0.30'	30.9	NA	NA
	0.40'	54.9	NA	NA
	0.45'	69.4	NA	NA
TT 0.43'	0.50'	84.2	NA	NA
	0.60'	113.9	NA	NA
	0.70'	143.6	70.9	94.2
	0.80'	173.3	85.6	112.2
	0.90'	203.0	100.3	130.2
	1.00'	232.7	114.9	148.2
	1.10'	262.4	129.6	166.2
	1.20'	292.1	144.3	184.2

* For Detail "A"
** For Optional Detail "A"

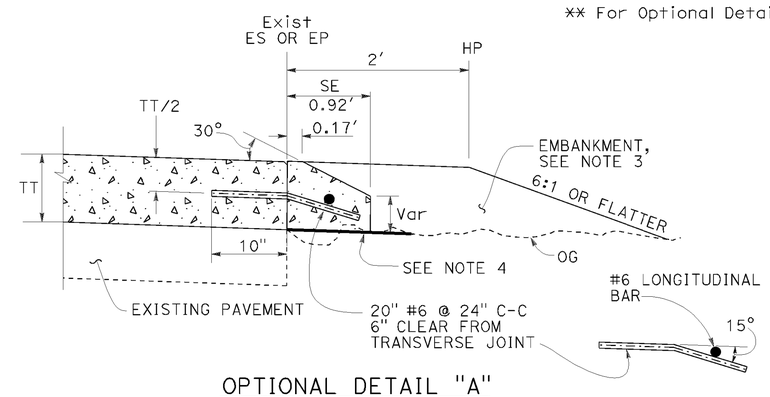

OPTIONAL DETAIL "A"
For concrete overlay
See Note 5

NOTES:

1. For limits of safety edge and vertical edge treatments, see Revised Standard Plan RSP P74.
2. Details shown for HMA overlay thickness less than 0.43'. See Detail "A" for HMA overlay thickness more than 0.43' or concrete overlay.
3. For locations and limits of shoulder backing or embankment see project plans.
4. Grade existing ground to place safety edge. 1' minimum width
5. Safety edge transverse joint must match overlay transverse joint. End of #6 longitudinal bar must be 2" ±½" clear from transverse joint.
6. Safety edge is not needed in the area of MBGR, barrier, right turn lane and acceleration lane. See Revised Standard Plan RSP P74.

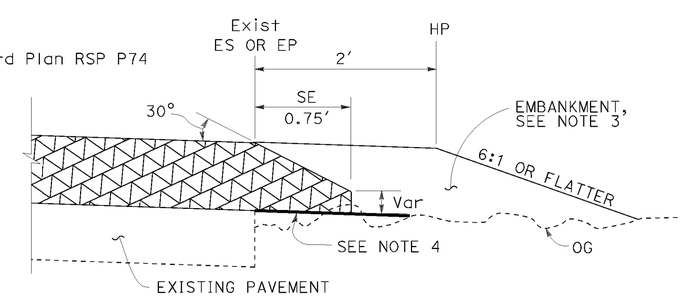

DETAIL "A"
For HMA overlay thickness more than 0.43' or concrete overlay

STATE OF CALIFORNIA
DEPARTMENT OF TRANSPORTATION

PAVEMENT EDGE TREATMENTS-OVERLAYS

NO SCALE

RSP P75 DATED JANUARY 20, 2012 SUPPLEMENTS THE STANDARD PLANS BOOK DATED 2010.

REVISED STANDARD PLAN RSP P75

P:\proj2\02\3c072_plans\pse\23c072va006.dgn

01-09-12