DIST	COUNTY	ROUTE	POST MILES TOTAL PROJECT	SHEET No	TOTAL SHEETS
02	Plu	70	0.6/35.2	57	101

REGISTERED CIVIL ENGINEER 8-29-2011 DATE

1-9-12
PLANS APPROVAL DATE

REGISTERED PROFESSIONAL ENGINEER M. J. CULLEN No. C 40620 Exp. 03-31-13 CIVIL STATE OF CALIFORNIA

The State of California or its officers or agents shall not be responsible for the accuracy or completeness of electronic copies of this plan sheet.

Notes:

1. For Begin and End Wall Location See "Wall Details No. 1" Sheet "Section A-A"
2. For Details and Quantity of Existing CSP Retaining Wall See "Existing 36" CSP Retaining Wall Removal" Sheet

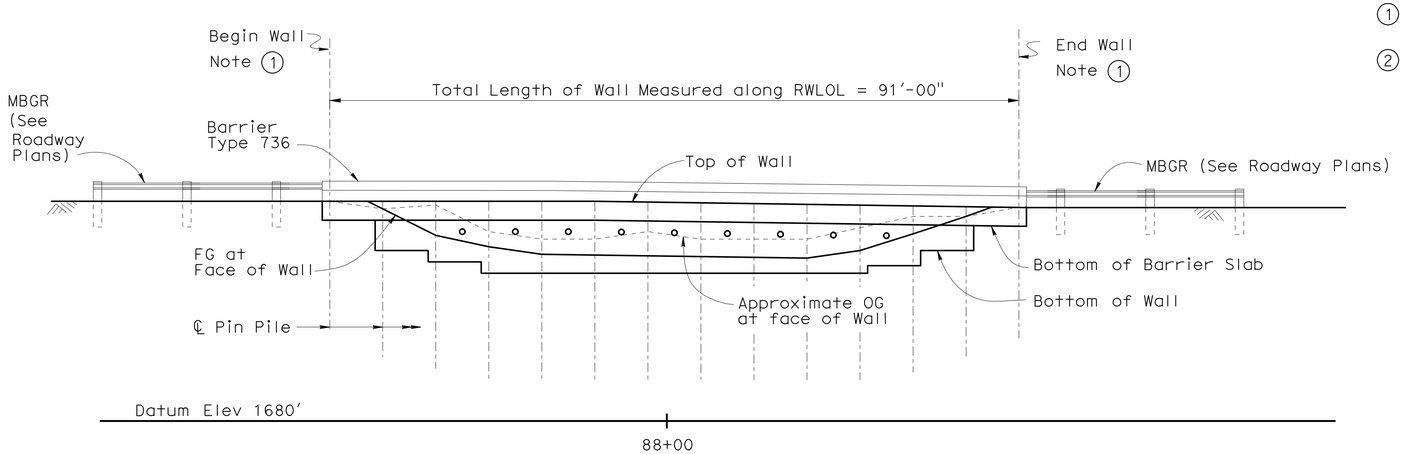

∘ Indicates Rock Anchor

DEVELOPED MIRROR ELEVATION

1" = 10'-0"

QUANTITIES

PREPARE CONCRETE BARRIER SLAB SURFACE	482	SQFT
REMOVE 36" CORRUGATED STEEL PIPE	65	LF
RETAINING WALL		
STRUCTURE EXCAVATION (ROCK ANCHOR WALL)	85	CY
STRUCTURE BACKFILL (ROCK ANCHOR WALL)	33 ~~10~~	CY
ROCK ANCHOR ASSEMBLY	280	LF
STEEL PIN PILE (6"XX STRONG PIPE)	437	LF
DRILLED HOLE	442	LF
STRUCTURAL CONCRETE, RETAINING WALL	13	CY
STRUCTURAL CONCRETE, BARRIER SLAB	57	CY
FIELDSTONE FORMED RELIEF TEXTURE	400	SQFT
FURNISH POLYESTER CONCRETE OVERLAY	30	CF
PLACE POLYESTER CONCRETE OVERLAY	482	SQFT
BAR REINFORCING STEEL (RETAINING WALL)	5,780	LB
SHOTCRETE	7	CY
PREPARE AND STAIN CONCRETE	400	SQFT
CONCRETE BARRIER (TYPE 736)	93	LF

1

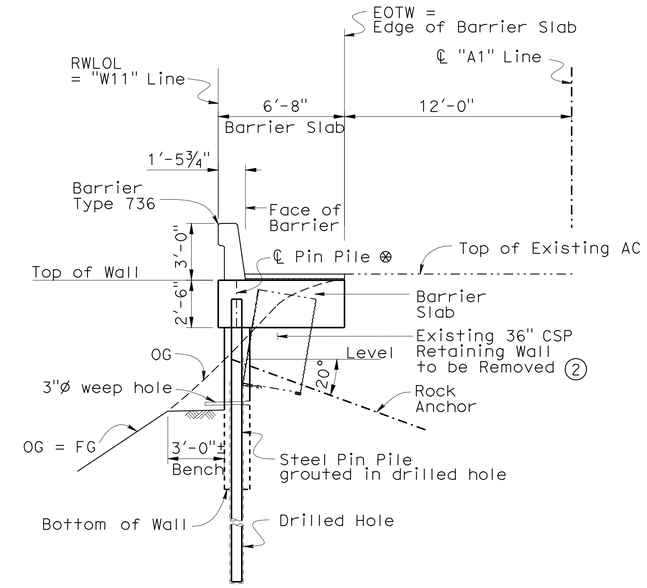

⊗ Pin Pile consists of 6" XX Strong Pipe

TYPICAL SECTION

¼"=1'-0"

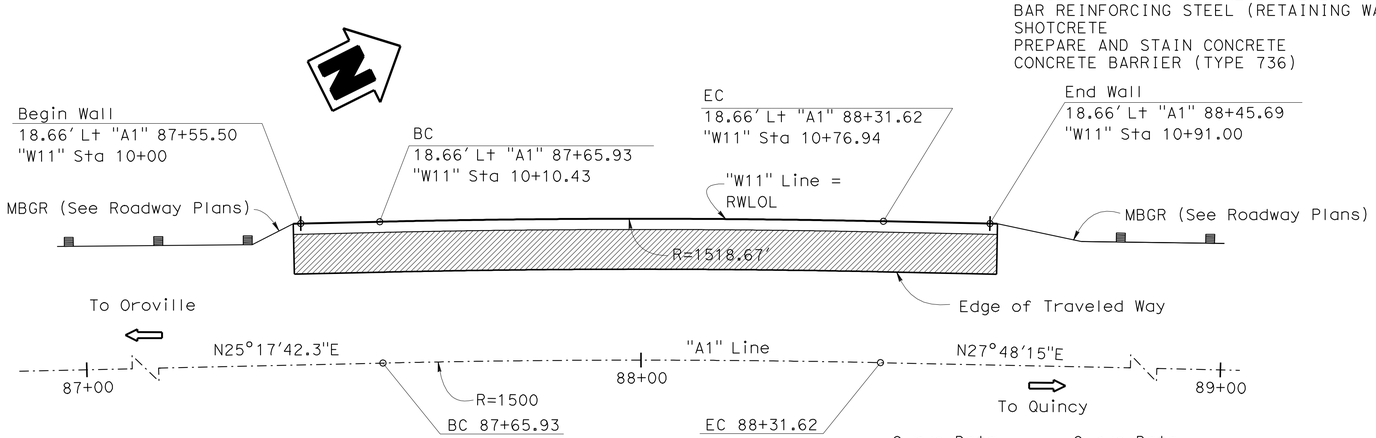

Indicates ¾" Polyester Concrete Overlay

PLAN

1" = 10'-0"

Curve Data "A1" Line	Curve Data RWLOL
R = 1500.00'	R = 1518.67'
Δ = 02°30'33"	Δ = 02°30'33"
T = 32.85'	T = 33.26'
L = 65.69'	L = 66.51'

INDEX TO PLANS

1. GENERAL PLAN
2. STRUCTURE PLAN
3. FOUNDATION PLAN
4. EXISTING 36" CMP RETAINING WALL REMOVAL
5. WALL DETAILS NO. 1
6. WALL DETAILS NO. 2
7. ROCK ANCHOR DETAILS
8. ARCHITECTURAL TREATMENT
9. LOG OF TEST BORINGS 1 OF 4
10. LOG OF TEST BORINGS 2 OF 4
11. LOG OF TEST BORINGS 3 OF 4
12. LOG OF TEST BORINGS 4 OF 4

1 **REVISED PER ADDENDUM No. 1 DATED APRIL 25, 2012**

Gary Blakesley
DESIGN ENGINEER

	BY	CHECKED			
DESIGN	M. J. Cullen	M. Guadamuz	SERVICE LOAD DESIGN	LIVE LOADING: 2 FEET LEVEL SURCHARGE	
DETAILS	A. Chen/S. Jiang	M. J. Cullen	LAYOUT	M. J. Cullen	M. Guadamuz
QUANTITIES	H. Fang	C. Siegenthaler	SPECIFICATIONS	M. Kopsa	PLANS AND SPECS COMPARED M. Kopsa

STATE OF CALIFORNIA
DEPARTMENT OF TRANSPORTATION

DIVISION OF ENGINEERING SERVICES
STRUCTURE DESIGN
DESIGN BRANCH 5

BRIDGE NO. 09E0002
POST MILE 1.68

WALL LOCATION 11
GENERAL PLAN

STRUCTURES DESIGN GENERAL PLAN SHEET (ENGLISH) (REV. 10/25/05)

ORIGINAL SCALE IN INCHES FOR REDUCED PLANS 0 1 2 3

CU 02
EA 3C3001

DISREGARD PRINTS BEARING EARLIER REVISION DATES

REVISION DATES: 10-14-10 11-18-11 6-14-11 8-14-11 8-26-11

SHEET 1 OF 12

FILE => 11-a-gp.ddl

STRUCTURES DESIGN GENERAL PLAN SHEET (ENGLISH) (REV.07-24-06)

USERNAME => s6121614 DATE PLOTTED => 25-APR-2012 TIME PLOTTED => 10:51

DIST	COUNTY	ROUTE	POST MILES TOTAL PROJECT	SHEET No	TOTAL SHEETS
02	Plu	70	0.6/35.2	69	101

REGISTERED CIVIL ENGINEER 08/30/2011 DATE

1-9-12
PLANS APPROVAL DATE

The State of California or its officers or agents shall not be responsible for the accuracy or completeness of electronic copies of this plan sheet.

REGISTERED PROFESSIONAL ENGINEER M. J. CULLEN No. C 40620 Exp. 03-31-13 CIVIL STATE OF CALIFORNIA

Notes:

1. For Begin and End Wall Location See "Wall Details No. 1" Sheet "Section A-A"
2. For Details and Quantity of Existing CSP Retaining Wall See "Existing 36" CSP Retaining Wall Removal" Sheet

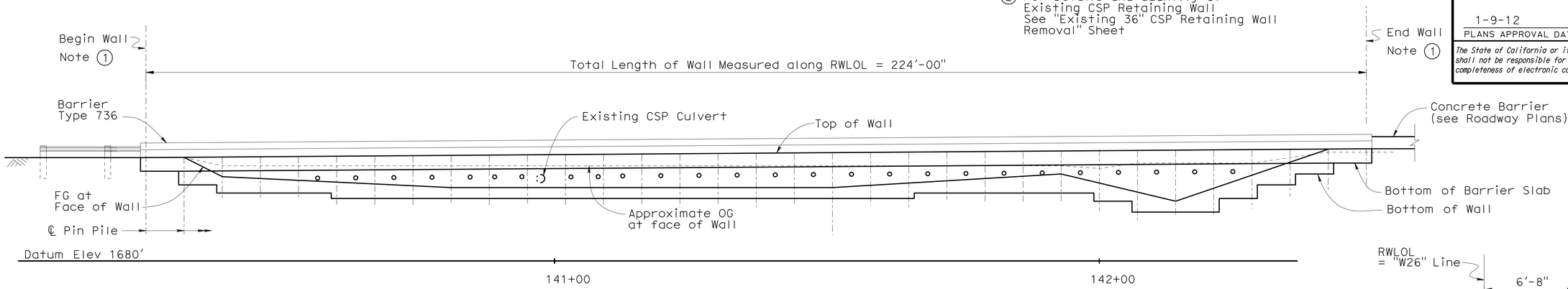

∘ Indicates Rock Anchor

DEVELOPED MIRROR ELEVATION

1" = 10'-0"

INDEX TO PLANS

1. GENERAL PLAN
2. STRUCTURE PLAN NO. 1
3. STRUCTURE PLAN NO. 2
4. FOUNDATION PLAN
5. EXISTING 36" CMP RETAINING WALL REMOVAL
6. WALL DETAILS NO. 1
7. WALL DETAILS NO. 2
8. ROCK ANCHOR DETAILS
9. ARCHITECTURAL TREATMENT
10. LOG OF TEST BORINGS 1 OF 5
11. LOG OF TEST BORINGS 2 OF 5
12. LOG OF TEST BORINGS 3 OF 5
13. LOG OF TEST BORINGS 4 OF 5
14. LOG OF TEST BORINGS 5 OF 5

QUANTITIES

PREPARE CONCRETE BARRIER SLAB SURFACE	1,172	SQFT	
REMOVE 36" CORRUGATED STEEL PIPE	197	LF	
RETAINING WALL			
STRUCTURE EXCAVATION (ROCK ANCHOR WALL)	235	CY	1
STRUCTURE BACKFILL (ROCK ANCHOR WALL)	103 ~~22~~	CY	
ROCK ANCHOR ASSEMBLY	644	LF	
STEEL PIN PILE (6"XX STRONG PIPE)	758	LF	
DRILLED HOLE	782	LF	
STRUCTURAL CONCRETE, RETAINING WALL	32	CY	
STRUCTURAL CONCRETE, BARRIER SLAB	140	CY	
FIELDSTONE FORMED RELIEF TEXTURE	1,028	SQFT	
FURNISH POLYESTER CONCRETE OVERLAY	73	CF	
PLACE POLYESTER CONCRETE OVERLAY	1,172	SQFT	
BAR REINFORCING STEEL (RETAINING WALL)	14,780	LB	
SHOTCRETE	18	CY	
PREPARE AND STAIN CONCRETE	1,028	SQFT	
CONCRETE BARRIER (TYPE 736)	226	LF	

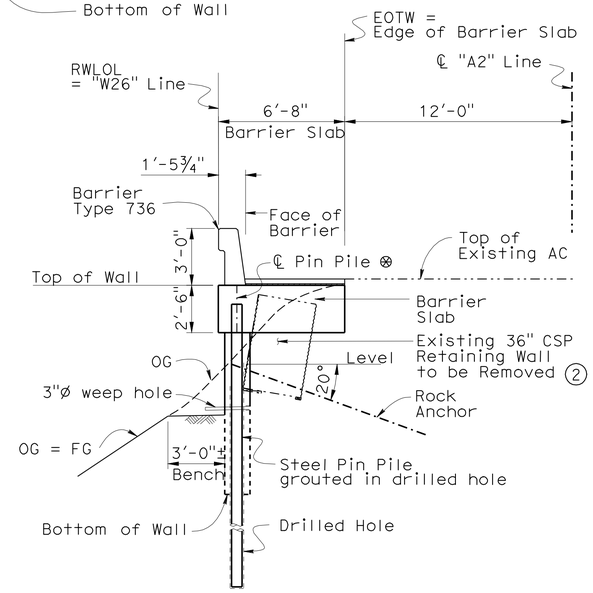

⊗ Pin Pile consists of 6" XX Strong Pipe

TYPICAL SECTION

¼"=1'-0"

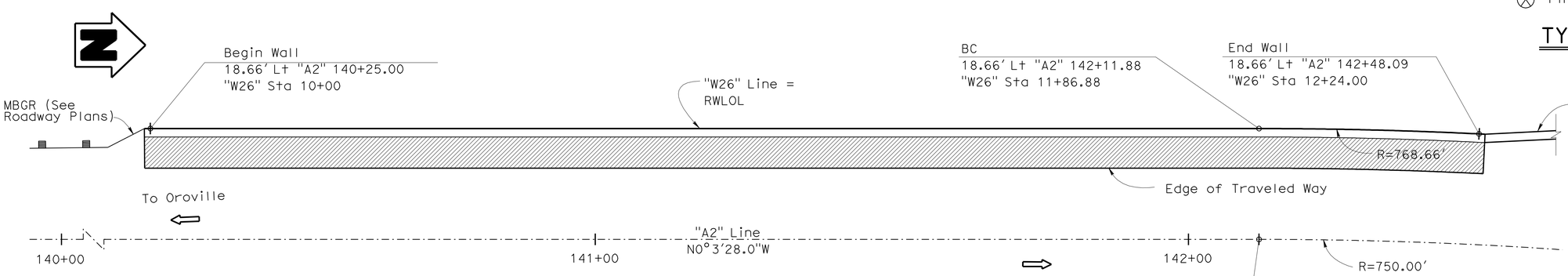

Indicates ¾" Polyester Concrete Overlay

PLAN

1" = 10'-0"

1 REVISED PER ADDENDUM No. 1 DATED APRIL 25, 2012

Curve Data	Curve Data
"A2" Line	RWLOL
R = 750.00'	R = 768.66'
Δ = 06°39'16"	Δ = 02°45'58"
T = 43.60'	T = 18.56'
L = 87.11'	L = 37.11'

Gary Blakesley
DESIGN ENGINEER

DESIGN	BY M. J. Cullen	CHECKED M. Guadamuz	SERVICE LOAD DESIGN	LIVE LOADING: 2 FEET LEVEL SURCHARGE	
DETAILS	BY A. Chen /S. Jiang	CHECKED M. J. Cullen	LAYOUT	BY M. J. Cullen	CHECKED M. Guadamuz
QUANTITIES	BY H. Fang	CHECKED C. Siegenthaler	SPECIFICATIONS	BY M. Kopsa	PLANS AND SPECS COMPARED M. J. Cullen

STATE OF CALIFORNIA
DEPARTMENT OF TRANSPORTATION

DIVISION OF ENGINEERING SERVICES
STRUCTURE DESIGN
DESIGN BRANCH 5

BRIDGE NO. 09E0003
POST MILE 2.68

WALL LOCATION 26
GENERAL PLAN

STRUCTURES DESIGN GENERAL PLAN SHEET (ENGLISH) (REV. 10/25/05)

ORIGINAL SCALE IN INCHES FOR REDUCED PLANS 0 1 2 3

CU 02
EA 3C3001

DISREGARD PRINTS BEARING EARLIER REVISION DATES

REVISION DATES: 10-12-10 1-13-11 1-19-11 3-14-11 6-1-11 8-12-11 8-26-11

SHEET 1 OF 14

FILE => 26-a-gp.ddd

STRUCTURES DESIGN GENERAL PLAN SHEET (ENGLISH) (REV.07-24-06)

USERNAME => s6121614

DIST	COUNTY	ROUTE	POST MILES TOTAL PROJECT	SHEET No	TOTAL SHEETS
02	Plu	70	0.6/35.2	83	101

REGISTERED CIVIL ENGINEER 8/30/2011 DATE

1-9-12
PLANS APPROVAL DATE

REGISTERED PROFESSIONAL ENGINEER M. J. CULLEN No. C 40620 Exp. 03-31-13 CIVIL STATE OF CALIFORNIA

The State of California or its officers or agents shall not be responsible for the accuracy or completeness of electronic copies of this plan sheet.

Notes:

1. For Begin and End Wall Location See "Wall Details No. 1" Sheet "Section A-A"
2. For Details and Quantity of Existing CSP Retaining Wall See "Existing 36" CSP Retaining Wall Removal" Sheet

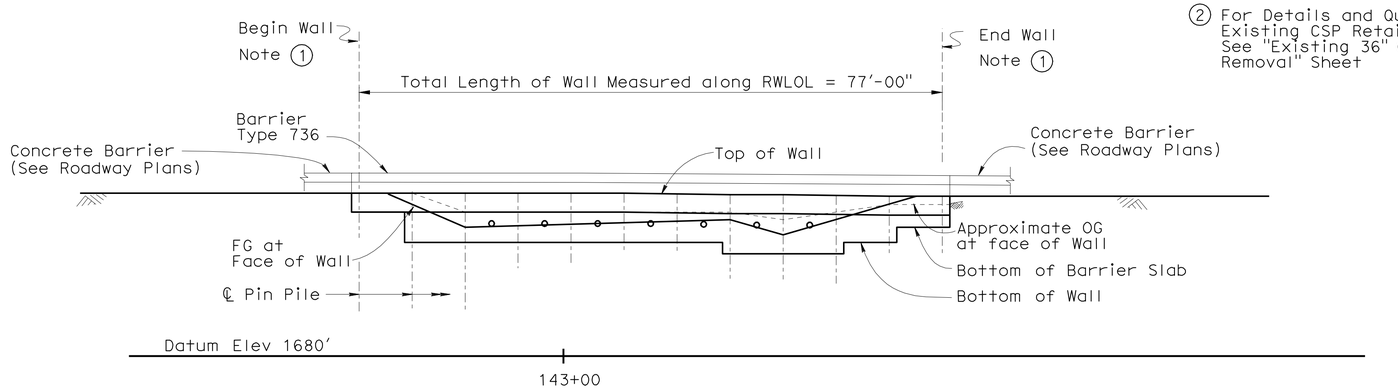

∘ Indicates Rock Anchor

DEVELOPED MIRROR ELEVATION

1" = 10'-0"

INDEX TO PLANS

1. GENERAL PLAN
2. STRUCTURE PLAN
3. FOUNDATION PLAN
4. EXISTING 36" CMP RETAINING WALL REMOVAL
5. WALL DETAILS NO. 1
6. WALL DETAILS NO. 2
7. ROCK ANCHOR DETAILS
8. ARCHITECTURAL TREATMENT
9. LOG OF TEST BORINGS 1 OF 4
10. LOG OF TEST BORINGS 2 OF 4
11. LOG OF TEST BORINGS 3 OF 4
12. LOG OF TEST BORINGS 4 OF 4

QUANTITIES

SALVAGE CONCRETE BARRIER (TYPE K)	60	LF
PREPARE CONCRETE BARRIER SLAB SURFACE	410	SQFT
REMOVE 36" CORRUGATED STEEL PIPE	64	LF
RETAINING WALL		
STRUCTURE EXCAVATION (ROCK ANCHOR WALL)	68	CY
STRUCTURE BACKFILL (ROCK ANCHOR WALL)	33 ~~9~~	CY
ROCK ANCHOR ASSEMBLY	224	LF
STEEL PIN PILE (6"XX STRONG PIPE)	305	LF
DRILLED HOLE	313	LF
STRUCTURAL CONCRETE, RETAINING WALL	7	CY
STRUCTURAL CONCRETE, BARRIER SLAB	49	CY
FIELDSTONE FORMED RELIEF TEXTURE	196	SQFT
FURNISH POLYESTER CONCRETE OVERLAY	26	CF
PLACE POLYESTER CONCRETE OVERLAY	410	SQFT
BAR REINFORCING STEEL (RETAINING WALL)	3,840	LB
SHOTCRETE	4	CY
PREPARE AND STAIN CONCRETE	196	SQFT
CONCRETE BARRIER (TYPE 736)	79	LF

1

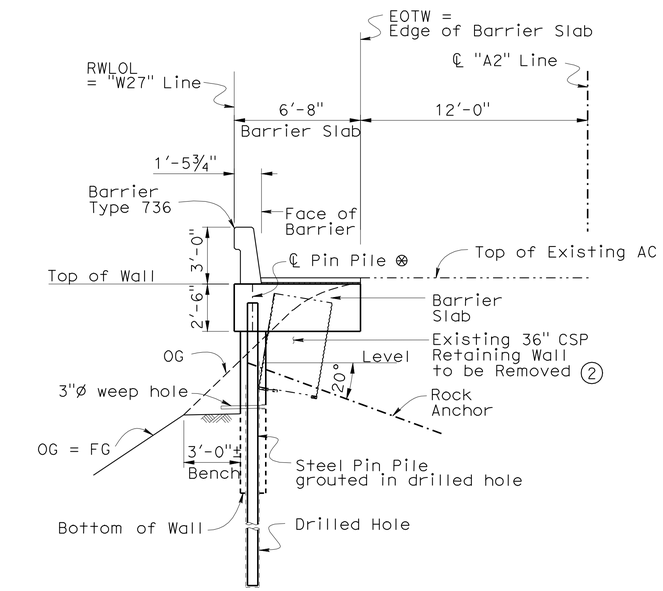

⊗ Pin Pile consists of 6" XX Strong Pipe

TYPICAL SECTION

¼"=1'-0"

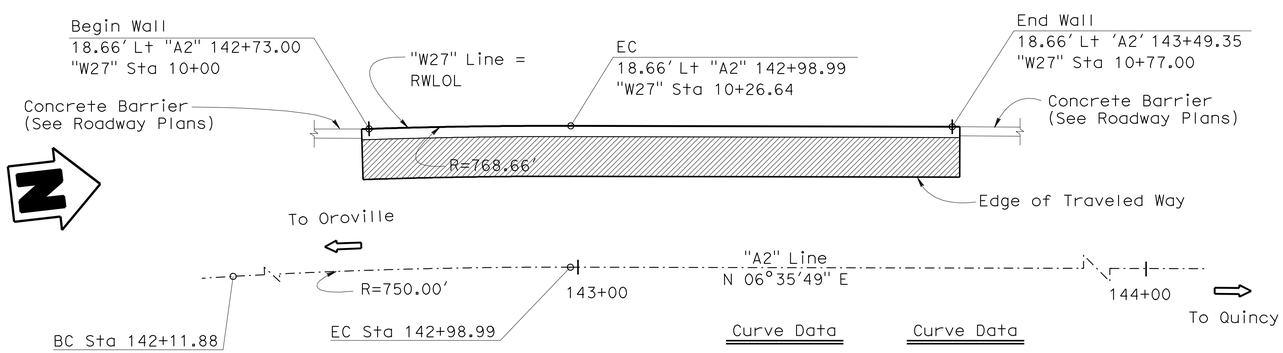

Indicates ¾" Polyester Concrete Overlay

PLAN

1" = 10'-0"

Curve Data "A2" Line	Curve Data RWLOL
R = 750.00'	R = 768.66'
Δ = 06°39'17"	Δ = 01°59'08"
T = 43.60'	T = 13.32'
L = 87.11'	L = 26.64'

1 **REVISED PER ADDENDUM No. 1 DATED APRIL 25, 2012**

Gary Blakesley
DESIGN ENGINEER

	BY	CHECKED			
DESIGN	M. J. Cullen	M. Guadamuz	SERVICE LOAD DESIGN	LIVE LOADING: 2 FEET LEVEL SURCHARGE	
DETAILS	A. Chen /S. Jiang	M. J. Cullen	LAYOUT	M. J. Cullen	M. Guadamuz
QUANTITIES	H. Fang	C. Siegenthaler	SPECIFICATIONS	M. Kopsa	PLANS AND SPECS COMPARED M. J. Cullen

STATE OF CALIFORNIA
DEPARTMENT OF TRANSPORTATION

DIVISION OF ENGINEERING SERVICES
STRUCTURE DESIGN
DESIGN BRANCH 5

BRIDGE NO. 09E0004
POST MILE 2.73

WALL LOCATION 27
GENERAL PLAN

STRUCTURES DESIGN GENERAL PLAN SHEET (ENGLISH) (REV. 10/25/05)

ORIGINAL SCALE IN INCHES FOR REDUCED PLANS 0 1 2 3

CU 02
EA 3C3001

DISREGARD PRINTS BEARING EARLIER REVISION DATES

REVISION DATES: 3-26-09 3-26-10 1-13-11 3-14-11 6-1-11 8-12-11 8-26-11

SHEET 1 OF 12

FILE => 27-a-gp.dgn

STRUCTURES DESIGN GENERAL PLAN SHEET (ENGLISH) (REV.07-24-06)

USERNAME => s121614 DATE PLOTTED => 25-APR-2012 TIME PLOTTED => 10:51