ACHSSTP-P070(102)E

Dist	COUNTY	ROUTE	POST MILES TOTAL PROJECT	SHEET No.	TOTAL SHEETS
02	Plu	70	0.6/35.2	1	101

STATE OF CALIFORNIA
DEPARTMENT OF TRANSPORTATION

PROJECT PLANS FOR CONSTRUCTION ON
STATE HIGHWAY
IN PLUMAS COUNTY
AT VARIOUS LOCATIONS
FROM GRIZZLY CREEK BRIDGE
TO 0.1 MILE WEST OF SPANISH CREEK BRIDGE

TO BE SUPPLEMENTED BY STANDARD PLANS DATED MAY 2006

INDEX OF PLANS

SHEET No.	DESCRIPTION
1	TITLE AND LOCATION MAP
2-4	LAYOUTS
5-22	CONSTRUCTION DETAILS
23	CONSTRUCTION AREA SIGNS
24-34	SUMMARY OF QUANTITIES
35-56	REVISED AND NEW STANDARD PLANS

STRUCTURE PLANS

57-68	WALL LOCATION 11, Br No. 09E0002
69-82	WALL LOCATION 26, Br No. 09E0003
83-94	WALL LOCATION 27, Br No. 09E0004
95-101	WALL LOCATION 28, Br No. 09E0005

THE STANDARD PLANS LIST APPLICABLE TO THIS CONTRACT IS INCLUDED IN THE NOTICE TO BIDDERS AND SPECIAL PROVISIONS BOOK.

LOCATION MAP

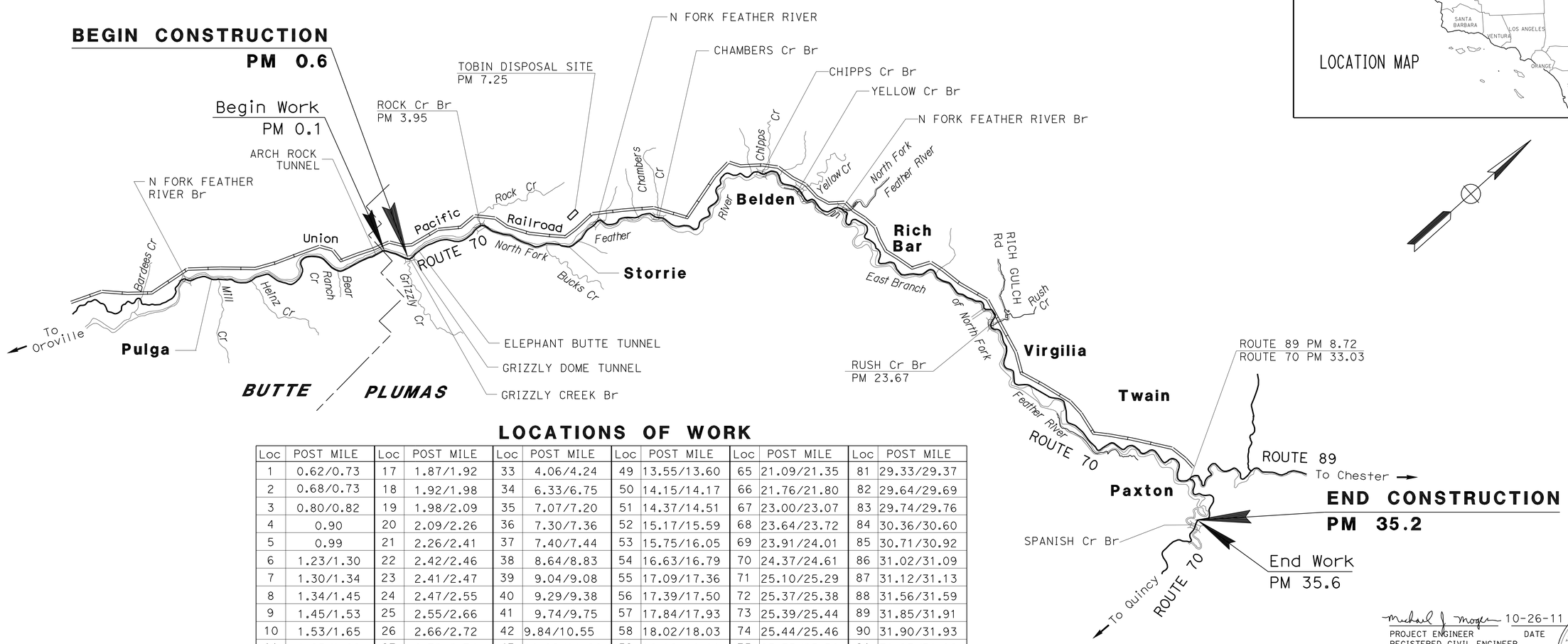

LOCATIONS OF WORK

Loc	POST MILE	Loc	POST MILE	Loc	POST MILE	Loc	POST MILE	Loc	POST MILE	Loc	POST MILE
1	0.62/0.73	17	1.87/1.92	33	4.06/4.24	49	13.55/13.60	65	21.09/21.35	81	29.33/29.37
2	0.68/0.73	18	1.92/1.98	34	6.33/6.75	50	14.15/14.17	66	21.76/21.80	82	29.64/29.69
3	0.80/0.82	19	1.98/2.09	35	7.07/7.20	51	14.37/14.51	67	23.00/23.07	83	29.74/29.76
4	0.90	20	2.09/2.26	36	7.30/7.36	52	15.17/15.59	68	23.64/23.72	84	30.36/30.60
5	0.99	21	2.26/2.41	37	7.40/7.44	53	15.75/16.05	69	23.91/24.01	85	30.71/30.92
6	1.23/1.30	22	2.42/2.46	38	8.64/8.83	54	16.63/16.79	70	24.37/24.61	86	31.02/31.09
7	1.30/1.34	23	2.41/2.47	39	9.04/9.08	55	17.09/17.36	71	25.10/25.29	87	31.12/31.13
8	1.34/1.45	24	2.47/2.55	40	9.29/9.38	56	17.39/17.50	72	25.37/25.38	88	31.56/31.59
9	1.45/1.53	25	2.55/2.66	41	9.74/9.75	57	17.84/17.93	73	25.39/25.44	89	31.85/31.91
10	1.53/1.65	26	2.66/2.72	42	9.84/10.55	58	18.02/18.03	74	25.44/25.46	90	31.90/31.93
11	1.65/1.69	27	2.72/2.74	43	10.92/11.00	59	18.10/18.11	75	25.55/25.56	91	31.97/31.98
12	1.69/1.72	28	2.74/2.87	44	11.63/11.74	60	18.37/18.39	76	26.23/26.35	92	32.72/32.73
13	1.72/1.75	29	2.87/3.03	45	12.05/12.06	61	18.66/18.80	77	27.15/27.25	93	32.74/32.92
14	1.75/1.79	30	3.15/3.28	46	12.18/12.19	62	18.88/19.03	78	27.26/27.46	94	34.04/34.31
15	1.79/1.84	31	3.19/3.31	47	12.56/12.75	63	19.11/19.21	79	27.47/27.48	95	34.67/35.12
16	1.84/1.87	32	3.66/3.73	48	13.25/13.27	64	19.99/20.08	80	27.50/27.53		

NO SCALE

THE CONTRACTOR SHALL POSSESS THE CLASS (OR CLASSES) OF LICENSE AS SPECIFIED IN THE "NOTICE TO BIDDERS."

PROJECT MANAGER: ERIC ORR
DESIGN ENGINEER: JULIE CASEY

P:\proj2\02\3c300_plans\pse\23c300ab001.dgn

Michael J Mogen 10-26-11
PROJECT ENGINEER DATE
REGISTERED CIVIL ENGINEER

REGISTERED PROFESSIONAL ENGINEER MIKE MOGEN No. C67018 Exp. 9-30-12 CIVIL STATE OF CALIFORNIA

January 9, 2012
PLANS APPROVAL DATE

THE STATE OF CALIFORNIA OR ITS OFFICERS OR AGENTS SHALL NOT BE RESPONSIBLE FOR THE ACCURACY OR COMPLETENESS OF ELECTRONIC COPIES OF THIS PLAN SHEET.

LAST REVISION 10-24-11
DATE PLOTTED => 14-MAR-2012
TIME PLOTTED => 08:00

CONTRACT No.	02-3C3004
PROJECT ID	0200000317

Dist	COUNTY	ROUTE	POST MILES TOTAL PROJECT	SHEET No.	TOTAL SHEETS
02	Plu	70	0.6/35.2	2	101

REGISTERED CIVIL ENGINEER 10-26-11 DATE

1-9-12
PLANS APPROVAL DATE

REGISTERED PROFESSIONAL ENGINEER MIKE MOGEN No. C67018 Exp. 9-30-12 CIVIL STATE OF CALIFORNIA

THE STATE OF CALIFORNIA OR ITS OFFICERS OR AGENTS SHALL NOT BE RESPONSIBLE FOR THE ACCURACY OR COMPLETENESS OF SCANNED COPIES OF THIS PLAN SHEET.

NOTES:

1. FOR ACCURATE RIGHT OF WAY DATA, CONTACT RIGHT OF WAY ENGINEERING AT THE DISTRICT OFFICE.
2. EXISTING UTILITY FACILITIES ARE NOT SHOWN ON THESE PLANS.

LEGEND:

- ROCK ANCHOR RETAINING WALL
- CONCRETE BARRIER (TYPE 736B)
- 36" EARTH RETAINING STRUCTURE (CORRUGATED STEEL PIPE)

ABBREVIATIONS:

CANWALL EXISTING 36" ERS (CSP)

CURVE DATA

No.	R	Δ	T	L
1	1700.000′	12° 37′ 47.215"	188.129′	374.733′
2	738.657′	6° 39′ 18.182"	42.947′	85.797′
3	748.554′	14° 49′ 46.527"	97.417′	193.745′

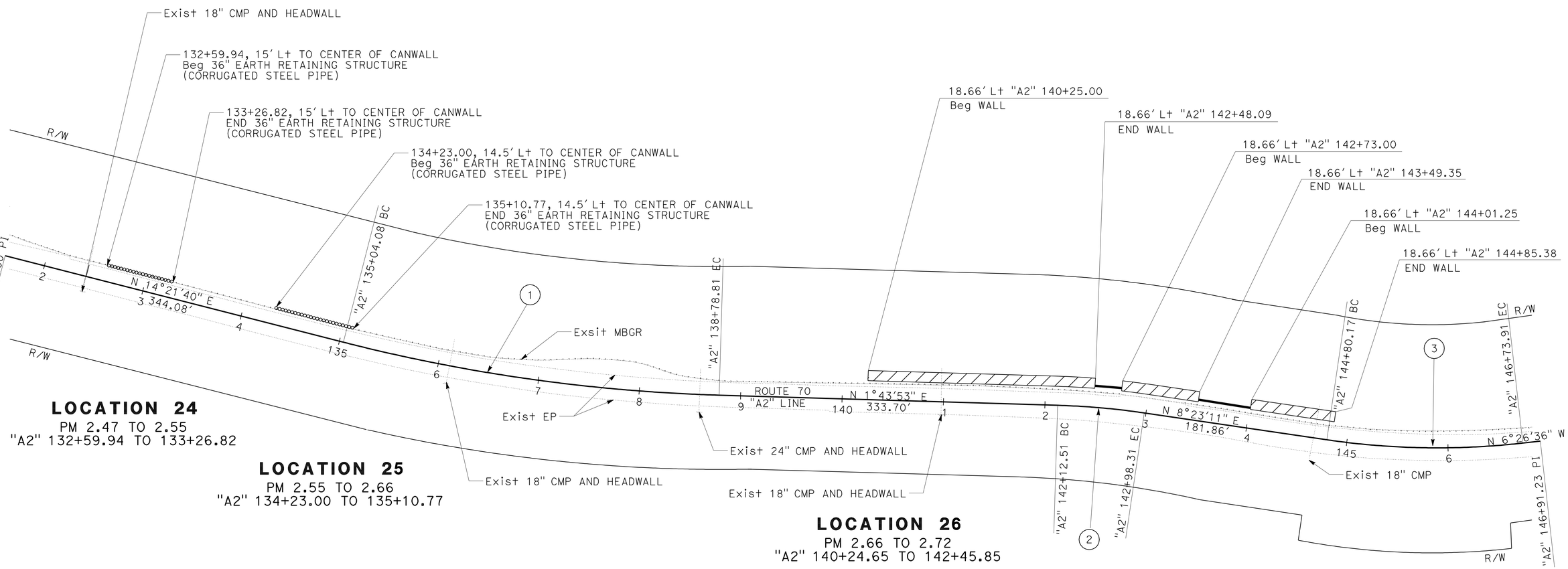

LAYOUT

SCALE: 1" = 50′

L-1

REVISED BY	DATE REVISED

CALCULATED-DESIGNED BY	CHECKED BY
MIKE MOGEN	DAN FISHER

FUNCTIONAL SUPERVISOR: JULIE CASEY

STATE OF CALIFORNIA - DEPARTMENT OF TRANSPORTATION

Caltrans® **DESIGN**

P:\proj2\02\3c300_plans\pse\23c300ea001.dgn

LAST REVISION 10-24-11 | DATE PLOTTED => 09-JAN-2012 | TIME PLOTTED => 11:00

Dist	COUNTY	ROUTE	POST MILES TOTAL PROJECT	SHEET No.	TOTAL SHEETS
02	Plu	70	0.6/35.2	3	101

REGISTERED CIVIL ENGINEER 10-26-11 DATE

1-9-12
PLANS APPROVAL DATE

REGISTERED PROFESSIONAL ENGINEER MIKE MOGEN No. C67018 Exp. 9-30-12 CIVIL STATE OF CALIFORNIA

THE STATE OF CALIFORNIA OR ITS OFFICERS OR AGENTS SHALL NOT BE RESPONSIBLE FOR THE ACCURACY OR COMPLETENESS OF SCANNED COPIES OF THIS PLAN SHEET.

NOTES:

1. FOR ACCURATE RIGHT OF WAY DATA, CONTACT RIGHT OF WAY ENGINEERING AT THE DISTRICT OFFICE.
2. EXISTING UTILITY FACILITIES ARE NOT SHOWN ON THESE PLANS.

CURVE DATA

No.	R	Δ	T	L
1	1500.00′	17° 49′ 29.570″	235.230′	466.655′

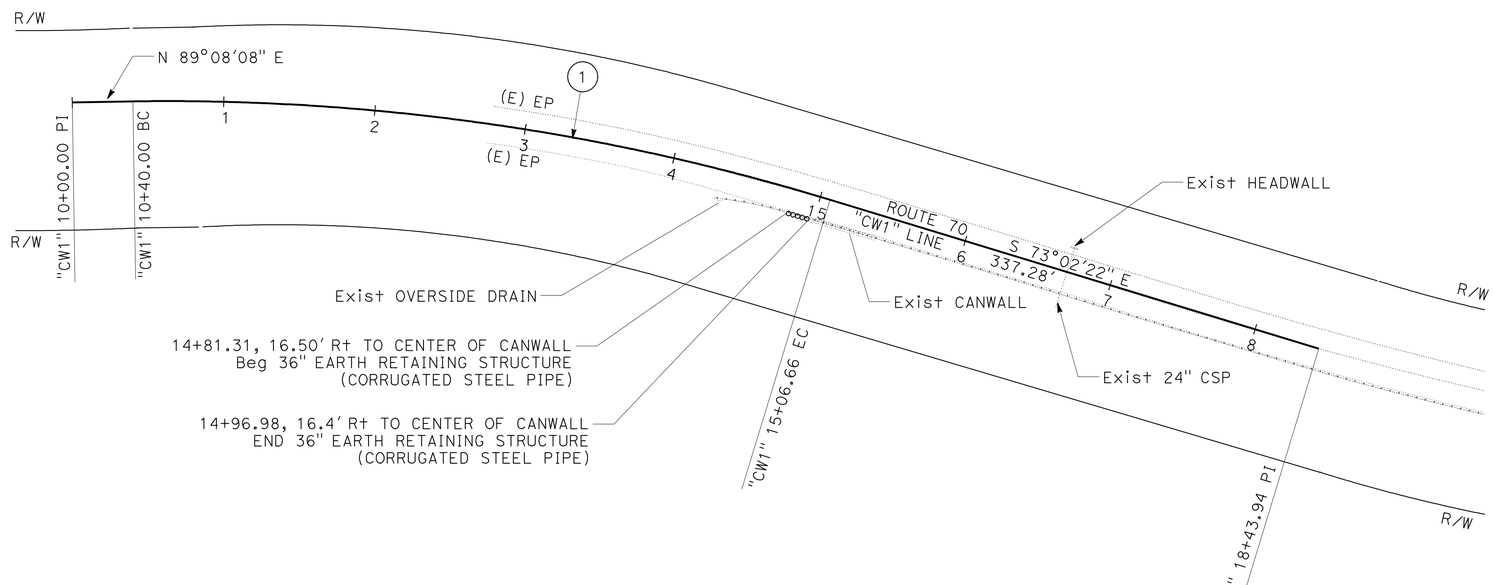

LOCATION 52

PM 15.17 TO 15.59
"CW1" 14+81.31 TO 14+96.98

LAYOUT

SCALE: 1″ = 50′ **L-2**

REVISED BY | DATE REVISED
MIKE MOGEN | DAN FISHER
CALCULATED-DESIGNED BY | CHECKED BY
FUNCTIONAL SUPERVISOR: JULIE CASEY

STATE OF CALIFORNIA - DEPARTMENT OF TRANSPORTATION
Caltrans® **DESIGN**

P:\proj2\02\3c300_plans\pse\23c300ea002.dgn

LAST REVISION 10-24-11 | DATE PLOTTED => 09-JAN-2012 | TIME PLOTTED => 08:42

Dist	COUNTY	ROUTE	POST MILES TOTAL PROJECT	SHEET No.	TOTAL SHEETS
02	Plu	70	0.6/35.2	4	101

REGISTERED CIVIL ENGINEER 10-26-11 DATE

1-9-12
PLANS APPROVAL DATE

REGISTERED PROFESSIONAL ENGINEER MIKE MOGEN No. C67018 Exp. 9-30-12 CIVIL STATE OF CALIFORNIA

THE STATE OF CALIFORNIA OR ITS OFFICERS OR AGENTS SHALL NOT BE RESPONSIBLE FOR THE ACCURACY OR COMPLETENESS OF SCANNED COPIES OF THIS PLAN SHEET.

NOTES:

1. FOR ACCURATE RIGHT OF WAY DATA, CONTACT RIGHT OF WAY ENGINEERING AT THE DISTRICT OFFICE.
2. EXISTING UTILITY FACILITIES ARE NOT SHOWN ON THESE PLANS.

CURVE DATA

No.	R	Δ	T	L
1	3200.00′	5° 22′ 36″	150.25′	300.29′

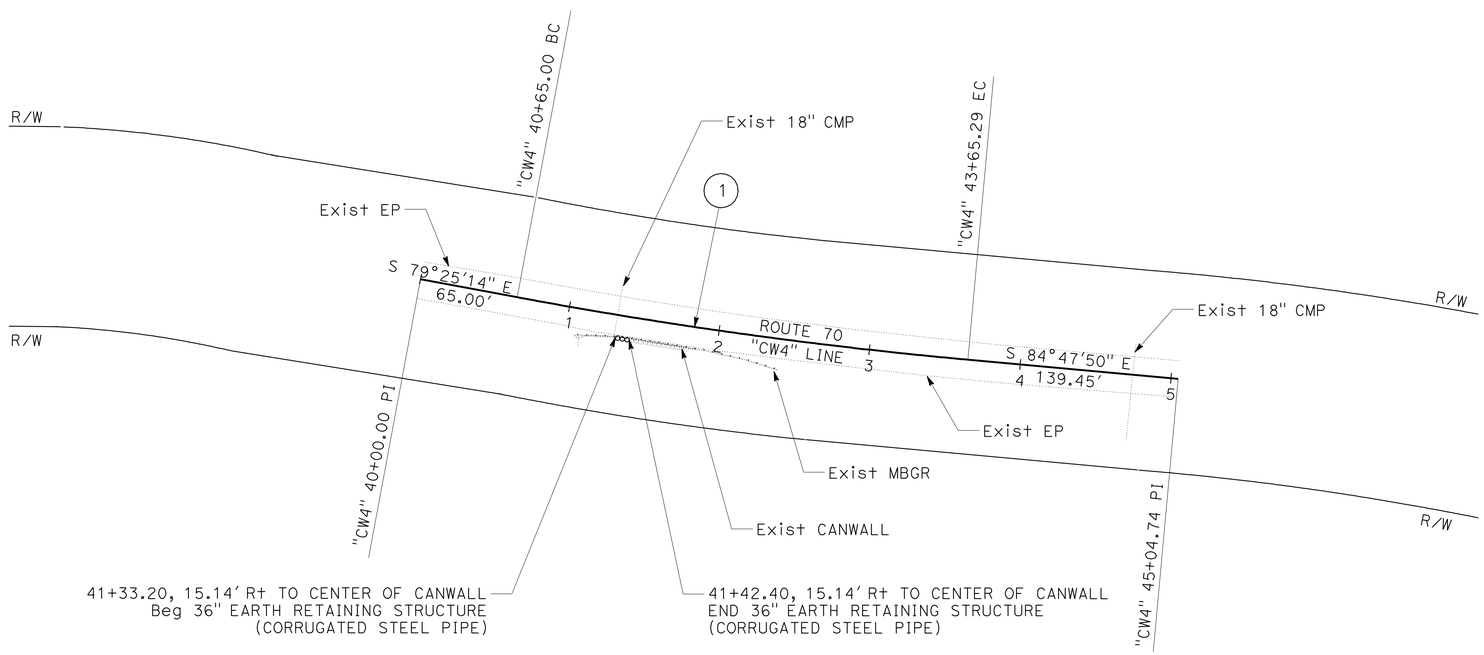

LOCATION 66

PM 21.76 TO 21.80
"CW4" 41+33.20 TO 41+42.40

LAYOUT

SCALE: 1" = 50′ **L-3**

REVISED BY	DATE REVISED

CALCULATED-DESIGNED BY: MIKE MOGEN
CHECKED BY: DAN FISHER

FUNCTIONAL SUPERVISOR: JULIE CASEY

STATE OF CALIFORNIA - DEPARTMENT OF TRANSPORTATION
Caltrans® DESIGN

V:\ProjectPlans\PSEWorking\d2\02-3C3001-redlines\23c300ea003.dgn

LAST REVISION 10-24-11
DATE PLOTTED => 09-JAN-2012
TIME PLOTTED => 08:48

Dist	COUNTY	ROUTE	POST MILES TOTAL PROJECT	SHEET No.	TOTAL SHEETS
02	Plu	70	0.6/35.2	5	101

REGISTERED CIVIL ENGINEER 10-26-11 DATE

1-9-12
PLANS APPROVAL DATE

REGISTERED PROFESSIONAL ENGINEER MIKE MOGEN No. C67018 Exp. 9-30-12 CIVIL STATE OF CALIFORNIA

THE STATE OF CALIFORNIA OR ITS OFFICERS OR AGENTS SHALL NOT BE RESPONSIBLE FOR THE ACCURACY OR COMPLETENESS OF SCANNED COPIES OF THIS PLAN SHEET.

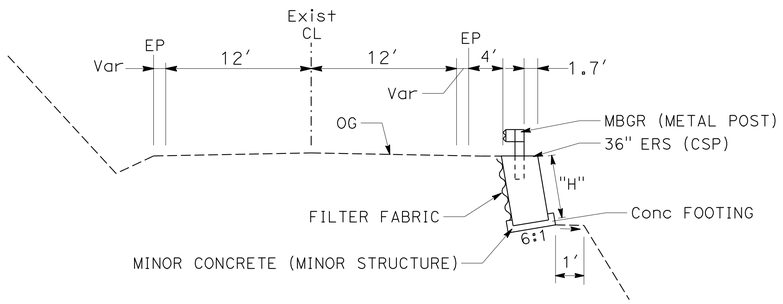

SECTION A-A
NOTE: "H" SHOWN ON QUANTITY SHEET

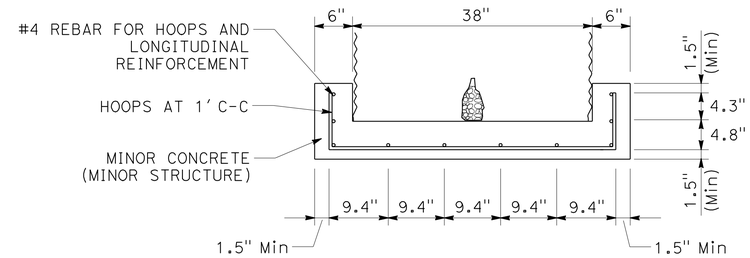

CONCRETE FOOTING

ABBREVIATIONS:

#	NUMBER
ERS	EARTH RETAINING STRUCTURE
OD	OVERSIDE DRAIN
CL	CENTERLINE

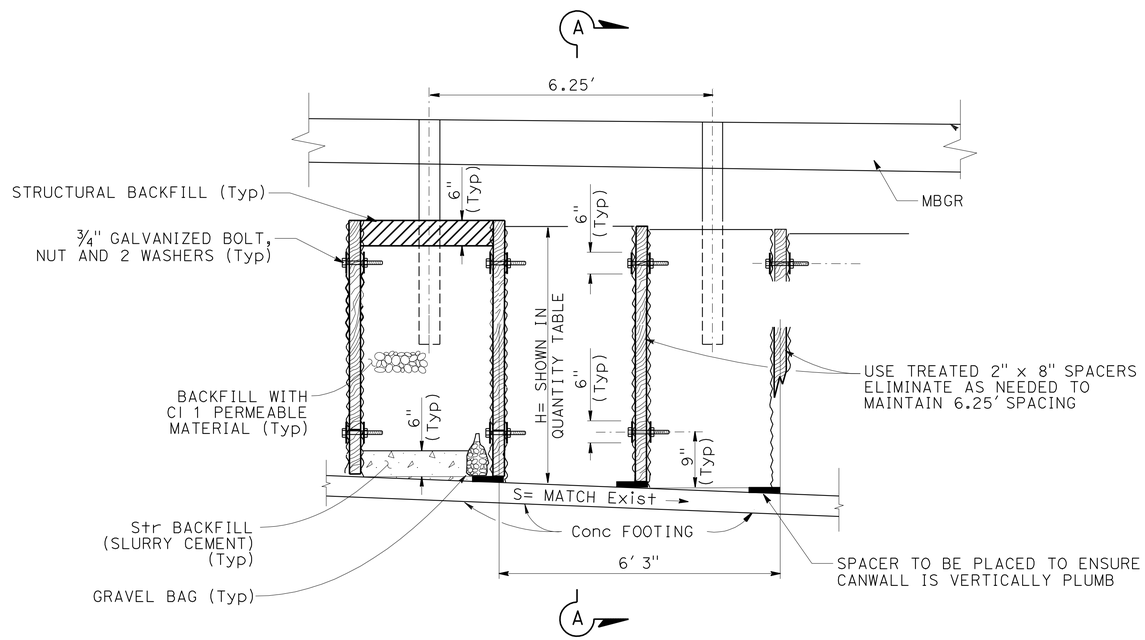

ELEVATION

36" EARTH RETAINING STRUCTURE (CORRUGATED STEEL PIPE)

PM 2.47 TO 2.66 (LOCATION 24-25)
PM 15.19 TO 15.2 (LOCATION 52)
PM 21.76 TO 21.80 (LOCATION 66)

NOTE:
THE 36" ERS (CSP) EXTENSIONS AT LOCATIONS 52 AND 66 SHALL BE BOLTED TO THE EXISTING 36" ERS (CSP) AS SHOWN ABOVE. THE EXISTING ADJACENT 36" CSP SHALL BE EMPTIED IN ORDER TO INSTALL THE HARDWARE AND THEN BACKFILLED AS SHOWN ABOVE. THE CONCRETE FOOTING WILL ONLY BE PLACED UNDER NEW 36" CSP.

CONSTRUCTION DETAILS
NO SCALE

C-1

REVISED BY | DATE REVISED
MIKE MOGEN | DAN FISHER
CALCULATED-DESIGNED BY | CHECKED BY
FUNCTIONAL SUPERVISOR: JULIE CASEY

STATE OF CALIFORNIA - DEPARTMENT OF TRANSPORTATION
Caltrans DESIGN

P:\proj2\02\3c300_plans\pse\23c300ga001.dgn

LAST REVISION | DATE PLOTTED => 09-JAN-2012 | TIME PLOTTED => 08:42
10-24-11

Dist	COUNTY	ROUTE	POST MILES TOTAL PROJECT	SHEET No.	TOTAL SHEETS
02	Plu	70	0.6/35.2	6	101

REGISTERED CIVIL ENGINEER 10-26-11 DATE

1-9-12
PLANS APPROVAL DATE

REGISTERED PROFESSIONAL ENGINEER MIKE MOGEN No. C67018 Exp. 9-30-12 CIVIL STATE OF CALIFORNIA

THE STATE OF CALIFORNIA OR ITS OFFICERS OR AGENTS SHALL NOT BE RESPONSIBLE FOR THE ACCURACY OR COMPLETENESS OF SCANNED COPIES OF THIS PLAN SHEET.

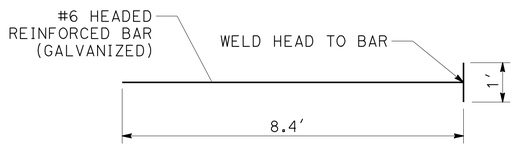

SOIL ANCHOR

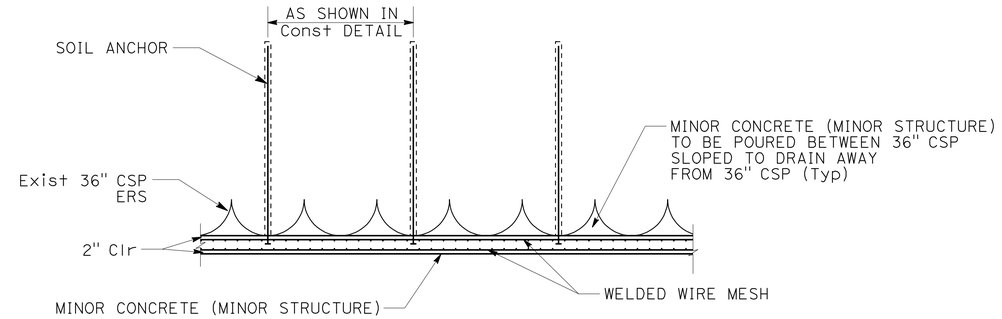

SECTION B-B

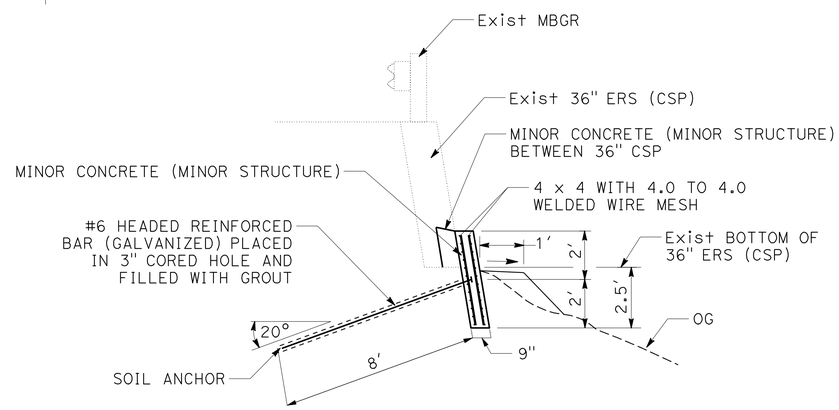

SECTION A-A

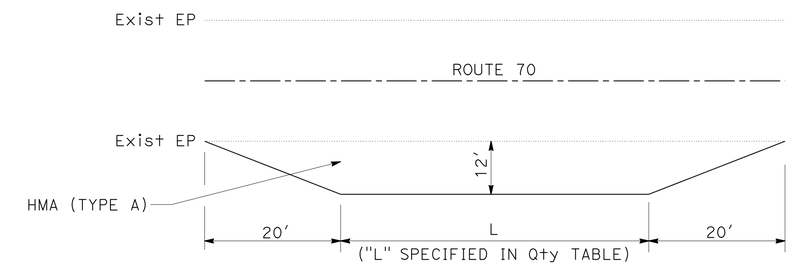

PLAN

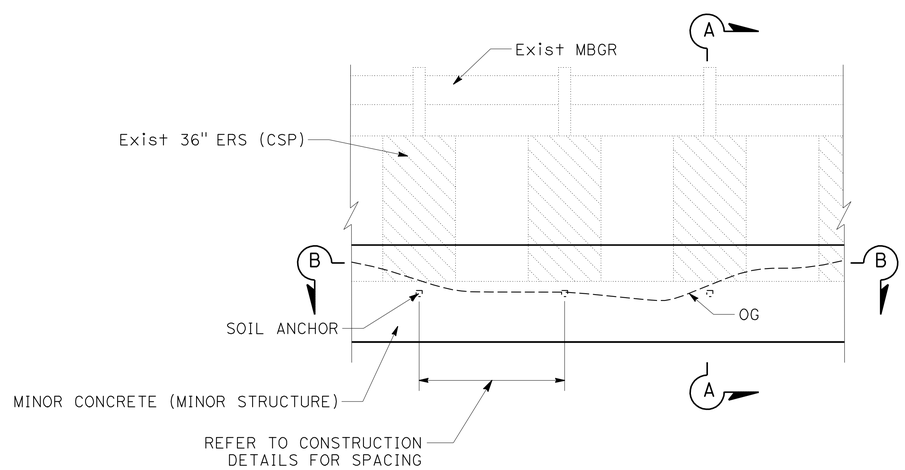

ELEVATION

UNDERPIN 36" ERS (CSP)

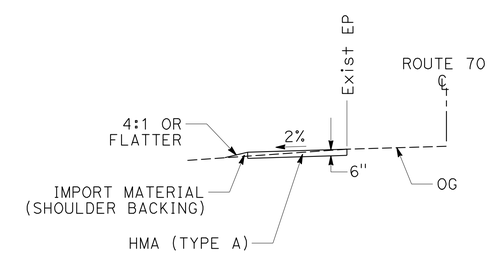

ELEVATION

PAVE PULLOUT

(LOCATION 10) PM 1.53 TO 1.65
(LOCATION 12) PM 1.69 TO 1.72
(LOCATION 18) PM 1.92 TO 1.98
(LOCATION 20) PM 2.09 TO 2.26
(LOCATION 21) PM 2.26 TO 2.41
(LOCATION 29) PM 2.87 TO 3.03

CONSTRUCTION DETAILS

NO SCALE

C-2

REVISED BY | DATE REVISED
MIKE MOGEN | DAN FISHER
CALCULATED-DESIGNED BY | CHECKED BY
FUNCTIONAL SUPERVISOR
JULIE CASEY

STATE OF CALIFORNIA - DEPARTMENT OF TRANSPORTATION
Caltrans® DESIGN

P:\proj2\02\3c300_plans\pse\23c300ga002.dgn

LAST REVISION 10-24-11 | DATE PLOTTED => 09-JAN-2012 | TIME PLOTTED => 08:42

Dist	COUNTY	ROUTE	POST MILES TOTAL PROJECT	SHEET No.	TOTAL SHEETS
02	Plu	70	0.6/35.2	7	101

REGISTERED CIVIL ENGINEER 10-26-11 DATE

1-9-12
PLANS APPROVAL DATE

REGISTERED PROFESSIONAL ENGINEER MIKE MOGEN No. C67018 Exp. 9-30-12 CIVIL STATE OF CALIFORNIA

THE STATE OF CALIFORNIA OR ITS OFFICERS OR AGENTS SHALL NOT BE RESPONSIBLE FOR THE ACCURACY OR COMPLETENESS OF SCANNED COPIES OF THIS PLAN SHEET.

LEGEND:

DIRECTION OF TRAFFIC

CAN 36" CSP

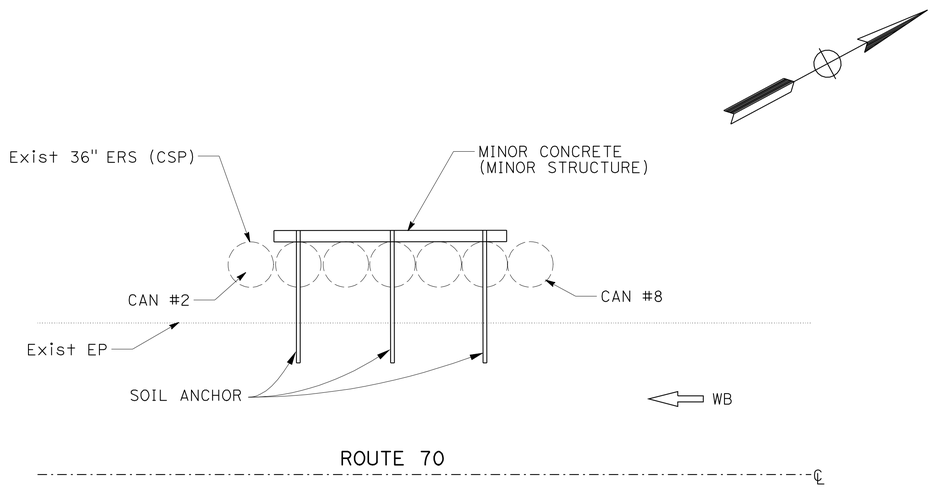

LOCATION 13
PM 1.72 TO 1.75

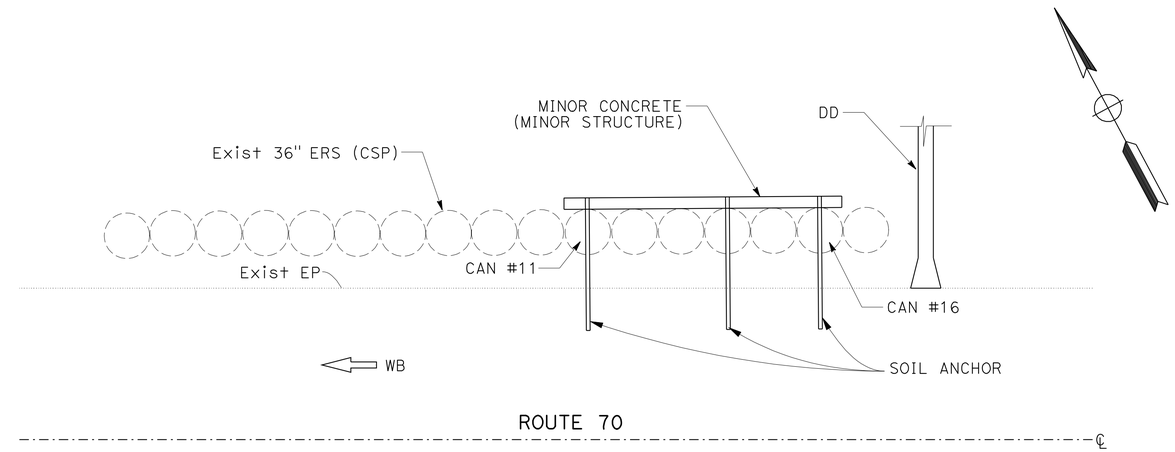

LOCATION 15
PM 1.79 TO 1.84

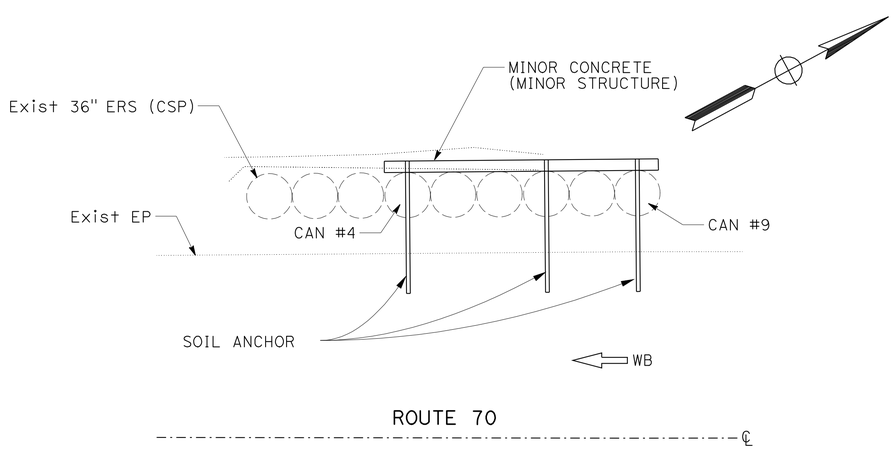

LOCATION 14
PM 1.75 TO 1.79

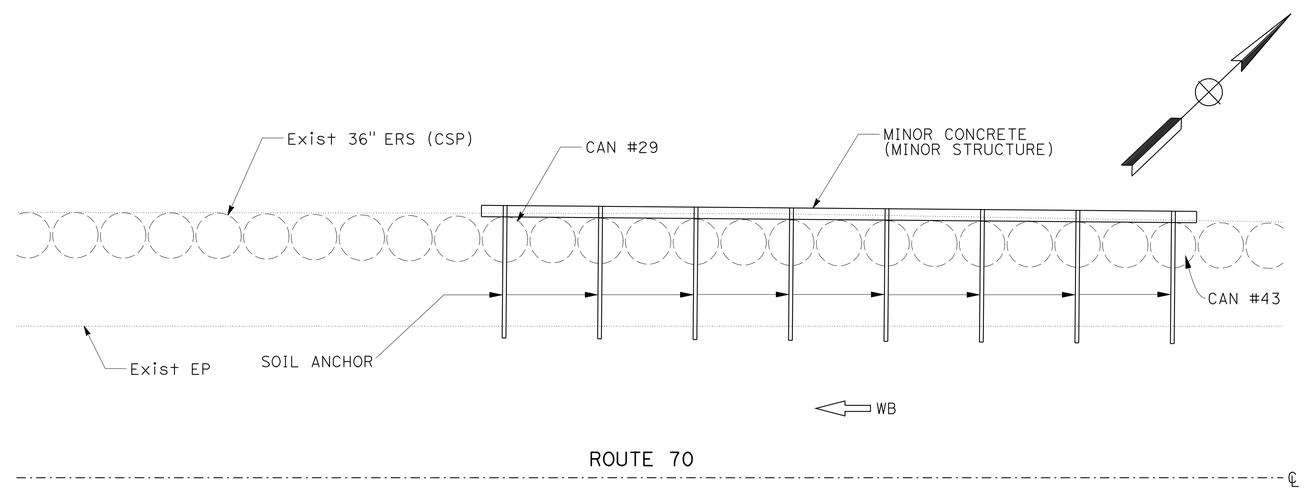

LOCATION 17
PM 1.87 TO 1.92

UNDERPIN 36" ERS (CSP)

CONSTRUCTION DETAILS
NO SCALE

C-3

REVISED BY | DATE REVISED
MIKE MOGEN | DAN FISHER
CALCULATED-DESIGNED BY | CHECKED BY
FUNCTIONAL SUPERVISOR: JULIE CASEY

STATE OF CALIFORNIA - DEPARTMENT OF TRANSPORTATION
Caltrans DESIGN

P:\proj2\02\3c300_plans\pse\23c300ga003.dgn

LAST REVISION | DATE PLOTTED => 09-JAN-2012
10-24-11 | TIME PLOTTED => 08:42

Dist	COUNTY	ROUTE	POST MILES TOTAL PROJECT	SHEET No.	TOTAL SHEETS
02	Plu	70	0.6/35.2	8	101

REGISTERED CIVIL ENGINEER 10-26-11 DATE

1-9-12
PLANS APPROVAL DATE

REGISTERED PROFESSIONAL ENGINEER MIKE MOGEN No. C67018 Exp. 9-30-12 CIVIL STATE OF CALIFORNIA

THE STATE OF CALIFORNIA OR ITS OFFICERS OR AGENTS SHALL NOT BE RESPONSIBLE FOR THE ACCURACY OR COMPLETENESS OF SCANNED COPIES OF THIS PLAN SHEET.

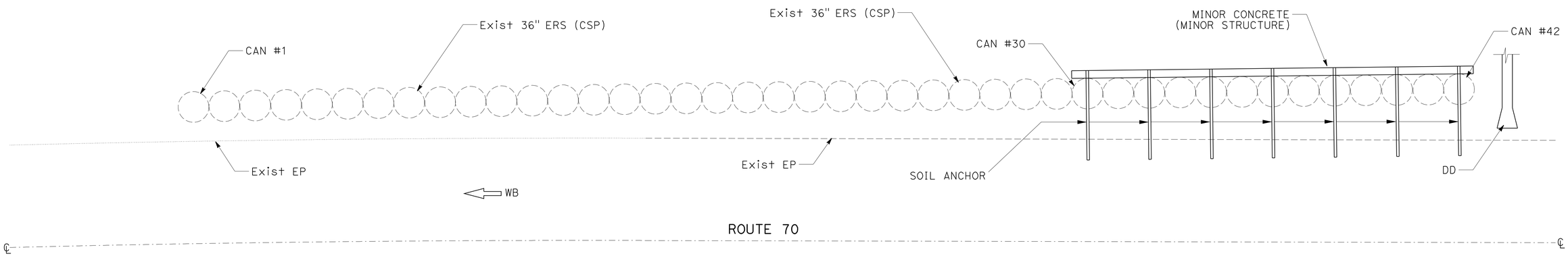

LOCATION 19
PM 1.98 TO 2.09

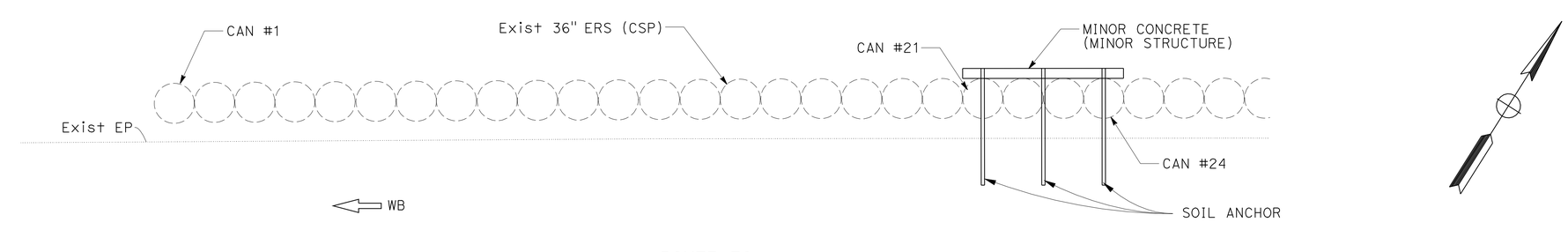

LOCATION 20
PM 2.09 TO 2.26

UNDERPIN 36" ERS (CSP)

CONSTRUCTION DETAILS
NO SCALE

C-4

REVISED BY | DATE REVISED
MIKE MOGEN | DAN FISHER
CALCULATED-DESIGNED BY | CHECKED BY
FUNCTIONAL SUPERVISOR: JULIE CASEY

STATE OF CALIFORNIA - DEPARTMENT OF TRANSPORTATION
Caltrans DESIGN

P:\proj2\02\3c300_plans\pse\23c300ga004.dgn

LAST REVISION | DATE PLOTTED => 09-JAN-2012
10-24-11 | TIME PLOTTED => 08:42

Dist	COUNTY	ROUTE	POST MILES TOTAL PROJECT	SHEET No.	TOTAL SHEETS
02	Plu	70	0.6/35.2	9	101

REGISTERED CIVIL ENGINEER 10-26-11 DATE

1-9-12
PLANS APPROVAL DATE

REGISTERED PROFESSIONAL ENGINEER MIKE MOGEN No. C67018 Exp. 9-30-12 CIVIL STATE OF CALIFORNIA

THE STATE OF CALIFORNIA OR ITS OFFICERS OR AGENTS SHALL NOT BE RESPONSIBLE FOR THE ACCURACY OR COMPLETENESS OF SCANNED COPIES OF THIS PLAN SHEET.

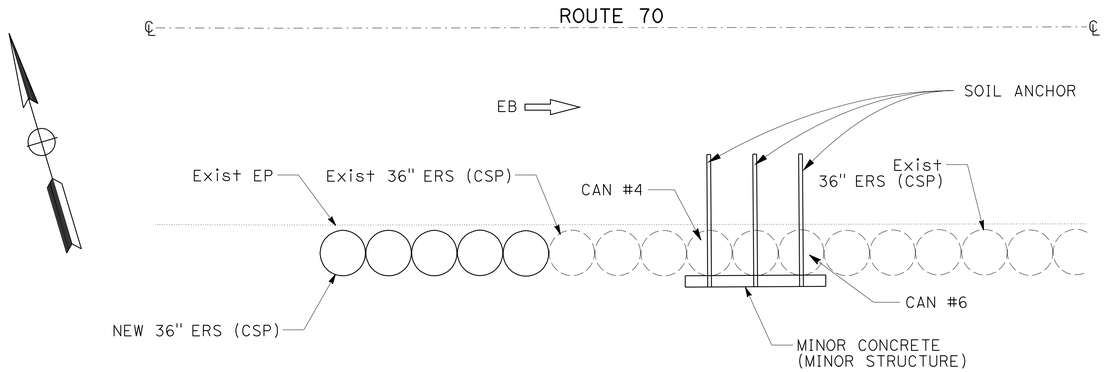

LOCATION 52
PM 15.17 TO 15.59

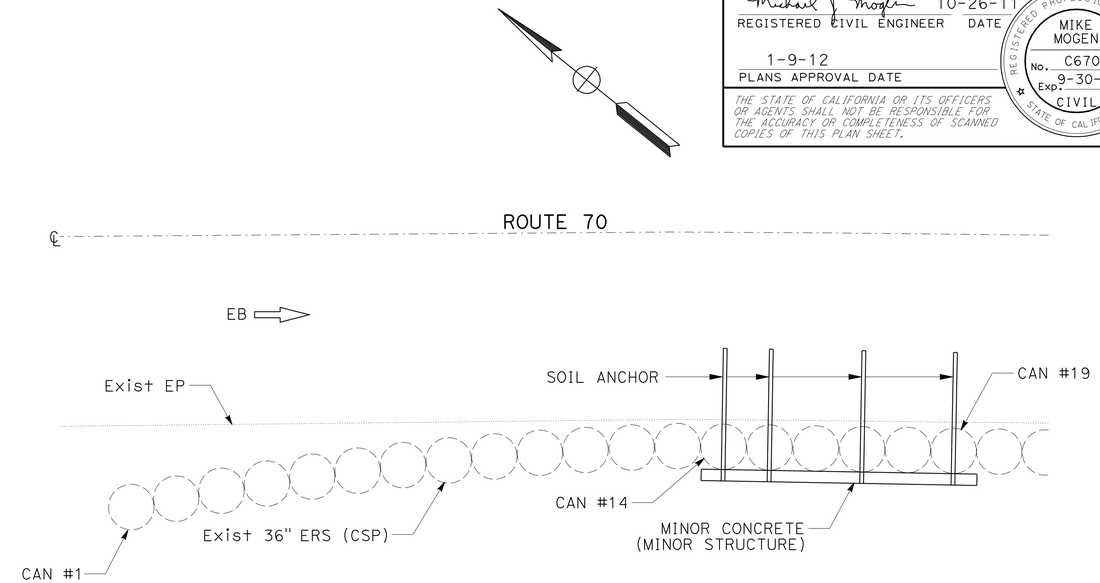

LOCATION 62 (1 OF 3)
PM 18.88 TO 19.03

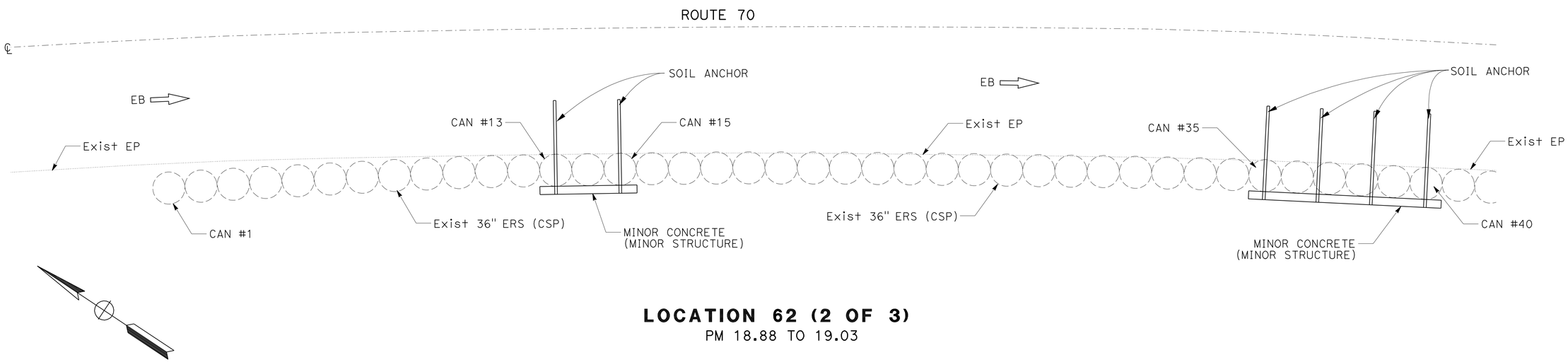

LOCATION 62 (2 OF 3)
PM 18.88 TO 19.03

UNDERPIN 36" ERS (CSP)

CONSTRUCTION DETAILS
NO SCALE

C-5

REVISED BY | DATE REVISED
MIKE MOGEN | DAN FISHER
CALCULATED-DESIGNED BY | CHECKED BY
FUNCTIONAL SUPERVISOR: JULIE CASEY

STATE OF CALIFORNIA - DEPARTMENT OF TRANSPORTATION
Caltrans® DESIGN

P:\proj2\02\3c300_plans\pse\23c300ga005.dgn

LAST REVISION 10-24-11 | DATE PLOTTED => 09-JAN-2012 | TIME PLOTTED => 08:42

Dist	COUNTY	ROUTE	POST MILES TOTAL PROJECT	SHEET No.	TOTAL SHEETS
02	Plu	70	0.6/35.2	10	101

REGISTERED CIVIL ENGINEER 10-26-11 DATE

1-9-12
PLANS APPROVAL DATE

REGISTERED PROFESSIONAL ENGINEER MIKE MOGEN No. C67018 Exp. 9-30-12 CIVIL STATE OF CALIFORNIA

THE STATE OF CALIFORNIA OR ITS OFFICERS OR AGENTS SHALL NOT BE RESPONSIBLE FOR THE ACCURACY OR COMPLETENESS OF SCANNED COPIES OF THIS PLAN SHEET.

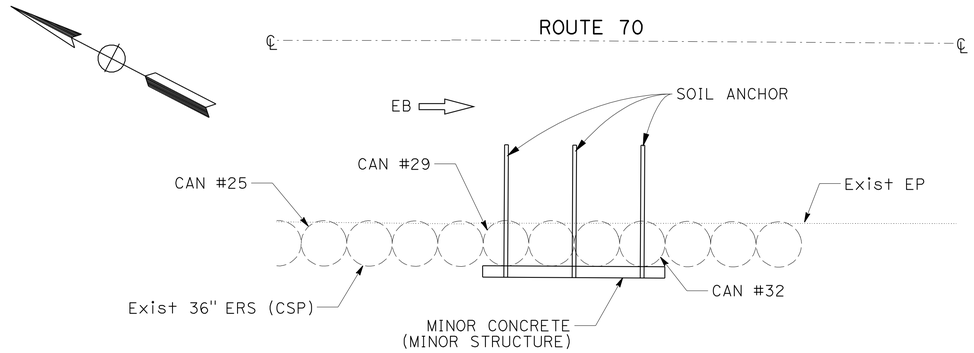

LOCATION 62 (3 OF 3)
PM 18.88 TO 19.03

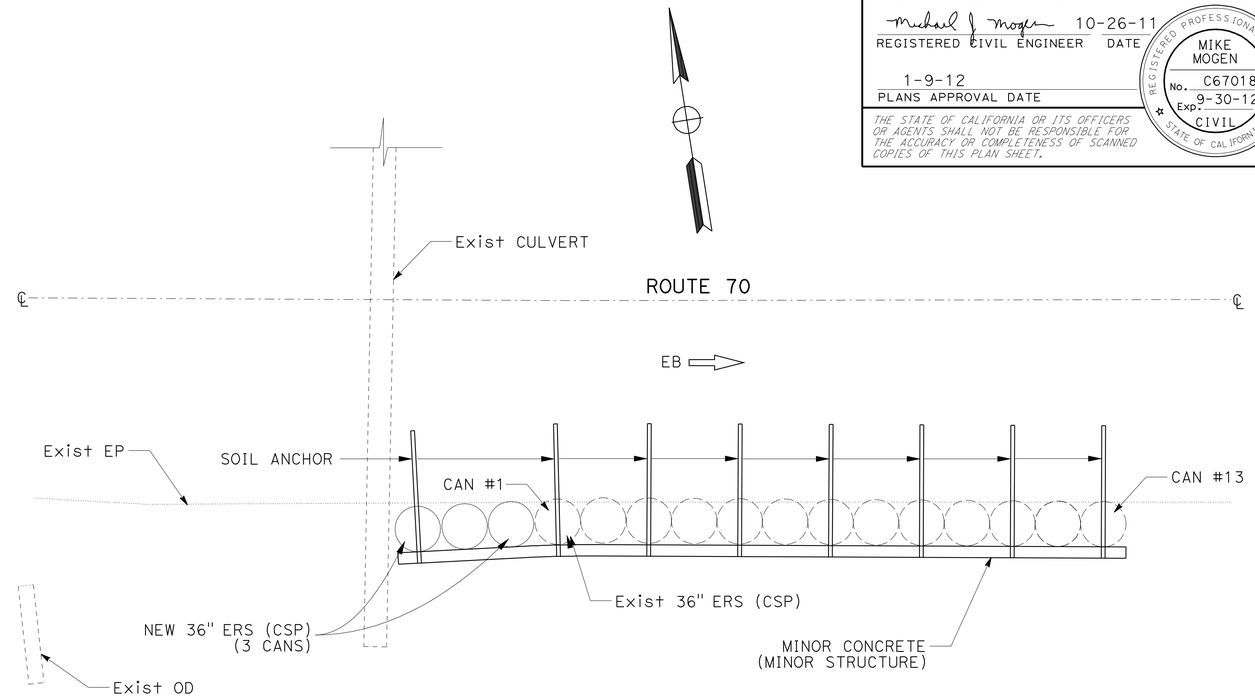

LOCATION 66
PM 21.76 TO 21.80

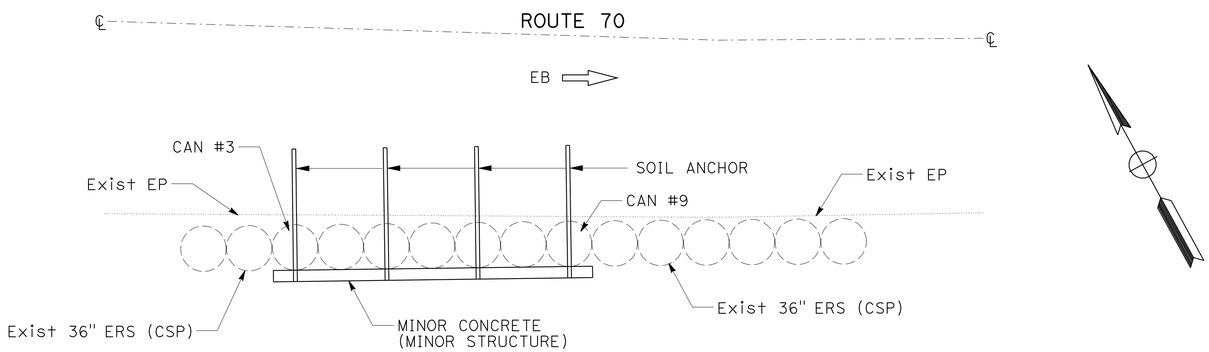

LOCATION 79
PM 27.47 TO 27.48

UNDERPIN 36" ERS (CSP)

CONSTRUCTION DETAILS
NO SCALE

C-6

REVISED BY	DATE REVISED

CALCULATED-DESIGNED BY	MIKE MOGEN
CHECKED BY	DAN FISHER

FUNCTIONAL SUPERVISOR: JULIE CASEY

STATE OF CALIFORNIA - DEPARTMENT OF TRANSPORTATION
Caltrans
DESIGN

P:\proj2\02\3c300_plans\pse\23c300ga006.dgn

LAST REVISION 10-24-11 | DATE PLOTTED => 09-JAN-2012 | TIME PLOTTED => 08:42

Dist	COUNTY	ROUTE	POST MILES TOTAL PROJECT	SHEET No.	TOTAL SHEETS
02	Plu	70	0.6/35.2	11	101

REGISTERED CIVIL ENGINEER 10-26-11 DATE

1-9-12
PLANS APPROVAL DATE

REGISTERED PROFESSIONAL ENGINEER MIKE MOGEN No. C67018 Exp. 9-30-12 CIVIL STATE OF CALIFORNIA

THE STATE OF CALIFORNIA OR ITS OFFICERS OR AGENTS SHALL NOT BE RESPONSIBLE FOR THE ACCURACY OR COMPLETENESS OF SCANNED COPIES OF THIS PLAN SHEET.

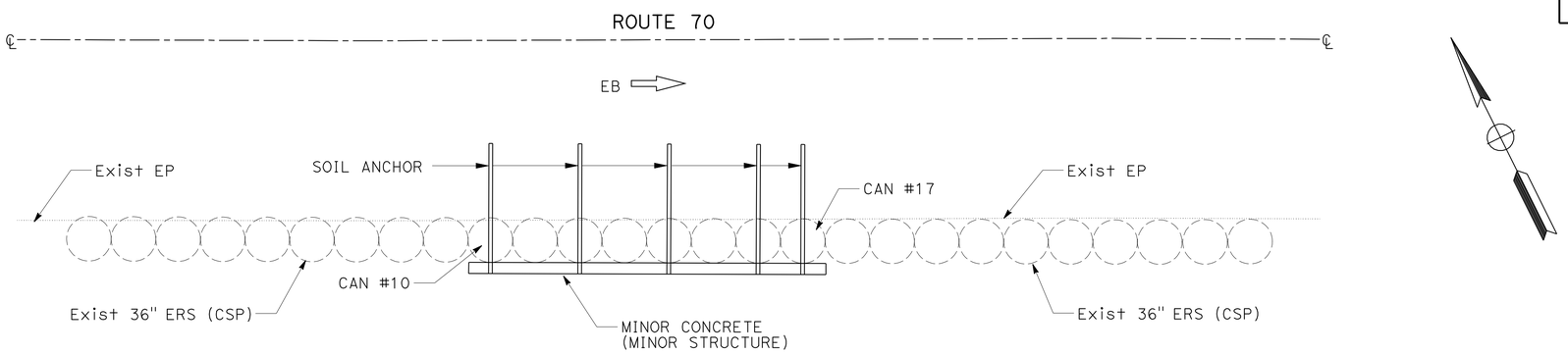

LOCATION 81
PM 29.33 TO 29.37

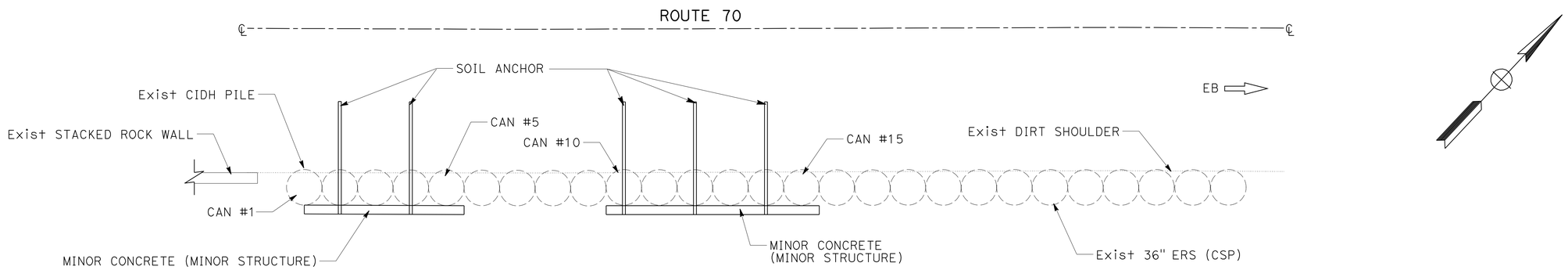

LOCATION 93
PM 32.74 TO 32.92

UNDERPIN 36" ERS (CSP)

CONSTRUCTION DETAILS
NO SCALE

C-7

REVISED BY | DATE REVISED
MIKE MOGEN | DAN FISHER
CALCULATED-DESIGNED BY | CHECKED BY
FUNCTIONAL SUPERVISOR | JULIE CASEY

STATE OF CALIFORNIA - DEPARTMENT OF TRANSPORTATION
Caltrans
DESIGN

P:\proj2\02\3c300_plans\pse\23c300ga007.dgn

LAST REVISION 10-24-11 | DATE PLOTTED => 09-JAN-2012 | TIME PLOTTED => 08:42

BORDER LAST REVISED 7/2/2010 | USERNAME => s114640 | DGN FILE => 23c300ga007.dgn | RELATIVE BORDER SCALE IS IN INCHES 0 1 2 3 | UNIT 246 | PROJECT NUMBER & PHASE: 02000003171

Dist	COUNTY	ROUTE	POST MILES TOTAL PROJECT	SHEET No.	TOTAL SHEETS
02	Plu	70	0.6/35.2	12	101

REGISTERED CIVIL ENGINEER 10-26-11 DATE

1-9-12
PLANS APPROVAL DATE

REGISTERED PROFESSIONAL ENGINEER MIKE MOGEN No. C67018 Exp. 9-30-12 CIVIL STATE OF CALIFORNIA

THE STATE OF CALIFORNIA OR ITS OFFICERS OR AGENTS SHALL NOT BE RESPONSIBLE FOR THE ACCURACY OR COMPLETENESS OF SCANNED COPIES OF THIS PLAN SHEET.

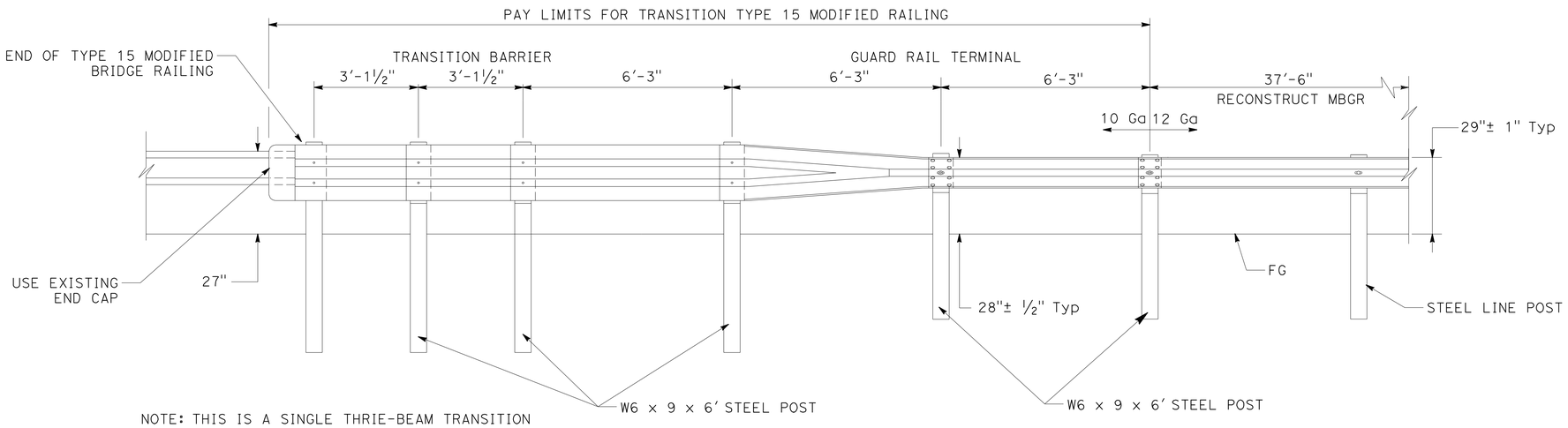

NOTE: THIS IS A SINGLE THRIE-BEAM TRANSITION

TRANSITION TYPE 15 MODIFIED RAILING

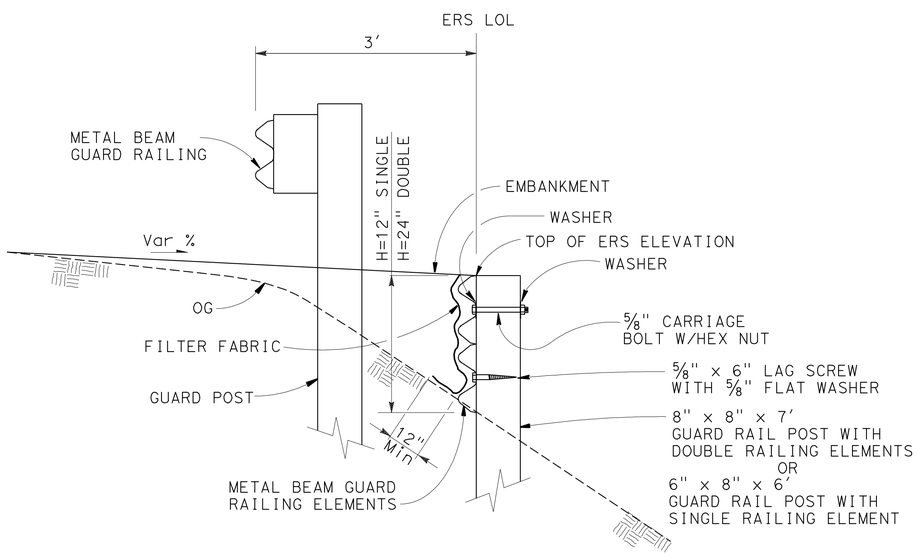

SECTION A-A

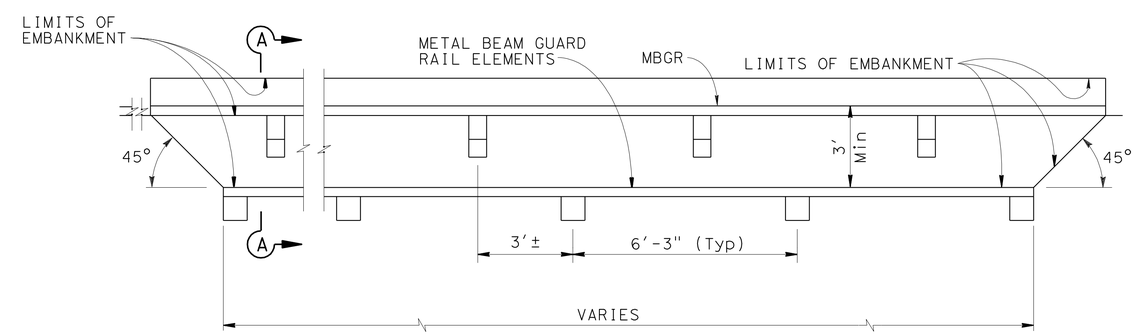

PLAN

EARTH RETAINING STRUCTURE (GUARD RAILING)

CONSTRUCTION DETAILS

NO SCALE

C-8

REVISED BY	DATE REVISED
MIKE MOGEN	DAN FISHER
CALCULATED-DESIGNED BY	CHECKED BY
FUNCTIONAL SUPERVISOR	JULIE CASEY

STATE OF CALIFORNIA - DEPARTMENT OF TRANSPORTATION
Caltrans
DESIGN

P:\proj2\02\3c300_plans\pse\23c300ga008.dgn

LAST REVISION 10-24-11 | DATE PLOTTED => 09-JAN-2012 | TIME PLOTTED => 08:42

Dist	COUNTY	ROUTE	POST MILES TOTAL PROJECT	SHEET No.	TOTAL SHEETS
02	Plu	70	0.6/35.2	13	101

REGISTERED CIVIL ENGINEER 10-26-11 DATE

1-9-12
PLANS APPROVAL DATE

REGISTERED PROFESSIONAL ENGINEER MIKE MOGEN No. C67018 Exp. 9-30-12 CIVIL STATE OF CALIFORNIA

THE STATE OF CALIFORNIA OR ITS OFFICERS OR AGENTS SHALL NOT BE RESPONSIBLE FOR THE ACCURACY OR COMPLETENESS OF SCANNED COPIES OF THIS PLAN SHEET.

NOTES:

1. SCUPPER SHALL BE 1" LARGER (ON BOTH SIDES OF PULL BOX) THAN EXISTING PULL BOX OPENING.
2. REINFORCEMENT TO BE SAME BAR SIZE AND SHAPE AS ADJACENT REINFORCEMENT.

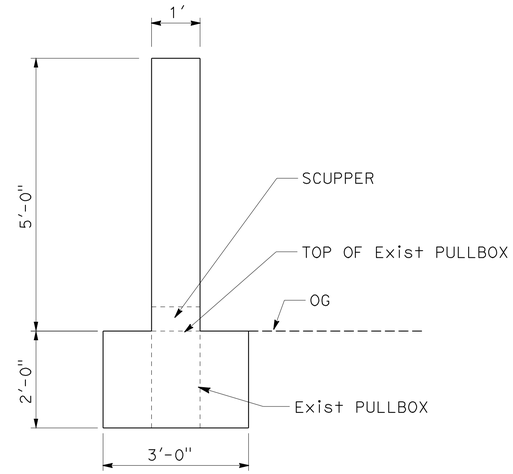

SECTION A-A

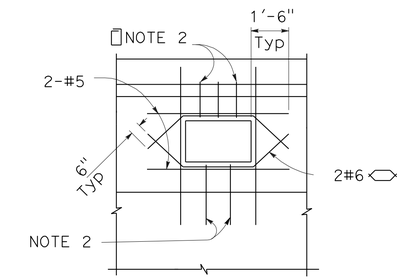

SCUPPER

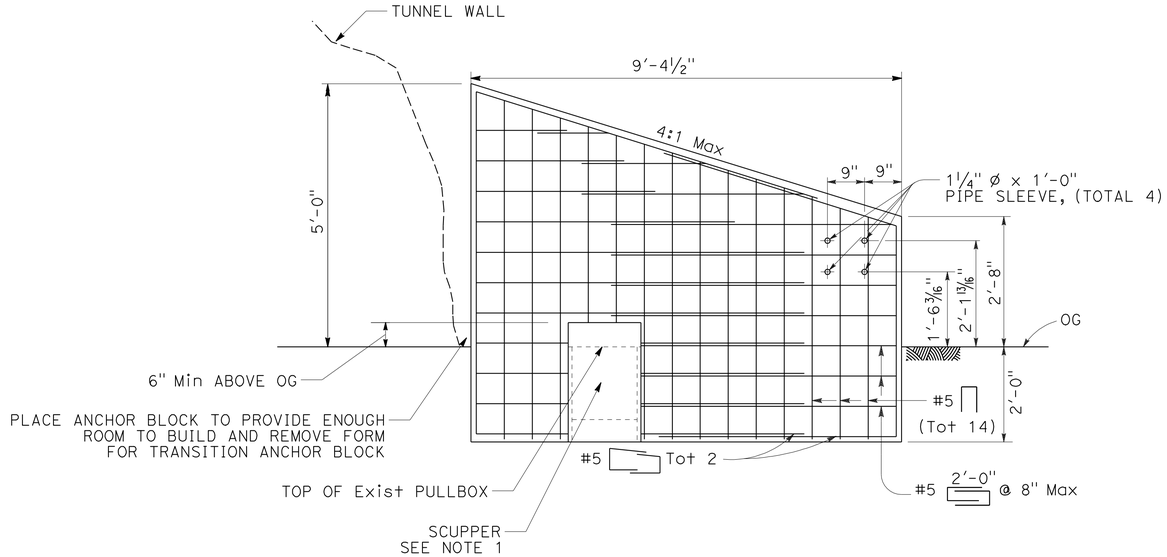

ELEVATION

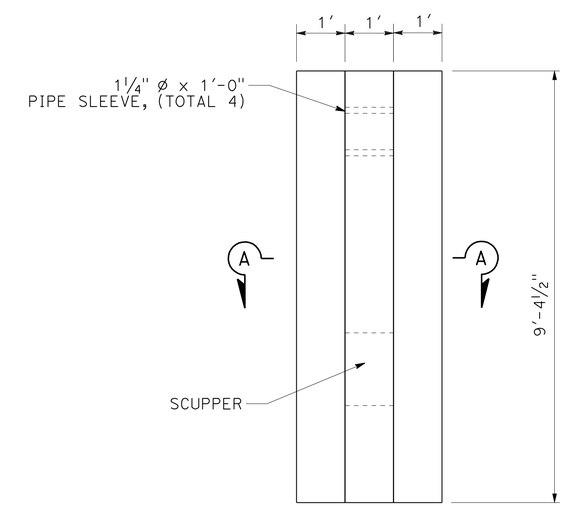

PLAN

CONCRETE BARRIER (TRANSITION ANCHOR BLOCK)

PM 0.80 TO 0.82 (LOCATION 3)

CONSTRUCTION DETAILS

NO SCALE

C-9

REVISED BY | DATE REVISED
MIKE MOGEN | DAN FISHER
CALCULATED-DESIGNED BY | CHECKED BY
FUNCTIONAL SUPERVISOR: JULIE CASEY

STATE OF CALIFORNIA - DEPARTMENT OF TRANSPORTATION
Caltrans® DESIGN

P:\proj2\02\3c300_plans\pse\23c300ga009.dgn

LAST REVISION 10-24-11 | DATE PLOTTED => 09-JAN-2012 | TIME PLOTTED => 08:31

Dist	COUNTY	ROUTE	POST MILES TOTAL PROJECT	SHEET No.	TOTAL SHEETS
02	Plu	70	0.6/35.2	14	101

REGISTERED CIVIL ENGINEER 10-26-11 DATE

1-9-12
PLANS APPROVAL DATE

REGISTERED PROFESSIONAL ENGINEER MIKE MOGEN No. C67018 Exp. 9-30-12 CIVIL STATE OF CALIFORNIA

THE STATE OF CALIFORNIA OR ITS OFFICERS OR AGENTS SHALL NOT BE RESPONSIBLE FOR THE ACCURACY OR COMPLETENESS OF SCANNED COPIES OF THIS PLAN SHEET.

NOTE:

FOR DETAILS NOT SHOWN, SEE STANDARD PLANS.

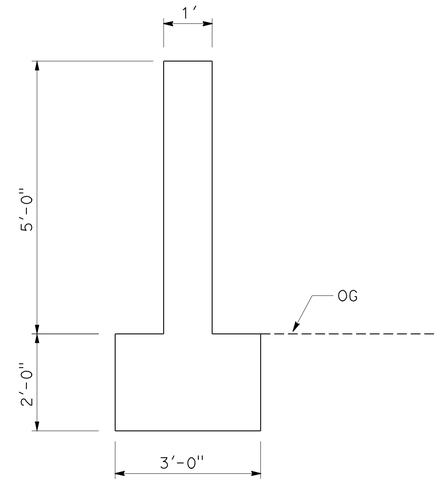

SECTION A-A

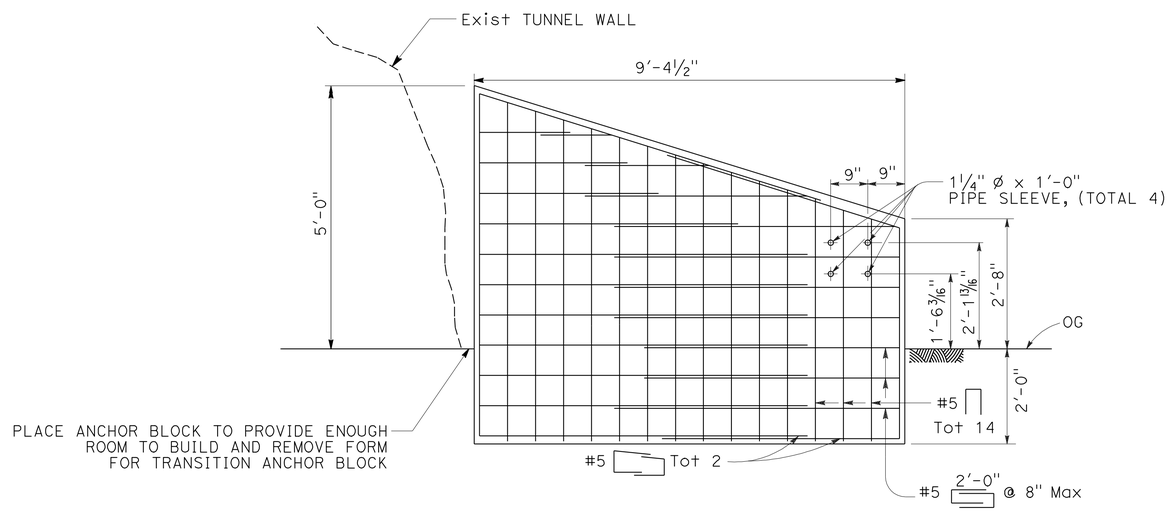

ELEVATION

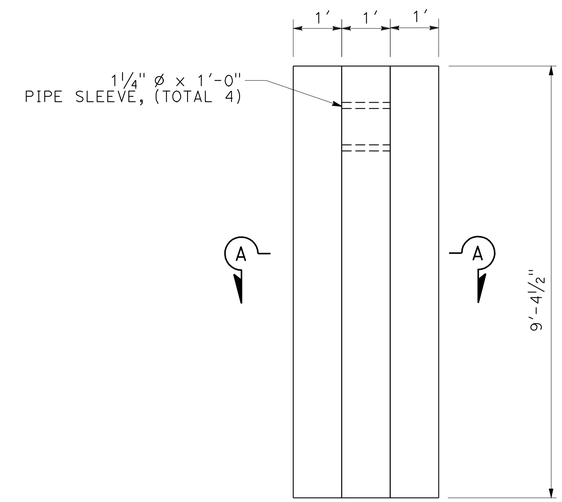

PLAN

CONCRETE BARRIER (TRANSITION ANCHOR BLOCK)

PM 0.73 (LOCATION 1 AT GRIZZLY CREEK TUNNEL- WEST END)
PM 0.73 (LOCATION 2 AT GRIZZLY CREEK TUNNEL- WEST END)
PM 0.99 (LOCATION 5 AT ELEPHANT BUTTE TUNNEL - WEST END)

CONSTRUCTION DETAILS

NO SCALE

C-10

REVISED BY	DATE REVISED
MIKE MOGEN	DAN FISHER

CALCULATED-DESIGNED BY / CHECKED BY

FUNCTIONAL SUPERVISOR: JULIE CASEY

STATE OF CALIFORNIA - DEPARTMENT OF TRANSPORTATION

Caltrans® DESIGN

P:\proj2\02\3c300_plans\pse\23c300ga010.dgn

LAST REVISION 10-24-11 | DATE PLOTTED => 09-JAN-2012 | TIME PLOTTED => 08:32

Dist	COUNTY	ROUTE	POST MILES TOTAL PROJECT	SHEET No.	TOTAL SHEETS
02	Plu	70	0.6/35.2	15	101

REGISTERED CIVIL ENGINEER 10-26-11 DATE

1-9-12
PLANS APPROVAL DATE

REGISTERED PROFESSIONAL ENGINEER MIKE MOGEN No. C67018 Exp. 9-30-12 CIVIL STATE OF CALIFORNIA

THE STATE OF CALIFORNIA OR ITS OFFICERS OR AGENTS SHALL NOT BE RESPONSIBLE FOR THE ACCURACY OR COMPLETENESS OF SCANNED COPIES OF THIS PLAN SHEET.

NOTE:

FOR DETAILS NOT SHOWN SEE, STANDARD PLANS.

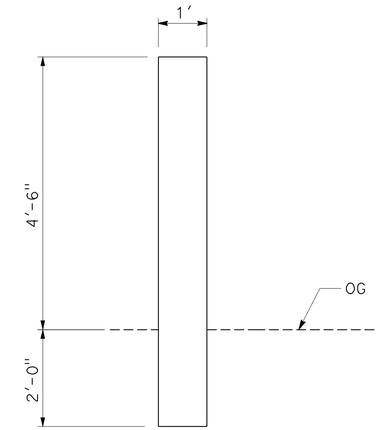

SECTION A-A

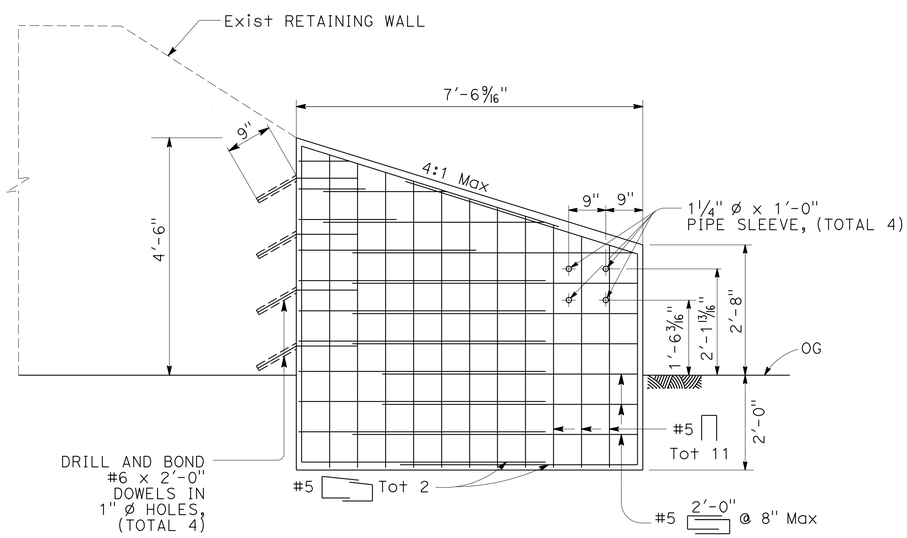

ELEVATION

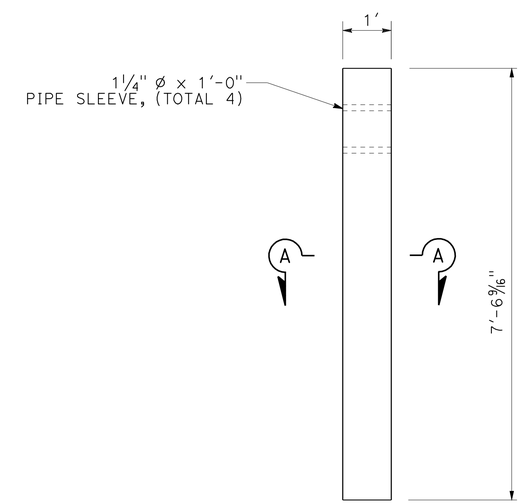

PLAN

CONCRETE BARRIER (TRANSITION ANCHOR BLOCK)

PM 3.31 (LOCATION 31)

CONSTRUCTION DETAILS

NO SCALE

C-11

REVISED BY | DATE REVISED

MIKE MOGEN | DAN FISHER

CALCULATED-DESIGNED BY | CHECKED BY

FUNCTIONAL SUPERVISOR: JULIE CASEY

STATE OF CALIFORNIA - DEPARTMENT OF TRANSPORTATION

Caltrans® DESIGN

P:\proj2\02\3c300_plans\pse\23c300ga011.dgn

LAST REVISION 10-24-11 | DATE PLOTTED => 09-JAN-2012 | TIME PLOTTED => 08:32

Dist	COUNTY	ROUTE	POST MILES TOTAL PROJECT	SHEET No.	TOTAL SHEETS
02	Plu	70	0.6/35.2	16	101

REGISTERED CIVIL ENGINEER 10-26-11 DATE

1-9-12
PLANS APPROVAL DATE

REGISTERED PROFESSIONAL ENGINEER MIKE MOGEN No. C67018 Exp. 9-30-12 CIVIL STATE OF CALIFORNIA

THE STATE OF CALIFORNIA OR ITS OFFICERS OR AGENTS SHALL NOT BE RESPONSIBLE FOR THE ACCURACY OR COMPLETENESS OF SCANNED COPIES OF THIS PLAN SHEET.

NOTES:

1. TAPER END AT 4:1 TO MATCH TOP ELEVATION OF WB TRANSITION.
2. FOR DETAILS NOT SHOWN SEE STANDARD PLAN A77J4.
3. ALL PLATES, BOLTS, NUTS AND WASHERS ARE TO BE GALVANIZED.

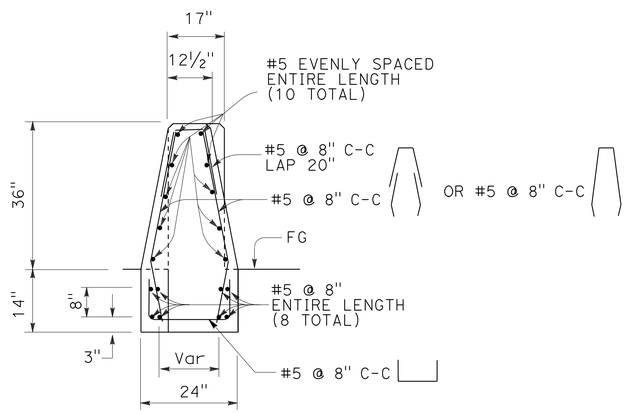

SECTION A-A

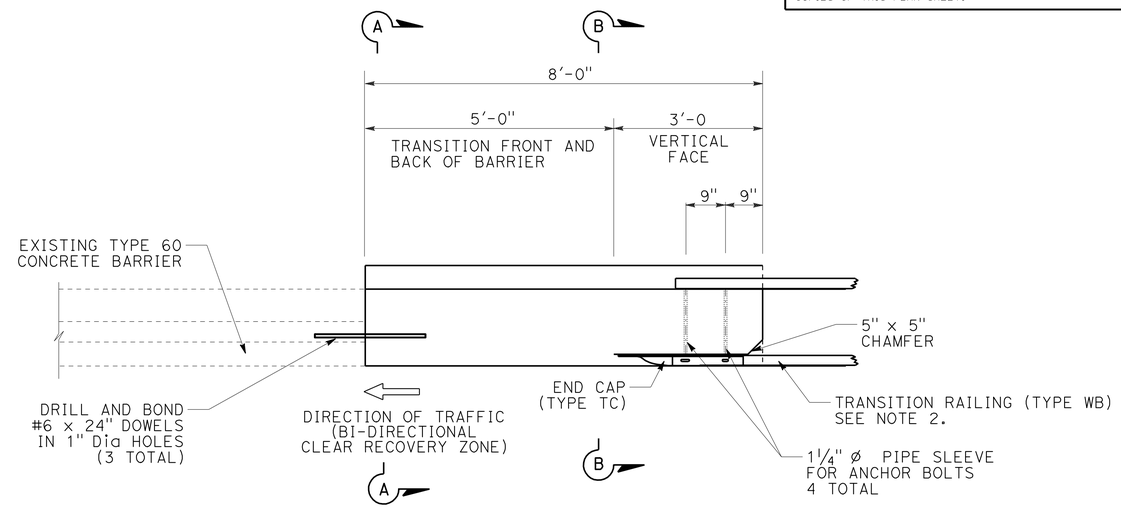

PLAN

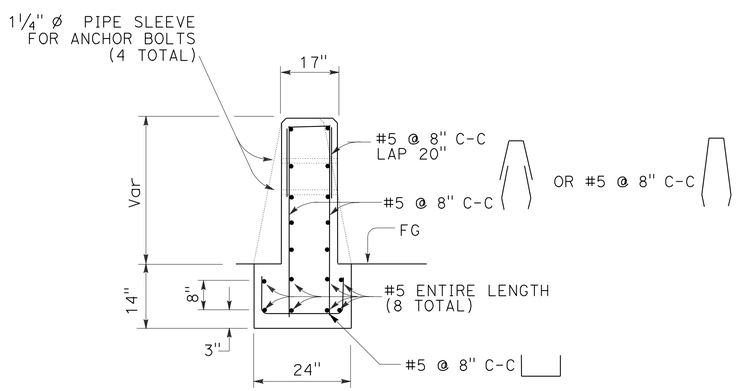

SECTION B-B

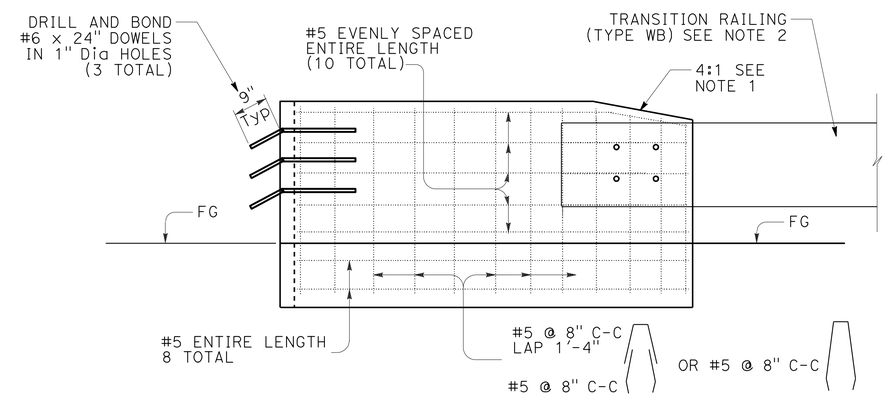

ELEVATION

CONCRETE BARRIER (TRANSITION ANCHOR BLOCK)

TRANSITION ANCHOR FOR TYPE 60 BARRIER
PM 0.82 (LOCATION 3)
PM 0.90 (LOCATION 4)

CONSTRUCTION DETAILS

NO SCALE

C-12

REVISED BY | DATE REVISED
MIKE MOGEN | DAN FISHER
CALCULATED-DESIGNED BY | CHECKED BY
FUNCTIONAL SUPERVISOR: JULIE CASEY
STATE OF CALIFORNIA - DEPARTMENT OF TRANSPORTATION
Caltrans® DESIGN

P:\proj2\02\3c300_plans\pse\23c300ga012.dgn

LAST REVISION 10-24-11 | DATE PLOTTED => 09-JAN-2012 | TIME PLOTTED => 08:32

Dist	COUNTY	ROUTE	POST MILES TOTAL PROJECT	SHEET No.	TOTAL SHEETS
02	Plu	70	0.6/35.2	17	101

REGISTERED CIVIL ENGINEER 10-26-11 DATE

1-9-12
PLANS APPROVAL DATE

REGISTERED PROFESSIONAL ENGINEER MIKE MOGEN No. C67018 Exp. 9-30-12 CIVIL STATE OF CALIFORNIA

THE STATE OF CALIFORNIA OR ITS OFFICERS OR AGENTS SHALL NOT BE RESPONSIBLE FOR THE ACCURACY OR COMPLETENESS OF SCANNED COPIES OF THIS PLAN SHEET.

NOTES:

1. FOR WB CONNECTION DETAILS NOT SHOWN, SEE Std PLANS A77J1, A77F1, A77F2.
2. DEPENDENT DIMENSIONS WILL BE VERIFIED IN THE FIELD BEFORE FABRICATING ANY END CONNECTION TO CONFORM WITH EXISTING PAVED CONDITIONS.
3. ALL PLATES, BOLTS, NUTS AND WASHERS ARE GALVANIZED.

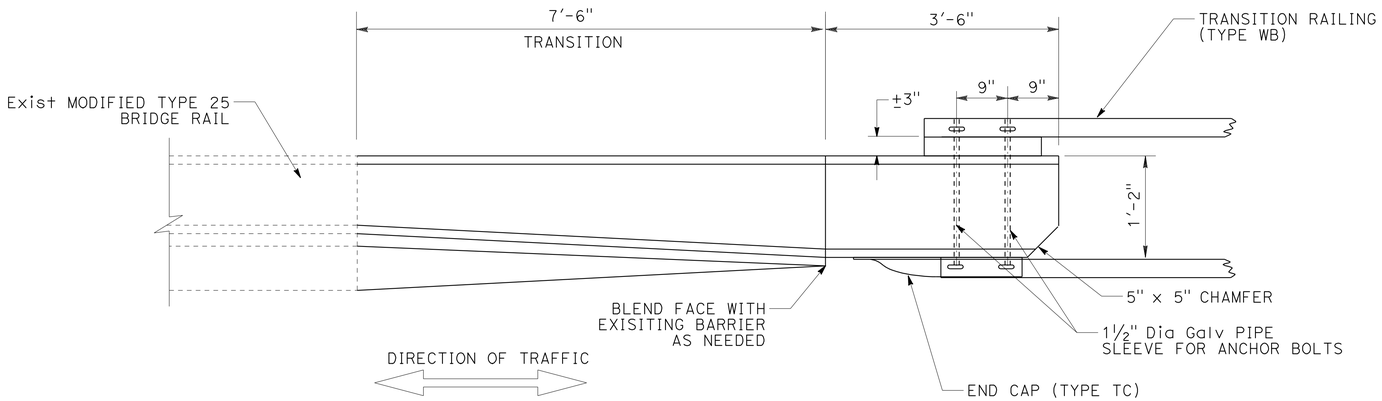

PLAN

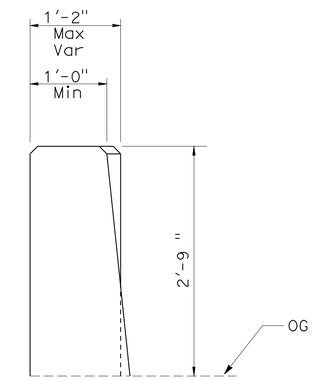

SECTION B-B

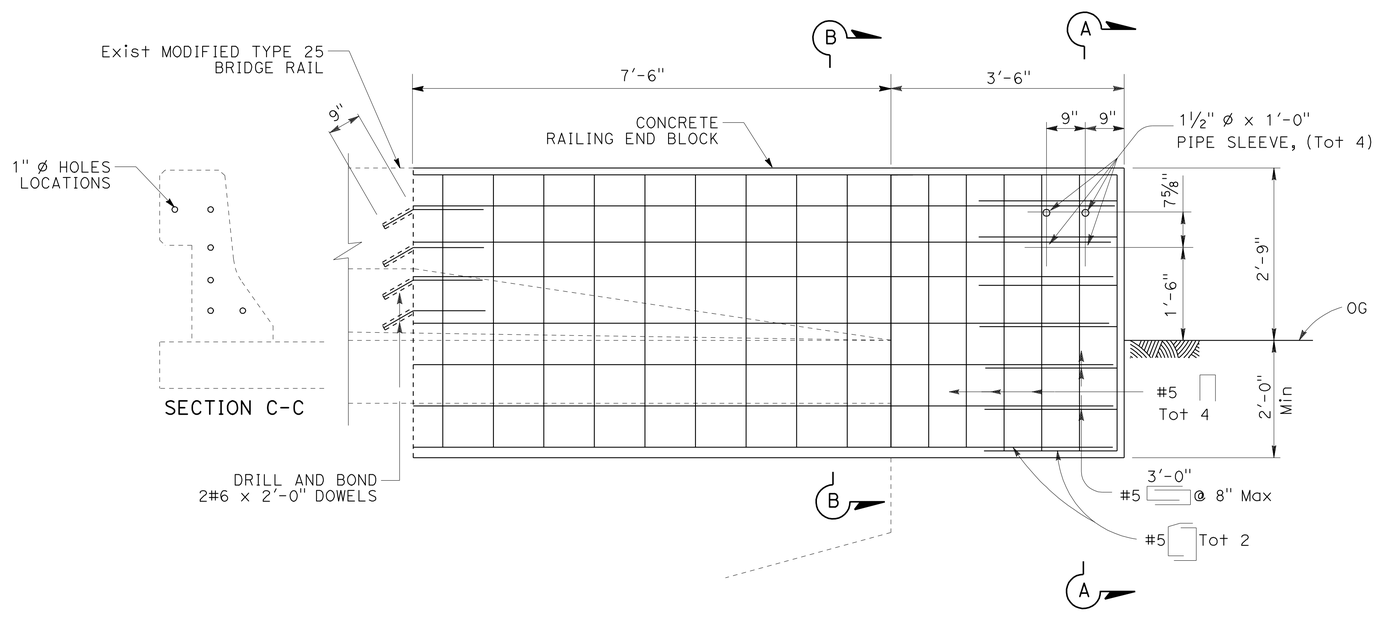

ELEVATION

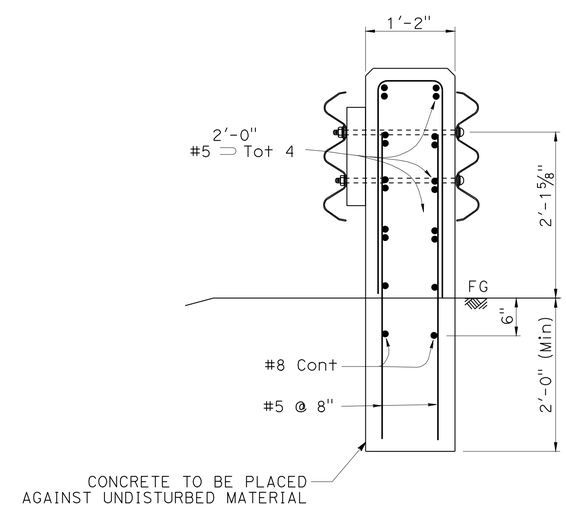

SECTION A-A

CONCRETE BARRIER (TRANSITION ANCHOR BLOCK)

TRANSITION BLOCK TYPE 25 MODIFIED
PM 9.75 (LOCATION 41)
PM 13.55 (LOCATION 49)

CONSTRUCTION DETAILS

NO SCALE

C-13

REVISED BY | DATE REVISED
MIKE MOGEN | DAN FISHER
CALCULATED-DESIGNED BY | CHECKED BY
FUNCTIONAL SUPERVISOR: JULIE CASEY

STATE OF CALIFORNIA - DEPARTMENT OF TRANSPORTATION
Caltrans® DESIGN

P:\proj2\02\3c300_plans\pse\23c300ga013.dgn

LAST REVISION 10-24-11 | DATE PLOTTED => 09-JAN-2012 | TIME PLOTTED => 08:32

Dist	COUNTY	ROUTE	POST MILES TOTAL PROJECT	SHEET No.	TOTAL SHEETS
02	Plu	70	0.6/35.2	18	101

REGISTERED CIVIL ENGINEER 10-26-11 DATE

1-9-12
PLANS APPROVAL DATE

REGISTERED PROFESSIONAL ENGINEER MIKE MOGEN No. C67018 Exp. 9-30-12 CIVIL STATE OF CALIFORNIA

THE STATE OF CALIFORNIA OR ITS OFFICERS OR AGENTS SHALL NOT BE RESPONSIBLE FOR THE ACCURACY OR COMPLETENESS OF SCANNED COPIES OF THIS PLAN SHEET.

NOTES:

1. DEPENDENT DIMENSIONS WILL BE VERIFIED IN THE FIELD BEFORE FABRICATING ANY END CONNECTION TO CONFORM WITH Exist CONDITIONS.
2. FOR TYPICAL METAL RAILING CONNECTION DETAILS NOT SHOWN, SEE REVISED STANDARD PLANS A77J1-A77J4.
3. FOR THRIE BEAM CONNECTION, SEE REVISED STANDARD PLAN A78F1 AND A78F2.
4. ALL PLATES, BOLTS, NUTS AND WASHERS ARE GALVANIZED.

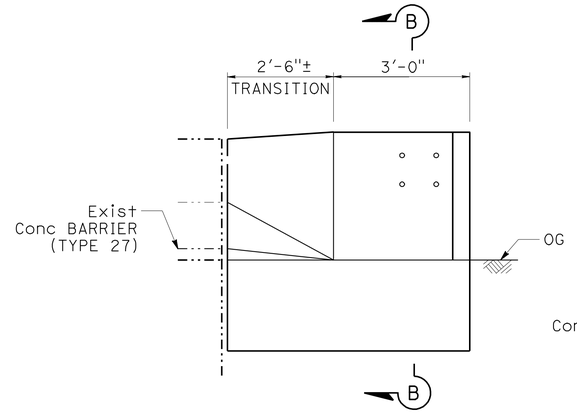

ELEVATION

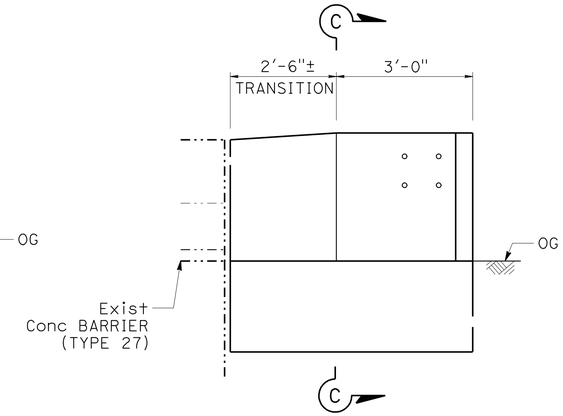

ELEVATION

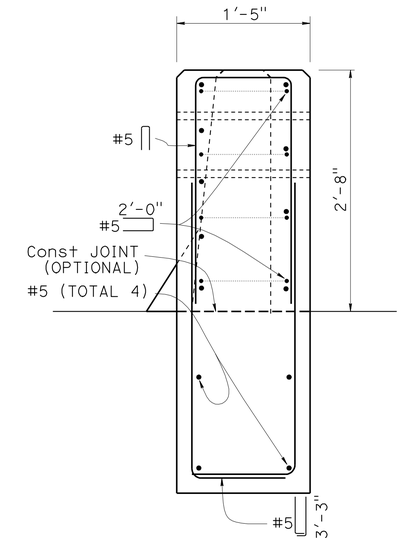

SECTION B-B

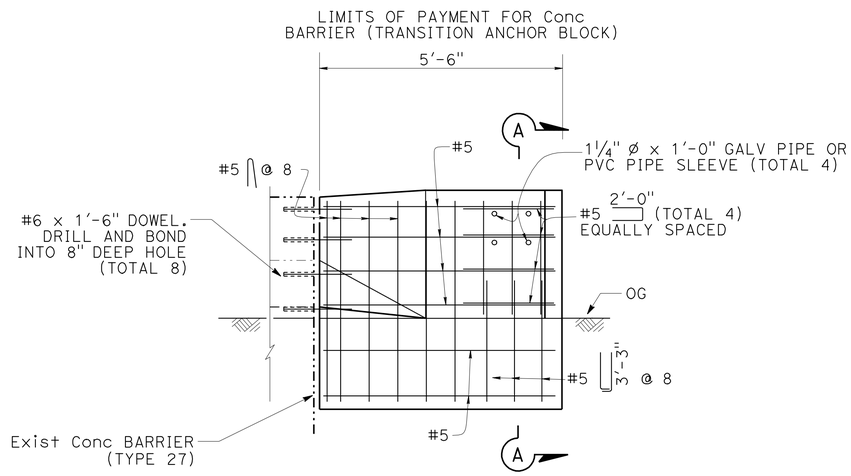

ELEVATION
SCALE: ¾" = 1'-0"

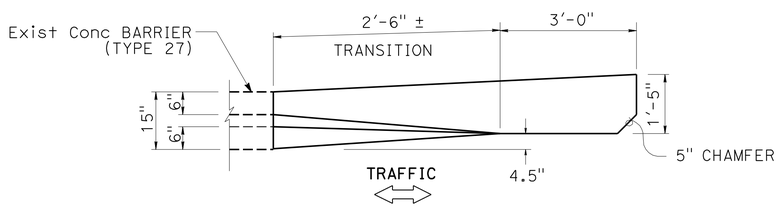

PLAN

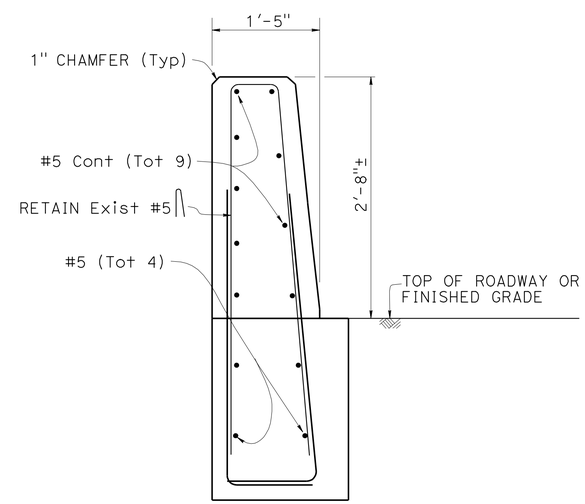

SECTION C-C

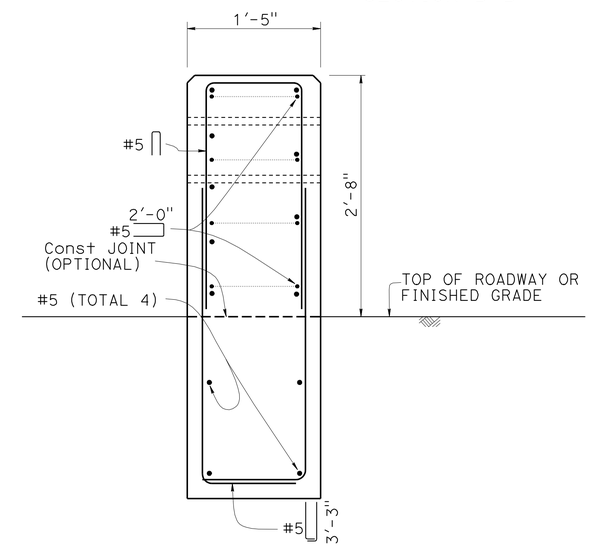

SECTION A-A

CONCRETE BARRIER (TRANSITION ANCHOR BLOCK)

APPROACH ANCHOR BLOCK (TYPE 27)
PM 1.05 (LOCATION 39)
PM 31.90 (LOCATION 90)
PM 31.98 (LOCATION 91)

CONSTRUCTION DETAILS

NO SCALE

C-14

REVISED BY | DATE REVISED
MIKE MOGEN | DAN FISHER
CALCULATED-DESIGNED BY | CHECKED BY
FUNCTIONAL SUPERVISOR: JULIE CASEY

STATE OF CALIFORNIA - DEPARTMENT OF TRANSPORTATION
Caltrans DESIGN

P:\proj2\02\3c300_plans\pse\23c300ga014.dgn

LAST REVISION | DATE PLOTTED => 09-JAN-2012
10-24-11 | TIME PLOTTED => 08:32

BORDER LAST REVISED 7/2/2010 | USERNAME => s114937 | DGN FILE => 23c300ga014.dgn | RELATIVE BORDER SCALE IS IN INCHES 0 1 2 3 | UNIT 246 | PROJECT NUMBER & PHASE: 02000003171

Dist	COUNTY	ROUTE	POST MILES TOTAL PROJECT	SHEET No.	TOTAL SHEETS
02	Plu	70	0.6/35.2	19	101

REGISTERED CIVIL ENGINEER 10-26-11 DATE

1-9-12
PLANS APPROVAL DATE

REGISTERED PROFESSIONAL ENGINEER MIKE MOGEN No. C67018 Exp. 9-30-12 CIVIL STATE OF CALIFORNIA

THE STATE OF CALIFORNIA OR ITS OFFICERS OR AGENTS SHALL NOT BE RESPONSIBLE FOR THE ACCURACY OR COMPLETENESS OF SCANNED COPIES OF THIS PLAN SHEET.

NOTES:

1. CONNECTION DETAIL A APPLIES TO THE TRAFFIC APPROACH END OF FIXED OBJECTS. FOR TRAFFIC DEPARTURE END OF STACKED ROCK WALLS, SEE CONNECTION DETAIL B.
2. TERMINAL SECTION END SECTIONS CAN EITHER BE COMPLETE WRAP-AROUND OR ¾ WRAP END SECTION SHOWN. INCLUDE COST OF END SECTION IN THE COST OF TRANSITION RAILING.
3. ANCHOR POST ASSEMBLY TO BE GALVANIZED AFTER FABRICATION.
4. FOR TRAFFIC APPROACH RAILING DETAILS, SEE TYPE WB TRANSITION RAILING ON STANDARD PLAN A77J4.

LEGEND:

DIRECTION OF TRAFFIC

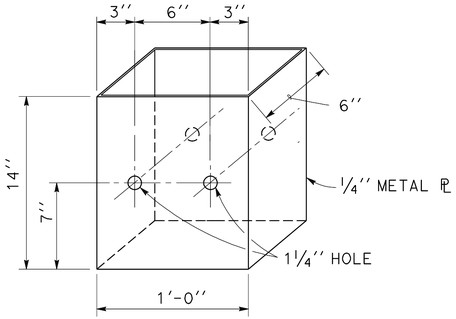

ISOMETRIC METAL BOX SPACER

PLACE 1¼" x 5¼" PIPE SPACERS ON 1" BOLTS PASSING THROUGH BOX INTERIOR.

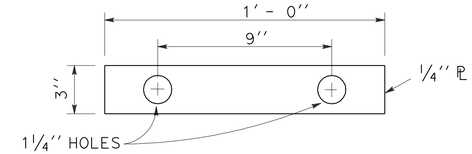

ANCHOR BOLT PLATE WASHER

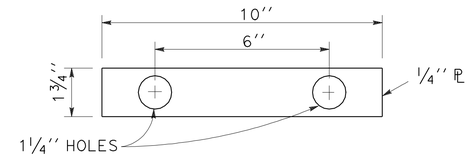

PLATE WASHER

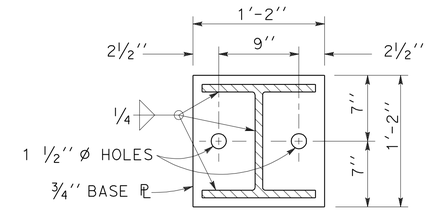

SECTION D-D

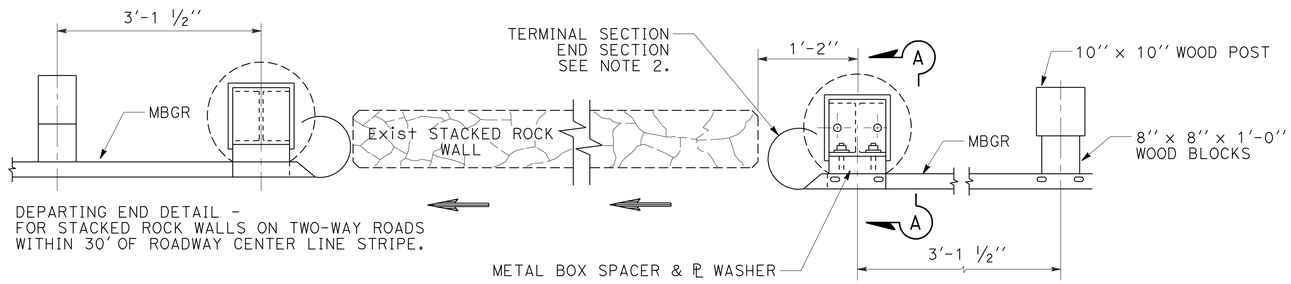

PLAN
CONNECTION DETAIL B

PLAN
CONNECTION DETAIL A

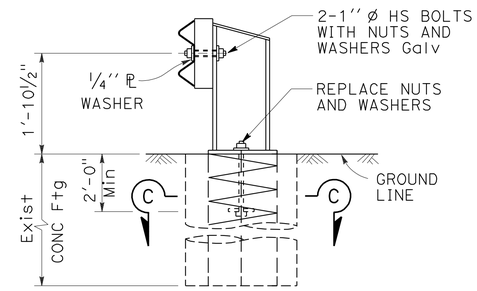

SECTION A-A

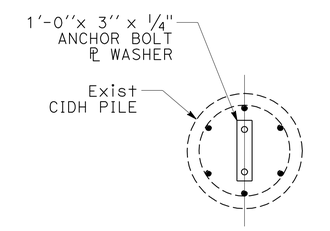

SECTION C-C

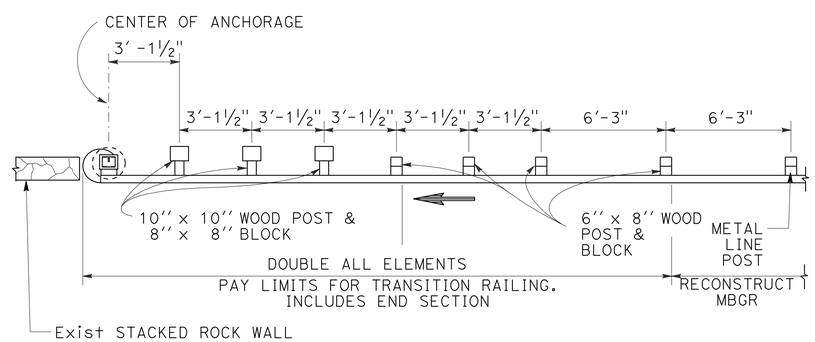

STACKED ROCK WALL TRANSITION RAILING

PM 12.05 TO 12.06 (LOCATION 45)
PM 12.18 TO 12.19 (LOCATION 46)
PM 17.84 TO 17.93 (LOCATION 57)
PM 18.02 TO 18.03 (LOCATION 58)
PM 18.37 TO 18.39 (LOCATION 60)
PM 19.11 TO 19.21 (LOCATION 63)
PM 23.00 TO 23.07 (LOCATION 67)
PM 25.37 TO 25.38 (LOCATION 72)
PM 25.44 TO 25.46 (LOCATION 74)
PM 25.55 TO 25.56 (LOCATION 75)
PM 27.47 TO 27.48 (LOCATION 79)
PM 27.50 TO 27.53 (LOCATION 80)
PM 29.74 TO 29.76 (LOCATION 83)
PM 31.02 TO 31.09 (LOCATION 86)
PM 31.12 TO 31.13 (LOCATION 87)
PM 31.56 TO 21.59 (LOCATION 88)
PM 32.72 TO 32.73 (LOCATION 92)
PM 32.74 TO 32.92 (LOCATION 93)

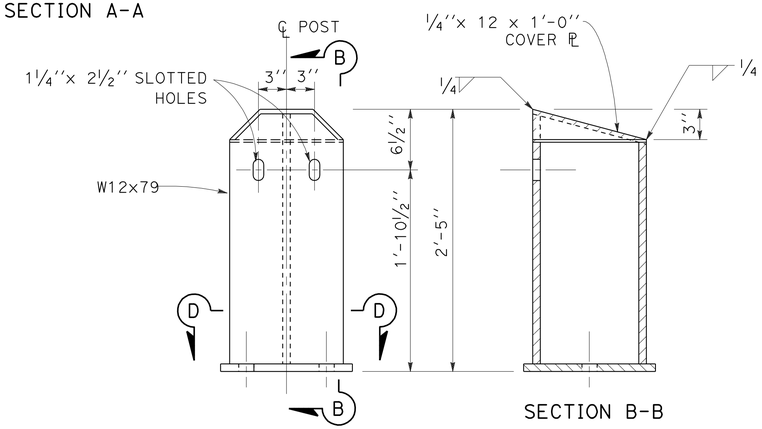

ANCHOR POST ASSEMBLY

CONSTRUCTION DETAILS

NO SCALE

C-15

REVISED BY | DATE REVISED
MIKE MOGEN | DAN FISHER
CALCULATED-DESIGNED BY | CHECKED BY
FUNCTIONAL SUPERVISOR: JULIE CASEY

STATE OF CALIFORNIA - DEPARTMENT OF TRANSPORTATION
Caltrans DESIGN

P:\proj2\02\3c300_plans\pse\23c300ga015.dgn

LAST REVISION 10-24-11 | DATE PLOTTED => 09-JAN-2012 | TIME PLOTTED => 09:51

Dist	COUNTY	ROUTE	POST MILES TOTAL PROJECT	SHEET No.	TOTAL SHEETS
02	Plu	70	0.6/35.2	20	101

REGISTERED CIVIL ENGINEER 10-26-11 DATE

1-9-12
PLANS APPROVAL DATE

REGISTERED PROFESSIONAL ENGINEER MIKE MOGEN No. C67018 Exp. 9-30-12 CIVIL STATE OF CALIFORNIA

THE STATE OF CALIFORNIA OR ITS OFFICERS OR AGENTS SHALL NOT BE RESPONSIBLE FOR THE ACCURACY OR COMPLETENESS OF SCANNED COPIES OF THIS PLAN SHEET.

NOTES:

1. DETAIL D APPLIES TO THE BOLTED CONNECTION OF STACKED ROCK WALLS TO MBGR.
2. FOR TRAFFIC APPROACH RAILING DETAILS, SEE TYPE WB TRANSITION RAILING ON STANDARD PLAN A77J4.
3. ANCHOR POST ASSEMBLY TO BE GALVANIZED AFTER FABRICATION.
4. FOR CIDH PILE DETAILS SEE Std PLAN B2-3.
5. WHERE WALL TAPERS AWAY FROM MBGR, FIELD FIT BLOCKS @ STANDARD POST SPACING OF 6'-3".
6. TOP OF RAIL TO TRANSITION AT Max 120:1 FROM 28" TO 29" HEIGHT.

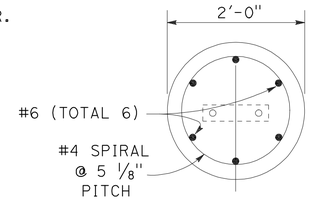

SECTION D-D

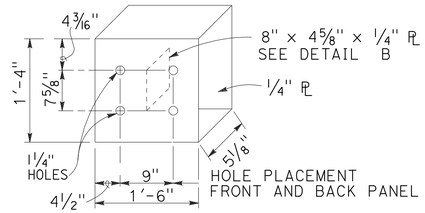

DETAIL A

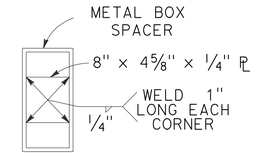

DETAIL B

METAL BOX SPACER

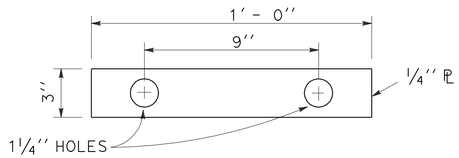

PLATE WASHER

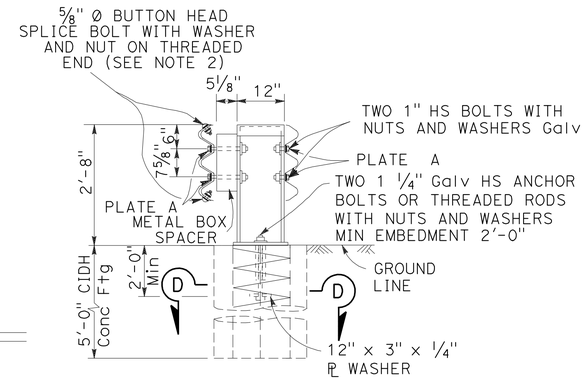

SECTION A-A
SEE NOTE 4

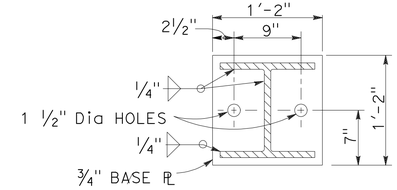

SECTION C-C

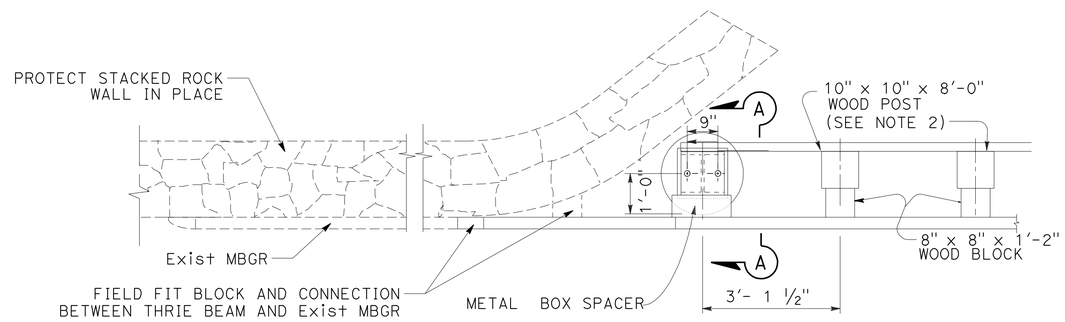

PLAN
DETAIL D

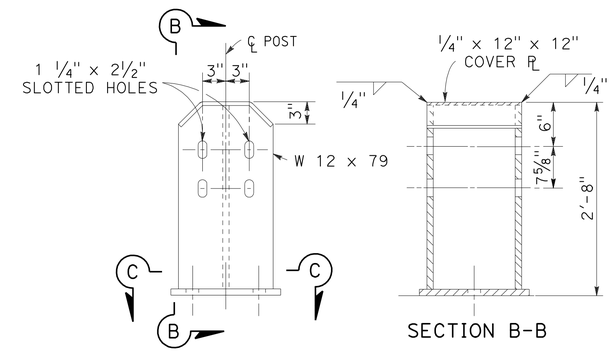

SECTION B-B

ANCHOR POST ASSEMBLY

SEE NOTE 3

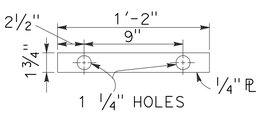

PLATE A

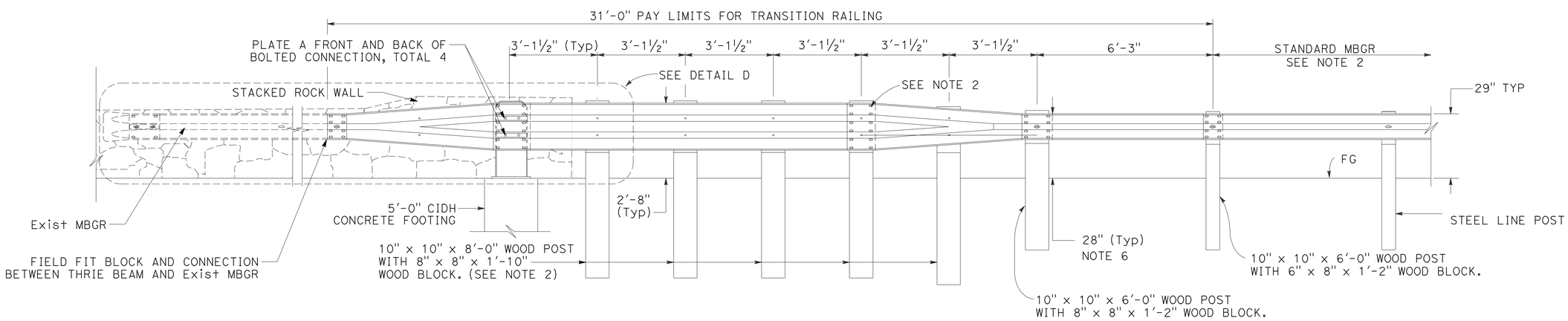

ELEVATION

STACKED ROCK WALL LAPPED TRANSITION RAILING

PM 0.62 TO 0.73 (LOCATION 1)

CONSTRUCTION DETAILS

NO SCALE

C-16

REVISED BY | DATE REVISED
MIKE MOGEN | DAN FISHER
CALCULATED-DESIGNED BY | CHECKED BY
FUNCTIONAL SUPERVISOR: JULIE CASEY

STATE OF CALIFORNIA - DEPARTMENT OF TRANSPORTATION
Caltrans DESIGN

P:\proj2\02\3c300_plans\pse\23c300ga016.dgn

LAST REVISION 10-24-11 | DATE PLOTTED => 09-JAN-2012 | TIME PLOTTED => 09:52

BORDER LAST REVISED 7/2/2010 | USERNAME => s114926 | DGN FILE => 23c300ga016.dgn | RELATIVE BORDER SCALE IS IN INCHES 0 1 2 3 | UNIT 246 | PROJECT NUMBER & PHASE: 02000003171

Dist	COUNTY	ROUTE	POST MILES TOTAL PROJECT	SHEET No.	TOTAL SHEETS
02	Plu	70	0.6/35.2	21	101

REGISTERED CIVIL ENGINEER 10-26-11 DATE

1-9-12
PLANS APPROVAL DATE

REGISTERED PROFESSIONAL ENGINEER MIKE MOGEN No. C67018 Exp. 9-30-12 CIVIL STATE OF CALIFORNIA

THE STATE OF CALIFORNIA OR ITS OFFICERS OR AGENTS SHALL NOT BE RESPONSIBLE FOR THE ACCURACY OR COMPLETENESS OF SCANNED COPIES OF THIS PLAN SHEET.

NOTE:

ALL EMBANKMENT MATERIAL CONTAINING NATURALLY OCCURING ASBESTOS MUST BE CAPPED WITH 12" OF CLEAN SOIL.

LEGEND:

EMBANKMENT AREA

ABBREVIATIONS;

NOA NATURALLY OCCURING ASBESTOS

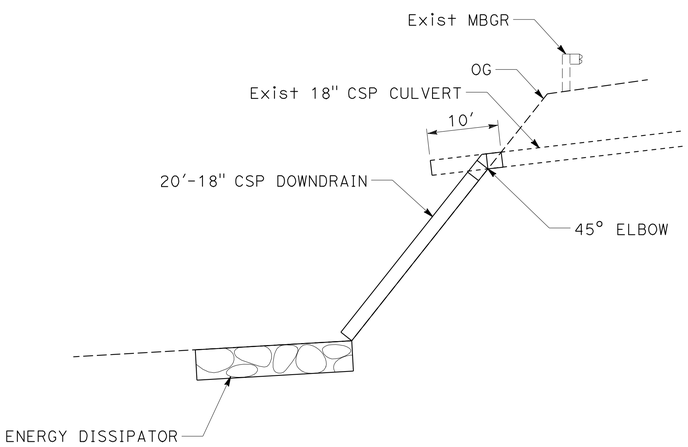

18" CSP DOWNDRAIN

PM 15.17 TO 15.59 (LOCATION 52)

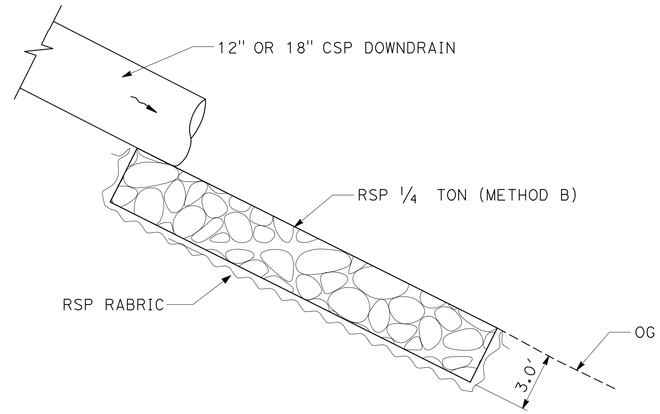

SECTION A-A

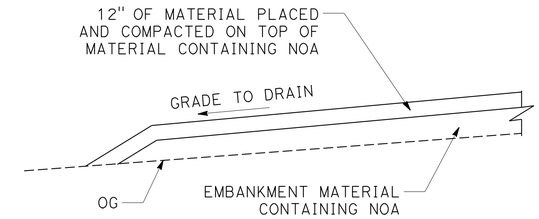

SECTION B-B

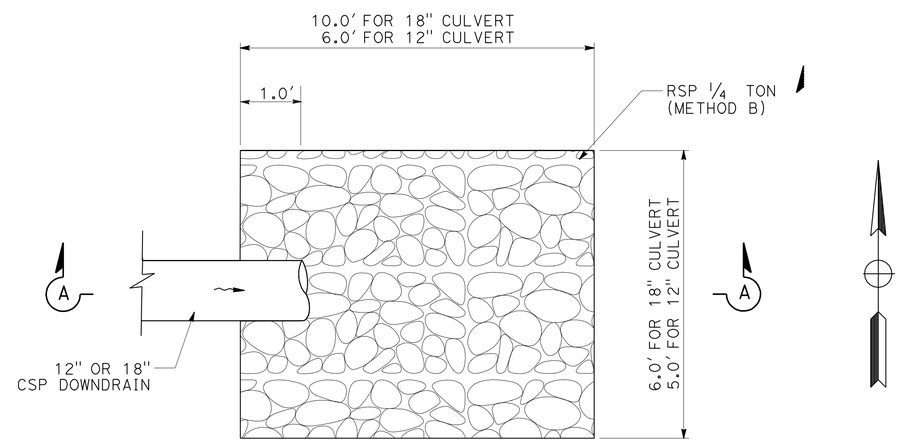

ENERGY DISSIPATOR

PM 1.23 TO 1.30 (LOCATION 6)
PM 1.30 TO 1.34 (LOCATION 7)
PM 1.34 TO 1.45 (LOCATION 8)
PM 1.45 TO 1.53 (LOCATION 9)
PM 1.53 TO 1.65 (LOCATION 10)
PM 1.69 TO 1.72 (LOCATION 12)
PM 1.72 TO 1.75 (LOCATION 13)
PM 1.75 TO 1.79 (LOCATION 14)
PM 1.79 TO 1.84 (LOCATION 15)
PM 2.26 TO 2.41 (LOCATION 21)
PM 2.41 TO 2.47 (LOCATION 23)
PM 2.47 TO 2.55 (LOCATION 24)
PM 6.33 TO 6.75 (LOCATION 34)
PM 15.17 TO 15.59 (LOCATION 52)
PM 18.88 TO 19.03 (LOCATION 62)
PM 25.37 TO 25.38 (LOCATION 72)

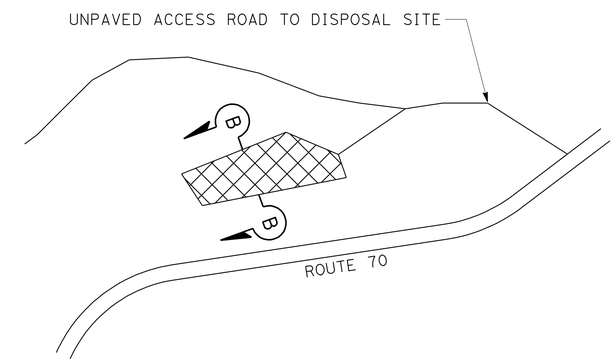

EMBANKMENT LOCATION AND STAGING AREA

PM 7.25 (TOBIN DISPOSAL SITE)

NOTE:
1. ALL EXCESS SOIL FROM THIS PROJECT MUST BE PLACED AT THIS LOCATION. SEE INFORMATIONAL HANDOUT.

CONSTRUCTION DETAILS

NO SCALE

C-17

REVISED BY | DATE REVISED
MIKE MOGEN | DAN FISHER
CALCULATED-DESIGNED BY | CHECKED BY
FUNCTIONAL SUPERVISOR: JULIE CASEY

STATE OF CALIFORNIA - DEPARTMENT OF TRANSPORTATION
Caltrans DESIGN

P:\proj2\02\3c300_plans\pse\23c300ga017.dgn

LAST REVISION 10-24-11 | DATE PLOTTED => 09-JAN-2012 | TIME PLOTTED => 09:52

Dist	COUNTY	ROUTE	POST MILES TOTAL PROJECT	SHEET No.	TOTAL SHEETS
02	Plu	70	0.6/35.2	22	101

REGISTERED CIVIL ENGINEER 10-26-11 DATE

1-9-12
PLANS APPROVAL DATE

REGISTERED PROFESSIONAL ENGINEER MIKE MOGEN No. C67018 Exp. 9-30-12 CIVIL STATE OF CALIFORNIA

THE STATE OF CALIFORNIA OR ITS OFFICERS OR AGENTS SHALL NOT BE RESPONSIBLE FOR THE ACCURACY OR COMPLETENESS OF SCANNED COPIES OF THIS PLAN SHEET.

NOTE:

FOR DOWNDRAIN DETAILS, SEE STANDARD PLAN D87A.

LEGEND:

PLACE HMA (Misc AREA)

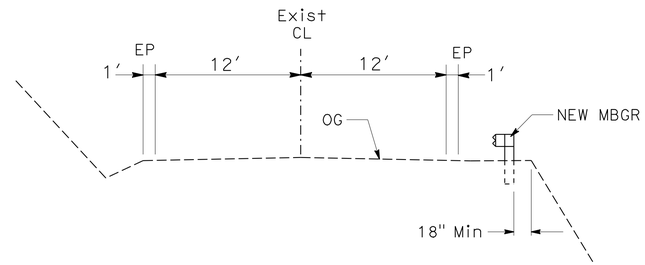

METAL BEAM GUARD RAIL LOCATIONS

PM 10.50 TO 10.55 (LOCATION 42)
PM 11.63 TO 11.74 (LOCATION 44)
PM 31.85 TO PM 31.91 (LOCATION 89)

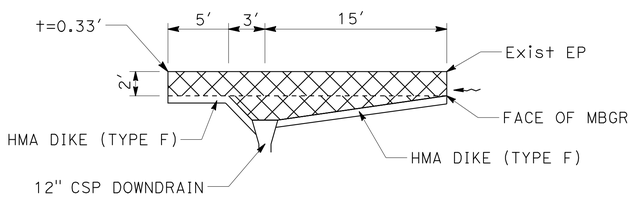

12" CSP DOWNDRAIN

PM 1.23 TO 1.30 (LOCATION 6)
PM 1.30 TO 1.34 (LOCATION 7)
PM 1.34 TO 1.45 (LOCATION 8)
PM 1.45 TO 1.53 (LOCATION 9)
PM 1.53 TO 1.65 (LOCATION 10)
PM 1.69 TO 1.72 (LOCATION 12)
PM 1.72 TO 1.75 (LOCATION 13)
PM 1.75 TO 1.79 (LOCATION 14)
PM 1.79 TO 1.84 (LOCATION 15)
PM 2.26 TO 2.41 (LOCATION 21)
PM 2.41 TO 2.47 (LOCATION 23)
PM 2.47 TO 2.55 (LOCATION 24)
PM 6.33 TO 6.75 (LOCATION 34)
PM 18.88 TO 19.03 (LOCATION 62)

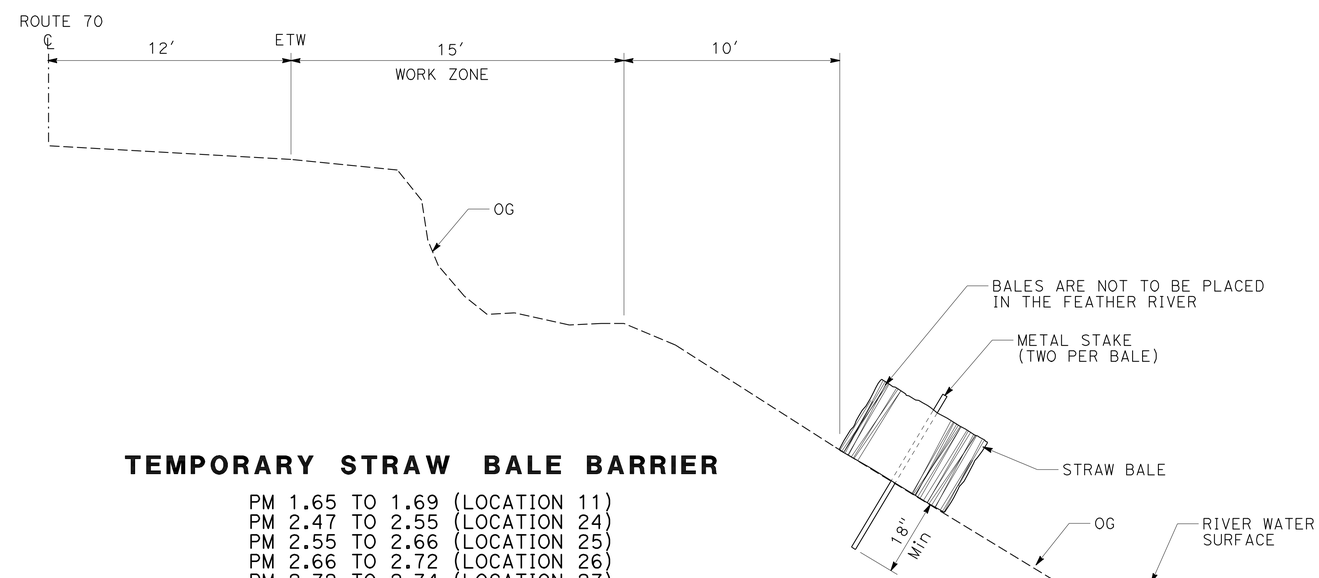

TEMPORARY STRAW BALE BARRIER

PM 1.65 TO 1.69 (LOCATION 11)
PM 2.47 TO 2.55 (LOCATION 24)
PM 2.55 TO 2.66 (LOCATION 25)
PM 2.66 TO 2.72 (LOCATION 26)
PM 2.72 TO 2.74 (LOCATION 27)
PM 2.74 TO 2.87 (LOCATION 28)
PM 15.17 TO 15.59 (LOCATION 52)
PM 21.09 TO 21.35 (LOCATION 66)

CONSTRUCTION DETAILS

NO SCALE

C-18

REVISED BY	DATE REVISED

CALCULATED-DESIGNED BY	CHECKED BY
MIKE MOGEN	DAN FISHER

FUNCTIONAL SUPERVISOR: JULIE CASEY

STATE OF CALIFORNIA - DEPARTMENT OF TRANSPORTATION
Caltrans® DESIGN

P:\proj2\02\3c300_plans\pse\23c300ga018.dgn

LAST REVISION 10-24-11 | DATE PLOTTED => 09-JAN-2012 | TIME PLOTTED => 09:53

Dist	COUNTY	ROUTE	POST MILES TOTAL PROJECT	SHEET No.	TOTAL SHEETS
02	Plu	70	0.6/35.2	23	101

REGISTERED CIVIL ENGINEER — DATE: 10-26-11

PLANS APPROVAL DATE: 1-9-12

REGISTERED PROFESSIONAL ENGINEER — MIKE MOGEN — No. C67018 — Exp. 9-30-12 — CIVIL — STATE OF CALIFORNIA

THE STATE OF CALIFORNIA OR ITS OFFICERS OR AGENTS SHALL NOT BE RESPONSIBLE FOR THE ACCURACY OR COMPLETENESS OF SCANNED COPIES OF THIS PLAN SHEET.

NOTES:

1. EXACT SIGN LOCATIONS TO BE DETERMINED BY THE ENGINEER.
2. CALIFORNIA SIGN CODES ARE DESIGNATED BY (CA), OTHERWISE, FEDERAL MUTCD SIGN CODES ARE SHOWN.
3. CONSTRUCTION AREA SIGNS SHALL HAVE A BLACK LEGEND WITH AN ORANGE BACKGROUND.
4. SIGN "C" TO BE PLACED EVERY ±5 MILES WITHIN WORK LIMITS.

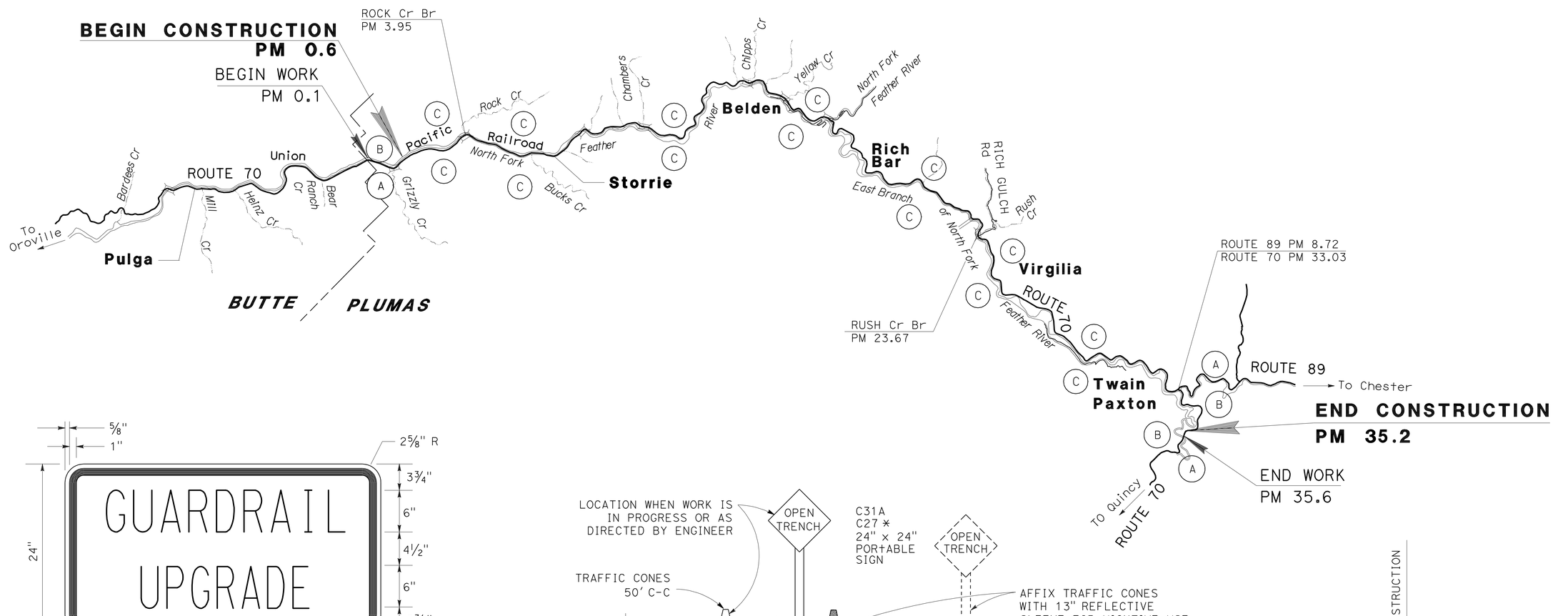

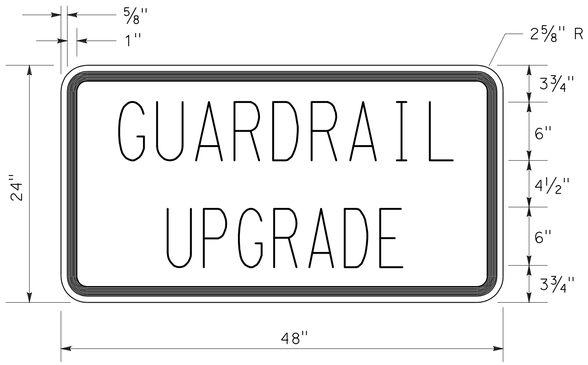

C23B SIGN PANEL DETAIL

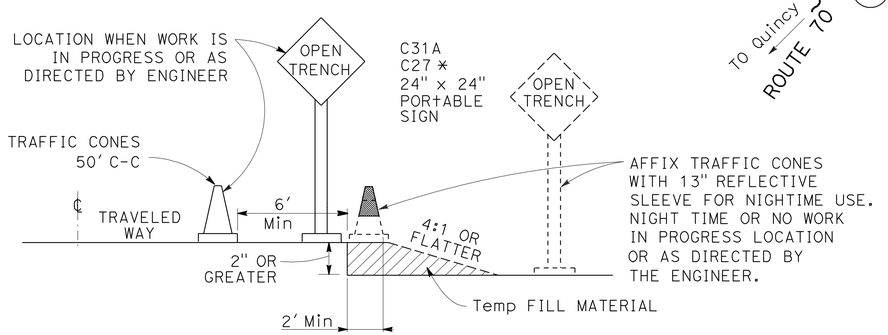

OPEN TRENCH SIGNING AND MARKING

* PLACE AT 250' INTERVALS THROUGH THE OPEN TRENCH AREA, ALTERNATE C27 (OPEN TRENCH) AND C31A (NO SHOULDER) SIGNS

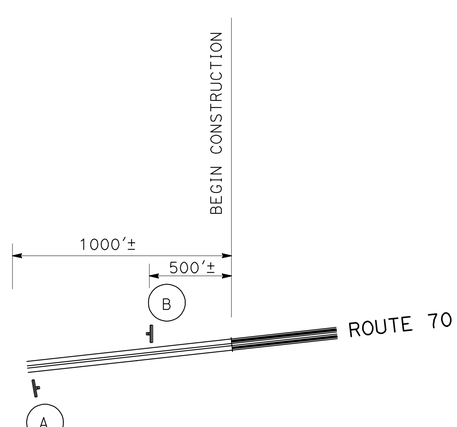

STATIONARY MOUNTED CONSTRUCTION AREA SIGNS

SIGN TYPE	CODE	PANEL SIZE	MESSAGE	NUMBER OF POST AND SIZE	NUMBER OF SIGNS
A	G20-1 C23B (CA)	48" x 48" 48" x 24"	"ROAD WORK NEXT 35 MILES" "GUARDRAIL UPGRADE"	1 - 4" x 6"	3 3
B	G20-2	36" x 18"	"END ROAD WORK"	1 - 4" x 4"	3
C	W20-1 C23B (CA)	48" x 48" 48" x 24"	"ROAD WORK AHEAD" "GUARDRAIL UPGRADE"	1 - 4" x 6"	14

CONSTRUCTION AREA SIGNS

NO SCALE

CS-1

REVISED BY | DATE REVISED

MIKE MOGEN | DAN FISHER

CALCULATED-DESIGNED BY | CHECKED BY

FUNCTIONAL SUPERVISOR: JULIE CASEY

STATE OF CALIFORNIA - DEPARTMENT OF TRANSPORTATION

DESIGN

P:\proj2\02\3c300_plans\pse\23c3001a001.dgn

LAST REVISION 10-24-11 | DATE PLOTTED => 09-JAN-2012 | TIME PLOTTED => 09:53

Dist	COUNTY	ROUTE	POST MILES TOTAL PROJECT	SHEET No.	TOTAL SHEETS
02	Plu	70	0.6/35.2	24	101

REGISTERED CIVIL ENGINEER 10-26-11 DATE

1-9-12
PLANS APPROVAL DATE

REGISTERED PROFESSIONAL ENGINEER MIKE MOGEN No. C67018 Exp. 9-30-12 CIVIL STATE OF CALIFORNIA

THE STATE OF CALIFORNIA OR ITS OFFICERS OR AGENTS SHALL NOT BE RESPONSIBLE FOR THE ACCURACY OR COMPLETENESS OF SCANNED COPIES OF THIS PLAN SHEET.

ABBREVIATIONS;

RECON RECONSTRUCT

SUMMARY OF QUANTITIES

LOCATION No.	POST MILE LIMITS **	DIRECTION	DETAIL SHEET No.	REMOVE MBGR (LF)	RECONSTRUCT MBGR (STEEL POSTS) (LF)	MBGR (STEEL POST) * (LF)	END ANCHOR ASSEMBLY (TYPE SFT) (EA)	TRANSITION RAILING (TYPE WB) * (EA)	BURIED POST END ANCHOR (N) (EA)	ALTERNATIVE IN-LINE TERMINLAL SYSTEM * (EA)	ALTERNATIVE FLARED TERMINAL SYSTEM * (EA)	CONCRETE BARRIER (TRANSITION ANCHOR BLOCK) (LF)	CONCRETE BARRIER (TYPE 736B) (LF)	TRANSITION TYPE 15 MODIFIED RAILING (EA)	STACKED ROCK WALL LAPPED TRANSITION RAILING (EA)	STACKED ROCK WALL TRANSITION RAILING (EA)	ROADWAY EXCAVATION (CY)	EMBANKMENT (N) (CY)	EARTH RETAINING STRUCTURE (GUARD RAILING) (SQFT)	EARTH RETAINING STRUCTURE (CSP) (SQFT)	MINOR CONCRETE (MINOR STRUCTURE) (CY)	SOIL ANCHOR (EA)	SHOULDER BACKING (TON)	HOT MIX ASPHALT (TYPE A) (TON)	PLACE HMA DIKE (TYPE F) (LF)	PLACE HMA (Misc AREA) (SQYD)	18"CORRUGATED STEEL PIPE DOWNDRAIN (0.109" THICK) (LF)	12" CORRUGATED STEEL PIPE DOWNDRAIN (LF)	ROCK SLOPE PROTECTION (1/4 TON, METHOD B) (CY)	ROCK SLOPE PROTECTION FABRIC (SQYD)	GUARD RAILING DELINEATOR (EA)	OBJECT MARKER (TYPE L-1) (EA)	TEMPORARY STRAW BALE BARRIER (LF)	EROSION CONTROL (HYDROSEED) *** (SQFT)	DESCRIPTION
1	0.62/0.73	W	C10	35				1				9.4																								REMOVAL FOR ANCHOR BLOCK AND WB
			C15	25	213										1																					GRIZZLY DOME TUNNEL TO GRIZZLY CREEK BRIDGE APPROACH
			C15	61	175						1				1																	1				GRIZZLY CREEK BRIDGE DEPARTURE
2	0.68/0.73	E	C10	36	75			1				9.4																								AT GRIZZLY DOME TUNNEL
			C10	36	75		1	1				9.4																								ENTRANCE TO ROCK CLIMBING AREA/UP AGAINST ROCK SLOPE
3	0.80/0.82	W	C9	35	20			1				9.4																								AT GRIZZLY DOME TUNNEL
			C12	35				1				8																								TRANSITION ANCHOR FOR TYPE 60 BARRIER
4	0.9	W	C12	67	150			1				8																								TRANSITION ANCHOR FOR TYPE 60 BARRIER
											1																					1				
5	0.99	W	C10	65				1				9.4																								WEST END OF ELEPHANT BUTTE TUNNEL
											1																					1				
6	1.23/1.30	W			300																															
				38							1																					1				DEPARTURE END TREATMENT
			C17,18																					3	24	7.4		5	3.3	10.7				200	DOWNDRAIN AND ENERGY DISSIPATOR, PM 1.29
7	1.30/1.34	W			190																															
			C17,18																					3	24	7.4		5	3.3	10.7				200	DOWNDRAIN AND ENERGY DISSIPATOR, PM 1.31
8	1.34/1.45	W	C17,18		630																			3	24	7.4		5	3.3	10.7				200	DOWNDRAIN AND ENERGY DISSIPATOR, PM 1.36
			C17,18																					3	24	7.4		5	3.3	10.7				200	DOWNDRAIN AND ENERGY DISSIPATOR, PM 1.41
9	1.45/1.53	W	C8		410																															
			C17																200					3	24	7.4		5	3.3	10.7				200	DOWNDRAIN AND ENERGY DISSIPATOR, PM 1.49
			C18																200					3	24	7.4		5	3.3	10.7				200	DOWNDRAIN AND ENERGY DISSIPATOR, PM 1.50
10	1.53/1.65	W	C8		640														200															200	
			C17,18																					3	24	7.4		5	3.3	10.7					DOWNDRAIN AND ENERGY DISSIPATOR, PM 1.56
			C2														75						7.4	163											PAVE PULLOUT, L = 280′
11				91	220																															REMOVAL OF MBGR WITHIN ROCK ANCHOR RETAINING WALL
	1.65/1.69	W	C18																					10									115	1200	PAVING OVER BARRIER SLAB
SHEET Q-1 SUB-TOTAL				524	3098		1	7			4	63			2		75		600				7.4	194	168	51.8		35	23.1	74.9		4	115	2600	

(N) - NOT A SEPARATE PAY ITEM, FOR INFORMATION ONLY
* NEW RAILING WILL BE TREATED TO PRODUCE A NON-SHINY SURFACE.
* * POST MILE LIMITS ARE APPROXIMATE.
* * * TO BE PLACED ON DISTURBED SOIL AREAS.

SUMMARY OF QUANTITIES

Q-1

REVISED BY | DATE REVISED
MIKE MOGEN | DAN FISHER
CALCULATED-DESIGNED BY | CHECKED BY
FUNCTIONAL SUPERVISOR: JULIE CASEY

STATE OF CALIFORNIA - DEPARTMENT OF TRANSPORTATION
Caltrans DESIGN

P:\proj2\02\3c300_plans\pse\23c300pa001.dgn

LAST REVISION 10-24-11 | DATE PLOTTED => 09-JAN-2012 | TIME PLOTTED => 09:54

Dist	COUNTY	ROUTE	POST MILES TOTAL PROJECT	SHEET No.	TOTAL SHEETS
02	Plu	70	0.6/35.2	25	101

REGISTERED CIVIL ENGINEER 10-26-11 DATE

1-9-12
PLANS APPROVAL DATE

REGISTERED PROFESSIONAL ENGINEER MIKE MOGEN No. C67018 Exp. 9-30-12 CIVIL STATE OF CALIFORNIA

THE STATE OF CALIFORNIA OR ITS OFFICERS OR AGENTS SHALL NOT BE RESPONSIBLE FOR THE ACCURACY OR COMPLETENESS OF SCANNED COPIES OF THIS PLAN SHEET.

SUMMARY OF QUANTITIES

LOCATION No.	POST MILE LIMITS **	DIRECTION	DETAIL SHEET No.	REMOVE MBGR (LF)	RECONSTRUCT MBGR (STEEL POSTS) (LF)	MBGR (STEEL POST) * (LF)	END ANCHOR ASSEMBLY (TYPE SFT) (EA)	TRANSITION RAILING (TYPE WB) * (EA)	BURIED POST END ANCHOR (N) (EA)	ALTERNATIVE IN-LINE TERMINLAL SYSTEM * (EA)	ALTERNATIVE FLARED TERMINAL SYSTEM * (EA)	CONCRETE BARRIER (TRANSITION ANCHOR BLOCK) (LF)	CONCRETE BARRIER (TYPE 736B) (LF)	TRANSITION TYPE 15 MODIFIED RAILING (EA)	STACKED ROCK WALL LAPPED TRANSITION RAILING (EA)	STACKED ROCK WALL TRANSITION RAILING (EA)	ROADWAY EXCAVATION (CY)	EMBANKMENT (N) (CY)	EARTH RETAINING STRUCTURE (GUARD RAILING) (SQFT)	EARTH RETAINING STRUCTURE (CSP) (SQFT)	MINOR CONCRETE (MINOR STRUCTURE) (CY)	SOIL ANCHOR (EA)	SHOULDER BACKING (TON)	HOT MIX ASPHALT (TYPE A) (TON)	PLACE HMA DIKE (TYPE F) (LF)	PLACE HMA (Misc AREA) (SQYD)	18"CORRUGATED STEEL PIPE DOWNDRAIN (0.109" THICK) (LF)	12" CORRUGATED STEEL PIPE DOWNDRAIN (LF)	ROCK SLOPE PROTECTION (1/4 TON, METHOD B) (CY)	ROCK SLOPE PROTECTION FABRIC (SQYD)	GUARD RAILING DELINEATOR (EA)	OBJECT MARKER (TYPE L-1) (EA)	TEMPORARY STRAW BALE BARRIER (LF)	EROSION CONTROL (HYDROSEED) *** (SQFT)	DESCRIPTION
12		W			145																														RECON MBGR ONLY, NO END TREATMENTS
	1.69/1.72		C2														45						4.4	96											PAVE PULLOUT, L = 150′
			C17,18																					3	24	7.4		5	3.3	10.7				200	DOWNDRAIN AND ENERGY DISSIPATOR, PM 1.70
13		W	C17,18																					3	24	7.4		5	3.3	10.7				200	DOWNDRAIN AND ENERGY DISSIPATOR, PM 1.73
	1.72/1.75		C2,3																		2	3													UNDERPIN 36" ERS (CSP), 6 CANS
					180																														
14	1.75/1.79	W	C17,18																					3	24	7.4		5	3.3	10.7				200	DOWNDRAIN AND ENERGY DISSIPATOR, PM 1.76 AT EAST END OF 36" ERS (CSP)
			C2,3																		2	3													UNDERPIN 36" ERS (CSP), 6 CANS
					206																														
15		W	C17,18																					3	24	7.4		5	3.3	10.7				200	DOWNDRAIN AND ENERGY DISSIPATOR, PM 1.80
	1.79/1.84		C17,18																					3	24	7.4		5	3.3	10.7				200	DOWNDRAIN AND ENERGY DISSIPATOR, PM 1.82
			C2,3																		2	3													UNDERPIN 36" ERS (CSP), 6 CANS
					260																														
16	1.84/1.87	W			150																														
17	1.87/1.92	W	C2,3																		5	8													UNDERPIN 36" ERS (CSP), 15 CANS
					300																														
18	1.92/1.98	W	C2														60						5.6	122											PAVE PULLOUT, L = 200′
					300																														
19	1.98/2.09	W	C2,4																		4.4	7													UNDERPIN 36" ERS (CSP), 13 CANS
					600																														
20			C2,4																		1.4	3													UNDERPIN 36" ERS (CSP), 4 CANS
	2.09/2.26	W	C2														66		100				6.9	150											PAVE PULLOUT, L = 255′
					870																														
21			C17,18																					3	24	7.4		5	3.3	10.7				200	DOWNDRAIN AND ENERGY DISSIPATOR, PM 2.37
	2.26/2.41	W	C2														100						10.2	220											PAVE PULLOUT, L = 400′
					770																														
SHEET Q-2 SUB-TOTAL					3781												271		100		16.8	27	27.1	606	144	44.4		30	19.8	64.2				1200	

(N) - NOT A SEPARATE PAY ITEM, FOR INFORMATION ONLY
* NEW RAILING WILL BE TREATED TO PRODUCE A NON-SHINY SURFACE.
* * POST MILE LIMITS ARE APPROXIMATE.
* * * TO BE PLACED ON DISTURBED SOIL AREAS.

SUMMARY OF QUANTITIES
Q-2

REVISED BY | DATE REVISED
MIKE MOGEN | DAN FISHER
CALCULATED-DESIGNED BY | CHECKED BY
FUNCTIONAL SUPERVISOR | JULIE CASEY
STATE OF CALIFORNIA - DEPARTMENT OF TRANSPORTATION
Caltrans DESIGN
P:\proj2\02\3c300_plans\pse\23c300pa002.dgn

LAST REVISION 10-24-11 | DATE PLOTTED => 09-JAN-2012 | TIME PLOTTED => 09:54

Dist	COUNTY	ROUTE	POST MILES TOTAL PROJECT	SHEET No.	TOTAL SHEETS
02	Plu	70	0.6/35.2	26	101

REGISTERED CIVIL ENGINEER 10-26-11 DATE

1-9-12
PLANS APPROVAL DATE

REGISTERED PROFESSIONAL ENGINEER MIKE MOGEN No. C67018 Exp. 9-30-12 CIVIL STATE OF CALIFORNIA

THE STATE OF CALIFORNIA OR ITS OFFICERS OR AGENTS SHALL NOT BE RESPONSIBLE FOR THE ACCURACY OR COMPLETENESS OF SCANNED COPIES OF THIS PLAN SHEET.

SUMMARY OF QUANTITIES

LOCATION No.	POST MILE LIMITS **	DIRECTION	DETAIL SHEET No.	REMOVE MBGR (LF)	RECONSTRUCT MBGR (STEEL POSTS) (LF)	MBGR (STEEL POST) * (LF)	END ANCHOR ASSEMBLY (TYPE SFT) (EA)	TRANSITION RAILING (TYPE WB) * (EA)	BURIED POST END ANCHOR (N) (EA)	ALTERNATIVE IN-LINE TERMINLAL SYSTEM * (EA)	ALTERNATIVE FLARED TERMINAL SYSTEM * (EA)	CONCRETE BARRIER (TRANSITION ANCHOR BLOCK) (LF)	CONCRETE BARRIER (TYPE 736B) (LF)	TRANSITION TYPE 15 MODIFIED RAILING (EA)	STACKED ROCK WALL LAPPED TRANSITION RAILING (EA)	STACKED ROCK WALL TRANSITION RAILING (EA)	ROADWAY EXCAVATION (CY)	EMBANKMENT (N) (CY)	EARTH RETAINING STRUCTURE (GUARD RAILING) (SQFT)	EARTH RETAINING STRUCTURE (CSP) (SQFT)	MINOR CONCRETE (MINOR STRUCTURE) (CY)	SOIL ANCHOR (EA)	SHOULDER BACKING (TON)	HOT MIX ASPHALT (TYPE A) (TON)	PLACE HMA DIKE (TYPE F) (LF)	PLACE HMA (Misc AREA) (SQYD)	18"CORRUGATED STEEL PIPE DOWNDRAIN (0.109" THICK) (LF)	12" CORRUGATED STEEL PIPE DOWNDRAIN (LF)	ROCK SLOPE PROTECTION (1/4 TON, METHOD B) (CY)	ROCK SLOPE PROTECTION FABRIC (SQYD)	GUARD RAILING DELINEATOR (EA)	OBJECT MARKER (TYPE L-1) (EA)	TEMPORARY STRAW BALE BARRIER (LF)	EROSION CONTROL (HYDROSEED) *** (SQFT)	DESCRIPTION
22	2.42/2.46	E			70				1																										REMOVE AND REPLACE BURIED POST ANCHOR
				37.5							1																					1			APPROACH END TREATMENT
23	2.41/2.47	W	C17																					3	24	7.4		5	3.3	10.7				200	DOWNDRAIN AND ENERGY DISSIPATOR, PM 2.45
			C18		340																														
24			C17																					3	24	7.4		5	3.3	10.7				200	DOWNDRAIN AND ENERGY DISSIPATOR, PM 2.48
	2.47/2.55	W	C18		430																														
			C1																	455	5.2												90	450	36" ERS (CSP), H = 6.5′, TOTAL OF 21 CANS
25	2.55/2.66	W	C1																	585	6.7												110	550	36" ERS (CSP), H = 6.5′, TOTAL OF 27 CANS
			C18		570																														
26				275																															
	2.66/2.72	W		35				1				9.7																							TYPE 736 BARRIER TRANSITION, STANDARD PLAN B11-56
													30																						BARRIER RAILING TYPE 736B BETWEEN LOCATIONS 26 AND 27
			C18																					24									244	1200	ROCK ANCHOR RETAINING WALL LOCATION, PAVING OVER BARRIER SLAB
27				130																															
	2.72/2.74	W											50																						BARRIER RAILING TYPE 736B BETWEEN LOCATIONS 27 AND 28
			C18																					8									100	500	ROCK ANCHOR RETAINING WALL LOCATION, PAVING OVER BARRIER SLAB
28	2.74/2.87	W		115	580			1				9.7																							TYPE 736 BARRIER TRANSITION, STANDARD PLAN B11-56
			C18																					9									105	525	ROCK ANCHOR RETAINING WALL LOCATION, PAVING OVER BARRIER SLAB
29																	60						6.1	135											PAVE PULLOUT, L = 225′
	2.87/3.03	W	C2		780																														
				37.5							1																					1			DEPARTURE END TREATMENT
30					700																														START RECONSTRUCT AT END OF Exist WB TRANSITION
	3.15/3.28	E		37.5							1																					1			DEPARTURE END TREATMENT
																															7				S = 70′, R = 600′
31					17																														
	3.19/3.31	W	C11	33				1				7.6																							ATTACH ANCHOR BLOCK TO Exist CONCRETE WALL
				37.5																												1			APPROACH END TREATMENT
SHEET Q-3 SUB-TOTAL				738	3487			3	1		3	27.0	80				60			1040	11.9		6.1	182	48	14.8		10	6.6	21.4	7	4	649	3625	

(N) - NOT A SEPARATE PAY ITEM, FOR INFORMATION ONLY
* NEW RAILING WILL BE TREATED TO PRODUCE A NON-SHINY SURFACE.
* * POST MILE LIMITS ARE APPROXIMATE.
* * * TO BE PLACED ON DISTURBED SOIL AREAS.

SUMMARY OF QUANTITIES

Q-3

MIKE MOGEN | REVISED BY
DAN FISHER | DATE REVISED
CALCULATED-DESIGNED BY
CHECKED BY
FUNCTIONAL SUPERVISOR
JULIE CASEY
STATE OF CALIFORNIA - DEPARTMENT OF TRANSPORTATION
Caltrans DESIGN
P:\proj2\02\3c300_plans\pse\23c300pa003.dgn

LAST REVISION | DATE PLOTTED => 09-JAN-2012
10-24-11 | TIME PLOTTED => 09:55

Dist	COUNTY	ROUTE	POST MILES TOTAL PROJECT	SHEET No.	TOTAL SHEETS
02	Plu	70	0.6/35.2	27	101

REGISTERED CIVIL ENGINEER 10-26-11 DATE

1-9-12
PLANS APPROVAL DATE

REGISTERED PROFESSIONAL ENGINEER MIKE MOGEN No. C67018 Exp. 9-30-12 CIVIL STATE OF CALIFORNIA

THE STATE OF CALIFORNIA OR ITS OFFICERS OR AGENTS SHALL NOT BE RESPONSIBLE FOR THE ACCURACY OR COMPLETENESS OF SCANNED COPIES OF THIS PLAN SHEET.

SUMMARY OF QUANTITIES

LOCATION No.	POST MILE LIMITS **	DIRECTION	DETAIL SHEET No.	REMOVE MBGR LF	RECONSTRUCT MBGR (STEEL POSTS) LF	MBGR (STEEL POST) * LF	END ANCHOR ASSEMBLY (TYPE SFT) EA	TRANSITION RAILING (TYPE WB) * EA	BURIED POST END ANCHOR (N) EA	ALTERNATIVE IN-LINE TERMINLAL SYSTEM * EA	ALTERNATIVE FLARED TERMINAL SYSTEM * EA	CONCRETE BARRIER (TRANSITION ANCHOR BLOCK) LF	CONCRETE BARRIER (TYPE 736B) LF	TRANSITION TYPE 15 MODIFIED RAILING EA	STACKED ROCK WALL LAPPED TRANSITION RAILING EA	STACKED ROCK WALL TRANSITION RAILING EA	ROADWAY EXCAVATION CY	EMBANKMENT (N) CY	EARTH RETAINING STRUCTURE (GUARD RAILING) SQFT	EARTH RETAINING STRUCTURE (CSP) SQFT	MINOR CONCRETE (MINOR STRUCTURE) CY	SOIL ANCHOR EA	SHOULDER BACKING TON	HOT MIX ASPHALT (TYPE A) TON	PLACE HMA DIKE (TYPE F) LF	PLACE HMA (Misc AREA) SQYD	18"CORRUGATED STEEL PIPE DOWNDRAIN (0.109" THICK) LF	12" CORRUGATED STEEL PIPE DOWNDRAIN LF	ROCK SLOPE PROTECTION (1/4 TON, METHOD B) CY	ROCK SLOPE PROTECTION FABRIC SQYD	GUARD RAILING DELINEATOR EA	OBJECT MARKER (TYPE L-1) EA	TEMPORARY STRAW BALE BARRIER LF	EROSION CONTROL (HYDROSEED) *** SQFT	DESCRIPTION
32	3.66/3.73	E		37.5							1																					1			APPROACH END TREATMENT
					150																														
				37.5							1																					1			DEPARTURE END TREATMENT
33	4.06/4.24	E		37.5							1																					1			APPROACH END TREATMENT
					663																														
				50						1																									DEPARTURE END TREATMENT
34	6.33/6.75	W	C8		2038														100																
				75							2																					2			APPROACH AND DEPARTURE END TREATMENTS
			C17,18																					3	24	7.4		5	3.3	10.7				200	DOWNDRAIN AND ENERGY DISSIPATOR, PM 6.48
																							149												EP TO FACE OF MBGR (1292' X 5' X 0.33')
35	7.07/7.20	E			680																														START AT END OF WB TRANSITION
				37							1																					1			DEPARTURE END TREATMENT
																															10				S = 55', R = 400'
36	7.30/7.36	E	C8	37.5						1									200																APPROACH END TREATMENT
					200																														
				37.5						1																									DEPARTURE END TREATMENT
37	7.40/7.44	E		37.5						1																									APPROACH END TREATMENT
					125																														
				37.5						1																									DEPARTURE END TREATMENT
38	8.64/8.83	E		37.5							1																					1			APPROACH END TREATMENT
			C8		830														100																
				37.5							1																					1			DEPARTURE END TREATMENT
39	9.04/9.08	W	C14	70.5				1			1	5.5																				1			CHAMBER CREEK BRIDGE APPROACH END TREATMENT
				37.5	25						1																					1			DEPARTURE END TREATMENT, STANDARD PLAN A77J1
		E	C14	70.5				1			1	5.5																				1			CHAMBER CREEK BRIDGE APPROACH END TREATMENT
				37.5	25						1																					1			DEPARTURE END TREATMENT, STANDARD PLAN A77J1
40	9.29/9.38	E		37.5							1																					1			APPROACH END TREATMENT
					430																														
				38.0							1																					1			DEPARTURE END TREATMENT
SHEET Q-4 SUB-TOTAL				791	5166			2		5	14	11							400				149	3	24	7.4		5	3.3	10.7	10	14		200	

(N) - NOT A SEPARATE PAY ITEM, FOR INFORMATION ONLY
* NEW RAILING WILL BE TREATED TO PRODUCE A NON-SHINY SURFACE.
* * POST MILE LIMITS ARE APPROXIMATE.
* * * TO BE PLACED ON DISTURBED SOIL AREAS.

SUMMARY OF QUANTITIES
Q-4

REVISED BY | DATE REVISED
MIKE MOGEN | DAN FISHER
CALCULATED-DESIGNED BY | CHECKED BY
FUNCTIONAL SUPERVISOR: JULIE CASEY

STATE OF CALIFORNIA - DEPARTMENT OF TRANSPORTATION
Caltrans DESIGN

P:\proj2\02\3c300_plans\pse\23c300pa004.dgn

LAST REVISION | DATE PLOTTED => 09-JAN-2012 | TIME PLOTTED => 09:56

Dist	COUNTY	ROUTE	POST MILES TOTAL PROJECT	SHEET No.	TOTAL SHEETS
02	Plu	70	0.6/35.2	28	101

REGISTERED CIVIL ENGINEER 10-26-11 DATE

1-9-12
PLANS APPROVAL DATE

REGISTERED PROFESSIONAL ENGINEER MIKE MOGEN No. C67018 Exp. 9-30-12 CIVIL STATE OF CALIFORNIA

THE STATE OF CALIFORNIA OR ITS OFFICERS OR AGENTS SHALL NOT BE RESPONSIBLE FOR THE ACCURACY OR COMPLETENESS OF SCANNED COPIES OF THIS PLAN SHEET.

SUMMARY OF QUANTITIES

LOCATION No.	POST MILE LIMITS **	DIRECTION	DETAIL SHEET No.	REMOVE MBGR LF	RECONSTRUCT MBGR (STEEL POSTS) LF	MBGR (STEEL POST) * LF	END ANCHOR ASSEMBLY (TYPE SFT) EA	TRANSITION RAILING (TYPE WB) * EA	BURIED POST END ANCHOR (N) EA	ALTERNATIVE IN-LINE TERMINLAL SYSTEM * EA	ALTERNATIVE FLARED TERMINAL SYSTEM * EA	CONCRETE BARRIER (TRANSITION ANCHOR BLOCK) LF	CONCRETE BARRIER (TYPE 736B) LF	TRANSITION TYPE 15 MODIFIED RAILING EA	STACKED ROCK WALL LAPPED TRANSITION RAILING EA	STACKED ROCK WALL TRANSITION RAILING EA	ROADWAY EXCAVATION CY	EMBANKMENT (N) CY	EARTH RETAINING STRUCTURE (GUARD RAILING) SQFT	EARTH RETAINING STRUCTURE (CSP) SQFT	MINOR CONCRETE (MINOR STRUCTURE) CY	SOIL ANCHOR EA	SHOULDER BACKING TON	HOT MIX ASPHALT (TYPE A) TON	PLACE HMA DIKE (TYPE F) LF	PLACE HMA (Misc AREA) SQYD	18"CORRUGATED STEEL PIPE DOWNDRAIN (0.109" THICK) LF	12" CORRUGATED STEEL PIPE DOWNDRAIN LF	ROCK SLOPE PROTECTION (1/4 TON, METHOD B) CY	ROCK SLOPE PROTECTION FABRIC SQYD	GUARD RAILING DELINEATOR EA	OBJECT MARKER (TYPE L-1) EA	TEMPORARY STRAW BALE BARRIER LF	EROSION CONTROL (HYDROSEED) *** SQFT	DESCRIPTION
41	9.74/9.75	E	C13									11																							TRANSITION BLOCK TYPE 25 MODIFIED
								1			1																					1			APPROACH END TREATMENT
42	9.84/10.55	E	C8,18		3500	215													100																EXTEND MBGR APPROX 250' EAST OF Exist MBGR
				37.5							1																					1			APPROACH END TREATMENT
				37.5							1																					1			DEPARTURE END TREATMENT
																															25				CURVE 1: S = 80', Rr = 800'; CURVE 2: S = 50', R = 300'
43	10.92/11.00	E		37.5							1																					1			APPROACH END TREATMENT
					375																														
				37.5							1																					1			DEPARTURE END TREATMENT
44	11.63/11.74	E									1																					1			APPROACH END TREATMENT
						510																													NEW MBGR LOCATION
											1																					1			DEPARTURE END TREATMENT
45	12.05/12.06	E			25																														
			C15	62.5							1					1																1			APPROACH END OF STACKED ROCK WALL; USE Exist CIDH PILE
46	12.18/12.19	E			25																														
			C15	62.5							1					1																1			DEPARTURE END OF STACKED ROCK WALL; USE Exist CIDH PILE
47	12.56/12.75	E		37.5							1																					1			APPROACH END TREATMENT
					990																														
				37.5							1																					1			DEPARTURE END TREATMENT
																															10				S = 85', R = 900'
48	13.25/13.27	W		37.5							1																					1			APPROACH END TREATMENT
					55																														
				37.5							1																					1			DEPARTURE END TREATMENT
49	13.55/13.60	W	C13	65				1			1	11																				1			CHIPS CREEK BRIDGE APPROACH END TREATMENT
			C13	65				1			1	11																				1			CHIPS CREEK BRIDGE DEPARTURE END TREATMENT
		E	C13	65				1			1	11																				1			CHIPS CREEK BRIDGE APPROACH END TREATMENT
			C13	65				1			1	11																				1			CHIPS CREEK BRIDGE DEPARTURE END TREATMENT
SHEET Q-5 SUB-TOTAL				685	4970	725		5			17	55				2			100												35	17			

(N) - NOT A SEPARATE PAY ITEM, FOR INFORMATION ONLY
* NEW RAILING WILL BE TREATED TO PRODUCE A NON-SHINY SURFACE.
* * POST MILE LIMITS ARE APPROXIMATE.
* * * TO BE PLACED ON DISTURBED SOIL AREAS.

SUMMARY OF QUANTITIES
Q-5

MIKE MOGEN — REVISED BY
DAN FISHER — DATE REVISED
CALCULATED-DESIGNED BY
CHECKED BY
FUNCTIONAL SUPERVISOR
JULIE CASEY

STATE OF CALIFORNIA - DEPARTMENT OF TRANSPORTATION
Caltrans
DESIGN

P:\proj2\02\3c300_plans\pse\23c300pa005.dgn

LAST REVISION 10-24-11
DATE PLOTTED => 09-JAN-2012
TIME PLOTTED => 09:56

Dist	COUNTY	ROUTE	POST MILES TOTAL PROJECT	SHEET No.	TOTAL SHEETS
02	Plu	70	0.6/35.2	29	101

REGISTERED CIVIL ENGINEER 10-26-11 DATE

1-9-12
PLANS APPROVAL DATE

REGISTERED PROFESSIONAL ENGINEER MIKE MOGEN No. C67018 Exp. 9-30-12 CIVIL STATE OF CALIFORNIA

THE STATE OF CALIFORNIA OR ITS OFFICERS OR AGENTS SHALL NOT BE RESPONSIBLE FOR THE ACCURACY OR COMPLETENESS OF SCANNED COPIES OF THIS PLAN SHEET.

SUMMARY OF QUANTITIES

LOCATION No.	** POST MILE LIMITS	DIRECTION	DETAIL SHEET No.	REMOVE MBGR (LF)	RECONSTRUCT MBGR (STEEL POSTS) (LF)	* MBGR (STEEL POST) (LF)	END ANCHOR ASSEMBLY (TYPE SFT) (EA)	* TRANSITION RAILING (TYPE WB) (EA)	(N) BURIED POST END ANCHOR (EA)	* ALTERNATIVE IN-LINE TERMINLAL SYSTEM (EA)	* ALTERNATIVE FLARED TERMINAL SYSTEM (EA)	CONCRETE BARRIER (TRANSITION ANCHOR BLOCK) (LF)	CONCRETE BARRIER (TYPE 736B) (LF)	TRANSITION TYPE 15 MODIFIED RAILING (EA)	STACKED ROCK WALL LAPPED TRANSITION RAILING (EA)	STACKED ROCK WALL TRANSITION RAILING (EA)	ROADWAY EXCAVATION (CY)	(N) EMBANKMENT (CY)	EARTH RETAINING STRUCTURE (GUARD RAILING) (SQFT)	EARTH RETAINING STRUCTURE (CSP) (SQFT)	MINOR CONCRETE (MINOR STRUCTURE) (CY)	SOIL ANCHOR (EA)	SHOULDER BACKING (TON)	HOT MIX ASPHALT (TYPE A) (TON)	PLACE HMA DIKE (TYPE F) (LF)	PLACE HMA (Misc AREA) (SQYD)	18"CORRUGATED STEEL PIPE DOWNDRAIN (0.109" THICK) (LF)	12" CORRUGATED STEEL PIPE DOWNDRAIN (LF)	ROCK SLOPE PROTECTION (1/4 TON, METHOD B) (CY)	ROCK SLOPE PROTECTION FABRIC (SQYD)	GUARD RAILING DELINEATOR (EA)	OBJECT MARKER (TYPE L-1) (EA)	TEMPORARY STRAW BALE BARRIER (LF)	*** EROSION CONTROL (HYDROSEED) (SQFT)	DESCRIPTION
50	14.15/14.17	W		37.5							1																					1			LITTLE INDIAN CREEK BRIDGE APPROACH END TREATMENT
				37.5							1																					1			LITTLE INDIAN CREEK BRIDGE DEPARTURE END TREATMENT
		E		37.5							1																					1			LITTLE INDIAN CREEK BRIDGE APPROACH END TREATMENT
				37.5							1																					1			LITTLE INDIAN CREEK BRIDGE DEPARTURE END TREATMENT
		E/W			138																														RAISE MBGR ATTACHED TO METAL BLOCKS
51	14.37/14.51	E		37.5							1																					1			APPROACH END TREATMENT
					700																														
				37.5							1																					1			DEPARTURE END TREATMENT
																															10				S = 80′, R = 800′
52	15.17/15.59	E		37.5							1																					1			APPROACH END TREATMENT
					2190																														
				37.5							1																					1			DEPARTURE END TREATMENT
			C17																								20		6.7	17.4					ADD DOWNDRAIN AND ENERGY DISSIPATOR TO PERCHED CULVERT, PM 15.18
			C2,5																		1	3													UNDERPIN 36" ERS (CSP), 3 CANS
			C1,18																	90	1.1												35	75	EXTEND 36" ERS (CSP) TO WEST, 5 CANS, H = 6′, PM 15.24
																															20				CURVE 1: S = 55′, R = 400′; CURVE 2: S = 70′, R = 600′
53	15.75/16.05	E									1																					1			APPROACH END TREATMENT
						1525																													NEW MBGR LOCATION
											1																					1			DEPARTURE END TREATMENT
54	16.63/16.79	E			1050																														START RECONSTRUCT AT END OF Exist WB ON THE SE CORNER OF BRIDGE
				37.5							1																					1			DEPARTURE END TREATMENT
55	17.09/17.36	E		37.5							1																					1			APPROACH END TREATMENT
					1440																														
				50						1																									DEPARTURE END TREATMENT
56	17.39/17.50	E		50						1																									APPROACH END TREATMENT
					625																														
				50						1																									DEPARTURE END TREATMENT
																															12				CURVE 1: S = 55′, 5 = 400′; CURVE 2: S = 90′, R = 1000′
SHEET Q-6 SUB-TOTAL				525	6143	1525				3	12									90	2.1	3					20		6.7	17.4	42	12	35	75	

(N) - NOT A SEPARATE PAY ITEM, FOR INFORMATION ONLY
* NEW RAILING WILL BE TREATED TO PRODUCE A NON-SHINY SURFACE.
** POST MILE LIMITS ARE APPROXIMATE.
*** TO BE PLACED ON DISTURBED SOIL AREAS.

SUMMARY OF QUANTITIES
Q-6

REVISED BY | DATE REVISED
MIKE MOGEN | DAN FISHER
CALCULATED-DESIGNED BY | CHECKED BY
FUNCTIONAL SUPERVISOR: JULIE CASEY

STATE OF CALIFORNIA - DEPARTMENT OF TRANSPORTATION
Caltrans DESIGN

P:\proj2\02\3c300_plans\pse\23c300pa006.dgn

LAST REVISION 10-24-11 | DATE PLOTTED => 09-JAN-2012 | TIME PLOTTED => 09:57

Dist	COUNTY	ROUTE	POST MILES TOTAL PROJECT	SHEET No.	TOTAL SHEETS
02	Plu	70	0.6/35.2	30	101

REGISTERED CIVIL ENGINEER 10-26-11 DATE

1-9-12
PLANS APPROVAL DATE

REGISTERED PROFESSIONAL ENGINEER MIKE MOGEN No. C67018 Exp. 9-30-12 CIVIL STATE OF CALIFORNIA

THE STATE OF CALIFORNIA OR ITS OFFICERS OR AGENTS SHALL NOT BE RESPONSIBLE FOR THE ACCURACY OR COMPLETENESS OF SCANNED COPIES OF THIS PLAN SHEET.

SUMMARY OF QUANTITIES

LOCATION No.	POST MILE LIMITS **	DIRECTION	DETAIL SHEET No.	REMOVE MBGR	RECONSTRUCT MBGR (STEEL POSTS)	MBGR (STEEL POST) *	END ANCHOR ASSEMBLY (TYPE SFT)	TRANSITION RAILING (TYPE WB) *	BURIED POST END ANCHOR (N)	ALTERNATIVE IN-LINE TERMINLAL SYSTEM *	ALTERNATIVE FLARED TERMINAL SYSTEM *	CONCRETE BARRIER (TRANSITION ANCHOR BLOCK)	CONCRETE BARRIER (TYPE 736B)	TRANSITION TYPE 15 MODIFIED RAILING	STACKED ROCK WALL LAPPED TRANSITION RAILING	STACKED ROCK WALL TRANSITION RAILING	ROADWAY EXCAVATION	EMBANKMENT (N)	EARTH RETAINING STRUCTURE (GUARD RAILING)	EARTH RETAINING STRUCTURE (CSP)	MINOR CONCRETE (MINOR STRUCTURE)	SOIL ANCHOR	SHOULDER BACKING	HOT MIX ASPHALT (TYPE A)	PLACE HMA DIKE (TYPE F)	PLACE HMA (Misc AREA)	18"CORRUGATED STEEL PIPE DOWNDRAIN (0.109" THICK)	12" CORRUGATED STEEL PIPE DOWNDRAIN	ROCK SLOPE PROTECTION (1/4 TON, METHOD B)	ROCK SLOPE PROTECTION FABRIC	GUARD RAILING DELINEATOR	OBJECT MARKER (TYPE L-1)	TEMPORARY STRAW BALE BARRIER	EROSION CONTROL (HYDROSEED) ***	DESCRIPTION
				LF	LF	LF	EA	EA	EA	EA	EA	LF	LF	EA	EA	EA	CY	CY	SQFT	SQFT	CY	EA	TON	TON	LF	SQYD	LF	LF	CY	SQYD	EA	EA	LF	SQFT	
57	17.84/17.93	E	C15	75						1						1																			APPROACH END TREATMENT
					50																														USE Exist STEEL POSTS, WEST END OF STACKED ROCK WALL
					50																														USE Exist STEEL POSTS, EAST END OF STACKED ROCK WALL
			C15	75						1						1																			DEPARTURE END TREATMENT
58	18.02/18.03	E	C15	75						1						1																			APPROACH END TREATEMENT OF STACKED ROCK WALL
59	18.10/18.11	E			25				1																										DEPARTURE END TREATMENT OF STACKED ROCK WALL
				50						1																									
60	18.37/18.39	E			15																														
			C15	75						1						1																			DEPARTURE END TREATMENT OF STACKED ROCK WALL
61	18.66/18.80	E		50						1																									APPROACH END TREATMENT
			C8		450														100																
				37.5							1																					1			DEPARTURE END TREATMENT
62	18.88/19.03	E		37.5							1																					1			APPROACH END TREATMENT
					690					1																									DEPARTURE END TREATMENT
				90																															REMOVE 90' OF DEPARTURE END OF MBGR
			C17,18																				3	24	7.4		5	3.3	10.7				200	DOWNDRAIN AND ENERGY DISSIPATOR, PM 18.89
			C17,18																				3	24	7.4		5	3.3	10.7				200	DOWNDRAIN AND ENERGY DISSIPATOR, PM 18.96
			C2,5,6																		6.4	13													UNDERPIN 36" ERS (CSP); 4 LOCATIONS, TOTAL 19 CANS
63	19.11/19.21	E	C15	62.5							1					1																1			APPROACH END TREATMENT
					340																														BETWEEN PM 19.11 AND PM 19.18
			C15	62.5							1					1																1			DEPARTURE END TREATMENT
																															7				S = 50', R = 300'
64	19.99/20.08	E		37.5							1																					1			APPROACH END TREATMENT
					475																														
				37.5							1																					1			DEPARTURE END TREATMENT
																															7				S = 70', R = 600'
65	21.09/21.35	E		37.5							1																					1			APPROACH END TREATMENT
					1390																														
				37.5							1																					1			DEPARTURE END TREATMENT
																															13				S = 65', R = 500'
SHEET Q-7 SUBTOTAL				840	3485				1	7	8					6			100		6.4	13		6	48	14.8		10	6.6	21.4	27	8		400	

(N) - NOT A SEPARATE PAY ITEM, FOR INFORMATION ONLY
* NEW RAILING WILL BE TREATED TO PRODUCE A NON-SHINY SURFACE.
** POST MILE LIMITS ARE APPROXIMATE.
*** TO BE PLACED ON DISTURBED SOIL AREAS.

SUMMARY OF QUANTITIES Q-7

REVISED BY | DATE REVISED
MIKE MOGEN | DAN FISHER
CALCULATED-DESIGNED BY | CHECKED BY
FUNCTIONAL SUPERVISOR: JULIE CASEY
STATE OF CALIFORNIA - DEPARTMENT OF TRANSPORTATION
Caltrans DESIGN
P:\proj2\02\3c300_plans\pse\23c300pa007.dgn

LAST REVISION 10-24-11 | DATE PLOTTED => 09-JAN-2012 | TIME PLOTTED => 09:06

Dist	COUNTY	ROUTE	POST MILES TOTAL PROJECT	SHEET No.	TOTAL SHEETS
02	Plu	70	0.6/35.2	31	101

REGISTERED CIVIL ENGINEER 10-26-11 DATE

1-9-12
PLANS APPROVAL DATE

REGISTERED PROFESSIONAL ENGINEER MIKE MOGEN No. C67018 Exp. 9-30-12 CIVIL STATE OF CALIFORNIA

THE STATE OF CALIFORNIA OR ITS OFFICERS OR AGENTS SHALL NOT BE RESPONSIBLE FOR THE ACCURACY OR COMPLETENESS OF SCANNED COPIES OF THIS PLAN SHEET.

SUMMARY OF QUANTITIES

LOCATION No.	POST MILE LIMITS **	DIRECTION	DETAIL SHEET No.	REMOVE MBGR	RECONSTRUCT MBGR (STEEL POSTS)	MBGR (STEEL POST) *	END ANCHOR ASSEMBLY (TYPE SFT)	TRANSITION RAILING (TYPE WB) *	BURIED POST END ANCHOR (N)	ALTERNATIVE IN-LINE TERMINLAL SYSTEM *	ALTERNATIVE FLARED TERMINAL SYSTEM *	CONCRETE BARRIER (TRANSITION ANCHOR BLOCK)	CONCRETE BARRIER (TYPE 736B)	TRANSITION TYPE 15 MODIFIED RAILING	STACKED ROCK WALL LAPPED TRANSITION RAILING	STACKED ROCK WALL TRANSITION RAILING	ROADWAY EXCAVATION	EMBANKMENT (N)	EARTH RETAINING STRUCTURE (GUARD RAILING)	EARTH RETAINING STRUCTURE (CSP)	MINOR CONCRETE (MINOR STRUCTURE)	SOIL ANCHOR	SHOULDER BACKING	HOT MIX ASPHALT (TYPE A)	PLACE HMA DIKE (TYPE F)	PLACE HMA (Misc AREA)	18"CORRUGATED STEEL PIPE DOWNDRAIN (0.109" THICK)	12" CORRUGATED STEEL PIPE DOWNDRAIN	ROCK SLOPE PROTECTION (1/4 TON, METHOD B)	ROCK SLOPE PROTECTION FABRIC	GUARD RAILING DELINEATOR	OBJECT MARKER (TYPE L-1)	TEMPORARY STRAW BALE BARRIER	EROSION CONTROL (HYDROSEED) ***	DESCRIPTION
				LF	LF	LF	EA	EA	EA	EA	EA	LF	LF	EA	EA	EA	CY	CY	SQFT	SQFT	CY	EA	TON	TON	LF	SQYD	LF	LF	CY	SQYD	EA	EA	LF	SQFT	
66	21.76/21.80	E		37.5							1																					1			APPROACH END TREATMENT
					70																														
			C18	37.5							1																					1			DEPARTURE END TREATMENT
			C2,6																		5.4														UNDERPIN 36" ERS (CSP), 16 CANS, ERS H = 6'
			C1,2,6																	54	0.7	8											30	45	EXTEND 36" ERS (CSP) W BY 3 CANS, UNDERPIN 36" ERS (CSP)
67	23.00/23.07	E	C15	62.5							1					1																1			APPROACH END TREATMENT OF STACKED ROCK WALL
					90																														
			C15	62.5							1					1																1			DEPARTURE END TREATMENT OF STACKED ROCK WALL
68	23.64/23.72	E		37.5							1																					1			APPROACH END TREATMENT
					190																														
				50						1																									DEPARTURE END TREATMENT
		W		37.5							1																					1			APROACH END TREATMENT
					90																														
				37.5							1																					1			DEPARTURE END TREATMENT
69	23.91/24.01	E		37.5							1																					1			APPROACH END TREATMENT
					480																														
				37.5							1																					1			DEPARTURE END TREATMENT
70	24.37/24.61	E		37.5							1																					1			APPROACH END TREATMENT
					1130																														
				37.5							1																					1			DEPARTURE END TREATMENT
																															13				CURVE 1: S = 90', R = 1000'; CURVE 2: S = 75', R = 700'
71	25.10/25.29	E		37.5							1																					1			APPROACH END TREATMENT
			C8		880														200																
				37.5							1																					1			DEPARTURE END TREATMENT
																															10				S = 90', R = 1000'
72	25.37/25.38	E	C17																										3.3	10.7					PLACE RSP AT END OF 12" PERCHED CULVERT
			C15	62.5							1					1																1			DEPARTURE END TREATMENT OF STACKED ROCK WALL
73	25.39/25.44	E		37.5							1																					1			APPROACH END TREATMENT
					180																														DRILL NEW HOLES IN Exist METAL POSTS OF Ret STRUCTURE
				37.5							1																					1			DEPARTURE END TREATMENT
SHEET Q-8 SUBTOTAL				725	3110					1	16					3			200	54	6.1	8							3.3	10.7	23	16	30	45	

(N) - NOT A SEPARATE PAY ITEM, FOR INFORMATION ONLY
* NEW RAILING WILL BE TREATED TO PRODUCE A NON-SHINY SURFACE.
** POST MILE LIMITS ARE APPROXIMATE.
*** TO BE PLACED ON DISTURBED SOIL AREAS.

SUMMARY OF QUANTITIES

Q-8

REVISED BY | DATE REVISED
MIKE MOGEN | DAN FISHER
CALCULATED-DESIGNED BY | CHECKED BY
FUNCTIONAL SUPERVISOR: JULIE CASEY

STATE OF CALIFORNIA - DEPARTMENT OF TRANSPORTATION
Caltrans® DESIGN

P:\proj2\02\3c300_plans\pse\23c300pa008.dgn

LAST REVISION 10-24-11 | DATE PLOTTED => 09-JAN-2012 | TIME PLOTTED => 09:06

Dist	COUNTY	ROUTE	POST MILES TOTAL PROJECT	SHEET No.	TOTAL SHEETS
02	Plu	70	0.6/35.2	32	101

REGISTERED CIVIL ENGINEER 10-26-11 DATE

1-9-12
PLANS APPROVAL DATE

REGISTERED PROFESSIONAL ENGINEER MIKE MOGEN No. C67018 Exp. 9-30-12 CIVIL STATE OF CALIFORNIA

THE STATE OF CALIFORNIA OR ITS OFFICERS OR AGENTS SHALL NOT BE RESPONSIBLE FOR THE ACCURACY OR COMPLETENESS OF SCANNED COPIES OF THIS PLAN SHEET.

SUMMARY OF QUANTITIES

LOCATION No.	POST MILE LIMITS **	DIRECTION	DETAIL SHEET No.	REMOVE MBGR	RECONSTRUCT MBGR (STEEL POSTS)	MBGR (STEEL POST) *	END ANCHOR ASSEMBLY (TYPE SFT)	TRANSITION RAILING (TYPE WB) *	BURIED POST END ANCHOR (N)	ALTERNATIVE IN-LINE TERMINLAL SYSTEM *	ALTERNATIVE FLARED TERMINAL SYSTEM *	CONCRETE BARRIER (TRANSITION ANCHOR BLOCK)	CONCRETE BARRIER (TYPE 736B)	TRANSITION TYPE 15 MODIFIED RAILING	STACKED ROCK WALL LAPPED TRANSITION RAILING	STACKED ROCK WALL TRANSITION RAILING	ROADWAY EXCAVATION	EMBANKMENT (N)	EARTH RETAINING STRUCTURE (GUARD RAILING)	EARTH RETAINING STRUCTURE (CSP)	MINOR CONCRETE (MINOR STRUCTURE)	SOIL ANCHOR	SHOULDER BACKING	HOT MIX ASPHALT (TYPE A)	PLACE HMA DIKE (TYPE F)	PLACE HMA (Misc AREA)	18"CORRUGATED STEEL PIPE DOWNDRAIN (0.109" THICK)	12" CORRUGATED STEEL PIPE DOWNDRAIN	ROCK SLOPE PROTECTION (1/4 TON, METHOD B)	ROCK SLOPE PROTECTION FABRIC	GUARD RAILING DELINEATOR	OBJECT MARKER (TYPE L-1)	TEMPORARY STRAW BALE BARRIER	EROSION CONTROL (HYDROSEED) ***	DESCRIPTION
				LF	LF	LF	EA	EA	EA	EA	EA	LF	LF	EA	EA	EA	CY	CY	SQFT	SQFT	CY	EA	TON	TON	LF	SQYD	LF	LF	CY	SQYD	EA	EA	LF	SQFT	
74	25.44/25.46	E	C15	62.5							1					1																1			APPROACH END TREATMENT OF STACKED ROCK WALL
			C15	62.5							1					1																1			DEPARTURE END TREATMENT OF STACKED ROCK WALL
75	25.55/25.56	E	C15	62.5							1					1																1			APPROACH END TREATMENT OF STACKED ROCK WALL
			C15	62.5							1					1																1			DEPARTURE END TREATMENT OF STACKED ROCK WALL
76	26.23/26.35	E		37.5							1																					1			APPROACH END TREATMENT
			C8		600														400																
				37.5							1																					1			DEPARTURE END TREATMENT
77	27.15/27.25	E		50						1																									APPROACH END TREATMENT
					450																														
				50						1																									DEPARTURE END TREATMENT
78	27.26/27.46	E		50						1																									DEPARTURE END TREATMENT
					940																														
				37.5							1																					1			APPROACH END TREATMENT
			C8											2																					ONE ON EACH SIDE OF TYPE 15 MODIFIED RAIL
																															8				S = 55', R = 400'
79	27.47/27.48	E	C15	62.5	15						1					1																1			APPROACH END TREATMENT OF STACKED ROCK WALL
			C2,6																		2.4	4													UNDERPIN 36" ERS (CSP), 7 DAMAGED CANS
80	27.50/27.53	E	C15	50	35											2																			BETWEEN TWO STACKED ROCK WALLS
			C15	75	25					1						1																			EAST END OF STACKED ROCK WALL
81	29.33/29.37	E		50						1																									APPROACH END TREATMENT
					120																														
				50						1																									DEPARTURE END TREATMENT
			C2,7																		2.7	5													UNDERPIN 36" ERS (CSP), 8 DAMAGED CANS
82	29.64/29.69	E		37.5							1																					1			APPROACH END TREATMENT
					240																														
				37.5							1																					1			DEPARTURE END TREATMENT
83	29.74/29.76	E			55																														
				50						1																									DEPARTURE END TREATMENT
			C15	25												1																			DEPARTURE END OF STACKED ROCK WALL
SHEET Q-9 SUBTOTAL				950	2480					7	10			2		9			400		5.1	9									8	10			

(N) - NOT A SEPARATE PAY ITEM, FOR INFORMATION ONLY
* NEW RAILING WILL BE TREATED TO PRODUCE A NON-SHINY SURFACE.
* * POST MILE LIMITS ARE APPROXIMATE.
* * * TO BE PLACED ON DISTURBED SOIL AREAS.

SUMMARY OF QUANTITIES

Q-9

REVISED BY | DATE REVISED
MIKE MOGEN | DAN FISHER
CALCULATED-DESIGNED BY | CHECKED BY
FUNCTIONAL SUPERVISOR: JULIE CASEY
STATE OF CALIFORNIA - DEPARTMENT OF TRANSPORTATION
Caltrans DESIGN
P:\proj2\02\3c300_plans\pse\23c300pa009.dgn

LAST REVISION | DATE PLOTTED => 09-JAN-2012 | TIME PLOTTED => 09:07
10-24-11

Dist	COUNTY	ROUTE	POST MILES TOTAL PROJECT	SHEET No.	TOTAL SHEETS
02	Plu	70	0.6/35.2	33	101

REGISTERED CIVIL ENGINEER 10-26-11 DATE

1-9-12
PLANS APPROVAL DATE

REGISTERED PROFESSIONAL ENGINEER MIKE MOGEN No. C67018 Exp. 9-30-12 CIVIL STATE OF CALIFORNIA

THE STATE OF CALIFORNIA OR ITS OFFICERS OR AGENTS SHALL NOT BE RESPONSIBLE FOR THE ACCURACY OR COMPLETENESS OF SCANNED COPIES OF THIS PLAN SHEET.

SUMMARY OF QUANTITIES

LOCATION No.	POST MILE LIMITS **	DIRECTION	DETAIL SHEET No.	REMOVE MBGR	RECONSTRUCT MBGR (STEEL POSTS)	MBGR (STEEL POST) *	END ANCHOR ASSEMBLY (TYPE SFT)	TRANSITION RAILING (TYPE WB) *	BURIED POST END ANCHOR (N)	ALTERNATIVE IN-LINE TERMINLAL SYSTEM *	ALTERNATIVE FLARED TERMINAL SYSTEM *	CONCRETE BARRIER (TRANSITION ANCHOR BLOCK)	CONCRETE BARRIER (TYPE 736B)	TRANSITION TYPE 15 MODIFIED RAILING	STACKED ROCK WALL LAPPED TRANSITION RAILING	STACKED ROCK WALL TRANSITION RAILING	ROADWAY EXCAVATION	EMBANKMENT (N)	EARTH RETAINING STRUCTURE (GUARD RAILING)	EARTH RETAINING STRUCTURE (CSP)	MINOR CONCRETE (MINOR STRUCTURE)	SOIL ANCHOR	SHOULDER BACKING	HOT MIX ASPHALT (TYPE A)	PLACE HMA DIKE (TYPE F)	PLACE HMA (Misc AREA)	18"CORRUGATED STEEL PIPE DOWNDRAIN (0.109" THICK)	12" CORRUGATED STEEL PIPE DOWNDRAIN	ROCK SLOPE PROTECTION (1/4 TON, METHOD B)	ROCK SLOPE PROTECTION FABRIC	GUARD RAILING DELINEATOR	OBJECT MARKER (TYPE L-1)	TEMPORARY STRAW BALE BARRIER	EROSION CONTROL (HYDROSEED) ***	DESCRIPTION
				LF	LF	LF	EA	EA	EA	EA	EA	LF	LF	EA	EA	EA	CY	CY	SQFT	SQFT	CY	EA	TON	TON	LF	SQYD	LF	LF	CY	SQYD	EA	EA	LF	SQFT	
84	30.36/30.60	E		50						1																									APPROACH END TREATMENT
					1070																														
				50						1																									DEPARTURE END TREATMENT
																															9				S = 65', R = 500'
85	30.71/30.92	E		38							1																					1			APPROACH END TREATMENT
			C8																400																
				50						1																									DEPARTURE END TREATMENT
																															12				S = 75', R = 700'
					1075																														
86	31.02/31.09	E		50						1																									APPROACH END TREATMENT
					240																														
			C15	25												1																			DEPARTURE END TREATMENT OF STACKED ROCK WALL
87	31.12/31.13	E	C15	65						1																									NO RECON MBGR, NEW ELEMENTS LONGER THAN Exist
																1																			DEPARTURE END OF STACKED ROCK WALL
88	31.56/31.59	E	C15	78						1						1																			APPROACH END OF STACKED ROCK WALL
			C15	75	12					1						1																			DEPARTURE END OF STACKED ROCK WALL
89	31.85/31.91	W				240																													
											1																					1			DEPARTURE END TREATMENT
									1																										APPROACH END TREATMENT
90	31.90/31.93	E	C14	68	138			1			1	5.5																				1			APPROACH END OF Conc BARRIER
																																			NO RECON OF MBGR, NEW ELEMENTS LONGER THAN Exist
91	31.97/31.98	E	C14	62				1		1		5.5																							DEPARTURE END OF Conc BARRIER
																																			NO RECON OF MBGR, NEW ELEMENTS LONGER THAN Exist
SHEET Q-10 SUBTOTAL				611	2535	240		2	1	8	3	11.0				4			400												21	3			

(N) - NOT A SEPARATE PAY ITEM, FOR INFORMATION ONLY
* NEW RAILING WILL BE TREATED TO PRODUCE A NON-SHINY SURFACE.
* * POST MILE LIMITS ARE APPROXIMATE.
* * * TO BE PLACED ON DISTURBED SOIL AREAS.

SUMMARY OF QUANTITIES
Q-10

REVISED BY | DATE REVISED
MIKE MOGEN | DAN FISHER
CALCULATED-DESIGNED BY | CHECKED BY
FUNCTIONAL SUPERVISOR: JULIE CASEY

STATE OF CALIFORNIA - DEPARTMENT OF TRANSPORTATION
Caltrans
DESIGN

P:\proj2\02\3c300_plans\pse\23c300pa010.dgn

LAST REVISION | DATE PLOTTED => 09-JAN-2012 | TIME PLOTTED => 09:07
10-24-11

Dist	COUNTY	ROUTE	POST MILES TOTAL PROJECT	SHEET No.	TOTAL SHEETS
02	Plu	70	0.6/35.2	34	101

REGISTERED CIVIL ENGINEER 10-26-11 DATE

1-9-12
PLANS APPROVAL DATE

REGISTERED PROFESSIONAL ENGINEER MIKE MOGEN No. C67018 Exp. 9-30-12 CIVIL STATE OF CALIFORNIA

THE STATE OF CALIFORNIA OR ITS OFFICERS OR AGENTS SHALL NOT BE RESPONSIBLE FOR THE ACCURACY OR COMPLETENESS OF SCANNED COPIES OF THIS PLAN SHEET.

TEMPORARY EROSION CONTROL

LOCATION	TEMPORARY FIBER ROLL
	LF
TOBIN DISPOSAL SITE	1500

TACK COAT

LOCATION	QTY (TON)
6-15,21,23,24,34,62	1.0

EXISTING TRAFFIC MANAGEMENT SYSTEM ELEMENTS TO BE MAINTAINED

PM	DESCRIPTION
33.00	HAR
33.04	CCTV AND FLASHING BEACON

SUMMARY OF QUANTITIES

LOCATION No.	POST MILE LIMITS **	DIRECTION	DETAIL SHEET No.	REMOVE MBGR	RECONSTRUCT MBGR (STEEL POSTS)	MBGR (STEEL POST) *	END ANCHOR ASSEMBLY (TYPE SFT)	TRANSITION RAILING (TYPE WB) *	BURIED POST END ANCHOR (N)	ALTERNATIVE IN-LINE TERMINLAL SYSTEM *	ALTERNATIVE FLARED TERMINAL SYSTEM *	CONCRETE BARRIER (TRANSITION ANCHOR BLOCK)	CONCRETE BARRIER (TYPE 736B)	TRANSITION TYPE 15 MODIFIED RAILING	STACKED ROCK WALL LAPPED TRANSITION RAILING	STACKED ROCK WALL TRANSITION RAILING	ROADWAY EXCAVATION	EMBANKMENT (N)	EARTH RETAINING STRUCTURE (GUARD RAILING)	EARTH RETAINING STRUCTURE (CSP)	MINOR CONCRETE (MINOR STRUCTURE)	SOIL ANCHOR	SHOULDER BACKING	HOT MIX ASPHALT (TYPE A)	PLACE HMA DIKE (TYPE F)	PLACE HMA (Misc AREA)	18"CORRUGATED STEEL PIPE DOWNDRAIN (0.109" THICK)	12" CORRUGATED STEEL PIPE DOWNDRAIN	ROCK SLOPE PROTECTION (1/4 TON, METHOD B)	ROCK SLOPE PROTECTION FABRIC	GUARD RAILING DELINEATOR	OBJECT MARKER (TYPE L-1)	TEMPORARY STRAW BALE BARRIER	EROSION CONTROL (HYDROSEED) ***	DESCRIPTION
				LF	LF	LF	EA	EA	EA	EA	EA	LF	LF	EA	EA	EA	CY	CY	SQFT	SQFT	CY	EA	TON	TON	LF	SQYD	LF	LF	CY	SQYD	EA	EA	LF	SQFT	
92	32.72/32.73	E	C15	62.5						1						1																		APPROACH END OF STACKED ROCK WALL
93	32.74/32.92	E	C8	37.5							1								600													1		DEPARTURE END TREATMENT
					880																													
			C15	25												1																		DEPARTURE END OF STACKED ROCK WALL
			C2,7																		3.7	5												UNDERPIN 36" ERS (CSP), 11 DAMAGED CANS
94	34.04/34.31	E		50						1																								APPROACH END TREATMENT
			C8		1315														1000															
				50						1																								DEPARTURE END TREATMENT
																															20			S = 75', R = 700'
95	34.67/35.12	E		50						1																								APPROACH END TREATMENT
					2290																													
				50						1																								DEPARTURE END TREATMENT
	TOBIN DISPOSAL SITE																	810															155206	EMBANKMENT AND STAGING AREAS
SHEET Q-11 SUBTOTAL				325	4485					5	1					2		810	1600		3.7	5									20	1		155206	
SHEET Q-10 SUBTOTAL				611	2535	240		2	1	8	3	11.0				4			400												21	3			
SHEET Q-9 SUBTOTAL				950	2480					7	10			2		9			400		5.1	9									8	10			
SHEET Q-8 SUBTOTAL				725	3110					1	16					3			200	54	6.1	8							3.3	10.7	23	16	30	45	
SHEET Q-7 SUBTOTAL				840	3485				1	7	8					6			100		6.4	13		6	48	14.8		10	6.6	21.4	27	8		400	
SHEET Q-6 SUBTOTAL				525	6143	1525				3	12									90	2.1	3					20		6.7	17.4	42	12	35	75	
SHEET Q-5 SUBTOTAL				685	4970	725		5			17	55				2			100												35	17			
SHEET Q-4 SUBTOTAL				791	5166			2		5	14	11							400				149	3	24	7.4		5	3.3	10.7	10	14		200	
SHEET Q-3 SUBTOTAL				738	3487			3	1		3	27.0	80				60			1040	11.9		6.1	182	48	14.8		10	6.6	21.4	7	4	649	3625	
SHEET Q-2 SUBTOTAL					3781												271		100		16.8	27	27.1	606	144	44.4		30	19.8	64.2				1200	
SHEET Q-1 SUBTOTAL				524	3098		1	7			4	63			2		75		600				7.4	194	168	51.8		35	23.1	74.9		4	115	2600	
GRAND TOTAL				6714	42740	2490	1	19	3	36	88	167	80	2	2	26	406	810	3900	1184	52.1	65	189.6	991	432	133.2	20	90	69.4	220.7	193	89	829	163351	

(N) - NOT A SEPARATE PAY ITEM, FOR INFORMATION ONLY
* NEW RAILING WILL BE TREATED TO PRODUCE A NON-SHINY SURFACE.
* * POST MILE LIMITS ARE APPROXIMATE.
* * * TO BE PLACED ON DISTURBED SOIL AREAS.

REVISED BY | DATE REVISED
MIKE MOGEN | DAN FISHER
CALCULATED-DESIGNED BY | CHECKED BY
FUNCTIONAL SUPERVISOR
JULIE CASEY

STATE OF CALIFORNIA - DEPARTMENT OF TRANSPORTATION
DESIGN
Caltrans

P:\proj2\02\3c300_plans\pse\23c300pa011.dgn

SUMMARY OF QUANTITIES

Q-11

LAST REVISION 10-24-11 | DATE PLOTTED => 07-FEB-2012 | TIME PLOTTED => 12:06

Dist	COUNTY	ROUTE	POST MILES TOTAL PROJECT	SHEET No.	TOTAL SHEETS
02	Plu	70	0.6/35.2	35	101

Randell D. Hiatt
REGISTERED CIVIL ENGINEER

May 20, 2011
PLANS APPROVAL DATE

REGISTERED PROFESSIONAL ENGINEER
Randell D. Hiatt
No. C50200
Exp. 6-30-11
CIVIL
STATE OF CALIFORNIA

The State of California or its officers or agents shall not be responsible for the accuracy or completeness of electronic copies of this plan sheet.

To accompany plans dated 1-9-12

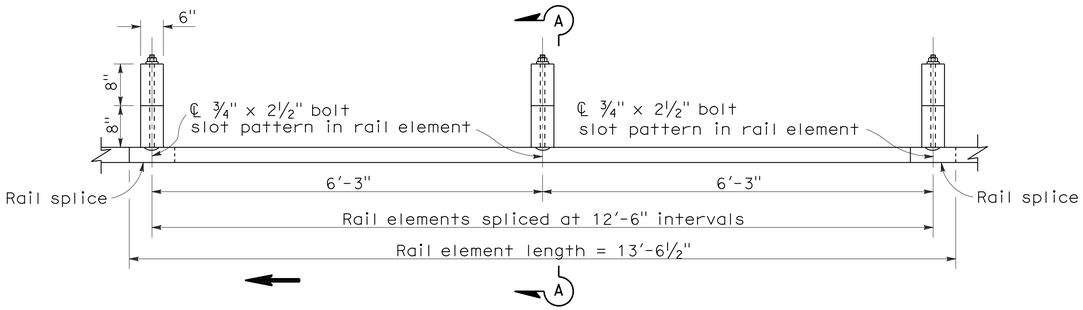

PLAN

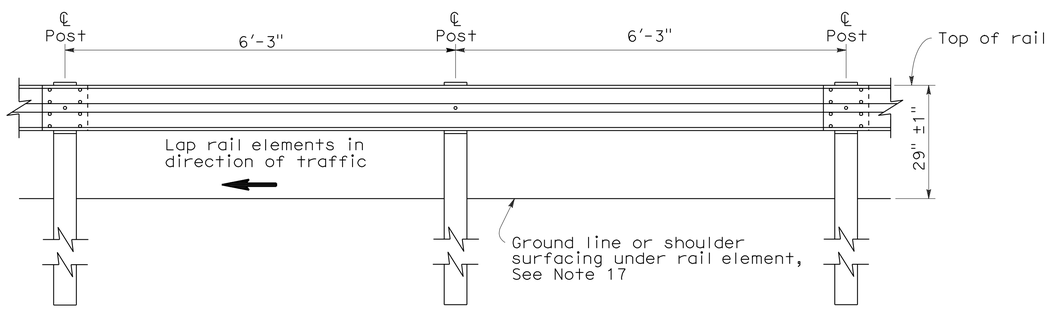

ELEVATION

METAL BEAM GUARD RAILING WITH WOOD POST AND BLOCKS

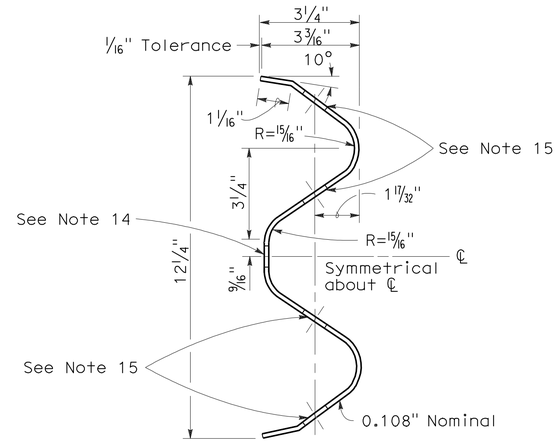

SECTION THRU RAIL ELEMENT

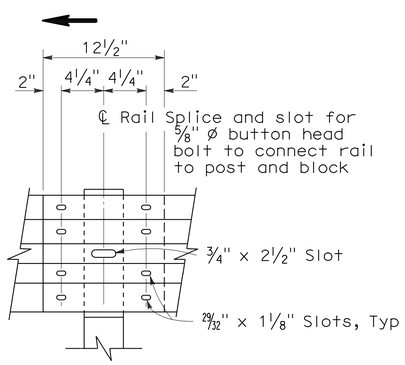

ELEVATION

RAIL ELEMENT SPLICE DETAIL

a) Connect the over lapped end of the rail elements with ⅝" ø x 1⅜" button head oval shoulder splice bolts inserted into the 29⁄32" x 1⅛" slots and bolted together with ⅝" ø recessed hex nuts. Recess of hex nut points toward rail element. A total of 8 bolts and nuts are to be used at each rail splice connection.

b) The ends of the rail elements are to be overlapped in the direction of traffic (see details).

c) Where end cap is to be attached to the end of a rail element, a total of 4 of the above described splice bolts and nuts are to be used.

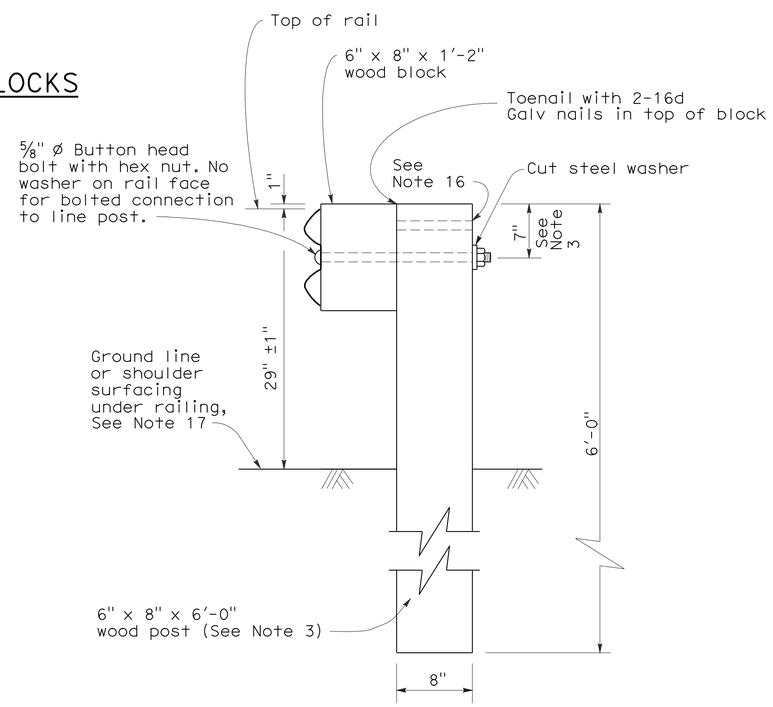

SECTION A-A

TYPICAL WOOD LINE POST INSTALLATION

See Note 4

NOTES:

1. For details of steel post installations, see Standard Plan A77A2.
2. For details of standard hardware used to construct guard railing, see Standard Plan A77B1.
3. For details of wood posts and wood blocks used to construct guard railing, see Standard Plan A77C1.
4. For additional installation details, see Standard Plan A77C3.
5. Guard railing post spacing to be 6'-3" center to center, except as otherwise noted.
6. For guard railing typical layouts, see the A77E, A77F and A77G Series of Standard Plans.
7. For terminal system end treatment details, see the A77L Series of Standard Plans. To connect railing to terminal system end treatment, transition the top of railing height at a ratio of 120:1 to terminal system end treatment height plus one 12'-6" standard railing section at the transitioned height for a horizontal connection to the end treatment.
8. For guard railing end anchor details, see Standard Plans A77H1 and A77I2.
9. For details of guard railing transition to bridge railing, see Standard Plan A77J4.
10. For additional details of guard railing connection to bridge railings, see Standard Plans A77J1, A77J2 and A77K1.
11. For guard railing connection details to abutments and walls, see Standard Plan A77J3.
12. Direction of adjacent traffic indicated by ➡.
13. For typical guard railing delineation and dike positioning details, see Standard Plan A77C4.
14. Slotted hole for bolted connection of rail element to block and post. See "Section Thru Rail Element".
15. Slotted holes for splice bolts to overlap ends of rail element. See "Section Thru Rail Element".
16. Additional hole in uppermost portion of line post is for potential future adjustments of railing height. See Standard Plan A77C1.
17. Install posts in soil.

STATE OF CALIFORNIA
DEPARTMENT OF TRANSPORTATION

METAL BEAM GUARD RAILING STANDARD RAILING SECTION (WOOD POST WITH WOOD BLOCK)

NO SCALE

RSP A77A1 DATED MAY 20, 2011 SUPERSEDES STANDARD PLAN A77A1 DATED MAY 1, 2006 - PAGE 41 OF THE STANDARD PLANS BOOK DATED MAY 2006.

REVISED STANDARD PLAN RSP A77A1

2006 REVISED STANDARD PLAN RSP A77A1

3-10-11

Dist	COUNTY	ROUTE	POST MILES TOTAL PROJECT	SHEET No.	TOTAL SHEETS
02	Plu	70	0.6/35.2	36	101

Randell D. Hiatt
REGISTERED CIVIL ENGINEER

May 20, 2011
PLANS APPROVAL DATE

REGISTERED PROFESSIONAL ENGINEER Randell D. Hiatt No. C50200 Exp. 6-30-11 CIVIL STATE OF CALIFORNIA

The State of California or its officers or agents shall not be responsible for the accuracy or completeness of electronic copies of this plan sheet.

To accompany plans dated 1-9-12

2006 REVISED STANDARD PLAN RSP A77A2

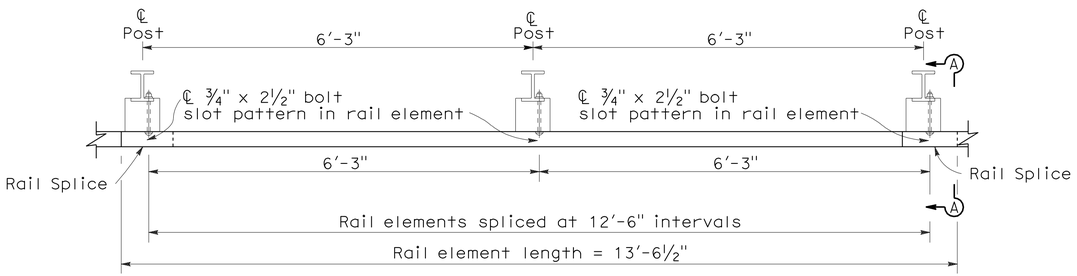

PLAN

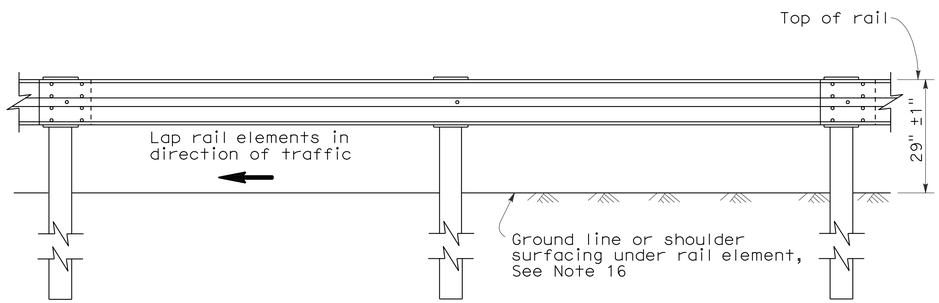

ELEVATION

METAL BEAM GUARD RAILING WITH STEEL POSTS AND NOTCHED WOOD OR NOTCHED RECYCLED PLASTIC BLOCKS

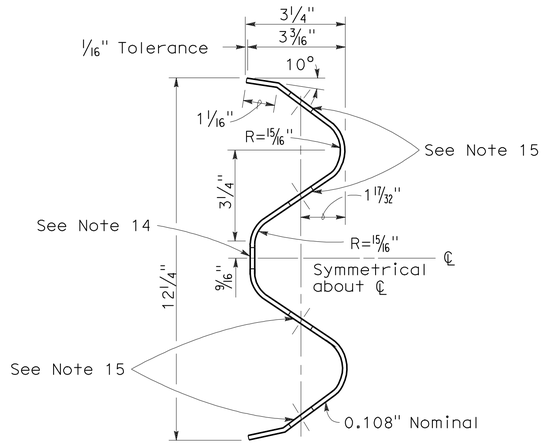

SECTION THRU RAIL ELEMENT

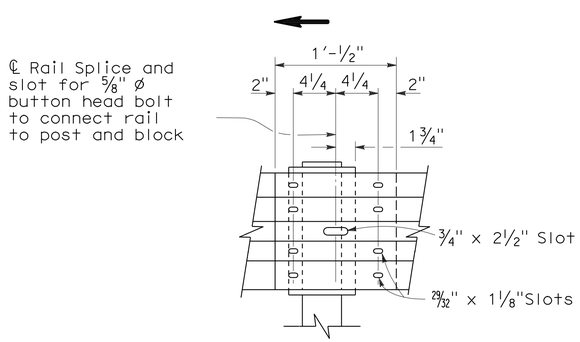

ELEVATION

RAIL ELEMENT SPLICE DETAIL

a) Connect the over lapped end of the rail elements with ⅝" ø x 1⅜" button head oval shoulder splice bolts inserted into the 29/32" x 1⅛" slots and bolted together with ⅝" ø recessed hex nuts. Recess of hex nut points toward rail element. A total of 8 bolts and nuts are to be used at each rail splice connection.

b) The ends of the rail elements are to be overlapped in the direction of traffic (see details).

c) Where end cap is to be attached to the end of a rail element, a total of 4 of the above described splice bolts and nuts are to be used.

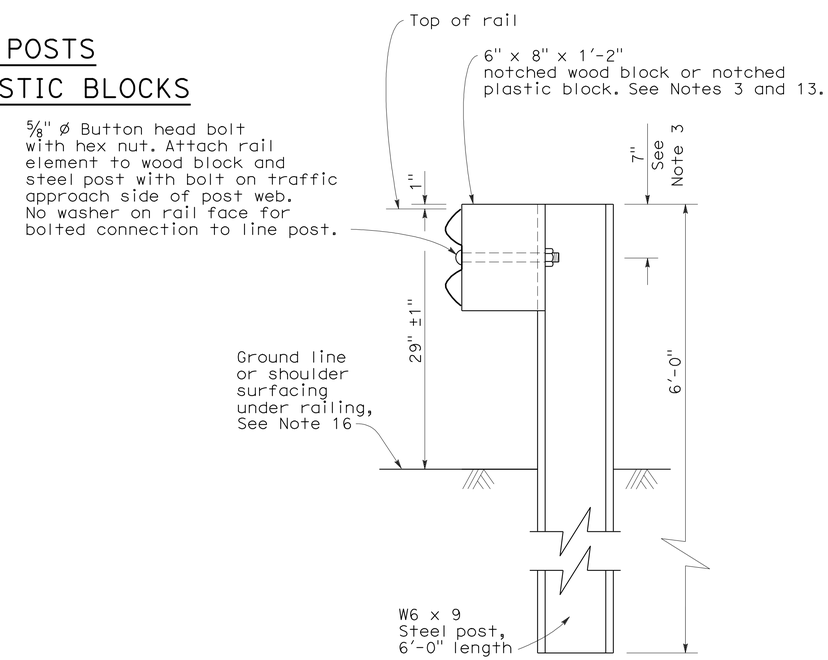

SECTION A-A

TYPICAL STEEL LINE POST INSTALLATION

See Note 4

NOTES:

1. For details of wood post installations, see Standard Plan A77A1.
2. For details of standard hardware used to construct guard railing, see Standard Plan A77B1.
3. For details of steel posts and notched wood blocks used to construct guard railing, see Standard Plan A77C2.
4. For additional installation details, see Standard Plan A77C3.
5. Guard railing post spacing to be 6'-3" center to center, except as otherwise noted.
6. For guard railing typical layouts, see the A77E, A77F and A77G Series of Standard Plans.
7. For terminal system end treatment details, see the A77L Series of Standard Plans. To connect railing to terminal system end treatment, transition the top of railing height at a ratio of 120:1 to terminal system end treatment height plus one 12'-6" standard railing section at the transitioned height for a horizontal connection to the end treatment.
8. For guard railing end anchor details, see Standard Plans A77H1 and A77I2.
9. For details of guard railing transition to bridge railing, see Standard Plan A77J4.
10. For additional details of guard railing connection to bridge railings, see Standard Plans A77J1, A77J2 and A77K1.
11. For dike positioning and guard railing delineation details, see Standard Plan A77C4.
12. Direction of adjacent traffic indicated by → .
13. Notched face of block faces steel post.
14. Slotted hole for bolted connection of rail element to block and post. See "Section Thru Rail Element".
15. Slotted holes for splice bolts to overlap ends of rail element. See "Section Thru Rail Element".
16. Install posts in soil.

STATE OF CALIFORNIA
DEPARTMENT OF TRANSPORTATION

METAL BEAM GUARD RAILING STANDARD RAILING SECTION (STEEL POST WITH NOTCHED WOOD OR NOTCHED RECYCLED PLASTIC BLOCK)

NO SCALE

RSP A77A2 DATED MAY 20, 2011 SUPERSEDES STANDARD PLAN A77A2 DATED MAY 1, 2006 - PAGE 42 OF THE STANDARD PLANS BOOK DATED MAY 2006.

REVISED STANDARD PLAN RSP A77A2

5-4-11

To accompany plans dated 1-9-12

Dist	COUNTY	ROUTE	POST MILES TOTAL PROJECT	SHEET No.	TOTAL SHEETS
02	Plu	70	0.6/35.2	37	101

Randell D. Hiatt
REGISTERED CIVIL ENGINEER

May 20, 2011
PLANS APPROVAL DATE

REGISTERED PROFESSIONAL ENGINEER
Randell D. Hiatt
No. C50200
Exp. 6-30-11
CIVIL
STATE OF CALIFORNIA

The State of California or its officers or agents shall not be responsible for the accuracy or completeness of electronic copies of this plan sheet.

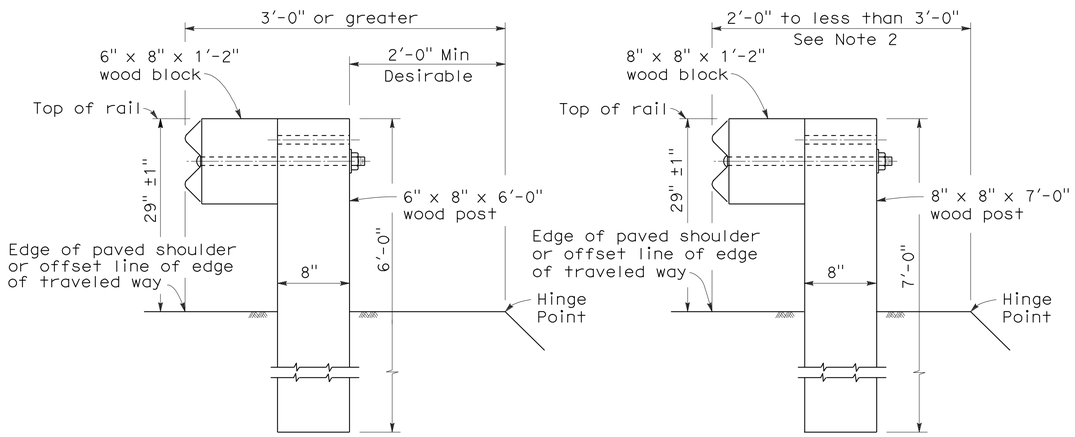

DETAIL A
TYPICAL ROADWAY INSTALLATION
See Note 1

DETAIL B
NARROW ROADWAY INSTALLATION
See Note 1

POST EMBEDMENT

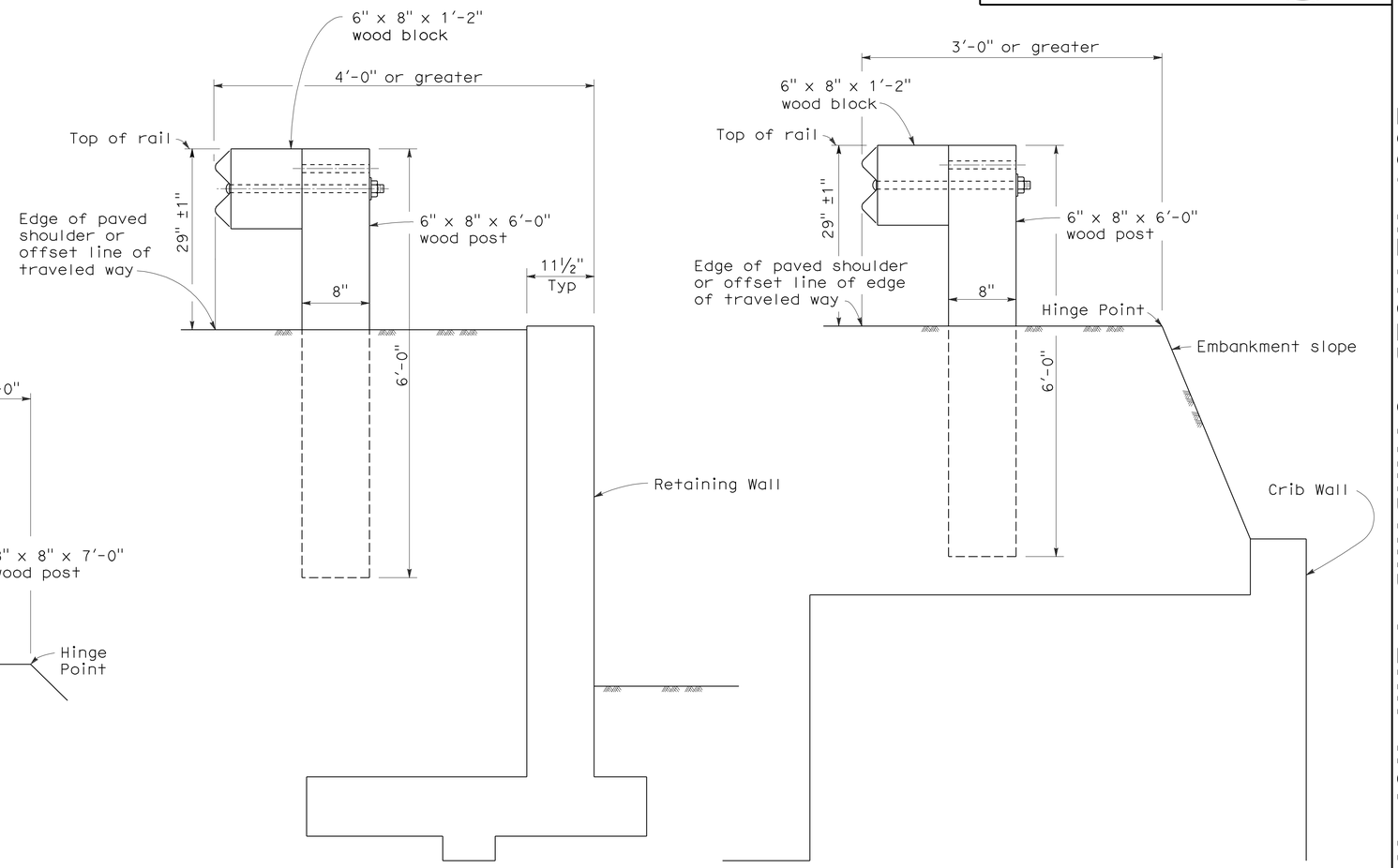

DETAIL C

DETAIL D

INSTALLATION AT EARTH RETAINING WALLS

NOTES:

1. These installation details also applicable to steel line post installations. For Detail A, C, and D, where steel line post installations are constructed, W6 x 9 steel post, 6'-0" in length, with 6" x 8" x 1'-2" notched wood blocks or notched recycled plastic blocks are to be used in place of the size of wood post and wood block shown. For Detail B, where steel line post installations are constructed, W6 x 9 steel post, 7'-0" in length, with 6" x 8" x 1'-2" notched wood blocks or notched recycled plastic blocks are to be used in place of the size of wood post and wood block shown. For additional installation details, see Standard Plans A77A1 and A77A2.
2. Where the distance between the face of the rail and the hinge point is less than 2'-0", see the Project Plans for special details.
3. For dike positioning with guard railing installations, see Standard Plan A77C4.

STATE OF CALIFORNIA
DEPARTMENT OF TRANSPORTATION

METAL BEAM GUARD RAILING TYPICAL LINE POST EMBEDMENT AND HINGE POINT OFFSET DETAILS

NO SCALE

RSP A77C3 DATED MAY 20, 2011 SUPERSEDES STANDARD PLAN A77C3
DATED MAY 1, 2006 - PAGE 46 OF THE STANDARD PLANS BOOK DATED MAY 2006.

REVISED STANDARD PLAN RSP A77C3

2006 REVISED STANDARD PLAN RSP A77C3

3-10-11

Dist	COUNTY	ROUTE	POST MILES TOTAL PROJECT	SHEET No.	TOTAL SHEETS
02	Plu	70	0.6/35.2	38	101

Randell D. Hiatt
REGISTERED CIVIL ENGINEER

May 20, 2011
PLANS APPROVAL DATE

REGISTERED PROFESSIONAL ENGINEER
Randell D. Hiatt
No. C50200
Exp. 6-30-11
CIVIL
STATE OF CALIFORNIA

The State of California or its officers or agents shall not be responsible for the accuracy or completeness of electronic copies of this plan sheet.

To accompany plans dated 1-9-12

NOTES:

1. When necessary to place dike in front of face of guard railing, only Type C dike may be used. For dike details, see Standard Plan A87B.
2. For standard railing post embedment, see Standard Plans A77C3.
3. Guard railing delineation to be used where shown on the Project Plans.
4. When dike or curb is placed under guard railing, the maximum height of the dike or curb shall be 4". Mountable dike should not be used. For dike and curb details, see Standard Plans A87A and A87B.
5. For details of typical distance between the face of rail and hinge point, see Standard Plan A77C3.
6. For steel line posts, use ¼ - 20 self-tapping screws in 0.22" diameter holes or ¼" bolts in 9/32" diameter holes.

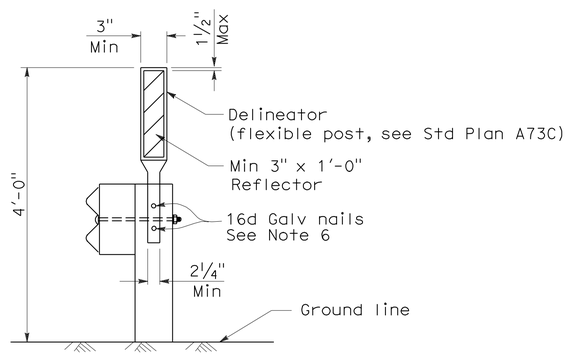

GUARD RAILING DELINEATION

See Note 3

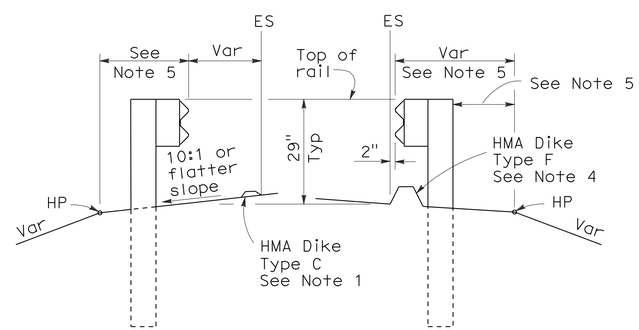

DIKE POSITIONING

See Note 1

STATE OF CALIFORNIA
DEPARTMENT OF TRANSPORTATION

METAL BEAM GUARD RAILING TYPICAL RAILING DELINEATION AND DIKE POSITIONING DETAILS

NO SCALE

RSP A77C4 DATED MAY 20, 2011 SUPERSEDES RSP A77C4 DATED JUNE 6, 2008 AND STANDARD PLAN A77C4 DATED MAY 1, 2006 - PAGE 47 OF THE STANDARD PLANS BOOK DATED MAY 2006.

REVISED STANDARD PLAN RSP A77C4

2006 REVISED STANDARD PLAN RSP A77C4

3-10-11

DIST	COUNTY	ROUTE	POST MILES TOTAL PROJECT	SHEET NO.	TOTAL SHEETS
02	Plu	70	0.6/35.2	39	101

Randell D. Hiatt
REGISTERED CIVIL ENGINEER

June 6, 2008
PLANS APPROVAL DATE

REGISTERED PROFESSIONAL ENGINEER Randell D. Hiatt No. C50200 Exp. 6-30-09 CIVIL STATE OF CALIFORNIA

The State of California or its officers or agents shall not be responsible for the accuracy or completeness of electronic copies of this plan sheet.

To accompany plans dated 1-9-12

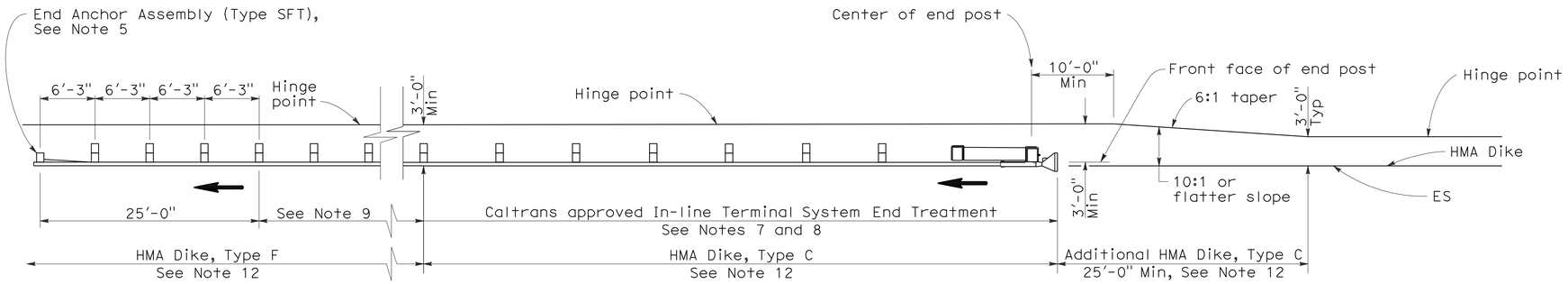

TYPE 11A LAYOUT

(EMBANKMENT GUARD INSTALLATION WITH IN-LINE END TREATMENT AT TRAFFIC APPROACH END OF RAILING)
See Note 6

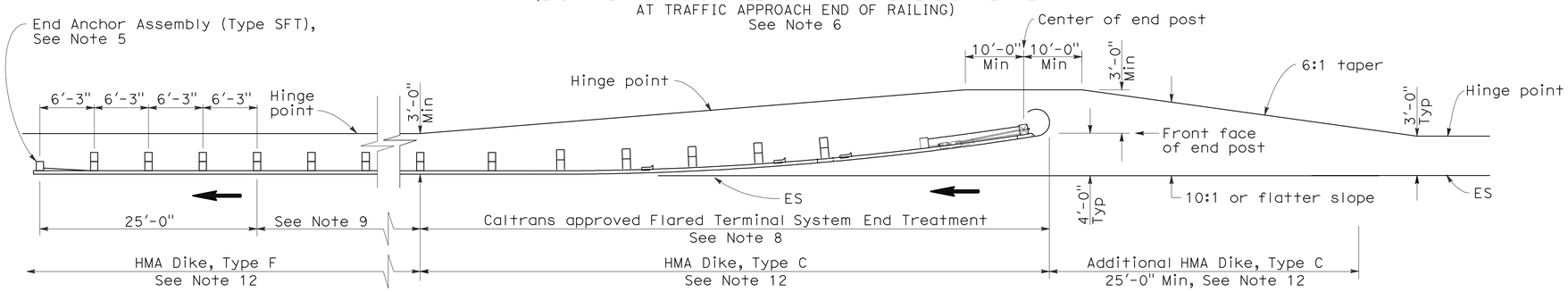

TYPE 11B LAYOUT

(EMBANKMENT GUARD RAILING INSTALLATION WITH FLARED END TREATMENT AT TRAFFIC APPROACH END OF RAILING)
See Note 6

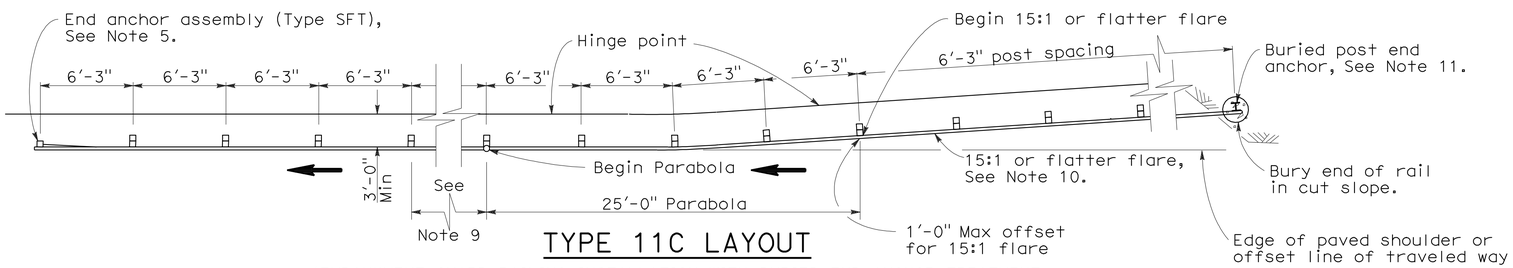

TYPE 11C LAYOUT

(EMBANKMENT GUARD RAILING INSTALLATION WITH BURIED END ANCHOR TREATMENT AT TRAFFIC APPROACH END OF RAILING)
See Notes 6 and 12

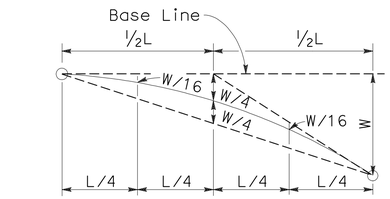

TYPICAL PARABOLIC LAYOUT

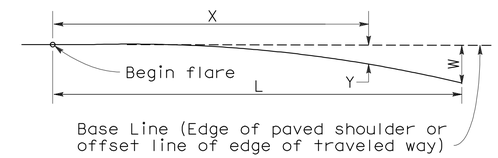

$$Y = \frac{WX^2}{L^2}$$

Y = Offset from base line
W = Maximum offset
X = Distance along base line
L = Length of flare

PARABOLIC FLARE OFFSETS

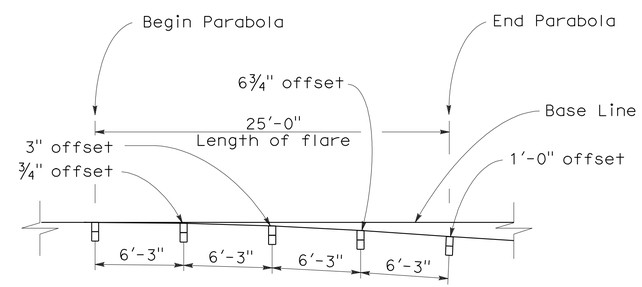

TYPICAL FLARE OFFSETS FOR 1 FOOT MAX END OFFSET

NOTES:

1. Line post, blocks and hardware to be used are shown on Standard Plans A77A1, A77A2, A77B1, A77C1, and A77C2.
2. Guard rail post spacing to be 6'-3" center to center, except as otherwise noted.
3. Except as noted, line posts are 6" x 8" x 6'-0" wood with 6" x 8" x 1'-2" wood blocks. W6 x 9 steel posts, 6'-0" in length, with 6" x 8" x 1'-2" notched wood blocks or recycled plastic blocks may be used for 6" x 8" x 6'-0" wood post with 6" x 8" x 1'-2" wood blocks where applicable and when specified.
4. Direction of adjacent traffic indicated by ⟶.
5. For End Anchor Assembly (Type SFT) details, see Standard Plan A77H1.
6. Layout Types 11A, 11B or 11C are typically used where guard railing is recommended to shield embankment slopes and a crashworthy end treatment is required for only one direction of traffic.
7. In-line Terminal System End Treatments are used where site conditions will not accommodate a flared end treatment.
8. The type of terminal system end treatment to be used will be shown on the Project Plans.
9. Dependent on site conditions (embankment height and side slope), construction of additional guard railing (length equal to multiples of 12'-6" with 6'-3" post spacing) may be advisable.
10. The 15:1 or flatter flare used with buried end anchors is based on the edge of the paved shoulder or offset line of edge of the traveled way. The length of guard railing within the 15:1 or flatter flare is based on site conditions and should be a length equal to multiples of 12'-6".
11. For details of the buried post end anchor used with Type 11C Layout, see Standard Plan A77I2.
12. Where placement of dike is required with guard railing installations, see Revised Standard Plan RSP A77C4 for dike positioning details.

STATE OF CALIFORNIA
DEPARTMENT OF TRANSPORTATION

METAL BEAM GUARD RAILING TYPICAL LAYOUTS FOR EMBANKMENTS

NO SCALE

RSP A77E1 DATED JUNE 6, 2008 SUPERSEDES STANDARD PLAN A77E1
DATED MAY 1, 2006 - PAGE 48 OF THE STANDARD PLANS BOOK DATED MAY 2006.

REVISED STANDARD PLAN RSP A77E1

2006 REVISED STANDARD PLAN RSP A77E1

12-10-07

DIST	COUNTY	ROUTE	POST MILES TOTAL PROJECT	SHEET NO.	TOTAL SHEETS
02	Plu	70	0.6/35.2	40	101

Randell D. Hiatt
REGISTERED CIVIL ENGINEER

June 6, 2008
PLANS APPROVAL DATE

REGISTERED PROFESSIONAL ENGINEER
Randell D. Hiatt
No. C50200
Exp. 6-30-09
CIVIL
STATE OF CALIFORNIA

The State of California or its officers or agents shall not be responsible for the accuracy or completeness of electronic copies of this plan sheet.

To accompany plans dated 1-9-12

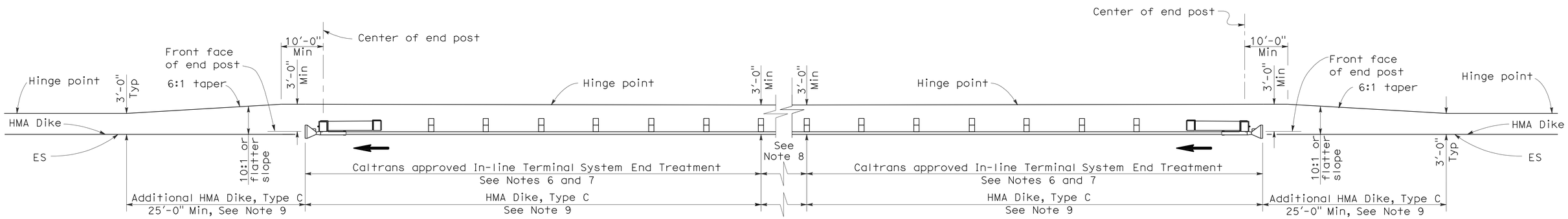

TYPE 11D LAYOUT

(EMBANKMENT GUARD RAILING INSTALLATION WITH
IN-LINE END TREATMENT AT EACH END OF RAILING)
See Note 5

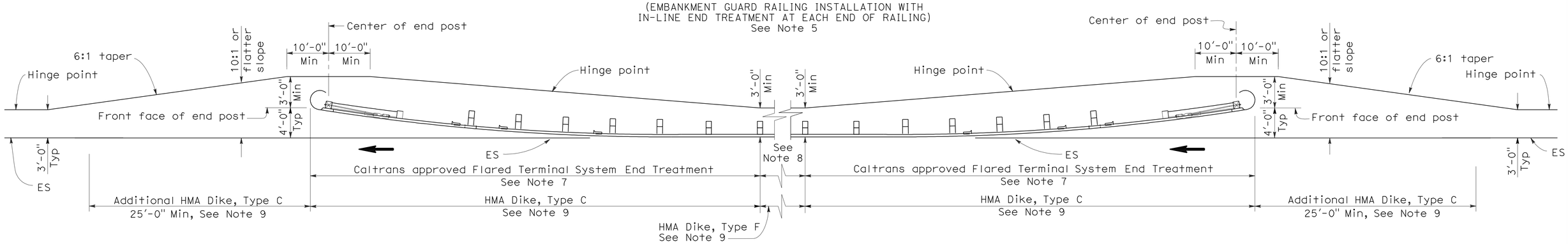

TYPE 11E LAYOUT

(EMBANKMENT GUARD RAILING INSTALLATION WITH
FLARED END TREATMENT AT EACH END OF RAILING)
See Note 5

NOTES:

1. Line post, blocks and hardware to be used are shown on Standard Plans A77A1, A77A2, A77B1, A77C1 and A77C2.
2. Guard rail post spacing to be 6'-3" center to center, except as otherwise noted.
3. Except as noted, line posts are 6" x 8" x 6'-0" wood with 6" x 8" x 1'-2" wood blocks, W6 x 9 steel posts, 6'-0" in length, with 6" x 8" x 1'-2" notched wood blocks or plastic blocks may be used for 6" x 8" x 6'-0" wood post with 6" x 8" x 1'-2" wood blocks where applicable and when specified.
4. Direction of adjacent traffic indicated by ⟶.
5. Layout Types 11D through 11L, shown on the A77E Series of Revised Standard Plans, are typically used where guard railing is recommended to shield embankment slopes and a crashworthy end treatment is required for both directions of traffic.
6. In-line Terminal System End Treatments are used where site conditions will not accommodate a flared end treatment.
7. The type of terminal system end treatment to be used will be shown on the Project Plans.
8. Dependent on site conditions (embankment height and side slope), construction of additional guard railing (length equal to multiples of 12'-6" with 6'-3" post spacing) may be advisable.
9. Where placement of dike is required with guard railing installations, see Revised Standard Plan RSP A77C4 for dike positioning details.

STATE OF CALIFORNIA
DEPARTMENT OF TRANSPORTATION

METAL BEAM GUARD RAILING TYPICAL LAYOUTS FOR EMBANKMENTS

NO SCALE

RSP A77E2 DATED JUNE 6, 2008 SUPERSEDES STANDARD PLAN A77E2
DATED MAY 1, 2006 - PAGE 49 OF THE STANDARD PLANS BOOK DATED MAY 2006.

REVISED STANDARD PLAN RSP A77E2

2006 REVISED STANDARD PLAN RSP A77E2

12-10-07

DIST	COUNTY	ROUTE	POST MILES TOTAL PROJECT	SHEET NO.	TOTAL SHEETS
02	Plu	70	0.6/35.2	41	101

Randell D. Hiatt
REGISTERED CIVIL ENGINEER

June 6, 2008
PLANS APPROVAL DATE

REGISTERED PROFESSIONAL ENGINEER
Randell D. Hiatt
No. C50200
Exp. 6-30-09
CIVIL
STATE OF CALIFORNIA

The State of California or its officers or agents shall not be responsible for the accuracy or completeness of electronic copies of this plan sheet.

To accompany plans dated 1-9-12

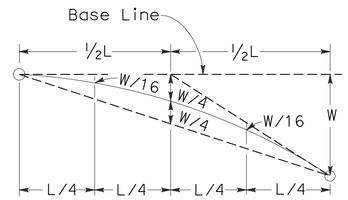

TYPICAL PARABOLIC LAYOUT

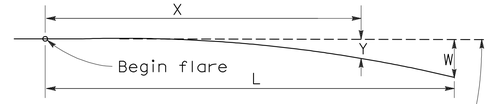

Base Line (Edge of paved shoulder or offset line of edge of traveled way)

$$Y = \frac{WX^2}{L^2}$$

Y = Offset from base line
W = Maximum offset
X = Distance along base line
L = Length of flare

PARABOLIC FLARE OFFSETS

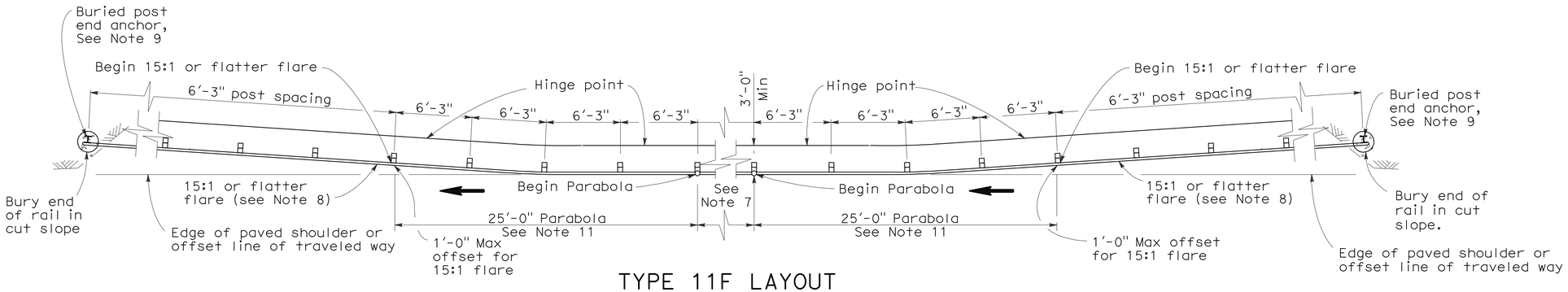

TYPE 11F LAYOUT

(EMBANKMENT GUARD RAILING INSTALLATION WITH A BURIED END ANCHOR TREATMENT AT EACH END OF RAILING)
See Notes 5 and 10

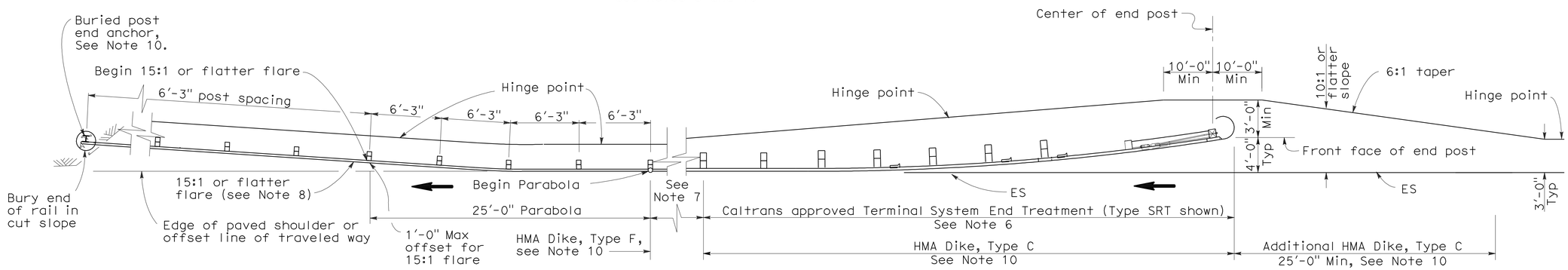

TYPE 11G LAYOUT

(EMBANKMENT GUARD RAILING INSTALLATION WITH FLARED END TREATMENT AND A BURIED END ANCHOR TREATMENT AT THE ENDS OF RAILING)
See Notes 5 and 10

NOTES:

1. Line post, blocks and hardware to be used are shown on Standard Plans A77A1, A77A2, A77B1, A77C1 and A77C2.
2. Guard rail post spacing to be 6'-3" center to center, except as otherwise noted.
3. Except as noted, line posts are 6" x 8" x 6'-0" wood with 6" x 8" x 1'-2" wood blocks. W6 x 9 steel posts, 6'-0" in length, with 6" x 8" x 1'-2" notched wood blocks or plastic blocks may be used for 6" x 8" x 6'-0" wood post with 6" x 8" x 1'-2" wood blocks where applicable and when specified.
4. Direction of adjacent traffic indicated by ⟶.
5. Layout Types 11D through 11L, shown on the A77E Series of Revised Standard Plans, are typically used where guard railing is recommended to shield embankment slopes and a crashworthy end treatment is required for both directions of traffic.
6. The type of terminal system end treatment to be used will be shown on the Project Plans.
7. Dependent on site conditions (embankment height and side slope), construction of additional guard railing (length equal to multiples of 12'-6" with 6'-3" post spacing) may be advisable.
8. The 15:1 or flatter flare used with buried end anchors is based on the edge of the paved shoulder or offset line of edge of the traveled way. The length of guard railing within the 15:1 or flatter flare is based on site conditions and should be a length equal to multiples of 12'-6".
9. For details of the buried post end anchor used with Type 11F and 11G Layouts, see Standard Plan A77I2.
10. Where placement of dike is required with guard railing installations, see Revised Standard Plan RSP A77C4 for dike positioning details.
11. For typical flare offsets for 25'-0" length parabola with maximum offset of 1'-0", see Revised Standard Plan RSP A77E1.

STATE OF CALIFORNIA
DEPARTMENT OF TRANSPORTATION

METAL BEAM GUARD RAILING TYPICAL LAYOUTS FOR EMBANKMENTS

NO SCALE

RSP A77E3 DATED JUNE 6, 2008 SUPERSEDES STANDARD PLAN A77E3
DATED MAY 1, 2006 - PAGE 50 OF THE STANDARD PLANS BOOK DATED MAY 2006.

REVISED STANDARD PLAN RSP A77E3

2006 REVISED STANDARD PLAN RSP A77E3

12-10-07

DIST	COUNTY	ROUTE	POST MILES TOTAL PROJECT	SHEET NO.	TOTAL SHEETS
02	Plu	70	0.6/35.2	42	101

Randell D. Hiatt
REGISTERED CIVIL ENGINEER

June 6, 2008
PLANS APPROVAL DATE

REGISTERED PROFESSIONAL ENGINEER
Randell D. Hiatt
No. C50200
Exp. 6-30-09
CIVIL
STATE OF CALIFORNIA

The State of California or its officers or agents shall not be responsible for the accuracy or completeness of electronic copies of this plan sheet.

To accompany plans dated 1-9-12

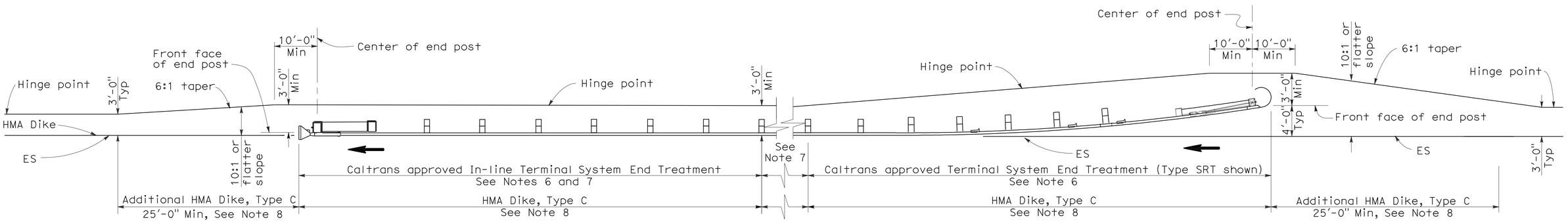

TYPE 11H LAYOUT

(EMBANKMENT GUARD RAILING INSTALLATION WITH FLARED END TREATMENT
AND AN IN-LINE TREATMENT AT THE ENDS OF RAILING)
See Notes 5 and 8

NOTES:

1. Line post, blocks and hardware to be used are shown on Standard Plans A77A1, A77A2, A77B1, A77C1 and A77C2.
2. Guard rail post spacing to be 6'-3" center to center, except as otherwise noted.
3. Except as noted, line posts are 6" x 8" x 6'-0" wood with 6" x 8" x 1'-2" wood blocks. W6 x 9 steel posts, 6'-0" in length, with 6" x 8" x 1'-2" notched wood blocks or plastic blocks may be used for 6" x 8" x 6'-0" wood post with 6" x 8" x 1'-2" wood blocks where applicable and when specified.
4. Direction of adjacent traffic indicated by ⟶.
5. Layout Types 11D through 11L, shown on the A77E Series of Revised Standard Plans, are typically used where guard railing is recommended to shield embankment slopes and a crashworthy end treatment is required for both directions of traffic.
6. The type of terminal system end treatment to be used will be shown on the Project Plans.
7. Dependent on site conditions (embankment height and side slope), construction of additional guard railing (length equal to multiples of 12'-6" with 6'-3" post spacing) may be advisable.
8. Where placement of dike is required with guard railing installations, see Revised Standard Plan RSP A77C4 for dike positioning details.

STATE OF CALIFORNIA
DEPARTMENT OF TRANSPORTATION

METAL BEAM GUARD RAILING TYPICAL LAYOUTS FOR EMBANKMENTS

NO SCALE

RSP A77E4 DATED JUNE 6, 2008 SUPERSEDES STANDARD PLAN A77E4
DATED MAY 1, 2006 - PAGE 51 OF THE STANDARD PLANS BOOK DATED MAY 2006.

REVISED STANDARD PLAN RSP A77E4

2006 REVISED STANDARD PLAN RSP A77E4

DIST	COUNTY	ROUTE	POST MILES TOTAL PROJECT	SHEET NO.	TOTAL SHEETS
02	Plu	70	0.6/35.2	43	101

Randell D. Hiatt
REGISTERED CIVIL ENGINEER

June 6, 2008
PLANS APPROVAL DATE

REGISTERED PROFESSIONAL ENGINEER
Randell D. Hiatt
No. C50200
Exp. 6-30-09
CIVIL
STATE OF CALIFORNIA

The State of California or its officers or agents shall not be responsible for the accuracy or completeness of electronic copies of this plan sheet.

To accompany plans dated 1-9-12

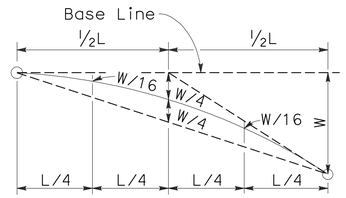

TYPICAL PARABOLIC LAYOUT

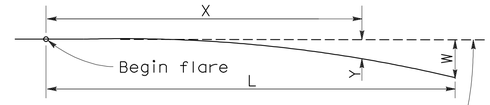

Base Line (Edge of paved shoulder or offset line of edge of traveled way)

$$Y = \frac{WX^2}{L^2}$$

Y = Offset from base line
W = Maximum offset
X = Distance along base line
L = Length of flare

PARABOLIC FLARE OFFSETS

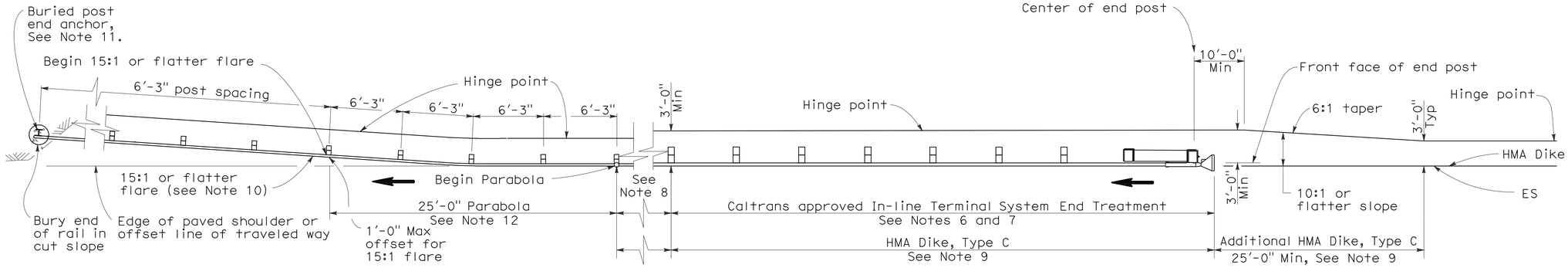

TYPE 11I LAYOUT

(EMBANKMENT GUARD RAILING INSTALLATION WITH IN-LINE END TREATMENT AND A BURIED END ANCHOR TREATMENT AT THE ENDS OF RAILING)
See Note 5

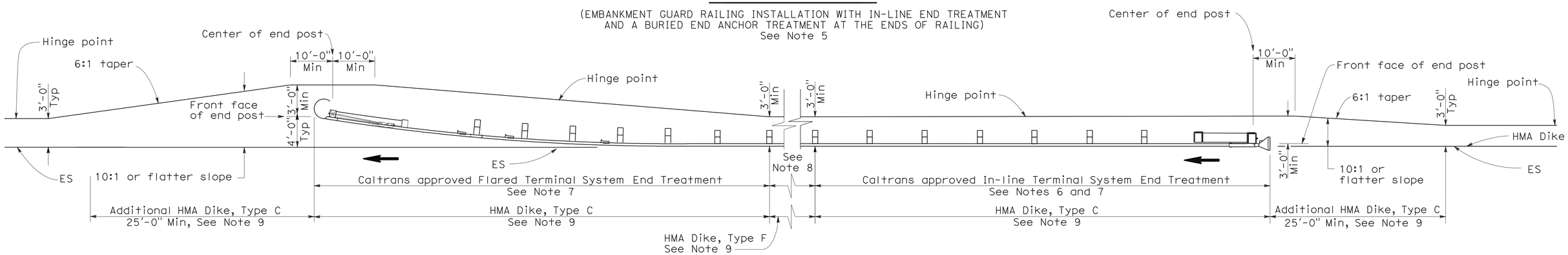

TYPE 11J LAYOUT

(EMBANKMENT GUARD RAILING INSTALLATION WITH IN-LINE END TREATMENT AND FLARED END TREATMENT AT THE ENDS OF RAILING)
See Note 5

NOTES:

1. Line post, blocks and hardware to be used are shown on Standard Plans A77A1, A77A2, A77B1, A77C1 and A77C2.
2. Guard rail post spacing to be 6'-3" center to center, except as otherwise noted.
3. Except as noted, line posts are 6" x 8" x 6'-0" wood with 6" x 8" x 1'-2" wood blocks. W6 x 9 steel posts, 6'-0" in length, with 6" x 8" x 1'-2" notched wood blocks or plastic blocks may be used for 6" x 8" x 6'-0" wood post with 6" x 8" x 1'-2" wood blocks where applicable and when specified.
4. Direction of adjacent traffic indicated by ➡.
5. Layout Types 11D through 11L, shown on the A77E Series of Revised Standard Plans, are typically used where guard railing is recommended to shield embamkment slopes and a crashworthy end treatment is required for both directions of traffic.
6. In-line Terminal System End Treatments are used where site conditions will not accommodate a flared end treatment.
7. The type of terminal system end treatment to be used will be shown on the Project Plans.
8. Dependent on site conditions (embankment height and side slope), construction of additional guard railing (length equal to multiples of 12'-6" with 6'-3" post spacing) may be advisable.
9. Where placement of dike is required with guard railing installations, see Revised Standard Plan RSP A77C4 for dike positioning details.
10. The 15:1 or flatter flare used with buried end anchors is based on the edge of the paved shoulder or offset line of edge of the traveled way. The length of guard railing within the 15:1 or flatter flare is based on site conditions and should be a length equal to multiples of 12'-6".
11. For details of the buried post end anchor used with Type 11I Layout, see Standard Plan A77I2.
12. For typical flare offsets for 25'-0" length parabola with maximum offset of 1'-0", see Revised Standard Plan RSP A77E1.

STATE OF CALIFORNIA
DEPARTMENT OF TRANSPORTATION

METAL BEAM GUARD RAILING TYPICAL LAYOUTS FOR EMBANKMENTS

NO SCALE

RSP A77E5 DATED JUNE 6, 2008 SUPERSEDES STANDARD PLAN A77E5 DATED MAY 1, 2006 - PAGE 52 OF THE STANDARD PLANS BOOK DATED MAY 2006.

REVISED STANDARD PLAN RSP A77E5

2006 REVISED STANDARD PLAN RSP A77E5

12-10-07

DIST	COUNTY	ROUTE	POST MILES TOTAL PROJECT	SHEET NO.	TOTAL SHEETS
02	Plu	70	0.6/35.2	44	101

Randell D. Hiatt
REGISTERED CIVIL ENGINEER

June 6, 2008
PLANS APPROVAL DATE

REGISTERED PROFESSIONAL ENGINEER
Randell D. Hiatt
No. C50200
Exp. 6-30-09
CIVIL
STATE OF CALIFORNIA

The State of California or its officers or agents shall not be responsible for the accuracy or completeness of electronic copies of this plan sheet.

To accompany plans dated 1-9-12

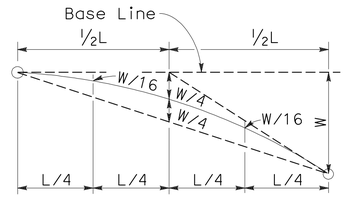

TYPICAL PARABOLIC LAYOUT

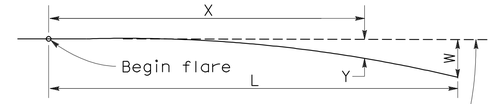

Base Line (Edge of paved shoulder or offset line of edge of traveled way)

$$Y = \frac{WX^2}{L^2}$$

Y = Offset from base line
W = Maximum offset
X = Distance along base line
L = Length of flare

PARABOLIC FLARE OFFSETS

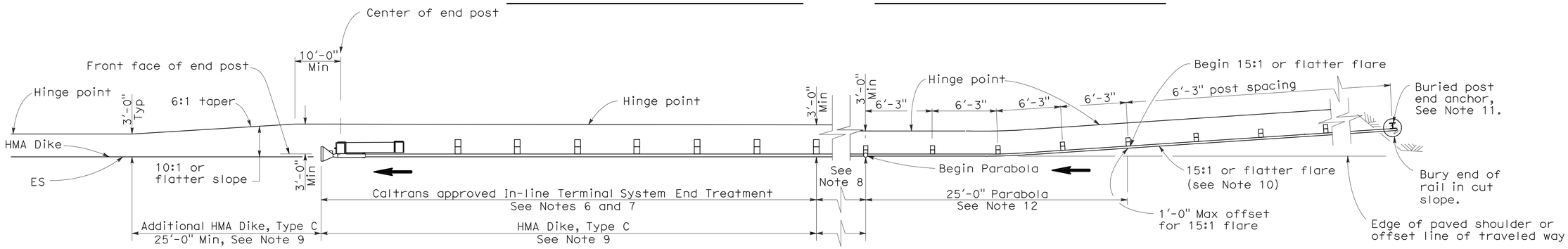

TYPE 11K LAYOUT

(EMBANKMENT GUARD RAILING INSTALLATION WITH A BURIED END ANCHOR TREATMENT AND AN IN-LINE END TREATMENT AT THE ENDS OF RAILING)
See Note 5

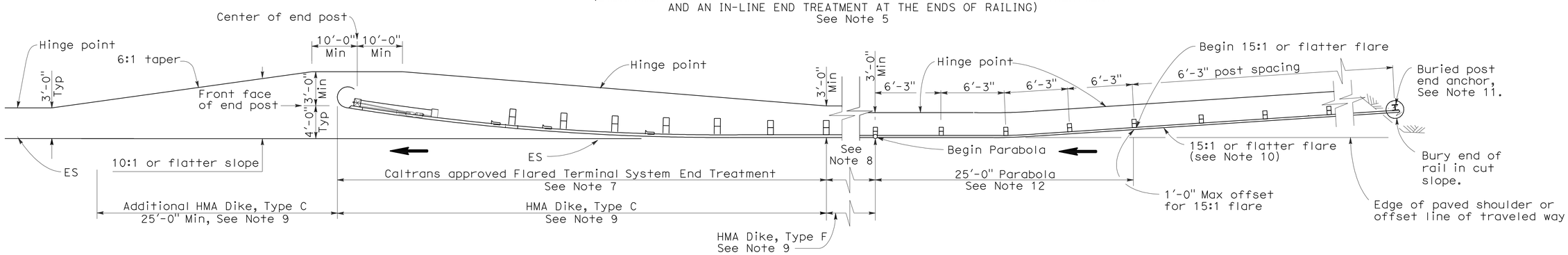

TYPE 11L LAYOUT

(EMBANKMENT GUARD RAILING INSTALLATION WITH A BURIED END ANCHOR TREATMENT AND A FLARED END TREATMENT AT THE ENDS OF RAILING)
See Note 5

NOTES:

1. Line post, blocks and hardware to be used are shown on Standard Plans A77A1, A77A2, A77B1, A77C1 and A77C2.
2. Guard rail post spacing to be 6'-3" center to center, except as otherwise noted.
3. Except as noted, line posts are 6" x 8" x 6'-0" wood with 6" x 8" x 1'-2" wood blocks. W6 x 9 steel posts, 6'-0" in length, with 6" x 8" x 1'-2" notched wood blocks or plastic blocks may be used for 6" x 8" x 6'-0" wood post with 6" x 8" x 1'-2" wood blocks where applicable and when specified.
4. Direction of adjacent traffic indicated by ⟶.
5. Layout Types 11D through 11L, shown on the A77E Series of Revised Standard Plans, are typically used where guard railing is recommended to shield embamkment slopes and a crashworthy end treatment is required for both directions of traffic.
6. In-line Terminal System End Treatments are used where site conditions will not accommodate a flared end treatment.
7. The type of terminal system end treatment to be used will be shown on the Project Plans.
8. Dependent on site conditions (embankment height and side slope), construction of additional guard railing (length equal to multiples of 12'-6" with 6'-3" post spacing) may be advisable.
9. Where placement of dike is required with guard railing installations, see Revised Standard Plan RSP A77C4 for dike positioning details.
10. The 15:1 or flatter flare used with buried end anchors is based on the edge of the paved shoulder or offset line of edge of the traveled way. The length of guard railing within the 15:1 or flatter flare is based on site conditions and should be a length equal to multiples of 12'-6".
11. For details of the buried post end anchor used with Type 11K and 11L Layouts, see Standard Plan A77I2.
12. For typical flare offsets for 25'-0" length parabola with maximum offset of 1'-0", see Revised Standard Plan RSP A77E1.

STATE OF CALIFORNIA
DEPARTMENT OF TRANSPORTATION

METAL BEAM GUARD RAILING TYPICAL LAYOUTS FOR EMBANKMENTS

NO SCALE

RSP A77E6 DATED JUNE 6, 2008 SUPERSEDES STANDARD PLAN A77E6
DATED MAY 1, 2006 - PAGE 53 OF THE STANDARD PLANS BOOK DATED MAY 2006.

REVISED STANDARD PLAN RSP A77E6

2006 REVISED STANDARD PLAN RSP A77E6

12-10-07

Dist	COUNTY	ROUTE	POST MILES TOTAL PROJECT	SHEET No.	TOTAL SHEETS
02	Plu	70	0.6/35.2	45	101

Randell D. Hiatt
REGISTERED CIVIL ENGINEER

May 20, 2011
PLANS APPROVAL DATE

REGISTERED PROFESSIONAL ENGINEER
Randell D. Hiatt
No. C50200
Exp. 6-30-11
CIVIL
STATE OF CALIFORNIA

The State of California or its officers or agents shall not be responsible for the accuracy or completeness of electronic copies of this plan sheet.

To accompany plans dated 1-9-12

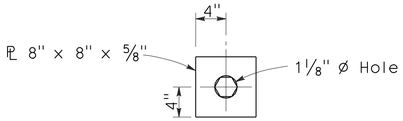

DETAIL A
CABLE CONNECTION
END PLATE

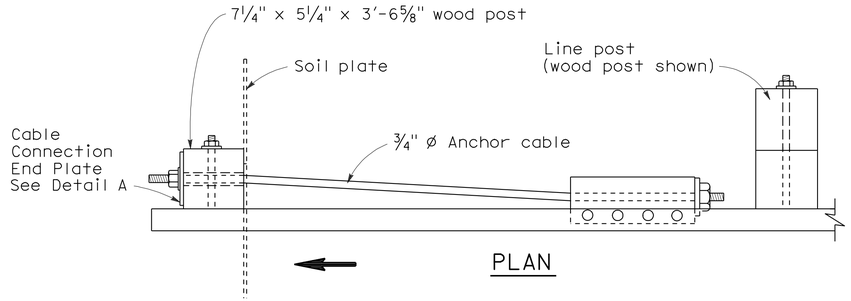

PLAN

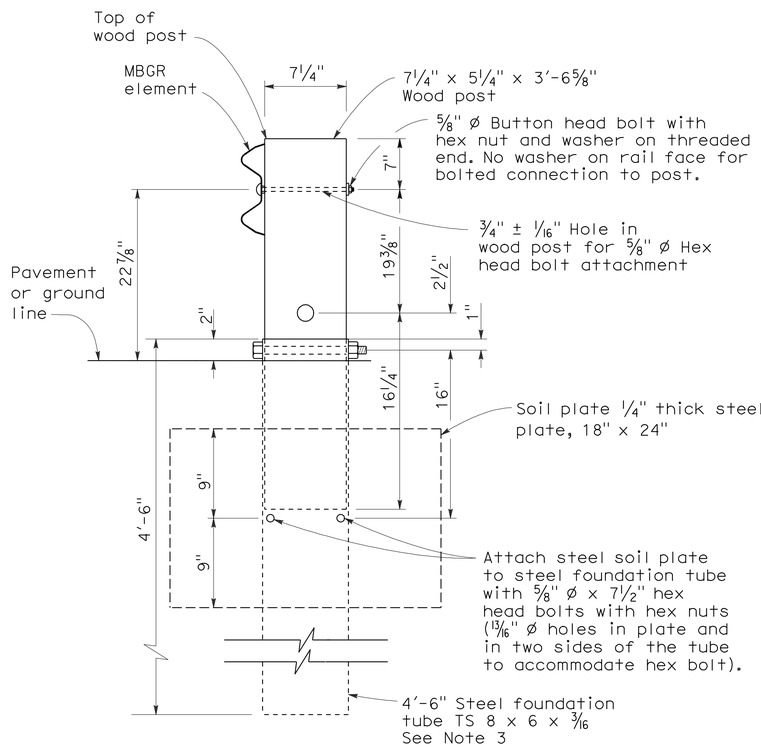

SECTION A-A

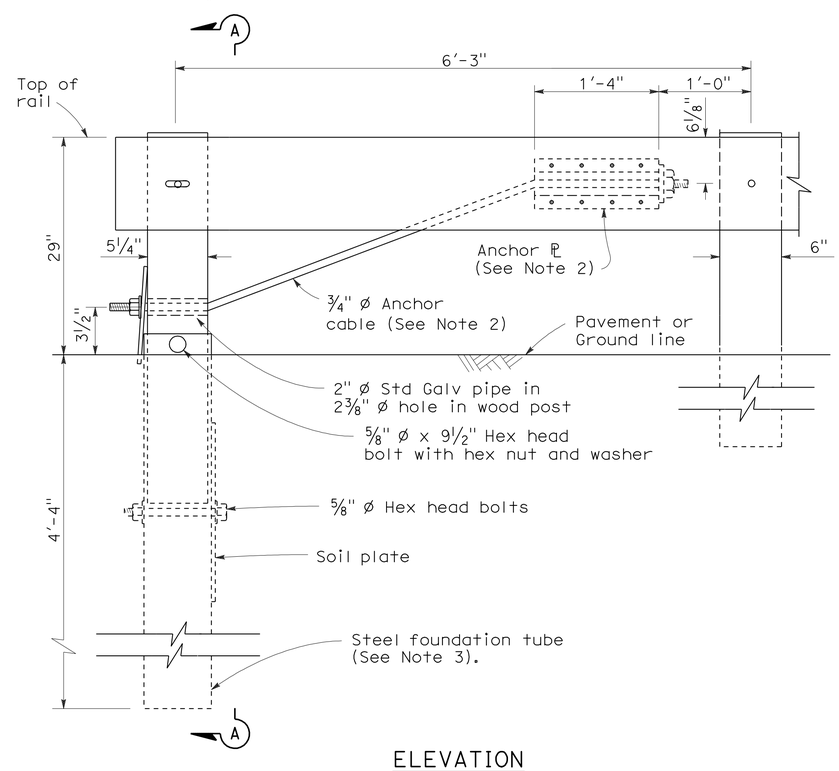

ELEVATION
END ANCHOR
ASSEMBLY (TYPE SFT)
See Note 1

NOTES:

1. See the A77E, A77F and A77G series of Standard Plans for typical use of End Anchor Assembly (Type SFT).
2. For details of the anchor plate and 3/4" cable, see Standard Plan A77H3.
3. A 6'-0" length steel foundation tube, TS 8 x 6 x 3/16, without a soil plate, may be furnished and installed in place of the 4'-6" length steel foundation tube and soil plate shown. Minimum embedment of the 6'-0" length tube shall be 5'-9". A 5/8" Ø hex head bolt and nut shall be installed in the hole in the 6'-0" length tube to keep the wood post from dropping into the tube.
4. Direction of traffic indicated by ⟹.
5. Install line post, steel foundation tube and soil plate in soil.

STATE OF CALIFORNIA
DEPARTMENT OF TRANSPORTATION

METAL RAILING END ANCHOR ASSEMBLY (TYPE SFT)

NO SCALE

RSP A77H1 DATED MAY 20, 2011 SUPERSEDES STANDARD PLAN A77H1
DATED MAY 1, 2006 - PAGE 67 OF THE STANDARD PLANS BOOK DATED MAY 2006.

REVISED STANDARD PLAN RSP A77H1

2006 REVISED STANDARD PLAN RSP A77H1

Dist	COUNTY	ROUTE	POST MILES TOTAL PROJECT	SHEET No.	TOTAL SHEETS
02	Plu	70	0.6/35.2	46	101

Randell D. Hiatt
REGISTERED CIVIL ENGINEER

May 20, 2011
PLANS APPROVAL DATE

REGISTERED PROFESSIONAL ENGINEER
Randell D. Hiatt
No. C50200
Exp. 6-30-11
CIVIL
STATE OF CALIFORNIA

The State of California or its officers or agents shall not be responsible for the accuracy or completeness of electronic copies of this plan sheet.

To accompany plans dated 1-9-12

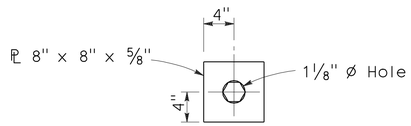

DETAIL A
CABLE CONNECTION
END PLATE

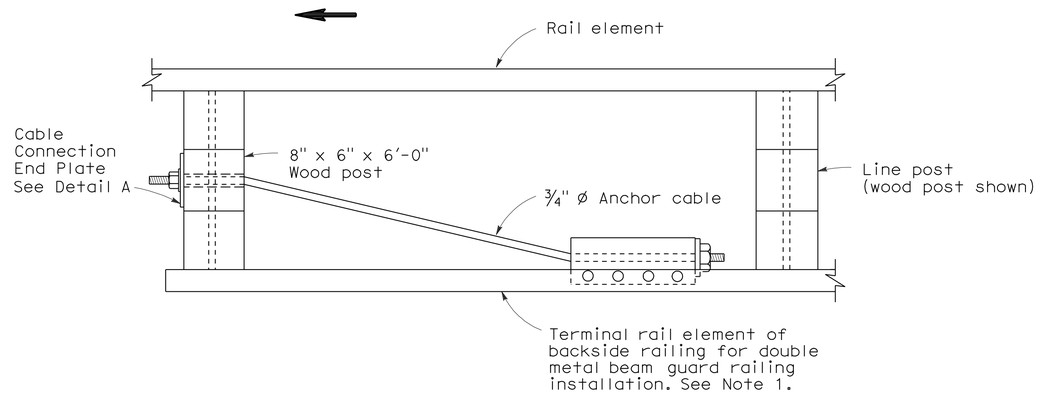

PLAN

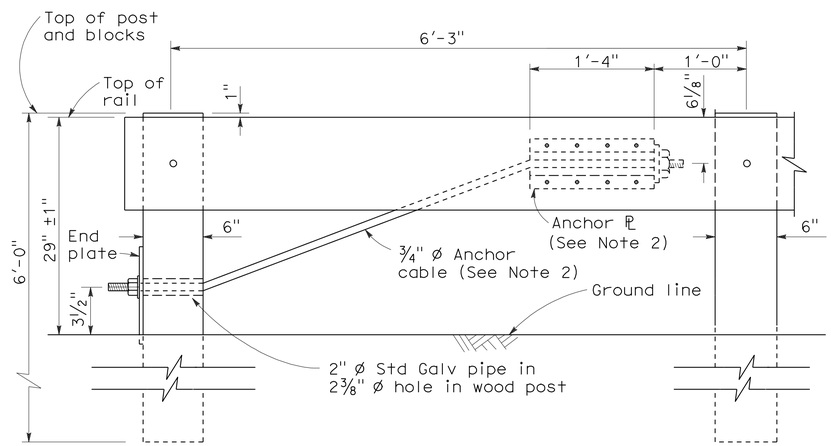

ELEVATION
RAIL TENSIONING
ASSEMBLY
See Note 1

NOTES:

1. See Standard Plan A77F3 and Standard Plan A77G1 for typical use of rail tensioning assembly.
2. For details of the anchor plate and 3/4" cable, see Standard Plan A77H3.
3. Direction of traffic indicated by ⟶.

STATE OF CALIFORNIA
DEPARTMENT OF TRANSPORTATION

METAL RAILING
RAIL TENSIONING ASSEMBLY

NO SCALE

RSP A77H2 DATED MAY 20, 2011 SUPERSEDES STANDARD PLAN A77H2
DATED MAY 1, 2006 - PAGE 68 OF THE STANDARD PLANS BOOK DATED MAY 2006.

REVISED STANDARD PLAN RSP A77H2

2006 REVISED STANDARD PLAN RSP A77H2

3-10-11

Dist	COUNTY	ROUTE	POST MILES TOTAL PROJECT	SHEET No.	TOTAL SHEETS
02	Plu	70	0.6/35.2	47	101

Randell D. Hiatt
REGISTERED CIVIL ENGINEER

May 20, 2011
PLANS APPROVAL DATE

REGISTERED PROFESSIONAL ENGINEER
Randell D. Hiatt
No. C50200
Exp. 6-30-11
CIVIL
STATE OF CALIFORNIA

The State of California or its officers or agents shall not be responsible for the accuracy or completeness of electronic copies of this plan sheet.

To accompany plans dated 1-9-12

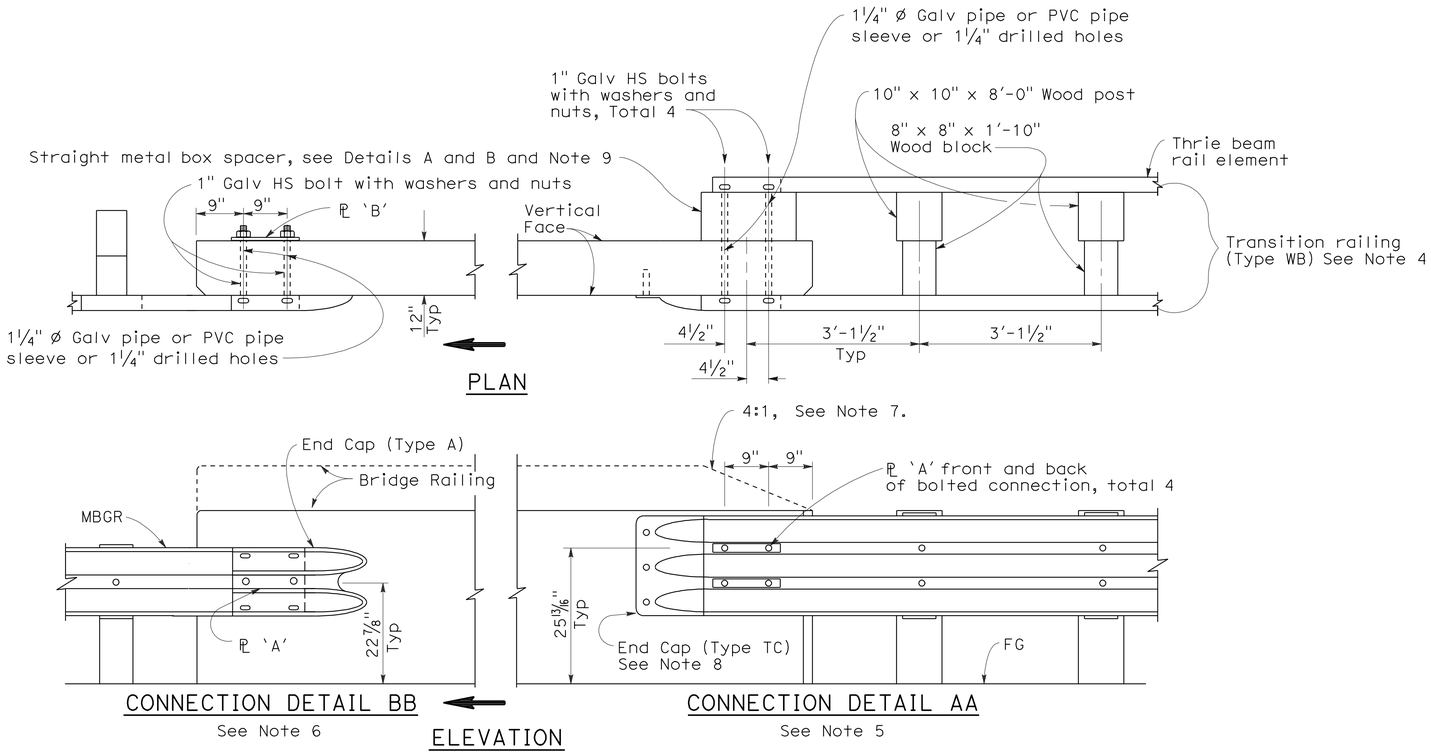

GUARD RAILING CONNECTION TO BRIDGE RAILING WITHOUT SIDEWALK

NOTES:

1. See Revised Standard Plan RSP A77J2 for additional connection details to bridges without sidewalks.
2. Additional details of posts, blocks and hardware are shown on Standard Plan A77B1, A77C1 and A77C2.
3. Direction of adjacent traffic indicated by ➡.
4. For additional details of Transition Railing (Type WB), see Standard Plan A77J4. Transition Railing (Type WB) transitions the 12 gage w-beam standard railing section of guard railing to a heavier gage nested thrie beam railing section which is connected to the concrete bridge railing.
5. For typical use of Connection Detail AA, see Layout Types 12A and 12B on Revised Standard Plan RSP A77F1, Layout Types 12C and 12D on Standard Plan A77F2, and Layout Type 12E on Revised Standard Plan RSP A77F3.
6. For typical use of Connection Detail BB, see Layout Type 12D (structure departure railing connection) on Standard Plan A77F2 and Layout Type 12DD on Standard Plan A77F5.
7. Where the height of the bridge railing exceeds the height of the thrie beam railing by more than 1" at Connection Detail AA, taper the top of the end of the bridge railing at 4:1 to match the top elevation of the thrie beam rail.
8. For details of End Cap (Type TC), see Standard Plan A77J4.
9. See Standard Plan A77J4 for additional details regarding depth dimension for straight metal box spacer.

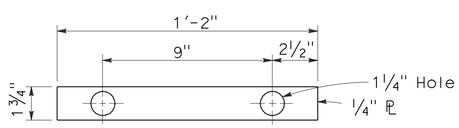

PLATE 'A'

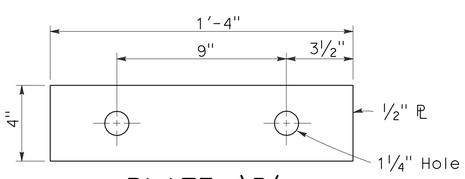

PLATE 'B'
(For backside of connection BB)

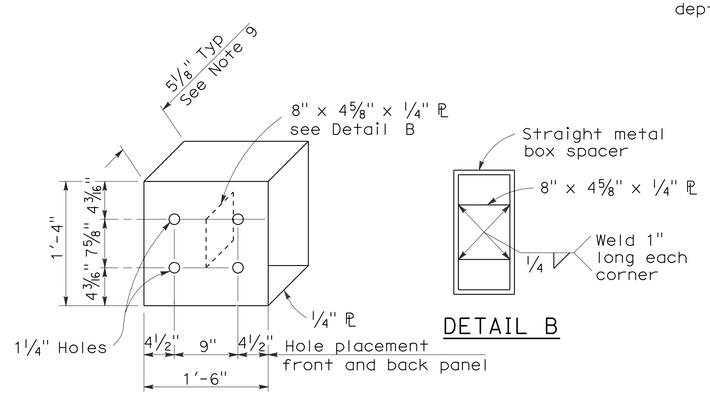

DETAIL A

DETAIL B

STRAIGHT METAL BOX SPACER

STATE OF CALIFORNIA
DEPARTMENT OF TRANSPORTATION

METAL BEAM GUARD RAILING CONNECTIONS TO BRIDGE RAILINGS WITHOUT SIDEWALKS DETAILS No.1

NO SCALE

RSP A77J1 DATED MAY 20, 2011 SUPERSEDES RSP A77J1 DATED JUNE 6, 2008 AND STANDARD PLAN A77J1 DATED MAY 1, 2006 - PAGE 72 OF THE STANDARD PLANS BOOK DATED MAY 2006.

REVISED STANDARD PLAN RSP A77J1

2006 REVISED STANDARD PLAN RSP A77J1

3-10-11

DIST	COUNTY	ROUTE	POST MILES TOTAL PROJECT	SHEET NO.	TOTAL SHEETS
02	Plu	70	0.6/35.2	48	101

Randell D. Hiatt
REGISTERED CIVIL ENGINEER

June 6, 2008
PLANS APPROVAL DATE

REGISTERED PROFESSIONAL ENGINEER
Randell D. Hiatt
No. C50200
Exp. 6-30-09
CIVIL
STATE OF CALIFORNIA

The State of California or its officers or agents shall not be responsible for the accuracy or completeness of electronic copies of this plan sheet.

To accompany plans dated 1-9-12

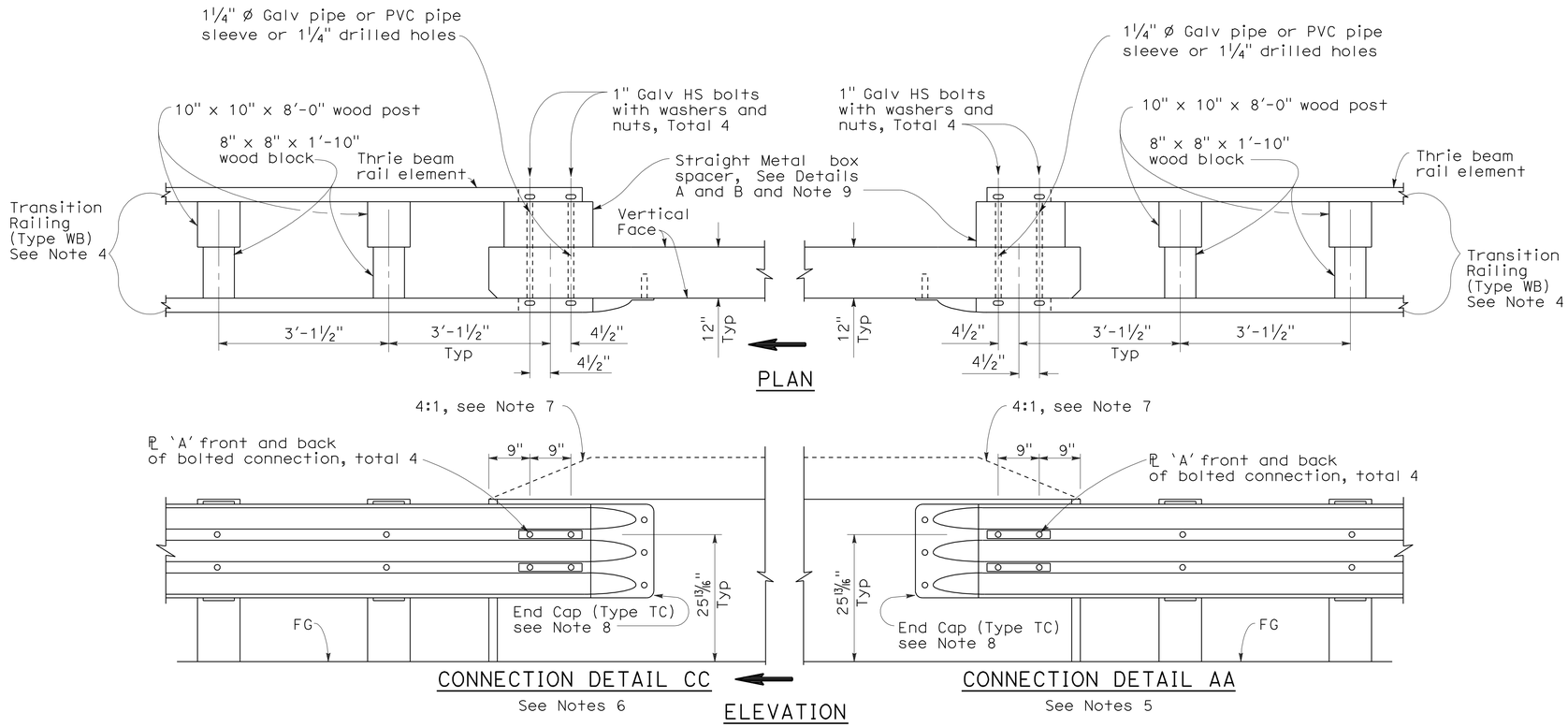

GUARD RAILING CONNECTION TO BRIDGE RAILING WITHOUT SIDEWALK

NOTES:

1. See Revised Standard Plan RSP A77J1 for additional connection details to bridges without sidewalks.
2. Additional details of posts, blocks and hardware are shown on Standard Plan A77B1, A77C1 and A77C2.
3. Direction of adjacent traffic indicated by ⟹.
4. For additional details of Transition Railing (Type WB), see Standard Plan A77J4. Transition Railing (Type WB) transitions the 12 gage w-beam standard railing section of guard railing to a heavier gage nested thrie beam railing section which is connected to the concrete bridge railing.
5. For typical use of Connection Detail AA, see Layout Types 12A and 12B on Revised Standard Plan RSP A77F1, Layout Types 12C and 12D on Standard Plan A77F2, and Layout Type 12E on Revised Standard Plan RSP A77F3.
6. For typical use of Connection Detail CC, see Layout Types 12AA and 12BB on Standard Plan A77F4 and Layout Type 12CC on Standard Plan A77F5.
7. Where the height of the bridge railing exceeds the height of the thrie beam railing by more than 1" at Connection Detail AA and connection Detail CC, taper the top of the end of the bridge railing at 4:1 to match the top elevation of the thrie beam railing.
8. For details of End Cap (Type TC), see Standard Plans A77J4.
9. See Standard Plans A77J4 for additional details regarding depth dimension for straight metal box spacer.

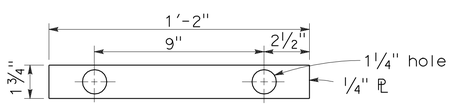

PLATE 'A'

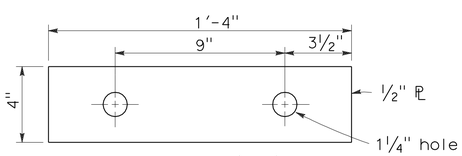

PLATE 'B'
(For backside of connection BB)

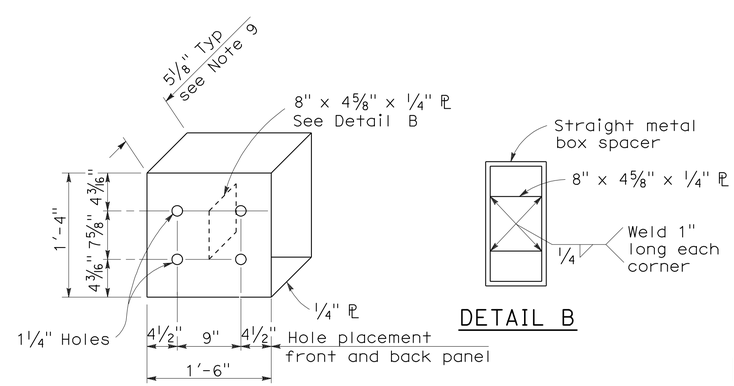

DETAIL A

DETAIL B

STRAIGHT METAL BOX SPACER

STATE OF CALIFORNIA
DEPARTMENT OF TRANSPORTATION

METAL BEAM GUARD RAILING CONNECTIONS TO BRIDGE RAILINGS WITHOUT SIDEWALKS DETAILS No.2

NO SCALE

RSP A77J2 DATED JUNE 6, 2008 SUPERSEDES STANDARD PLAN A77J2 DATED MAY 1, 2006 - PAGE 73 OF THE STANDARD PLANS BOOK DATED MAY 2006.

REVISED STANDARD PLAN RSP A77J2

2006 REVISED STANDARD PLAN RSP A77J2

12-10-07

Dist	COUNTY	ROUTE	POST MILES TOTAL PROJECT	SHEET No.	TOTAL SHEETS
02	Plu	70	0.6/35.2	49	101

Randell D. Hiatt
REGISTERED CIVIL ENGINEER

May 20, 2011
PLANS APPROVAL DATE

To accompany plans dated 1-9-12

REGISTERED PROFESSIONAL ENGINEER Randell D. Hiatt No. C50200 Exp. 6-30-11 CIVIL STATE OF CALIFORNIA

The State of California or its officers or agents shall not be responsible for the accuracy or completeness of electronic copies of this plan sheet.

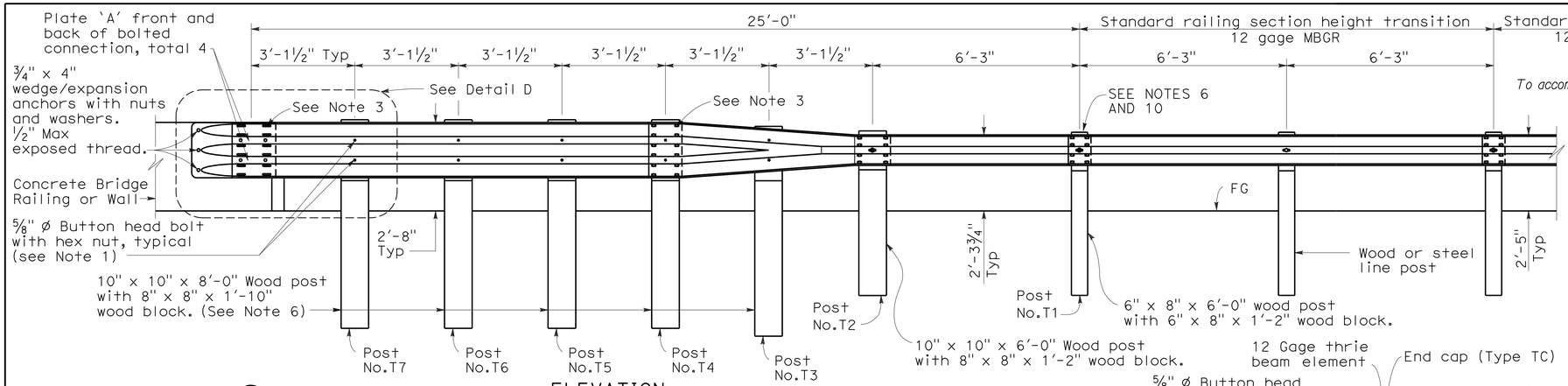

ELEVATION

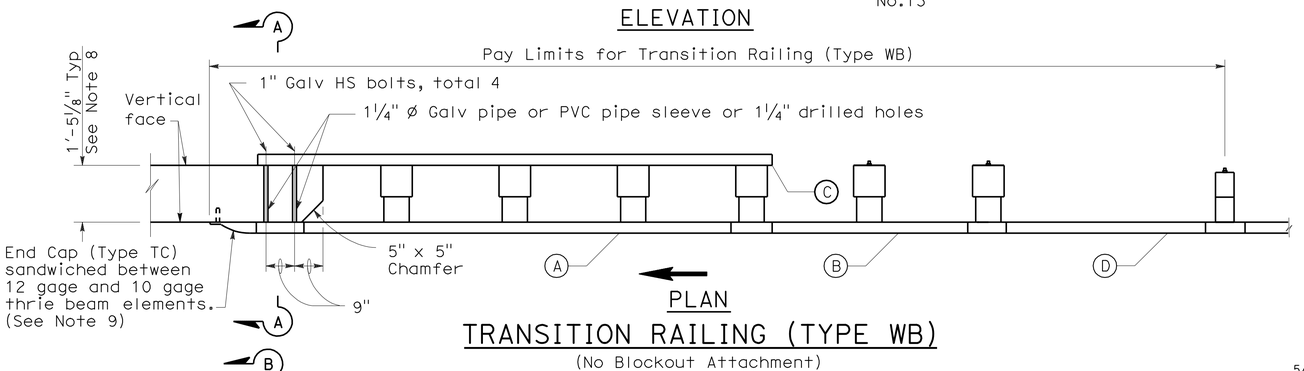

PLAN

TRANSITION RAILING (TYPE WB)

(No Blockout Attachment)

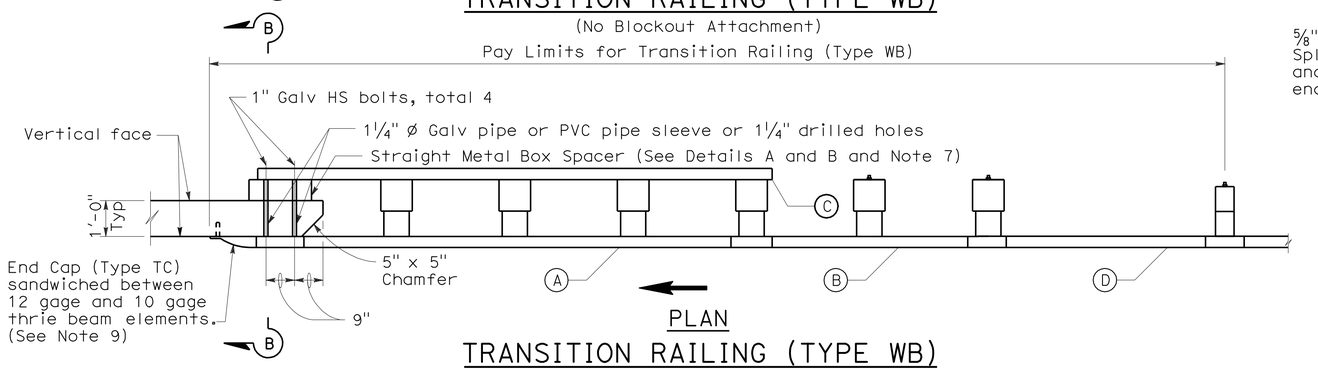

PLAN

TRANSITION RAILING (TYPE WB)

(Blockout Attachment)

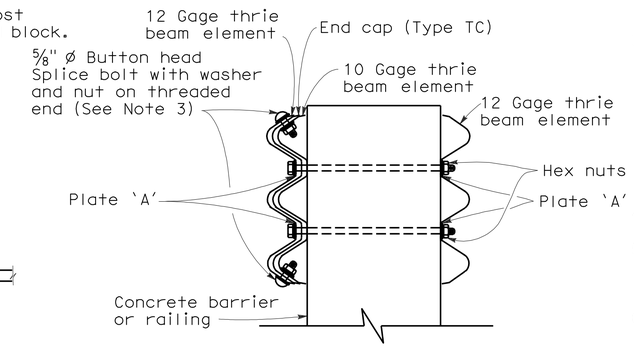

SECTION A-A

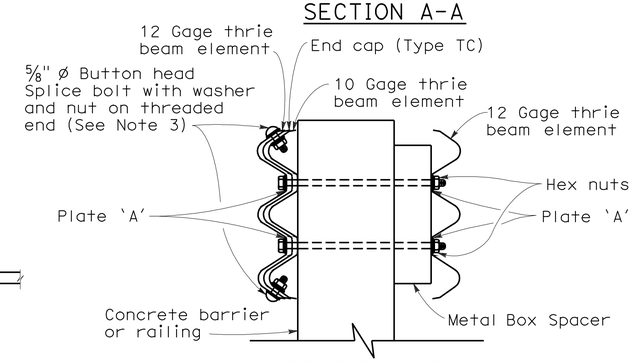

SECTION B-B

NOTES:

1. Use ⅝" ø Button head bolts and hex nuts for connections to posts. No washer on rail face for bolted connections to post.
2. The nested rail elements, end cap, and 'W' beam to thrie beam element may be spliced together prior to bolting the elements to the wood post and concrete barrier or railing.
3. Exterior splice bolt holes for rail element splices at Post No. T4 and the connection to the concrete barrier or railing shall be the standard 29/32" x 1⅛" slot size. Interior splice bolt holes at these locations may be increased up to 1¼" ø. Only the top 2 and the bottom 2 splice bolts with washers and nuts are required for rail splices at Post No. T4 and the connection to the concrete barrier or railing.
4. Direction of adjacent traffic indicated by ➡.
5. The top elevation of Posts No. T2 through No. T7 shall not project more than 1" above the top elevation of the rail element.
6. Typically, the railing connected to Transition Railing (Type WB) will be either standard railing section of metal beam guard railing with height transition ratio of 120:1 or an approved Caltrans end treatment attached to Post No. T1.
7. The depth of the metal box spacer varies from the 5⅛" to 1½" and is dependent on the width of the concrete railing or wall. The combined dimension for the depth of the metal box spacer plus the width of railing or wall is typically 17⅛". Where the space between the backside of the concrete railing or wall and the rear thrie beam element is less than 1½", metal plates similar to Plate 'A' are to be used as spacers.
8. Where the width of the concrete railing or wall is greater than 17⅛", wood blocks are to be used to fill the space created between the backside of Posts No. T4 through No. T7 and the rear thrie beam element. These wood blocks shall be 8" in width and 1'-2" in length. The dimension between the front thrie beam element and the rear thrie beam element is to match the width of the concrete railing or wall.
9. End cap may be installed over 12 gage and 10 gage thrie beam elements where transition railing is installed on the departure end of bridge railing.
10. Conform standard railing section height to 2'-3¾" at Post No. T1 using height transition ratio of 120:1.

LEGEND

(A) Nested thrie beam elements (one 12 gage element nested over one 10 gage element).

(B) One 10 gage "W" beam to thrie beam element.

(C) One 12 gage thrie beam element.

(D) One 10 gage "W" beam rail element (7'-3½" length)

10 gage = 0.135" thick

12 gage = 0.108" thick

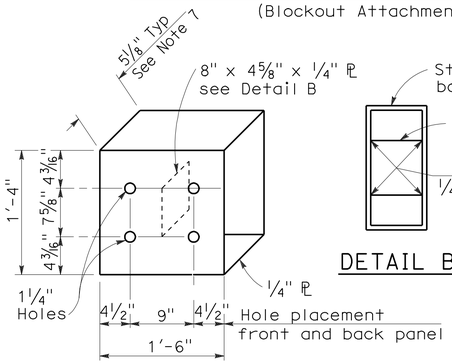

DETAIL A

STRAIGHT METAL BOX SPACER

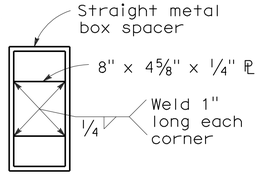

DETAIL B

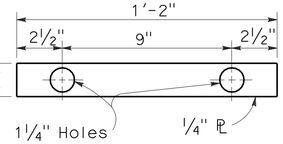

DETAIL C

PLATE 'A'

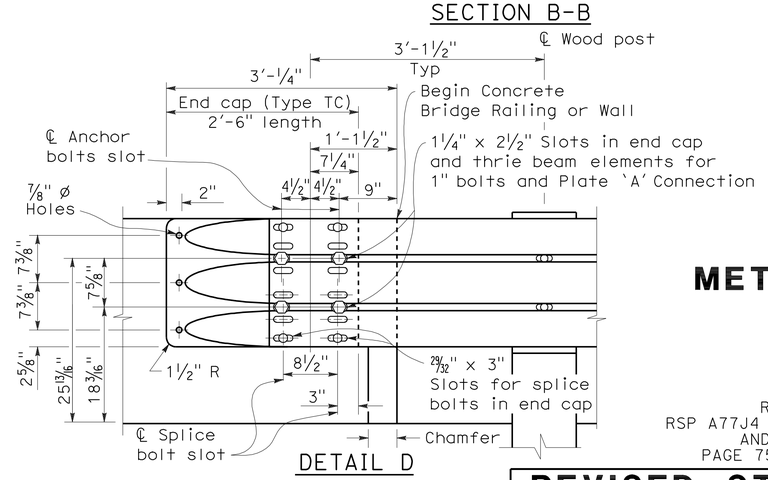

DETAIL D

STATE OF CALIFORNIA
DEPARTMENT OF TRANSPORTATION

METAL BEAM GUARD RAILING TRANSITION RAILING (TYPE WB)

NO SCALE

RSP A77J4 DATED MAY 20, 2011 SUPERSEDES
RSP A77J4 DATED JUNE 5, 2009, RSP A77J4 DATED JUNE 6, 2008
AND STANDARD PLAN A77J4 DATED MAY 1, 2006 -
PAGE 75 OF THE STANDARD PLANS BOOK DATED MAY 2006.

REVISED STANDARD PLAN RSP A77J4

2006 REVISED STANDARD PLAN RSP A77J4

5-14-09

DIST	COUNTY	ROUTE	POST MILES TOTAL PROJECT	SHEET NO.	TOTAL SHEETS
02	Plu	70	0.6/35.2	50	101

Randell D. Hiatt
REGISTERED CIVIL ENGINEER

June 6, 2008
PLANS APPROVAL DATE

REGISTERED PROFESSIONAL ENGINEER
Randell D. Hiatt
No. C50200
Exp. 6-30-09
CIVIL
STATE OF CALIFORNIA

The State of California or its officers or agents shall not be responsible for the accuracy or completeness of electronic copies of this plan sheet.

To accompany plans dated 1-9-12

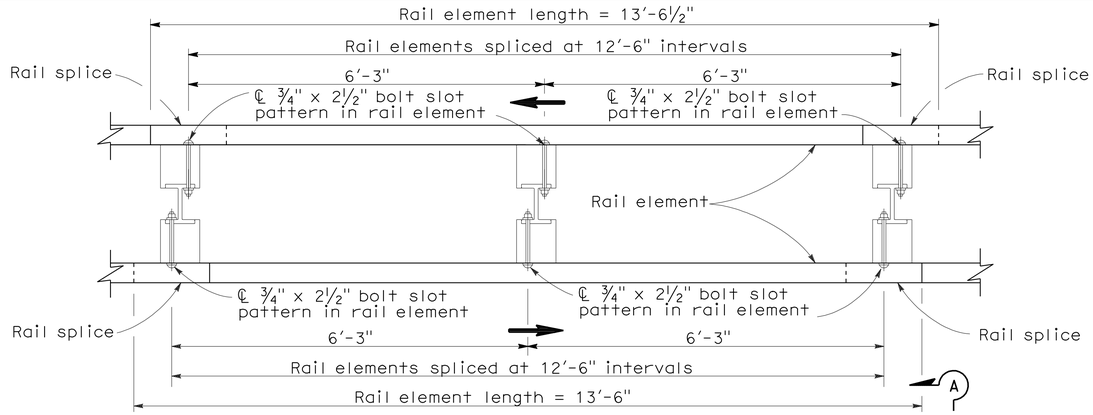

PLAN

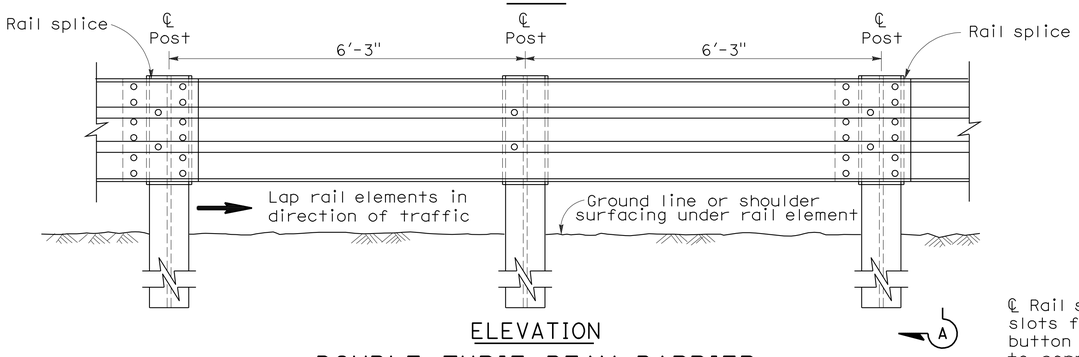

ELEVATION

DOUBLE THRIE BEAM BARRIER

(Steel post with notched wood or notched plastic blocks)
See Note 1

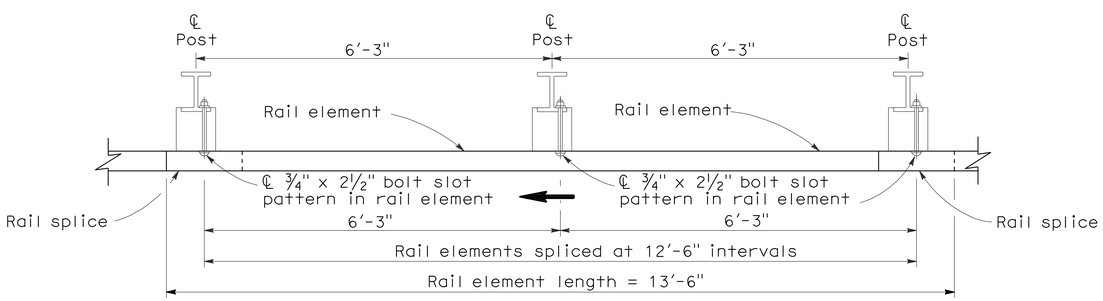

PLAN

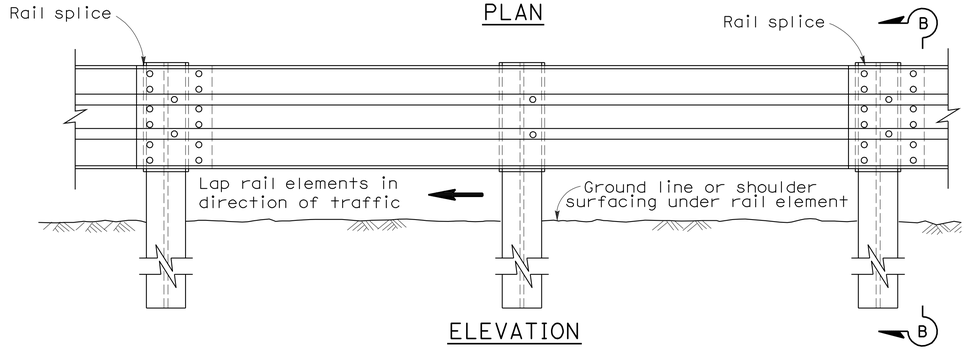

ELEVATION

SINGLE THRIE BEAM BARRIER

(Steel post with notched wood or notched plastic blocks)
See Note 1

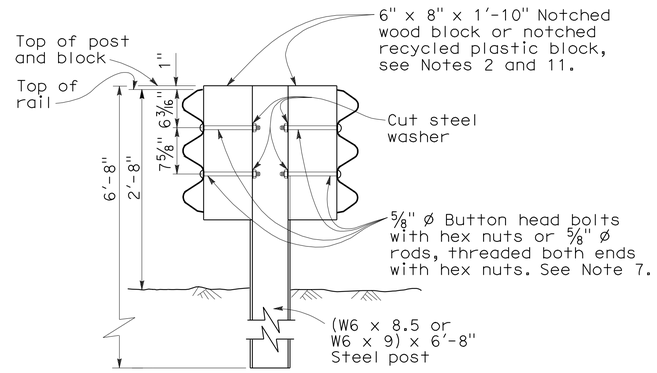

SECTION A-A

TYPICAL STEEL LINE POST INSTALLATION

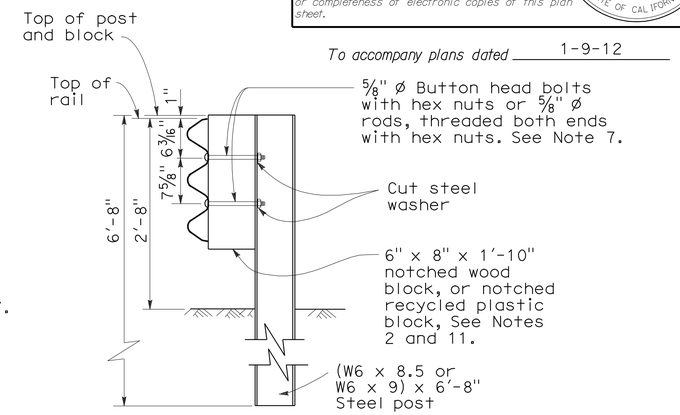

SECTION B-B

TYPICAL STEEL LINE POST INSTALLATION

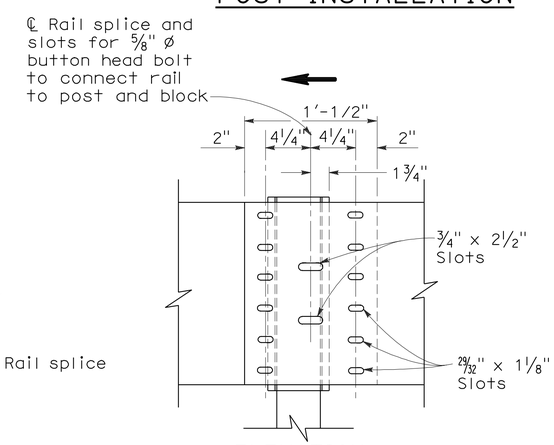

ELEVATION

RAIL ELEMENT SPLICE DETAIL

a) Connect the overlapped ends of the thrie beam rail elements with ⅝" ø x 1⅛" button head oval shoulder bolts inserted into the 29/32" x 1⅛" slots and bolted together with ⅝" ø x 1⅛" recessed hex nuts. Recess of hex nut points toward rail element. A total of 12 bolts and nuts are to be used at each rail splice connection.

b) The ends of the rail elements are to be overlapped in the direction of traffic (see details).

c) Where end cap is to be attached to the end of a rail element, a total of 4 of the above described splice bolts and nuts are to be used. Where a return cap is to be attached to the ends of rail elements, a total of 8 of the above described splice bolts and nuts are to be used.

NOTES:

1. For details of the cross section of the thrie beam rail element and details for wood post with wood block installations, see Standard Plan A78A.
2. For details of standard hardware, posts and blocks used to construct thrie beam barrier, see Revised Standard Plan RSP A78C1 and Standard Plan A78C2.
3. Thrie beam barrier post spacing to be 6'-3" center to center, except as otherwise noted.
4. Top of barrier rail to be 2'-8" above ground line or shoulder surfacing under the rail element.
5. For barrier end treatments and barrier connections, see Standard Plans A78E1, A78E2 and A78E3, Revised Standard Plans RSPs A78F1 and A78F2, Standard Plan A78G and Revised Standard Plan RSP A78H.
6. For connection to Concrete Barrier, see Revised Standard Plan RSP A78I.
7. Attach rail element to block and steel post with 2 bolts or rods on approaching traffic side of block and post web. No washer on rail face for rod or bolted connections to line post.
8. For details of thrie beam barrier on bridges, see Standard Plan A78D2. For details of thrie beam barrier at fixed objects, see Standard Plan A78D1.
9. Direction of traffic indicated by ⟶.
10. Notched face of block faces steel post.

STATE OF CALIFORNIA
DEPARTMENT OF TRANSPORTATION

THRIE BEAM BARRIER STANDARD BARRIER RAILING SECTION (STEEL POST WITH NOTCHED WOOD BLOCK OR NOTCHED RECYCLED PLASTIC BLOCK)

NO SCALE

RSP A78B DATED JUNE 6, 2008 SUPERSEDES STANDARD PLAN A78B DATED MAY 1, 2006 - PAGE 84 OF THE STANDARD PLANS BOOK DATED MAY 2006.

REVISED STANDARD PLAN RSP A78B

2006 REVISED STANDARD PLAN RSP A78B

5-14-08

DIST	COUNTY	ROUTE	POST MILES TOTAL PROJECT	SHEET No.	TOTAL SHEETS
02	Plu	70	0.6/35.2	51	101

Randell D. Hiatt
REGISTERED CIVIL ENGINEER

June 6, 2008
PLANS APPROVAL DATE

REGISTERED PROFESSIONAL ENGINEER
Randell D. Hiatt
No. C50200
Exp. 6-30-09
CIVIL
STATE OF CALIFORNIA

The State of California or its officers or agents shall not be responsible for the accuracy or completeness of electronic copies of this plan sheet.

To accompany plans dated 1-9-12

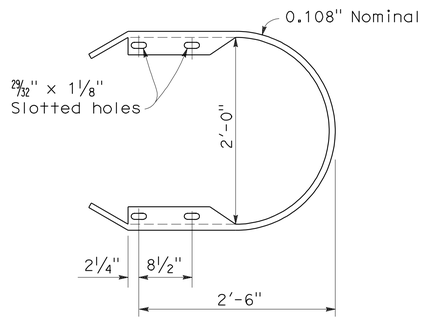

RETURN CAP
(TYPE TA)

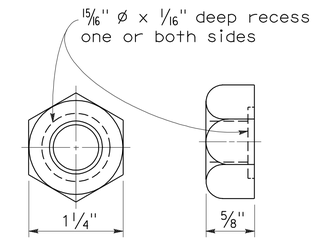

5/8" ø RECESS NUT

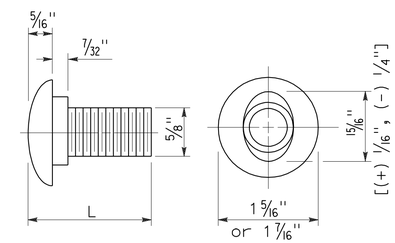

5/8" ø BUTTON HEAD BOLT

L	THREAD LENGTH
1 1/4"	full thread length
2"	full thread length
9 1/2"	4" Min thread length
18"	4" Min thread length

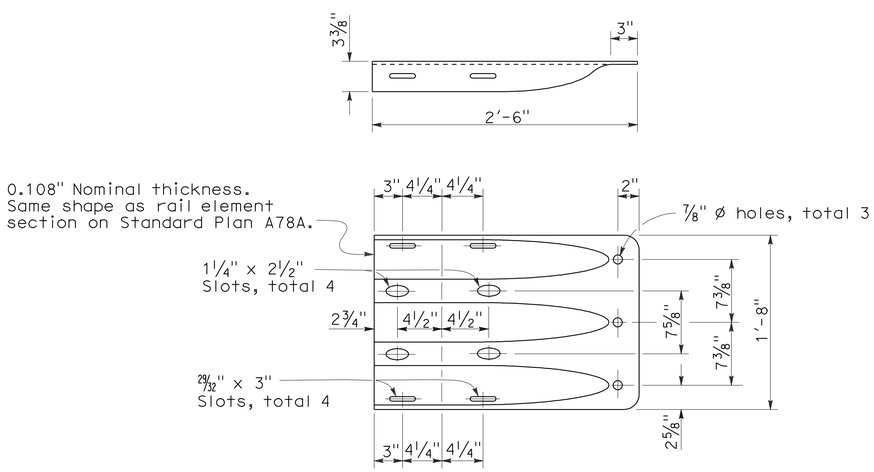

END CAP
(TYPE TC)

STATE OF CALIFORNIA
DEPARTMENT OF TRANSPORTATION

THRIE BEAM BARRIER STANDARD HARDWARE DETAILS

NO SCALE

RSP A78C1 DATED JUNE 6, 2008 SUPERSEDES STANDARD PLAN A78C1
DATED MAY 1, 2006 - PAGE 85 OF THE STANDARD PLANS BOOK DATED MAY 2006.

REVISED STANDARD PLAN RSP A78C1

2006 REVISED STANDARD PLAN RSP A78C1

4-21-08

DIST	COUNTY	ROUTE	POST MILES TOTAL PROJECT	SHEET NO.	TOTAL SHEETS
02	Plu	70	0.6/35.2	52	101

Randell D. Hiatt
REGISTERED CIVIL ENGINEER

June 6, 2008
PLANS APPROVAL DATE

REGISTERED PROFESSIONAL ENGINEER
Randell D. Hiatt
No. C50200
Exp. 6-30-09
CIVIL
STATE OF CALIFORNIA

The State of California or its officers or agents shall not be responsible for the accuracy or completeness of electronic copies of this plan sheet.

To accompany plans dated 1-9-12

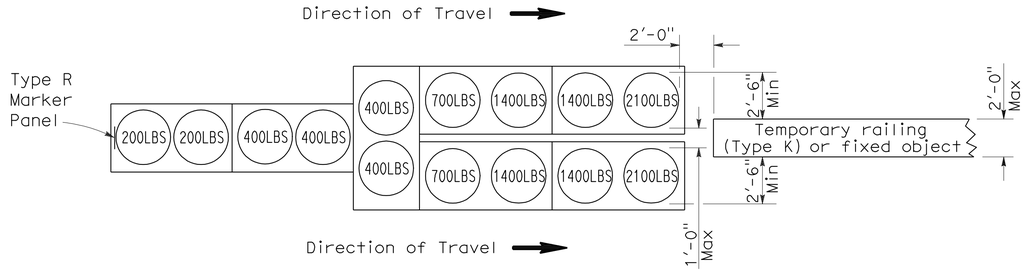

ARRAY 'TU14'

Approach speed 45 mph or more

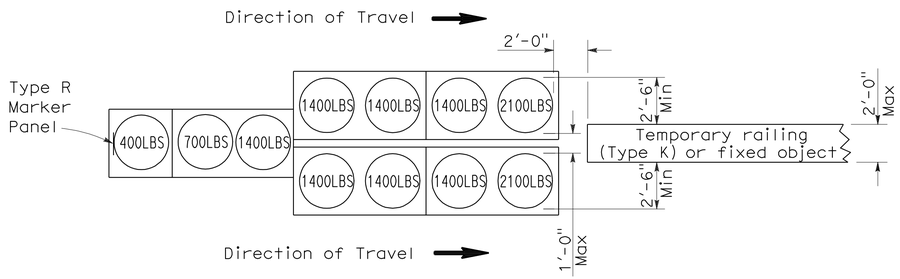

ARRAY 'TU11'

Approach speed less than 45 mph

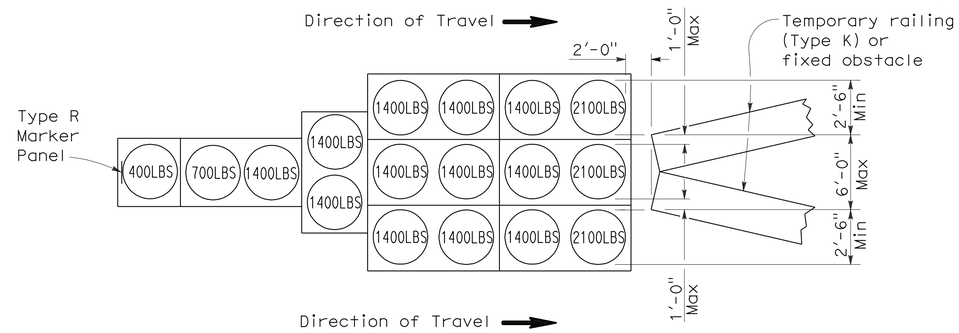

ARRAY 'TU17'

Approach speed less than 45 mph

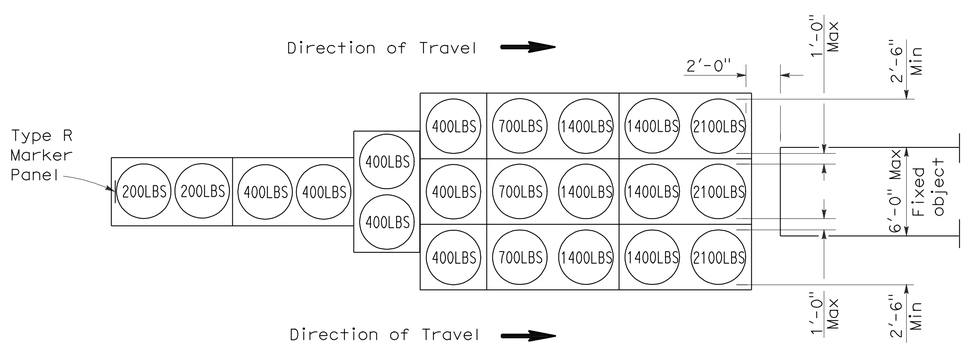

ARRAY 'TU21'

Approach speed 45 mph or more

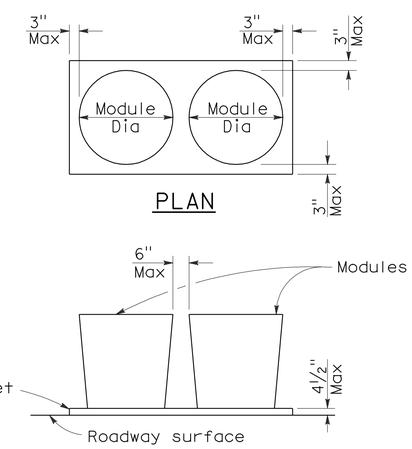

PLAN

ELEVATION

CRASH CUSHION PALLET DETAIL

See Note 7

NOTES:

1. (XXX) Indicates sand filled module location and weight of sand in pounds for each module. Module spacing is based on the greater diameter of the module.
2. All sand weights are nominal.
3. Temporary crash cushion arrays shall not encroach on the traveled way.
4. Place the top of Type R marker panel 1" below the module lid.
5. Refer to Standard Plan A73B for marker details.
6. Approach speeds indicated conform to NCHRP 350 Report criteria.
7. Use of pallets is optional.

STATE OF CALIFORNIA
DEPARTMENT OF TRANSPORTATION

TEMPORARY CRASH CUSHION, SAND FILLED (UNIDIRECTIONAL)

NO SCALE

RSP T1A DATED JUNE 6, 2008 SUPERSEDES STANDARD PLAN T1A
DATED MAY 1, 2006 - PAGE 211 OF THE STANDARD PLANS BOOK DATED MAY 2006.

REVISED STANDARD PLAN RSP T1A

2006 REVISED STANDARD PLAN RSP T1A

DIST	COUNTY	ROUTE	POST MILES TOTAL PROJECT	SHEET NO.	TOTAL SHEETS
02	Plu	70	0.6/35.2	53	101

Randell D. Hiatt
REGISTERED CIVIL ENGINEER

June 6, 2008
PLANS APPROVAL DATE

REGISTERED PROFESSIONAL ENGINEER
Randell D. Hiatt
No. C50200
Exp. 6-30-09
CIVIL
STATE OF CALIFORNIA

The State of California or its officers or agents shall not be responsible for the accuracy or completeness of electronic copies of this plan sheet.

To accompany plans dated 1-9-12

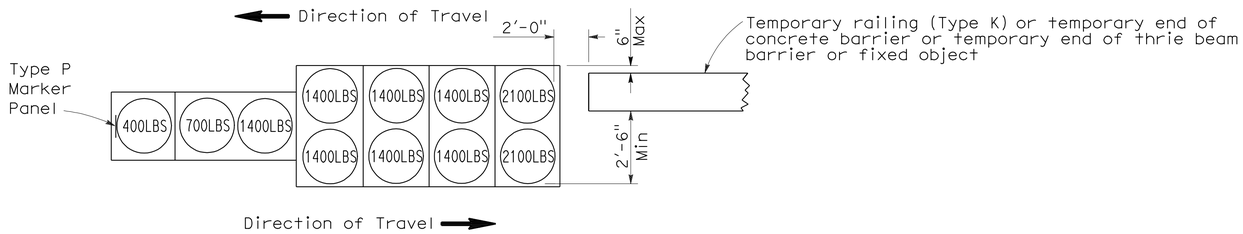

ARRAY 'TB11'

Approach speed less than 45 mph

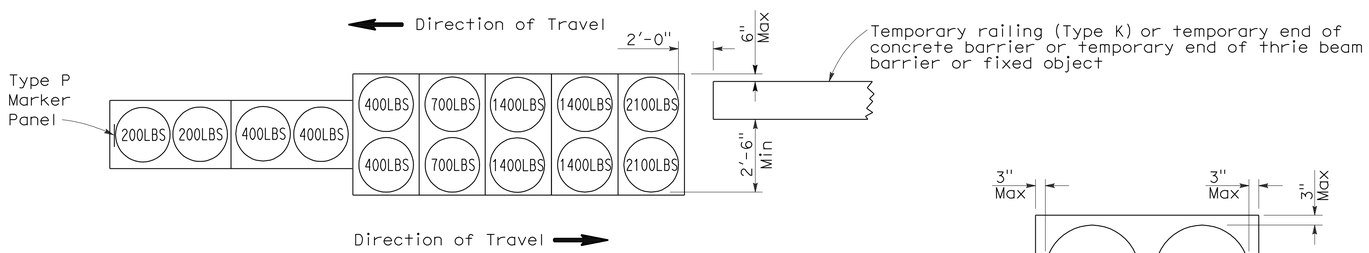

ARRAY 'TB14'

Approach speed 45 mph or more

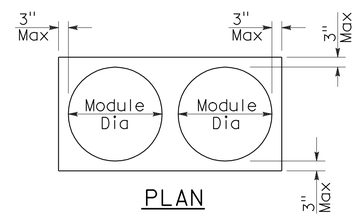

PLAN

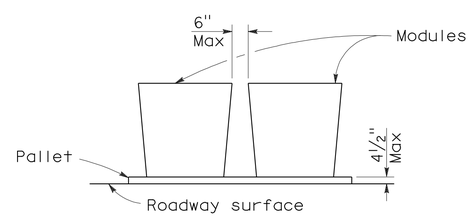

ELEVATION

CRASH CUSHION PALLET DETAIL

See Note 7

NOTES:

1. (XXX) Indicates sand filled module location and weight of sand in pounds for each module. Module spacing is based on the greater diameter of the module.
2. All sand weights are nominal.
3. Temporary crash cushion arrays shall not encroach on the traveled way.
4. Place the Type P marker panel so that the bottom of the panel rests upon the pallet.
5. Refer to Standard Plan A73B for marker details.
6. Approach speeds indicated conform to NCHRP 350 Report criteria.
7. Use of pallets is optional.

STATE OF CALIFORNIA
DEPARTMENT OF TRANSPORTATION

TEMPORARY CRASH CUSHION, SAND FILLED (BIDIRECTIONAL)

NO SCALE

RSP T1B DATED JUNE 6, 2008 SUPERSEDES STANDARD PLAN T1B
DATED MAY 1, 2006 - PAGE 212 OF THE STANDARD PLANS BOOK DATED MAY 2006.

REVISED STANDARD PLAN RSP T1B

2006 REVISED STANDARD PLAN RSP T1B

5-15-08

DIST	COUNTY	ROUTE	POST MILES TOTAL PROJECT	SHEET NO.	TOTAL SHEETS
02	Plu	70	0.6/35.2	54	101

Randell D. Hiatt
REGISTERED CIVIL ENGINEER

June 6, 2008
PLANS APPROVAL DATE

REGISTERED PROFESSIONAL ENGINEER
Randell D. Hiatt
No. C50200
Exp. 6-30-09
CIVIL
STATE OF CALIFORNIA

The State of California or its officers or agents shall not be responsible for the accuracy or completeness of electronic copies of this plan sheet.

To accompany plans dated 1-9-12

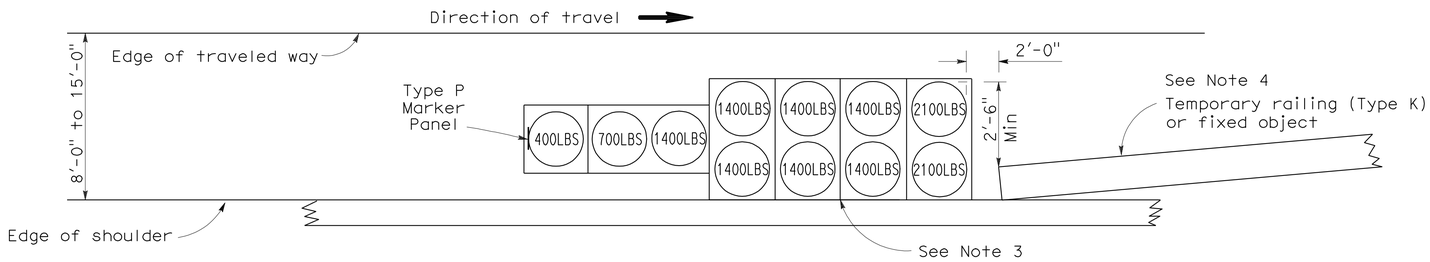

ARRAY 'TS11'

Approach speed less than 45 mph
See Note 9

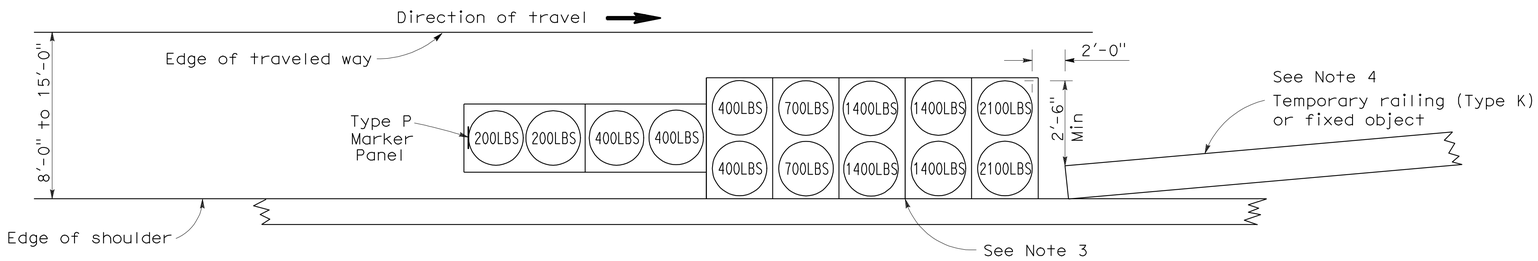

ARRAY 'TS14'

Approach speed 45 mph or more
See Note 9

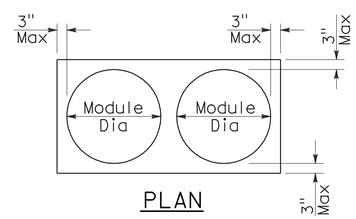

PLAN

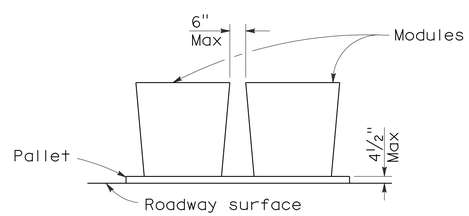

ELEVATION

CRASH CUSHION PALLET DETAIL

See Note 11

NOTES:

1. (XXX) Indicates sand filled module location and weight of sand in pounds for each module. Module spacing is based on the greater diameter of the module.
2. All sand weights are nominal.
3. The temporary crash cushion arrays shown on this plan shall be used only in locations where there will be traffic on one side of the temporary crash cushion array.
4. If the fixed object or approach end of the temporary railing is less than 15'-0" from the edge of traveled way, a temporary crash cushion is required in a construction or work zone.
5. Temporary crash cushion arrays shall not encroach on the traveled way.
6. Arrays for median shoulders shall conform to details shown on this plan for outside shoulders.
7. Place the Type P marker panel so that the bottom of the panel rests upon the pallet and faces traffic.
8. Refer to Standard Plan A73B for marker details.
9. For shoulder widths less than 8'-0", appropriate approved crash cushion protection, other than sand filled modules, shall be provided at fixed objects and at approach ends of temporary railing. The specific type of crash cushion shall be as shown on the project plans or as specified in the Special Provisions, or if not shown on the project plans or specified in the Special Provisions, shall be as approved by the Engineer.
10. Approach speeds indicated conform to NCHRP 350 Report criteria.
11. Use of pallets is optional.

STATE OF CALIFORNIA
DEPARTMENT OF TRANSPORTATION

TEMPORARY CRASH CUSHION, SAND FILLED (SHOULDER INSTALLATIONS)

NO SCALE

RSP T2 DATED JUNE 6, 2008 SUPERSEDES STANDARD PLAN T2
DATED MAY 1, 2006 - PAGE 213 OF THE STANDARD PLANS BOOK DATED MAY 2006.

REVISED STANDARD PLAN RSP T2

2006 REVISED STANDARD PLAN RSP T2

5-15-08

Dist	COUNTY	ROUTE	POST MILES TOTAL PROJECT	SHEET No.	TOTAL SHEETS
02	Plu	70	0.6/35.2	55	101

Randell D. Hiatt
REGISTERED CIVIL ENGINEER

May 20, 2011
PLANS APPROVAL DATE

REGISTERED PROFESSIONAL ENGINEER
Randell D. Hiatt
No. C50200
Exp. 6-30-11
CIVIL
STATE OF CALIFORNIA

The State of California or its officers or agents shall not be responsible for the accuracy or completeness of electronic copies of this plan sheet.

To accompany plans dated 1-9-12

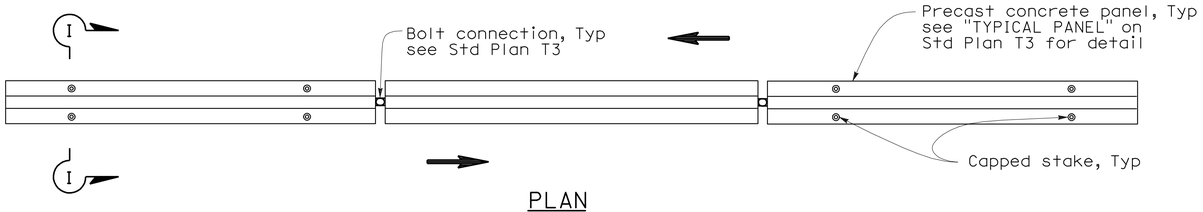

PLAN

RAILING STAKING CONFIGURATION FOR TWO-WAY TRAFFIC

See Note 1

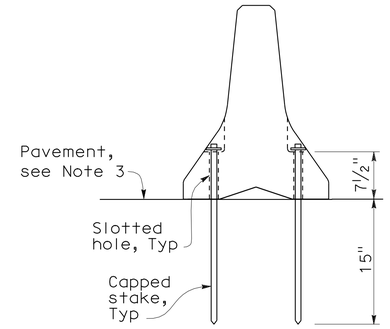

SECTION I-I

NOTES:

1. Where Type K Temporary Railing is placed as a temporary or long term barrier in two-way traffic on highways with less than 24" from the edge of traveled way, use four capped stakes per every other panel with end panels staked.
2. Where Type K Temporary Railing is placed 3" to 24" from the edge of an excavation on highways, use two capped stakes per panel along the traffic side.
3. Staked Type K Temporary Railing must be supported by at least 4" thick concrete, hot mix asphalt or existing asphalt concrete pavement.
4. The minimum yield strength for the washer must be 60,000 psi.
5. Direction of adjacent traffic indicated by ⟹.

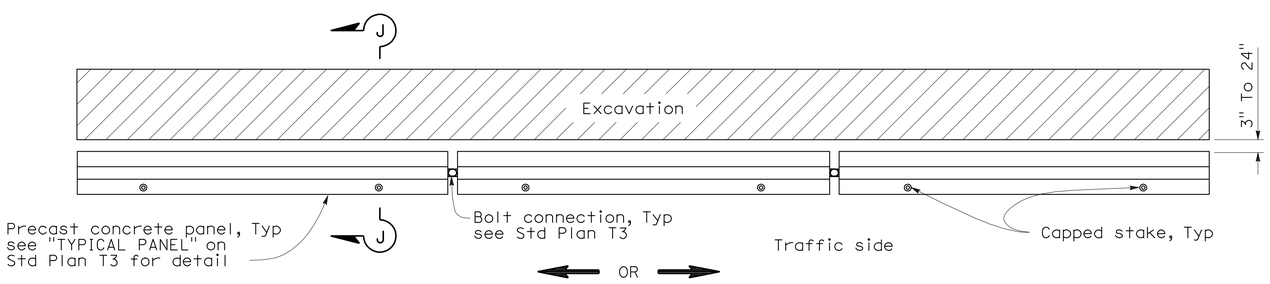

PLAN

RAILING STAKING CONFIGURATION ADJACENT TO AN EXCAVATION

See Note 2

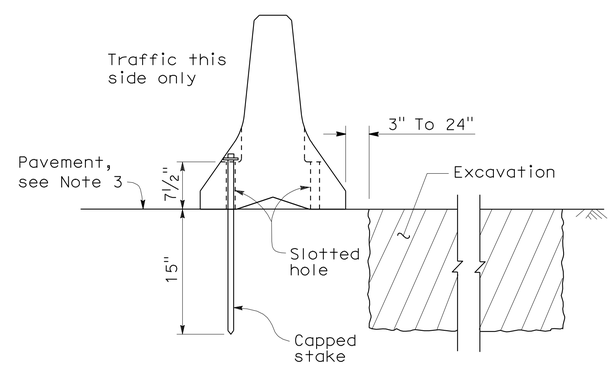

SECTION J-J

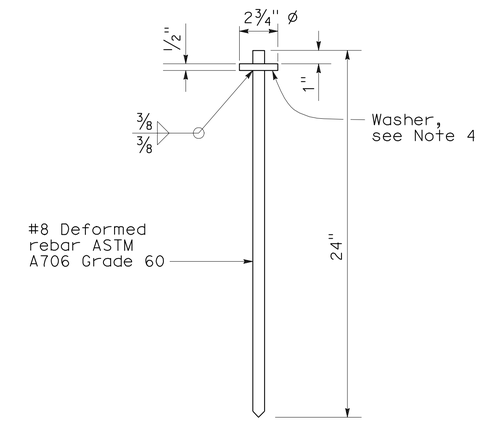

CAPPED STAKE DETAIL

STATE OF CALIFORNIA
DEPARTMENT OF TRANSPORTATION

TEMPORARY RAILING (TYPE K)

NO SCALE

NSP T3A DATED MAY 20, 2011 SUPPLEMENTS
THE STANDARD PLANS BOOK DATED MAY 2006.

NEW STANDARD PLAN NSP T3A

2006 NEW STANDARD PLAN NSP T3A

DIST	COUNTY	ROUTE	POST MILES TOTAL PROJECT	SHEET NO.	TOTAL SHEETS
02	Plu	70	0.6/35.2	56	101

Robert B Schott
LICENSED LANDSCAPE ARCHITECT

April 3, 2009
PLANS APPROVAL DATE

LICENSED LANDSCAPE ARCHITECT — Robert B. Schott 3025 — Signature — 11-30-10 Renewal Date — 2-25-09 Date — STATE OF CALIFORNIA

The State of California or its officers or agents shall not be responsible for the accuracy or completeness of electronic copies of this plan sheet.

To accompany plans dated 1-9-12

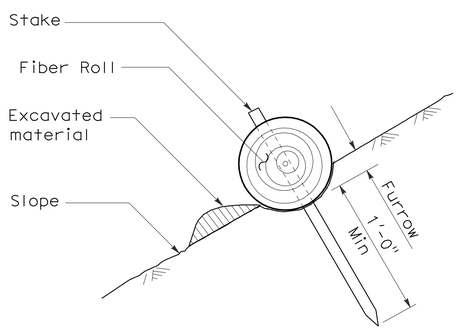

SECTION

TEMPORARY FIBER ROLL (TYPE 1)

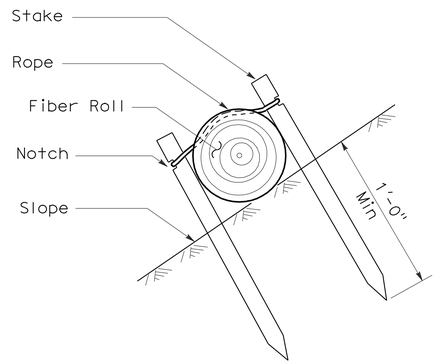

SECTION

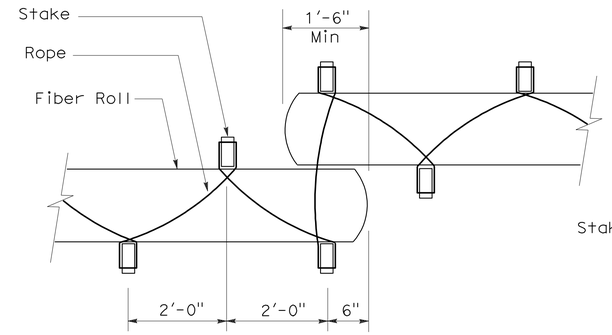

PLAN

TEMPORARY FIBER ROLL (TYPE 2)

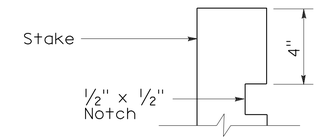

ELEVATION

STAKE NOTCH DETAIL

NOTES:

1. Temporary fiber roll spacing varies depending upon slope inclination.
2. Installations shown in the perspectives are for slope inclination of 10:1 and steeper.

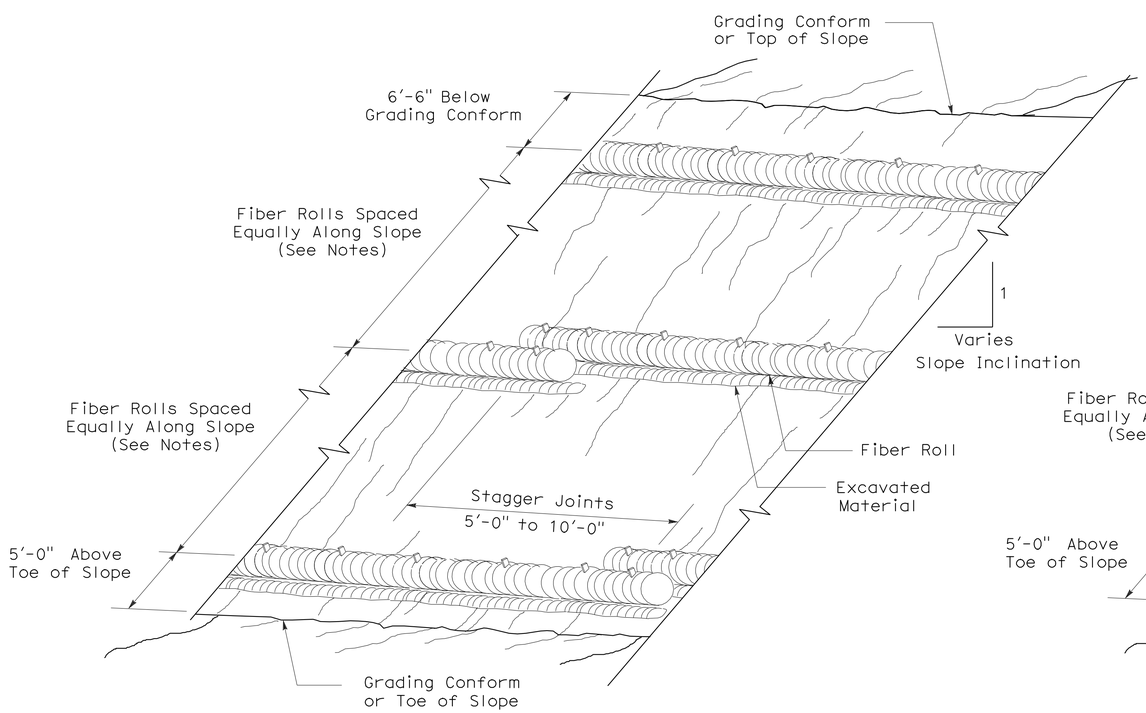

PERSPECTIVE

TEMPORARY FIBER ROLL (TYPE 1)

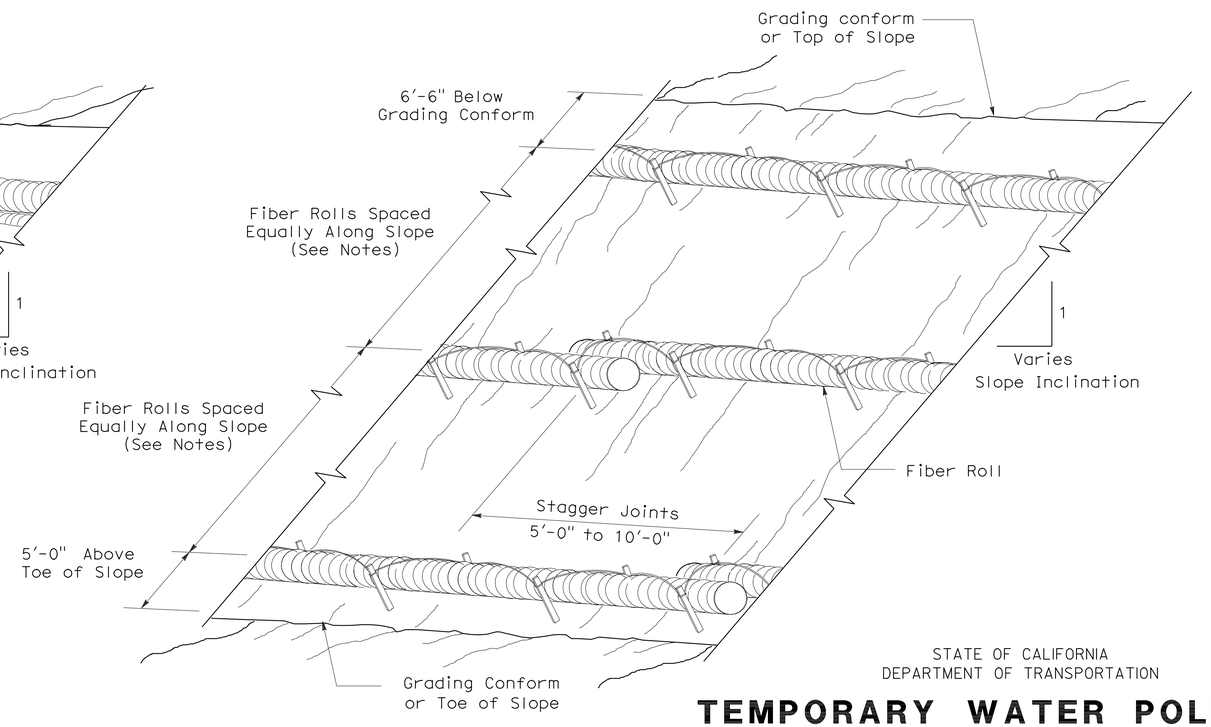

PERSPECTIVE

TEMPORARY FIBER ROLL (TYPE 2)

STATE OF CALIFORNIA
DEPARTMENT OF TRANSPORTATION

TEMPORARY WATER POLLUTION CONTROL DETAILS (TEMPORARY FIBER ROLL)

NO SCALE

RSP T56 DATED APRIL 3, 2009 SUPERSEDES STANDARD PLAN T56
DATED MAY 1, 2006 - PAGE 232 OF THE STANDARD PLANS BOOK DATED MAY 2006.

REVISED STANDARD PLAN RSP T56

2006 REVISED STANDARD PLAN RSP T56

2-23-09

DIST	COUNTY	ROUTE	POST MILES TOTAL PROJECT	SHEET No	TOTAL SHEETS
02	Plu	70	0.6/35.2	57	101

REGISTERED CIVIL ENGINEER 8-29-2011 DATE

1-9-12
PLANS APPROVAL DATE

REGISTERED PROFESSIONAL ENGINEER M. J. CULLEN No. C 40620 Exp. 03-31-13 CIVIL STATE OF CALIFORNIA

The State of California or its officers or agents shall not be responsible for the accuracy or completeness of electronic copies of this plan sheet.

Notes:

1. For Begin and End Wall Location See "Wall Details No. 1" Sheet "Section A-A"
2. For Details and Quantity of Existing CSP Retaining Wall See "Existing 36" CSP Retaining Wall Removal" Sheet

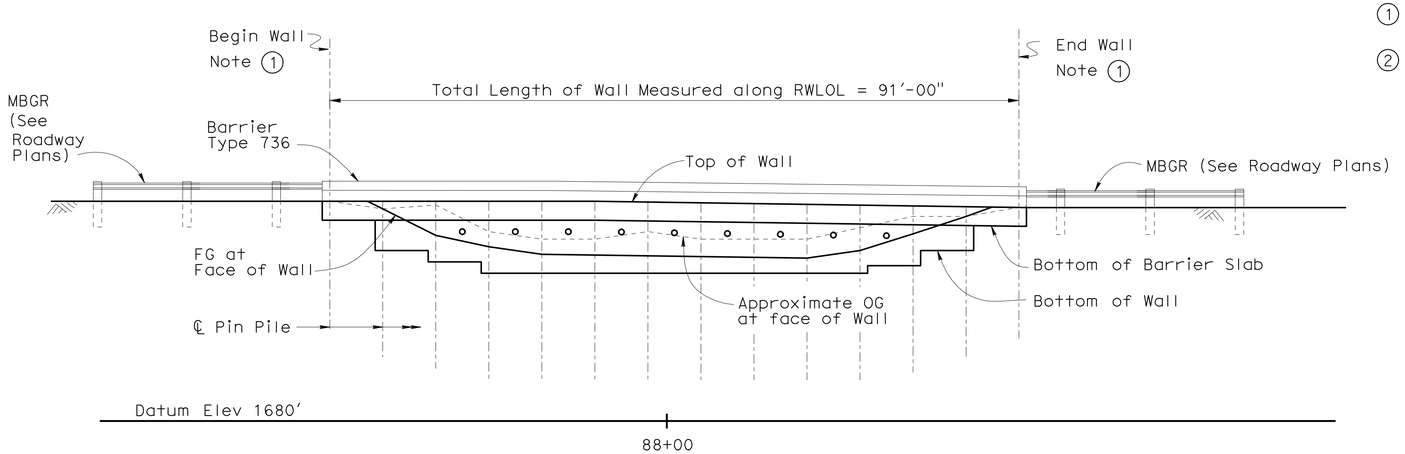

∘ Indicates Rock Anchor

DEVELOPED MIRROR ELEVATION

1" = 10'-0"

QUANTITIES

PREPARE CONCRETE BARRIER SLAB SURFACE	482	SQFT
REMOVE 36" CORRUGATED STEEL PIPE	65	LF
RETAINING WALL		
STRUCTURE EXCAVATION (ROCK ANCHOR WALL)	85	CY
STRUCTURE BACKFILL (ROCK ANCHOR WALL)	10	CY
ROCK ANCHOR ASSEMBLY	280	LF
STEEL PIN PILE (6"XX STRONG PIPE)	437	LF
DRILLED HOLE	442	LF
STRUCTURAL CONCRETE, RETAINING WALL	13	CY
STRUCTURAL CONCRETE, BARRIER SLAB	57	CY
FIELDSTONE FORMED RELIEF TEXTURE	400	SQFT
FURNISH POLYESTER CONCRETE OVERLAY	30	CF
PLACE POLYESTER CONCRETE OVERLAY	482	SQFT
BAR REINFORCING STEEL (RETAINING WALL)	5,780	LB
SHOTCRETE	7	CY
PREPARE AND STAIN CONCRETE	400	SQFT
CONCRETE BARRIER (TYPE 736)	93	LF

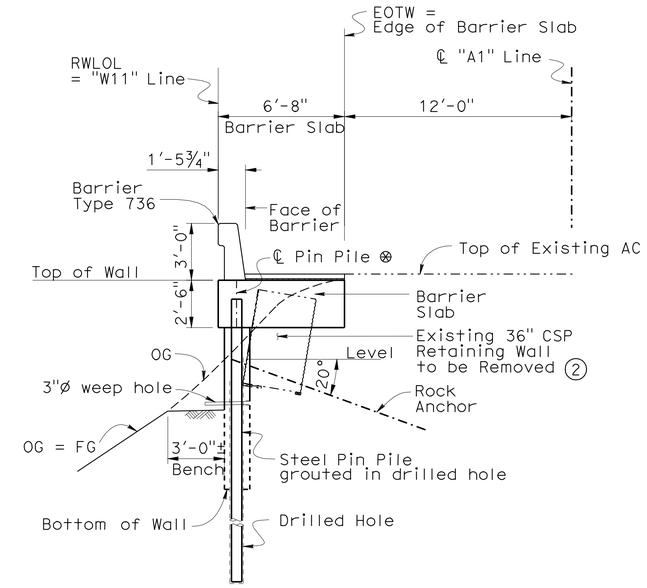

⊗ Pin Pile consists of 6" XX Strong Pipe

TYPICAL SECTION

¼"=1'-0"

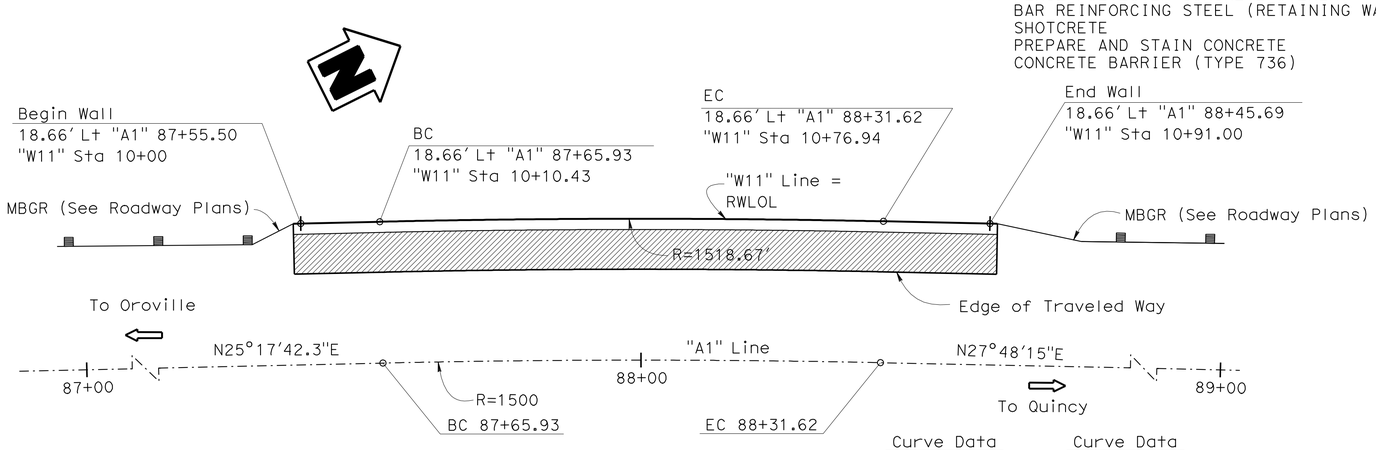

Indicates ¾" Polyester Concrete Overlay

PLAN

1" = 10'-0"

Curve Data	Curve Data
"A1" Line	RWLOL
R = 1500.00'	R = 1518.67'
Δ = 02°30'33"	Δ = 02°30'33"
T = 32.85'	T = 33.26'
L = 65.69'	L = 66.51'

INDEX TO PLANS

1. GENERAL PLAN
2. STRUCTURE PLAN
3. FOUNDATION PLAN
4. EXISTING 36" CMP RETAINING WALL REMOVAL
5. WALL DETAILS NO. 1
6. WALL DETAILS NO. 2
7. ROCK ANCHOR DETAILS
8. ARCHITECTURAL TREATMENT
9. LOG OF TEST BORINGS 1 OF 4
10. LOG OF TEST BORINGS 2 OF 4
11. LOG OF TEST BORINGS 3 OF 4
12. LOG OF TEST BORINGS 4 OF 4

Gary Blakesley
DESIGN ENGINEER

	BY	CHECKED			
DESIGN	M. J. Cullen	M. Guadamuz	SERVICE LOAD DESIGN	LIVE LOADING: 2 FEET LEVEL SURCHARGE	
DETAILS	A. Chen/S. Jiang	M. J. Cullen	LAYOUT	M. J. Cullen	M. Guadamuz
QUANTITIES	H. Fang	C. Siegenthaler	SPECIFICATIONS	M. Kopsa	PLANS AND SPECS COMPARED M. Kopsa

STATE OF CALIFORNIA
DEPARTMENT OF TRANSPORTATION

DIVISION OF ENGINEERING SERVICES
STRUCTURE DESIGN
DESIGN BRANCH 5

BRIDGE NO. 09E0002
POST MILE 1.68

WALL LOCATION 11
GENERAL PLAN

STRUCTURES DESIGN GENERAL PLAN SHEET (ENGLISH) (REV. 10/25/05)

ORIGINAL SCALE IN INCHES FOR REDUCED PLANS 0 1 2 3

CU 02
EA 3C3001

DISREGARD PRINTS BEARING EARLIER REVISION DATES

REVISION DATES: 10-14-10 1-13-11 6-1-11 8-15-11 8-26-11

SHEET 1 OF 12

FILE => 11-a-gp.dgn

STRUCTURES DESIGN GENERAL PLAN SHEET (ENGLISH) (REV.07-24-06)

USERNAME => s6123631 DATE PLOTTED => 24-JAN-2012 TIME PLOTTED => 12:50

DIST	COUNTY	ROUTE	POST MILES TOTAL PROJECT	SHEET No	TOTAL SHEETS
02	Plu	70	0.6/35.2	58	101

REGISTERED CIVIL ENGINEER 8-29-2011 DATE

1-9-12
PLANS APPROVAL DATE

The State of California or its officers or agents shall not be responsible for the accuracy or completeness of electronic copies of this plan sheet.

REGISTERED PROFESSIONAL ENGINEER M. J. CULLEN No. C 40620 Exp. 03-31-13 CIVIL STATE OF CALIFORNIA

GENERAL NOTES

DESIGN:

CALTRANS BRIDGE DESIGN SPECIFICATIONS-APRIL 2000 (LFD)
(1996 AASHTO with Interims and Revisions by CALTRANS)

SOIL PARAMETERS:

(For determination of design lateral earth pressures)

Soil	Rock
ϕ = 34°	ϕ = 38°
γ_m = 135 pcf	γ_m = 165 pcf
Qd = N/A	c = 3500 pcf
	Qd = 6000 $\frac{lbs}{ft}$

Qd = Design Pullout Resistance (lbs per linear foot)

LIVE LOAD:

Surcharge - 2 feet Level Earth

SHOTCRETE/REINFORCED CONCRETE:

f'c = 3600 psi (Concrete compressive strength at 28 days)
fy = 60 000 psi (Yield strength of reinforcement)

STRUCTURAL STEEL:

Steel Piles, 6" XX Strong Pipe
ASTM Designation A53 Grade B

ROCK ANCHORS:

ASTM Designation A615 Grade 75
fy = 75 ksi
fs = 42 ksi

STANDARD PLANS DATED MAY 2006

A10A ACRONYMS AND ABBREVIATIONS (A-L)
B11-56 BARRIER RAIL TYPE 736

STANDARD PLAN SHEET NO.
DETAIL NO.

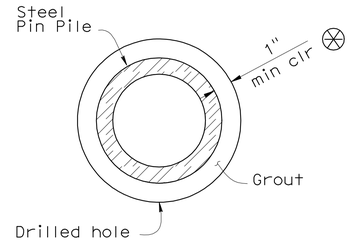

DRILLED HOLE DETAIL

3" = 1'-0"
Typical for all Piles

Notes:

* ℄ Rock anchor @ back face of wall, Place Rock anchors midway between piles.

† Embedment length to be increased where needed to assure that anchors are socketed at least 7 feet into the formational rock. (Embedment length may not be decreased)

⊗ Drilled hole must be large enough so that a minimum gap of 1" is provided between drilled hole and steel Pin Pile. This condition must be met at all depths. Hole diameter may be larger if required by drilling conditions.

⊗⊗ For beginning and end wall segments the bottom of wall is the bottom of the barrier slab.

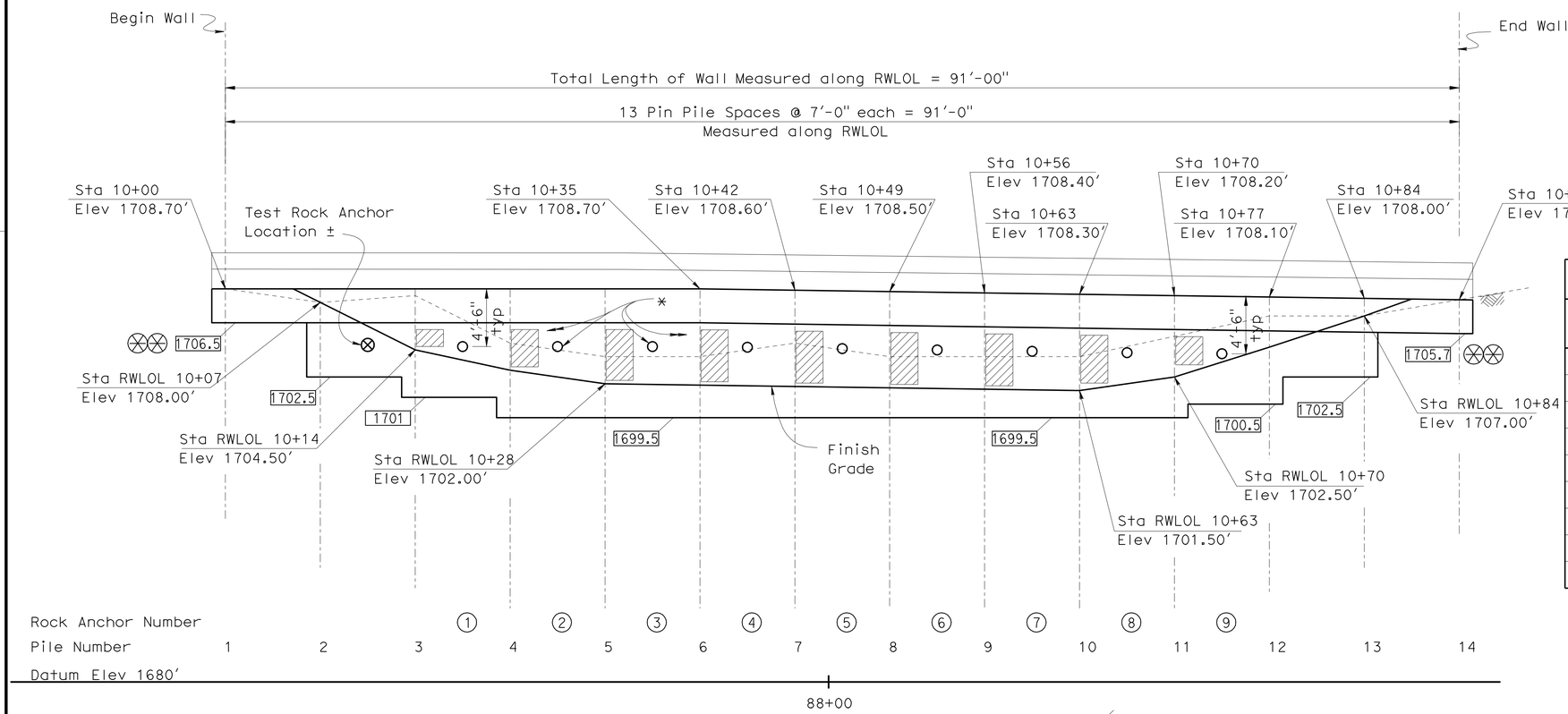

DEVELOPED MIRROR ELEVATION

1" = 5'-0"

Indicates Bottom of Wall Elevation

Indicates Vertical Geocomposite Drain with Weephole (Backface of Wall). See "Wall Details No. 2" sheet

ROCK ANCHOR TABLE

Rock Anchor	† Embedment Length	Size
1	35	#8
2	35	#8
3	25	#8
4	25	#8
5	25	#8
6	25	#8
7	25	#8
8	25	#8
9	25	#8

PILE DATA TABLE

Pile Number	"W11" Station	Tip Elevation
1	10+00	1668
2	10+07	1668
3	10+14	1668
4	10+21	1668
5	10+28	1680
6	10+35	1680
7	10+42	1680
8	10+49	1680
9	10+56	1680
10	10+63	1680
11	10+70	1680
12	10+77	1680
13	10+84	1680
14	10+91	1680

One test rock anchor shall be placed as shown on the "Elevation" view Exact location shall be approved by the engineer. Test Rock Anchor to be tested before production Rock Anchors are constructed.

All Pin Piles shall be 6" XX -strong pipe and be embeded 8 ft into bedrock. Tip Elevation to be lowered where needed to maintain 8 ft embedment

	BY	CHECKED
DESIGN	M. J. Cullen	M. Guadamuz
DETAILS	A. Chen/S. Jiang	M. J. Cullen
QUANTITIES	H. Fang	C. Siegenthaler

STATE OF CALIFORNIA DEPARTMENT OF TRANSPORTATION

DIVISION OF ENGINEERING SERVICES STRUCTURE DESIGN DESIGN BRANCH 5

BRIDGE NO. 09E0002
POST MILE 1.68

WALL LOCATION 11
STRUCTURE PLAN

STRUCTURES DESIGN DETAIL SHEET (ENGLISH) (REV. 10/25/05)

ORIGINAL SCALE IN INCHES FOR REDUCED PLANS 0 1 2 3

CU 02
EA 3C3001

DISREGARD PRINTS BEARING EARLIER REVISION DATES

REVISION DATES 10-19-10 1-13-11 2-17-11 3-8-11 6-3-11 8-12-11 8-26-11

SHEET 2 OF 12

FILE => 11-c-sp.dgn

USERNAME => s109858 DATE PLOTTED => 09-JAN-2012 TIME PLOTTED => 09:09

DIST	COUNTY	ROUTE	POST MILES TOTAL PROJECT	SHEET No	TOTAL SHEETS
02	Plu	70	0.6/35.2	59	101

REGISTERED CIVIL ENGINEER 08-30-2011 DATE

1-9-12
PLANS APPROVAL DATE

REGISTERED PROFESSIONAL ENGINEER M. J. CULLEN No. C 40620 Exp. 03-31-13 CIVIL STATE OF CALIFORNIA

The State of California or its officers or agents shall not be responsible for the accuracy or completeness of electronic copies of this plan sheet.

CURVE DATA

No.	R	Δ	T	L
Ⓐ	1500.00	02°30'33"	32.85	65.69
Ⓑ	1518.67	02°30'33"	33.26	66.51

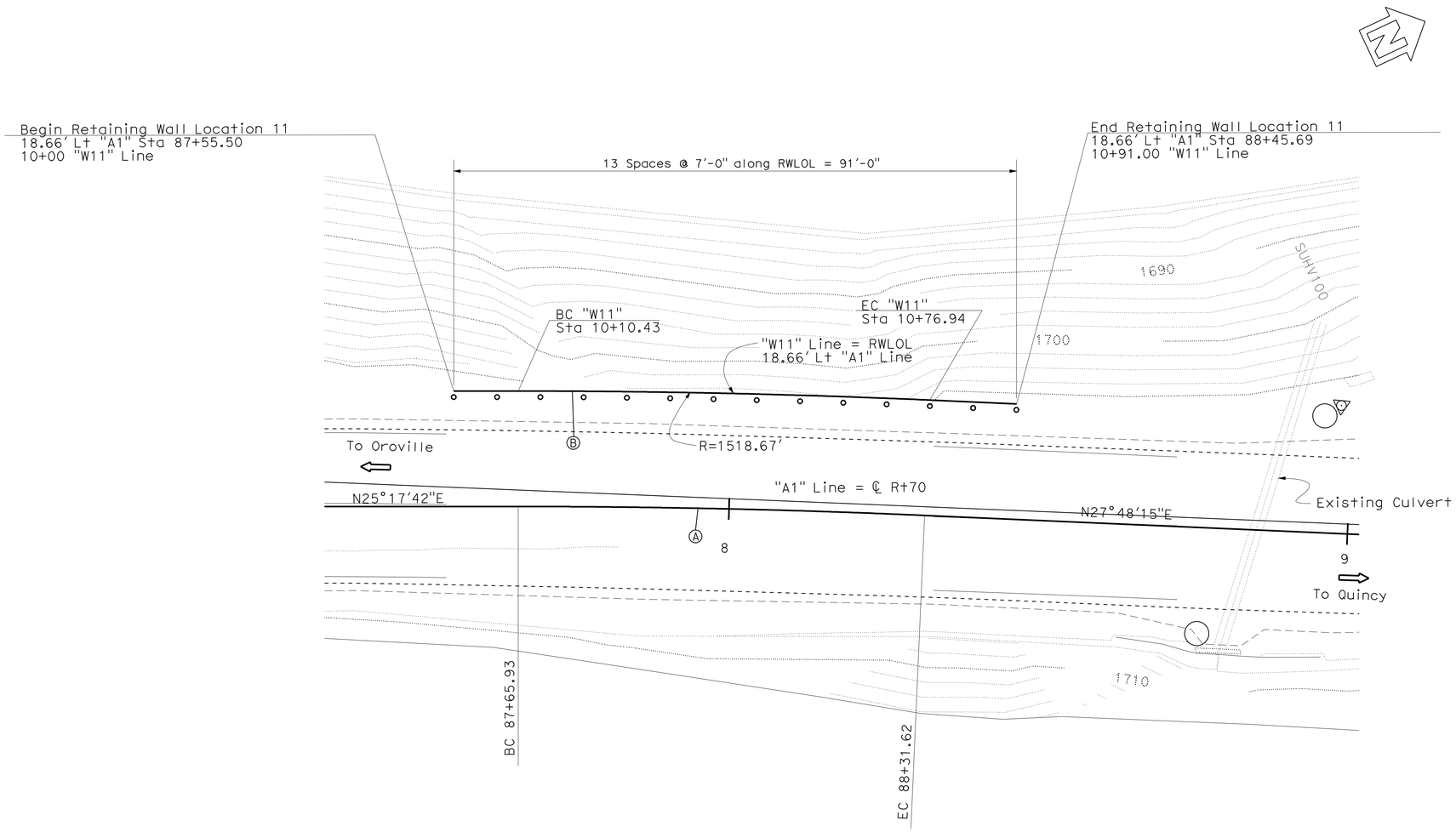

SURVEY CONTROL

MEN 253-1.95 (PRHV 195)
Fnd Aluminum Cap on 3/4" Rebar Stamped: MEN 253-1.95
19.48 FT Rt. "GE" Line Rte 253
Sta. 18+31.22
N 2,128,926.29
E 6,185,156.81
Elev. = 980.60

MEN 253-2.03 (PRHV 203) (Not Shown on Plan)
Fnd Aluminum Cap on 3/4" Rebar Stamped: MEN 253-2.03
42.15 FT Lt. "GE" Line Rte 253
Sta. 23+17.36
N 2,129,306.77
E 6,185,467.17
Elev. = 1018.91

∘ Indicates #6 xx Pin Pile

PRELIMINARY INVESTIGATION SECTION

SCALE	VERT.DATUM	PHOTOGRAMMETRY AS OF: X			
1"=5'	HORZ.DATUM	SURVEYED	BY District	CHECKED	BY
ALIGNMENT TIES Dist.Traverse Sheet		DRAFTED	BY	CHECKED	BY

	BY	CHECKED
DESIGN	M. J. Cullen	M. Guadamuz
DETAILS	A. Chen	M. J. Cullen
QUANTITIES	H. Fang	C. Siegenthaler

STATE OF CALIFORNIA
DEPARTMENT OF TRANSPORTATION

DIVISION OF ENGINEERING SERVICES
STRUCTURE DESIGN
DESIGN BRANCH 5

BRIDGE NO. 09E0002
POST MILE 1.68

WALL LOCATION 11
FOUNDATION PLAN

STRUCTURES FOUNDATION PLAN SHEET (ENGLISH) (REV. 10/25/05)

ORIGINAL SCALE IN INCHES FOR REDUCED PLANS 0 1 2 3

CU 02
EA 3C3001

DISREGARD PRINTS BEARING EARLIER REVISION DATES

REVISION DATES: 10-18-10 1-5-11 3-8-11 8-12-11

SHEET 3 OF 12

FILE => 11-e-fdp101.dgn

USERNAME => s12614 DATE PLOTTED => 09-JAN-2012 TIME PLOTTED => 10:29

DIST	COUNTY	ROUTE	POST MILES TOTAL PROJECT	SHEET No	TOTAL SHEETS
02	Plu	70	0.6/35.2	60	101

REGISTERED CIVIL ENGINEER 8-29-2011 DATE

1-9-12
PLANS APPROVAL DATE

REGISTERED PROFESSIONAL ENGINEER M. J. CULLEN No. C 40620 Exp. 03-31-13 CIVIL STATE OF CALIFORNIA

The State of California or its officers or agents shall not be responsible for the accuracy or completeness of electronic copies of this plan sheet.

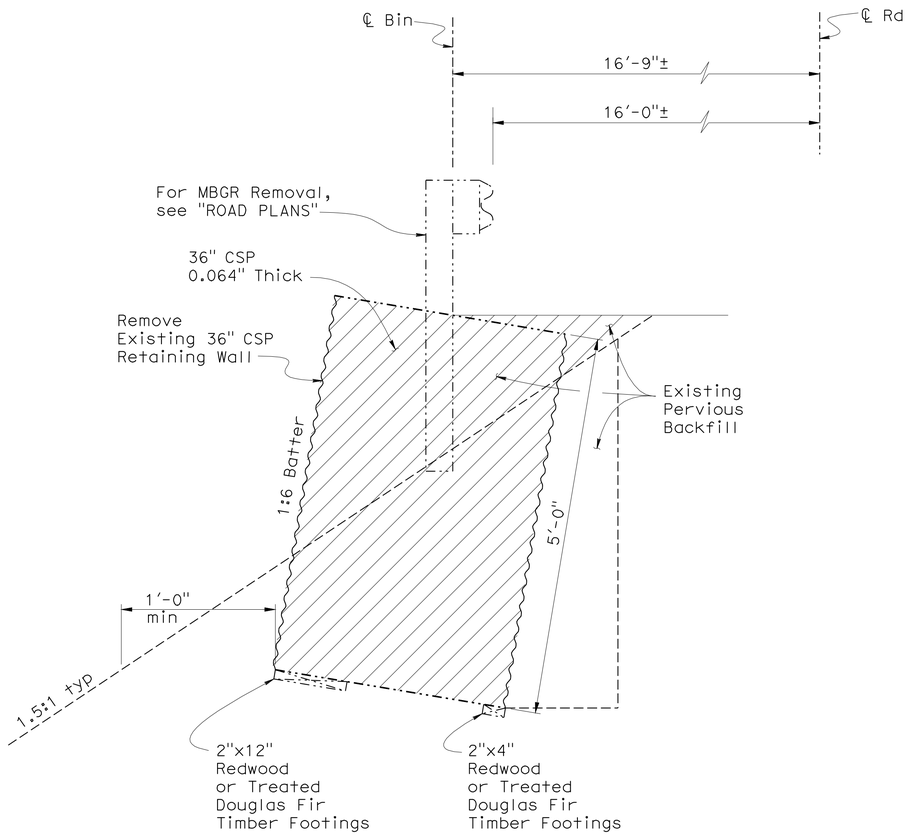

SECTION A-A

1" = 1'-0"

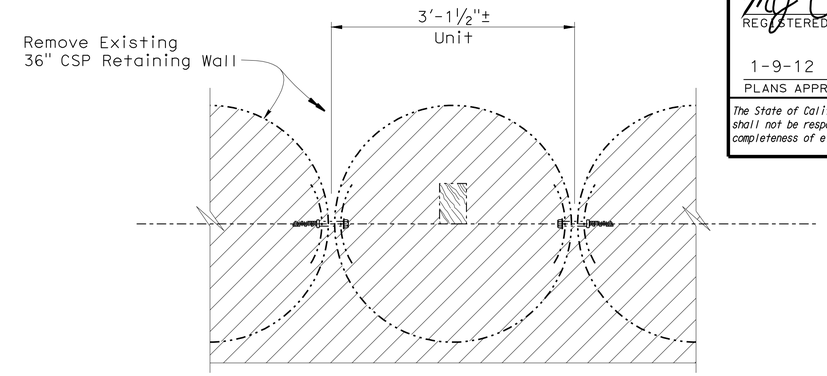

SECTION B-B

1" = 1'-0"

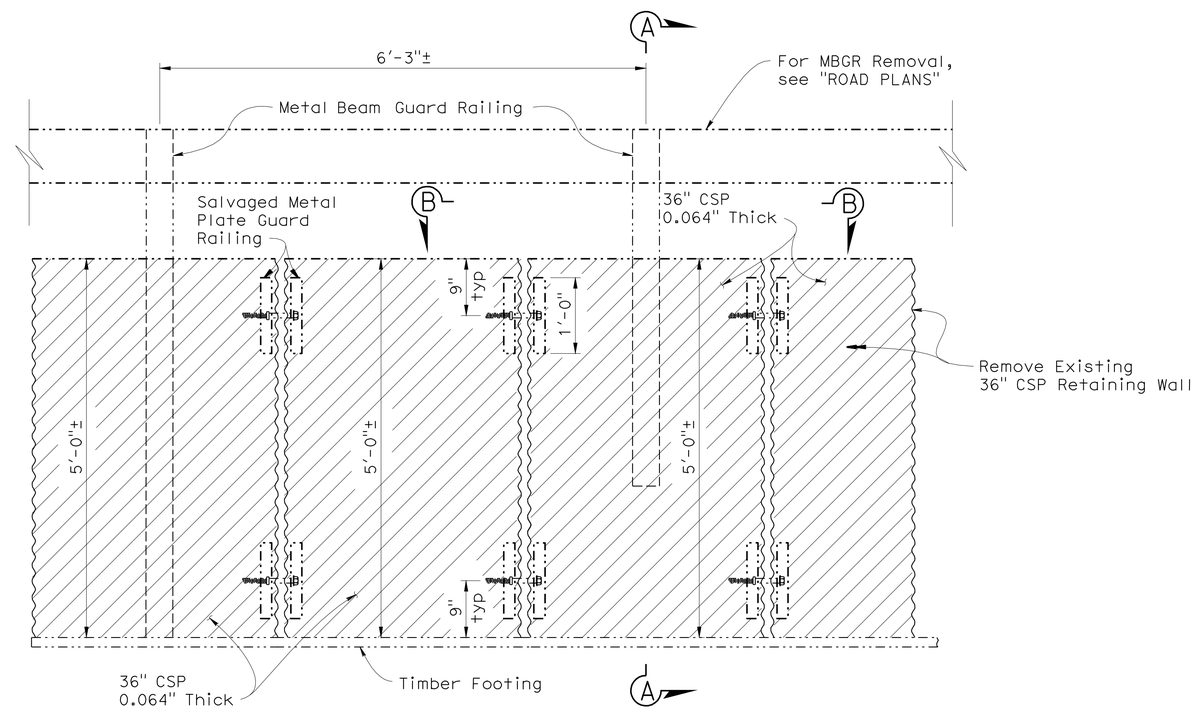

ELEVATION

1" = 1'-0"

Remove 36" CSP Retaining Wall @ Location 11 = 65 LF Total

Indicates Remove Existing 36" Ø CSP Retaining Wall (Total 65 LF ±)

DESIGN	BY M. J. Cullen	CHECKED M. Guadamuz	
DETAILS	BY A. Chen/S. Jiang	CHECKED M. J. Cullen	
QUANTITIES	BY H. Fang	CHECKED C. Siegenthaler	

STATE OF CALIFORNIA DEPARTMENT OF TRANSPORTATION

DIVISION OF ENGINEERING SERVICES STRUCTURE DESIGN DESIGN BRANCH 5

BRIDGE NO. 09E0002
POST MILE 1.68

WALL LOCATION 11
EXISTING 36" CSP RETAINING WALL REMOVAL

STRUCTURES DESIGN DETAIL SHEET (ENGLISH) (REV. 10/25/05)

ORIGINAL SCALE IN INCHES FOR REDUCED PLANS 0 1 2 3

CU 02
EA 3C3001

DISREGARD PRINTS BEARING EARLIER REVISION DATES

REVISION DATES 8-18-11 8-26-11

SHEET 4 OF 12

FILE => 11-q-dt01.dgn

USERNAME => s109858 DATE PLOTTED => 09-JAN-2012 TIME PLOTTED => 10:45

DIST	COUNTY	ROUTE	POST MILES TOTAL PROJECT	SHEET No	TOTAL SHEETS
02	Plu	70	0.6/35.2	61	101

REGISTERED CIVIL ENGINEER 8-29-2011 DATE

1-9-12
PLANS APPROVAL DATE

The State of California or its officers or agents shall not be responsible for the accuracy or completeness of electronic copies of this plan sheet.

REGISTERED PROFESSIONAL ENGINEER M. J. CULLEN No. C 40620 Exp. 03-31-13 CIVIL STATE OF CALIFORNIA

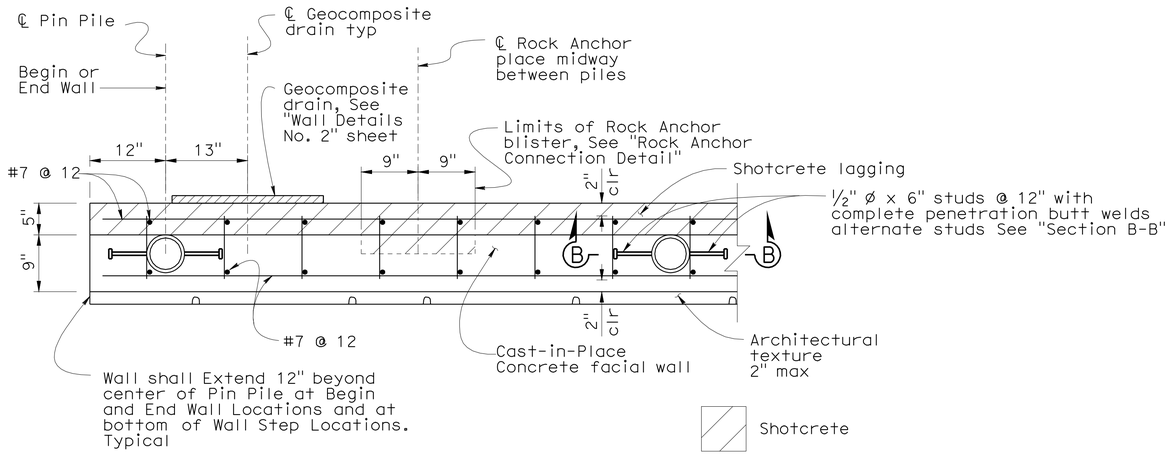

SECTION A-A

1"=1'-0"

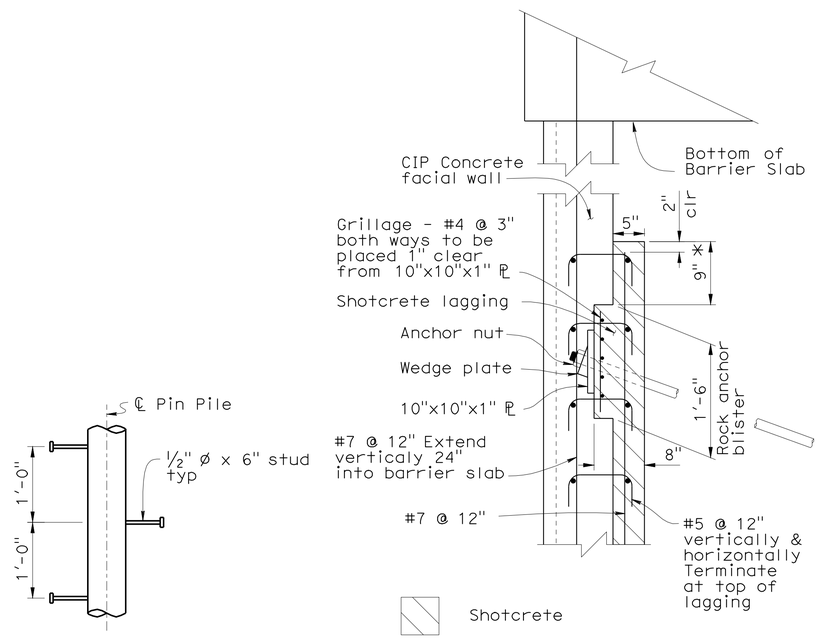

SECTION B-B

1"=1'-0"

ROCK ANCHOR CONNECTION DETAIL

1"=1'-0"

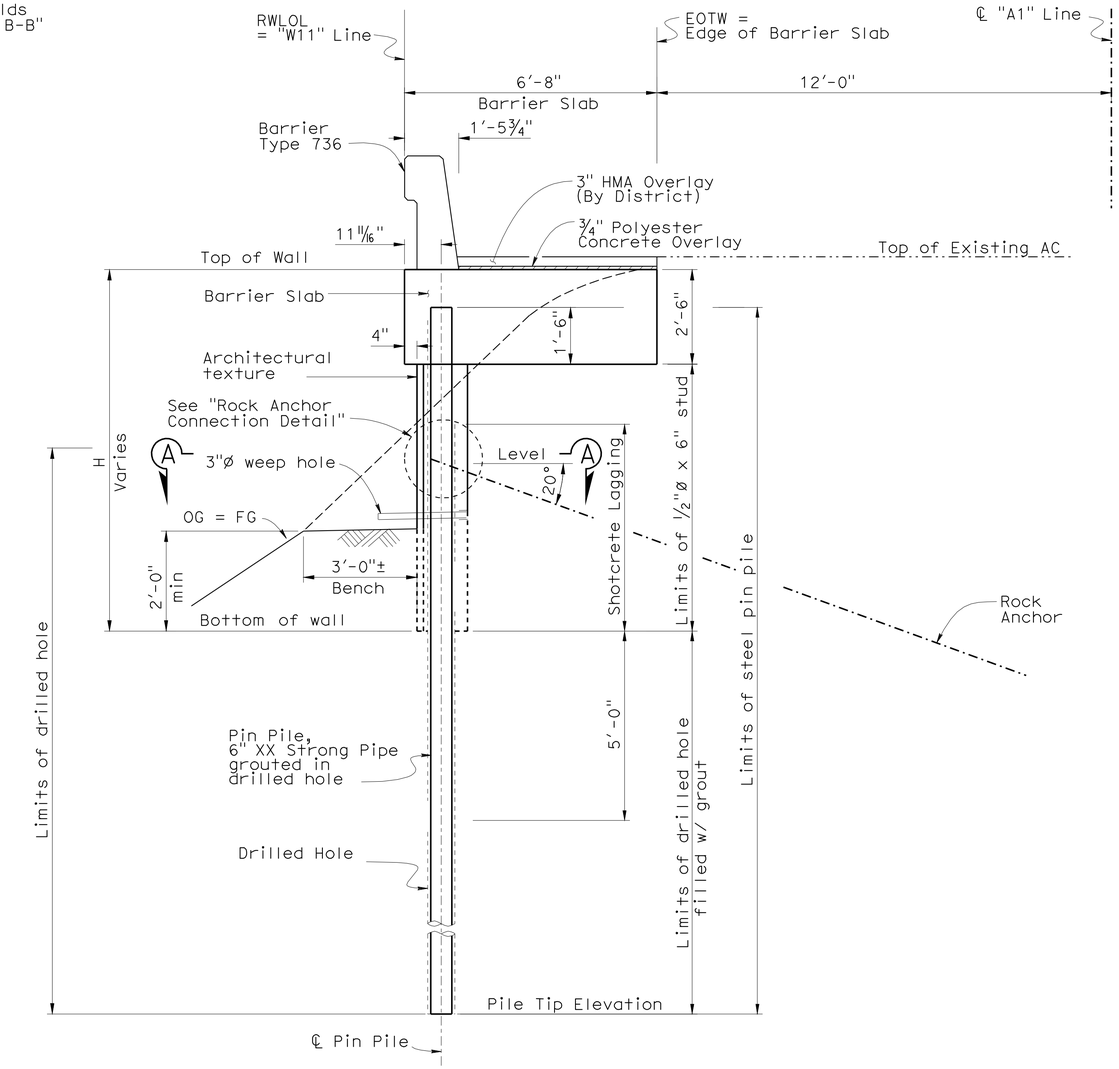

TYPICAL SECTION

½"=1'-0"

DESIGN	BY M. J. Cullen	CHECKED M. Guadamuz	
DETAILS	BY A. Chen/S. Jiang	CHECKED M. J. Cullen	
QUANTITIES	BY H. Fang	CHECKED C. Siegenthaler	

STATE OF CALIFORNIA
DEPARTMENT OF TRANSPORTATION

DIVISION OF ENGINEERING SERVICES
STRUCTURE DESIGN
DESIGN BRANCH 5

BRIDGE NO. 09E0002
POST MILE 1.68

WALL LOCATION 11
WALL DETAILS NO. 1

STRUCTURES DESIGN DETAIL SHEET (ENGLISH) (REV. 10/25/05)

ORIGINAL SCALE IN INCHES FOR REDUCED PLANS 0 1 2 3

CU 02
EA 3C3001

DISREGARD PRINTS BEARING EARLIER REVISION DATES

REVISION DATES: 10-19-10 1-3-11 3-14-11 6-1-11 8-18-11 8-26-11

SHEET 5 OF 12

FILE => 11-q-dt02.dgn

USERNAME => s123631 DATE PLOTTED => 24-JAN-2012 TIME PLOTTED => 12:50

DIST	COUNTY	ROUTE	POST MILES TOTAL PROJECT	SHEET No	TOTAL SHEETS
02	Plu	70	0.6/35.2	62	101

REGISTERED CIVIL ENGINEER 8-29-2011 DATE

1-9-12
PLANS APPROVAL DATE

The State of California or its officers or agents shall not be responsible for the accuracy or completeness of electronic copies of this plan sheet.

REGISTERED PROFESSIONAL ENGINEER M. J. CULLEN No. C 40620 Exp. 03-31-13 CIVIL STATE OF CALIFORNIA

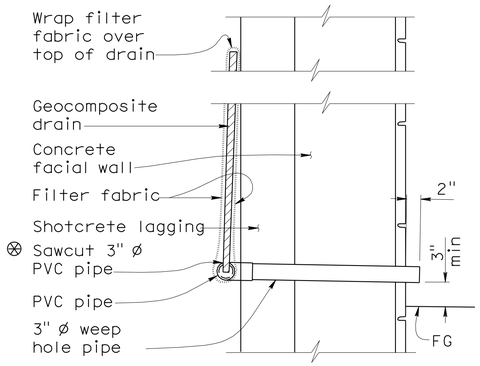

SECTION X-X

No Scale

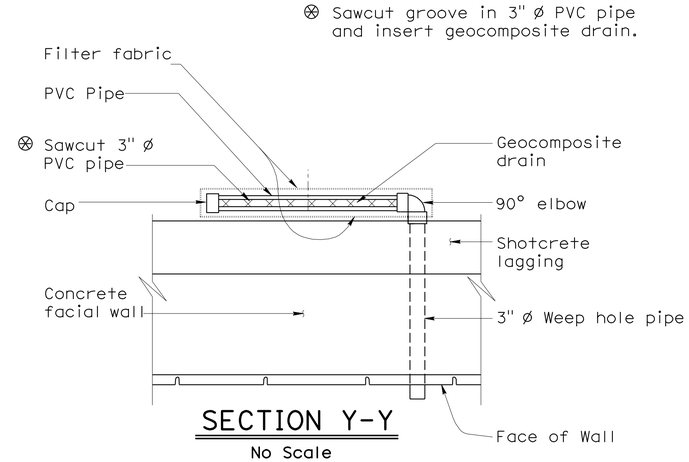

SECTION Y-Y

No Scale

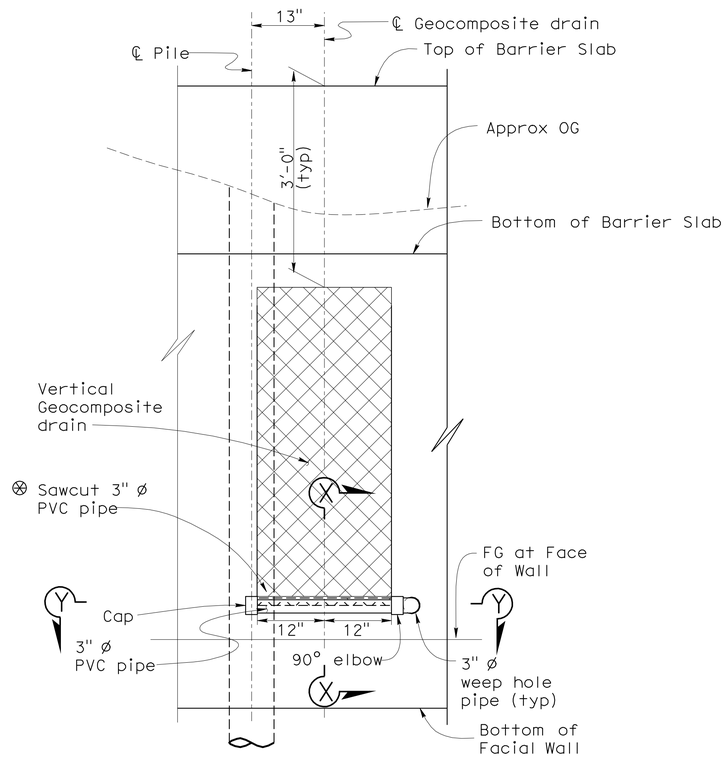

VERTICAL DRAINAGE DETAIL

Note: Wrap entire Geocomposite drain system with filter fabric

GEOCOMPOSITE DRAIN DETAILS

No Scale

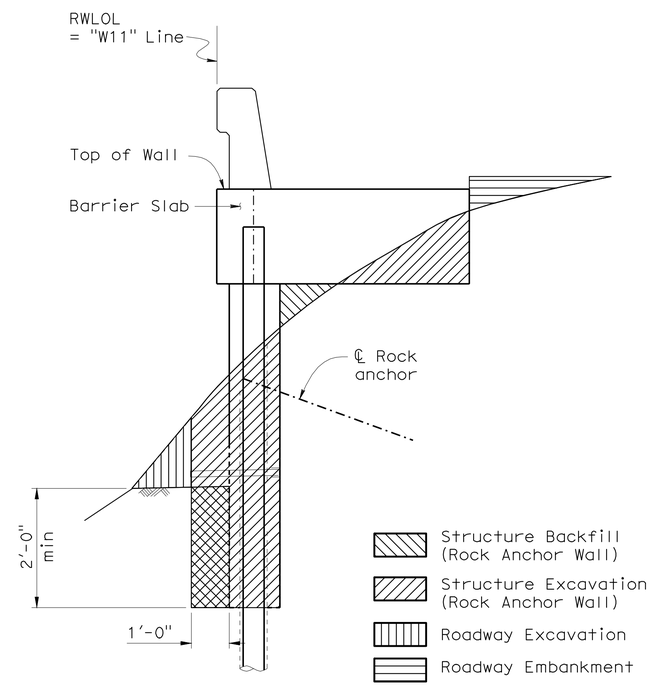

LIMITS OF PAYMENT FOR EXCAVATION AND BACKFILL

½"=1'-0"

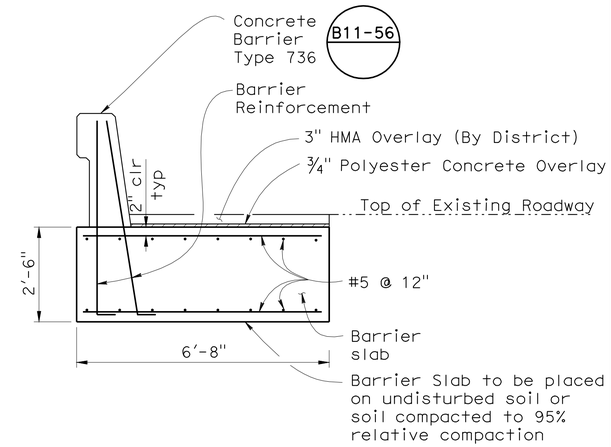

Note: All reinforcement in barrier slab be epoxy coated

BARRIER SLAB DETAIL

½" = 1'-0"

DESIGN	BY M. J. Cullen	CHECKED M. Guadamuz	
DETAILS	BY A. Chen	CHECKED M. J. Cullen	
QUANTITIES	BY H. Fang	CHECKED C. Siegenthaler	

STATE OF CALIFORNIA
DEPARTMENT OF TRANSPORTATION

DIVISION OF ENGINEERING SERVICES
STRUCTURE DESIGN
DESIGN BRANCH 5

BRIDGE NO. 09E0002
POST MILE 1.68

WALL LOCATION 11
WALL DETAILS NO. 2

STRUCTURES DESIGN DETAIL SHEET (ENGLISH) (REV. 10/25/05)

ORIGINAL SCALE IN INCHES FOR REDUCED PLANS 0 1 2 3

CU 02
EA 3C3001

DISREGARD PRINTS BEARING EARLIER REVISION DATES

REVISION DATES: 10-26-10 1-3-11 2-17-11 3-14-11 8-12-11

SHEET 6 OF 12

FILE => 11-q-dt03.dgn

USERNAME => s109858 DATE PLOTTED => 09-JAN-2012 TIME PLOTTED => 09:03

DIST	COUNTY	ROUTE	POST MILES TOTAL PROJECT	SHEET No	TOTAL SHEETS
02	Plu	70	0.6/35.2	63	101

REGISTERED CIVIL ENGINEER 8-29-2011 DATE

1-9-12
PLANS APPROVAL DATE

The State of California or its officers or agents shall not be responsible for the accuracy or completeness of electronic copies of this plan sheet.

REGISTERED PROFESSIONAL ENGINEER M. J. CULLEN No. C 40620 Exp. 03-31-13 CIVIL STATE OF CALIFORNIA

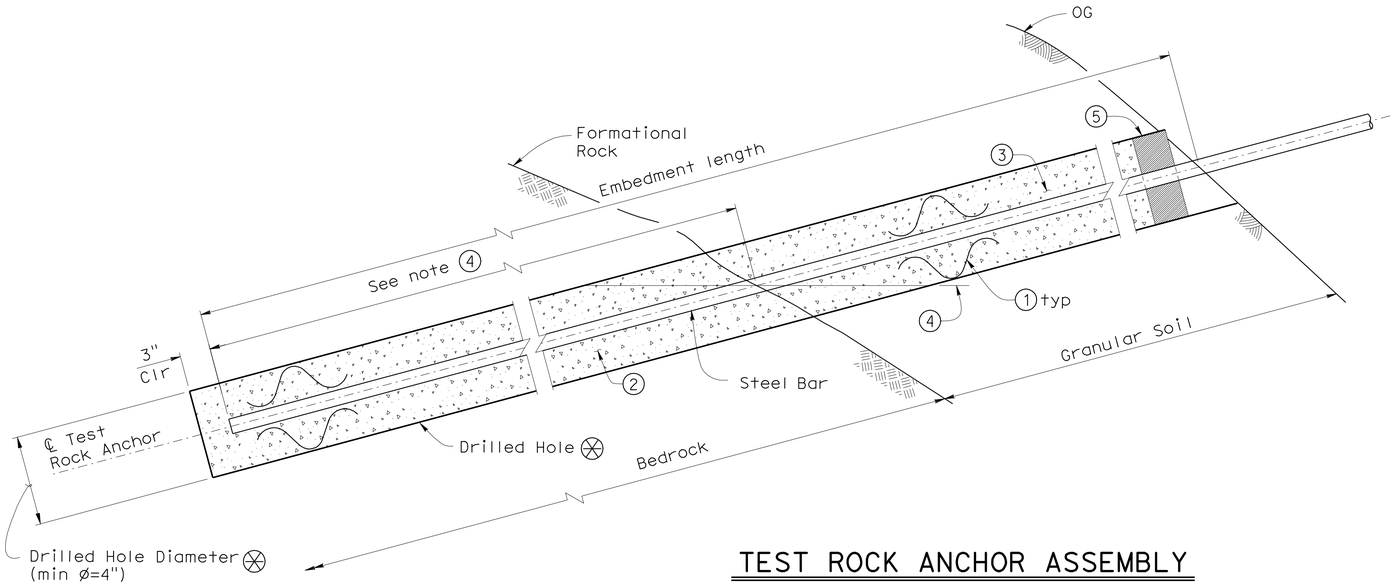

TEST ROCK ANCHOR ASSEMBLY

No Scale

Test Anchor Notes:

Embedment length shall be long enough to provide 10' bond length into bedrock

Total length of test Rock Anchor equals embedment length plus the length required for jacking equipment.

For location of test Rock Anchor See "Structure Plan"

1. Centralizers @ 5'-0" and located 20" minimum from top and bottom of drilled hole (Typ)
2. Initial grout
3. Secondary grout (Place after testing)
4. Level of Initial grout
5. Block out as required for pullout testing

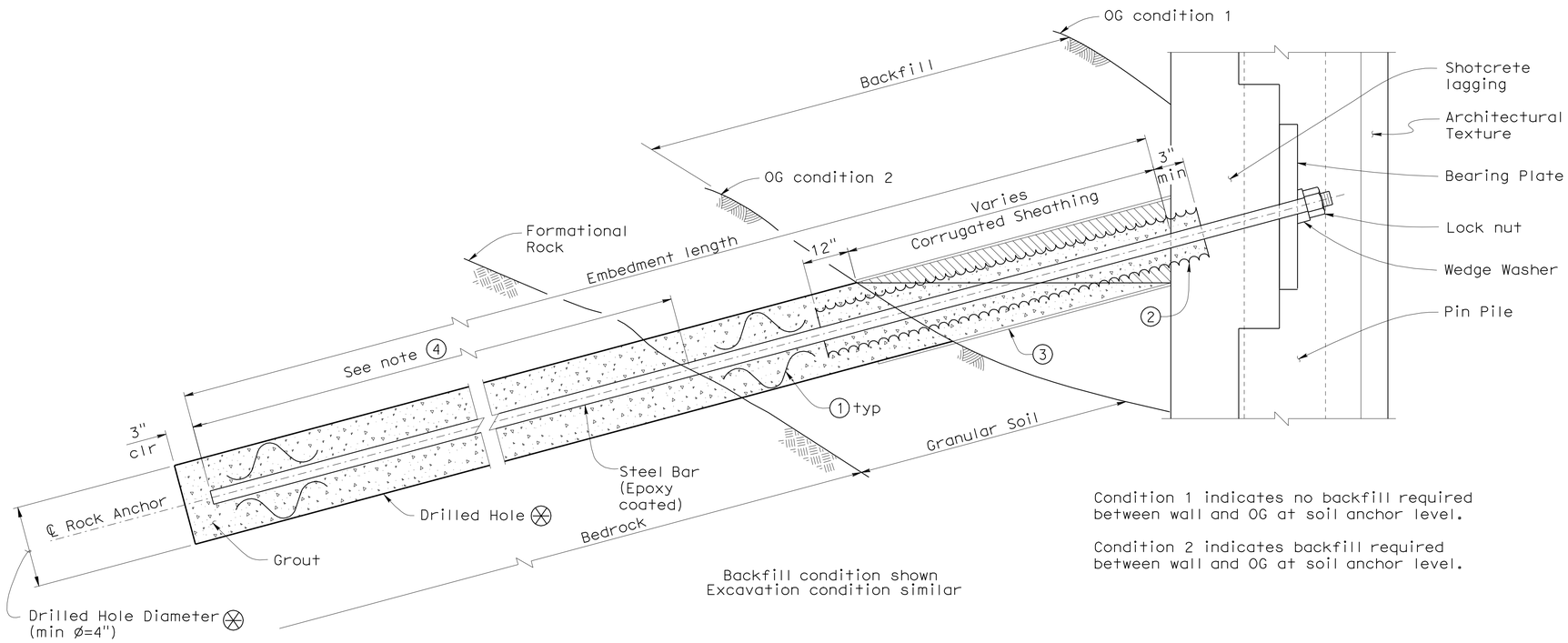

Backfill condition shown
Excavation condition similar

Condition 1 indicates no backfill required between wall and OG at soil anchor level.

Condition 2 indicates backfill required between wall and OG at soil anchor level.

ROCK ANCHOR ASSEMBLY

No Scale

Production Anchor Notes:

For segments of the wall supported by Rock Anchors there shall be no time during construction where the wall will laterally support 5'-0" or more of soil with out the Rock Anchor connected to the wall.

In fill situations Backfill to be placed and compacted after Rock Anchor is connected to the wall.

1. Centralizers @ 5'-0" and located 20" minimum from top and bottom of drilled hole (Typ)
2. Corrugated sheathing filled with grout. Grout to be cured before rock anchor is placed in drilled hole. Minimum diameter sheathing shall be 2"
3. Drilled hole extension comprised of pipe w/ inside diameter equal to inside diameter of drilled hole. (only required in condition 2)
4. Rock anchor shall be socketed a minimum of 7 ft into formational Rock. For additional rock anchor details, See notes on "Structure Plan" sheet.

Fill void w/ shotcrete at time of shotcrete wall construction (Required in condition 1 & 2)

Contractor to determine drilled hole diameter (ø)

	BY	CHECKED
DESIGN	M. J. Cullen	M. Guadamuz
DETAILS	A. Chen/S. Jiang	M. J. Cullen
QUANTITIES	H. Fang	C. Siegenthaler

STATE OF CALIFORNIA DEPARTMENT OF TRANSPORTATION

DIVISION OF ENGINEERING SERVICES STRUCTURE DESIGN DESIGN BRANCH 5

BRIDGE NO. 09E0002
POST MILE 1.68

WALL LOCATION 11
ROCK ANCHOR DETAILS

STRUCTURES DESIGN DETAIL SHEET (ENGLISH) (REV. 10/25/05)

ORIGINAL SCALE IN INCHES FOR REDUCED PLANS 0 1 2 3

CU 02
EA 3C3001

DISREGARD PRINTS BEARING EARLIER REVISION DATES

REVISION DATES: 10-26-10 2-24-11 2-28-11 3-8-11 6-24-11 8-24-11 8-26-11

SHEET 7 OF 12

FILE => 11-q-dt04.dgn

USERNAME => s109858 DATE PLOTTED => 09-JAN-2012 TIME PLOTTED => 09:09

DIST	COUNTY	ROUTE	POST MILES TOTAL PROJECT	SHEET No	TOTAL SHEETS
02	Plu	70	0.6/35.2	64	101

REGISTERED CIVIL ENGINEER 8-29-2011 DATE

1-9-12
PLANS APPROVAL DATE

REGISTERED PROFESSIONAL ENGINEER
M. J. CULLEN
No. C 40620
Exp. 03-31-13
CIVIL
STATE OF CALIFORNIA

The State of California or its officers or agents shall not be responsible for the accuracy or completeness of electronic copies of this plan sheet.

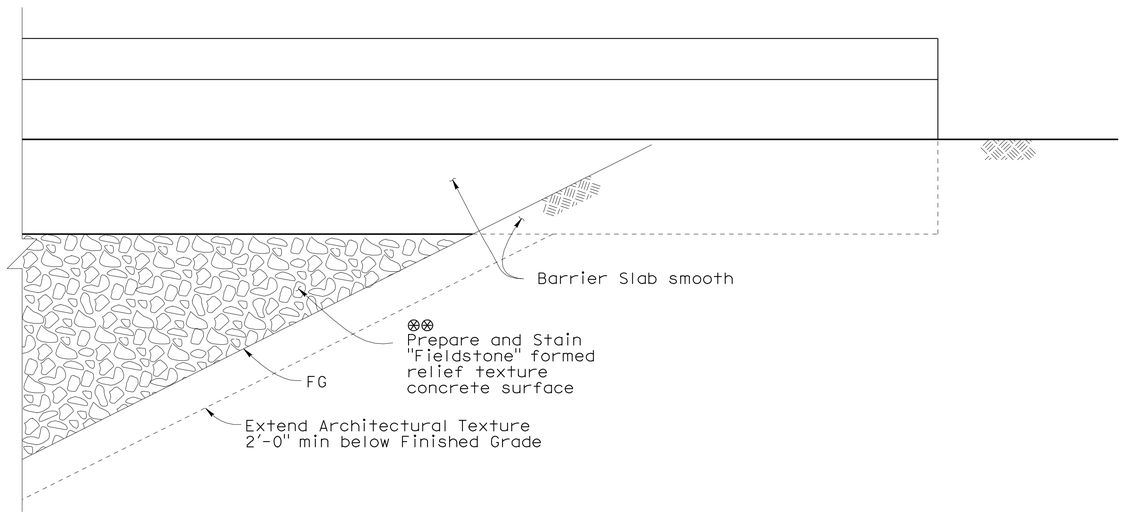

VIEW A-A

No Scale

⊗⊗ Concrete to be stained gray and approved by Project Landscape Architect

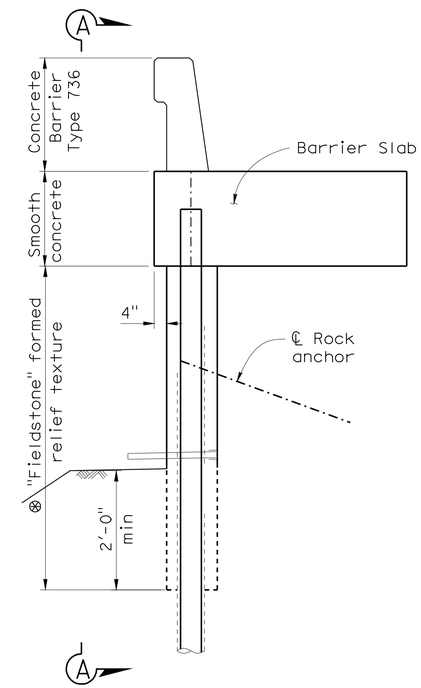

TYPICAL SECTION

No Scale

⊗ Limits of Payment for Prepare and Stain Concrete.

DESIGN	BY M. J. Cullen	CHECKED M. Guadamuz	
DETAILS	BY A. Chen	CHECKED M. J. Cullen	
QUANTITIES	BY H. Fang	CHECKED C. Siegenthaler	

STATE OF CALIFORNIA
DEPARTMENT OF TRANSPORTATION

DIVISION OF ENGINEERING SERVICES
STRUCTURE DESIGN
DESIGN BRANCH 5

BRIDGE NO. 09E0002
POST MILE 1.68

WALL LOCATION 11
ARCHITECTURAL TREATMENT

STRUCTURES DESIGN DETAIL SHEET (ENGLISH) (REV. 10/25/05)

ORIGINAL SCALE IN INCHES FOR REDUCED PLANS 0 1 2 3

CU 02
EA 3C3001

DISREGARD PRINTS BEARING EARLIER REVISION DATES

REVISION DATES: 10-26-10, 3-14-11, 6-1-11, 8-17-11

SHEET 8 OF 12

FILE => 11-v-archdt.dgn

USERNAME => s103858 DATE PLOTTED => 09-JAN-2012 TIME PLOTTED => 09:10

DIST	COUNTY	ROUTE	POST MILES TOTAL PROJECT	SHEET No	TOTAL SHEETS
02	Plu	70	0.6/35.2	65	101

PROFESSIONAL ENGINEER 3-21-11

1-9-12
PLANS APPROVAL DATE

REGISTERED PROFESSIONAL ENGINEER Mark Hagy No. GE2838 Exp. 12-31-12 GEOTECHNICAL STATE OF CALIFORNIA

The State of California or its officers or agents shall not be responsible for the accuracy or completeness of electronic copies of this plan sheet.

This LOTB sheet was prepared in accordance with the Caltrans Soil & Rock Logging, Classification, & Presentation Manual (2010 Edition).

BENCH MARK

REBAR WITH METAL CAP
CM 1.62 (SUHV162) PLU 70 PM 1.62
"A1" Line Sta 82+53 Lt 32′
N 1,840,877.73
E 6,738,336.73
Elev = 1704.73′
NAVD88

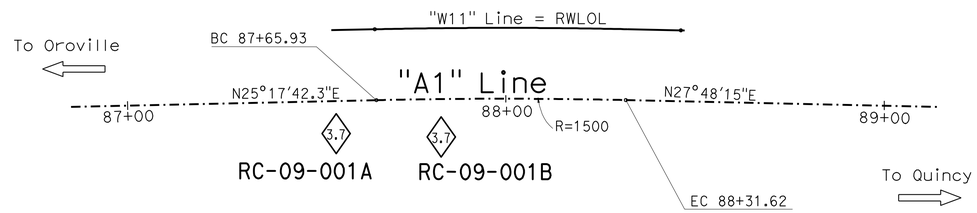

PLAN

1" = 20′

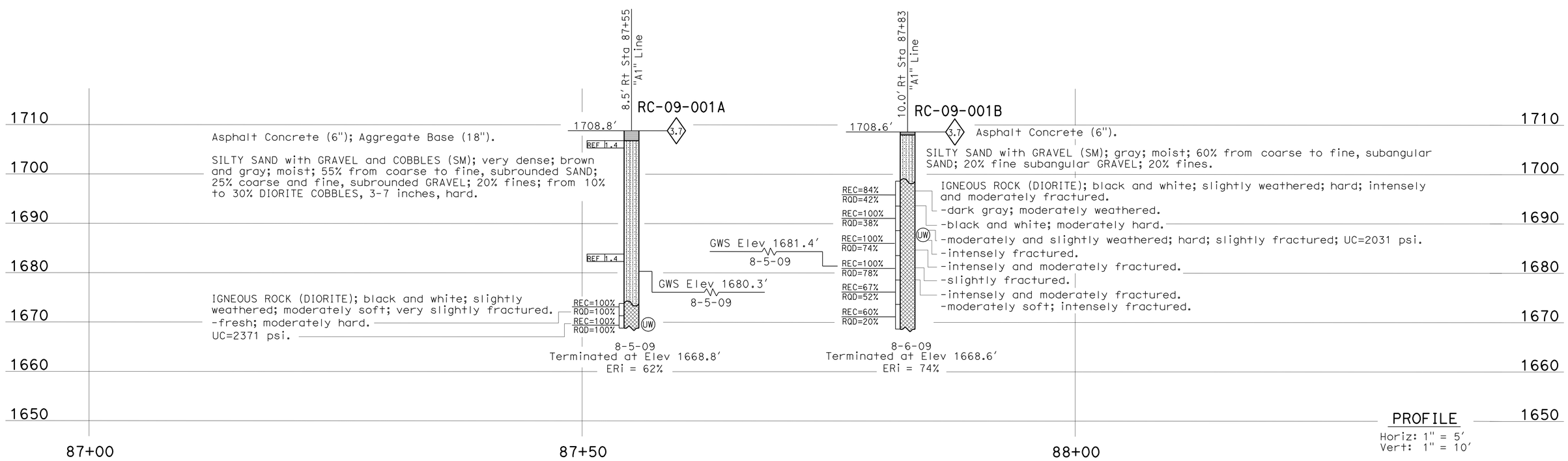

PROFILE

Horiz: 1" = 5′
Vert: 1" = 10′

ENGINEERING SERVICES	GEOTECHNICAL SERVICES	STATE OF CALIFORNIA DEPARTMENT OF TRANSPORTATION	DIVISION OF ENGINEERING SERVICES STRUCTURE DESIGN DESIGN BRANCH 5	BRIDGE NO. 09E0002 POST MILE 1.68	WALL LOCATION 11 LOG OF TEST BORINGS 1 OF 4
FUNCTIONAL SUPERVISOR NAME: D. Brittsan	DRAWN BY: I.G-Remmen, 3/11 CHECKED BY: L. Paredes-Mejia	FIELD INVESTIGATION BY: M. Kiesse, H. AkbarZadegan			

OGS CIVIL LOG OF TEST BORINGS SHEET

ORIGINAL SCALE IN INCHES FOR REDUCED PLANS 0 1 2 3

UNIT: 3643
PROJECT NUMBER & PHASE: 02000003171 CONTRACT NO.: 02-3C3001

DISREGARD PRINTS BEARING EARLIER REVISION DATES → 03-15-11

SHEET 9 OF 12

FILE => 11-z-ltb01of4.dgn

USERNAME => s109858 DATE PLOTTED => 09-JAN-2012 TIME PLOTTED => 09:10

REFERENCE: CALTRANS SOIL & ROCK LOGGING, CLASSIFICATION, AND PRESENTATION MANUAL (2010)

DIST	COUNTY	ROUTE	POST MILES TOTAL PROJECT	SHEET No	TOTAL SHEETS
02	Plu	70	0.6/35.2	66	101

PROFESSIONAL ENGINEER 3-21-11

1-9-12
PLANS APPROVAL DATE

REGISTERED PROFESSIONAL ENGINEER Mark Hagy No. GE2838 Exp. 12-31-12 GEOTECHNICAL STATE OF CALIFORNIA

The State of California or its officers or agents shall not be responsible for the accuracy or completeness of electronic copies of this plan sheet.

CEMENTATION

Description	Criteria
Weak	Crumbles or breaks with handling or little finger pressure.
Moderate	Crumbles or breaks with considerable finger pressure.
Strong	Will not crumble or break with finger pressure.

BOREHOLE IDENTIFICATION

Symbol	Hole Type	Description
Size	A	Auger Boring (hollow or solid stem bucket)
Size	R RW RC P	Rotary drilled boring (conventional) Rotary drilled with self-casing wire-line Rotary core with continuously-sampled, self-casing wire-line Rotary percussion boring (air)
Size	R	Rotary drilled diamond core
Size	HD HA	Hand driven (1-inch soil tube) Hand Auger
●	D	Dynamic Cone Penetration Boring
▲	CPT	Cone Penetration Test (ASTM D 5778)
⬚	O	Other (note on LOTB)

Note: Size in inches.

CONSISTENCY OF COHESIVE SOILS

Description	Shear Strength (tsf)	Pocket Penetrometer Measurement, PP, (tsf)	Torvane Measurement, TV, (tsf)	Vane Shear Measurement, VS, (tsf)
Very Soft	Less than 0.12	Less than 0.25	Less than 0.12	Less than 0.12
Soft	0.12 - 0.25	0.25 - 0.5	0.12 - 0.25	0.12 - 0.25
Medium Stiff	0.25 - 0.5	0.5 - 1	0.25 - 0.5	0.25 - 0.5
Stiff	0.5 - 1	1 - 2	0.5 - 1	0.5 - 1
Very Stiff	1 - 2	2 - 4	1 - 2	1 - 2
Hard	Greater than 2	Greater than 4	Greater than 2	Greater than 2

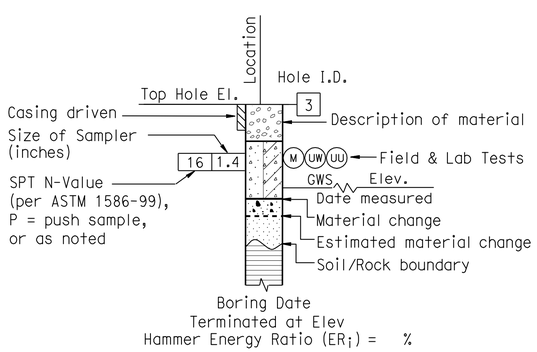

ROTARY BORING

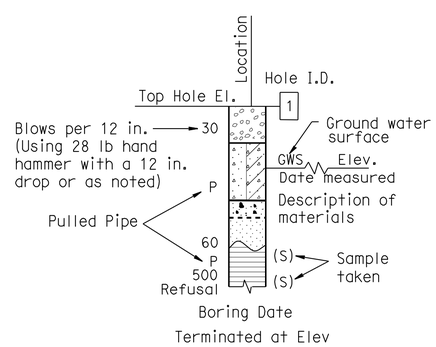

HAND BORING

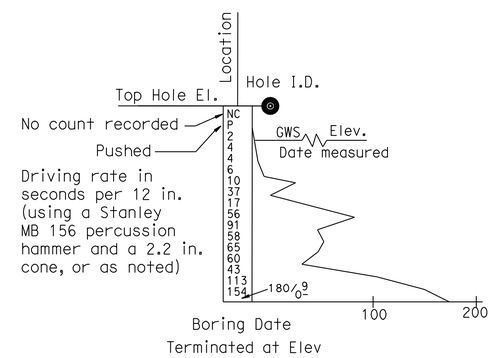

DYNAMIC CONE PENETRATION BORING

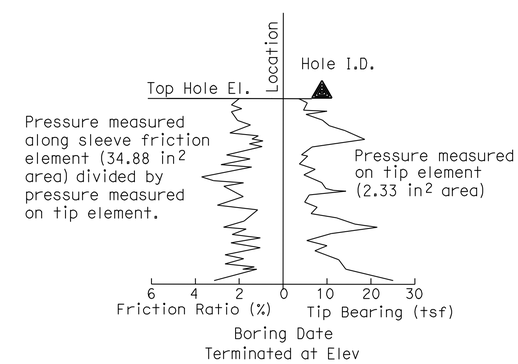

CONE PENETRATION TEST (CPT) BORING

ENGINEERING SERVICES	GEOTECHNICAL SERVICES	STATE OF CALIFORNIA DEPARTMENT OF TRANSPORTATION	DIVISION OF ENGINEERING SERVICES STRUCTURE DESIGN DESIGN BRANCH 5	BRIDGE NO. 09E0002 POST MILE 1.68	WALL LOCATION 11 LOG OF TEST BORINGS 2 OF 4
	PREPARED BY: I.G-Remmen, 3/11				

GS LOTB SOIL LEGEND

ORIGINAL SCALE IN INCHES FOR REDUCED PLANS 0 1 2 3

UNIT: 3643
PROJECT NUMBER & PHASE: 02000003171 CONTRACT NO.: 02-3C3001

DISREGARD PRINTS BEARING EARLIER REVISION DATES

REVISION DATES 03-15-11 | SHEET 10 | OF 12

FILE => 11-z-ltb02of4.dgn

USERNAME => s109858 DATE PLOTTED => 09-JAN-2012 TIME PLOTTED => 09:10

REFERENCE: CALTRANS SOIL & ROCK LOGGING, CLASSIFICATION, AND PRESENTATION MANUAL (2010)

DIST	COUNTY	ROUTE	POST MILES TOTAL PROJECT	SHEET No	TOTAL SHEETS
02	Plu	70	0.6/35.2	67	101

PROFESSIONAL ENGINEER 3-21-11

1-9-12
PLANS APPROVAL DATE

REGISTERED PROFESSIONAL ENGINEER Mark Hagy No. GE2838 Exp. 12-31-12 GEOTECHNICAL STATE OF CALIFORNIA

The State of California or its officers or agents shall not be responsible for the accuracy or completeness of electronic copies of this plan sheet.

GROUP SYMBOLS AND NAMES

Graphic/Symbol	Group Names
GW	Well-graded GRAVEL Well-graded GRAVEL with SAND
GP	Poorly-graded GRAVEL Poorly-graded GRAVEL with SAND
GW-GM	Well-graded GRAVEL with SILT Well-graded GRAVEL with SILT and SAND
GW-GC	Well-graded GRAVEL with CLAY (or SILTY CLAY) Well-graded GRAVEL with CLAY and SAND (or SILTY CLAY and SAND)
GP-GM	Poorly-graded GRAVEL with SILT Poorly-graded GRAVEL with SILT and SAND
GP-GC	Poorly-graded GRAVEL with CLAY (or SILTY CLAY) Poorly-graded GRAVEL with CLAY and SAND (or SILTY CLAY and SAND)
GM	SILTY GRAVEL SILTY GRAVEL with SAND
GC	CLAYEY GRAVEL CLAYEY GRAVEL with SAND
GC-GM	SILTY, CLAYEY GRAVEL SILTY, CLAYEY GRAVEL with SAND
SW	Well-graded SAND Well-graded SAND with GRAVEL
SP	Poorly-graded SAND Poorly-graded SAND with GRAVEL
SW-SM	Well-graded SAND with SILT Well-graded SAND with SILT and GRAVEL
SW-SC	Well-graded SAND with CLAY (or SILTY CLAY) Well-graded SAND with CLAY and GRAVEL (or SILTY CLAY and GRAVEL)
SP-SM	Poorly-graded SAND with SILT Poorly-graded SAND with SILT and GRAVEL
SP-SC	Poorly-graded SAND with CLAY (or SILTY CLAY) Poorly-graded SAND with CLAY and GRAVEL (or SILTY CLAY and GRAVEL)
SM	SILTY SAND SILTY SAND with GRAVEL
SC	CLAYEY SAND CLAYEY SAND with GRAVEL
SC-SM	SILTY, CLAYEY SAND SILTY, CLAYEY SAND with GRAVEL
PT	PEAT
	COBBLES COBBLES and BOULDERS BOULDERS

Graphic/Symbol	Group Names
CL	Lean CLAY Lean CLAY with SAND Lean CLAY with GRAVEL SANDY lean CLAY SANDY lean CLAY with GRAVEL GRAVELLY lean CLAY GRAVELLY lean CLAY with SAND
CL-ML	SILTY CLAY SILTY CLAY with SAND SILTY CLAY with GRAVEL SANDY SILTY CLAY SANDY SILTY CLAY with GRAVEL GRAVELLY SILTY CLAY GRAVELLY SILTY CLAY with SAND
ML	SILT SILT with SAND SILT with GRAVEL SANDY SILT SANDY SILT with GRAVEL GRAVELLY SILT GRAVELLY SILT with SAND
OL	ORGANIC lean CLAY ORGANIC lean CLAY with SAND ORGANIC lean CLAY with GRAVEL SANDY ORGANIC lean CLAY SANDY ORGANIC lean CLAY with GRAVEL GRAVELLY ORGANIC lean CLAY GRAVELLY ORGANIC lean CLAY with SAND
OL	ORGANIC SILT ORGANIC SILT with SAND ORGANIC SILT with GRAVEL SANDY ORGANIC SILT SANDY ORGANIC SILT with GRAVEL GRAVELLY ORGANIC SILT GRAVELLY ORGANIC SILT with SAND
CH	Fat CLAY Fat CLAY with SAND Fat CLAY with GRAVEL SANDY fat CLAY SANDY fat CLAY with GRAVEL GRAVELLY fat CLAY GRAVELLY fat CLAY with SAND
MH	Elastic SILT Elastic SILT with SAND Elastic SILT with GRAVEL SANDY elastic SILT SANDY elastic SILT with GRAVEL GRAVELLY elastic SILT GRAVELLY elastic SILT with SAND
OH	ORGANIC fat CLAY ORGANIC fat CLAY with SAND ORGANIC fat CLAY with GRAVEL SANDY ORGANIC fat CLAY SANDY ORGANIC fat CLAY with GRAVEL GRAVELLY ORGANIC fat CLAY GRAVELLY ORGANIC fat CLAY with SAND
OH	ORGANIC elastic SILT ORGANIC elastic SILT with SAND ORGANIC elastic SILT with GRAVEL SANDY ORGANIC elastic SILT SANDY ORGANIC elastic SILT with GRAVEL GRAVELLY ORGANIC elastic SILT GRAVELLY ORGANIC elastic SILT with SAND
OL/OH	ORGANIC SOIL ORGANIC SOIL with SAND ORGANIC SOIL with GRAVEL SANDY ORGANIC SOIL SANDY ORGANIC SOIL with GRAVEL GRAVELLY ORGANIC SOIL GRAVELLY ORGANIC SOIL with SAND

FIELD AND LABORATORY TESTING

- (C) Consolidation (ASTM D 2435)
- (CL) Collapse Potential (ASTM D 5333)
- (CP) Compaction Curve (CTM 216)
- (CR) Corrosivity Testing (CTM 643, CTM 422, CTM 417)
- (CU) Consolidated Undrained Triaxial (ASTM D 4767)
- (DS) Direct Shear (ASTM D 3080)
- (EI) Expansion Index (ASTM D 4829)
- (M) Moisture Content (ASTM D 2216)
- (OC) Organic Content-% (ASTM D 2974)
- (P) Permeability (CTM 220)
- (PA) Particle Size Analysis (ASTM D 422)
- (PI) Plasticity Index (AASHTO T 90) Liquid Limit (AASHTO T 89)
- (PL) Point Load Index (ASTM D 5731)
- (PM) Pressure Meter
- (R) R-Value (CTM 301)
- (SE) Sand Equivalent (CTM 217)
- (SG) Specific Gravity (AASHTO T 100)
- (SL) Shrinkage Limit (ASTM D 427)
- (SW) Swell Potential (ASTM D 4546)
- (UC) Unconfined Compression-Soil (ASTM D 2166) Unconfined Compression-Rock (ASTM D 2938)
- (UU) Unconsolidated Undrained Triaxial (ASTM D 2850)
- (UW) Unit Weight (ASTM D 4767)

APPARENT DENSITY OF COHESIONLESS SOILS

Description	SPT N_{60} (Blows / 12 in.)
Very Loose	0 - 5
Loose	5 - 10
Medium Dense	10 - 30
Dense	30 - 50
Very Dense	Greater than 50

MOISTURE

Description	Criteria
Dry	No discernable moisture
Moist	Moisture present, but no free water
Wet	Visible free water

PERCENT OR PROPORTION OF SOILS

Description	Criteria
Trace	Particles are present but estimated to be less than 5%
Few	5% - 10%
Little	15% - 25%
Some	30% - 45%
Mostly	50% - 100%

PARTICLE SIZE

Description		Size (in.)
Boulder		Greater than 12
Cobble		3 - 12
Gravel	Coarse	3/4 - 3
	Fine	1/5 - 3/4
Sand	Coarse	1/16 - 1/5
	Medium	1/64 - 1/16
	Fine	1/300 - 1/64
Silt and Clay		Less than 1/300

ENGINEERING SERVICES

GEOTECHNICAL SERVICES

PREPARED BY: I.G-Remmen, 3/11

STATE OF CALIFORNIA DEPARTMENT OF TRANSPORTATION

DIVISION OF ENGINEERING SERVICES STRUCTURE DESIGN DESIGN BRANCH 5

BRIDGE NO. 09E0002

POST MILE 1.68

WALL LOCATION 11

LOG OF TEST BORINGS 3 OF 4

GS LOTB SOIL LEGEND

ORIGINAL SCALE IN INCHES FOR REDUCED PLANS 0 1 2 3

UNIT: 3643
PROJECT NUMBER & PHASE: 02000003171
CONTRACT NO.: 02-3C3001

DISREGARD PRINTS BEARING EARLIER REVISION DATES

REVISION DATES 03-15-11

SHEET 11 OF 12

FILE => 11-z-ltb03of4.dgn

USERNAME => s103858 DATE PLOTTED => 09-JAN-2012 TIME PLOTTED => 09:10

REFERENCE: CALTRANS SOIL & ROCK LOGGING, CLASSIFICATION, AND PRESENTATION MANUAL (2010)

DIST	COUNTY	ROUTE	POST MILES TOTAL PROJECT	SHEET No	TOTAL SHEETS
02	Plu	70	0.6/35.2	68	101

PROFESSIONAL ENGINEER 3-21-11

1-9-12
PLANS APPROVAL DATE

REGISTERED PROFESSIONAL ENGINEER Mark Hagy No. GE2838 Exp. 12-31-12 GEOTECHNICAL STATE OF CALIFORNIA

The State of California or its officers or agents shall not be responsible for the accuracy or completeness of electronic copies of this plan sheet.

PERCENT CORE RECOVERY (REC) & ROCK QUALITY DESIGNATION (RQD)

$$REC = \frac{\sum \text{Length of the recovered core pieces (in.)}}{\text{Total length of core run (in.)}} \times 100\%$$

$$RQD = \frac{\sum \text{Length of intact core pieces} \geq 4 \text{ in.}}{\text{Total length of core run (in.)}} \times 100\%$$

RQD* Indicates soundness criteria not met.

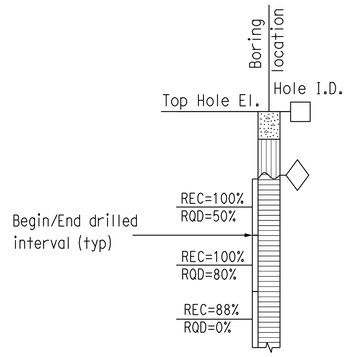

BEDDING SPACING

Description	Thickness / Spacing
Massive	Greater than 10 ft
Very Thickly Bedded	3 ft - 10 ft
Thickly Bedded	1 ft - 3 ft
Moderately Bedded	4 in. - 1 ft
Thinly Bedded	1 in. - 4 in.
Very Thinly Bedded	1/4 in. - 1 in.
Laminated	Less than 1/4 in.

LEGEND OF ROCK MATERIALS

- IGNEOUS ROCK
- SEDIMENTARY ROCK
- METAMORPHIC ROCK

ROCK HARDNESS

Description	Criteria
Extremely Hard	Cannot be scratched with a pocketknife or sharp pick. Can only be chipped with repeated heavy hammer blows.
Very Hard	Cannot be scratched with a pocketknife or sharp pick. Breaks with repeated heavy hammer blows.
Hard	Can be scratched with a pocketknife or sharp pick with difficulty (heavy pressure). Breaks with heavy hammer blows.
Moderately Hard	Can be scratched with pocketknife or sharp pick with light or moderate pressure. Breaks with moderate hammer blows.
Moderately Soft	Can be grooved 1/16 in. deep with a pocketknife or sharp pick with moderate or heavy pressure. Breaks with light hammer blow or heavy manual pressure.
Soft	Can be grooved or gouged easily by a pocketknife or sharp pick with light pressure, can be scratched with fingernail. Breaks with light to moderate manual pressure.
Very Soft	Can be readily indented, grooved or gouged with fingernail, or carved with a pocketknife. Breaks with light manual pressure.

FRACTURE DENSITY

Description	Observed Fracture Density
Unfractured	No fractures.
Very Slightly Fractured	Core lengths greater than 3 ft.
Slightly Fractured	Core lengths mostly from 1 to 3 ft.
Moderately Fractured	Core lengths mostly from 4 in. to 1 ft.
Intensely Fractured	Core lengths mostly from 1 to 4 in.
Very Intensely Fractured	Mostly chips and fragments.

WEATHERING DESCRIPTORS FOR INTACT ROCK

Description	Diagnostic Features					General Characteristics
	Chemical Weathering-Discoloration and/or Oxidation		Mechanical Weathering-Grain Boundary Conditions (Disaggregation) Primarily for Granitics and Some Coarse-Grained Sediments	Texture and Leaching		
	Body of Rock	Fracture Surfaces		Texture	Leaching	
Fresh	No discoloration, not oxidized.	No discoloration or oxidation.	No separation, intact (tight).	No change	No leaching	Hammer rings when crystalline rocks are struck.
Slightly Weathered	Discoloration or oxidation is limited to surface of, or short distance from, fractures; some feldspar crystals are dull.	Minor to complete discoloration or oxidation of most surfaces.	No visible separation, intact (tight).	Preserved	Minor leaching of some soluble minerals.	Hammer rings when crystalline rocks are struck. Body of rock not weakened.
Moderately Weathered	Discoloration or oxidation extends from fractures usually throughout; Fe-Mg minerals are "rusty," feldspar crystals are "cloudy."	All fracture surfaces are discolored or oxidized.	Partial separation of boundaries visible.	Generally preserved	Soluble minerals may be mostly leached.	Hammer does not ring when rock is struck. Body of rock is slightly weakened.
Intensely Weathered	Discoloration or oxidation throughout; all feldspars and Fe-Mg minerals are altered to clay to some extent; or chemical alteration produces in-situ disaggregation, see grain boundary conditions.	All fracture surfaces are discolored or oxidized, surfaces friable.	Partial separation, rock is friable; in semiarid conditions granitics are disaggregated.	Texture altered by chemical disintegration (hydration, argillation).	Leaching of soluble minerals may be complete.	Dull sound when struck with hammer, usually can be broken with moderate to heavy manual pressure or by light hammer blow without reference to planes of weakness such as incipient or hairline fractures, or veinlets. Rock is significantly weakened.
Decomposed	Discolored or oxidized throughout, but resistant minerals such as quartz may be unaltered; all feldspars and Fe-Mg minerals are completely altered to clay.		Complete separation of grain boundaries (disaggregated).	Resembles a soil, partial or complete remnant rock structure may be preserved; leaching of soluble minerals usually complete.		Can be granulated by hand. Resistant minerals such as quartz may be present as "stringers" or "dikes."

ENGINEERING SERVICES

GEOTECHNICAL SERVICES
PREPARED BY: I.G-Remmen, 3/11

STATE OF CALIFORNIA
DEPARTMENT OF TRANSPORTATION

DIVISION OF ENGINEERING SERVICES
STRUCTURE DESIGN
DESIGN BRANCH 5

BRIDGE NO. 09E0002
POST MILE 1.68

WALL LOCATION 11
LOG OF TEST BORINGS 4 OF 4

GS LOTB SOIL LEGEND

ORIGINAL SCALE IN INCHES FOR REDUCED PLANS 0 1 2 3

UNIT: 3643
PROJECT NUMBER & PHASE: 02000003171
CONTRACT NO.: 02-3C3001

DISREGARD PRINTS BEARING EARLIER REVISION DATES

REVISION DATES 03-15-11

SHEET 12 OF 12

FILE => 11-z-ltb04of4.dgn

USERNAME => s109858 DATE PLOTTED => 09-JAN-2012 TIME PLOTTED => 09:10

DIST	COUNTY	ROUTE	POST MILES TOTAL PROJECT	SHEET No	TOTAL SHEETS
02	Plu	70	0.6/35.2	69	101

REGISTERED CIVIL ENGINEER 08/30/2011 DATE

1-9-12
PLANS APPROVAL DATE

The State of California or its officers or agents shall not be responsible for the accuracy or completeness of electronic copies of this plan sheet.

REGISTERED PROFESSIONAL ENGINEER M. J. CULLEN No. C 40620 Exp. 03-31-13 CIVIL STATE OF CALIFORNIA

Notes:

1. For Begin and End Wall Location See "Wall Details No. 1" Sheet "Section A-A"
2. For Details and Quantity of Existing CSP Retaining Wall See "Existing 36" CSP Retaining Wall Removal" Sheet

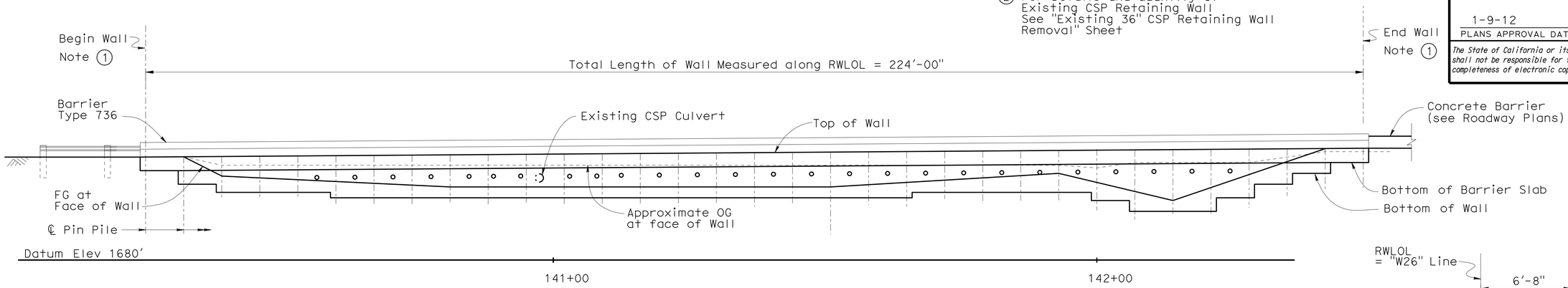

∘ Indicates Rock Anchor

DEVELOPED MIRROR ELEVATION

1" = 10'-0"

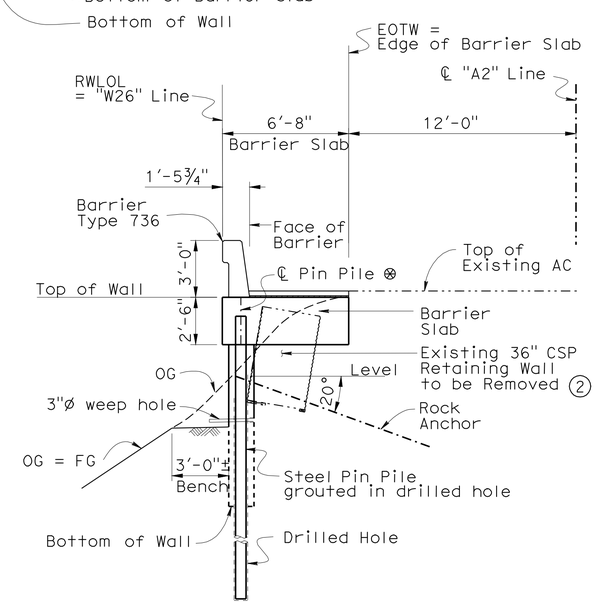

⊗ Pin Pile consists of 6" XX Strong Pipe

TYPICAL SECTION

¼"=1'-0"

INDEX TO PLANS

1. GENERAL PLAN
2. STRUCTURE PLAN NO. 1
3. STRUCTURE PLAN NO. 2
4. FOUNDATION PLAN
5. EXISTING 36" CMP RETAINING WALL REMOVAL
6. WALL DETAILS NO. 1
7. WALL DETAILS NO. 2
8. ROCK ANCHOR DETAILS
9. ARCHITECTURAL TREATMENT
10. LOG OF TEST BORINGS 1 OF 5
11. LOG OF TEST BORINGS 2 OF 5
12. LOG OF TEST BORINGS 3 OF 5
13. LOG OF TEST BORINGS 4 OF 5
14. LOG OF TEST BORINGS 5 OF 5

QUANTITIES

PREPARE CONCRETE BARRIER SLAB SURFACE	1,172	SQFT
REMOVE 36" CORRUGATED STEEL PIPE	197	LF
RETAINING WALL		
STRUCTURE EXCAVATION (ROCK ANCHOR WALL)	235	CY
STRUCTURE BACKFILL (ROCK ANCHOR WALL)	22	CY
ROCK ANCHOR ASSEMBLY	644	LF
STEEL PIN PILE (6"XX STRONG PIPE)	758	LF
DRILLED HOLE	782	LF
STRUCTURAL CONCRETE, RETAINING WALL	32	CY
STRUCTURAL CONCRETE, BARRIER SLAB	140	CY
FIELDSTONE FORMED RELIEF TEXTURE	1,028	SQFT
FURNISH POLYESTER CONCRETE OVERLAY	73	CF
PLACE POLYESTER CONCRETE OVERLAY	1,172	SQFT
BAR REINFORCING STEEL (RETAINING WALL)	14,780	LB
SHOTCRETE	18	CY
PREPARE AND STAIN CONCRETE	1,028	SQFT
CONCRETE BARRIER (TYPE 736)	226	LF

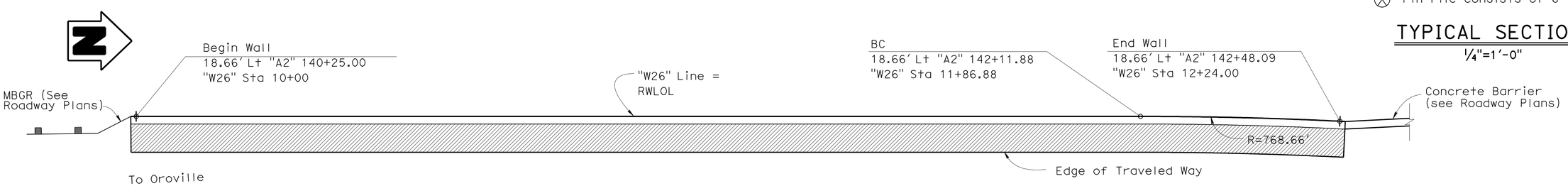

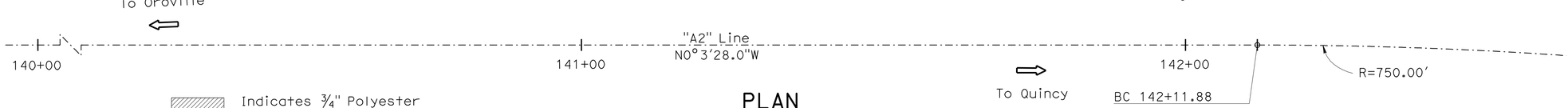

Indicates ¾" Polyester Concrete Overlay

PLAN

1" = 10'-0"

Curve Data	Curve Data
"A2" Line	RWLOL
R = 750.00'	R = 768.66'
Δ = 06°39'16"	Δ = 02°45'58"
T = 43.60'	T = 18.56'
L = 87.11'	L = 37.11'

Gary Blakesley
DESIGN ENGINEER

DESIGN	BY M. J. Cullen	CHECKED M. Guadamuz	SERVICE LOAD DESIGN	LIVE LOADING: 2 FEET LEVEL SURCHARGE
DETAILS	BY A. Chen /S. Jiang	CHECKED M. J. Cullen	LAYOUT BY M. J. Cullen	CHECKED M. Guadamuz
QUANTITIES	BY H. Fang	CHECKED C. Siegenthaler	SPECIFICATIONS BY M. Kopsa	PLANS AND SPECS COMPARED M. J. Cullen

STATE OF CALIFORNIA
DEPARTMENT OF TRANSPORTATION

DIVISION OF ENGINEERING SERVICES
STRUCTURE DESIGN
DESIGN BRANCH 5

BRIDGE NO. 09E0003
POST MILE 2.68

WALL LOCATION 26
GENERAL PLAN

STRUCTURES DESIGN GENERAL PLAN SHEET (ENGLISH) (REV. 10/25/05)

ORIGINAL SCALE IN INCHES FOR REDUCED PLANS 0 1 2 3

CU 02
EA 3C3001

DISREGARD PRINTS BEARING EARLIER REVISION DATES

REVISION DATES: 10-12-10 1-13-11 1-19-11 3-14-11 6-1-11 8-12-11 8-26-11

SHEET 1 OF 14

FILE => 26-a-gp.dgn

STRUCTURES DESIGN GENERAL PLAN SHEET (ENGLISH) (REV.07-24-06)

USERNAME => s123631

DIST	COUNTY	ROUTE	POST MILES TOTAL PROJECT	SHEET No	TOTAL SHEETS
02	Plu	70	0.6/35.2	70	101

REGISTERED CIVIL ENGINEER 08-30-2011 DATE

1-9-12
PLANS APPROVAL DATE

REGISTERED PROFESSIONAL ENGINEER M. J. CULLEN No. C 40620 Exp. 03-31-13 CIVIL STATE OF CALIFORNIA

The State of California or its officers or agents shall not be responsible for the accuracy or completeness of electronic copies of this plan sheet.

GENERAL NOTES

DESIGN:

CALTRANS BRIDGE DESIGN SPECIFICATIONS-APRIL 2000 (LFD)
(1996 AASHTO with Interims and Revisions by CALTRANS)

SOIL PARAMETERS:

(For determination of design lateral earth pressures)

Soil	Rock
$\phi = 34°$	$\phi = 38°$
$\gamma_m = 135$ pcf	$\gamma_m = 165$ pcf
Q_d = N/A	c = 3500 pcf
	$Q_d = 6000 \frac{lbs}{ft}$

Q_d = Design Pullout Resistance (lbs per linear foot)

LIVE LOAD:

Surcharge - 2 feet Level Earth

SHOTCRETE/REINFORCED CONCRETE:

f'c = 3600 psi (Concrete compressive strength at 28 days)
fy = 60 000 psi (Yield strength of reinforcement)

STRUCTURAL STEEL:

Steel Piles, 6" XX Strong Pipe
ASTM Designation A53 Grade B

ROCK ANCHORS:

ASTM Designation A615 Grade 75
fy = 75 ksi
fs = 42 ksi

STANDARD PLANS DATED MAY 2006

A10A ACRONYMS AND ABBREVIATIONS (A-L)

B11-56 BARRIER RAIL TYPE 736

STANDARD PLAN SHEET NO.

DETAIL NO.

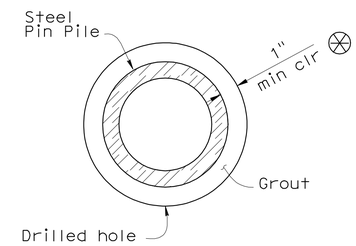

DRILLED HOLE DETAIL

3" = 1'-0"
Typical for all Piles

Notes:

* ℄ Rock anchor @ back face of wall, Place Rock anchors midway between piles. (except where noted)

‡ Embedment length to be increased where needed to assure that anchors are socketed at least 7 feet into the formational rock. (Embedment length may not be decreased)

⊗ Drilled hole must be large enough so that a minimum gap of 1" is provided between drilled hole and steel Pin Pile. This condition must be met at all depths. Hole diameter may be larger if required by drilling conditions.

⊗⊗ For beginning and end wall segments the bottom of wall is the bottom of the barrier slab

\- The Test Rock Anchor at Wall Location 27 shall be tested before any rock anchors are to be constructed on Wall Location 26

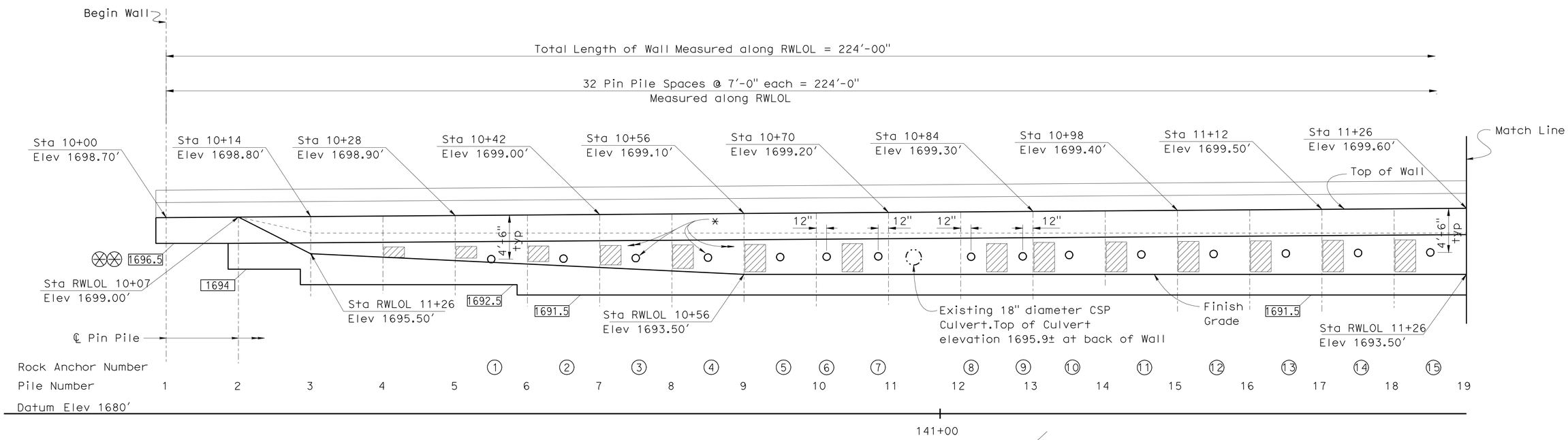

DEVELOPED MIRROR ELEVATION

1" = 5'-0"

Indicates Bottom of Wall Elevation

Indicates Vertical Geocomposite Drain with Weephole (Backface of Wall). See "Wall Details No. 2" sheet

DESIGN	BY M. J. Cullen	CHECKED M. Guadamuz	
DETAILS	BY A. Chen /S. Jiang	CHECKED M. J. Cullen	
QUANTITIES	BY H. Fang	CHECKED C. Siegenthaler	

STATE OF CALIFORNIA DEPARTMENT OF TRANSPORTATION

DIVISION OF ENGINEERING SERVICES STRUCTURE DESIGN DESIGN BRANCH 5

BRIDGE NO. 09E0003
POST MILE 2.73

WALL LOCATION 26
STRUCTURE PLAN NO. 1

STRUCTURES DESIGN DETAIL SHEET (ENGLISH) (REV. 10/25/05)

ORIGINAL SCALE IN INCHES FOR REDUCED PLANS 0 1 2 3

CU 02
EA 3C3001

DISREGARD PRINTS BEARING EARLIER REVISION DATES

REVISION DATES 10-18-10 1-18-11 1-18-11 2-14-11 3-8-11 6-14-11 8-14-11 8-26-11

SHEET 2 OF 14

FILE => 26-c-sp01.dgn

USERNAME => s128843 DATE PLOTTED => 09-JAN-2012 TIME PLOTTED => 09:12

DIST	COUNTY	ROUTE	POST MILES TOTAL PROJECT	SHEET No	TOTAL SHEETS
02	Plu	70	0.6/35.2	71	101

REGISTERED CIVIL ENGINEER 08-30-2011 DATE

1-9-12
PLANS APPROVAL DATE

REGISTERED PROFESSIONAL ENGINEER
M. J. CULLEN
No. C 40620
Exp. 03-31-13
CIVIL
STATE OF CALIFORNIA

The State of California or its officers or agents shall not be responsible for the accuracy or completeness of electronic copies of this plan sheet.

ROCK ANCHOR TABLE

Rock Anchor	† Embedment Length	Size
1	22	#8
2	22	#8
3	22	#8
4	22	#8
5	28	#8
6	28	#8
7	28	#8
8	28	#8
9	28	#8
10	28	#8
11	28	#8
12	28	#8
13	28	#8
14	28	#8
15	28	#8
16	28	#8
17	28	#8
18	28	#8
19	28	#8
20	28	#8
21	22	#8
22	22	#8
23	22	#8
24	14	#8
25	14	#8
26	14	#8

PILE DATA TABLE

Pile Number	"W26" Station	Tip Elevation
1	10+00	1676
2	10+07	1676
3	10+14	1676
4	10+21	1676
5	10+28	1676
6	10+35	1676
7	10+42	1676
8	10+49	1676
9	10+56	1672
10	10+63	1672
11	10+70	1672
12	10+77	1672
13	10+84	1672
14	10+91	1672
15	10+98	1672
16	11+05	1672
17	11+12	1672
18	11+19	1672
19	11+26	1672
20	11+33	1672
21	11+40	1672
22	11+47	1672
23	11+54	1672
24	11+61	1672
25	11+68	1678
26	11+75	1678
27	11+82	1678
28	11+89	1678
29	11+96	1686
30	12+03	1686
31	12+10	1686
32	12+17	1686
33	12+24	1686

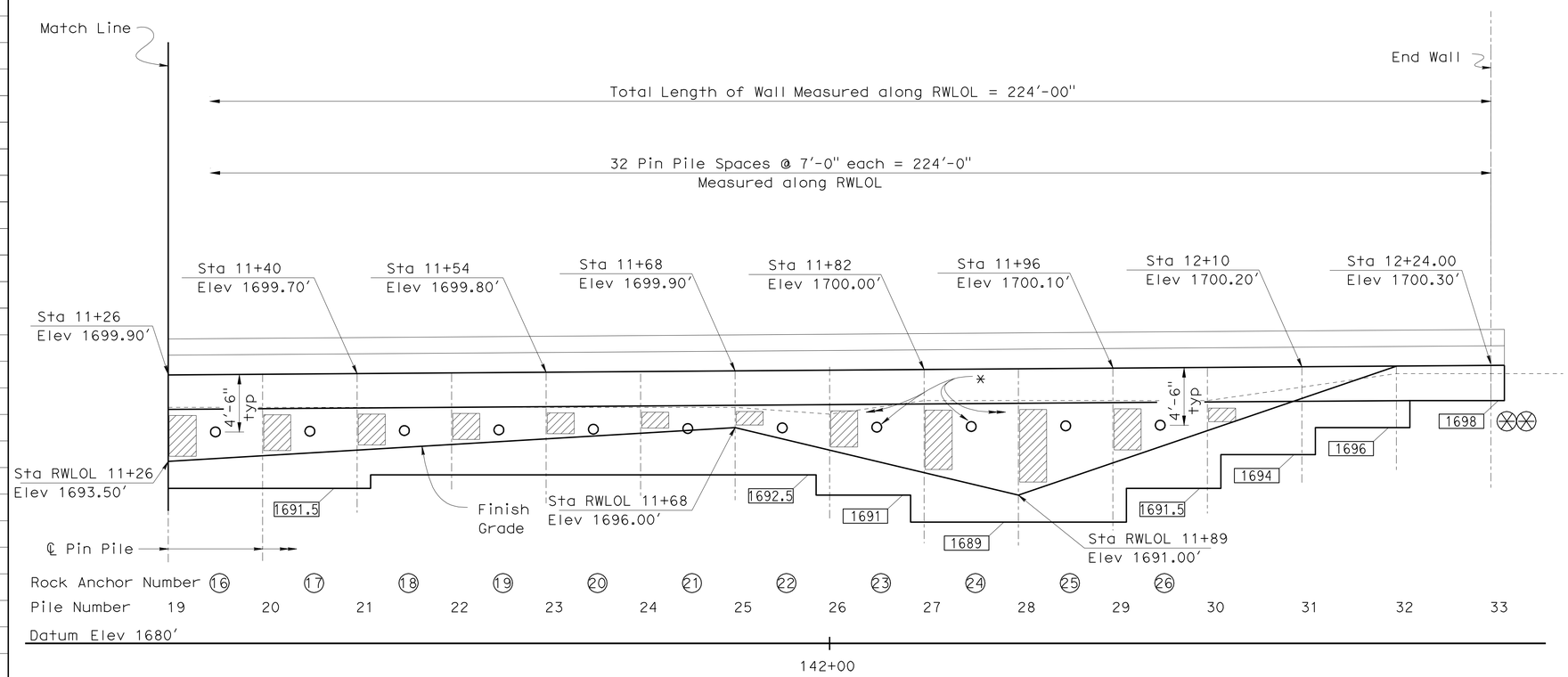

DEVELOPED MIRROR ELEVATION

1" = 5'-0"

All Pin Piles shall be 6" XX -strong pipe and be embeded 8 ft into bedrock. Tip Elevation to be lowered where needed to maintain 8 ft embedment

DESIGN	BY M. J. Cullen	CHECKED M. Guadamuz	
DETAILS	BY A. Chen	CHECKED M. J. Cullen	
QUANTITIES	BY H. Fang	CHECKED C. Siegenthaler	

STATE OF CALIFORNIA
DEPARTMENT OF TRANSPORTATION

DIVISION OF ENGINEERING SERVICES
STRUCTURE DESIGN
DESIGN BRANCH 5

BRIDGE NO. 09E0003
POST MILE 2.73

WALL LOCATION 26
STRUCTURE PLAN NO. 2

STRUCTURES DESIGN DETAIL SHEET (ENGLISH) (REV. 10/25/05)

ORIGINAL SCALE IN INCHES FOR REDUCED PLANS 0 1 2 3

CU 02
EA 3C3001

DISREGARD PRINTS BEARING EARLIER REVISION DATES

REVISION DATES: 10-28-10 1-13-11 1-19-11 2-15-11 3-8-11 6-14-11 8-17-11

SHEET 3 OF 14

FILE => 26-c-sp02.dgn

USERNAME => s128843 DATE PLOTTED => 09-JAN-2012 TIME PLOTTED => 09:13

DIST	COUNTY	ROUTE	POST MILES TOTAL PROJECT	SHEET No	TOTAL SHEETS
02	Plu	70	0.6/35.2	72	101

REGISTERED CIVIL ENGINEER 08-30-2001 DATE

1-9-12
PLANS APPROVAL DATE

The State of California or its officers or agents shall not be responsible for the accuracy or completeness of electronic copies of this plan sheet.

REGISTERED PROFESSIONAL ENGINEER
M. J. CULLEN
No. C 40620
Exp. 03-31-13
CIVIL
STATE OF CALIFORNIA

CURVE DATA

No.	R	Δ	T	L
Ⓐ	750.00′	06°09′17″	43.60	87.11
Ⓑ	768.66′	02°45′58″	18.56	37.11

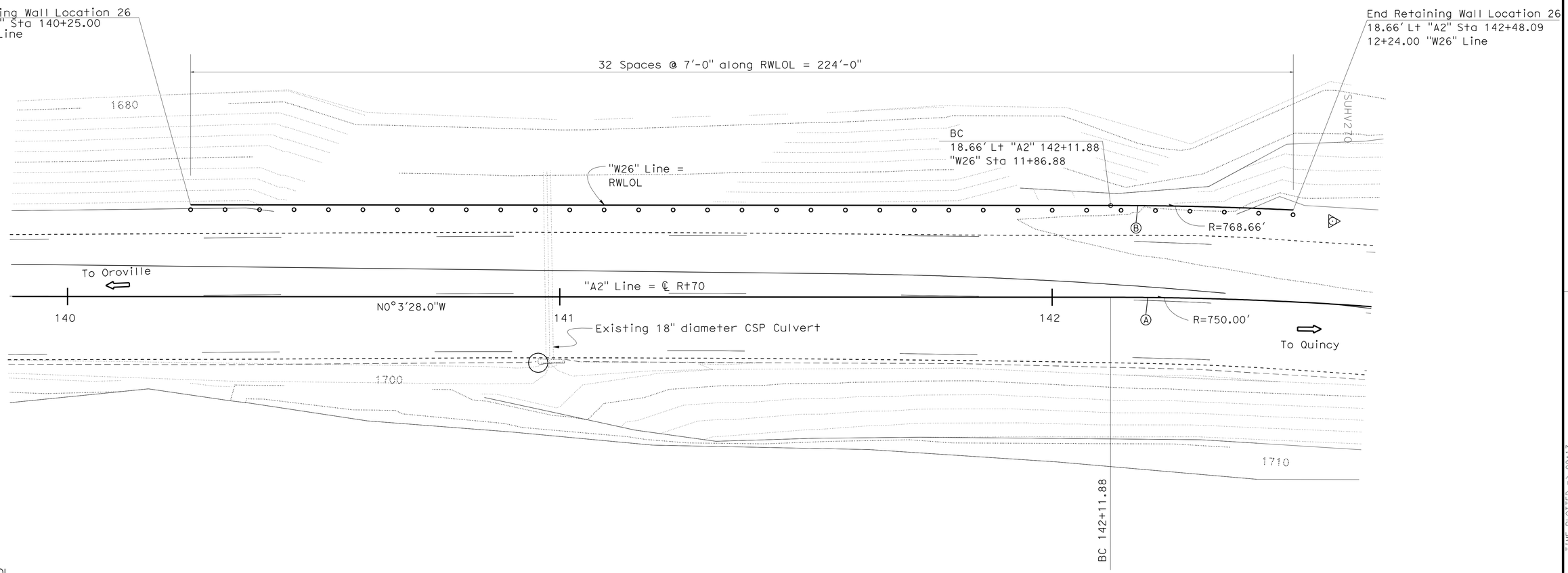

SURVEY CONTROL

MEN 253-1.95 (PRHV 195)
Fnd Aluminum Cap on ¾" Rebar Stamped: MEN 253-1.95
19.48 FT Rt. "GE" Line Rte 253
Sta. 18+31.22
N 2,128,926.29
E 6,185,156.81
Elev. = 980.60

MEN 253-2.03 (PRHV 203) (Not Shown on Plan)
Fnd Aluminum Cap on ¾" Rebar Stamped: MEN 253-2.03
42.15 FT Lt. "GE" Line Rte 253
Sta. 23+17.36
N 2,129,306.77
E 6,185,467.17
Elev. = 1018.91

∘ Indicates #6 xx Pin Pile

PRELIMINARY INVESTIGATION SECTION

SCALE 1"=5′	VERT.DATUM	PHOTOGRAMMETRY AS OF: X			
	HORZ.DATUM	SURVEYED	BY District	CHECKED	BY
	ALIGNMENT TIES Dist.Traverse Sheet	DRAFTED	BY	CHECKED	BY

STRUCTURES FOUNDATION PLAN SHEET (ENGLISH) (REV. 10/25/05)

	BY	CHECKED
DESIGN	M. J. Cullen	M. Guadamuz
DETAILS	A. Chen	M. J. Cullen
QUANTITIES	H. Fang	C. Siegenthaler

ORIGINAL SCALE IN INCHES FOR REDUCED PLANS 0 1 2 3

STATE OF CALIFORNIA
DEPARTMENT OF TRANSPORTATION

DIVISION OF ENGINEERING SERVICES
STRUCTURE DESIGN
DESIGN BRANCH 5

CU 02
EA 3C3001

BRIDGE NO. 09E0003
POST MILE 2.68

WALL LOCATION 26
FOUNDATION PLAN

DISREGARD PRINTS BEARING EARLIER REVISION DATES

REVISION DATES: 10-26-10 1-19-11 3-9-11 8-17-11

SHEET 4 OF 14

FILE => 26-e-fdp101.dgn

USERNAME => s128843 DATE PLOTTED => 09-JAN-2012 TIME PLOTTED => 09:13

DIST	COUNTY	ROUTE	POST MILES TOTAL PROJECT	SHEET No	TOTAL SHEETS
02	Plu	70	0.6/35.2	73	101

REGISTERED CIVIL ENGINEER 08-30-2011 DATE

1-9-12
PLANS APPROVAL DATE

REGISTERED PROFESSIONAL ENGINEER M. J. CULLEN No. C 40620 Exp. 03-31-13 CIVIL STATE OF CALIFORNIA

The State of California or its officers or agents shall not be responsible for the accuracy or completeness of electronic copies of this plan sheet.

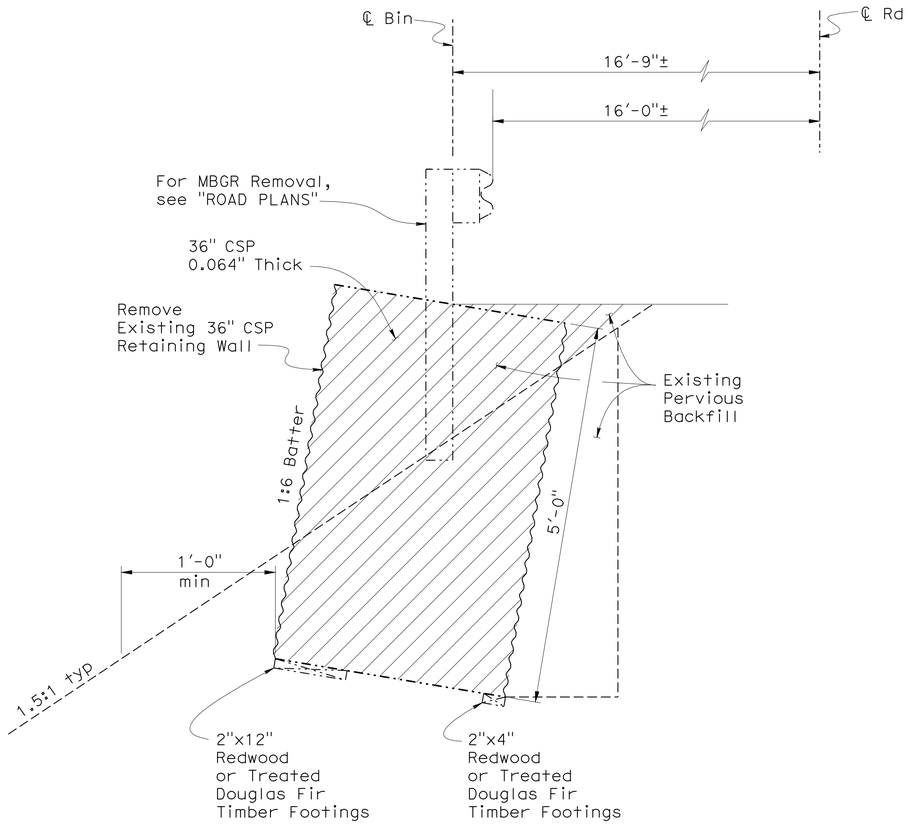

SECTION A-A
1" = 1'-0"

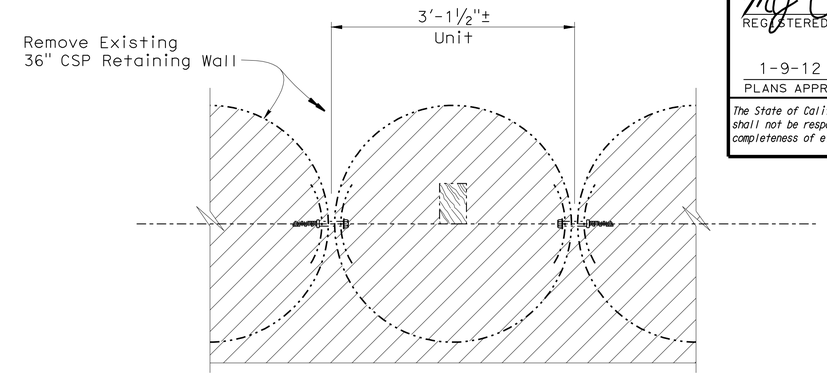

SECTION B-B
1" = 1'-0"

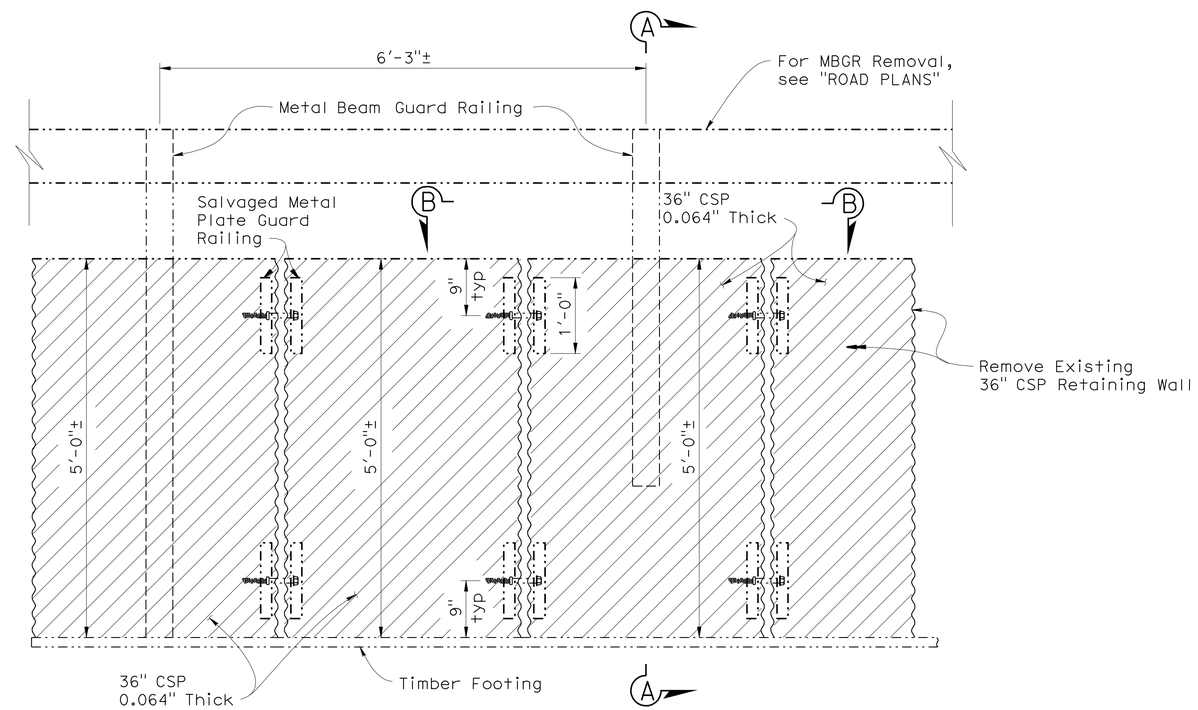

ELEVATION
1" = 1'-0"

Remove 36" CSP Retaining Wall @ Location 26 = 197 LF Total

Indicates Remove Existing 36" Ø CSP Retaining Wall (Total 197 LF ±)

DESIGN	BY M. J. Cullen	CHECKED M. Guadamuz	
DETAILS	BY A. Chen/S. Jiang	CHECKED M. J. Cullen	
QUANTITIES	BY H. Fang	CHECKED C. Siegenthaler	

STATE OF CALIFORNIA DEPARTMENT OF TRANSPORTATION

DIVISION OF ENGINEERING SERVICES STRUCTURE DESIGN
DESIGN BRANCH 5

BRIDGE NO. 09E0003
POST MILE 2.73

WALL LOCATION 26
EXISTING 36" CSP RETAINING WALL REMOVAL

STRUCTURES DESIGN DETAIL SHEET (ENGLISH) (REV. 10/25/05)

ORIGINAL SCALE IN INCHES FOR REDUCED PLANS 0 1 2 3

CU 02
EA 3C3001

DISREGARD PRINTS BEARING EARLIER REVISION DATES

REVISION DATES: 10-26-10 1-5-11 1-19-11 2-15-11 3-14-11 8-12-11 8-26-11

SHEET 5 OF 14

FILE => 26-q-dt01.dgn

USERNAME => s128843 DATE PLOTTED => 09-JAN-2012 TIME PLOTTED => 10:43

DIST	COUNTY	ROUTE	POST MILES TOTAL PROJECT	SHEET No	TOTAL SHEETS
02	Plu	70	0.6/35.2	74	101

REGISTERED CIVIL ENGINEER 08-30-2011 DATE

1-9-12
PLANS APPROVAL DATE

REGISTERED PROFESSIONAL ENGINEER M. J. CULLEN No. C 40620 Exp. 03-31-13 CIVIL STATE OF CALIFORNIA

The State of California or its officers or agents shall not be responsible for the accuracy or completeness of electronic copies of this plan sheet.

⊗⊗ Except as noted on Structure Plan.

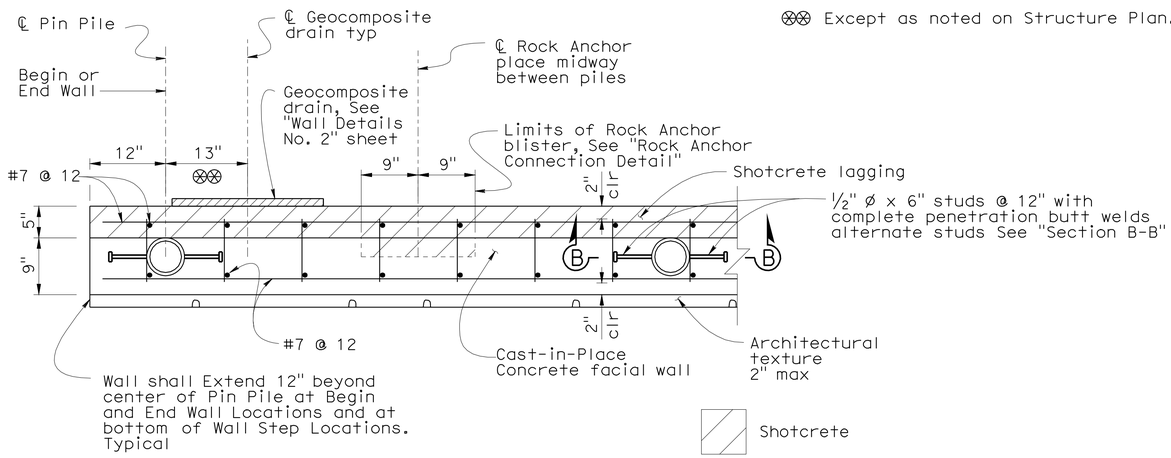

SECTION A-A

1"=1'-0"

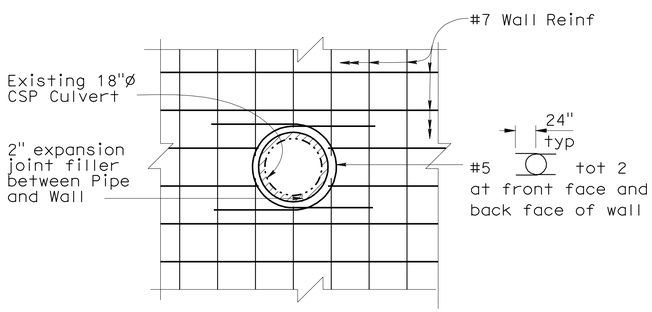

EXISTING CSP CULVERT OPENING THROUGH WALL DETAIL

½"=1'-0"

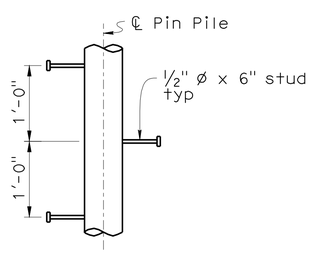

SECTION B-B

1"=1'-0"

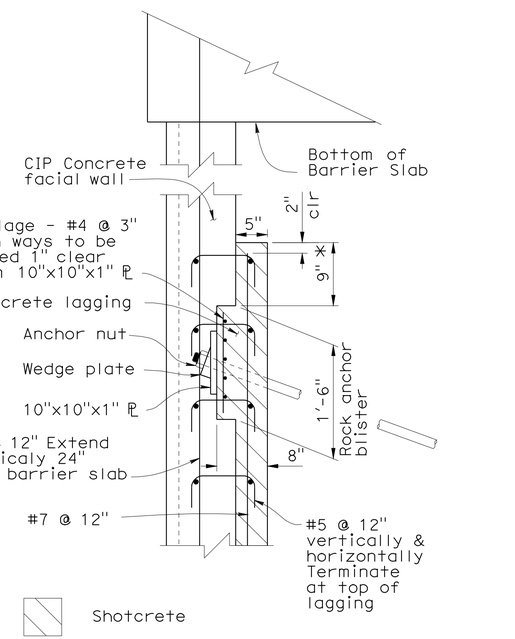

* Shotcrete wall must extend 9" minimum above Rock Anchor blister for all wall segments with Rock Anchors

ROCK ANCHOR CONNECTION DETAIL

1"=1'-0"

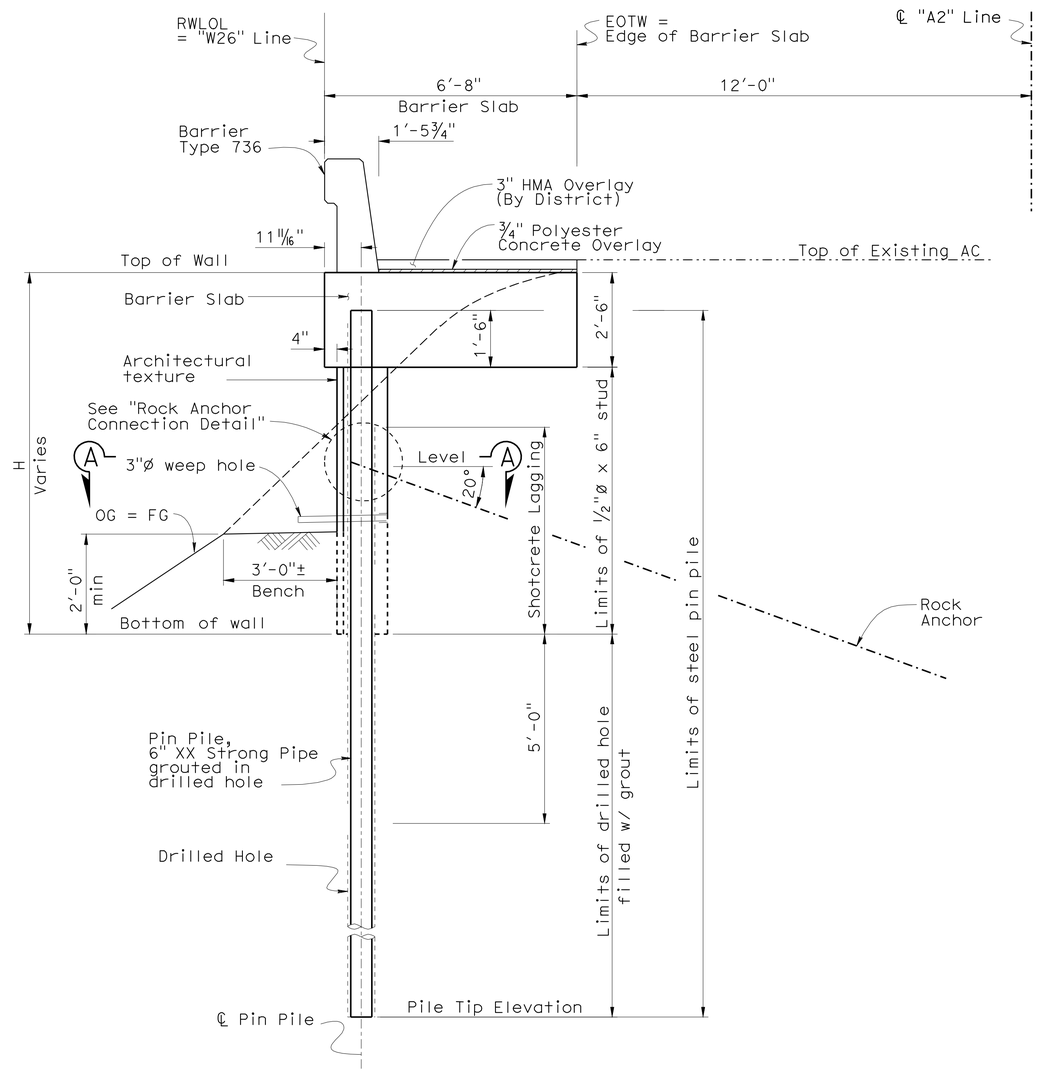

TYPICAL SECTION

½"=1'-0"

DESIGN	BY M. J. Cullen	CHECKED M. Guadamuz	
DETAILS	BY A. Chen	CHECKED M. J. Cullen	
QUANTITIES	BY H. Fang	CHECKED C. Siegenthaler	

STATE OF CALIFORNIA
DEPARTMENT OF TRANSPORTATION

DIVISION OF ENGINEERING SERVICES
STRUCTURE DESIGN
DESIGN BRANCH 5

BRIDGE NO. 09E0003
POST MILE 2.73

WALL LOCATION 26
WALL DETAILS NO. 1

STRUCTURES DESIGN DETAIL SHEET (ENGLISH) (REV. 10/25/05)

ORIGINAL SCALE IN INCHES FOR REDUCED PLANS 0 1 2 3

CU 02
EA 3C3001

DISREGARD PRINTS BEARING EARLIER REVISION DATES

REVISION DATES: 10-19-10 1-13-11 1-19-11 2-11-11 3-16-11 6-1-11 8-12-11

SHEET 6 OF 14

FILE => 26-q-dt02.dgn

USERNAME => s123631 DATE PLOTTED => 24-JAN-2012 TIME PLOTTED => 12:50

DIST	COUNTY	ROUTE	POST MILES TOTAL PROJECT	SHEET No	TOTAL SHEETS
02	Plu	70	0.6/35.2	75	101

REGISTERED CIVIL ENGINEER 08-30-2011 DATE

1-9-12
PLANS APPROVAL DATE

REGISTERED PROFESSIONAL ENGINEER M. J. CULLEN No. C 40620 Exp. 03-31-13 CIVIL STATE OF CALIFORNIA

The State of California or its officers or agents shall not be responsible for the accuracy or completeness of electronic copies of this plan sheet.

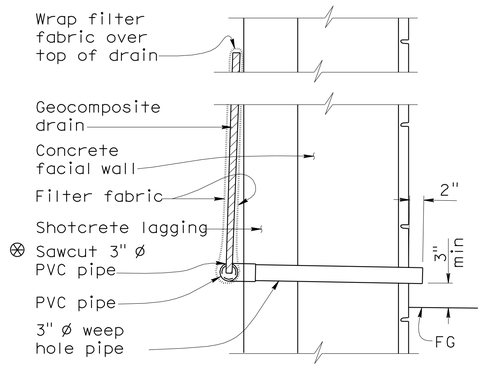

SECTION X-X

No Scale

⊗ Sawcut groove in 3" ø PVC pipe and insert geocomposite drain.

⊗⊗ Except where noted on Structure Plan.

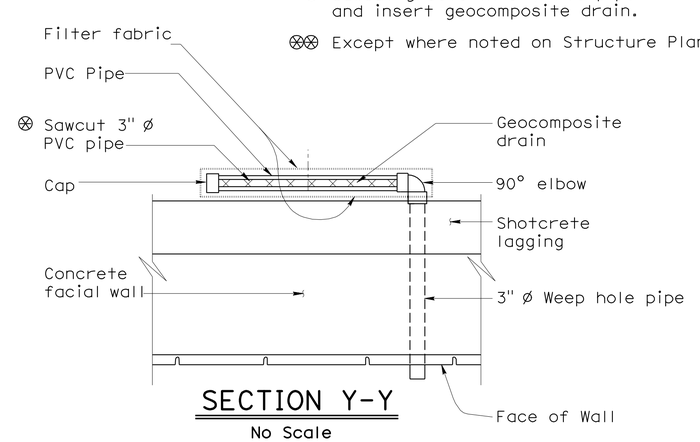

SECTION Y-Y

No Scale

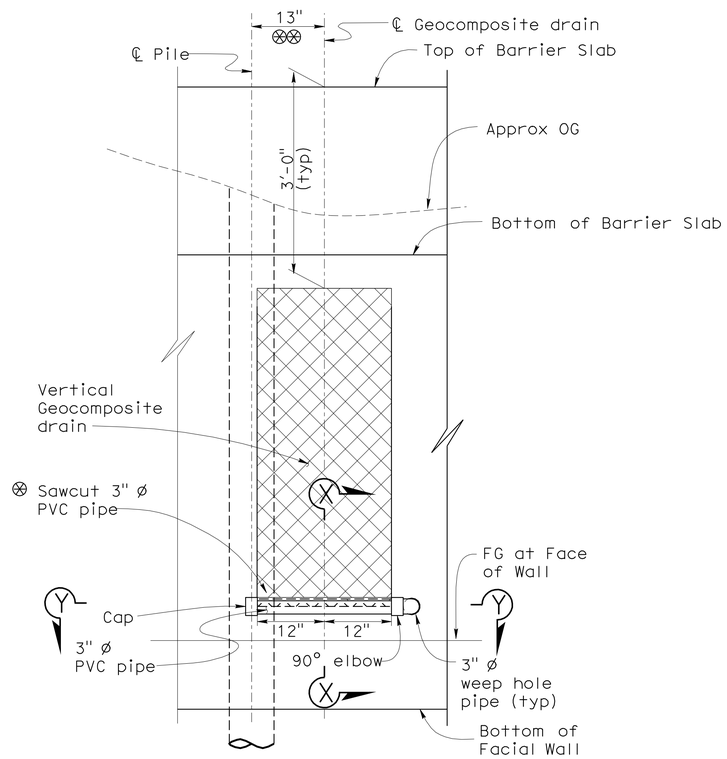

VERTICAL DRAINAGE DETAIL

Note: Wrap entire Geocomposite drain system with filter fabric

GEOCOMPOSITE DRAIN DETAILS

No Scale

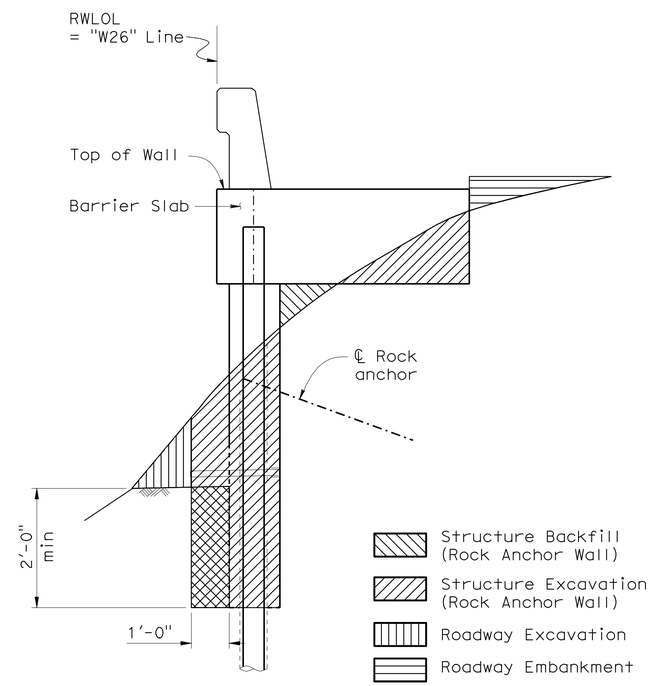

LIMITS OF PAYMENT FOR EXCAVATION AND BACKFILL

½"=1'-0"

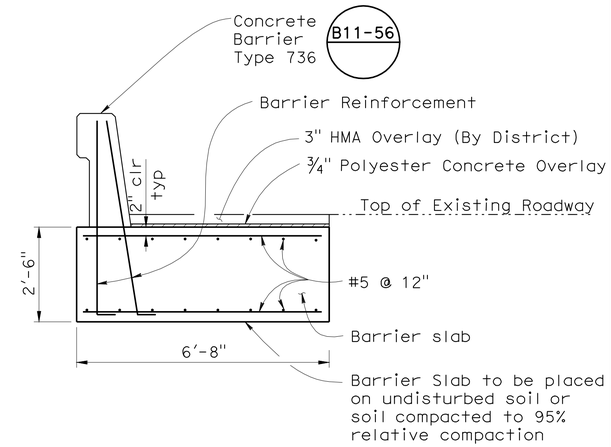

Note: All reinforcement in barrier slab be epoxy coated

BARRIER SLAB DETAIL

½" = 1'-0"

DESIGN	BY M. J. Cullen	CHECKED M. Guadamuz	
DETAILS	BY A. Chen	CHECKED M. J. Cullen	
QUANTITIES	BY H. Fang	CHECKED C. Siegenthaler	

STATE OF CALIFORNIA
DEPARTMENT OF TRANSPORTATION

DIVISION OF ENGINEERING SERVICES
STRUCTURE DESIGN
DESIGN BRANCH 5

BRIDGE NO. 09E0003
POST MILE 2.73

WALL LOCATION 26
WALL DETAILS NO. 2

STRUCTURES DESIGN DETAIL SHEET (ENGLISH) (REV. 10/25/05)

ORIGINAL SCALE IN INCHES FOR REDUCED PLANS 0 1 2 3

CU 02
EA 3C3001

DISREGARD PRINTS BEARING EARLIER REVISION DATES

REVISION DATES: 10-26-10 1-3-11 1-19-11 2-14-11 3-14-11 8-17-11

SHEET 7 OF 14

FILE => 26-q-dt03.dgn

USERNAME => s128843 DATE PLOTTED => 09-JAN-2012 TIME PLOTTED => 10:46

DIST	COUNTY	ROUTE	POST MILES TOTAL PROJECT	SHEET No	TOTAL SHEETS
02	Plu	70	0.6/35.2	76	101

REGISTERED CIVIL ENGINEER 08-30-2011 DATE

1-9-12
PLANS APPROVAL DATE

REGISTERED PROFESSIONAL ENGINEER M. J. CULLEN No. C 40620 Exp. 03-31-13 CIVIL STATE OF CALIFORNIA

The State of California or its officers or agents shall not be responsible for the accuracy or completeness of electronic copies of this plan sheet.

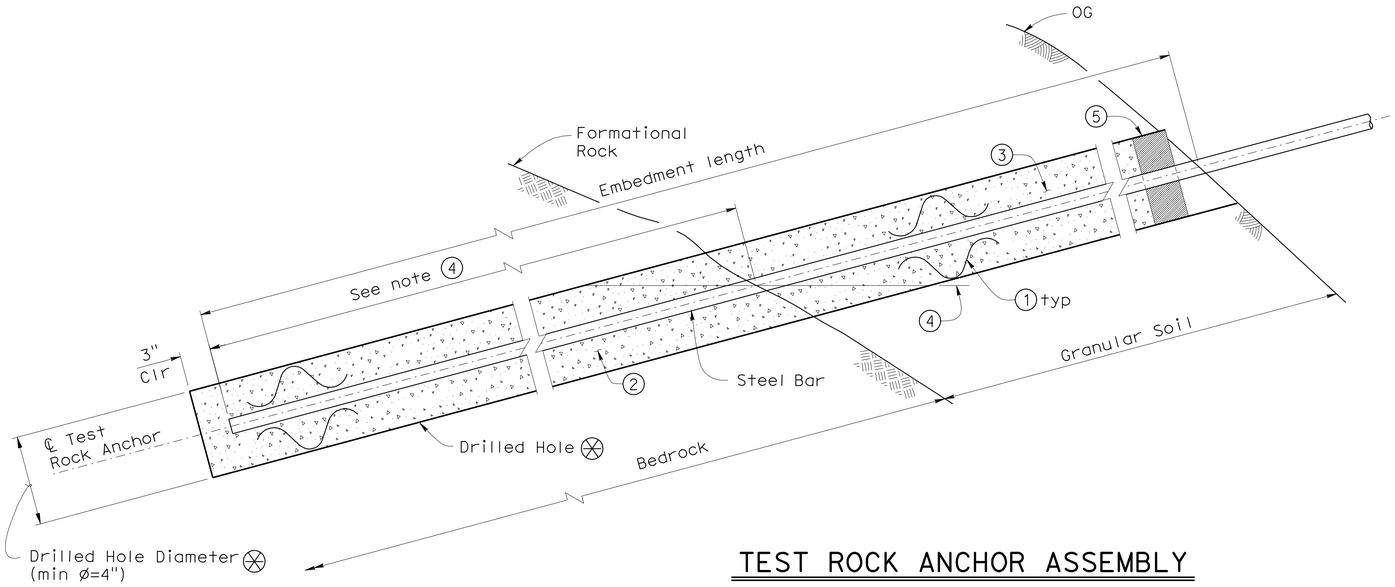

TEST ROCK ANCHOR ASSEMBLY

No Scale

Test Anchor Notes:

Embedment length shall be long enough to provide 10' bond length into bedrock

Total length of test Rock Anchor equals embedment length plus the length required for jacking equipment.

For location of test Rock Anchor See "Structure Plan"

1. Centralizers @ 5'-0" and located 20" minimum from top and bottom of drilled hole (Typ)
2. Initial grout
3. Secondary grout (Place after testing)
4. Level of Initial grout
5. Block out as required for pullout testing

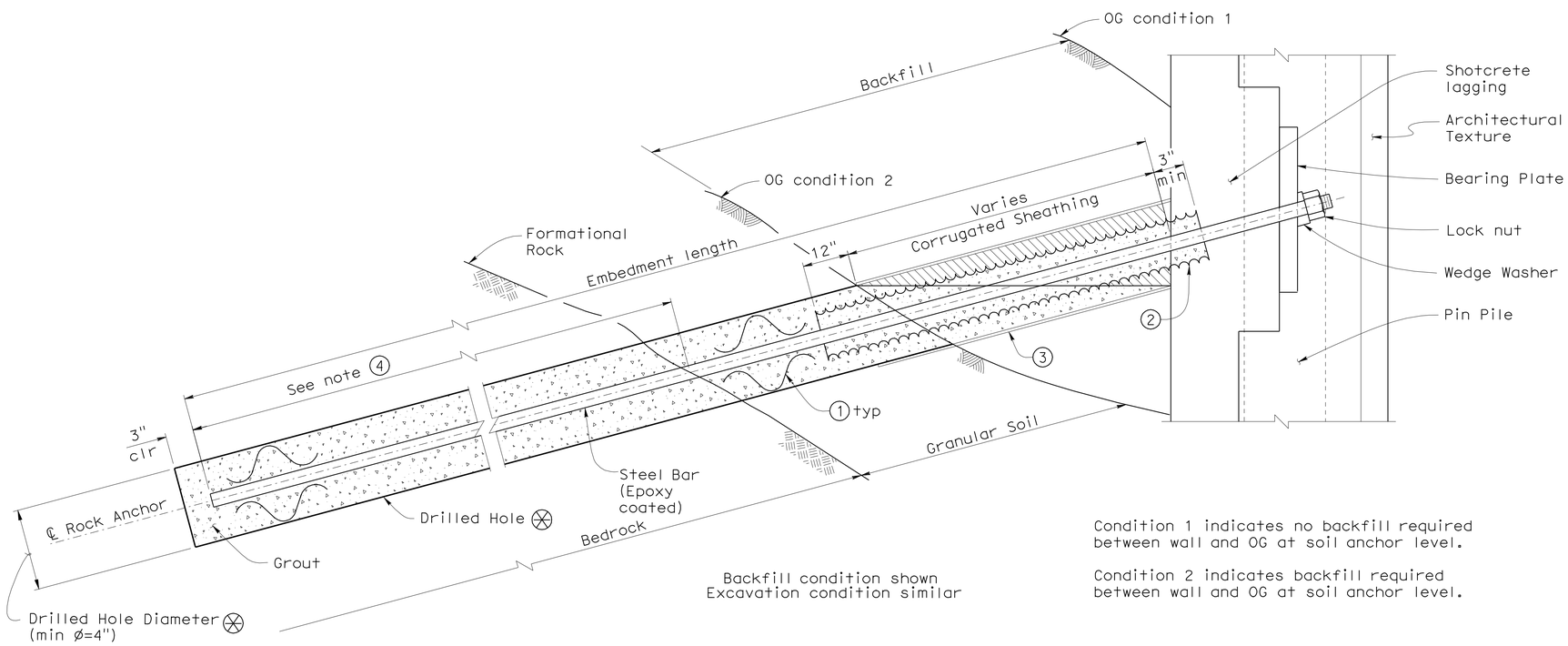

Backfill condition shown
Excavation condition similar

Condition 1 indicates no backfill required between wall and OG at soil anchor level.

Condition 2 indicates backfill required between wall and OG at soil anchor level.

ROCK ANCHOR ASSEMBLY

No Scale

Production Anchor Notes:

For segments of the wall supported by Rock Anchors there shall be no time during construction where the wall will laterally support 5'-0" or more of soil with out the Rock Anchor connected to the wall.

In fill situations Backfill to be placed and compacted after Rock Anchor is connected to the wall.

1. Centralizers @ 5'-0" and located 20" minimum from top and bottom of drilled hole (Typ)
2. Corrugated sheathing filled with grout. Grout to be cured before rock anchor is placed in drilled hole. Minimum diameter sheathing shall be 2"
3. Drilled hole extension comprised of pipe w/ inside diameter equal to inside diameter of drilled hole. (only required in condition 2)
4. Rock anchor shall be socketed a minimum of 7 ft into formational Rock. For additional rock anchor details, See notes on "Structure Plan" sheet.

Fill void w/ shotcrete at time of shotcrete wall construction (Required in condition 1 & 2)

Contractor to determine drilled hole diameter (ø)

	BY	CHECKED
DESIGN	M. J. Cullen	M. Guadamuz
DETAILS	A. Chen/S. Jiang	M. J. Cullen
QUANTITIES	H. Fang	C. Siegenthaler

STATE OF CALIFORNIA DEPARTMENT OF TRANSPORTATION

DIVISION OF ENGINEERING SERVICES STRUCTURE DESIGN DESIGN BRANCH 5

BRIDGE NO. 09E0003
POST MILE 2.73

WALL LOCATION 26
ROCK ANCHOR DETAILS

STRUCTURES DESIGN DETAIL SHEET (ENGLISH) (REV. 10/25/05)

ORIGINAL SCALE IN INCHES FOR REDUCED PLANS 0 1 2 3

CU 02
EA 3C3001

DISREGARD PRINTS BEARING EARLIER REVISION DATES

REVISION DATES: 10-26-10 1-3-11 2-22-11 6-7-11 8-18-11 8-26-11

SHEET 8 OF 14

FILE => 26-q-dt04.dgn

USERNAME => s128843 DATE PLOTTED => 09-JAN-2012 TIME PLOTTED => 09:13

DIST	COUNTY	ROUTE	POST MILES TOTAL PROJECT	SHEET No	TOTAL SHEETS
02	Plu	70	0.6/35.2	77	101

REGISTERED CIVIL ENGINEER 08-30-2011 DATE

1-9-12
PLANS APPROVAL DATE

REGISTERED PROFESSIONAL ENGINEER
M. J. CULLEN
No. C 40620
Exp. 03-31-13
CIVIL
STATE OF CALIFORNIA

The State of California or its officers or agents shall not be responsible for the accuracy or completeness of electronic copies of this plan sheet.

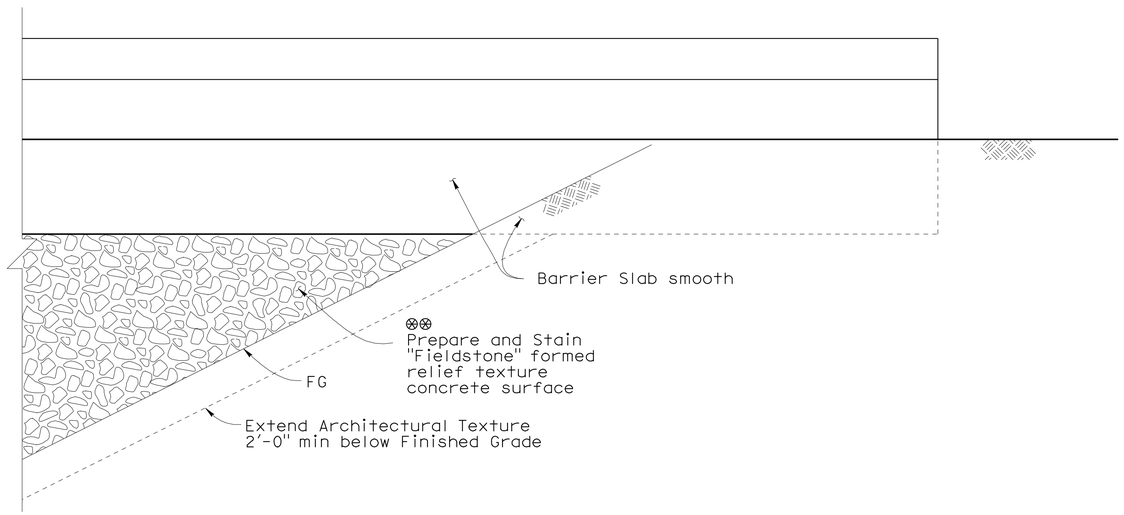

VIEW A-A

No Scale

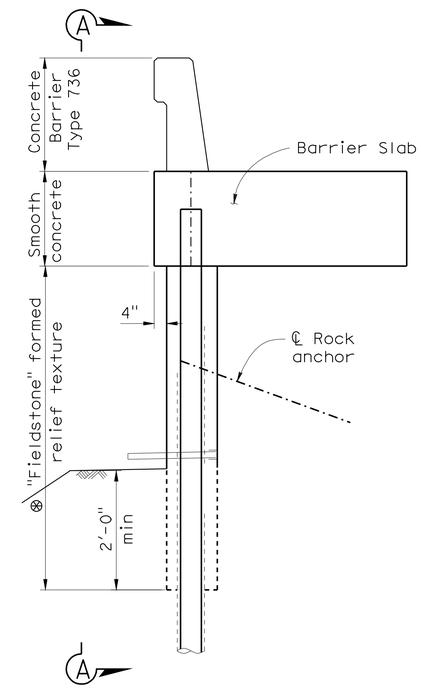

TYPICAL SECTION

No Scale

⊗ Limits of Payment for Prepare and Stain Concrete.

⊗⊗ Concrete to be stained gray and approved by Project Landscape Architect

DESIGN	BY M. J. Cullen	CHECKED M. Guadamuz
DETAILS	BY A. Chen	CHECKED M. J. Cullen
QUANTITIES	BY H. Fang	CHECKED C. Siegenthaler

STATE OF CALIFORNIA
DEPARTMENT OF TRANSPORTATION

DIVISION OF ENGINEERING SERVICES
STRUCTURE DESIGN
DESIGN BRANCH 5

BRIDGE NO. 09E0003
POST MILE 2.73

WALL LOCATION 26
ARCHITECTURAL TREATMENT

STRUCTURES DESIGN DETAIL SHEET (ENGLISH) (REV. 10/25/05)

ORIGINAL SCALE IN INCHES FOR REDUCED PLANS 0 1 2 3

CU 02
EA 3C3001

DISREGARD PRINTS BEARING EARLIER REVISION DATES

REVISION DATES: 10-26-10, 3-8-11, 6-1-11, 8-17-11

SHEET 9 OF 14

FILE => 26-v-archdt.dgn

USERNAME => s128843 DATE PLOTTED => 09-JAN-2012 TIME PLOTTED => 09:13

DIST	COUNTY	ROUTE	POST MILES TOTAL PROJECT	SHEET No	TOTAL SHEETS
02	Plu	70	0.6/35.2	78	101

PROFESSIONAL ENGINEER 3-09-11

1-9-12
PLANS APPROVAL DATE

REGISTERED PROFESSIONAL ENGINEER
Mark Hagy
No. GE2838
Exp. 12-31-12
GEOTECHNICAL
STATE OF CALIFORNIA

The State of California or its officers or agents shall not be responsible for the accuracy or completeness of electronic copies of this plan sheet.

This LOTB sheet was prepared in accordance with the Caltrans Soil & Rock Logging, Classification, & Presentation Manual (2010 Edition).

BENCH MARK

REBAR WITH METAL CAP
CM 2.70 (SUHV270) PLU 70 PM 2.70
"A2" Line Sta 142+57 Lt 18'
N 1,845,391.66
E 6,741,389.82
Elev = 1701.14
NAVD88

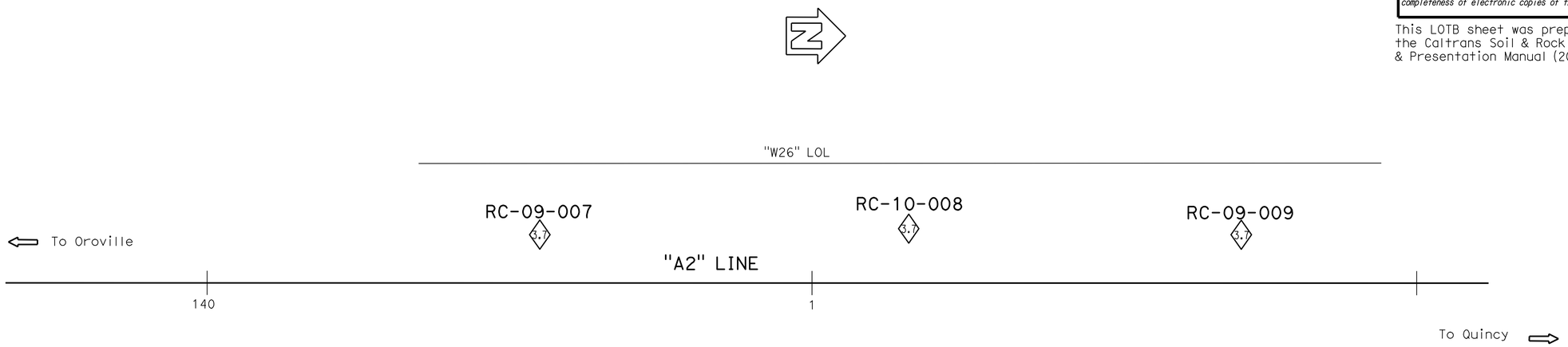

PLAN
1" = 10'

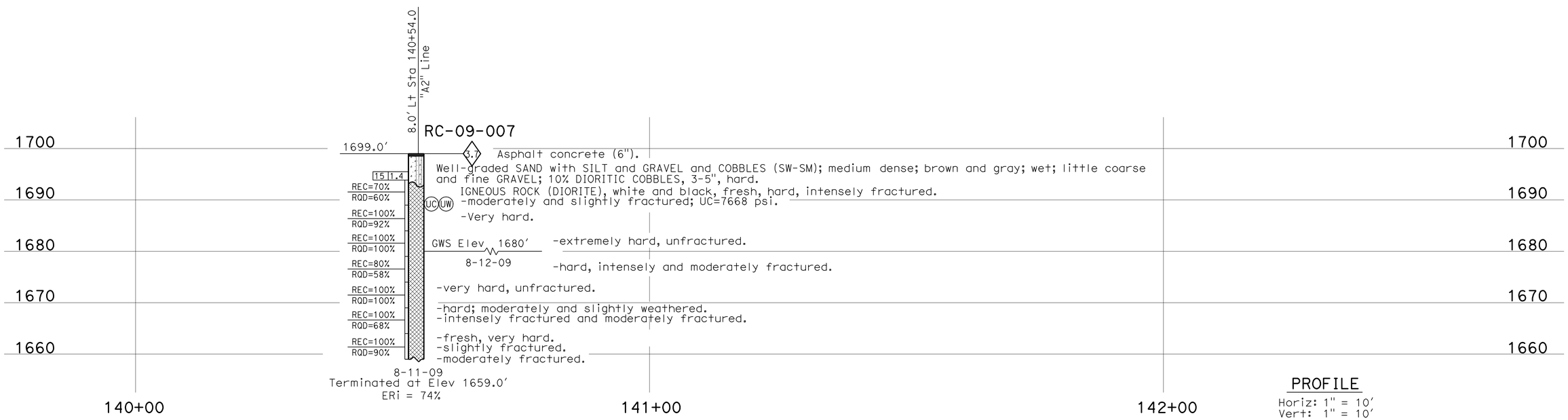

PROFILE
Horiz: 1" = 10'
Vert: 1" = 10'

ENGINEERING SERVICES	GEOTECHNICAL SERVICES	STATE OF CALIFORNIA DEPARTMENT OF TRANSPORTATION	DIVISION OF ENGINEERING SERVICES STRUCTURE DESIGN DESIGN BRANCH 5	BRIDGE NO. 09E0003 POST MILE 2.68/2.73	WALL LOCATION 26
FUNCTIONAL SUPERVISOR NAME: D. Brittsan	DRAWN BY: F. Nguyen 11/10 CHECKED BY: L. Paredes	FIELD INVESTIGATION BY: H. AkbarZadegan			LOG OF TEST BORINGS 1 OF 5

OGS CIVIL LOG OF TEST BORINGS SHEET

ORIGINAL SCALE IN INCHES FOR REDUCED PLANS 0 1 2 3

UNIT: 3643
PROJECT NUMBER & PHASE: 02000003171 CONTRACT NO.: 02-3C3001

DISREGARD PRINTS BEARING EARLIER REVISION DATES

REVISION DATES 02-08-11 02-16-11 02-24-11 SHEET 10 OF 14

FILE => 26-z-ltb01of5.dgn

USERNAME => s128843 DATE PLOTTED => 09-JAN-2012 TIME PLOTTED => 09:13

DIST	COUNTY	ROUTE	POST MILES TOTAL PROJECT	SHEET No	TOTAL SHEETS
02	Plu	70	0.6/35.2	79	101

PROFESSIONAL ENGINEER 3-09-11

1-9-12
PLANS APPROVAL DATE

REGISTERED PROFESSIONAL ENGINEER
Mark Hagy
No. GE2838
Exp. 12-31-12
GEOTECHNICAL
STATE OF CALIFORNIA

The State of California or its officers or agents shall not be responsible for the accuracy or completeness of electronic copies of this plan sheet.

This LOTB sheet was prepared in accordance with the Caltrans Soil & Rock Logging, Classification, & Presentation Manual (2010 Edition).

FOR PLAN VIEW, SEE
"LOG OF TEST BORINGS 1 OF 5"

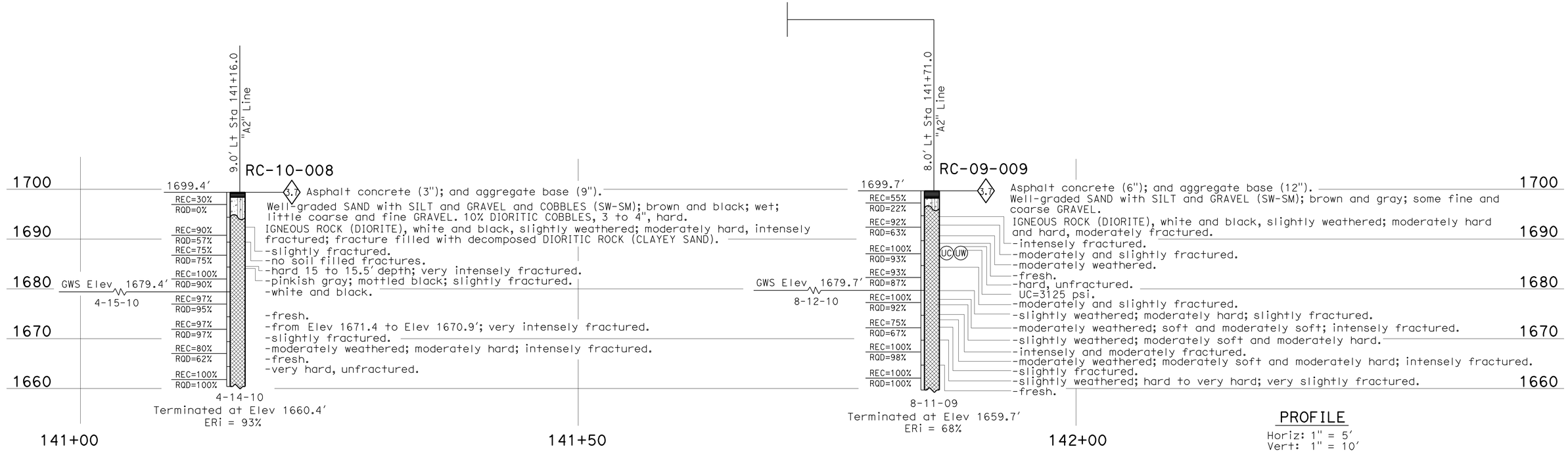

ENGINEERING SERVICES	GEOTECHNICAL SERVICES	STATE OF CALIFORNIA DEPARTMENT OF TRANSPORTATION	DIVISION OF ENGINEERING SERVICES STRUCTURE DESIGN DESIGN BRANCH 5	BRIDGE NO. 09E0003 POST MILE 2.68/2.73	WALL LOCATION 26
FUNCTIONAL SUPERVISOR NAME: D. Brittsan	DRAWN BY: F. Nguyen 11/10 CHECKED BY: L. Paredes	FIELD INVESTIGATION BY: C. Hoadley/M. Kiesse			LOG OF TEST BORINGS 2 OF 5

OGS CIVIL LOG OF TEST BORINGS SHEET

ORIGINAL SCALE IN INCHES FOR REDUCED PLANS 0 1 2 3

UNIT: 3643
PROJECT NUMBER & PHASE: 02000003171 CONTRACT NO.: 02-3C3001

DISREGARD PRINTS BEARING EARLIER REVISION DATES

REVISION DATES 02-08-11 02-16-11 02-24-11

SHEET 11 OF 14

FILE => 26-z-ltb02of5.dgn

USERNAME => s128843 DATE PLOTTED => 09-JAN-2012 TIME PLOTTED => 09:14

DIST	COUNTY	ROUTE	POST MILES TOTAL PROJECT	SHEET No	TOTAL SHEETS
02	Plu	70	0.6/35.2	80	101

PROFESSIONAL ENGINEER 3-09-11

1-9-12
PLANS APPROVAL DATE

REGISTERED PROFESSIONAL ENGINEER — Mark Hagy No. GE2838 Exp. 12-31-12 — GEOTECHNICAL — STATE OF CALIFORNIA

The State of California or its officers or agents shall not be responsible for the accuracy or completeness of electronic copies of this plan sheet.

REFERENCE: CALTRANS SOIL & ROCK LOGGING, CLASSIFICATION, AND PRESENTATION MANUAL (2010)

CEMENTATION

Description	Criteria
Weak	Crumbles or breaks with handling or little finger pressure.
Moderate	Crumbles or breaks with considerable finger pressure.
Strong	Will not crumble or break with finger pressure.

BOREHOLE IDENTIFICATION

Symbol	Hole Type	Description
Size	A	Auger Boring (hollow or solid stem bucket)
Size	R RW RC P	Rotary drilled boring (conventional) Rotary drilled with self-casing wire-line Rotary core with continuously-sampled, self-casing wire-line Rotary percussion boring (air)
Size	R	Rotary drilled diamond core
Size	HD HA	Hand driven (1-inch soil tube) Hand Auger
●	D	Dynamic Cone Penetration Boring
▲	CPT	Cone Penetration Test (ASTM D 5778)
⬚	O	Other (note on LOTB)

Note: Size in inches.

CONSISTENCY OF COHESIVE SOILS

Description	Shear Strength (tsf)	Pocket Penetrometer Measurement, PP, (tsf)	Torvane Measurement, TV, (tsf)	Vane Shear Measurement, VS, (tsf)
Very Soft	Less than 0.12	Less than 0.25	Less than 0.12	Less than 0.12
Soft	0.12 - 0.25	0.25 - 0.5	0.12 - 0.25	0.12 - 0.25
Medium Stiff	0.25 - 0.5	0.5 - 1	0.25 - 0.5	0.25 - 0.5
Stiff	0.5 - 1	1 - 2	0.5 - 1	0.5 - 1
Very Stiff	1 - 2	2 - 4	1 - 2	1 - 2
Hard	Greater than 2	Greater than 4	Greater than 2	Greater than 2

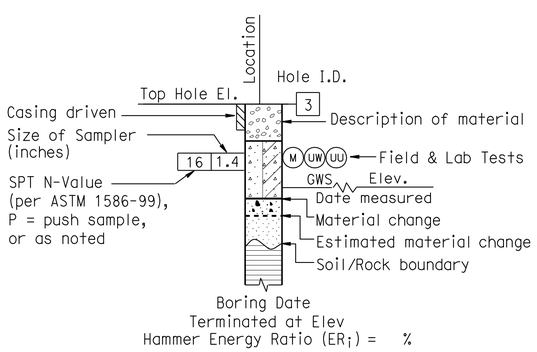

ROTARY BORING

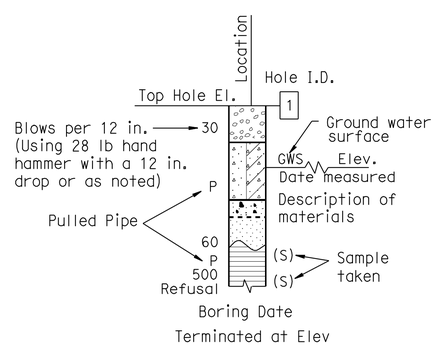

HAND BORING

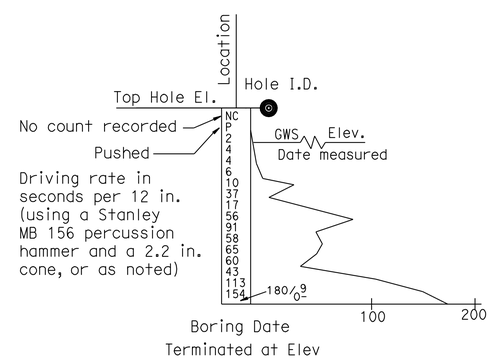

DYNAMIC CONE PENETRATION BORING

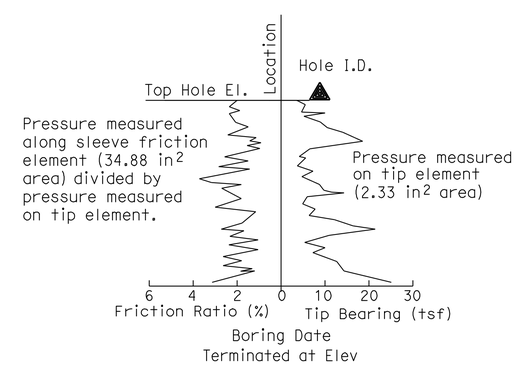

CONE PENETRATION TEST (CPT) BORING

ENGINEERING SERVICES	GEOTECHNICAL SERVICES	STATE OF CALIFORNIA DEPARTMENT OF TRANSPORTATION	DIVISION OF ENGINEERING SERVICES STRUCTURE DESIGN DESIGN BRANCH 5	BRIDGE NO. 09E0003 POST MILE 2.68/2.73	WALL LOCATION 26 LOG OF TEST BORINGS 3 OF 5
	PREPARED BY: F. Nguyen 11/10				

GS LOTB SOIL LEGEND

ORIGINAL SCALE IN INCHES FOR REDUCED PLANS 0 1 2 3

UNIT: 3643
PROJECT NUMBER & PHASE: 02000003171 CONTRACT NO.: 02-3C3001

DISREGARD PRINTS BEARING EARLIER REVISION DATES

REVISION DATES 02-08-11 | SHEET 12 OF 14

FILE => 26-z-ltb03of5.dgn

USERNAME => s114937 DATE PLOTTED => 09-JAN-2012 TIME PLOTTED => 09:06

REFERENCE: CALTRANS SOIL & ROCK LOGGING, CLASSIFICATION, AND PRESENTATION MANUAL (2010)

DIST	COUNTY	ROUTE	POST MILES TOTAL PROJECT	SHEET No	TOTAL SHEETS
02	Plu	70	0.6/35.2	81	101

PROFESSIONAL ENGINEER 3-09-11

1-9-12
PLANS APPROVAL DATE

REGISTERED PROFESSIONAL ENGINEER Mark Hagy No. GE2838 Exp. 12-31-12 GEOTECHNICAL STATE OF CALIFORNIA

The State of California or its officers or agents shall not be responsible for the accuracy or completeness of electronic copies of this plan sheet.

GROUP SYMBOLS AND NAMES

Graphic/Symbol	Group Names	Graphic/Symbol	Group Names
GW	Well-graded GRAVEL Well-graded GRAVEL with SAND	CL	Lean CLAY Lean CLAY with SAND Lean CLAY with GRAVEL SANDY lean CLAY SANDY lean CLAY with GRAVEL GRAVELLY lean CLAY GRAVELLY lean CLAY with SAND
GP	Poorly-graded GRAVEL Poorly-graded GRAVEL with SAND		
GW-GM	Well-graded GRAVEL with SILT Well-graded GRAVEL with SILT and SAND	CL-ML	SILTY CLAY SILTY CLAY with SAND SILTY CLAY with GRAVEL SANDY SILTY CLAY SANDY SILTY CLAY with GRAVEL GRAVELLY SILTY CLAY GRAVELLY SILTY CLAY with SAND
GW-GC	Well-graded GRAVEL with CLAY (or SILTY CLAY) Well-graded GRAVEL with CLAY and SAND (or SILTY CLAY and SAND)		
GP-GM	Poorly-graded GRAVEL with SILT Poorly-graded GRAVEL with SILT and SAND	ML	SILT SILT with SAND SILT with GRAVEL SANDY SILT SANDY SILT with GRAVEL GRAVELLY SILT GRAVELLY SILT with SAND
GP-GC	Poorly-graded GRAVEL with CLAY (or SILTY CLAY) Poorly-graded GRAVEL with CLAY and SAND (or SILTY CLAY and SAND)		
GM	SILTY GRAVEL SILTY GRAVEL with SAND	OL	ORGANIC lean CLAY ORGANIC lean CLAY with SAND ORGANIC lean CLAY with GRAVEL SANDY ORGANIC lean CLAY SANDY ORGANIC lean CLAY with GRAVEL GRAVELLY ORGANIC lean CLAY GRAVELLY ORGANIC lean CLAY with SAND
GC	CLAYEY GRAVEL CLAYEY GRAVEL with SAND		
GC-GM	SILTY, CLAYEY GRAVEL SILTY, CLAYEY GRAVEL with SAND	OL	ORGANIC SILT ORGANIC SILT with SAND ORGANIC SILT with GRAVEL SANDY ORGANIC SILT SANDY ORGANIC SILT with GRAVEL GRAVELLY ORGANIC SILT GRAVELLY ORGANIC SILT with SAND
SW	Well-graded SAND Well-graded SAND with GRAVEL		
SP	Poorly-graded SAND Poorly-graded SAND with GRAVEL	CH	Fat CLAY Fat CLAY with SAND Fat CLAY with GRAVEL SANDY fat CLAY SANDY fat CLAY with GRAVEL GRAVELLY fat CLAY GRAVELLY fat CLAY with SAND
SW-SM	Well-graded SAND with SILT Well-graded SAND with SILT and GRAVEL		
SW-SC	Well-graded SAND with CLAY (or SILTY CLAY) Well-graded SAND with CLAY and GRAVEL (or SILTY CLAY and GRAVEL)	MH	Elastic SILT Elastic SILT with SAND Elastic SILT with GRAVEL SANDY elastic SILT SANDY elastic SILT with GRAVEL GRAVELLY elastic SILT GRAVELLY elastic SILT with SAND
SP-SM	Poorly-graded SAND with SILT Poorly-graded SAND with SILT and GRAVEL		
SP-SC	Poorly-graded SAND with CLAY (or SILTY CLAY) Poorly-graded SAND with CLAY and GRAVEL (or SILTY CLAY and GRAVEL)	OH	ORGANIC fat CLAY ORGANIC fat CLAY with SAND ORGANIC fat CLAY with GRAVEL SANDY ORGANIC fat CLAY SANDY ORGANIC fat CLAY with GRAVEL GRAVELLY ORGANIC fat CLAY GRAVELLY ORGANIC fat CLAY with SAND
SM	SILTY SAND SILTY SAND with GRAVEL		
SC	CLAYEY SAND CLAYEY SAND with GRAVEL	OH	ORGANIC elastic SILT ORGANIC elastic SILT with SAND ORGANIC elastic SILT with GRAVEL SANDY ORGANIC elastic SILT SANDY ORGANIC elastic SILT with GRAVEL GRAVELLY ORGANIC elastic SILT GRAVELLY ORGANIC elastic SILT with SAND
SC-SM	SILTY, CLAYEY SAND SILTY, CLAYEY SAND with GRAVEL		
PT	PEAT	OL/OH	ORGANIC SOIL ORGANIC SOIL with SAND ORGANIC SOIL with GRAVEL SANDY ORGANIC SOIL SANDY ORGANIC SOIL with GRAVEL GRAVELLY ORGANIC SOIL GRAVELLY ORGANIC SOIL with SAND
	COBBLES COBBLES and BOULDERS BOULDERS		

FIELD AND LABORATORY TESTING

- (C) Consolidation (ASTM D 2435)
- (CL) Collapse Potential (ASTM D 5333)
- (CP) Compaction Curve (CTM 216)
- (CR) Corrosivity Testing (CTM 643, CTM 422, CTM 417)
- (CU) Consolidated Undrained Triaxial (ASTM D 4767)
- (DS) Direct Shear (ASTM D 3080)
- (EI) Expansion Index (ASTM D 4829)
- (M) Moisture Content (ASTM D 2216)
- (OC) Organic Content-% (ASTM D 2974)
- (P) Permeability (CTM 220)
- (PA) Particle Size Analysis (ASTM D 422)
- (PI) Plasticity Index (AASHTO T 90) Liquid Limit (AASHTO T 89)
- (PL) Point Load Index (ASTM D 5731)
- (PM) Pressure Meter
- (R) R-Value (CTM 301)
- (SE) Sand Equivalent (CTM 217)
- (SG) Specific Gravity (AASHTO T 100)
- (SL) Shrinkage Limit (ASTM D 427)
- (SW) Swell Potential (ASTM D 4546)
- (UC) Unconfined Compression-Soil (ASTM D 2166) Unconfined Compression-Rock (ASTM D 2938)
- (UU) Unconsolidated Undrained Triaxial (ASTM D 2850)
- (UW) Unit Weight (ASTM D 4767)

APPARENT DENSITY OF COHESIONLESS SOILS

Description	SPT N_{60} (Blows / 12 in.)
Very Loose	0 - 5
Loose	5 - 10
Medium Dense	10 - 30
Dense	30 - 50
Very Dense	Greater than 50

MOISTURE

Description	Criteria
Dry	No discernable moisture
Moist	Moisture present, but no free water
Wet	Visible free water

PERCENT OR PROPORTION OF SOILS

Description	Criteria
Trace	Particles are present but estimated to be less than 5%
Few	5% - 10%
Little	15% - 25%
Some	30% - 45%
Mostly	50% - 100%

PARTICLE SIZE

Description		Size (in.)
Boulder		Greater than 12
Cobble		3 - 12
Gravel	Coarse	3/4 - 3
	Fine	1/5 - 3/4
Sand	Coarse	1/16 - 1/5
	Medium	1/64 - 1/16
	Fine	1/300 - 1/64
Silt and Clay		Less than 1/300

ENGINEERING SERVICES

GEOTECHNICAL SERVICES

PREPARED BY: F. Nguyen 11/10

STATE OF CALIFORNIA DEPARTMENT OF TRANSPORTATION

DIVISION OF ENGINEERING SERVICES STRUCTURE DESIGN DESIGN BRANCH 5

BRIDGE NO. 09E0003

POST MILE 2.68/2.73

WALL LOCATION 26

LOG OF TEST BORINGS 4 OF 5

GS LOTB SOIL LEGEND

ORIGINAL SCALE IN INCHES FOR REDUCED PLANS 0 1 2 3

UNIT: 3643
PROJECT NUMBER & PHASE: 02000003171
CONTRACT NO.: 02-3C3001

DISREGARD PRINTS BEARING EARLIER REVISION DATES

REVISION DATES 02-08-11

SHEET 13 OF 14

FILE => 26-z-ltb04of5.dgn

USERNAME => s114937 DATE PLOTTED => 09-JAN-2012 TIME PLOTTED => 09:06

REFERENCE: CALTRANS SOIL & ROCK LOGGING, CLASSIFICATION, AND PRESENTATION MANUAL (2010)

DIST	COUNTY	ROUTE	POST MILES TOTAL PROJECT	SHEET No	TOTAL SHEETS
02	Plu	70	0.6/35.2	82	101

PROFESSIONAL ENGINEER 3-09-11

1-9-12
PLANS APPROVAL DATE

REGISTERED PROFESSIONAL ENGINEER Mark Hagy No. GE2838 Exp. 12-31-12 GEOTECHNICAL STATE OF CALIFORNIA

The State of California or its officers or agents shall not be responsible for the accuracy or completeness of electronic copies of this plan sheet.

PERCENT CORE RECOVERY (REC) & ROCK QUALITY DESIGNATION (RQD)

$$REC = \frac{\sum \text{Length of the recovered core pieces (in.)}}{\text{Total length of core run (in.)}} \times 100\%$$

$$RQD = \frac{\sum \text{Length of intact core pieces} \geq 4 \text{ in.}}{\text{Total length of core run (in.)}} \times 100\%$$

RQD* Indicates soundness criteria not met.

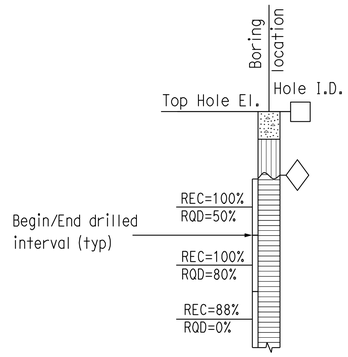

BEDDING SPACING

Description	Thickness / Spacing
Massive	Greater than 10 ft
Very Thickly Bedded	3 ft - 10 ft
Thickly Bedded	1 ft - 3 ft
Moderately Bedded	4 in. - 1 ft
Thinly Bedded	1 in. - 4 in.
Very Thinly Bedded	1/4 in. - 1 in.
Laminated	Less than 1/4 in.

LEGEND OF ROCK MATERIALS

- IGNEOUS ROCK
- SEDIMENTARY ROCK
- METAMORPHIC ROCK

ROCK HARDNESS

Description	Criteria
Extremely Hard	Cannot be scratched with a pocketknife or sharp pick. Can only be chipped with repeated heavy hammer blows.
Very Hard	Cannot be scratched with a pocketknife or sharp pick. Breaks with repeated heavy hammer blows.
Hard	Can be scratched with a pocketknife or sharp pick with difficulty (heavy pressure). Breaks with heavy hammer blows.
Moderately Hard	Can be scratched with pocketknife or sharp pick with light or moderate pressure. Breaks with moderate hammer blows.
Moderately Soft	Can be grooved 1/16 in. deep with a pocketknife or sharp pick with moderate or heavy pressure. Breaks with light hammer blow or heavy manual pressure.
Soft	Can be grooved or gouged easily by a pocketknife or sharp pick with light pressure, can be scratched with fingernail. Breaks with light to moderate manual pressure.
Very Soft	Can be readily indented, grooved or gouged with fingernail, or carved with a pocketknife. Breaks with light manual pressure.

FRACTURE DENSITY

Description	Observed Fracture Density
Unfractured	No fractures.
Very Slightly Fractured	Core lengths greater than 3 ft.
Slightly Fractured	Core lengths mostly from 1 to 3 ft.
Moderately Fractured	Core lengths mostly from 4 in. to 1 ft.
Intensely Fractured	Core lengths mostly from 1 to 4 in.
Very Intensely Fractured	Mostly chips and fragments.

WEATHERING DESCRIPTORS FOR INTACT ROCK

Description	Diagnostic Features					General Characteristics
	Chemical Weathering-Discoloration and/or Oxidation		Mechanical Weathering-Grain Boundary Conditions (Disaggregation) Primarily for Granitics and Some Coarse-Grained Sediments	Texture and Leaching		
	Body of Rock	Fracture Surfaces		Texture	Leaching	
Fresh	No discoloration, not oxidized.	No discoloration or oxidation.	No separation, intact (tight).	No change	No leaching	Hammer rings when crystalline rocks are struck.
Slightly Weathered	Discoloration or oxidation is limited to surface of, or short distance from, fractures; some feldspar crystals are dull.	Minor to complete discoloration or oxidation of most surfaces.	No visible separation, intact (tight).	Preserved	Minor leaching of some soluble minerals.	Hammer rings when crystalline rocks are struck. Body of rock not weakened.
Moderately Weathered	Discoloration or oxidation extends from fractures usually throughout; Fe-Mg minerals are "rusty," feldspar crystals are "cloudy."	All fracture surfaces are discolored or oxidized.	Partial separation of boundaries visible.	Generally preserved	Soluble minerals may be mostly leached.	Hammer does not ring when rock is struck. Body of rock is slightly weakened.
Intensely Weathered	Discoloration or oxidation throughout; all feldspars and Fe-Mg minerals are altered to clay to some extent; or chemical alteration produces in-situ disaggregation, see grain boundary conditions.	All fracture surfaces are discolored or oxidized, surfaces friable.	Partial separation, rock is friable; in semiarid conditions granitics are disaggregated.	Texture altered by chemical disintegration (hydration, argillation).	Leaching of soluble minerals may be complete.	Dull sound when struck with hammer, usually can be broken with moderate to heavy manual pressure or by light hammer blow without reference to planes of weakness such as incipient or hairline fractures, or veinlets. Rock is significantly weakened.
Decomposed	Discolored or oxidized throughout, but resistant minerals such as quartz may be unaltered; all feldspars and Fe-Mg minerals are completely altered to clay.		Complete separation of grain boundaries (disaggregated).	Resembles a soil, partial or complete remnant rock structure may be preserved; leaching of soluble minerals usually complete.		Can be granulated by hand. Resistant minerals such as quartz may be present as "stringers" or "dikes."

ENGINEERING SERVICES

GEOTECHNICAL SERVICES

PREPARED BY: F. Nguyen 11/10

STATE OF CALIFORNIA DEPARTMENT OF TRANSPORTATION

DIVISION OF ENGINEERING SERVICES STRUCTURE DESIGN
DESIGN BRANCH 5

BRIDGE NO. 09E0003
POST MILE 2.68/2.73

WALL LOCATION 26
LOG OF TEST BORINGS 5 OF 5

GS LOTB SOIL LEGEND

ORIGINAL SCALE IN INCHES FOR REDUCED PLANS 0 1 2 3

UNIT: 3643
PROJECT NUMBER & PHASE: 02000003171
CONTRACT NO.: 02-3C3001

DISREGARD PRINTS BEARING EARLIER REVISION DATES

REVISION DATES 02-08-11

SHEET 14 OF 14

FILE => 26-z-ltb05of5.dgn

USERNAME => s114937 DATE PLOTTED => 09-JAN-2012 TIME PLOTTED => 09:07

DIST	COUNTY	ROUTE	POST MILES TOTAL PROJECT	SHEET No	TOTAL SHEETS
02	Plu	70	0.6/35.2	83	101

REGISTERED CIVIL ENGINEER 8/30/2011 DATE

1-9-12
PLANS APPROVAL DATE

The State of California or its officers or agents shall not be responsible for the accuracy or completeness of electronic copies of this plan sheet.

REGISTERED PROFESSIONAL ENGINEER M. J. CULLEN No. C 40620 Exp. 03-31-13 CIVIL STATE OF CALIFORNIA

Notes:

1. For Begin and End Wall Location See "Wall Details No. 1" Sheet "Section A-A"
2. For Details and Quantity of Existing CSP Retaining Wall See "Existing 36" CSP Retaining Wall Removal" Sheet

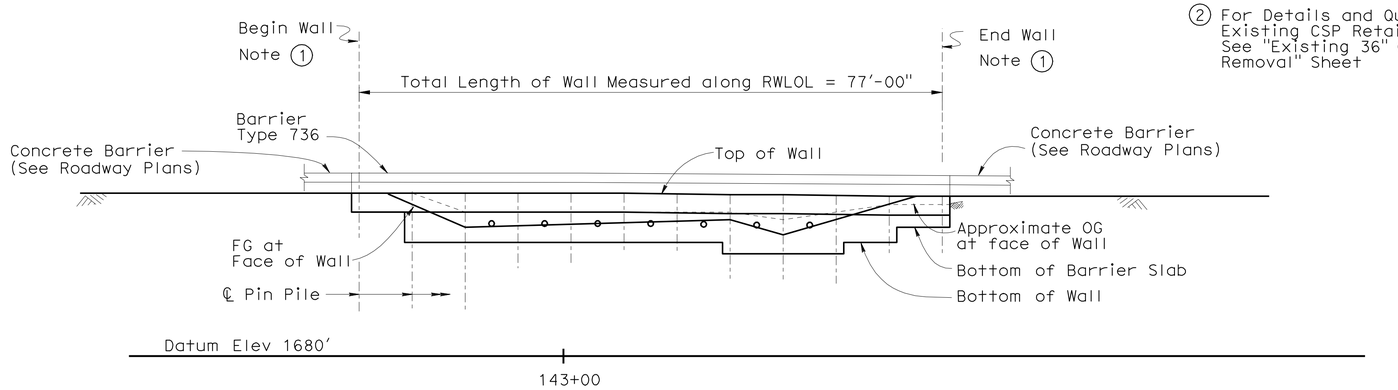

∘ Indicates Rock Anchor

DEVELOPED MIRROR ELEVATION

1" = 10'-0"

INDEX TO PLANS

1. GENERAL PLAN
2. STRUCTURE PLAN
3. FOUNDATION PLAN
4. EXISTING 36" CMP RETAINING WALL REMOVAL
5. WALL DETAILS NO. 1
6. WALL DETAILS NO. 2
7. ROCK ANCHOR DETAILS
8. ARCHITECTURAL TREATMENT
9. LOG OF TEST BORINGS 1 OF 4
10. LOG OF TEST BORINGS 2 OF 4
11. LOG OF TEST BORINGS 3 OF 4
12. LOG OF TEST BORINGS 4 OF 4

QUANTITIES

SALVAGE CONCRETE BARRIER (TYPE K)	60	LF
PREPARE CONCRETE BARRIER SLAB SURFACE	410	SQFT
REMOVE 36" CORRUGATED STEEL PIPE	64	LF
RETAINING WALL		
STRUCTURE EXCAVATION (ROCK ANCHOR WALL)	68	CY
STRUCTURE BACKFILL (ROCK ANCHOR WALL)	9	CY
ROCK ANCHOR ASSEMBLY	224	LF
STEEL PIN PILE (6"XX STRONG PIPE)	305	LF
DRILLED HOLE	313	LF
STRUCTURAL CONCRETE, RETAINING WALL	7	CY
STRUCTURAL CONCRETE, BARRIER SLAB	49	CY
FIELDSTONE FORMED RELIEF TEXTURE	196	SQFT
FURNISH POLYESTER CONCRETE OVERLAY	26	CF
PLACE POLYESTER CONCRETE OVERLAY	410	SQFT
BAR REINFORCING STEEL (RETAINING WALL)	3,840	LB
SHOTCRETE	4	CY
PREPARE AND STAIN CONCRETE	196	SQFT
CONCRETE BARRIER (TYPE 736)	79	LF

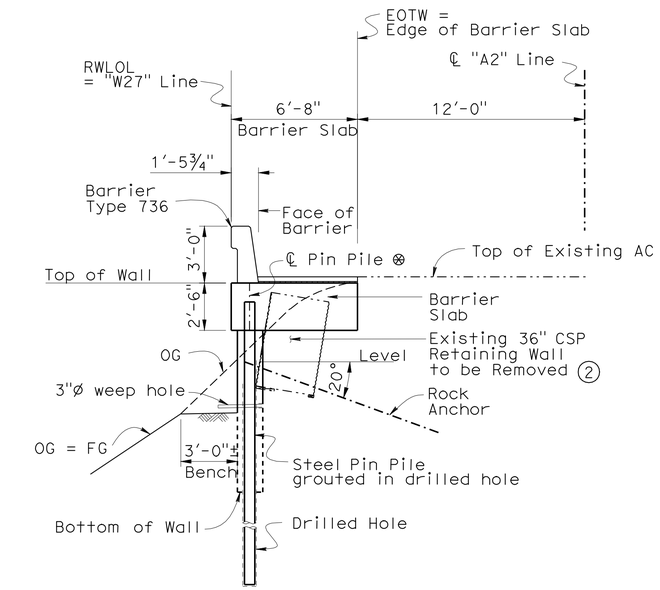

⊗ Pin Pile consists of 6" XX Strong Pipe

TYPICAL SECTION

¼"=1'-0"

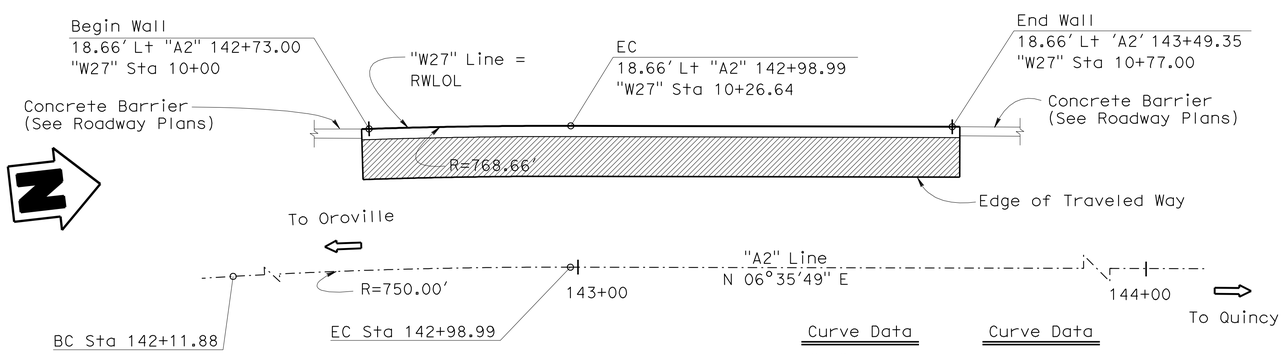

PLAN

1" = 10'-0"

Indicates ¾" Polyester Concrete Overlay

Curve Data "A2" Line	Curve Data RWLOL
R = 750.00'	R = 768.66'
Δ = 06°39'17"	Δ = 01°59'08"
T = 43.60'	T = 13.32'
L = 87.11'	L = 26.64'

Gary Blakesley
DESIGN ENGINEER

	BY	CHECKED			
DESIGN	M. J. Cullen	M. Guadamuz	SERVICE LOAD DESIGN	LIVE LOADING: 2 FEET LEVEL SURCHARGE	
DETAILS	A. Chen /S. Jiang	M. J. Cullen	LAYOUT	M. J. Cullen	M. Guadamuz
QUANTITIES	H. Fang	C. Siegenthaler	SPECIFICATIONS	M. Kopsa	PLANS AND SPECS COMPARED M. J. Cullen

STATE OF CALIFORNIA
DEPARTMENT OF TRANSPORTATION

DIVISION OF ENGINEERING SERVICES
STRUCTURE DESIGN
DESIGN BRANCH 5

BRIDGE NO. 09E0004
POST MILE 2.73

WALL LOCATION 27
GENERAL PLAN

STRUCTURES DESIGN GENERAL PLAN SHEET (ENGLISH) (REV. 10/25/05)

ORIGINAL SCALE IN INCHES FOR REDUCED PLANS 0 1 2 3

CU 02
EA 3C3001

DISREGARD PRINTS BEARING EARLIER REVISION DATES

REVISION DATES: 5-21-09 3-26-10 1-13-11 3-14-11 6-9-11 8-19-11 8-26-11

SHEET 1 OF 12

FILE => 27-a-gp.dgn

STRUCTURES DESIGN GENERAL PLAN SHEET (ENGLISH) (REV.07-24-06)

USERNAME => s123631 DATE PLOTTED => 24-JAN-2012 TIME PLOTTED => 12:50

DIST	COUNTY	ROUTE	POST MILES TOTAL PROJECT	SHEET No	TOTAL SHEETS
02	Plu	70	0.6/35.2	84	101

REGISTERED CIVIL ENGINEER 08-30-2011 DATE

1-9-12
PLANS APPROVAL DATE

The State of California or its officers or agents shall not be responsible for the accuracy or completeness of electronic copies of this plan sheet.

REGISTERED PROFESSIONAL ENGINEER M. J. CULLEN No. C 40620 Exp. 03-31-13 CIVIL STATE OF CALIFORNIA

GENERAL NOTES

DESIGN:

CALTRANS BRIDGE DESIGN SPECIFICATIONS-APRIL 2000 (LFD)
(1996 AASHTO with Interims and Revisions by CALTRANS)

SOIL PARAMETERS:

(For determination of design lateral earth pressures)

Soil	Rock
ϕ = 34°	ϕ = 38°
γ_m = 135 pcf	γ_m = 165 pcf
Qd = N/A	c = 3500 pcf
	Qd = 6000 $\frac{lbs}{ft}$

Qd = Design Pullout Resistance (lbs per linear foot)

LIVE LOAD:

Surcharge - 2 feet Level Earth

SHOTCRETE/REINFORCED CONCRETE:

f'c = 3600 psi (Concrete compressive strength at 28 days)
fy = 60 000 psi (Yield strength of reinforcement)

STRUCTURAL STEEL:

Steel Piles, 6" XX Strong Pipe
ASTM Designation A53 Grade B

ROCK ANCHORS:

ASTM Designation A615 Grade 75
fy = 75 ksi
fs = 42 ksi

STANDARD PLANS DATED MAY 2006

A10A ACRONYMS AND ABBREVIATIONS (A-L)

B11-56 BARRIER RAIL TYPE 736

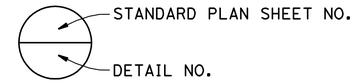

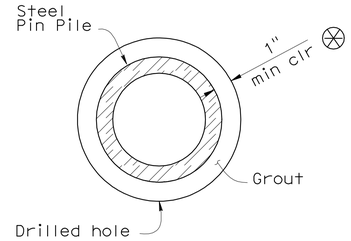

DRILLED HOLE DETAIL

3" = 1'-0"
Typical for all Piles

Notes:

* ℄ Rock anchor @ back face of wall, Place Rock anchors midway between piles.

† Embedment length to be increased where needed to assure that anchors are socketed at least 7 feet into the formational rock. (Embedment length may not be decreased)

⊗ Drilled hole must be large enough so that a minimum gap of 1" is provided between drilled hole and steel Pin Pile. This condition must be met at all depths. Hole diameter may be larger if required by drilling conditions.

⊗⊗ For beginning and end wall segments the bottom of wall is the bottom of the barrier slab.

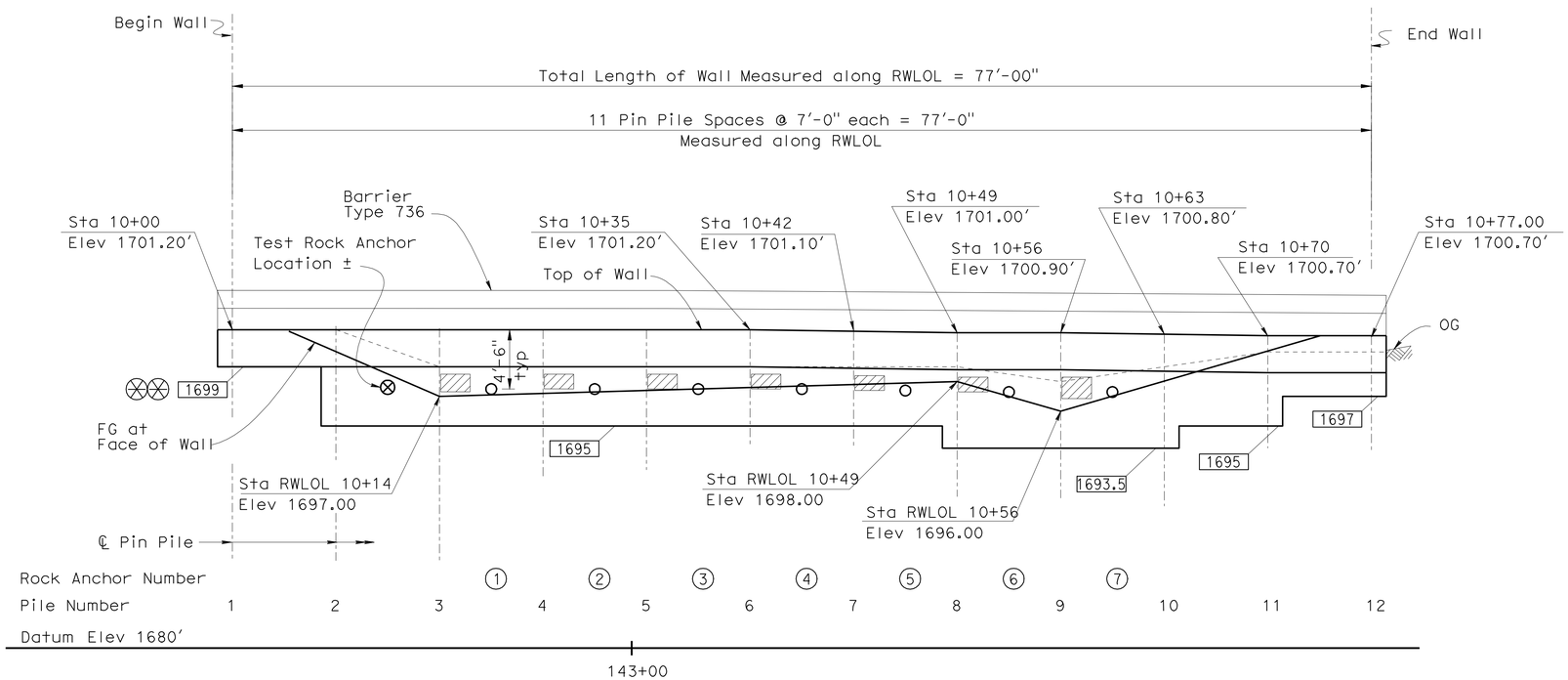

DEVELOPED MIRROR ELEVATION

1" = 5'-0"

Indicates Bottom of Wall Elevation

Indicates Vertical Geocomposite Drain with Weephole (Backface of Wall). See "Wall Details No. 2" sheet

ROCK ANCHOR TABLE

Rock Anchor	† Embedment Length	Size
1	28	#8
2	28	#8
3	28	#8
4	28	#8
5	28	#8
6	28	#8
7	28	#8

PILE DATA TABLE

Pile Number	"W27" Station	Tip Elevation
1	10+00	1686
2	10+07	1678
3	10+14	1678
4	10+21	1672
5	10+28	1672
6	10+35	1672
7	10+42	1672
8	10+49	1672
9	10+56	1672
10	10+63	1675
11	10+70	1675
12	10+77	1675

One test rock anchor shall be placed as shown on the "Elevation" view Exact location shall be approved by the engineer. Test Rock Anchor to be tested before production Rock Anchors are constructed.

All Pin Piles shall be 6" XX -strong pipe and be embeded 8 ft into bedrock. Tip Elevation to be lowered where needed to maintain 8 ft embedment

DESIGN	BY M. J. Cullen	CHECKED M. Guadamuz	
DETAILS	BY A. Chen/S. Jiang	CHECKED M. J. Cullen	
QUANTITIES	BY H. Fang	CHECKED C. Siegenthaler	

STATE OF CALIFORNIA
DEPARTMENT OF TRANSPORTATION

DIVISION OF ENGINEERING SERVICES
STRUCTURE DESIGN
DESIGN BRANCH 5

BRIDGE NO. 09E0004
POST MILE 2.73

WALL LOCATION 27
STRUCTURE PLAN

STRUCTURES DESIGN DETAIL SHEET (ENGLISH) (REV. 10/25/05)

ORIGINAL SCALE IN INCHES FOR REDUCED PLANS 0 1 2 3

CU 02
EA 3C3001

DISREGARD PRINTS BEARING EARLIER REVISION DATES

REVISION DATES: 11-4-10 1-13-11 2-14-11 7-8-11 8-1-11 8-12-11 8-26-11

SHEET 2 OF 12

FILE => 27-c-sp.dgn

USERNAME => s114937 DATE PLOTTED => 09-JAN-2012 TIME PLOTTED => 09:07

DIST	COUNTY	ROUTE	POST MILES TOTAL PROJECT	SHEET No	TOTAL SHEETS
02	Plu	70	0.6/35.2	85	101

M J Cullen 08-30-2011
REGISTERED CIVIL ENGINEER DATE

1-9-12
PLANS APPROVAL DATE

REGISTERED PROFESSIONAL ENGINEER
M. J. CULLEN
No. C 40620
Exp. 03-31-13
CIVIL
STATE OF CALIFORNIA

The State of California or its officers or agents shall not be responsible for the accuracy or completeness of electronic copies of this plan sheet.

CURVE DATA

No.	R	Δ	T	L
Ⓐ	750.00′	06°09′17″	43.60	87.11
Ⓑ	768.66′	01°59′08″	13.32	26.64

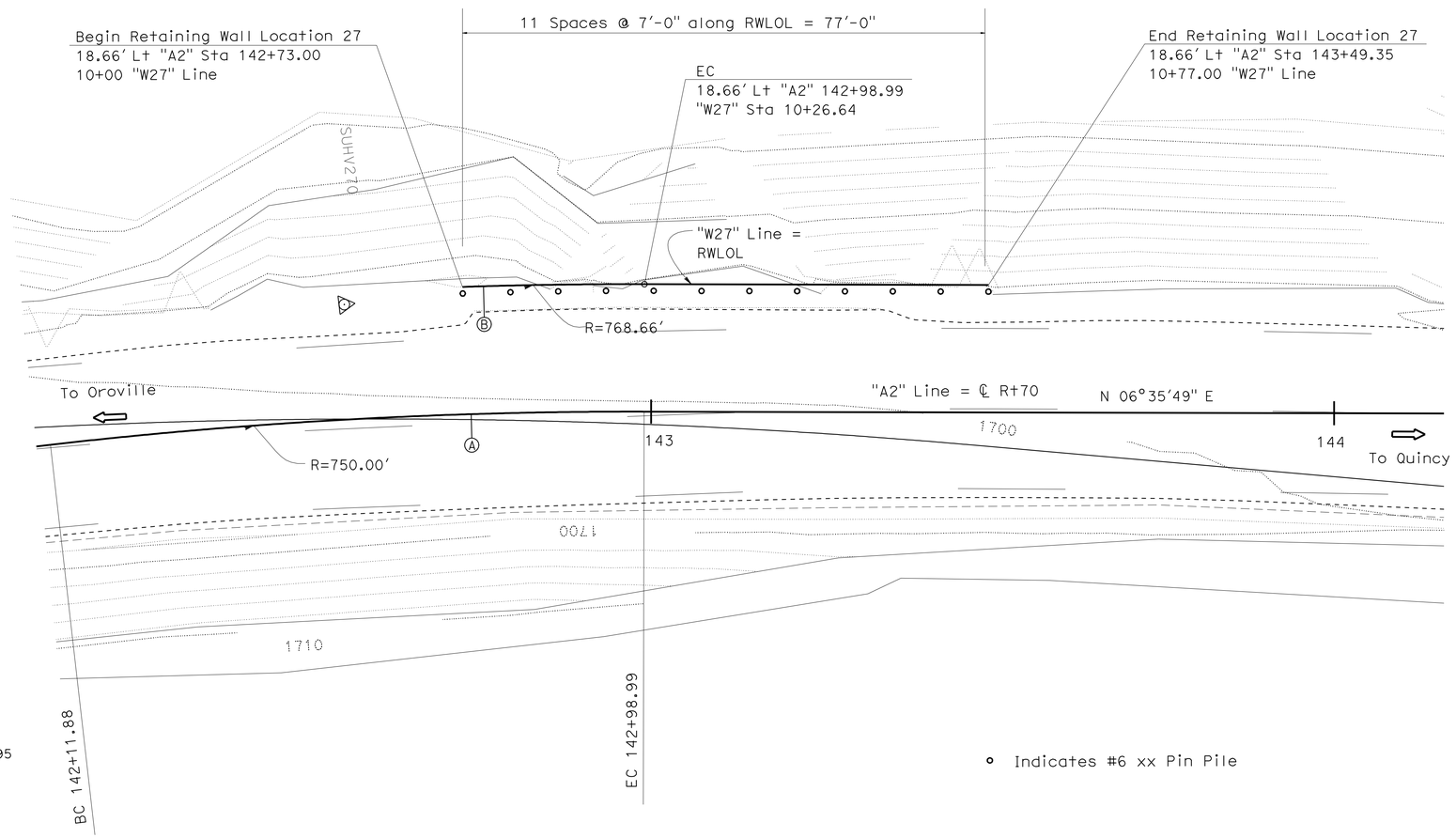

SURVEY CONTROL

MEN 253-1.95 (PRHV 195)
Fnd Aluminum Cap on ¾″ Rebar Stamped: MEN 253-1.95
19.48 FT Rt. "GE" Line Rte 253
Sta. 18+31.22
N 2,128,926.29
E 6,185,156.81
Elev. = 980.60

MEN 253-2.03 (PRHV 203) (Not Shown on Plan)
Fnd Aluminum Cap on ¾″ Rebar Stamped: MEN 253-2.03
42.15 FT Lt. "GE" Line Rte 253
Sta. 23+17.36
N 2,129,306.77
E 6,185,467.17
Elev. = 1018.91

PRELIMINARY INVESTIGATION SECTION

SCALE	VERT.DATUM	PHOTOGRAMMETRY AS OF: X		
1″=5′	HORZ.DATUM	SURVEYED BY District	CHECKED	BY
ALIGNMENT TIES Dist.Traverse Sheet		DRAFTED BY	CHECKED	BY

STRUCTURES FOUNDATION PLAN SHEET (ENGLISH) (REV. 10/25/05)

	BY	CHECKED
DESIGN	M. J. Cullen	M. Guadamuz
DETAILS	A. Chen	M. J. Cullen
QUANTITIES	H. Fang	C. Siegenthaler

ORIGINAL SCALE IN INCHES FOR REDUCED PLANS 0 1 2 3

STATE OF CALIFORNIA
DEPARTMENT OF TRANSPORTATION

DIVISION OF ENGINEERING SERVICES
STRUCTURE DESIGN
DESIGN BRANCH 5

CU 02
EA 3C3001

BRIDGE NO. 09E0004
POST MILE 2.73

WALL LOCATION 27
FOUNDATION PLAN

DISREGARD PRINTS BEARING EARLIER REVISION DATES

REVISION DATES: 11-4-10 3-8-11 8-12-11

SHEET 3 OF 12

FILE => 27-e-fdp101.dgn

USERNAME => s121614 DATE PLOTTED => 09-JAN-2012 TIME PLOTTED => 09:02

DIST	COUNTY	ROUTE	POST MILES TOTAL PROJECT	SHEET No	TOTAL SHEETS
02	Plu	70	0.6/35.2	86	101

REGISTERED CIVIL ENGINEER 08-30-2011 DATE

1-9-12
PLANS APPROVAL DATE

The State of California or its officers or agents shall not be responsible for the accuracy or completeness of electronic copies of this plan sheet.

REGISTERED PROFESSIONAL ENGINEER M. J. CULLEN No. C 40620 Exp. 03-31-13 CIVIL STATE OF CALIFORNIA

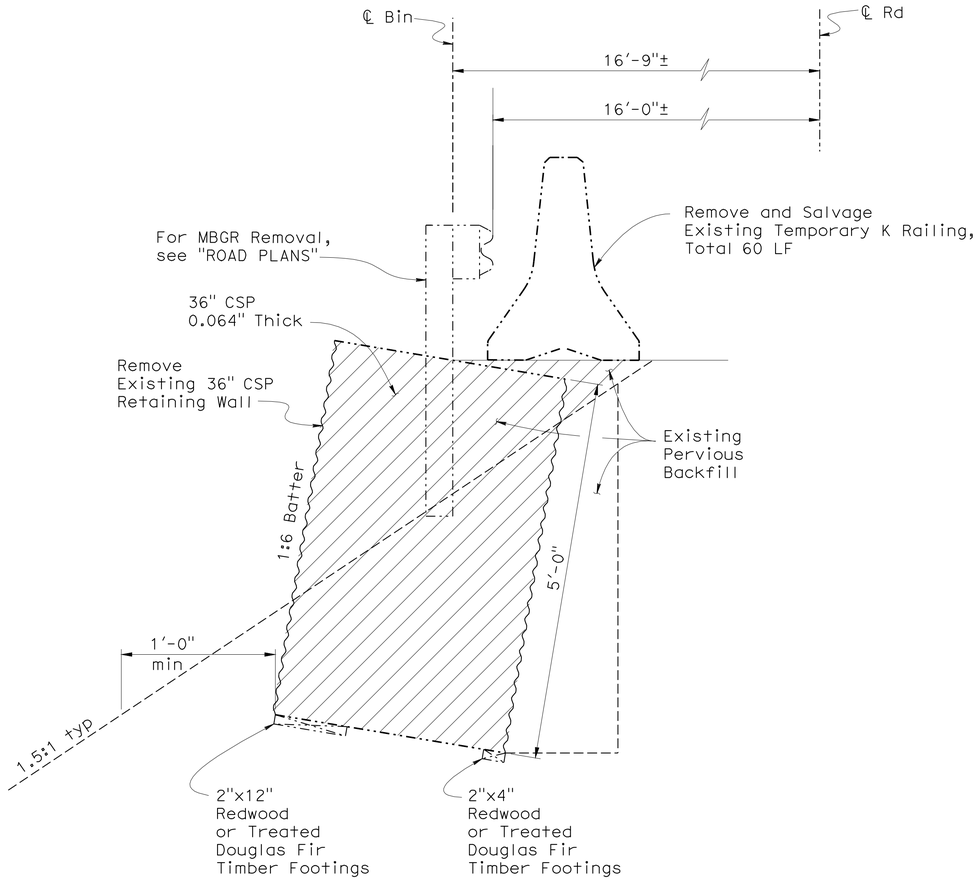

SECTION A-A
1" = 1'-0"

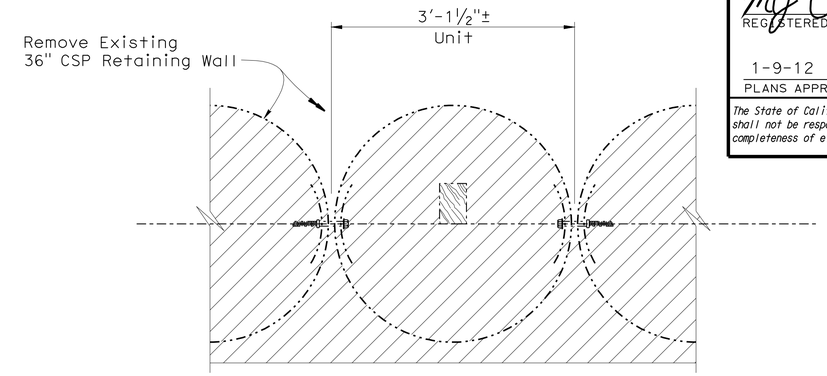

SECTION B-B
1" = 1'-0"

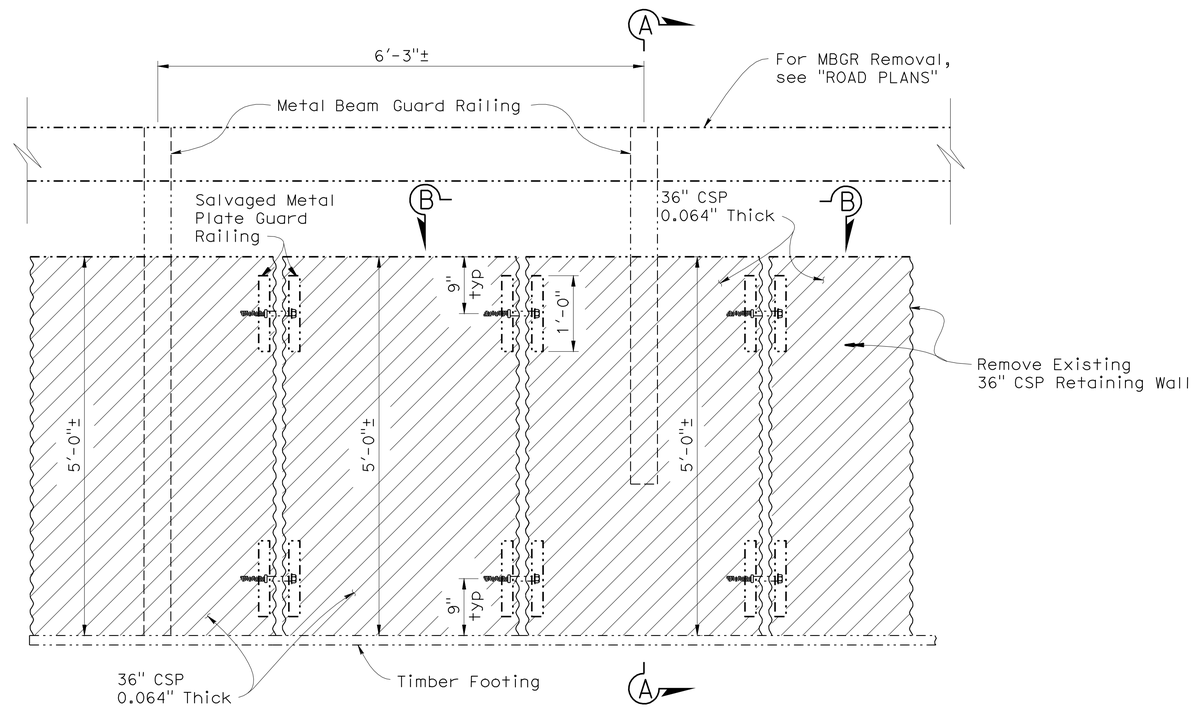

ELEVATION
1" = 1'-0"

Indicates Remove Existing 36" ø CSP Retaining Wall (Total 64 LF ±)

DESIGN	BY M. J. Cullen	CHECKED M. Guadamuz	
DETAILS	BY A. Chen/S. Jiang	CHECKED M. J. Cullen	
QUANTITIES	BY H. Fang	CHECKED C. Siegenthaler	

STATE OF CALIFORNIA DEPARTMENT OF TRANSPORTATION

DIVISION OF ENGINEERING SERVICES STRUCTURE DESIGN
DESIGN BRANCH 5

BRIDGE NO. 09E0004
POST MILE 2.73

WALL LOCATION 27
EXISTING 36" CSP RETAINING WALL REMOVAL

STRUCTURES DESIGN DETAIL SHEET (ENGLISH) (REV. 10/25/05)

ORIGINAL SCALE IN INCHES FOR REDUCED PLANS 0 1 2 3

CU 02
EA 3C3001

DISREGARD PRINTS BEARING EARLIER REVISION DATES

REVISION DATES 8-19-11 8-26-11

SHEET 4 OF 12

FILE => 27-q-dt01.dgn

USERNAME => s12614 DATE PLOTTED => 09-JAN-2012 TIME PLOTTED => 10:53

DIST	COUNTY	ROUTE	POST MILES TOTAL PROJECT	SHEET No	TOTAL SHEETS
02	Plu	70	0.6/35.2	87	101

REGISTERED CIVIL ENGINEER 08-30-2011 DATE

1-9-12
PLANS APPROVAL DATE

REGISTERED PROFESSIONAL ENGINEER M. J. CULLEN No. C 40620 Exp. 03-31-13 CIVIL STATE OF CALIFORNIA

The State of California or its officers or agents shall not be responsible for the accuracy or completeness of electronic copies of this plan sheet.

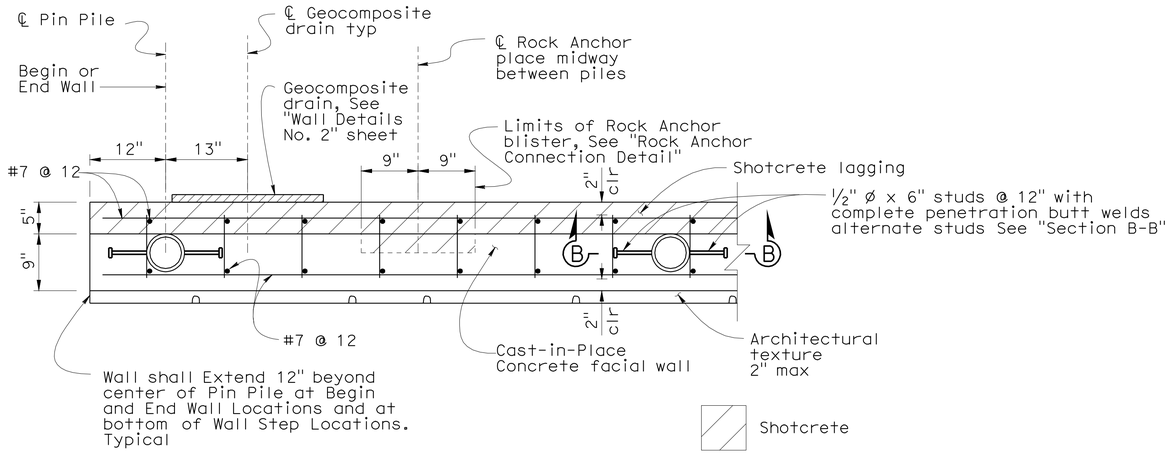

SECTION A-A

1"=1'-0"

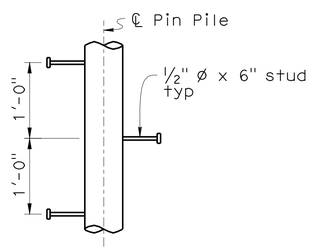

SECTION B-B

1"=1'-0"

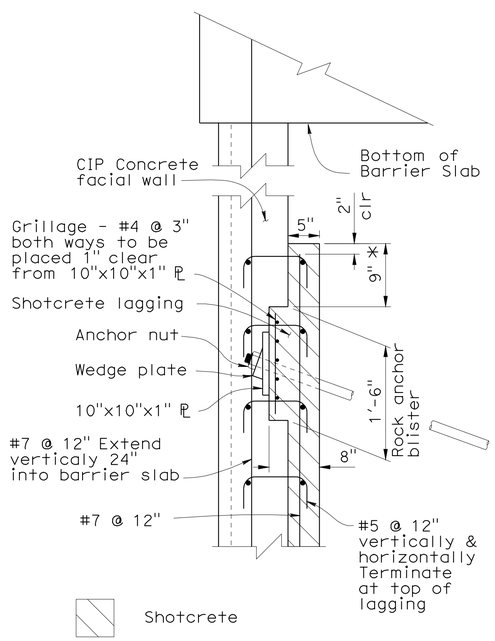

* Shotcrete wall must extend 9" minimum above Rock Anchor blister for all wall segments with Rock Anchors

ROCK ANCHOR CONNECTION DETAIL

1"=1'-0"

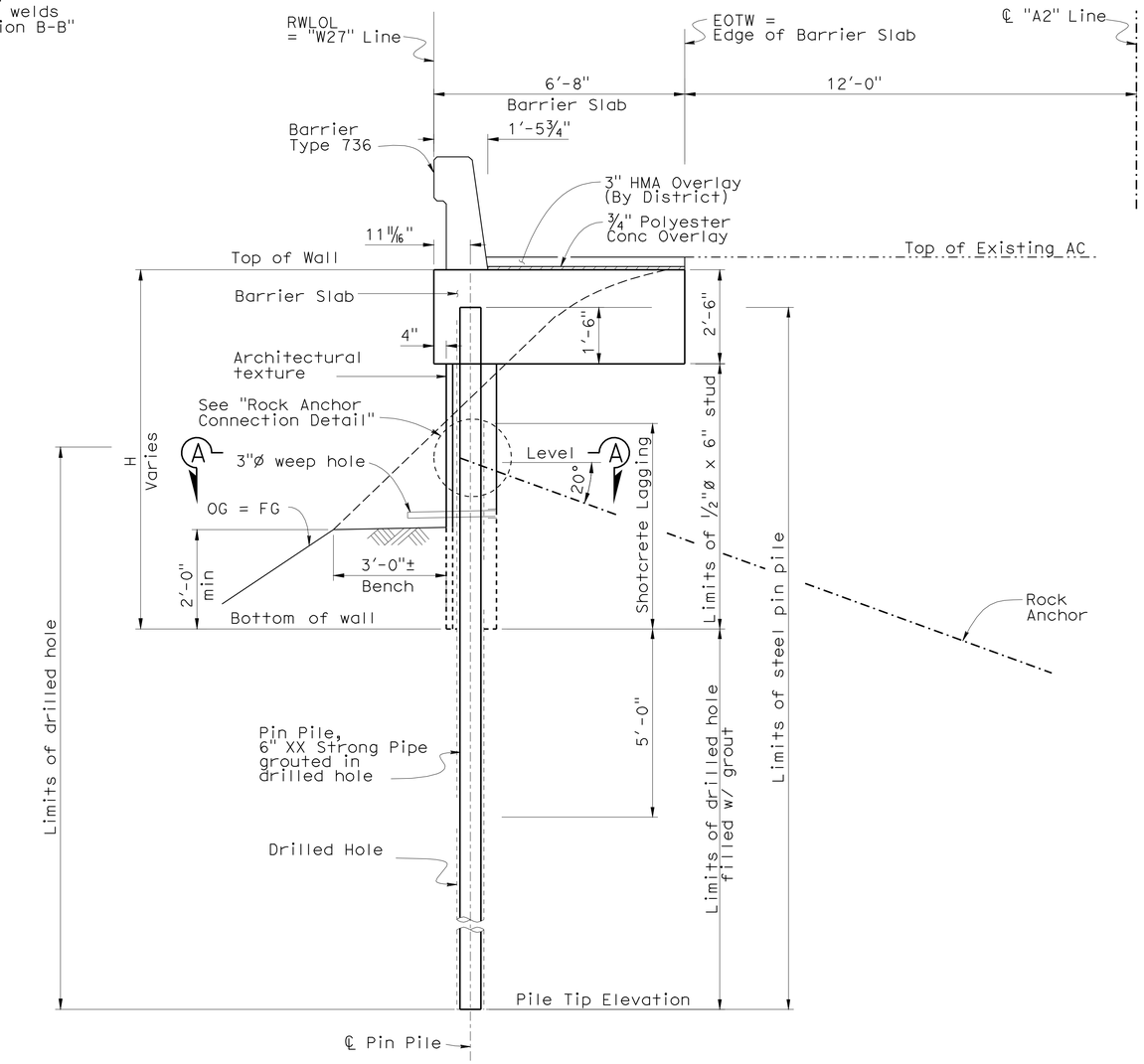

TYPICAL SECTION

½"=1'-0"

DESIGN	BY M. J. Cullen	CHECKED M. Guadamuz	
DETAILS	BY A. Chen/S. Jiang	CHECKED M. J. Cullen	
QUANTITIES	BY H. Fang	CHECKED C. Siegenthaler	

STATE OF CALIFORNIA DEPARTMENT OF TRANSPORTATION

DIVISION OF ENGINEERING SERVICES STRUCTURE DESIGN DESIGN BRANCH 5

BRIDGE NO. 09E0004
POST MILE 2.73

WALL LOCATION 27
WALL DETAILS NO. 1

STRUCTURES DESIGN DETAIL SHEET (ENGLISH) (REV. 10/25/05)

ORIGINAL SCALE IN INCHES FOR REDUCED PLANS 0 1 2 3

CU 02
EA 3C3001

DISREGARD PRINTS BEARING EARLIER REVISION DATES

REVISION DATES: 10-19-10 1-13-11 3-14-11 6-1-11 8-18-11 8-26-11

SHEET 5 OF 12

FILE => 27-q-dt02.dgn

USERNAME => s123631 DATE PLOTTED => 24-JAN-2012 TIME PLOTTED => 12:50

DIST	COUNTY	ROUTE	POST MILES TOTAL PROJECT	SHEET No	TOTAL SHEETS
02	Plu	70	0.6/35.2	88	101

REGISTERED CIVIL ENGINEER 08-30-2011 DATE

1-9-12
PLANS APPROVAL DATE

The State of California or its officers or agents shall not be responsible for the accuracy or completeness of electronic copies of this plan sheet.

REGISTERED PROFESSIONAL ENGINEER M. J. CULLEN No. C 40620 Exp. 03-31-13 CIVIL STATE OF CALIFORNIA

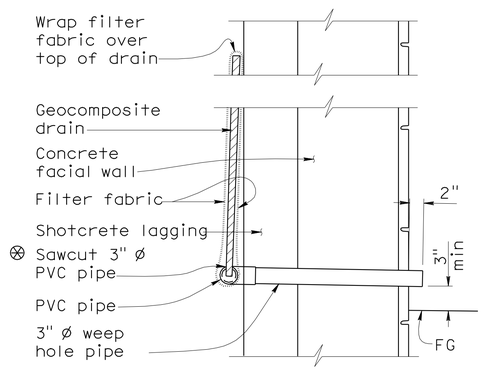

SECTION X-X

No Scale

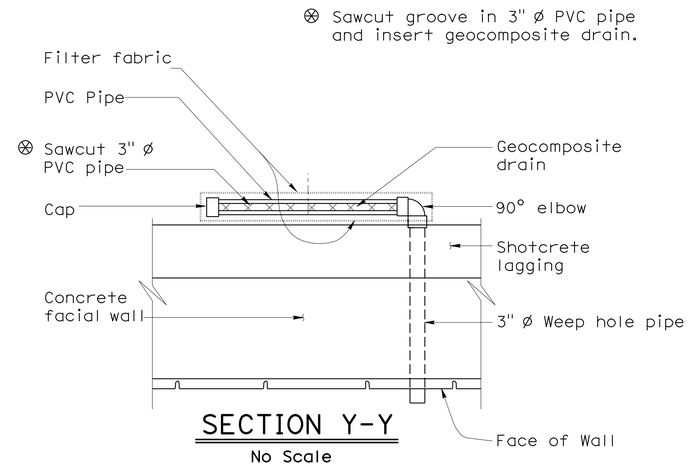

SECTION Y-Y

No Scale

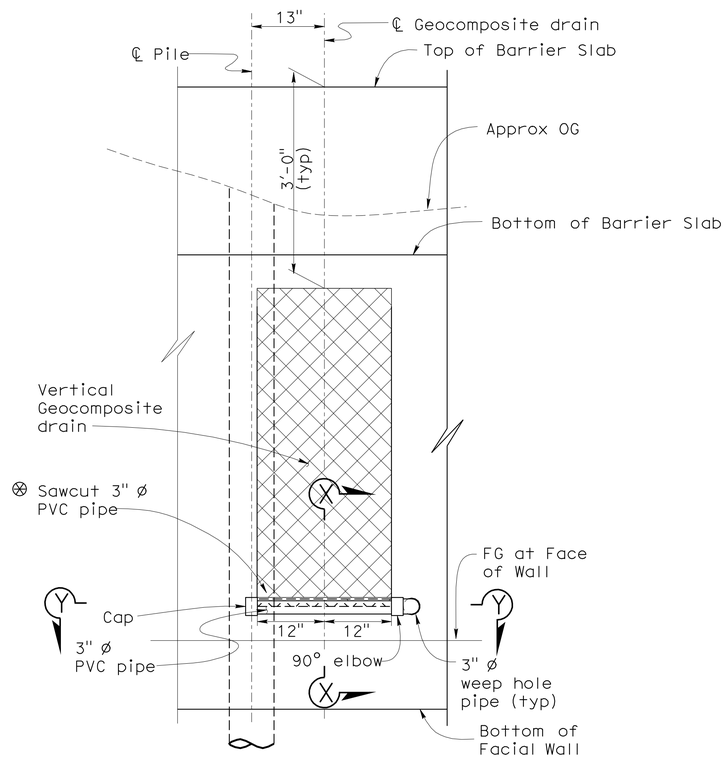

VERTICAL DRAINAGE DETAIL

Note: Wrap entire Geocomposite drain system with filter fabric

GEOCOMPOSITE DRAIN DETAILS

No Scale

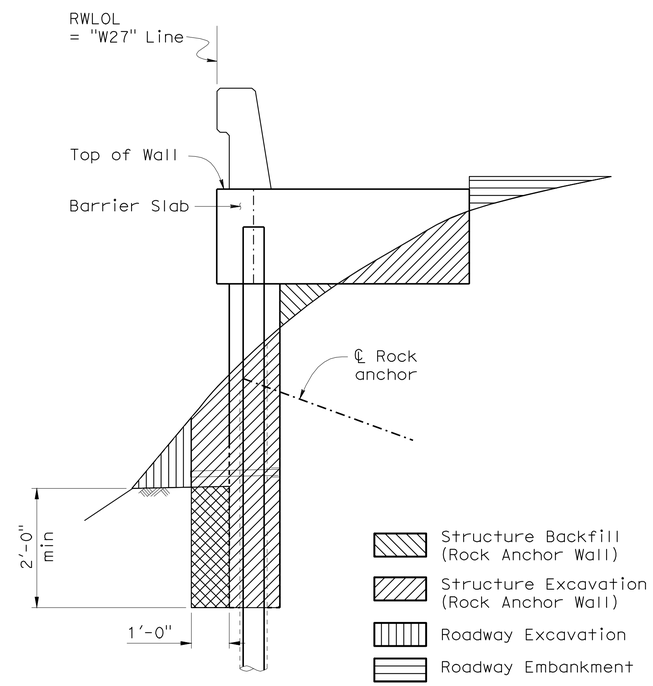

LIMITS OF PAYMENT FOR EXCAVATION AND BACKFILL

½"=1'-0"

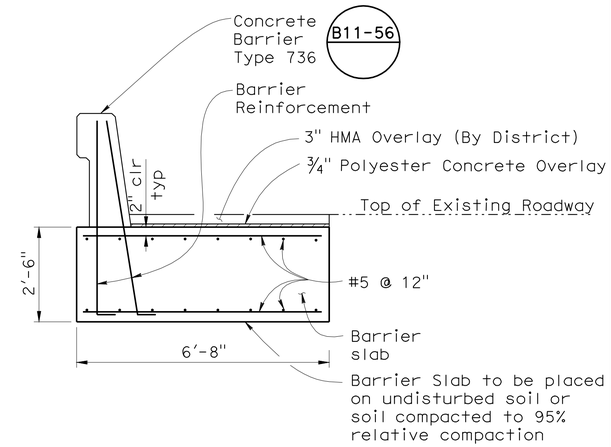

Note: All reinforcement in barrier slab be epoxy coated

BARRIER SLAB DETAIL

½" = 1'-0"

DESIGN	BY M. J. Cullen	CHECKED M. Guadamuz	
DETAILS	BY A. Chen	CHECKED M. J. Cullen	
QUANTITIES	BY H. Fang	CHECKED C. Siegenthaler	

STATE OF CALIFORNIA
DEPARTMENT OF TRANSPORTATION

DIVISION OF ENGINEERING SERVICES
STRUCTURE DESIGN
DESIGN BRANCH 5

BRIDGE NO. 09E0004
POST MILE 2.73

WALL LOCATION 27
WALL DETAILS NO. 2

STRUCTURES DESIGN DETAIL SHEET (ENGLISH) (REV. 10/25/05)

ORIGINAL SCALE IN INCHES FOR REDUCED PLANS 0 1 2 3

CU 02
EA 3C3001

DISREGARD PRINTS BEARING EARLIER REVISION DATES

REVISION DATES: 10-26-10 1-3-11 2-17-11 3-14-11 8-12-11

SHEET 6 OF 12

FILE => 27-q-dt03.dgn

USERNAME => s12161 4 DATE PLOTTED => 09-JAN-2012 TIME PLOTTED => 09:03

DIST	COUNTY	ROUTE	POST MILES TOTAL PROJECT	SHEET No	TOTAL SHEETS
02	Plu	70	0.6/35.2	89	101

REGISTERED CIVIL ENGINEER 08-30-2011 DATE

1-9-12
PLANS APPROVAL DATE

REGISTERED PROFESSIONAL ENGINEER M. J. CULLEN No. C 40620 Exp. 03-31-13 CIVIL STATE OF CALIFORNIA

The State of California or its officers or agents shall not be responsible for the accuracy or completeness of electronic copies of this plan sheet.

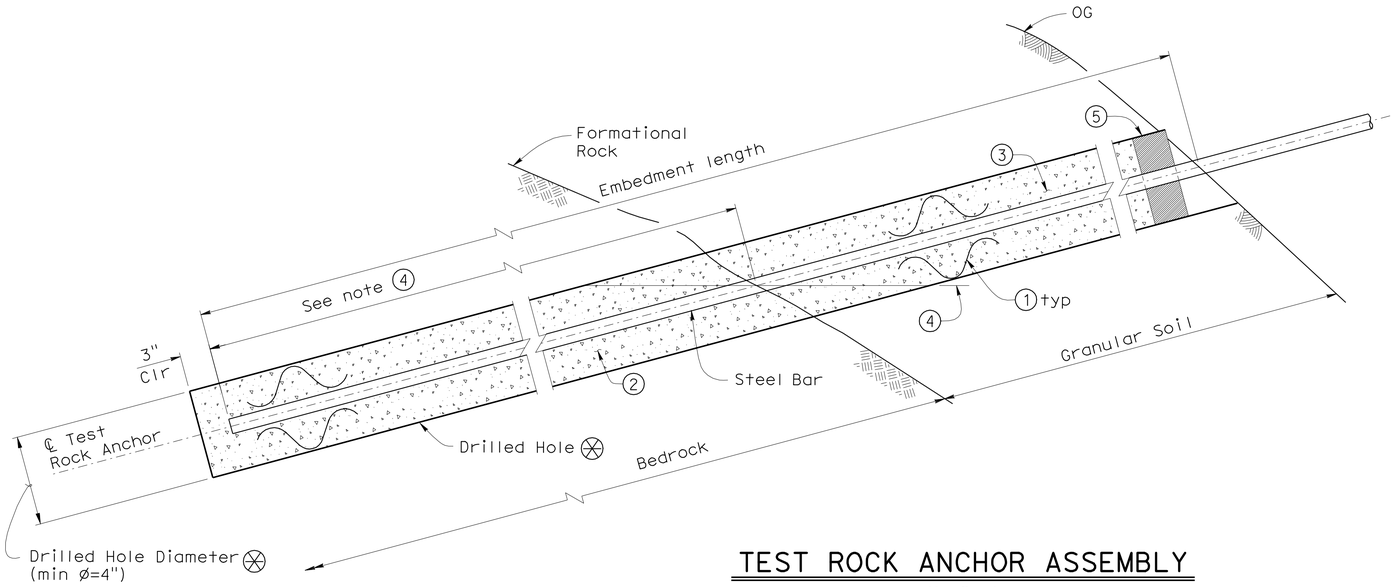

TEST ROCK ANCHOR ASSEMBLY

No Scale

Test Anchor Notes:

Embedment length shall be long enough to provide 10' bond length into bedrock

Total length of test Rock Anchor equals embedment length plus the length required for jacking equipment.

For location of test Rock Anchor See "Structure Plan"

1. Centralizers @ 5'-0" and located 20" minimum from top and bottom of drilled hole (Typ)
2. Initial grout
3. Secondary grout (Place after testing)
4. Level of Initial grout
5. Block out as required for pullout testing

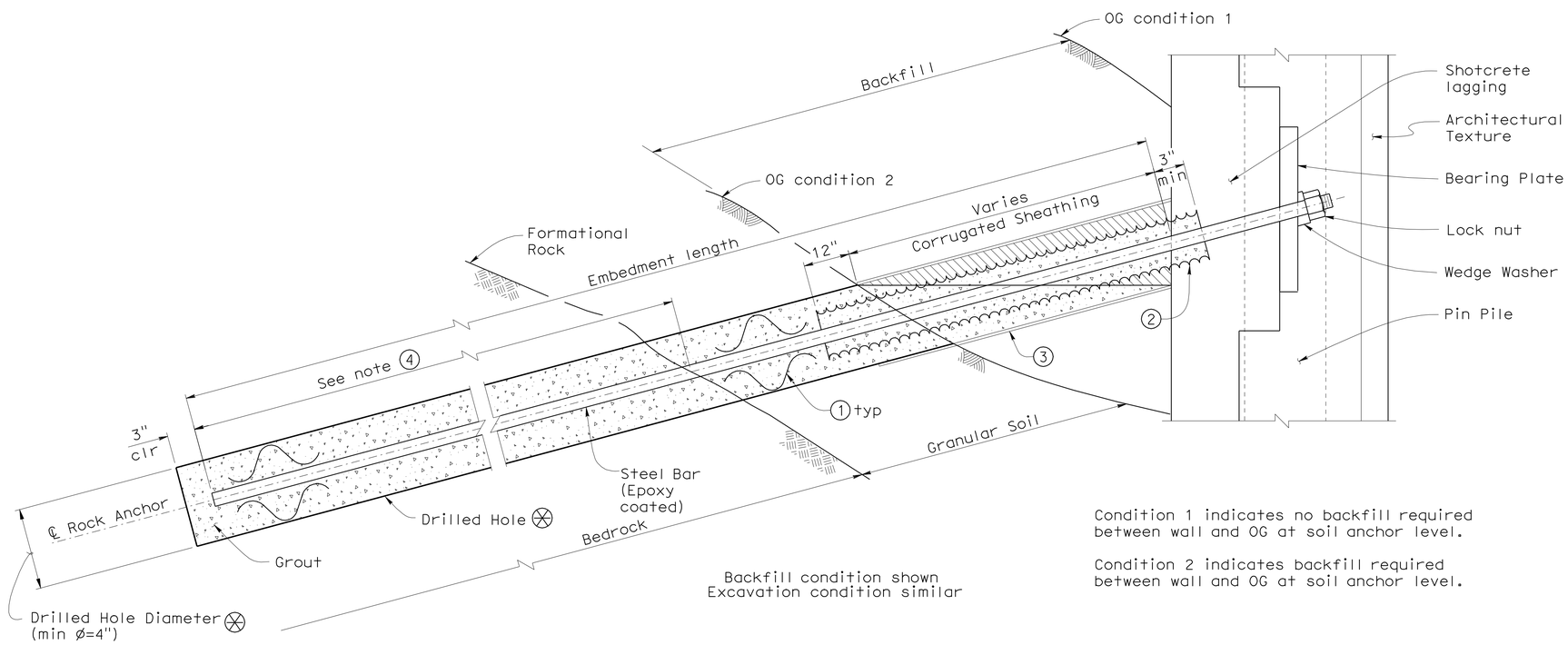

Backfill condition shown
Excavation condition similar

Condition 1 indicates no backfill required between wall and OG at soil anchor level.

Condition 2 indicates backfill required between wall and OG at soil anchor level.

ROCK ANCHOR ASSEMBLY

No Scale

Production Anchor Notes:

For segments of the wall supported by Rock Anchors there shall be no time during construction where the wall will laterally support 5'-0" or more of soil with out the Rock Anchor connected to the wall.

In fill situations Backfill to be placed and compacted after Rock Anchor is connected to the wall.

1. Centralizers @ 5'-0" and located 20" minimum from top and bottom of drilled hole (Typ)
2. Corrugated sheathing filled with grout. Grout to be cured before rock anchor is placed in drilled hole. Minimum diameter sheathing shall be 2"
3. Drilled hole extension comprised of pipe w/ inside diameter equal to inside diameter of drilled hole. (only required in condition 2)
4. Rock anchor shall be socketed a minimum of 7 ft into formational Rock. For additional rock anchor details, See notes on "Structure Plan" sheet.

Fill void w/ shotcrete at time of shotcrete wall construction (Required in condition 1 & 2)

Contractor to determine drilled hole diameter (ø)

	BY	CHECKED
DESIGN	M. J. Cullen	M. Guadamuz
DETAILS	A. Chen/S. Jiang	M. J. Cullen
QUANTITIES	H. Fang	C. Siegenthaler

STATE OF CALIFORNIA DEPARTMENT OF TRANSPORTATION

DIVISION OF ENGINEERING SERVICES STRUCTURE DESIGN DESIGN BRANCH 5

BRIDGE NO. 09E0004
POST MILE 2.73

WALL LOCATION 27
ROCK ANCHOR DETAILS

STRUCTURES DESIGN DETAIL SHEET (ENGLISH) (REV. 10/25/05)

ORIGINAL SCALE IN INCHES FOR REDUCED PLANS 0 1 2 3

CU 02
EA 3C3001

DISREGARD PRINTS BEARING EARLIER REVISION DATES

REVISION DATES: 10-26-10 1-3-11 2-7-11 6-7-11 8-7-11 8-26-11

SHEET 7 OF 12

FILE => 27-q-dt04.dgn

USERNAME => s126614 DATE PLOTTED => 09-JAN-2012 TIME PLOTTED => 09:03

DIST	COUNTY	ROUTE	POST MILES TOTAL PROJECT	SHEET No	TOTAL SHEETS
02	Plu	70	0.6/35.2	90	101

REGISTERED CIVIL ENGINEER 08-30-2011 DATE

1-9-12
PLANS APPROVAL DATE

REGISTERED PROFESSIONAL ENGINEER
M. J. CULLEN
No. C 40620
Exp. 03-31-13
CIVIL
STATE OF CALIFORNIA

The State of California or its officers or agents shall not be responsible for the accuracy or completeness of electronic copies of this plan sheet.

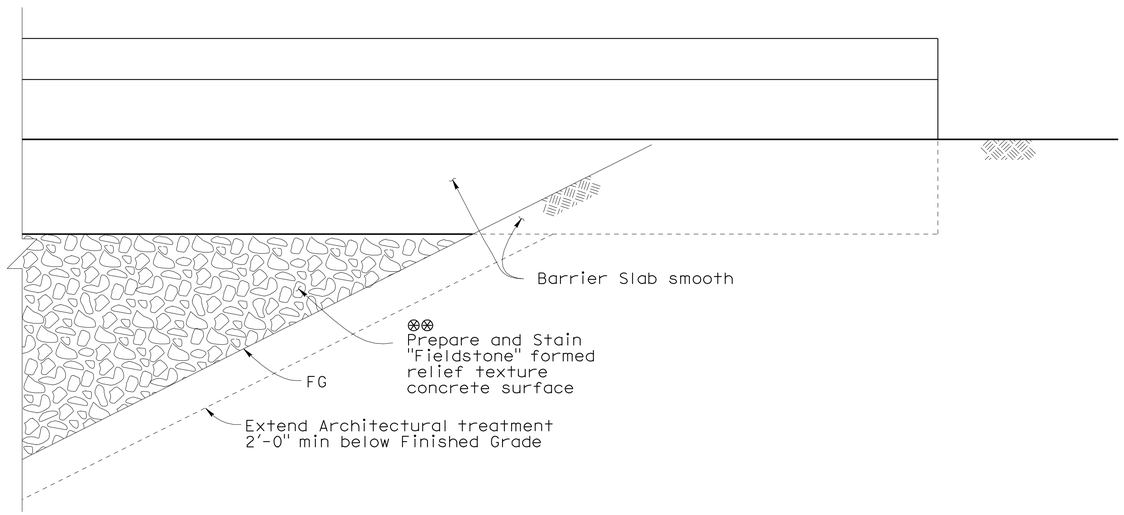

VIEW A-A

No Scale

⊗⊗ Concrete to be stained gray and approved by Project Landscape Architect

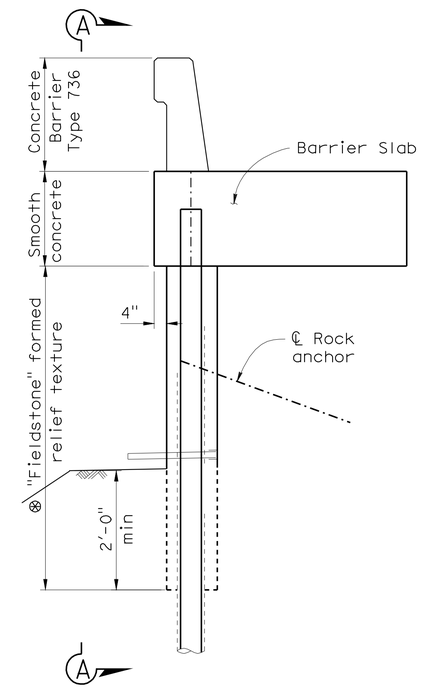

TYPICAL SECTION

No Scale

⊗ Limits of Payment for Prepare and Stain Concrete.

DESIGN	BY M. J. Cullen	CHECKED M. Guadamuz	
DETAILS	BY A. Chen	CHECKED M. J. Cullen	
QUANTITIES	BY H. Fang	CHECKED C. Siegenthaler	

STATE OF CALIFORNIA
DEPARTMENT OF TRANSPORTATION

DIVISION OF ENGINEERING SERVICES
STRUCTURE DESIGN
DESIGN BRANCH 5

BRIDGE NO. 09E0004
POST MILE 2.73

WALL LOCATION 27
ARCHITECTURAL TREATMENT

STRUCTURES DESIGN DETAIL SHEET (ENGLISH) (REV. 10/25/05)

ORIGINAL SCALE IN INCHES FOR REDUCED PLANS 0 1 2 3

CU 02
EA 3C3001

DISREGARD PRINTS BEARING EARLIER REVISION DATES

REVISION DATES: 10-26-10 3-8-11 6-1-11 8-17-11

SHEET 8 OF 12

FILE => 27-v-archdt.dgn

USERNAME => s8121614 DATE PLOTTED => 09-JAN-2012 TIME PLOTTED => 09:03

DIST	COUNTY	ROUTE	POST MILES TOTAL PROJECT	SHEET No	TOTAL SHEETS
02	Plu	70	0.6/35.2	91	101

PROFESSIONAL ENGINEER 3-09-11

1-9-12
PLANS APPROVAL DATE

REGISTERED PROFESSIONAL ENGINEER
Mark Hagy
No. GE2838
Exp. 12-31-12
GEOTECHNICAL
STATE OF CALIFORNIA

The State of California or its officers or agents shall not be responsible for the accuracy or completeness of electronic copies of this plan sheet.

This LOTB sheet was prepared in accordance with the Caltrans Soil & Rock Logging, Classification, & Presentation Manual (June 2010).

BENCH MARK

REBAR WITH METAL CAP
CM 2.70 (SUHV270) PLU 70 PM 2.70
"A2" Line Sta 142+57 Lt 18′
N 1,845,391.66
E 6,741,389.82
Elev = 1701.14
NAVD88

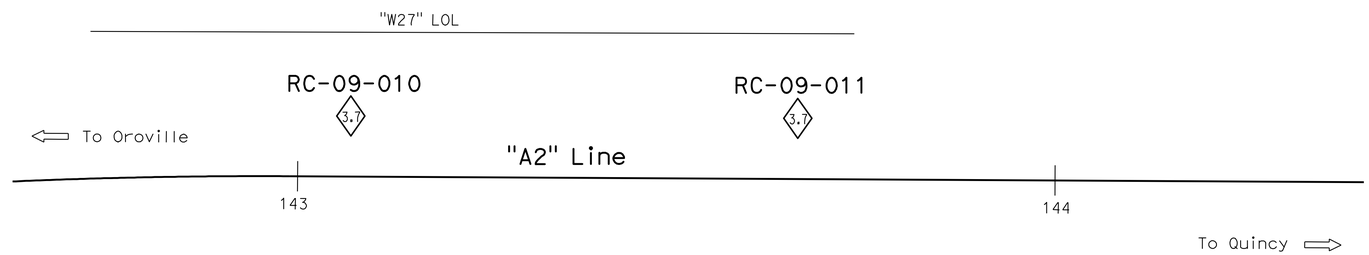

PLAN

1" = 10′

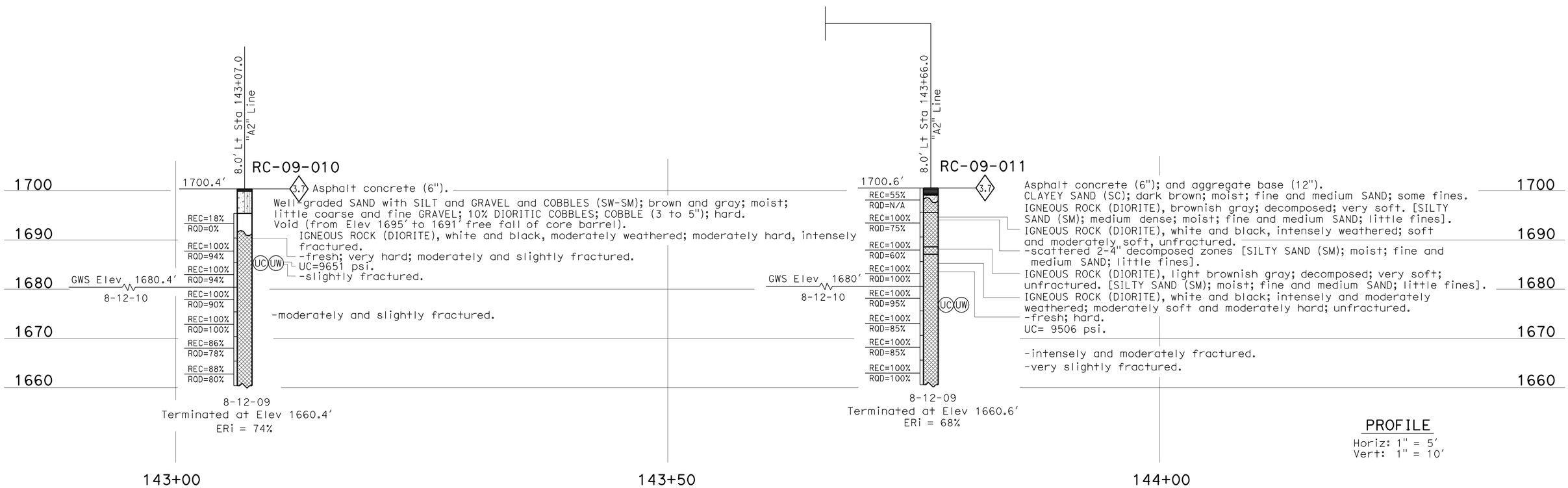

PROFILE

Horiz: 1" = 5′
Vert: 1" = 10′

ENGINEERING SERVICES	GEOTECHNICAL SERVICES	STATE OF CALIFORNIA DEPARTMENT OF TRANSPORTATION	DIVISION OF ENGINEERING SERVICES STRUCTURE DESIGN DESIGN BRANCH 5	BRIDGE NO. 09E0004 POST MILE 2.68/2.73	WALL LOCATION 27
FUNCTIONAL SUPERVISOR NAME: D. Brittsan	DRAWN BY: F. Nguyen 11/10 CHECKED BY: L. Paredes	FIELD INVESTIGATION BY: H. AkbarZadegan/ M. Kiesse			LOG OF TEST BORINGS 1 OF 4

OGS CIVIL LOG OF TEST BORINGS SHEET

ORIGINAL SCALE IN INCHES FOR REDUCED PLANS 0 1 2 3

UNIT: 3643
PROJECT NUMBER & PHASE: 02000003171 CONTRACT NO.: 02-3C3001

DISREGARD PRINTS BEARING EARLIER REVISION DATES → 02-08-11 02-15-11

SHEET 9 OF 12

FILE => 27-z-ltb01of4.dgn

USERNAME => s123631 DATE PLOTTED => 09-JAN-2012 TIME PLOTTED => 09:51

DIST	COUNTY	ROUTE	POST MILES TOTAL PROJECT	SHEET No	TOTAL SHEETS
02	Plu	70	0.6/35.2	92	101

PROFESSIONAL ENGINEER 3-09-11

1-9-12
PLANS APPROVAL DATE

REGISTERED PROFESSIONAL ENGINEER Mark Hagy No. GE2838 Exp. 12-31-12 GEOTECHNICAL STATE OF CALIFORNIA

The State of California or its officers or agents shall not be responsible for the accuracy or completeness of electronic copies of this plan sheet.

REFERENCE: CALTRANS SOIL & ROCK LOGGING, CLASSIFICATION, AND PRESENTATION MANUAL (2010)

CEMENTATION

Description	Criteria
Weak	Crumbles or breaks with handling or little finger pressure.
Moderate	Crumbles or breaks with considerable finger pressure.
Strong	Will not crumble or break with finger pressure.

BOREHOLE IDENTIFICATION

Symbol	Hole Type	Description
Size	A	Auger Boring (hollow or solid stem bucket)
Size	R RW RC P	Rotary drilled boring (conventional) Rotary drilled with self-casing wire-line Rotary core with continuously-sampled, self-casing wire-line Rotary percussion boring (air)
Size	R	Rotary drilled diamond core
Size	HD HA	Hand driven (1-inch soil tube) Hand Auger
●	D	Dynamic Cone Penetration Boring
▲	CPT	Cone Penetration Test (ASTM D 5778)
⬚	O	Other (note on LOTB)

Note: Size in inches.

CONSISTENCY OF COHESIVE SOILS

Description	Shear Strength (tsf)	Pocket Penetrometer Measurement, PP, (tsf)	Torvane Measurement, TV, (tsf)	Vane Shear Measurement, VS, (tsf)
Very Soft	Less than 0.12	Less than 0.25	Less than 0.12	Less than 0.12
Soft	0.12 - 0.25	0.25 - 0.5	0.12 - 0.25	0.12 - 0.25
Medium Stiff	0.25 - 0.5	0.5 - 1	0.25 - 0.5	0.25 - 0.5
Stiff	0.5 - 1	1 - 2	0.5 - 1	0.5 - 1
Very Stiff	1 - 2	2 - 4	1 - 2	1 - 2
Hard	Greater than 2	Greater than 4	Greater than 2	Greater than 2

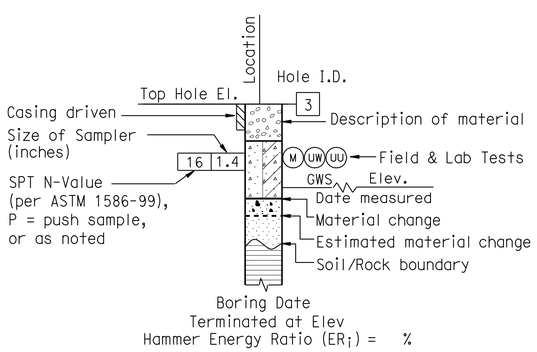

ROTARY BORING

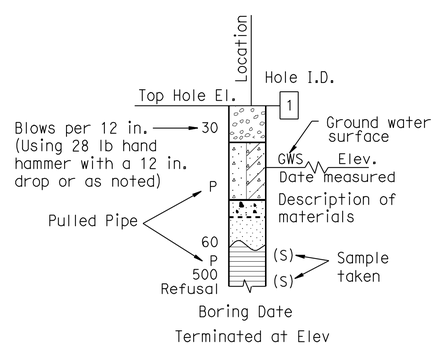

HAND BORING

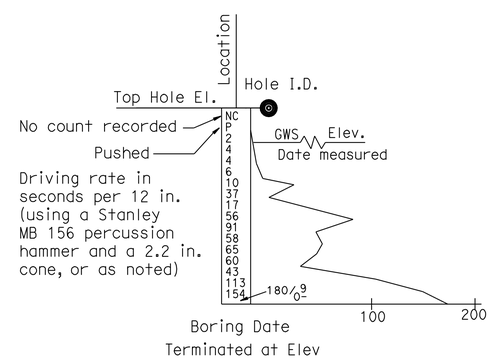

DYNAMIC CONE PENETRATION BORING

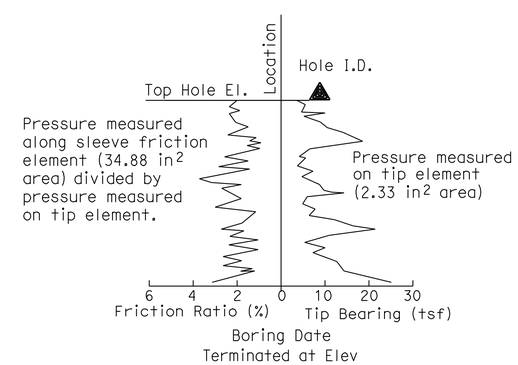

CONE PENETRATION TEST (CPT) BORING

ENGINEERING SERVICES	GEOTECHNICAL SERVICES	STATE OF CALIFORNIA DEPARTMENT OF TRANSPORTATION	DIVISION OF ENGINEERING SERVICES STRUCTURE DESIGN DESIGN BRANCH 5	BRIDGE NO. 09E0004 POST MILE 2.68/2.73	WALL LOCATION 27 LOG OF TEST BORINGS 2 OF 4
	PREPARED BY: F. Nguyen 11/10				

GS LOTB SOIL LEGEND

ORIGINAL SCALE IN INCHES FOR REDUCED PLANS 0 1 2 3

UNIT: 3643
PROJECT NUMBER & PHASE: 02000003171 CONTRACT NO.: 02-3C3001

DISREGARD PRINTS BEARING EARLIER REVISION DATES

REVISION DATES 02-08-11 SHEET 10 OF 12

FILE => 27-z-ltb02of4.dgn

USERNAME => s123631 DATE PLOTTED => 09-JAN-2012 TIME PLOTTED => 09:51

REFERENCE: CALTRANS SOIL & ROCK LOGGING, CLASSIFICATION, AND PRESENTATION MANUAL (2010)

DIST	COUNTY	ROUTE	POST MILES TOTAL PROJECT	SHEET No	TOTAL SHEETS
02	Plu	70	0.6/35.2	93	101

PROFESSIONAL ENGINEER 3-09-11

1-9-12
PLANS APPROVAL DATE

REGISTERED PROFESSIONAL ENGINEER Mark Hagy No. GE2838 Exp. 12-31-12 GEOTECHNICAL STATE OF CALIFORNIA

The State of California or its officers or agents shall not be responsible for the accuracy or completeness of electronic copies of this plan sheet.

GROUP SYMBOLS AND NAMES

Graphic/Symbol	Group Names	Graphic/Symbol	Group Names
GW	Well-graded GRAVEL Well-graded GRAVEL with SAND	CL	Lean CLAY Lean CLAY with SAND Lean CLAY with GRAVEL SANDY lean CLAY SANDY lean CLAY with GRAVEL GRAVELLY lean CLAY GRAVELLY lean CLAY with SAND
GP	Poorly-graded GRAVEL Poorly-graded GRAVEL with SAND		
GW-GM	Well-graded GRAVEL with SILT Well-graded GRAVEL with SILT and SAND	CL-ML	SILTY CLAY SILTY CLAY with SAND SILTY CLAY with GRAVEL SANDY SILTY CLAY SANDY SILTY CLAY with GRAVEL GRAVELLY SILTY CLAY GRAVELLY SILTY CLAY with SAND
GW-GC	Well-graded GRAVEL with CLAY (or SILTY CLAY) Well-graded GRAVEL with CLAY and SAND (or SILTY CLAY and SAND)		
GP-GM	Poorly-graded GRAVEL with SILT Poorly-graded GRAVEL with SILT and SAND	ML	SILT SILT with SAND SILT with GRAVEL SANDY SILT SANDY SILT with GRAVEL GRAVELLY SILT GRAVELLY SILT with SAND
GP-GC	Poorly-graded GRAVEL with CLAY (or SILTY CLAY) Poorly-graded GRAVEL with CLAY and SAND (or SILTY CLAY and SAND)		
GM	SILTY GRAVEL SILTY GRAVEL with SAND	OL	ORGANIC lean CLAY ORGANIC lean CLAY with SAND ORGANIC lean CLAY with GRAVEL SANDY ORGANIC lean CLAY SANDY ORGANIC lean CLAY with GRAVEL GRAVELLY ORGANIC lean CLAY GRAVELLY ORGANIC lean CLAY with SAND
GC	CLAYEY GRAVEL CLAYEY GRAVEL with SAND		
GC-GM	SILTY, CLAYEY GRAVEL SILTY, CLAYEY GRAVEL with SAND	OL	ORGANIC SILT ORGANIC SILT with SAND ORGANIC SILT with GRAVEL SANDY ORGANIC SILT SANDY ORGANIC SILT with GRAVEL GRAVELLY ORGANIC SILT GRAVELLY ORGANIC SILT with SAND
SW	Well-graded SAND Well-graded SAND with GRAVEL		
SP	Poorly-graded SAND Poorly-graded SAND with GRAVEL	CH	Fat CLAY Fat CLAY with SAND Fat CLAY with GRAVEL SANDY fat CLAY SANDY fat CLAY with GRAVEL GRAVELLY fat CLAY GRAVELLY fat CLAY with SAND
SW-SM	Well-graded SAND with SILT Well-graded SAND with SILT and GRAVEL		
SW-SC	Well-graded SAND with CLAY (or SILTY CLAY) Well-graded SAND with CLAY and GRAVEL (or SILTY CLAY and GRAVEL)	MH	Elastic SILT Elastic SILT with SAND Elastic SILT with GRAVEL SANDY elastic SILT SANDY elastic SILT with GRAVEL GRAVELLY elastic SILT GRAVELLY elastic SILT with SAND
SP-SM	Poorly-graded SAND with SILT Poorly-graded SAND with SILT and GRAVEL		
SP-SC	Poorly-graded SAND with CLAY (or SILTY CLAY) Poorly-graded SAND with CLAY and GRAVEL (or SILTY CLAY and GRAVEL)	OH	ORGANIC fat CLAY ORGANIC fat CLAY with SAND ORGANIC fat CLAY with GRAVEL SANDY ORGANIC fat CLAY SANDY ORGANIC fat CLAY with GRAVEL GRAVELLY ORGANIC fat CLAY GRAVELLY ORGANIC fat CLAY with SAND
SM	SILTY SAND SILTY SAND with GRAVEL		
SC	CLAYEY SAND CLAYEY SAND with GRAVEL	OH	ORGANIC elastic SILT ORGANIC elastic SILT with SAND ORGANIC elastic SILT with GRAVEL SANDY ORGANIC elastic SILT SANDY ORGANIC elastic SILT with GRAVEL GRAVELLY ORGANIC elastic SILT GRAVELLY ORGANIC elastic SILT with SAND
SC-SM	SILTY, CLAYEY SAND SILTY, CLAYEY SAND with GRAVEL		
PT	PEAT	OL/OH	ORGANIC SOIL ORGANIC SOIL with SAND ORGANIC SOIL with GRAVEL SANDY ORGANIC SOIL SANDY ORGANIC SOIL with GRAVEL GRAVELLY ORGANIC SOIL GRAVELLY ORGANIC SOIL with SAND
	COBBLES COBBLES and BOULDERS BOULDERS		

FIELD AND LABORATORY TESTING

- (C) Consolidation (ASTM D 2435)
- (CL) Collapse Potential (ASTM D 5333)
- (CP) Compaction Curve (CTM 216)
- (CR) Corrosivity Testing (CTM 643, CTM 422, CTM 417)
- (CU) Consolidated Undrained Triaxial (ASTM D 4767)
- (DS) Direct Shear (ASTM D 3080)
- (EI) Expansion Index (ASTM D 4829)
- (M) Moisture Content (ASTM D 2216)
- (OC) Organic Content-% (ASTM D 2974)
- (P) Permeability (CTM 220)
- (PA) Particle Size Analysis (ASTM D 422)
- (PI) Plasticity Index (AASHTO T 90) Liquid Limit (AASHTO T 89)
- (PL) Point Load Index (ASTM D 5731)
- (PM) Pressure Meter
- (R) R-Value (CTM 301)
- (SE) Sand Equivalent (CTM 217)
- (SG) Specific Gravity (AASHTO T 100)
- (SL) Shrinkage Limit (ASTM D 427)
- (SW) Swell Potential (ASTM D 4546)
- (UC) Unconfined Compression-Soil (ASTM D 2166) Unconfined Compression-Rock (ASTM D 2938)
- (UU) Unconsolidated Undrained Triaxial (ASTM D 2850)
- (UW) Unit Weight (ASTM D 4767)

APPARENT DENSITY OF COHESIONLESS SOILS

Description	SPT N_{60} (Blows / 12 in.)
Very Loose	0 - 5
Loose	5 - 10
Medium Dense	10 - 30
Dense	30 - 50
Very Dense	Greater than 50

MOISTURE

Description	Criteria
Dry	No discernable moisture
Moist	Moisture present, but no free water
Wet	Visible free water

PERCENT OR PROPORTION OF SOILS

Description	Criteria
Trace	Particles are present but estimated to be less than 5%
Few	5% - 10%
Little	15% - 25%
Some	30% - 45%
Mostly	50% - 100%

PARTICLE SIZE

Description		Size (in.)
Boulder		Greater than 12
Cobble		3 - 12
Gravel	Coarse	3/4 - 3
	Fine	1/5 - 3/4
Sand	Coarse	1/16 - 1/5
	Medium	1/64 - 1/16
	Fine	1/300 - 1/64
Silt and Clay		Less than 1/300

ENGINEERING SERVICES

GEOTECHNICAL SERVICES

PREPARED BY: F. Nguyen 11/10

STATE OF CALIFORNIA
DEPARTMENT OF TRANSPORTATION

DIVISION OF ENGINEERING SERVICES
STRUCTURE DESIGN
DESIGN BRANCH 5

BRIDGE NO. 09E0004
POST MILE 2.68/2.73

WALL LOCATION 27
LOG OF TEST BORINGS 3 OF 4

GS LOTB SOIL LEGEND

ORIGINAL SCALE IN INCHES FOR REDUCED PLANS 0 1 2 3

UNIT: 3643
PROJECT NUMBER & PHASE: 02000003171
CONTRACT NO.: 02-3C3001

DISREGARD PRINTS BEARING EARLIER REVISION DATES

REVISION DATES 02-08-11

SHEET 11 OF 12

FILE => 27-z-ltb03of4.dgn

USERNAME => s123631 DATE PLOTTED => 09-JAN-2012 TIME PLOTTED => 09:51

REFERENCE: CALTRANS SOIL & ROCK LOGGING, CLASSIFICATION, AND PRESENTATION MANUAL (2010)

DIST	COUNTY	ROUTE	POST MILES TOTAL PROJECT	SHEET No	TOTAL SHEETS
02	Plu	70	0.6/35.2	94	101

PROFESSIONAL ENGINEER 3-09-11

1-9-12
PLANS APPROVAL DATE

REGISTERED PROFESSIONAL ENGINEER Mark Hagy No. GE2838 Exp. 12-31-12 GEOTECHNICAL STATE OF CALIFORNIA

The State of California or its officers or agents shall not be responsible for the accuracy or completeness of electronic copies of this plan sheet.

PERCENT CORE RECOVERY (REC) & ROCK QUALITY DESIGNATION (RQD)

$$REC = \frac{\sum \text{Length of the recovered core pieces (in.)}}{\text{Total length of core run (in.)}} \times 100\%$$

$$RQD = \frac{\sum \text{Length of intact core pieces} \geq 4 \text{ in.}}{\text{Total length of core run (in.)}} \times 100\%$$

RQD* Indicates soundness criteria not met.

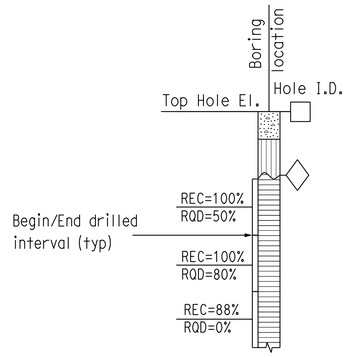

BEDDING SPACING

Description	Thickness / Spacing
Massive	Greater than 10 ft
Very Thickly Bedded	3 ft - 10 ft
Thickly Bedded	1 ft - 3 ft
Moderately Bedded	4 in. - 1 ft
Thinly Bedded	1 in. - 4 in.
Very Thinly Bedded	1/4 in. - 1 in.
Laminated	Less than 1/4 in.

LEGEND OF ROCK MATERIALS

- IGNEOUS ROCK
- SEDIMENTARY ROCK
- METAMORPHIC ROCK

ROCK HARDNESS

Description	Criteria
Extremely Hard	Cannot be scratched with a pocketknife or sharp pick. Can only be chipped with repeated heavy hammer blows.
Very Hard	Cannot be scratched with a pocketknife or sharp pick. Breaks with repeated heavy hammer blows.
Hard	Can be scratched with a pocketknife or sharp pick with difficulty (heavy pressure). Breaks with heavy hammer blows.
Moderately Hard	Can be scratched with pocketknife or sharp pick with light or moderate pressure. Breaks with moderate hammer blows.
Moderately Soft	Can be grooved 1/16 in. deep with a pocketknife or sharp pick with moderate or heavy pressure. Breaks with light hammer blow or heavy manual pressure.
Soft	Can be grooved or gouged easily by a pocketknife or sharp pick with light pressure, can be scratched with fingernail. Breaks with light to moderate manual pressure.
Very Soft	Can be readily indented, grooved or gouged with fingernail, or carved with a pocketknife. Breaks with light manual pressure.

FRACTURE DENSITY

Description	Observed Fracture Density
Unfractured	No fractures.
Very Slightly Fractured	Core lengths greater than 3 ft.
Slightly Fractured	Core lengths mostly from 1 to 3 ft.
Moderately Fractured	Core lengths mostly from 4 in. to 1 ft.
Intensely Fractured	Core lengths mostly from 1 to 4 in.
Very Intensely Fractured	Mostly chips and fragments.

WEATHERING DESCRIPTORS FOR INTACT ROCK

Description	Diagnostic Features					General Characteristics
	Chemical Weathering-Discoloration and/or Oxidation		Mechanical Weathering-Grain Boundary Conditions (Disaggregation) Primarily for Granitics and Some Coarse-Grained Sediments	Texture and Leaching		
	Body of Rock	Fracture Surfaces		Texture	Leaching	
Fresh	No discoloration, not oxidized.	No discoloration or oxidation.	No separation, intact (tight).	No change	No leaching	Hammer rings when crystalline rocks are struck.
Slightly Weathered	Discoloration or oxidation is limited to surface of, or short distance from, fractures; some feldspar crystals are dull.	Minor to complete discoloration or oxidation of most surfaces.	No visible separation, intact (tight).	Preserved	Minor leaching of some soluble minerals.	Hammer rings when crystalline rocks are struck. Body of rock not weakened.
Moderately Weathered	Discoloration or oxidation extends from fractures usually throughout; Fe-Mg minerals are "rusty," feldspar crystals are "cloudy."	All fracture surfaces are discolored or oxidized.	Partial separation of boundaries visible.	Generally preserved	Soluble minerals may be mostly leached.	Hammer does not ring when rock is struck. Body of rock is slightly weakened.
Intensely Weathered	Discoloration or oxidation throughout; all feldspars and Fe-Mg minerals are altered to clay to some extent; or chemical alteration produces in-situ disaggregation, see grain boundary conditions.	All fracture surfaces are discolored or oxidized, surfaces friable.	Partial separation, rock is friable; in semiarid conditions granitics are disaggregated.	Texture altered by chemical disintegration (hydration, argillation).	Leaching of soluble minerals may be complete.	Dull sound when struck with hammer, usually can be broken with moderate to heavy manual pressure or by light hammer blow without reference to planes of weakness such as incipient or hairline fractures, or veinlets. Rock is significantly weakened.
Decomposed	Discolored or oxidized throughout, but resistant minerals such as quartz may be unaltered; all feldspars and Fe-Mg minerals are completely altered to clay.		Complete separation of grain boundaries (disaggregated).	Resembles a soil, partial or complete remnant rock structure may be preserved; leaching of soluble minerals usually complete.		Can be granulated by hand. Resistant minerals such as quartz may be present as "stringers" or "dikes."

ENGINEERING SERVICES

GEOTECHNICAL SERVICES

PREPARED BY: F. Nguyen 11/10

STATE OF CALIFORNIA DEPARTMENT OF TRANSPORTATION

DIVISION OF ENGINEERING SERVICES STRUCTURE DESIGN
DESIGN BRANCH 5

BRIDGE NO. 09E0004
POST MILE 2.68/2.73

WALL LOCATION 27
LOG OF TEST BORINGS 4 OF 4

GS LOTB SOIL LEGEND

ORIGINAL SCALE IN INCHES FOR REDUCED PLANS 0 1 2 3

UNIT: 3643
PROJECT NUMBER & PHASE: 02000003171
CONTRACT NO.: 02-3C3001

DISREGARD PRINTS BEARING EARLIER REVISION DATES

REVISION DATES 02-08-11

SHEET 12 OF 12

FILE => 27-z-ltb04of4.dgn

USERNAME => s123631 DATE PLOTTED => 09-JAN-2012 TIME PLOTTED => 09:51

DIST	COUNTY	ROUTE	POST MILES TOTAL PROJECT	SHEET No	TOTAL SHEETS
02	Plu	70	0.6/35.2	95	101

REGISTERED CIVIL ENGINEER 08-30-2011 DATE

1-9-12
PLANS APPROVAL DATE

REGISTERED PROFESSIONAL ENGINEER M. J. CULLEN No. C 40620 Exp. 03-31-13 CIVIL STATE OF CALIFORNIA

The State of California or its officers or agents shall not be responsible for the accuracy or completeness of electronic copies of this plan sheet.

Notes:

1. For Begin and End Wall Location See "Wall Details No. 1" Sheet "Section A-A"

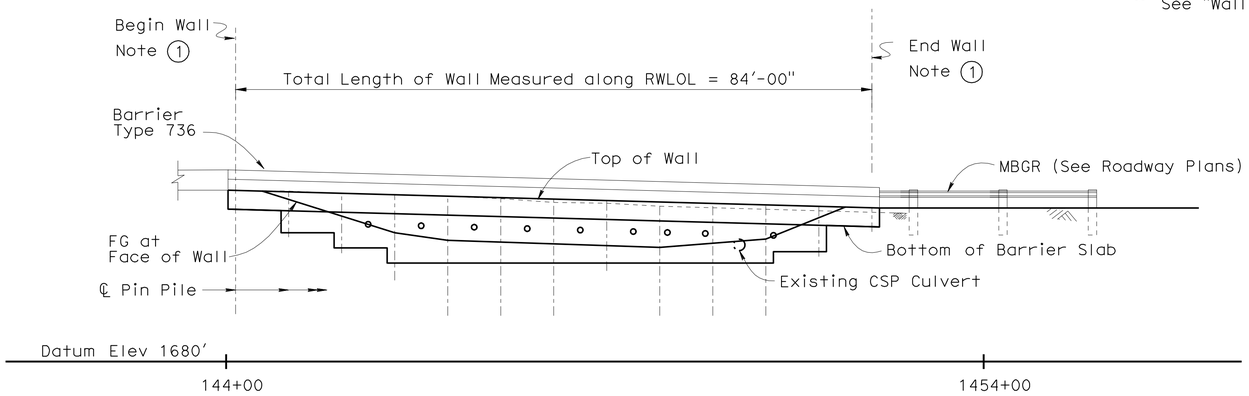

∘ Indicates Rock Anchor

DEVELOPED MIRROR ELEVATION

1" = 10'-0"

QUANTITIES

PREPARE CONCRETE BARRIER SLAB SURFACE	446	SQFT
STRUCTURE EXCAVATION (ROCK ANCHOR WALL)	82	CY
STRUCTURE BACKFILL (ROCK ANCHOR WALL)	9	CY
ROCK ANCHOR ASSEMBLY	252	LF
STEEL PIN PILE (6"XX STRONG PIPE)	370	LF
DRILLED HOLE	377	LF
STRUCTURAL CONCRETE, RETAINING WALL	10	CY
STRUCTURAL CONCRETE, BARRIER SLAB	53	CY
FIELDSTONE FORMED RELIEF TEXTURE	296	SQFT
FURNISH POLYESTER CONCRETE OVERLAY	28	CF
PLACE POLYESTER CONCRETE OVERLAY	446	SQFT
BAR REINFORCING STEEL (RETAINING WALL)	4,630	LB
SHOTCRETE	6	CY
PREPARE AND STAIN CONCRETE	296	SQFT
CONCRETE BARRIER (TYPE 736)	86	LF

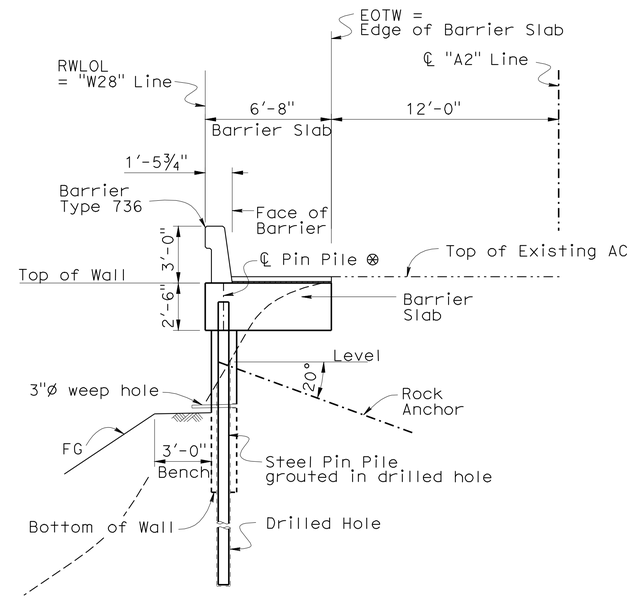

⊗ Pin Pile consists of 6" XX Strong Pipe

TYPICAL SECTION

¼"=1'-0"

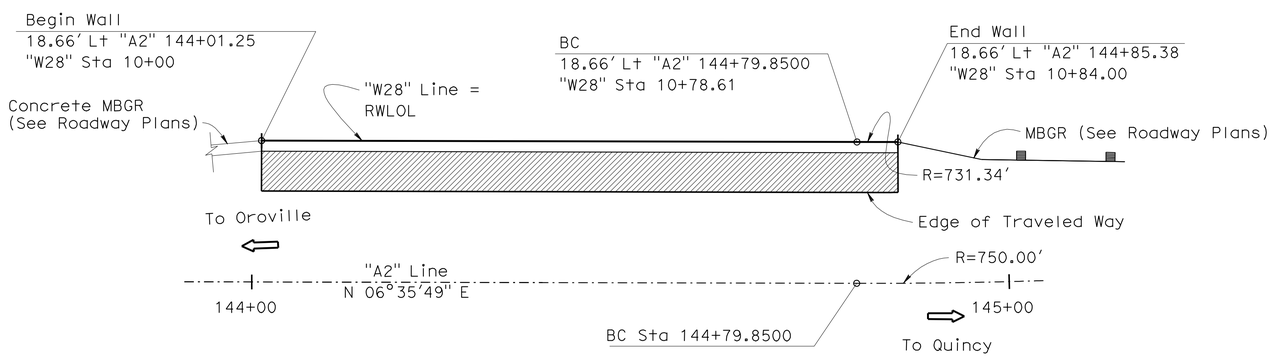

Indicates ¾" Polyester Concrete Overlay

PLAN

1" = 10'-0"

Curve Data	Curve Data
"A2" Line	RWLOL
R = 750.00'	R = 731.34'
Δ = 14°49'52"	Δ = 02°25'21"
T = 97.62'	T = 02.70'
L = 194.14'	L = 05.39'

INDEX TO PLANS

1. GENERAL PLAN
2. STRUCTURE PLAN
3. FOUNDATION PLAN
4. WALL DETAILS NO. 1
5. WALL DETAILS NO. 2
6. ROCK ANCHOR DETAILS
7. ARCHITECTURAL TREATMENT

Gary Blakesley
DESIGN ENGINEER

DESIGN	BY M. J. Cullen	CHECKED M. Guadamuz	SERVICE LOAD DESIGN	LIVE LOADING: 2 FEET LEVEL SURCHARGE
DETAILS	BY A. Chen	CHECKED M. J. Cullen	LAYOUT BY M. J. Cullen	CHECKED M. Guadamuz
QUANTITIES	BY H. Fang	CHECKED C. Siegenthaler	SPECIFICATIONS BY M. Kopsa	PLANS AND SPECS COMPARED M. J. Cullen

STATE OF CALIFORNIA
DEPARTMENT OF TRANSPORTATION

DIVISION OF ENGINEERING SERVICES
STRUCTURE DESIGN
DESIGN BRANCH 5

BRIDGE NO. 09E0005
POST MILE 2.73

WALL LOCATION 28
GENERAL PLAN

STRUCTURES DESIGN GENERAL PLAN SHEET (ENGLISH) (REV. 10/25/05)

ORIGINAL SCALE IN INCHES FOR REDUCED PLANS 0 1 2 3

CU 02
EA 3C3001

DISREGARD PRINTS BEARING EARLIER REVISION DATES

REVISION DATES: 10-21-10, 1-13-11, 1-19-11, 3-14-11, 6-1-11, 8-17-11

SHEET 1 OF 7

FILE => 28-a-gp.dgn

STRUCTURES DESIGN GENERAL PLAN SHEET (ENGLISH) (REV.07-24-06)

USERNAME => s123631 DATE PLOTTED => 09-JAN-2012 TIME PLOTTED => 09:52

DIST	COUNTY	ROUTE	POST MILES TOTAL PROJECT	SHEET No	TOTAL SHEETS
02	Plu	70	0.6/35.2	96	101

REGISTERED CIVIL ENGINEER 08-30-2011 DATE

1-9-12
PLANS APPROVAL DATE

REGISTERED PROFESSIONAL ENGINEER M. J. CULLEN No. C 40620 Exp. 03-31-13 CIVIL STATE OF CALIFORNIA

The State of California or its officers or agents shall not be responsible for the accuracy or completeness of electronic copies of this plan sheet.

GENERAL NOTES

DESIGN:

CALTRANS BRIDGE DESIGN SPECIFICATIONS-APRIL 2000 (LFD)
(1996 AASHTO with Interims and Revisions by CALTRANS)

SOIL PARAMETERS:

(For determination of design lateral earth pressures)

Soil	Rock
ϕ = 34°	ϕ = 38°
γ_m = 135 pcf	γ_m = 165 pcf
Q_d = N/A	c = 3500 pcf
	Q_d = 6000 $\frac{lbs}{ft}$

Q_d = Design Pullout Resistance (lbs per linear foot)

LIVE LOAD:

Surcharge - 2 feet Level Earth

SHOTCRETE/REINFORCED CONCRETE:

f'c = 3600 psi (Concrete compressive strength at 28 days)
fy = 60 000 psi (Yield strength of reinforcement)

STRUCTURAL STEEL:

Steel Piles, 6" XX Strong Pipe
ASTM Designation A53 Grade B

ROCK ANCHORS:

ASTM Designation A615 Grade 75
fy = 75 ksi
fs = 42 ksi

STANDARD PLANS DATED MAY 2006

A10A ACRONYMS AND ABBREVIATIONS (A-L)
B11-56 BARRIER RAIL TYPE 736

STANDARD PLAN SHEET NO.
DETAIL NO.

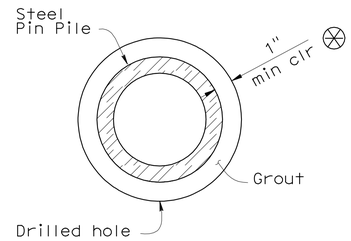

DRILLED HOLE DETAIL

3" = 1'-0"
Typical for all Piles

Notes:

* ℄ Rock anchor @ back face of wall, Place Rock anchors midway between piles. (except where noted)

† Embedment length to be increased where needed to assure that anchors are socketed at least 7 feet into the formational rock. (Embedment length may not be decreased)

⊗ Drilled hole must be large enough so that a minimum gap of 1" is provided between drilled hole and steel Pin Pile. This condition must be met at all depths. Hole diameter may be larger if required by drilling conditions.

⊗⊗ For beginning and end wall segments the bottom of wall is the bottom of the barrier slab

\- The Test Rock Anchor at Wall Location 27 shall be tested before any rock anchors may be constructed on Wall Location 28

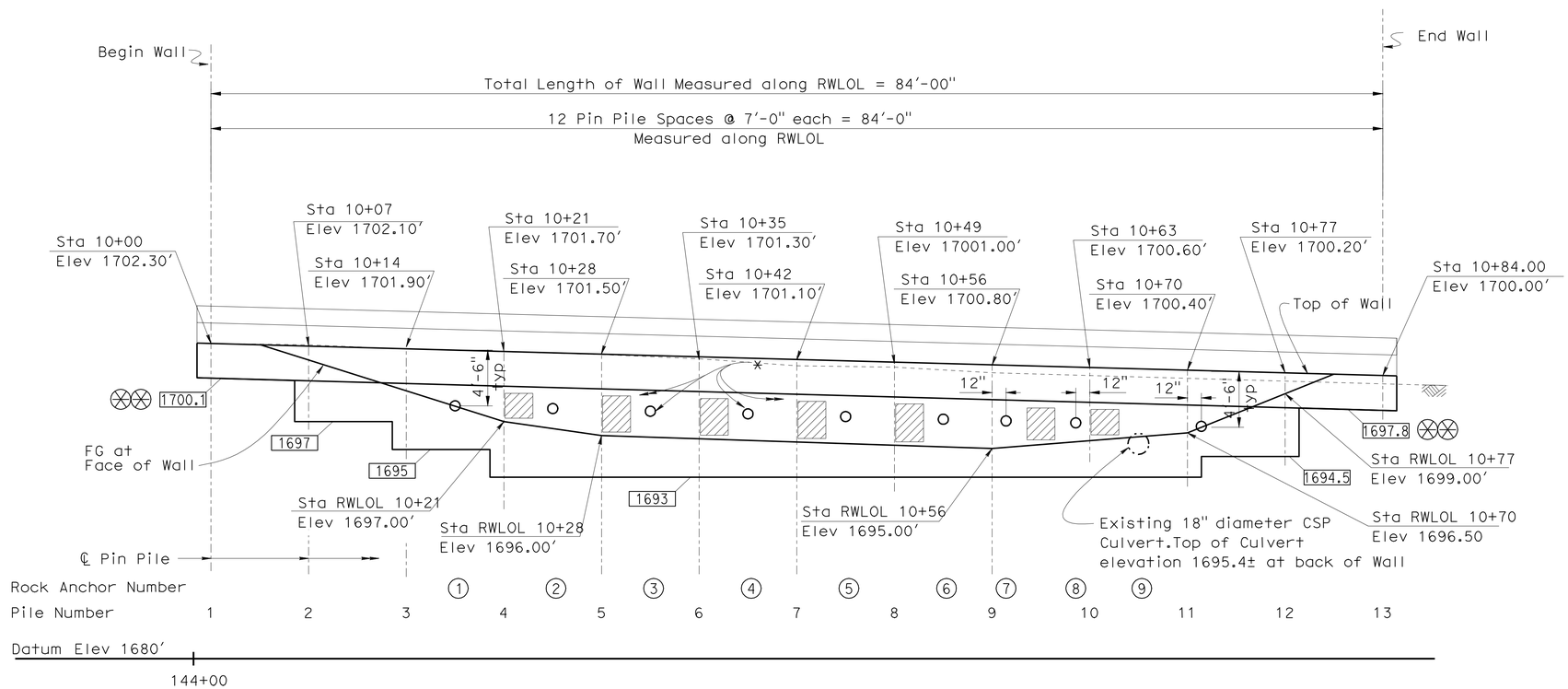

DEVELOPED MIRROR ELEVATION

1" = 5'-0"

Indicates Bottom of Wall Elevation

Indicates Vertical Geocomposite Drain with Weephole (Backface of Wall). See "Wall Details No. 2" sheet

ROCK ANCHOR TABLE

Rock Anchor	† Embedment Length	Size
1	28	#8
2	28	#8
3	28	#8
4	28	#8
5	28	#8
6	28	#8
7	28	#8
8	28	#8
9	28	#8

PILE DATA TABLE

Pile Number	"W28" Station	Tip Elevation
1	10+00	1672
2	10+07	1672
3	10+14	1672
4	10+21	1672
5	10+28	1672
6	10+35	1672
7	10+42	1672
8	10+49	1672
9	10+56	1672
10	10+63	1672
11	10+70	1672
12	10+77	1672
13	10+84	1672

All Pin Piles shall be 6" XX -strong pipe and be embeded 8 ft into bedrock. Tip Elevation to be lowered where needed to maintain 8 ft embedment

DESIGN	BY M. J. Cullen	CHECKED M. Guadamuz	
DETAILS	BY A. Chen/S. Jiang	CHECKED M. J. Cullen	
QUANTITIES	BY H. Fang	CHECKED C. Siegenthaler	

STATE OF CALIFORNIA
DEPARTMENT OF TRANSPORTATION

DIVISION OF ENGINEERING SERVICES
STRUCTURE DESIGN
DESIGN BRANCH 5

BRIDGE NO. 09E0005
POST MILE 2.73

WALL LOCATION 28
STRUCTURE PLAN

STRUCTURES DESIGN DETAIL SHEET (ENGLISH) (REV. 10/25/05)

ORIGINAL SCALE IN INCHES FOR REDUCED PLANS 0 1 2 3

CU 02
EA 3C3001

DISREGARD PRINTS BEARING EARLIER REVISION DATES

REVISION DATES: 11-9-10 1-13-11 1-19-11 2-15-11 3-8-11 6-9-11 8-19-11 8-26-11

SHEET 2 OF 7

FILE => 28-c-sp.dgn

USERNAME => s123631 DATE PLOTTED => 09-JAN-2012 TIME PLOTTED => 09:52

DIST	COUNTY	ROUTE	POST MILES TOTAL PROJECT	SHEET No	TOTAL SHEETS
02	Plu	70	0.6/35.2	97	101

REGISTERED CIVIL ENGINEER 08-30-2011 DATE

1-9-12
PLANS APPROVAL DATE

REGISTERED PROFESSIONAL ENGINEER
M. J. CULLEN
No. C 40620
Exp. 03-31-13
CIVIL
STATE OF CALIFORNIA

The State of California or its officers or agents shall not be responsible for the accuracy or completeness of electronic copies of this plan sheet.

CURVE DATA

No.	R	Δ	T	L
Ⓐ	750.00′	14°49′52″	97.62	194.14
Ⓑ	731.34′	02°25′21″	02.70	05.39

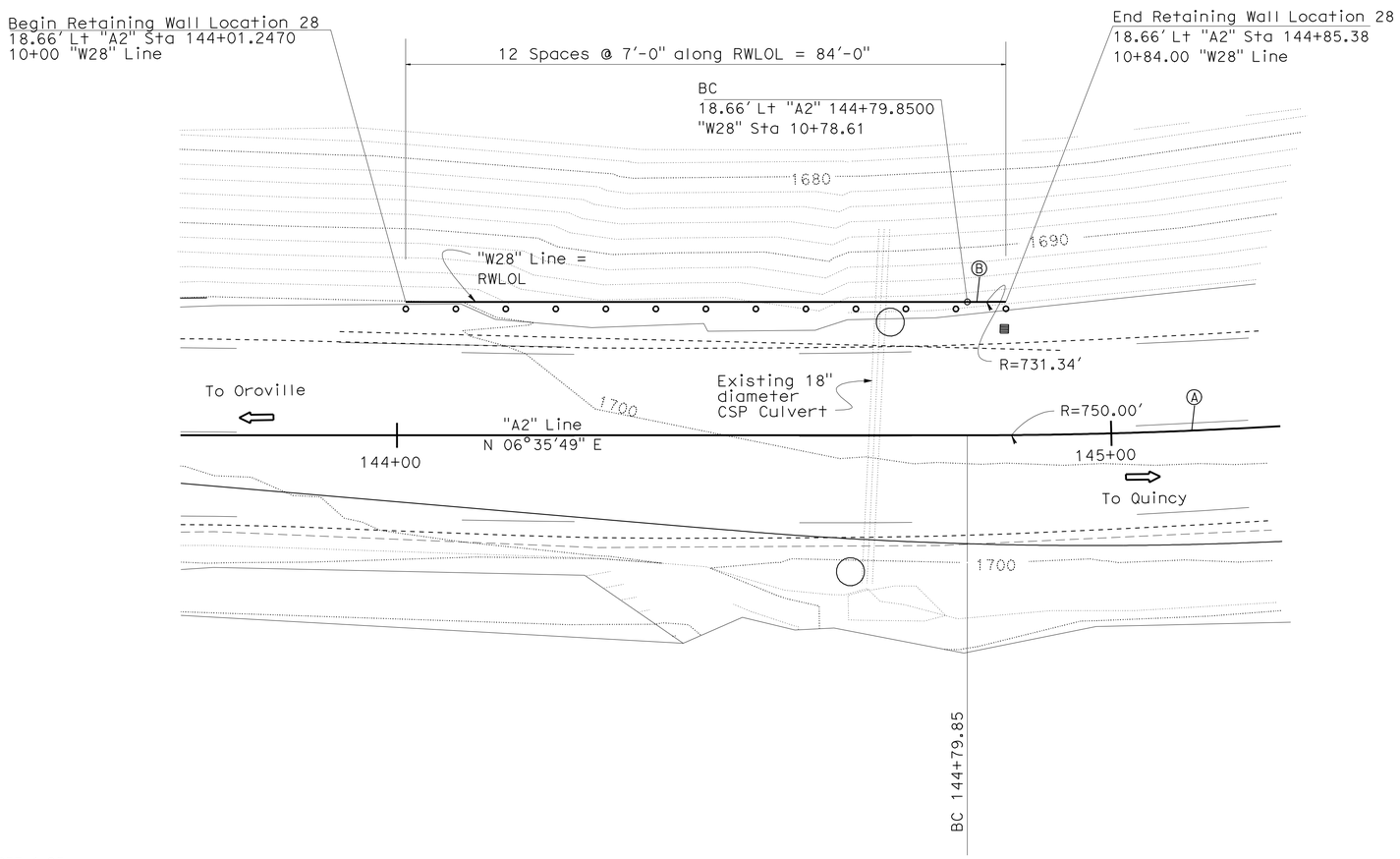

∘ Indicates #6 xx Pin Pile

SURVEY CONTROL

MEN 253-1.95 (PRHV 195)
Fnd Aluminum Cap on¾" Rebar Stamped: MEN 253-1.95
19.48 FT Rt. "GE" Line Rte 253
Sta. 18+31.22
N 2,128,926.29
E 6,185,156.81
Elev. = 980.60

MEN 253-2.03 (PRHV 203) (Not Shown on Plan)
Fnd Aluminum Cap on¾" Rebar Stamped: MEN 253-2.03
42.15 FT Lt. "GE" Line Rte 253
Sta. 23+17.36
N 2,129,306.77
E 6,185,467.17
Elev. = 1018.91

PRELIMINARY INVESTIGATION SECTION

SCALE	VERT.DATUM	PHOTOGRAMMETRY AS OF: X		
1"=5′	HORZ.DATUM	SURVEYED BY District	CHECKED BY	
ALIGNMENT TIES Dist.Traverse Sheet		DRAFTED BY	CHECKED BY	

DESIGN	BY M. J. Cullen	CHECKED M. Guadamuz	
DETAILS	BY A. Chen	CHECKED M. J. Cullen	
QUANTITIES	BY H. Fang	CHECKED C. Siegenthaler	

STATE OF CALIFORNIA
DEPARTMENT OF TRANSPORTATION

DIVISION OF ENGINEERING SERVICES
STRUCTURE DESIGN
DESIGN BRANCH 5

BRIDGE NO. 09E0005
POST MILE 2.73

WALL LOCATION 28
FOUNDATION PLAN

STRUCTURES FOUNDATION PLAN SHEET (ENGLISH) (REV. 10/25/05)

ORIGINAL SCALE IN INCHES FOR REDUCED PLANS 0 1 2 3

CU 02
EA 3C3001

DISREGARD PRINTS BEARING EARLIER REVISION DATES

REVISION DATES: 11-8-10, 1-19-11, 3-8-11, 8-17-11

SHEET 3 OF 7

FILE => 28-e-fdp101.dgn

USERNAME => s123631 DATE PLOTTED => 09-JAN-2012 TIME PLOTTED => 09:52

DIST	COUNTY	ROUTE	POST MILES TOTAL PROJECT	SHEET No	TOTAL SHEETS
02	Plu	70	0.6/35.2	98	101

REGISTERED CIVIL ENGINEER 08-30-2011 DATE

1-9-12
PLANS APPROVAL DATE

REGISTERED PROFESSIONAL ENGINEER M. J. CULLEN No. C 40620 Exp. 03-31-13 CIVIL STATE OF CALIFORNIA

The State of California or its officers or agents shall not be responsible for the accuracy or completeness of electronic copies of this plan sheet.

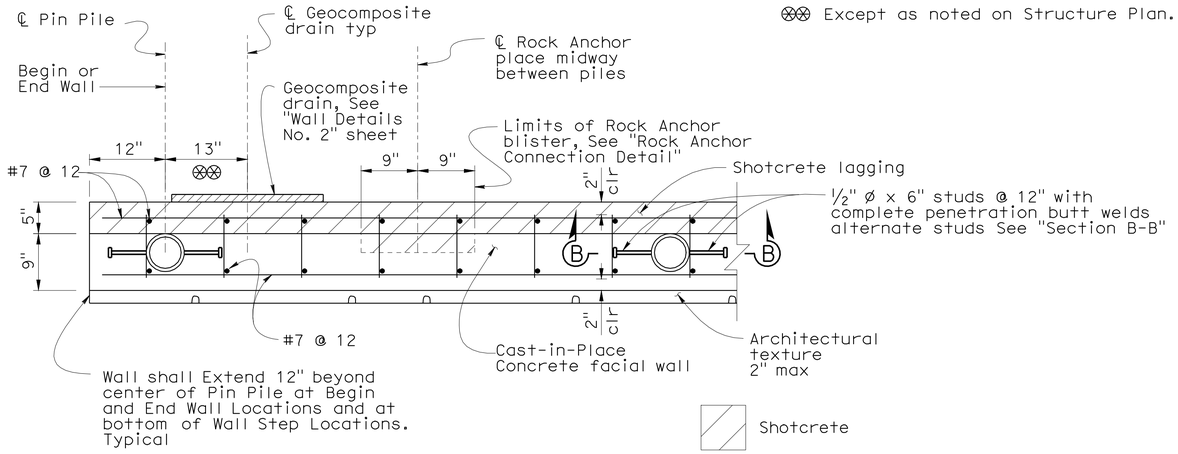

⊗⊗ Except as noted on Structure Plan.

SECTION A-A

1"=1'-0"

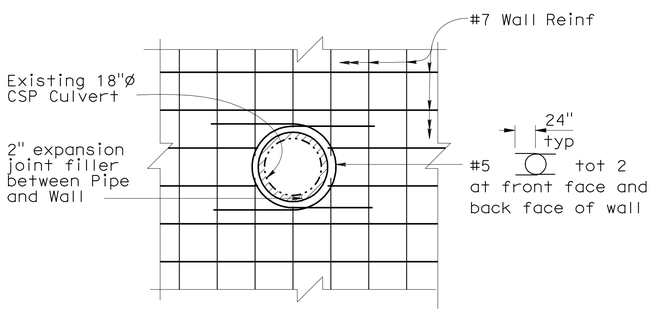

EXISTING CSP CULVERT OPENING THROUGH WALL DETAIL

½"=1'-0"

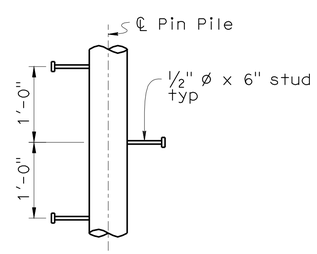

SECTION B-B

1"=1'-0"

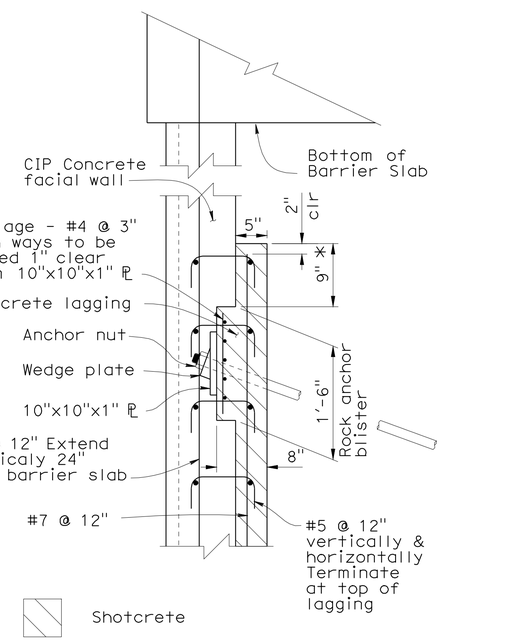

* Shotcrete wall must extend 9" minimum above Rock Anchor blister for all wall segments with Rock Anchors

ROCK ANCHOR CONNECTION DETAIL

1"=1'-0"

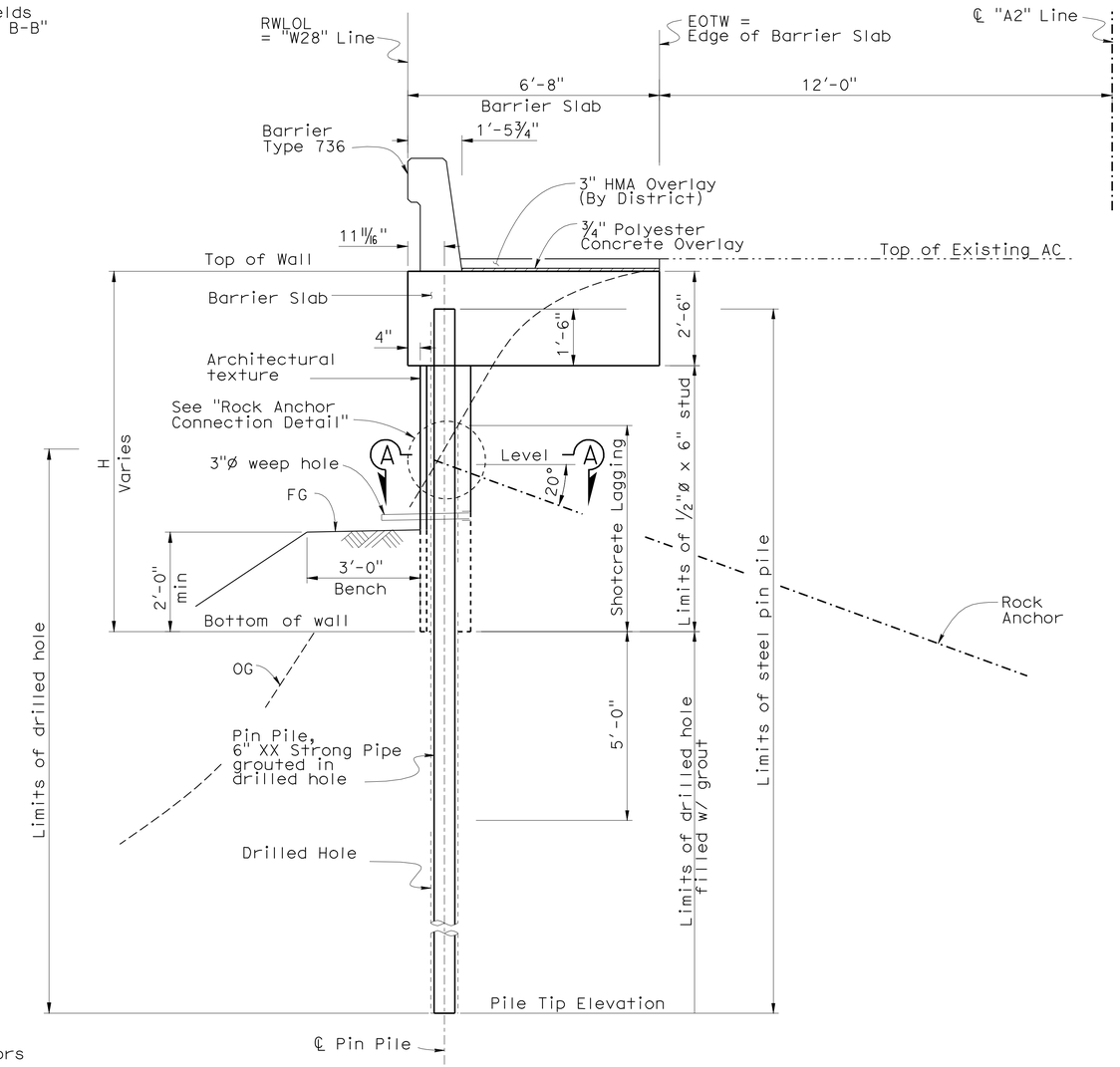

TYPICAL SECTION

½"=1'-0"

DESIGN	BY M. J. Cullen	CHECKED M. Guadamuz	
DETAILS	BY A. Chen /S. Jiang	CHECKED M. J. Cullen	
QUANTITIES	BY H. Fang	CHECKED C. Siegenthaler	

STATE OF CALIFORNIA
DEPARTMENT OF TRANSPORTATION

DIVISION OF ENGINEERING SERVICES
STRUCTURE DESIGN
DESIGN BRANCH 5

BRIDGE NO. 09E0005
POST MILE 2.73

WALL LOCATION 28
WALL DETAILS NO. 1

STRUCTURES DESIGN DETAIL SHEET (ENGLISH) (REV. 10/25/05)

ORIGINAL SCALE IN INCHES FOR REDUCED PLANS 0 1 2 3

CU 02
EA 3C3001

DISREGARD PRINTS BEARING EARLIER REVISION DATES

REVISION DATES: 10-19-10 1-13-11 1-19-11 2-15-11 3-16-11 6-9-11 8-12-11 8-26-11

SHEET 4 OF 7

FILE => 28-q-dt01.dgn

USERNAME => s12614 DATE PLOTTED => 09-JAN-2012 TIME PLOTTED => 10:59

DIST	COUNTY	ROUTE	POST MILES TOTAL PROJECT	SHEET No	TOTAL SHEETS
02	Plu	70	0.6/35.2	99	101

REGISTERED CIVIL ENGINEER 08-30-2011 DATE

1-9-12
PLANS APPROVAL DATE

REGISTERED PROFESSIONAL ENGINEER M. J. CULLEN No. C 40620 Exp. 03-31-13 CIVIL STATE OF CALIFORNIA

The State of California or its officers or agents shall not be responsible for the accuracy or completeness of electronic copies of this plan sheet.

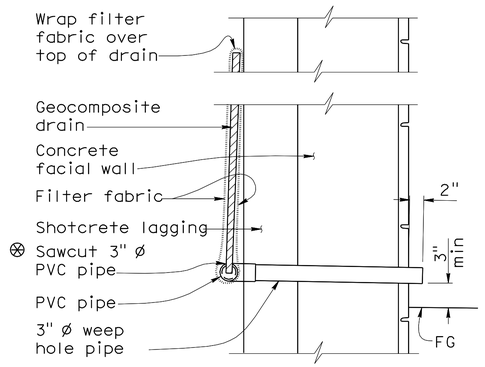

SECTION X-X

No Scale

⊗ Sawcut groove in 3" ø PVC pipe and insert geocomposite drain.

⊗⊗ Except where noted on Structure Plan.

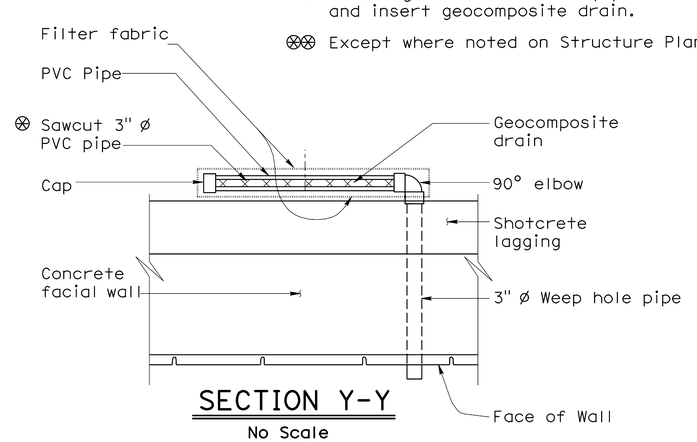

SECTION Y-Y

No Scale

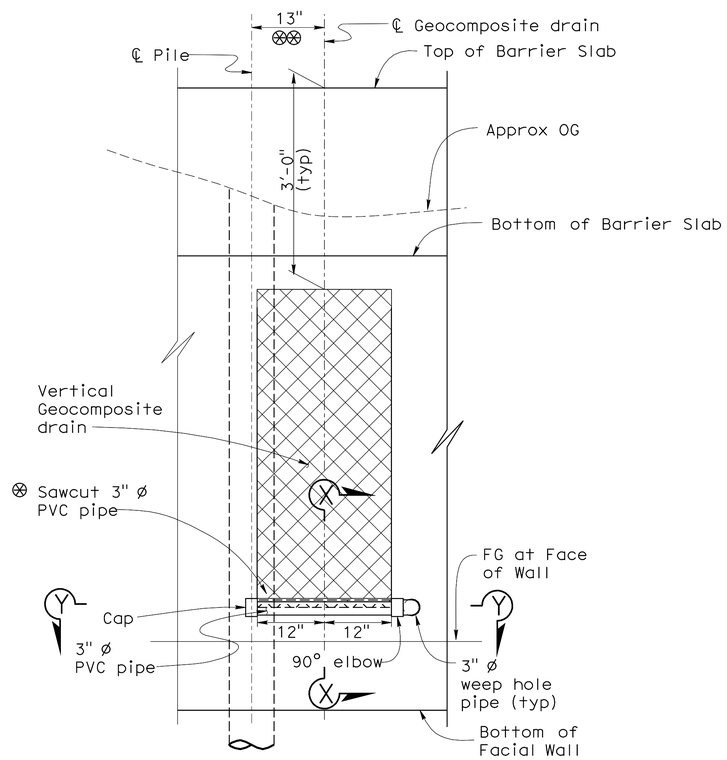

VERTICAL DRAINAGE DETAIL

Note: Wrap entire Geocomposite drain system with filter fabric

GEOCOMPOSITE DRAIN DETAILS

No Scale

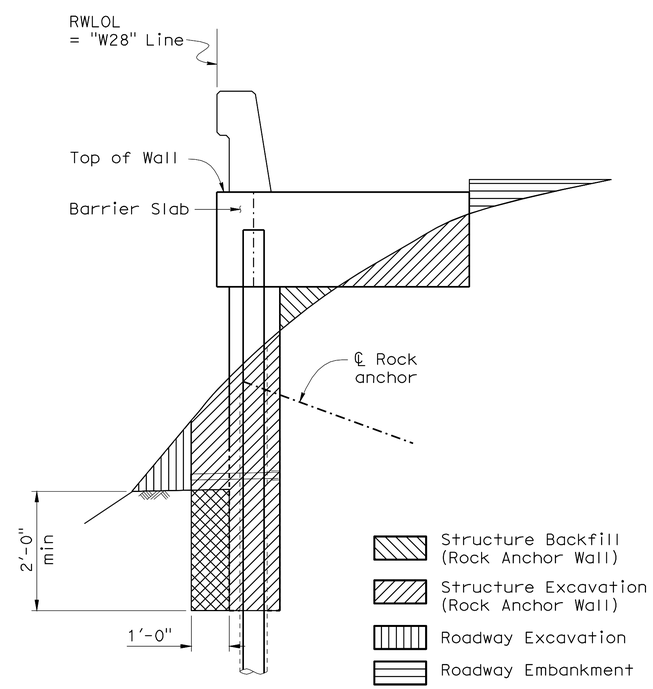

LIMITS OF PAYMENT FOR EXCAVATION AND BACKFILL

½"=1'-0"

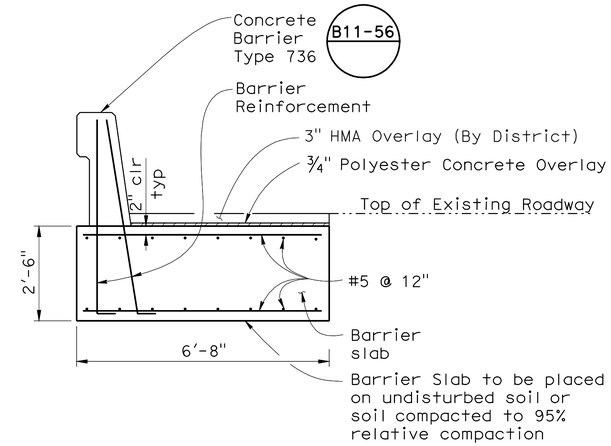

Note: All reinforcement in barrier slab be epoxy coated

BARRIER SLAB DETAIL

½" = 1'-0"

DESIGN	BY M. J. Cullen	CHECKED M. Guadamuz	
DETAILS	BY A. Chen	CHECKED M. J. Cullen	
QUANTITIES	BY H. Fang	CHECKED C. Siegenthaler	

STATE OF CALIFORNIA
DEPARTMENT OF TRANSPORTATION

DIVISION OF ENGINEERING SERVICES
STRUCTURE DESIGN
DESIGN BRANCH 5

BRIDGE NO. 09E0005
POST MILE 2.73

WALL LOCATION 28
WALL DETAILS NO. 2

STRUCTURES DESIGN DETAIL SHEET (ENGLISH) (REV. 10/25/05)

ORIGINAL SCALE IN INCHES FOR REDUCED PLANS 0 1 2 3

CU 02
EA 3C3001

DISREGARD PRINTS BEARING EARLIER REVISION DATES

REVISION DATES: 10-26-10 1-3-11 1-19-11 2-11-11 3-14-11 8-12-11

SHEET 5 OF 7

FILE => 28-q-dt02.dgn

USERNAME => s123631 DATE PLOTTED => 09-JAN-2012 TIME PLOTTED => 09:52

DIST	COUNTY	ROUTE	POST MILES TOTAL PROJECT	SHEET No	TOTAL SHEETS
02	Plu	70	0.6/35.2	100	101

M J Cullen 08-30-2011
REGISTERED CIVIL ENGINEER DATE

1-9-12
PLANS APPROVAL DATE

REGISTERED PROFESSIONAL ENGINEER M. J. CULLEN No. C 40620 Exp. 03-31-13 CIVIL STATE OF CALIFORNIA

The State of California or its officers or agents shall not be responsible for the accuracy or completeness of electronic copies of this plan sheet.

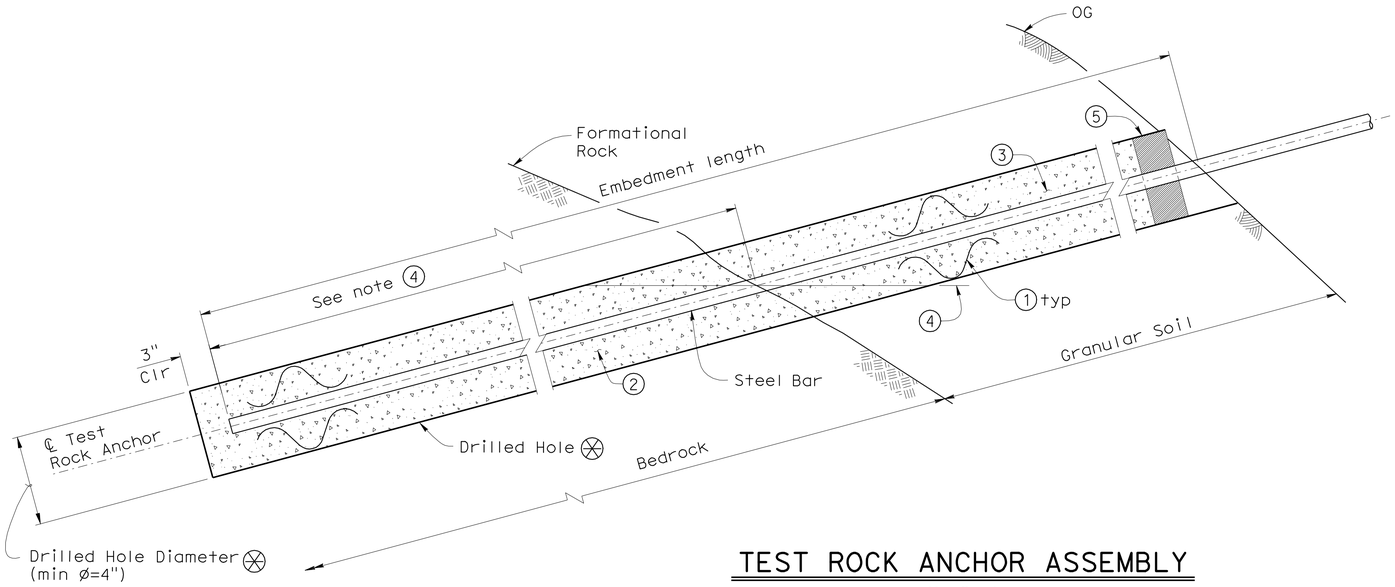

TEST ROCK ANCHOR ASSEMBLY

No Scale

Test Anchor Notes:

Embedment length shall be long enough to provide 10' bond length into bedrock

Total length of test Rock Anchor equals embedment length plus the length required for jacking equipment.

For location of test Rock Anchor See "Structure Plan"

1. Centralizers @ 5'-0" and located 20" minimum from top and bottom of drilled hole (Typ)
2. Initial grout
3. Secondary grout (Place after testing)
4. Level of Initial grout
5. Block out as required for pullout testing

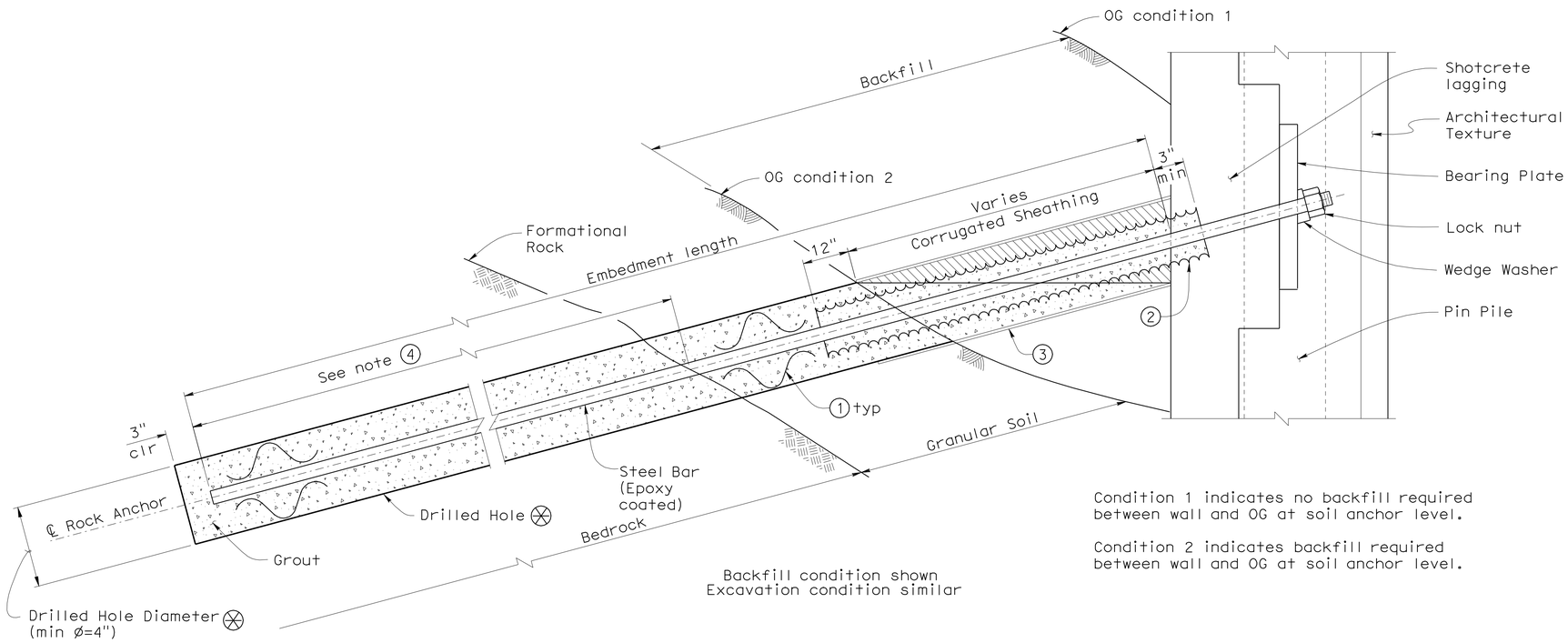

Backfill condition shown
Excavation condition similar

Condition 1 indicates no backfill required between wall and OG at soil anchor level.

Condition 2 indicates backfill required between wall and OG at soil anchor level.

ROCK ANCHOR ASSEMBLY

No Scale

Production Anchor Notes:

For segments of the wall supported by Rock Anchors there shall be no time during construction where the wall will laterally support 5'-0" or more of soil with out the Rock Anchor connected to the wall.

In fill situations Backfill to be placed and compacted after Rock Anchor is connected to the wall.

1. Centralizers @ 5'-0" and located 20" minimum from top and bottom of drilled hole (Typ)
2. Corrugated sheathing filled with grout. Grout to be cured before rock anchor is placed in drilled hole. Minimum diameter sheathing shall be 2"
3. Drilled hole extension comprised of pipe w/ inside diameter equal to inside diameter of drilled hole. (only required in condition 2)
4. Rock anchor shall be socketed a minimum of 7 ft into formational Rock. For additional rock anchor details, See notes on "Structure Plan" sheet.

Fill void w/ shotcrete at time of shotcrete wall construction (Required in condition 1 & 2)

Contractor to determine drilled hole diameter (ø)

DESIGN	BY M. J. Cullen	CHECKED M. Guadamuz	
DETAILS	BY A. Chen/S. Jiang	CHECKED M. J. Cullen	
QUANTITIES	BY H. Fang	CHECKED C. Siegenthaler	

STATE OF CALIFORNIA DEPARTMENT OF TRANSPORTATION

DIVISION OF ENGINEERING SERVICES STRUCTURE DESIGN DESIGN BRANCH 5

BRIDGE NO. 09E0005
POST MILE 2.73

WALL LOCATION 28
ROCK ANCHOR DETAILS

STRUCTURES DESIGN DETAIL SHEET (ENGLISH) (REV. 10/25/05)

ORIGINAL SCALE IN INCHES FOR REDUCED PLANS 0 1 2 3

CU 02
EA 3C3001

DISREGARD PRINTS BEARING EARLIER REVISION DATES

REVISION DATES: 10-26-10 1-3-11 2-7-11 6-7-11 8-3-11 8-26-11

SHEET 6 OF 7

FILE => 28-q-dt03.dgn

USERNAME => s123631 DATE PLOTTED => 09-JAN-2012 TIME PLOTTED => 09:52

DIST	COUNTY	ROUTE	POST MILES TOTAL PROJECT	SHEET No	TOTAL SHEETS
02	Plu	70	0.6/35.2	101	101

M J Cullen 08-30-2011
REGISTERED CIVIL ENGINEER DATE

1-9-12
PLANS APPROVAL DATE

REGISTERED PROFESSIONAL ENGINEER
M. J. CULLEN
No. C 40620
Exp. 03-31-13
CIVIL
STATE OF CALIFORNIA

The State of California or its officers or agents shall not be responsible for the accuracy or completeness of electronic copies of this plan sheet.

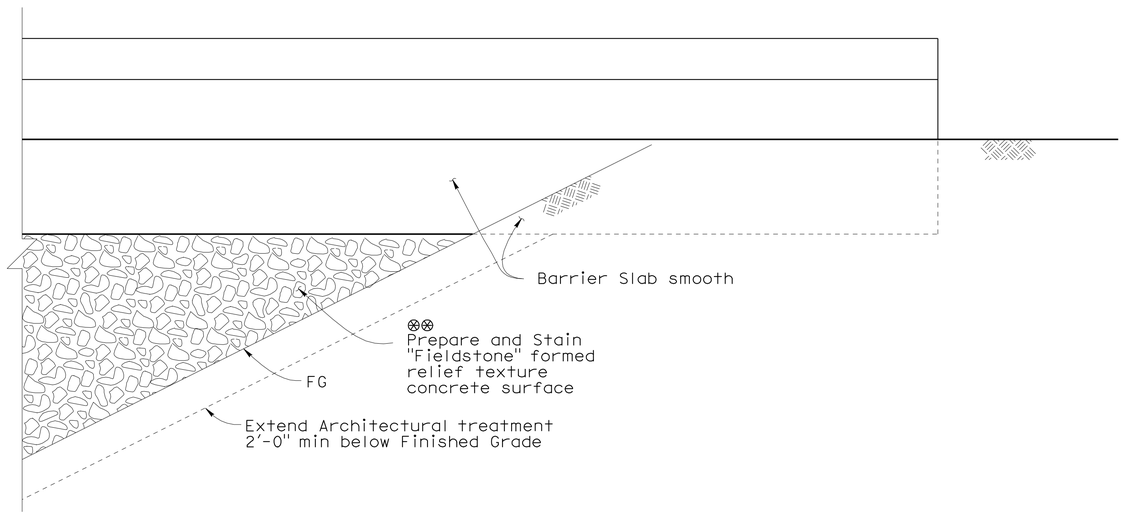

VIEW A-A

No Scale

⊗⊗ Concrete to be stained gray and approved by Project Landscape Architect

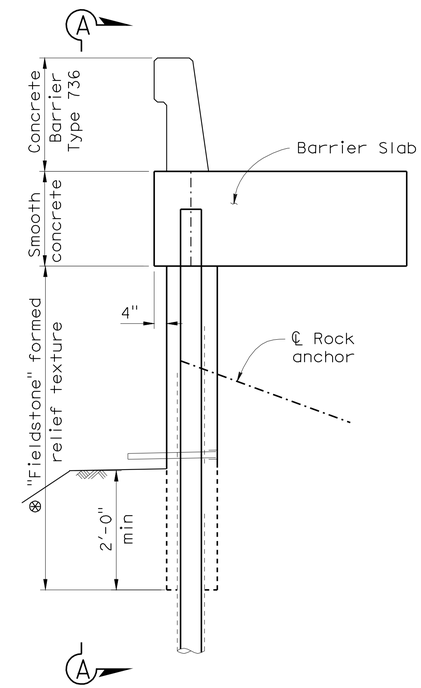

TYPICAL SECTION

No Scale

⊗ Limits of Payment for Prepare and Stain Concrete.

DESIGN	BY M. J. Cullen	CHECKED M. Guadamuz
DETAILS	BY A. Chen	CHECKED M. J. Cullen
QUANTITIES	BY H. Fang	CHECKED C. Siegenthaler

STATE OF CALIFORNIA
DEPARTMENT OF TRANSPORTATION

DIVISION OF ENGINEERING SERVICES
STRUCTURE DESIGN
DESIGN BRANCH 5

BRIDGE NO. 09E0005
POST MILE 2.73

WALL LOCATION 28
ARCHITECTURAL TREATMENT

STRUCTURES DESIGN DETAIL SHEET (ENGLISH) (REV. 10/25/05)

ORIGINAL SCALE IN INCHES FOR REDUCED PLANS 0 1 2 3

CU 02
EA 3C3001

DISREGARD PRINTS BEARING EARLIER REVISION DATES

REVISION DATES: 10-26-10, 3-8-11, 6-1-11, 8-17-11

SHEET 7 OF 7

FILE => 28-v-archdt.dgn

USERNAME => s123631 DATE PLOTTED => 09-JAN-2012 TIME PLOTTED => 09:53