Dist	COUNTY	ROUTE	POST MILES TOTAL PROJECT	SHEET No.	TOTAL SHEETS
02	Tri	36	R30.4/R30.7	1	26

ACHSSTP-S036(096)E

STATE OF CALIFORNIA
DEPARTMENT OF TRANSPORTATION

PROJECT PLANS FOR CONSTRUCTION ON
STATE HIGHWAY
IN TRINITY COUNTY
ABOUT 12 MILES EAST OF FOREST GLEN
FROM 1.7 MILES TO 2.1 MILES EAST OF ROUTE 3

TO BE SUPPLEMENTED BY STANDARD PLANS DATED MAY 2010

INDEX OF SHEETS

SHEET No.	DESCRIPTION
1	TITLE AND LOCATION MAP
2-3	TYPICAL CROSS SECTIONS
4	LAYOUTS
5	PROFILES AND SUPERELEVATION DIAGRAMS
6	CONSTRUCTION DETAILS
7-8	EROSION CONTROL PLAN AND QUANTITIES
9-14	DRAINAGE PLANS, PROFILES, DETAILS AND QUANTITIES
15	CONSTRUCTION AREA SIGNS
16-18	PAVEMENT DELINEATION PLANS, DETAILS AND QUANTITIES
19	SUMMARY OF QUANTITIES
20-21	ELECTRICAL PLANS
22	TRAFFIC CONTROL SYSTEM
23-26	REVISED STANDARD PLANS

THE STANDARD PLANS LIST APPLICABLE TO THIS CONTRACT IS INCLUDED IN THE NOTICE TO BIDDERS AND SPECIAL PROVISIONS BOOK.

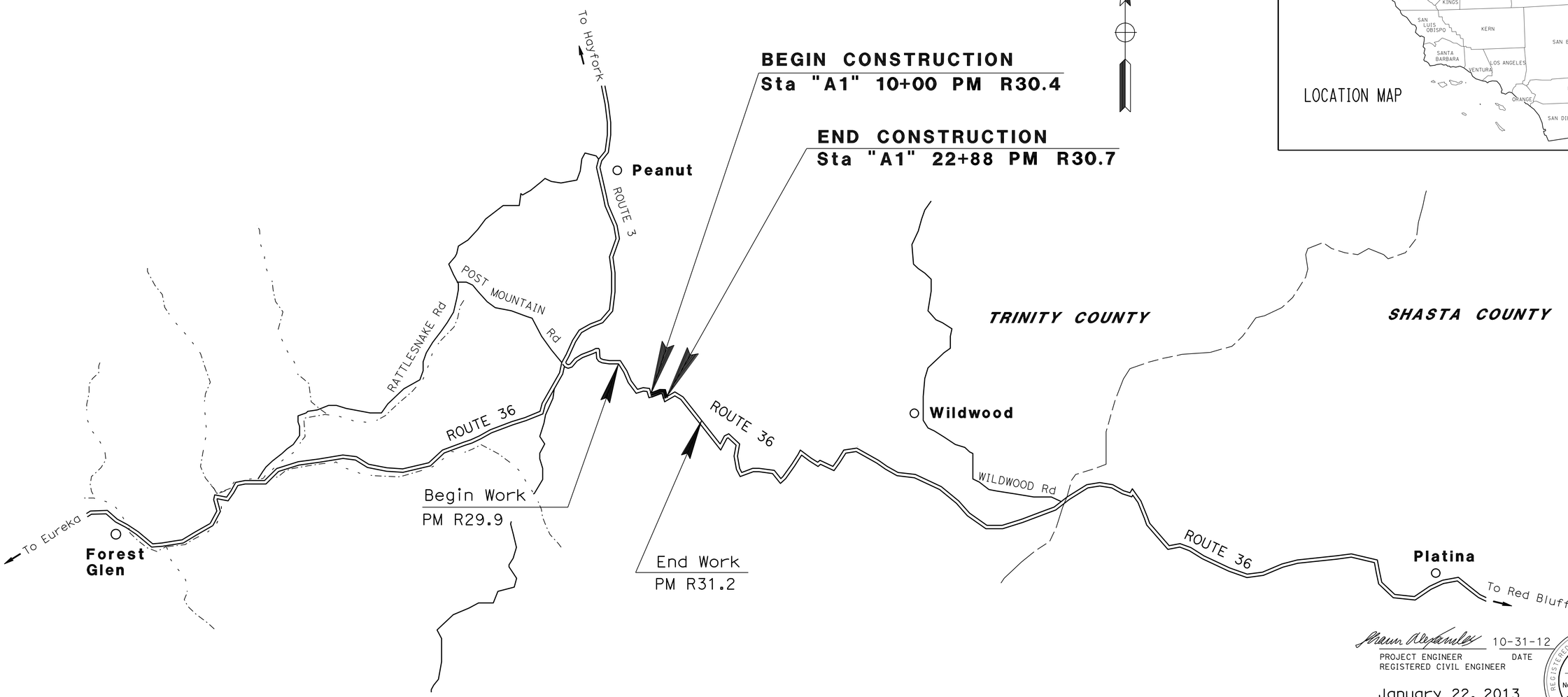

Shaun Alexander 10-31-12
PROJECT ENGINEER DATE
REGISTERED CIVIL ENGINEER

January 22, 2013
PLANS APPROVAL DATE

REGISTERED PROFESSIONAL ENGINEER
SHAUN ALEXANDER
No. C70833
Exp. 6-30-13
CIVIL
STATE OF CALIFORNIA

THE STATE OF CALIFORNIA OR ITS OFFICERS OR AGENTS SHALL NOT BE RESPONSIBLE FOR THE ACCURACY OR COMPLETENESS OF SCANNED COPIES OF THIS PLAN SHEET.

THE CONTRACTOR SHALL POSSESS THE CLASS (OR CLASSES) OF LICENSE AS SPECIFIED IN THE "NOTICE TO BIDDERS."

NO SCALE

CONTRACT No.	02-3E7104
PROJECT ID	0200020148

LAST REVISION 10-31-12
DATE PLOTTED => 13-FEB-2013
TIME PLOTTED => 06:30

PROJECT MANAGER: CHRIS HARVEY
DESIGN ENGINEER: AL TRUJILLO

P:\proj1\02\3E710_plans\pse\23e710ab001.dgn

Dist	COUNTY	ROUTE	POST MILES TOTAL PROJECT	SHEET No.	TOTAL SHEETS
02	Tri	36	R30.4/R30.7	2	26

REGISTERED CIVIL ENGINEER 10-31-12 DATE

1-22-13
PLANS APPROVAL DATE

REGISTERED PROFESSIONAL ENGINEER SHAUN ALEXANDER No. C70833 Exp. 06-30-13 CIVIL STATE OF CALIFORNIA

THE STATE OF CALIFORNIA OR ITS OFFICERS OR AGENTS SHALL NOT BE RESPONSIBLE FOR THE ACCURACY OR COMPLETENESS OF SCANNED COPIES OF THIS PLAN SHEET.

NOTES:

1. DIMENSIONS OF THE PAVEMENT STRUCTURES (STRUCTURAL SECTIONS) ARE SUBJECT TO TOLERANCES SPECIFIED IN THE STANDARD SPECIFICATIONS.

DESIGN DESIGNATION

ADT (2013)	416	D	75%
ADT (2033)	996	T	7%
DHV	299	V	55 MPH
EAL	257,600	TI_{20}	7.5

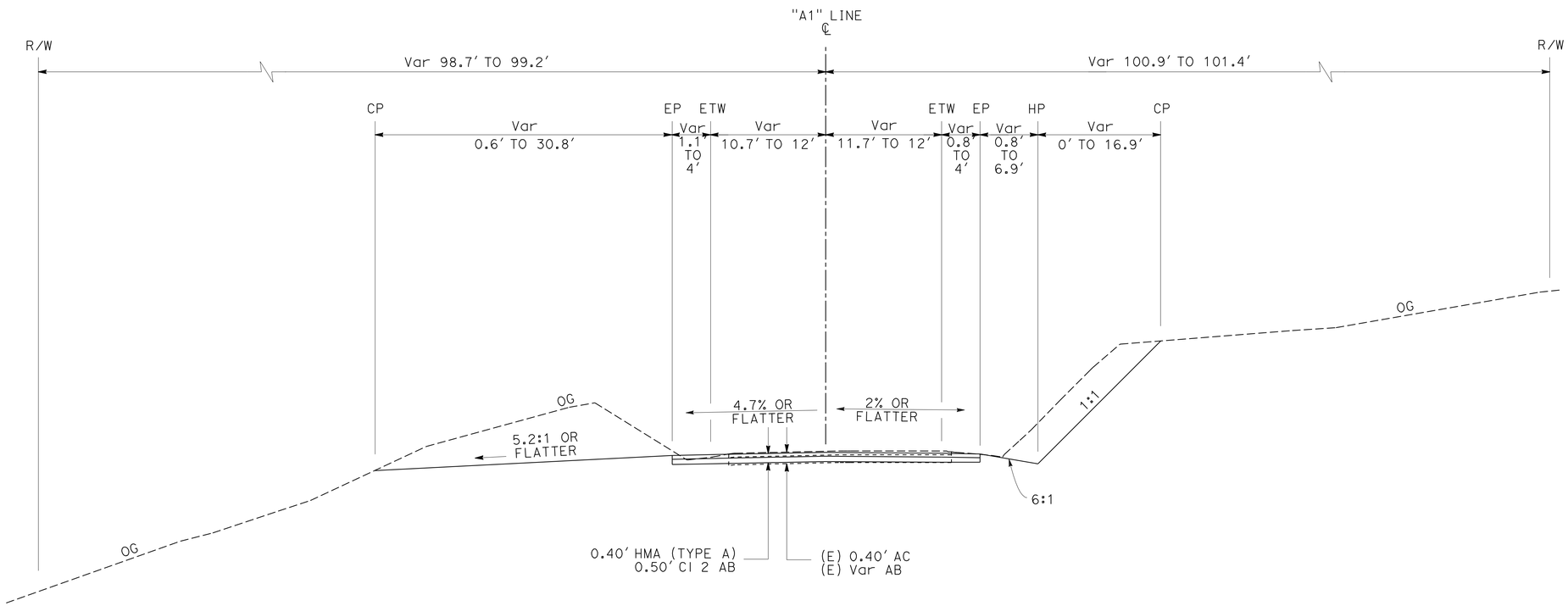

ROUTE 36

"A1" 10+00.00 TO 11+20.00

TYPICAL CROSS SECTIONS

NO SCALE

X-1

REVISED BY | DATE REVISED
JEFF COON | SHAUN ALEXANDER
CALCULATED-DESIGNED BY | CHECKED BY
FUNCTIONAL SUPERVISOR
AL TRUJILLO

STATE OF CALIFORNIA - DEPARTMENT OF TRANSPORTATION
Caltrans®
DESIGN

P:\proj1\02\3E710_plans\pse\23e710ca001.dgn

LAST REVISION 10-31-12 | DATE PLOTTED => 23-JAN-2013 | TIME PLOTTED => 07:54

Dist	COUNTY	ROUTE	POST MILES TOTAL PROJECT	SHEET No.	TOTAL SHEETS
02	Tri	36	R30.4/R30.7	3	26

Shaun Alexander 10-31-12
REGISTERED CIVIL ENGINEER DATE

1-22-13
PLANS APPROVAL DATE

REGISTERED PROFESSIONAL ENGINEER
SHAUN ALEXANDER
No. C70833
Exp. 06-30-13
CIVIL
STATE OF CALIFORNIA

THE STATE OF CALIFORNIA OR ITS OFFICERS OR AGENTS SHALL NOT BE RESPONSIBLE FOR THE ACCURACY OR COMPLETENESS OF SCANNED COPIES OF THIS PLAN SHEET.

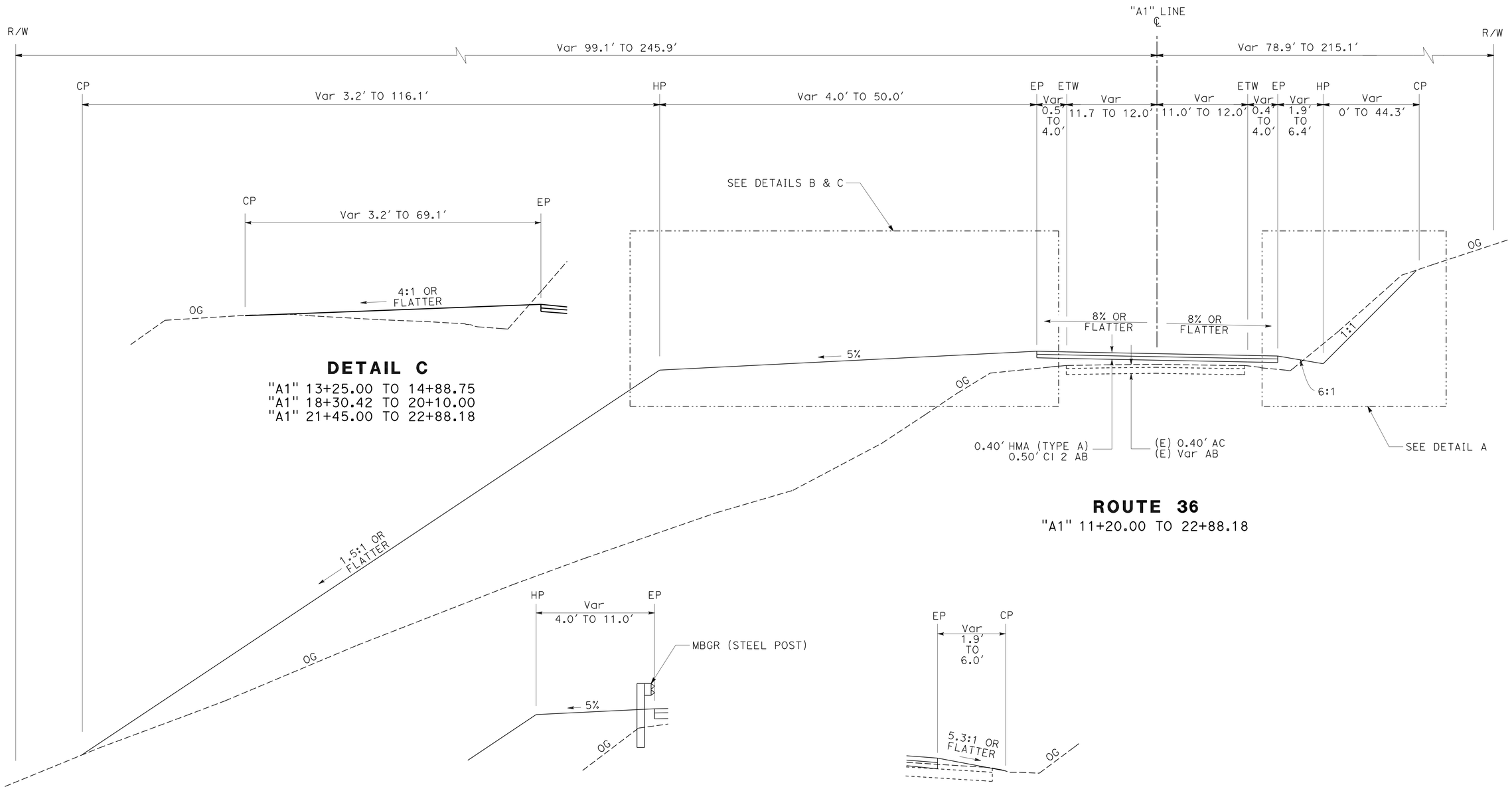

DETAIL C
"A1" 13+25.00 TO 14+88.75
"A1" 18+30.42 TO 20+10.00
"A1" 21+45.00 TO 22+88.18

ROUTE 36
"A1" 11+20.00 TO 22+88.18

DETAIL B
"A1" 11+25.00 TO 13+25.00
"A1" 20+10.00 TO 21+45.00

DETAIL A
"A1" 20+75.00 TO 21+50.00
"A1" 22+82.00 TO 22+88.18

TYPICAL CROSS SECTIONS
NO SCALE

X-2

REVISED BY	DATE REVISED

CALCULATED-DESIGNED BY	CHECKED BY
JEFF COON	SHAUN ALEXANDER

FUNCTIONAL SUPERVISOR
AL TRUJILLO

STATE OF CALIFORNIA - DEPARTMENT OF TRANSPORTATION
Caltrans
DESIGN

P:\proj1\02\3E710_plans\pse\23e710ca002.dgn

LAST REVISION 10-31-12
DATE PLOTTED => 23-JAN-2013
TIME PLOTTED => 07:51

Dist	COUNTY	ROUTE	POST MILES TOTAL PROJECT	SHEET No.	TOTAL SHEETS
02	Tri	36	R30.4/R30.7	4	26

Shaun Alexander 10-31-12
REGISTERED CIVIL ENGINEER DATE

1-22-13
PLANS APPROVAL DATE

REGISTERED PROFESSIONAL ENGINEER SHAUN ALEXANDER No. C70833 Exp. 06-30-13 CIVIL STATE OF CALIFORNIA

THE STATE OF CALIFORNIA OR ITS OFFICERS OR AGENTS SHALL NOT BE RESPONSIBLE FOR THE ACCURACY OR COMPLETENESS OF SCANNED COPIES OF THIS PLAN SHEET.

NOTE:

1. FOR ACCURATE RIGHT OF WAY DATA, CONTACT RIGHT OF WAY ENGINEERING AT THE DISTRICT OFFICE.

LEGEND

CPACP

ABBREVIATIONS:

CPACP COLD PLANE ASPHALT CONCRETE PAVEMENT
AFTS ALTERNATIVE FLARED TERMINAL SECTION

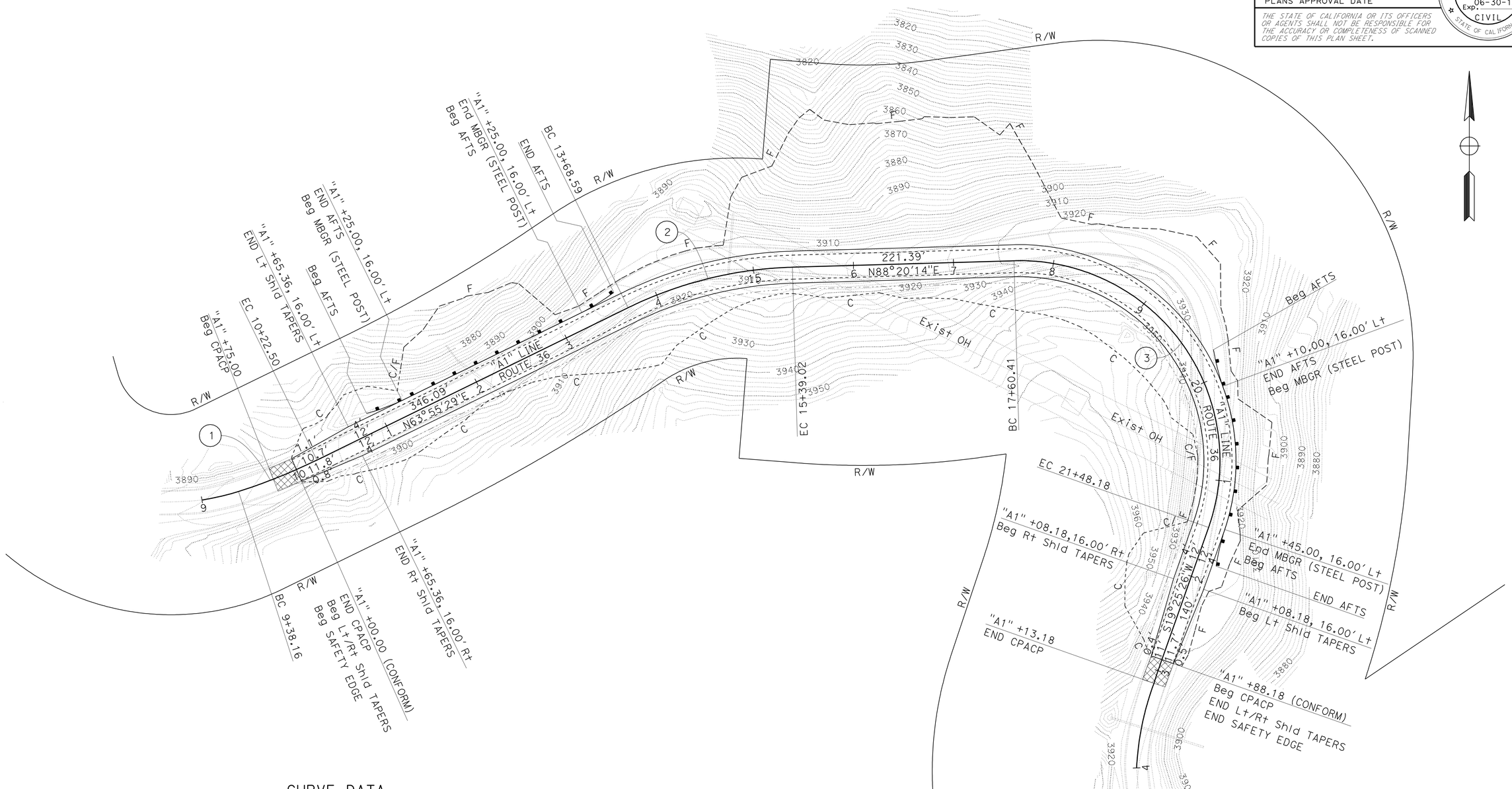

CURVE DATA

No. ⊕	R	Δ	T	L
1	584′	8°16′53″	42.24′	84.34′
2	400′	24°24′44″	86.53′	170.43′
3	200′	111°5′13″	291.47′	387.77′

LAYOUT

SCALE: 1" = 50′

L-1

STATE OF CALIFORNIA - DEPARTMENT OF TRANSPORTATION
Caltrans® DESIGN

FUNCTIONAL SUPERVISOR: AL TRUJILLO
CALCULATED-DESIGNED BY: JEFF COON
CHECKED BY: SHAUN ALEXANDER
REVISED BY / DATE REVISED

P:\proj1\02\3E710_plans\pse\23e710ea001.dgn

LAST REVISION 10-31-12 | DATE PLOTTED => 23-JAN-2013 | TIME PLOTTED => 07:46

Dist	COUNTY	ROUTE	POST MILES TOTAL PROJECT	SHEET No.	TOTAL SHEETS
02	Tri	36	R30.4/R30.7	5	26

Shaun Alexander 10-31-12
REGISTERED CIVIL ENGINEER DATE

1-22-13
PLANS APPROVAL DATE

REGISTERED PROFESSIONAL ENGINEER SHAUN ALEXANDER No. C70833 Exp. 06-30-13 CIVIL STATE OF CALIFORNIA

THE STATE OF CALIFORNIA OR ITS OFFICERS OR AGENTS SHALL NOT BE RESPONSIBLE FOR THE ACCURACY OR COMPLETENESS OF SCANNED COPIES OF THIS PLAN SHEET.

ABBREVIATIONS:

TW TRAVELED WAY

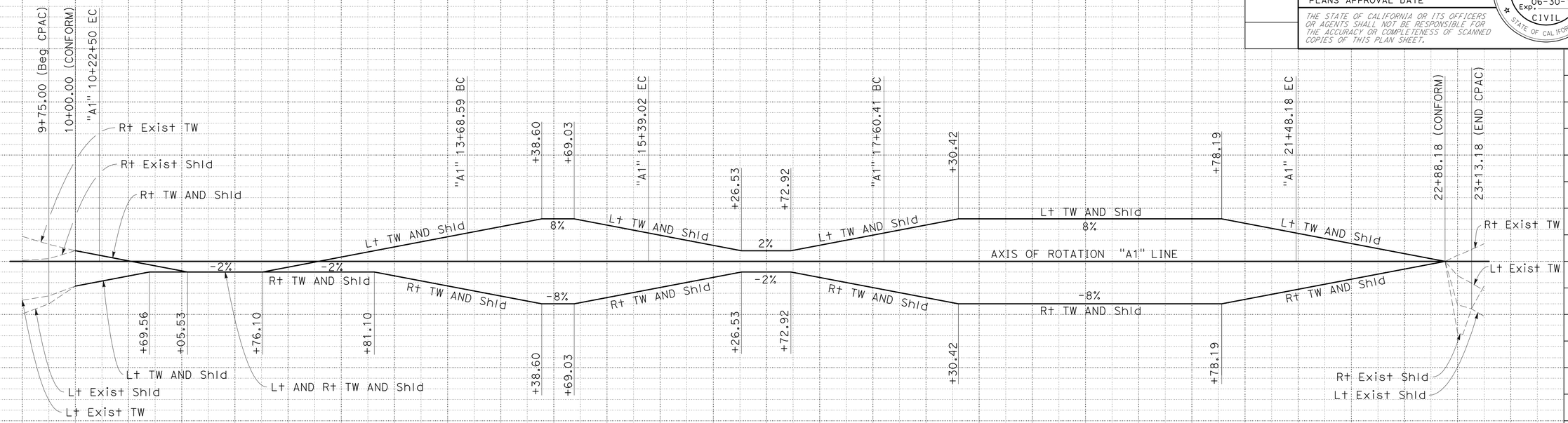

SUPERELEVATION DIAGRAM

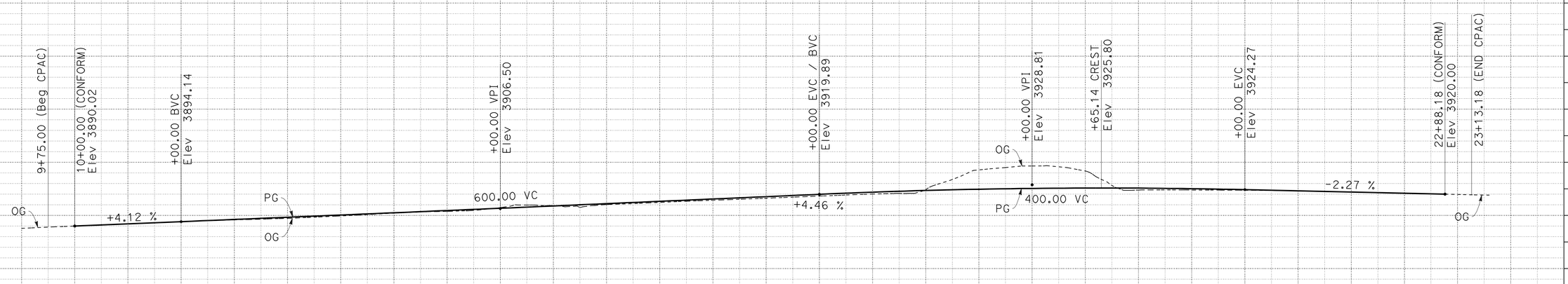

PROFILE

"A1" LINE

PROFILE AND SUPERELEVATION DIAGRAM

SCALE: Horiz 1" = 50'
Vert 1" = 50'

PS-1

STATION		10+00	11+00	12+00	13+00	14+00	15+00	16+00	17+00	18+00	19+00	20+00	21+00	22+00	23+00	TOTAL
CY	Exc	5230								7705		1192				14127
	Emb	13309								335		451				14095

REVISED BY | DATE REVISED
JEFF COON | SHAUN ALEXANDER
CALCULATED-DESIGNED BY | CHECKED BY
FUNCTIONAL SUPERVISOR: AL TRUJILLO

STATE OF CALIFORNIA - DEPARTMENT OF TRANSPORTATION
Caltrans DESIGN

P:\proj1\02\3E710_plans\pse\23e710fb001.dgn

LAST REVISION 10-31-12 | DATE PLOTTED => 23-JAN-2013 | TIME PLOTTED => 07:46

BORDER LAST REVISED 7/2/2010 | USERNAME => s114640 | DGN FILE => 23e710fb001.dgn | RELATIVE BORDER SCALE IS IN INCHES 0 1 2 3 | UNIT 0316 | PROJECT NUMBER & PHASE 02000201481

Dist	COUNTY	ROUTE	POST MILES TOTAL PROJECT	SHEET No.	TOTAL SHEETS
02	Tri	36	R30.4/R30.7	6	26

Shaun Alexander 10-31-12
REGISTERED CIVIL ENGINEER DATE

1-22-13
PLANS APPROVAL DATE

REGISTERED PROFESSIONAL ENGINEER
SHAUN ALEXANDER
No. C70833
Exp. 06-30-13
CIVIL
STATE OF CALIFORNIA

THE STATE OF CALIFORNIA OR ITS OFFICERS OR AGENTS SHALL NOT BE RESPONSIBLE FOR THE ACCURACY OR COMPLETENESS OF SCANNED COPIES OF THIS PLAN SHEET.

LEGEND

CPACP

ABBREVIATIONS

CPACP COLD PLANE ASPHALT CONCRETE PAVEMENT

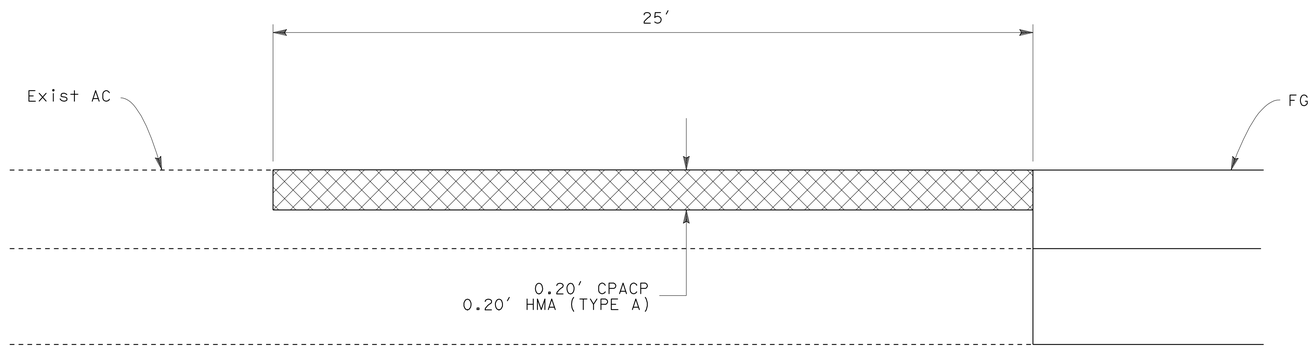

PROFILE

PAVEMENT CONFORM

"A1" 9+75.00 TO 10+00.00
"A1" 22+88.18 TO 23+13.18

CONSTRUCTION DETAILS

NO SCALE

C-1

REVISED BY	DATE REVISED

CALCULATED-DESIGNED BY	CHECKED BY
JEFF COON	SHAUN ALEXANDER

FUNCTIONAL SUPERVISOR: AL TRUJILLO

STATE OF CALIFORNIA - DEPARTMENT OF TRANSPORTATION
Caltrans
DESIGN

P:\proj1\02\3E710_plans\pse\23e710ga001.dgn

LAST REVISION 10-31-12 | DATE PLOTTED => 23-JAN-2013 | TIME PLOTTED => 07:46

Dist	COUNTY	ROUTE	POST MILES TOTAL PROJECT	SHEET No.	TOTAL SHEETS
02	Tri	36	R30.4/R30.7	7	26

Shaun Alexander 10-31-12
REGISTERED CIVIL ENGINEER DATE

1-22-13
PLANS APPROVAL DATE

REGISTERED PROFESSIONAL ENGINEER
SHAUN ALEXANDER
No. C70833
Exp. 06-30-13
CIVIL
STATE OF CALIFORNIA

THE STATE OF CALIFORNIA OR ITS OFFICERS OR AGENTS SHALL NOT BE RESPONSIBLE FOR THE ACCURACY OR COMPLETENESS OF SCANNED COPIES OF THIS PLAN SHEET.

NOTES:

1. FOR ACCURATE RIGHT OF WAY DATA, CONTACT RIGHT OF WAY ENGINEERING AT THE DISTRICT OFFICE.
2. APPLY EROSION CONTROL (BONDED FIBER MATRIX) ON 1.5:1 FINISH EMBANKMENT SURFACE AREAS.

LEGEND

EROSION CONTROL (BONDED FIBER MATRIX)

HYDROSEED

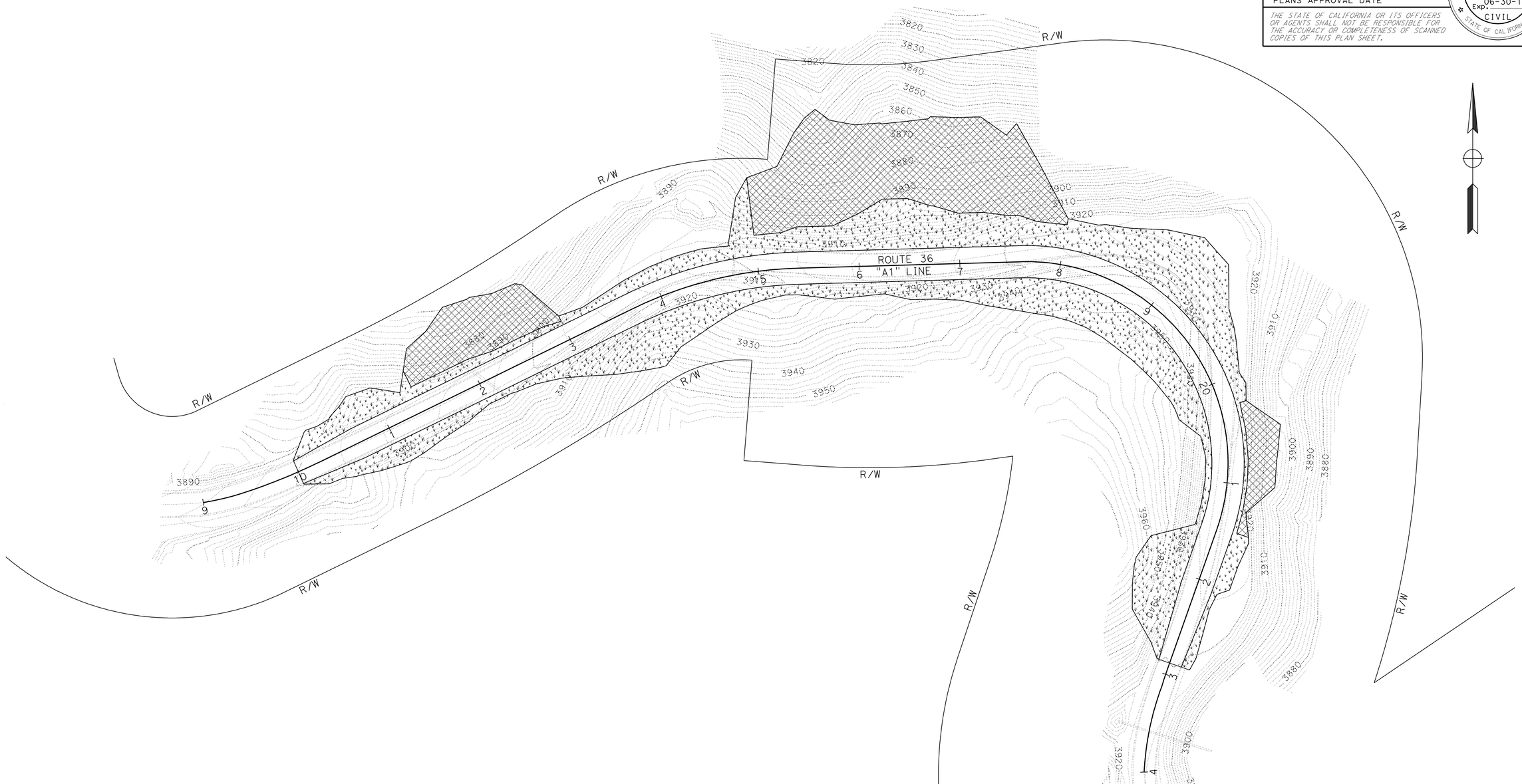

ACCURATE FOR EROSION CONTROL WORK ONLY

EROSION CONTROL PLAN

SCALE: 1" = 50'

EC-1

REVISED BY	DATE REVISED

CALCULATED-DESIGNED BY	CHECKED BY
JEFF COON	SHAUN ALEXANDER

FUNCTIONAL SUPERVISOR: AL TRUJILLO

STATE OF CALIFORNIA - DEPARTMENT OF TRANSPORTATION

Caltrans® **DESIGN**

P:\proj1\02\3E710_plans\pse\23e710ge001.dgn

LAST REVISION 10-31-12 | DATE PLOTTED => 23-JAN-2013 | TIME PLOTTED => 07:46

Dist	COUNTY	ROUTE	POST MILES TOTAL PROJECT	SHEET No.	TOTAL SHEETS
02	Tri	36	R30.4/R30.7	8	26

LICENSED LANDSCAPE ARCHITECT

1-22-13
PLANS APPROVAL DATE

LICENSED LANDSCAPE ARCHITECT J. PATRICK SULLIVAN #3125 Signature 07/31/14 Renewal Date 10/31/12 Date STATE OF CALIFORNIA

THE STATE OF CALIFORNIA OR ITS OFFICERS OR AGENTS SHALL NOT BE RESPONSIBLE FOR THE ACCURACY OR COMPLETENESS OF SCANNED COPIES OF THIS PLAN SHEET.

NOTE:

1. (N) - NOT A SEPARATE PAY ITEM, FOR INFORMATION ONLY.

EROSION CONTROL (BONDED FIBER MATRIX) SEQUENCE/APPLICATION RATES (N)

SEQUENCE	ITEM	MATERIAL DESCRIPTION	MATERIAL TYPE	APPLICATION RATE (N)
STEP 1	BONDED FIBER MATRIX APPLICATION	PURE LIVE SEED	MIX	106 LB/ACRE
		FIBER	ALTERNATE	2000 LB/ACRE
		SLOW RELEASE FERTILIZER	GRANULAR 15-15-15	100 LB/ACRE
STEP 2	BONDED FIBER MATRIX APPLICATION	COMPOST	WOOD PRODUCT	1.2 CY/ACRE
		FIBER	ALTERNATE	2250 LB/ACRE
		TACKIFIER	PSYLLIUM	100 LB/ACRE

HYDROSEED SEQUENCE/APPLICATION RATES (N)

SEQUENCE	ITEM	MATERIAL DESCRIPTION	MATERIAL TYPE	APPLICATION RATE (N)
STEP 1	HYDROSEED	PURE LIVE SEED	MIX	106 LB/ACRE
		FIBER	ALTERNATE	2000 LB/ACRE
		SLOW RELEASE FERTILIZER	GRANULAR 15-15-15	100 LB/ACRE
STEP 2	HYDROSEED	COMPOST	WOOD PRODUCT	1.2 CY/ACRE
		FIBER	ALTERNATE	2000 LB/ACRE
		TACKIFIER	PSYLLIUM	100 LB/ACRE

SEED MIX (N) (BOTH EROSION APPLICATIONS)

BOTANICAL NAME (COMMON NAME)	PERCENT GERMINATION (MINIMUM)	POUNDS PURE LIVE SEED PER ACRE (N) (SLOPE MEASUREMENT)
ACHILLEA MILLEFOLIUM (COMMON YARROW)	50	2
ELYMUS GLAUCUS (Calif WILD RYE)	70	25
FESTUCA IDAHOENSIS (WESTERN FESCUE)	70	25
LOTUS PURSHIANUS (PURSHING)	70	10
LUPINUS BICOLOR (SKY LUPINES)	60	2
LUPINUS NANA (DWARF LUPINES)	60	2
POA SECUNDA (BLUE PINE GRASS)	60	15
VULPIA MICROSTACHYS (SMALL FESCUE)	80	25
	TOTAL	106

EROSION CONTROL (BONDED FIBER MATRIX) TOTALS

MATERIAL DESCRIPTION	MATERIAL TYPE	TOTALS	
PURE LIVE SEED	MIX	105.4 LB (N)	EROSION CONTROL (BONDED FIBER MATRIX)
FIBER MATRIX	ALTERNATE	4224.6 LB (N)	
SLOW RELEASE FERTILIZER	GRANULAR 15-15-15	99 LB (N)	
COMPOST	WOOD PRODUCT	1.19 CY (N)	
TACKIFIER	PSYLLIUM	99 LB (N)	
FROM STA 11+30 (L) TO 13+00 (L) 15+00 (L) TO 18+08 (L) 20+20 (L) TO 21+45 (L)		TOTAL SQFT 43300	

HYDROSEED

MATERIAL DESCRIPTION	MATERIAL TYPE	TOTALS	
PURE LIVE SEED	MIX	279.8 LB (N)	HYDROSEED
FIBER	ALTERNATE	10560 LB (N)	
SLOW RELEASE FERTILIZER	GRANULAR 15-15-15	264 LB (N)	
COMPOST	WOOD PRODUCT	3.17 CY (N)	
TACKIFIER	PSYLLIUM	264 LB (N)	
FROM STA 10+00 TO 22+88		TOTAL SQFT	115000

EROSION CONTROL SEQUENCING (N)

SEQUENCE	ITEM	MATERIAL DESCRIPTION	APPLICATION RATE
STEP 1 APPLY	EROSION CONTROL (BONDED FIBER MATRIX)		(PER ABOVE APPLICATION RATES) AND LOCATIONS
STEP 2 APPLY	HYDROSEED		(PER ABOVE APPLICATION RATES) AND LOCATIONS

EROSION CONTROL QUANTITIES

ECQ-1

APPROVED FOR LANDSCAPE WORK ONLY

REVISED BY | DATE REVISED
J. PATRICK SULLIVAN | RON FLORY
CALCULATED-DESIGNED BY | CHECKED BY
SENIOR LANDSCAPE ARCHITECT | RON FLORY

STATE OF CALIFORNIA - DEPARTMENT OF TRANSPORTATION
Caltrans® LANDSCAPE ARCHITECTURE

P:\proj1\02\3E710_plans\pse\23e710gh001.dgn

LAST REVISION 10-31-12 | DATE PLOTTED => 23-JAN-2013 | TIME PLOTTED => 07:46

Dist	COUNTY	ROUTE	POST MILES TOTAL PROJECT	SHEET No.	TOTAL SHEETS
02	Tri	36	R30.4/R30.7	9	26

Shaun Alexander 10-31-12
REGISTERED CIVIL ENGINEER DATE

1-22-13
PLANS APPROVAL DATE

REGISTERED PROFESSIONAL ENGINEER
SHAUN ALEXANDER
No. C70833
Exp. 06-30-13
CIVIL
STATE OF CALIFORNIA

THE STATE OF CALIFORNIA OR ITS OFFICERS OR AGENTS SHALL NOT BE RESPONSIBLE FOR THE ACCURACY OR COMPLETENESS OF SCANNED COPIES OF THIS PLAN SHEET.

NOTE:

1. FOR ACCURATE RIGHT OF WAY DATA, CONTACT RIGHT OF WAY ENGINEERING AT THE DISTRICT OFFICE.

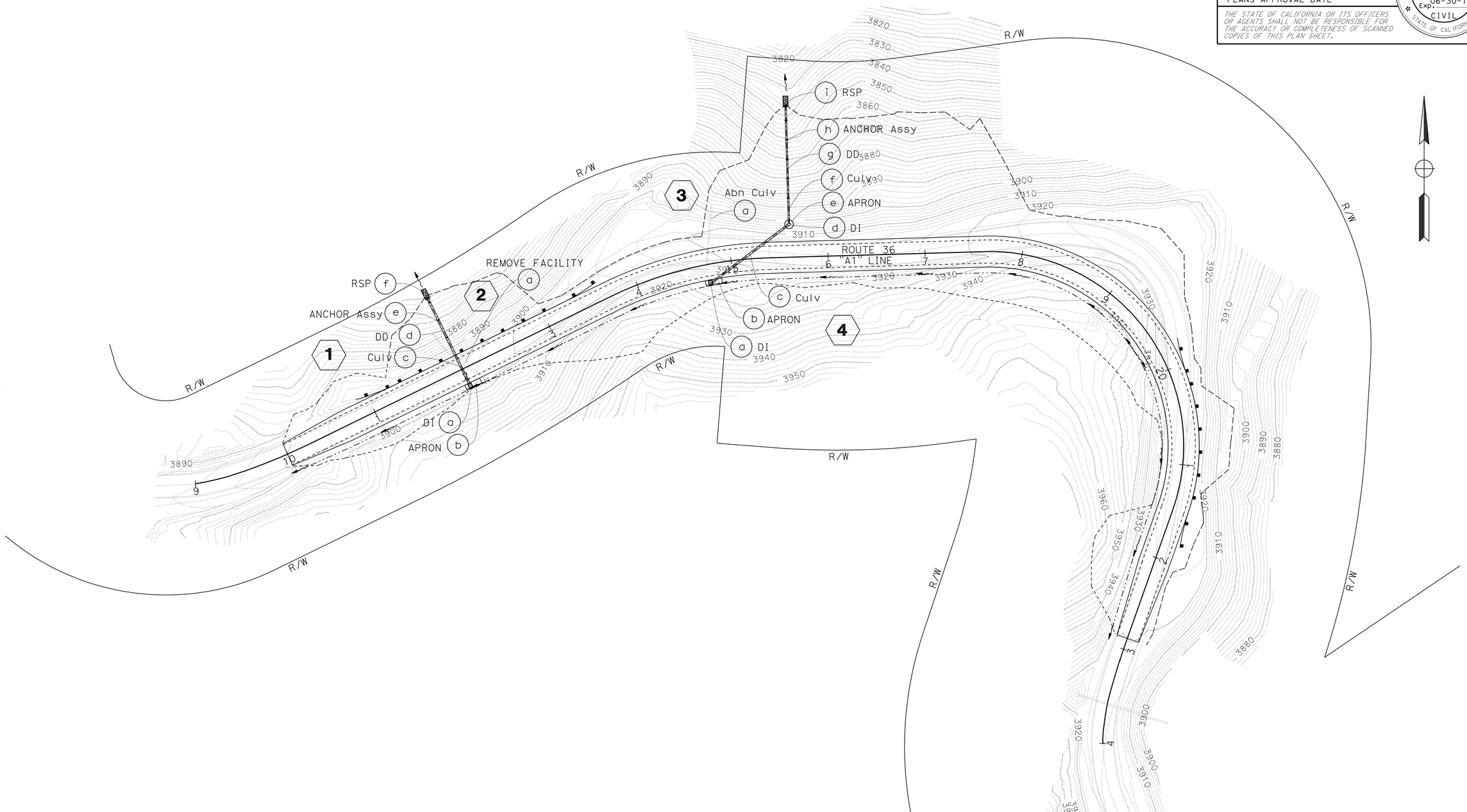

ACCURATE FOR DRAINAGE WORK ONLY

DRAINAGE PLAN

SCALE: 1" = 50'

D-1

REVISED BY | DATE REVISED
JEFF COON | SHAUN ALEXANDER
CALCULATED-DESIGNED BY | CHECKED BY
FUNCTIONAL SUPERVISOR
AL TRUJILLO

STATE OF CALIFORNIA - DEPARTMENT OF TRANSPORTATION
Caltrans
DESIGN

P:\proj1\02\3E710_plans\pse\23e710ia001.dgn

LAST REVISION 10-31-12 | DATE PLOTTED => 23-JAN-2013 | TIME PLOTTED => 07:31

BORDER LAST REVISED 7/2/2010 | USERNAME => s114937 | DGN FILE => 23e710ia001.dgn | RELATIVE BORDER SCALE IS IN INCHES 0 1 2 3 | UNIT 0316 | PROJECT NUMBER & PHASE 02000201481

Dist	COUNTY	ROUTE	POST MILES TOTAL PROJECT	SHEET No.	TOTAL SHEETS
02	Tri	36	R30.4/R30.7	10	26

Shaun Alexander 10-31-12
REGISTERED CIVIL ENGINEER DATE

1-22-13
PLANS APPROVAL DATE

REGISTERED PROFESSIONAL ENGINEER
SHAUN ALEXANDER
No. C70833
Exp. 06-30-13
CIVIL
STATE OF CALIFORNIA

THE STATE OF CALIFORNIA OR ITS OFFICERS OR AGENTS SHALL NOT BE RESPONSIBLE FOR THE ACCURACY OR COMPLETENESS OF SCANNED COPIES OF THIS PLAN SHEET.

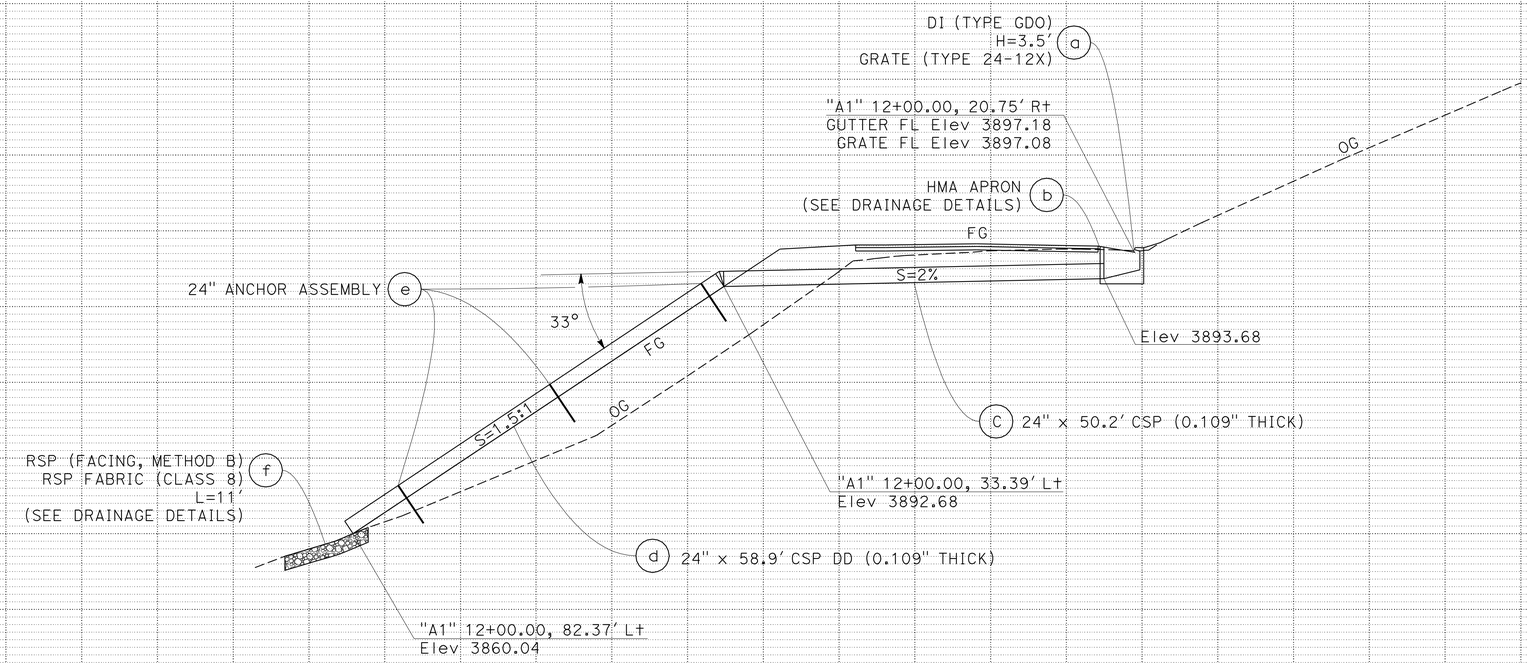

DRAINAGE SYSTEM No. 1

"A1" 12+00.00

DRAINAGE PROFILES

SCALE: 1" = 10'

DP-1

REVISED BY | DATE REVISED
JEFF COON | SHAUN ALEXANDER
CALCULATED-DESIGNED BY | CHECKED BY
FUNCTIONAL SUPERVISOR
AL TRUJILLO

STATE OF CALIFORNIA - DEPARTMENT OF TRANSPORTATION
Caltrans
DESIGN

P:\proj1\02\3E710_plans\pse\23e710ib001.dgn

LAST REVISION 10-31-12 | DATE PLOTTED => 23-JAN-2013 | TIME PLOTTED => 07:31

BORDER LAST REVISED 7/2/2010 | USERNAME => s114937 | DGN FILE => 23e710ib001.dgn | RELATIVE BORDER SCALE IS IN INCHES 0 1 2 3 | UNIT 0316 | PROJECT NUMBER & PHASE 02000201481

Dist	COUNTY	ROUTE	POST MILES TOTAL PROJECT	SHEET No.	TOTAL SHEETS
02	Tri	36	R30.4/R30.7	11	26

REGISTERED CIVIL ENGINEER 10-31-12 DATE

1-22-13
PLANS APPROVAL DATE

REGISTERED PROFESSIONAL ENGINEER
SHAUN ALEXANDER
No. C70833
Exp. 06-30-13
CIVIL
STATE OF CALIFORNIA

THE STATE OF CALIFORNIA OR ITS OFFICERS OR AGENTS SHALL NOT BE RESPONSIBLE FOR THE ACCURACY OR COMPLETENESS OF SCANNED COPIES OF THIS PLAN SHEET.

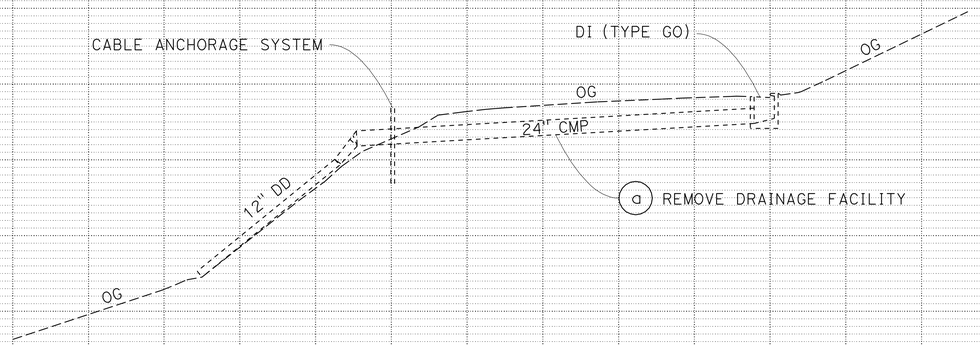

DRAINAGE SYSTEM No. 2
"A1" 11+89.07 TO 12+17.67

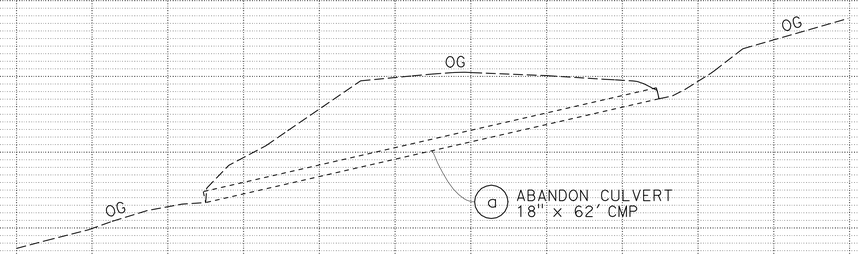

DRAINAGE SYSTEM No. 3
"A1" 14+74.87 TO 14+88.75

DRAINAGE PROFILES

SCALE: 1" = 10'

DP-2

REVISED BY | DATE REVISED
JEFF COON | SHAUN ALEXANDER
CALCULATED-DESIGNED BY | CHECKED BY
FUNCTIONAL SUPERVISOR: AL TRUJILLO

STATE OF CALIFORNIA - DEPARTMENT OF TRANSPORTATION
Caltrans DESIGN

P:\proj1\02\3E710_plans\pse\23e710ib002.dgn

LAST REVISION 10-31-12 | DATE PLOTTED => 23-JAN-2013 | TIME PLOTTED => 07:31

Dist	COUNTY	ROUTE	POST MILES TOTAL PROJECT	SHEET No.	TOTAL SHEETS
02	Tri	36	R30.4/R30.7	12	26

REGISTERED CIVIL ENGINEER 10-31-12 DATE

1-22-13
PLANS APPROVAL DATE

REGISTERED PROFESSIONAL ENGINEER
SHAUN ALEXANDER
No. C70833
Exp. 06-30-13
CIVIL
STATE OF CALIFORNIA

THE STATE OF CALIFORNIA OR ITS OFFICERS OR AGENTS SHALL NOT BE RESPONSIBLE FOR THE ACCURACY OR COMPLETENESS OF SCANNED COPIES OF THIS PLAN SHEET.

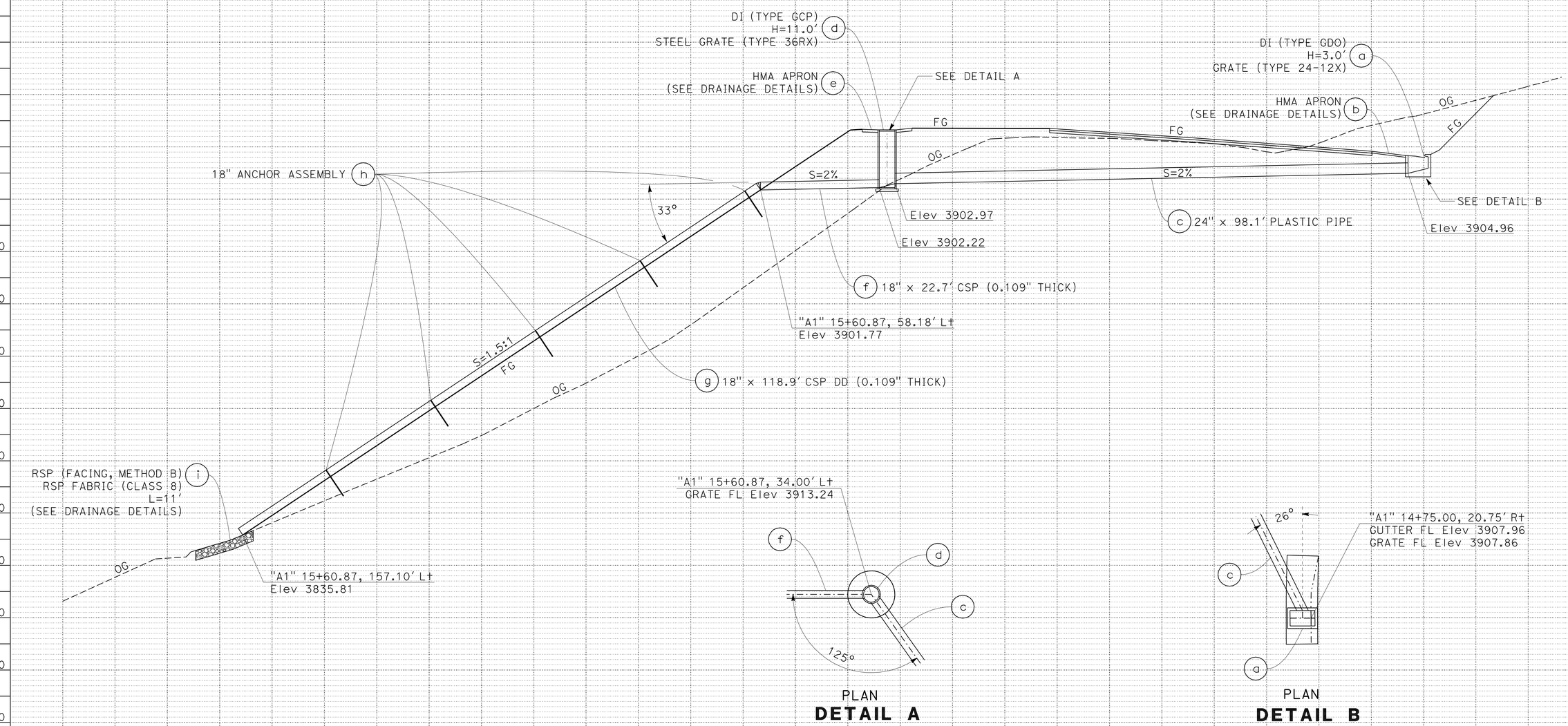

PLAN
DETAIL A

PLAN
DETAIL B

DRAINAGE SYSTEM No. 4
"A1" 14+75.00 TO 15+60.87

DRAINAGE PROFILES
SCALE: 1" = 10′

DP-3

REVISED BY | DATE REVISED
JEFF COON | SHAUN ALEXANDER
CALCULATED-DESIGNED BY | CHECKED BY
FUNCTIONAL SUPERVISOR
AL TRUJILLO

STATE OF CALIFORNIA - DEPARTMENT OF TRANSPORTATION
Caltrans
DESIGN

P:\proj1\02\3E710_plans\pse\23e710ib003.dgn

LAST REVISION | DATE PLOTTED => 23-JAN-2013 | TIME PLOTTED => 07:57
10-31-12

BORDER LAST REVISED 7/2/2010 | USERNAME => s114937 | DGN FILE => 23e710ib003.dgn | RELATIVE BORDER SCALE IS IN INCHES 0 1 2 3 | UNIT 0316 | PROJECT NUMBER & PHASE 02000201481

Dist	COUNTY	ROUTE	POST MILES TOTAL PROJECT	SHEET No.	TOTAL SHEETS
02	Tri	36	R30.4/R30.7	13	26

REGISTERED CIVIL ENGINEER 10-31-12 DATE

1-22-13
PLANS APPROVAL DATE

REGISTERED PROFESSIONAL ENGINEER
SHAUN ALEXANDER
No. C70833
Exp. 06-30-13
CIVIL
STATE OF CALIFORNIA

THE STATE OF CALIFORNIA OR ITS OFFICERS OR AGENTS SHALL NOT BE RESPONSIBLE FOR THE ACCURACY OR COMPLETENESS OF SCANNED COPIES OF THIS PLAN SHEET.

LEGEND

PLACE HMA (Misc AREA)

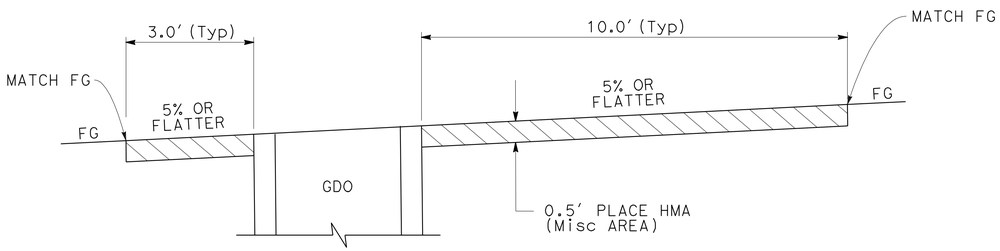

SECTION B-B

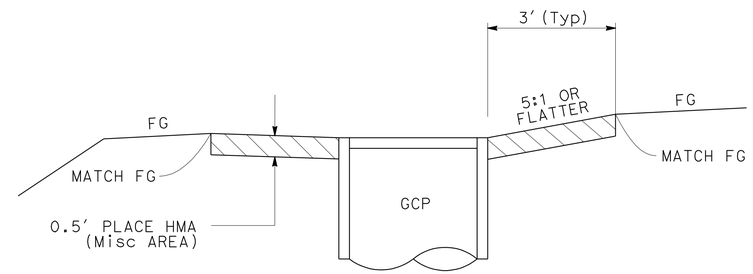

SECTION C-C

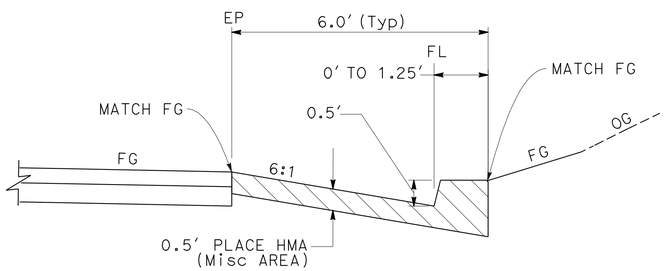

SECTION A-A

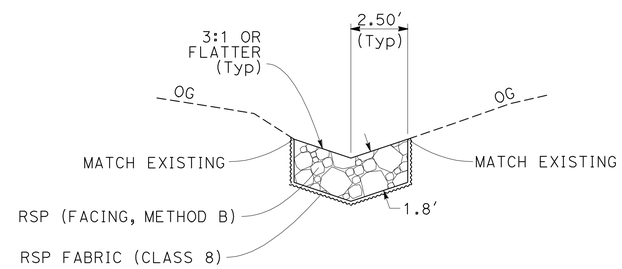

RSP (FACING, METHOD B)

DRAINAGE SYSTEM No. 1 f
4 i

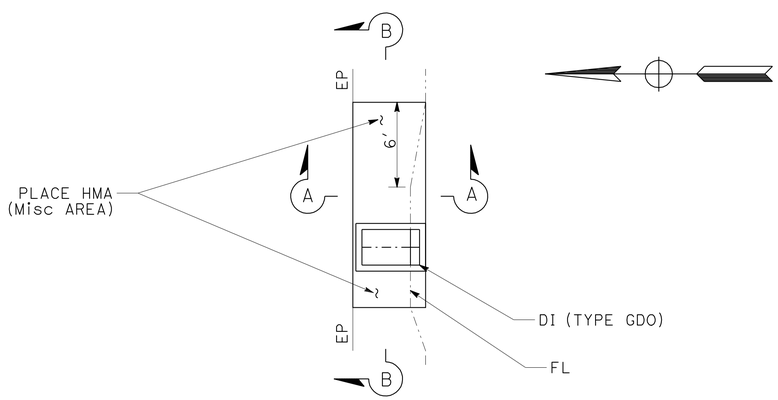

PLAN

GDO INLET APRON DETAIL

DRAINAGE SYSTEM No. 1 b
4 b

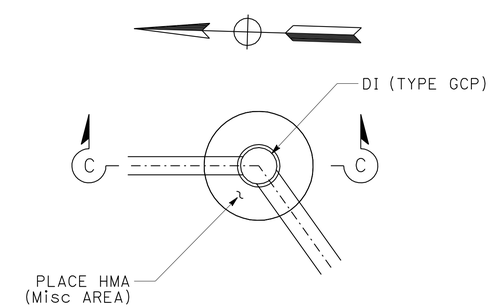

PLAN

GCP INLET APRON DETAIL

DRAINAGE SYSTEM No. 4 d

DRAINAGE DETAILS

NO SCALE

DD-1

REVISED BY | DATE REVISED
JEFF COON | SHAUN ALEXANDER
CALCULATED-DESIGNED BY | CHECKED BY
FUNCTIONAL SUPERVISOR
AL TRUJILLO

STATE OF CALIFORNIA - DEPARTMENT OF TRANSPORTATION
Caltrans
DESIGN

P:\proj1\02\3E710_plans\pse\23e710ic001.dgn

LAST REVISION 10-31-12 | DATE PLOTTED => 23-JAN-2013 | TIME PLOTTED => 08:04

Dist	COUNTY	ROUTE	POST MILES TOTAL PROJECT	SHEET No.	TOTAL SHEETS
02	Tri	36	R30.4/R30.7	14	26

REGISTERED CIVIL ENGINEER 10-31-12 DATE

1-22-13
PLANS APPROVAL DATE

REGISTERED PROFESSIONAL ENGINEER SHAUN ALEXANDER No. C70833 Exp. 06-30-13 CIVIL STATE OF CALIFORNIA

THE STATE OF CALIFORNIA OR ITS OFFICERS OR AGENTS SHALL NOT BE RESPONSIBLE FOR THE ACCURACY OR COMPLETENESS OF SCANNED COPIES OF THIS PLAN SHEET.

NOTES:

1. (N) - NOT A SEPARATE PAY ITEM, FOR INFORMATION ONLY
2. ALL PP CULVERTS SHALL HAVE SMOOTH INTERIOR WALL.

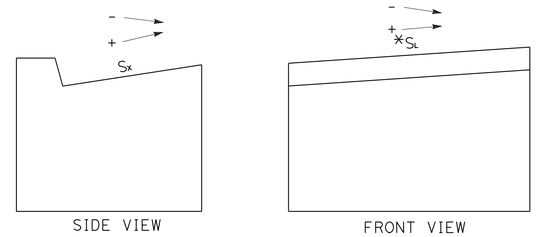

INLET SLOPE FIGURE

*THE SLOPE SL REFERENCES UP-STATION

DRAINAGE QUANTITIES

SHEET No.	DRAINAGE SYSTEM No.	DRAINAGE UNIT No.	ABANDON CULVERT	REMOVE DRAINAGE FACILITY	HOT MIX ASPHALT (TYPE A)	PLACE HOT MIX ASHPHALT (Misc AREA)	MINOR CONCRETE (MINOR STRUCTURE)	Misc IRON AND STEEL	18" CORRUGATED STEEL PIPE (0.109" THICK)	18" CORRUGATED STEEL PIPE DOWNDRAIN (0.109" THICK)	18" ANCHORAGE ASSEMBLY	24" CORRUGATED STEEL PIPE (0.109" THICK)	24" CORRUGATED STEEL PIPE DOWNDRAIN (0.109" THICK)	24" ANCHORAGE ASSEMBLY	24" PLASTIC PIPE	36" PRECAST CONCRETE PIPE INLET	ROCK SLOPE PROTECTION (FACING, METHOD B)	ROCK SLOPE PROTECTION FABRIC (CLASS 8)	(N) SL	(N) SX	(N) HEIGHT	STATION "A1" LINE	DESCRIPTION	SHEET No.	DRAINAGE SYSTEM No.	DRAINAGE UNIT No.
			LF	EA	TON	SQYD	CY	LB	LF	LF	EA	LF	LF	EA	LF	LF	CY	SQYD	%	%	LF					
DP-1	1	a					1.78	473											4.2	16.7	3.5	12+00	DI (TYPE GDO), GRATE (TYPE 24-12X)	DP-1	1	a
		b			3	8.9																12+00	HMA APRON			b
		c										50.2										12+00				c
		d											58.9									12+00				d
		e												3								12+00				e
		f															4	17				12+00				f
DP-2	2	a		1																		11+89 TO 12+18		DP-2	2	a
DP-2	3	a	62																			14+75 TO 14+89	18" CMP	DP-2	3	a
DP-3	4	a					1.62	473											5.0	16.7	3.0	14+75 TO 15+61	DI (TYPE GDO), GRATE (TYPE 24-12X)	DP-3	4	a
		b			3	8.9																14+75	HMA APRON			b
		c													98.1							14+75 TO 15+61				c
		d					0.40	215								11.5					11.0	15+61	DI (TYPE GCP), STEEL GRATE (TYPE 36RX)			d
		e			2	6.3																15+61	HMA APRON			e
		f							22.7													15+61				f
		g								118.9												15+61				g
		h									5											15+61				h
		i															4	17				15+61				i
TOTAL			62	1	8	24.1	3.80	1161	22.7	118.9	5	50.2	58.9	3	98.1	11.5	8	34								

DRAINAGE QUANTITIES

NO SCALE

DQ-1

REVISED BY | DATE REVISED

CALCULATED-DESIGNED BY: JEFF COON | CHECKED BY: SHAUN ALEXANDER

FUNCTIONAL SUPERVISOR: AL TRUJILLO

STATE OF CALIFORNIA - DEPARTMENT OF TRANSPORTATION

Caltrans DESIGN

P:\proj1\02\3E710_plans\pse\23e710id001.dgn

LAST REVISION 10-31-12 | DATE PLOTTED => 23-JAN-2013 | TIME PLOTTED => 08:04

Dist	COUNTY	ROUTE	POST MILES TOTAL PROJECT	SHEET No.	TOTAL SHEETS
02	Tri	36	R30.4/R30.7	15	26

REGISTERED CIVIL ENGINEER 10-31-12 DATE

1-22-13
PLANS APPROVAL DATE

REGISTERED PROFESSIONAL ENGINEER SHAUN ALEXANDER No. C70833 Exp. 06-30-13 CIVIL STATE OF CALIFORNIA

THE STATE OF CALIFORNIA OR ITS OFFICERS OR AGENTS SHALL NOT BE RESPONSIBLE FOR THE ACCURACY OR COMPLETENESS OF SCANNED COPIES OF THIS PLAN SHEET.

NOTES:

1. EXACT SIGN LOCATIONS WILL BE DETERMINED BY THE ENGINEER.
2. CALIFORNIA CODES ARE DESIGNATED BY (CA), OTHERWISE FEDERAL CODES ARE SHOWN.
3. PORTABLE CHANGEABLE MESSAGE SIGN AND W8-3 SIGNS ARE REQUIRED WHEN TRAFFIC CONTROL IS NOT IN PLACE AND UNPAVED CONDITIONS EXIST.

LEGEND

SIGN, STATIONARY MOUNTED, SINGLE POST

TEMPORARY FLASHING BEACON

FRAME 1: REDUCE SPEED

FRAME 2: UNPAVED ROAD AHEAD

PCMS MESSAGE

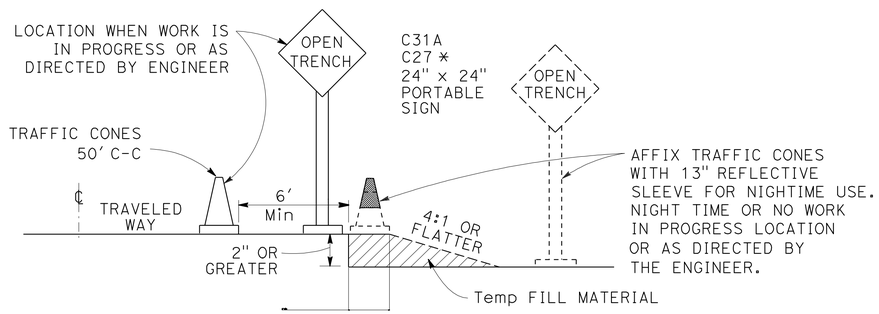

OPEN TRENCH SIGNING AND MARKING

* PLACE AT 250' INTERVALS THROUGH THE OPEN TRENCH AREA, ALTERNATE C27 (OPEN TRENCH) AND C31A (NO SHOULDER) SIGNS

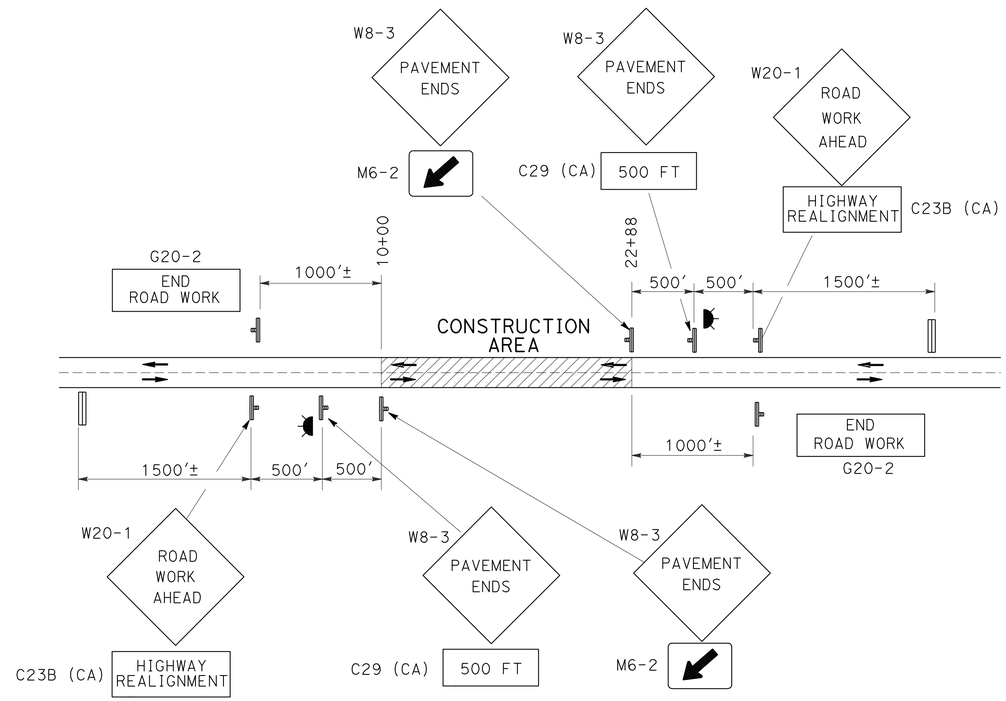

CONSTRUCTION AREA SIGNS (TYPICAL)

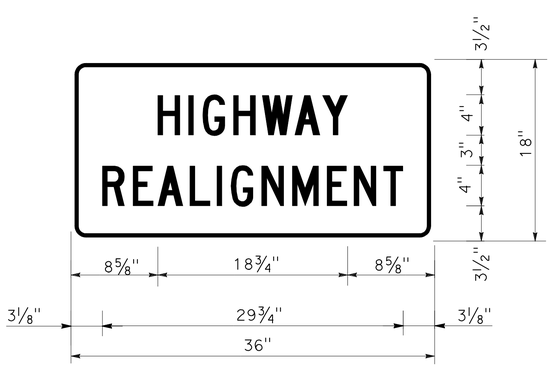

C23B (CA) SIGN DETAIL

1.5" RADIUS, 0.4" BORDER, 0.4" INDENT, BLACK ON ORANGE; [HIGHWAY] C; [REALIGNMENT] C;

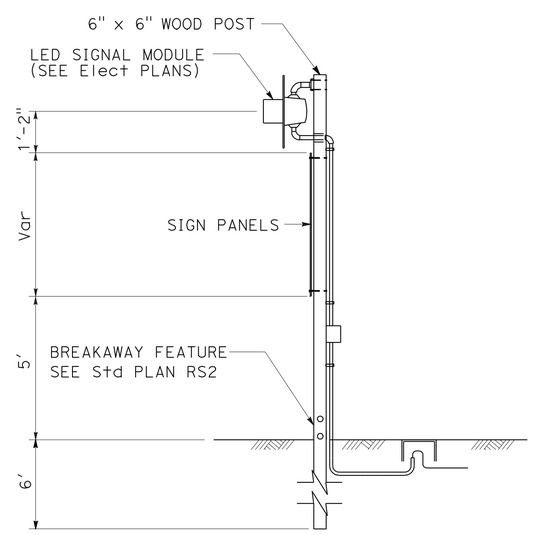

CONSTRUCTION AREA SIGN WITH TEMPORARY FLASHING BEACON

CONSTRUCTION AREA SIGNS (STATIONARY MOUNTED)

CODE	PANEL SIZE	SIGN MESSAGE	No. AND SIZE OF POSTS	EACH
W20-1	48" x 48"	ROAD WORK AHEAD	1-4" x 6"	2
C23B (CA)	36" x 18"	HIGHWAY REALIGNMENT		
W8-3	48" x 48"	PAVEMENT ENDS	1-6" x 6"	2
C29 (CA)	36" x 9"	500 FT		
W8-3	48" x 48"	PAVEMENT ENDS	1-4" x 6"	2
M6-2	21" x 15"	DIRECTIONAL ARROW		
G20-2	36" x 18"	END ROAD WORK	1-4" x 4"	2
TOTAL				8

CONSTRUCTION AREA SIGNS

NO SCALE

CS-1

REVISED BY | DATE REVISED

JEFF COON | SHAUN ALEXANDER

CALCULATED-DESIGNED BY | CHECKED BY

FUNCTIONAL SUPERVISOR: AL TRUJILLO

STATE OF CALIFORNIA - DEPARTMENT OF TRANSPORTATION

Caltrans DESIGN

P:\proj1\02\3E710_plans\pse\23e710ia001.dgn

LAST REVISION 10-31-12 | DATE PLOTTED => 23-JAN-2013 | TIME PLOTTED => 14:44

Dist	COUNTY	ROUTE	POST MILES TOTAL PROJECT	SHEET No.	TOTAL SHEETS
02	Tri	36	R30.4/R30.7	16	26

REGISTERED CIVIL ENGINEER 10-31-12 DATE

1-22-13
PLANS APPROVAL DATE

REGISTERED PROFESSIONAL ENGINEER SHAUN ALEXANDER No. C70833 Exp. 06-30-13 CIVIL STATE OF CALIFORNIA

THE STATE OF CALIFORNIA OR ITS OFFICERS OR AGENTS SHALL NOT BE RESPONSIBLE FOR THE ACCURACY OR COMPLETENESS OF SCANNED COPIES OF THIS PLAN SHEET.

NOTE:

1. EXACT SIGN LOCATION TO BE DETERMINED BY THE ENGINEER.

LEGEND

X-X	ROADSIDE SIGN NUMBER
XXX	PAVEMENT DELINEATION STRIPE DETAIL No.
	ROADSIDE SIGN (1 POST)
	EXISTING ROADSIDE SIGN (1 POST)
	REMOVE ROADSIDE SIGN
XX	SPEED TO BE DETERMINED BY ENGINEER
	REMOVE DELINEATOR
	MILEPOST MARKER
	REMOVE MARKER
	DELINEATOR (TYPE E)
	STRIPING CHANGE
	OBJECT MARKER (TYPE L-1)
C	MARKER (CULVERT)
S=XX′	DELINEATOR SPACING

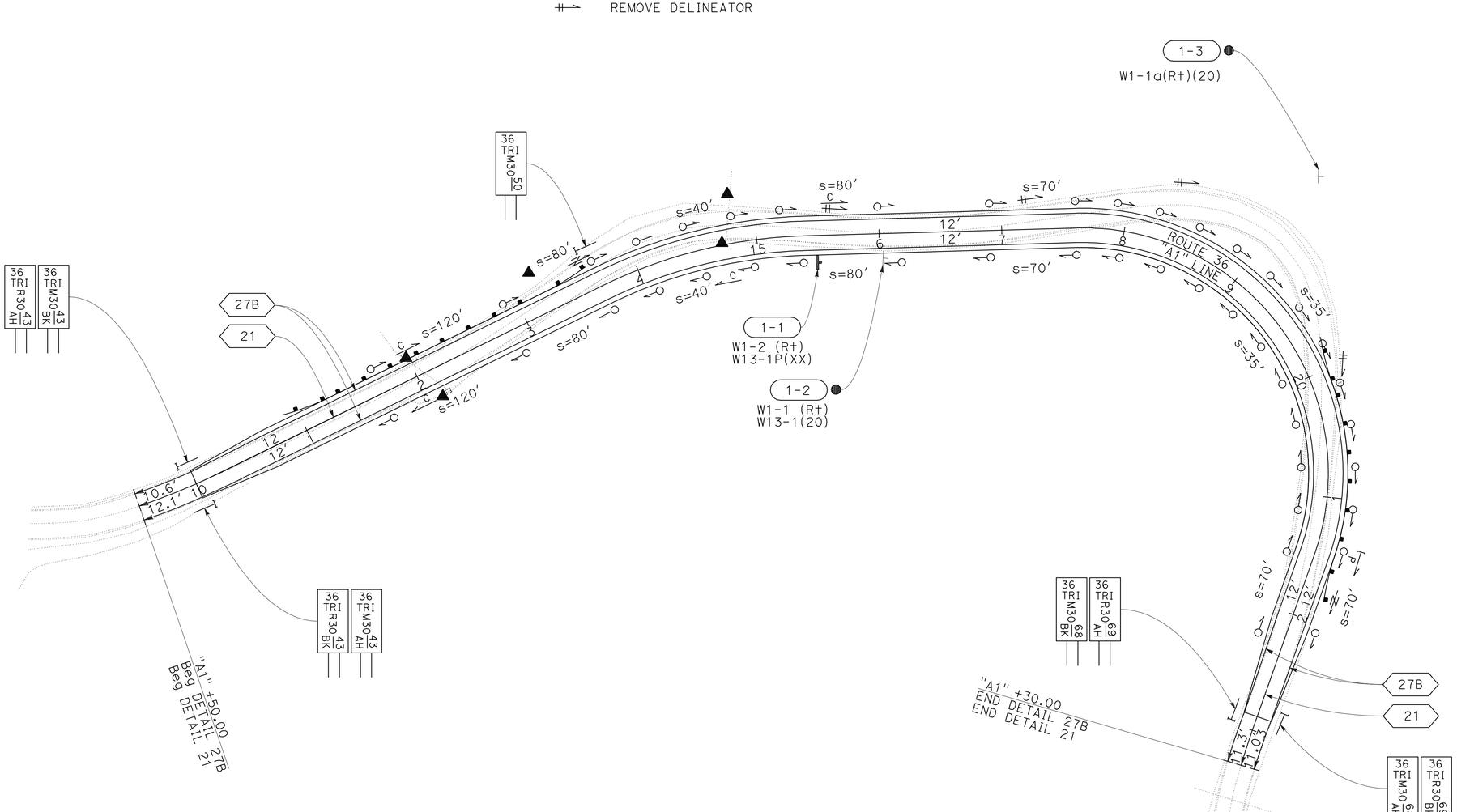

ACCURATE FOR PAVEMENT DELINEATION AND SIGN WORK ONLY

PAVEMENT DELINEATION AND SIGN PLAN

SCALE: 1" = 50′

PD-1

REVISED BY	DATE REVISED

CALCULATED-DESIGNED BY: JEFF COON
CHECKED BY: SHAUN ALEXANDER
FUNCTIONAL SUPERVISOR: AL TRUJILLO

STATE OF CALIFORNIA - DEPARTMENT OF TRANSPORTATION
Caltrans
DESIGN

P:\proj1\02\3E710_plans\pse\23e710na001.dgn

LAST REVISION 10-31-12
DATE PLOTTED => 23-JAN-2013
TIME PLOTTED => 08:04

Dist	COUNTY	ROUTE	POST MILES TOTAL PROJECT	SHEET No.	TOTAL SHEETS
02	Tri	36	R30.4/R30.7	17	26

REGISTERED CIVIL ENGINEER 10-31-12 DATE

1-22-13
PLANS APPROVAL DATE

REGISTERED PROFESSIONAL ENGINEER SHAUN ALEXANDER No. C70833 Exp. 06-30-13 CIVIL STATE OF CALIFORNIA

THE STATE OF CALIFORNIA OR ITS OFFICERS OR AGENTS SHALL NOT BE RESPONSIBLE FOR THE ACCURACY OR COMPLETENESS OF SCANNED COPIES OF THIS PLAN SHEET.

NOTES:

1. USE A 2¼" SQUARE TUBE x 30" LONG, 3/16" THICK ANCHOR FOR 2" POSTS. USE A 3" SQUARE TUBE x 3' LONG, 3/16" THICK ANCHOR FOR 2-1/2 " POSTS.
2. USE A 5/16" CORNER BOLT OR TWO DRIVE RIVETS TO FASTEN ASSEMBLED SIGN AND POST INTO ANCHOR. INSTALL CORNER BOLT OR DRIVE RIVETS INTO THE SIDES FACING TRAFFIC.
3. REMOVE EXISTING AC OR PCC, DRIVE ANCHOR SLEEVE INTO SOIL AND RECAP WITH LIKE MATERIAL, MATCHING EXISTING THICKNESS.
4. 2" POSTS ARE TO BE 1/8" THICK, PERFORATIONS OF 7/16" IN DIAMETER ARE 1" ON CENTER ON ALL SIDES, LENGTHS ARE 10' AND 12'.
5. 2-1/2" POSTS ARE TO BE 1/8" THICK, PERFORATIONS OF 7/16" IN DIAMETER ARE 1" ON CENTER ON ALL SIDES, 2-1/2" POSTS ARE 12' AND 14' IN LENGTH.
6. FOR DETAILS NOT SHOWN, REFER TO THE STANDARD PLANS.
7. ALL ANCHOR SLEEVES SHALL BE EMBEDDED IN MINOR CONCRETE.
8. THE MARKER SHALL BE WHITE (NON-REFLECTIVE) TARGET PLATE WITH BLACK SERIES D NUMERALS AND LETTERS.
9. A POST MILE PREFIX, SUCH AS "R", SHALL APPLY ONLY WHEN DIRECTED BY THE ENGINEER.
10. "BK" (BACK), "AH" (AHEAD), OR A BLANK SPACE SHALL APPLY AS DIRECTED BY THE ENGINEER.
11. ALL INFORMATION SHALL BE IN ENGLISH UNITS (MILES).

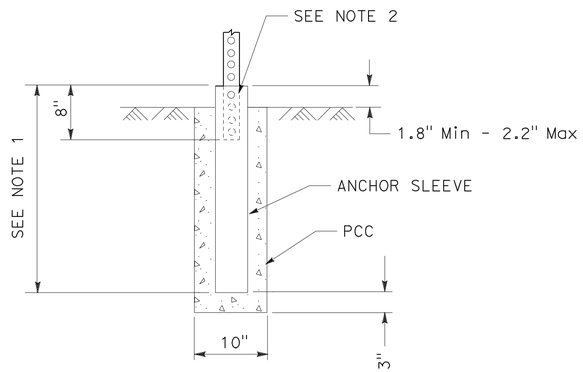

INSTALLATION IN SOIL (PCC)
(SEE NOTE 7)

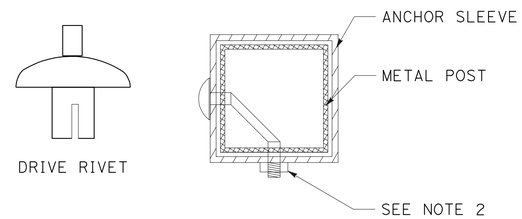

FASTENER DETAILS

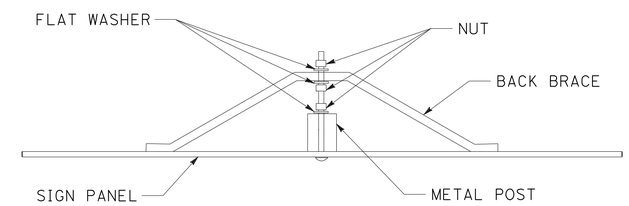

BACK BRACE MOUNTING DETAIL

METAL SIGN POST INSTALLATION DETAILS

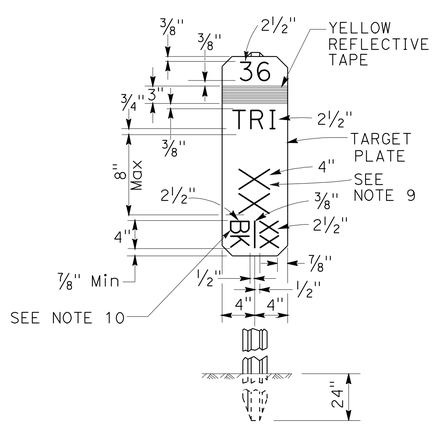

FRONT
BACK

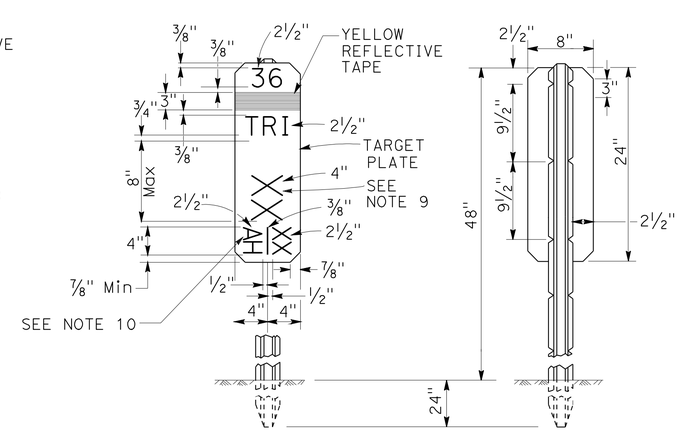

FRONT
AHEAD
REAR

MILEPOST MARKER DETAIL

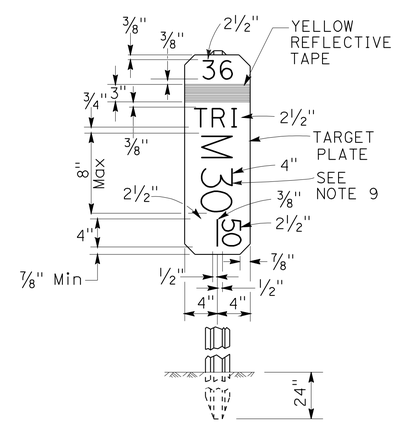

MILEPOST MARKER DETAIL

STATION	POST MILE	QUANTITY
"A1" 10+00.00	R30.43	2
"A1" 10+00.00	M30.43	2
"A1" 13+68.59	M30.50	1
"A1" 22+88.18	M30.68	2
"A1" 22+88.18	R30.69	2

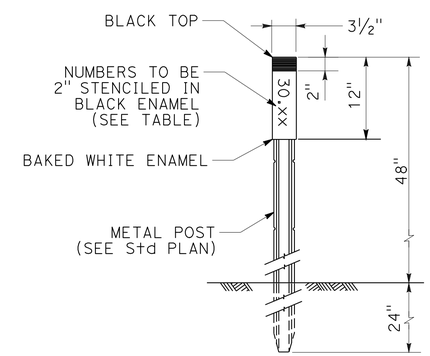

CULVERT MARKER

MARKER (CULVERT)

DRAINAGE SYSTEM	STATION	MARKER (CULVERT)	POSTMILE
1	"A1" 12+00.00	2	M30.47
4	"A1" 14+75.00	1	M30.52
4	"A1" 15+60.87	1	M30.54

PAVEMENT DELINEATION AND SIGN DETAILS

NO SCALE

SD-1

REVISED BY | DATE REVISED
JEFF COON | SHAUN ALEXANDER
CALCULATED-DESIGNED BY | CHECKED BY
FUNCTIONAL SUPERVISOR: AL TRUJILLO
STATE OF CALIFORNIA - DEPARTMENT OF TRANSPORTATION
Caltrans DESIGN

P:\proj1\02\3E710_plans\pse\23e710ob001.dgn

LAST REVISION 10-31-12 | DATE PLOTTED => 23-JAN-2013 | TIME PLOTTED => 09:21

Dist	COUNTY	ROUTE	POST MILES TOTAL PROJECT	SHEET No.	TOTAL SHEETS
02	Tri	36	R30.4/R30.7	18	26

Shaun Alexander 10-31-12
REGISTERED CIVIL ENGINEER DATE

1-22-13
PLANS APPROVAL DATE

REGISTERED PROFESSIONAL ENGINEER SHAUN ALEXANDER No. C70833 Exp. 06-30-13 CIVIL STATE OF CALIFORNIA

THE STATE OF CALIFORNIA OR ITS OFFICERS OR AGENTS SHALL NOT BE RESPONSIBLE FOR THE ACCURACY OR COMPLETENESS OF SCANNED COPIES OF THIS PLAN SHEET.

NOTES:

1. (N) - NOT A SEPARATE PAY ITEM, FOR INFORMATION ONLY.
2. CALIFORNIA SIGN CODES ARE DESIGNATED BY (CA), OTHERWISE, FEDERAL SIGN CODES ARE SHOWN.
3. SPEED TO BE DETERMINED BY ENGINEER.

PAVEMENT DELINEATION QUANTITIES

STATION	THERMOPLASTIC TRAFFIC STRIPE (SPRAYABLE)	
	DETAIL 21	DETAIL 27B
	LF	LF
"A1" 9+50 TO 23+30	1380	
"A1" 9+50 TO 23+30		2760
SUBTOTAL	1380	2760
TOTAL	4140	

CONTRACTOR FURNISHED ROADSIDE SIGN PANELS

No.	SIGN CODE	PANEL SIZE L x D (In x In)	SINGLE FACED	SIGN FACING MATERIAL				FURNISH SINGLE SHEET ALUMINUM (0.080"-UNFRAMED)	DESCRIPTION (REMARKS)
				BACKGROUND		LEGEND			
				SHEETING COLOR	RETROREFLECTIVE ASTM TYPE	SHEETING COLOR	RETROREFLECTIVE ASTM TYPE		
1-1	W1-2(R+)	36 x 36	X	YELLOW	III	BLACK	II	9	CURVE WARNING
1-1	W13-1P (XX)	24 x 24	X	YELLOW	III	BLACK	II	4	XX MPH (SEE NOTE 3)
TOTAL (SQFT)								13	

ROADSIDE SIGNS

SHEET No.	SIGN No. #-#	SIGN CODE	PANEL SIZE L x D (In x In)	(N) POST SIZE AND LENGTH (FT) METAL POST 2½" x 2½"	ROADSIDE SIGN ONE POST	REMOVE ROADSIDE SIGN	DESCRIPTION/REMARKS
					EA	EA	
PD-1	1-1	W1-2(R+) W13-1P (XX)	36 x 36 24 x 24	12	1		RIGHT TURN SYMBOL ADVISORY SPEED (SEE NOTE 3)
	1-2	W1-1(R+) W13-1 (20)				1	RIGHT TURN SYMBOL "20 MPH"
	1-3	W1-1a(R+)(20)				1	RIGHT TURN SYMBOL "20 MPH"
TOTAL					1	2	

MARKERS AND DELINEATORS

SHEET NO.	STATION	DELINEATOR (CLASS 2) TYPE E	MARKER (CULVERT)	MILEPOST MARKER	OBJECT MARKER (TYPE L-1)	REMOVE MARKER	REMOVE DELINEATOR
		EA	EA	EA	EA	EA	EA
PD-1	"A1" 10+00 TO 22+88	44	4	9	2	5	4
TOTAL		44	4	9	2	5	4

PAVEMENT DELINEATION AND SIGN QUANTITIES

SQ-1

REVISED BY | DATE REVISED
JEFF COON | SHAUN ALEXANDER
CALCULATED-DESIGNED BY | CHECKED BY
FUNCTIONAL SUPERVISOR
AL TRUJILLO
STATE OF CALIFORNIA - DEPARTMENT OF TRANSPORTATION
Caltrans DESIGN
V:\Project\Plans\PSEWorking\d2\02-3e7101-rdw\23e710od001.dgn

LAST REVISION 10-31-12 | DATE PLOTTED => 23-JAN-2013 | TIME PLOTTED => 09:21

Dist	COUNTY	ROUTE	POST MILES TOTAL PROJECT	SHEET No.	TOTAL SHEETS
02	Tri	36	R30.4/R30.7	19	26

REGISTERED CIVIL ENGINEER 10-31-12 DATE

1-22-13
PLANS APPROVAL DATE

REGISTERED PROFESSIONAL ENGINEER SHAUN ALEXANDER No. C70833 Exp. 06-30-13 CIVIL STATE OF CALIFORNIA

THE STATE OF CALIFORNIA OR ITS OFFICERS OR AGENTS SHALL NOT BE RESPONSIBLE FOR THE ACCURACY OR COMPLETENESS OF SCANNED COPIES OF THIS PLAN SHEET.

NOTE:

1. (N) - NOT A SEPARATE PAY ITEM, FOR INFORMATION ONLY

TEMPORARY WATER POLLUTION CONTROL

	TEMPORARY FIBER ROLL	TEMPORARY CHECK DAM	TEMPORARY DRAINAGE INLET PROTECTION
	LF	LF	EA
TOTAL	4000	100	2

SAFETY EDGE

STATION	(N) SAFETY EDGE
	LF
"A1" 10+00.00 TO 22+88.18	2070
TOTAL	2070

METAL BEAM GUARD RAILING

STATION	L+/R+	METAL BEAM GUARD RAILING (STEEL POST)	ALTERNATIVE FLARED TERMINAL SYSTEM
		LF	EA
"A1" 11+25	L+		1
"A1" 11+25 TO 13+25	L+	200	
"A1" 13+25	L+		1
"A1" 20+10	L+		1
"A1" 20+10 TO 21+45	L+	146	
"A1" 21+45	L+		1
TOTAL		346	4

ROADWAY QUANTITIES

STATION	COLD PLANE ASPHALT CONCRETE PAVEMENT	ROADWAY EXCAVATION	CLASS 2 AGGREGATE BASE	HOT MIX ASPHALT (TYPE A)	TACK COAT	(N) EMBANKMENT	COMMENTS
	SQYD	CY	CY	TON	TON	CY	
"A1" 10+00.00 TO 22+88.18		14,127	760	1274		14,095	
"A1" 9+75.00 TO 10+00.00	68.4			10	1		CPACP
"A1" 22+88.18 TO 23+13.18	66.1			9			CPACP
"A1" 10+00.00 TO 22+88.18				43			SAFETY EDGE
"A1" 10+00.00 TO 22+88.18				8			FROM DRAINAGE QUANTITIES
TOTAL	135	14,127	760	1301	1	14,095	

SUMMARY OF QUANTITIES

Q-1

REVISED BY | DATE REVISED
JEFF COON | SHAUN ALEXANDER
CALCULATED-DESIGNED BY | CHECKED BY
FUNCTIONAL SUPERVISOR
AL TRUJILLO

STATE OF CALIFORNIA - DEPARTMENT OF TRANSPORTATION
Caltrans
DESIGN

P:\proj1\02\3E710_plans\pse\23e710pa001.dgn

LAST REVISION 10-31-12 | DATE PLOTTED => 23-JAN-2013 | TIME PLOTTED => 09:21

Dist	COUNTY	ROUTE	POST MILES TOTAL PROJECT	SHEET No.	TOTAL SHEETS
02	Tri	36	R30.4/R30.7	20	26

REGISTERED CIVIL ENGINEER 10-04-12 DATE

1-22-13
PLANS APPROVAL DATE

REGISTERED PROFESSIONAL ENGINEER THERESA ANDERSON No. C77957 Exp. 6-30-13 CIVIL STATE OF CALIFORNIA

THE STATE OF CALIFORNIA OR ITS OFFICERS OR AGENTS SHALL NOT BE RESPONSIBLE FOR THE ACCURACY OR COMPLETENESS OF SCANNED COPIES OF THIS PLAN SHEET.

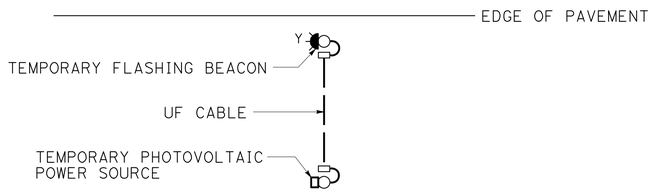

TYPICAL INSTALLATION

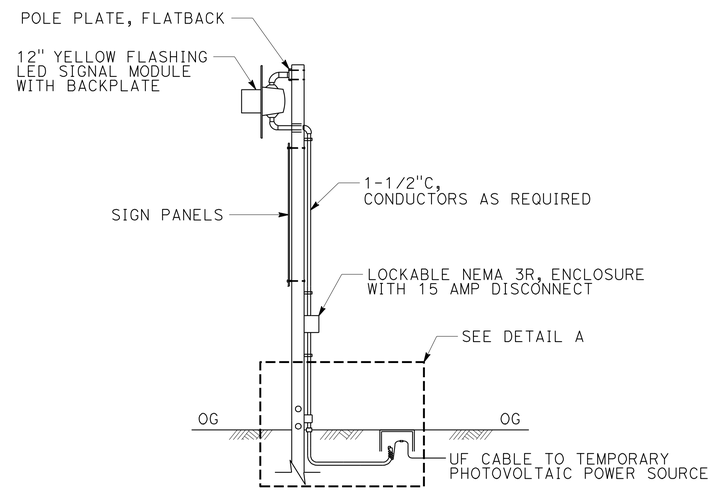

TEMPORARY FLASHING BEACON

FOR DETAILS NOT SHOWN, SEE SHEET CS-1

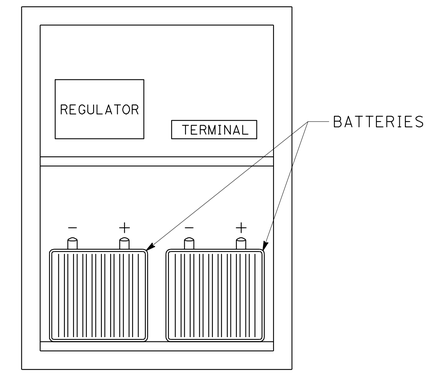

NEMA 4 BATTERY AND CONTROL ENCLOSURE

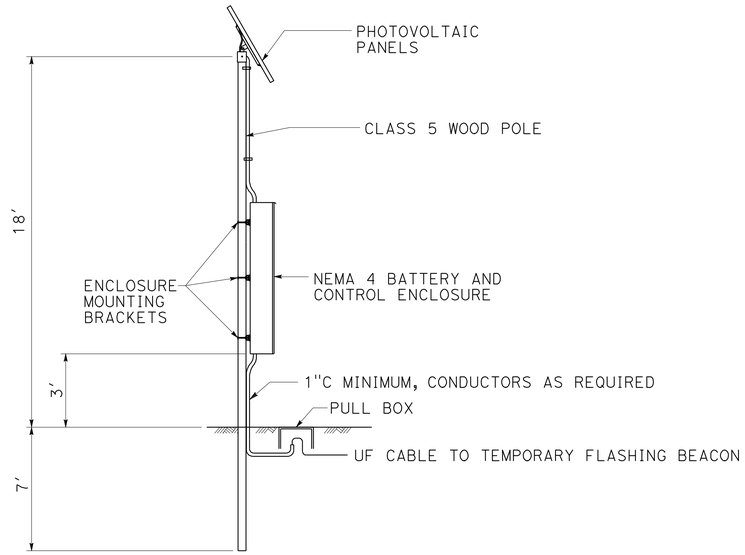

NOTE: POLE SHALL BE LOCATED 15′ FROM ETW OR PROVIDE ATTENUATION.

TEMPORARY PHOTOVOLTAIC POWER SOURCE

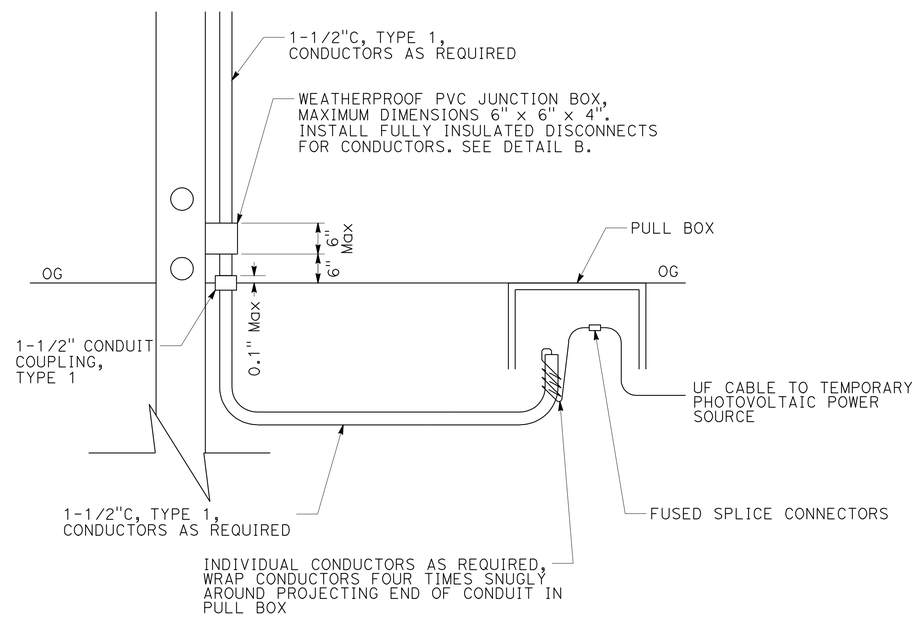

DETAIL A

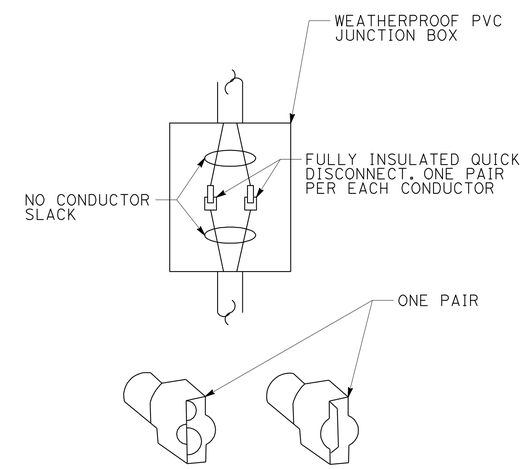

DETAIL B

TEMPORARY FLASHING BEACON SYSTEM

NO SCALE

APPROVED FOR ELECTRICAL WORK ONLY

E-1

REVISED BY	DATE REVISED
TERI ANDERSON	ARTURO ROBLES
CALCULATED-DESIGNED BY	CHECKED BY
FUNCTIONAL SUPERVISOR	ROB STINGER

STATE OF CALIFORNIA - DEPARTMENT OF TRANSPORTATION
Caltrans® ELECTRICAL DESIGN

P:\proj1\02\3E710_plans\pse\23e710ua001.dgn

LAST REVISION 10-31-12 | DATE PLOTTED => 23-JAN-2013 | TIME PLOTTED => 08:16

Dist	COUNTY	ROUTE	POST MILES TOTAL PROJECT	SHEET No.	TOTAL SHEETS
02	Tri	36	R30.4/R30.7	21	26

REGISTERED CIVIL ENGINEER 10-04-12 DATE

1-22-13
PLANS APPROVAL DATE

REGISTERED PROFESSIONAL ENGINEER THERESA ANDERSON No. C77957 Exp. 6-30-13 CIVIL STATE OF CALIFORNIA

THE STATE OF CALIFORNIA OR ITS OFFICERS OR AGENTS SHALL NOT BE RESPONSIBLE FOR THE ACCURACY OR COMPLETENESS OF SCANNED COPIES OF THIS PLAN SHEET.

TEMPORARY FLASHING BEACON SYSTEM

SHEET No.	TRENCH	1" STEEL CONDUIT	1½" STEEL CONDUIT	UF CABLE	No. 5 PULL BOX	PHOTOVOLTAIC PANEL	NEMA 3R ENCLOSURE WITH 15 A DISCONNECT	BATTERY AND CONTROL ENCLOSURE COMPLETE	12" LED SIGNAL MODULE WITH BACKPLATE	6" X 6" WOOD POST	CLASS 5 WOOD POLE
	(N)	(N)	(N)	(N)	(N)	(N)	(N)	(N)	(N)	(N)	(N)
	LF	LF	LF	LF	EA	EA	EA	EA	EA	EA	EA
E-1	40	50	50	40	4	4	2	2	2	2	2

(N) - NOT A SEPARATE PAY ITEM, FOR INFORMATION ONLY

ELECTRICAL QUANTITIES

E-2

STATE OF CALIFORNIA - DEPARTMENT OF TRANSPORTATION
Caltrans® ELECTRICAL DESIGN

FUNCTIONAL SUPERVISOR: ROB STINGER
CALCULATED-DESIGNED BY: TERI ANDERSON
CHECKED BY: ARTURO ROBLES
REVISED BY
DATE REVISED

P:\proj1\02\3E710_plans\pse\23e710ua002.dgn

LAST REVISION 10-31-12
DATE PLOTTED => 23-JAN-2013
TIME PLOTTED => 08:12

Dist	COUNTY	ROUTE	POST MILES TOTAL PROJECT	SHEET No.	TOTAL SHEETS
02	Tri	36	R30.4/R30.7	22	26

REGISTERED CIVIL ENGINEER 12-7-12 DATE

1-22-13
PLANS APPROVAL DATE

REGISTERED PROFESSIONAL ENGINEER Gurinderpal Bhullar No. C48815 Exp. 9-30-14 CIVIL STATE OF CALIFORNIA

THE STATE OF CALIFORNIA OR ITS OFFICERS OR AGENTS SHALL NOT BE RESPONSIBLE FOR THE ACCURACY OR COMPLETENESS OF SCANNED COPIES OF THIS PLAN SHEET.

NOTES:

Unless otherwise specified in the special provisions, all temporary warning signs shall have black legend on orange background.

California code are designated by (CA). Otherwise, Federal (MUTCD) codes are shown.

TYPICAL LANE CLOSURE WITH REVERSIBLE CONTROL

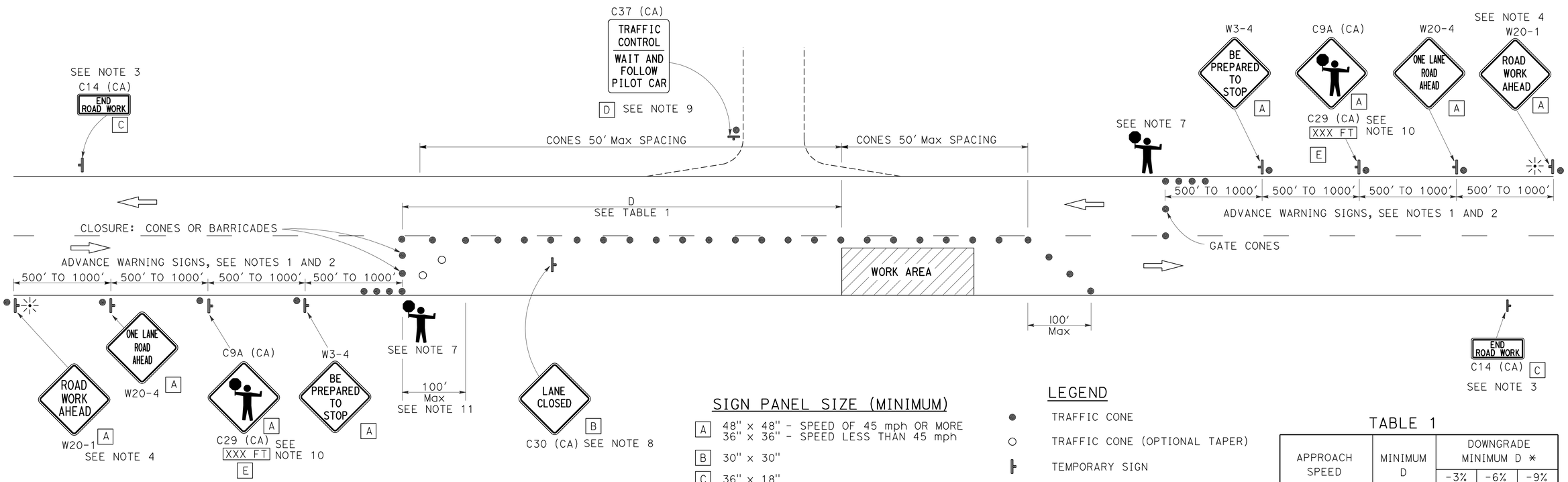

SIGN PANEL SIZE (MINIMUM)

- A: 48" x 48" - SPEED OF 45 mph OR MORE; 36" x 36" - SPEED LESS THAN 45 mph
- B: 30" x 30"
- C: 36" x 18"
- D: 36" x 42"
- E: 36" x 9"

LEGEND

- TRAFFIC CONE
- TRAFFIC CONE (OPTIONAL TAPER)
- TEMPORARY SIGN
- PORTABLE FLASHING BEACON
- FLAGGER

TABLE 1

APPROACH SPEED	MINIMUM D	DOWNGRADE MINIMUM D *		
		-3%	-6%	-9%
mph	ft	ft	ft	ft
25 AND BELOW	155	158	165	173
30	200	205	215	227
35	250	257	271	287
40	305	315	333	354
45	360	378	400	427
50	425	446	474	507
55	495	520	553	593
60	570	598	638	686
65	645	682	728	785

* USE ON SUSTAINED DOWNGRADE STEEPER THAN -3 PERCENT AND LONGER THAN 1 MILE.

NOTES:

1. Where approach speeds are low, advance warning signs may be placed at 300' spacing, and closer in urban areas.
2. Each advance warning sign in each direction of travel shall be equipped with at least two flags for daytime closure. Each flag shall be at least 16" x 16" in size and shall be orange or fluorescent red-orange in color. Flashing beacons shall be placed at the locations indicated for lane closure during hours of darkness.
3. A C14 (CA) "END ROAD WORK" sign, as appropriate, shall be placed at the end of the lane control unless the end of work area is obvious, or ends within a larger project's limits.
4. If the W20-1 sign would follow within 2000' of a stationary W20-1 or C11 (CA) "ROAD WORK NEXT _____MILES", use a W20-4 sign for the first advance warning sign.
5. All cones used for lane closures during the hours of darkness shall be fitted with retroreflective bands (or sleeves) as specified in the specifications.
6. Portable delineators, placed at one-half the spacing indicated for traffic cones, may be used instead of cones for daytime closures only.
7. Additional advance flaggers may be required. Flagger should stand in a conspicuous place, be visible to approaching traffic as well as approaching vehicles after the first vehicle has stopped. During the hours of darkness, the flagging-station and flagger shall be illuminated and clearly visible to approaching traffic. The illumination footprint of the lighting on the ground shall be at least 20' in diameter. Place a minimum of four cones at 50' intervals in advance of flagger station as shown.
8. Place C30 (CA) "LANE CLOSED" sign at 500' to 1000' intervals throughout extended work areas. They are optional if the work area is visible from the flagger station.
9. When a pilot car is used, place a C37 (CA) "TRAFFIC CONTROL-WAIT AND FOLLOW PILOT CAR" sign at all intersections within traffic control area. Signs shall be clean and visible at all times.
10. An optional C29 (CA) sign may be placed below the C9A (CA) sign.
11. Traffic cones or barricades may be placed on the optional taper as shown, barricades shall be Type I, II, or III.

STATE OF CALIFORNIA
DEPARTMENT OF TRANSPORTATION

TRAFFIC CONTROL SYSTEM FOR LANE CLOSURE ON TWO LANE CONVENTIONAL HIGHWAYS

NO SCALE

TCS-1

STATE OF CALIFORNIA - DEPARTMENT OF TRANSPORTATION
Caltrans

FUNCTIONAL SUPERVISOR | CALCULATED-DESIGNED BY | CHECKED BY | REVISED BY | DATE REVISED

LAST REVISION 00-00-00 | DATE PLOTTED => 23-JAN-2013 | TIME PLOTTED => 07:56

DIST	COUNTY	ROUTE	POST MILES TOTAL PROJECT	SHEET No.	TOTAL SHEETS
02	Tri	36	R30.4/R30.7	23	26

REGISTERED CIVIL ENGINEER

January 20, 2012
PLANS APPROVAL DATE

REGISTERED PROFESSIONAL ENGINEER
Cornelis M. Hakim
No. C55610
Exp. 12-31-12
CIVIL
STATE OF CALIFORNIA

THE STATE OF CALIFORNIA OR ITS OFFICERS OR AGENTS SHALL NOT BE RESPONSIBLE FOR THE ACCURACY OR COMPLETENESS OF SCANNED COPIES OF THIS PLAN SHEET.

TO ACCOMPANY PLANS DATED 1-22-13

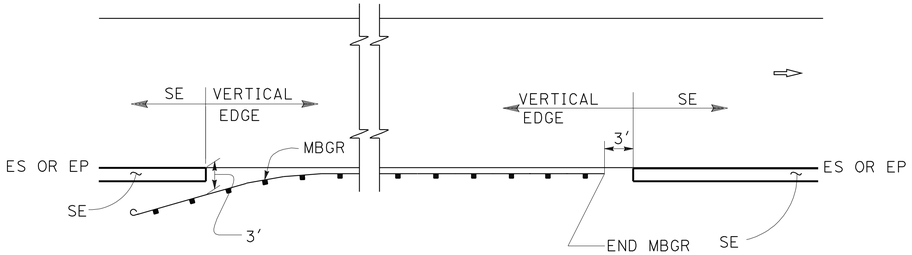

MBGR

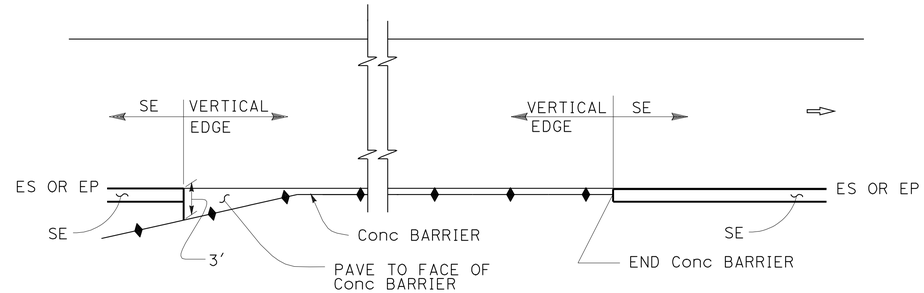

CONCRETE BARRIER

ABBREVIATIONS:

SE SAFETY EDGE

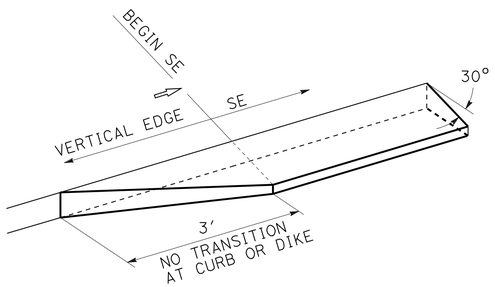

TRANSITION DETAIL
FOR CONCRETE ONLY

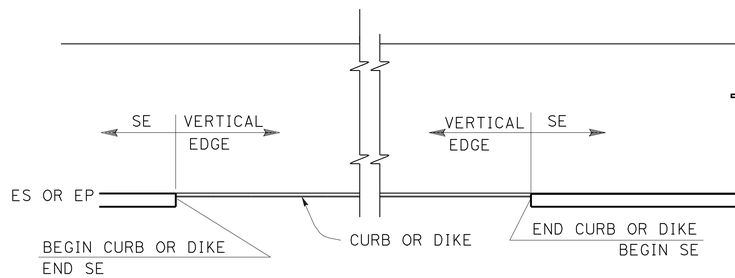

CURB OR DIKE

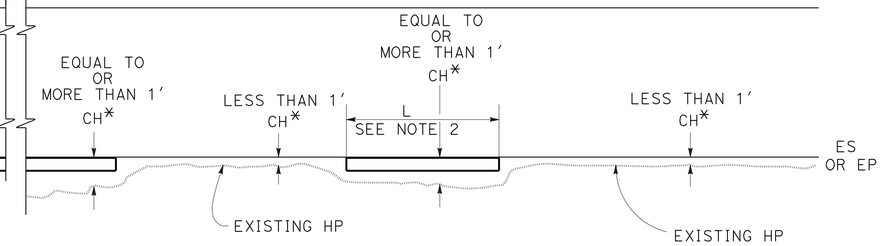

NARROW SIDE SLOPE

* CH = Distance from ES or EP to existing HP.

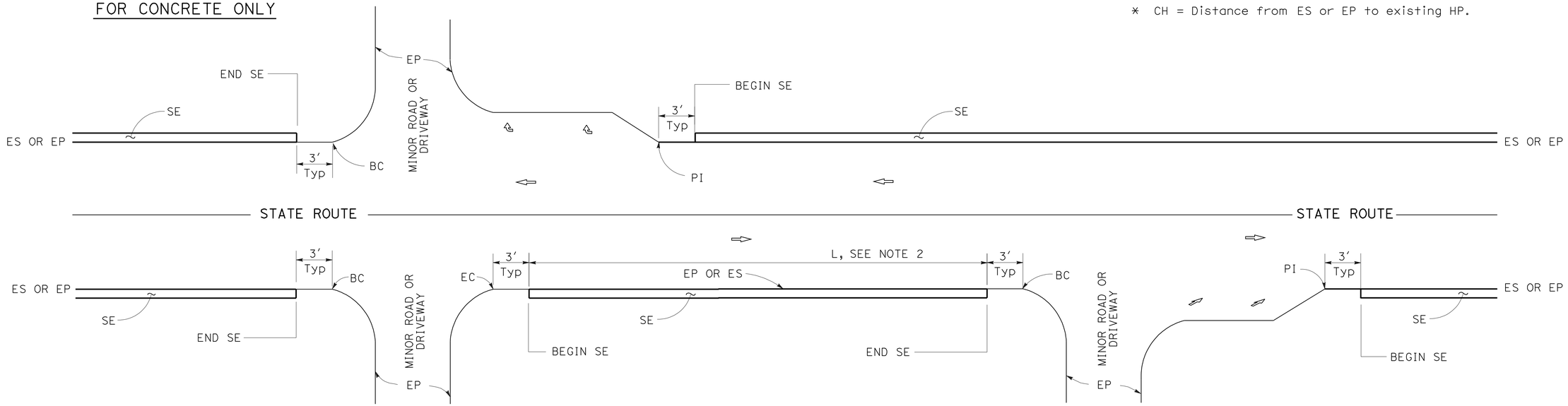

INTERSECTION

MINOR ROADWAY OR DRIVEWAY

DRIVEWAY AND INTERSECTION

NOTES:

1. For details not shown, see Revised Standard Plans RSP P75 and RSP P76.
2. Safety edge is optional when L is less than 30′.

STATE OF CALIFORNIA
DEPARTMENT OF TRANSPORTATION

PAVEMENT EDGE TREATMENTS

NO SCALE

RSP P74 DATED JANUARY 20, 2012 SUPPLEMENTS THE STANDARD PLANS BOOK DATED 2010.

REVISED STANDARD PLAN RSP P74

2010 REVISED STANDARD PLAN RSP P74

01-05-12

DIST	COUNTY	ROUTE	POST MILES TOTAL PROJECT	SHEET No.	TOTAL SHEETS
02	Tri	36	R30.4/R30.7	24	26

REGISTERED CIVIL ENGINEER

January 20, 2012
PLANS APPROVAL DATE

REGISTERED PROFESSIONAL ENGINEER Cornelis M. Hakim No. C55610 Exp. 12-31-12 CIVIL STATE OF CALIFORNIA

THE STATE OF CALIFORNIA OR ITS OFFICERS OR AGENTS SHALL NOT BE RESPONSIBLE FOR THE ACCURACY OR COMPLETENESS OF SCANNED COPIES OF THIS PLAN SHEET.

TO ACCOMPANY PLANS DATED 1-22-13

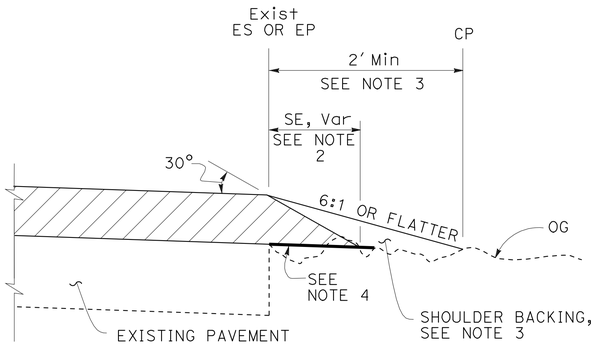

CASE A
Safety Edge

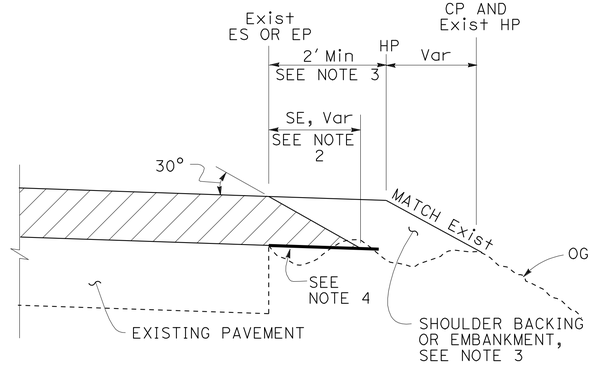

CASE B
Safety Edge

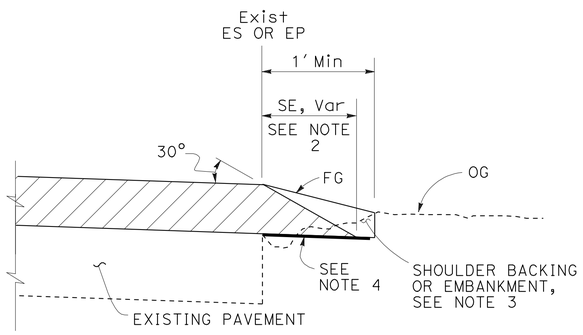

CASE C
Safety Edge

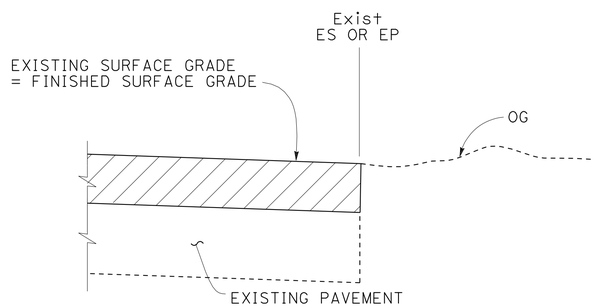

CASE D
Vertical Edge

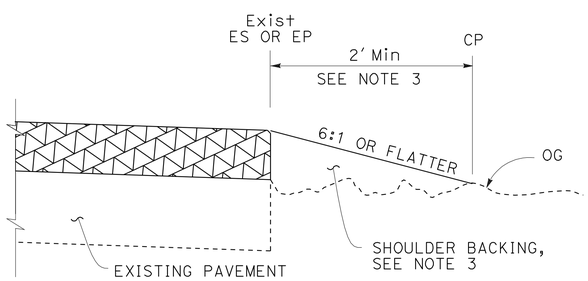

CASE E
Vertical Edge

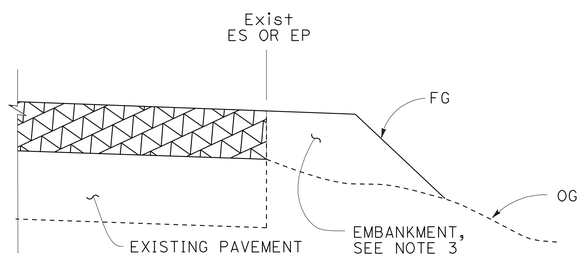

CASE F
Vertical Edge
* See Table A and Revised Std Plan RSP P74

LEGEND:

- HMA OVERLAY
- HMA OR CONCRETE OVERLAY
- CONCRETE OVERLAY

ABBREVIATIONS:

SE SAFETY EDGE
TT TOTAL THICKNESS OF SE

TABLE A
EDGE TREATMENT FOR VARIOUS OVERLAY THICKNESS AND CONDITIONS

	OVERLAY THICKNESS	
FIELD CONDITION	LESS THAN 0.15′	0.15′ OR MORE
Exist SLOPE 6:1 OR FLATTER	CASE E	CASE A
Exist SLOPE 3:1 TO 6:1	CASE E	CASE B
Exist SLOPE STEEPER THAN 3:1	CASE F	CASE F
CUT SECTION (REPLACE, COLD PLANE, MILL PAVEMENT)	CASE D	CASE C

ADDITIONAL HMA OR CONCRETE QUANTITIES FOR SE/SIDE/MILE

TYPICAL CROSS SECTION	TT	TOTAL ADDITIONAL MATERIAL FOR SE/SIDE/MILE		
		HMA (TON)	CONCRETE (CY)*	CONCRETE (CY)**
TT	0.15′	NA	NA	NA
	0.20′	13.7	NA	NA
	0.30′	30.9	NA	NA
	0.40′	54.9	NA	NA
	0.45′	69.4	NA	NA
TT 0.43′	0.50′	84.2	NA	NA
	0.60′	113.9	NA	NA
	0.70′	143.6	70.9	94.2
	0.80′	173.3	85.6	112.2
	0.90′	203.0	100.3	130.2
	1.00′	232.7	114.9	148.2
	1.10′	262.4	129.6	166.2
	1.20′	292.1	144.3	184.2

* For Detail "A"
** For Optional Detail "A"

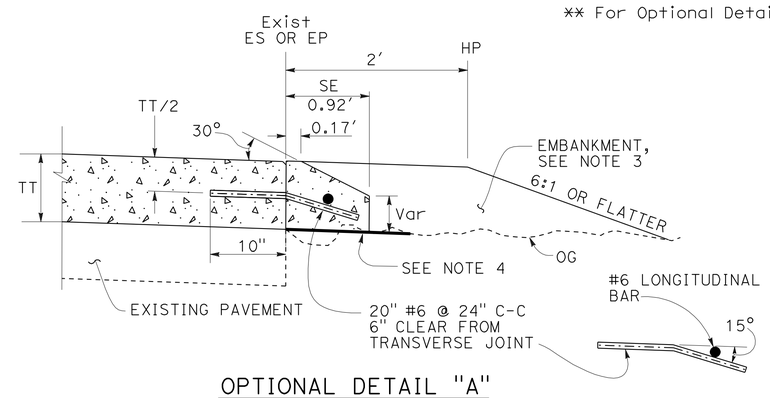

OPTIONAL DETAIL "A"
For concrete overlay
See Note 5

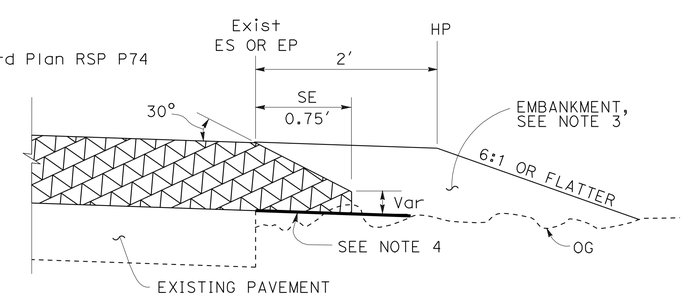

DETAIL "A"
For HMA overlay thickness more than 0.43′ or concrete overlay

NOTES:

1. For limits of safety edge and vertical edge treatments, see Revised Standard Plan RSP P74.
2. Details shown for HMA overlay thickness less than 0.43′. See Detail "A" for HMA overlay thickness more than 0.43′ or concrete overlay.
3. For locations and limits of shoulder backing or embankment see project plans.
4. Grade existing ground to place safety edge. 1′ minimum width
5. Safety edge transverse joint must match overlay transverse joint. End of #6 longitudinal bar must be 2" ±½" clear from transverse joint.
6. Safety edge is not needed in the area of MBGR, barrier, right turn lane and acceleration lane. See Revised Standard Plan RSP P74.

STATE OF CALIFORNIA
DEPARTMENT OF TRANSPORTATION

PAVEMENT EDGE TREATMENTS-OVERLAYS

NO SCALE

RSP P75 DATED JANUARY 20, 2012 SUPPLEMENTS THE STANDARD PLANS BOOK DATED 2010.

REVISED STANDARD PLAN RSP P75

2010 REVISED STANDARD PLAN RSP P75

Dist	COUNTY	ROUTE	POST MILES TOTAL PROJECT	SHEET No.	TOTAL SHEETS
02	Tri	36	R30.4/R30.7	25	26

Raymond Don Tsztoo
REGISTERED CIVIL ENGINEER

July 20, 2012
PLANS APPROVAL DATE

REGISTERED PROFESSIONAL ENGINEER Raymond Don Tsztoo No. C37332 Exp. 6-30-14 CIVIL STATE OF CALIFORNIA

THE STATE OF CALIFORNIA OR ITS OFFICERS OR AGENTS SHALL NOT BE RESPONSIBLE FOR THE ACCURACY OR COMPLETENESS OF SCANNED COPIES OF THIS PLAN SHEET.

TO ACCOMPANY PLANS DATED 1-22-13

2010 REVISED STANDARD PLAN RSP D77B

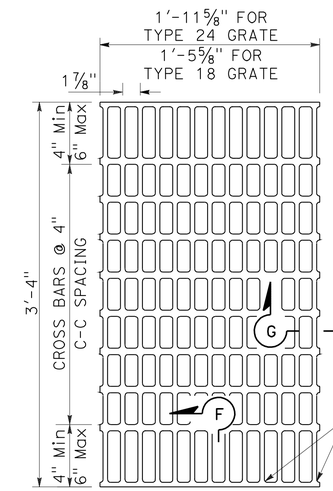

NOTES:

Bearing bars to be 3½" × ¼" bars on 1⅞" centers.

⅜"± ø Cross bars may be fillet welded, resistance welded or electroforged to bearing bars.

Weight of Type 24 grate = 141 LBS.

Weight of Type 18 grate = 107 LBS. (Type 24 grate shown).

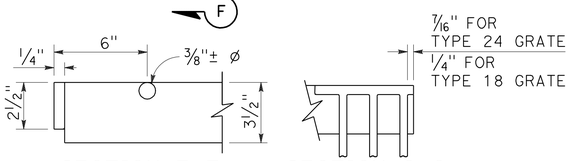

SECTION F-F SECTION G-G

TYPE 18-10 AND 24-13 GRATE

(Welded Steel)

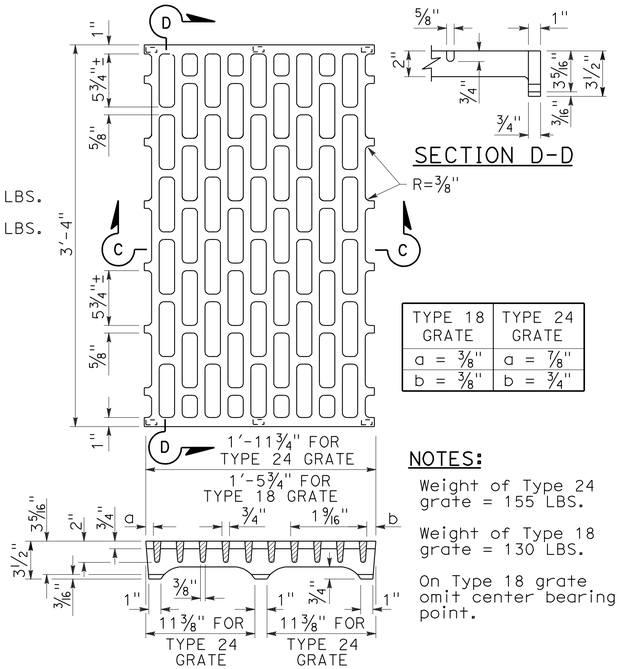

SECTION D-D

TYPE 18 GRATE	TYPE 24 GRATE
a = ⅜"	a = ⅞"
b = ⅜"	b = ¾"

NOTES:

Weight of Type 24 grate = 155 LBS.

Weight of Type 18 grate = 130 LBS.

On Type 18 grate omit center bearing point.

SECTION C-C

TYPE 18-8C AND 24-10C GRATE

(Cast ductile iron)

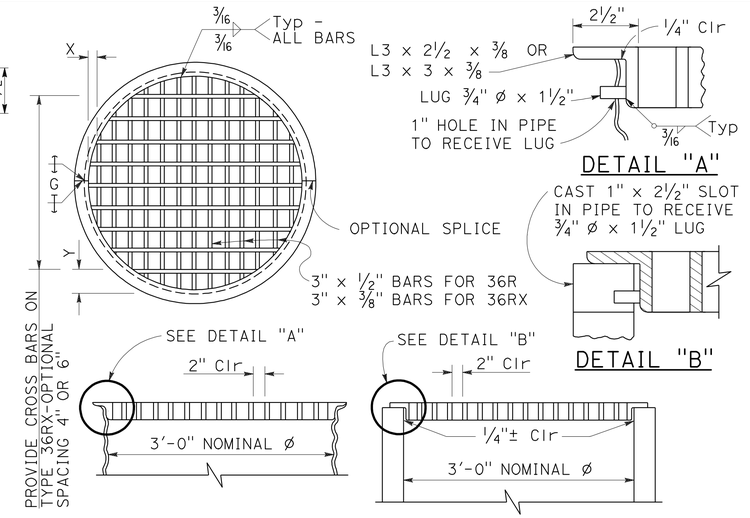

TYPE 36R AND 36RX GRATE DETAILS

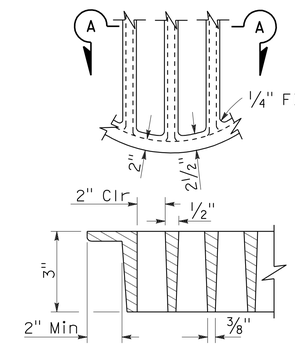

SECTION A-A

ALTERNATIVE CAST DUCTILE IRON GRATE OR CAST CARBON STEEL GRATE TYPE 36R AND 36RX

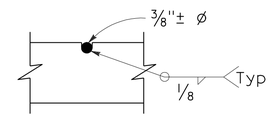

⅜"± ø Cross bars may be fillet welded, resistance welded or electroforged to bearing bars.

CROSS BAR DETAIL TYPE 36RX GRATE (WELDED STEEL)

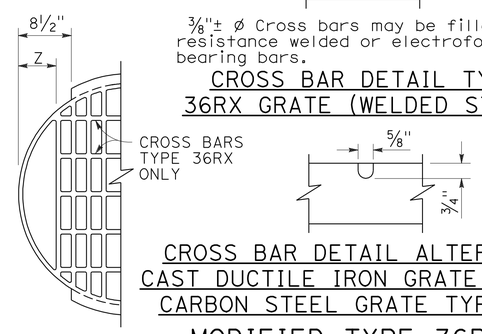

CROSS BAR DETAIL ALTERNATIVE CAST DUCTILE IRON GRATE OR CAST CARBON STEEL GRATE TYPE 36RX

MODIFIED TYPE 36R AND 36RX GRATE FOR ODI INLET

BASIS FOR Misc IRON AND STEEL FINAL PAY WEIGHTS FOR DRAINAGE INLETS

INLET TYPE	GRATE TYPE	No. OF GRATES	WEIGHT LB
GDO (SEE NOTE 4)	24-10C	2	391
	24-10S	2	456
	24-12X	2	473
	24-13	2	374
GO,GOL,G1,G2, G3,G4 (TYPE 24)	24-10C	1	202
	24-10S	1	229
	24-12X	1	239
	24-13	1	188
G4 (TYPE 18) G5,G6	18-8S	1	187
	18-9X	1	187
	18-10	1	149
GT1,GT2	18-8S	2	374
	18-9X	2	374
	18-10	2	298
GT3,GT4	24-10C	2	404
	24-10S	2	458
	24-12X	2	478
	24-13	2	376
ODI	36RX (Mod)	1	196
GMP,GCP,GCPI	36RX	1	215
ODI	36R (Mod)	1	220
GMP,GCP,GCPI	36R	1	236
TRASH RACK			22
GRATE CHAIN			3

NOTES:

1. When alternative grates are allowed - Final pay based on alternative with the lesser weight.
2. Use frame shown on Standard Plan D74A, D74B or RSP D77A as appropriate.
3. When Type 24-10S, 24-12X or 24-13 grates are used with GDO Inlets, a ¼" × 3½" × 3'-4⅞" steel bar shall be welded across the center of inlet frame to separate the individual grates.
4. See Revised Standard Plan RSP D77A for connecting chain to welded grate and frame. When chain is required, do not use cast ductile iron grate.

GRATE BAR SPACING TABLE

TYPE	No. OF BARS	CLEAR BAR SPACING	X	Y 4" SPACING	Y 6" SPACING	Z
36R	13	2"	2⅛"	-	-	-
36RX (STEEL)	15	2"	9/16"	3¾"	5¾"	-
36RX (CAST)	13	2"	2⅛"	3¾"	5¾"	-
36R Mod	12	2"	2⅛"	-	-	5"
36RX Mod (STEEL)	13	2"	9/16"	3¾"	5¾"	5 11/16"
36RX Mod (CAST)	12	2"	2⅛"	3¾"	5¾"	5"

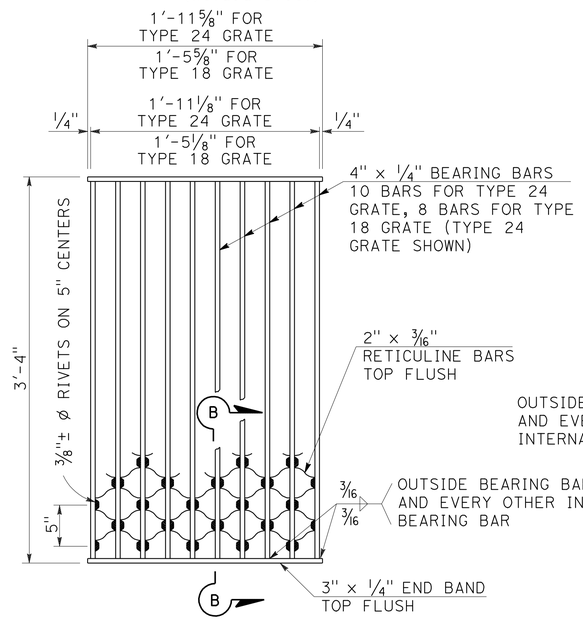

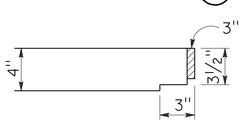

NOTES:

Weight of Type 24 grate = 182 LBS.
Weight of Type 18 grate = 145 LBS.

SECTION B-B

TYPE 18-8S AND 24-10S GRATE

(Welded Steel) Reticuline type

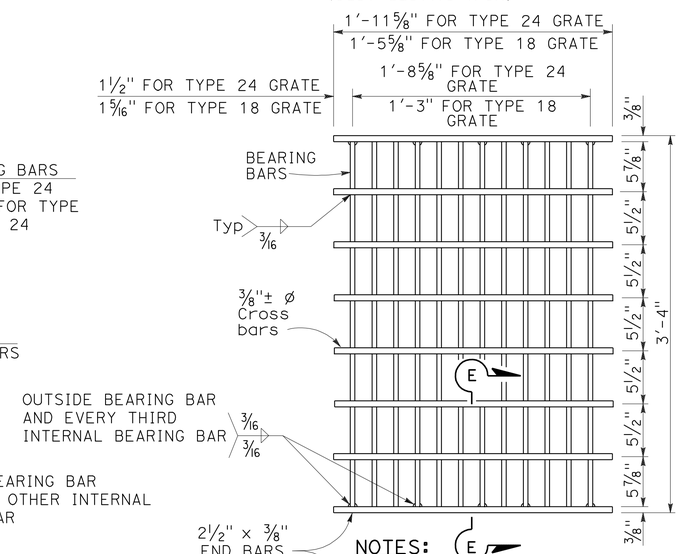

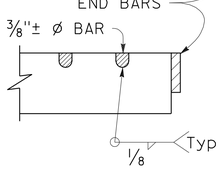

SECTION E-E

NOTES:

Bearing bars to be 3½" × ⅜" bars on 1⅞" centers.

12 Bars for Type 24 grate - 9 bars for Type 18 grates. (Type 24 grate shown).

Weight of Type 24 grate = 192 LBS.

Weight of Type 18 grate = 145 LBS.

⅜"± ø Cross bars may be fillet welded, resistance welded or electroforged to bearing bars.

TYPE 18-9X AND 24-12X GRATE

(Welded Steel)

STATE OF CALIFORNIA
DEPARTMENT OF TRANSPORTATION

BICYCLE TRAVERSABLE GRATE DETAILS

NO SCALE

RSP D77B DATED JULY 20, 2012 SUPERSEDES STANDARD PLAN D77B DATED MAY 20, 2011 - PAGE 165 OF THE STANDARD PLANS BOOK DATED 2010.

REVISED STANDARD PLAN RSP D77B

4-17-12

DIST	COUNTY	ROUTE	POST MILES TOTAL PROJECT	SHEET NO.	TOTAL SHEETS
02	Tri	36	R30.4/R30.7	26	26

Jeffery G. McRae
REGISTERED ELECTRICAL ENGINEER

January 20, 2012
PLANS APPROVAL DATE

REGISTERED PROFESSIONAL ENGINEER
Jeffery G. McRae
No. E14512
Exp. 6-30-12
ELECTRICAL
STATE OF CALIFORNIA

THE STATE OF CALIFORNIA OR ITS OFFICERS OR AGENTS SHALL NOT BE RESPONSIBLE FOR THE ACCURACY OR COMPLETENESS OF SCANNED COPIES OF THIS PLAN SHEET.

TO ACCOMPANY PLANS DATED 1-22-13

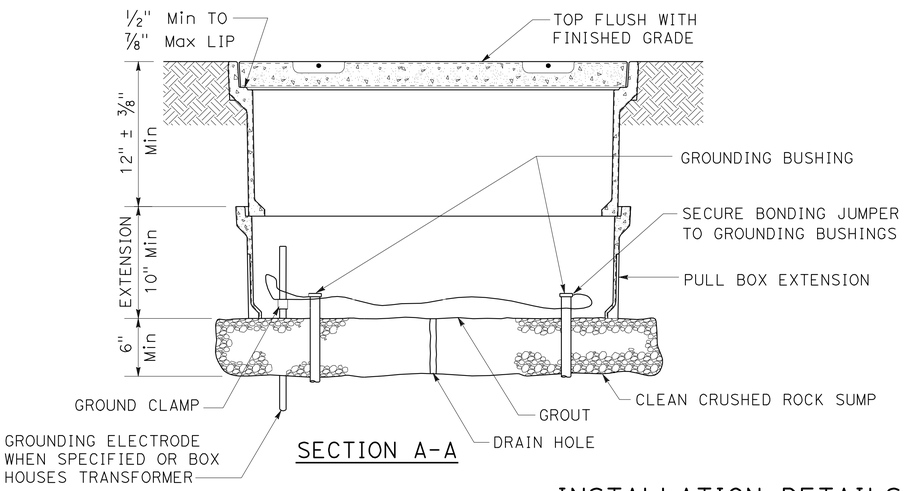

SECTION A-A

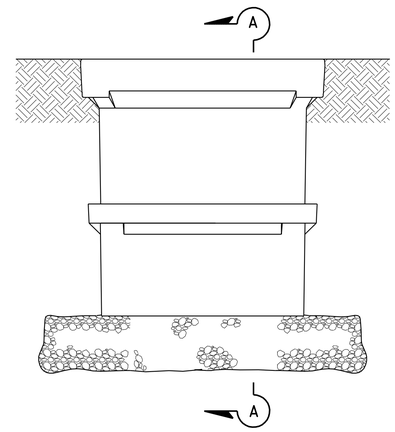

SIDE VIEW

INSTALLATION DETAILS

DETAIL A

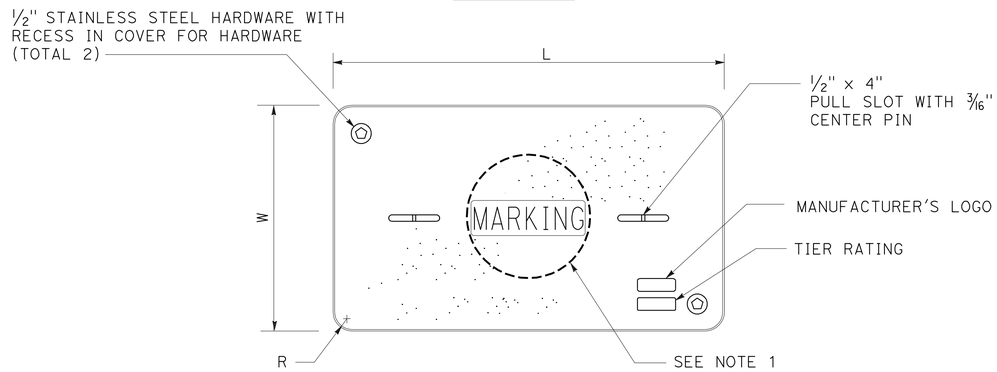

COVER TOP VIEW

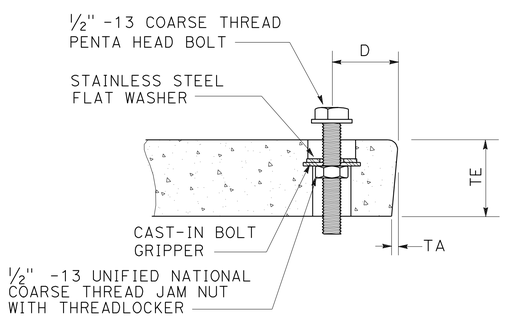

TYPICAL COVER CAPTIVE BOLT

OR SIMILAR

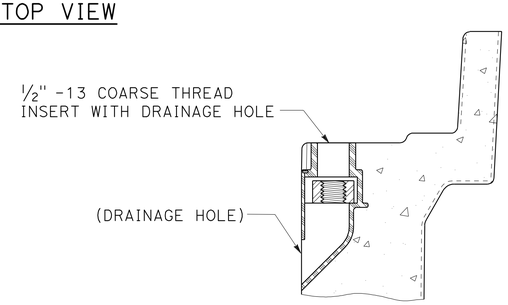

TYPICAL THREADED INSERT

OR SIMILAR

DIMENSION TABLE										
PULL BOX	PULL BOX			COVER						
	MINIMUM DEPTH BOX	MINIMUM DEPTH EXTENSION	MAXIMUM WEIGHT	L	W	R	TE	TA	D	MAXIMUM WEIGHT
No. 3 1/2	12"	N/A	40 lb	1' - 3 3/8"	10 1/8"	1 3/8"	2"	1/8"	1 3/4"	30 lb
No. 5	12"	10"	55 lb	1' - 11 1/4"	1' - 1 3/4"	1 3/8"	2"	1/8"	1 3/4"	60 lb
No. 6	12"	10"	70 lb	2' - 6 1/2"	1' - 5 1/2"	1 3/8"	2"	1/8"	2"	85 lb

NOTES ON PULL BOXES:

1. Pull box covers must be marked as follows: "SERVICE" Service circuits between service point and service disconnect; "SPRINKLER-CONTROL" sprinkler control circuits, 50 V or less; "CALTRANS" on all pull boxes, except pull boxes marked "SPRINKLER-CONTROL"; and "TELEPHONE" Telephone service;

   A) No. 3 1/2 pull box.
      1) "SIGNAL" - Traffic signal circuits with or without street or sign lighting circuits.
      2) "ST LIGHTING" - Street or sign lighting circuits where voltage is under 600 V.

   B) No. 5, 6, 9 or 9A pull box.
      1) "TRAFFIC SIGNAL" - Traffic signal circuits with or without street or sign lighting circuits.
      2) "STREET LIGHTING" - Street or sign lighting circuits where voltage is under 600 V.
      3) "STREET LIGHTING-HIGH VOLTAGE" - Street or sign lighting circuits where voltage is above 600 V.
      4) "IRRIGATION" - Circuits to irrigation controller 120 V or more.
      5) "RAMP METER" - Ramp meter circuits.
      6) "COUNT STATION" - Count or speed monitor circuits.
      7) "COMMUNICATIONS" - Communication circuits.
      8) "TOS COMMUNICATIONS" - TOS communication line.
      9) "TOS POWER" - TOS power.
      10) "TDC POWER" - Telephone demarcation cabinet power.
      11) "CCTV" - Closed circuit television circuits.
      12) "TMS" - Traffic monitoring station circuits.
      13) "CMS" - Changeable message sign circuits.
      14) "HAR" - Highway advisory radio circuits.

2. The nominal dimensions of the opening in which the cover sets must be the same as the cover dimensions (L and W) plus 1/8" or greater.

3. Covers and boxes must be interchangeable with California Standard. When interchanged with a standard, the top surfaces must be flush within 1/8". Top outside radius of covers and pull boxes must have a 1/8" radius.

4. Pull box extension may be another pull box as long as the bottom edge of the pull box can fit into the cover opening.

STATE OF CALIFORNIA
DEPARTMENT OF TRANSPORTATION

ELECTRICAL SYSTEMS (PULL BOX)

NO SCALE

RSP ES-8A DATED JANUARY 20, 2012 SUPPLEMENTS THE STANDARD PLANS BOOK DATED 2010.

REVISED STANDARD PLAN RSP ES-8A

2010 REVISED STANDARD PLAN RSP ES-8A

01-09-12