Dist	COUNTY	ROUTE	POST MILES TOTAL PROJECT	SHEET No.	TOTAL SHEETS
02	Sis	5	68.3	1	120

STATE OF CALIFORNIA

DEPARTMENT OF TRANSPORTATION

ACSTPI-005-(173)E

PROJECT PLANS FOR CONSTRUCTION ON

STATE HIGHWAY

IN SISKIYOU COUNTY ABOUT 19 MILES NORTH OF YREKA AT HILT ROAD OVERCROSSING

TO BE SUPPLEMENTED BY STANDARD PLANS DATED MAY 2010

INDEX OF PLANS

SHEET No.	DESCRIPTION
1	TITLE AND LOCATION MAP
2-4	TYPICAL CROSS SECTIONS
5-6	LAYOUTS
7-12	PROFILES AND SUPERELEVATION DIAGRAMS
13-23	CONSTRUCTION DETAILS
24-29	DRAINAGE PLANS, PROFILES, DETAILS AND QUANTITIES
30	CONSTRUCTION AREA SIGNS
31-33	TRAFFIC HANDLING PLANS
34-35	DETOUR PLANS
36-38	PAVEMENT DELINEATION PLANS, DETAILS AND QUANTITIES
39-51	SIGN PLANS, DETAILS AND QUANTITIES
52-53	SUMMARY OF QUANTITIES
54-56	EROSION CONTROL PLANS AND QUANTITIES
57-61	ELECTRICAL PLANS
62-100	REVISED STANDARD PLANS

STRUCTURE PLANS

101-120	STRUCTURES

THE STANDARD PLANS LIST APPLICABLE TO THIS CONTRACT IS INCLUDED IN THE NOTICE TO BIDDERS AND SPECIAL PROVISIONS BOOK.

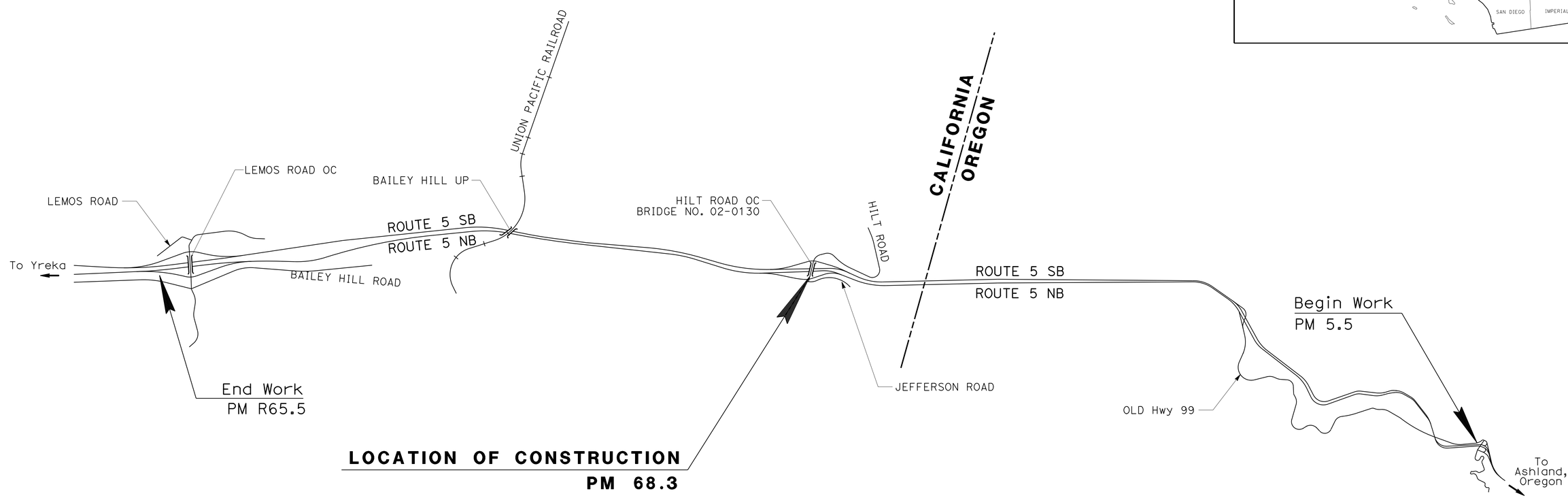

LOCATION MAP

NO SCALE

THE CONTRACTOR SHALL POSSESS THE CLASS (OR CLASSES) OF LICENSE AS SPECIFIED IN THE "NOTICE TO BIDDERS."

PROJECT MANAGER: DEREK WILLIS

DESIGN ENGINEER: JULIE CASEY

P:\proj1\02\3E730_plans\pse\23e730ab001.dgn

11-25-14
PROJECT ENGINEER DATE
REGISTERED CIVIL ENGINEER

November 26, 2014
PLANS APPROVAL DATE

REGISTERED PROFESSIONAL ENGINEER
JAVED IQBAL
No. C82518
Exp. 9/30/16
CIVIL
STATE OF CALIFORNIA

THE STATE OF CALIFORNIA OR ITS OFFICERS OR AGENTS SHALL NOT BE RESPONSIBLE FOR THE ACCURACY OR COMPLETENESS OF SCANNED COPIES OF THIS PLAN SHEET.

CONTRACT No.	02-3E7304
PROJECT ID	0200020157

LAST REVISION 11-25-14 DATE PLOTTED => 23-JAN-2015 TIME PLOTTED => 12:35

Dist	COUNTY	ROUTE	POST MILES TOTAL PROJECT	SHEET No.	TOTAL SHEETS
02	Sis	5	68.3	2	120

REGISTERED CIVIL ENGINEER 11-25-14 DATE

11-26-14
PLANS APPROVAL DATE

REGISTERED PROFESSIONAL ENGINEER JAVED IQBAL No. C82518 Exp. 9/30/16 CIVIL STATE OF CALIFORNIA

THE STATE OF CALIFORNIA OR ITS OFFICERS OR AGENTS SHALL NOT BE RESPONSIBLE FOR THE ACCURACY OR COMPLETENESS OF SCANNED COPIES OF THIS PLAN SHEET.

NOTES:

1. DIMENSIONS OF THE PAVEMENT STRUCTURES (STRUCTURAL SECTIONS) ARE SUBJECT TO TOLERANCES SPECIFIED IN THE STANDARD SPECIFICATIONS.
2. FOR ACCURATE RIGHT OF WAY DATA, CONTACT RIGHT OF WAY ENGINEERING AT THE DISTRICT OFFICE.
3. SUPERELEVATIONS ARE SHOWN ON THE SUPERELEVATION DIAGRAMS.

DESIGN DESIGNATION:

ADT (2015)	16100	D	53%
ADT (2040)	20800	T	24%
DHV	2400	V	70 mph
ESAL	6720900	TI_{10}	11.5

CLIMATE REGION:

HIGH DESERT

LEGEND:

S1 0.3′ SHOULDER BACKING

S2 0.4′ SHOULDER BACKING

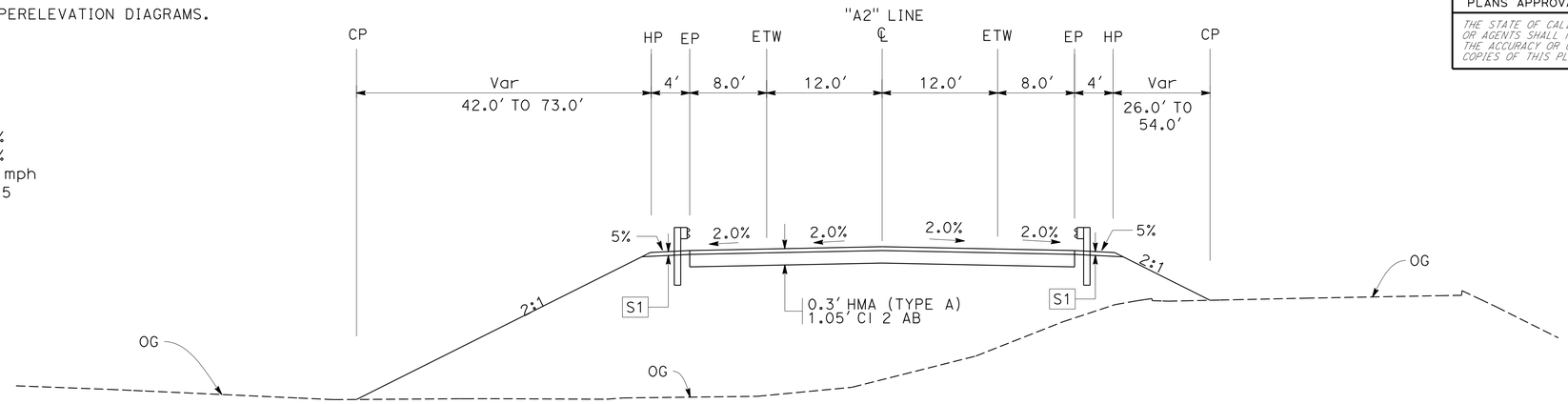

HILT ROAD

"A2" 17+00.00 TO "A2" 18+93.22 BB
"A2" 21+27.45 EB TO "A2" 23+06.45

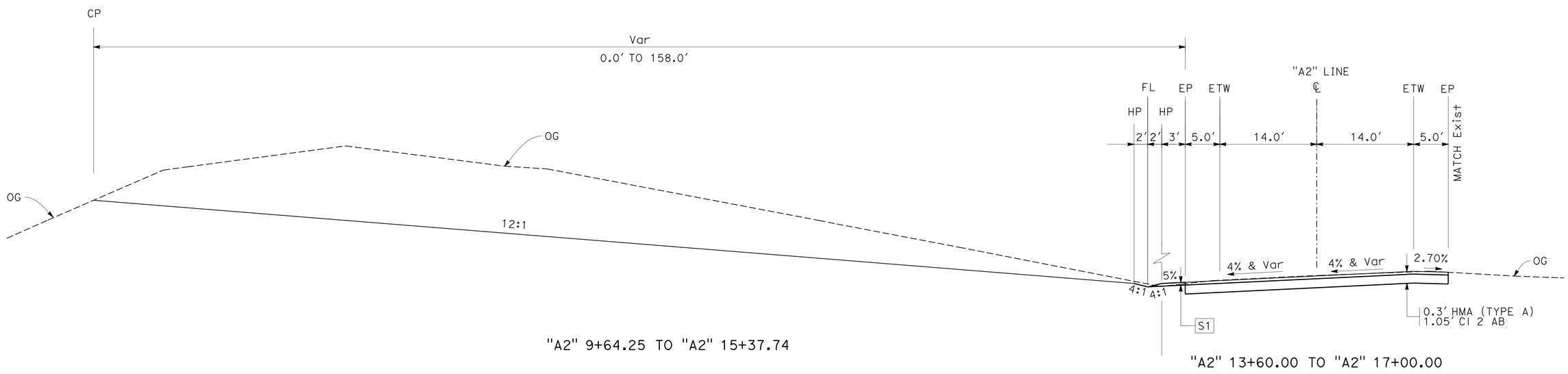

"A2" 9+64.25 TO "A2" 15+37.74

"A2" 13+60.00 TO "A2" 17+00.00

HILT ROAD

"A2" 9+64.25 TO "A2" 17+00.00

TYPICAL CROSS SECTIONS

NO SCALE

X-1

REVISED BY | DATE REVISED
JAVED IQBAL | JULIE CASEY
CALCULATED-DESIGNED BY | CHECKED BY
FUNCTIONAL SUPERVISOR: JULIE CASEY

STATE OF CALIFORNIA - DEPARTMENT OF TRANSPORTATION
Caltrans® DESIGN

P:\proj1\02\3E730_plans\pse\23e730ca001.dgn

LAST REVISION 11-25-14 | DATE PLOTTED => 23-JAN-2015 | TIME PLOTTED => 12:35

Dist	COUNTY	ROUTE	POST MILES TOTAL PROJECT	SHEET No.	TOTAL SHEETS
02	Sis	5	68.3	3	120

REGISTERED CIVIL ENGINEER 11-25-14 DATE

11-26-14
PLANS APPROVAL DATE

REGISTERED PROFESSIONAL ENGINEER JAVED IQBAL No. C82518 Exp. 9/30/16 CIVIL STATE OF CALIFORNIA

THE STATE OF CALIFORNIA OR ITS OFFICERS OR AGENTS SHALL NOT BE RESPONSIBLE FOR THE ACCURACY OR COMPLETENESS OF SCANNED COPIES OF THIS PLAN SHEET.

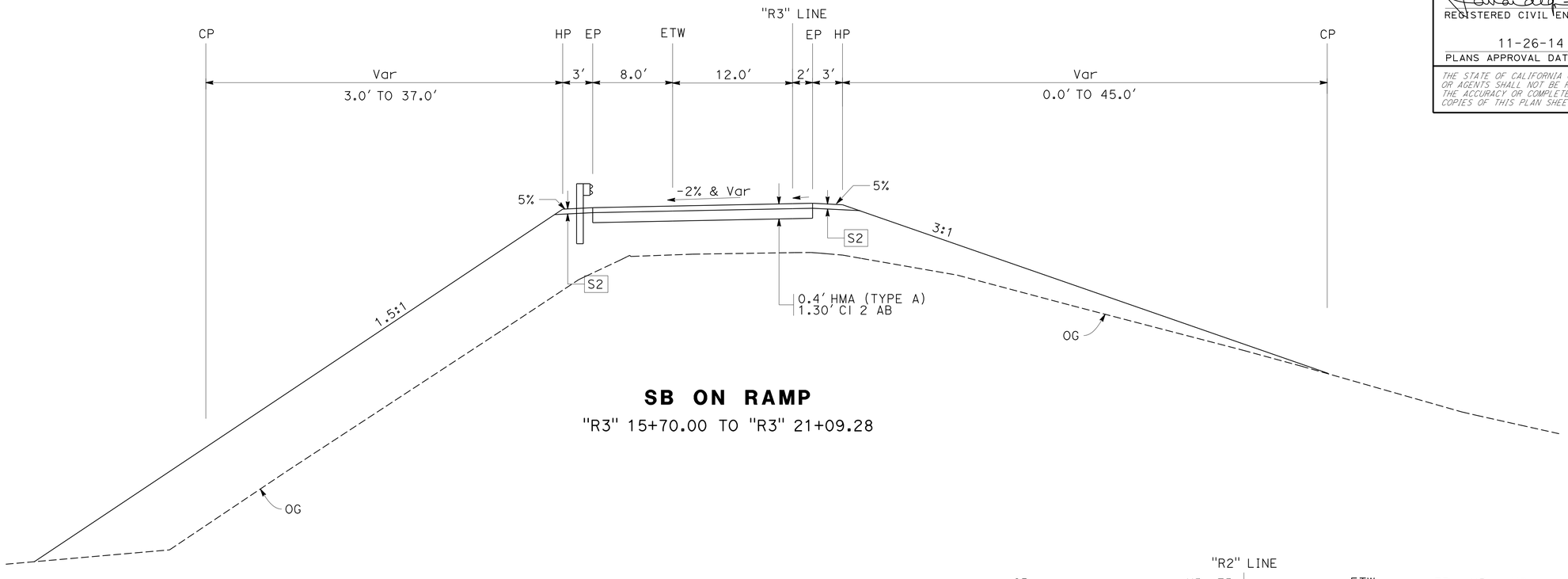

SB ON RAMP

"R3" 15+70.00 TO "R3" 21+09.28

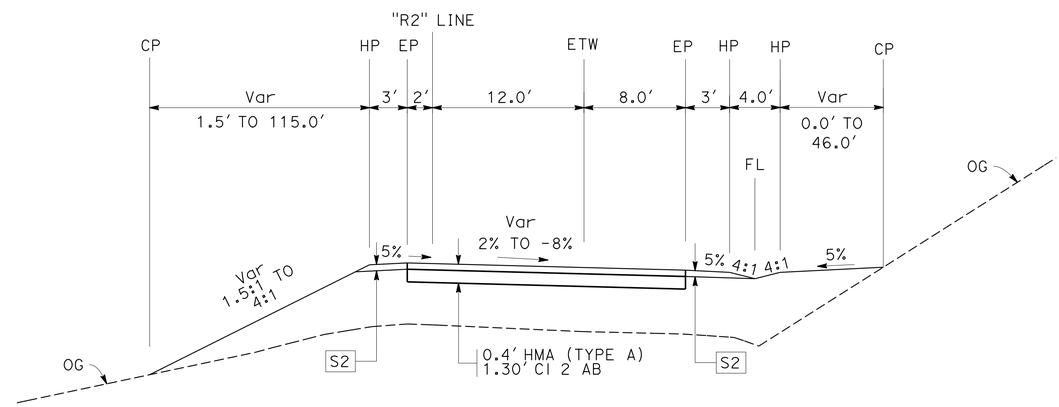

NB ON RAMP

"R2" 10+20.00 TO "R2" 15+12.00

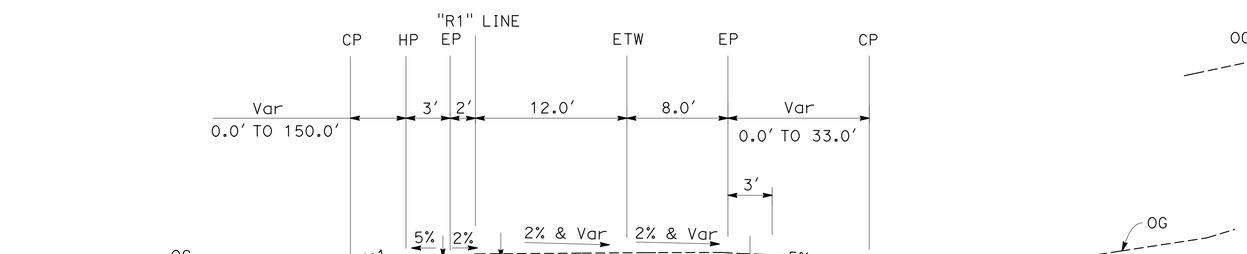

NB OFF RAMP

"R1" 19+82.49 TO "R1" 21+84.38

TYPICAL CROSS SECTIONS

NO SCALE

X-2

REVISED BY	DATE REVISED
JAVED IQBAL	JULIE CASEY
CALCULATED-DESIGNED BY	CHECKED BY
FUNCTIONAL SUPERVISOR	JULIE CASEY

STATE OF CALIFORNIA - DEPARTMENT OF TRANSPORTATION
Caltrans
DESIGN

P:\proj1\02\3E730_plans\pse\23e730ca002.dgn

LAST REVISION 11-25-14 | DATE PLOTTED => 23-JAN-2015 | TIME PLOTTED => 12:35

Dist	COUNTY	ROUTE	POST MILES TOTAL PROJECT	SHEET No.	TOTAL SHEETS
02	Sis	5	68.3	4	120

REGISTERED CIVIL ENGINEER 11-25-14 DATE

11-26-14
PLANS APPROVAL DATE

REGISTERED PROFESSIONAL ENGINEER JAVED IQBAL No. C82518 Exp. 9/30/16 CIVIL STATE OF CALIFORNIA

THE STATE OF CALIFORNIA OR ITS OFFICERS OR AGENTS SHALL NOT BE RESPONSIBLE FOR THE ACCURACY OR COMPLETENESS OF SCANNED COPIES OF THIS PLAN SHEET.

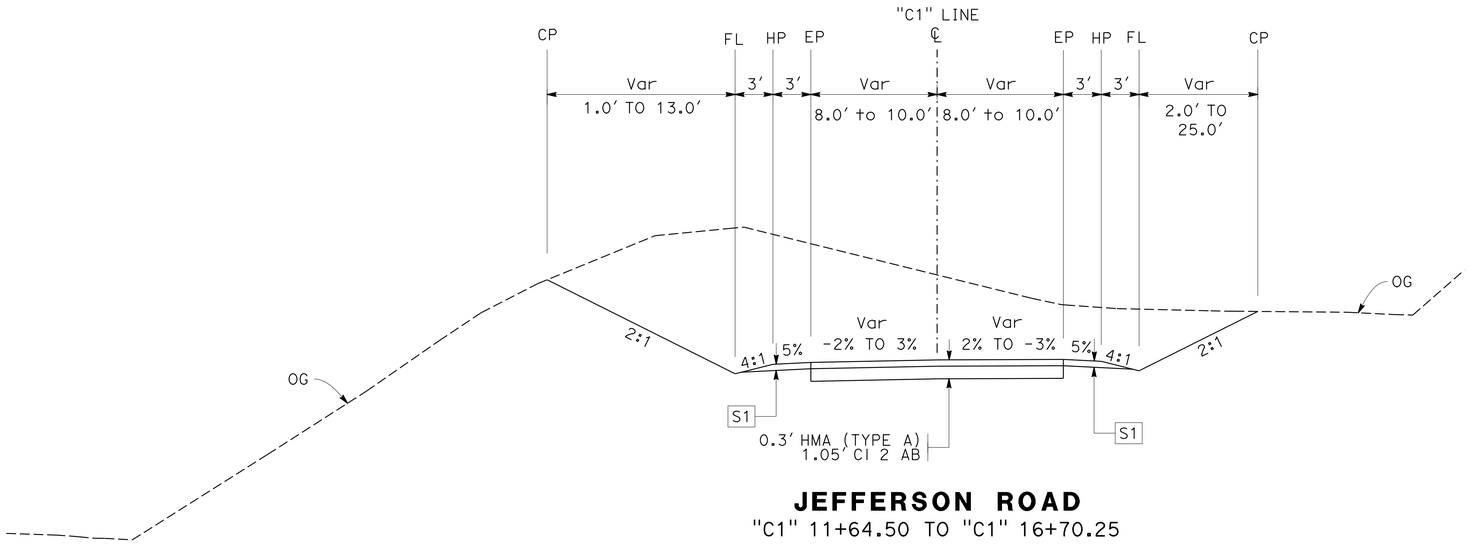

JEFFERSON ROAD
"C1" 11+64.50 TO "C1" 16+70.25

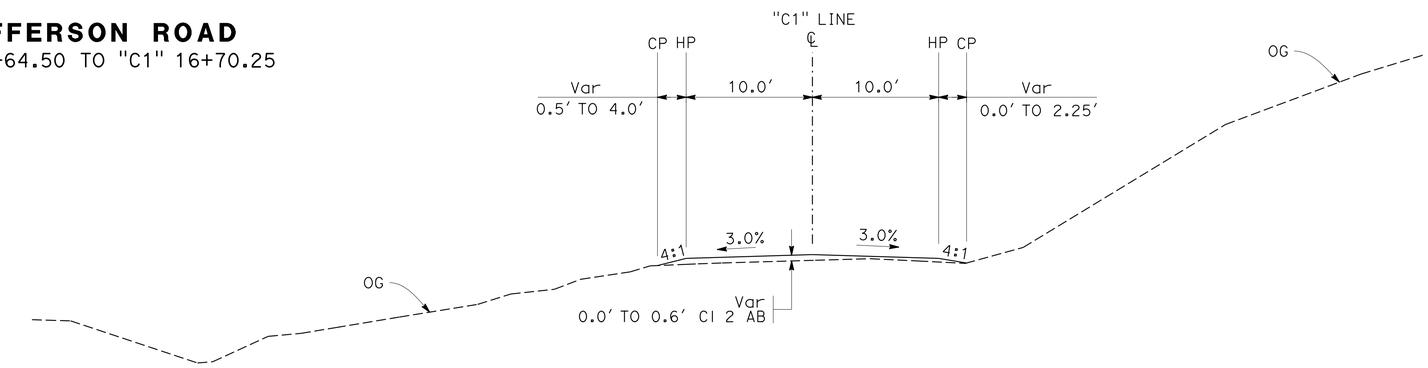

JEFFERSON ROAD
"C1" 10+00.00 TO 11+64.50

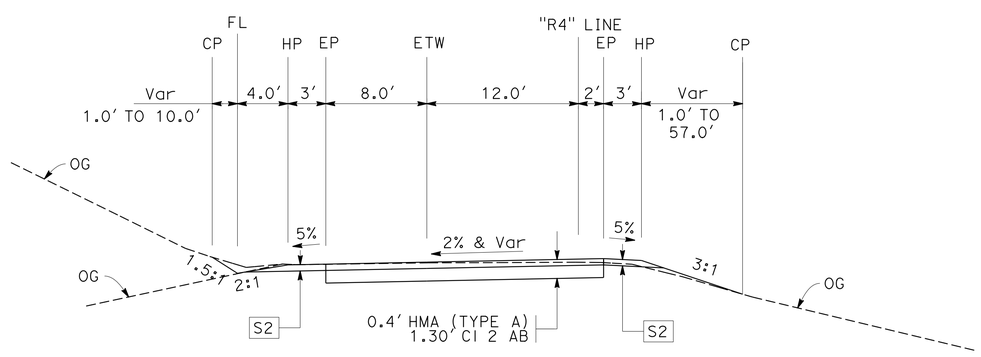

SB OFF RAMP
"R4" 10+29.08 TO "R4" 15+00.00

TYPICAL CROSS SECTIONS
NO SCALE

X-3

REVISED BY	DATE REVISED
JAVED IQBAL	JULIE CASEY
CALCULATED-DESIGNED BY	CHECKED BY
FUNCTIONAL SUPERVISOR	JULIE CASEY

STATE OF CALIFORNIA - DEPARTMENT OF TRANSPORTATION
Caltrans
DESIGN

P:\proj1\02\3E730_plans\pse\23e730ca003.dgn

LAST REVISION 11-25-14 | DATE PLOTTED => 23-JAN-2015 | TIME PLOTTED => 12:35

Dist	COUNTY	ROUTE	POST MILES TOTAL PROJECT	SHEET No.	TOTAL SHEETS
02	Sis	5	68.3	5	120

REGISTERED CIVIL ENGINEER 11-25-14 DATE

11-26-14
PLANS APPROVAL DATE

REGISTERED PROFESSIONAL ENGINEER JAVED IQBAL No. C82518 Exp. 9/30/16 CIVIL STATE OF CALIFORNIA

THE STATE OF CALIFORNIA OR ITS OFFICERS OR AGENTS SHALL NOT BE RESPONSIBLE FOR THE ACCURACY OR COMPLETENESS OF SCANNED COPIES OF THIS PLAN SHEET.

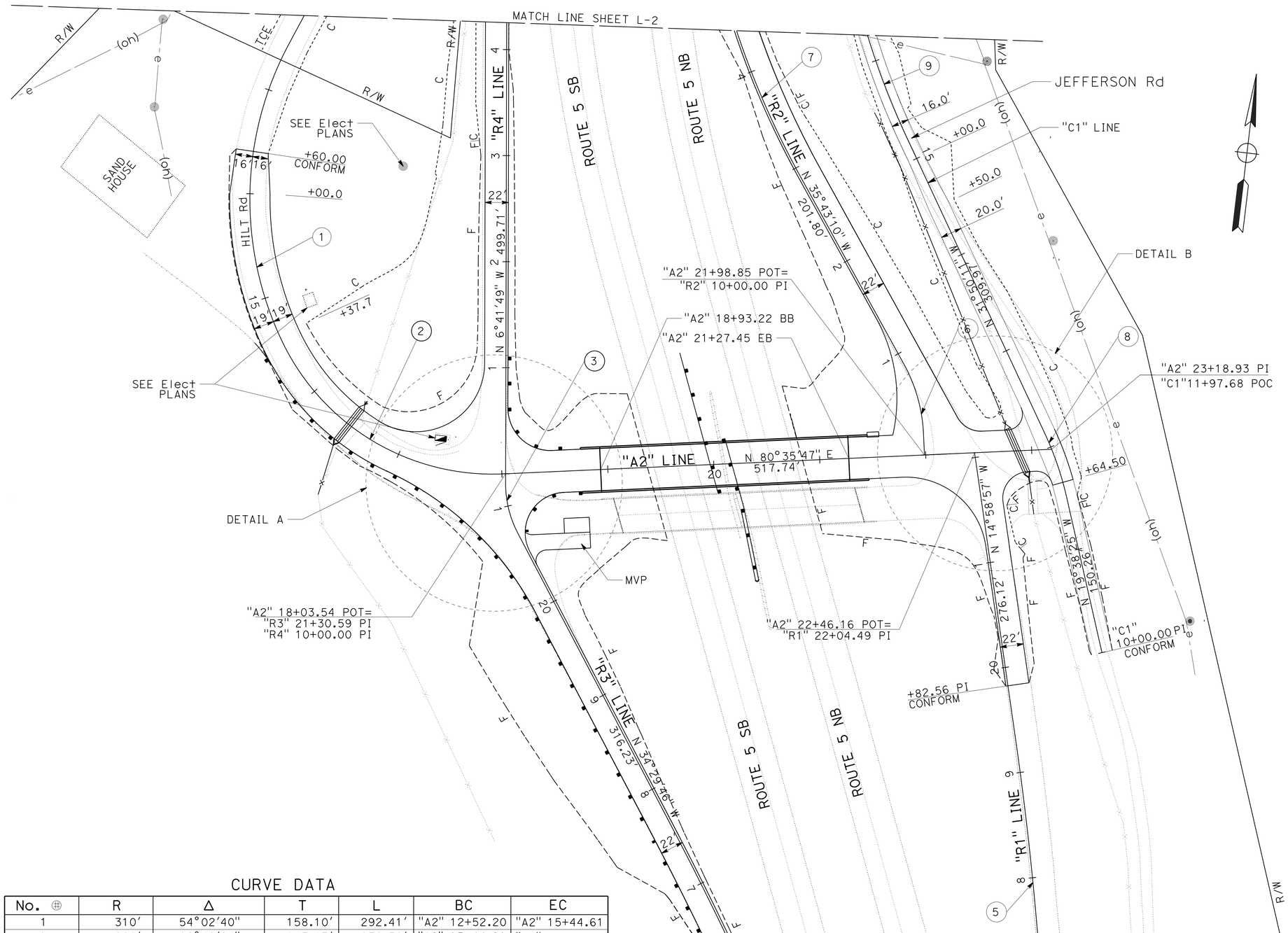

NOTES:

1. FOR ACCURATE RIGHT OF WAY DATA, CONTACT RIGHT OF WAY ENGINEERING AT THE DISTRICT OFFICE
2. SEE CONSTRUCTION DETAIL SHEETS FOR MBGR, DIKE, FENCE AND CATTLE GUARD DETAILS

LEGEND:

- UTILITY POLE
- UTILITY PEDESTAL
- -(oh)- -(oh)- ELECTRICAL LINE (OVERHEAD) (E)

ABBREVIATIONS:

(E) EXISTING

CURVE DATA

No. ⊕	R	Δ	T	L	BC	EC
1	310′	54°02′40"	158.10′	292.41′	"A2" 12+52.20	"A2" 15+44.61
2	220′	66°49′24"	145.13′	256.58′	"A2" 15+44.61	"A2" 18+01.19
3	100′	27°47′55"	24.75′	48.52′	"R3" 20+72.95	"R3" 21+21.47
4	3000′	13°09′21"	345.94′	688.84′	"R3" 10+67.88	"R3" 17+56.72
5	3000′	03°05′45"	81.07′	162.10′	"R1" 17+66.27	"R1" 19+28.37
6	150′	26°18′59"	35.07′	68.90′	"R2" 10+20.04	"R2" 10+88.94
7	825′	31°33′13"	233.09′	454.34′	"R2" 12+90.74	"R2" 17+45.07
8	300′	12°11′43"	32.05′	63.85′	"C1" 11+50.26	"C1" 12+14.11
9	710′	22°19′10"	140.06′	276.58′	"C1" 15+24.08	"C1" 18+00.66

LAYOUT

SCALE: 1" = 50′ **L-1**

REVISED BY	DATE REVISED
JAVED IQBAL	JULIE CASEY
CALCULATED-DESIGNED BY	CHECKED BY
FUNCTIONAL SUPERVISOR	JULIE CASEY

STATE OF CALIFORNIA - DEPARTMENT OF TRANSPORTATION
Caltrans
DESIGN

P:\proj1\02\3E730_plans\pse\23e730ea001.dgn

LAST REVISION 11-25-14 | DATE PLOTTED => 23-JAN-2015 | TIME PLOTTED => 12:35

Dist	COUNTY	ROUTE	POST MILES TOTAL PROJECT	SHEET No.	TOTAL SHEETS
02	Sis	5	68.3	6	120

REGISTERED CIVIL ENGINEER 11-25-14 DATE

11-26-14
PLANS APPROVAL DATE

REGISTERED PROFESSIONAL ENGINEER JAVED IQBAL No. C82518 Exp. 9/30/16 CIVIL STATE OF CALIFORNIA

THE STATE OF CALIFORNIA OR ITS OFFICERS OR AGENTS SHALL NOT BE RESPONSIBLE FOR THE ACCURACY OR COMPLETENESS OF SCANNED COPIES OF THIS PLAN SHEET.

NOTE:

1. FOR ACCURATE RIGHT OF WAY DATA, CONTACT RIGHT OF WAY ENGINEERING AT THE DISTRICT OFFICE.

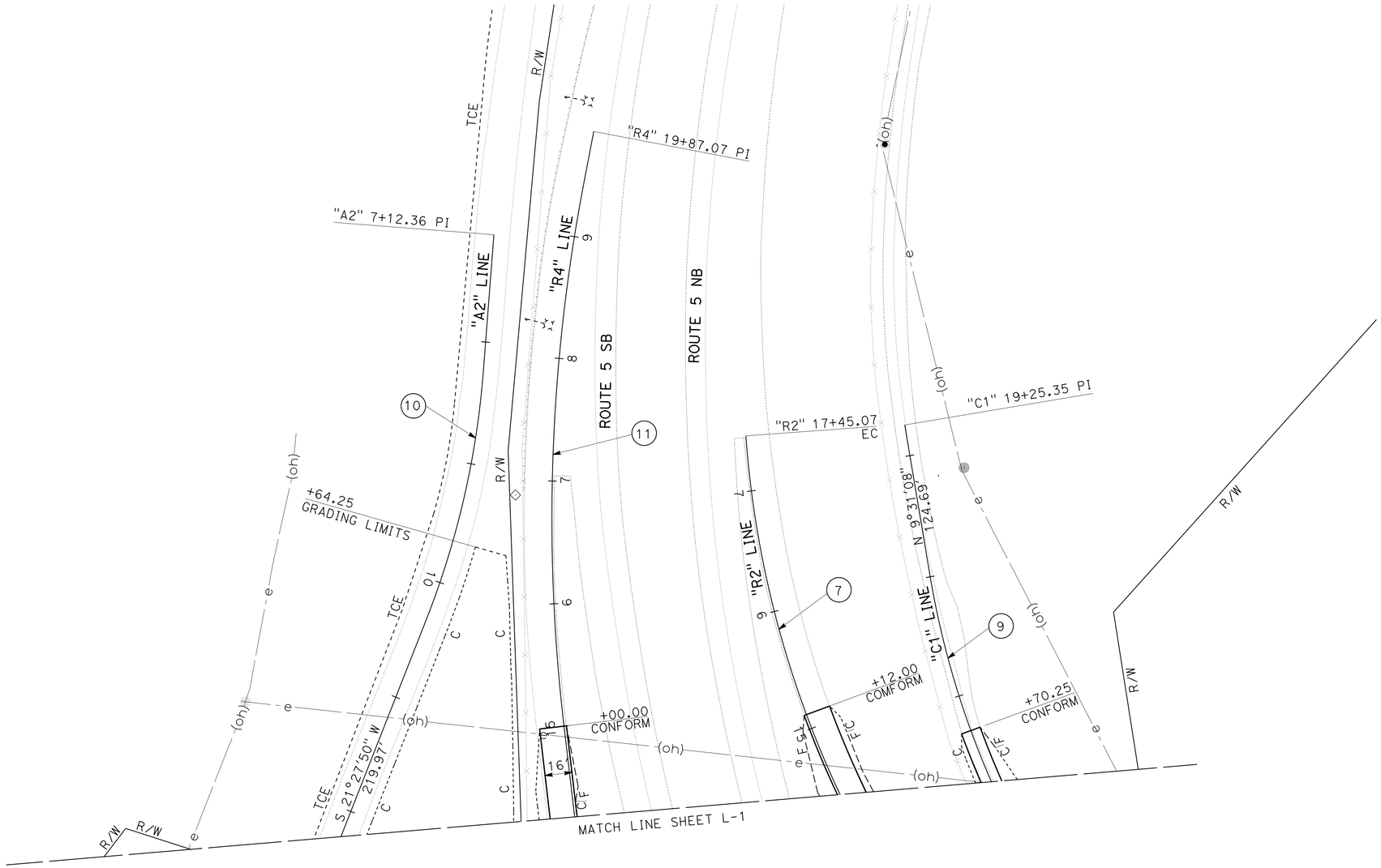

CURVE DATA

No. ⊕	R	Δ	T	L	BC	EC
7	825′	31°33′13"	233.09′	454.34′	"R2" 12+90.74	"R2" 17+45.07
9	710′	22°19′10"	140.06′	276.58′	"C1" 15+24.08	"C1" 18+00.66
10	700′	17°02′42"	104.90′	208.25′	"A2" 8+23.99	"A2" 10+32.23
11	1450′	17°32′09"	223.64′	443.79′	"R4" 14+99.71	"R4" 19+43.50

LAYOUT

SCALE: 1" = 50′

L-2

REVISED BY	DATE REVISED
JAVED IQBAL	JULIE CASEY

CALCULATED-DESIGNED BY JAVED IQBAL
CHECKED BY JULIE CASEY
FUNCTIONAL SUPERVISOR JULIE CASEY

STATE OF CALIFORNIA - DEPARTMENT OF TRANSPORTATION
Caltrans
DESIGN

P:\proj1\02\3E730_plans\pse\23e730ea002.dgn

LAST REVISION 11-25-14 | DATE PLOTTED => 23-JAN-2015 | TIME PLOTTED => 12:35

Dist	COUNTY	ROUTE	POST MILES TOTAL PROJECT	SHEET No.	TOTAL SHEETS
02	Sis	5	68.3	7	120

REGISTERED CIVIL ENGINEER 11-25-14 DATE

11-26-14
PLANS APPROVAL DATE

REGISTERED PROFESSIONAL ENGINEER JAVED IQBAL No. C82518 Exp. 9/30/16 CIVIL STATE OF CALIFORNIA

THE STATE OF CALIFORNIA OR ITS OFFICERS OR AGENTS SHALL NOT BE RESPONSIBLE FOR THE ACCURACY OR COMPLETENESS OF SCANNED COPIES OF THIS PLAN SHEET.

ABBREVIATIONS:

VPI VERTICAL POINT OF INTERSECTION
VPOT VERTICAL POINT OF TANGENCY

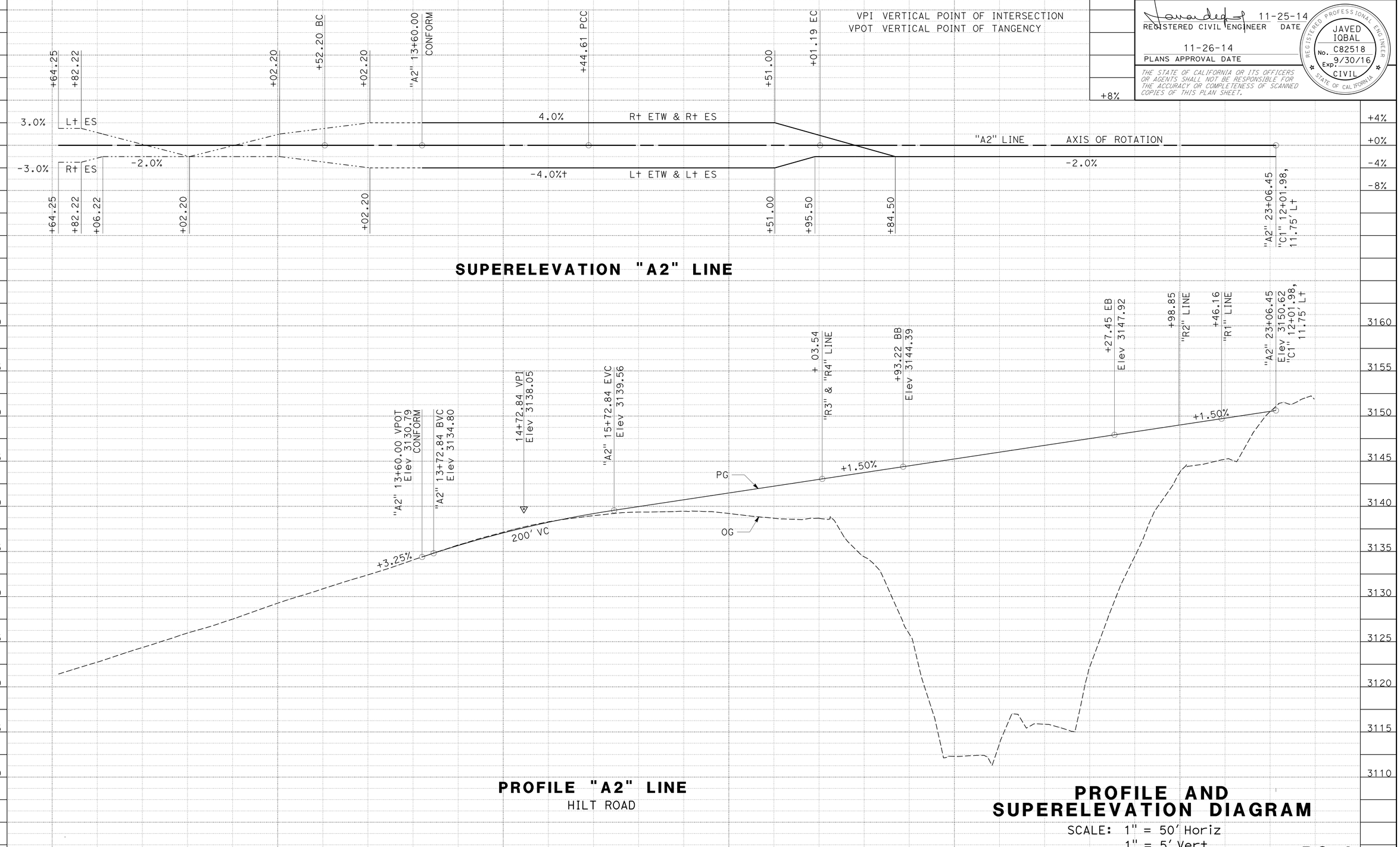

STATION	10	11	12	13	14	15	16	17	18	19	20	21	22	23	TOTAL
CY Exc	12270														12270
CY Emb				7105											7105

REVISED BY | DATE REVISED
JAVED IQBAL | JULIE CASEY
CALCULATED-DESIGNED BY | CHECKED BY
FUNCTIONAL SUPERVISOR: JULIE CASEY

STATE OF CALIFORNIA - DEPARTMENT OF TRANSPORTATION
DESIGN
Caltrans

P:\proj1\02\3E730_plans\pse\23e730fb001.dgn

LAST REVISION 11-25-14 | DATE PLOTTED => 23-JAN-2015 | TIME PLOTTED => 12:35

Dist	COUNTY	ROUTE	POST MILES TOTAL PROJECT	SHEET No.	TOTAL SHEETS
02	Sis	5	68.3	8	120

REGISTERED CIVIL ENGINEER 11-25-14 DATE

11-26-14
PLANS APPROVAL DATE

REGISTERED PROFESSIONAL ENGINEER JAVED IQBAL No. C82518 Exp. 9/30/16 CIVIL STATE OF CALIFORNIA

THE STATE OF CALIFORNIA OR ITS OFFICERS OR AGENTS SHALL NOT BE RESPONSIBLE FOR THE ACCURACY OR COMPLETENESS OF SCANNED COPIES OF THIS PLAN SHEET.

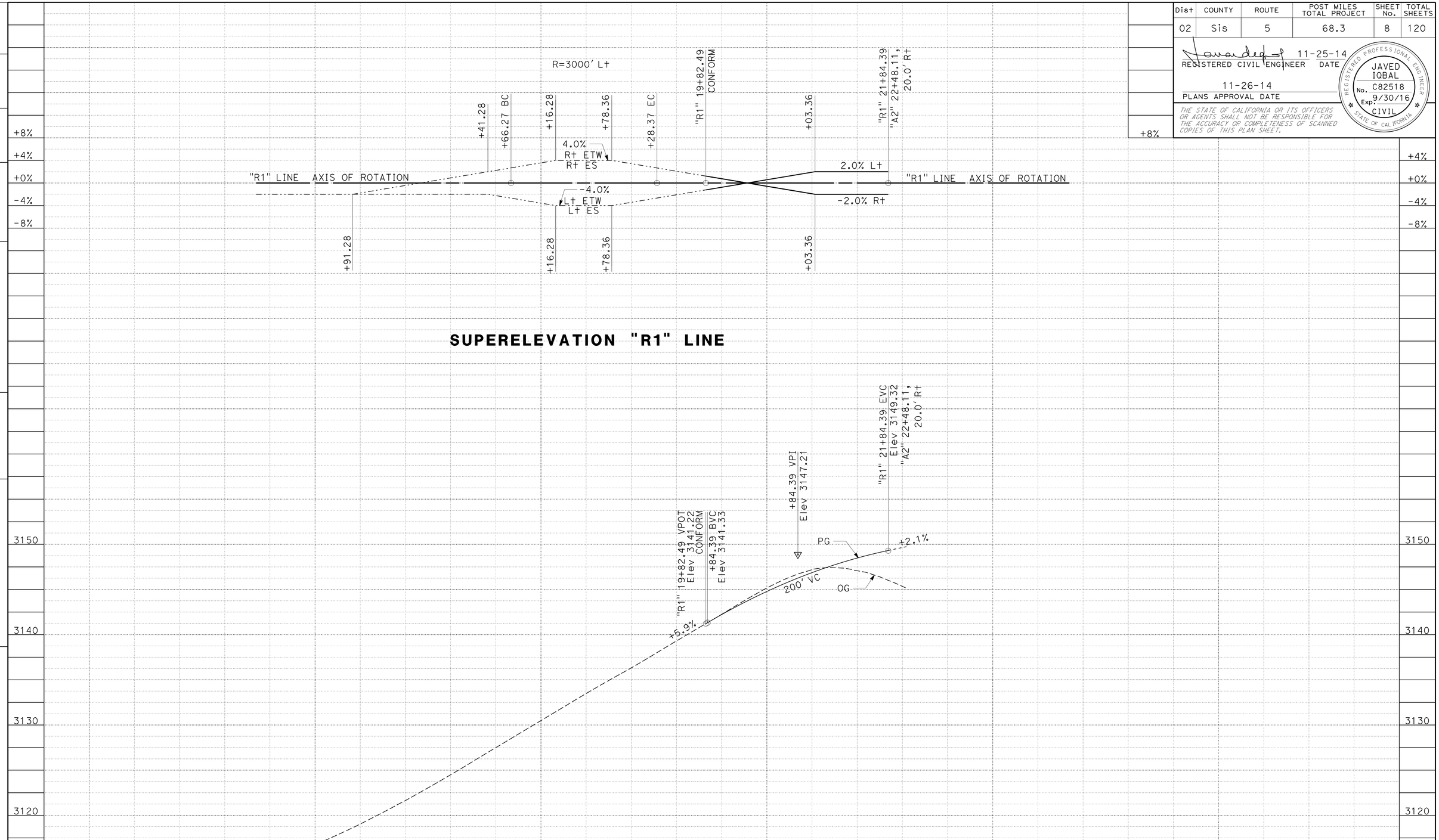

PROFILE AND SUPERELEVATION DIAGRAM

SCALE: 1" = 50' Horiz
1" = 5' Vert

PS-2

REVISED BY | DATE REVISED
JAVED IQBAL | JULIE CASEY
CALCULATED-DESIGNED BY | CHECKED BY
FUNCTIONAL SUPERVISOR: JULIE CASEY

STATE OF CALIFORNIA - DEPARTMENT OF TRANSPORTATION
Caltrans
DESIGN

P:\proj\2A\3E730_plans\pse\23e730fb002.dgn

LAST REVISION 11-25-14 | DATE PLOTTED => 23-JAN-2015 | TIME PLOTTED => 12:35

Dist	COUNTY	ROUTE	POST MILES TOTAL PROJECT	SHEET No.	TOTAL SHEETS
02	Sis	5	68.3	9	120

REGISTERED CIVIL ENGINEER 11-25-14 DATE

11-26-14
PLANS APPROVAL DATE

REGISTERED PROFESSIONAL ENGINEER JAVED IQBAL No. C82518 Exp. 9/30/16 CIVIL STATE OF CALIFORNIA

THE STATE OF CALIFORNIA OR ITS OFFICERS OR AGENTS SHALL NOT BE RESPONSIBLE FOR THE ACCURACY OR COMPLETENESS OF SCANNED COPIES OF THIS PLAN SHEET.

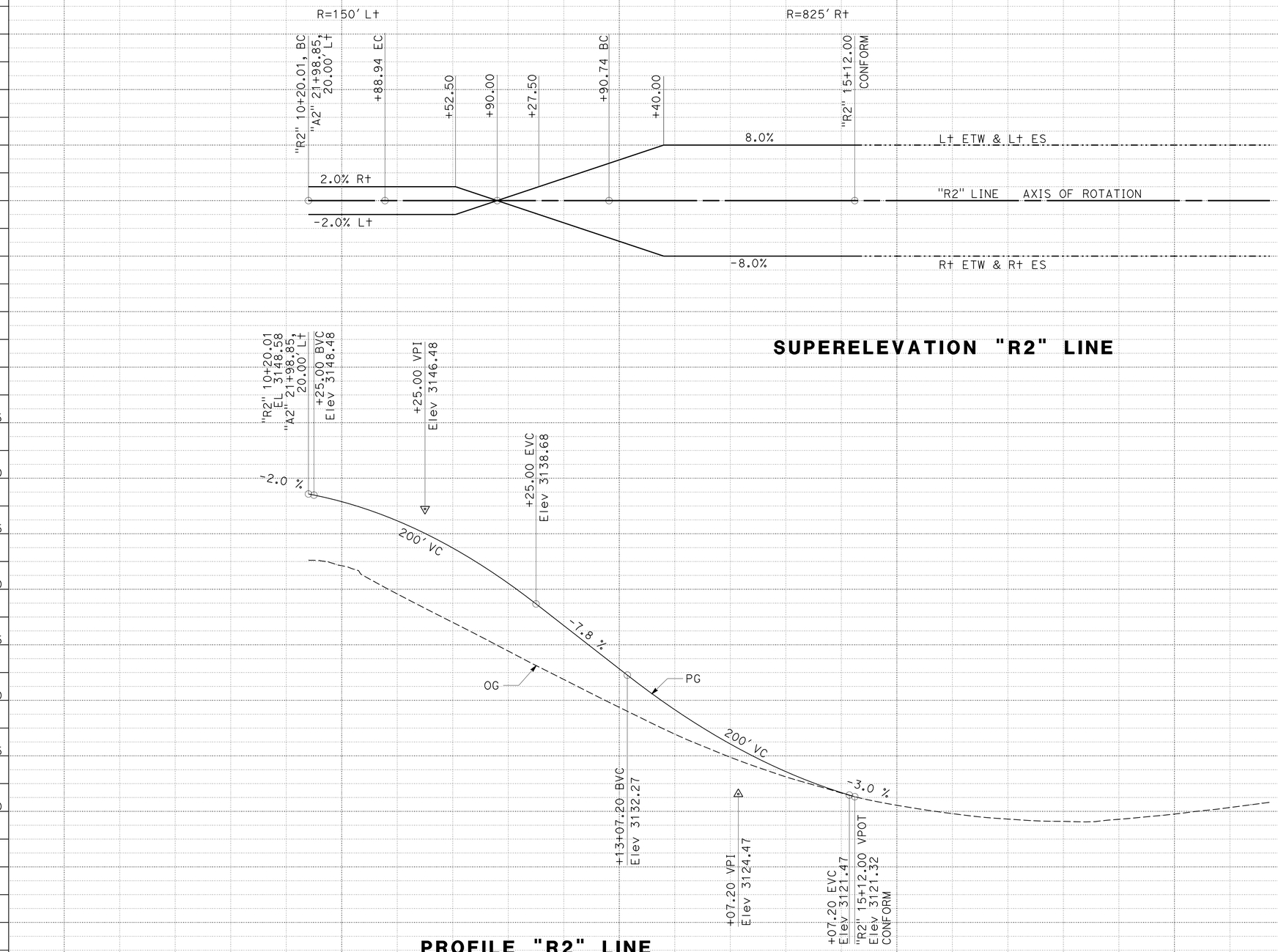

SUPERELEVATION "R2" LINE

PROFILE "R2" LINE

ROUTE 5 NB ON RAMP

PROFILE AND SUPERELEVATION DIAGRAM

SCALE: 1" = 50' Horiz
1" = 5' Vert

PS-3

STATION		10	11	12	13	14	15	16	17	18	19	TOTAL
CY	Exc					93						93
	Emb	5700										5700

STATE OF CALIFORNIA - DEPARTMENT OF TRANSPORTATION
Caltrans DESIGN

FUNCTIONAL SUPERVISOR: JULIE CASEY
CALCULATED-DESIGNED BY: JAVED IQBAL
CHECKED BY: JULIE CASEY
REVISED BY
DATE REVISED

LAST REVISION 11-25-14
DATE PLOTTED => 23-JAN-2015
TIME PLOTTED => 12:35

P:\proj\2\3E730_plans\pse\23e730fb003.dgn

BORDER LAST REVISED 7/2/2010
USERNAME => s123119
DGN FILE => 23e730fb003.dgn
RELATIVE BORDER SCALE IS IN INCHES 0 1 2 3
UNIT 0318
PROJECT NUMBER & PHASE 02-0002-0157-1
EA: 02-3E7301

Dist	COUNTY	ROUTE	POST MILES TOTAL PROJECT	SHEET No.	TOTAL SHEETS
02	Sis	5	68.3	10	120

REGISTERED CIVIL ENGINEER 11-25-14 DATE

11-26-14
PLANS APPROVAL DATE

REGISTERED PROFESSIONAL ENGINEER JAVED IQBAL No. C82518 Exp. 9/30/16 CIVIL STATE OF CALIFORNIA

THE STATE OF CALIFORNIA OR ITS OFFICERS OR AGENTS SHALL NOT BE RESPONSIBLE FOR THE ACCURACY OR COMPLETENESS OF SCANNED COPIES OF THIS PLAN SHEET.

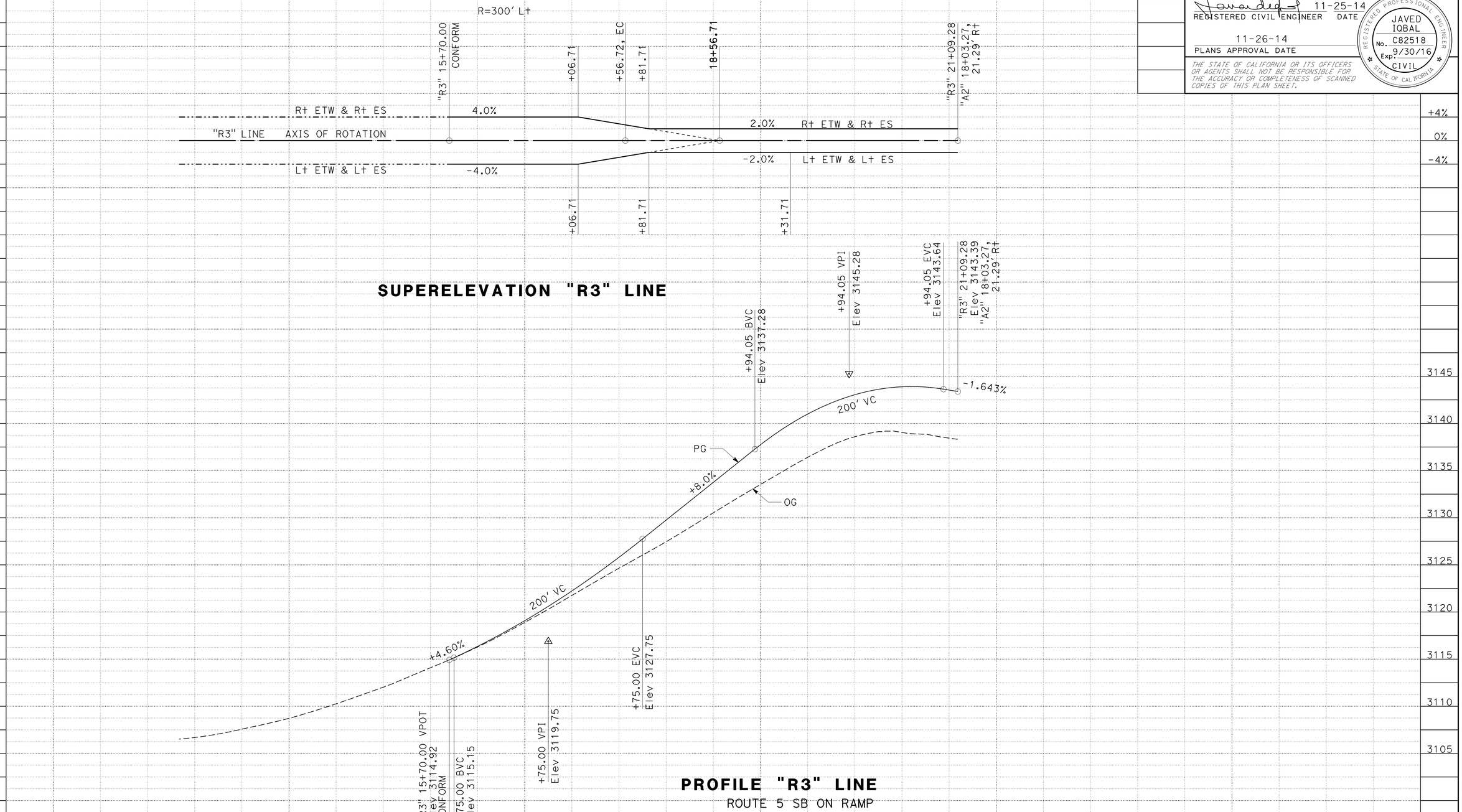

SUPERELEVATION "R3" LINE

PROFILE "R3" LINE

ROUTE 5 SB ON RAMP

PROFILE AND SUPERELEVATION DIAGRAM

SCALE: 1" = 50' Horiz
1" = 5' Vert

PS-4

REVISED BY | DATE REVISED

JAVED IQBAL | JULIE CASEY

CALCULATED-DESIGNED BY | CHECKED BY

FUNCTIONAL SUPERVISOR: JULIE CASEY

STATE OF CALIFORNIA - DEPARTMENT OF TRANSPORTATION

Caltrans

DESIGN

P:\proj1\02\3E730_plans\pse\23e730fb004.dgn

LAST REVISION 11-25-14 | DATE PLOTTED => 23-JAN-2015 | TIME PLOTTED => 12:35

Dist	COUNTY	ROUTE	POST MILES TOTAL PROJECT	SHEET No.	TOTAL SHEETS
02	Sis	5	68.3	11	120

REGISTERED CIVIL ENGINEER 11-25-14 DATE

11-26-14
PLANS APPROVAL DATE

REGISTERED PROFESSIONAL ENGINEER JAVED IQBAL No. C82518 Exp. 9/30/16 CIVIL STATE OF CALIFORNIA

THE STATE OF CALIFORNIA OR ITS OFFICERS OR AGENTS SHALL NOT BE RESPONSIBLE FOR THE ACCURACY OR COMPLETENESS OF SCANNED COPIES OF THIS PLAN SHEET.

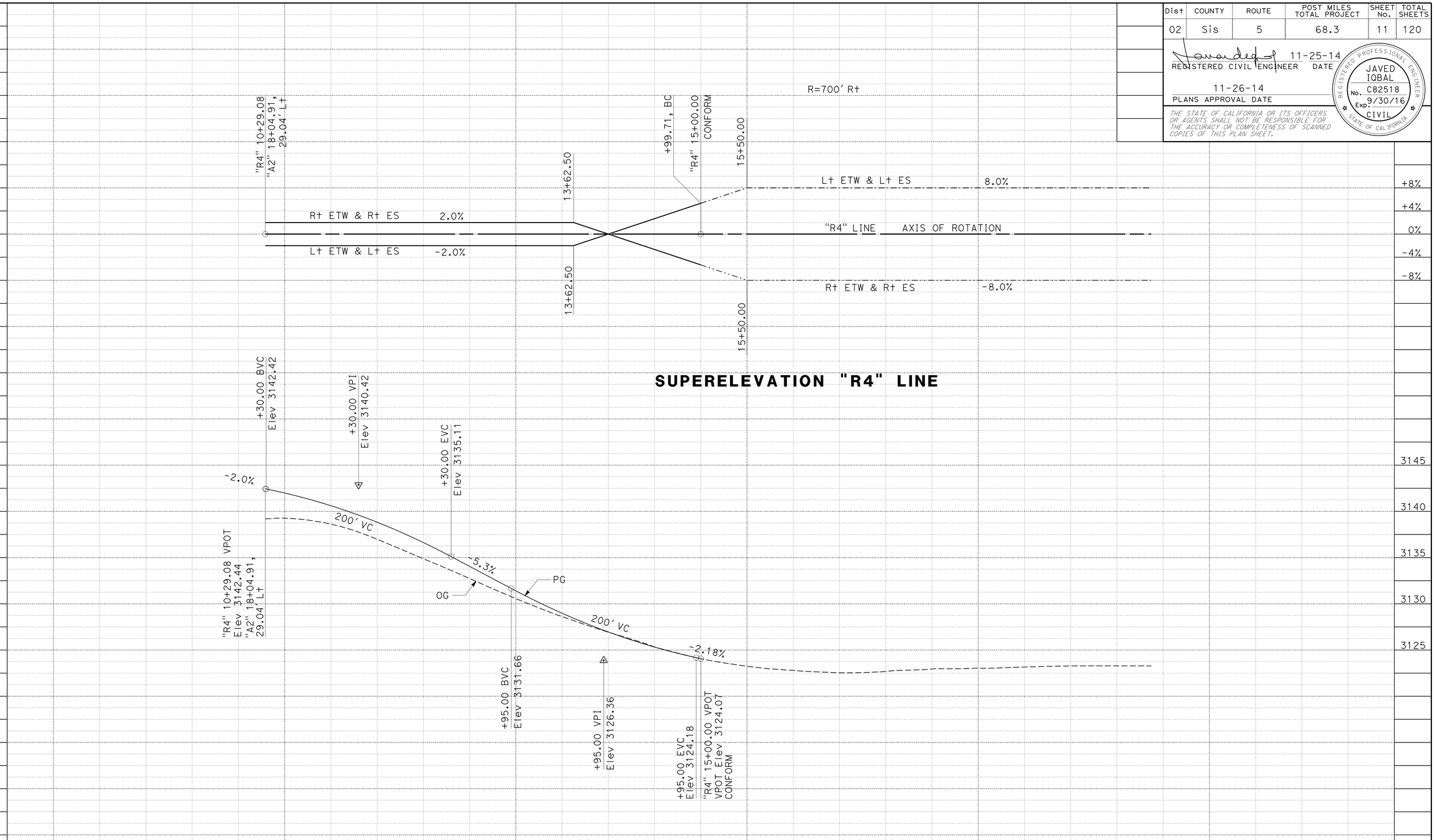

PROFILE AND SUPERELEVATION DIAGRAM

SCALE: 1" = 50' Horiz
1" = 5' Vert

PS-5

STATION		10	11	12	13	14	15	16	17	18	19	TOTAL
CY	Exc				263							263
	Emb	790										790

REVISED BY | DATE REVISED

JAVED IQBAL | JULIE CASEY

CALCULATED-DESIGNED BY | CHECKED BY

FUNCTIONAL SUPERVISOR: JULIE CASEY

STATE OF CALIFORNIA - DEPARTMENT OF TRANSPORTATION
Caltrans
DESIGN

P:\proj1\02\3E730_plans\pse\23e730fb005.dgn

LAST REVISION 11-25-14 | DATE PLOTTED => 23-JAN-2015 | TIME PLOTTED => 12:35

Dist	COUNTY	ROUTE	POST MILES TOTAL PROJECT	SHEET No.	TOTAL SHEETS
02	Sis	5	68.3	12	120

REGISTERED CIVIL ENGINEER 11-25-14 DATE

11-26-14
PLANS APPROVAL DATE

REGISTERED PROFESSIONAL ENGINEER JAVED IQBAL No. C82518 Exp. 9/30/16 CIVIL STATE OF CALIFORNIA

THE STATE OF CALIFORNIA OR ITS OFFICERS OR AGENTS SHALL NOT BE RESPONSIBLE FOR THE ACCURACY OR COMPLETENESS OF SCANNED COPIES OF THIS PLAN SHEET.

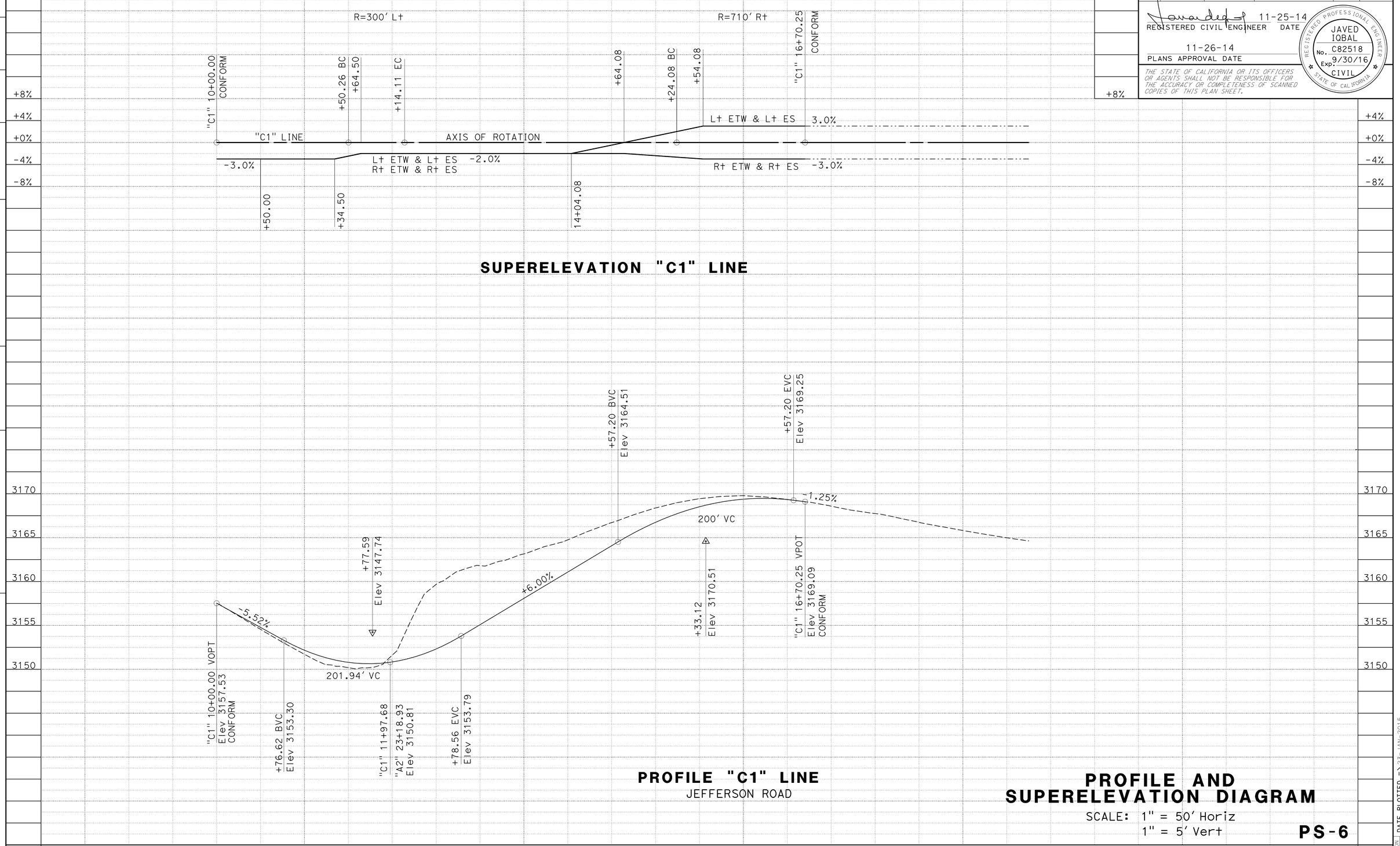

PROFILE AND SUPERELEVATION DIAGRAM

SCALE: 1" = 50' Horiz
1" = 5' Vert

PS-6

STATION		10	11	12	13	14	15	16	17	TOTAL
CY	Exc			2892						2892
	Emb	1								1

REVISED BY | DATE REVISED
JAVED IQBAL | JULIE CASEY
CALCULATED-DESIGNED BY | CHECKED BY
FUNCTIONAL SUPERVISOR: JULIE CASEY

STATE OF CALIFORNIA - DEPARTMENT OF TRANSPORTATION
Caltrans
DESIGN

P:\proj1\02\3E730_plans\pse\23e730fb006.dgn

LAST REVISION 11-25-14 | DATE PLOTTED => 23-JAN-2015 | TIME PLOTTED => 12:35

Dist	COUNTY	ROUTE	POST MILES TOTAL PROJECT	SHEET No.	TOTAL SHEETS
02	Sis	5	68.3	13	120

REGISTERED CIVIL ENGINEER 11-25-14 DATE

11-26-14
PLANS APPROVAL DATE

REGISTERED PROFESSIONAL ENGINEER JAVED IQBAL No. C82518 Exp. 9/30/16 CIVIL STATE OF CALIFORNIA

THE STATE OF CALIFORNIA OR ITS OFFICERS OR AGENTS SHALL NOT BE RESPONSIBLE FOR THE ACCURACY OR COMPLETENESS OF SCANNED COPIES OF THIS PLAN SHEET.

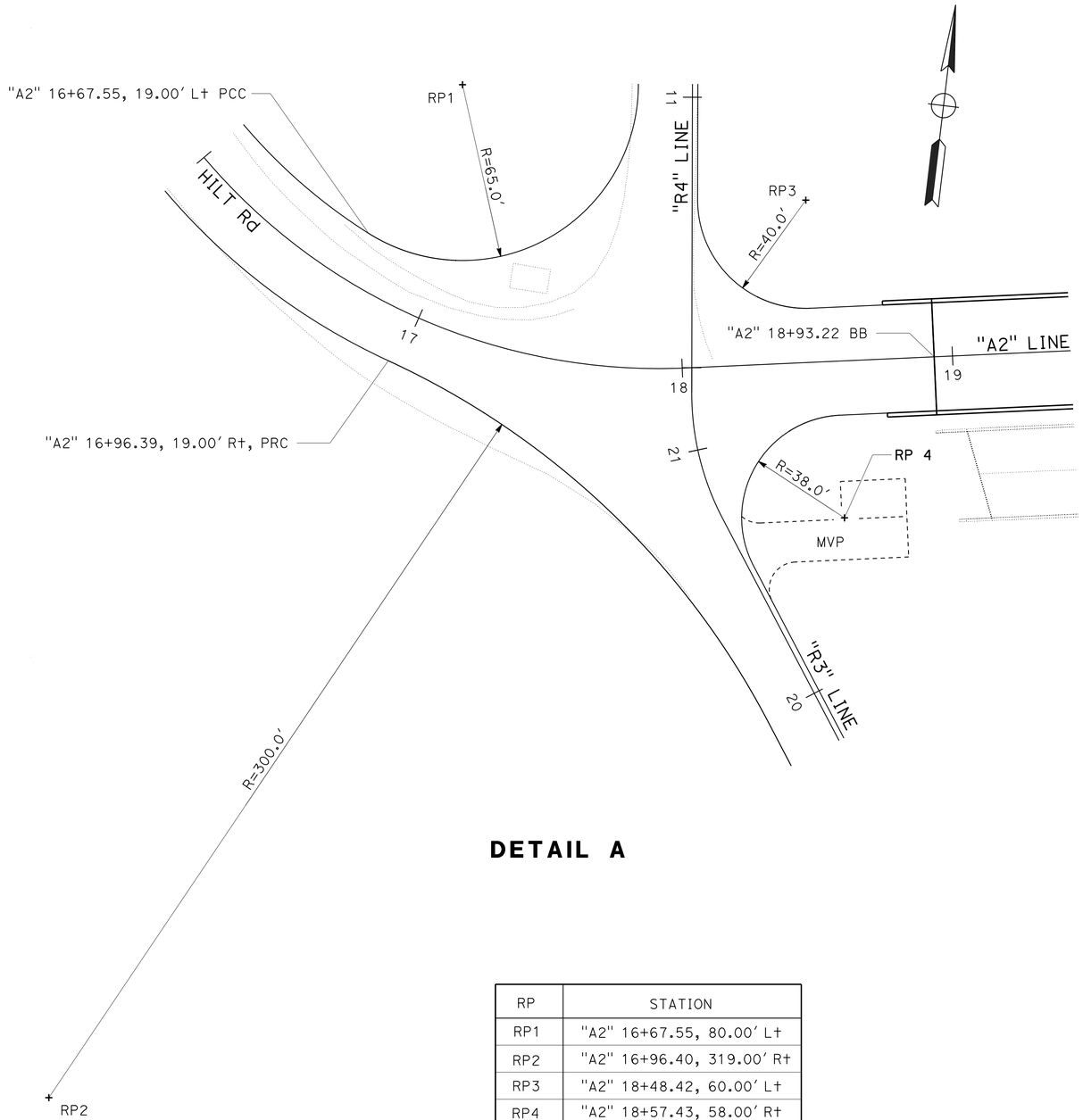

DETAIL A

RP	STATION
RP1	"A2" 16+67.55, 80.00' Lt
RP2	"A2" 16+96.40, 319.00' Rt
RP3	"A2" 18+48.42, 60.00' Lt
RP4	"A2" 18+57.43, 58.00' Rt
RP5	"A2" 20+19.46, 61.43' Lt
RP6	"A2" 21+77.16, 96.00' Rt
RP7	"A2" 22+54.05, 45.00' Lt
RP8	"A2" 22+77.92, 35.00' Lt
RP9	"A2" 22+95.76, 45.00' Rt
RP10	"A2" 23+03.10, 35.00' Rt

ABBREVIATIONS:

ITS INTELLIGENT TRANSPORTATION SYSTEM

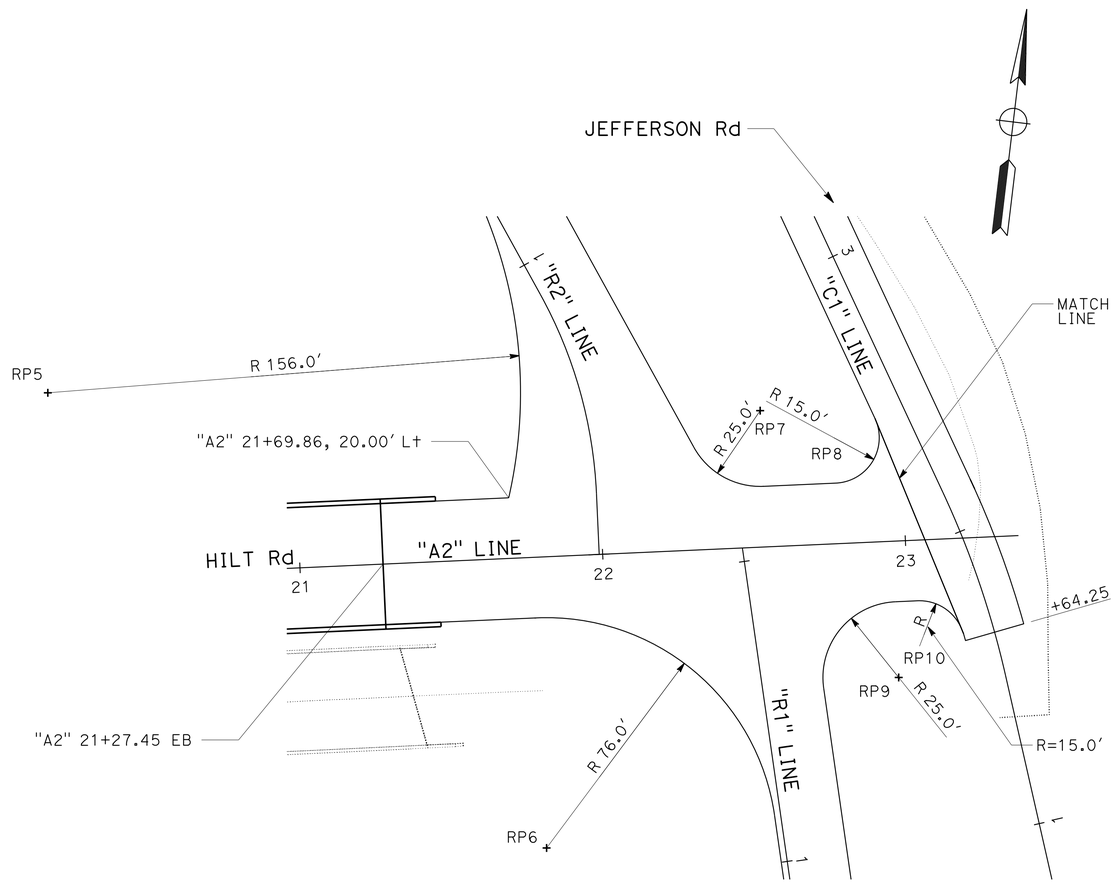

DETAIL B

CONSTRUCTION DETAILS

NO SCALE

C-1

JAVED IQBAL — JULIE CASEY — REVISED BY — DATE REVISED
CALCULATED-DESIGNED BY — CHECKED BY
FUNCTIONAL SUPERVISOR — JULIE CASEY

STATE OF CALIFORNIA - DEPARTMENT OF TRANSPORTATION
Caltrans® DESIGN

P:\proj1\02\3E730_plans\pse\23e730ga001.dgn

LAST REVISION 11-25-14 — DATE PLOTTED => 23-JAN-2015 — TIME PLOTTED => 12:35

Dist	COUNTY	ROUTE	POST MILES TOTAL PROJECT	SHEET No.	TOTAL SHEETS
02	Sis	5	68.3	14	120

REGISTERED CIVIL ENGINEER 11-25-14 DATE

11-26-14
PLANS APPROVAL DATE

REGISTERED PROFESSIONAL ENGINEER
JAVED IQBAL
No. C82518
Exp. 9/30/16
CIVIL
STATE OF CALIFORNIA

THE STATE OF CALIFORNIA OR ITS OFFICERS OR AGENTS SHALL NOT BE RESPONSIBLE FOR THE ACCURACY OR COMPLETENESS OF SCANNED COPIES OF THIS PLAN SHEET.

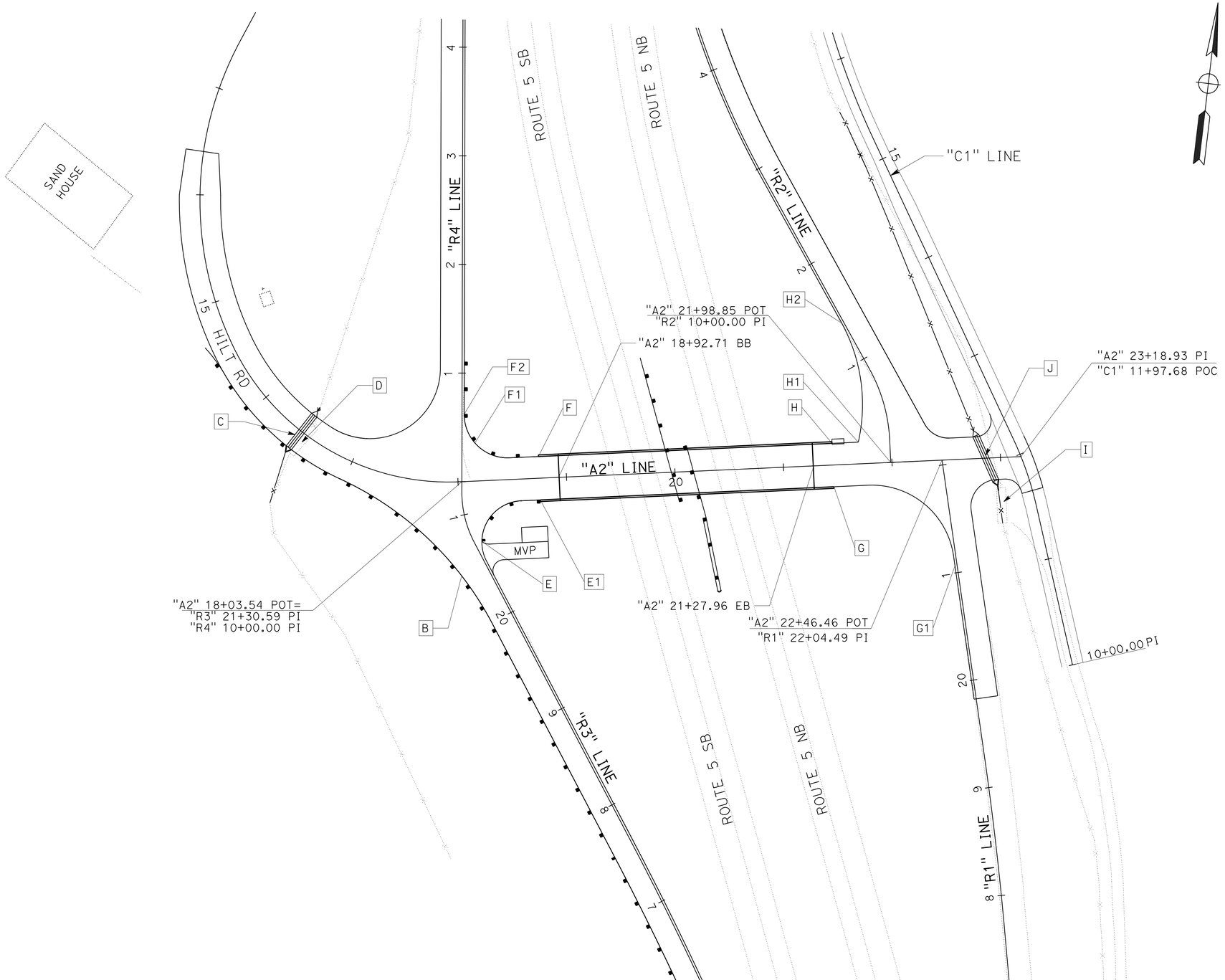

LEGEND:

A	"R3" 15+70.00, 20.00' L+ Beg HMA DIKE (TYPE F) MATCH Exist
B	"R3" 20+51.00, 24.56' L+ END HMA DIKE (TYPE F)
C	"A2" 16+45.40 METAL CATTLE GUARD Loc 1
D	"A2" 16+43.00, REMOVE CATTLE GUARD
E	"R3" 20+70.38, 6.60' R+ Beg HMA DIKE (TYPE F)
E1	"A2" 18+75.00, 20.00' R+ END HMA DIKE (TYPE F)
F	"A2" 18+75.00, 20.00' L+ Beg HMA DIKE (TYPE F)
F1	"A2" 18+17.13, 35.04' L+ END DIKE TYPE "F" Beg HMA DIKE (TYPE E)
F2	"R4" 10+62.06, 2.00' R+ END HMA DIKE (TYPE E)
G	"A2" 21+45.66, 20.00' R+ Beg HMA DIKE (TYPE E)
G1	"R1" 21+06.53, 2.00' L+ END HMA DIKE (TYPE E)
H	"A2" 21+45.66, 20.00' L+ Beg HMA DIKE (TYPE C)
H1	"A2" 21+69.86, 20.00' L+ END HMA DIKE (TYPE C) Beg HMA DIKE (TYPE E)
H2	"R2" 11+38.51, 2.00' L+ END HMA DIKE (TYPE E)
I	"A2" 23+00.00, 45.00' R+ REMOVE CATTLE GUARD
J	"A2" 22+86.36 METAL CATTLE GUARD Loc 2

HMA DIKE AND CATTLE GUARD DETAIL

CONSTRUCTION DETAILS

SCALE: 1" = 50'

C-2

REVISED BY	DATE REVISED
JAVED IQBAL	JULIE CASEY
CALCULATED-DESIGNED BY	CHECKED BY
FUNCTIONAL SUPERVISOR	JULIE CASEY

STATE OF CALIFORNIA - DEPARTMENT OF TRANSPORTATION
Caltrans
DESIGN

P:\proj1\02\3E730_plans\pse\23e730ga002.dgn

LAST REVISION 11-25-14 | DATE PLOTTED => 23-JAN-2015 | TIME PLOTTED => 12:35

Dist	COUNTY	ROUTE	POST MILES TOTAL PROJECT	SHEET No.	TOTAL SHEETS
02	Sis	5	68.3	15	120

REGISTERED CIVIL ENGINEER 11-25-14 DATE

11-26-14
PLANS APPROVAL DATE

REGISTERED PROFESSIONAL ENGINEER JAVED IQBAL No. C82518 Exp. 9/30/16 CIVIL STATE OF CALIFORNIA

THE STATE OF CALIFORNIA OR ITS OFFICERS OR AGENTS SHALL NOT BE RESPONSIBLE FOR THE ACCURACY OR COMPLETENESS OF SCANNED COPIES OF THIS PLAN SHEET.

NOTES:

1. RECONSTRUCT GUARDRAIL. MOVE FROM LOCATION "FF1" TO "GG" AND LOCATION "FF2" TO "GG1"
2. RECONSTRUCT GUARDRAIL. MOVE FROM LOCATION "HH" TO "II" AND LOCATION "HH1" TO "II4"

LEGEND:

- AA — "R3" 15+70.00, 20.00′ L+ Beg RECONSTRUCT GUARDRAIL MATCH Exist MBGR
- AA1 — "A2" 16+58.00, 19.00′ R+ END RECONSTRUCT GUARDRAIL Beg RECONSTRUCT GUARD (7′ POST)
- AA2 — "A2" 15+34.77, 24.00′ R+ END RECONSTRUCT GUARDRAIL (7′ POST) MATCH Exist MBGR
- BB — "A2" 19+02.32, 60.33′ R+ Beg REMOVE GUARDRAIL
- BB1 — "R3" 20+40.35, 60.33′ R+ END REMOVE GUARDRAIL
- CC — "A2" 18+94.73, 28.48′ R+ Beg REMOVE GUARDRAIL
- CC1 — "A2" 18+31.02, 20.82′ R+ END REMOVE GUARDRAIL
- DD — "A2" 18+75.01, 20.00′ R+ Beg MGS TRANSITION RAILING TYPE "WB-31"
- DD1 — "A2" 18+50.06, 20.72′ R+ END MGS TRANSITION RAILING TYPE "WB-31" Beg MGS
- DD2 — "R3" 20+75.95, 10.00′ R+ END MGS MGS END ANCHOR ASSEMBLY (TYPE SFT)
- EE — "A2" 18+75.01, 20.00′ L+ Beg MGS
- EE1 — "A2" 18+54.67, 20.00′ L+ END MGS INTERMEDIATE ANCHOR ASSEMBLY (TYPE SFT)
- EE2 — "A2" 18+48.42, 20.00′ L+ Beg MGS
- EE3 — "R4" 10+62.06, 2.00′ R+ END MGS ALTERNATIVE IN-LINE TERMINAL SYSTEM
- FF — "A2" 19+99.76, 69.12′ L+ SALVAGE CRASH CUSHION
- FF1 — "A2" 20+03.78, 39.39′ L+ SEE NOTE 1
- FF2 — "A2" 20+21.59, 70.29′ R+ SEE NOTE 1
- GG — "A2" 19+72.68, 106.60′ L+ Beg RECONSTRUCT GUARDRAIL BURIED END SEE NOTE 1
- GG1 — "A2" 20+01.53, 21.44′ R+ END RECONSTRUCT GUARDRAIL, Beg ANCHOR ASSEMBLY (TYPE SFT) SEE NOTE 1
- GG2 — "A2" 20+02.90, 27.54′ R+ END ANCHOR ASSEMBLY (TYPE SFT) SEE NOTE 1
- HH — "A2" 20+20.50, 14.04′ R+ SEE NOTE 2
- HH1 — "A2" 20+46.94, 158.12′ R+ SEE NOTE 2
- II — "A2" 20+11.58, 23.97′ L+ END ANCHOR ASSEMBLY (TYPE SFT) SEE NOTE 2
- II1 — "A2" 20+12.94, 17.87′ L+ Beg RECONSTRUCT GUARDRAIL SEE NOTE 2
- II2 — "A2" 20+26.72, 43.09′ R+ END RECONSTRUCT GUARDRAIL Beg RECONSTRUCT GUARDRAIL (DOUBLE) SEE NOTE 2
- II3 — "A2" 20+32.66, 80.59′ R+ END RECONSTRUCT GUARDRAIL (DOUBLE) Beg RECONSTRUCT CRASH CUSHION, TYPE "CAT" SEE NOTE 2
- II4 — "A2" 20+37.34, 110.23′ R+ END RECONSTRUCT CRASH CUSHION, TYPE "CAT" SEE NOTE 2
- JJ — "A2" 21+56.00, 20.00′ L+ ALTERNATIVE CRASH CUSHION

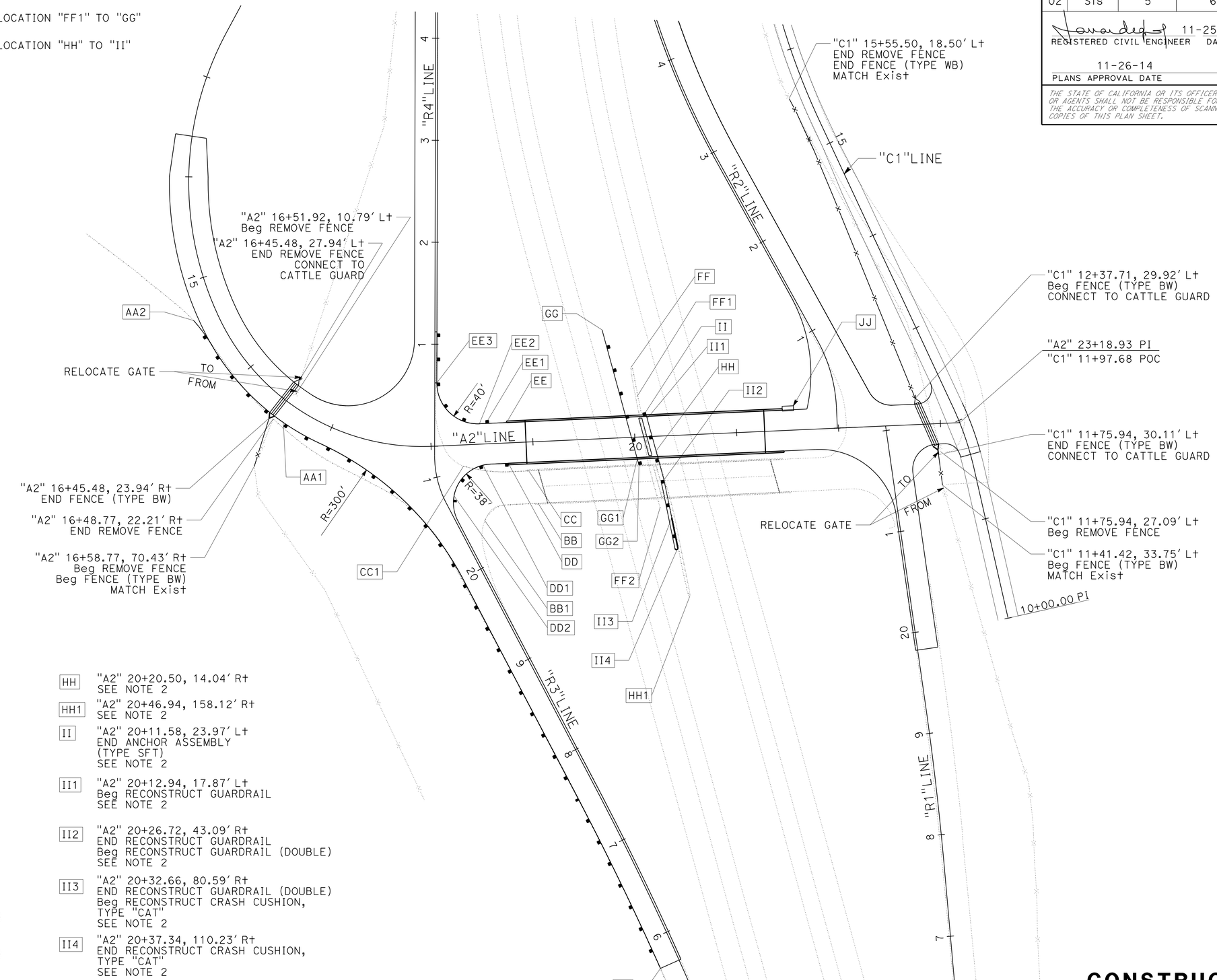

GUARDRAIL AND FENCE DETAIL

APPROVED FOR CONSTRUCTION DETAIL WORK ONLY

CONSTRUCTION DETAILS

SCALE: 1" = 50′

C-3

STATE OF CALIFORNIA - DEPARTMENT OF TRANSPORTATION
Caltrans DESIGN

JAVED IQBAL — JULIE CASEY — FUNCTIONAL SUPERVISOR
CALCULATED-DESIGNED BY — CHECKED BY
REVISED BY — DATE REVISED

P:\proj\02\3E730_plans\pse\23e730ga003.dgn

LAST REVISION 11-25-14 — DATE PLOTTED => 23-JAN-2015 — TIME PLOTTED => 12:35

Dist	COUNTY	ROUTE	POST MILES TOTAL PROJECT	SHEET No.	TOTAL SHEETS
02	Sis	5	68.3	16	120

REGISTERED CIVIL ENGINEER 11-25-14 DATE

11-26-14
PLANS APPROVAL DATE

REGISTERED PROFESSIONAL ENGINEER JAVED IQBAL No. C82518 Exp. 9/30/16 CIVIL STATE OF CALIFORNIA

THE STATE OF CALIFORNIA OR ITS OFFICERS OR AGENTS SHALL NOT BE RESPONSIBLE FOR THE ACCURACY OR COMPLETENESS OF SCANNED COPIES OF THIS PLAN SHEET.

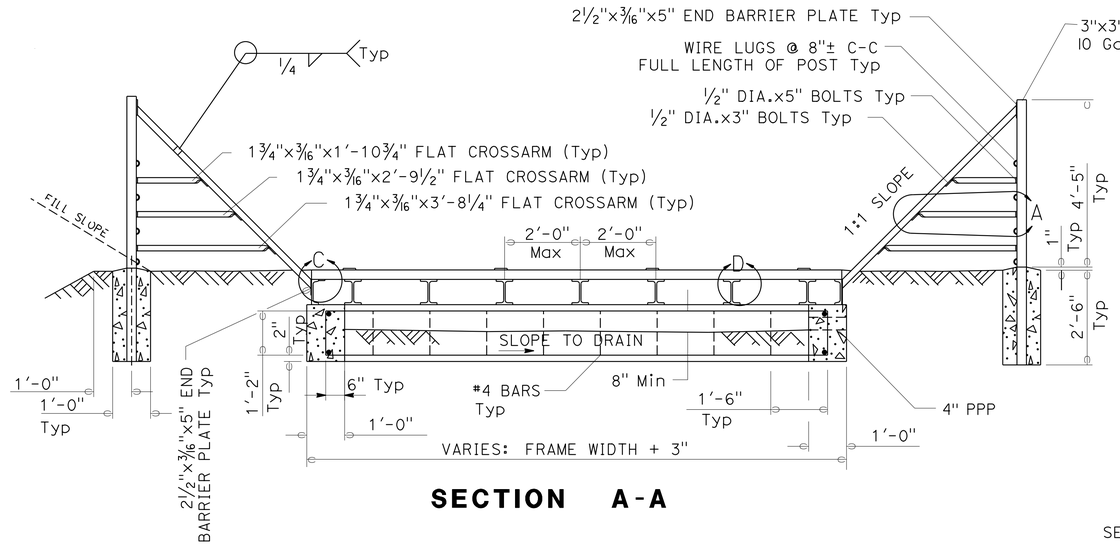

SECTION A-A

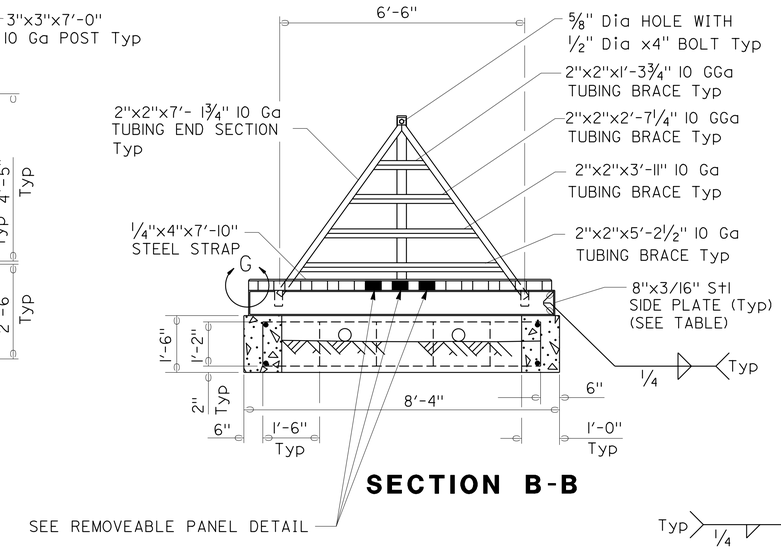

SECTION B-B

NOTES:

1. ALTERNATIVE DESIGN MAY BE SUBSTITUTED BY THE CONTRACTOR FOR APPROVAL BY THE ENGINEER.
2. LIVE LOADING: H-20
3. CATTLE GUARD SLOPE IS TO CONFORM TO THE ROADWAY CROSS SLOPE AND GRADE.
4. "FRAME WIDTH" COMBINATIONS MAY BE VARIED TO OBTAIN THE SPECIFIED WIDTH OF CATTLE GUARDS.
5. THE SLOPE OF THE 4" PPP WILL FOLLOW THE SLOPE OF OG.

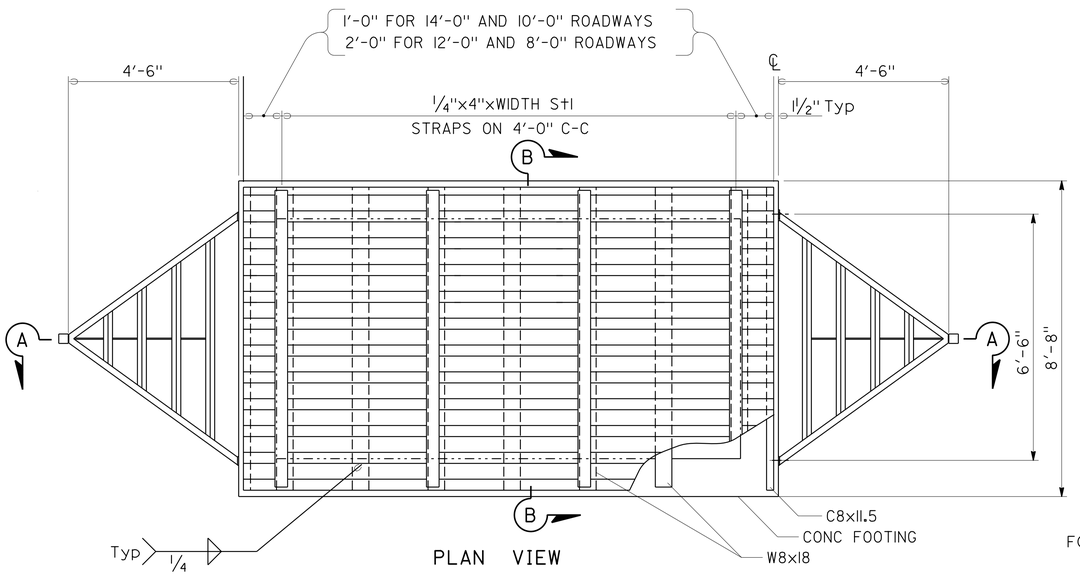

PLAN VIEW

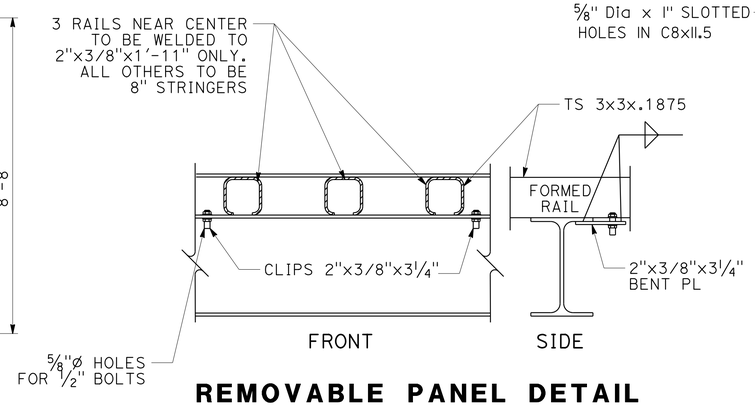

REMOVABLE PANEL DETAIL

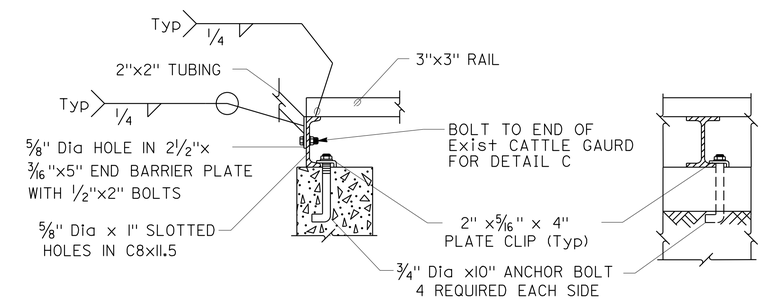

DETAILS "C" & "D"

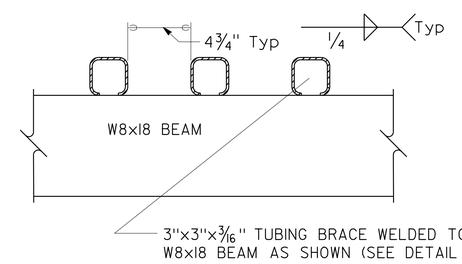

DETAIL "T"

CATTLE GUARD WIDTH

LOCATION	WIDTH LF
LOCATION 1	40.0
LOCATION 2	45.3

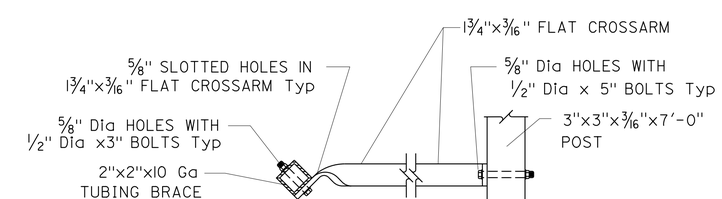

DETAIL "A"

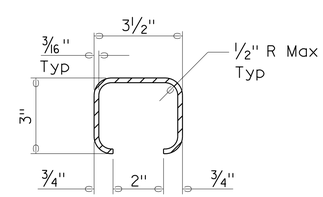

DETAIL "H"

NOTE: A WELDED OR ROLLED UNIT OF EQUIVALENT DESIGN LOADING CAPACITY MAY BE SUBMITTED TO THE ENGINEER FOR APPROVAL IN PLACE OF A 3"x3"x3/16" TUBING

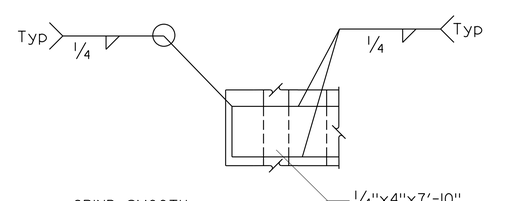

DETAIL "G"

CONSTRUCTION DETAILS METAL CATTLE GUARD

NO SCALE

C-4

REVISED BY | DATE REVISED
JAVED IQBAL | JULIE CASEY
CALCULATED-DESIGNED BY | CHECKED BY
FUNCTIONAL SUPERVISOR: JULIE CASEY

STATE OF CALIFORNIA - DEPARTMENT OF TRANSPORTATION
Caltrans DESIGN

P:\proj1\02\3E730_plans\pse\23e730ga004.dgn

LAST REVISION 11-25-14 | DATE PLOTTED => 23-JAN-2015 | TIME PLOTTED => 12:36

Dist	COUNTY	ROUTE	POST MILES TOTAL PROJECT	SHEET No.	TOTAL SHEETS
02	Sis	5	68.3	17	120

Dwight D Winterlin 11-25-14
REGISTERED CIVIL ENGINEER DATE

11-26-14
PLANS APPROVAL DATE

REGISTERED PROFESSIONAL ENGINEER
DWIGHT WINTERLIN
No. C68438
Exp. 9-30-15
CIVIL
STATE OF CALIFORNIA

THE STATE OF CALIFORNIA OR ITS OFFICERS OR AGENTS SHALL NOT BE RESPONSIBLE FOR THE ACCURACY OR COMPLETENESS OF SCANNED COPIES OF THIS PLAN SHEET.

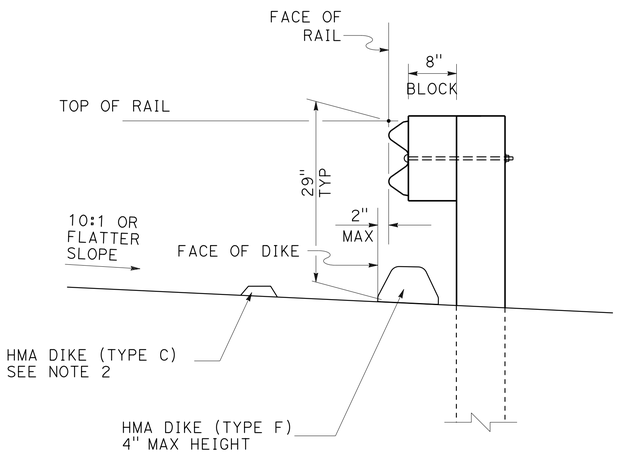

MBGR DIKE POSITIONING

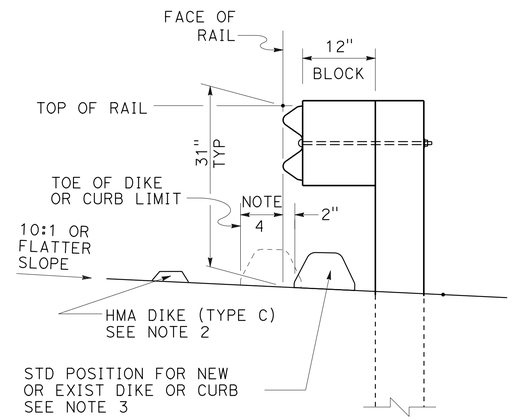

MGS DIKE POSITIONING

NOTES:

1. FOR CURB AND DIKE DETAILS, SEE REVISED STANDARD PLANS RSP A87A. AND RSP A87B.
2. ONLY TYPE C DIKE MAY BE USED UNDER OR IN FRONT OF TERMINAL SYSTEMS, OR WHEN DIKE IS PLACED MORE THAN 2" IN FRONT OF FACE OF MBGR, OR MORE THAN 7" IN FRONT OF FACE OF MGS.
3. DIKE OR CURB MUST BE PLACED IN THE STD POSITION UNLESS OTHERWISE SHOWN. THE MAXIMUM HEIGHT OF THE DIKE OR CURB SHALL BE 4" FOR MBGR, AND 6" FOR MGS. 6" MOUNTABLE DIKE SHOULD NOT BE USED UNDER GUARDRAIL.
4. DIKE OR CURB MAY BE PLACED UP TO 7" IN FRONT OF FACE OF MGS WHERE SHOWN ON PROJECT PLANS OR AUTHORIZED BY THE ENGINEER.
5. GUARDRAIL DELINEATION TO BE USED WHERE SHOWN ON THE PROJECT PLANS.
6. FOR STEEL LINE POSTS, USE 1/4 - 20 SELF-TAPPING SCREWS IN 0.22" DIAMETER HOLES OR 1/4" BOLTS IN 9/32" DIAMETER HOLES.

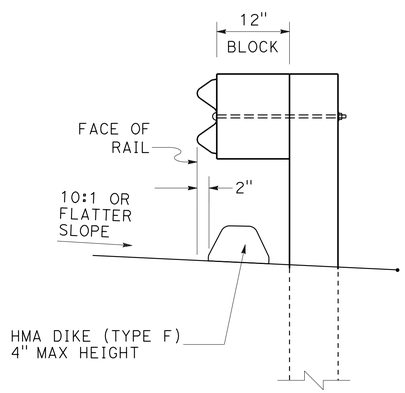

MBGR WITH 12" BLOCK DIKE POSITIONING

SNOW COUNTRY

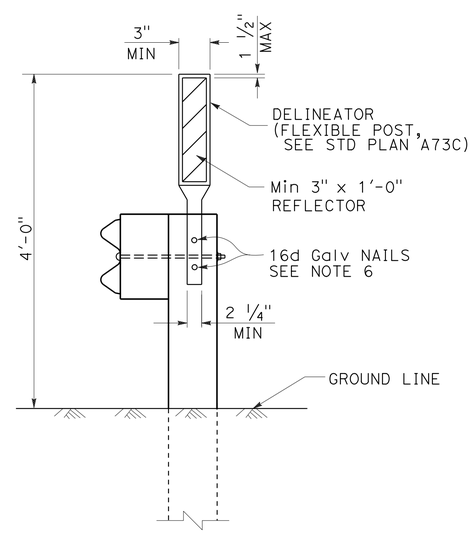

GUARDRAIL DELINEATION

SEE NOTE 5

CONSTRUCTION DETAILS
GUARDRAIL
TYPICAL DIKE POSITIONING AND DELINEATION DETAILS

NO SCALE

C-5

REVISED BY | DATE REVISED
DWIGHT WINTERLIN | JOHN HART
CALCULATED-DESIGNED BY | CHECKED BY
FUNCTIONAL SUPERVISOR: KRISTI WESTOBY
STATE OF CALIFORNIA - DEPARTMENT OF TRANSPORTATION
Caltrans
TRAFFIC

P:\proj1\02\3E730_plans\pse\23e730ga005.dgn

LAST REVISION 11-14-14 | DATE PLOTTED => 23-JAN-2015 | TIME PLOTTED => 12:36

Dist	COUNTY	ROUTE	POST MILES TOTAL PROJECT	SHEET No.	TOTAL SHEETS
02	Sis	5	68.3	18	120

Dwight D Winterlin 11-25-14
REGISTERED CIVIL ENGINEER DATE

11-26-14
PLANS APPROVAL DATE

REGISTERED PROFESSIONAL ENGINEER
DWIGHT WINTERLIN
No. C68438
Exp. 9-30-15
CIVIL
STATE OF CALIFORNIA

THE STATE OF CALIFORNIA OR ITS OFFICERS OR AGENTS SHALL NOT BE RESPONSIBLE FOR THE ACCURACY OR COMPLETENESS OF SCANNED COPIES OF THIS PLAN SHEET.

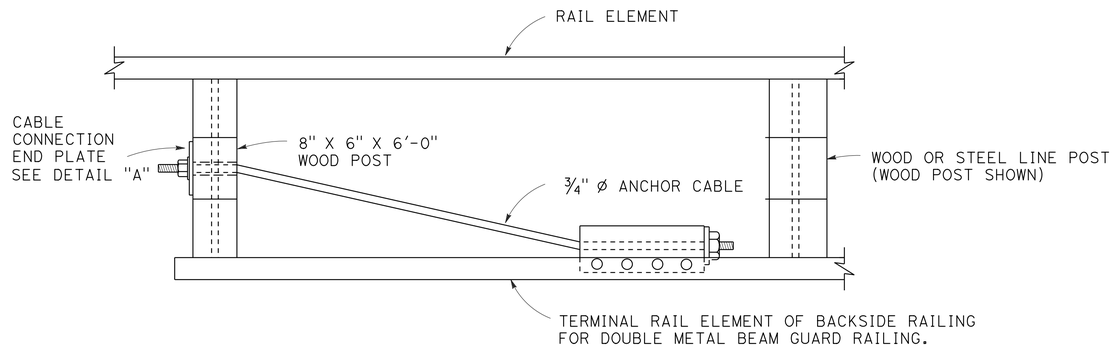

PLAN

NOTES:

1. FOR DETAILS OF THE ANCHOR PLATE AND 3/4" CABLE, SEE STANDARD PLAN A77S3.

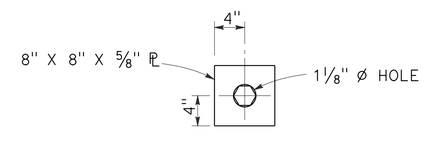

DETAIL A
CABLE CONNECTION END PLATE

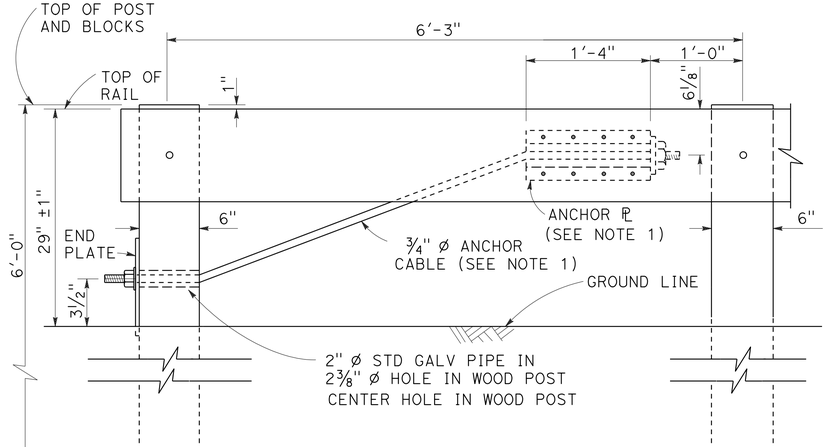

ELEVATION
RAIL TENSIONING ASSEMBLY
SEE NOTE 1

CONSTRUCTION DETAILS METAL BEAM GUARDRAIL RAIL TENSIONING ASSEMBLY

NO SCALE

C-6

REVISED BY	DATE REVISED

CALCULATED-DESIGNED BY: DWIGHT WINTERLIN
CHECKED BY: JOHN HART
FUNCTIONAL SUPERVISOR: KRISTI WESTOBY

STATE OF CALIFORNIA - DEPARTMENT OF TRANSPORTATION
Caltrans
TRAFFIC

P:\proj1\02\3E730_plans\pse\23e730ga006.dgn

LAST REVISION 11-14-14 | DATE PLOTTED => 23-JAN-2015 | TIME PLOTTED => 12:36

Dist	COUNTY	ROUTE	POST MILES TOTAL PROJECT	SHEET No.	TOTAL SHEETS
02	Sis	5	68.3	19	120

Dwight D Winterlin 11-25-14
REGISTERED CIVIL ENGINEER DATE

11-26-14
PLANS APPROVAL DATE

REGISTERED PROFESSIONAL ENGINEER
DWIGHT WINTERLIN
No. C68438
Exp. 9-30-15
CIVIL
STATE OF CALIFORNIA

THE STATE OF CALIFORNIA OR ITS OFFICERS OR AGENTS SHALL NOT BE RESPONSIBLE FOR THE ACCURACY OR COMPLETENESS OF SCANNED COPIES OF THIS PLAN SHEET.

NOTES:

1. FOR DETAILS OF THE ANCHOR PLATE AND ¾" CABLE, SEE STANDARD PLAN A77H3 OR A77S3.
2. INTERMEDIATE ANCHOR ASSEMBLY IS TYPICALLY USED AT END OF SHOP BENT GUARD RAILING TO PROVIDE TENSION FOR THE NON SHOP BENT GUARD RAILING.
3. CONTACT DISTRACT TRAFFIC FOR QUESTIONS REGARDING THE USE OF INTERMEDIATE ANCHOR ASSEMBLY AND GUARD RAILING LAYOUT TO BE USED.

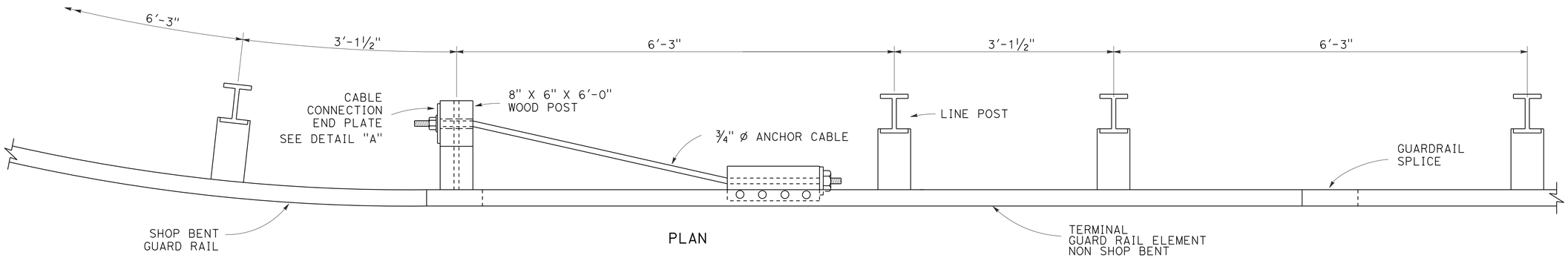

PLAN

SEE NOTE 2

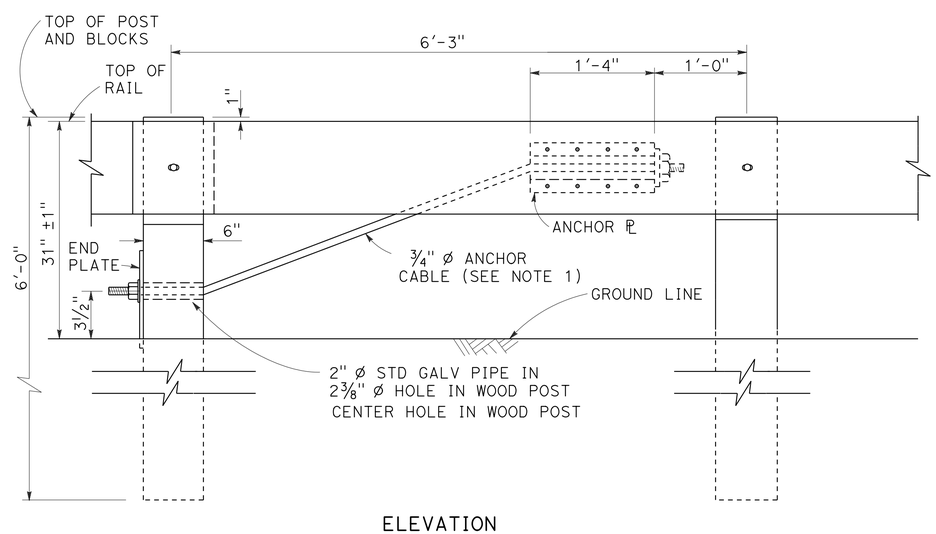

ELEVATION

INTERMEDIATE ANCHOR ASSEMBLY (MGS)

SEE NOTE 1

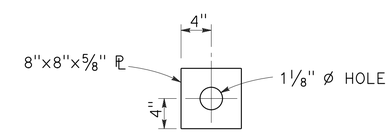

DETAIL A
CABLE CONNECTION END PLATE

CONSTRUCTION DETAILS GUARDRAILING - MGS INTERMEDIATE ANCHOR ASSEMBLY

NO SCALE

C-7

REVISED BY | DATE REVISED
DWIGHT WINTERLIN | JOHN HART
CALCULATED-DESIGNED BY | CHECKED BY
FUNCTIONAL SUPERVISOR
KRISTI WESTOBY

STATE OF CALIFORNIA - DEPARTMENT OF TRANSPORTATION
Caltrans
TRAFFIC

P:\proj1\02\3E730_plans\pse\23e730ga007.dgn

LAST REVISION 11-14-14 | DATE PLOTTED => 23-JAN-2015 | TIME PLOTTED => 12:36

Dist	COUNTY	ROUTE	POST MILES TOTAL PROJECT	SHEET No.	TOTAL SHEETS
02	Sis	5	68.3	20	120

Dwight D Winterlin 11-25-14
REGISTERED CIVIL ENGINEER DATE

11-26-14
PLANS APPROVAL DATE

REGISTERED PROFESSIONAL ENGINEER
DWIGHT WINTERLIN
No. C68438
Exp. 9-30-15
CIVIL
STATE OF CALIFORNIA

THE STATE OF CALIFORNIA OR ITS OFFICERS OR AGENTS SHALL NOT BE RESPONSIBLE FOR THE ACCURACY OR COMPLETENESS OF SCANNED COPIES OF THIS PLAN SHEET.

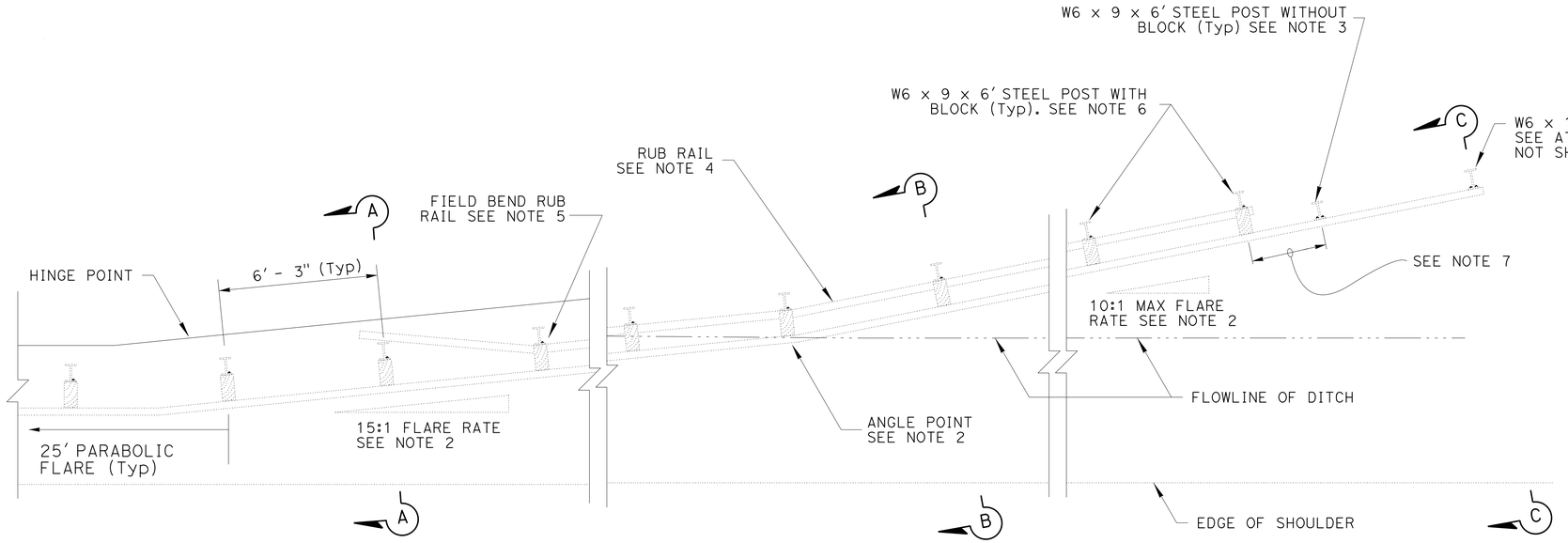

PLAN

NOTES:

1. ELEVATION OF THE GUARDRAIL SHOULD FOLLOW THE PROFILE GRADE OF THE SHOULDER AND BE NO LOWER THAN 10% OF THE OFFSET FROM THE SHOULDER TO THE RAIL. SEE SECTION C-C.
2. MAXIMUM FLARE RATE OF GUARDRAIL FROM THE SHOULDER TO THE FLOWLINE IS 15:1. FLARE RATE CAN BE INCREASED UP TO 10:1 AFTER CROSSING THE DITCH FLOWLINE.
3. NO BLOCKS ON POSTS WHERE BLOCKS ARE IN CONTACT WITH SOIL.
4. USE STANDARD GUARDRAIL ELEMENTS WITH NO BLOCKS FOR RUB RAIL.
5. BEGIN RUB RAIL WHEN THE HEIGHT OF THE GUARDRAIL IS MORE THAN 32" ABOVE THE GROUND DIRECTLY BELOW THE RAIL.
6. CONTINUE RUB RAIL UNTIL TOP OF RUB RAIL BURIED IN THE BACKSLOPE.
7. POST SPACING AND ELEMENT SPLICES SHOWN FOR MGS. MAINTAIN 6'-3" SPACING AND SPLICE ELEMENTS AT POSTS FOR MBGR.
8. THE BURRIED POST END ANCHOR SHOULD BE INSTALLED IN A NON-TRAVERSABLE SLOPE.

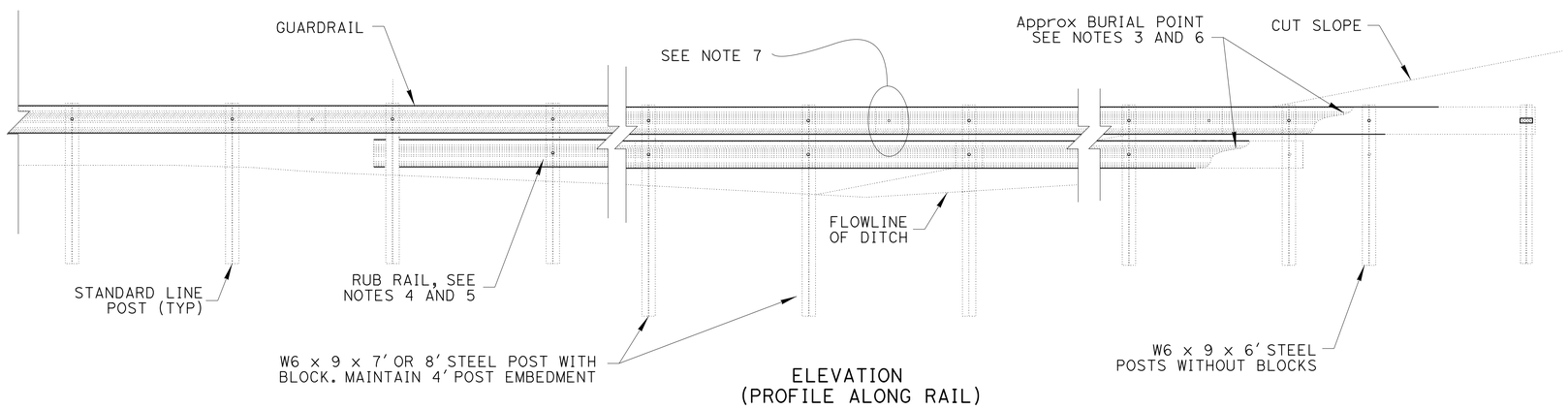

ELEVATION
(PROFILE ALONG RAIL)

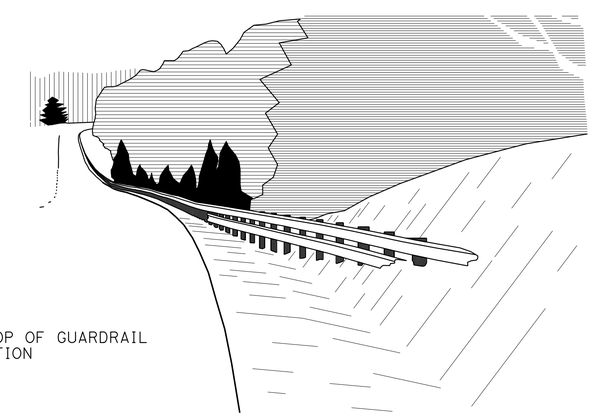

PERSPECTIVE

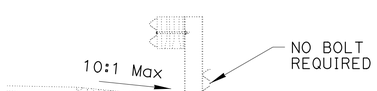

SECTION A-A

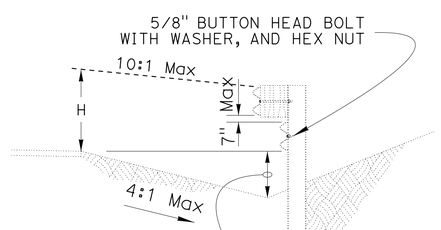

SECTION B-B

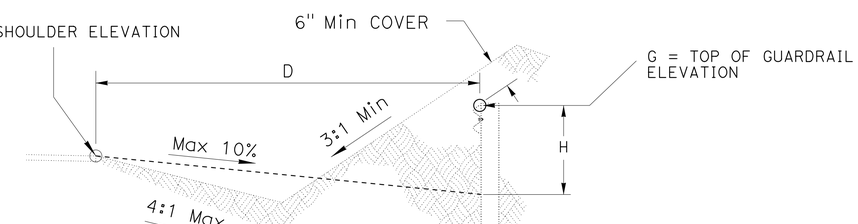

SEE NOTE 1
G = S + H - (10% x D)Max
H = 31" (MGS)
H = 29" (MBGR)

SECTION C-C

CONSTRUCTON DETAILS GUARDRAIL MODIFIED BURIED POST END ANCHOR

NO SCALE

C-8

REVISED BY | DATE REVISED
DWIGHT WINTERLIN | JOHN HART
CALCULATED-DESIGNED BY | CHECKED BY
FUNCTIONAL SUPERVISOR | KRISTI WESTOBY
STATE OF CALIFORNIA - DEPARTMENT OF TRANSPORTATION
Caltrans | TRAFFIC
P:\proj1\02\3E730_plans\pse\23e730ga008.dgn

LAST REVISION | DATE PLOTTED => 23-JAN-2015
11-14-14 | TIME PLOTTED => 12:36

Dist	COUNTY	ROUTE	POST MILES TOTAL PROJECT	SHEET No.	TOTAL SHEETS
02	Sis	5	68.3	21	120

Dwight D Winterlin 11-25-14
REGISTERED CIVIL ENGINEER DATE

11-26-14
PLANS APPROVAL DATE

REGISTERED PROFESSIONAL ENGINEER DWIGHT WINTERLIN No. C68438 Exp. 9-30-15 CIVIL STATE OF CALIFORNIA

THE STATE OF CALIFORNIA OR ITS OFFICERS OR AGENTS SHALL NOT BE RESPONSIBLE FOR THE ACCURACY OR COMPLETENESS OF SCANNED COPIES OF THIS PLAN SHEET.

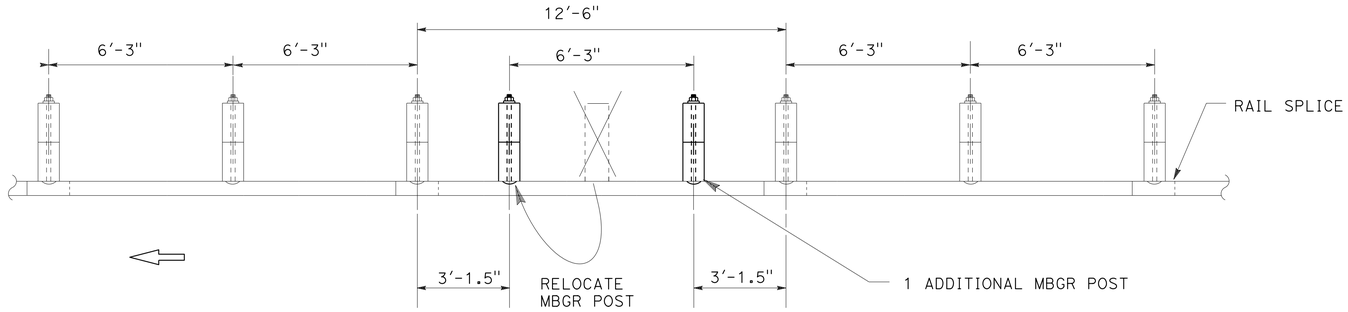

CASE 1

(ONE POST CONFLICT, MOVE THE POST AND ADD ONE POST)
(NO NESTED RAIL REQUIRED)

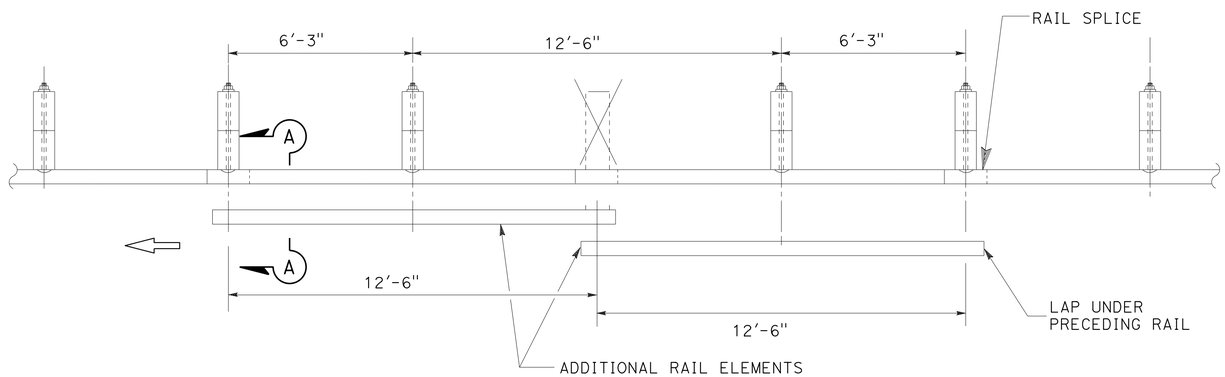

CASE 2

(ONE POST OMITTED AT JUNCTION OF TWO ELEMENTS)
(NEST TWO LENGTHS OF RAIL REQUIRED)

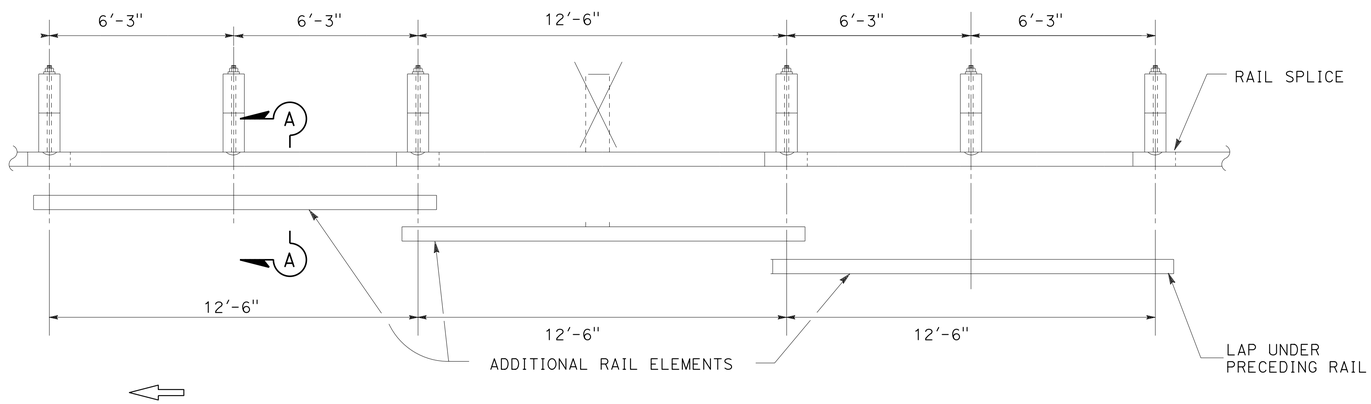

CASE 3

(ONE POST OMITTED AT CENTER OF OF ELEMENT)
(NEST THREE LENGTHS OF RAIL REQUIRED)
(ONE ADDITIONAL POST MAY BE OMITTED SEE NOTE 3)

LONG SPAN NESTED GUARDRAILING

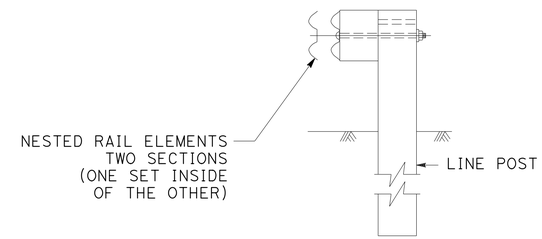

SECTION A-A

TYPICAL RAILING OVERLAP INSTALLATION AT POST

NOTES:

1. NEST ALL RAILS AT EXISTING RAIL LAPS
2. WHEN A POST IS REMOVED AND THE RAIL ELEMENTS ARE NESTED, THE NESTED ELEMENTS MUST BE SUPPORTED BY A MIN OF 2 POST EACH SIDE OF THE MISSING POST OR ADD ADDITIONAL LENGTH OF NESTED ELEMENTS.
3. USING CASE 3, A SECOND ADJACENT POST CAN BE REMOVED IF THE NESTED RAIL ELEMENTS ARE SUPPORTED BY A MIN OF 2 POSTS EACH SIDE OF THE MISSING POSTS. THE 2-POST OPTION USES CASE 3 BUT NOT SHOWN.

CONSTRUCTION DETAILS METAL BEAM GUARDRAILING REMOVE POST OPTIONS

NO SCALE

C-9

REVISED BY | DATE REVISED
DWIGHT WINTERLIN | JOHN HART
CALCULATED-DESIGNED BY | CHECKED BY
FUNCTIONAL SUPERVISOR
KRISTI WESTOBY

STATE OF CALIFORNIA - DEPARTMENT OF TRANSPORTATION
Caltrans
TRAFFIC

P:\proj\02\3E730_plans\pse\23e730ga009.dgn

LAST REVISION 11-14-14 | DATE PLOTTED => 23-JAN-2015 | TIME PLOTTED => 12:36

Dist	COUNTY	ROUTE	POST MILES TOTAL PROJECT	SHEET No.	TOTAL SHEETS
02	Sis	5	68.3	22	120

Dwight D Winterlin 11-25-14
REGISTERED CIVIL ENGINEER DATE

11-26-14
PLANS APPROVAL DATE

REGISTERED PROFESSIONAL ENGINEER DWIGHT WINTERLIN No. C68438 Exp. 9-30-15 CIVIL STATE OF CALIFORNIA

THE STATE OF CALIFORNIA OR ITS OFFICERS OR AGENTS SHALL NOT BE RESPONSIBLE FOR THE ACCURACY OR COMPLETENESS OF SCANNED COPIES OF THIS PLAN SHEET.

NOTES:

1. THESE INSTALLATION DETAILS APPLICABLE TO WOOD AND STEEL LINE POST INSTALLATIONS.
2. MAX 10:1 SLOPE IN FRONT OF GUARDRAIL.
3. FOR POST AND BLOCK DETAILS SEE RSP A77N1 AND A77N2.
4. W6 x 15 STEEL POST, 8'-0" IN LENGTH, WITH 8" NOTCHED BLOCKS MAY BE USED OR PLACE 10" x 10" x 8'-0" WOOD POST WITH 8" BLOCK SHOWN IN THE "STRENGTHENED RAILING SECTIONS DETAILS".
5. WHEN THERE IS A BREAK POINT IN FRONT OF GUARDRAIL BETWEEN 4'-8' THE HEIGHT WILL BE DETERMINED BY THE ENGINEER.
6. PLACE RUB RAIL AS DIRECTED BY ENGINEER. ATTACH RAIL ELEMENT TO POST WITH NO BLOCK WHEN HEIGHT OF GUARDRAIL IS MINIMUM 32" ABOVE FINISH GRADE UNDER FACE OF RAIL.

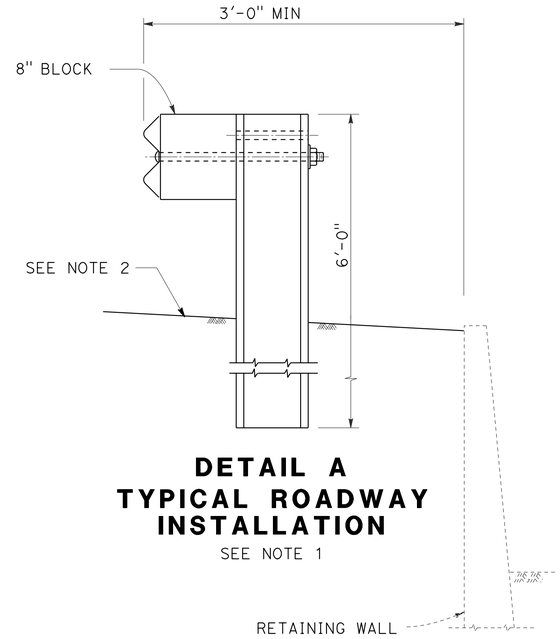

DETAIL A
TYPIC AL ROADWAY INSTALLATION
SEE NOTE 1

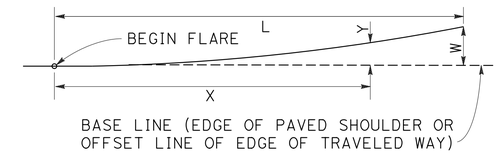

$$Y = \frac{WX^2}{L^2}$$

Y = OFFSET FROM BASE LINE
W = MAXIMUM OFFSET
X = DISTANCE ALONG BASE LINE
L = LENGTH OF FLARE

PARABOLIC FLARE OFFSETS

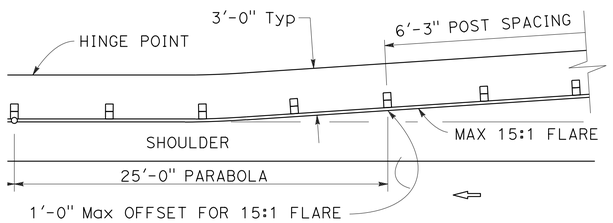

GUARDRAIL WITH FLARED ALIGNMENT

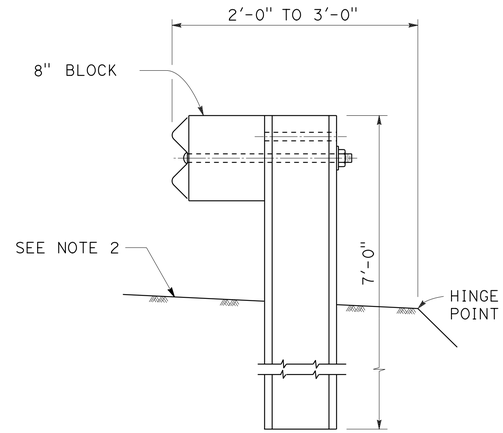

DETAIL B
NARROW ROADWAY INSTALLATION
SEE NOTE 1

POST EMBEDMENT

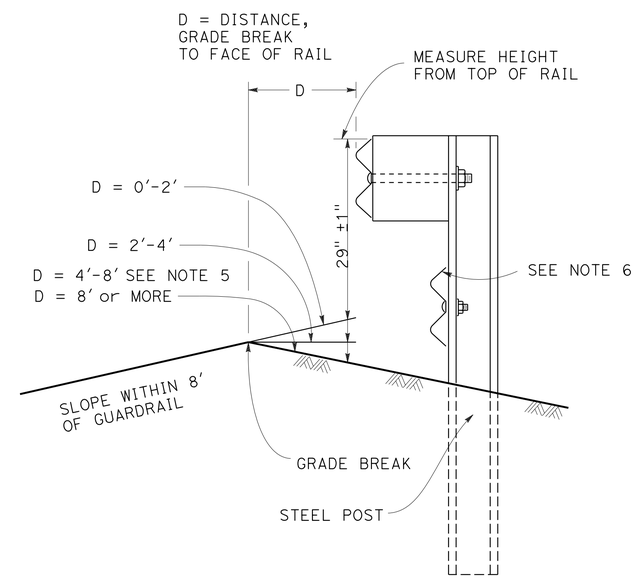

MEASURE HEIGHT AT GRADE BREAK DETAIL
WHEN THERE IS A BREAK POINT IN FRONT OF GUARDRAIL MEASURE HEIGHT OF GUARDRAIL BASED ON DISTANCE FROM GRADE BREAK TO ADJUST FOR TRAJECTORY.

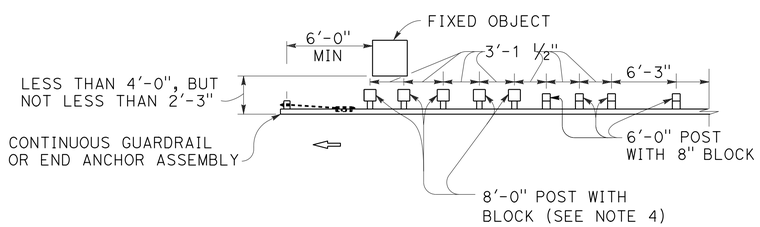

NOTE A:
FOR A SERIES OF FIXED OBJECTS (BRIDGE COLUMNS, OVERHEAD SIGN SUPPORTS, ETC.) ADDITIONAL 8'-0" POST WITH BLOCKS AT 3'-1 ½" CENTER TO CENTER SPACING ARE TO BE USED BETWEEN FIXED OBJECTS.

STRENGTHENED RAILING SECTIONS FOR FIXED OBJECT

USE STRENGTHENED RAILING SECTIONS WHERE MINIMUM CLEARANCE BETWEEN THE FACE OF THE GUARDRAILING AND FIXED OBJECT(S) IS LESS THAN 4'-0", BUT NOT LESS THAN 2'-3".

CONSTRUCTON DETAILS
METAL BEAM GUARDRAILING
TYPICAL LINE POST EMBEDMENT AND HINGE POINT OFFSET DETAILS

NO SCALE

C-10

STATE OF CALIFORNIA - DEPARTMENT OF TRANSPORTATION
Caltrans® TRAFFIC

FUNCTIONAL SUPERVISOR: KRISTI WESTOBY
CALCULATED-DESIGNED BY: DWIGHT WINTERLIN
CHECKED BY: JOHN HART
REVISED BY
DATE REVISED

P:\proj1\02\3E730_plans\pse\23e730ga010.dgn

LAST REVISION 11-14-14
DATE PLOTTED => 23-JAN-2015
TIME PLOTTED => 12:36

Dist	COUNTY	ROUTE	POST MILES TOTAL PROJECT	SHEET No.	TOTAL SHEETS
02	Sis	5	68.3	23	120

Dwight D Winterlin 11-25-14
REGISTERED CIVIL ENGINEER DATE

11-26-14
PLANS APPROVAL DATE

REGISTERED PROFESSIONAL ENGINEER
DWIGHT WINTERLIN
No. C68438
Exp. 9-30-15
CIVIL
STATE OF CALIFORNIA

THE STATE OF CALIFORNIA OR ITS OFFICERS OR AGENTS SHALL NOT BE RESPONSIBLE FOR THE ACCURACY OR COMPLETENESS OF SCANNED COPIES OF THIS PLAN SHEET.

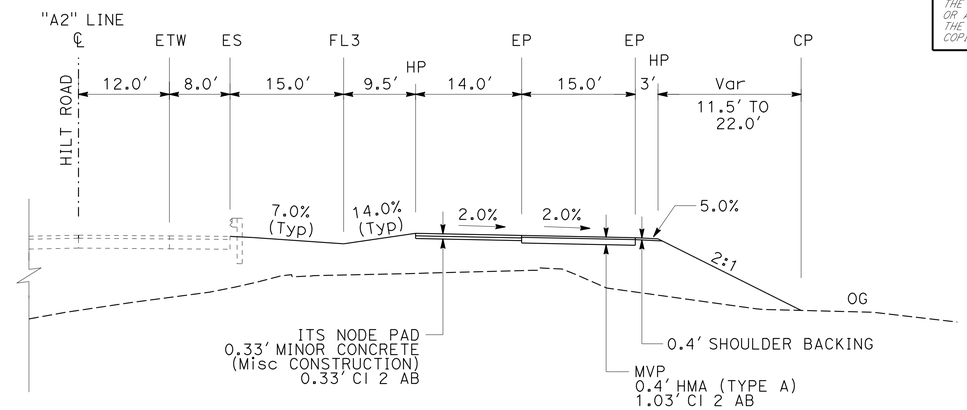

SECTION A-A

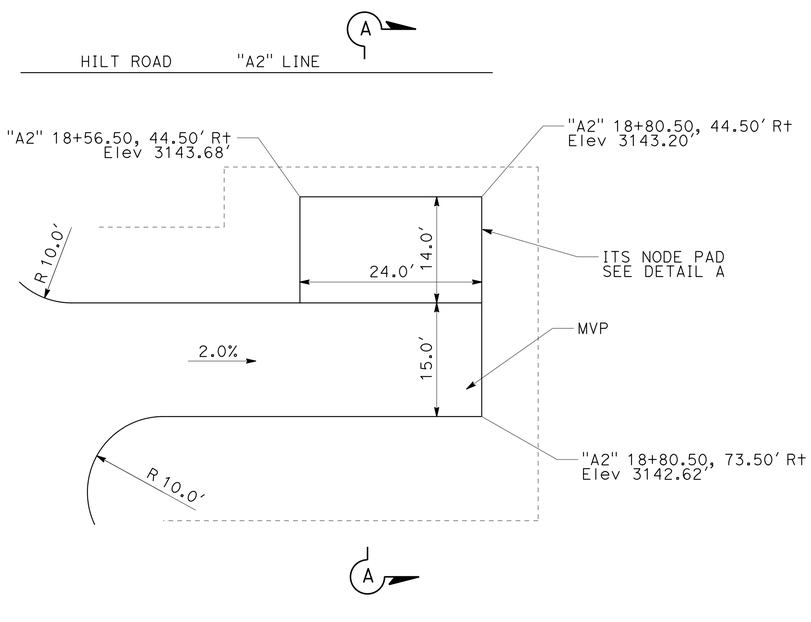

PLAN

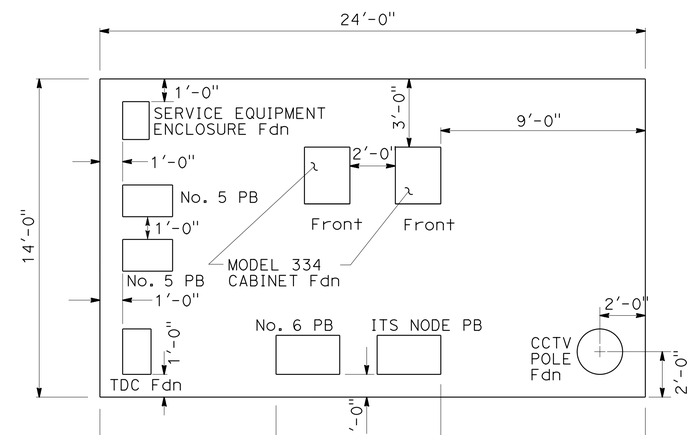

PLAN

DETAIL A
ITS NODE PAD

ITS NODE AND MAINTENANCE VEHICLE PULLOUT (MVP)

CONSTRUCTION DETAILS

NO SCALE

C-11

REVISED BY	DATE REVISED

CALCULATED-DESIGNED BY	DWIGHT WINTERLIN
CHECKED BY	JOHN HART
FUNCTIONAL SUPERVISOR	KRISTI WESTOBY

STATE OF CALIFORNIA - DEPARTMENT OF TRANSPORTATION
Caltrans
TRAFFIC

P:\proj\02\3E730_plans\pse\23e730ga011.dgn

LAST REVISION 11-14-14
DATE PLOTTED => 23-JAN-2015
TIME PLOTTED => 12:36

Dist	COUNTY	ROUTE	POST MILES TOTAL PROJECT	SHEET No.	TOTAL SHEETS
02	Sis	5	68.3	24	120

REGISTERED CIVIL ENGINEER 11-25-14 DATE

11-26-14
PLANS APPROVAL DATE

REGISTERED PROFESSIONAL ENGINEER JAVED IQBAL No. C82518 Exp. 9/30/16 CIVIL STATE OF CALIFORNIA

THE STATE OF CALIFORNIA OR ITS OFFICERS OR AGENTS SHALL NOT BE RESPONSIBLE FOR THE ACCURACY OR COMPLETENESS OF SCANNED COPIES OF THIS PLAN SHEET.

NOTE:

1. FOR ACCURATE RIGHT OF WAY DATA, CONTACT RIGHT OF WAY ENGNEERING AT THE DISTRICT OFFICE

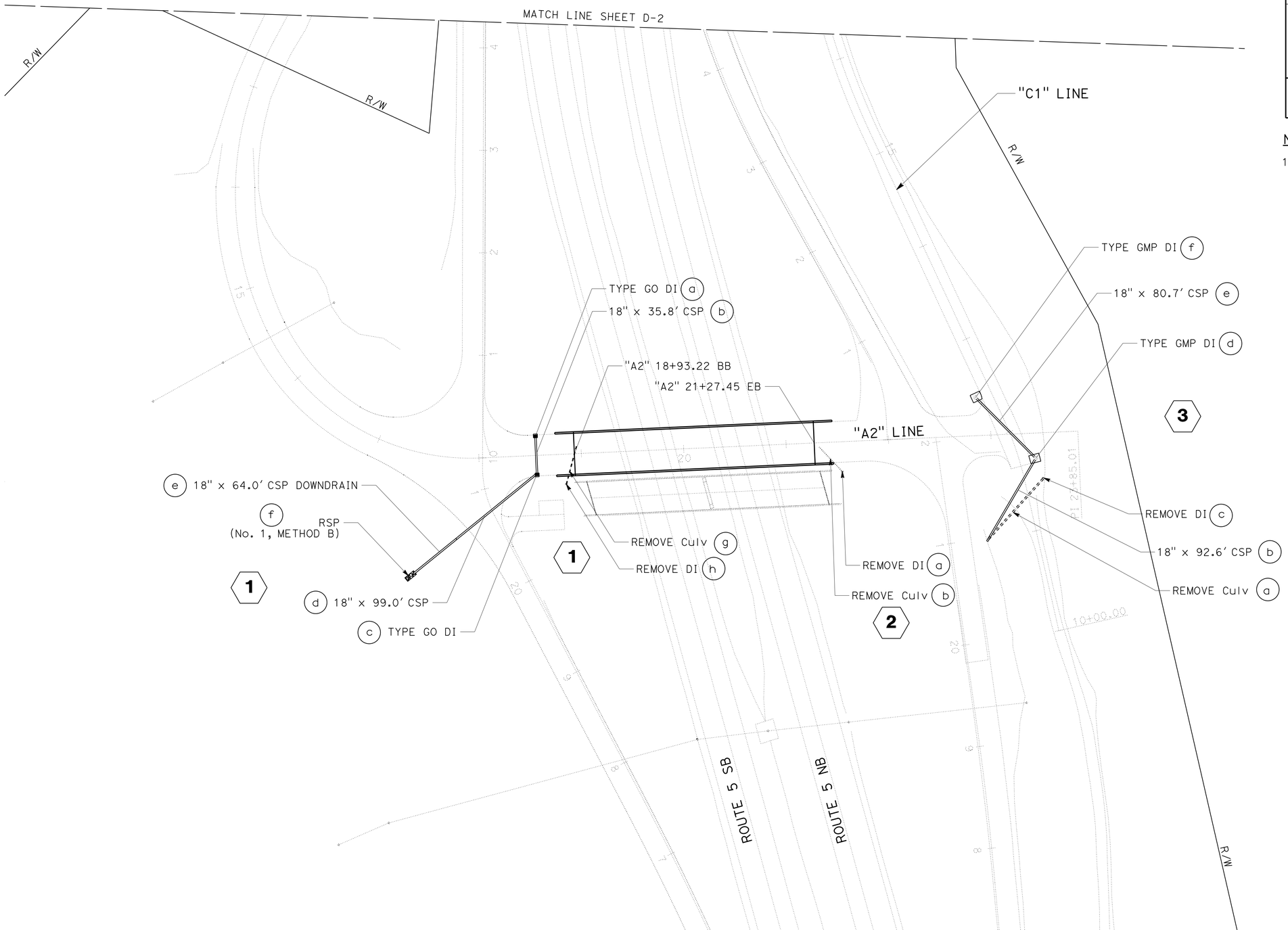

DRAINAGE PLAN

SCALE: 1" = 50'

D-1

APPROVED FOR DRAINAGE WORK ONLY

STATE OF CALIFORNIA - DEPARTMENT OF TRANSPORTATION
Caltrans DESIGN

FUNCTIONAL SUPERVISOR: JULIE CASEY
CALCULATED-DESIGNED BY: JAVED IQBAL
CHECKED BY: JULIE CASEY
REVISED BY / DATE REVISED

P:\proj1\02\3E730_plans\pse\23e730ia001.dgn

LAST REVISION 11-25-14 | DATE PLOTTED => 23-JAN-2015 | TIME PLOTTED => 12:36

Dist	COUNTY	ROUTE	POST MILES TOTAL PROJECT	SHEET No.	TOTAL SHEETS
02	Sis	5	68.3	25	120

REGISTERED CIVIL ENGINEER 11-25-14 DATE

11-26-14
PLANS APPROVAL DATE

REGISTERED PROFESSIONAL ENGINEER
JAVED IQBAL
No. C82518
Exp. 9/30/16
CIVIL
STATE OF CALIFORNIA

THE STATE OF CALIFORNIA OR ITS OFFICERS OR AGENTS SHALL NOT BE RESPONSIBLE FOR THE ACCURACY OR COMPLETENESS OF SCANNED COPIES OF THIS PLAN SHEET.

NOTE:

1. FOR ACCURATE RIGHT OF WAY DATA, CONTACT RIGHT OF WAY ENGINEERING AT THE DISTRICT OFFICE.

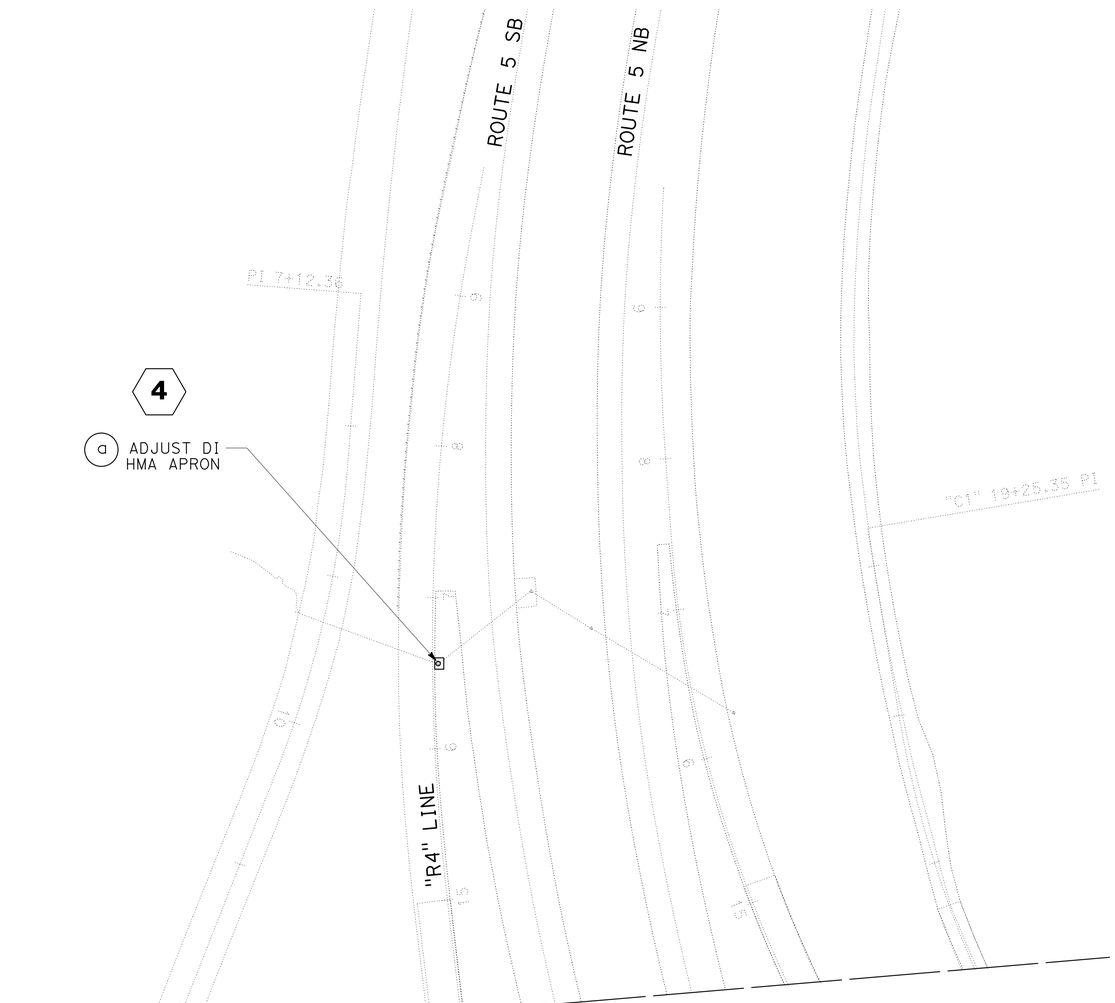

APPROVED FOR DRAINAGE WORK ONLY

DRAINAGE PLAN

SCALE: 1" = 50'

D-2

REVISED BY	DATE REVISED
JAVED IQBAL	JULIE CASEY

CALCULATED-DESIGNED BY	CHECKED BY

FUNCTIONAL SUPERVISOR: JULIE CASEY

STATE OF CALIFORNIA - DEPARTMENT OF TRANSPORTATION
Caltrans
DESIGN

P:\proj1\02\3E730_plans\pse\23e730ia002.dgn

LAST REVISION 11-25-14 | DATE PLOTTED => 23-JAN-2015 | TIME PLOTTED => 12:36

Dist	COUNTY	ROUTE	POST MILES TOTAL PROJECT	SHEET No.	TOTAL SHEETS
02	Sis	5	68.3	26	120

REGISTERED CIVIL ENGINEER 11-25-14 DATE

11-26-14
PLANS APPROVAL DATE

REGISTERED PROFESSIONAL ENGINEER JAVED IQBAL No. C82518 Exp. 9/30/16 CIVIL STATE OF CALIFORNIA

THE STATE OF CALIFORNIA OR ITS OFFICERS OR AGENTS SHALL NOT BE RESPONSIBLE FOR THE ACCURACY OR COMPLETENESS OF SCANNED COPIES OF THIS PLAN SHEET.

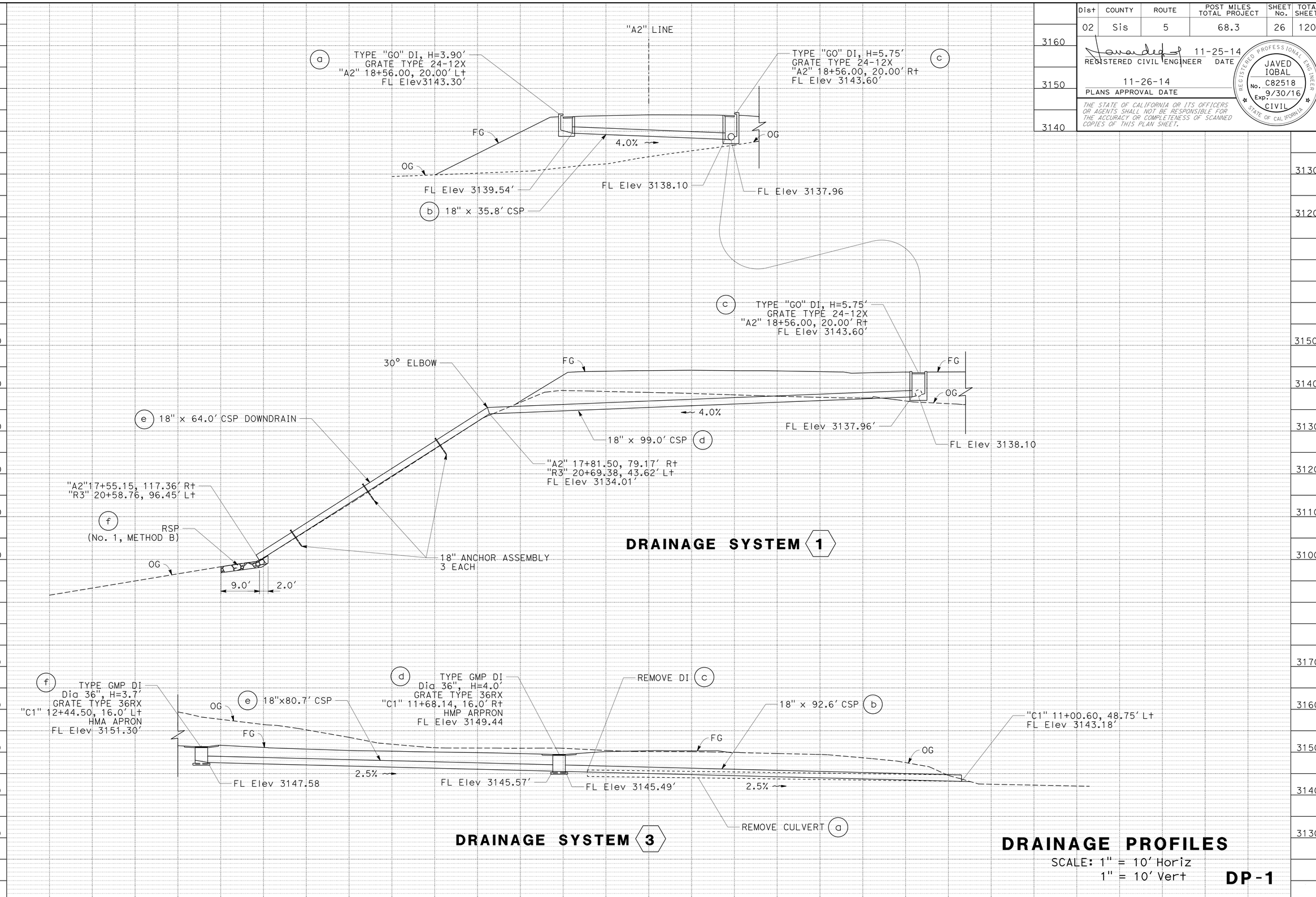

DRAINAGE PROFILES

SCALE: 1" = 10' Horiz
1" = 10' Vert

DP-1

REVISED BY | DATE REVISED
JAVED IQBAL | JULIE CASEY
CALCULATED-DESIGNED BY | CHECKED BY
FUNCTIONAL SUPERVISOR: JULIE CASEY

STATE OF CALIFORNIA - DEPARTMENT OF TRANSPORTATION
Caltrans
DESIGN

P:\proj1\02\3E730_plans\pse\23e730ib001.dgn

LAST REVISION 11-25-14 | DATE PLOTTED => 23-JAN-2015 | TIME PLOTTED => 12:36

Dist	COUNTY	ROUTE	POST MILES TOTAL PROJECT	SHEET No.	TOTAL SHEETS
02	Sis	5	68.3	27	120

REGISTERED CIVIL ENGINEER 11-25-14 DATE

11-26-14
PLANS APPROVAL DATE

REGISTERED PROFESSIONAL ENGINEER JAVED IQBAL No. C82518 Exp. 9/30/16 CIVIL STATE OF CALIFORNIA

THE STATE OF CALIFORNIA OR ITS OFFICERS OR AGENTS SHALL NOT BE RESPONSIBLE FOR THE ACCURACY OR COMPLETENESS OF SCANNED COPIES OF THIS PLAN SHEET.

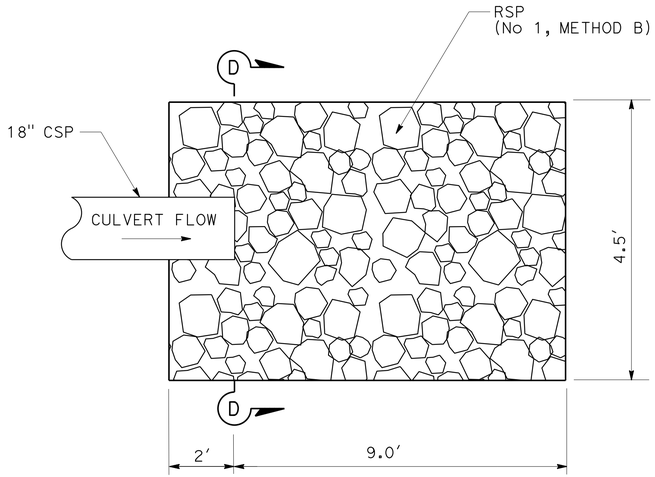

PLAN

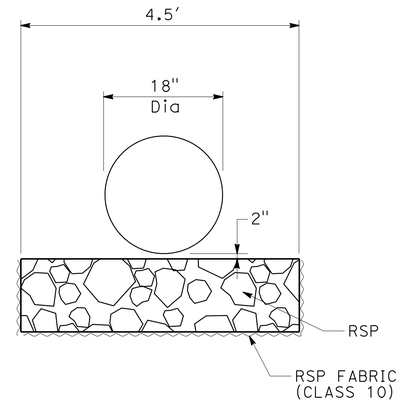

SECTION D-D

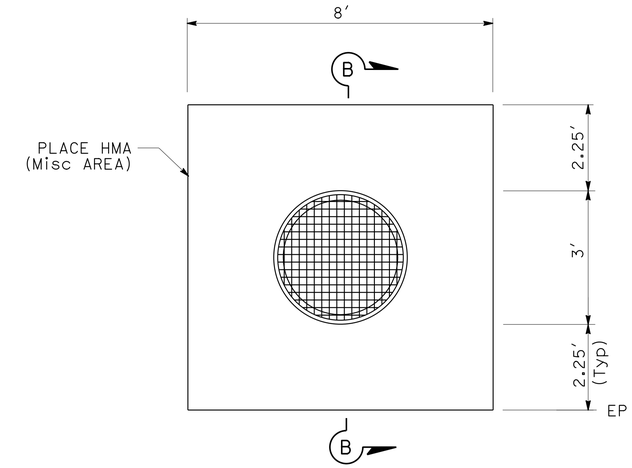

PLAN

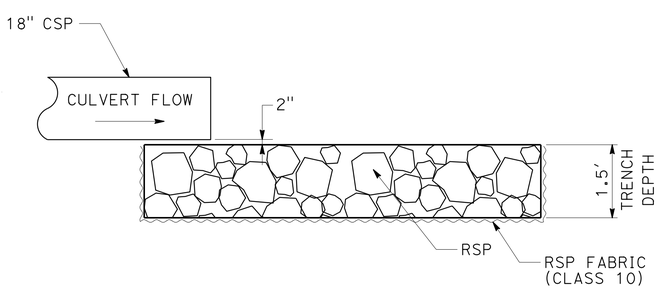

PROFILE

ENERGY DISSIPATOR 1 e

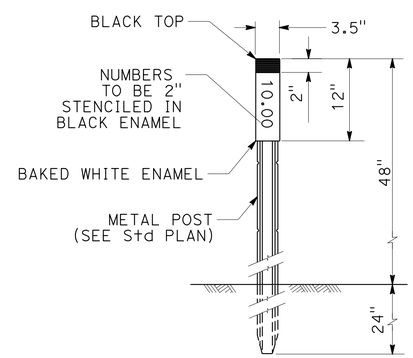

MARKER (CULVERT)

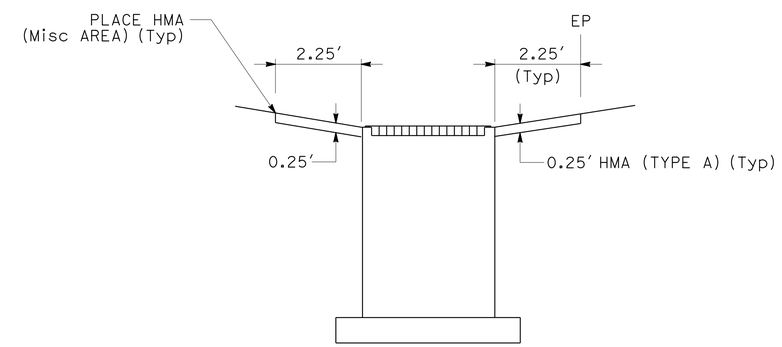

SECTION B-B

TYPE GMP DRAINAGE INLET HMA APRON 3 d f / 4 a

DRAINAGE DETAILS

NO SCALE

DD-1

REVISED BY	DATE REVISED
JAVED IQBAL	JULIE CASEY
CALCULATED-DESIGNED BY	CHECKED BY
FUNCTIONAL SUPERVISOR	JULIE CASEY

STATE OF CALIFORNIA - DEPARTMENT OF TRANSPORTATION
Caltrans® **DESIGN**

P:\proj1\02\3E730_plans\pse\23e730ic001.dgn

LAST REVISION 11-25-14 | DATE PLOTTED => 23-JAN-2015 | TIME PLOTTED => 12:36

Dist	COUNTY	ROUTE	POST MILES TOTAL PROJECT	SHEET No.	TOTAL SHEETS
02	Sis	5	68.3	28	120

REGISTERED CIVIL ENGINEER 11-25-14 DATE

11-26-14
PLANS APPROVAL DATE

REGISTERED PROFESSIONAL ENGINEER JAVED IQBAL No. C82518 Exp. 9/30/16 CIVIL STATE OF CALIFORNIA

THE STATE OF CALIFORNIA OR ITS OFFICERS OR AGENTS SHALL NOT BE RESPONSIBLE FOR THE ACCURACY OR COMPLETENESS OF SCANNED COPIES OF THIS PLAN SHEET.

NOTE:

1. REINFORCEMENT SHALL CONFORM TO ASTM A 615 M (A615) GRADE 300 (40)

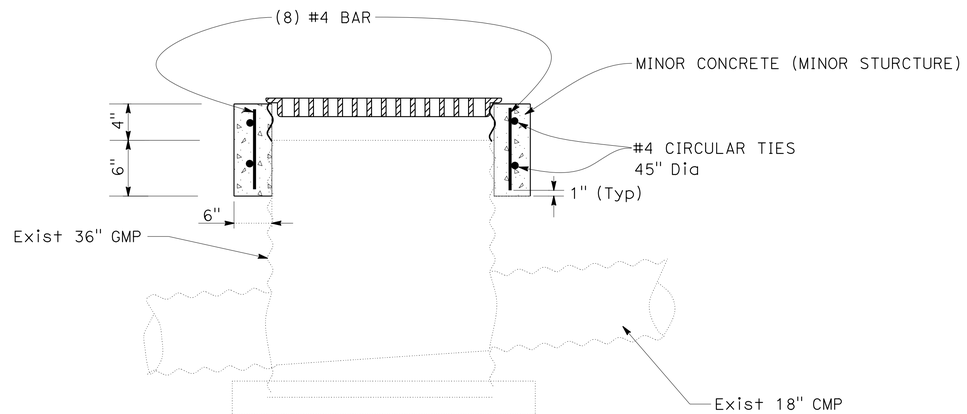

ADJUST DI COVER TO GRADE 4 a

DRAINAGE DETAILS

NO SCALE

DD-2

JAVED IQBAL — REVISED BY
JULIE CASEY — DATE REVISED
CALCULATED-DESIGNED BY
CHECKED BY
FUNCTIONAL SUPERVISOR
JULIE CASEY

STATE OF CALIFORNIA - DEPARTMENT OF TRANSPORTATION
Caltrans
DESIGN

P:\proj\02\3E730_plans\pse\23e730ic002.dgn

LAST REVISION 11-25-14 | DATE PLOTTED => 23-JAN-2015 | TIME PLOTTED => 12:36

Dist	COUNTY	ROUTE	POST MILES TOTAL PROJECT	SHEET No.	TOTAL SHEETS
02	Sis	5	68.3	29	120

REGISTERED CIVIL ENGINEER 11-25-14 DATE

11-26-14
PLANS APPROVAL DATE

REGISTERED PROFESSIONAL ENGINEER JAVED IQBAL No. C82518 Exp. 9/30/16 CIVIL STATE OF CALIFORNIA

THE STATE OF CALIFORNIA OR ITS OFFICERS OR AGENTS SHALL NOT BE RESPONSIBLE FOR THE ACCURACY OR COMPLETENESS OF SCANNED COPIES OF THIS PLAN SHEET.

DRAINAGE QUANTITIES

DRAINAGE SHEET No.	DRAINAGE SYSTEM No.	DRAINAGE UNIT No.	REMOVE INLET	REMOVE CULVERT	ADJUST INLET	HOT MIX ASPHALT (TYPE A) *	PLACE HOT MIX ASPHALT (MISCELLANEOUS AREA) *	MINOR CONCRETE (MINOR STRUCTURE) *	18" CORRUGATED STEEL PIPE DOWNDRAIN (.064" THICK)	18" CORRUGATED STEEL PIPE (.064" THICK)	30° ELBOW (N)	18" ANCHOR ASSEMBLY	36" CORRUGATED STEEL PIPE INLET (.064" THICK)	ROCK SLOPE PROTECTION (No. 1, METHOD B)	ROCK SLOPE PROTECTION FABRIC (CLASS 10)	MISCELLANEOUS IRON AND STEEL	DRAINAGE SYSTEM No.	DRAINAGE UNIT No.	STATION	DESCRIPTION
			EA	LF	EA	TON	SQYD	CY	LF	LF	EA	EA	LF	CY	SQYD	LB				
D-1	1	a						1.5								239	a	1	"A2" 18+56.00	TYPE GO DI, H=3.90′
		b								36							b			
		c						1.9								239	c			TYPE GO DI, H=5.75′
		d								99							d		"R3" 20+78.21	
		e							64.0		1	3					e			
		f												2.8	11.7		f			
		g		39													g			Exist 8" PP
		h	1														h		"A2" 18+93.34	Exist TYPE GO DI
	2	a	1														a	2	"A2" 21+31.75	Exist GO DI
		b		34													b			Exist 8" PP
	3	a		80													a	3	"C1" 11+35.41	Exist 18" CMP
		b								94							b		"C1" 11+52.57	
		c	1														c		"C1" 11+48.04	Exist TYPE GMP DI
		d				1.4	8						4.2			215	d		"C1" 11+68.14	TYPE GMP DI, H=3.7′
		e								82							e		"C1" 12+00.00	
		f				1.4	8						4.5			215	f		"C1" 12+44.50	TYPE GMP DI, H=4.0′
D-2	4	a			1	0.8	5	0.4									a	4	"R4" 16+56.33	Exist 36" DI TYPE GMP
	TOTAL		3	153	1	3.6	21	3.8	64.0	311	1	3	8.7	2.8	11.7	908				

(N) - NOT A SEPARATE PAY ITEM, FOR INFORMATION ONLY
* - ITEM SUBTOTAL SUMMARIZED ON SHEET Q-1 & Q-2

DRAINAGE QUANTITIES
DQ-1

REVISED BY | DATE REVISED
JAVED IQBAL | JULIE CASEY
CALCULATED-DESIGNED BY | CHECKED BY
FUNCTIONAL SUPERVISOR: JULIE CASEY

STATE OF CALIFORNIA - DEPARTMENT OF TRANSPORTATION
Caltrans
DESIGN

P:\proj1\02\3E730_plans\pse\23e730id001.dgn

LAST REVISION 11-25-14 | DATE PLOTTED => 23-JAN-2015 | TIME PLOTTED => 12:36

Dist	COUNTY	ROUTE	POST MILES TOTAL PROJECT	SHEET No.	TOTAL SHEETS
02	Sis	5	68.3	30	120

REGISTERED CIVIL ENGINEER 11-25-14 DATE

11-26-14
PLANS APPROVAL DATE

REGISTERED PROFESSIONAL ENGINEER JAVED IQBAL No. C82518 Exp. 9/30/16 CIVIL STATE OF CALIFORNIA

THE STATE OF CALIFORNIA OR ITS OFFICERS OR AGENTS SHALL NOT BE RESPONSIBLE FOR THE ACCURACY OR COMPLETENESS OF SCANNED COPIES OF THIS PLAN SHEET.

NOTES:

1. EXACT LOCATION OF ALL SIGNS TO BE DETERMINED BY THE ENGINEER.
2. CALIFORNIA CODES ARE DESIGNATED BY (CA), OTHERWISE FEDERAL CODES ARE SHOWN.

LEGEND

- ONE POST STATIONARY MOUNTED SIGN
- DIRECTION OF TRAFFIC
- CONSTRUCTION AREA

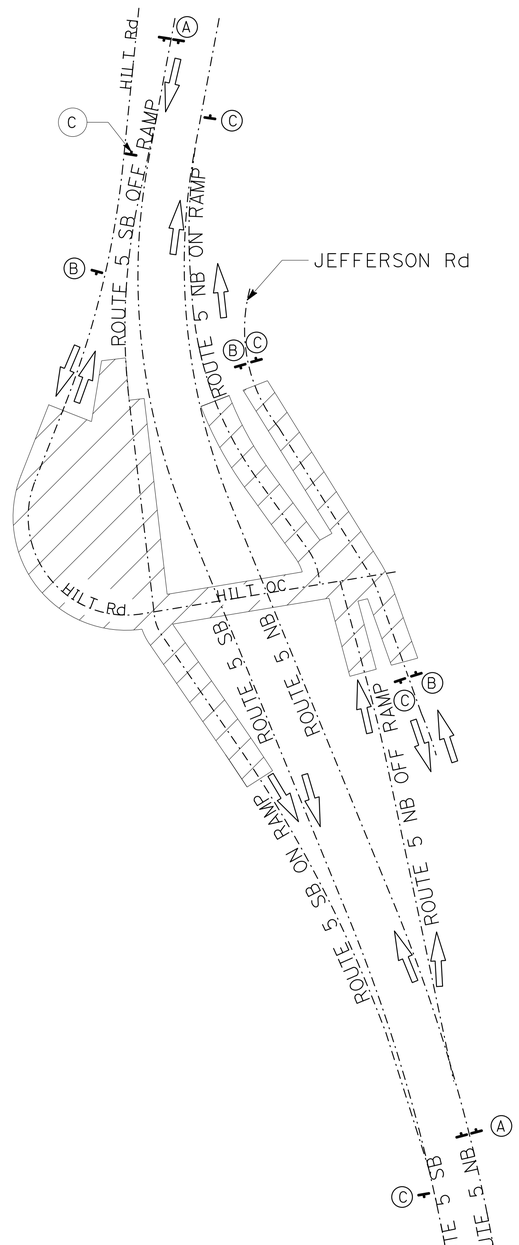

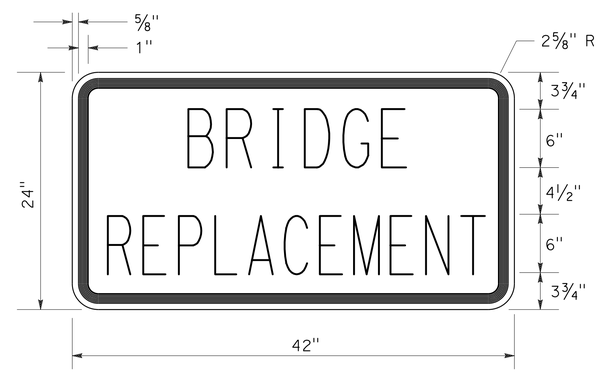

C23B SIGN PANEL DETAIL

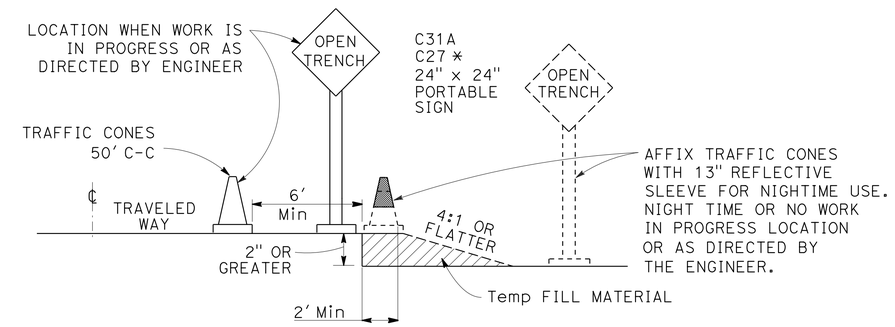

OPEN TRENCH SIGNING AND MARKING

NO SCALE

* PLACE AT 250' INTERVALS THROUGH THE OPEN TRENCH AREA, ALTERNATE C27 (OPEN TRENCH) AND C31A (NO SHOULDER) SIGNS

CONSTRUCTION AREA SIGNS (STATIONARY MOUNTED)

TYPE	CODE	PANEL SIZE	SIGN MESSAGE	NUMBER AND SIZE OF POST	No. OF SIGNS
A	W20-1 C23B(CA)	48" x 48" 42" x 24"	ROAD WORK AHEAD BRIDGE REPLACEMENT	1-4" x 6"	4
B	W20-1 C23B(CA)	48" x 48" 30" x 18"	ROAD WORK AHEAD BRIDGE REPLACEMENT	1-4" x 6"	3
C	G20-2	36" x 18"	END ROAD WORK	1-4" x 4"	5

CONSTRUCTION AREA SIGNS

NO SCALE

CS-1

REVISED BY | DATE REVISED
JAVED IQBAL | JULIE CASEY
CALCULATED-DESIGNED BY | CHECKED BY
FUNCTIONAL SUPERVISOR
JULIE CASEY
STATE OF CALIFORNIA - DEPARTMENT OF TRANSPORTATION
Caltrans
DESIGN

P:\proj1\02\3E7301_plans\pse\23e7301a001.dgn

LAST REVISION 11-25-14 | DATE PLOTTED => 23-JAN-2015 | TIME PLOTTED => 12:36

Dist	COUNTY	ROUTE	POST MILES TOTAL PROJECT	SHEET No.	TOTAL SHEETS
02	Sis	5	68.3	31	120

REGISTERED CIVIL ENGINEER 11-25-14 DATE

11-26-14
PLANS APPROVAL DATE

REGISTERED PROFESSIONAL ENGINEER JAVED IQBAL No. C82518 Exp. 9/30/16 CIVIL STATE OF CALIFORNIA

THE STATE OF CALIFORNIA OR ITS OFFICERS OR AGENTS SHALL NOT BE RESPONSIBLE FOR THE ACCURACY OR COMPLETENESS OF SCANNED COPIES OF THIS PLAN SHEET.

NOTES:

1. CALIFORNIA SIGN CODES ARE DESIGNATED BY (CA), OTHERWISE, FEDERAL MUTCD SIGN CODES ARE SHOWN
2. EXACT SIGN LOCATION TO BE DETERMINED BY THE ENGINEER

LEGEND:

- DETOUR ROUTE
- PCMS
- SIGN LOCATION
- QUEUE WARNING TRAFFIC SURVEILLANCE UNIT
- × CLOSED ROADWAY SECTION

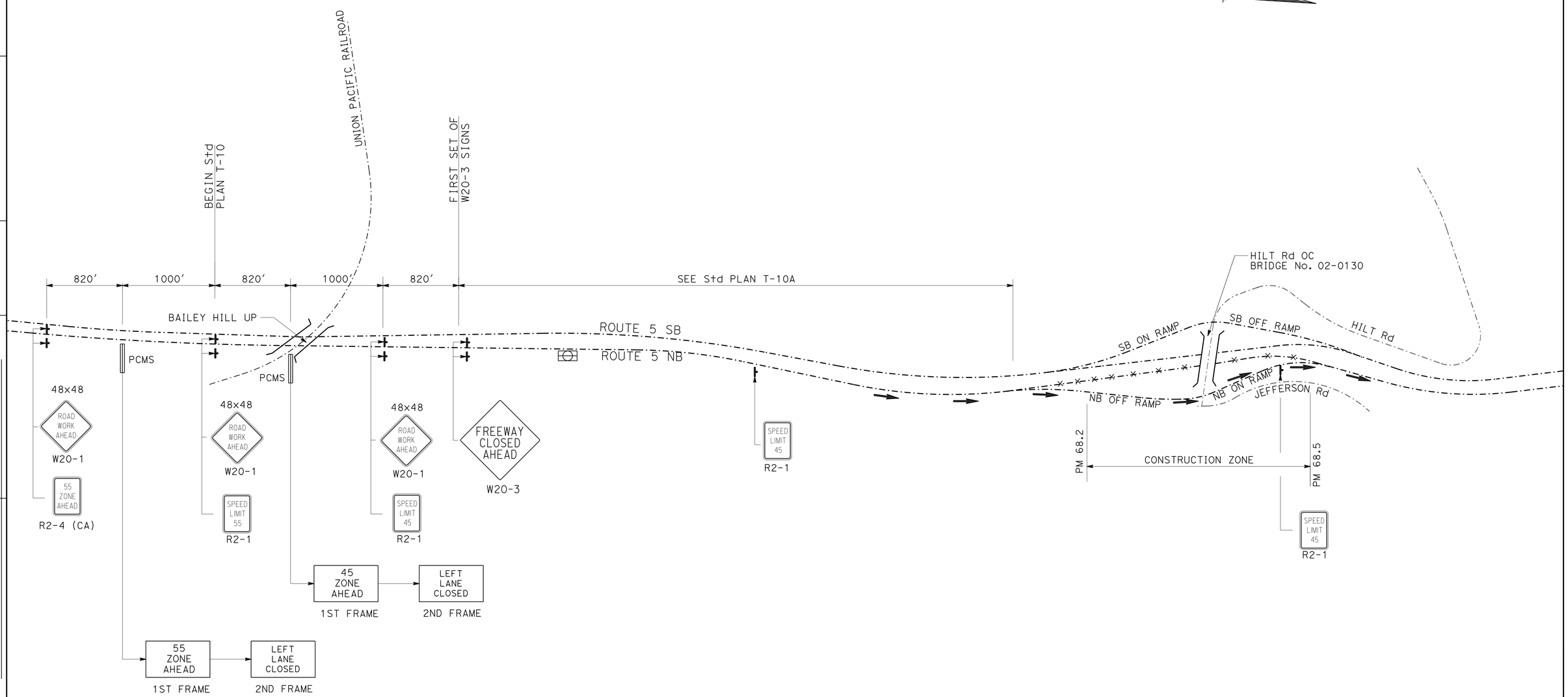

TRAFFIC HANDLING FOR CLOSURE OF ROUTE 5 NB AND TEMPORARY REDUCED SPEED ZONE AT HILT ROAD OVERCROSSING

APPROVED FOR TRAFFIC HANDLING WORK ONLY

TRAFFIC HANDLING PLAN

SCALE: 1" = 400′

TH-1

REVISED BY	DATE REVISED

CALCULATED-DESIGNED BY: JAVED IQBAL
CHECKED BY: JULIE CASEY
FUNCTIONAL SUPERVISOR: JULIE CASEY

STATE OF CALIFORNIA - DEPARTMENT OF TRANSPORTATION
Caltrans DESIGN

P:\proj1\02\3E730_plans\pse\23e730md001.dgn

LAST REVISION 11-25-14 | DATE PLOTTED => 23-JAN-2015 | TIME PLOTTED => 12:36

Dist	COUNTY	ROUTE	POST MILES TOTAL PROJECT	SHEET No.	TOTAL SHEETS
02	Sis	5	68.3	32	120

REGISTERED CIVIL ENGINEER 11-25-14 DATE

11-26-14
PLANS APPROVAL DATE

REGISTERED PROFESSIONAL ENGINEER JAVED IQBAL No. C82518 Exp. 9/30/16 CIVIL STATE OF CALIFORNIA

THE STATE OF CALIFORNIA OR ITS OFFICERS OR AGENTS SHALL NOT BE RESPONSIBLE FOR THE ACCURACY OR COMPLETENESS OF SCANNED COPIES OF THIS PLAN SHEET.

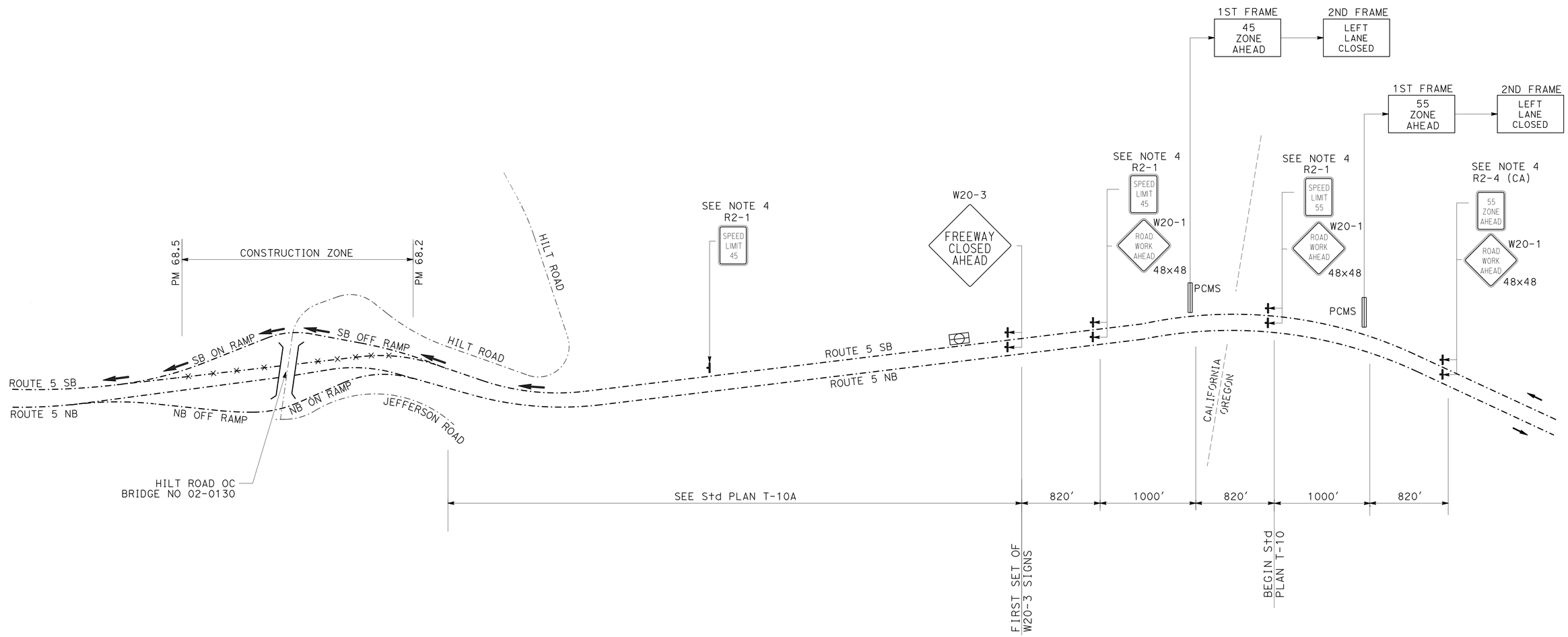

TRAFFIC HANDLING FOR CLOSURE OF ROUTE 5 SB AND TEMPRORAY REDUCED SPEED ZONE AT HILT ROAD OVERCROSSING

TRAFFIC HANDLING PLAN

SCALE: 1" = 400′

TH-2

APPROVED FOR TRAFFIC HANDLING WORK ONLY

STATE OF CALIFORNIA - DEPARTMENT OF TRANSPORTATION
Caltrans
DESIGN

FUNCTIONAL SUPERVISOR: JULIE CASEY
CALCULATED-DESIGNED BY: JAVED IQBAL
CHECKED BY: JULIE CASEY
REVISED BY
DATE REVISED

P:\proj1\02\3E730_plans\pse\23e730md002.dgn

LAST REVISION 11-25-14 | DATE PLOTTED => 23-JAN-2015 | TIME PLOTTED => 12:36

Dist	COUNTY	ROUTE	POST MILES TOTAL PROJECT	SHEET No.	TOTAL SHEETS
02	Sis	5	68.3	33	120

REGISTERED CIVIL ENGINEER 11-25-14 DATE

11-26-14
PLANS APPROVAL DATE

REGISTERED PROFESSIONAL ENGINEER JAVED IQBAL No. C82518 Exp. 9/30/16 CIVIL STATE OF CALIFORNIA

THE STATE OF CALIFORNIA OR ITS OFFICERS OR AGENTS SHALL NOT BE RESPONSIBLE FOR THE ACCURACY OR COMPLETENESS OF SCANNED COPIES OF THIS PLAN SHEET.

TEMPORARY TRAFFIC CONTROL

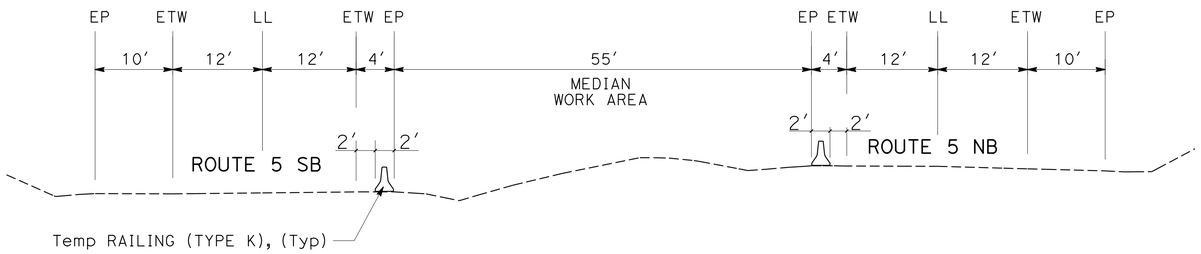

TYPICAL SECTION

NO SCALE

LEGEND:
(THIS SHEET)

- WORK AREA
- Temp RAILING (TYPE K)
- CHANNELIZER (SURFACE MOUNTED)
- DIRECTION OF TRAFFIC
- CONSTRUCTION AREA SIGN
- Temp CRASH CUSHION (ALTERNATIVE IN-LINE)

SHEET No.	CHANNELIZER (SURFACE MOUNTED)	TEMPORARY RAILING (TYPE K)	TEMPORARY CRASH CUSHION (ALTERNATIVE IN-LINE)
	EA	LF	EA
TH-3	16	800	2

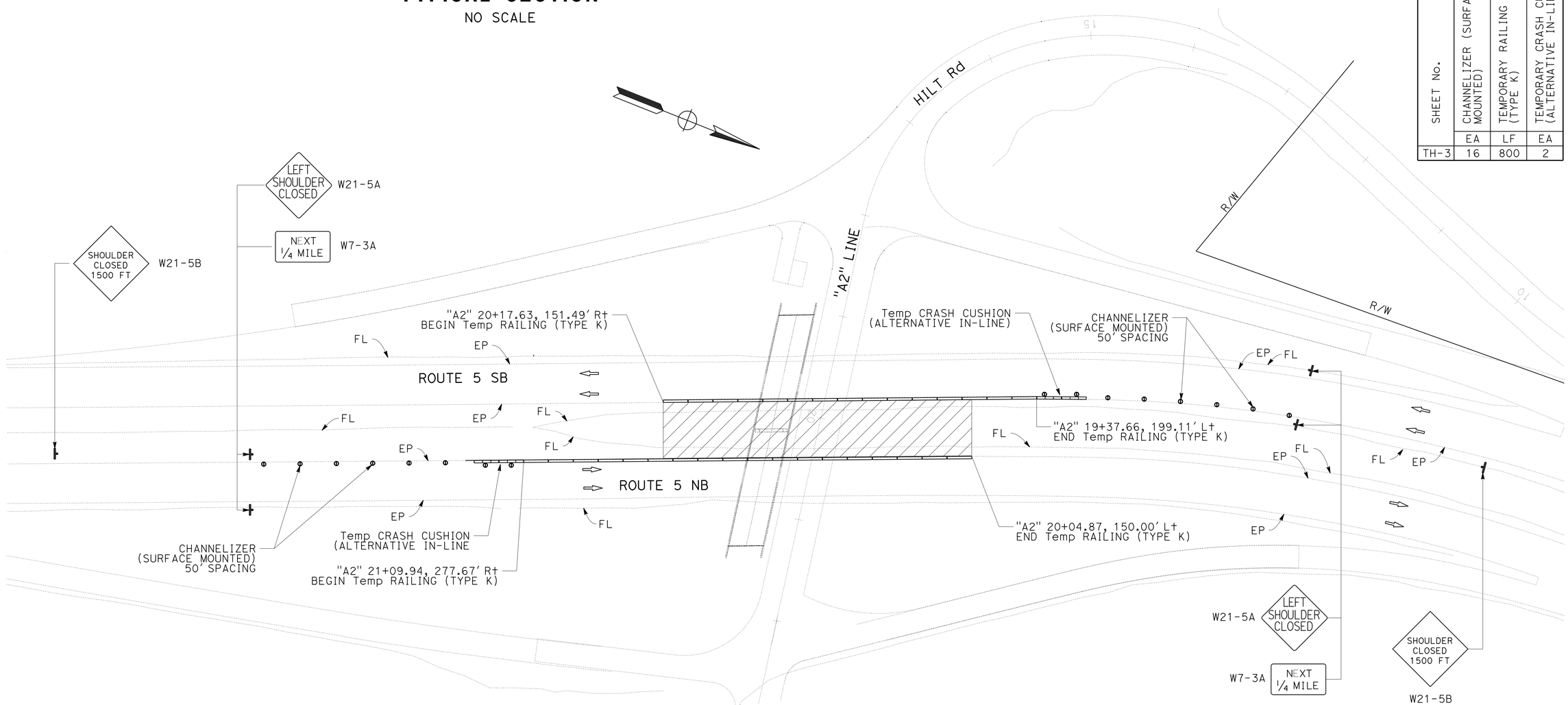

MEDIAN WORK ON ROUTE 5 AT HILT ROAD OVERCROSSING

APPROVED FOR TRAFFIC HANDLING WORK ONLY

TRAFFIC HANDLING PLAN

SCALE: 1" = 50′

TH-3

REVISED BY | DATE REVISED
JAVED IQBAL | JULIE CASEY
CALCULATED-DESIGNED BY | CHECKED BY
FUNCTIONAL SUPERVISOR: JULIE CASEY

STATE OF CALIFORNIA - DEPARTMENT OF TRANSPORTATION
Caltrans
DESIGN

P:\proj1\02\3E730_plans\pse\23e730md003.dgn

LAST REVISION 11-25-14 | DATE PLOTTED => 23-JAN-2015 | TIME PLOTTED => 12:36

Dist	COUNTY	ROUTE	POST MILES TOTAL PROJECT	SHEET No.	TOTAL SHEETS
02	Sis	5	68.3	34	120

REGISTERED CIVIL ENGINEER 11-25-14 DATE

11-26-14
PLANS APPROVAL DATE

REGISTERED PROFESSIONAL ENGINEER JAVED IQBAL No. C82518 Exp. 9/30/16 CIVIL STATE OF CALIFORNIA

THE STATE OF CALIFORNIA OR ITS OFFICERS OR AGENTS SHALL NOT BE RESPONSIBLE FOR THE ACCURACY OR COMPLETENESS OF SCANNED COPIES OF THIS PLAN SHEET.

NOTES:

1. CALIFORNIA SIGN CODES ARE DESIGNATED BY (CA), OTHERWISE, FEDERAL MUTCD SIGN CODES ARE SHOWN.
2. EXACT SIGN LOCATION TO BE DETERMINED BY THE ENGINEER.

LEGEND:

DETOUR ROUTE

SIGN LOCATION

× CLOSED ROADWAY SECTION

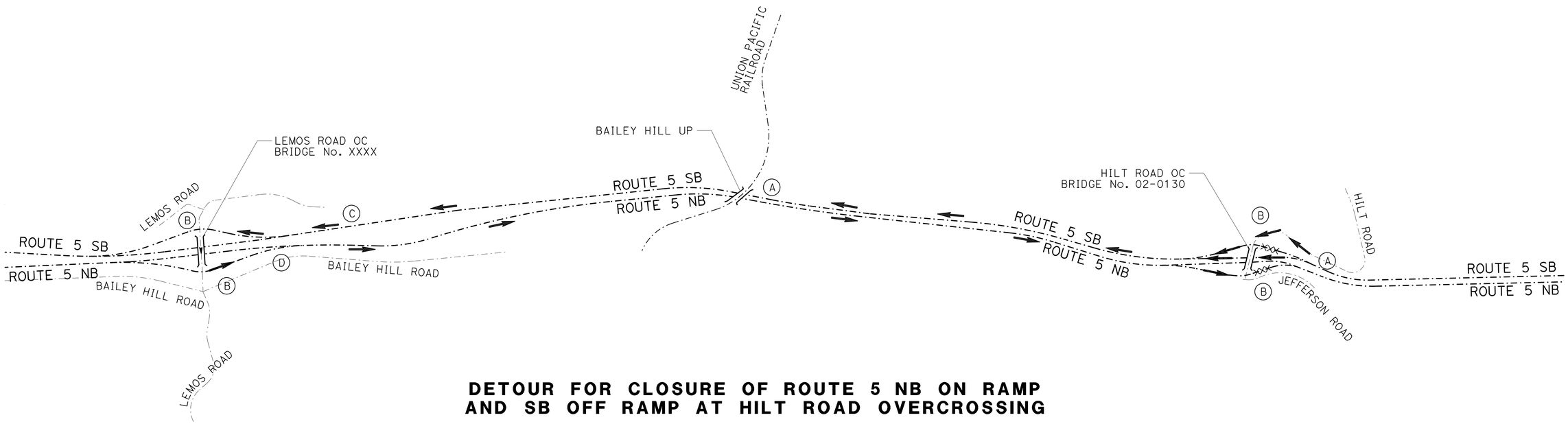

DETOUR FOR CLOSURE OF ROUTE 5 NB ON RAMP AND SB OFF RAMP AT HILT ROAD OVERCROSSING

CONSTRUCTION AREA SIGNS (PORTABLE SIGNS)

SIGN No. ◯	CODE	PANEL SIZE (INCH)	REMARKS	No. (EA)
A	SC3(CA)	48" × 18"	↑ "DETOUR"	6
B	M4-10 L	48" × 18"	← "DETOUR"	6
C	M4-10 R	48" × 18"	"DETOUR" →	4
D	M4-8A	24" × 18"	"END DETOUR"	2
			TOTAL	18

APPROVED FOR DETOUR WORK ONLY

DETOUR PLAN
SCALE: 1" = 1000'
DE-1

REVISED BY	DATE REVISED

JAVED IQBAL — CALCULATED-DESIGNED BY
JULIE CASEY — CHECKED BY
JULIE CASEY — FUNCTIONAL SUPERVISOR

STATE OF CALIFORNIA - DEPARTMENT OF TRANSPORTATION
Caltrans
DESIGN

P:\proj1\02\3E730_plans\pse\23e730mg001.dgn

LAST REVISION 11-25-14 | DATE PLOTTED => 23-JAN-2015 | TIME PLOTTED => 12:36

Dist	COUNTY	ROUTE	POST MILES TOTAL PROJECT	SHEET No.	TOTAL SHEETS
02	Sis	5	68.3	35	120

REGISTERED CIVIL ENGINEER 11-25-14 DATE

11-26-14
PLANS APPROVAL DATE

REGISTERED PROFESSIONAL ENGINEER
JAVED IQBAL
No. C82518
Exp. 9/30/16
CIVIL
STATE OF CALIFORNIA

THE STATE OF CALIFORNIA OR ITS OFFICERS OR AGENTS SHALL NOT BE RESPONSIBLE FOR THE ACCURACY OR COMPLETENESS OF SCANNED COPIES OF THIS PLAN SHEET.

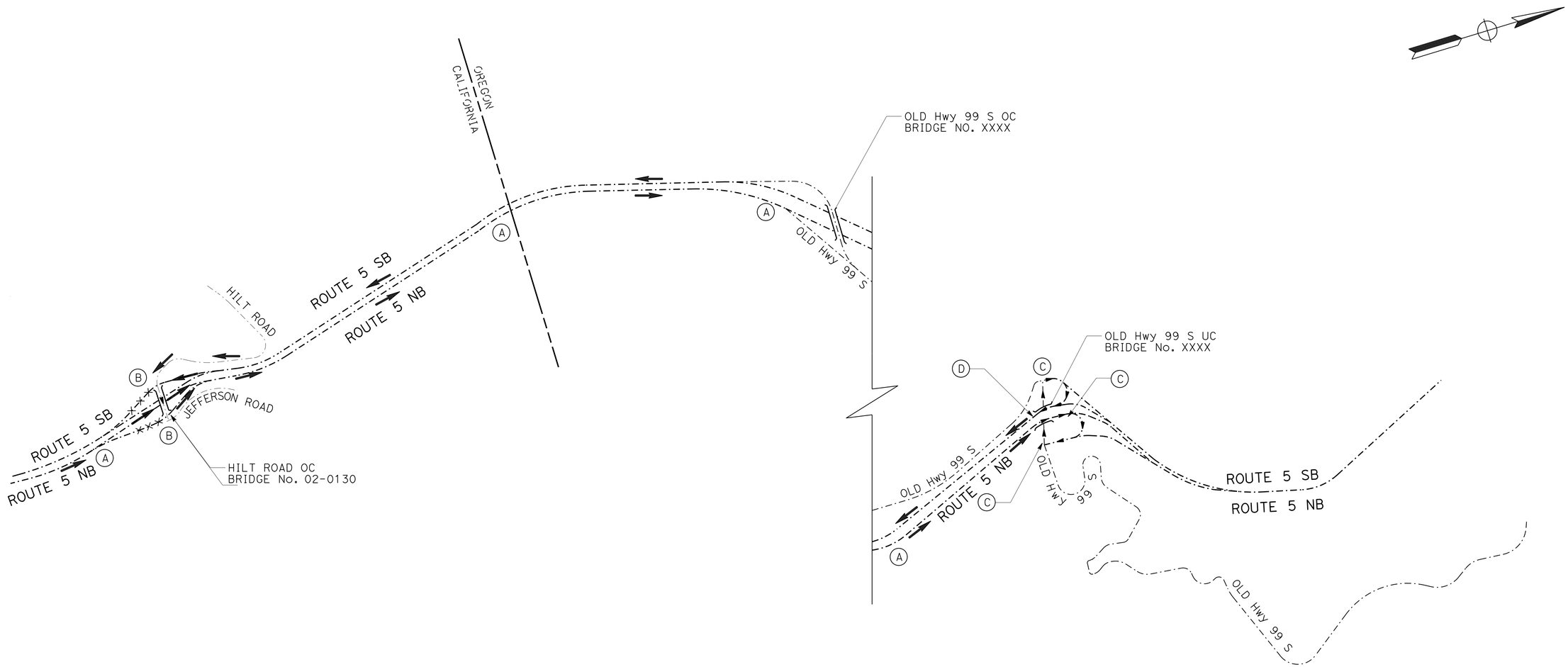

DETOUR FOR CLOSURE OF ROUTE 5 SB ON-RAMP AND NB OFF RAMP AT HILT ROAD OVERCROSSING

DETOUR PLAN

SCALE: 1" = 1000'

DE-2

APPROVED FOR DETOUR WORK ONLY

JAVED IQBAL — JULIE CASEY — REVISED BY — DATE REVISED
CALCULATED-DESIGNED BY — CHECKED BY — FUNCTIONAL SUPERVISOR: JULIE CASEY

STATE OF CALIFORNIA - DEPARTMENT OF TRANSPORTATION
Caltrans
DESIGN

P:\proj1\02\3E730_plans\pse\23e730mg002.dgn

LAST REVISION 11-25-14 | DATE PLOTTED => 23-JAN-2015 | TIME PLOTTED => 12:36

BORDER LAST REVISED 7/2/2010 | USERNAME => s123119 | DGN FILE => 23e730mg002.dgn | RELATIVE BORDER SCALE IS IN INCHES 0 1 2 3 | UNIT 0318 | PROJECT NUMBER & PHASE 02-0002-0157-1 | EA: 02-3E7301

Dist	COUNTY	ROUTE	POST MILES TOTAL PROJECT	SHEET No.	TOTAL SHEETS
02	Sis	5	68.3	36	120

REGISTERED CIVIL ENGINEER 11-25-14 DATE

11-26-14
PLANS APPROVAL DATE

REGISTERED PROFESSIONAL ENGINEER JAVED IQBAL No. C82518 Exp. 9/30/16 CIVIL STATE OF CALIFORNIA

THE STATE OF CALIFORNIA OR ITS OFFICERS OR AGENTS SHALL NOT BE RESPONSIBLE FOR THE ACCURACY OR COMPLETENESS OF SCANNED COPIES OF THIS PLAN SHEET.

LEGEND:

- X-X — PAVEMENT DELINEATION STRIPE DETAIL No.
- LL — LIMIT LINE
- TYPE I ARROW
- TYPE V ARROW
- SINGLE STRIPE MARKER
- STRIPE CHANGE LOCATION

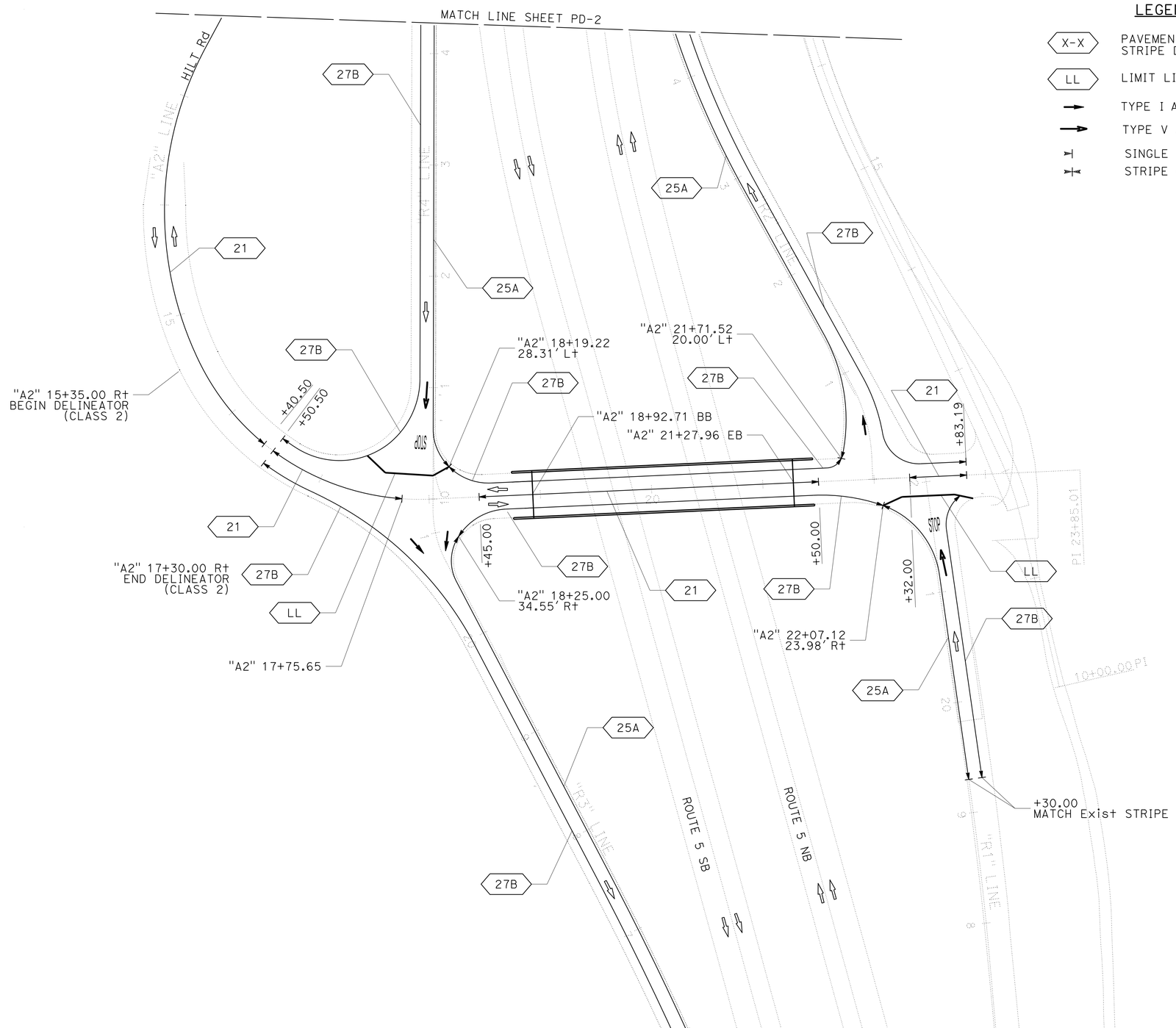

PAVEMENT DELINEATION PLAN

SCALE: 1" = 50'

PD-1

APPROVED FOR PAVEMENT DELINEATION WORK ONLY

STATE OF CALIFORNIA - DEPARTMENT OF TRANSPORTATION
Caltrans® **DESIGN**

FUNCTIONAL SUPERVISOR: JULIE CASEY
CALCULATED-DESIGNED BY: JAVED IQBAL
CHECKED BY: JULIE CASEY
REVISED BY
DATE REVISED

P:\proj1\02\3E730_plans\pse\23e730na001.dgn

LAST REVISION 11-25-14 | DATE PLOTTED => 23-JAN-2015 | TIME PLOTTED => 12:36

BORDER LAST REVISED 7/2/2010 | USERNAME => s123119 | DGN FILE => 23e730na001.dgn | RELATIVE BORDER SCALE IS IN INCHES 0 1 2 3 | UNIT 0318 | PROJECT NUMBER & PHASE 02-0002-0157-1 | EA: 02-3E7301

Dist	COUNTY	ROUTE	POST MILES TOTAL PROJECT	SHEET No.	TOTAL SHEETS
02	Sis	5	68.3	37	120

REGISTERED CIVIL ENGINEER 11-25-14 DATE

11-26-14
PLANS APPROVAL DATE

REGISTERED PROFESSIONAL ENGINEER
JAVED IQBAL
No. C82518
Exp. 9/30/16
CIVIL
STATE OF CALIFORNIA

THE STATE OF CALIFORNIA OR ITS OFFICERS OR AGENTS SHALL NOT BE RESPONSIBLE FOR THE ACCURACY OR COMPLETENESS OF SCANNED COPIES OF THIS PLAN SHEET.

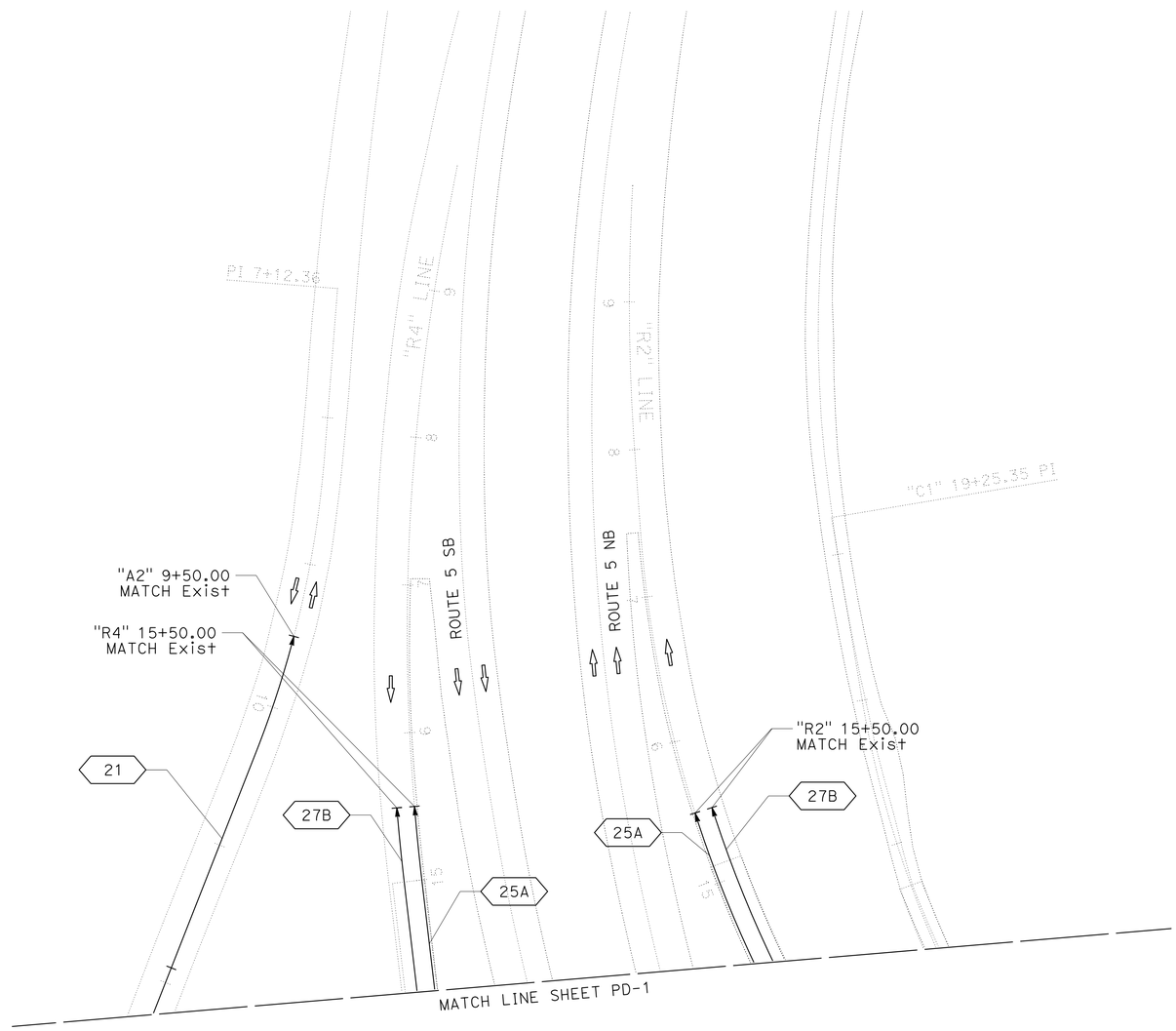

PAVEMENT DELINEATION PLAN

SCALE: 1" = 50'

PD-2

THIS PLAN ACCURATE FOR PAVEMENT DELINEATION WORK ONLY

STATE OF CALIFORNIA - DEPARTMENT OF TRANSPORTATION
Caltrans DESIGN

FUNCTIONAL SUPERVISOR: JULIE CASEY
CALCULATED-DESIGNED BY: JAVED IQBAL
CHECKED BY: JULIE CASEY
REVISED BY
DATE REVISED

P:\proj1\02\3E730_plans\pse\23e730na002.dgn

LAST REVISION 11-25-14
DATE PLOTTED => 23-JAN-2015
TIME PLOTTED => 12:36

Dist	COUNTY	ROUTE	POST MILES TOTAL PROJECT	SHEET No.	TOTAL SHEETS
02	Sis	5	68.3	38	120

REGISTERED CIVIL ENGINEER 11-25-14 DATE

11-26-14
PLANS APPROVAL DATE

REGISTERED PROFESSIONAL ENGINEER JAVED IQBAL No. C82518 Exp. 9/30/16 CIVIL STATE OF CALIFORNIA

THE STATE OF CALIFORNIA OR ITS OFFICERS OR AGENTS SHALL NOT BE RESPONSIBLE FOR THE ACCURACY OR COMPLETENESS OF SCANNED COPIES OF THIS PLAN SHEET.

NOTE:

1. (N) - NOT A SEPARATE PAY ITEM, FOR INFORMATION ONLY

TRAFFIC STRIPE

STATION	LOCATION	PAINT TRAFFIC STRIPE (2 COAT)		
		DETAIL 21	DETAIL 25A	DETAIL 27B
		LF	LF	LF
"A2" 9+50 TO 22+83	NB/SB	1175		
"A2" 16+50 TO 17+50	NB/SB			200
"A2"18+25 TO 22+07	NB/SB			765
"R1" 19+30 TO 21+90	NB		260	260
"R2" 10+20 TO 15+50	NB		530	530
"R3" 15+50 TO 21+20	SB		570	570
"R4" 10+35 TO 15+50	SB		515	515
SUBTOTAL		1175	1875	2840
TOTAL		5890		

PAINT PAVEMENT MARKING

APPROXIMATE LOCATION	PAINT PAVEMENT MARKING (2 COAT)	NOTES
	SQFT	
"R1" 21+86.00	83	LIMIT LINE (1'-0" WHITE LINE)
"R1" 21+50, R†	22	STOP
"R1" 21+25, R†	25	TYPE I, 18'-0" ARROW
"R2" 10+50, R†	25	TYPE I, 18'-0" ARROW
"R3" 21+00	50	TYPE I, 18'-0" ARROW, 2 EACH
"R4" 10+25	82	LIMIT LINE (1'-0" WHITE LINE)
"R4" 10+50, L†	22	STOP
"R4" 11+00, L†	25	TYPE I, 18'-0" ARROW
TOTAL	334	

MARKER

LAYOUT SHEET NO.	DRAINAGE SYSTEM NO.	ALIGNMENT	STATION	POST MILE	LEFT	RIGHT	MARKER (CULVERT)	OBJECT MARKER (TYPE P)	PAVEMENT MARKER (RETROREFLECTIVE-RECESSED)
							EA	EA	EA
L-1	1	"A2"	18+56	68.33	X		1		
	1	"A2"	18+56	68.32		X	1		
		"A2"	18+75		X	X		2	
		"A2"	21+45		X	X		2	
	3	"C1"	11+02	68.28	X		1		
	3	"C1"	11+68	68.29		X	1		
	3	"C1"	12+44	68.31	X		1		
		"R1"	19+30 TO 21+90						10
		"R2"	10+20 TO 15+50						21
	1	"R3"	20+72	68.31	X		1		
		"R3"	15+50 TO 21+20						19
		"R4"	10+35 TO 15+50						20
		"R4"	10+36			X		1	
						TOTAL	6	5	70

DELINEATOR

SHEET No.		ALIGNMENT	STATION	LEFT	RIGHT	DELINEATOR (CLASS 2)
						EA
PD-1		"A2"	15+35 TO 17+30		X	15
					TOTAL	15

PAVEMENT DELINEATION AND SIGN QUANTITIES

PDQ-1

REVISED BY	DATE REVISED
JAVED IQBAL	JULIE CASEY
CALCULATED-DESIGNED BY	CHECKED BY
FUNCTIONAL SUPERVISOR	JULIE CASEY

STATE OF CALIFORNIA - DEPARTMENT OF TRANSPORTATION
Caltrans
DESIGN

P:\proj\02\3E730_plans\pse\23e730nc001.dgn

LAST REVISION 11-25-14 | DATE PLOTTED => 23-JAN-2015 | TIME PLOTTED => 12:36

Dist	COUNTY	ROUTE	POST MILES TOTAL PROJECT	SHEET No.	TOTAL SHEETS
02	Sis	5	68.3	39	120

Frank A. Rivas 11-26-14
REGISTERED CIVIL ENGINEER DATE

11-26-14
PLANS APPROVAL DATE

REGISTERED PROFESSIONAL ENGINEER
FRANK RIVAS
No. C53592
Exp. 6/30/15
CIVIL
STATE OF CALIFORNIA

THE STATE OF CALIFORNIA OR ITS OFFICERS OR AGENTS SHALL NOT BE RESPONSIBLE FOR THE ACCURACY OR COMPLETENESS OF SCANNED COPIES OF THIS PLAN SHEET.

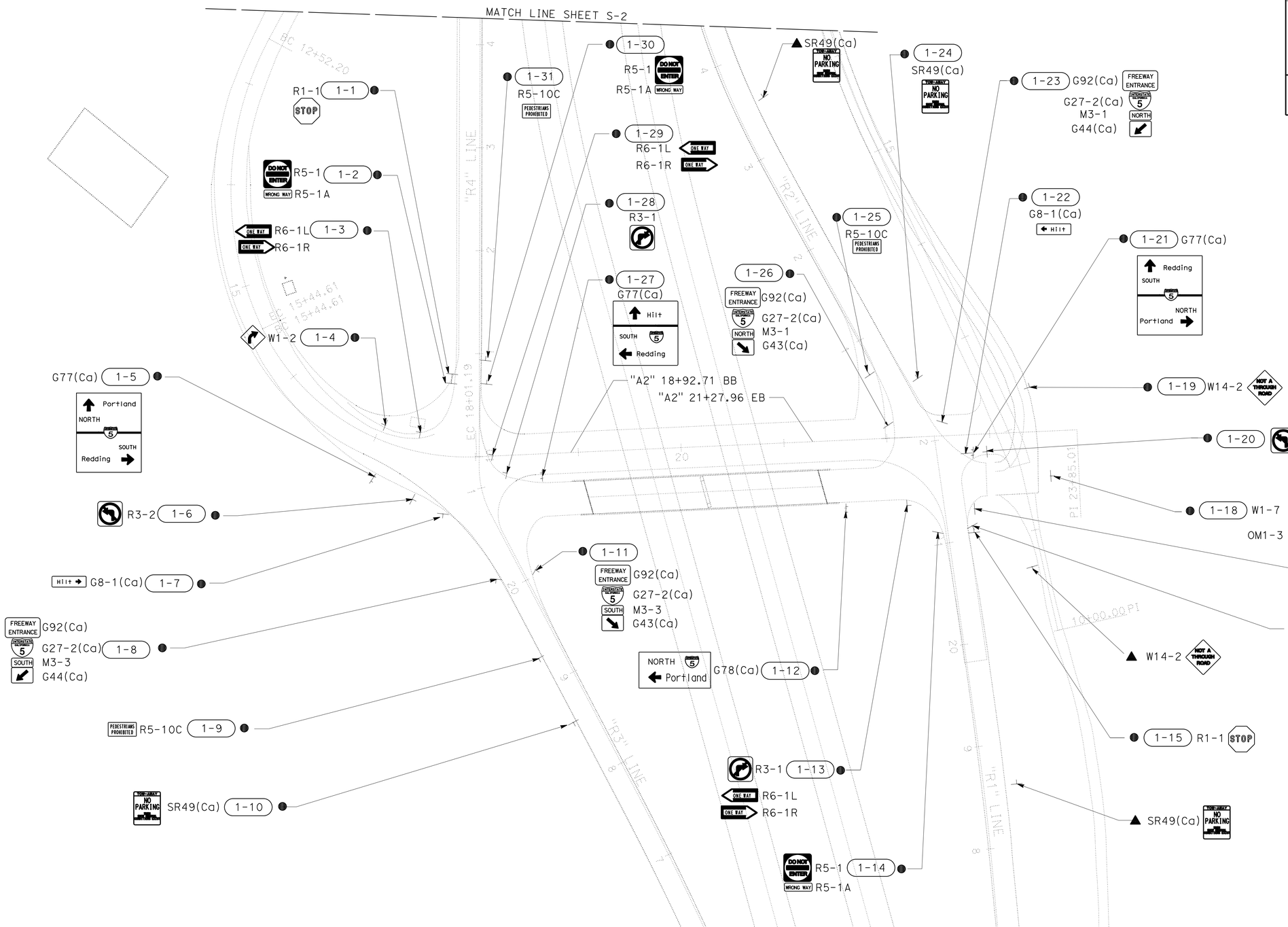

LEGEND:

- ● REMOVE ROADSIDE SIGN
- ▲ EXISTING SIGN TO REMAIN
- ■ RELOCATE ROADSIDE SIGN
- EXISTING ROADSIDE SIGN (1-POST)
- EXISTING ROADSIDE SIGN (2-POST)
- NEW ROADSIDE SIGN (1-POST)
- NEW ROADSIDE SIGN (2-POST)
- #-# ROADSIDE SIGN

SIGN PLAN (REMOVAL)

SCALE: 1" = 50'

S-1

APPROVED FOR SIGN WORK ONLY

REVISED BY | DATE REVISED
FRANK RIVAS | CHECKER
CALCULATED-DESIGNED BY | CHECKED BY
FUNCTIONAL SUPERVISOR: ROB STINGER

STATE OF CALIFORNIA - DEPARTMENT OF TRANSPORTATION
Caltrans® TRAFFIC OPS

P:\proj\02\3E730_plans\pse\23e730aa001.dgn

LAST REVISION 11-26-14 | DATE PLOTTED => 23-JAN-2015 | TIME PLOTTED => 12:36

BORDER LAST REVISED 7/2/2010 | USERNAME => s123119 | DGN FILE => 23e730aa001.dgn | RELATIVE BORDER SCALE IS IN INCHES 0 1 2 3 | UNIT 0147 | PROJECT NUMBER & PHASE 02-0002-0157-1 | EA 02-3E7301

Dist	COUNTY	ROUTE	POST MILES TOTAL PROJECT	SHEET No.	TOTAL SHEETS
02	Sis	5	68.3	40	120

Frank J. Rivas 11-26-14
REGISTERED CIVIL ENGINEER DATE

11-26-14
PLANS APPROVAL DATE

REGISTERED PROFESSIONAL ENGINEER
FRANK RIVAS
No. C53592
Exp. 6/30/15
CIVIL
STATE OF CALIFORNIA

THE STATE OF CALIFORNIA OR ITS OFFICERS OR AGENTS SHALL NOT BE RESPONSIBLE FOR THE ACCURACY OR COMPLETENESS OF SCANNED COPIES OF THIS PLAN SHEET.

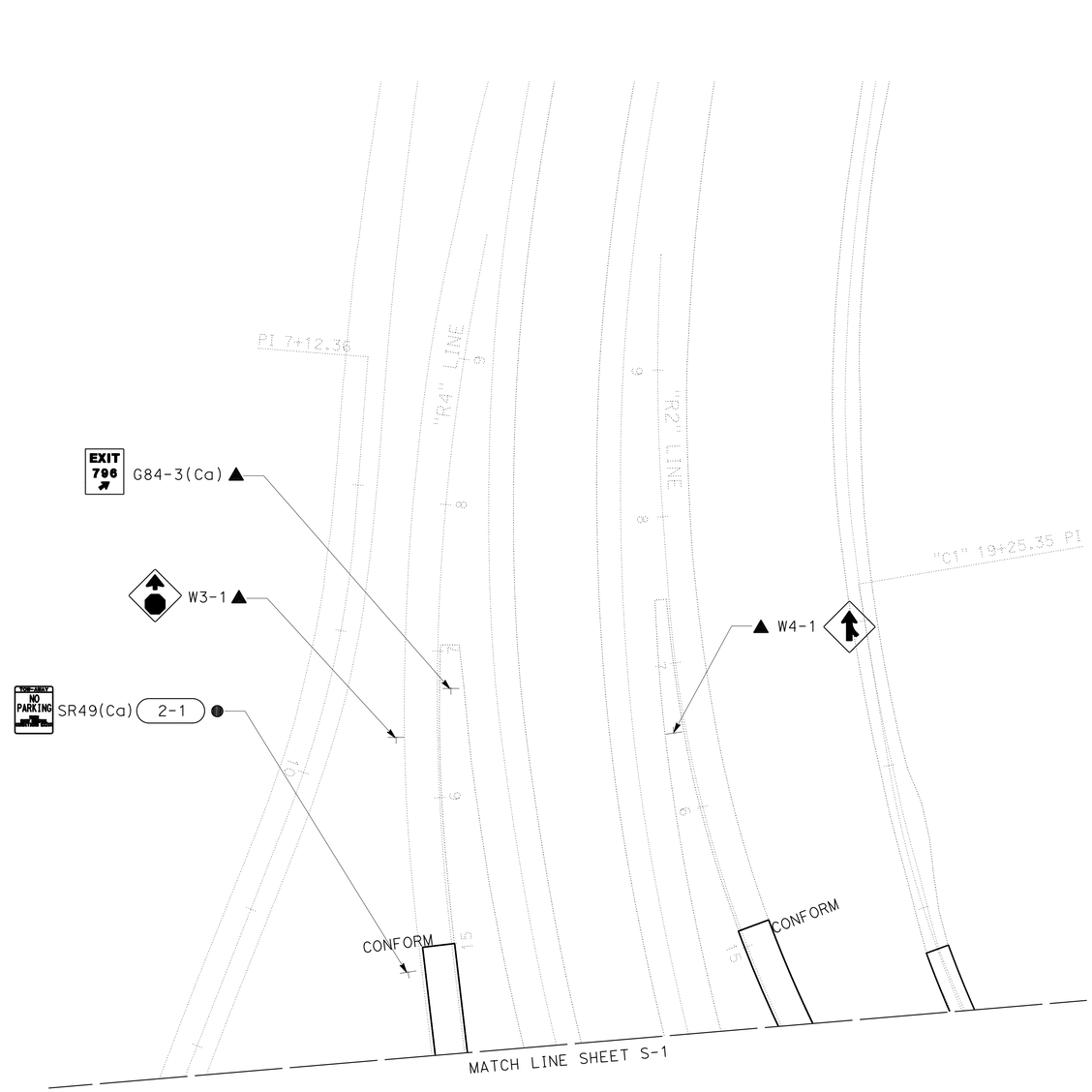

SIGN PLAN (REMOVAL)

SCALE: 1" = 50'

S-2

APPROVED FOR SIGN WORK ONLY

STATE OF CALIFORNIA - DEPARTMENT OF TRANSPORTATION
Caltrans® TRAFFIC OPS

FUNCTIONAL SUPERVISOR: ROB STINGER
CALCULATED-DESIGNED BY: FRANK RIVAS
CHECKED BY: CHECKER
REVISED BY
DATE REVISED

P:\proj1\02\3E730_plans\pse\23e730oa002.dgn

LAST REVISION 11-26-14
DATE PLOTTED => 23-JAN-2015
TIME PLOTTED => 12:36

Dist	COUNTY	ROUTE	POST MILES TOTAL PROJECT	SHEET No.	TOTAL SHEETS
02	Sis	5	68.3	41	120

REGISTERED CIVIL ENGINEER DATE 11-26-14

PLANS APPROVAL DATE 11-26-14

REGISTERED PROFESSIONAL ENGINEER FRANK RIVAS No. C53592 Exp. 6/30/15 CIVIL STATE OF CALIFORNIA

THE STATE OF CALIFORNIA OR ITS OFFICERS OR AGENTS SHALL NOT BE RESPONSIBLE FOR THE ACCURACY OR COMPLETENESS OF SCANNED COPIES OF THIS PLAN SHEET.

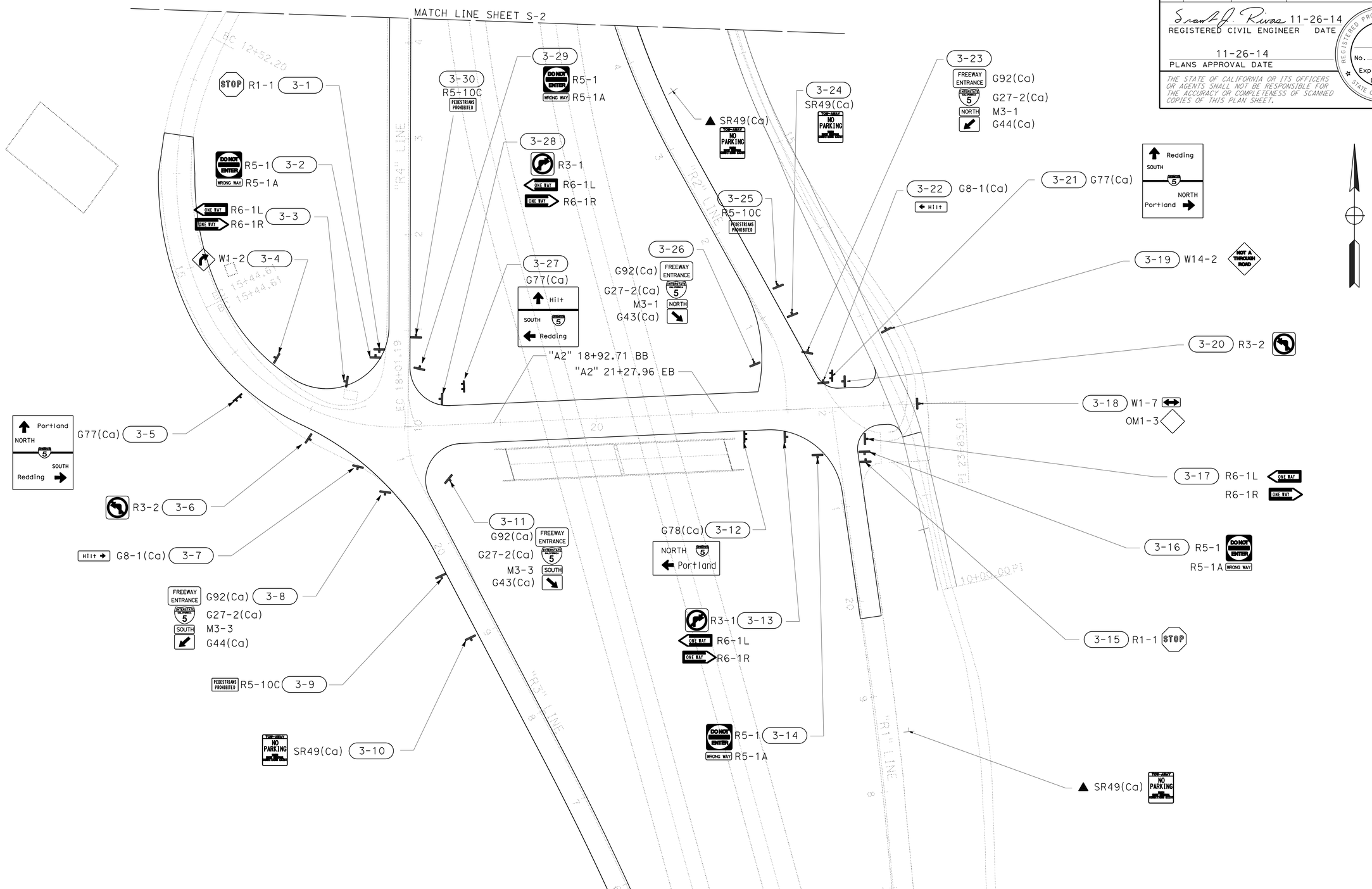

SIGN PLAN

SCALE: 1" = 50'

S-3

APPROVED FOR SIGN WORK ONLY

REVISED BY	DATE REVISED
FRANK RIVAS	CHECKER
CALCULATED-DESIGNED BY	CHECKED BY
FUNCTIONAL SUPERVISOR	ROB STINGER

STATE OF CALIFORNIA - DEPARTMENT OF TRANSPORTATION

Caltrans® TRAFFIC OPS

P:\proj1\02\3E730_plans\pse\23e730oa003.dgn

LAST REVISION 11-26-14 DATE PLOTTED => 23-JAN-2015 TIME PLOTTED => 12:36

Dist	COUNTY	ROUTE	POST MILES TOTAL PROJECT	SHEET No.	TOTAL SHEETS
02	Sis	5	68.3	42	120

Frank J. Rivas 11-26-14
REGISTERED CIVIL ENGINEER DATE

11-26-14
PLANS APPROVAL DATE

REGISTERED PROFESSIONAL ENGINEER
FRANK RIVAS
No. C53592
Exp. 6/30/15
CIVIL
STATE OF CALIFORNIA

THE STATE OF CALIFORNIA OR ITS OFFICERS OR AGENTS SHALL NOT BE RESPONSIBLE FOR THE ACCURACY OR COMPLETENESS OF SCANNED COPIES OF THIS PLAN SHEET.

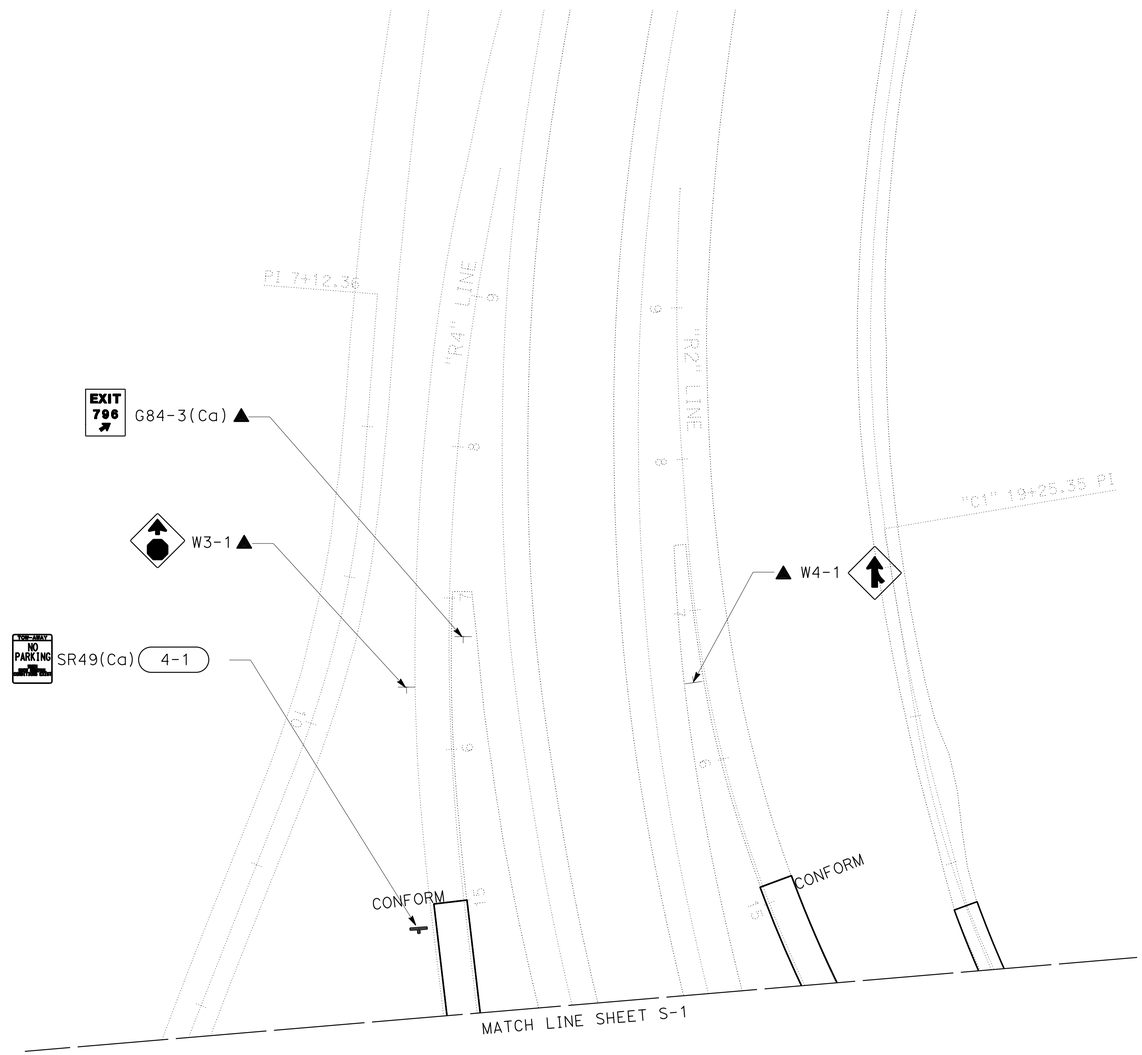

APPROVED FOR SIGN WORK ONLY

SIGN PLAN

SCALE: 1" = 50'

S-4

STATE OF CALIFORNIA - DEPARTMENT OF TRANSPORTATION
Caltrans® **TRAFFIC OPS**

FUNCTIONAL SUPERVISOR: ROB STINGER
CALCULATED-DESIGNED BY: FRANK RIVAS
CHECKED BY: CHECKER
REVISED BY
DATE REVISED

P:\proj1\02\3E730_plans\pse\23e730aa004.dgn

LAST REVISION 11-26-14
DATE PLOTTED => 23-JAN-2015
TIME PLOTTED => 12:36

BORDER LAST REVISED 7/2/2010
USERNAME => s123119
DGN FILE => 23e730aa004.dgn
RELATIVE BORDER SCALE IS IN INCHES 0 1 2 3
UNIT 0147
PROJECT NUMBER & PHASE 02-0002-0157-1
EA 02-3E7301

Dist	COUNTY	ROUTE	POST MILES TOTAL PROJECT	SHEET No.	TOTAL SHEETS
02	Sis	5	68.3	43	120

Frank J. Rivas 11-26-14
REGISTERED CIVIL ENGINEER DATE

11-26-14
PLANS APPROVAL DATE

REGISTERED PROFESSIONAL ENGINEER
FRANK RIVAS
No. C53592
Exp. 6/30/15
CIVIL
STATE OF CALIFORNIA

THE STATE OF CALIFORNIA OR ITS OFFICERS OR AGENTS SHALL NOT BE RESPONSIBLE FOR THE ACCURACY OR COMPLETENESS OF SCANNED COPIES OF THIS PLAN SHEET.

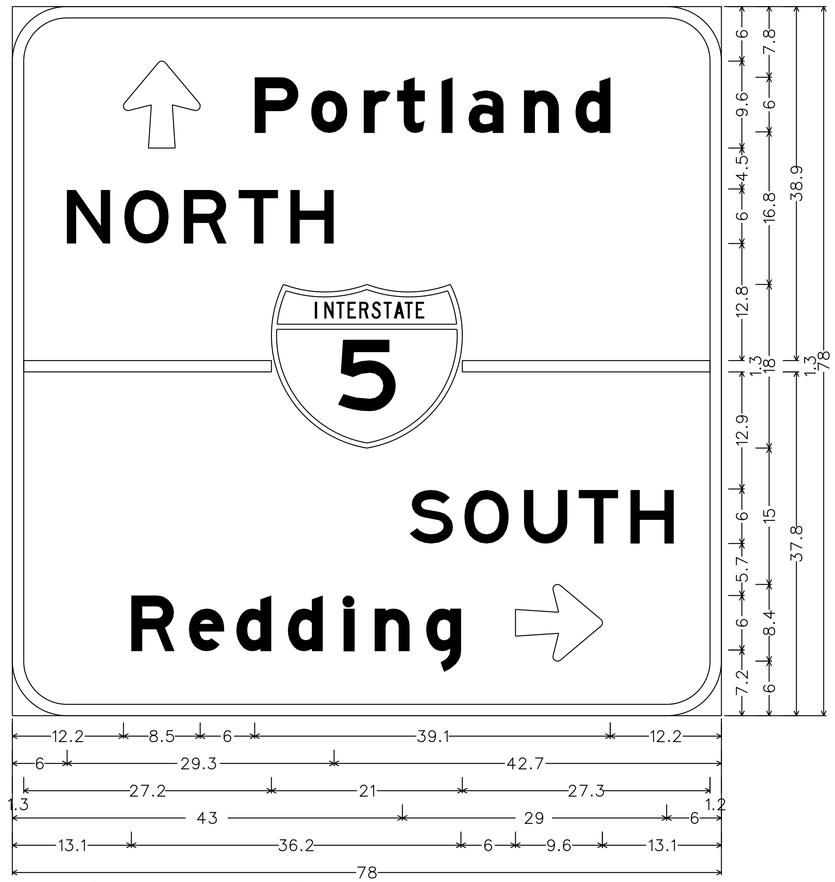

6.0" Radius, 1.25" Border, White on Green;
Arrow 6UC-1L - 9.6" 90°; [Portland] E Mod; [NORTH] E; [SOUTH] E;
[Redding] E Mod; Arrow 6UC-1L - 9.6" 0°;

3-5

G77(Ca)

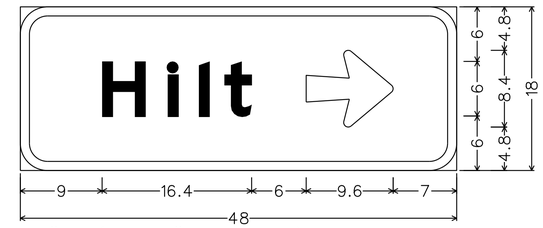

3.0" Radius, 1.0" Border, White on Green;
[Hilt] E Mod; Arrow 6UC-1L - 9.6" 0°;

3-7

G8-1(Ca)

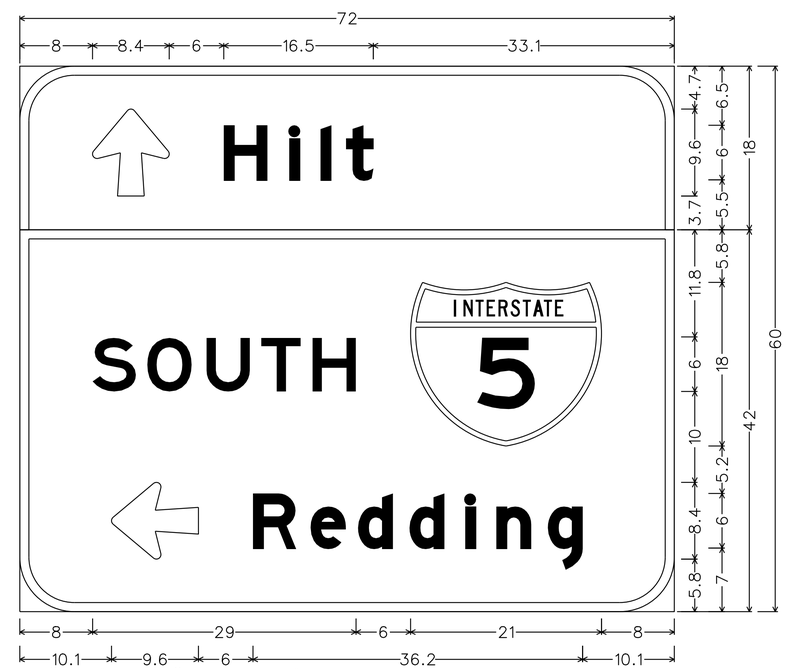

6.0" Radius, 1.0" Border, White on Green;
Arrow 6UC-1L - 9.6" 90°; [Hilt] E Mod;
6.0" Radius, 1.0" Border, White on Green;
[SOUTH] E; Arrow 6UC-1L - 9.6" 180°; [Redding] E Mod;

3-27

G77(Ca)

SIGN DETAILS
NO SCALE

SD-1

REVISED BY | DATE REVISED
FRANK RIVAS | CHECKER
CALCULATED-DESIGNED BY | CHECKED BY
FUNCTIONAL SUPERVISOR: ROB STINGER
STATE OF CALIFORNIA - DEPARTMENT OF TRANSPORTATION
Caltrans® TRAFFIC OPS
P:\proj1\02\3E730_plans\pse\23e730ob001.dgn

LAST REVISION 11-26-14 | DATE PLOTTED => 23-JAN-2015 | TIME PLOTTED => 12:36

Dist	COUNTY	ROUTE	POST MILES TOTAL PROJECT	SHEET No.	TOTAL SHEETS
02	Sis	5	68.3	44	120

Frank A. Rivas 11-26-14
REGISTERED CIVIL ENGINEER DATE

11-26-14
PLANS APPROVAL DATE

REGISTERED PROFESSIONAL ENGINEER
FRANK RIVAS
No. C53592
Exp. 6/30/15
CIVIL
STATE OF CALIFORNIA

THE STATE OF CALIFORNIA OR ITS OFFICERS OR AGENTS SHALL NOT BE RESPONSIBLE FOR THE ACCURACY OR COMPLETENESS OF SCANNED COPIES OF THIS PLAN SHEET.

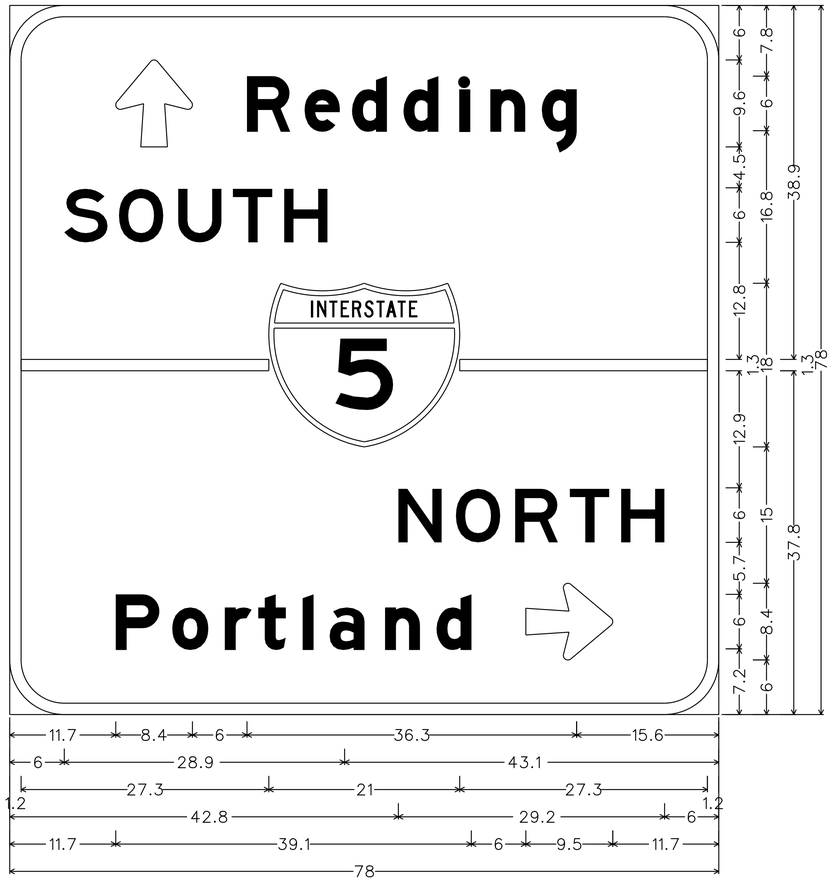

6.0" Radius, 1.25" Border, White on Green;
Arrow 6UC-1L - 9.6" 90°; [Redding] E Mod; [SOUTH] E; [NORTH] E; [Portland] E Mod;
Arrow 6UC-1L - 9.6" 0°;

3-21
G77(Ca)

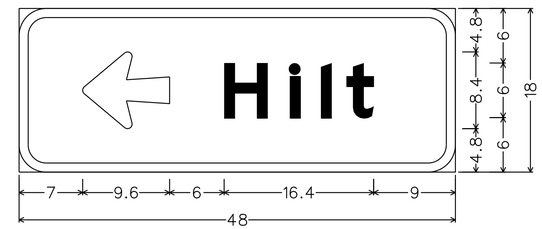

3.0" Radius, 1.0" Border, White on Green;
Arrow 6UC-1L - 9.6" 180°; [Hilt] E Mod;

3-22
G8-1(Ca)

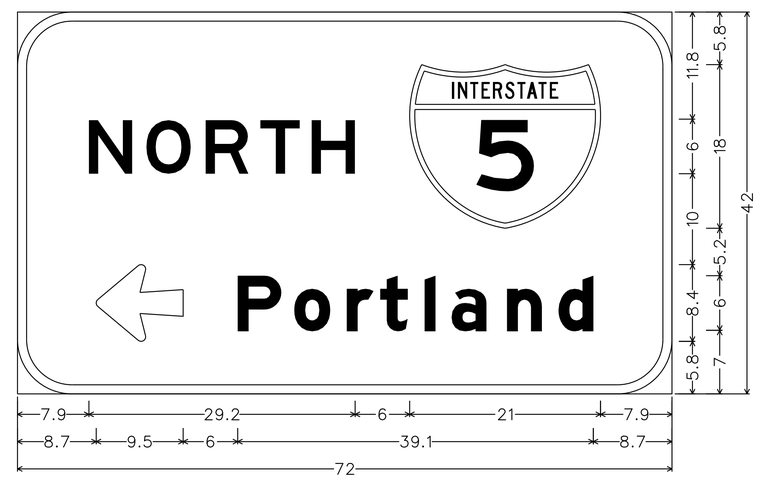

6.0" Radius, 1.0" Border, White on Green;
[NORTH] E; Arrow 6UC-1L - 9.6" 180°; [Portland] E Mod;

3-12
G78(Ca)

SIGN DETAILS
NO SCALE

SD-2

REVISED BY	DATE REVISED

FRANK RIVAS — CHECKER
CALCULATED-DESIGNED BY — CHECKED BY
FUNCTIONAL SUPERVISOR: ROB STINGER

STATE OF CALIFORNIA - DEPARTMENT OF TRANSPORTATION
Caltrans® TRAFFIC OPS

P:\proj\02\3E730_plans\pse\23e730ob002.dgn

LAST REVISION 11-26-14 | DATE PLOTTED => 23-JAN-2015 | TIME PLOTTED => 12:36

Dist	COUNTY	ROUTE	POST MILES TOTAL PROJECT	SHEET No.	TOTAL SHEETS
02	Sis	5	68.3	45	120

REGISTERED CIVIL ENGINEER 11-26-14 DATE

11-26-14
PLANS APPROVAL DATE

REGISTERED PROFESSIONAL ENGINEER FRANK RIVAS No. C53592 Exp. 6/30/15 CIVIL STATE OF CALIFORNIA

THE STATE OF CALIFORNIA OR ITS OFFICERS OR AGENTS SHALL NOT BE RESPONSIBLE FOR THE ACCURACY OR COMPLETENESS OF SCANNED COPIES OF THIS PLAN SHEET.

NOTES:

1. USE A 2¼" Sq TUBE x 30" LONG, 3/16" THICK ANCHOR FOR 2" POSTS.
   USE A 3" Sq TUBE x 3' LONG, 3/16" THICK ANCHOR FOR 2-1/2 " POSTS.
2. USE A 5/16" CORNER BOLT OR TWO DRIVE RIVETS TO FASTEN ASSEMBLED SIGN AND POST INTO ANCHOR. INSTALL CORNER BOLT OR DRIVE RIVETS INTO THE SIDES FACING TRAFFIC.
3. REMOVE EXISTING AC OR PCC, DRIVE ANCHOR SLEEVE INTO SOIL AND RECAP WITH LIKE MATERIAL, MATCHING EXISTING THICKNESS.
4. 2" POSTS ARE TO BE 1/8" THICK, PERFORATIONS OF 7/16" IN DIAMETER ARE 1" ON CENTER ON ALL SIDES, LENGTHS ARE 10' AND 12'.
5. 2-1/2" POSTS ARE TO BE 1/8" THICK, PERFORATIONS OF 7/16" IN DIAMETER ARE 1" ON CENTER ON ALL SIDES, 2-1/2" POSTS ARE 12' AND 14' IN LENGTH.
6. FOR DETAILS NOT SHOWN, REFER TO THE STANDARD PLANS.
7. 2-1/2" POSTS SHALL BE USED IN SIDEWALK AND HIGH PEDESTRIAN USE PLACEMENTS.
8. ALL ANCHOR SLEEVES SHALL BE EMBEDDED IN PCC, EXCEPT FOR INSTALLATIONS IN PAVEMENTS OR SIDEWALKS.

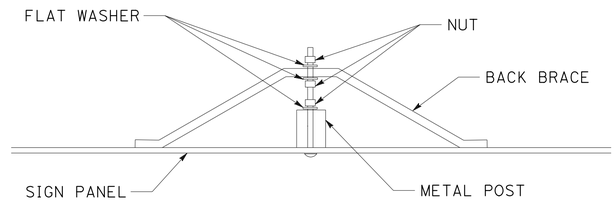

BACK BRACE MOUNTING DETAIL

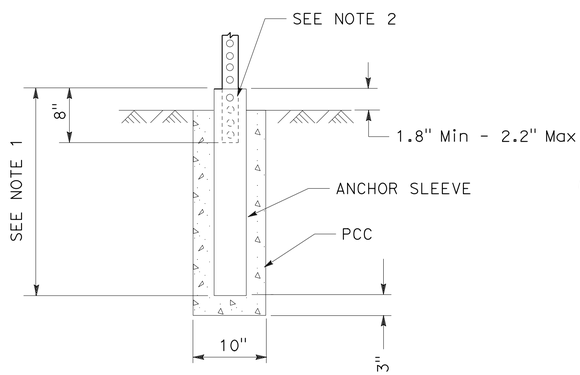

INSTALLATION IN SOIL (PCC)
(SEE NOTE 8)

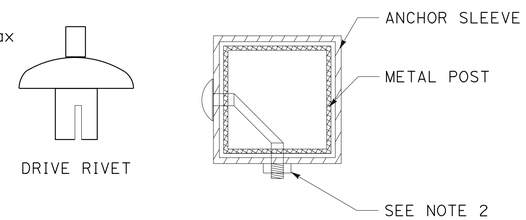

FASTENER DETAILS

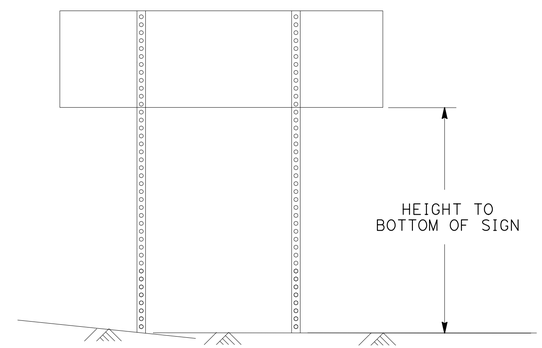

TWO POSTS INSTALLATION
(POST SIZE, SEE CHART BELOW)

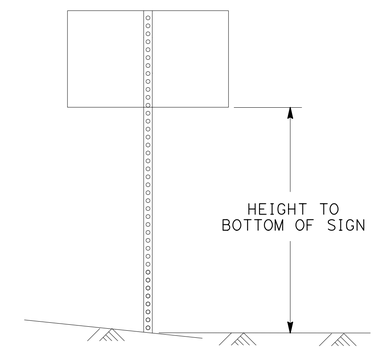

SINGLE POST INSTALLATION
(POST SIZE, SEE CHART BELOW)

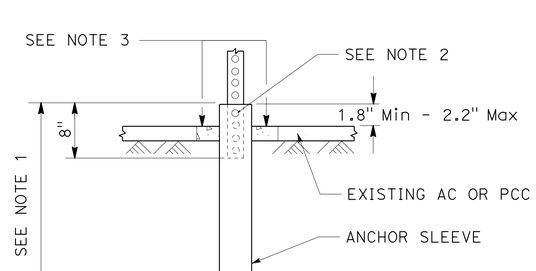

INSTALLATION IN EXISTING AC OR PCC

Max Sq Ft OF SIGN

POST SIZE	60"	72"	84"	96"	108"	120"
2"	18	16	14	12	10	8
2.5"	35	32	28	24	21	21

HEIGHT TO BOTTOM OF SIGN
DOUBLE POST GROUND SIGNS
70 MPH WIND SPEED

Max Sq Ft OF SIGN

POST SIZE	60"	72"	84"	96"	108"	120"
2"	10.5	10	8.7	7.4	6.2	5
2.5"	16	16	16	16	12	12

HEIGHT TO BOTTOM OF SIGN
SINGLE POST GROUND SIGNS
70 MPH WIND SPEED

METAL SIGN POST DETAIL

METAL SIGN POST INSTALLATION DETAILS

SIGN DETAILS
NO SCALE
SD-3

FRANK RIVAS — CHECKER — REVISED BY — DATE REVISED
CALCULATED-DESIGNED BY — CHECKED BY
FUNCTIONAL SUPERVISOR — ROB STINGER

STATE OF CALIFORNIA - DEPARTMENT OF TRANSPORTATION
Caltrans® TRAFFIC OPS

P:\proj1\02\3E730_plans\pse\23e730ob003.dgn

LAST REVISION 11-26-14 | DATE PLOTTED => 23-JAN-2015 | TIME PLOTTED => 12:36

Dist	COUNTY	ROUTE	POST MILES TOTAL PROJECT	SHEET No.	TOTAL SHEETS
02	Sis	5	68.3	46	120

Frank A. Rivas 11-26-14
REGISTERED CIVIL ENGINEER DATE

11-26-14
PLANS APPROVAL DATE

REGISTERED PROFESSIONAL ENGINEER
FRANK RIVAS
No. C53592
Exp. 6/30/15
CIVIL
STATE OF CALIFORNIA

THE STATE OF CALIFORNIA OR ITS OFFICERS OR AGENTS SHALL NOT BE RESPONSIBLE FOR THE ACCURACY OR COMPLETENESS OF SCANNED COPIES OF THIS PLAN SHEET.

NOTES:

1. EXACT LOCATION AND POSITION OF ROADSIDE SIGN TO BE DETERMINED BY THE ENGINEER.
2. POST SIZE AND LENGTH GIVEN ARE APPROXIMATE.
3. CALIFORNIA CODES ARE DESIGNATED BY (CA), OTHERWISE FEDERAL CODES ARE SHOWN.
4. (N) NOT A SEPARATE PAY ITEM, FOR INFORMATION ONLY.
5. "C" DIM = VERTICAL CLEARANCE EP TO BOTTOM OF SIGN PANEL.
6. POST DIMENSIONS CALCULATED ASSUMING CLOSEST EDGE OF SIGN IS 3' FROM EP OR BACK OF GUARD RAIL POST.

ROADSIDE SIGNS

SIGN No. #-##	SIGN CODE	PANEL SIZE In x In	REMOVE ROADSIDE SIGN (EA)	TREATED WOOD WASTE (LBS)	ROADSIDE SIGN ONE POST (EA)	ROADSIDE SIGN TWO POST (EA)	(N) "C" DIM (FT)	(N) POST SIZE AND LENGTH (LF) METAL POST 2½" x 2½"	WOOD POST 4" x 4"	WOOD POST 4" x 6"	WOOD POST 6" x 6"	WOOD POST 6" x 8"	COMMENTS
1-1	R1-1	30 x 30	1	34					11.5				
1-2	R5-1	36 x 36	1	52						11.3			
	R5-1A	36 x 21											
1-3	R6-1L	48 x 16	1	20					6.8				
	R6-1R	48 x 16											
1-4	W1-2R	36 x 36	1	64						14.0			
1-5	G77(Ca)	78 x 78	1	371								18.5,20.5	
1-6	R3-2	24 x 24	1	30					10.4				
1-7	G8-1(Ca)	48 x 18	1										EXISTING SIGN ON METAL POST
1-8	G92(Ca)	48 x 30	1	108							15.0		
	G27-2(Ca)	24 x 24											
	M3-3	24 x 12											
	G44(Ca)	21 x 15											
1-9	R5-10C	24 x 12	1	29					10.1				
1-10	SR49(Ca)	36 x 45	1	63						13.7			
1-11	G92(Ca)	48 x 30	1	108							15.0		
	G27-2(Ca)	24 x 24											
	M3-3	24 x 12											
	G43(Ca)	21 x 15											
1-12	G78(Ca)	72 x 42	1	129						13.5,14.5			
1-13	R3-1	24 x 24	1	30					10.4				
	R6-1L	48 x 16											
	R6-1R	48 x 16											
1-14	R5-1	36 x 36	1	52						11.3			
	R5-1A	36 x 21											
1-15	R1-1	30 x 30	1	32					11.0				
1-16	R5-1	36 x 36	1	52						11.3			
	R5-1A	36 x 21											
		SHEET TOTAL	16	1174									

SIGN QUANTITIES
SQ-1

REVISED BY | DATE REVISED
FRANK RIVAS | CHECKER
CALCULATED-DESIGNED BY | CHECKED BY
FUNCTIONAL SUPERVISOR: ROB STINGER

STATE OF CALIFORNIA - DEPARTMENT OF TRANSPORTATION
Caltrans TRAFFIC OPS

P:\proj1\02\3E730_plans\pse\23e730od001.dgn

LAST REVISION 11-26-14 | DATE PLOTTED => 23-JAN-2015 | TIME PLOTTED => 12:36

Dist	COUNTY	ROUTE	POST MILES TOTAL PROJECT	SHEET No.	TOTAL SHEETS
02	Sis	5	68.3	47	120

Frank A. Rivas 11-26-14
REGISTERED CIVIL ENGINEER DATE

11-26-14
PLANS APPROVAL DATE

REGISTERED PROFESSIONAL ENGINEER
FRANK RIVAS
No. C53592
Exp. 6/30/15
CIVIL
STATE OF CALIFORNIA

THE STATE OF CALIFORNIA OR ITS OFFICERS OR AGENTS SHALL NOT BE RESPONSIBLE FOR THE ACCURACY OR COMPLETENESS OF SCANNED COPIES OF THIS PLAN SHEET.

ROADSIDE SIGNS

SIGN No. #-##	SIGN CODE	PANEL SIZE In x In	REMOVE ROADSIDE SIGN (EA)	TREATED WOOD WASTE (LBS)	ROADSIDE SIGN ONE POST (EA)	ROADSIDE SIGN TWO POST (EA)	(N) "C" DIM (FT)	(N) POST SIZE AND LENGTH (LF) METAL POST 2½" x 2½"	WOOD POST 4" x 4"	WOOD POST 4" x 6"	WOOD POST 6" x 6"	WOOD POST 6" x 8"	COMMENTS
1-17	R6-1L	48 x 16	1	18					6.3				
	R6-1R	48 x 16											
1-18	W1-7	48 x 24	1	28					9.6				
	OM1-3	18 x 18											
1-19	W14-2	30 x 30	1	35					12.0				
1-20	R3-2	24 x 24	1	31					10.5				
1-21	G77(Ca)	78 x 78	1	238							16.5,16.5		
1-22	G8-1(Ca)	48 x 18	1										EXISTING SIGN ON METAL POST
1-23	G92(Ca)	48 x 30	1	133							14.0		
	G27-2(Ca)	24 x 24											
	M3-3	24 x 12											
	G44(Ca)	21 x 15											
1-24	SR49(Ca)	36 x 45	1	56						12.3			
1-25	R5-10C	24 x 12	1	48						10.5			
1-26	G92(Ca)	48 x 30	1	133							14.0		
	G27-2(Ca)	24 x 24											
	M3-3	24 x 12											
	G43(Ca)	21 x 15											
1-27	G77(Ca)	72 x 54	1	151						16.0,17.0			
1-28	R3-1	24 x 24	1	48					10.5				
1-29	R6-1L	48 x 16	1	18					6.3				
	R6-1R	48 x 16											
1-30	R5-1	36 x 36	1	52						11.3			
	R5-1A	36 x 21											
1-31	R5-10C	24 x 12	1	48					10.5				
2-1	SR49(Ca)	36 x 45	1	61						13.3			
		SHEET TOTAL	16	1098									

(N) NOT A SEPARATE PAY ITEM, FOR INFORMATION ONLY.

SIGN QUANTITIES
SQ-2

REVISED BY | DATE REVISED
FRANK RIVAS | CHECKER
CALCULATED-DESIGNED BY | CHECKED BY
FUNCTIONAL SUPERVISOR: ROB STINGER

STATE OF CALIFORNIA - DEPARTMENT OF TRANSPORTATION
Caltrans TRAFFIC OPS

P:\proj1\02\3E730_plans\pse\23e730od002.dgn

LAST REVISION 11-26-14 | DATE PLOTTED => 23-JAN-2015 | TIME PLOTTED => 12:36

Dist	COUNTY	ROUTE	POST MILES TOTAL PROJECT	SHEET No.	TOTAL SHEETS
02	Sis	5	68.3	48	120

Frank J. Rivas 11-26-14
REGISTERED CIVIL ENGINEER DATE

11-26-14
PLANS APPROVAL DATE

REGISTERED PROFESSIONAL ENGINEER
FRANK RIVAS
No. C53592
Exp. 6/30/15
CIVIL
STATE OF CALIFORNIA

THE STATE OF CALIFORNIA OR ITS OFFICERS OR AGENTS SHALL NOT BE RESPONSIBLE FOR THE ACCURACY OR COMPLETENESS OF SCANNED COPIES OF THIS PLAN SHEET.

ROADSIDE SIGNS

SIGN No. #-##	SIGN CODE	PANEL SIZE In x In	REMOVE ROADSIDE SIGN (EA)	TREATED WOOD WASTE (LBS)	ROADSIDE SIGN ONE POST (EA)	ROADSIDE SIGN TWO POST (EA)	(N) "C" DIM (FT)	(N) POST SIZE AND LENGTH (LF) METAL POST 2½" x 2½"	WOOD POST 4" x 4"	WOOD POST 4" x 6"	WOOD POST 6" x 6"	WOOD POST 6" x 8"	COMMENTS
3-1	R1-1	30 x 30			1		5	9					
3-2	R5-1	36 x 36			1		2	8					
	R5-1A	36 x 24											
3-3	R6-1L	54 x 18			1		1.5	4					
	R6-1R	54 x 18											
3-4	W1-2R	36 x 36			1		5			14.3			
3-5	G77(Ca)	78 x 78				1	5					19.4, 21.3	
3-6	R3-2	24 x 24			1		5	8.9					
3-7	G8-1(Ca)	48 x 18			1		5	8.4					
3-8	G92(Ca)	48 x 30			1		2.5			15.7			
	G27-2(Ca)	24 x 24											
	M3-3	24 x 12											
	G44(Ca)	21 x 15											
3-9	R5-10C	24 x 12			1		5	9.4					
3-10	SR49(Ca)	36 x 45			1		5			16.4			
3-11	G92(Ca)	48 x 30			1		2			15			
	G27-2(Ca)	24 x 24											
	M3-3	24 x 12											
	G43(Ca)	21 x 15											
3-12	G78(Ca)	72 x 42				1	5			14.5, 16.5			
3-13	R3-1	24 x 24			1		5	8					
	R6-1L	54 x 18					1.5						
	R6-1R	54 x 18											
3-14	R5-1	36 x 36			1		2	8					
	R5-1A	36 x 24											
3-15	R1-1	30 x 30			1		5	8.2					
3-16	R5-1	36 x 36			1		2	7.7					
	R5-1A	36 x 24											
SHEET TOTAL					14	2							

(N) NOT A SEPARATE PAY ITEM, FOR INFORMATION ONLY.

SIGN QUANTITIES
SQ-3

REVISED BY | DATE REVISED
FRANK RIVAS | CHECKER
CALCULATED-DESIGNED BY | CHECKED BY
FUNCTIONAL SUPERVISOR: ROB STINGER
STATE OF CALIFORNIA - DEPARTMENT OF TRANSPORTATION
Caltrans® TRAFFIC OPS
P:\proj1\02\3E730_plans\pse\23e730od003.dgn

LAST REVISION 11-26-14 | DATE PLOTTED => 23-JAN-2015 | TIME PLOTTED => 12:36

Dist	COUNTY	ROUTE	POST MILES TOTAL PROJECT	SHEET No.	TOTAL SHEETS
02	Sis	5	68.3	49	120

Frank J. Rivas 11-26-14
REGISTERED CIVIL ENGINEER DATE

11-26-14
PLANS APPROVAL DATE

REGISTERED PROFESSIONAL ENGINEER
FRANK RIVAS
No. C53592
Exp. 6/30/15
CIVIL
STATE OF CALIFORNIA

THE STATE OF CALIFORNIA OR ITS OFFICERS OR AGENTS SHALL NOT BE RESPONSIBLE FOR THE ACCURACY OR COMPLETENESS OF SCANNED COPIES OF THIS PLAN SHEET.

ROADSIDE SIGNS

SIGN No. #-##	SIGN CODE	PANEL SIZE In x In	REMOVE ROADSIDE SIGN (EA)	* TREATED WOOD WASTE (LBS)	ROADSIDE SIGN ONE POST (EA)	ROADSIDE SIGN TWO POST (EA)	(N) "C" DIM (FT)	(N) POST SIZE AND LENGTH (LF) METAL POST 2½" x 2½"	WOOD POST 4" x 4"	WOOD POST 4" x 6"	WOOD POST 6" x 6"	WOOD POST 6" x 8"	COMMENTS
3-17	R6-1L	48 x 16			1		1.5	4.1					
	R6-1R	48 x 16											
3-18	W1-7	48 x 24			1		4	9					
	OM1-3	18 x 18											
3-19	W14-2	36 x 36			1		5	9.4					
3-20	R3-2	24 x 24			1		5	7					
3-21	G77(Ca)	78 x 78				1	5					18.2, 19.2	
3-22	G8-1(Ca)	48 x 18			1		5	7.1					
3-23	G92(Ca)	48 x 30			1		2			13.6			
	G27-2(Ca)	24 x 24											
	M3-1	24 x 12											
	G44(Ca)	21 x 15											
3-24	SR49(Ca)	36 x 45			1		5			13.3			
3-25	R5-10C	24 x 12			1		5	6.7					
3-26	G92(Ca)	48 x 30			1		2			13.6			
	G27-2(Ca)	24 x 24											
	M3-1	24 x 12											
	G43(Ca)	21 x 15											
3-27	G77(Ca)	72 x 60				1	5				19, 17		
3-28	R3-1	24 x 24			1		5	9.2					
	R6-1L	48 x 16					2						
	R6-1R	48 x 16											
3-29	R5-1	36 x 36			1		5	8					
	R5-1A	36 x 24											
3-30	R5-10C	24 x 12			1		5	7.4					
4-1	SR49(Ca)	36 x 45			1		5			13.4			
SHEET TOTAL					13	2							
GRAND TOTAL			32	2272	27	4							

*-ITEM SUBTOTAL SUMMARIZED ON SHEET Q-1
(N) NOT A SEPARATE PAY ITEM, FOR INFORMATION ONLY.

SIGN QUANTITIES
SQ-4

REVISED BY | DATE REVISED
FRANK RIVAS | CHECKER
CALCULATED-DESIGNED BY | CHECKED BY
FUNCTIONAL SUPERVISOR
ROB STINGER
STATE OF CALIFORNIA - DEPARTMENT OF TRANSPORTATION
Caltrans® TRAFFIC OPS
P:\proj1\02\3E730_plans\pse\23e730od004.dgn

LAST REVISION 11-26-14 | DATE PLOTTED => 23-JAN-2015 | TIME PLOTTED => 12:36

Dist	COUNTY	ROUTE	POST MILES TOTAL PROJECT	SHEET No.	TOTAL SHEETS
02	Sis	5	68.3	51	120

Frank J. Rivas 11-25-14
REGISTERED CIVIL ENGINEER DATE

11-25-14
PLANS APPROVAL DATE

REGISTERED PROFESSIONAL ENGINEER FRANK RIVAS No. C53592 Exp. 6/30/15 CIVIL STATE OF CALIFORNIA

THE STATE OF CALIFORNIA OR ITS OFFICERS OR AGENTS SHALL NOT BE RESPONSIBLE FOR THE ACCURACY OR COMPLETENESS OF SCANNED COPIES OF THIS PLAN SHEET.

NOTES:

1. CALIFORNIA SIGN CODES ARE DESIGNATED BY (CA), OTHERWISE, FEDERAL MUTCD SIGN CODES ARE SHOWN.

ABBREVIATIONS

L	LENGTH OF SIGN
D	DEPTH OF SIGN
FY	FLUORESCENT YELLOW

ROADSIDE SIGN PANEL QUANTITIES

SIGN No.	SIGN CODE	SIGN MESSAGE/ DESCRIPTION	SIGN SIZE L x D (In x In)	SINGLE FACED	SIGN FACING MATERIAL						FURNISH SINGLE SHEET ALUMINUM SIGN		FURNISH SINGLE SHEET ALUMINUM SIGN TYPE XI SHEETING			RETROREFLECTIVE SHEETING (TYPE XI)
					BACKGROUND		LEGEND		PROTECTIVE FILM		UNFRAMED		UNFRAMED		FRAMED	
					SHEETING COLOR	RETROREFLECTIVE ASTM TYPE	SHEETING COLOR	RETROREFLECTIVE ASTM TYPE	STANDARD	PREMIUM	0.063"	0.080"	0.063"	0.080"	0.063"	
3-1	R1-1	STOP	30 x 30	X	RED	IV	WHITE	IV			6.3					
3-2	R5-1	DO NOT ENTER	36 x 36	X	WHITE	IV	RED	IV			9.0					
3-2	R5-1A	WRONG WAY	36 x 24	X	RED	IV	WHITE	IV			6.0					
3-3	R6-1L	ONE WAY ARROW	54 x 18	X	BLACK		WHITE	IV				6.8				
3-3	R6-1R	ONE WAY ARROW	54 x 18	X	BLACK		WHITE	IV				6.8				
3-4	W1-2R	CURVE WARNING RIGHT	36 x 36	X	FY	XI	BLACK			X	9.0					
3-5	G77(Ca)	ARROW PORTLAND, NORTH, ROUTE 5 SHIELD, SOUTH REDDING ARROW	78 x 78	X	GREEN	XI	WHITE	XI		X					42.3	42.3
3-6	R3-2	LEFT TURN PROHIBITED	24 x 24	X	WHITE	IV	RED/Blk	IV			4.0					
3-7	G8-1(Ca)	HILT ARROW	48 x 18	X	GREEN	XI	WHITE	XI		X				6.0		6.0
3-8	G92(Ca)	FREEWAY ENTRANCE	48 x 30	X	GREEN	XI	WHITE	XI		X				10.0		10.0
3-8	G27-2(5)(Ca)	ROUTE 5 SHIELD	24 x 24	X	RED/BLUE	XI	WHITE	XI		X			4.0			4.0
3-8	M3-3	SOUTH	24 x 12	X	GREEN	XI	WHITE	XI		X			2.0			2.0
3-8	G44(Ca)	ARROW	21 x 15	X	GREEN	XI	WHITE	XI		X			2.2			2.2
3-9	R5-10C	PEDESTRIANS PROHIBITED	24 x 12	X	WHITE	IV	BLACK				2.0					
3-10	SR49(Ca)	TOW-AWAY, NO PARKING	36 x 45	X	WHITE	IV	RED	IV			11.3					
3-11	G92(Ca)	FREEWAY ENTRANCE	48 x 30	X	GREEN	XI	WHITE	XI		X				10.0		10.0
3-11	G27-2(5)(Ca)	ROUTE 5 SHIELD	24 x 24	X	RED/BLUE	XI	WHITE	XI		X			4.0			4.0
3-11	M3-3	SOUTH	24 x 12	X	GREEN	XI	WHITE	XI		X			2.0			2.0
3-11	G43(Ca)	ARROW	21 x 15	X	GREEN	XI	WHITE	XI		X			2.2			2.2
3-12	G78(Ca)	NORTH ROUTE 5 SHIELD, ARROW PORTLAND	72 x 42	X	GREEN	XI	WHITE	XI		X					21.0	21.0
3-13	R3-1	RIGHT TURNS PROHIBITED	24 x 24	X	WHITE	IV	RED/Blk	IV			4.0					
3-13	R6-1L	ONE WAY ARROW	54 x 18	X	BLACK		WHITE	IV				6.8				
3-13	R6-1R	ONE WAY ARROW	54 x 18	X	BLACK		WHITE	IV				6.8				
3-14	R5-1	DO NOT ENTER	36 x 36	X	WHITE	IV	RED	IV			9.0					
3-14	R5-1A	WRONG WAY	36 x 24	X	RED	IV	WHITE	IV			6.0					
3-15	R1-1	STOP	30 x 30	X	RED	IV	WHITE	IV			6.3					
3-16	R5-1	DO NOT ENTER	36 x 36	X	WHITE	IV	RED	IV			9.0					
3-16	R5-1A	WRONG WAY	36 x 24	X	RED	IV	WHITE	IV			6.0					
										SHEET TOTAL (SQFT)	87.9	27.2	16.4	26.0	63.3	105.7

SIGN QUANTITIES
SQ-5

REVISED BY | DATE REVISED
FRANK RIVAS | JAVED IQBAL
CALCULATED-DESIGNED BY | CHECKED BY
FUNCTIONAL SUPERVISOR: ROB STINGER
STATE OF CALIFORNIA - DEPARTMENT OF TRANSPORTATION
Caltrans® TRAFFIC OPS

P:\proj1\02\3E730_plans\pse\23e730od005.dgn

LAST REVISION 11-25-14 | DATE PLOTTED => 23-JAN-2015 | TIME PLOTTED => 12:36

Dist	COUNTY	ROUTE	POST MILES TOTAL PROJECT	SHEET No.	TOTAL SHEETS
02	Sis	5	68.3	52	120

Frank J. Rivas 11-25-14
REGISTERED CIVIL ENGINEER DATE

11-25-14
PLANS APPROVAL DATE

REGISTERED PROFESSIONAL ENGINEER FRANK RIVAS No. C53592 Exp. 6/30/15 CIVIL STATE OF CALIFORNIA

THE STATE OF CALIFORNIA OR ITS OFFICERS OR AGENTS SHALL NOT BE RESPONSIBLE FOR THE ACCURACY OR COMPLETENESS OF SCANNED COPIES OF THIS PLAN SHEET.

ROADSIDE SIGN PANEL QUANTITIES

SIGN No.	SIGN CODE	SIGN MESSAGE/ DESCRIPTION	SIGN SIZE L x D (In x In)	SINGLE FACED	SIGN FACING MATERIAL						FURNISH SINGLE SHEET ALUMINUM SIGN		FURNISH SINGLE SHEET ALUMINUM SIGN TYPE XI SHEETING			RETROREFLECTIVE SHEETING (TYPE XI)
					BACKGROUND		LEGEND		PROTECTIVE FILM		UNFRAMED		UNFRAMED		FRAMED	
					SHEETING COLOR	RETROREFLECTIVE ASTM TYPE	SHEETING COLOR	RETROREFLECTIVE ASTM TYPE	STANDARD	PREMIUM	0.063"	0.080"	0.063"	0.080"	0.063"	
3-17	R6-1L	ONE WAY ARROW	54 x 18	X	BLACK		WHITE	IV				6.8				
3-17	R6-1R	ONE WAY ARROW	54 x 18	X	BLACK		WHITE	IV				6.8				
3-18	W1-7	TWO HEADED ARROW	48 x 24	X	FY	XI	BLACK			X				8.0		8.0
3-18	OM1-3	OBJECT MARKER	18 x 18	X	FY	XI	BLACK			X			2.3			2.3
3-19	W14-2	NO OUTLET	36 x 36	X	FY	XI	BLACK						9.0			9.0
3-20	R3-2	LEFT TURNS PROHIBITED	24 x 24	X	WHITE	IV	RED/Blk	IV			4.0					
3-21	G77(Ca)	ARROW REDDING, SOUTH, ROUTE 5 SHIELD, NORTH, PORTLAND ARROW	78 x 78	X	GREEN	XI	WHITE	XI		X					42.3	42.3
3-22	G8-1(Ca)	ARROW HILT	48 x 18	X	GREEN	XI	WHITE	XI		X				6.0		6.0
3-23	G92(Ca)	FREEWAY ENTRANCE	48 x 30	X	GREEN	XI	WHITE	XI		X				10.0		10.0
3-23	G27-2(5)(Ca)	ROUTE 5 SHIELD	24 x 24	X	RED/BLUE	XI	WHITE	XI		X			4.0			4.0
3-23	M3-1	NORTH	24 x 12	X	GREEN	XI	WHITE	XI		X			2.0			2.0
3-23	G44(Ca)	ARROW	21 x 15	X	GREEN	XI	WHITE	XI		X			2.2			2.2
3-24	SR49(Ca)	TOW-AWAY, NO PARKING	36 x 45	X	WHITE	IV	RED	IV			11.3					
3-25	R5-10C	PEDESTRIANS PROHIBITED	24 x 12	X	WHITE	IV	BLACK				2.0					
3-26	G92(Ca)	FREEWAY ENTRANCE	48 x 30	X	GREEN	XI	WHITE	XI		X				10.0		10.0
3-26	G27-2(5)(Ca)	ROUTE 5 SHIELD	24 x 24	X	RED/BLUE	XI	WHITE	XI		X			4.0			4.0
3-26	M3-1	NORTH	24 x 12	X	GREEN	XI	WHITE	XI		X			2.0			2.0
3-26	G43(Ca)	ARROW	21 x 15	X	GREEN	XI	WHITE	XI		X			2.2			2.2
3-27	G77(Ca)	ARROW HILT, SOUTH ROUTE 5 SHIELD, ARROW REDDING	72 x 60	X	GREEN	XI	WHITE	XI		X					30.0	30.0
3-28	R3-1	RIGHT TURNS PROHIBITED	24 x 24	X	WHITE	IV	RED/Blk	IV			4.0					
3-28	R6-1L	ONE WAY ARROW	54 x 18	X	BLACK		WHITE	IV				6.8				
3-28	R6-1R	ONE WAY ARROW	54 x 18	X	BLACK		WHITE	IV				6.8				
3-29	R5-1	DO NOT ENTER	36 x 36	X	WHITE	IV	RED	IV			9.0					
3-29	R5-1A	WRONG WAY	36 x 24	X	RED	IV	WHITE	IV			6.0					
3-30	R5-10C	PEDESTRIANS PROHIBITED	24 x 12	X	WHITE	IV	BLACK				2.0					
4-1	SR49(Ca)	TOW-AWAY, NO PARKING	36 x 45	X	WHITE	IV	RED	IV			11.3					
										SHEET TOTAL (SQFT)	49.6	27.2	27.7	34.0	72.3	134.0
										GRAND TOTAL (SQFT)	137.5	54.4	44.1	60.0	135.6	239.7

SIGN QUANTITIES
SQ-6

REVISED BY | DATE REVISED
FRANK RIVAS | JAVED IQBAL
CALCULATED-DESIGNED BY | CHECKED BY
FUNCTIONAL SUPERVISOR
ROB STINGER
STATE OF CALIFORNIA - DEPARTMENT OF TRANSPORTATION
Caltrans® TRAFFIC OPS
P:\proj1\02\3E730_plans\pse\23e730od006.dgn

LAST REVISION | DATE PLOTTED => 23-JAN-2015
11-25-14 | TIME PLOTTED => 12:36

Dist	COUNTY	ROUTE	POST MILES TOTAL PROJECT	SHEET No.	TOTAL SHEETS
02	Sis	5	68.3	52	120

REGISTERED CIVIL ENGINEER 11-25-14 DATE

11-26-14
PLANS APPROVAL DATE

REGISTERED PROFESSIONAL ENGINEER JAVED IQBAL No. C82518 Exp. 9/30/16 CIVIL STATE OF CALIFORNIA

THE STATE OF CALIFORNIA OR ITS OFFICERS OR AGENTS SHALL NOT BE RESPONSIBLE FOR THE ACCURACY OR COMPLETENESS OF SCANNED COPIES OF THIS PLAN SHEET.

NOTE:

1. (N) - NOT A SEPARATE PAY ITEM, FOR INFORMATION ONLY

FENCE AND GUARDRAIL

STATION	REMOVE FENCE	REMOVE GUARDRAIL	SALVAGE CRASH CUSHION	RECONSTRUCT GUARDRAIL	RECONSTRUCT GUARDRAIL (7' POST)	RECONSTRUCT CRASH CUSHION (TYPE CAT)	ALTERNATIVE IN-LINE TERMINAL SYSTEM	FENCE (TYPE BW, 5-STRAND, METAL POST)	MIDWEST GUARDRAIL SYSTEM	TRANSITION RAILING (TYPE WB-31)	END ANCHOR ASSEMBLY (TYPE SFT)	ALTERNATIVE CRASH CUSHION	RELOCATE GATE	METAL CATTLE GUARD	REMOVE METAL CATTLE GUARD	TREATED WOOD WASTE
	LF	LF	EA	LF	LF	EA	EA	LF	LF	EA	EA	EA	EA	EA	EA	LB
"R3" 15+70.00 R+ TO "A2" 16+58.00 R+				575												6315
"A2" 16+58.00 R+ TO "A2" 15+34.77 L+					225											2879
"A2" 16+45.45														1	1	
"A2" 16+58.77 R+ TO "A2" 16+48.77 R+	50															
"A2" 16+58.77 R+ TO "A2" 16+45.48 R+								50								
"A2" 16+51.92 L+ TO "A2" 16+45.48 L+	18.5															
"A2" 16+43.00 L+													1			
"A2" 18+75.01 L+ TO "R4" 10+62.06 R+									87.5		1					
"R4" 10+62.06 R+ TO "R4" 11+12.06 R+							1									
"A2" 18+75.01 R+ TO "A2" 18+50.06 R+										1						
"A2" 18+50.06 R+ TO "R3" 20+70.37 R+									43.8		1					
"A2" 18+94.73 R+ TO "A2" 18+31.02 R+		64.5														686
"A2" 19+02.32 R+ TO "R3" 20+40.35 R+		58.5														618
"A2" 19+99.76 R+ (I-5)			1													
"A2" 19+72.68 L+ TO "A2" 20+01.53 R+ (I-5)				131.3							1					1440
"A2" 20+11.58 L+ TO "A2" 20+37.34 R+ (I-5)				100		1					1					1167
"A2" 21+56.00 L+												1				
"A2" 22+86.41														1	1	
"C1" 11+41.42 L+ TO "C1" 11+75.94 L+								31								
"C1" 11+75.94 L+ TO "C1" 15+55.50 L+	379.5															
"C1" 11+75.94 L+													1			
"C1" 12+37.71 L+ TO "C1" 15+55.50 L+								318								
FROM SIGN QUANTITIES																2272
TOTAL	448	123	1	806.3	225	1	1	399	131.3	1	4	1	2	2	2	15377

MINOR CONCRETE

STATION	MINOR CONCRETE (MINOR STRUCTURES)	MINOR CONCRETE (Misc CONSTRUCTION)	COMMENTS
	CY	CY	
FROM DRAINAGE QUANTITIES	3.8		SEE SHEET DQ-1
"R3" 20+81.50, R+		4.1	ITS PAD
TOTAL	3.8	4.1	

SUMMARY OF QUANTITIES
Q-1

JAVED IQBAL | JULIE CASEY | REVISED BY | DATE REVISED
CALCULATED-DESIGNED BY | CHECKED BY | FUNCTIONAL SUPERVISOR JULIE CASEY
STATE OF CALIFORNIA - DEPARTMENT OF TRANSPORTATION
Caltrans® DESIGN
P:\proj1\02\3E730_plans\pse\23e730pa001.dgn

LAST REVISION 11-25-14 | DATE PLOTTED => 23-JAN-2015 | TIME PLOTTED => 12:36

Dist	COUNTY	ROUTE	POST MILES TOTAL PROJECT	SHEET No.	TOTAL SHEETS
02	Sis	5	68.3	53	120

REGISTERED CIVIL ENGINEER 11-25-14 DATE

11-26-14
PLANS APPROVAL DATE

REGISTERED PROFESSIONAL ENGINEER JAVED IQBAL No. C82518 Exp. 9/30/16 CIVIL STATE OF CALIFORNIA

THE STATE OF CALIFORNIA OR ITS OFFICERS OR AGENTS SHALL NOT BE RESPONSIBLE FOR THE ACCURACY OR COMPLETENESS OF SCANNED COPIES OF THIS PLAN SHEET.

NOTE:

1. (N) - NOT A SEPARATE PAY ITEM, FOR INFORMATION ONLY

TEMPORARY WATER POLLUTION CONTROL

LOCATION	TEMPORARY CONSTRUCTION ENTRANCE	TEMPORARY FIBER ROLL	TEMPORARY SILT FENCE	TEMPORARY EROSION CONTROL BLANKET	TEMPORARY COVER
	EA	LF	LF	SQYD	SQYD
"A2" 9+64.00 TO 15+50 Lt	2	600	1000	3500	1000
"A2" 18+00 TO 22+00		250	200	1500	
"R2" 10+50 TO 12+50		300			
"R3" 17+00 TO 20+50 Lt		350	300		
TOTAL	2	1500	1500	5000	1000

AC DIKE

LOCATION	PLACE AC DIKE			HMA (TYPE A)
	TYPE C	TYPE E	TYPE F	
	LF	LF	LF	TON
"R3" 15+70.00 TO "R3" 20+51.00 LT			481	6.4
"A2" 18+17.13 TO "R4" 10+62.06 Lt		29		0.7
"A2" 18+75.00 TO "A2" 18+17.13 Lt			50	0.6
"A2" 18+75.00 TO "R3" 20+70.38 RT			75	1.0
"A2" 21+45.66 TO "A2" 21+69.86 LT	24			0.3
"A2" 21+45.66 TO "R1" 21+06.53 RT		153		4.0
"A2" 21+69.86 TO "R2" 11+38.51 LT		114		3.0
TOTALS	24	296	630	16.0 *

* ADDTIONAL QUANTITIES SHOWN ELSEWHERE, SEE TABLE "ROADWAY ITEMS" FOR TOTAL QUANTITY

ROADWAY ITEMS

STATION	LOCATION	ROADWAY EXCAVATION	(N) EMBANKMENT	CLASS 2 AGGREGATE BASE	HOT MIX ASPHALT (TYPE A)	PLACE HMA (Misc AREA)	SHOULDER BACKING	TACK COAT	COMMENTS
	Rt/Lt	CY	CY	CY	TON	SQYD	TON	TON	
"A2" 9+64.25 TO 23+06.45		13,449	6500	1510	870		42	0.8	HILT ROAD
"C1" 10+00.00 TO 16+70.25		2892	1	390	215		55	0.2	JEFFERSON ROAD
"R1" 19+82.49 TO 21+84.38		1690	235	270	170		36	0.1	NB OFF RAMP
"R2" 10+20.00 TO 15+12.00		93	5700	615	382		82	0.3	NB ON RAMP
"R3" 15+70.00 TO 21+09.28		165	4825	685	430		92	0.3	SB ON RAMP
"R3" 20+53.89 TO 20+70.46	Rt		50	22	20		7		MAINTENANCE VEHICLE PULLOUT
"R4" 10+29.08 TO 15+00.00		270	790	570	355		78	0.3	SB OFF RAMP
FROM DRAINAGE QUANTITIES					4	21			SEE SHEET DQ-1
AC DIKE QUANTITIES					16				SEE TABLE "AC DIKE"
TOTAL		18,562	18,051	4062	2462	21	392	2	

SUMMARY OF QUANTITIES
Q-2

REVISED BY | DATE REVISED
JAVED IQBAL | JULIE CASEY
CALCULATED-DESIGNED BY | CHECKED BY
FUNCTIONAL SUPERVISOR: JULIE CASEY

STATE OF CALIFORNIA - DEPARTMENT OF TRANSPORTATION
Caltrans DESIGN

P:\proj1\02\3E730_plans\pse\23e730pa002.dgn

LAST REVISION 11-25-14 | DATE PLOTTED => 23-JAN-2015 | TIME PLOTTED => 12:36

Dist	COUNTY	ROUTE	POST MILES TOTAL PROJECT	SHEET No.	TOTAL SHEETS
02	Sis	5	68.3	54	120

REGISTERED CIVIL ENGINEER 11-25-14 DATE

11-26-14
PLANS APPROVAL DATE

REGISTERED PROFESSIONAL ENGINEER JAVED IQBAL No. C82518 Exp. 9/30/16 CIVIL STATE OF CALIFORNIA

THE STATE OF CALIFORNIA OR ITS OFFICERS OR AGENTS SHALL NOT BE RESPONSIBLE FOR THE ACCURACY OR COMPLETENESS OF SCANNED COPIES OF THIS PLAN SHEET.

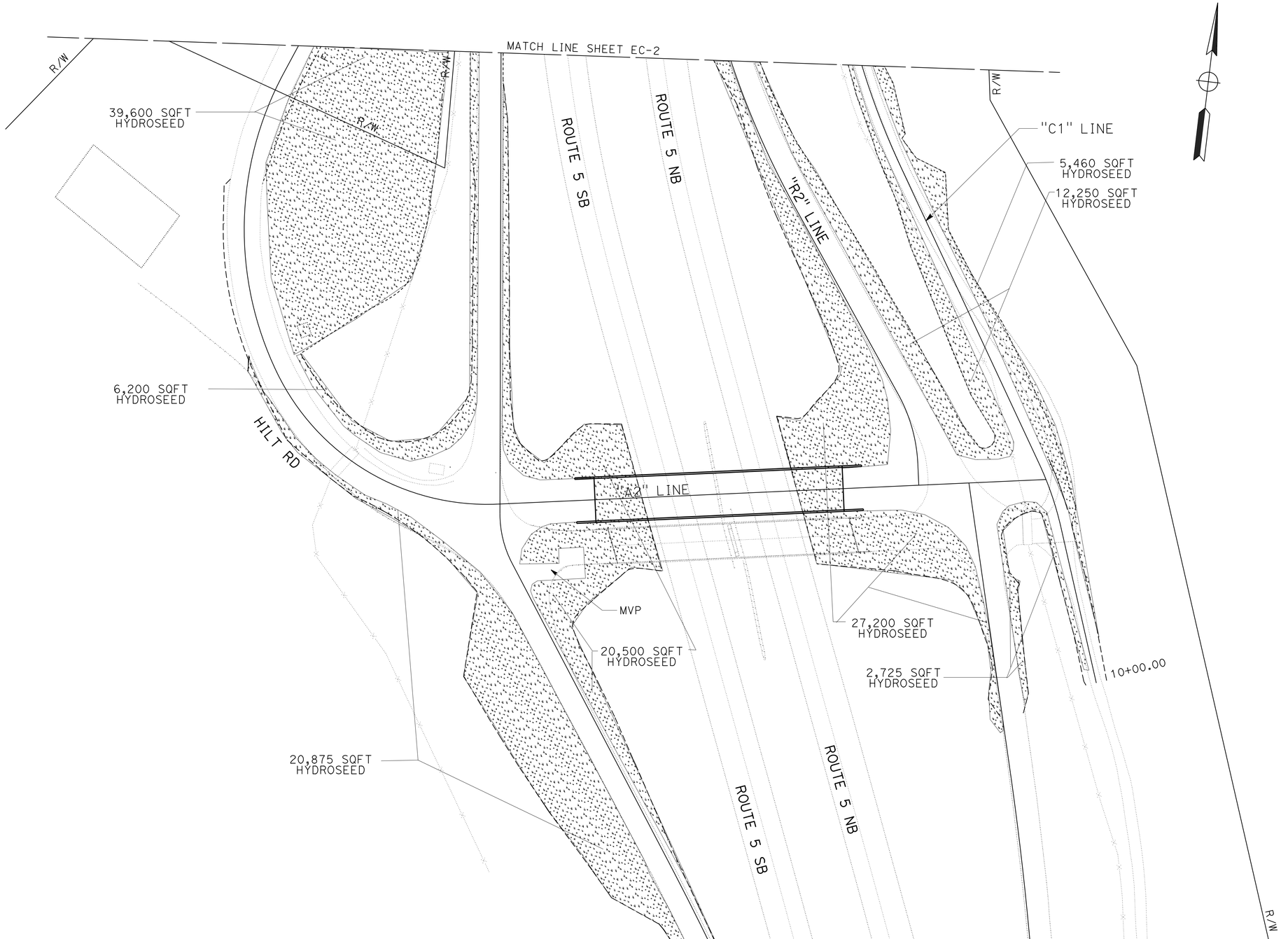

NOTES:

1. FOR ACCURATE RIGHT OF WAY DATA, CONACT RIGHT OF WAY ENGINEERING AT THE DISTRICT OFFICE

LEGEND:

HYDROSEED

EROSION CONTROL PLAN

SCALE: 1" = 50'

EC-1

APPROVED FOR EROISON CONTROL WORK ONLY

REVISED BY | DATE REVISED

JAVED IQBAL | JULIE CASEY

CALCULATED-DESIGNED BY | CHECKED BY

FUNCTIONAL SUPERVISOR: JULIE CASEY

STATE OF CALIFORNIA - DEPARTMENT OF TRANSPORTATION

Caltrans® DESIGN

P:\proj1\02\3E730_plans\pse\23e730te001.dgn

LAST REVISION 11-25-14 | DATE PLOTTED => 23-JAN-2015 | TIME PLOTTED => 12:36

Dist	COUNTY	ROUTE	POST MILES TOTAL PROJECT	SHEET No.	TOTAL SHEETS
02	Sis	5	68.3	55	120

REGISTERED CIVIL ENGINEER 11-25-14 DATE

11-26-14
PLANS APPROVAL DATE

REGISTERED PROFESSIONAL ENGINEER JAVED IQBAL No. C82518 Exp. 9/30/16 CIVIL STATE OF CALIFORNIA

THE STATE OF CALIFORNIA OR ITS OFFICERS OR AGENTS SHALL NOT BE RESPONSIBLE FOR THE ACCURACY OR COMPLETENESS OF SCANNED COPIES OF THIS PLAN SHEET.

NOTE:

1. FOR ACCURATE RIGHT OF WAY DATA, CONTACT RIGHT OF WAY ENGINEERING AT THE DISTRICT OFFICE.

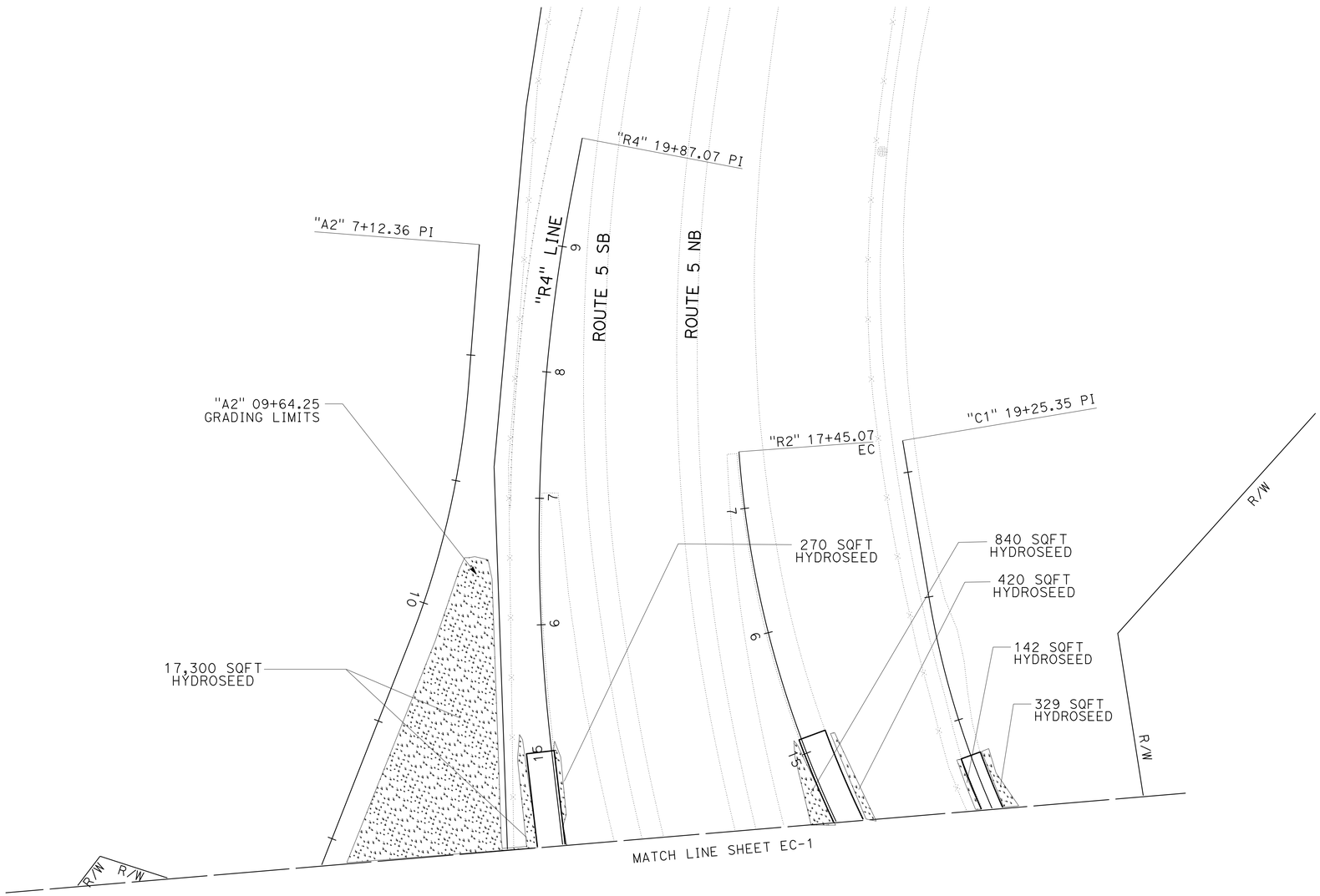

EROSION CONTROL PLAN

SCALE: 1" = 50'

APPROVED FOR LANDSCAPE WORK ONLY

EC-2

REVISED BY	DATE REVISED

CALCULATED-DESIGNED BY	JAVED IQBAL
CHECKED BY	JULIE CASEY
FUNCTIONAL SUPERVISOR	JULIE CASEY

STATE OF CALIFORNIA - DEPARTMENT OF TRANSPORTATION

Caltrans

DESIGN

P:\proj1\02\3E730_plans\pse\23e730te002.dgn

LAST REVISION 11-25-14 | DATE PLOTTED => 23-JAN-2015 | TIME PLOTTED => 12:36

Dist	COUNTY	ROUTE	POST MILES TOTAL PROJECT	SHEET No.	TOTAL SHEETS
02	Sis	5	68.3	56	120

REGISTERED CIVIL ENGINEER 11-25-14 DATE

11-26-14
PLANS APPROVAL DATE

REGISTERED PROFESSIONAL ENGINEER JAVED IQBAL No. C82518 Exp. 9/30/16 CIVIL STATE OF CALIFORNIA

THE STATE OF CALIFORNIA OR ITS OFFICERS OR AGENTS SHALL NOT BE RESPONSIBLE FOR THE ACCURACY OR COMPLETENESS OF SCANNED COPIES OF THIS PLAN SHEET.

NOTES:

1. (N) - NOT A SEPARATE PAY ITEM, FOR INFORMATION ONLY.
2. STRAW MUST COMPLETELY COVER ALL BARE DISTURBED AREAS.
3. EROSION CONTROL QUANTITIES ARE BASED UPON 3.54 ACRES OF DISTURBED AREAS.

HYDROSEED SEQUENCE/ APPLICATION RATES (N)

SEQUENCE	ITEM	MATERIAL DESCRIPTION	MATERIAL TYPE	APPLICATION RATE (N)
STEP 1	HYDROSEED APPLICATION	PURE LIVE SEED	MIX	105 LB/ACRE
		FIBER	ALTERNATE	2000 LB/ACRE
		SLOW RELEASE FERTLIZER	GRANULAR 16-16-16	150 LB/ACRE
STEP 2	APPLY STRAW	STRAW	WHEAT OR BARLEY	5 TONS/ACRE
STEP 3	HYDROSEED APPLICATION	COMPOST	WOOD PRODUCT	1.2 CY/ ACRE
		FIBER	ALTERNATE	1500 LB/ACRE
		TACKIFIER	PSYLLIUM	150 LB/ACRE

SEED MIX (N)

BOTANICAL NAME (COMMON NAME)	PERCENT GERMINATION (MINIMUM)	POUNDS PURE LIVE SEED PER ACRE (N) (SLOPE MEASUREMENT)
ACHILLEA MILLEFOLIUM (COMMON YARROW)	50	2
ARTEMESIA TRIDENDATA (BIG BASIN SAGE)	50	8
BROMUS CARINATUS (CALIFORNIA BROME)	80	15
ELYMUS ELYMIOIDES (SQUIRREL TAIL WILD RYE)	70	8
FESTUCA IDAHOENSIS (WESTERN FESCUE)	70	25
LOTUS PURSHIANUS (SPANISH CLOVER)	70	8
LUPINUS BICOLOR (DWARF LUPINES)	60	2
SECALE CEREALE 'MERCED' (WINTER RYE COVER CROP)	70	20
VULPIA MICROSTACHYS (SMALL FESCUE)	80	17
	TOTAL	105

EROSION CONTROL TOTALS

MATERIAL DESCRIPTION	MATERIAL TYPE	TOTALS	
COMPOST	WOOD PRODUCT	4.3 CUYD (N)	HYDROSEED
PURE LIVE SEED	MIX	372 LBS (N)	
SLOW RELEASE FERTLIZER	GRANULAR	531 LBS (N)	
STRAW	BARLEY OR WHEAT	35,400 LBS (N)	
TACKIFIER	PSYLLIUM	531 LBS (N)	
SHEET NO.			SQFT
EC-1			134,810
EC- 2			19,301
		TOTAL	154,111

EROSION CONTROL QUANTITIES

ECQ-1

REVISED BY | DATE REVISED
JAVED IQBAL | JULIE CASEY
CALCULATED-DESIGNED BY | CHECKED BY
FUNCTIONAL SUPERVISOR
JULIE CASEY

STATE OF CALIFORNIA - DEPARTMENT OF TRANSPORTATION
Caltrans DESIGN

P:\proj1\02\3E730_plans\pse\23e730tg001.dgn

LAST REVISION 11-25-14 | DATE PLOTTED => 23-JAN-2015 | TIME PLOTTED => 12:36

Dist	COUNTY	ROUTE	POST MILES TOTAL PROJECT	SHEET No.	TOTAL SHEETS
02	Sis	5	68.3	57	120

ART 11-25-14
REGISTERED ELECTRICAL ENGINEER DATE

11-26-14
PLANS APPROVAL DATE

REGISTERED PROFESSIONAL ENGINEER A.P. ROBLES No. E15293 Exp. 3-31-15 ELECTRICAL STATE OF CALIFORNIA

THE STATE OF CALIFORNIA OR ITS OFFICERS OR AGENTS SHALL NOT BE RESPONSIBLE FOR THE ACCURACY OR COMPLETENESS OF SCANNED COPIES OF THIS PLAN SHEET.

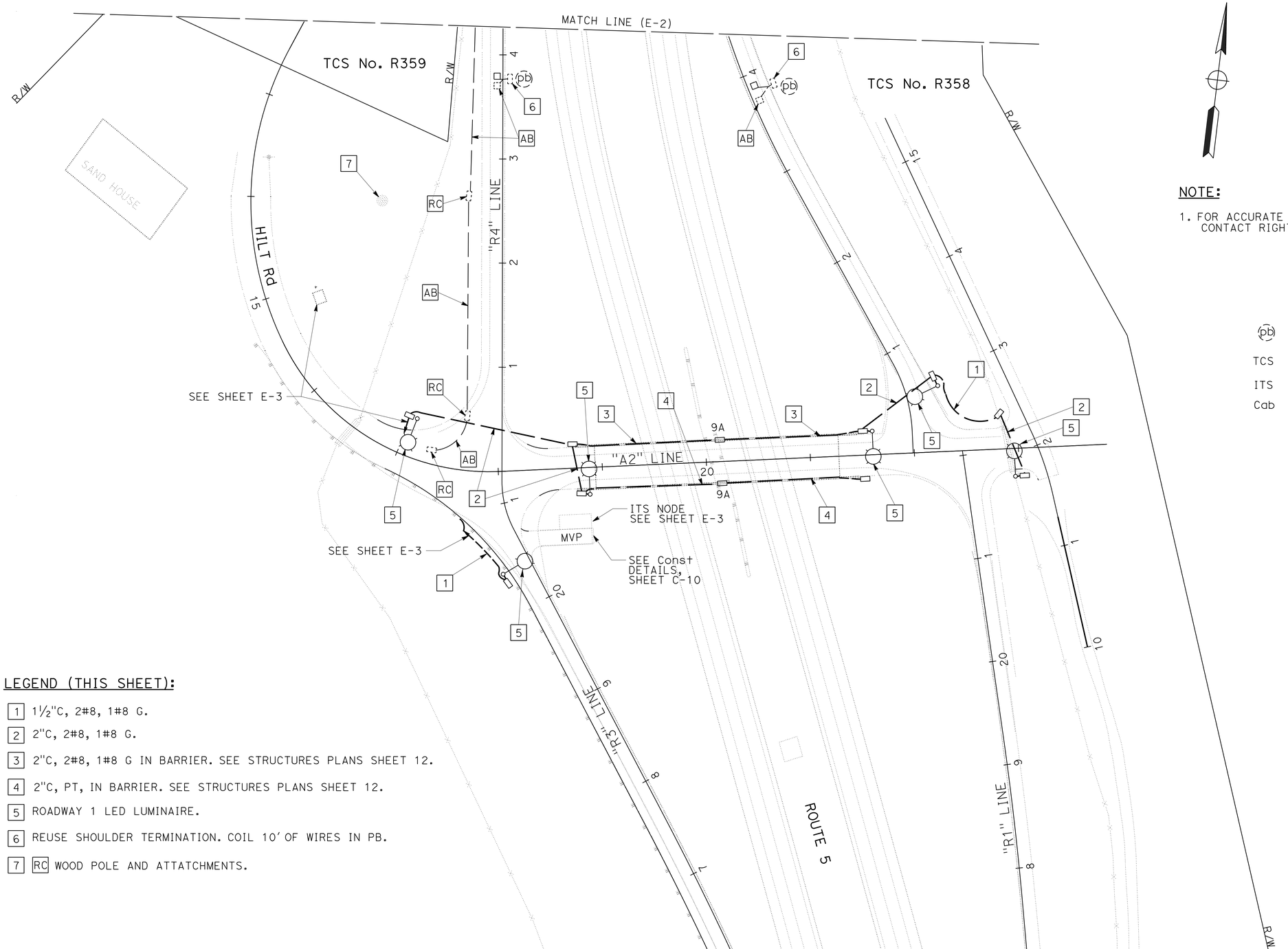

NOTE:

1. FOR ACCURATE RIGHT OF WAY DATA, CONTACT RIGHT OF WAY ENGINEERING AT THE DISTRICT OFFICE.

LEGEND:

(pb) Exist OBJECT MARKER (TYPE PB)

TCS TRAFFIC COUNT STATION

ITS INTELLIGENT TRANSPORTATION SYSTEMS

Cab CABINET

LEGEND (THIS SHEET):

1. 1½"C, 2#8, 1#8 G.
2. 2"C, 2#8, 1#8 G.
3. 2"C, 2#8, 1#8 G IN BARRIER. SEE STRUCTURES PLANS SHEET 12.
4. 2"C, PT, IN BARRIER. SEE STRUCTURES PLANS SHEET 12.
5. ROADWAY 1 LED LUMINAIRE.
6. REUSE SHOULDER TERMINATION. COIL 10′ OF WIRES IN PB.
7. RC WOOD POLE AND ATTATCHMENTS.

LIGHTING

SCALE: 1" = 50′

E-1

APPROVED FOR ELECTRICAL WORK ONLY

REVISED BY	DATE REVISED

CALCULATED-DESIGNED BY: ARTURO P. ROBLES
CHECKED BY: PRAJAKTI ERANDE
FUNCTIONAL SUPERVISOR: ROB STINGER

STATE OF CALIFORNIA - DEPARTMENT OF TRANSPORTATION
Caltrans® ELECTRICAL DESIGN

P:\proj1\02\3E730_plans\pse\23e730ua001.dgn

LAST REVISION 11-25-14 | DATE PLOTTED => 23-JAN-2015 | TIME PLOTTED => 12:36

Dist	COUNTY	ROUTE	POST MILES TOTAL PROJECT	SHEET No.	TOTAL SHEETS
02	Sis	5	68.3	58	120

ART 11-25-14
REGISTERED ELECTRICAL ENGINEER DATE

11-26-14
PLANS APPROVAL DATE

REGISTERED PROFESSIONAL ENGINEER A.P. ROBLES No. E15293 Exp. 3-31-15 ELECTRICAL STATE OF CALIFORNIA

THE STATE OF CALIFORNIA OR ITS OFFICERS OR AGENTS SHALL NOT BE RESPONSIBLE FOR THE ACCURACY OR COMPLETENESS OF SCANNED COPIES OF THIS PLAN SHEET.

NOTE:

1. FOR ACCURATE RIGHT OF WAY DATA, CONTACT RIGHT OF WAY ENGINEERING AT THE DISTRICT OFFICE.

LEGEND (THIS SHEET):

[1] REPLACE LUMINAIRE WITH LED ROADWAY 2 LUMINAIRE.

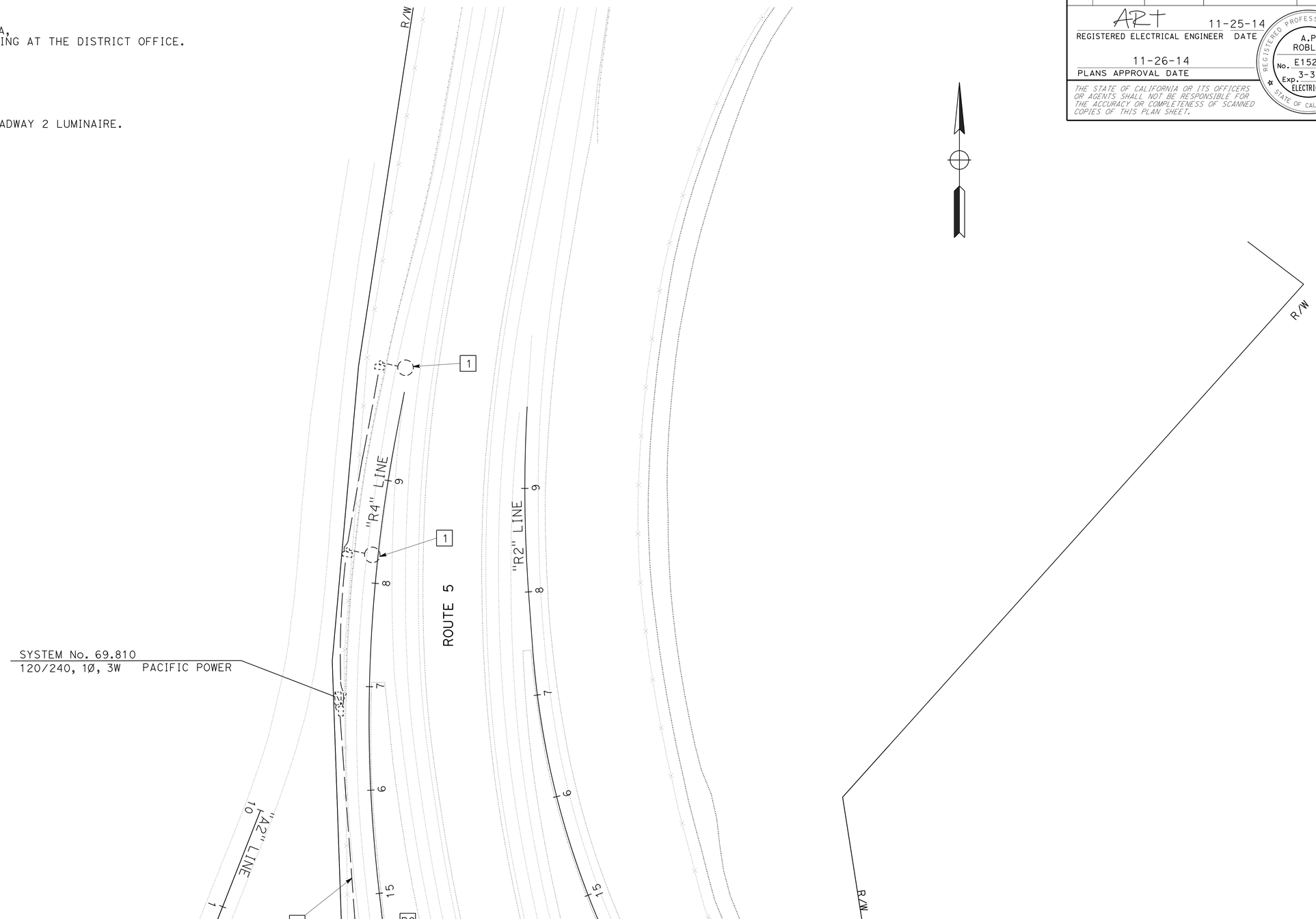

APPROVED FOR ELECTRICAL WORK ONLY

LIGHTING

SCALE: 1" = 50'

E-2

REVISED BY	DATE REVISED

CALCULATED-DESIGNED BY	ARTURO P. ROBLES
CHECKED BY	PRAJAKTI ERANDE
FUNCTIONAL SUPERVISOR	ROB STINGER

STATE OF CALIFORNIA - DEPARTMENT OF TRANSPORTATION
Caltrans® **ELECTRICAL DESIGN**

P:\proj1\02\3E730_plans\pse\23e730ua002.dgn

LAST REVISION 11-25-14 | DATE PLOTTED => 23-JAN-2015 | TIME PLOTTED => 12:36

Dist	COUNTY	ROUTE	POST MILES TOTAL PROJECT	SHEET No.	TOTAL SHEETS
02	Sis	5	68.3	59	120

ART 11-25-14
REGISTERED ELECTRICAL ENGINEER DATE

11-26-14
PLANS APPROVAL DATE

REGISTERED PROFESSIONAL ENGINEER A.P. ROBLES No. E15293 Exp. 3-31-15 ELECTRICAL STATE OF CALIFORNIA

THE STATE OF CALIFORNIA OR ITS OFFICERS OR AGENTS SHALL NOT BE RESPONSIBLE FOR THE ACCURACY OR COMPLETENESS OF SCANNED COPIES OF THIS PLAN SHEET.

NOTE:

1. FOR ACCURATE RIGHT OF WAY AND ACCESS DATA, CONTACT RIGHT OF WAY ENGINEERING AT THE DISTRICT OFFICE.

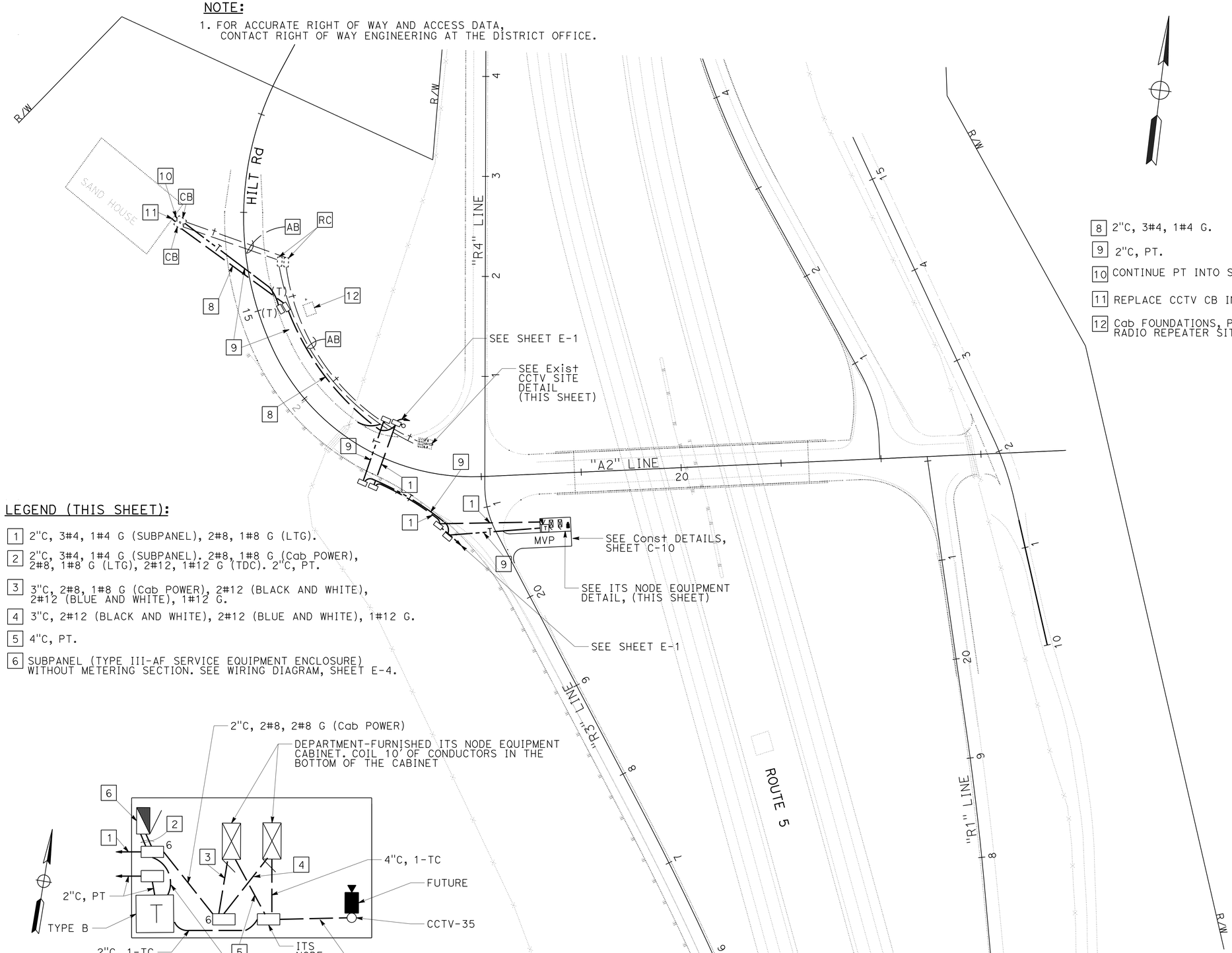

LEGEND (THIS SHEET):

1. 2"C, 3#4, 1#4 G (SUBPANEL), 2#8, 1#8 G (LTG).
2. 2"C, 3#4, 1#4 G (SUBPANEL). 2#8, 1#8 G (Cab POWER), 2#8, 1#8 G (LTG), 2#12, 1#12 G (TDC). 2"C, PT.
3. 3"C, 2#8, 1#8 G (Cab POWER), 2#12 (BLACK AND WHITE), 2#12 (BLUE AND WHITE), 1#12 G.
4. 3"C, 2#12 (BLACK AND WHITE), 2#12 (BLUE AND WHITE), 1#12 G.
5. 4"C, PT.
6. SUBPANEL (TYPE III-AF SERVICE EQUIPMENT ENCLOSURE) WITHOUT METERING SECTION. SEE WIRING DIAGRAM, SHEET E-4.
8. 2"C, 3#4, 1#4 G.
9. 2"C, PT.
10. CONTINUE PT INTO SAND HOUSE IN Exist CONDUIT.
11. REPLACE CCTV CB IN MAIN PANEL WITH 70 A, 2 POLE CB ("SUBPANEL").
12. Cab FOUNDATIONS, POLE, AND PULL BOXES FOR FUTURE RADIO REPEATER SITE. PROTECT IN PLACE.

ITS NODE EQUIPMENT
NO SCALE

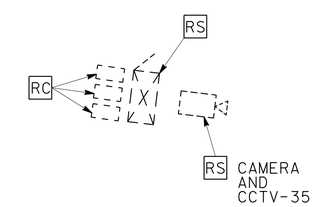

Exist CCTV SITE
NO SCALE

APPROVED FOR ELECTRICAL WORK ONLY

CLOSED CIRCUIT TELEVISION SYSTEM

SCALE: 1" = 50'

E-3

REVISED BY	DATE REVISED

CALCULATED-DESIGNED BY: ARTURO P. ROBLES
CHECKED BY: PRAJAKTI ERANDE
FUNCTIONAL SUPERVISOR: ROB STINGER

STATE OF CALIFORNIA - DEPARTMENT OF TRANSPORTATION
Caltrans® ELECTRICAL DESIGN

P:\proj1\02\3E730_plans\pse\23e730ua003.dgn

LAST REVISION 11-25-14 | DATE PLOTTED => 23-JAN-2015 | TIME PLOTTED => 12:36

Dist	COUNTY	ROUTE	POST MILES TOTAL PROJECT	SHEET No.	TOTAL SHEETS
02	Sis	5	68.3	60	120

ART 11-25-14
REGISTERED ELECTRICAL ENGINEER DATE

11-26-14
PLANS APPROVAL DATE

REGISTERED PROFESSIONAL ENGINEER A.P. ROBLES No. E15293 Exp. 3-31-15 ELECTRICAL STATE OF CALIFORNIA

THE STATE OF CALIFORNIA OR ITS OFFICERS OR AGENTS SHALL NOT BE RESPONSIBLE FOR THE ACCURACY OR COMPLETENESS OF SCANNED COPIES OF THIS PLAN SHEET.

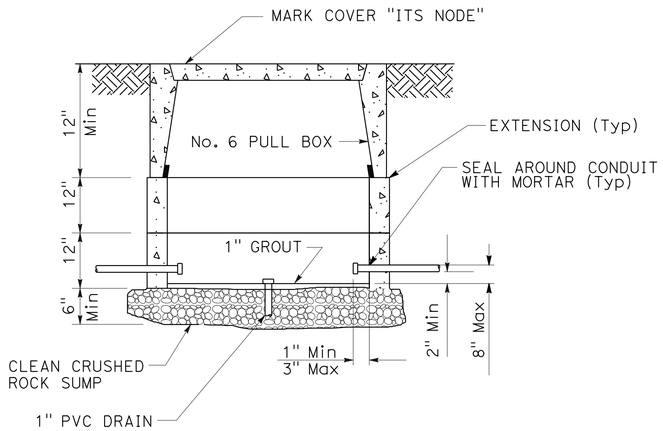

ITS NODE PULL BOX

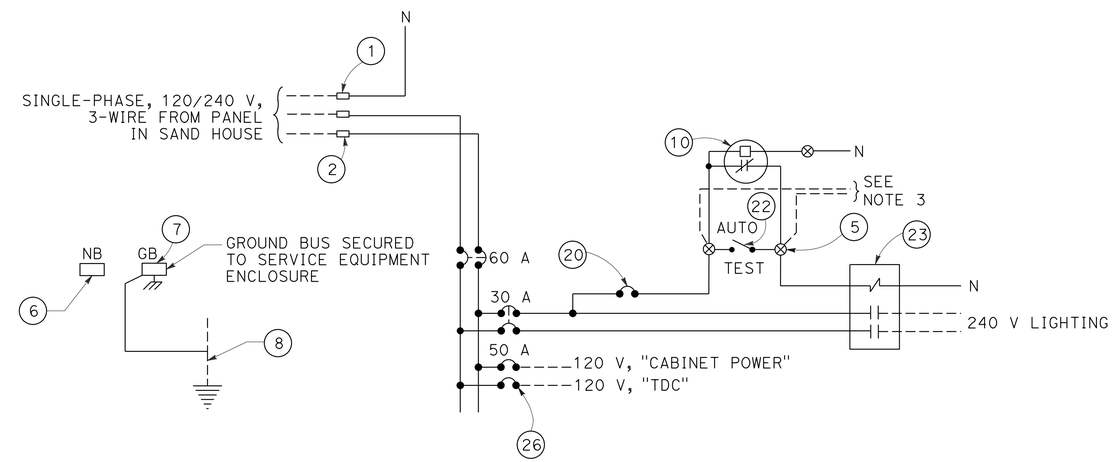

SUBPANEL WIRING DIAGRAM

FOR ADDITIONAL INFORMATION, SEE ES-2D

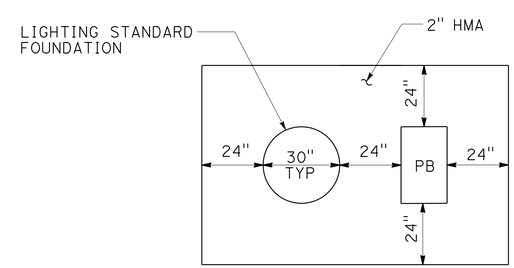

NOTE: APPLIES TO ALL INSTALLATIONS IN UNPAVED AREAS

PULL BOX AND LIGHT STANDARD PAVING

ELECTRICAL DETAILS

NO SCALE ~~NOT TO SCALE~~

E-4

REVISED BY	DATE REVISED

CALCULATED-DESIGNED BY	CHECKED BY
ARTURO P. ROBLES	PRAJAKTI ERANDE

FUNCTIONAL SUPERVISOR: ROB STINGER

STATE OF CALIFORNIA - DEPARTMENT OF TRANSPORTATION
Caltrans® ELECTRICAL DESIGN

P:\proj1\02\3E730_plans\pse\23e730ua004.dgn

LAST REVISION 11-25-14 | DATE PLOTTED => 23-JAN-2015 | TIME PLOTTED => 12:36

Dist	COUNTY	ROUTE	POST MILES TOTAL PROJECT	SHEET No.	TOTAL SHEETS
02	Sis	5	68.3	61	120

ART 11-25-14
REGISTERED ELECTRICAL ENGINEER DATE

11-26-14
PLANS APPROVAL DATE

REGISTERED PROFESSIONAL ENGINEER A.P. ROBLES No. E15293 Exp. 3-31-15 ELECTRICAL STATE OF CALIFORNIA

THE STATE OF CALIFORNIA OR ITS OFFICERS OR AGENTS SHALL NOT BE RESPONSIBLE FOR THE ACCURACY OR COMPLETENESS OF SCANNED COPIES OF THIS PLAN SHEET.

LIGHTING

SHEET No.	(N) TRENCHING AND BACKFILL	(N) BORING	(N) 1½" CONDUIT	(N) 2" CONDUIT	(N) No. 5 PULL BOX	(N) No. 9A PULL BOX	(N) INSTALL CONDUIT AND CONDUCTORS IN BARRIER RAIL	(N) No. 8 CONDUCTOR	(N) No. 8 GROUND	(N) TYPE 15 POLE WITH LMA	(N) ROADWAY 1 LED LUMINAIRE	(N) ROADWAY 2 LED LUMINAIRE	(N) TYPE A LOOP DETECTOR
	LF	LF	LF	LF	EA	LF	LF	LF	LF	EA	EA	EA	EA
E-1	150	350	150	1200	9	2	600	1500	750	6	6		2
E-2												2	

(N) - ITEMS IN THIS TABLE ARE NOT A SEPARATE PAY ITEM, FOR INFORMATION ONLY.

LOOP DETECTORS TO REMAIN IN PLACE AND OPERATIONAL

ID NO.	LOCATION	TYPE	DESCRIPTION	EQUIPMENT
R356	Sis-PM R68.14	RAMP	NB OFF-953' S OF HILT ROAD NB RAMP TERMINAL	1 LOOP
R357	Sis-PM R68.16	RAMP	SB ON-999' S OF HILT ROAD SB INTERSECTION	1 LOOP
231	Sis-PM R68.32	CLASSIFICATION	NEAR BEGINNING OF NB HILT ROAD EXIT	6 LOOPS 8 AXLE SENSORS

ITEMS IN THIS TABLE ARE NOT A SEPARATE PAY ITEM, FOR INFORMATION ONLY.

CLOSED CIRCUIT TELEVISION SYSTEM

SHEET No.	(N) TRENCHING AND BACKFILL	(N) BORING	(N) 2" CONDUIT	(N) No 4 CONDUCTOR	(N) No.4 GROUND	(N) No. 8 CONDUCTOR	(N) No. 8 GROUND	(N) PULL TAPE	(N) TELEPHONE CABLE	(N) No. 5 PULL BOX	(N) No. 5(T) PULL BOX	(N) No. 6 PULL BOX	(N) ITS NODE PULL BOX	(N) INSTALL CABINET	(N) SALVAGE POLE AND CAMERA	(N) SALVAGE CABINETS
	LF	LF	LF	LF	LF	LF	LF	LF	LF	EA	EA	EA	EA	EA	EA	EA
E-3	500	850	1200	1200	600	500	250	600	30	7	2	2	1	2	1	2

(N) - ITEMS IN THIS TABLE ARE NOT A SEPARATE PAY ITEM, FOR INFORMATION ONLY.

ELECTRICAL QUANTITIES

E-5

REVISED BY | DATE REVISED
ARTURO P. ROBLES | PRAJAKTI ERANDE
CALCULATED-DESIGNED BY | CHECKED BY
FUNCTIONAL SUPERVISOR: ROB STINGER
STATE OF CALIFORNIA - DEPARTMENT OF TRANSPORTATION
Caltrans ELECTRICAL DESIGN
P:\proj1\02\3E730_plans\pse\23e730ua005.dgn

LAST REVISION 11-25-14 | DATE PLOTTED => 23-JAN-2015 | TIME PLOTTED => 12:36

M

Maint	MAINTENANCE
Max	MAXIMUM
MB	METAL BEAM
MBB	METAL BEAM BARRIER
MBGR	METAL BEAM GUARD RAILING
Med	MEDIAN
MGS	MIDWEST GUARDRAIL SYSTEM
MH	MANHOLE
Min	MINIMUM
Misc	MISCELLANEOUS
Misc I & S	MISCELLANEOUS IRON AND STEEL
Mkr	MARKER
Mod	MODIFIED,
	MODIFY
Mon	MONUMENT
MP	METAL PLATE
MPGR	METAL PLATE GUARD RAILING
MR	MOVEMENT RATING
MSE	MECHANICALLY STABILIZED EMBANKMENT
Mt	MOUNTAIN, MOUNT
Mtl	MATERIAL
MVP	MAINTENANCE VEHICLE PULLOUT

N

N	NORTH
NB	NORTHBOUND
No.	NUMBER (MUST HAVE PERIOD)
Nos.	NUMBERS (MUST HAVE PERIOD)
NPS	NOMINAL PIPE SIZE
NS	NEAR SIDE
NSP	NEW STANDARD PLAN
NTS	NOT TO SCALE

O

Oblr	OBLITERATE
OC	OVERCROSSING
OD	OUTSIDE DIAMETER
OF	OUTSIDE FACE
OG	ORIGINAL GROUND
OGAC	OPEN GRADED ASPHALT CONCRETE
OGFC	OPEN GRADED FRICTION COURSE
OH	OVERHEAD
OHWM	ORDINARY HIGH WATER MARK
O-O	OUT TO OUT
Opp	OPPOSITE
OSD	OVERSIDE DRAIN

P

P	PAGE
PAP	PERFORATED ALUMINUM PIPE
PB	PULL BOX
PC	POINT OF CURVATURE,
	PRECAST
PCC	POINT OF COMPOUND CURVE,
	PORTLAND CEMENT CONCRETE
PCMS	PORTABLE CHANGEABLE MESSAGE SIGN
PCP	PERFORATED CONCRETE PIPE,
	PRESTRESSED CONCRETE PIPE
PCVC	POINT OF COMPOUND VERTICAL CURVE
PEC	PERMIT TO ENTER AND CONSTRUCT
Ped	PEDESTRIAN
Ped OC	PEDESTRIAN OVERCROSSING
Ped UC	PEDESTRIAN UNDERCROSSING
Perm Mtl	PERMEABLE MATERIAL

P continued

PG	PROFILE GRADE
PI	POINT OF INTERSECTION
PJP	PARTIAL JOINT PENETRATION
Pkwy	PARKWAY
ℙL,PL	PLATE
P/L	PROPERTY LINE
PM	POST MILE,
	TIME FROM NOON TO MIDNIGHT
PN	PAVING NOTCH
POC	POINT OF HORIZONTAL CURVE
POT	POINT OF TANGENT
POVC	POINT OF VERTICAL CURVE
PP	PIPE PILE,
	PLASTIC PIPE,
	POWER POLE
PPL	PREFORMED PERMEABLE LINER
PPP	PERFORATED PLASTIC PIPE
PRC	POINT OF REVERSE CURVE
PRF	PAVEMENT REINFORCING FABRIC
PRVC	POINT OF REVERSE VERTICAL CURVE
PS&E	PLANS, SPECIFICATIONS AND ESTIMATES
PS, P/S	PRESTRESSED
PSP	PERFORATED STEEL PIPE
PT	POINT OF TANGENCY
PVC	POLYVINYL CHLORIDE
Pvmt	PAVEMENT

Q

Qty	QUANTITY

R

R	RADIUS
R & D	REMOVE AND DISPOSE
R & S	REMOVE AND SALVAGE
R/C	RATE OF CHANGE
RCA	REINFORCED CONCRETE ARCH
RCB	REINFORCED CONCRETE BOX
RCP	REINFORCED CONCRETE PIPE
RCPA	REINFORCED CONCRETE PIPE ARCH
Rd	ROAD
Reinf	REINFORCED,
	REINFORCEMENT,
	REINFORCING
Rel	RELOCATE
Repl	REPLACEMENT
Ret	RETAINING
Rev	REVISED, REVISION
Rdwy	ROADWAY
RHMA	RUBBERIZED HOT MIX ASPHALT
Riv	RIVER
RM	ROAD-MIXED
RP	RADIUS POINT,
	REFERENCE POINT
RR	RAILROAD
RSP	ROCK SLOPE PROTECTION,
	REVISED STANDARD PLAN
Rt	RIGHT
Rte	ROUTE
RW	REDWOOD,
	RETAINING WALL
R/W	RIGHT OF WAY
Rwy	RAILWAY

S

S	SOUTH,
	SUPPLEMENT
SAE	STRUCTURE APPROACH EMBANKMENT
Salv	SALVAGE
SAPP	STRUCTURAL ALUMINUM PLATE PIPE
SB	SOUTHBOUND
SC	SAND CUSHION
SCSP	SLOTTED CORRUGATED STEEL PIPE
SD	STORM DRAIN
Sec	SECOND,
	SECTION
Sep	SEPARATION
SG	SUBGRADE
Shld	SHOULDER
Sht	SHEET
Sim	SIMILAR
℄	STATION LINE
SM	SELECTED MATERIAL
Spec	SPECIAL,
	SPECIFICATIONS
SPP	SLOTTED PLASTIC PIPE
SS	SLOPE STAKE
SSBM	STRAP AND SADDLE BRACKET METHOD
SSD	STRUCTURAL SECTION DRAIN
SSPA	STRUCTURAL STEEL PLATE ARCH
SSPP	STRUCTURAL STEEL PLATE PIPE
SSPPA	STRUCTURAL STEEL PLATE PIPE ARCH
SSRP	STEEL SPIRAL RIB PIPE
St	STREET
Sta	STATION
STBB	SINGLE THRIE BEAM BARRIER
Std	STANDARD
Str	STRUCTURE
Surf	SURFACING
SW	SIDEWALK,
	SOUND WALL
Swr	SEWER
Sym	SYMMETRICAL
S4S	SURFACE 4 SIDES

T

T	SEMI-TANGENT
Tan	TANGENT
TBB	THRIE BEAM BARRIER
Tbr	TIMBER
TC	TOP OF CURB
TCB	TRAFFIC CONTROL BOX
TCE	TEMPORARY CONSTRUCTION EASEMENT
Tel	TELEPHONE
Temp	TEMPORARY
TG	TOP OF GRADE
Tot	TOTAL
TP	TELEPHONE POLE
TPB	TREATED PERMEABLE BASE
TPM	TREATED PERMEABLE MATERIAL
Trans	TRANSITION

T continued

TS	TRANSVERSE,
	TRAFFIC SIGNAL,
	TUBULAR STEEL
Typ	TYPICAL

U

UC	UNDERCROSSING
UD	UNDERDRAIN
UG	UNDERGROUND
UON	UNLESS OTHERWISE NOTED
UP	UNDERPASS

V

V	VALVE,
	DESIGN SPEED
Var	VARIABLE,
	VARIES
VC	VERTICAL CURVE
VCP	VITRIFIED CLAY PIPE
Vert	VERTICAL
Via	VIADUCT
Vol	VOLUME

W

W	WEST,
	WIDTH
WB	WESTBOUND
WH	WEEP HOLE
WM	WIRE MESH
WS	WATER SURFACE
WSP	WELDED STEEL PIPE
Wt	WEIGHT
WV	WATER VALVE
WW	WINGWALL
WWLOL	WINGWALL LAYOUT LINE

X

X Sec	CROSS SECTION
Xing	CROSSING

Y

Yr	YEAR
Yrs	YEARS

Dist	COUNTY	ROUTE	POST MILES TOTAL PROJECT	SHEET No.	TOTAL SHEETS
02	Sis	5	68.3	62	120

Grace M. Tsushima
REGISTERED CIVIL ENGINEER

July 19, 2013
PLANS APPROVAL DATE

REGISTERED PROFESSIONAL ENGINEER
Grace M. Tsushima
No. C49814
Exp. 9-30-14
CIVIL
STATE OF CALIFORNIA

THE STATE OF CALIFORNIA OR ITS OFFICERS OR AGENTS SHALL NOT BE RESPONSIBLE FOR THE ACCURACY OR COMPLETENESS OF SCANNED COPIES OF THIS PLAN SHEET.

TO ACCOMPANY PLANS DATED 11-26-14

UNIT OF MEASUREMENT SYMBOLS:

Some of the symbols used in the project plan quantity tables and in the Bid Item List are:

TABLE A

SYMBOL USED	DEFINITIONS
ACRE	ACRE
CF	CUBIC FOOT
CY	CUBIC YARD
EA	EACH
GAL	GALLON
LB	POUND
LF	LINEAR FOOT
SQFT	SQUARE FOOT
SQYD	SQUARE YARD
STA	100 FEET
TAB	TABLET
TON	2,000 POUNDS

Some of the symbols used in the plans other than in the project plan quantity tables are:

TABLE B

SYMBOL USED	DEFINITIONS
ksi	KIPS PER SQUARE INCH
ksf	KIPS PER SQUARE FOOT
psi	POUNDS PER SQUARE INCH
psf	POUNDS PER SQUARE FOOT
lb/ft^3, pcf	POUNDS PER CUBIC FOOT
tsf	TONS PER SQUARE FOOT
mph, MPH *	MILES PER HOUR
ø	NOMINAL DIAMETER
oz	OUNCE
lb	POUND
kip	1,000 POUNDS
cal	CALORIE
ft	FOOT OR FEET
gal	GALLON

* For use on a sign panel only

STATE OF CALIFORNIA
DEPARTMENT OF TRANSPORTATION

ABBREVIATIONS (SHEET 2 OF 2)

NO SCALE

RSP A10B DATED JULY 19, 2013 SUPERSEDES STANDARD PLAN A10B DATED MAY 20, 2011 - PAGE 2 OF THE STANDARD PLANS BOOK DATED 2010.

REVISED STANDARD PLAN RSP A10B

2010 REVISED STANDARD PLAN RSP A10B

DATE PLOTTED => 23-JAN-2015
TIME PLOTTED => 12:36

Dist	COUNTY	ROUTE	POST MILES TOTAL PROJECT	SHEET No.	TOTAL SHEETS
02	Sis	5	68.3	63	120

REGISTERED CIVIL ENGINEER

July 19, 2013
PLANS APPROVAL DATE

REGISTERED PROFESSIONAL ENGINEER Roberta L. McLaughlin No. C40375 Exp. 3-31-15 CIVIL STATE OF CALIFORNIA

THE STATE OF CALIFORNIA OR ITS OFFICERS OR AGENTS SHALL NOT BE RESPONSIBLE FOR THE ACCURACY OR COMPLETENESS OF SCANNED COPIES OF THIS PLAN SHEET.

TO ACCOMPANY PLANS DATED 11-26-14

EXIT RAMP NEUTRAL AREA (GORE) TREATMENT

DETAIL 36

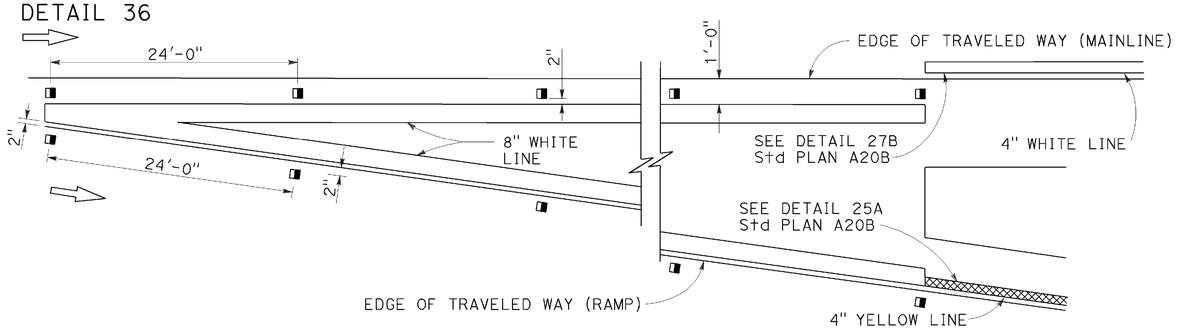

ENTRANCE RAMP NEUTRAL AREA (MERGE) TREATMENT

DETAIL 36A

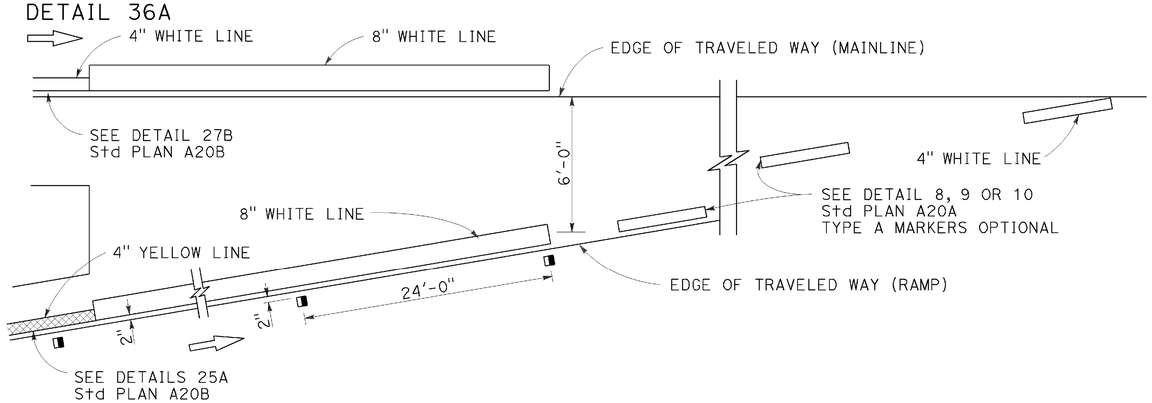

ENTRANCE RAMP NEUTRAL AREA (ACCELERATION LANE) TREATMENT

DETAIL 36B

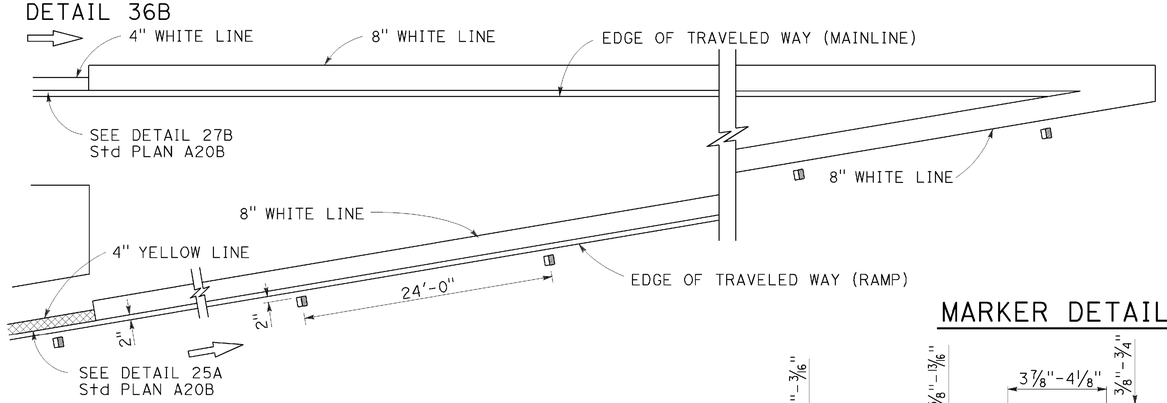

LANE DROP AT EXIT RAMPS

DETAIL 37

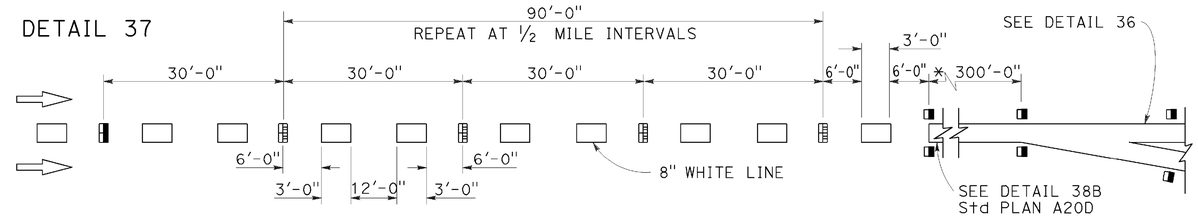

DETAIL 37A

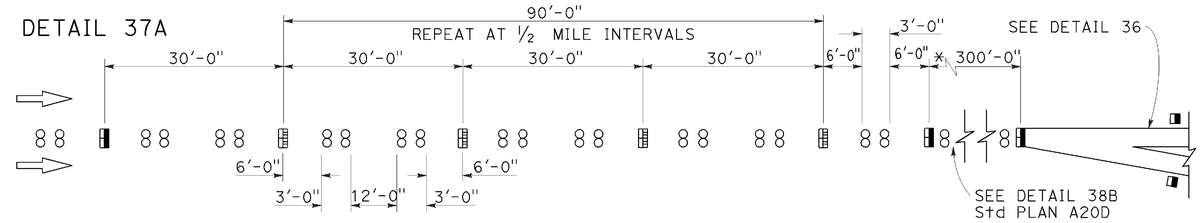

* The solid channelizing line shown may be omitted on short auxiliary lanes where weaving length is critical.

LANE DROP AT INTERSECTIONS

DETAIL 37B

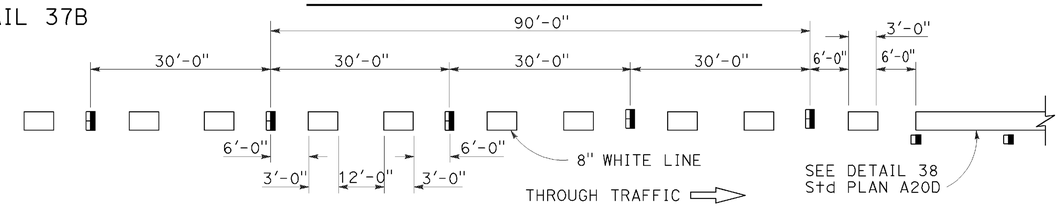

DETAIL 37C

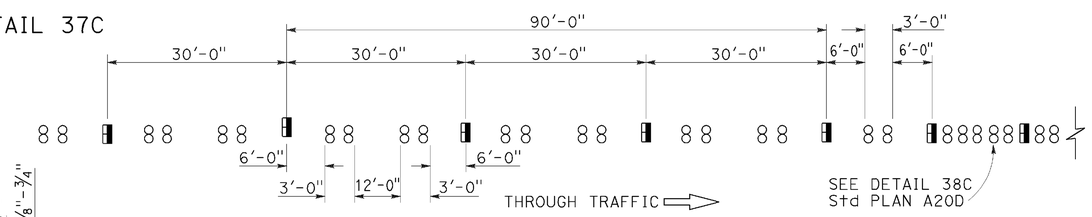

MARKER DETAILS

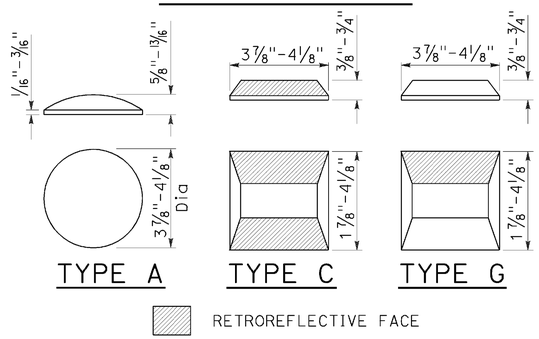

LEGEND:

MARKERS

- ○ TYPE A WHITE NON-REFLECTIVE
- ⊞ TYPE C RED-CLEAR RETROREFLECTIVE
- ◨ TYPE G ONE-WAY CLEAR RETROREFLECTIVE

STATE OF CALIFORNIA
DEPARTMENT OF TRANSPORTATION

PAVEMENT MARKERS AND TRAFFIC LINE TYPICAL DETAILS

NO SCALE

RSP A20C DATED JULY 19, 2013 SUPERSEDES STANDARD PLAN A20C DATED MAY 20, 2011 - PAGE 11 OF THE STANDARD PLANS BOOK DATED 2010.

REVISED STANDARD PLAN RSP A20C

2010 REVISED STANDARD PLAN RSP A20C

DATE PLOTTED => 23-JAN-2015
TIME PLOTTED => 12:37

Dist	COUNTY	ROUTE	POST MILES TOTAL PROJECT	SHEET No.	TOTAL SHEETS
02	Sis	5	68.3	64	120

REGISTERED CIVIL ENGINEER

April 20, 2012
PLANS APPROVAL DATE

Registered Professional Engineer — Roberta L. McLaughlin, No. C40375, Exp. 3-31-13, CIVIL, State of California

THE STATE OF CALIFORNIA OR ITS OFFICERS OR AGENTS SHALL NOT BE RESPONSIBLE FOR THE ACCURACY OR COMPLETENESS OF SCANNED COPIES OF THIS PLAN SHEET.

TO ACCOMPANY PLANS DATED 11-26-14

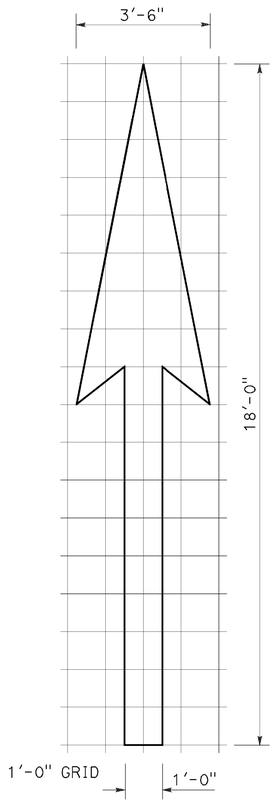

A=25 ft^2

TYPE I 18'-0" ARROW

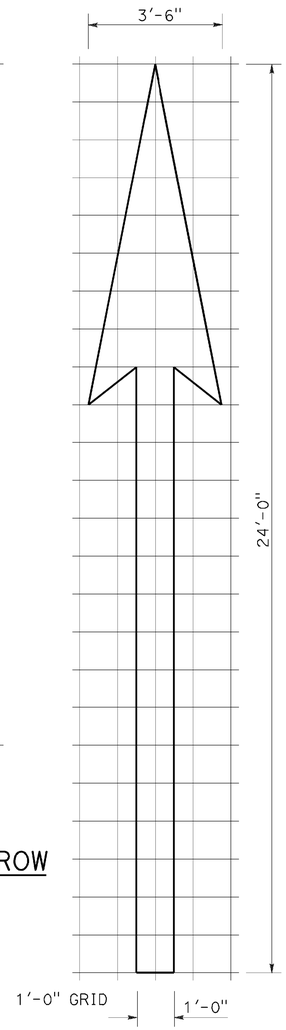

A=31 ft^2

TYPE I 24'-0" ARROW

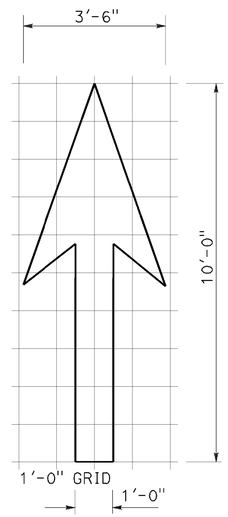

A=14 ft^2

TYPE I 10'-0" ARROW

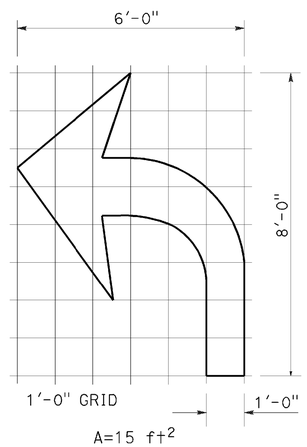

A=15 ft^2

TYPE IV (L) ARROW

(For Type IV (R) arrow, use mirror image)

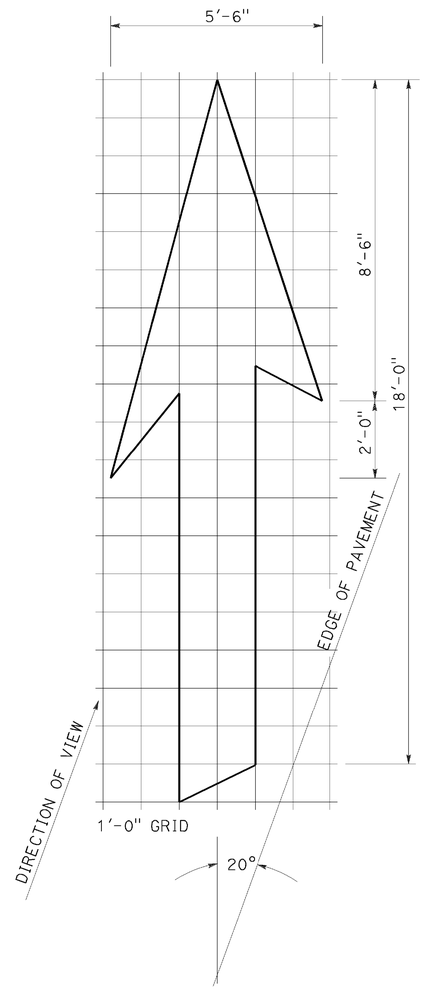

A=42 ft^2

TYPE VI ARROW

Right lane drop arrow
(For left lane, use mirror image)

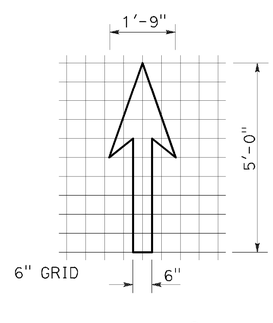

A=3.5 ft^2

BIKE LANE ARROW

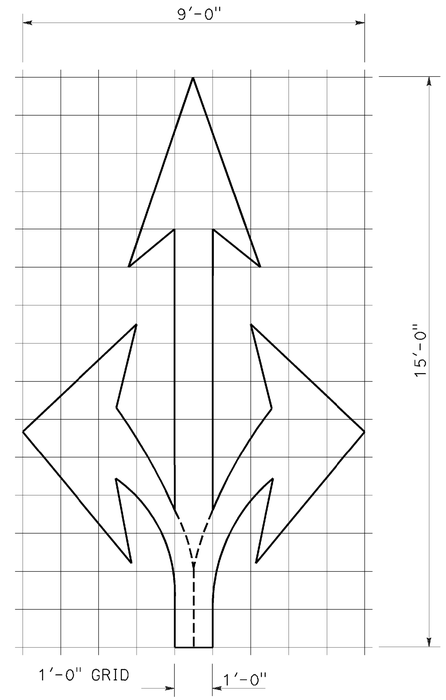

A=36 ft^2

TYPE VIII ARROW

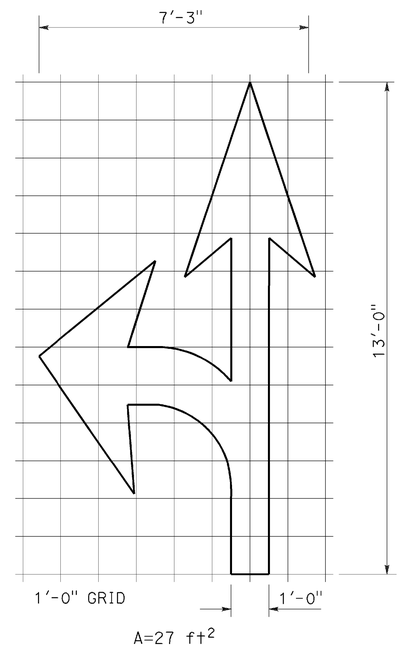

A=27 ft^2

TYPE VII (L) ARROW

(For Type VII (R) arrow, use mirror image)

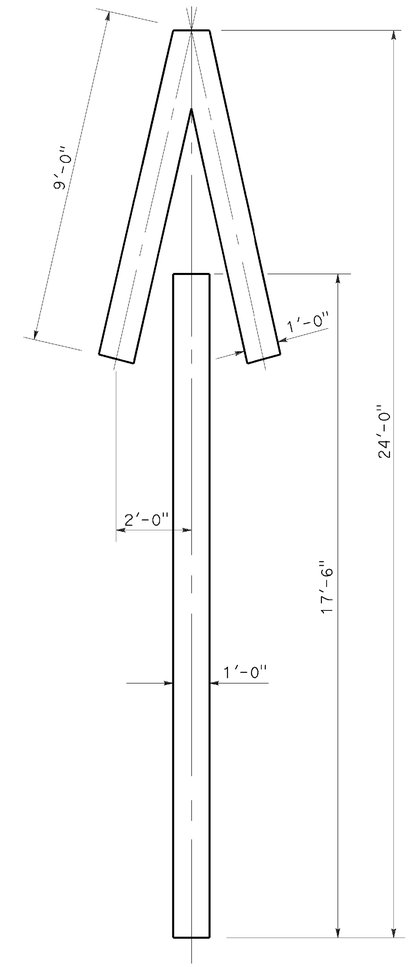

A=33 ft^2

TYPE V ARROW

NOTE:
Minor variations in dimensions may be accepted by the Engineer.

STATE OF CALIFORNIA
DEPARTMENT OF TRANSPORTATION

PAVEMENT MARKINGS ARROWS

NO SCALE

RSP A24A DATED APRIL 20, 2012 SUPERSEDES STANDARD PLAN A24A DATED MAY 20, 2011 - PAGE 13 OF THE STANDARD PLANS BOOK DATED 2010.

REVISED STANDARD PLAN RSP A24A

2010 REVISED STANDARD PLAN RSP A24A

DATE PLOTTED => 23-JAN-2015
TIME PLOTTED => 12:37

Dist	COUNTY	ROUTE	POST MILES TOTAL PROJECT	SHEET No.	TOTAL SHEETS
02	Sis	5	68.3	65	120

REGISTERED CIVIL ENGINEER

July 20, 2012
PLANS APPROVAL DATE

REGISTERED PROFESSIONAL ENGINEER
Roberta L. McLaughlin
No. C40375
Exp. 3-31-13
CIVIL
STATE OF CALIFORNIA

THE STATE OF CALIFORNIA OR ITS OFFICERS OR AGENTS SHALL NOT BE RESPONSIBLE FOR THE ACCURACY OR COMPLETENESS OF SCANNED COPIES OF THIS PLAN SHEET.

TO ACCOMPANY PLANS DATED 11-26-14

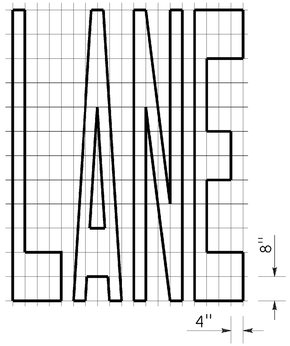

A=24 ft²

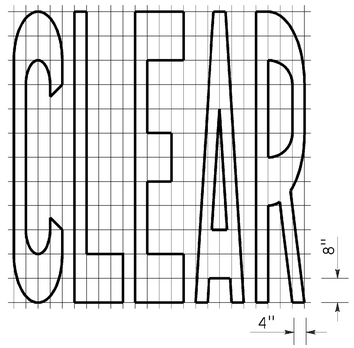

A=27 ft²

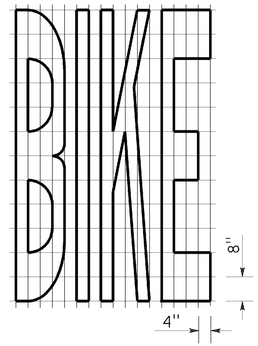

A=21 ft²

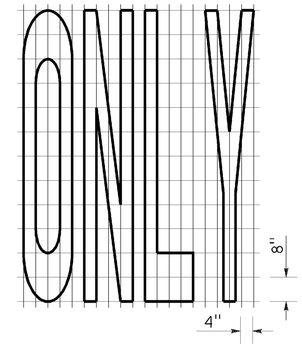

A=22 ft²

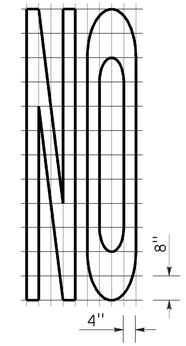

A=14 ft²

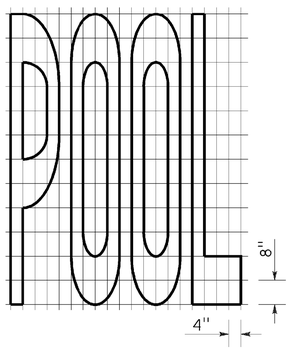

A=23 ft²

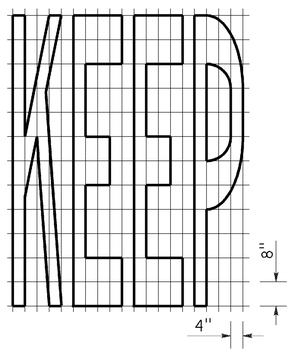

A=24 ft²

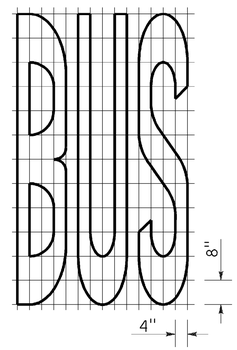

A=20 ft²

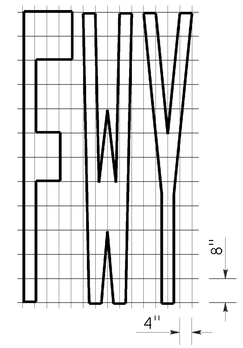

A=16 ft²

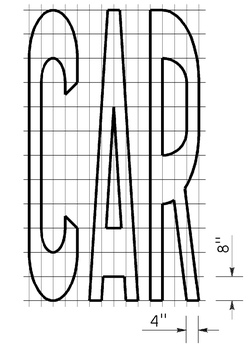

A=17 ft²

WORD MARKINGS			
ITEM	ft²	ITEM	ft²
LANE	24	NO	14
POOL	23	BIKE	21
CAR	17	BUS	20
CLEAR	27	ONLY	22
KEEP	24	FWY	16

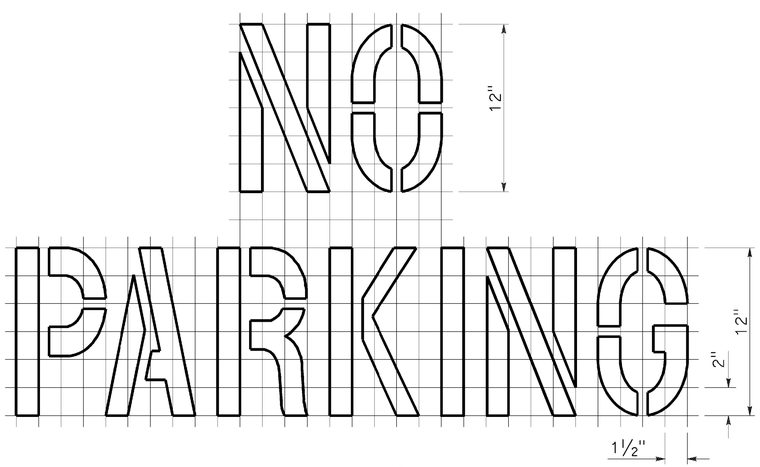

A=2 ft²
See Notes 6 and 7

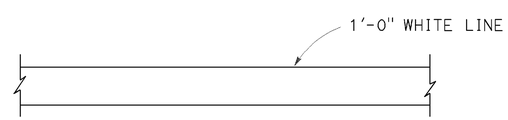

LIMIT LINE (STOP LINE)

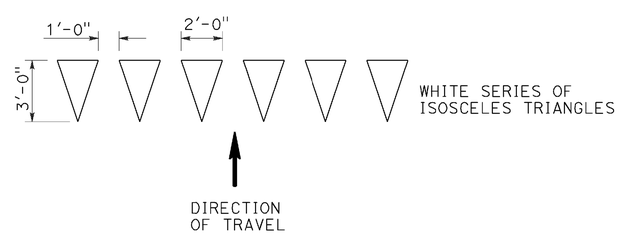

YIELD LINE

NOTES:

1. If a message consists of more than one word, it should read "UP", i.e., the first word should be nearest the driver.
2. The space between words should be at least four times the height of the characters for low speed roads, but not more than ten times the height of the characters. The space may be reduced appropriately where there is limited space because of local conditions.
3. Minor variations in dimensions may be accepted by the Engineer.
4. Portions of a letter, number or symbol may be separated by connecting segments not to exceed 2" in width.
5. The words "NO PARKING" pavement marking is to be used for parking facilities. For typical locations of markings, see Standard Plans A90A and A90B.
6. The words "NO PARKING", shall be painted in white letters no less than 1'-0" high on a contrasting background and located so that it is visible to traffic enforcement officials.

STATE OF CALIFORNIA
DEPARTMENT OF TRANSPORTATION

PAVEMENT MARKINGS WORDS, LIMIT AND YIELD LINES

NO SCALE

RSP A24E DATED JULY 20, 2012 SUPERSEDES STANDARD PLAN A24E
DATED MAY 20, 2011 - PAGE 17 OF THE STANDARD PLANS BOOK DATED 2010.

REVISED STANDARD PLAN RSP A24E

2010 REVISED STANDARD PLAN RSP A24E

DATE PLOTTED => 23-JAN-2015
TIME PLOTTED => 12:37

Dist	COUNTY	ROUTE	POST MILES TOTAL PROJECT	SHEET No.	TOTAL SHEETS
02	Sis	5	68.3	66	120

Randell D. Hiatt
REGISTERED CIVIL ENGINEER

July 19, 2013
PLANS APPROVAL DATE

REGISTERED PROFESSIONAL ENGINEER
Randell D. Hiatt
No. C50200
Exp. 6-30-15
CIVIL
STATE OF CALIFORNIA

THE STATE OF CALIFORNIA OR ITS OFFICERS OR AGENTS SHALL NOT BE RESPONSIBLE FOR THE ACCURACY OR COMPLETENESS OF SCANNED COPIES OF THIS PLAN SHEET.

TO ACCOMPANY PLANS DATED 11-26-14

2010 REVISED STANDARD PLAN RSP A77L2

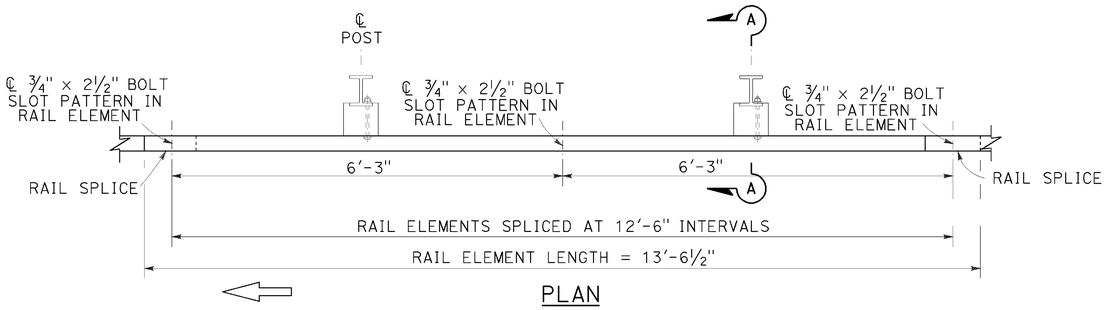

PLAN

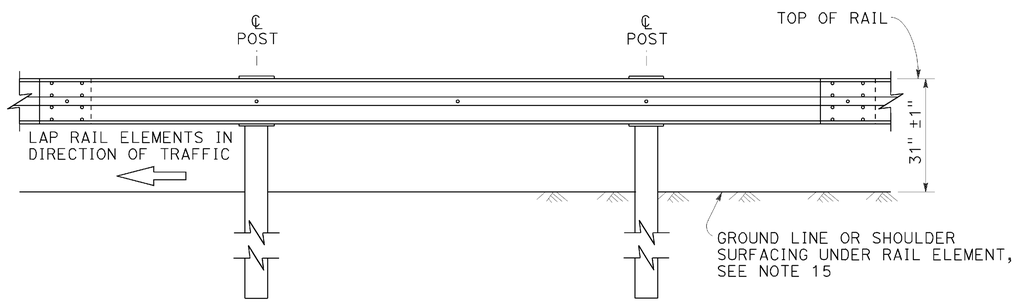

ELEVATION

MIDWEST GUARDRAIL SYSTEM WITH STEEL POSTS AND NOTCHED WOOD OR NOTCHED RECYCLED PLASTIC BLOCKS

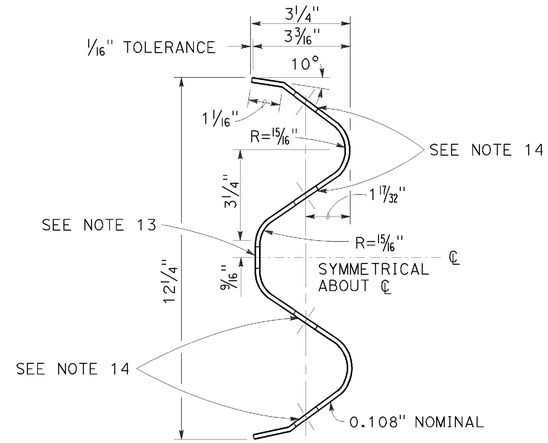

SECTION THRU RAIL ELEMENT

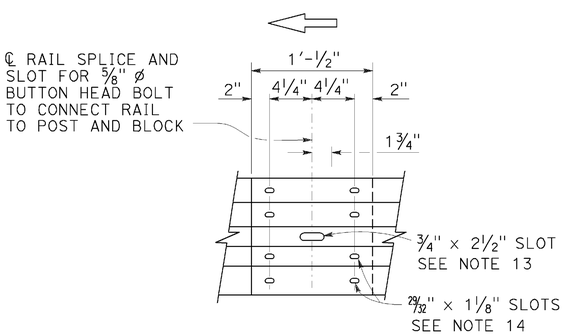

ELEVATION

RAIL ELEMENT SPLICE DETAIL

a) Connect the over lapped end of the rail elements with ⅝" ø × 1⅜" button head oval shoulder splice bolts inserted into the 29⁄32" × 1⅛" slots and bolted together with ⅝" ø recessed hex nuts. Recess of hex nut points toward rail element. A total of 8 bolts and nuts are to be used at each rail splice connection.

b) The ends of the rail elements are to be overlapped in the direction of traffic (see details).

c) Where end cap is to be attached to the end of a rail element, a total of 4 of the above described splice bolts and nuts are to be used.

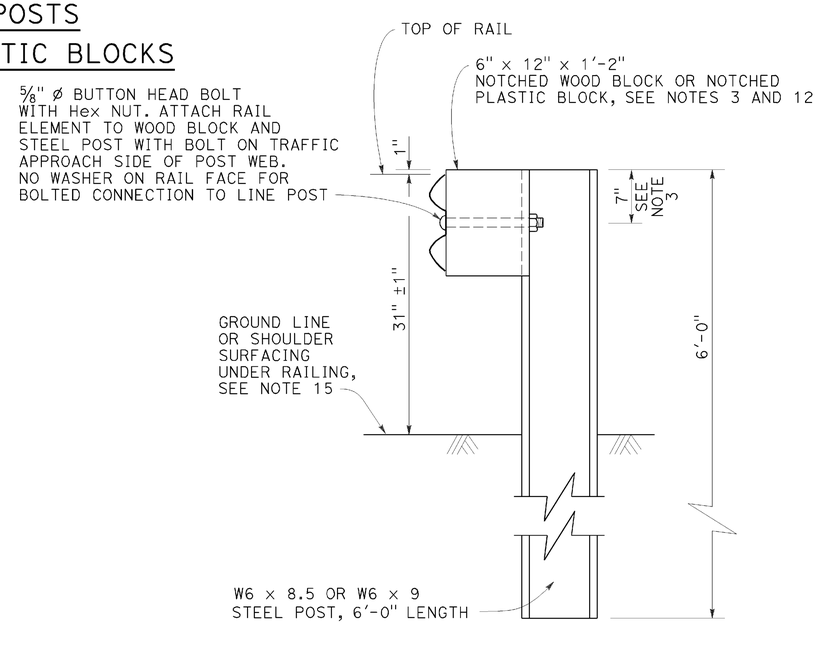

SECTION A-A

TYPICAL STEEL LINE POST INSTALLATION

See Note 4

NOTES:

1. For details of wood post installations, see Revised Standard Plan RSP A77L1.
2. For details of standard hardware used to construct MGS, see Revised Standard Plan RSP A77M1.
3. For details of steel posts and notched wood blocks used to construct MGS, see Revised Standard Plan RSP A77N2.
4. For additional installation details, see Revised Standard Plan RSP A77N3.
5. MGS post spacing to be 6'-3" center to center, except as otherwise noted.
6. For MGS typical layouts, see the A77P, A77Q and A77R Series of Standard Plans.
7. If railing is connected to terminal system end treatment, use 31" height terminal system end treatment.
8. For MGS end anchor details, see Revised Standard Plans RSP A77S1 and RSP A77T2.
9. For details of MGS transition to bridge railing, see Revised Standard Plan RSP A77U4.
10. For additional details of MGS connection to bridge railings, see Revised Standard Plans RSP A77U1, RSP A77U2 and RSP A77V1.
11. For dike positioning and MGS delineation details, see Revised Standard Plan RSP A77N4.
12. Notched face of block faces steel post.
13. Slotted hole for bolted connection of rail element to block and post. See "Section Thru Rail Element".
14. Slotted holes for splice bolts to overlap ends of rail element. See "Section Thru Rail Element".
15. Install posts in soil.

STATE OF CALIFORNIA
DEPARTMENT OF TRANSPORTATION

MIDWEST GUARDRAIL SYSTEM STANDARD RAILING SECTION (STEEL POST WITH NOTCHED WOOD OR NOTCHED RECYCLED PLASTIC BLOCK)

NO SCALE

RSP A77L2 DATED JULY 19, 2013 SUPPLEMENTS THE STANDARD PLANS BOOK DATED 2010.

REVISED STANDARD PLAN RSP A77L2

DATE PLOTTED => 23-JAN-2015
TIME PLOTTED => 12:37

Dist	COUNTY	ROUTE	POST MILES TOTAL PROJECT	SHEET No.	TOTAL SHEETS
02	Sis	5	68.3	67	120

Randell D. Hiatt
REGISTERED CIVIL ENGINEER

July 19, 2013
PLANS APPROVAL DATE

REGISTERED PROFESSIONAL ENGINEER
Randell D. Hiatt
No. C50200
Exp. 6-30-15
CIVIL
STATE OF CALIFORNIA

THE STATE OF CALIFORNIA OR ITS OFFICERS OR AGENTS SHALL NOT BE RESPONSIBLE FOR THE ACCURACY OR COMPLETENESS OF SCANNED COPIES OF THIS PLAN SHEET.

TO ACCOMPANY PLANS DATED 11-26-14

2010 REVISED STANDARD PLAN RSP A77L3

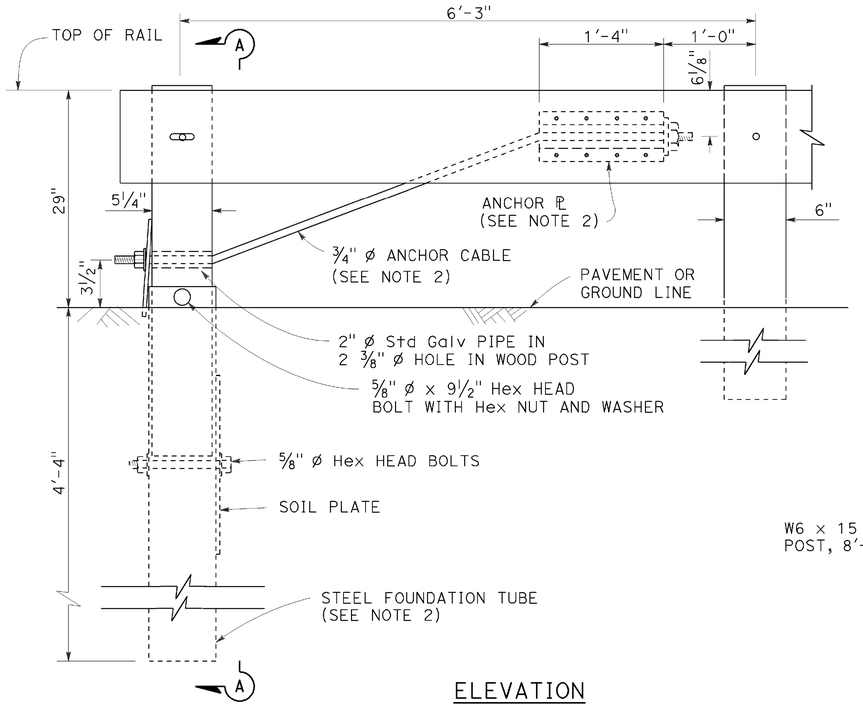

ELEVATION
END ANCHOR
ASSEMBLY (TYPE SFT)

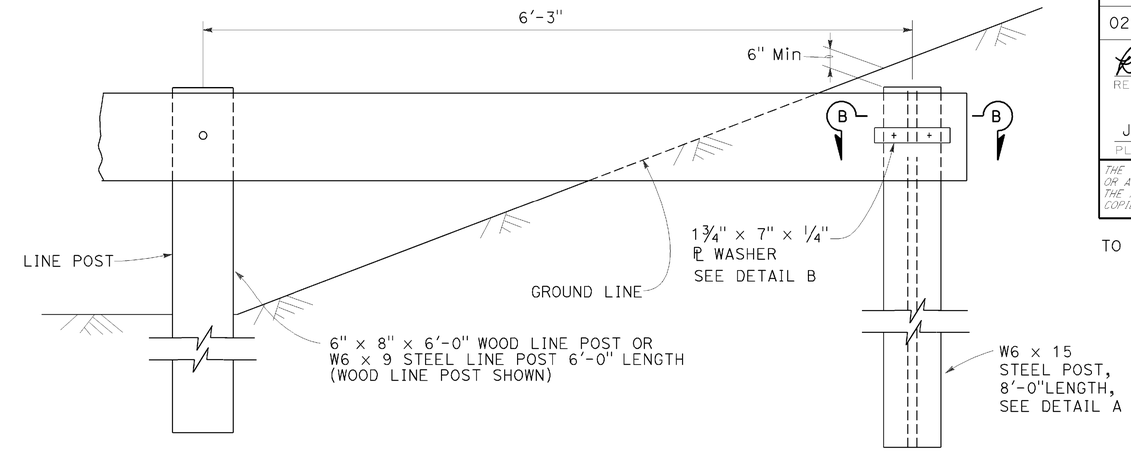

BURIED POST END ANCHOR

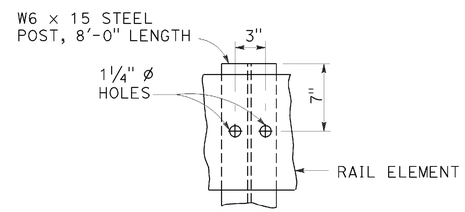

DETAIL A

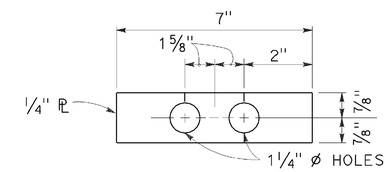

DETAIL B

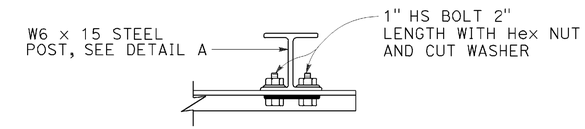

SECTION B-B

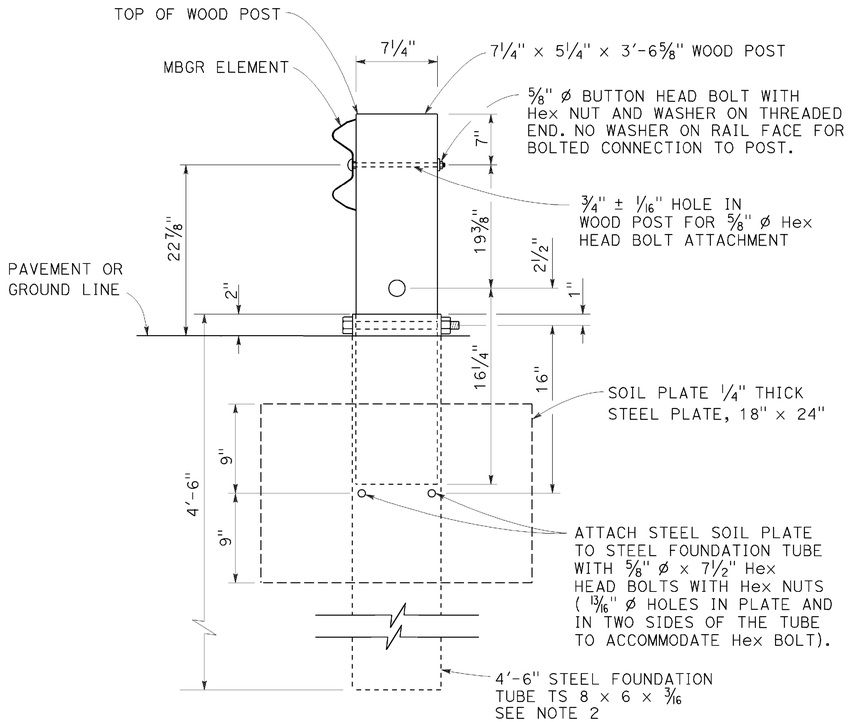

SECTION A-A

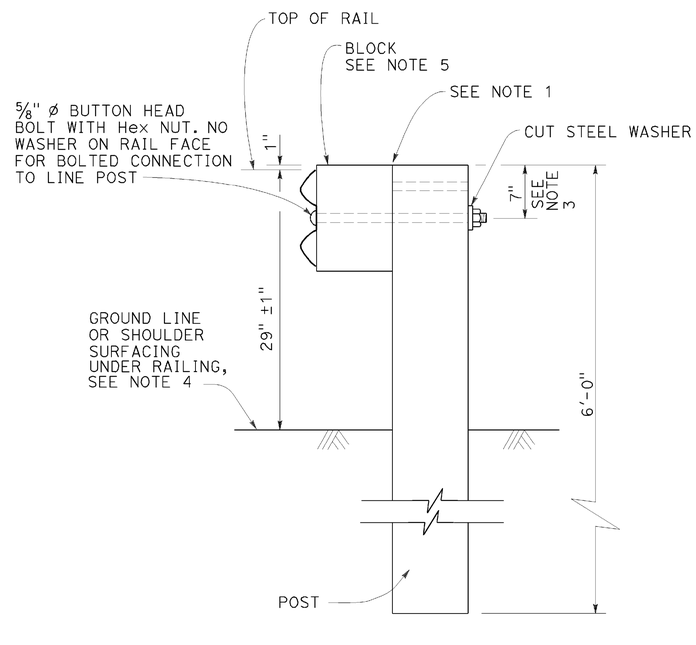

TYPICAL LINE
POST INSTALLATION

NOTES:

1. For wood post and wood block, toenail with 2-16d Galv nails in top of block. For steel post and notched wood or plastic block, notched face of block faces steel post.
2. A 6'-0" Length steel foundation tube, TS 8 x 6 x 3/16, without a soil plate, may be furnished and installed in place of the 4'-6" length steel foundation tube and soil plate shown, Minimum embadment of the 6'-0" length tube shall be 5'-9". A 5/8" ø Hex head bolt and nut shall be installed in the hole in the 6'-0" length tube to keep the wood post from dropping into the tube.
3. To connect railing to 27" terminal system end treatment, transition the top of railing height at a ratio of 120:1 to terminal system end treatment height plus one 12'-6" standard railing section at the transitioned height for a horizontal connection to the end treatment.
4. Install posts in soil.
5. See Revised Standard Plans RSP A77N1 and RSP A77N2 for details.
6. Holes excavation in the slope to construct the buried post end anchor shall be backfilled with selected earth, placed in layers approximately 1'-0" thick. Each layer shall be moistened and thoroughly compacted.

STATE OF CALIFORNIA
DEPARTMENT OF TRANSPORTATION

METAL BEAM GUARD RAILING RECONSTRUCT INSTALLATION

NO SCALE

RSP A77L3 DATED JULY 19, 2013 SUPPLEMENTS THE STANDARD PLANS BOOK DATED 2010.

REVISED STANDARD PLAN RSP A77L3

DATE PLOTTED => 23-JAN-2015
TIME PLOTTED => 12:37

Dist	COUNTY	ROUTE	POST MILES TOTAL PROJECT	SHEET No.	TOTAL SHEETS
02	Sis	5	68.3	68	120

Randell D. Hiatt
REGISTERED CIVIL ENGINEER

July 19, 2013
PLANS APPROVAL DATE

REGISTERED PROFESSIONAL ENGINEER
Randell D. Hiatt
No. C50200
Exp. 6-30-15
CIVIL
STATE OF CALIFORNIA

THE STATE OF CALIFORNIA OR ITS OFFICERS OR AGENTS SHALL NOT BE RESPONSIBLE FOR THE ACCURACY OR COMPLETENESS OF SCANNED COPIES OF THIS PLAN SHEET.

TO ACCOMPANY PLANS DATED 11-26-14

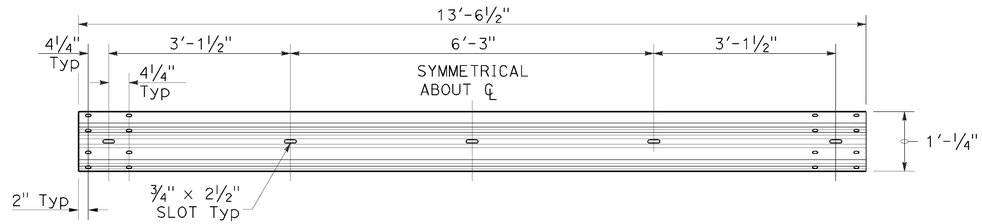

TYPICAL RAIL ELEMENT

NOTE:

1. Slotted holes for splice bolts to overlap ends of rail element.

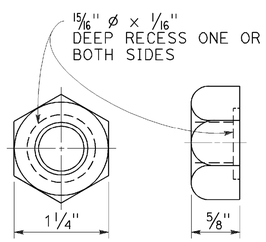

⅝" Ø RECESS NUT

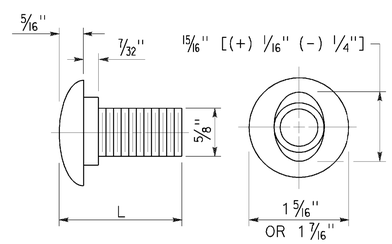

⅝" Ø BUTTON HEAD BOLT

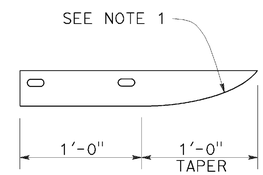

PLAN

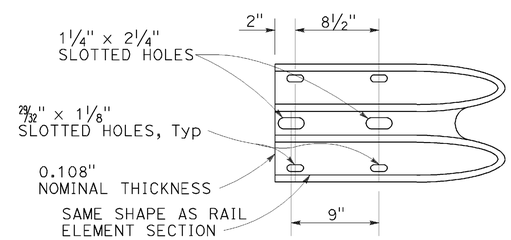

ELEVATION

END CAP
(TYPE A)

BUTTON HEAD BOLT

L	THREAD LENGTH
1⅜"	FULL THREAD LENGTH
2"	FULL THREAD LENGTH
10"	4" Min THREAD LENGTH
18"	4" Min THREAD LENGTH
20"	4" Min THREAD LENGTH
22"	4" Min THREAD LENGTH
26"	4" Min THREAD LENGTH
36"	4" Min THREAD LENGTH
** 2¾"	2" Min THREAD LENGTH
** 19"	4" Min THREAD LENGTH

** For nested rail applications.

STATE OF CALIFORNIA
DEPARTMENT OF TRANSPORTATION

MIDWEST GUARDRAIL SYSTEM STANDARD HARDWARE

NO SCALE

RSP A77M1 DATED JULY 19, 2013 SUPPLEMENTS THE STANDARD PLANS BOOK DATED 2010.

REVISED STANDARD PLAN RSP A77M1

2010 REVISED STANDARD PLAN RSP A77M1

DATE PLOTTED => 23-JAN-2015
TIME PLOTTED => 12:33

Dist	COUNTY	ROUTE	POST MILES TOTAL PROJECT	SHEET No.	TOTAL SHEETS
02	Sis	5	68.3	69	120

Randell D. Hiatt
REGISTERED CIVIL ENGINEER

November 15, 2013
PLANS APPROVAL DATE

REGISTERED PROFESSIONAL ENGINEER
Randell D. Hiatt
No. C50200
Exp. 6-30-15
CIVIL
STATE OF CALIFORNIA

THE STATE OF CALIFORNIA OR ITS OFFICERS OR AGENTS SHALL NOT BE RESPONSIBLE FOR THE ACCURACY OR COMPLETENESS OF SCANNED COPIES OF THIS PLAN SHEET.

TO ACCOMPANY PLANS DATED 11-26-14

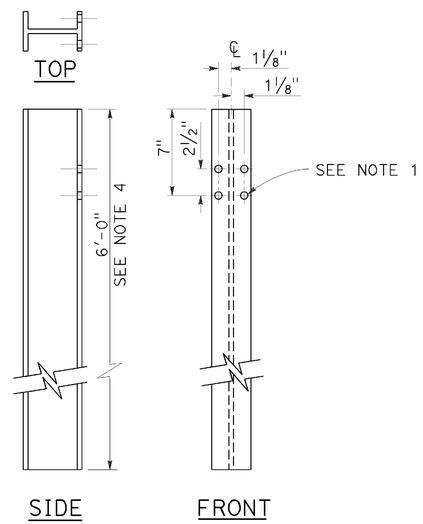

W6 x 9 OR W6 x 8.5
STEEL POST
See Note 4

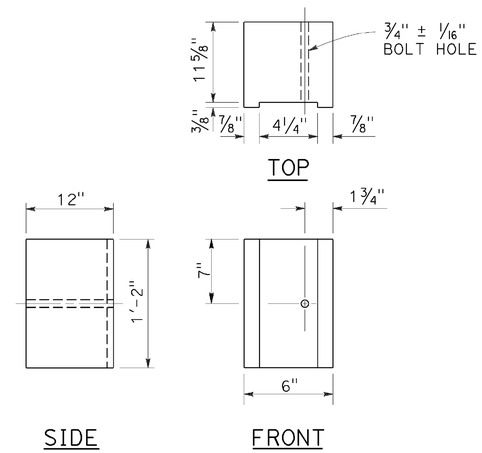

6" x 12"
NOTCHED WOOD BLOCK
See Notes 2 and 3

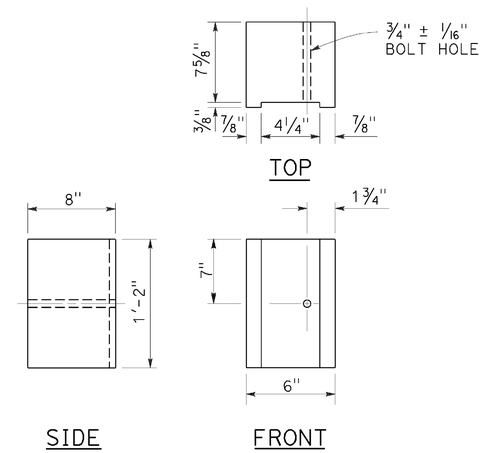

6" x 8"
NOTCHED WOOD BLOCK
Only for use with metal beam guard railing. See Note 5

NOTES:

1. All holes in steel post shall be 13/16" Dia maximum.
2. Dimensions shown for wood block are nominal.
3. Notched face of block faces steel post.
4. 6'-0" length posts to be used for typical roadway installation. See Revised Standard Plan RSP A77N3.
5. See Revised Standard Plan RSP A77L3 for use of 6" x 8" and 8" x 8" notched wood blocks.
6. This post and 8" x 12" block combination to be used for line post sections of MGS on narrow roadways and where strengthened line post sections of MGS are warranted to shield fixed objects.

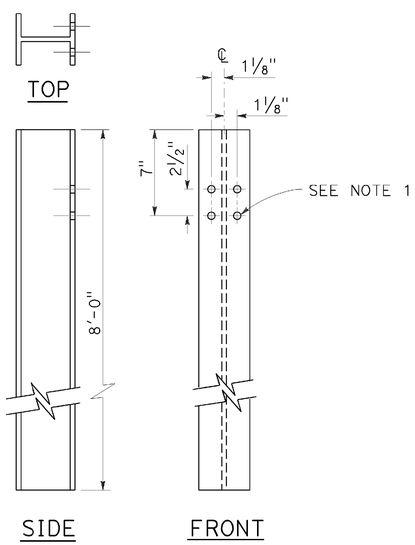

W6 x 15
STEEL POST
See Note 6

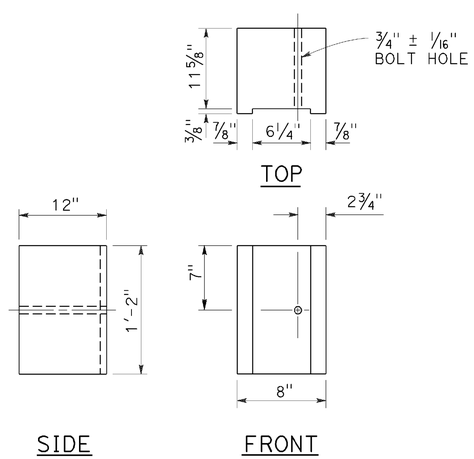

8" x 12"
NOTCHED WOOD BLOCK
See Notes 2 and 3

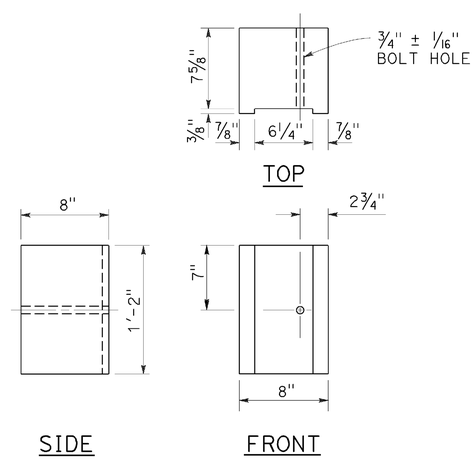

8" x 8"
NOTCHED WOOD BLOCK
Only for use with metal beam guard railing. See Note 5

STATE OF CALIFORNIA
DEPARTMENT OF TRANSPORTATION

MIDWEST GUARDRAIL SYSTEM STEEL POST AND NOTCHED WOOD BLOCK DETAILS

NO SCALE

RSP A77N2 DATED NOVEMBER 15, 2013 SUPERSEDES RSP A77N2
DATED JULY 19, 2013 THAT SUPPLEMENTS THE STANDARD PLANS BOOK DATED 2010.

REVISED STANDARD PLAN RSP A77N2

2010 REVISED STANDARD PLAN RSP A77N2

DATE PLOTTED => 23-JAN-2015
TIME PLOTTED => 12:38

Dist	COUNTY	ROUTE	POST MILES TOTAL PROJECT	SHEET No.	TOTAL SHEETS
02	Sis	5	68.3	70	120

Randell D. Hiatt
REGISTERED CIVIL ENGINEER

November 15, 2013
PLANS APPROVAL DATE

REGISTERED PROFESSIONAL ENGINEER
Randell D. Hiatt
No. C50200
Exp. 6-30-15
CIVIL
STATE OF CALIFORNIA

THE STATE OF CALIFORNIA OR ITS OFFICERS OR AGENTS SHALL NOT BE RESPONSIBLE FOR THE ACCURACY OR COMPLETENESS OF SCANNED COPIES OF THIS PLAN SHEET.

TO ACCOMPANY PLANS DATED 11-26-14

2010 REVISED STANDARD PLAN RSP A77N3

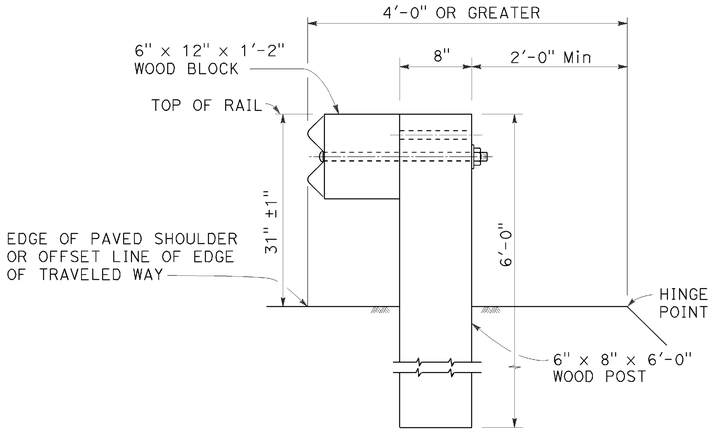

DETAIL A

TYPICAL ROADWAY INSTALLATION

See Note 1

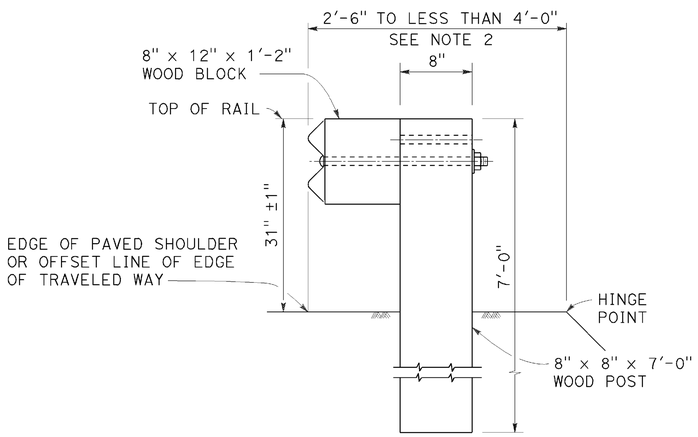

DETAIL B

NARROW ROADWAY INSTALLATION

See Note 1

POST EMBEDMENT

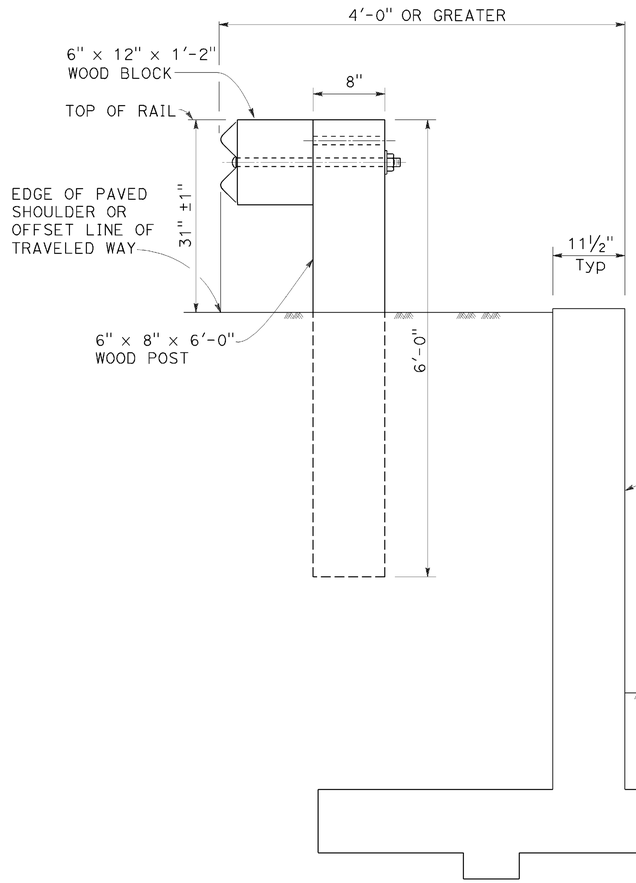

DETAIL C

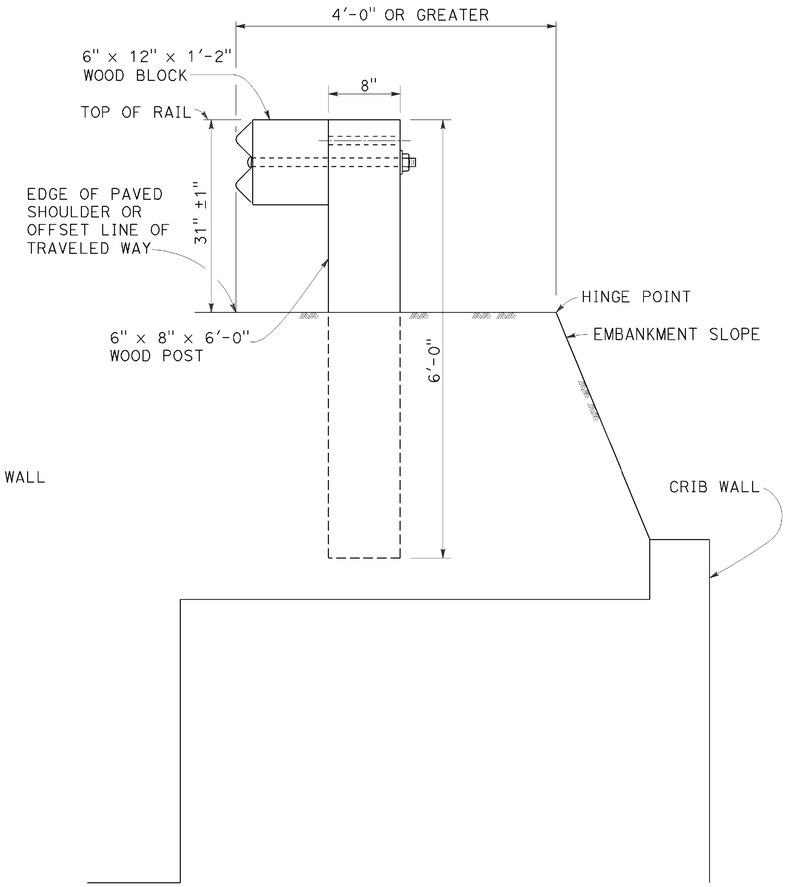

DETAIL D

INSTALLATION AT EARTH RETAINING WALLS

NOTES:

1. These installation details also applicable to steel line post installations. For Detail A, C, and D, where steel line post installations are constructed, W6 x 8.5 or W6 x 9 steel post, 6'-0" in length, with 6" x 12" x 1'-2" notched wood blocks or notched recycled plastic blocks are to be used in place of the size of wood post and wood block shown. For Detail B, where steel line post installations are constructed, W6 x 15 steel post, 8'-0" in length, with 8" x 12" x 1'-2" notched wood blocks or notched recycled plastic blocks are to be used in place of the size of wood post and wood block shown. For additional installation details, see Revised Standard Plan RSP A77L1 and RSP A77L2.
2. Where the distance between the face of the rail and the hinge point is less than 2'-6", see the Project Plans for special details.
3. For dike positioning with MGS installations, see Revised Standard Plan RSP A77N4.

STATE OF CALIFORNIA
DEPARTMENT OF TRANSPORTATION

MIDWEST GUARDRAIL SYSTEM TYPICAL LINE POST EMBEDMENT AND HINGE POINT OFFSET DETAILS

NO SCALE

RSP A77N3 DATED NOVEMBER 15, 2013 SUPERSEDES RSP A77N3 DATED JULY 19, 2013 THAT SUPPLEMENTS THE STANDARD PLANS BOOK DATED 2010.

REVISED STANDARD PLAN RSP A77N3

DATE PLOTTED => 23-JAN-2015
TIME PLOTTED => 12:38

Dist	COUNTY	ROUTE	POST MILES TOTAL PROJECT	SHEET No.	TOTAL SHEETS
02	Sis	5	68.3	71	120

Randell D. Hiatt
REGISTERED CIVIL ENGINEER

July 19, 2013
PLANS APPROVAL DATE

REGISTERED PROFESSIONAL ENGINEER
Randell D. Hiatt
No. C50200
Exp. 6-30-15
CIVIL
STATE OF CALIFORNIA

THE STATE OF CALIFORNIA OR ITS OFFICERS OR AGENTS SHALL NOT BE RESPONSIBLE FOR THE ACCURACY OR COMPLETENESS OF SCANNED COPIES OF THIS PLAN SHEET.

TO ACCOMPANY PLANS DATED 11-26-14

NOTES:

1. When necessary to place dike more than 7" in front of face of MGS, only Type C dike may be used. For dike details, see Revised Standard Plan RSP A87B.
2. For standard railing post embedment, see Revised Standard Plan RSP A77N3.
3. MGS delineation to be used where shown on the Project Plans.
4. When dike or curb is placed under MGS, the maximum height of the dike or curb shall be 6". Mountable dike should not be used. For dike and curb details, see Revised Standard Plans RSP A87A and RSP A87B.
5. For details of typical distance between the face of rail and hinge point, see Revised Standard Plan RSP A77N3.
6. For steel line posts, use 1/4 - 20 self-tapping screws in 0.22" diameter holes or 1/4" bolts in 9/32" diameter holes.

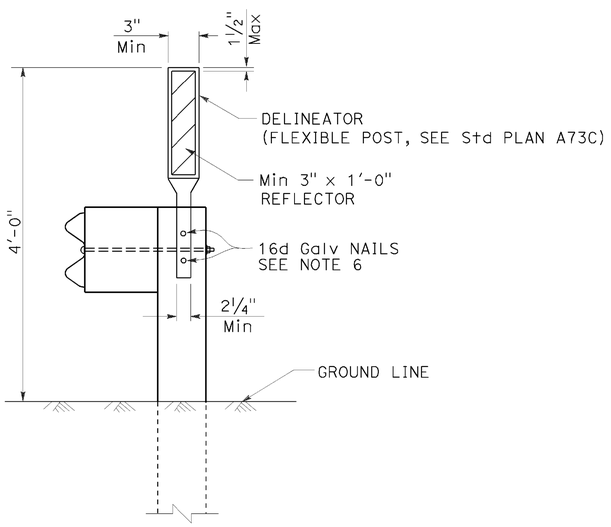

MGS DELINEATION
See Note 3

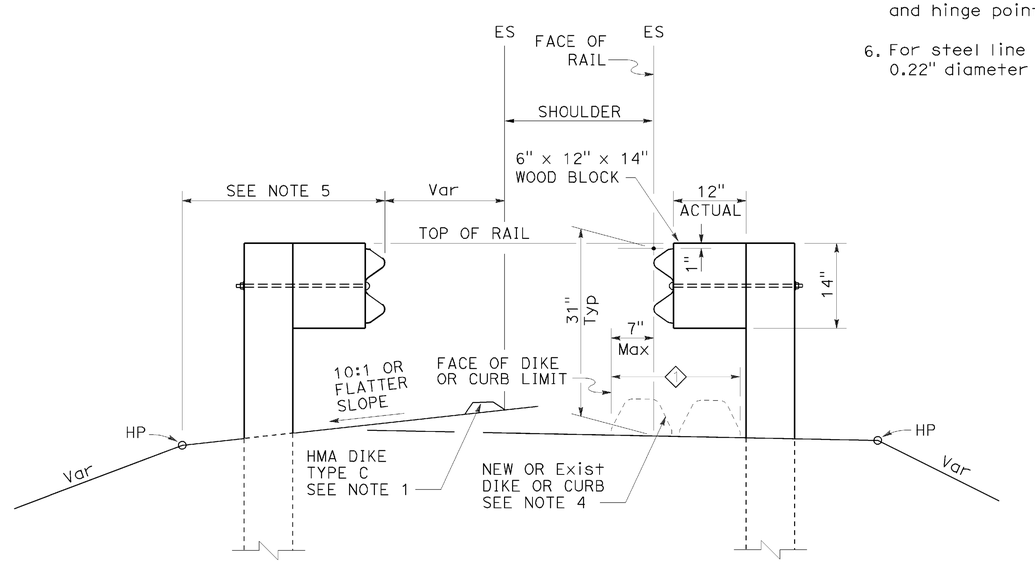

DIKE POSITIONING
See Note 1

1 PERMISSIBLE DIKE OR CURB PLACEMENT AREA

STATE OF CALIFORNIA
DEPARTMENT OF TRANSPORTATION

MIDWEST GUARDRAIL SYSTEM TYPICAL RAILING DELINEATION AND DIKE POSITIONING DETAILS

NO SCALE

RSP A77N4 DATED JULY 19, 2013 SUPPLEMENTS THE STANDARD PLANS BOOK DATED 2010.

REVISED STANDARD PLAN RSP A77N4

2010 REVISED STANDARD PLAN RSP A77N4

DATE PLOTTED => 23-JAN-2015
TIME PLOTTED => 12:38

Dist	COUNTY	ROUTE	POST MILES TOTAL PROJECT	SHEET No.	TOTAL SHEETS
02	Sis	5	68.3	72	120

Randell D. Hiatt
REGISTERED CIVIL ENGINEER

July 19, 2013
PLANS APPROVAL DATE

REGISTERED PROFESSIONAL ENGINEER
Randell D. Hiatt
No. C50200
Exp. 6-30-15
CIVIL
STATE OF CALIFORNIA

THE STATE OF CALIFORNIA OR ITS OFFICERS OR AGENTS SHALL NOT BE RESPONSIBLE FOR THE ACCURACY OR COMPLETENESS OF SCANNED COPIES OF THIS PLAN SHEET.

TO ACCOMPANY PLANS DATED 11-26-14

2010 REVISED STANDARD PLAN RSP A77Q3

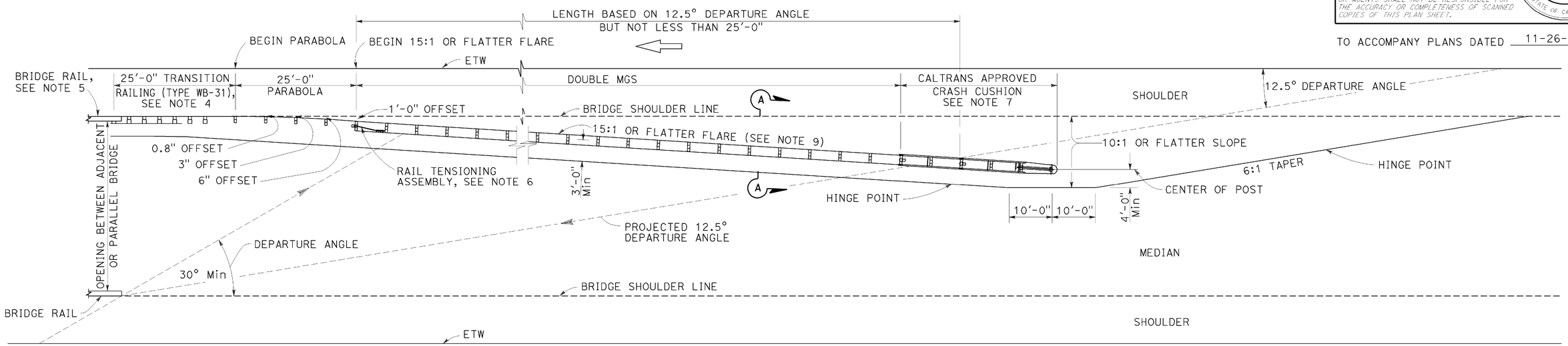

TYPE 12E LAYOUT

See Note 9

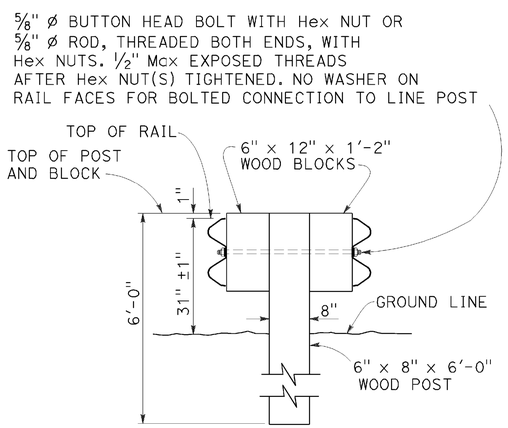

SECTION A-A
TYPICAL DOUBLE MIDWEST GUARDRAIL SYSTEM

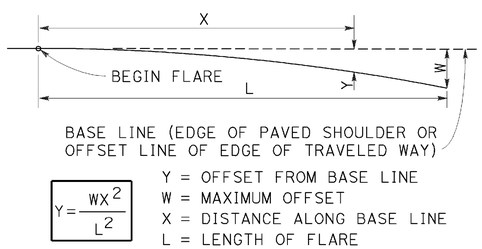

$$Y = \frac{WX^2}{L^2}$$

Y = OFFSET FROM BASE LINE
W = MAXIMUM OFFSET
X = DISTANCE ALONG BASE LINE
L = LENGTH OF FLARE

PARABOLIC FLARE OFFSETS

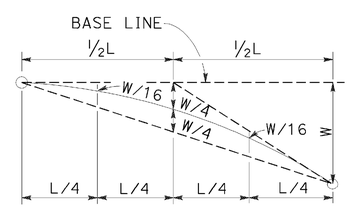

TYPICAL PARABOLIC LAYOUT

NOTES:

1. Line post, blocks and hardware to be used are shown on Revised Standard Plans RSP A77L1, RSP A77L2, RSP A77M1, RSP A77N1 and RSP A77N2.
2. MGS post spacing to be 6'-3" center to center, except as otherwise noted.
3. Except as noted, line posts are 6" x 8" x 6'-0" wood with 6" x 12" x 1'-2" wood blocks. W6 x 8.5 or W6 x 9 steel posts, 6'-0" in length, with 6" x 12" x 1'-2" notched wood blocks or notched recycled plastic blocks may be used for 6" x 8" x 6'-0" wood line posts with 6" x 12" x 1'-2" wood blocks where applicable and when specified.
4. For Transition Railing (Type WB-31) details, see Revised Standard Plan RSP A77U4.
5. For additional details of a typical connection to bridge rail, see Connection Detail AA on Revised Standard Plan RSP A77U1.
6. For Rail Tensioning Assembly details, see Revised Standard Plan RSP A77S2.
7. The type of Crash Cushion to be used will be shown on the Project Plans.
8. Type 12E Layout is typically used left of approaching traffic at the end of each structure on multilane freeways or expressways where a median type barrier is not constructed between separated roadbeds.
9. The 15:1 or flatter flare is measured off of the edge of traveled way.

STATE OF CALIFORNIA
DEPARTMENT OF TRANSPORTATION

MIDWEST GUARDRAIL SYSTEM TYPICAL LAYOUTS FOR STRUCTURE APPROACH

NO SCALE

RSP A77Q3 DATED JULY 19, 2013 SUPPLEMENTS THE STANDARD PLANS BOOK DATED 2010.

REVISED STANDARD PLAN RSP A77Q3

DATE PLOTTED => 23-JAN-2015
TIME PLOTTED => 12:38

Dist	COUNTY	ROUTE	POST MILES TOTAL PROJECT	SHEET No.	TOTAL SHEETS
02	Sis	5	68.3	73	120

Randell D. Hiatt
REGISTERED CIVIL ENGINEER

July 19, 2013
PLANS APPROVAL DATE

REGISTERED PROFESSIONAL ENGINEER
Randell D. Hiatt
No. C50200
Exp. 6-30-15
CIVIL
STATE OF CALIFORNIA

THE STATE OF CALIFORNIA OR ITS OFFICERS OR AGENTS SHALL NOT BE RESPONSIBLE FOR THE ACCURACY OR COMPLETENESS OF SCANNED COPIES OF THIS PLAN SHEET.

TO ACCOMPANY PLANS DATED 11-26-14

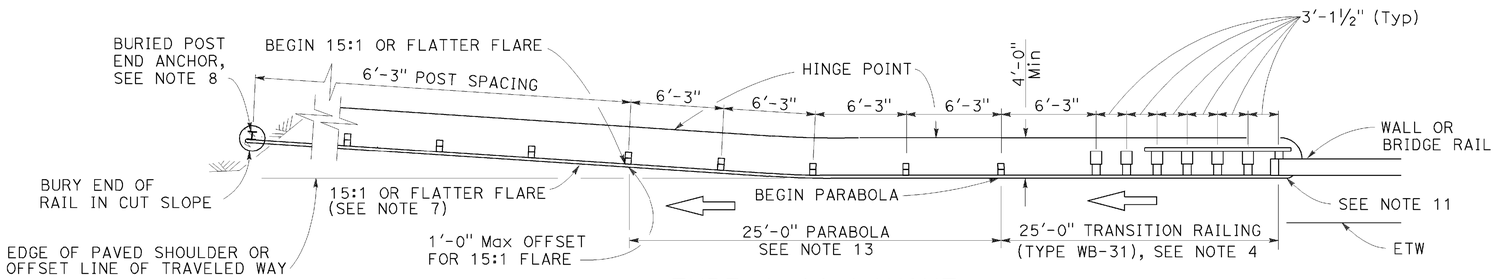

TYPE 12CC LAYOUT

(MGS installation at structure departure with a
Buried end anchor treatment at trailing end of railing)
See Notes 9 and 10

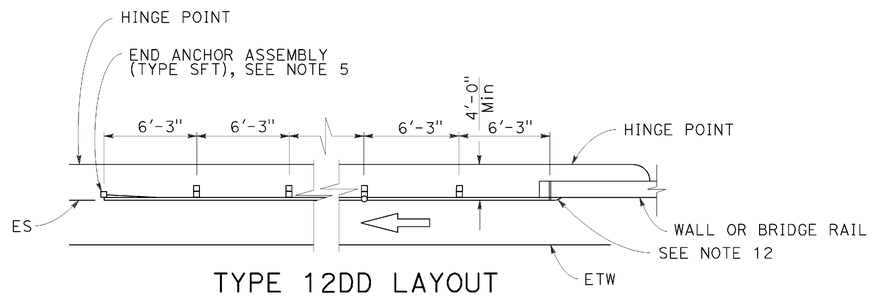

TYPE 12DD LAYOUT

(MGS installation at structure departure
With end anchor assembly at trailing end of railing)
See Notes 6 and 9

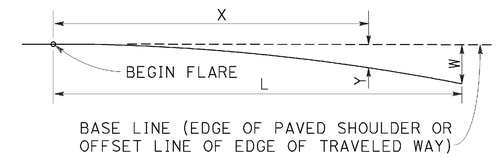

$$Y = \frac{WX^2}{L^2}$$

Y = OFFSET FROM BASE LINE
W = MAXIMUM OFFSET
X = DISTANCE ALONG BASE LINE
L = LENGTH OF FLARE

PARABOLIC FLARE OFFSETS

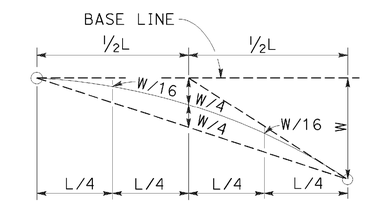

TYPICAL PARABOLIC LAYOUT

NOTES:

1. Line post, blocks and hardware to be used are shown on Revised Standard Plans RSP A77L1, RSP A77L2, RSP A77M1, RSP A77N1 and RSP A77N2.
2. MSG post spacing to be 6'-3" center to center, except as otherwise noted.
3. Except as noted, line posts are 6" x 8" x 6'-0" wood with 6" x 12" x 1'-2" wood blocks. W6 x 8.5 or W6 x 9 steel posts, 6'-0" in length, with 6" x 12" x 1'-2" notched wood blocks or notched recycled plastic blocks may be used for 6" x 8" x 6'-0" wood line posts with 6" x 12" x 1'-2" wood blocks where applicable and when specified.
4. For Transition Railing (Type WB-31) details for Type 12CC Layout, see Revised Standard Plan RSP A77U4.
5. For details of End Anchor Assembly (Type SFT) used with Type 12DD Layout, see Revised Standard Plan RSP A77S1.
6. Type 12DD layout is typically used to the right of traffic departing a structure on two-way conventional highways where the roadbed width across the structure is equal to or greater than 40 feet and MGS is recommended (embankment height, side slopes, other fixed objects). Length of railing to be equal to multiples of 12'-6". For MGS connection details to bridge rail, see Revised Standard Plans RSP A77U1 and RSP A77V1. For MGS connection details to wall, see Revised Standard Plan RSP A77U3.
7. The 15:1 or flatter flare for Type 12CC Layout is based on the edge of the paved shoulder or offset line of edge of the traveled way. The length of MGS within the 15:1 or flatter flare is based on site conditions and should be a length equal to multiples of 12'-6".
8. For details of the buried post end anchor used with Type 12CC Layout, see Revised Standard Plan RSP A77T2.
9. Where placement of dike is required with MGS installations, see Revised Standard Plan RSP A77N4 for dike positioning details.
10. Type 12CC Layout is typically used to the right of traffic departing a structure on two-way conventional highways where the roadbed width across the structure is less than 40 feet.
11. For additional details of a typical connection to bridge rail for Layout Type 12CC, see Connection Detail CC on Revised Standard Plan RSP A77U2 and Connection Detail HH on Revised Standard Plan RSP A77V2.
12. For additional details of a typical connection to bridge rail for Layout Type 12DD, see Connection Detail BB on Revised Standard Plan RSP A77U1 and Connection Detail GG on Revised Standard Plan RSP A77V1.
13. For typical flare offsets for 25'-0" length parabola with maximum offset of 1'-0", see Revised Standard Plan RSP A77P1.

STATE OF CALIFORNIA
DEPARTMENT OF TRANSPORTATION

MIDWEST GUARDRAIL SYSTEM TYPICAL LAYOUTS FOR STRUCTURE DEPARTURE

NO SCALE

RSP A77Q5 DATED JULY 19, 2013 SUPPLEMENTS THE STANDARD PLANS BOOK DATED 2010.

REVISED STANDARD PLAN RSP A77Q5

2010 REVISED STANDARD PLAN RSP A77Q5

DATE PLOTTED => 23-JAN-2015
TIME PLOTTED => 12:38

Dist	COUNTY	ROUTE	POST MILES TOTAL PROJECT	SHEET No.	TOTAL SHEETS
02	Sis	5	68.3	74	120

Randell D. Hiatt
REGISTERED CIVIL ENGINEER

November 15, 2013
PLANS APPROVAL DATE

REGISTERED PROFESSIONAL ENGINEER
Randell D. Hiatt
No. C50200
Exp. 6-30-15
CIVIL
STATE OF CALIFORNIA

THE STATE OF CALIFORNIA OR ITS OFFICERS OR AGENTS SHALL NOT BE RESPONSIBLE FOR THE ACCURACY OR COMPLETENESS OF SCANNED COPIES OF THIS PLAN SHEET.

TO ACCOMPANY PLANS DATED 11-26-14

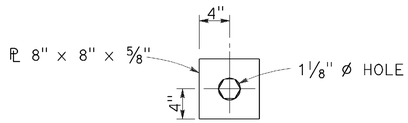

DETAIL "A"
CABLE CONNECTION
END PLATE

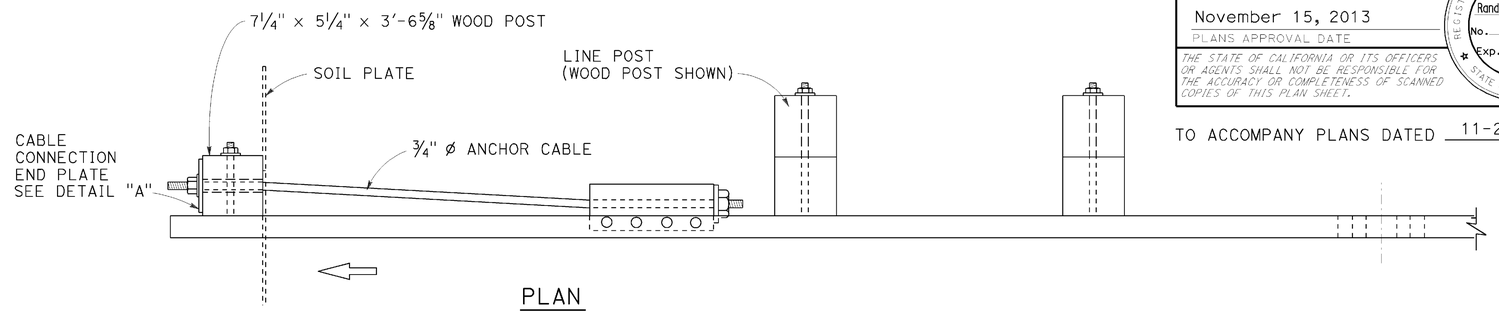

PLAN

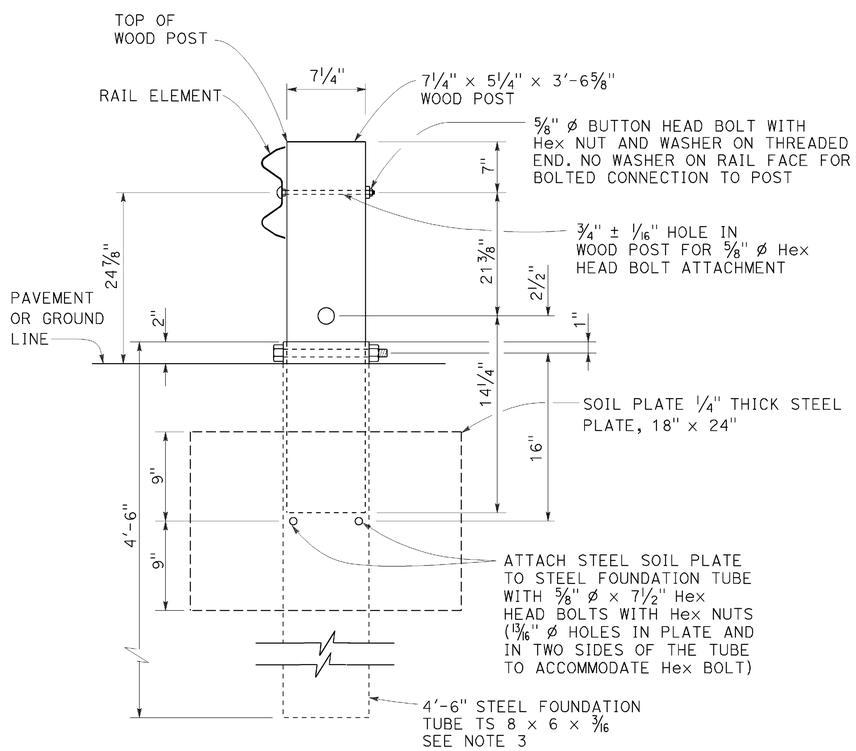

SECTION A-A

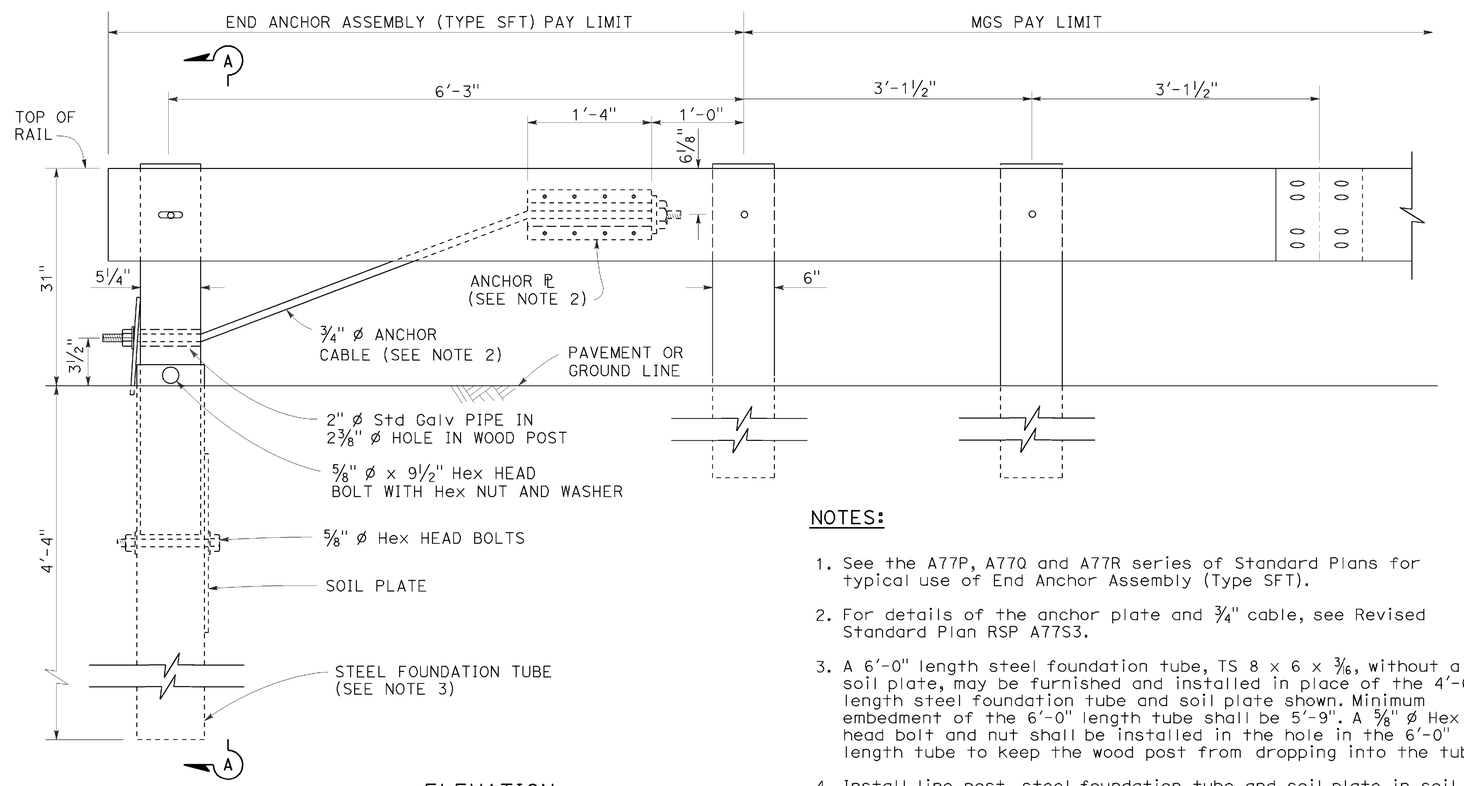

ELEVATION

END ANCHOR
ASSEMBLY (TYPE SFT)
See Note 1

NOTES:

1. See the A77P, A77Q and A77R series of Standard Plans for typical use of End Anchor Assembly (Type SFT).
2. For details of the anchor plate and 3/4" cable, see Revised Standard Plan RSP A77S3.
3. A 6'-0" length steel foundation tube, TS 8 x 6 x 3/16, without a soil plate, may be furnished and installed in place of the 4'-6" length steel foundation tube and soil plate shown. Minimum embedment of the 6'-0" length tube shall be 5'-9". A 5/8" ø Hex head bolt and nut shall be installed in the hole in the 6'-0" length tube to keep the wood post from dropping into the tube.
4. Install line post, steel foundation tube and soil plate in soil.

STATE OF CALIFORNIA
DEPARTMENT OF TRANSPORTATION

MIDWEST GUARDRAIL SYSTEM END ANCHOR ASSEMBLY (TYPE SFT)

NO SCALE

RSP A77S1 DATED NOVEMBER 15, 2013 SUPERSEDES RSP A77S1
DATED JULY 19, 2013 THAT SUPPLEMENTS THE STANDARD PLANS BOOK DATED 2010.

REVISED STANDARD PLAN RSP A77S1

2010 REVISED STANDARD PLAN RSP A77S1

DATE PLOTTED => 23-JAN-2015
TIME PLOTTED => 12:38

Dist	COUNTY	ROUTE	POST MILES TOTAL PROJECT	SHEET No.	TOTAL SHEETS
02	Sis	5	68.3	75	120

Randell D. Hiatt
REGISTERED CIVIL ENGINEER

July 19, 2013
PLANS APPROVAL DATE

REGISTERED PROFESSIONAL ENGINEER
Randell D. Hiatt
No. C50200
Exp. 6-30-15
CIVIL
STATE OF CALIFORNIA

THE STATE OF CALIFORNIA OR ITS OFFICERS OR AGENTS SHALL NOT BE RESPONSIBLE FOR THE ACCURACY OR COMPLETENESS OF SCANNED COPIES OF THIS PLAN SHEET.

TO ACCOMPANY PLANS DATED 11-26-14

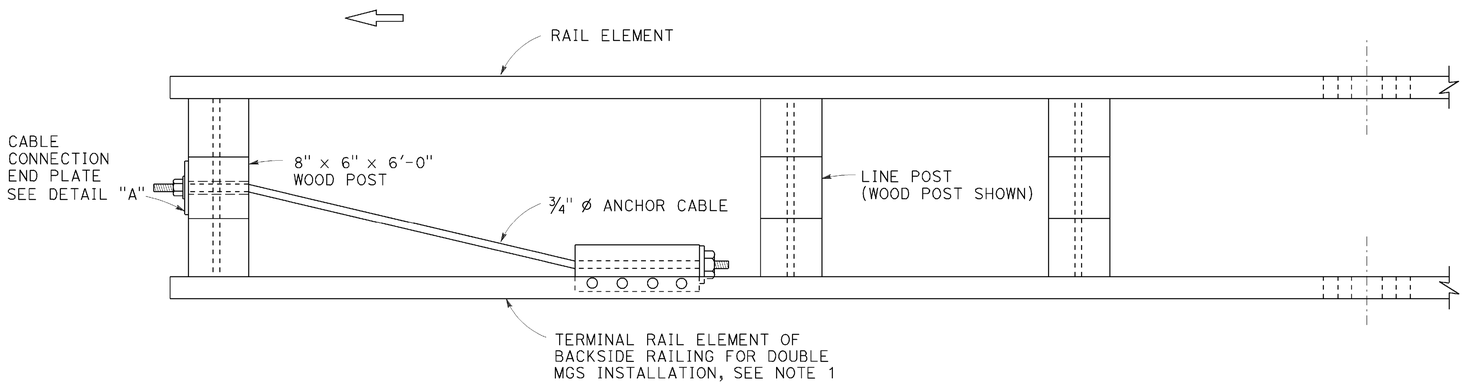

PLAN

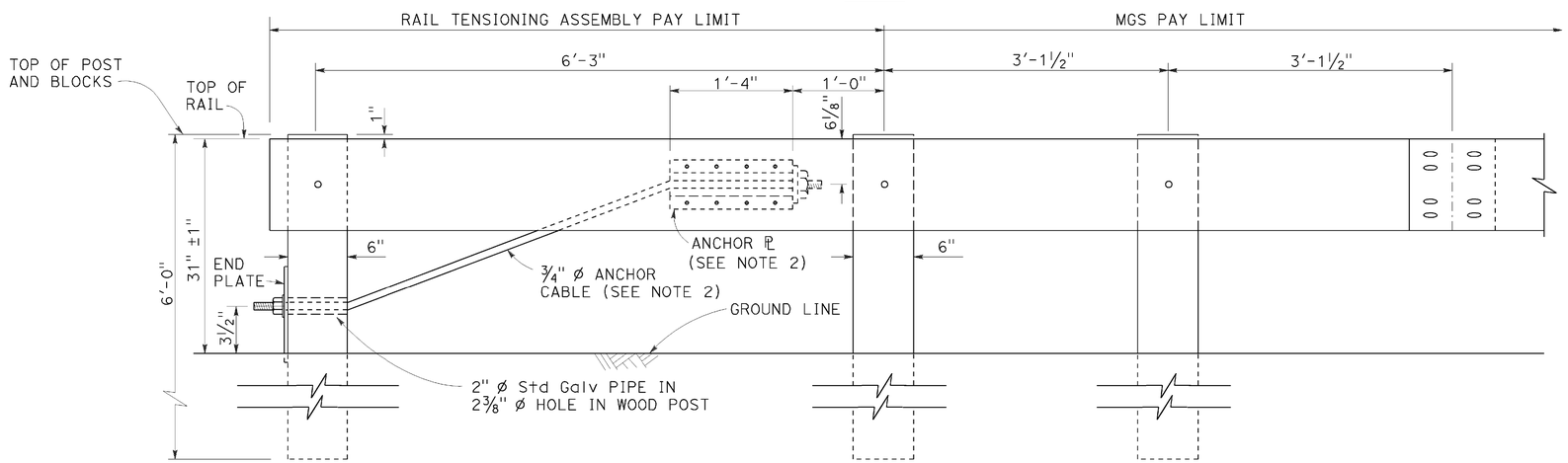

ELEVATION
RAIL TENSIONING ASSEMBLY
See Note 1

NOTES:

1. See Revised Standard Plans RSP A77Q3 and RSP A77R1 for typical use of rail tensioning assembly.
2. For details of the anchor plate and 3/4" cable, see Revised Standard Plan RSP A77S3.

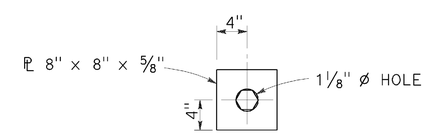

DETAIL "A"
CABLE CONNECTION END PLATE

STATE OF CALIFORNIA
DEPARTMENT OF TRANSPORTATION

MIDWEST GUARDRAIL SYSTEM RAIL TENSIONING ASSEMBLY

NO SCALE

RSP A77S2 DATED JULY 19, 2013 SUPPLEMENTS THE STANDARD PLANS BOOK DATED 2010.

REVISED STANDARD PLAN RSP A77S2

2010 REVISED STANDARD PLAN RSP A77S2

DATE PLOTTED => 23-JAN-2015
TIME PLOTTED => 12:39

USERNAME => s123119
DGN FILE => 23e730va014.dgn

P:\proj1\02\3E730_plans\pse\23e730va014.dgn

7-3-13

Dist	COUNTY	ROUTE	POST MILES TOTAL PROJECT	SHEET No.	TOTAL SHEETS
02	Sis	5	68.3	76	120

Randell D. Hiatt
REGISTERED CIVIL ENGINEER

November 15, 2013
PLANS APPROVAL DATE

REGISTERED PROFESSIONAL ENGINEER
Randell D. Hiatt
No. C50200
Exp. 6-30-15
CIVIL
STATE OF CALIFORNIA

THE STATE OF CALIFORNIA OR ITS OFFICERS OR AGENTS SHALL NOT BE RESPONSIBLE FOR THE ACCURACY OR COMPLETENESS OF SCANNED COPIES OF THIS PLAN SHEET.

TO ACCOMPANY PLANS DATED 11-26-14

NOTE:

See Revised Standard Plans RSP A77S1, RSP A77S2 and RSP A77T1 for typical use of anchor cable and anchor plate.

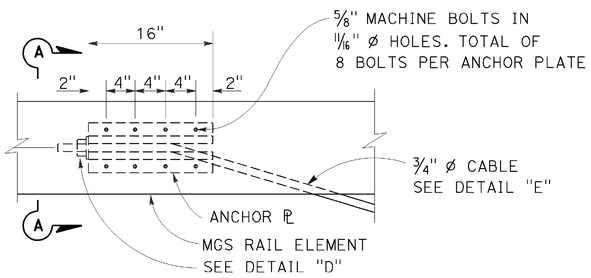

ANCHOR PLATE DETAIL

(MGS shown, TBB similar)

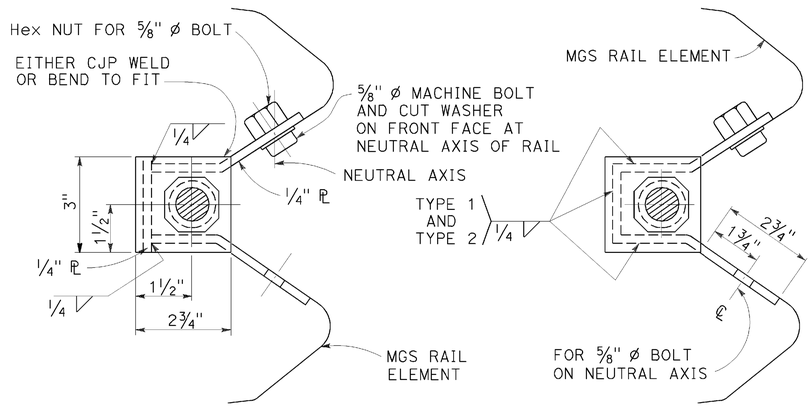

NOTE:

Dimensioning applies to both types.

SECTION A-A
(ALTERNATIVE TYPE 1)

SECTION A-A
(ALTERNATIVE TYPE 2)

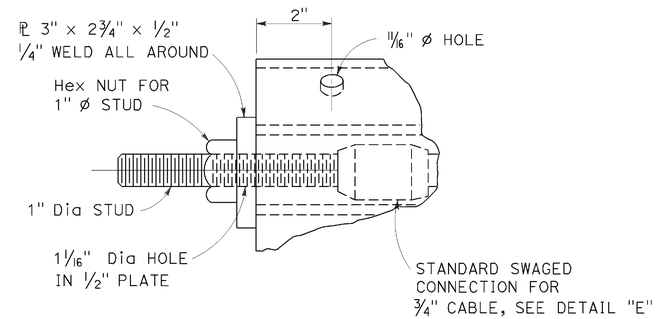

DETAIL "D"

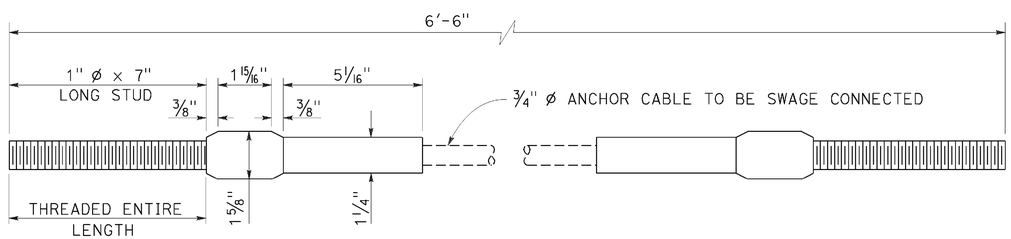

ANCHOR CABLE WITH SWAGED FITTING AND STUD

DETAIL "E"

STATE OF CALIFORNIA
DEPARTMENT OF TRANSPORTATION

METAL RAILING ANCHOR CABLE AND ANCHOR PLATE DETAILS

NO SCALE

RSP A77S3 DATED NOVEMBER 15, 2013 SUPERSEDES RSP A77S3 DATED JULY 19, 2013 THAT SUPPLEMENTS THE STANDARD PLANS BOOK DATED 2010.

REVISED STANDARD PLAN RSP A77S3

2010 REVISED STANDARD PLAN RSP A77S3

DATE PLOTTED => 23-JAN-2015
TIME PLOTTED => 12:39

Dist	COUNTY	ROUTE	POST MILES TOTAL PROJECT	SHEET No.	TOTAL SHEETS
02	Sis	5	68.3	77	120

Randell D. Hiatt
REGISTERED CIVIL ENGINEER

July 19, 2013
PLANS APPROVAL DATE

REGISTERED PROFESSIONAL ENGINEER
Randell D. Hiatt
No. C50200
Exp. 6-30-15
CIVIL
STATE OF CALIFORNIA

THE STATE OF CALIFORNIA OR ITS OFFICERS OR AGENTS SHALL NOT BE RESPONSIBLE FOR THE ACCURACY OR COMPLETENESS OF SCANNED COPIES OF THIS PLAN SHEET.

TO ACCOMPANY PLANS DATED 11-26-14

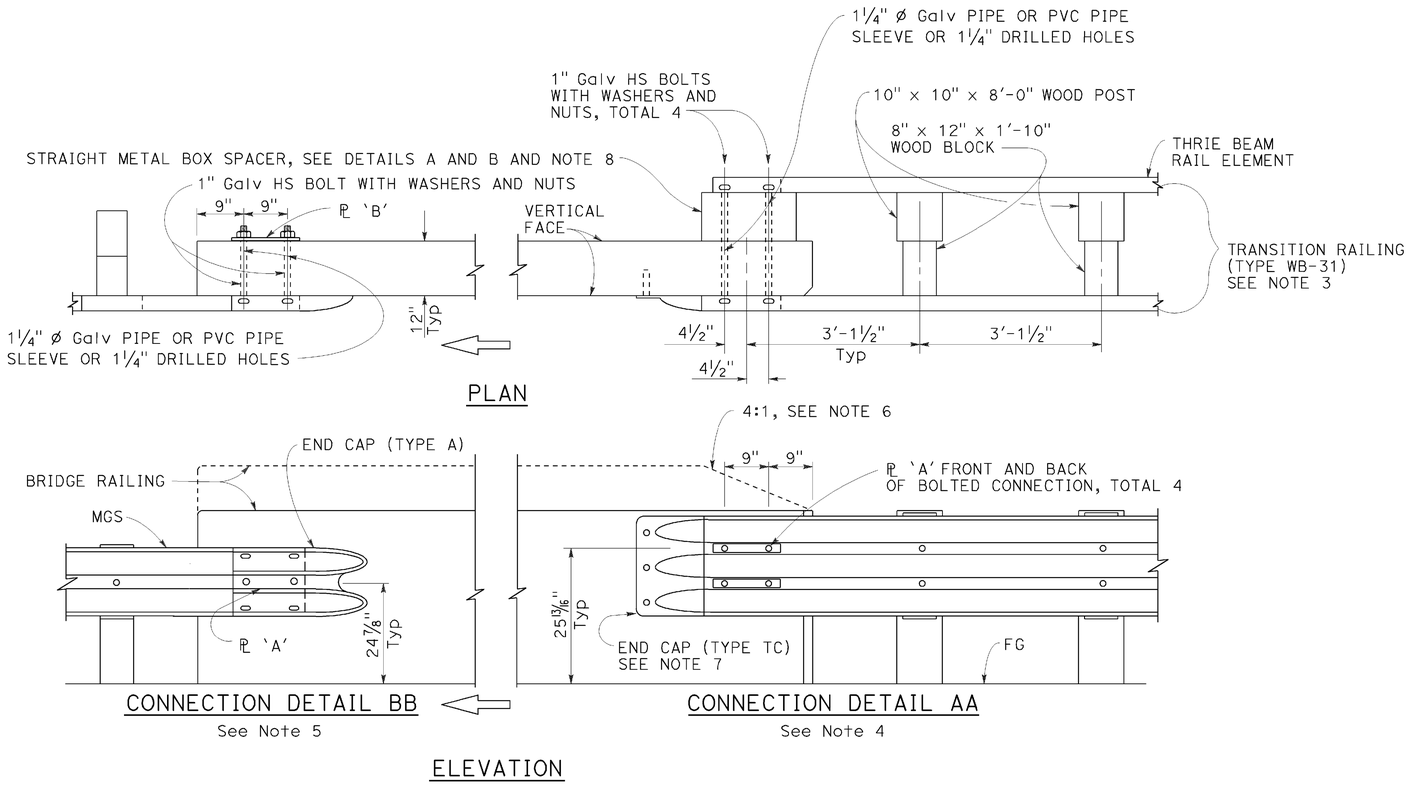

MIDWEST GUARDRAIL SYSTEM CONNECTION TO BRIDGE RAILING WITHOUT SIDEWALK

NOTES:

1. See Revised Standard Plan RSP A77U2 for additional connection details to bridges without sidewalks.
2. Additional details of posts, blocks and hardware are shown on Revised Standard Plans RSP A77M1, RSP A77N1 and RSP A77N2.
3. For additional details of Transition Railing (Type WB-31), see Revised Standard Plan RSP A77U4. Transition Railing (Type WB-31) transitions the 12 gauge MGS railing section to a heavier gage nested thrie beam railing section which is connected to the concrete bridge railing.
4. For typical use of Connection Detail AA, see Layout Types 12A and 12B on Revised Standard Plan RSP A77Q1, Layout Types 12C and 12D on Revised Standard Plan RSP A77Q2, and Layout Type 12E on Revised Standard Plan RSP A77Q3.
5. For typical use of Connection Detail BB, see Layout Type 12D (structure departure railing connection) on Revised Standard Plan RSP A77Q2 and Layout Type 12DD on Revised Standard Plan RSP A77Q5.
6. Where the height of the bridge railing exceeds the height of the thrie beam railing by more than 1" at Connection Detail AA, taper the top of the end of the bridge railing at 4:1 to match the top elevation of the thrie beam rail.
7. For details of End Cap (Type TC), see Revised Standard Plan RSP A77U4.
8. See Revised Standard Plan RSP A77U4 for additional details regarding depth dimension for straight metal box spacer.

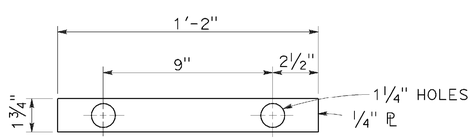

PLATE 'A'

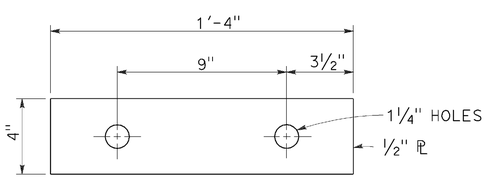

PLATE 'B'
(For backside of connection BB)

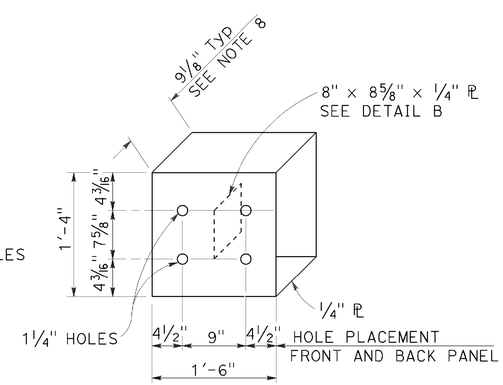

DETAIL A

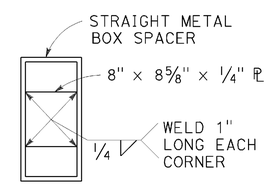

DETAIL B

STRAIGHT METAL BOX SPACER

STATE OF CALIFORNIA
DEPARTMENT OF TRANSPORTATION

MIDWEST GUARDRAIL SYSTEM CONNECTIONS TO BRIDGE RAILINGS WITHOUT SIDEWALKS DETAILS No. 1

NO SCALE

RSP A77U1 DATED JULY 19, 2013 SUPPLEMENTS THE STANDARD PLANS BOOK DATED 2010.

REVISED STANDARD PLAN RSP A77U1

2010 REVISED STANDARD PLAN RSP A77U1

DATE PLOTTED => 23-JAN-2015
TIME PLOTTED => 12:39

Dist	COUNTY	ROUTE	POST MILES TOTAL PROJECT	SHEET No.	TOTAL SHEETS
02	Sis	5	68.3	78	120

Randell D. Hiatt
REGISTERED CIVIL ENGINEER

November 15, 2013
PLANS APPROVAL DATE

REGISTERED PROFESSIONAL ENGINEER
Randell D. Hiatt
No. C50200
Exp. 6-30-15
CIVIL
STATE OF CALIFORNIA

THE STATE OF CALIFORNIA OR ITS OFFICERS OR AGENTS SHALL NOT BE RESPONSIBLE FOR THE ACCURACY OR COMPLETENESS OF SCANNED COPIES OF THIS PLAN SHEET.

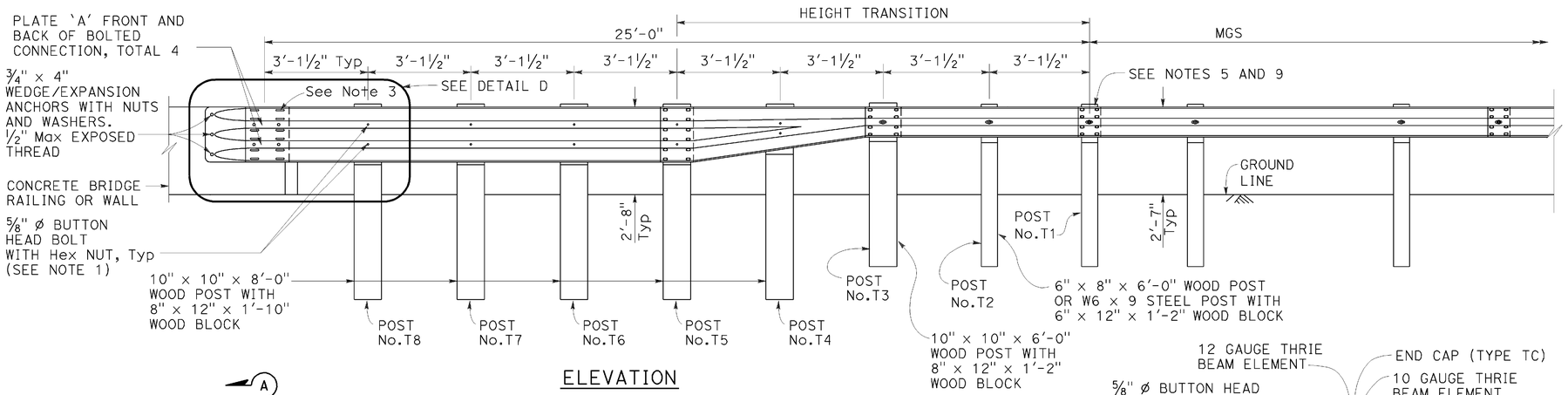

ELEVATION

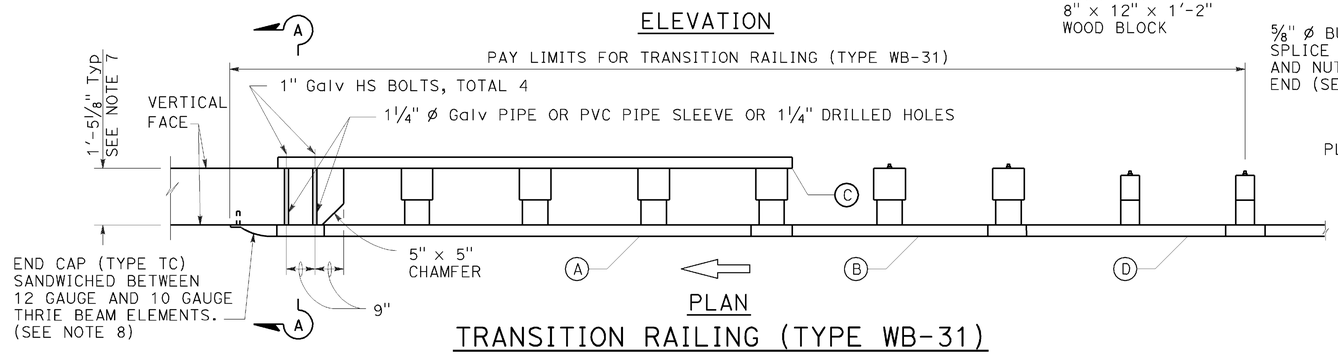

PLAN

TRANSITION RAILING (TYPE WB-31)

(No Blockout Attachment)

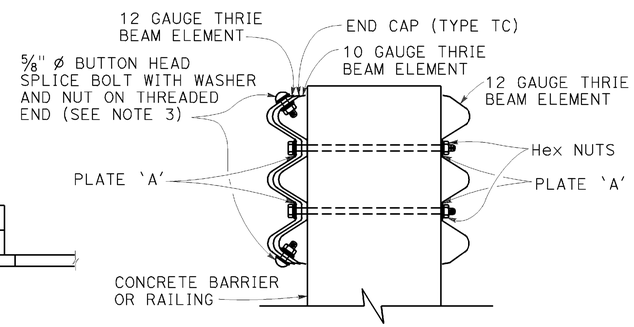

SECTION A-A

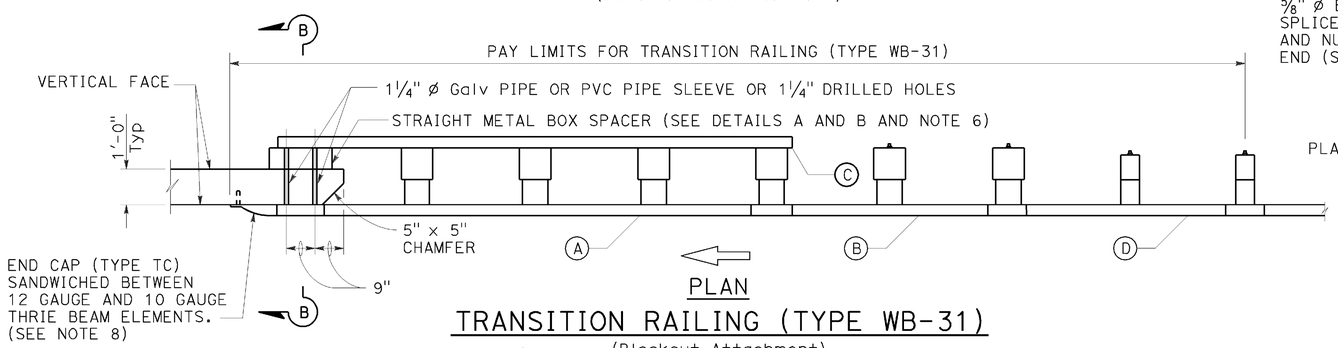

PLAN

TRANSITION RAILING (TYPE WB-31)

(Blockout Attachment)

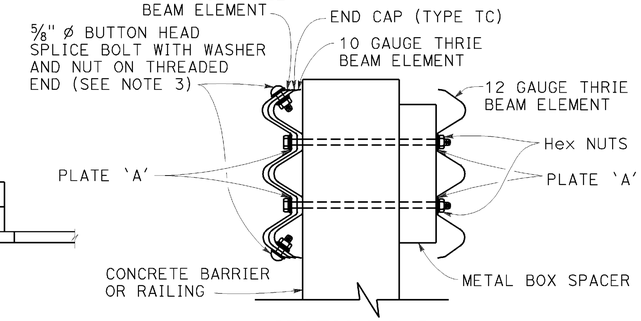

SECTION B-B

NOTES:

TO ACCOMPANY PLANS DATED 11-26-14

1. Use 5/8" ø Button head bolts and hex nuts for connections to posts. No washer on rail face for bolted connections to post.
2. The nested rail elements, end cap, and 'W' beam to thrie beam element may be spliced together prior to bolting the elements to the wood post and concrete barrier or railing.
3. Exterior splice bolt holes for rail element splices at Post No. T5 and the connection to the concrete barrier or railing shall be the standard 29/32" x 1 1/8" slot size. Interior splice bolt holes at these locations may be increased up to 1 1/4" ø. Only the top 4 and the bottom 4 splice bolts with washers and nuts are required for rail splices at Post No. T5 and the connection to the concrete barrier or railing.
4. The top elevation of Posts No. T2 through No. T7 shall not project more than 1" above the top elevation of the rail element.
5. Typically, the railing connected to Transition Railing (Type WB-31) will be either standard railing section of MGS with height transition ratio of 150:1 or a Caltrans approved 31" end treatment attached to Post No. T1.
6. The depth of the metal box spacer varies from the 9 1/8" to 1 1/2" and is dependent on the width of the concrete railing or wall. The combined dimension for the depth of the metal box spacer plus the width of railing or wall is typically 21 1/8". Where the space between the backside of the concrete railing or wall and the rear thrie beam element is less than 1 1/2", metal plates similar to Plate 'A' are to be used as spacers.
7. Where the width of the concrete railing or wall is greater than 17 1/8", wood blocks are to be used to fill the space created between the backside of Posts No. T5 through No. T8 and the rear thrie beam element. These wood blocks shall be 8" in width and 1'-2" in length. The dimension between the front thrie beam element and the rear thrie beam element is to match the width of the concrete railing or wall.
8. End cap may be installed over 12 gauge and 10 gauge thrie beam elements where transition railing is installed on the departure end of bridge railing.
9. Conform standard railing section height to 31" at Post No. T1 using height transition ratio of 150:1.

LEGEND:

(A) NESTED THRIE BEAM ELEMENTS (ONE 12 GAUGE ELEMENT NESTED OVER ONE 10 GAUGE ELEMENT).

(B) ONE ASYMMETRICAL 10 GAUGE "W" BEAM TO THRIE BEAM ELEMENT.

(C) ONE 12 GAUGE THRIE BEAM ELEMENT.

(D) ONE 10 GAUGE "W" BEAM RAIL ELEMENT (7'-3 1/2"LENGTH)

10 GAUGE = 0.138" THICK
12 GAUGE = 0.108" THICK

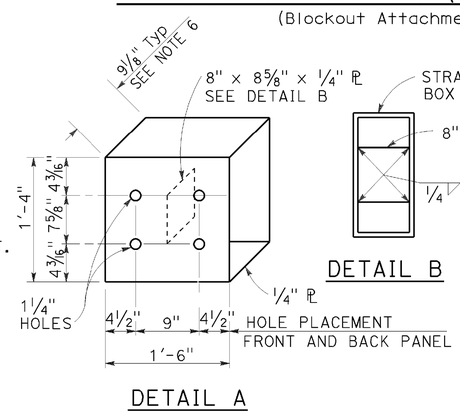

DETAIL A

STRAIGHT METAL BOX SPACER

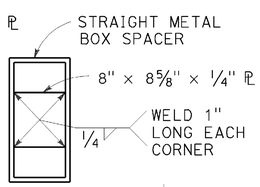

DETAIL B

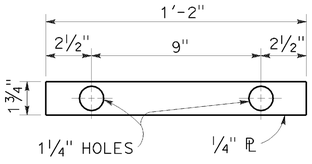

DETAIL C

PLATE 'A'

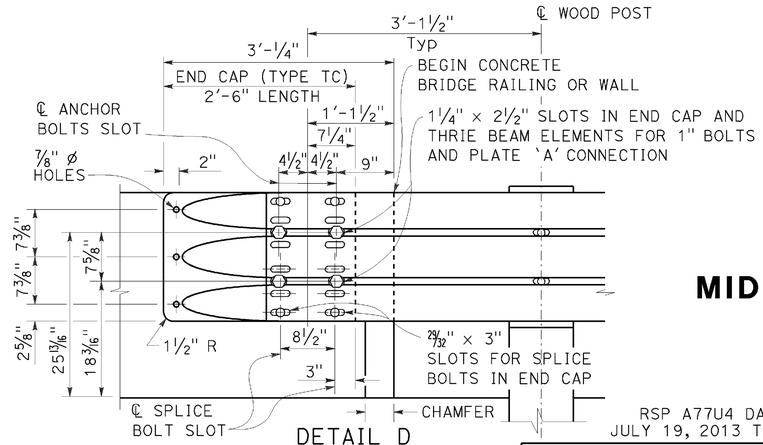

DETAIL D

MIDWEST GUARDRAIL SYSTEM TRANSITION RAILING (TYPE WB-31)

STATE OF CALIFORNIA
DEPARTMENT OF TRANSPORTATION

NO SCALE

RSP A77U4 DATED NOVEMBER 15, 2013 SUPERSEDES RSP A77U4 DATED JULY 19, 2013 THAT SUPPLEMENTS THE STANDARD PLANS BOOK DATED 2010.

REVISED STANDARD PLAN RSP A77U4

2010 REVISED STANDARD PLAN RSP A77U4

DATE PLOTTED => 23-JAN-2015
TIME PLOTTED => 12:39

Dist	COUNTY	ROUTE	POST MILES TOTAL PROJECT	SHEET No.	TOTAL SHEETS
02	Sis	5	68.3	79	120

Raymond Don Tsztoo
REGISTERED CIVIL ENGINEER

October 19, 2012
PLANS APPROVAL DATE

REGISTERED PROFESSIONAL ENGINEER
Raymond Don Tsztoo
No. C37332
Exp. 6-30-14
CIVIL
STATE OF CALIFORNIA

THE STATE OF CALIFORNIA OR ITS OFFICERS OR AGENTS SHALL NOT BE RESPONSIBLE FOR THE ACCURACY OR COMPLETENESS OF SCANNED COPIES OF THIS PLAN SHEET.

TO ACCOMPANY PLANS DATED 11-26-14

2010 REVISED STANDARD PLAN RSP A86D

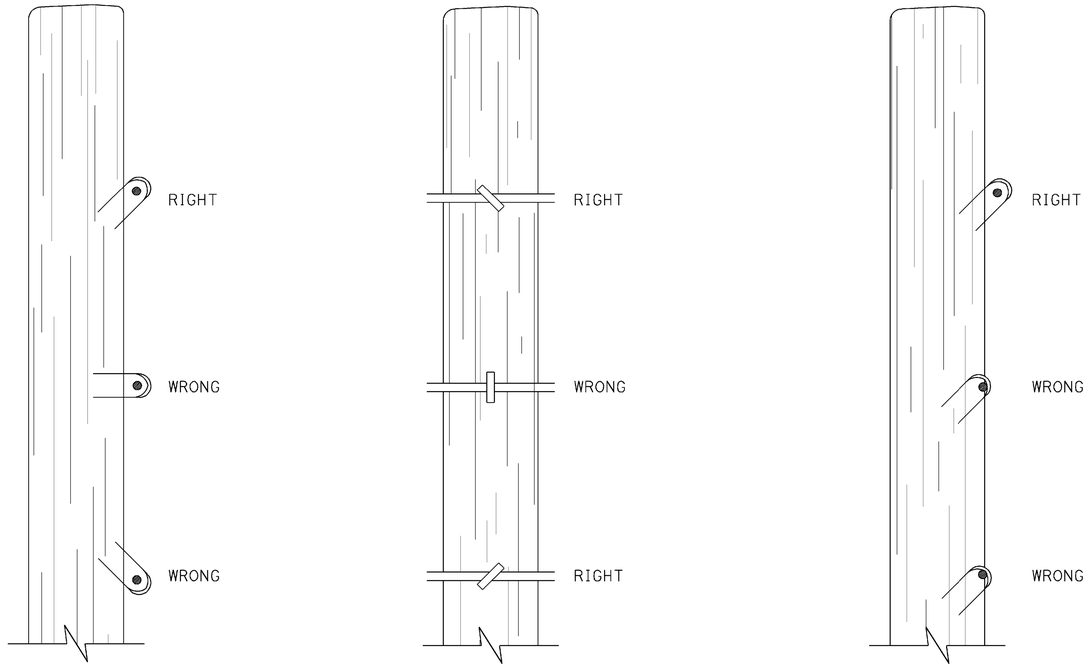

DRIVE STAPLES AT ANGLE

DO NOT DRIVE STAPLES PARALLEL TO SIDE OF POST

LEAVE WIRE LOOSE IN STAPLE

LINE POST STAPLING DETAILS

(Apply to rectangular/square and round posts)
Do not staple vertical wire in wire mesh.

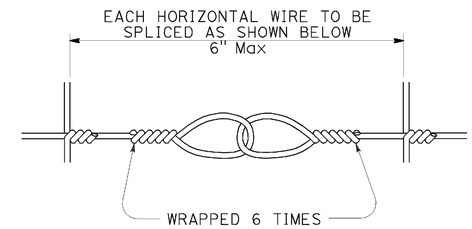

SPLICE DETAIL FOR BARBED WIRE/WIRE MESH FENCE

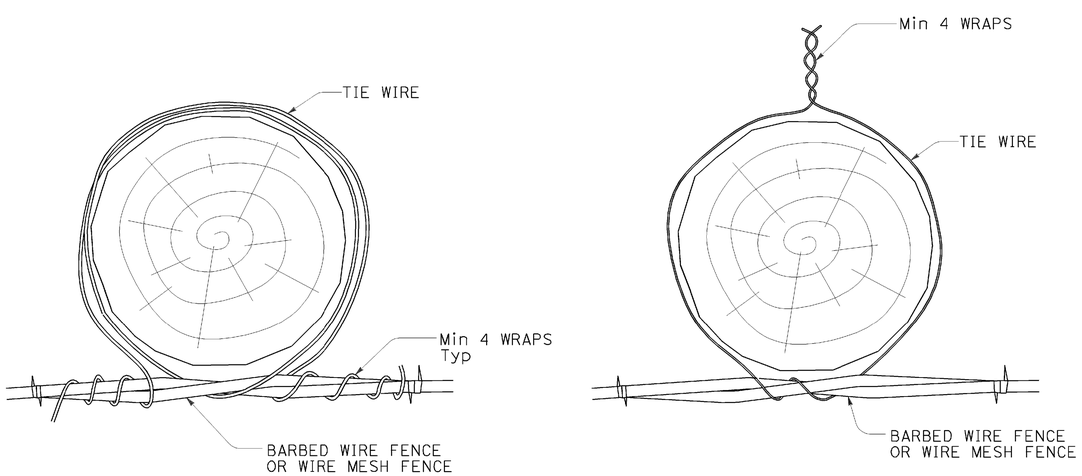

OPTION A

OPTION B

LINE POST WIRE TIE OPTION DETAILS

(Option details also apply to rectangular/square posts)

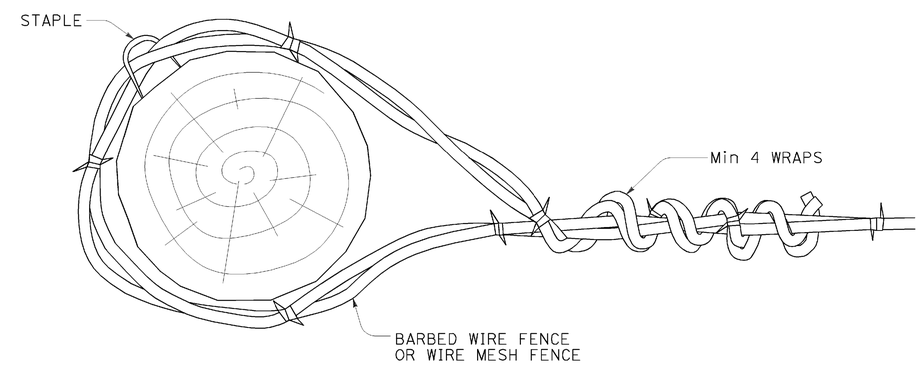

END, LATCH, PULL, AND CORNER POST DETAIL

(Also applies to rectangular/square posts)

STATE OF CALIFORNIA
DEPARTMENT OF TRANSPORTATION

BARBED WIRE AND WIRE MESH FENCE - MISCELLANEOUS DETAILS

NO SCALE

RSP A86D DATED OCTOBER 19, 2012 SUPPLEMENTS THE STANDARD PLANS BOOK DATED 2010.

REVISED STANDARD PLAN RSP A86D

DATE PLOTTED => 23-JAN-2015
TIME PLOTTED => 12:39

Dist	COUNTY	ROUTE	POST MILES TOTAL PROJECT	SHEET No.	TOTAL SHEETS
02	Sis	5	68.3	80	120

Raymond Don Tsztoo
REGISTERED CIVIL ENGINEER

April 19, 2013
PLANS APPROVAL DATE

REGISTERED PROFESSIONAL ENGINEER Raymond Don Tsztoo No. C37332 Exp. 6-30-14 CIVIL STATE OF CALIFORNIA

THE STATE OF CALIFORNIA OR ITS OFFICERS OR AGENTS SHALL NOT BE RESPONSIBLE FOR THE ACCURACY OR COMPLETENESS OF SCANNED COPIES OF THIS PLAN SHEET.

TO ACCOMPANY PLANS DATED 11-26-14

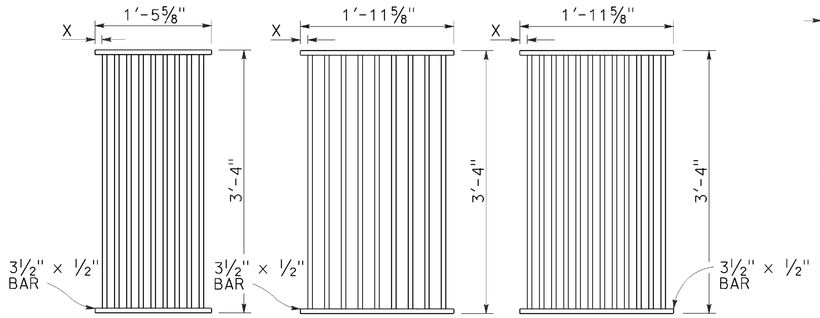

TYPE 18-9

1⅜" Clear spacing. Use within the roadbed on highways where bicycles and pedestrians are excluded.

TYPE 24-9

2" Clear spacing. Use in locations off the roadbed on all types of highways.

TYPE 24-12

1⅜" Clear spacing. Use within the roadbed on highways where bicycles and pedestrians are excluded.

RECTANGULAR GRATE DETAILS

(See table below)

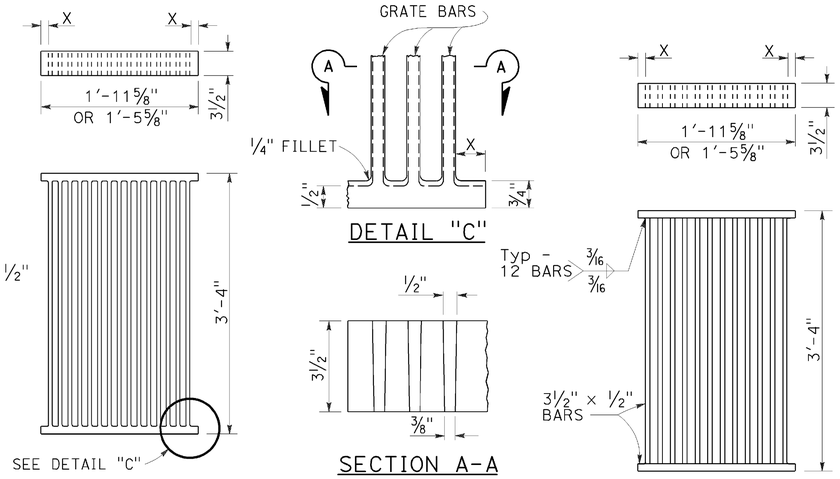

ALTERNATIVE CAST DUCTILE IRON GRATE OR CAST CARBON STEEL GRATE

ALTERNATIVE WELDED GRATE

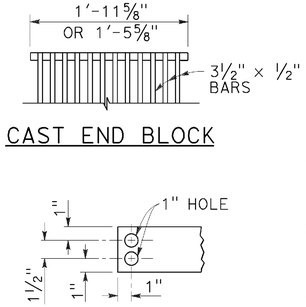

CAST END BLOCK

END OF BAR

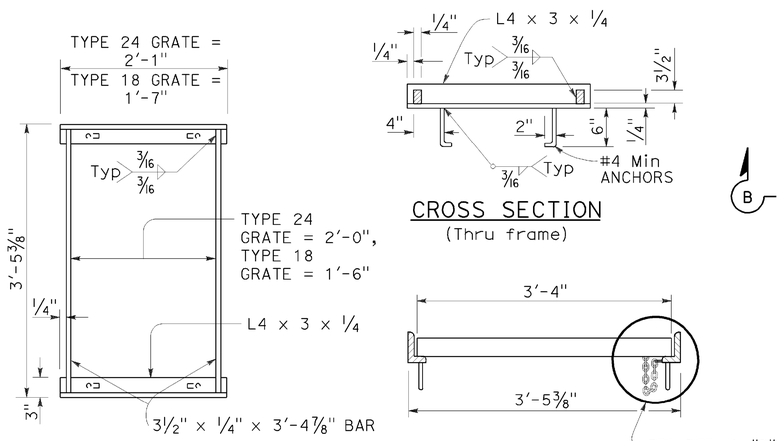

TYPICAL FRAME

CROSS SECTION

(Thru frame)

LONGITUDINAL SECTION

(Thru frame and grate)

RECTANGULAR FRAME DETAILS

(For all rectangular grates)

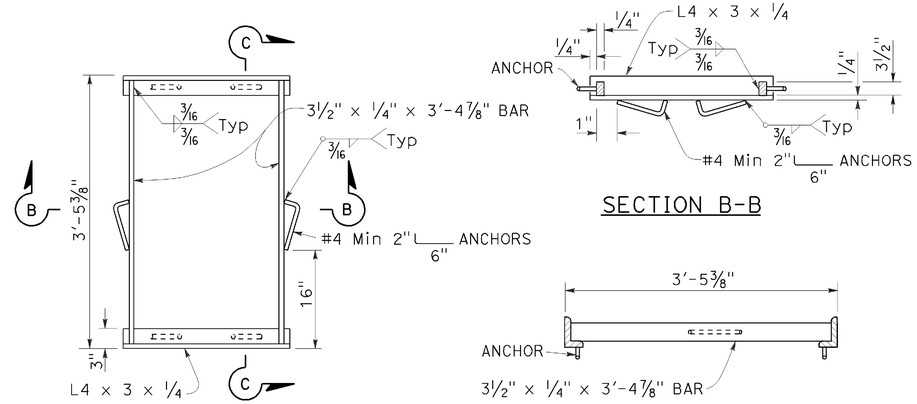

TYPICAL FRAME

SECTION B-B

SECTION C-C

ALTERNATIVE ANCHOR FOR RECTANGULAR FRAME

(For details not shown, See Rectangular Frame Details)

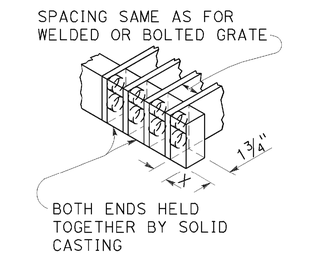

ALTERNATIVE CAST DUCTILE IRON OR CAST CARBON STEEL END BLOCK GRATE

NOTES:

1. Grate type numbers refer to approximate width of grate in inches and number of bars, respectively.
2. Contractor has the option of using cast ductile iron, cast carbon steel, welded, bolted, or cast end block grate.
3. Rounded top of bars optional on all grates.
4. Pipe inlets with a grate shall be placed so that bars parallel direction of principle surface flow.
5. Complete joint penetration butt welds may be substituted for the fillet welds on all anchors.
6. Standard square, hexagon, round or equivalent headed anchors may be substituted for the right angle hooks on the anchors shown on this plan.
7. Grate and frame weights are based on welded grates (weights of face angles, steps, protection bars, etc. are not included).
8. Connect chain to grate and frame only at locations shown on the plans. When chain is required, do not use cast ductile iron grates.

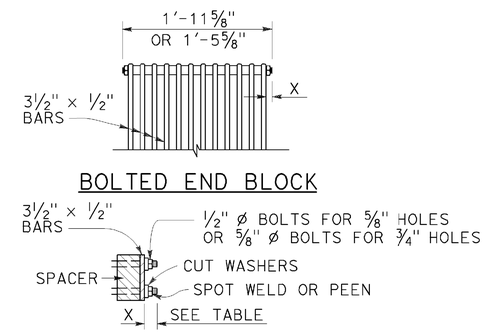

ALTERNATIVE BOLTED GRATE

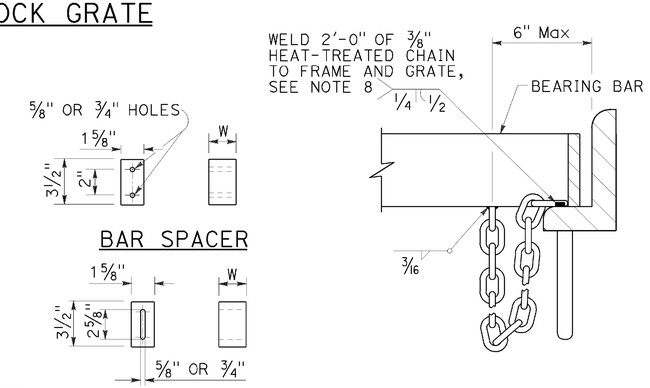

GRATE BAR SPACING TABLE

TYPE	No. OF BARS	CLEAR BAR SPACING	X
18-9	9	1⅜"	1 1/16"
24-9	9	2"	1 9/16"
24-12	12	1⅜"	1¼"

INLET TYPE	COVER TYPE	WEIGHT LB
OS	PLATE	174
OL-7	PLATE	170
OL-10	PLATE	170
OL-14	PLATE	170
OL-21	PLATE	170
OCP	PLATE	112
OCPI	PLATE	112
OCPI	REDWOOD	42
OMP	PLATE	177
OMPI	PLATE	177

INLET TYPE	GRATE TYPE	No. OF GRATES	WEIGHT LB
GDO	24-12	2	634
GOL-7	24-12	1	326
GOL-10	24-12	1	326
GO,G1,G2,G3,G4 (TYPE 24)	24-9	1	263
	24-12	1	326
G4 (TYPE 18),G5,G6	18-9	1	249
GT1	18-9	2	498
GT2	18-9	2	498
GT3	24-12	2	652
GT4	24-12	2	652
TRASH RACK			22
GRATE CHAIN			3

BASIS FOR Misc IRON & STEEL FINAL PAY WEIGHTS FOR DRAINAGE INLETS

(See Note 7)

STATE OF CALIFORNIA
DEPARTMENT OF TRANSPORTATION

GRATE DETAILS No. 1

NO SCALE

RSP D77A DATED APRIL 19, 2013 SUPERSEDES RSP D77A DATED JULY 20, 2012 AND STANDARD PLAN D77A DATED MAY 20, 2011 - PAGE 164 OF THE STANDARD PLANS BOOK DATED 2010.

REVISED STANDARD PLAN RSP D77A

2010 REVISED STANDARD PLAN RSP D77A

DATE PLOTTED => 23-JAN-2015
TIME PLOTTED => 12:40

Dist	COUNTY	ROUTE	POST MILES TOTAL PROJECT	SHEET No.	TOTAL SHEETS
02	Sis	5	68.3	81	120

REGISTERED CIVIL ENGINEER

April 19, 2013
PLANS APPROVAL DATE

Raymond Don Tsztoo No. C37332 Exp. 6-30-14 CIVIL — REGISTERED PROFESSIONAL ENGINEER — STATE OF CALIFORNIA

THE STATE OF CALIFORNIA OR ITS OFFICERS OR AGENTS SHALL NOT BE RESPONSIBLE FOR THE ACCURACY OR COMPLETENESS OF SCANNED COPIES OF THIS PLAN SHEET.

TO ACCOMPANY PLANS DATED 11-26-14

2010 REVISED STANDARD PLAN RSP D77B

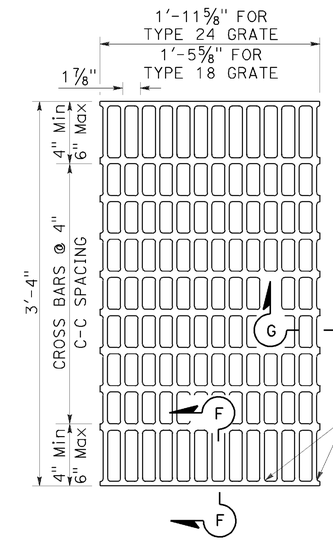

NOTES:

Bearing bars to be 3½" × ¼" bars on 1⅞" centers.

⅜"± ø Cross bars may be fillet welded, resistance welded or electroforged to bearing bars.

Weight of Type 24 grate = 141 LBS.

Weight of Type 18 grate = 107 LBS. (Type 24 grate shown).

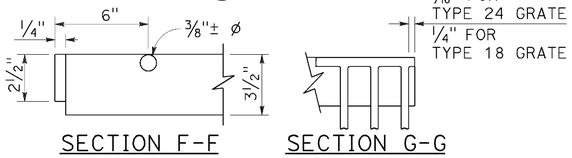

SECTION F-F SECTION G-G

TYPE 18-10 AND 24-13 GRATE

(Welded Steel)

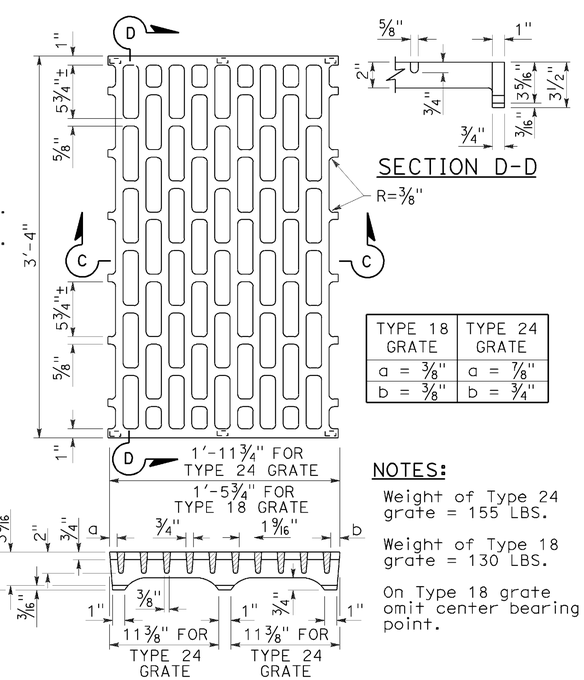

SECTION D-D

TYPE 18 GRATE	TYPE 24 GRATE
a = ⅜"	a = ⅞"
b = ⅜"	b = ¾"

NOTES:

Weight of Type 24 grate = 155 LBS.

Weight of Type 18 grate = 130 LBS.

On Type 18 grate omit center bearing point.

SECTION C-C

TYPE 18-8C AND 24-10C GRATE

(Cast ductile iron)

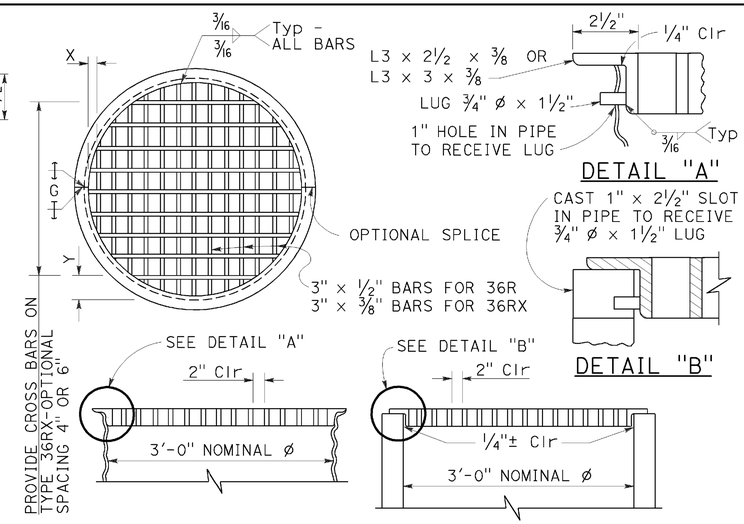

DETAIL "A"

DETAIL "B"

TYPE 36R AND 36RX GRATE DETAILS

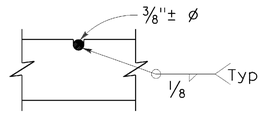

⅜"± ø Cross bars may be fillet welded, resistance welded or electroforged to bearing bars.

CROSS BAR DETAIL TYPE 36RX GRATE (WELDED STEEL)

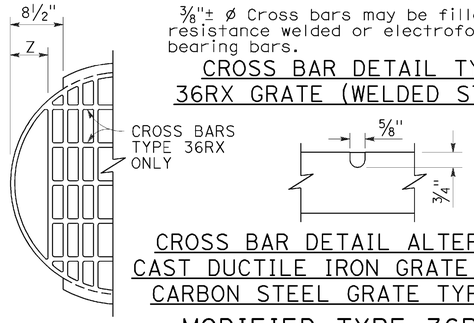

CROSS BAR DETAIL ALTERNATIVE CAST DUCTILE IRON GRATE OR CAST CARBON STEEL GRATE TYPE 36RX

MODIFIED TYPE 36R AND 36RX GRATE FOR ODI INLET

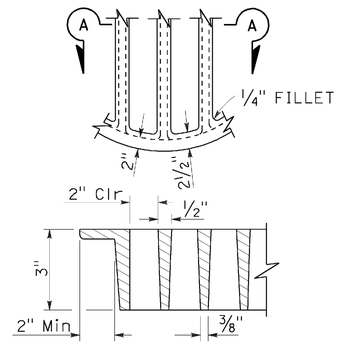

SECTION A-A

ALTERNATIVE CAST DUCTILE IRON GRATE OR CAST CARBON STEEL GRATE TYPE 36R AND 36RX

BASIS FOR Misc IRON AND STEEL FINAL PAY WEIGHTS FOR DRAINAGE INLETS

INLET TYPE	GRATE TYPE	No. OF GRATES	WEIGHT LB
GDO (SEE NOTE 4)	24-10C	2	391
	24-10S	2	456
	24-12X	2	473
	24-13	2	374
GO,GOL,G1,G2, G3,G4 (TYPE 24)	24-10C	1	202
	24-10S	1	229
	24-12X	1	239
	24-13	1	188
G4 (TYPE 18) G5,G6	18-8S	1	187
	18-9X	1	187
	18-10	1	149
GT1,GT2	18-8S	2	374
	18-9X	2	374
	18-10	2	298
GT3,GT4	24-10C	2	404
	24-10S	2	458
	24-12X	2	478
	24-13	2	376
ODI	36RX (Mod)	1	196
GMP,GCP,GCPI	36RX	1	215
ODI	36R (Mod)	1	220
GMP,GCP,GCPI	36R	1	236
TRASH RACK			22
GRATE CHAIN			3

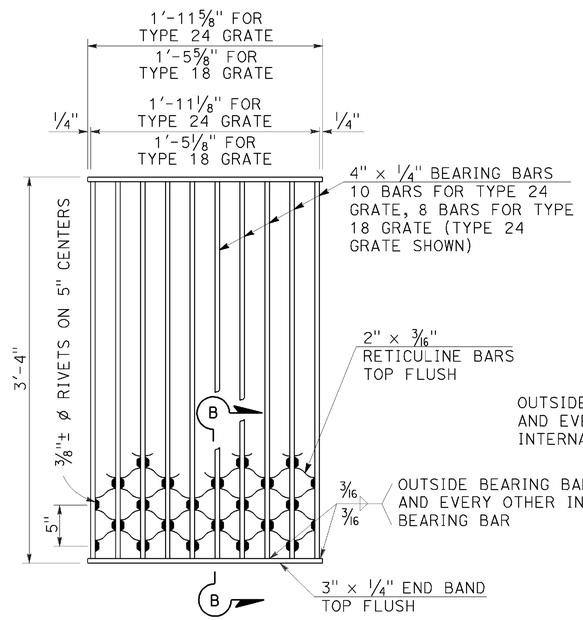

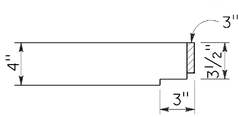

NOTES:

Weight of Type 24 grate = 182 LBS.
Weight of Type 18 grate = 145 LBS.

SECTION B-B

TYPE 18-8S AND 24-10S GRATE

(Welded Steel) Reticuline type

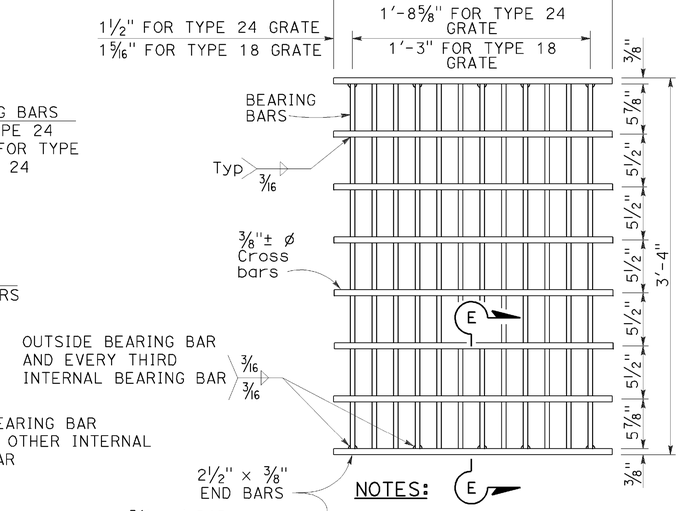

SECTION E-E

NOTES:

Bearing bars to be 3½" × ⅜" bars on 1⅞" centers.

12 Bars for Type 24 grate - 9 bars for Type 18 grates. (Type 24 grate shown).

Weight of Type 24 grate = 192 LBS.

Weight of Type 18 grate = 145 LBS.

⅜"± ø Cross bars may be fillet welded, resistance welded or electroforged to bearing bars.

TYPE 18-9X AND 24-12X GRATE

(Welded Steel)

NOTES:

1. When alternative grates are allowed - Final pay based on alternative with the lesser weight.
2. Use frame shown on Standard Plan D74A, D74B or RSP D77A as appropriate.
3. When Type 24-10S, 24-12X or 24-13 grates are used with GDO Inlets, a ¼" × 3½" × 3'-4⅞" steel bar shall be welded across the center of inlet frame to separate the individual grates.
4. See Revised Standard Plan RSP D77A for connecting chain to welded grate and frame. When chain is required, do not use cast ductile iron grate.

GRATE BAR SPACING TABLE

TYPE	No. OF BARS	CLEAR BAR SPACING	X	Y 4" SPACING	Y 6" SPACING	Z
36R	13	2"	2⅛"	-	-	-
36RX (STEEL)	15	2"	9/16"	3¾"	5¾"	-
36RX (CAST)	13	2"	2⅛"	3¾"	5¾"	-
36R Mod	12	2"	2⅛"	-	-	5"
36RX Mod (STEEL)	13	2"	9/16"	3¾"	5¾"	5 11/16"
36RX Mod (CAST)	12	2"	2⅛"	3¾"	5¾"	5"

STATE OF CALIFORNIA
DEPARTMENT OF TRANSPORTATION

GRATE DETAILS No. 2

NO SCALE

RSP D77B DATED APRIL 19, 2013 SUPERSEDES RSP D77B DATED JULY 20, 2012 AND STANDARD PLAN D77B DATED MAY 20, 2011 - PAGE 165 OF THE STANDARD PLANS BOOK DATED 2010.

REVISED STANDARD PLAN RSP D77B

DATE PLOTTED => 23-JAN-2015
TIME PLOTTED => 12:40

Dist	COUNTY	ROUTE	POST MILES TOTAL PROJECT	SHEET No.	TOTAL SHEETS
02	Sis	5	68.3	82	120

LICENSED LANDSCAPE ARCHITECT

July 19, 2013
PLANS APPROVAL DATE

THE STATE OF CALIFORNIA OR ITS OFFICERS OR AGENTS SHALL NOT BE RESPONSIBLE FOR THE ACCURACY OR COMPLETENESS OF SCANNED COPIES OF THIS PLAN SHEET.

LICENSED LANDSCAPE ARCHITECT — Gregory A. Balzer — 2516 — 02-28-15 Renewal Date — 7-19-13 Date — STATE OF CALIFORNIA

TO ACCOMPANY PLANS DATED 11-26-14

A

AB	AGGREGATE BASE
ABS	ACRYLONITRILE-BUTADIENE-STYRENE
AC	ASPHALT CONCRETE
ACC	ARMOR-CLAD CONDUCTORS
Adj	ADJACENT/ADJUSTABLE
AIC	AUXILIARY IRRIGATION CONTROLLER
Alt	ALTERNATIVE
AMEND	AMENDMENT
ARV	AIR RELEASE VALVE
AUTO	AUTOMATIC
AUX	AUXILIARY
AVB	ATMOSPHERIC VACUUM BREAKER

B

B&B	BALLED AND BURLAPPED
B/B	BRASS/BRONZE
B/B/PL	BRASS/BRONZE/PLASTIC
B/PL	BRASS/PLASTIC
BFM	BONDED FIBER MATRIX
Bit Ctd	BITUMINOUS COATED
BP	BOOSTER PUMP
BPA	BACKFLOW PREVENTER ASSEMBLY
BPE	BACKFLOW PREVENTER ENCLOSURE
BV	BALL VALVE

C

C	CONDUIT
CAP	CORRUGATED ALUMINUM PIPE
CARV	COMBINATION AIR RELEASE VALVE
CB	COUPLING BAND
CCA	CAM COUPLER ASSEMBLY
CEC	CONTROLLER ENCLOSURE CABINET
CHDPE	CORRUGATED HIGH DENSITY POLYETHYLENE
CL	CHAIN LINK
CNC	CONTROL AND NEUTRAL CONDUCTORS
Conc	CONCRETE
CP	COPPER PIPE
CS	COMPOST SOCK
CSP	CORRUGATED STEEL PIPE
CST	CENTER STRIP
CV	CHECK VALVE

D

Dia	DIAMETER
DIP	DUCTILE IRON PIPE
DIT	DRIP IRRIGATION TUBING
DG	DECOMPOSED GRANITE
DN	DIAMETER NOMINAL
DVA	DRIP VALVE ASSEMBLY

E

EC	EROSION CONTROL
ECTC	EROSION CONTROL TECHNOLOGY COUNCIL
Elect	ELECTRIC/ELECTRICAL
Elev	ELEVATION
ELL	ELBOW
ENCL	ENCLOSURE
EP	EDGE OF PAVEMENT
ES	EDGE OF SHOULDER
EST	END STRIP
ESTB	ESTABLISHMENT
ETW	EDGE OF TRAVELED WAY

F

F	FULL CIRCLE
F/P	FULL/PART CIRCLE
FCV	FLOW CONTROL VALVE
FERT	FERTILIZER
FG	FINISHED GRADE
FH	FLEXIBLE HOSE
FIPT	FEMALE IRON PIPE THREAD
FIS	FERTILIZER INJECTOR SYSTEM
FL	FLOW LINE
FR	FIBER ROLL
FS	FLOW SENSOR
FSC	FLOW SENSOR CABLE
FV	FLUSH VALVE

G

Galv	GALVANIZED
GARV	GARDEN VALVE
GARVA	GARDEN VALVE ASSEMBLY
GM	GRAVEL MULCH
GPH	GALLONS PER HOUR
GPM	GALLONS PER MINUTE
GSP	GALVANIZED STEEL PIPE
GV	GATE VALVE

H

H	HALF CIRCLE
HDPE	HIGH DENSITY POLYETHYLENE
HP	HORSEPOWER/HINGE POINT
HPL	HIGH PRESSURE LINE
Hwy	HIGHWAY

I

IC	IRRIGATION CONTROLLER
ICC	IRRIGATION CONTROLLER(S) IN CONTROLLER ENCLOSURE CABINET
ID	INSIDE DIAMETER
IFS	IRRIGATION FILTRATION SYSTEM
IPS	IRON PIPE SIZE
IPT	IRON PIPE THREAD
Irr	IRRIGATION

L

L	LENGTH

M

Max	MAXIMUM
MBGR	METAL BEAM GUARD RAILING
MCV	MANUAL CONTROL VALVE
MIC	MASTER IRRIGATION CONTROLLER
Min	MINIMUM
MIPT	MALE IRON PIPE THREAD
Misc	MISCELLANEOUS
Mtl	MATERIAL
MVP	MAINTENANCE VEHICLE PULLOUT

N

NCN	NO COMMON NAME
NL	NOZZLE LINE
No.	NUMBER
NPT	NATIONAL PIPE THREAD

O

O/C	ON CENTER
OD	OUTSIDE DIAMETER
OL	OVERLAP

P

P	PART CIRCLE
PB	PULL BOX
PCC	PORTLAND CEMENT CONCRETE
PE	POLYETHYLENE
Pkt	PACKET
PL	PLASTIC
PLS	PURE LIVE SEED
PLT	PLANT/PLANTING
PLT ESTB	PLANT ESTABLISHMENT
PM	POST MILE
PR	PRESSURE RATED
PRLV	PRESSURE RELIEF VALVE
PRV	PRESSURE REGULATING VALVE
PVC	POLYVINYL CHLORIDE
Pvmt	PAVEMENT

Q

Q	QUARTER CIRCLE
QCV	QUICK COUPLING VALVE

NOTE:

For additional abbreviations, see Standard Plans A10A and A10B.

R

R	RADIUS
RCP	REINFORCED CONCRETE PIPE
RCV	REMOTE CONTROL VALVE
RCVM	REMOTE CONTROL VALVE (MASTER)
RCVMF	REMOTE CONTROL VALVE (MASTER) W/FLOW SENSOR
RCVP	REMOTE CONTROL VALVE W/PRESSURE REGULATOR
RCW	RECYCLED WATER
RECP	ROLLED EROSION CONTROL PRODUCT
REQ	REQUIRED
RICS	REMOTE IRRIGATION CONTROL SYSTEM
R/W	RIGHT OF WAY

S

S	SLIP
SCH	SCHEDULE
SF	STATE-FURNISHED
Shld	SHOULDER
Sq	SQUARE
SST	SIDE STRIP
Sta	STATION
Std	STANDARD
SW	SIDEWALK/SOUND WALL

T

T	THIRD CIRCLE/THREAD
TLS	TRUCK LOADING STANDPIPE
TQ	THREE QUARTER CIRCLE
TRM	TURF REINFORCEMENT MAT
TT	TWO-THIRDS CIRCLE
TWSA	TREE WELL SPRINKLER ASSEMBLY
Typ	TYPICAL

U

UG	UNDERGROUND

W

W	WIDTH
W/	WITH
WM	WATER METER
WS	WYE STRAINER
WSA	WYE STRAINER ASSEMBLY
WSP	WELDED STEEL PIPE
WWM	WELDED WIRE MESH

STATE OF CALIFORNIA
DEPARTMENT OF TRANSPORTATION

LANDSCAPE AND EROSION CONTROL ABBREVIATIONS

NO SCALE

RSP H1 DATED JULY 19, 2013 SUPERSEDES STANDARD PLAN H1 DATED MAY 20, 2011 - PAGE 218 OF THE STANDARD PLANS BOOK DATED 2010.

REVISED STANDARD PLAN RSP H1

2010 REVISED STANDARD PLAN RSP H1

DATE PLOTTED => 23-JAN-2015
TIME PLOTTED => 12:40

Dist	COUNTY	ROUTE	POST MILES TOTAL PROJECT	SHEET No.	TOTAL SHEETS
02	Sis	5	68.3	83	120

LICENSED LANDSCAPE ARCHITECT

November 15, 2013
PLANS APPROVAL DATE

LICENSED LANDSCAPE ARCHITECT — Gregory A. Balzer — 2516 — Registration — 2-28-15 — Renewal Date — 11-15-13 — Date — STATE OF CALIFORNIA

THE STATE OF CALIFORNIA OR ITS OFFICERS OR AGENTS SHALL NOT BE RESPONSIBLE FOR THE ACCURACY OR COMPLETENESS OF SCANNED COPIES OF THIS PLAN SHEET.

TO ACCOMPANY PLANS DATED 11-26-14

EXISTING	NEW	ITEM DESCRIPTION
		WATER METER (WM)
		BACKFLOW PREVENTER ASSEMBLY (BPA)
		BACKFLOW PREVENTER ENCLOSURE (BPE)
		BOOSTER PUMP (BP)
		TRUCK LOADING STANDPIPE (TLS)
	FS	FLOW SENSOR (FS)
		MASTER IRRIGATION CONTROLLER (MIC)
		AUXILIARY IRRIGATION CONTROLLER (AIC)
		IRRIGATION CONTROLLER (IC) IRRIGATION CONTROLLER (IC) (BATTERY) IRRIGATION CONTROLLER (IC) (SOLAR) IRRIGATION CONTROLLER (IC) (TWO WIRE) IRRIGATION CONTROLLER(S) IN CONTROLLER ENCLOSURE CABINET (ICC)
acc	ACC	ARMOR-CLAD CONDUCTORS (ACC)
cnc	CNC	CONTROL AND NEUTRAL CONDUCTORS (CNC)
		IRRIGATION CONDUIT
		EXTEND IRRIGATION CONDUIT
dip	DIP	DUCTILE IRON PIPE (SUPPLY LINE) (MAIN) (DIP)
		GALVANIZED STEEL PIPE (SUPPLY LINE) (MAIN) (GSP)
		GALVANIZED STEEL PIPE (SUPPLY LINE) (LATERAL) (GSP)
		PLASTIC PIPE (SUPPLY LINE) (MAIN)
		PLASTIC PIPE (SUPPLY LINE) (LATERAL)
cp	CP	COPPER PIPE (SUPPLY LINE)
dit	DIT	DRIP IRRIGATION TUBING
		REMOTE CONTROL VALVE (RCV) REMOTE CONTROL VALVE (MASTER) (RCVM) REMOTE CONTROL VALVE (MASTER) W/FLOW METER (RCVMF)
P	P	REMOTE CONTROL VALVE W/PRESSURE REGULATOR (RCVP)
		EXISTING MANUAL CONTROL VALVE (MCV)
	V	DRIP VALVE ASSEMBLY (DVA)
	Y	WYE STRAINER ASSEMBLY (WSA)

EXISTING	NEW	ITEM DESCRIPTION
		GATE VALVE (GV)
		BALL VALVE (BV)
		QUICK COUPLING VALVE (QCV)
		CAM COUPLER ASSEMBLY (CCA)
		GARDEN VALVE ASSEMBLY (GARVA)
		PRESSURE REGULATING VALVE (PRV)
		PRESSURE RELIEF VALVE (PRLV)
		FLOW CONTROL VALVE (FCV)
		COMBINATION AIR RELEASE VALVE (CARV)
		CHECK VALVE (CV)
		FLUSH VALVE (FV)
		EXISTING NOZZLE LINE W/TURNING UNION
		EXISTING IRRIGATION SYSTEM
		EXISTING IRRIGATION SYSTEM TO BE REMOVED
		CHAIN LINK GATE
		QUICK COUPLING VALVE W/SPRINKLER PROTECTOR
3	3	SPRINKLER W/SPRINKLER PROTECTOR
	C	CONNECT TO EXISTING SYSTEM
		CAP
		CAP EXISTING
	\\\FR\\\	FIBER ROLL
	\\\CS\\\	COMPOST SOCK

- RCV SIZE
- IRRIGATION CONTROLLER
- CONTROLLER STATION
- VALVE IN PARALLEL (IF APPLICABLE)
- GPM
- QUANTITY OF SPRINKLERS (WHEN SHOWN)

* 2½"-A-2b-40-60

VALVE CODE

* VALVE CODES FOR EXISTING VALVES ARE SHOWN IN A DASHED ENCLOSURE.

STATE OF CALIFORNIA
DEPARTMENT OF TRANSPORTATION

LANDSCAPE AND EROSION CONTROL SYMBOLS

NO SCALE

RSP H2 DATED NOVEMBER 15, 2013 SUPERSEDES RSP H2 DATED JULY 19, 2013 AND STANDARD PLAN H2 DATED MAY 20, 2011 - PAGE 219 OF THE STANDARD PLANS BOOK DATED 2010.

REVISED STANDARD PLAN RSP H2

2010 REVISED STANDARD PLAN RSP H2

DATE PLOTTED => 23-JAN-2015
TIME PLOTTED => 12:40

Dist	COUNTY	ROUTE	POST MILES TOTAL PROJECT	SHEET No.	TOTAL SHEETS
02	Sis	5	68.3	84	120

REGISTERED CIVIL ENGINEER

July 19, 2013
PLANS APPROVAL DATE

REGISTERED PROFESSIONAL ENGINEER Gurinderpal Bhullar No. C48815 Exp. 9-30-14 CIVIL STATE OF CALIFORNIA

THE STATE OF CALIFORNIA OR ITS OFFICERS OR AGENTS SHALL NOT BE RESPONSIBLE FOR THE ACCURACY OR COMPLETENESS OF SCANNED COPIES OF THIS PLAN SHEET.

TO ACCOMPANY PLANS DATED 11-26-14

TABLE 1

TAPER LENGTH CRITERIA AND CHANNELIZING DEVICE SPACING

SPEED (S)	MINIMUM TAPER LENGTH * FOR WIDTH OF OFFSET 12 FEET (W)				MAXIMUM CHANNELIZING DEVICE SPACING		
					X	Y	Z **
	TANGENT 2L	MERGING L	SHIFTING L/2	SHOULDER L/3	TAPER	TANGENT	CONFLICT
mph	ft	ft	ft	ft	ft	ft	ft
20	160	80	40	27	20	40	10
25	250	125	63	42	25	50	12
30	360	180	90	60	30	60	15
35	490	245	123	82	35	70	17
40	640	320	160	107	40	80	20
45	1080	540	270	180	45	90	22
50	1200	600	300	200	50	100	25
55	1320	660	330	220	55	110	27
60	1440	720	360	240	60	120	30
65	1560	780	390	260	65	130	32
70	1680	840	420	280	70	140	35

* - For other offsets, use the following merging taper length formula for L:
For speed of 40 mph or less, $L = WS^2/60$
For speed of 45 mph or more, $L = WS$

Where: L = Taper length in feet
W = Width of offset in feet
S = Posted speed limit, off-peak 85th-percentile speed prior to work starting, or the anticipated operating speed in mph

** - Use for taper and tangent sections where there are no pavement markings or where there is a conflict between existing pavement markings and channelizers (CA).

TABLE 2

LONGITUDINAL BUFFER SPACE AND FLAGGER STATION SPACING

SPEED *	Min D **	DOWNGRADE Min D ***		
		-3%	-6%	-9%
mph	ft	ft	ft	ft
20	115	116	120	126
25	155	158	165	173
30	200	205	215	227
35	250	257	271	287
40	305	315	333	354
45	360	378	400	427
50	425	446	474	507
55	495	520	553	593
60	570	598	638	686
65	645	682	728	785
70	730	771	825	891

* - Speed is posted speed limit, off-peak 85th-percentile speed prior to work starting, or the anticipated operating speed in mph

** - Longitudinal buffer space or flagger station spacing

*** - Use on sustained downgrade steeper than -3 percent and longer than 1 mile.

TABLE 3

ADVANCE WARNING SIGN SPACING

ROAD TYPE	DISTANCE BETWEEN SIGNS *		
	A	B	C
	ft	ft	ft
URBAN - 25 mph OR LESS	100	100	100
URBAN - MORE THAN 25 mph TO 40 mph	250	250	250
URBAN - MORE THAN 40 mph	350	350	350
RURAL	500	500	500
EXPRESSWAY / FREEWAY	1000	1500	2640

* - The distances are approximate, are intended for guidance purposes only, and should be applied with engineering judgment. These distances should be adjusted by the Engineer for field conditions, if necessary, by increasing or decreasing the recommmended distances.

STATE OF CALIFORNIA
DEPARTMENT OF TRANSPORTATION

TRAFFIC CONTROL SYSTEM TABLES FOR LANE AND RAMP CLOSURES

NO SCALE

RSP T9 DATED JULY 19, 2013 SUPERSEDES RSP T9 DATED APRIL 19, 2013 THAT SUPPLEMENTS THE STANDARD PLANS BOOK DATED 2010.

REVISED STANDARD PLAN RSP T9

2010 REVISED STANDARD PLAN RSP T9

DATE PLOTTED => 23-JAN-2015
TIME PLOTTED => 12:40

TO ACCOMPANY PLANS DATED 11-26-14

Dist	COUNTY	ROUTE	POST MILES TOTAL PROJECT	SHEET No.	TOTAL SHEETS
02	Sis	5	68.3	85	120

REGISTERED CIVIL ENGINEER

April 19, 2013
PLANS APPROVAL DATE

REGISTERED PROFESSIONAL ENGINEER Gurinderpal Bhullar No. C48815 Exp. 9-30-14 CIVIL STATE OF CALIFORNIA

THE STATE OF CALIFORNIA OR ITS OFFICERS OR AGENTS SHALL NOT BE RESPONSIBLE FOR THE ACCURACY OR COMPLETENESS OF SCANNED COPIES OF THIS PLAN SHEET.

NOTES:

See Revised Standard Plan RSP T9 for tables.

Use cone spacing X for taper segment, Y for tangent segment or Z for conflict situations, as approriate, per Table 1, unless X, Y, or Z cone spacing is shown on this sheet.

Unless otherwise specified in the special provisions, all temporary warning signs shall have black legend on fluorescent orange background.

California codes are designated by (CA). Otherwise, Federal (MUTCD) codes are shown.

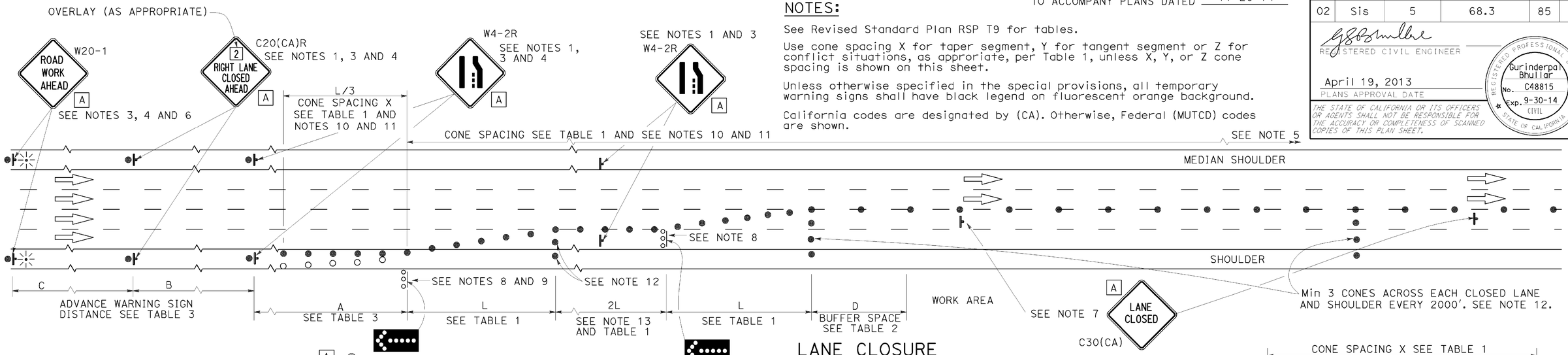

LANE CLOSURE

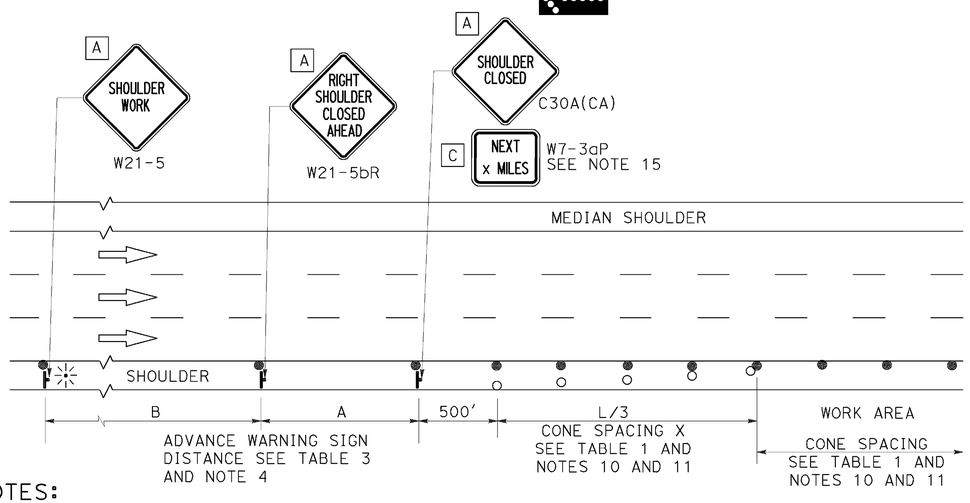

SHOULDER CLOSURE

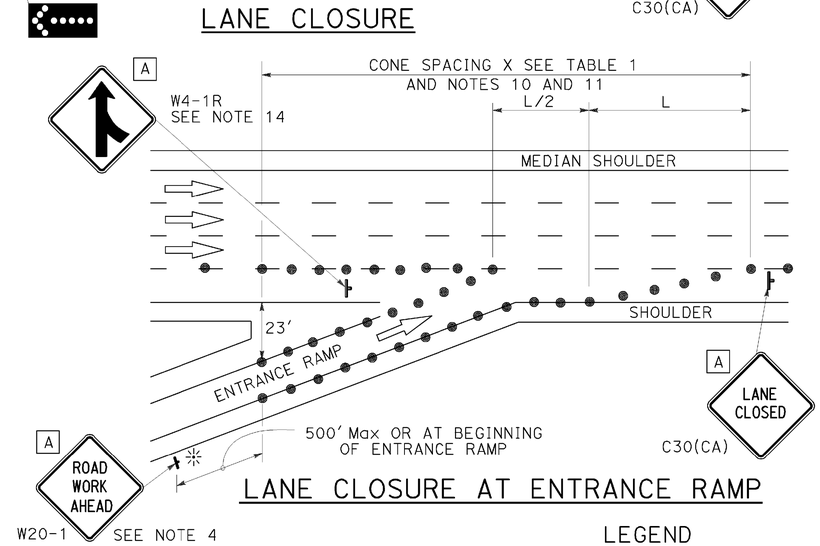

LANE CLOSURE AT ENTRANCE RAMP

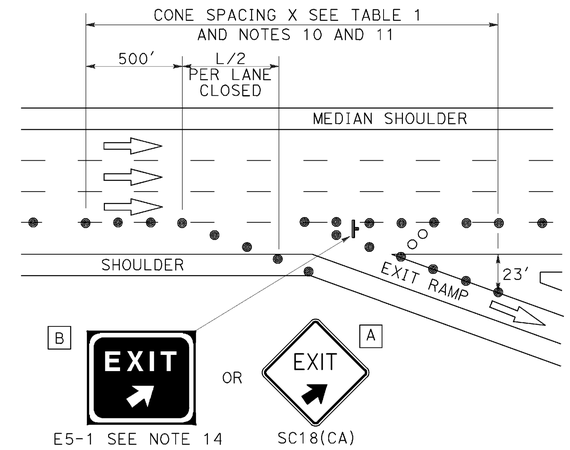

LANE CLOSURE AT EXIT RAMP

NOTES:

1. Median lane closures shall conform to the details as shown except that C20(CA)L and W4-2L signs shall be used.
2. At least one person shall be assigned to provide full time maintenance of traffic control devices for lane closures.
3. Duplicate sign installations are not required:
   a) On opposite shoulder if at least one-half of the available lanes remain open to traffic.
   b) In the median if the width of the median shoulder is less than 8' and the outside lanes are to be closed.
4. Each advance warning sign on each side of the roadway shall be equipped with at least two flags for daytime closure. Each flag shall be at least 16" x 16" in size and shall be orange or fluorescent red-orange in color. Flashing beacons shall be placed at the locations indicated for lane closure during hours of darkness.
5. A G20-2 "END ROAD WORK" sign, with minimum size of 48" x 24" as appropriate, shall be placed at the end of the lane closure unless the end of work area is obvious or ends within a larger project's limits.
6. If the W20-1 sign would follow within 2000' of a stationary W20-1 or G20-1 "ROAD WORK NEXT _____ MILES", use a C20(CA) sign for the first advance warning sign.
7. Place a C30(CA) sign every 2000' throughout length of lane closure.
8. One flashing arrow sign for each lane closed. The flashing arrow signs shall be Type I.
9. A minimum 1500' of sight distance shall be provided where possible for vehicles approaching the first flashing arrow sign. Lane closures shall not begin at top of crest vertical curve or on a horizontal curve.
10. All cones used for lane closures during the hours of darkness shall be fitted with retroreflective bands (or sleeves) as specified in the specifications.
11. Portable delineators, placed at one-half the spacing indicated for traffic cones may be used instead of cones for daytime closures only.
12. Unless otherwise specified in the special provisions, a minimum of 3 cones shall be placed transversely across each closed lane and shoulder at each location where a taper across a traffic lane ends and every 2000' as shown on the "Lane Closure" detail. Two Type II barricades may be used instead of the 3 cones. The transverse alignment of the cones or barricades on the closed shoulder may be shifted from the transverse alignment to provide access to the work.
13. Unless otherwise specified in the special provisions, the 2L tangent shown along lane lines shall be used between the L tapers required for each closed traffic lane.
14. Unless otherwise specified in the special provisions, the E5-1 or SC18(CA) and W4-1 signs shall be used as shown.
15. A W7-3aP "NEXT____ MILES" plaque must be used if theshoulder closure extends beyond the distance that can be perceived by road users.

LEGEND

- TRAFFIC CONE
- TRAFFIC CONE (OPTIONAL TAPER)
- TEMPORARY TRAFFIC CONTROL SIGN
- FLASHING ARROW SIGN (FAS)
- FAS SUPPORT OR TRAILER
- PORTABLE FLASHING BEACON

SIGN PANEL SIZE (Min)

A	48" x 48"
B	72" x 60"
C	36" x 30"

STATE OF CALIFORNIA
DEPARTMENT OF TRANSPORTATION

TRAFFIC CONTROL SYSTEM FOR LANE CLOSURE ON FREEWAYS AND EXPRESSWAYS

NO SCALE

RSP T10 DATED APRIL 19, 2013 SUPERSEDES STANDARD PLAN T10 DATED MAY 20, 2011 - PAGE 237 OF THE STANDARD PLANS BOOK DATED 2010.

REVISED STANDARD PLAN RSP T10

2010 REVISED STANDARD PLAN RSP T10

DATE PLOTTED => 23-JAN-2015
TIME PLOTTED => 12:40

TO ACCOMPANY PLANS DATED 11-26-14

Dist	COUNTY	ROUTE	POST MILES TOTAL PROJECT	SHEET No.	TOTAL SHEETS
02	Sis	5	68.3	86	120

REGISTERED CIVIL ENGINEER

April 19, 2013
PLANS APPROVAL DATE

REGISTERED PROFESSIONAL ENGINEER Gurinderpal Bhullar No. C48815 Exp. 9-30-14 CIVIL STATE OF CALIFORNIA

THE STATE OF CALIFORNIA OR ITS OFFICERS OR AGENTS SHALL NOT BE RESPONSIBLE FOR THE ACCURACY OR COMPLETENESS OF SCANNED COPIES OF THIS PLAN SHEET.

NOTES: See Revised Standard Plan RSP T9 for tables.

Use cone spacing X for taper segment, Y for tangent segment or Z for conflict situations, as approriate, per Table 1, unless X, Y, or Z cone spacing is shown on this sheet.

Unless otherwise specified in the special provisions, all temporary warning signs shall have black legend on fluorescent orange background.

California codes are designated by (CA). Otherwise, Federal (MUTCD) codes are shown.

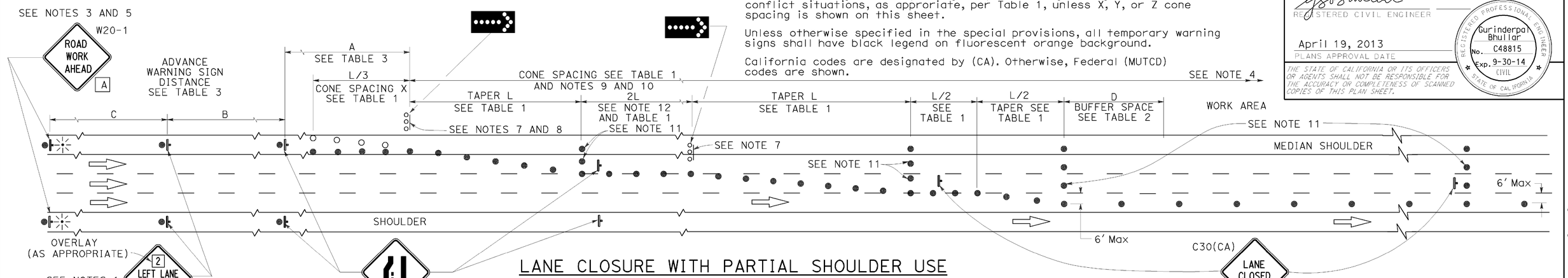

LANE CLOSURE WITH PARTIAL SHOULDER USE

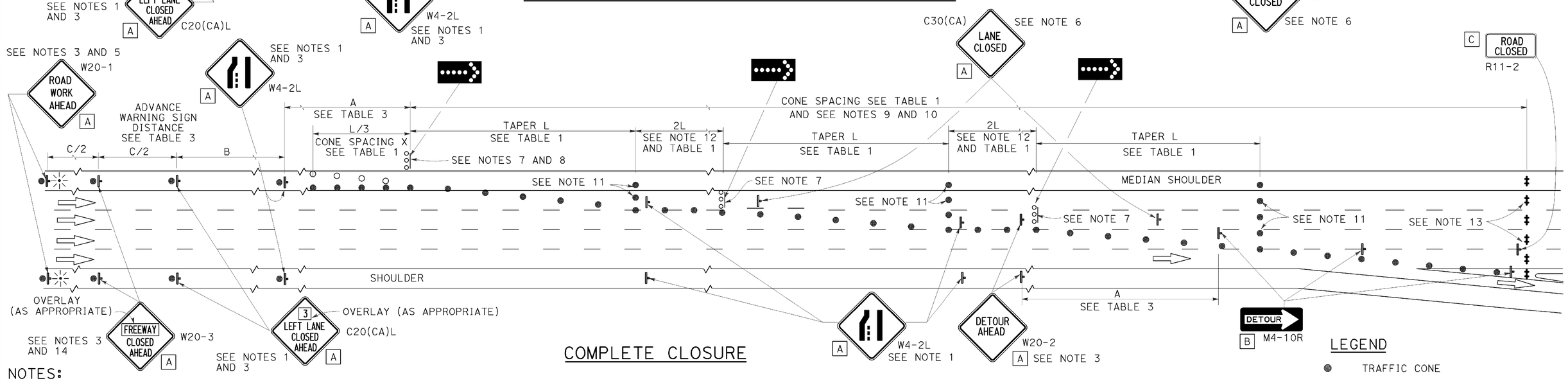

COMPLETE CLOSURE

LEGEND

- TRAFFIC CONE
- TRAFFIC CONE (OPTIONAL TAPER)
- TEMPORARY TRAFFIC CONTROL SIGN
- FLASHING ARROW SIGN (FAS)
- FAS SUPPORT OR TRAILER
- PORTABLE FLASHING BEACON

NOTES:

1. Lane closures on the right side using partial median shoulder as a traffic lane shall conform to the details as shown except that C20(CA)R and W4-2R signs shall be used.
2. At least one person shall be assigned to provide full time maintenance of traffic control devices for lane closures.
3. Each advance warning sign on each side of the roadway shall be equipped with at least two flags for daytime closure. Each flag shall be at least 16" X 16" in size and shall be orange or fluorescent red-orange in color. Flashing beacons shall be placed at the locations indicated for lane closure during hours of darkness.
4. A G20-2 "END ROAD WORK" sign, with minimum size of 48" x 24" as appropriate, shall be placed at the end of the lane closure unless the end of work area is obvious or ends within a larger project's limits.
5. If the W20-1 sign would follow within 2000' of a stationary W20-1 or G20-1 "ROAD WORK NEXT ___ MILES", use a C20(CA) sign for the first advance warning sign.
6. Place a C30(CA) sign every 2000' throughout length of lane closure.
7. One flashing arrow sign for each lane closed. The flashing arrow signs shall be Type I.
8. A minimum 1500' of sight distance shall be provided where possible for vehicles approaching the first flashing arrow sign. Lane closures shall not begin at the top of crest vertical curve or on a horizontal curve.
9. All cones used for lane closures during the hours of darkness shall be fitted with retroreflective bands (or sleeves) as specified in the specifications.
10. Portable delineators, placed at one-half the spacing indicated for traffic cones, may be used instead of cones for daytime closures only.
11. Unless otherwise specified in the special provisions, a minimum of 3 cones shall be placed transversely across each closed lane and shoulder at each location where a taper across a traffic lane ends and every 2000' as shown on the "Lane Closure With Partial Shoulder Use" detail. Two Type II barricades may be used instead of the 3 cones. The transverse alignment of the cones or barricades on the closed shoulder may be shifted from the transverse alignment to provide access to the work.
12. Unless otherwise specified in the special provisions, the 2L tangent shown along lane lines shall be used between the L tapers required for each closed traffic lane.
13. A minimum of Two Type II or III barricades shall be placed across each closed lane and shoulder at the location shown and every 2000' within the complete closure area. Within the complete closure area, the transverse alignment of the barricades on the closed shoulder may be shifted from the transverse alignment to provide access to the work.
14. When specified in the special provisions, a W20-2 "DETOUR AHEAD" sign is to be used in place of the W20-3 "FREEWAY CLOSED AHEAD" sign.

SIGN PANEL SIZE (Min)

A	48" x 48"
B	48" x 18"
C	48" x 30"

STATE OF CALIFORNIA
DEPARTMENT OF TRANSPORTATION

TRAFFIC CONTROL SYSTEM FOR LANE CLOSURES ON FREEWAYS AND EXPRESSWAYS

NO SCALE

RSP T10A DATED APRIL 19, 2013 SUPERSEDES STANDARD PLAN T10A DATED MAY 20, 2011 - PAGE 238 OF THE STANDARD PLANS BOOK DATED 2010.

REVISED STANDARD PLAN RSP T10A

2010 REVISED STANDARD PLAN RSP T10A

DATE PLOTTED => 23-JAN-2015
TIME PLOTTED => 12:41

Dist	COUNTY	ROUTE	POST MILES TOTAL PROJECT	SHEET No.	TOTAL SHEETS
02	Sis	5	68.3	87	120

Devinder Singh
REGISTERED CIVIL ENGINEER

October 17, 2014
PLANS APPROVAL DATE

REGISTERED PROFESSIONAL ENGINEER
Devinder Singh
No. C50470
Exp. 6-30-15
CIVIL
STATE OF CALIFORNIA

THE STATE OF CALIFORNIA OR ITS OFFICERS OR AGENTS SHALL NOT BE RESPONSIBLE FOR THE ACCURACY OR COMPLETENESS OF SCANNED COPIES OF THIS PLAN SHEET.

TO ACCOMPANY PLANS DATED 11-26-14

NOTES:

See Revised Standard Plan RSP T9 for tables.

Use cone spacing X for taper segment, Y for tangent segment or Z for conflict situations, as approriate, per Table 1, unless X, Y, or Z cone spacing is shown on this sheet.

Unless otherwise specified in the special provisions, all temporary warning signs shall have black legend on fluorescent orange background.

California codes are designated by (CA). Otherwise, Federal (MUTCD) codes are shown.

TYPICAL LANE CLOSURE WITH REVERSIBLE CONTROL

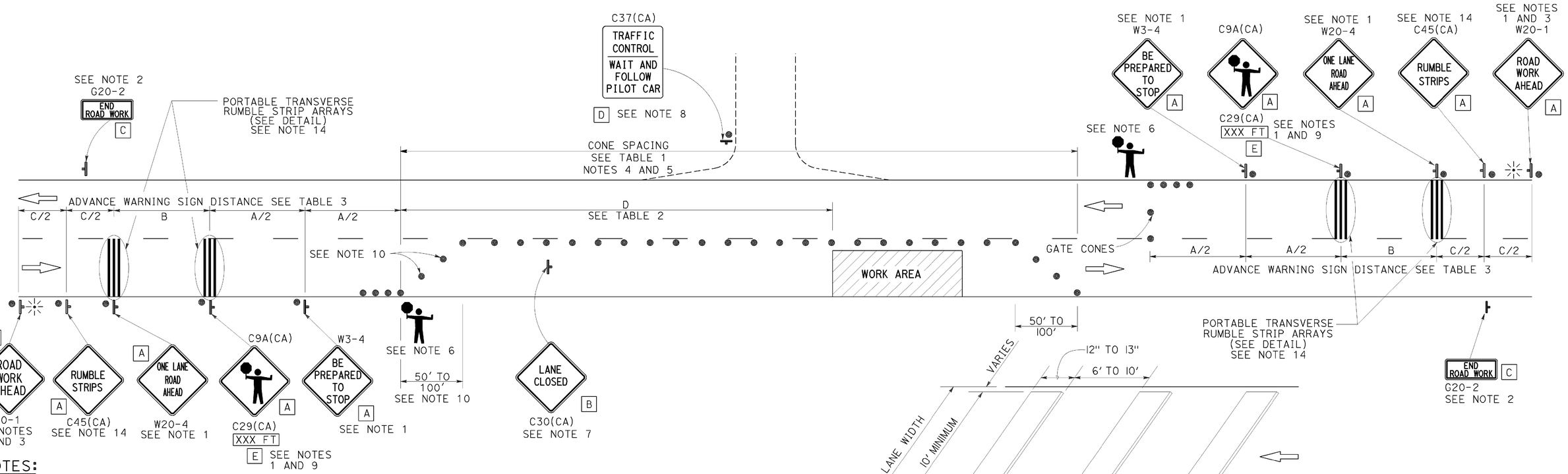

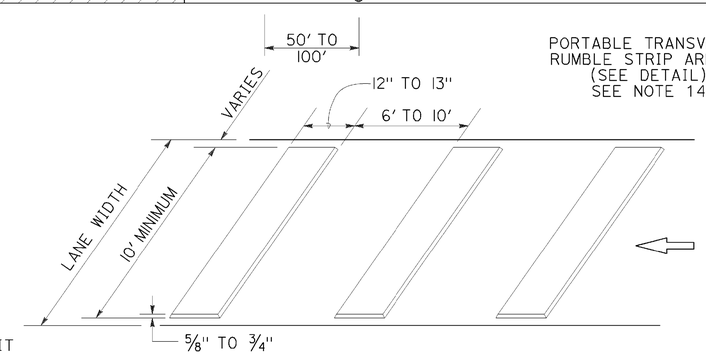

PORTABLE TRANSVERSE RUMBLE STRIP ARRAY DETAIL

NOTES:

1. Each advance warning sign in each direction of travel shall be equipped with at least two flags for daytime closure. Each flag shall be at least 16" x 16" in size and shall be orange or fluorescent red-orange in color. Flashing beacons shall be placed at the locations indicated for lane closure during hours of darkness.
2. A G20-2 "END ROAD WORK" sign, as appropriate, shall be placed at the end of the lane control unless the end of work area is obvious, or ends within a larger project's limits.
3. If the W20-1 sign would follow within 2000' of a stationary W20-1 or G20-1 "ROAD WORK NEXT _____ MILES", use a W20-4 sign for the first advance warning sign.
4. All cones used for lane closures during the hours of darkness shall be fitted with retroreflective bands (or sleeves) as specified in the specifications.
5. Portable delineators, placed at one-half the spacing indicated for traffic cones, may be used instead of cones for daytime closures only.
6. Additional advance flaggers may be required. Flagger should stand in a conspicuous place, be visible to approaching traffic as well as approaching vehicles after the first vehicle has stopped. During the hours of darkness, the flagging-station and flagger shall be illuminated and clearly visible to approaching traffic. The illumination footprint of the lighting on the ground shall be at least 20' in diameter. Place a minimum of four cones at 50' intervals in advance of flagger station as shown.
7. Place C30(CA) "LANE CLOSED" sign at 500' to 1000' intervals throughout extended work areas. They are optional if the work area is visible from the flagger station.
8. When a pilot car is used, place a C37(CA) "TRAFFIC CONTROL-WAIT AND FOLLOW PILOT CAR" sign with black legend on white background at all intersections, driveways and alleys without a flagger within traffic control area. Signs shall be clean and visible at all times. Where traffic can not be effectively self-regulated, at least one flagger shall be used at each intersection within traffic control area.
9. An optional C29(CA) sign may be placed below the C9A(CA) sign.
10. Either traffic cones or barricades shall be placed on the taper. Barricades shall be Type I, II, or III.
11. The color of the portable transverse rumble strips shall be black or orange. Use 2 arrays, each array shall consist of 3 rumble strips.
12. Portable transverse rumble strips shall not be placed on sharp horizontal or vertical curves nor shall they be placed through pedestrian crossings.
13. If the portable transverse rumble strips become out of alignment (skewed) by more than 6 inches, measured from one end to the other, they shall be readjusted to bring the placement back to the original location.
14. Portable transverse rumble strips are not required if any one of the following conditions is satisfied:
    A. Work duration occupies a location for four hours or less
    B. Posted speed limit is below 45 MPH
    C. Work is of emergency nature
    D. Work zone is in snow or icy weather conditions

LEGEND

- TRAFFIC CONE
- TEMPORARY TRAFFIC CONTROL SIGN
- PORTABLE FLASHING BEACON
- FLAGGER

SIGN PANEL SIZE (Min)

A	48" x 48"
B	30" x 30"
C	36" x 18"
D	36" x 42"
E	20" x 7"

STATE OF CALIFORNIA
DEPARTMENT OF TRANSPORTATION

TRAFFIC CONTROL SYSTEM FOR LANE CLOSURE ON TWO LANE CONVENTIONAL HIGHWAYS

NO SCALE

RSP T13 DATED OCTOBER 17, 2014 SUPERSEDES RSP T13 DATED JULY 18, 2014 AND RSP T13 DATED APRIL 19, 2013 AND STANDARD PLAN T13 DATED MAY 20, 2011 - PAGE 241 OF THE STANDARD PLANS BOOK DATED 2010.

REVISED STANDARD PLAN RSP T13

2010 REVISED STANDARD PLAN RSP T13

DATE PLOTTED => 23-JAN-2015
TIME PLOTTED => 12:41

Dist	COUNTY	ROUTE	POST MILES TOTAL PROJECT	SHEET No.	TOTAL SHEETS
02	Sis	5	68.3	88	120

REGISTERED CIVIL ENGINEER

April 19, 2013
PLANS APPROVAL DATE

REGISTERED PROFESSIONAL ENGINEER Gurinderpal Bhullar No. C48815 Exp. 9-30-14 CIVIL STATE OF CALIFORNIA

THE STATE OF CALIFORNIA OR ITS OFFICERS OR AGENTS SHALL NOT BE RESPONSIBLE FOR THE ACCURACY OR COMPLETENESS OF SCANNED COPIES OF THIS PLAN SHEET.

TO ACCOMPANY PLANS DATED 11-26-14

TYPICAL RAMP CLOSURES

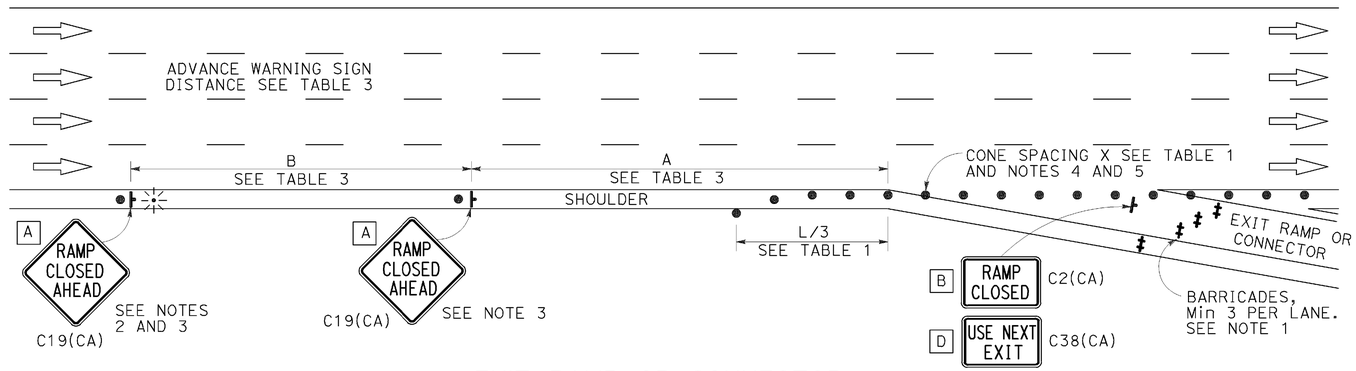

EXIT RAMP OR CONNECTOR

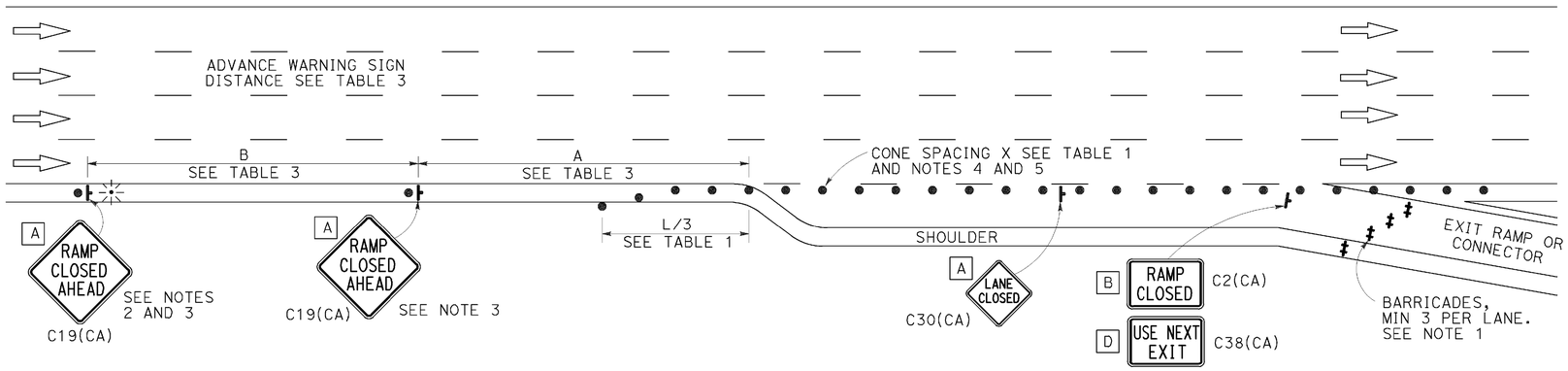

EXIT RAMP OR CONNECTOR WITH ADDITIONAL LANE

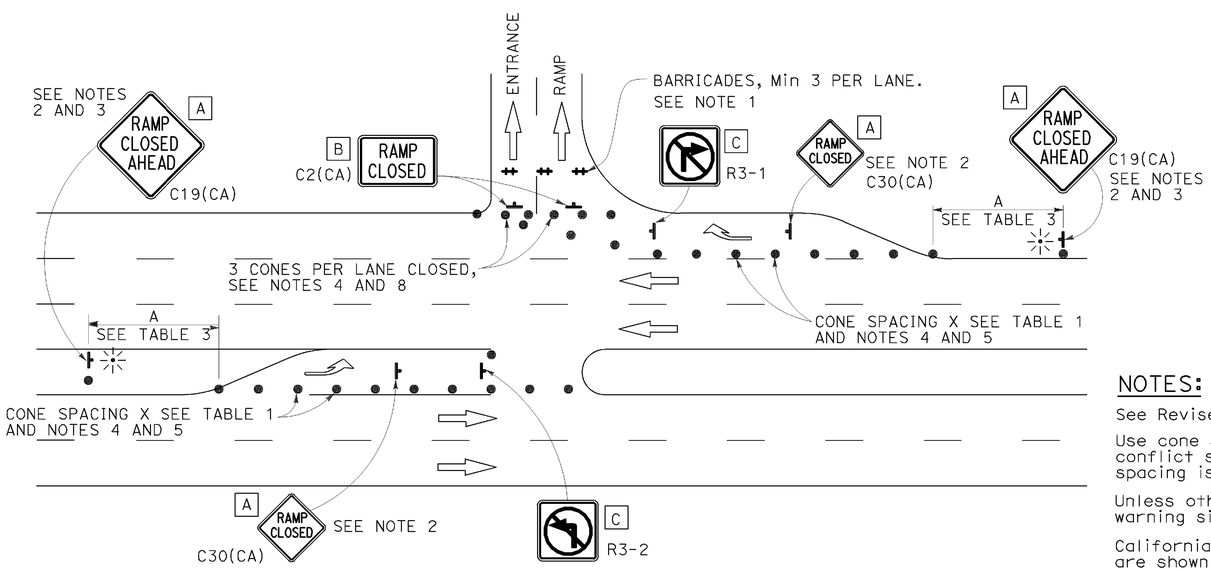

ENTRANCE RAMP WITH TURNING POCKETS

SIGN PANEL SIZE (Min)

- A 48" × 48"
- B 48" × 30"
- C 36" × 36"
- D 48" × 36"

LEGEND

- TRAFFIC CONE
- TEMPORARY TRAFFIC CONTROL SIGN
- BARRICADES
- PORTABLE FLASHING BEACON

NOTES:

1. Barricades shall be Type I, II, or III for closures lasting one week or less and Type III for closures lasting longer than one week.
2. In addition to placing the C19(CA) "RAMP CLOSED AHEAD" and C30(CA) "RAMP CLOSED" signs, black on orange overlay plates with the word "CLOSED" may be mounted, as directed by the Engineer, on all guide signs that refer to the closed ramp. The letter size on the overlay shall be the same as the guide sign.
3. Each advance C19(CA) "RAMP CLOSED AHEAD" sign shall be equipped with at least two flags for daytime closure. Each flag shall be at least 16" × 16" in size and shall be orange or fluorescent red-orange in color. A flashing beacon shall be placed on top of the first C19(CA) sign during hours of darkness.
4. All cones used for ramp closures during the hours of darkness shall be fitted with retroreflective bands (or sleeves) as specified in the specifications.
5. Portable delineators, placed at one-half the spacing indicated for traffic cones, may be used instead of cones for daytime ramp closures only.
6. At least one person shall be assigned to provide full time maintenance of traffic control devices, unless otherwise directed by the Engineer.
7. The existing "EXIT" signs shall be covered during ramp closures.
8. A minimum of 3 cones shall be placed transversely across each closed lane and shoulder.

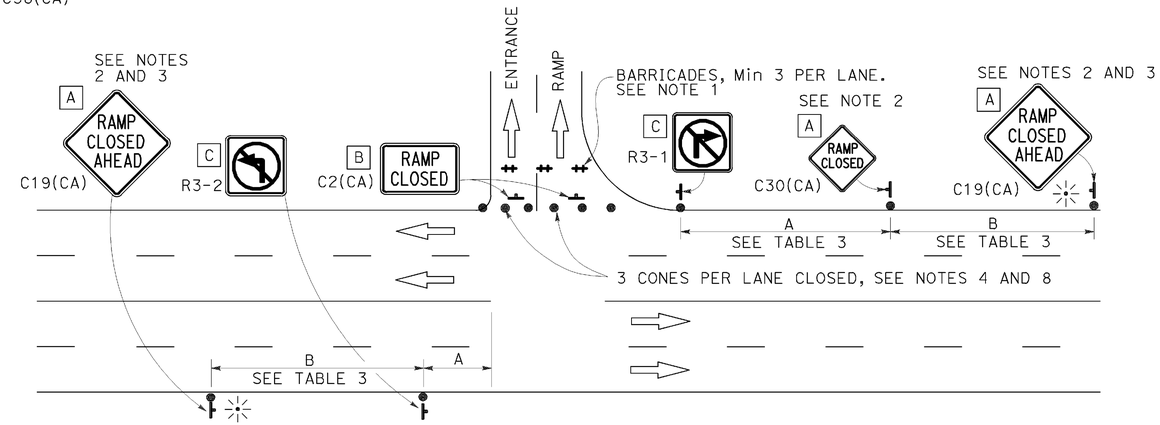

ENTRANCE RAMP WITHOUT TURNING POCKETS

NOTES:

See Revised Standard Plan RSP T9 for tables.

Use cone spacing X for taper segment, Y for tangent segment or Z for conflict situations, as approriate, per Table 1, unless X, Y, or Z cone spacing is shown on this sheet.

Unless otherwise specified in the special provisions, all temporary warning signs shall have black legend on fluorescent orange background.

California codes are designated by (CA). Otherwise, Federal (MUTCD) codes are shown.

STATE OF CALIFORNIA
DEPARTMENT OF TRANSPORTATION

TRAFFIC CONTROL SYSTEM FOR RAMP CLOSURE

NO SCALE

RSP T14 DATED APRIL 19, 2013 SUPERSEDES STANDARD PLAN T14
DATED MAY 20, 2011 - PAGE 242 OF THE STANDARD PLANS BOOK DATED 2010.

REVISED STANDARD PLAN RSP T14

2010 REVISED STANDARD PLAN RSP T14

DATE PLOTTED => 23-JAN-2015
TIME PLOTTED => 12:41

Dist	COUNTY	ROUTE	POST MILES TOTAL PROJECT	SHEET No.	TOTAL SHEETS
02	Sis	5	68.3	89	120

REGISTERED CIVIL ENGINEER

April 19, 2013
PLANS APPROVAL DATE

REGISTERED PROFESSIONAL ENGINEER Gurinderpal Bhullar No. C48815 Exp. 9-30-14 CIVIL STATE OF CALIFORNIA

THE STATE OF CALIFORNIA OR ITS OFFICERS OR AGENTS SHALL NOT BE RESPONSIBLE FOR THE ACCURACY OR COMPLETENESS OF SCANNED COPIES OF THIS PLAN SHEET.

TO ACCOMPANY PLANS DATED 11-26-14

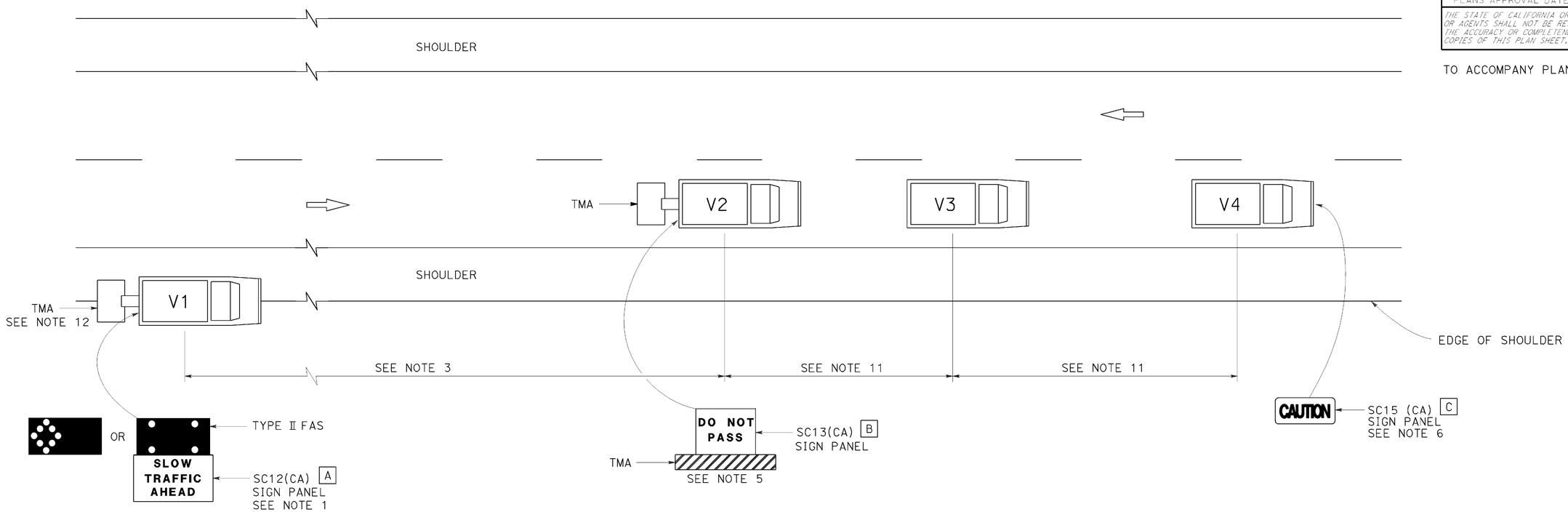

LEGEND

V1	SIGN VEHICLE
V2	SHADOW VEHICLE
V3	WORK/APPLICATION VEHICLE
V4	SIGN VEHICLE
TMA	TRUCK-MOUNTED ATTENUATOR
	FLASHING ARROW SIGN (FAS) IN FLASHING CAUTION MODE
	FLASHING ARROW SIGN (FAS) IN ALTERNATING DIAMOND CAUTION

SIGN PANEL SIZE (Min)

A	72" x 42"
B	54" x 42"
C	54" x 24"

NOTES:

1. Either a changeable message sign or a SC12(CA) "SLOW TRAFFIC AHEAD" sign shall be mounted on the rear of sign vehicle V1. The changeable message sign shall be sequenced to show the "CAUTION" message first, follow by the "SLOW TRAFFIC AHEAD" message. A Type II flashing arrow sign may be used with the SC12(CA) sign panel.
2. Sign vehicle V1 should be positioned where highly visible when shoulders are not available.
3. If traffic queues develop, sign vehicle V1 should be positioned upstream from the end of queue.
4. Vehicle-mounted sign panels shall have Type III or above retroreflective sheeting, black on white, or black on fluorescent orange, with 6" minimum series D letters per Caltrans sign specifications.
5. Shadow vehicle shall be equipped with a truck-mounted attenuator. The sign panel shown shall be mounted on the rear of shadow vehicle V2. The message "LANE CLOSED" may be used in place of the "DO NOT PASS" message.
6. The sign panel shown shall be mounted on the front of sign vehicle V4, facing opposing traffic.
7. All vehicles shall be equipped with flashing or rotating amber lights.
8. Sign vehicle V4 will not be required when the work and vehicles V2 and V3 are 2′ or more from the centerline of the highway during the work or application operations.
9. All vehicles used for lane closures shall be equipped with two-way radios and the vehicle operators shall maintain communication during the work or application operation.
10. This plan shall not be used where workers would be on foot in the work area. Use a stationary type lane closure (Revised Standard Plan T13) for this condition.
11. Minimize spacing between vehicles V2 and V3 and vehicles V3 and V4 to deter road users from driving in between them.
12. If sign vehicle V1 encroaches into the traffic lane due to insufficient shoulder width, sign vehicle V1 shall be equipped with a truck-mounted attenuator. Sign vehicle V1 shall stay as close to the edge of shoulder as practicable.

STATE OF CALIFORNIA
DEPARTMENT OF TRANSPORTATION

TRAFFIC CONTROL SYSTEM FOR MOVING LANE CLOSURE ON TWO LANE HIGHWAYS

NO SCALE

RSP T17 DATED APRIL 19, 2013 SUPERSEDES STANDARD PLAN T17
DATED MAY 20, 2011 - PAGE 245 OF THE STANDARD PLANS BOOK DATED 2010.

REVISED STANDARD PLAN RSP T17

2010 REVISED STANDARD PLAN RSP T17

DATE PLOTTED => 23-JAN-2015
TIME PLOTTED => 12:41

Dist	COUNTY	ROUTE	POST MILES TOTAL PROJECT	SHEET No.	TOTAL SHEETS
02	Sis	5	68.3	90	120

REGISTERED CIVIL ENGINEER

November 15, 2013
PLANS APPROVAL DATE

REGISTERED PROFESSIONAL ENGINEER — Tillat Satter, No. C42892, Exp. 3-31-14, CIVIL, STATE OF CALIFORNIA

THE STATE OF CALIFORNIA OR ITS OFFICERS OR AGENTS SHALL NOT BE RESPONSIBLE FOR THE ACCURACY OR COMPLETENESS OF SCANNED COPIES OF THIS PLAN SHEET.

TO ACCOMPANY PLANS DATED 11-26-14

2010 REVISED STANDARD PLAN RSP B11-56

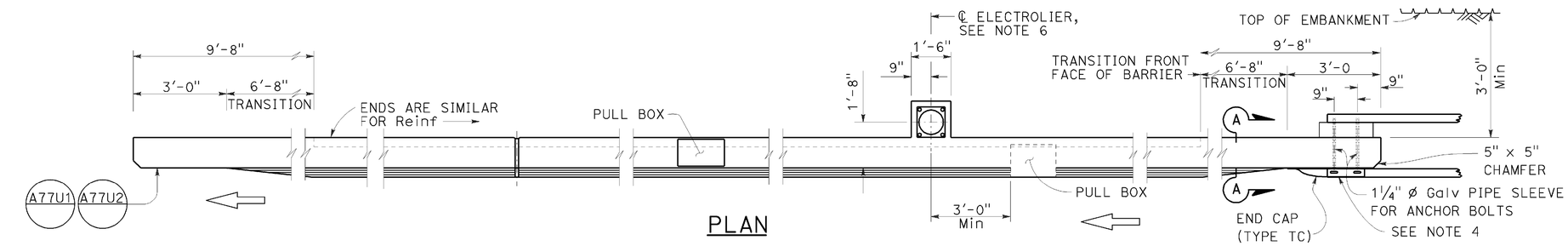

PLAN

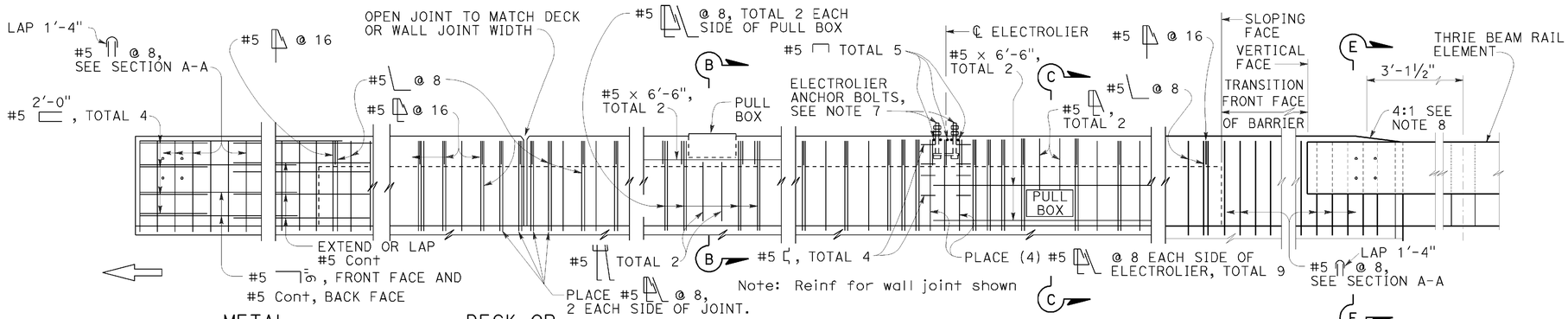

ELEVATION

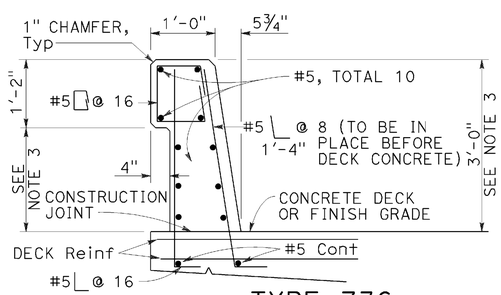

TYPE 736

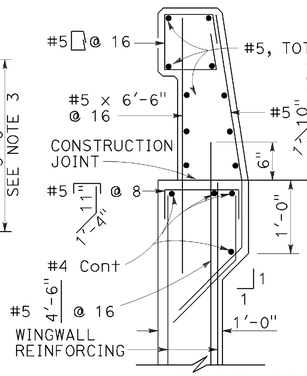

TYPE 736A

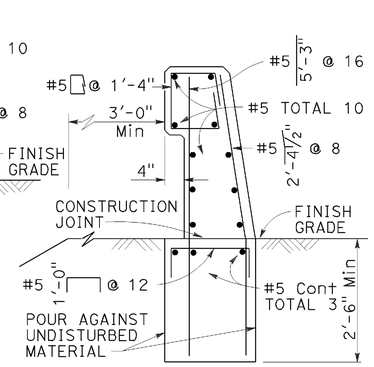

TYPE 736B

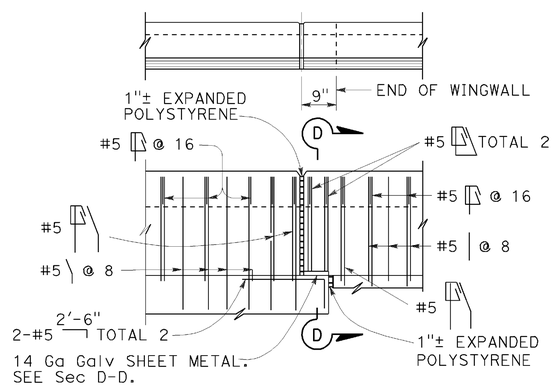

TYPE 736A TYPE 736B

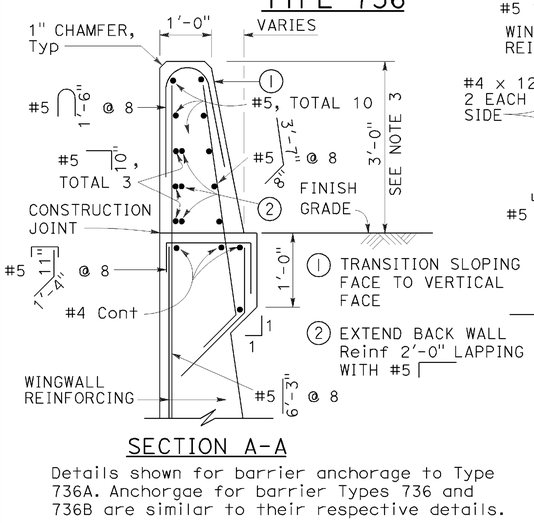

SECTION A-A

Details shown for barrier anchorage to Type 736A. Anchorgae for barrier Types 736 and 736B are similar to their respective details.

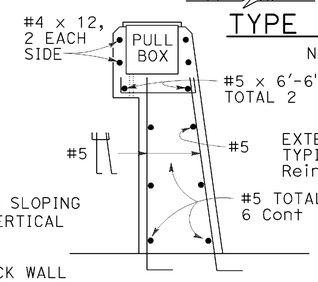

SECTION B-B

Note: Types 736A & 736B are similar to Type 736 except as noted

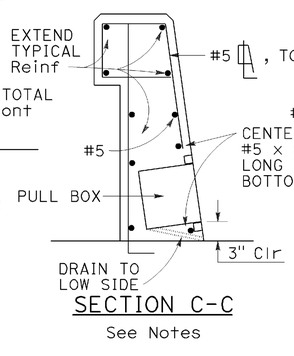

SECTION C-C

See Notes

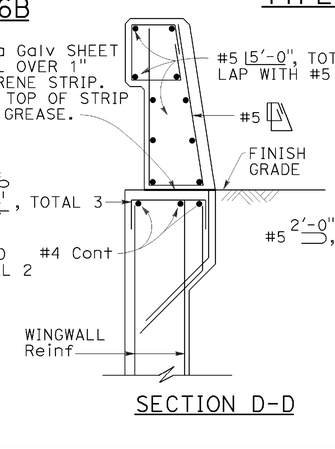

SECTION D-D

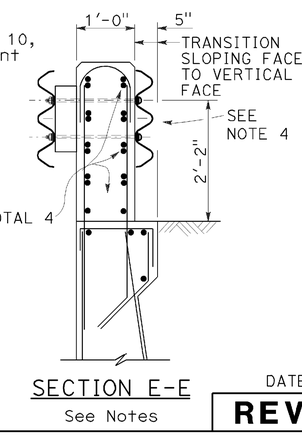

SECTION E-E

See Notes

NOTES:

1. Walls are to be backfilled before barrier is placed.
2. Clearance to reinforcing steel in barrier to be 1", except as noted. Longitudinal reinforcement to stop at all expansion joints.
3. Dimensions may vary with roadway cross slope and with certain thickness of surfacing. See Project Plans.
4. For typical metal railing connection details not shown, see Revised Standard Plans RSP A77U1 and RSP A77U2.
5. See Standard Plans ES-9A, ES-9B, ES-9C, ES-9D and ES-9E for electrical details. The maximum number of conduits in the barrier is limited to two 2" conduits along with one 3" conduit. When a 3" conduit is used, it is restricted to the base of the barrier.
6. For electrolier mounting details, See Standard Plans ES-6A and ES-6B.
7. Minimum concrete edge distance, to the reinforcing shown, shall be maintained. Edge distance may be adjusted to accommodate increase in concrete cover for architectual treatment.
8. Taper the top of the end of the bridge railing at 4:1 to match the top elevation of the thrie beam rail element.

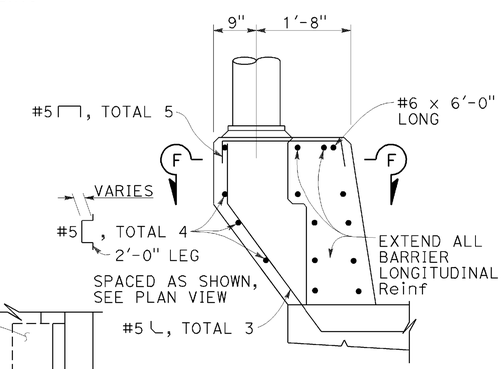

PEDESTAL ELEVATION

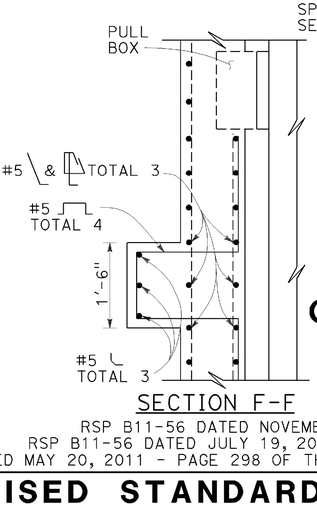

SECTION F-F

STATE OF CALIFORNIA
DEPARTMENT OF TRANSPORTATION

CONCRETE BARRIER TYPE 736

NO SCALE

RSP B11-56 DATED NOVEMBER 15, 2013 SUPERSEDES RSP B11-56 DATED JULY 19, 2013 AND STANDARD PLAN B11-56 DATED MAY 20, 2011 - PAGE 298 OF THE STANDARD PLANS BOOK DATED 2010.

REVISED STANDARD PLAN RSP B11-56

DATE PLOTTED => 23-JAN-2015
TIME PLOTTED => 12:41

Dist	COUNTY	ROUTE	POST MILES TOTAL PROJECT	SHEET No.	TOTAL SHEETS
02	Sis	5	68.3	91	120

Theresa Gabriel
REGISTERED ELECTRICAL ENGINEER

July 19, 2013
PLANS APPROVAL DATE

REGISTERED PROFESSIONAL ENGINEER Theresa Aziz Gabriel No. E15129 Exp. 6-30-14 ELECTRICAL STATE OF CALIFORNIA

THE STATE OF CALIFORNIA OR ITS OFFICERS OR AGENTS SHALL NOT BE RESPONSIBLE FOR THE ACCURACY OR COMPLETENESS OF SCANNED COPIES OF THIS PLAN SHEET.

TO ACCOMPANY PLANS DATED 11-26-14

LEGEND:

AB	ABANDON. IF APPLIED TO CONDUIT, REMOVE CONDUCTORS
BC	INSTALL PULL BOX IN EXISTING CONDUIT RUN
BP	PEDESTRIAN BARRICADE, TYPE AS INDICATED ON PLAN
CB	INSTALL CONDUIT INTO EXISTING PULL BOX
CC	CONNECT NEW AND EXISTING CONDUIT. REMOVE EXISTING CONDUCTORS AND INSTALL CONDUCTORS AS INDICATED
CF	CONDUIT TO REMAIN FOR FUTURE USE. REMOVE CONDUCTORS. INSTALL PULL TAPE
DH	DETECTOR HANDHOLE
FA	FOUNDATION TO BE ABANDONED
IS	INSTALL SIGN ON SIGNAL MAST ARM
NS	NO SLIP BASE ON STANDARD
PEC	PHOTOELECTRIC CONTROL
PEU	PHOTOELECTRIC UNIT
RC	EQUIPMENT OR MATERIAL TO BE REMOVED AND BECOME THE PROPERTY OF THE CONTRACTOR
RE	REMOVE ELECTROLIER, FUSES AND BALLAST. TAPE ENDS OF CONDUCTORS
RL	RELOCATE EQUIPMENT
RR	REMOVE AND REUSE EQUIPMENT
RS	REMOVE AND SALVAGE EQUIPMENT
SC	SPLICE NEW TO EXISTING CONDUCTORS
SD	SERVICE DISCONNECT
TSP	TELEPHONE SERVICE POINT

ABBREVIATIONS

APS	ACCESSIBLE PEDESTRIAN SIGNAL
BBS	BATTERY BACKUP SYSTEM
BC	BOLT CIRCLE
BPB	BICYCLE PUSH BUTTON
C	CONDUIT
CB	CIRCUIT BREAKER
CCTV	CLOSED CIRCUIT TELEVISION
Ckt	CIRCUIT
CMS	CHANGEABLE MESSAGE SIGN
Ctid	CALTRANS IDENTIFICATION
Comm	COMMUNICATION
DLC	LOOP DETECTOR LEAD-IN CABLE
EMS	EXTINGUISHABLE MESSAGE SIGN
EVUC	EMERGENCY VEHICLE UNIT CABLE
EVUD	EMERGENCY VEHICLE UNIT DETECTOR
FB	FLASHING BEACON
FBCA	FLASHING BEACON CONTROL ASSEMBLY
FBS	FLASHING BEACON WITH SLIP BASE
FO	FIBER OPTIC
G	EQUIPMENT GROUNDING CONDUCTOR
GB	GROUND BUS
GFCI	GROUND FAULT CIRCUIT INTERRUPTER
HAR	HIGHWAY ADVISORY RADIO
Hex	HEXAGONAL
HPS	HIGH PRESSURE SODIUM
IISNS	INTERNALLY ILLUMINATED STREET NAME SIGN
ISL	INDUCTION SIGN LIGHTING
LED	LIGHT EMITTING DIODE
LMA	LUMINAIRE MAST ARM
LPS	LOW PRESSURE SODIUM
Ltg	LIGHTING
Lum	LUMINAIRE
M	METERED
MAT	MAST ARM MOUNTING TOP ATTACHMENT
MAS	MAST ARM MOUNTING SIDE ATTACHMENT
M/M	MULTIPLE TO MULTIPLE TRANSFORMER
Mtg	MOUNTING
MV	MERCURY VAPOR LIGHTING FIXTURE
MVDS	MICROWAVE VEHICLE DETECTION SYSTEM
N	NEUTRAL (GROUNDED CONDUCTOR)
NB	NEUTRAL BUS
NC	NORMALLY CLOSE
NO	NORMALLY OPEN
P	CIRCUIT BREAKER'S POLE
PB	PULL BOX
PBA	PUSH BUTTON ASSEMBLY
PEC	PHOTOELECTRIC CONTROL
Ped	PEDESTRIAN
PEU	PHOTOELECTRIC UNIT
PT	CONDUIT WITH PULL TAPE
RE	RELOCATED EQUIPMENT
RM	RAMP METERING
RWIS	ROADSIDE WEATHER INFORMATION SYSTEM
SB	SLIP BASE
SIC	SIGNAL INTERCONNECT CABLE
Sig	SIGNAL
SMA	SIGNAL MAST ARM
SNS	STREET NAME SIGN
SP	SERVICE POINT
TDC	TELEPHONE DEMARCATION CABINET
TMS	TRAFFIC MONITORING STATION
TOS	TRAFFIC OPERATIONS SYSTEM
Veh	VEHICLE
VIVDS	VIDEO IMAGE VEHICLE DETECTION SYSTEM
WIM	WEIGH-IN-MOTION
Xfmr	TRANSFORMER

SOFFIT AND WALL MOUNTED LUMINAIRES

PENDANT, 70 W HPS UNLESS OTHERWISE SPECIFIED

FLUSH, 70 W HPS UNLESS OTHERWISE SPECIFIED

WALL SURFACE, 70 W HPS UNLESS OTHERWISE SPECIFIED

EXISTING SOFFIT OR WALL LUMINAIRE TO REMAIN UNMODIFIED

EXISTING SOFFIT OR WALL LUMINAIRE TO BE MODIFIED AS SPECIFIED

NOTE:
Arrow indicates "street side" of luminaire.

COMMONLY USED SYMBOLS FOR UNITED STATES CUSTOMARY UNITS OF MEASUREMENT:

SYMBOL USED	DEFINITIONS
Ω	OHMS
min	MINUTE
s	SECOND
bps	BITS PER SECOND
Bps	BYTES PER SECOND
A	AMPERE
V	VOLT
V(dc)	VOLT (DIRECT CURRENT)
V(ac)	VOLT (ALTERNATING CURRENT)
FC	FOOT - CANDLE
W	WATTS
VA	VOLT-AMPERE
M	MEGA
k	KILO
m	MILLI
μ	MICRO
P	PICO
Hz	HERTZ

MISCELLANEOUS ELECTROLIERS

NEW	EXISTING	
		LUMINAIRE ON WOOD POLE
		NON-STANDARD ELECTROLIER (SEE PROJECT NOTES OR PROJECT PLANS)
		CITY ELECTROLIER
		ELECTROLIER FOUNDATION (FUTURE INSTALLATION)

NOTES:

1. HPS luminaires shall be 310 W HPS when installed on Type 21, 21D, 30, 31 and 32 Standards, unless otherwise specified. HPS luminaires shall be 200 W when installed on other type standards or poles, unless otherwise specified.
2. LED luminaires shall be 235 W when installed on Type 21, 21D, 30, 31 and 32 Standards, unless otherwise specified. LED luminaires shall be 165 W when installed on other type standards or poles, unless otherwise specified.
3. Luminaires shall be the cutoff type, ANSI Type III medium cutoff lighting distribution, unless otherwise specified.

STANDARD ELECTROLIER

NEW	EXISTING	STANDARD TYPE
		15
		15D
		15 STRUCTURE
		15D STRUCTURE
		21
		21D
		21 STRUCTURE
		21D STRUCTURE
		30
		31
		32

STATE OF CALIFORNIA
DEPARTMENT OF TRANSPORTATION

ELECTRICAL SYSTEMS (LEGEND AND ABBREVIATIONS)

NO SCALE

RSP ES-1A DATED JULY 19, 2013 SUPERSEDES STANDARD PLAN ES-1A DATED MAY 20, 2011 - PAGE 425 OF THE STANDARD PLANS BOOK DATED 2010.

REVISED STANDARD PLAN RSP ES-1A

2010 REVISED STANDARD PLAN RSP ES-1A

DATE PLOTTED => 23-JAN-2015
TIME PLOTTED => 12:41

Dist	COUNTY	ROUTE	POST MILES TOTAL PROJECT	SHEET No.	TOTAL SHEETS
02	Sis	5	68.3	92	120

Theresa Gabriel
REGISTERED ELECTRICAL ENGINEER

July 19, 2013
PLANS APPROVAL DATE

Theresa Aziz Gabriel No. E15129 Exp. 6-30-14 ELECTRICAL — REGISTERED PROFESSIONAL ENGINEER — STATE OF CALIFORNIA

THE STATE OF CALIFORNIA OR ITS OFFICERS OR AGENTS SHALL NOT BE RESPONSIBLE FOR THE ACCURACY OR COMPLETENESS OF SCANNED COPIES OF THIS PLAN SHEET.

TO ACCOMPANY PLANS DATED 11-26-14

CONDUIT

NEW	EXISTING	
		LIGHTING CONDUIT, UNLESS OTHERWISE INDICATED OR NOTED
		TRAFFIC SIGNAL CONDUIT
C	c	COMMUNICATION CONDUIT
T	t	TELEPHONE CONDUIT
F	f	FIRE ALARM CONDUIT
FO	fo	FIBER OPTIC CONDUIT
		CONDUIT TERMINATION
R	r	CONDUIT RISER ATTACHED TO THE STRUCTURE OR SERVICE POLE

SERVICE EQUIPMENT

NEW	EXISTING	
OH	oh	OVERHEAD LINES
U	U	WOOD POLE, "U" INDICATES UTILITY OWNED
		POLE GUY WITH ANCHOR
		UTILITY TRANSFORMER - GROUND MOUNTED
III	III	SERVICE EQUIPMENT ENCLOSURE TYPE. DOOR INDICATES FRONT OF ENCLOSURE
T	t	TELEPHONE DEMARCATION CABINET

POLE-MOUNTED SERVICE DESIGNATION

TYPE H SERVICE, 28'-10" — TYPE OF INSTALLATION AND POLE HEIGHT ABOVE GRADE

FLASHING BEACON

NEW	EXISTING	
R	R	FLASHING BEACON (ONE VEHICLE SIGNAL HEAD WITH BACKPLATE AND VISOR) "R" INDICATES RED INDICATION, "Y" INDICATES YELLOW INDICATION
Y Y	Y Y	FLASHING BEACON WITH TYPE 15-FBS STANDARD AND A SIGN.
R R	R R	FLASHING BEACON WITH TYPES 9, 9A OR 9B SIGN UNLESS OTHERWISE SPECIFIED OR INDICATED

SIGNAL EQUIPMENT

NEW	EXISTING	
C	C	PEDESTRIAN SIGNAL HEAD "C" INDICATES COUNTDOWN PEDESTRIAN HEAD
		PUSH BUTTON ASSEMBLY POST
		PEDESTRIAN BARRICADE
		VEHICLE SIGNAL HEAD (WITH BACKPLATE AND 3-SECTIONS: RED, YELLOW AND GREEN)
		VEHICLE SIGNAL HEAD WITH ANGLE VISOR
PV	PV	MODIFICATIONS OF BASIC SYMBOL: "L" INDICATES ALL NON-ARROW SECTIONS LOUVERED "LG" INDICATES LOUVERED GREEN SECTION ONLY "PV" INDICATES ALL 12" SECTIONS PROGRAMMED VISIBILITY "8" INDICATES ALL 8" SECTIONS (ONLY WHEN SPECIFIED)
		VEHICLE SIGNAL HEAD CONSISTING OF RED, YELLOW AND GREEN LEFT ARROW SECTIONS
		VEHICLE SIGNAL HEAD CONSISTING OF RED AND YELLOW SECTIONS WITH AN UP GREEN ARROW SECTION
		VEHICLE SIGNAL HEAD (5 SECTION) CONSISTING OF RED, YELLOW AND GREEN SECTIONS WITH YELLOW AND GREEN RIGHT ARROW SECTIONS
		TYPE 15TS STANDARD WITH VEHICLE SIGNAL HEAD AND LUMINAIRE
		TYPE 21TS STANDARD WITH VEHICLE SIGNAL HEAD AND LUMINAIRE
		STANDARD WITH LUMINAIRE AND SIGNAL MAST ARMS AND ATTACHED VEHICLE SIGNAL HEADS
		TYPE 1 STANDARD WITH ATTACHED VEHICLE SIGNAL HEADS
		STANDARD WITH A SIGNAL MAST ARM, ATTACHED VEHICLE SIGNAL HEADS AND INTERNALLY ILLUMINATED STREET NAME SIGN
		CONTROLLER ASSEMBLY. DOOR INDICATES FRONT OF CABINET

SIGNAL EQUIPMENT Cont

NEW	EXISTING	
		GUARD POST
		TYPE 1 STANDARD WITH RAMP METERING SIGN
		OPTICAL DETECTOR FOR THE EMERGENCY VEHICLE DETECTION SYSTEM

NOTES:

1. All signal sections shall be 12" unless shown otherwise.
2. Signal heads shall be provided with backplates unless shown otherwise.

ILLUMINATED OVERHEAD SIGN

NEW	EXISTING	
		SINGLE POST, SINGLE ILLUMINATED SIGN, BALANCED BUTTERFLY
		SINGLE POST, DOUBLE ILLUMINATED SIGN, BALANCED BUTTERFLY
		SINGLE POST, SINGLE ILLUMINATED SIGN, FULL CANTILEVER
		DOUBLE POST, SINGLE ILLUMINATED SIGN
		SINGLE ILLUMINATED SIGN MOUNTED ON STRUCTURE
		DOUBLE POST, SINGLE ILLUMINATED SIGN WITH ELECTROLIER

STATE OF CALIFORNIA
DEPARTMENT OF TRANSPORTATION

ELECTRICAL SYSTEMS (LEGEND AND ABBREVIATIONS)

NO SCALE

RSP ES-1B DATED JULY 19, 2013 SUPERSEDES STANDARD PLAN ES-1B DATED MAY 20, 2011 - PAGE 426 OF THE STANDARD PLANS BOOK DATED 2010.

REVISED STANDARD PLAN RSP ES-1B

2010 REVISED STANDARD PLAN RSP ES-1B

DATE PLOTTED => 23-JAN-2015
TIME PLOTTED => 12:42

Dist	COUNTY	ROUTE	POST MILES TOTAL PROJECT	SHEET No.	TOTAL SHEETS
02	Sis	5	68.3	93	120

Theresa Gabriel
REGISTERED ELECTRICAL ENGINEER

July 19, 2013
PLANS APPROVAL DATE

REGISTERED PROFESSIONAL ENGINEER Theresa Aziz Gabriel No. E15129 Exp. 6-30-14 ELECTRICAL STATE OF CALIFORNIA

THE STATE OF CALIFORNIA OR ITS OFFICERS OR AGENTS SHALL NOT BE RESPONSIBLE FOR THE ACCURACY OR COMPLETENESS OF SCANNED COPIES OF THIS PLAN SHEET.

TO ACCOMPANY PLANS DATED 11-26-14

EQUIPMENT IDENTIFICATION

ILLUMINATED SIGN IDENTIFICATION NUMBER:

SIGN No. 12345

10 ISL SCI 1.0

- SIGN NUMBER - PLACE ON POST OR STRUCTURE
- TRANSFORMER RATING (kVA)
- LIGHTING CONTROL TYPE
- NUMBER AND TYPE OF FIXTURES

} DO NOT PLACE ON STANDARD OR STRUCTURE

ELECTROLIER OR EQUIPMENT IDENTIFICATION NUMBER:

12345 - 15'-0"

- MAST ARM LENGTH, IF SHOWN. DO NOT PLACE ON STANDARD OR STRUCTURE
- EQUIPMENT NUMBER - PLACE ON STANDARD OR STRUCTURE. EXISTING EQUIPMENT NUMBERS ARE SHOWN IN PARENTHESIS

CONDUIT AND CONDUCTOR IDENTIFICATION:

1½"C, 2#10, 15#14, 2 DLC, 12P#18 (PAIR)

- NUMBER AND SIZE OF CONDUCTORS AND CABLES
- SIZE OF CONDUIT IN INCHES

ø1, ø2, ø2P, etc.	TRAFFIC PHASE IDENTIFICATION FOR SIGNAL FACES, DETECTORS AND PHASE DIAGRAMS
1 2 3	LEGEND NUMBERS
A B C	EQUIPMENT, SIGNAL POLES, INSTALLATION OR ITEMS
1 2 3	CONDUIT RUN NUMBERS

SIGNAL AND LIGHTING STANDARD (TYPICAL DESIGNATION):

19A - 3 - 100

- WIND VELOCITY = 100 mph
- CASE 3 ARM LOADING
- STANDARD TYPE
- STANDARD PLAN SHEET NUMBER
- DETAIL, NUMBER, SECTION, TYPE OR ELEVATION

MISCELLANEOUS EQUIPMENT

NEW	EXISTING	
CMS	cms	CHANGEABLE MESSAGE SIGN
		CLOSED CIRCUIT TELEVISION CAMERA
		HIGHWAY ADVISORY RADIO POLE AND ANTENNA
EMS	ems	EXTINGUISHABLE MESSAGE SIGN
M V	m v	DETECTION DEVICE M = MICROWAVE SENSOR V = VIDEO IMAGE SENSOR

WIRING DIAGRAM LEGEND

- EXTERNAL CONDUCTOR
- CONDUCTOR OR BUS
- TIE POINT
- CONTACTOR COIL
- CONTACTOR, NO CONTACT
- TERMINAL BLOCKS
- CONTACTOR, NC CONTACT
- ENCLOSURE BOND
- GROUNDING ELECTRODE
- CIRCUIT BREAKER
- RECEPTACLE

PULL BOXES

NEW	EXISTING	
		PULL BOX, No. 5 UNLESS OTHERWISE INDICATED OR NOTED
3	9A(21)	PULL BOX, ADDITIONAL DESIGNATIONS OR DESCRIPTIONS

3 No. 3½ PULL BOX
5 No. 5 PULL BOX
6 No. 6 PULL BOX
7 No. 7 (CEILING PULL BOX)
8 No. 8 (PENDANT SOFFIT PULL BOX)
9 No. 9 PULL BOX
9A No. 9A PULL BOX

(C) COMMUNICATIONS PULL BOX
(E) PULL BOX WITH EXTENSION
(S) SPRINKLER CONTROL PULL BOX
(21) ANCHOR BOLTS AND CONDUIT FOR FUTURE INSTALLATION OF TYPE 21 STANDARD
(T) TRAFFIC PULL BOX

VEHICLE DETECTORS

5 J 9 U

- VEHICLE DETECTOR DESIGNATION
- U = UPPER
  L = LOWER
- SLOT NUMBER IN INPUT FILE
- INPUT FILE (I OR J)
- PHASE

NEW	EXISTING	
		TYPE A DETECTOR LOOP. OUTLINE OF SAWCUT SHOWN
		TYPE B DETECTOR LOOP. OUTLINE OF SAWCUT SHOWN
		TYPE C DETECTOR LOOP. OUTLINE OF SAWCUT SHOWN
		TYPE D DETECTOR LOOP. OUTLINE OF SAWCUT SHOWN
		TYPE E DETECTOR LOOP. OUTLINE OF SAWCUT SHOWN
		TYPE Q DETECTOR LOOP. OUTLINE OF SAWCUT SHOWN
		MAGNETIC DETECTOR
DH	dh	DETECTOR HANDHOLE
		MICROWAVE OR VIDEO DETECTION ZONE

STATE OF CALIFORNIA
DEPARTMENT OF TRANSPORTATION

ELECTRICAL SYSTEMS (LEGEND AND ABBREVIATIONS)

NO SCALE

RSP ES-1C DATED JULY 19, 2013 SUPERSEDES STANDARD PLAN ES-1C DATED MAY 20, 2011 - PAGE 427 OF THE STANDARD PLANS BOOK DATED 2010.

REVISED STANDARD PLAN RSP ES-1C

2010 REVISED STANDARD PLAN RSP ES-1C

DATE PLOTTED => 23-JAN-2015
TIME PLOTTED => 12:42

Dist	COUNTY	ROUTE	POST MILES TOTAL PROJECT	SHEET No.	TOTAL SHEETS
02	Sis	5	68.3	94	120

Theresa Gabriel
REGISTERED ELECTRICAL ENGINEER

July 19, 2013
PLANS APPROVAL DATE

REGISTERED PROFESSIONAL ENGINEER Theresa Aziz Gabriel No. E15129 Exp. 6-30-14 ELECTRICAL STATE OF CALIFORNIA

THE STATE OF CALIFORNIA OR ITS OFFICERS OR AGENTS SHALL NOT BE RESPONSIBLE FOR THE ACCURACY OR COMPLETENESS OF SCANNED COPIES OF THIS PLAN SHEET.

TO ACCOMPANY PLANS DATED 11-26-14

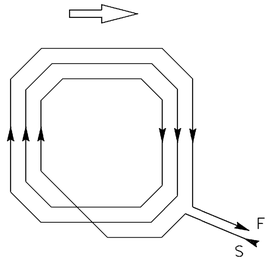

WINDING DETAIL

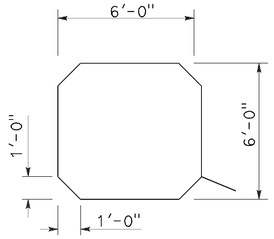

SAWCUT DETAIL

TYPE A LOOP DETECTOR CONFIGURATION

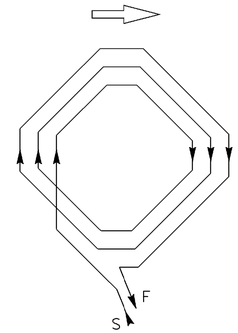

WINDING DETAIL

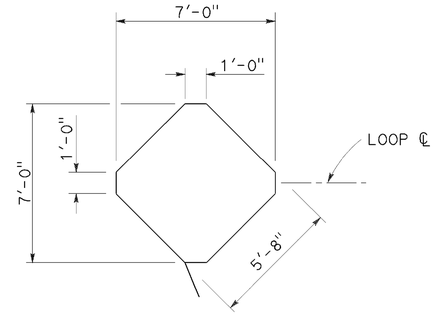

SAWCUT DETAIL

TYPE B LOOP DETECTOR CONFIGURATION

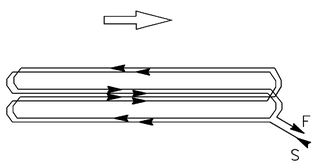

WINDING DETAIL

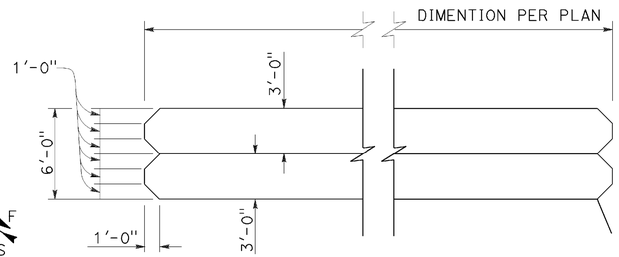

SAWCUT DETAIL

TYPE C LOOP DETECTOR CONFIGURATION

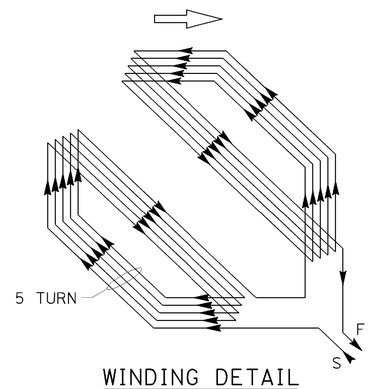

WINDING DETAIL

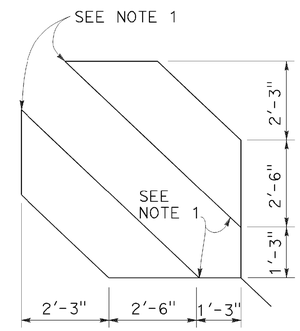

SAWCUT DETAIL

TYPE D LOOP DETECTOR CONFIGURATION

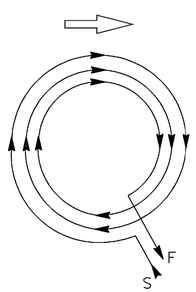

WINDING DETAIL

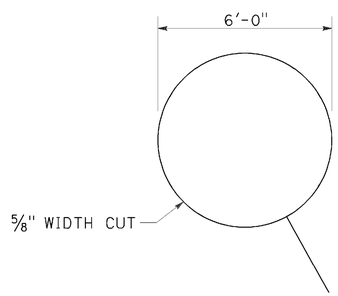

SAWCUT DETAIL

TYPE E LOOP DETECTOR CONFIGURATION

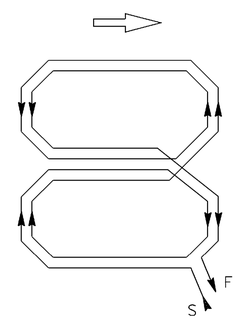

WINDING DETAIL

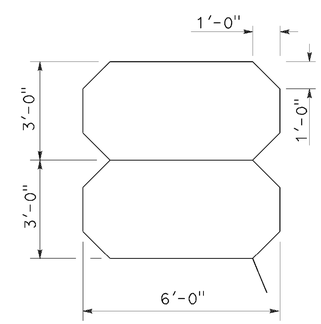

SAWCUT DETAIL

TYPE Q LOOP DETECTOR CONFIGURATION

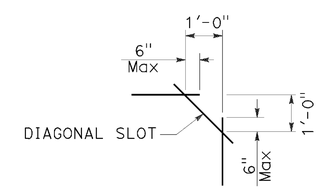

PLAN VIEW OF DIAGONAL SLOT AT CORNERS

NOTES:

1. Round corners of acute angle sawcuts to prevent damage to conductors.
2. Typical distance separating loops from edge to edge is 10' for Type A, B, D and E installation in single lane.

STATE OF CALIFORNIA
DEPARTMENT OF TRANSPORTATION

ELECTRICAL SYSTEMS (DETECTORS)

NO SCALE

RSP ES-5B DATED JULY 19, 2013 SUPERSEDES STANDARD PLAN ES-5B DATED MAY 20, 2011 - PAGE 449 OF THE STANDARD PLANS BOOK DATED 2010.

REVISED STANDARD PLAN RSP ES-5B

2010 REVISED STANDARD PLAN RSP ES-5B

DATE PLOTTED => 23-JAN-2015
TIME PLOTTED => 12:42

Dist	COUNTY	ROUTE	POST MILES TOTAL PROJECT	SHEET No.	TOTAL SHEETS
02	Sis	5	68.3	95	120

Theresa Gabriel
REGISTERED ELECTRICAL ENGINEER

July 19, 2013
PLANS APPROVAL DATE

REGISTERED PROFESSIONAL ENGINEER Theresa Aziz Gabriel No. E15129 Exp. 6-30-14 ELECTRICAL STATE OF CALIFORNIA

THE STATE OF CALIFORNIA OR ITS OFFICERS OR AGENTS SHALL NOT BE RESPONSIBLE FOR THE ACCURACY OR COMPLETENESS OF SCANNED COPIES OF THIS PLAN SHEET.

TO ACCOMPANY PLANS DATED 11-26-14

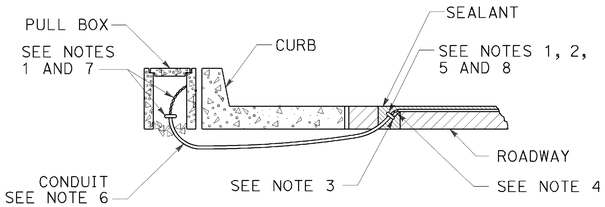

TYPE A
CURB TERMINATION DETAIL

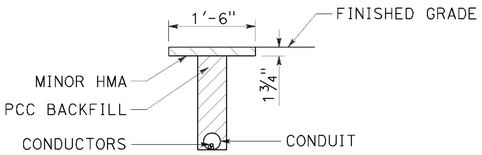

"T" TRENCH
DETAIL T

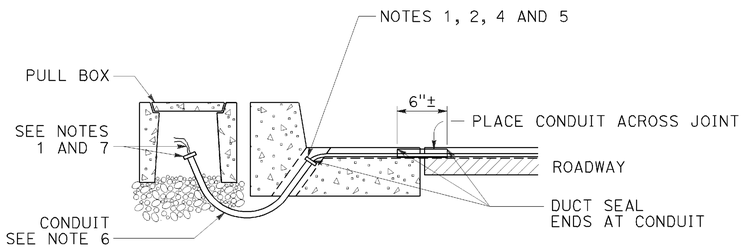

CROSS SECTION

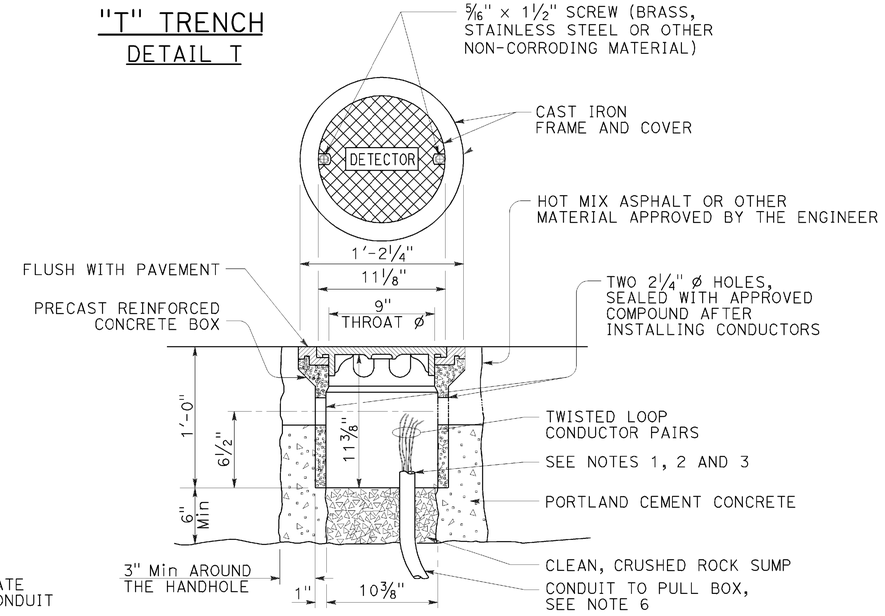

DETECTOR HANDHOLE DETAIL

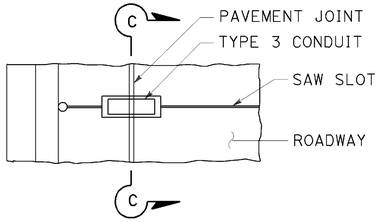

PLAN VIEW

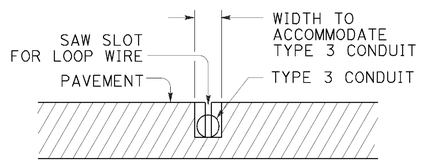

SECTION C-C

TYPE B
CURB TERMINATION DETAIL

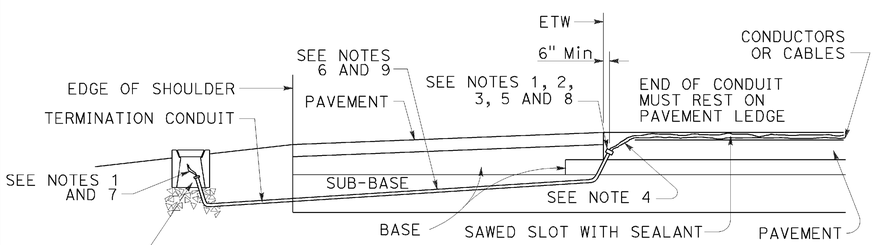

CROSS SECTION

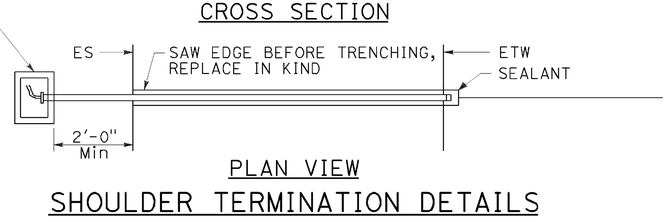

PLAN VIEW

SHOULDER TERMINATION DETAILS

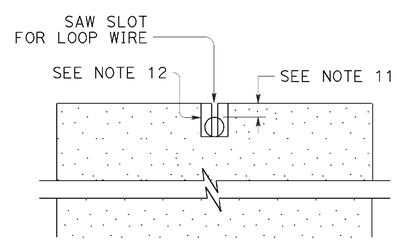

SECTION A-A

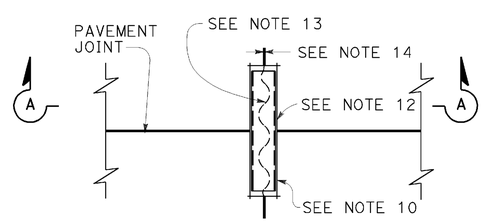

PLAN VIEW

TYPICAL LOOP LEAD-IN DETAIL AT PAVEMENT JOINT

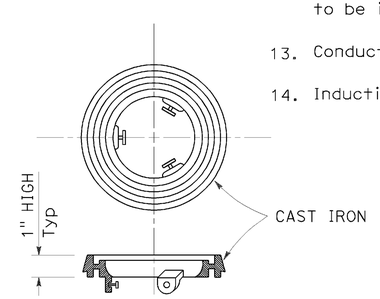

LOCKING GRADE RING

NOTES:

1. Bushing shall be used at end of conduit.
2. Tape detector conductors or cables 3" each side of bushings.
3. Install duct seal compound to each end of termination conduit before installing sealant.
4. Round all sharp edges where detector conductors or cables have to pass.
5. End of conduit shall be 3⅛" below roadway surface.
6.

Conduit size	Loop conductors
1"C minimum	1 to 2 pairs
1½"C minimum	3 to 4 pairs
2"C minimum	5 or more pairs

7. Splice detector conductors or cables to detector lead-in-cable.
8. Location of detector handhole when shown on plans.
9. When the shoulder and traveled way are paved with the same material and there is no joint between them, the conduit shall extend only 2'-0" into the shoulder pavement.
10. ¾"C, Type 3 conduit 6" long minimum, plug both ends with duct compound to keep out sealant.
11. ½" Minimum between top of conduit and pavement surface.
12. Sawcut shall not exceed 1" in width and ⅛" longer than conduit to be installed.
13. Conductors with ½" minimum slack inside conduit.
14. Inductive loop detector saw slot.

STATE OF CALIFORNIA
DEPARTMENT OF TRANSPORTATION

ELECTRICAL SYSTEMS (CURB TERMINATION AND HANDHOLE)

NO SCALE

RSP ES-5D DATED JULY 19, 2013 SUPERSEDES STANDARD PLAN ES-5D DATED MAY 20, 2011 - PAGE 451 OF THE STANDARD PLANS BOOK DATED 2010.

REVISED STANDARD PLAN RSP ES-5D

2010 REVISED STANDARD PLAN RSP ES-5D

DATE PLOTTED => 23-JAN-2015
TIME PLOTTED => 12:42

DIST	COUNTY	ROUTE	POST MILES TOTAL PROJECT	SHEET NO.	TOTAL SHEETS
02	Sis	5	68.3	96	120

Theresa Gabriel
REGISTERED ELECTRICAL ENGINEER

July 19, 2013
PLANS APPROVAL DATE

REGISTERED PROFESSIONAL ENGINEER Theresa Aziz Gabriel No. E15129 Exp. 6-30-14 ELECTRICAL STATE OF CALIFORNIA

THE STATE OF CALIFORNIA OR ITS OFFICERS OR AGENTS SHALL NOT BE RESPONSIBLE FOR THE ACCURACY OR COMPLETENESS OF SCANNED COPIES OF THIS PLAN SHEET.

TO ACCOMPANY PLANS DATED 11-26-14

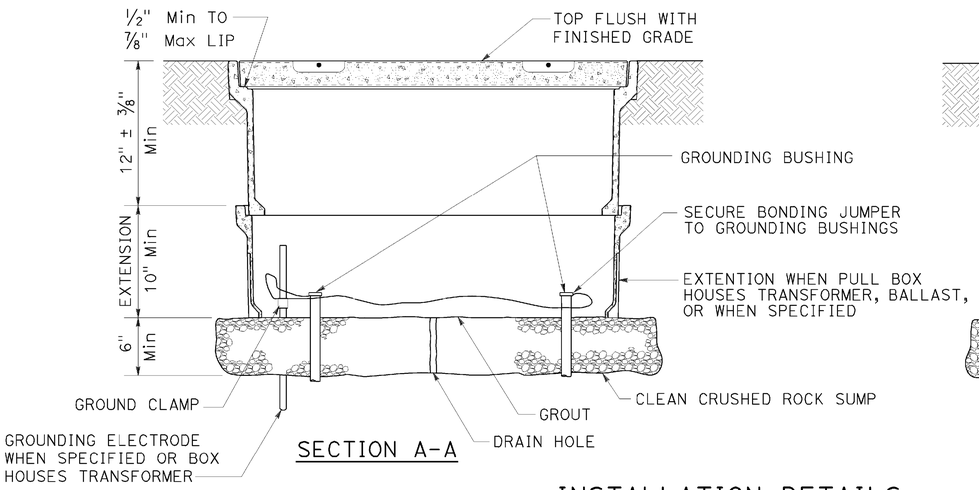

SECTION A-A

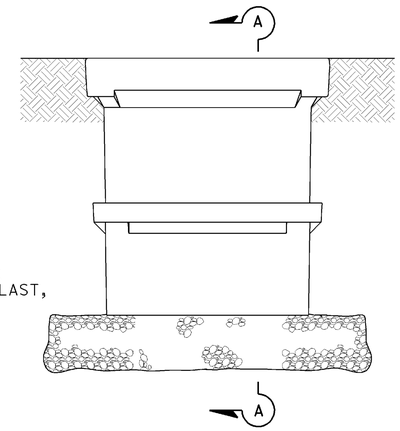

SIDE VIEW

INSTALLATION DETAILS

DETAIL A

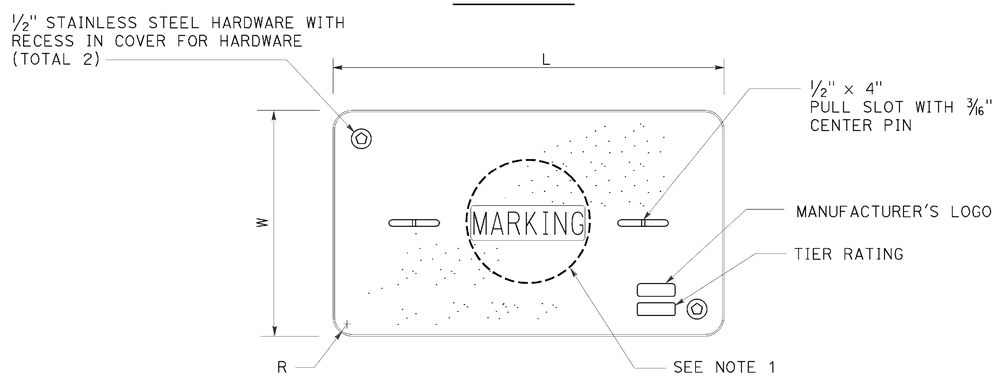

COVER TOP VIEW

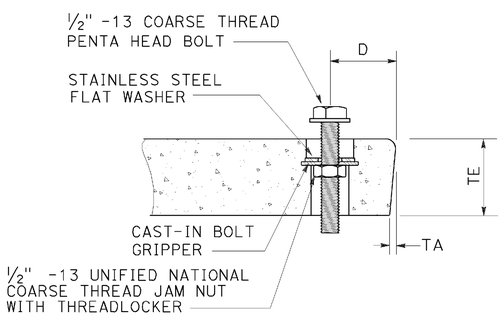

TYPICAL COVER CAPTIVE BOLT

OR SIMILAR

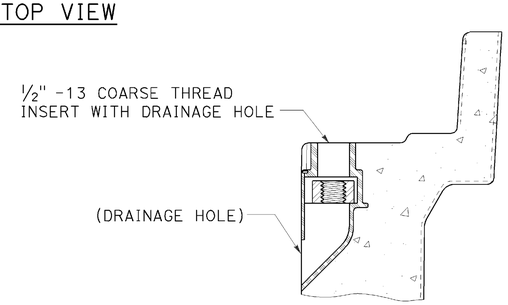

TYPICAL THREADED INSERT

OR SIMILAR

DIMENSION TABLE

PULL BOX	PULL BOX			COVER						
	MINIMUM DEPTH BOX	MINIMUM DEPTH EXTENSION	MAXIMUM WEIGHT	L	W	R	TE	TA	D	MAXIMUM WEIGHT
No. 3½	12"	N/A	40 lb	1′ - 3⅜"	10⅛"	1⅜"	2"	⅛"	1¾"	30 lb
No. 5	12"	10"	55 lb	1′ - 11¼"	1′ - 1¾"	1⅜"	2"	⅛"	1¾"	60 lb
No. 6	12"	10"	70 lb	2′ - 6½"	1′ - 5½"	1⅜"	2"	⅛"	2"	85 lb

NOTES:

1. Pull box covers shall be marked as follows: "SERVICE" Service circuits between service point and service disconnect; "SPRINKLER-CONTROL" sprinkler control circuits, 50 V or less; "CALTRANS" on all pull boxes, except pull boxes marked "SPRINKLER-CONTROL"; and "TELEPHONE" Telephone service;
   - A) No. 3½ pull box.
     - 1) "SIGNAL" - Traffic signal circuits with or without lighting or sign lighting circuits.
     - 2) "LIGHTING" - Lighting or sign lighting circuits where voltage is under 600 V.
   - B) No. 5, 6, 9 or 9A pull box.
     - 1) "TRAFFIC SIGNAL" - Traffic signal circuits with or without lighting or sign lighting circuits.
     - 2) "LIGHTING" - Lighting or sign lighting circuits where voltage is under 600 V.
     - 3) "LIGHTING-HIGH VOLTAGE" - Lighting or sign lighting circuits where voltage is above 600 V.
     - 4) "IRRIGATION" - Circuits to irrigation controller 120 V or more.
     - 5) "RAMP METER" - Ramp meter circuits.
     - 6) "COUNT STATION" - Count or speed monitor circuits.
     - 7) "COMMUNICATIONS" - Communication circuits.
     - 8) "TOS COMMUNICATIONS" - TOS communication line.
     - 9) "TOS POWER" - TOS power.
     - 10) "TDC POWER" - Telephone demarcation cabinet power.
     - 11) "CCTV" - Closed circuit television circuits.
     - 12) "TMS" - Traffic monitoring station circuits.
     - 13) "CMS" - Changeable message sign circuits.
     - 14) "HAR" - Highway advisory radio circuits.
     - 15) "BOOSTER PUMP" - Booster pump circuit.
2. The nominal dimensions of the opening in which the cover sets shall be the same as the cover dimensions except the length and width dimensions shall be ⅛" greater.
3. Covers and boxes shall be interchangeable with California standard male and female gages. When interchanged with a standard male or female gage, the top surfaces shall be flush within ⅛". Top outside radius of covers and pull boxes shall have a ⅛" radius.
4. Pull box extension may be another pull box as long as the bottom edge of the pull box can fit into the cover opening.
5. All dimensions for the cover for non-traffic pull box are nominal values.

STATE OF CALIFORNIA
DEPARTMENT OF TRANSPORTATION

ELECTRICAL SYSTEMS (NON-TRAFFIC PULL BOX)

NO SCALE

RSP ES-8A DATED JULY 19, 2013 SUPERSEDES RSP ES-8A DATED JANUARY 20, 2012 THAT SUPPLEMENTS THE STANDARD PLANS BOOK DATED 2010.

REVISED STANDARD PLAN RSP ES-8A

2010 REVISED STANDARD PLAN RSP ES-8A

DATE PLOTTED => 23-JAN-2015
TIME PLOTTED => 12:42

DIST	COUNTY	ROUTE	POST MILES TOTAL PROJECT	SHEET NO.	TOTAL SHEETS
02	Sis	5	68.3	97	120

Theresa Gabriel
REGISTERED ELECTRICAL ENGINEER

July 19, 2013
PLANS APPROVAL DATE

REGISTERED PROFESSIONAL ENGINEER Theresa Aziz Gabriel No. E15129 Exp. 6-30-14 ELECTRICAL STATE OF CALIFORNIA

THE STATE OF CALIFORNIA OR ITS OFFICERS OR AGENTS SHALL NOT BE RESPONSIBLE FOR THE ACCURACY OR COMPLETENESS OF SCANNED COPIES OF THIS PLAN SHEET.

TO ACCOMPANY PLANS DATED 11-26-14

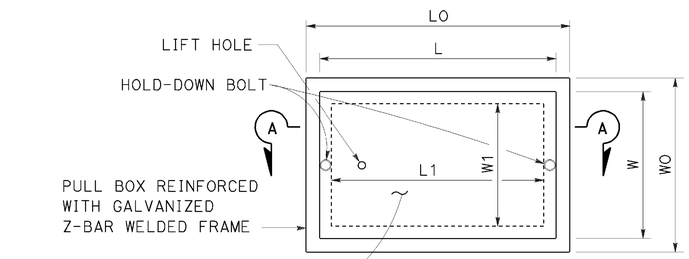

TOP VIEW

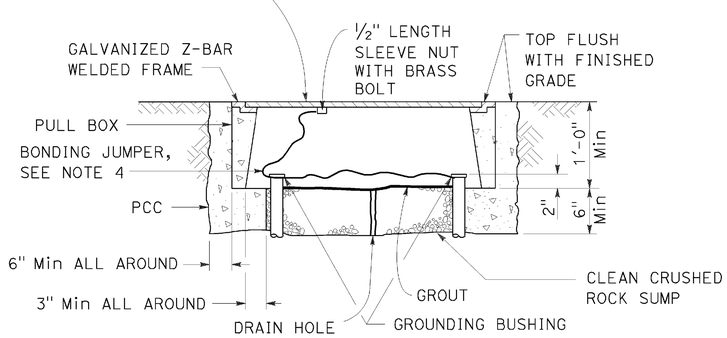

SECTION A-A

No. 3½(T), No. 5(T) AND No. 6(T) TRAFFIC PULL BOX

NOTES:

1. Traffic pull box shall be provided with steel cover and special concrete footing. Steel cover shall have embossed non-skid pattern.
2. Steel reinforcing shall be as regularly used in the standard products of the respective manufacturer.
3. Pull box covers shall be marked as follows: "SERVICE" Service circuits between service point and service disconnect; "SPRINKLER-CONTROL" Sprinkler control circuits, 50 V or less; "CALTRANS" On all pull boxes, except pull boxes marked "SPRINKLER-CONTROL"; and "TELEPHONE" Telephone service.
   A) No. 3½(T) pull box.
      1) "SIGNAL" - Traffic signal circuits with or without lighting or sign lighting circuits.
      2) "LIGHTING" - Lighting or sign lighting circuits where voltage is under 600 V.
   B) No. 5(T) or 6(T) pull box.
      1) "TRAFFIC SIGNAL" - Traffic signal circuits with or without lighting or sign lighting circuits.
      2) "LIGHTING" - Lighting or sign lighting circuits where voltage is under 600 V.
      3) "LIGHTING-HIGH VOLTAGE" - Lighting or sign lighting circuits where voltage is above 600 V.
      4) "IRRIGATION" - Circuits to irrigation controller 120 V or more.
      5) "RAMP METER" - Ramp meter circuits.
      6) "COUNT STATION" - Count or speed monitor circuits.
      7) "COMMUNICATION" - Communication circuits.
      8) "TOS COMMUNICATIONS" - TOS communications line.
      9) "TOS POWER" - TOS power.
      10) "TDC POWER" - Telephone demarcation cabinet power.
      11) "CCTV" - Closed circuit television circuits.
      12) "TMS" - Traffic monitoring station circuits.
      13) "CMS" - Changeable message sign circuits.
      14) "HAR" - Highway advisory radio circuits.
      15) "BOOSTER PUMP" - Booster pump circuit.
4. Bonding jumper for metal covers shall be 3' long, minimum.
5. The nominal dimensions of the opening in which the cover sets shall be the same as the cover dimensions except the length and width dimensions shall be ⅛" greater.
6. Covers and boxes shall be interchangeable with California standard male and female gages. When interchanged with a standard male or female gage, the top surfaces shall be flush within ⅛".

DIMENSION TABLE

PULL BOX	PULL BOX						COVER				
	MINIMUM * THICKNESS	MINIMUM DEPTH BOX AND EXTENSION	WO	LO	L1	W1	L **	W **	R	EDGE THICKNESS	EDGE TAPER
No. 3½(T)	1½"	1'-0"	1'-5"± 1"	1'-8⅞"±	1'-2½"±	10⅝"± 1"	1'-8"±	1'-1¾"±	0"	½"	NONE
No. 5(T)	1¾"	1'-0"	1'-11½"± 1"	2'-5½"±	1'-7"±	1'-1"± 1"	2'-3"±	1'-4"±	0"	½"	NONE
No. 6(T)	2"	1'-0"	2'-6"± 1"	2'-11½"±	1'-11½"±	1'-5"± 1"	2'-9"±	1'-8"±	0"	½"	NONE

* EXCLUDING CONDUIT WEB ** TOP DIMENSION

STATE OF CALIFORNIA
DEPARTMENT OF TRANSPORTATION

ELECTRICAL SYSTEMS (TRAFFIC PULL BOX)

NO SCALE

RSP ES-8B DATED JULY 19, 2013 SUPERSEDES RSP ES-8B DATED JANUARY 20, 2012 THAT SUPPLEMENTS THE STANDARD PLANS BOOK DATED 2010.

REVISED STANDARD PLAN RSP ES-8B

2010 REVISED STANDARD PLAN RSP ES-8B

DATE PLOTTED => 23-JAN-2015
TIME PLOTTED => 12:42

Dist	COUNTY	ROUTE	POST MILES TOTAL PROJECT	SHEET No.	TOTAL SHEETS
02	Sis	5	68.3	98	120

Theresa Gabriel
REGISTERED ELECTRICAL ENGINEER

July 19, 2013
PLANS APPROVAL DATE

Theresa Aziz Gabriel No. E15129 Exp. 6-30-14 ELECTRICAL — REGISTERED PROFESSIONAL ENGINEER — STATE OF CALIFORNIA

THE STATE OF CALIFORNIA OR ITS OFFICERS OR AGENTS SHALL NOT BE RESPONSIBLE FOR THE ACCURACY OR COMPLETENESS OF SCANNED COPIES OF THIS PLAN SHEET.

TO ACCOMPANY PLANS DATED 11-26-14

ISOFOOTCANDLE CURVE - MINIMUM

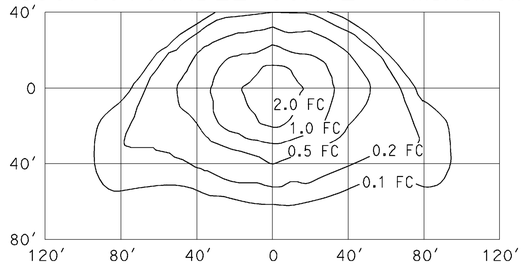

TYPE III MEDIUM CUTOFF

Cutoff Luminaire
34′ Mounting Height
Lamp operated at 22,000 lm
200-W high pressure sodium lamp
ANSI Designation S66

ISOFOOTCANDLE CURVE - MINIMUM

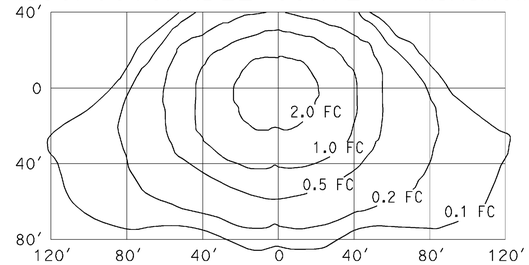

TYPE III MEDIUM CUTOFF

Cutoff Luminaire
40′ Mounting Height
Lamp operated at 37,000 lm
310-W high pressure sodium lamp
ANSI Designation S67

ISOFOOTCANDLE CURVE - MINIMUM

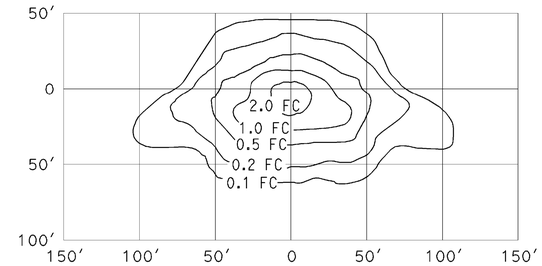

TYPE III MEDIUM CUTOFF

Cutoff Luminaire
30′ Mounting Height
Lamp operated at 16,000 lm
150-W high pressure sodium lamp
ANSI Designation S55

ISOFOOTCANDLE CURVE - MINIMUM

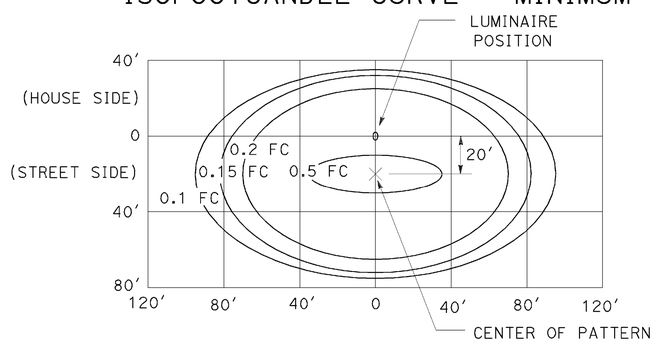

LED LUMINAIRE ROADWAY 1

165-W at 34′ Mounting Height

ISOFOOTCANDLE CURVE - MINIMUM

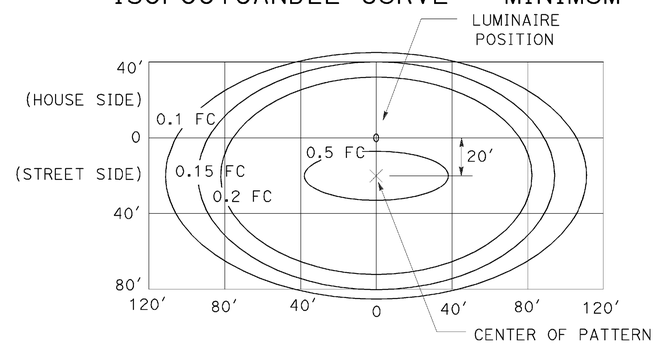

LED LUMINAIRE ROADWAY 2

235-W at 40′ Mounting Height

ISOFOOTCANDLE CURVE - MINIMUM

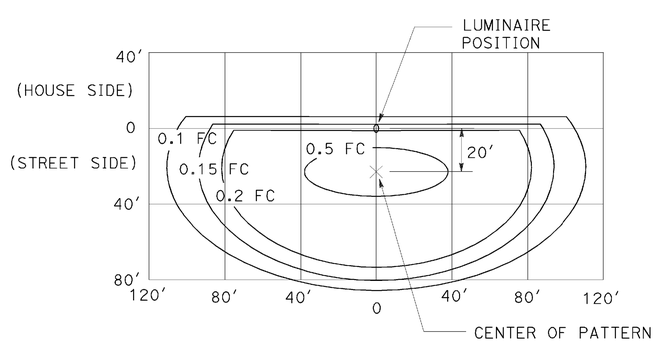

LED LUMINAIRE ROADWAY 3

235-W at 40′ Mounting Height
with back side control

ISOFOOTCANDLE CURVE - MINIMUM

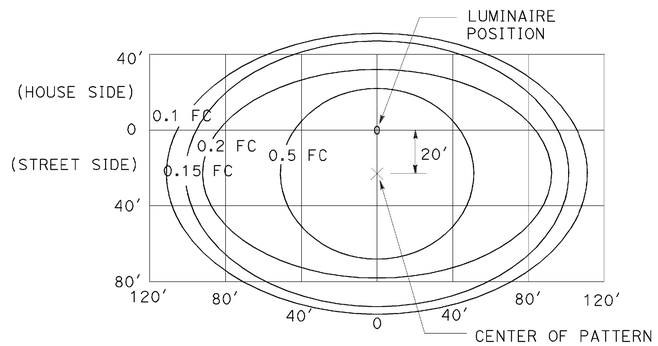

LED LUMINAIRE ROADWAY 4

300-W at 40′ Mounting Height

ISOFOOTCANDLE CURVE - MINIMUM

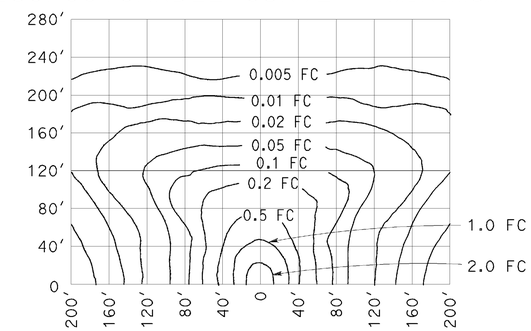

LOW PRESSURE SODIUM LUMINAIRE

40′ Mounting Height
Lamp operated at 33,000 lm
180-W low pressure sodium lamp

STATE OF CALIFORNIA
DEPARTMENT OF TRANSPORTATION

ELECTRICAL SYSTEMS (ISOFOOTCANDLE DIAGRAMS)

NO SCALE

RSP ES-10A DATED JULY 19, 2013 SUPERSEDES RSP ES-10A DATED JULY 20, 2012 THAT SUPPLEMENTS THE STANDARD PLANS BOOK DATED 2010.

REVISED STANDARD PLAN RSP ES-10A

2010 REVISED STANDARD PLAN RSP ES-10A

DATE PLOTTED => 23-JAN-2015
TIME PLOTTED => 12:43

Dist	COUNTY	ROUTE	POST MILES TOTAL PROJECT	SHEET No.	TOTAL SHEETS
02	Sis	5	68.3	99	120

REGISTERED CIVIL ENGINEER

July 19, 2013
PLANS APPROVAL DATE

REGISTERED PROFESSIONAL ENGINEER
Stanley P. Johnson
No. C57793
Exp. 3-31-14
CIVIL
STATE OF CALIFORNIA

THE STATE OF CALIFORNIA OR ITS OFFICERS OR AGENTS SHALL NOT BE RESPONSIBLE FOR THE ACCURACY OR COMPLETENESS OF SCANNED COPIES OF THIS PLAN SHEET.

TO ACCOMPANY PLANS DATED 11-26-14

STANDARD TYPE	SETBACK (DIMENSION A)
32	30'-0" (Min)
31	20'-0" (Min)
15, 15D, 15-SB, 21, 21D, 30	ARM LENGTH (Min)

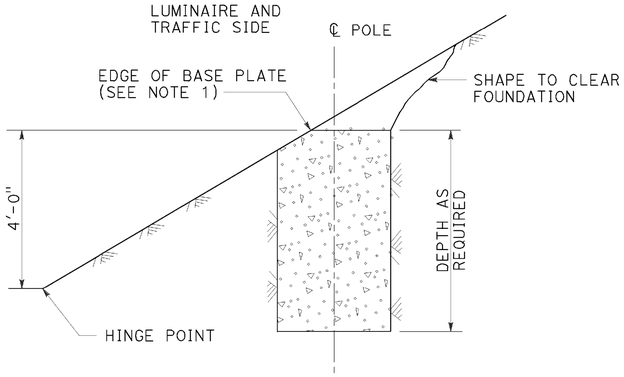

CUT SLOPES
STEEPER THAN 4:1,
LESS THAN 2:1
DETAIL A-1
See Note 2 and 3

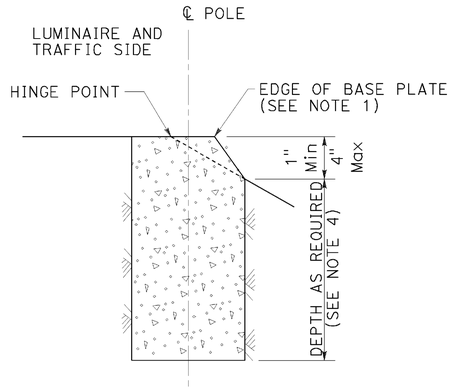

FILL SLOPES
STEEPER THAN 4:1,
LESS THAN 2:1
DETAIL A-2
See Note 2 and 3

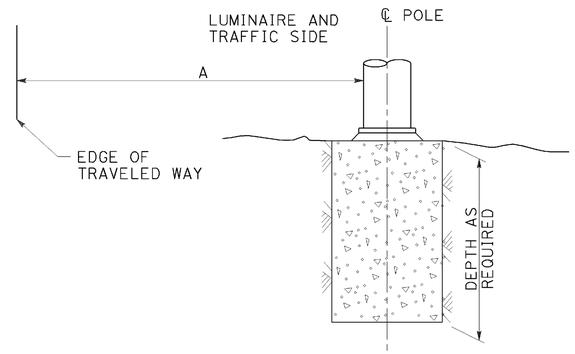

FLAT SECTIONS, CUT OR FILL SLOPES
4:1 OR FLATTER
DETAIL A-3
See Note 2

FOUNDATIONS ADJACENT TO ALL ROADWAYS EXCEPT
IN SIDEWALK, MEDIAN AND ISLAND AREAS
DETAIL A

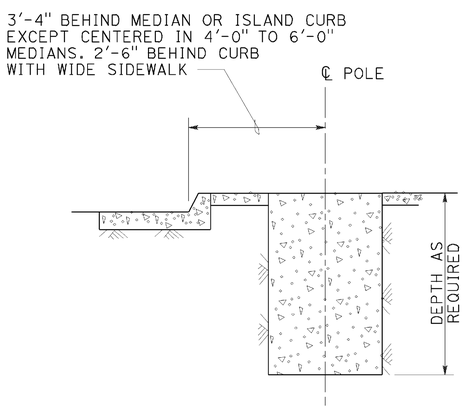

MEDIAN, ISLAND
OR WIDE SIDEWALK
DETAIL B-1
7' Wide and wider

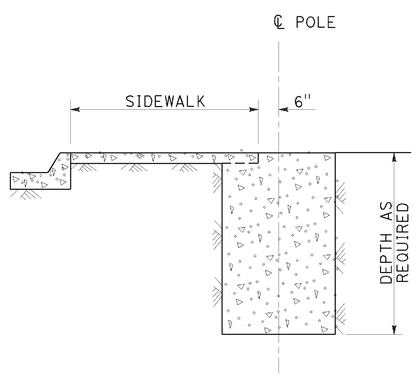

NARROW SIDEWALK
DETAIL B-2
Less than 7' wide

FOUNDATIONS IN SIDEWALK, MEDIAN AND ISLAND AREAS
DETAIL B

NOTES:

1. Where a portion of the foundation is above grade, the top edges shall have a 1" chamfer.
2. Slopes shall be horizontal to vertical ratio (Horizontal : Vertical).
3. Horizontal setbacks on cut and fill slopes steeper than 4:1 shall not exceed the distance shown for flat sections.
4. CIDH embedment depth shall be increased beyond standard depths by the diameter of the CIDH.

STATE OF CALIFORNIA
DEPARTMENT OF TRANSPORTATION

ELECTRICAL SYSTEMS (FOUNDATION INSTALLATIONS)

NO SCALE

RSP ES-11 DATED JULY 19, 2013 SUPERSEDES STANDARD PLAN ES-11
DATED MAY 20, 2011 - PAGE 488 OF THE STANDARD PLANS BOOK DATED 2010.

REVISED STANDARD PLAN RSP ES-11

2010 REVISED STANDARD PLAN RSP ES-11

DATE PLOTTED => 23-JAN-2015
TIME PLOTTED => 12:43

Dist	COUNTY	ROUTE	POST MILES TOTAL PROJECT	SHEET No.	TOTAL SHEETS
02	Sis	5	68.3	100	120

REGISTERED CIVIL ENGINEER

November 15, 2013
PLANS APPROVAL DATE

REGISTERED PROFESSIONAL ENGINEER
Stanley P. Johnson
No. C57793
Exp. 3-31-14
CIVIL
STATE OF CALIFORNIA

THE STATE OF CALIFORNIA OR ITS OFFICERS OR AGENTS SHALL NOT BE RESPONSIBLE FOR THE ACCURACY OR COMPLETENESS OF SCANNED COPIES OF THIS PLAN SHEET.

TO ACCOMPANY PLANS DATED 11-26-14

POLE TYPE	POLE DATA				BASE PLATE DATA				CIDH	
	HEIGHT "h"	Min OD		THICKNESS	"C"	THICKNESS	ANCHOR BOLT SIZE	BC = BOLT CIRCLE	Dia	"d"
		BASE	TOP							
CCTV 25	25′	7⅜"	3¾"	0.1793"	1′-1"	1"	1½" ø x 36"	11½"	2′-6"	7′-0"
CCTV 30	30′	8"			1′-1½"			1′-0"		7′-6"
CCTV 35	35′	8⅝"			1′-2"			1′-1"		8′-0"
CCTV 40	40′	9⅜"			1′-3"			1′-1½"		8′-6"
CCTV 45	45′	10"						1′-2"		

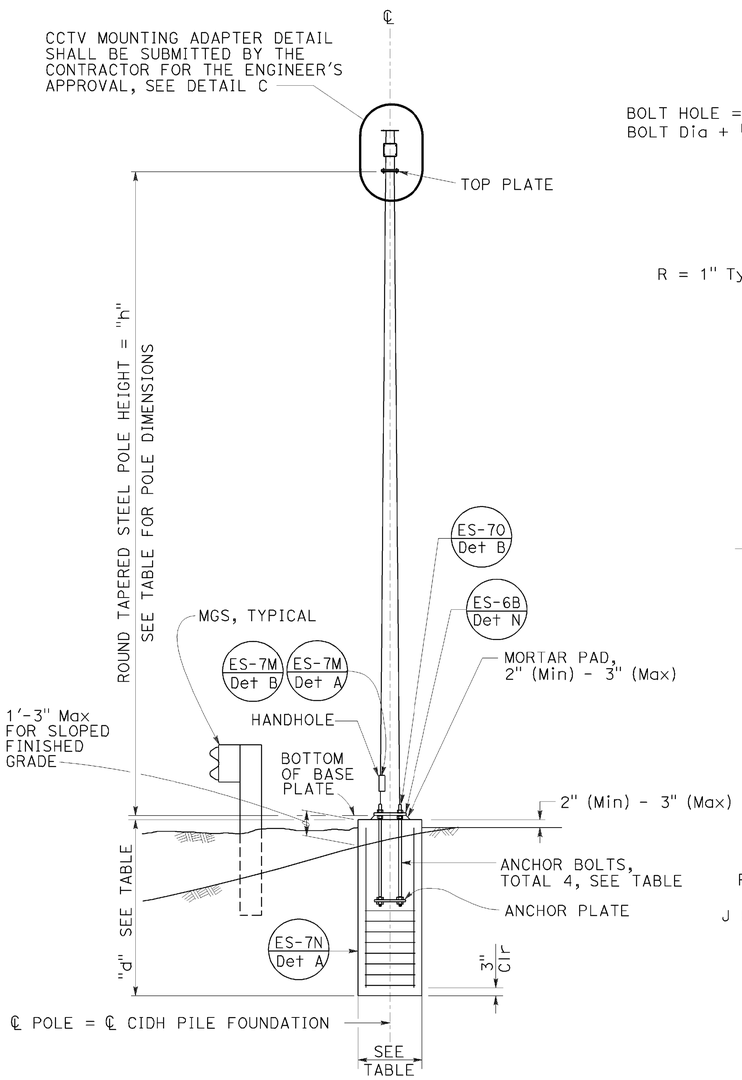

ELEVATION A

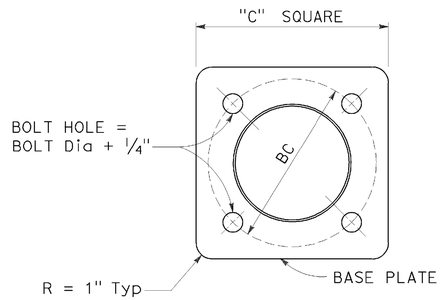

BASE PLATE

DETAIL A

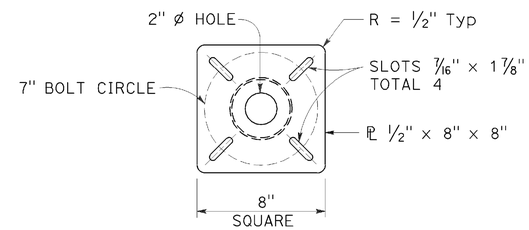

TOP PLATE

DETAIL B

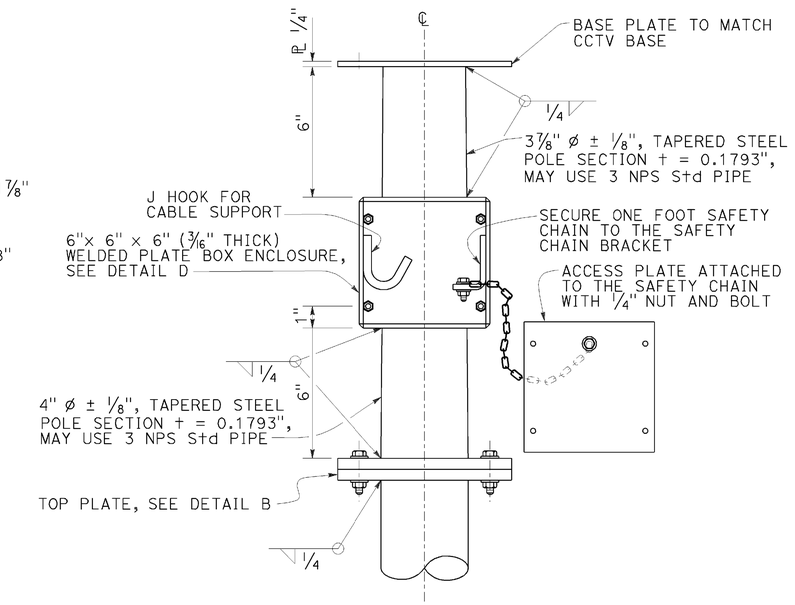

CLOSED CIRCUIT TELEVISION MOUNTING ADAPTER

DETAIL C

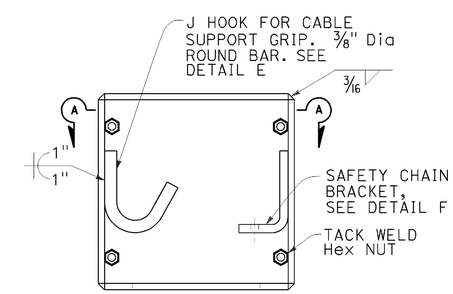

BOX ENCLOSURE

DETAIL D

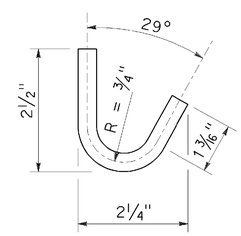

J HOOK

DETAIL E

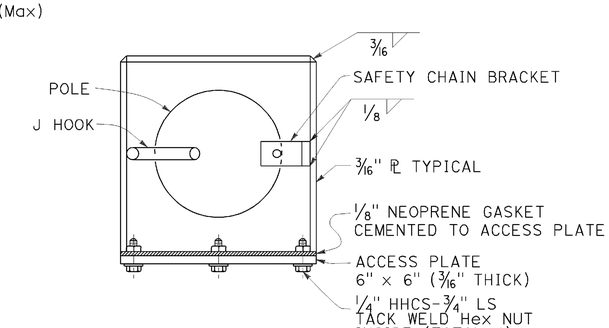

SECTION A-A

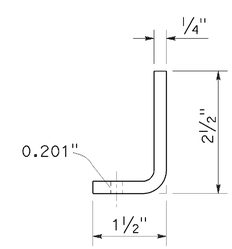

SAFETY CHAIN BRACKET

DETAIL F

NOTES:

1. The Contractor shall verify controlling field dimensions before ordering or fabricating any material.
2. During pole installation, the post shall be raked as necessary with the use of leveling nuts to provide a plumb pole axis.
3. Wind Loadings (3-second gust): 100 mph
4. Unit Stresses (Structural Steel):
   a. fy = 55,000 psi (tapered steel tube and anchor bolts)
   b. fy = 50,000 psi (unless otherwise noted)
5. Unit Stresses (Reinforced Concrete):
   a. f′c = 3,625 psi
   b. fy = 60,000 psi

STATE OF CALIFORNIA
DEPARTMENT OF TRANSPORTATION

ELECTRICAL SYSTEMS (CLOSED CIRCUIT TELEVISION, 25' TO 45' POLE)

NO SCALE

RSP ES-16B DATED NOVEMBER 15, 2013 SUPERSEDES STANDARD PLAN ES-16B DATED MAY 20, 2011 - PAGE 501 OF THE STANDARD PLANS BOOK DATED 2010.

REVISED STANDARD PLAN RSP ES-16B

2010 REVISED STANDARD PLAN RSP ES-16B

DATE PLOTTED => 23-JAN-2015
TIME PLOTTED => 12:43