DIST	COUNTY	ROUTE	POST MILES TOTAL PROJECT	SHEET No.	TOTAL SHEETS
02	Sis	5	68.3	101	120

REGISTERED CIVIL ENGINEER 10-17-14 DATE

11-26-14
PLANS APPROVAL DATE

REGISTERED PROFESSIONAL ENGINEER G. SLOCUM No. 44950 Exp. 3-31-16 CIVIL STATE OF CALIFORNIA

The State of California or its officers or agents shall not be responsible for the accuracy or completeness of scanned copies of this plan sheet.

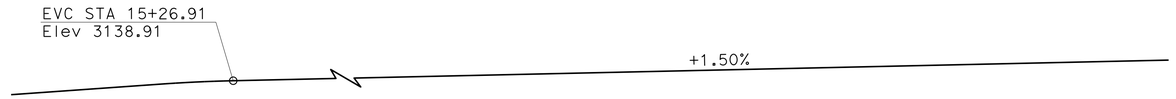

PROFILE GRADE

NO SCALE

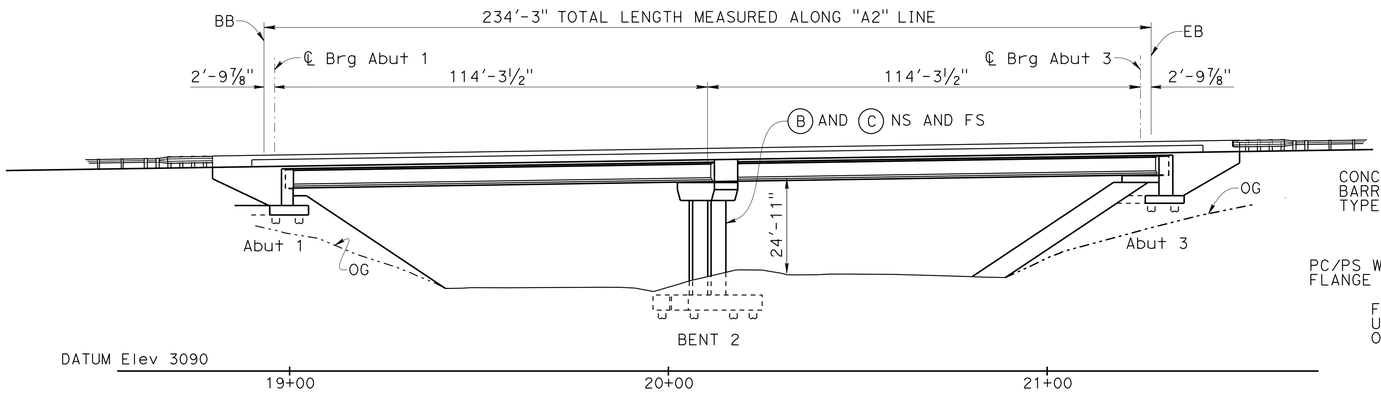

ELEVATION

1" = 20'

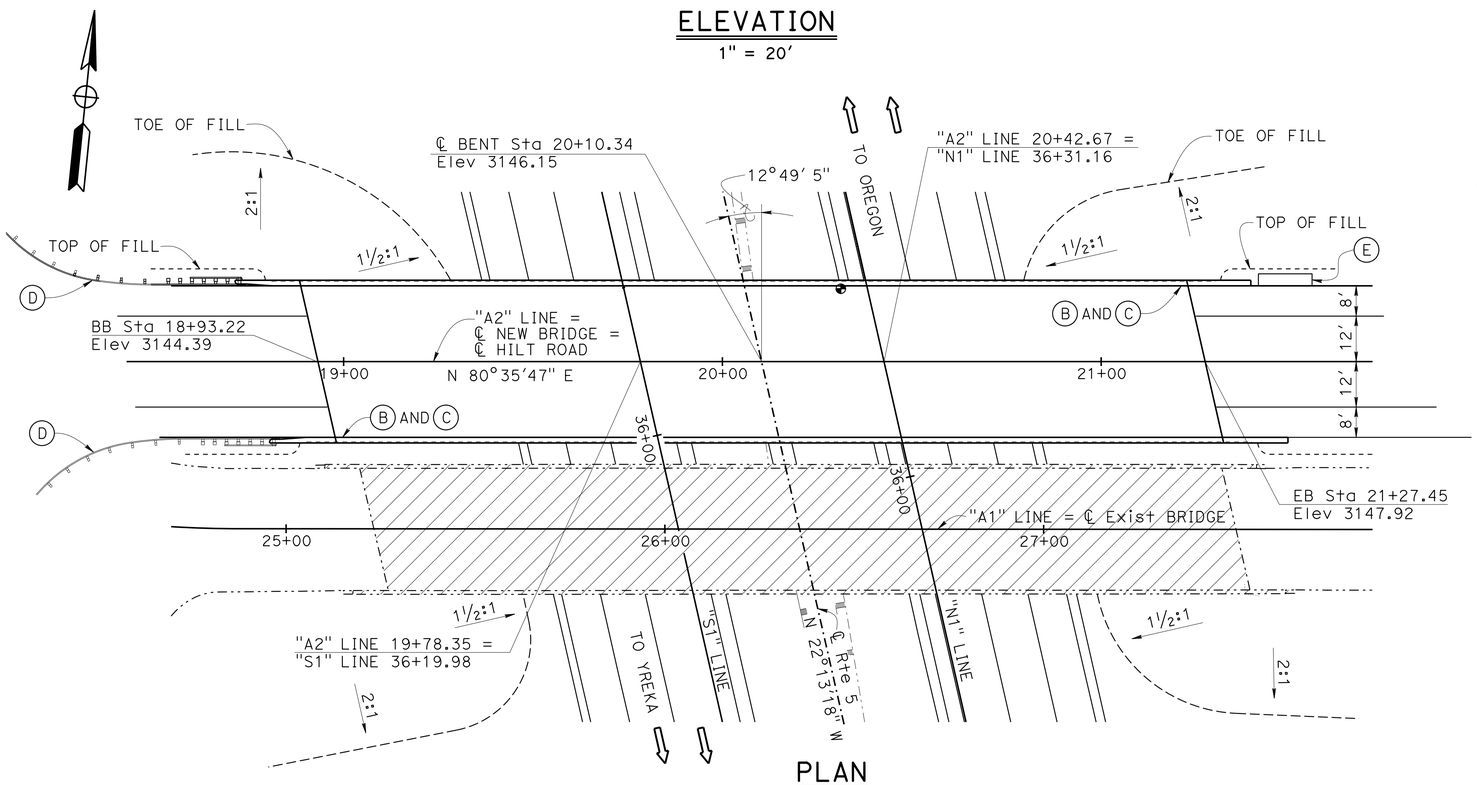

PLAN

1" = 20'

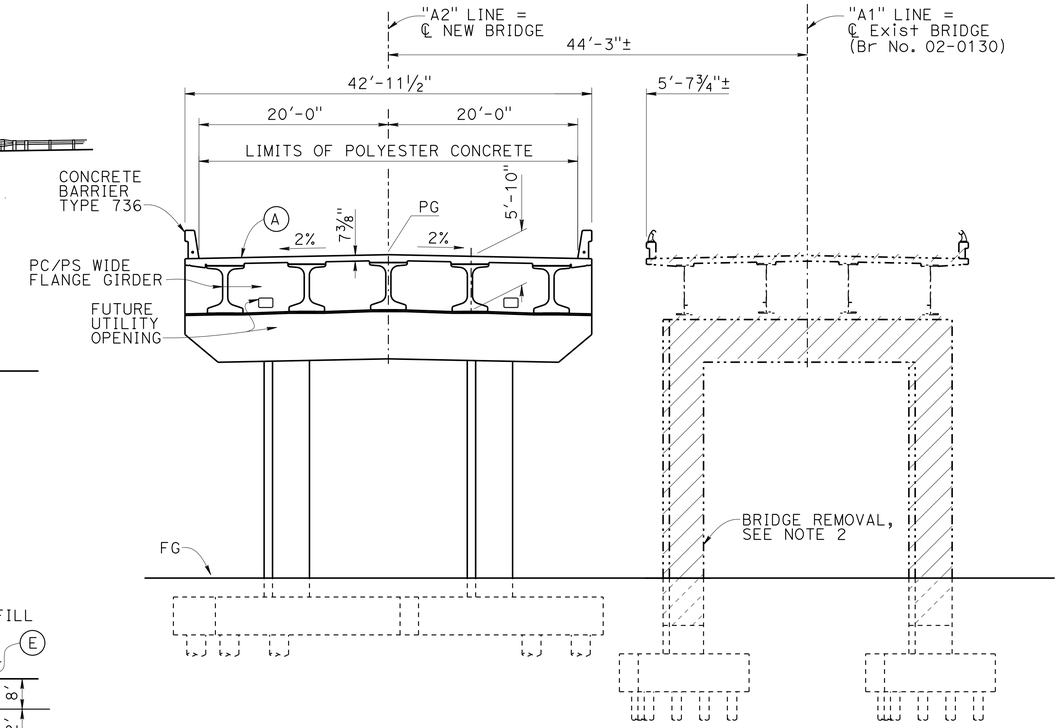

TYPICAL SECTION

⅛" = 1'-0"

NOTES:

1. For "INDEX TO PLANS", "STANDARD PLANS 2010", "PILE DATA TABLE", and "GENERAL NOTES", see "INDEX TO PLANS" sheet
2. Existing bridge columns to be removed to 3'-0" below finish grade.
3. For quantity decal, see "DECK CONTOURS" sheet.

LEGEND:

- (A) Prepare concrete bridge deck surface and place 1" polyester concrete overlay
- (B) Paint Bridge name "HILT ROAD OC"
- (C) Paint "Br. No. 02-0202
- (D) Midwest guardrail system, see "ROADWAY PLANS"
- (E) Alternative Crash cushion, see "ROADWAY PLANS"
- Indicates existing structure
- Indicates bridge removal of Hilt Road OC (Br. No. 02-0130) from BB to EB
- Point of minimum vertical clearance

Gudmund Setberg
DESIGN ENGINEER

	BY	CHECKED			
DESIGN	G. SLOCUM	H. FANG	LOAD & RESISTANCE FACTOR DESIGN	LIVE LOADING: HL93 W/"LOW-BOY"; PERMIT DESIGN VEHICLE	
DETAILS	C. FIGUERRES	H. FANG	LAYOUT	G. SLOCUM	H. FANG
QUANTITIES	G. ZUNIGA	J. LEE	SPECIFICATIONS	D. KLEIN	PLANS AND SPECS COMPARED D. KLEIN

STATE OF CALIFORNIA
DEPARTMENT OF TRANSPORTATION

DIVISION OF ENGINEERING SERVICES
STRUCTURE DESIGN
DESIGN BRANCH 2

BRIDGE NO. 02-0202
POST MILE 68.3

HILT ROAD OVERCROSSING (REPLACE)
GENERAL PLAN

ORIGINAL SCALE IN INCHES FOR REDUCED PLANS 0 1 2 3

UNIT: 3577
PROJECT NUMBER & PHASE: 0200020157
CONTRACT NO.: 02-3E7301

DISREGARD PRINTS BEARING EARLIER REVISION DATES

REVISION DATES 8-14-14 10-21-14 6-16-14

SHEET 1 OF 20

STRUCTURES DESIGN GENERAL PLAN SHEET (ENGLISH) (REV.09-01-10)

FILE => 02-0202-a-gp01_gp.dgn

USERNAME => s123119 DATE PLOTTED => 23-JAN-2015 TIME PLOTTED => 12:48

DIST	COUNTY	ROUTE	POST MILES TOTAL PROJECT	SHEET No.	TOTAL SHEETS
02	Sis	5	68.3	102	120

REGISTERED CIVIL ENGINEER 10-17-14 DATE

11-26-14
PLANS APPROVAL DATE

REGISTERED PROFESSIONAL ENGINEER G. SLOCUM No. 44950 Exp. 3-31-16 CIVIL STATE OF CALIFORNIA

The State of California or its officers or agents shall not be responsible for the accuracy or completeness of scanned copies of this plan sheet.

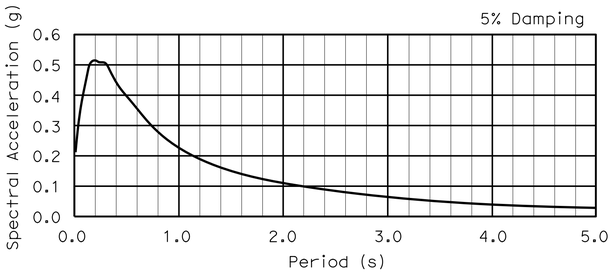

ABUTMENT 1

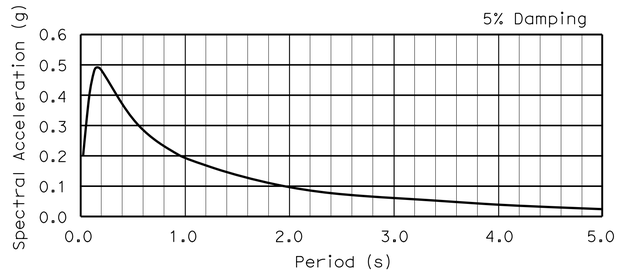

BENT 2 AND ABUTMENT 3

ACCELERATION RESPONSE SPECTRA

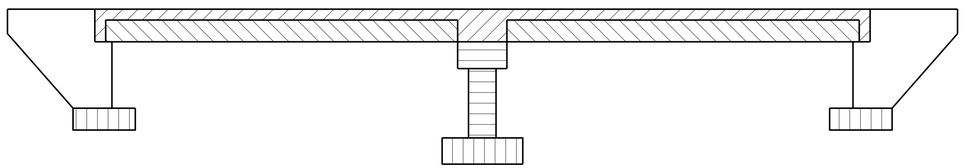

- Structural Concrete, Bridge (f'c = 3,600 Psi @ 28 days)
- Structural Concrete, Bridge (Fiber Reinforced) (f'c = 4,500 Psi @ 28 days)
- Structural Concrete, Bridge (f'c = 4,000 Psi @ 28 days)
- Structural Concrete, Bridge Footing (f'c = 4,000 Psi @ 28 days)
- Precast Pre-Stressed Wide Flange Girders, See "PC/PRETENSIONED GIRDER DETAILS No. 1"

CONCRETE STRENGTH AND TYPE LIMITS

NO SCALE

STANDARD PLANS 2010

	A10A	ABBREVIATIONS (SHEET 1 OF 2)
RSP	A10B	ABBREVIATIONS (SHEET 2 OF 2)
	A10C	LINE AND SYMBOLS (SHEET 1 OF 3)
	A62B	LIMITS OF PAYMENT FOR EXCAVATION AND BACKFILL-BRIDGE SURCHARGE AND WALL
	A62C	LIMITS OF PAYMENT FOR EXCAVATION AND BACKFILL-BRIDGE
	B0-1	BRIDGE DETAILS
	B0-3	BRIDGE DETAILS
	B0-5	BRIDGE DETAILS
	B0-13	BRIDGE DETAILS
	B2-3	16" AND 24" CAST-IN-DRILLED-HOLE CONCRETE PILE
	B6-10	UTILITY OPENINGS, T-BEAM
	B6-21	JOINT SEAL (MAXIMUM MOVEMENT RATING = 2")
RSP	B11-56	CONCRETE BARRIER TYPE 736
	B14-3	COMMUNICATION AND SPRINKLER CONTROL CONDUITS

STANDARD PLAN SHEET No.

DETAIL No.

INDEX TO PLANS

SHEET NO.	NAME
1.	GENERAL PLAN
2.	INDEX TO PLANS
3.	DECK CONTOURS
4.	FOUNDATION PLAN
5.	ABUTMENT LAYOUT
6.	ABUTMENT DETAILS NO. 1
7.	ABUTMENT DETAILS NO. 2
8.	ABUTMENT DETAILS NO. 3
9.	BENT LAYOUT
10.	BENT DETAILS NO. 1
11.	BENT DETAILS NO. 2
12.	TYPICAL SECTION
13.	GIRDER LAYOUT
14.	PC/PRETENSIONED GIRDER DETAILS NO. 1
15.	PC/PRETENSIONED GIRDER DETAILS NO. 2
16.	DECK REINFORCEMENT
17.	PIPE PIN DETAILS
18.	LOG OF TEST BORINGS 1 OF 3
19.	LOG OF TEST BORINGS 2 OF 3
20.	LOG OF TEST BORINGS 3 OF 3

PILE DATA TABLE

LOCATION	PILE TYPE	NOMINAL RESISTANCE COMPRESSION	NOMINAL RESISTANCE TENSION	CUT-OFF Elev	30"ø CIDH WITH PERMANENT STEEL CASING SPECIFIED TIP Elev	24"ø CIDH SPECIFIED TIP Elev	24"ø CIDH ROCK SOCKET DESIGN TIP Elev	24"ø CIDH ROCK SOCKET SPECIFIED TIP Elev
		Kips		Ft	Ft	Ft	Ft	Ft
ABUTMENT 1	30"ø CIDH WITH PERMANENT STEEL CASING AND 24"ø CIDH ROCK SOCKET	400	0	3131.5	3080.5	N/A	3070.0 (a-I)	3070.0
BENT 2	24"ø CIDH ROCK SOCKET	360	100	3106.8	N/A	N/A	3093.0 (a-I) 3094.0 (a-II) 3098.0 (b-II)	3093.0
ABUTMENT 3	24"ø CIDH WITH 24"ø CIDH ROCK SOCKET	400	0	3134.5	N/A	3124.0	3112.0 (a-I)	3112.0

Notes:

1. Design tip elevations controlled by:
   (a-I) Compression (Strength limits), (a-II) Compression (Extreme event), and (b-II) Tension (extreme event)
2. The specified tip elevations must not be raised.

GENERAL NOTES (LOAD AND RESISTANCE FACTOR DESIGN)

DESIGN: AASHTO LRFD Bridge Design Specifications, Fourth Edition with Caltrans amendments (September 2010).

SEISMIC DESIGN: Caltrans Seismic Design Criteria (SDC) Version 1.7, November 2010.

DEAD LOAD: Includes 35 psf for wearing surface.

LIVE LOADING: HL-93 Design Truck and Tandem and P-15 Long Deck Permit Design Load.

SEISMIC LOADING: The design ARS curves are an envelope of:
1) Statewide minimum deterministic spectrum requirements with MMax of 6.5, vertical strike slip event with a rupture distance of 7.5 miles and
2) The USGS 5% Probability of Exceedance in 50 years (975 year return period).
   Abut 1: Peak Ground Acceleration = 0.22g, Vs30 = 1650 ft/s.
   Bent 2 and Abut 3: Peak Ground Acceleration = 0.20g, Vs30 = 2160 ft/s.

REINFORCED CONCRETE: ASTM A706
f'y = 60 KSI
f'c see "Concrete Strength and Type Limits"

PRESTRESSED CONCRETE: See "Prestressing Notes" on "PC/PRETENSIONED GIRDER DETAILS No. 1" sheet.

	BY	CHECKED
DESIGN	G. SLOCUM	H. FANG
DETAILS	C. FIGUERRES	H. FANG
QUANTITIES	G. ZUNIGA	J. LEE

STATE OF CALIFORNIA
DEPARTMENT OF TRANSPORTATION

DIVISION OF ENGINEERING SERVICES
STRUCTURE DESIGN
DESIGN BRANCH 2

BRIDGE NO. 02-0202
POST MILE 68.3

HILT ROAD OVERCROSSING (REPLACE)
INDEX TO PLANS

STRUCTURES DESIGN DETAIL SHEET (ENGLISH) (REV. 09-01-10)

ORIGINAL SCALE IN INCHES FOR REDUCED PLANS 0 1 2 3

UNIT: 3577
PROJECT NUMBER & PHASE: 0200020157
CONTRACT NO.: 02-3E7301

DISREGARD PRINTS BEARING EARLIER REVISION DATES

REVISION DATES 7-16-14 8-8-14 8-15-14 9-2-14

SHEET 2 OF 20

FILE => 02-0202-a-itp.dgn

USERNAME => s123119 DATE PLOTTED => 23-JAN-2015 TIME PLOTTED => 12:48

DIST	COUNTY	ROUTE	POST MILES TOTAL PROJECT	SHEET No.	TOTAL SHEETS
02	Sis	5	68.3	103	120

REGISTERED CIVIL ENGINEER 10-17-14 DATE

11-26-14
PLANS APPROVAL DATE

REGISTERED PROFESSIONAL ENGINEER G. SLOCUM No. 44950 Exp. 3-31-16 CIVIL STATE OF CALIFORNIA

The State of California or its officers or agents shall not be responsible for the accuracy or completeness of scanned copies of this plan sheet.

QUANTITIES

WORK AREA MONITORING (BRIDGE)	LUMP	SUM
PREPARE CONCRETE BRIDGE DECK SURFACE	9,370	SQFT
FURNISH POLYESTER CONCRETE OVERLAY	945	CF
PLACE POLYESTER CONCRETE OVERLAY	9,370	SQFT
BRIDGE REMOVAL	LUMP	SUM
STRUCTURE EXCAVATION (BRIDGE)	310	CY
STRUCTURE BACKFILL (BRIDGE)	452	CY
30" PERMANENT STEEL CASING	816	LF
24" CAST-IN-DRILLED-HOLE CONCRETE PILING	168	LF
30" CAST-IN-DRILLED-HOLE CONCRETE PILING	816	LF
24" CAST-IN-DRILLED-HOLE CONCRETE PILING (ROCK SOCKET)	802	LF
STRUCTURAL CONCRETE, BRIDGE FOOTING	204	CY
STRUCTURAL CONCRETE, BRIDGE (FIBER REINFORCED)	365	CY
STRUCTURAL CONCRETE, BRIDGE	175	CY
FURNISH PRECAST PRESTRESSED CONCRETE WIDE FLANGE GIRDER(110'-120')	10	EA
ERECT PRECAST PRESTRESSED CONCRETE GIRDER	10	EA
JOINT SEAL (MR 1")	90	LF
BAR REINFORCING STEEL (BRIDGE)	106,000	LB
BAR REINFORCING STEEL (EPOXY COATED) (BRIDGE)	147,500	LB
HEADED BAR REINFORCEMENT	28	EA
MISCELLANEOUS METAL (BRIDGE)	945	LB
CONCRETE BARRIER (TYPE 736)	533	LF

NOTES:

1. Contours are for top of concrete deck and have been adjusted by lowering 1" from profile grade for polyester concrete overlay.
2. Contours do not include camber.
3. Contour interval equals 0.10 feet.

X = 10 feet along station line.

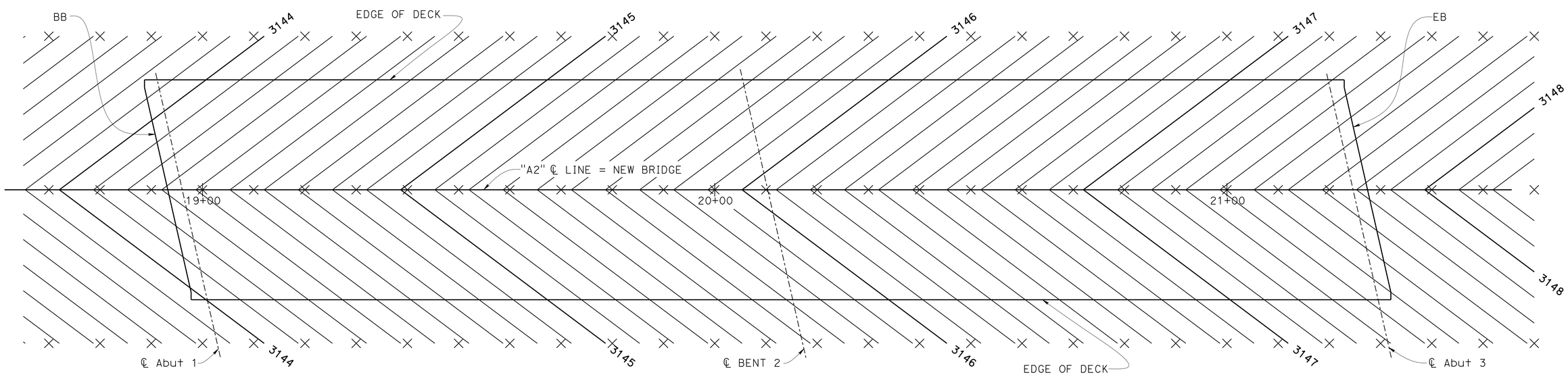

DECK CONTOURS

1" = 10'-0"

	BY	CHECKED
DESIGN	G. SLOCUM	H. FANG
DETAILS	C. FIGUERRES	H. FANG
QUANTITIES	G. ZUNIGA	J. LEE

STATE OF CALIFORNIA
DEPARTMENT OF TRANSPORTATION

DIVISION OF ENGINEERING SERVICES
STRUCTURE DESIGN
DESIGN BRANCH 2

BRIDGE NO. 02-0202
POST MILE 68.3

HILT ROAD OVERCROSSING (REPLACE)
DECK CONTOURS

STRUCTURES DESIGN DETAIL SHEET (ENGLISH) (REV. 09-01-10)

ORIGINAL SCALE IN INCHES FOR REDUCED PLANS 0 1 2 3

UNIT: 3577
PROJECT NUMBER & PHASE: 0200020157
CONTRACT NO.: 02-3E7301

DISREGARD PRINTS BEARING EARLIER REVISION DATES

REVISION DATES 2-26-14 6-16-14

SHEET 3 OF 20

FILE => 02-0202-b-dkc.dgn

USERNAME => s123119 DATE PLOTTED => 23-JAN-2015 TIME PLOTTED => 12:48

DIST	COUNTY	ROUTE	POST MILES TOTAL PROJECT	SHEET No.	TOTAL SHEETS
02	Sis	5	68.3	104	120

REGISTERED CIVIL ENGINEER 10-17-14 DATE

11-26-14
PLANS APPROVAL DATE

REGISTERED PROFESSIONAL ENGINEER G. SLOCUM No. 44950 Exp. 3-31-16 CIVIL STATE OF CALIFORNIA

The State of California or its officers or agents shall not be responsible for the accuracy or completeness of electronic copies of this plan sheet.

CURVE DATA

No.	R	Δ	T	L
1	230.00	120°52'04"	405.43	485.19
2	100.00	27°47'56"	24.75	48.52
3	150.00	26°18'59"	35.07	68.90
4	300.00	12°11'43"	32.05	63.85

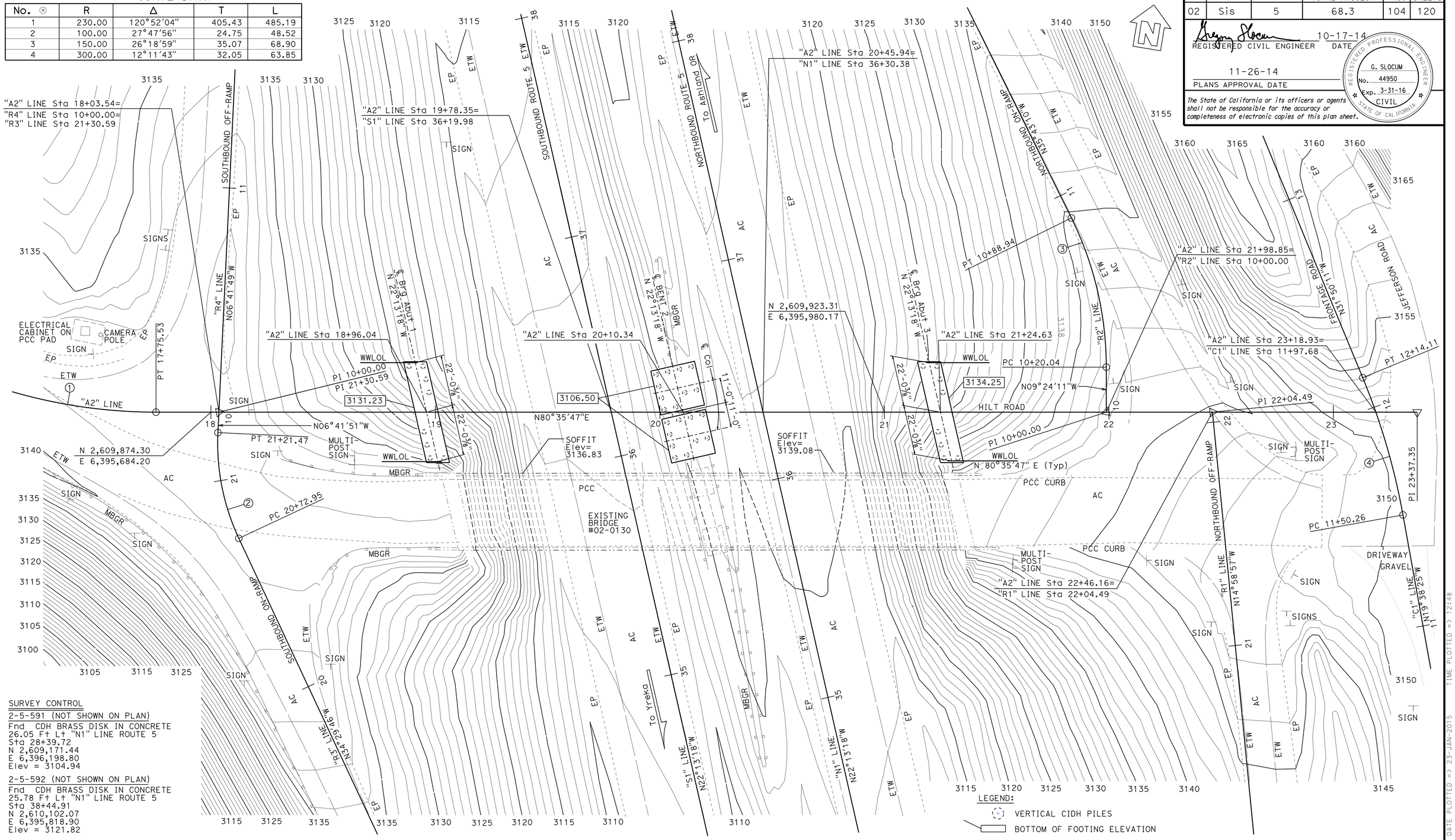

SURVEY CONTROL

2-5-591 (NOT SHOWN ON PLAN)
Fnd CDH BRASS DISK IN CONCRETE
26.05 Ft Lt "N1" LINE ROUTE 5
Sta 28+39.72
N 2,609,171.44
E 6,396,198.80
Elev = 3104.94

2-5-592 (NOT SHOWN ON PLAN)
Fnd CDH BRASS DISK IN CONCRETE
25.78 Ft Lt "N1" LINE ROUTE 5
Sta 38+44.91
N 2,610,102.07
E 6,395,818.90
Elev = 3121.82

LEGEND:
VERTICAL CIDH PILES
BOTTOM OF FOOTING ELEVATION
NOTE: ALL PILES NOT SHOWN.

PRELIMINARY INVESTIGATION SECTION

SCALE 1"=20'	VERT.DATUM NAVD88	PHOTOGRAMMETRY AS OF: X			
	HORZ.DATUM NAD83 (2004.69)	SURVEYED	BY DISTRICT	CHECKED	BY J. BORDEN 12/2013
ALIGNMENT TIES Dist TRAVERSE SHEET		DRAFTED	BY T. ZOLNIKOV 12/2013	CHECKED	BY L. LEW 12/2013

DESIGN	BY G. SLOCUM	CHECKED H. FANG
DETAILS	BY C. FIGUERRES	CHECKED H. FANG
QUANTITIES	BY G. ZUNIGA	CHECKED J. LEE

STATE OF CALIFORNIA
DEPARTMENT OF TRANSPORTATION

DIVISION OF ENGINEERING SERVICES
STRUCTURE DESIGN
DESIGN BRANCH 2

BRIDGE NO. 02-0202
POST MILE R68.30

HILT ROAD OC (REPLACE)
FOUNDATION PLAN

STRUCTURES FOUNDATION PLAN SHEET (ENGLISH) (REV. 09-01-10)

ORIGINAL SCALE IN INCHES FOR REDUCED PLANS 0 1 2 3

UNIT: 3646
PROJECT NUMBER & PHASE: 0200020157 0 CONTRACT NO.: 02-3E7301

DISREGARD PRINTS BEARING EARLIER REVISION DATES

REVISION DATES 12/20/13 12/18/13 4/1/14 4/21/14

SHEET 4 OF 20

FILE => 02-0202-e-fpl01.dgn

USERNAME => s123119 DATE PLOTTED => 23-JAN-2015 TIME PLOTTED => 12:48

DIST	COUNTY	ROUTE	POST MILES TOTAL PROJECT	SHEET No.	TOTAL SHEETS
02	Sis	5	68.3	105	120

REGISTERED CIVIL ENGINEER 10-17-14 DATE

11-26-14
PLANS APPROVAL DATE

REGISTERED PROFESSIONAL ENGINEER G. SLOCUM No. 44950 Exp. 3-31-16 CIVIL STATE OF CALIFORNIA

The State of California or its officers or agents shall not be responsible for the accuracy or completeness of scanned copies of this plan sheet.

LEGEND:

Headed bar reinforcement

NOTES:

1. For bearing pad details and backwall base detail, see "ABUTMENT DETAILS No. 3" sheet.
2. Abutment 1 shown, Abutment 3 similar.
3. For future utility openings, see "ABUTMENT DETAILS No. 2" sheet.
4. Piles to have permanent steel casing at Abutment 1. For wall thickness and limits of payment, see "ABUTMENT 1 PILE DETAILS" on "ABUTMENT DETAILS No. 2" sheet.
5. For limits of payment for 24"ø CIDH (Rock Socket), see "ABUTMENT 1 PILE DETAILS" and "ABUTMENT 3 PILE DETAILS" on "ABUTMENT DETAILS No. 2" sheet.

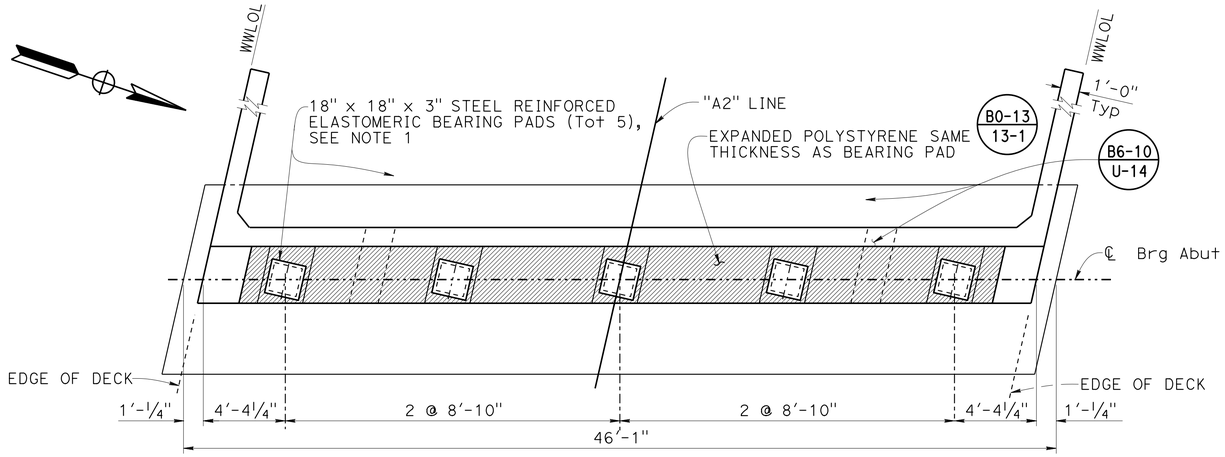

PLAN
¼" = 1'-0"

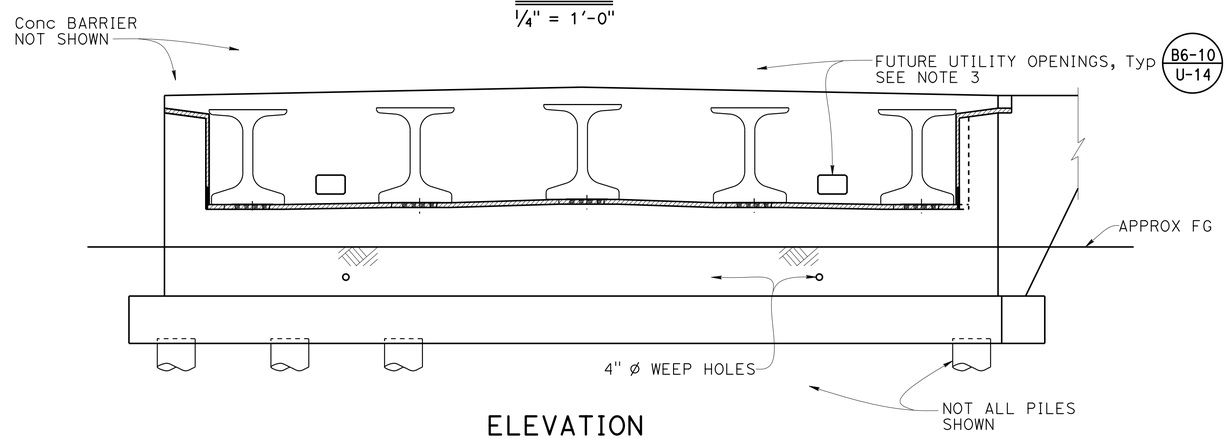

ELEVATION
¼" = 1'-0"

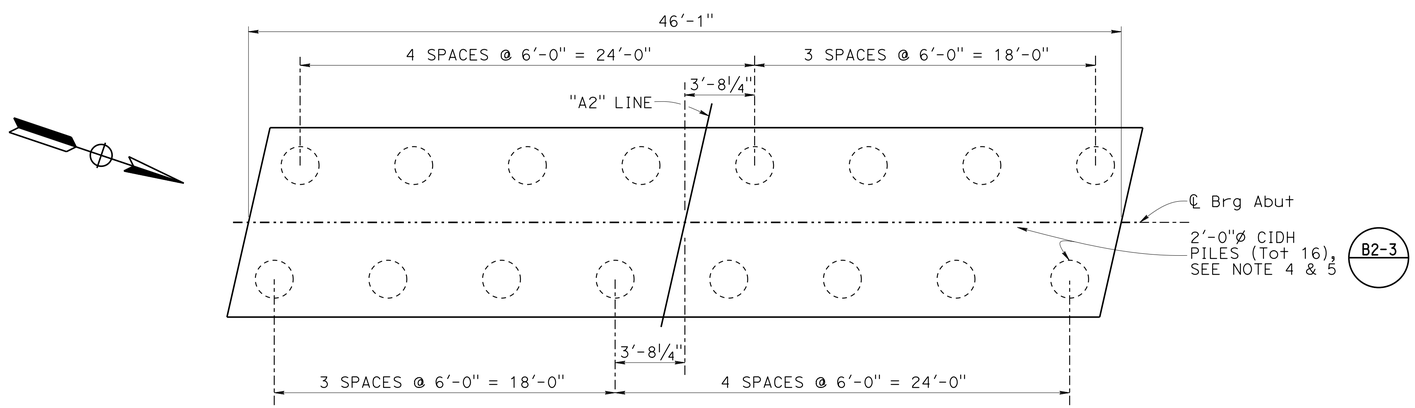

FOOTING PLAN
¼" = 1'-0"

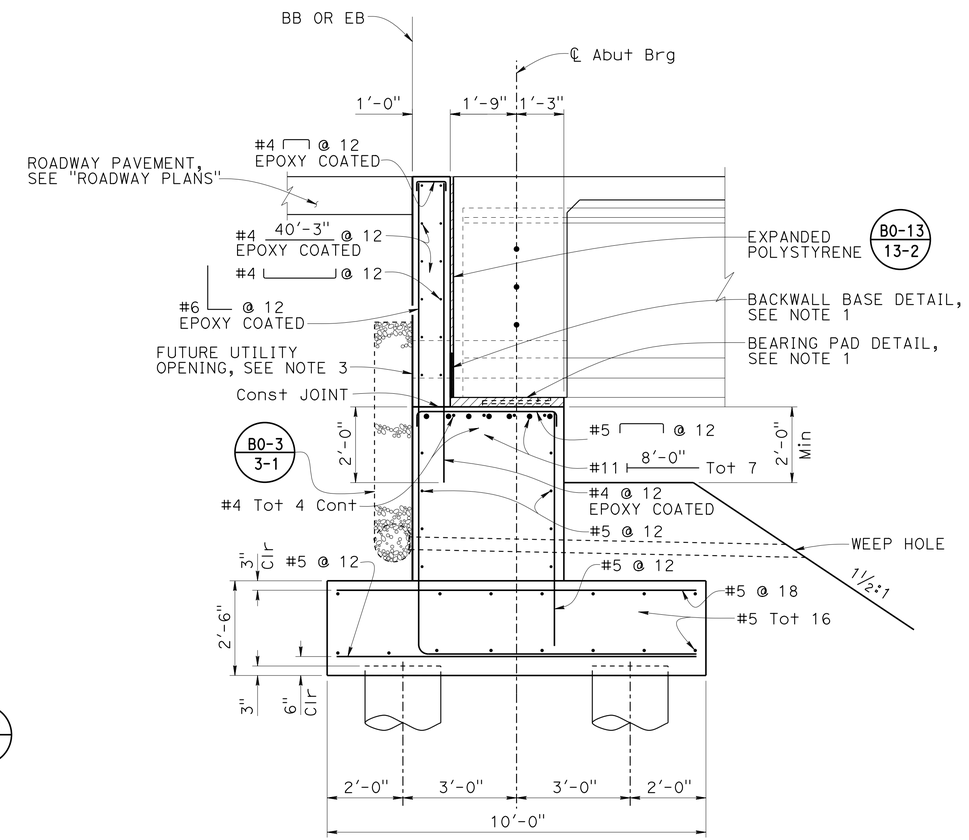

ABUTMENT TYPICAL SECTION
½" = 1'-0"

	BY	CHECKED
DESIGN	G. SLOCUM	H. FANG
DETAILS	C. FIGUERRES	H. FANG
QUANTITIES	G. ZUNIGA	J. LEE

STATE OF CALIFORNIA
DEPARTMENT OF TRANSPORTATION

DIVISION OF ENGINEERING SERVICES
STRUCTURE DESIGN
DESIGN BRANCH 2

BRIDGE NO. 02-0202
POST MILE 68.3

HILT ROAD OVERCROSSING (REPLACE)
ABUTMENT LAYOUT

STRUCTURES DESIGN DETAIL SHEET (ENGLISH) (REV. 09-01-10)

ORIGINAL SCALE IN INCHES FOR REDUCED PLANS 0 1 2 3

UNIT: 3577
PROJECT NUMBER & PHASE: 0200020157
CONTRACT NO.: 02-3E7301

DISREGARD PRINTS BEARING EARLIER REVISION DATES

REVISION DATES: 7-18-14 8-6-14 6-16-14

SHEET 5 OF 20

FILE => 02-0202-f-a01_aio01.dgn

USERNAME => s123119 DATE PLOTTED => 23-JAN-2015 TIME PLOTTED => 12:48

DIST	COUNTY	ROUTE	POST MILES TOTAL PROJECT	SHEET No.	TOTAL SHEETS
02	Sis	5	68.3	106	120

REGISTERED CIVIL ENGINEER 10-17-14 DATE

11-26-14
PLANS APPROVAL DATE

REGISTERED PROFESSIONAL ENGINEER G. SLOCUM No. 44950 Exp. 3-31-16 CIVIL STATE OF CALIFORNIA

The State of California or its officers or agents shall not be responsible for the accuracy or completeness of scanned copies of this plan sheet.

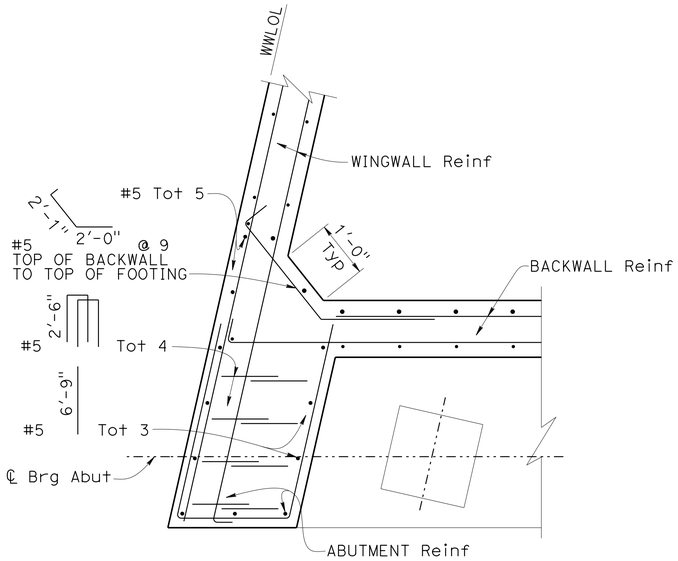

ACUTE CORNER

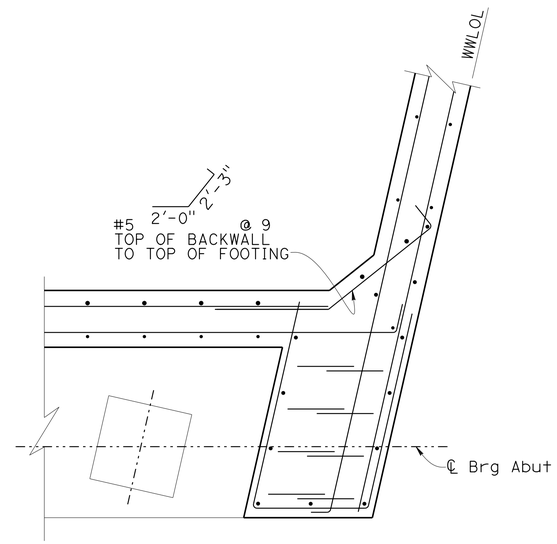

OBTUSE CORNER

SEE NOTE 1

SECTION B-B

¾" = 1'-0"

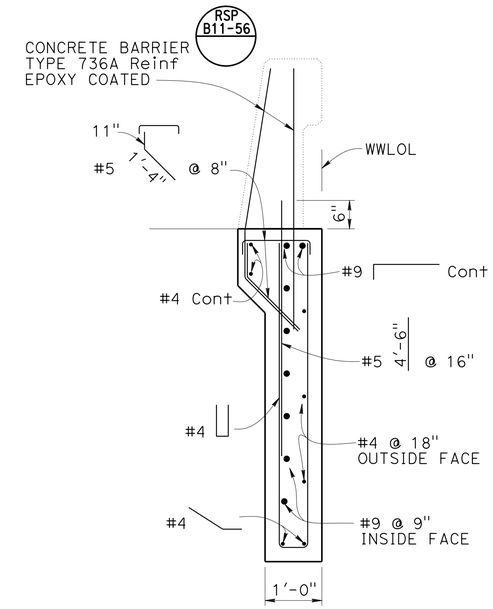

SECTION C-C

¾" = 1'-0"

NOTES:

1. For additional information, see "SECTION B-B" at acute corner.

LEGEND:

Headed bar reinforcement

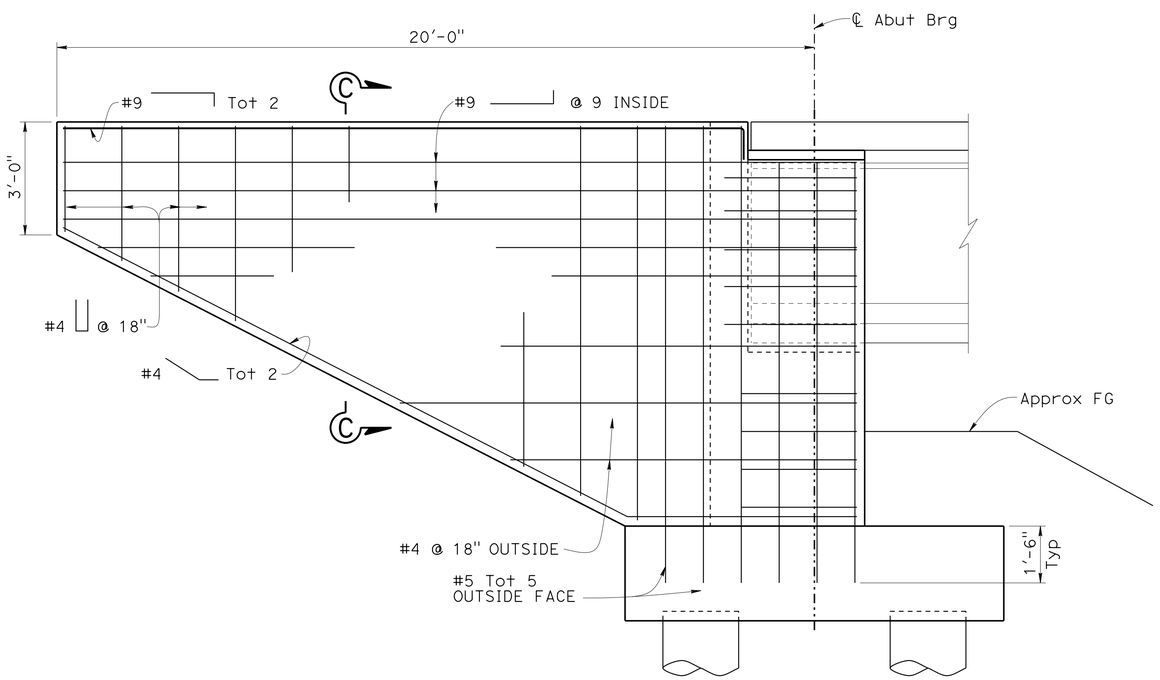

WINGWALL ELEVATION

½" = 1'-0"

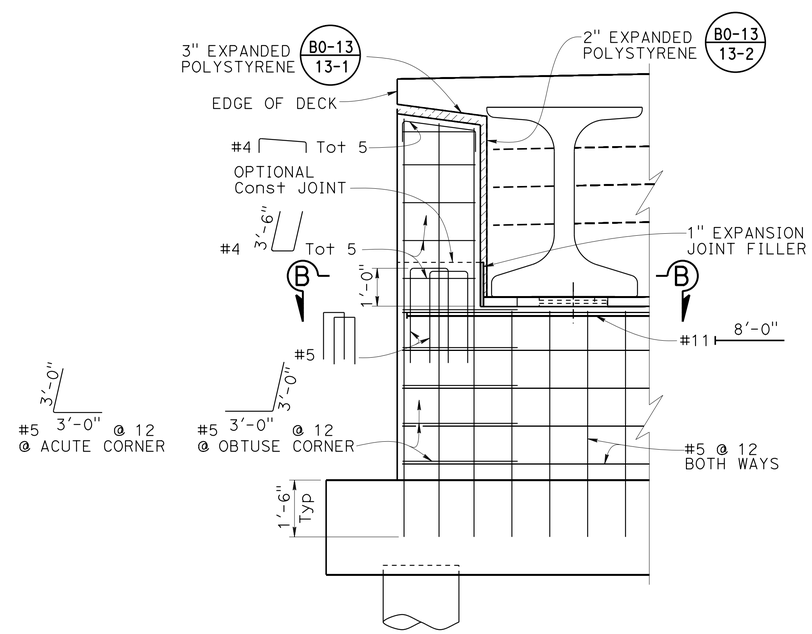

SHEAR KEY DETAIL

½" = 1'-0"

DESIGN	BY G. SLOCUM	CHECKED H. FANG	
DETAILS	BY C. FIGUERRES	CHECKED H. FANG	
QUANTITIES	BY G. ZUNIGA	CHECKED J. LEE	

STATE OF CALIFORNIA
DEPARTMENT OF TRANSPORTATION

DIVISION OF ENGINEERING SERVICES
STRUCTURE DESIGN
DESIGN BRANCH 2

BRIDGE NO. 02-0202
POST MILE 68.3

HILT ROAD OVERCROSSING (REPLACE)
ABUTMENT DETAILS No. 1

STRUCTURES DESIGN DETAIL SHEET (ENGLISH) (REV. 09-01-10)

ORIGINAL SCALE IN INCHES FOR REDUCED PLANS 0 1 2 3

UNIT: 3577
PROJECT NUMBER & PHASE: 0200020157
CONTRACT NO.: 02-3E7301

DISREGARD PRINTS BEARING EARLIER REVISION DATES

REVISION DATES 4-7-14 6-16-14 7-16-14

SHEET 6 OF 20

FILE => 02-0202-f-a01dt01.dgn

USERNAME => s123119 DATE PLOTTED => 23-JAN-2015 TIME PLOTTED => 12:48

DIST	COUNTY	ROUTE	POST MILES TOTAL PROJECT	SHEET No.	TOTAL SHEETS
02	Sis	5	68.3	107	120

REGISTERED CIVIL ENGINEER 10-17-14 DATE

11-26-14
PLANS APPROVAL DATE

REGISTERED PROFESSIONAL ENGINEER G. SLOCUM No. 44950 Exp. 3-31-16 CIVIL STATE OF CALIFORNIA

The State of California or its officers or agents shall not be responsible for the accuracy or completeness of scanned copies of this plan sheet.

NOTES:

1. Future utility opening 1'-0" H x 1'-6" W centered between girders.
2. For clarity, Deck and Abutment Reinforment not shown.
3. Concrete Barrier not shown.
4. For all pile specified elevations, see Pile Data Table on "INDEX TO PLANS" sheet.
5. For additional details, see notes and details for 200 kip pile B2-3 / -

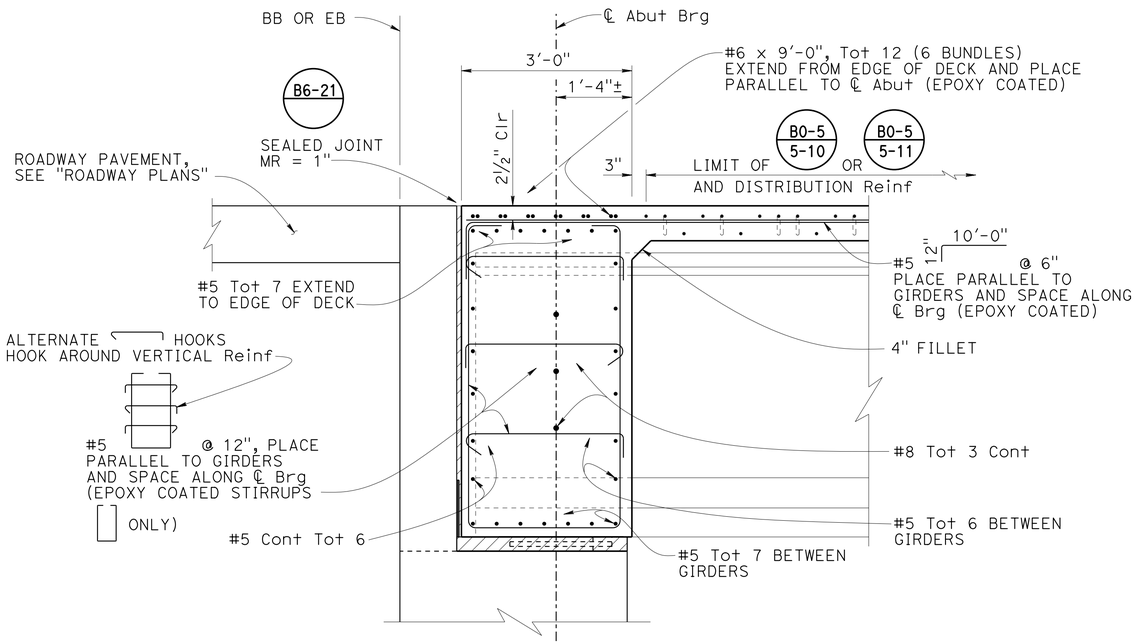

SECTION A-A

¾" = 1'-0"

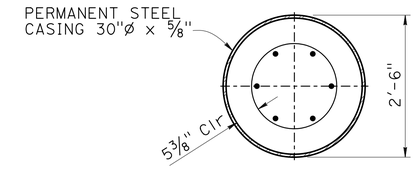

SECTION T-T

¾" = 1'-0"

SEE NOTE 5

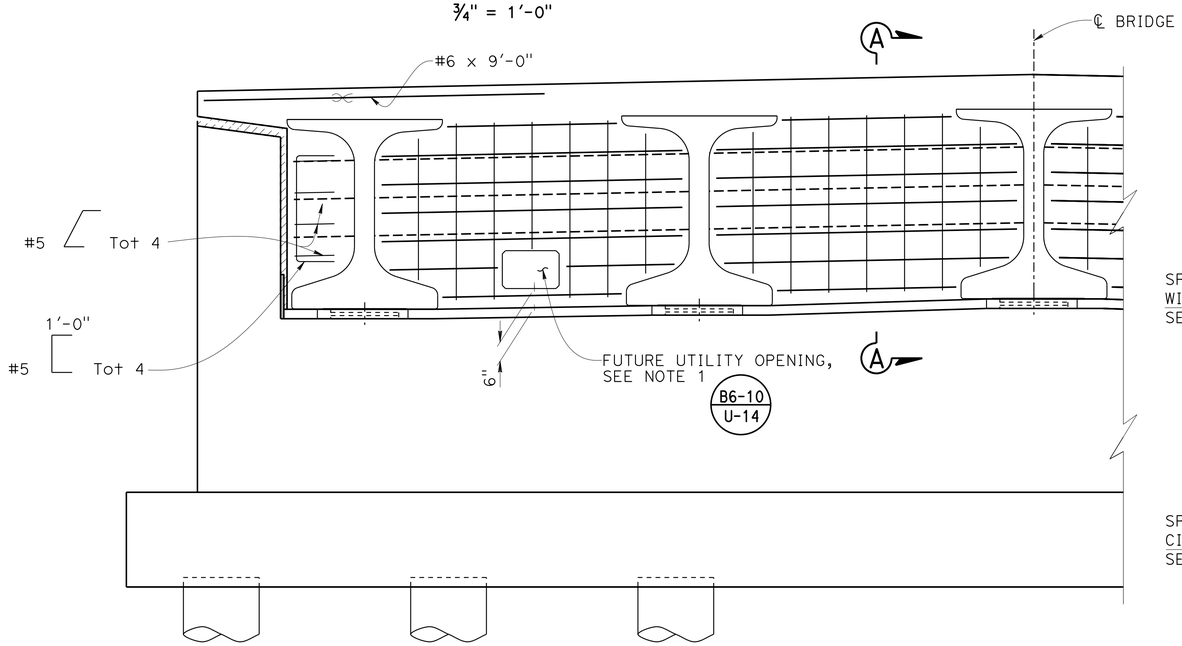

END DIAPHRAGM PART ELEVATION (SYMMETRICAL ABOUT ℄ BRIDGE)

½" = 1'-0"

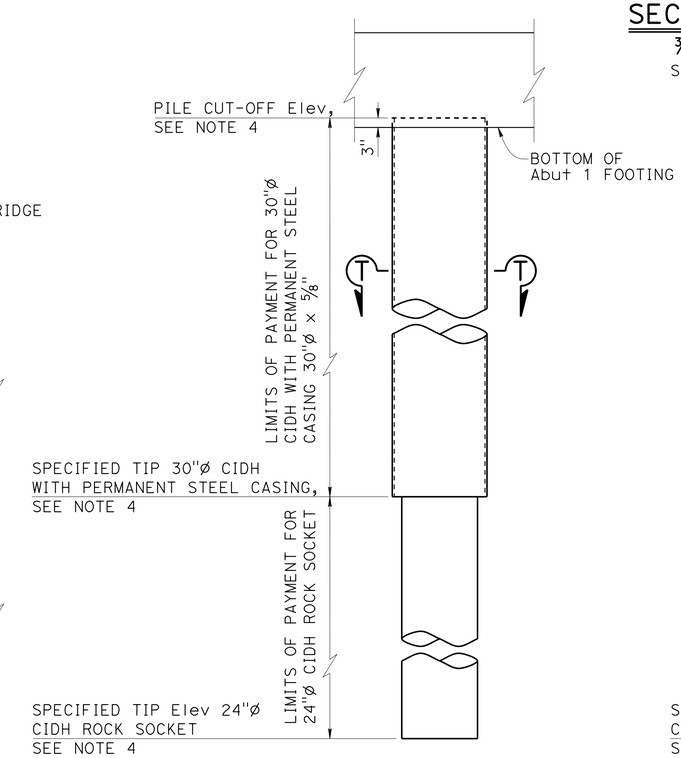

ABUTMENT 1 PILE DETAILS

½" = 1'-0"

SEE NOTE 5

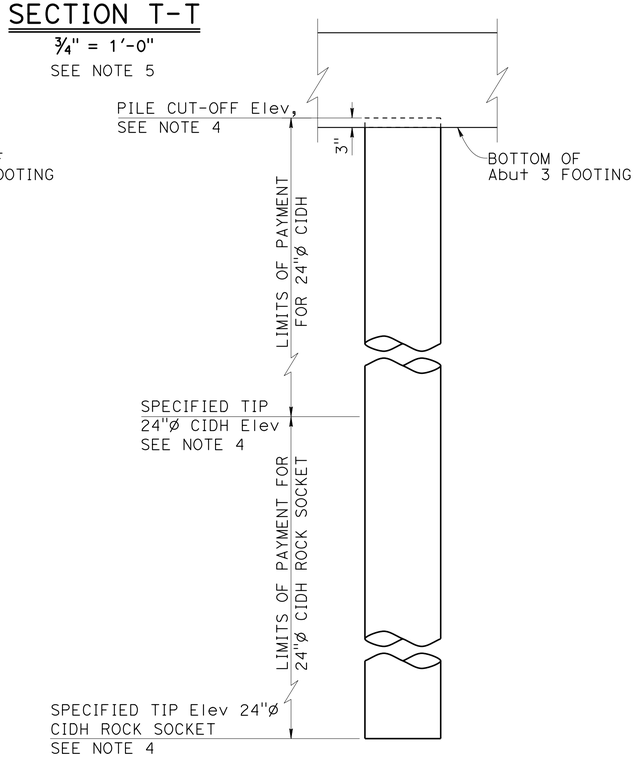

ABUTMENT 3 PILE DETAILS

½" = 1'-0"

SEE NOTE 5

DESIGN	BY G. SLOCUM	CHECKED H. FANG	
DETAILS	BY C. FIGUERRES	CHECKED H. FANG	
QUANTITIES	BY G. ZUNIGA	CHECKED J. LEE	

STATE OF CALIFORNIA DEPARTMENT OF TRANSPORTATION

DIVISION OF ENGINEERING SERVICES STRUCTURE DESIGN DESIGN BRANCH 2

BRIDGE NO. 02-0202 POST MILE 68.3

HILT ROAD OVERCROSSING (REPLACE)

ABUTMENT DETAILS No. 2

STRUCTURES DESIGN DETAIL SHEET (ENGLISH) (REV. 09-01-10)

ORIGINAL SCALE IN INCHES FOR REDUCED PLANS 0 1 2 3

UNIT: 3577
PROJECT NUMBER & PHASE: 0200020157
CONTRACT NO.: 02-3E7301

DISREGARD PRINTS BEARING EARLIER REVISION DATES

REVISION DATES 4/16/14 8-15-14

SHEET 7 OF 20

FILE => 02-0202-f-a01dt02.dgn

USERNAME => s123119 DATE PLOTTED => 23-JAN-2015 TIME PLOTTED => 12:48

DIST	COUNTY	ROUTE	POST MILES TOTAL PROJECT	SHEET No.	TOTAL SHEETS
02	Sis	5	68.3	108	120

REGISTERED CIVIL ENGINEER 10-17-14 DATE

11-26-14
PLANS APPROVAL DATE

REGISTERED PROFESSIONAL ENGINEER G. SLOCUM No. 44950 Exp. 3-31-16 CIVIL STATE OF CALIFORNIA

The State of California or its officers or agents shall not be responsible for the accuracy or completeness of scanned copies of this plan sheet.

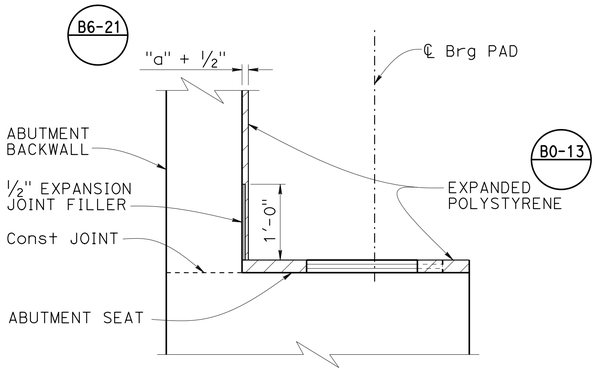

BACKWALL BASE DETAIL

1" = 1'-0"

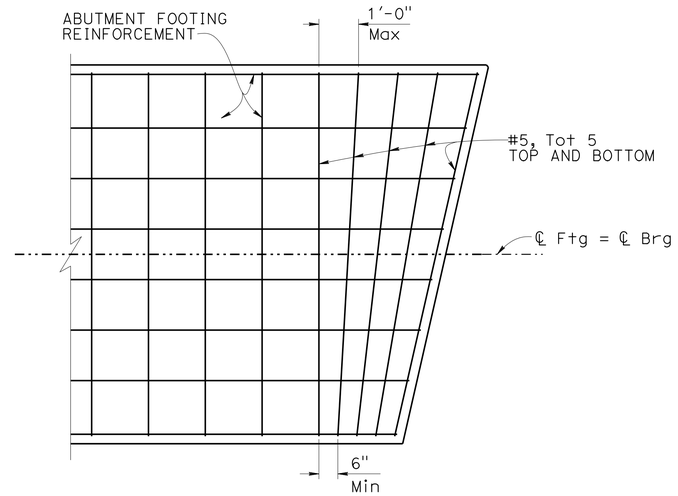

FOOTING CORNER REINFORCEMENT DETAIL

3/4" = 1'-0"

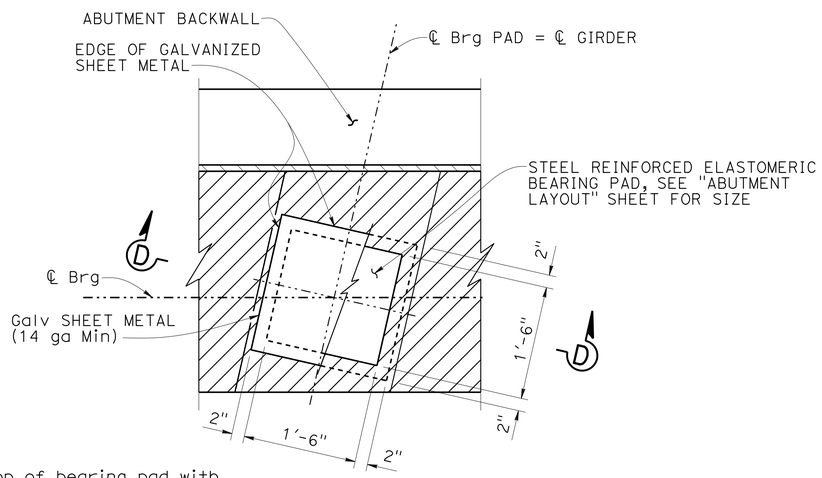

NOTE:
Coat top of bearing pad with silicone grease prior to placing sheet metal.

PLAN

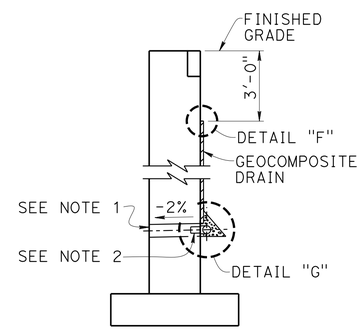

WALL SECTION

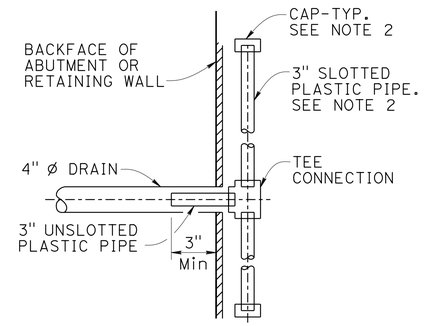

SECTION E-E

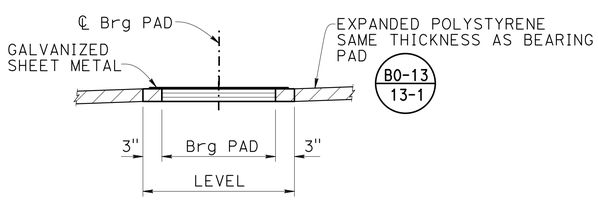

SECTION D-D

BEARING PAD DETAIL

1" = 1'-0"

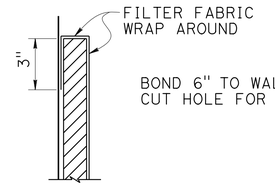

DETAIL "F"

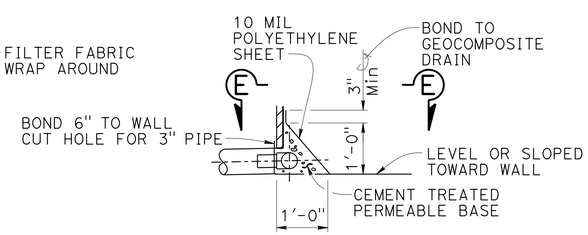

DETAIL "G"

WEEP HOLE AND GEOCOMPOSITE DRAIN

NO SCALE

ALTERNATIVE TO BRIDGE DETAIL B0-3 / 3-1

NOTES:

1. 4"Ø drains at intermediate sag points and at 25' max center to center. Exposed wall drains must be located 3"± above finished grade.
2. Geocomposite drain, cement treated permeable base, and 3"Ø slotted plastic pipe continuous behind retaining wall or abutment. Cap ends of pipe. Provide "Tee" connection at each 4"Ø drain.
3. Connect the low end of plastic pipe to the main outlet pipe as applicable.

	BY	CHECKED
DESIGN	G. SLOCUM	H. FANG
DETAILS	C. FIGUERRES	H. FANG
QUANTITIES	G. ZUNIGA	J. LEE

STATE OF CALIFORNIA
DEPARTMENT OF TRANSPORTATION

DIVISION OF ENGINEERING SERVICES
STRUCTURE DESIGN
DESIGN BRANCH 2

BRIDGE NO. 02-0202
POST MILE 68.3

HILT ROAD OVERCROSSING (REPLACE)
ABUTMENT DETAILS No. 3

STRUCTURES DESIGN DETAIL SHEET (ENGLISH) (REV. 09-01-10)

ORIGINAL SCALE IN INCHES FOR REDUCED PLANS 0 1 2 3

UNIT: 3577
PROJECT NUMBER & PHASE: 0200020157
CONTRACT NO.: 02-3E7301

DISREGARD PRINTS BEARING EARLIER REVISION DATES

REVISION DATES: 4-8-14 4-24-14 5-16-14

SHEET 8 OF 20

FILE => 02-0202-f-a01d+03.dgn

USERNAME => s123119 DATE PLOTTED => 23-JAN-2015 TIME PLOTTED => 12:48

DIST	COUNTY	ROUTE	POST MILES TOTAL PROJECT	SHEET No.	TOTAL SHEETS
02	Sis	5	68.3	109	120

REGISTERED CIVIL ENGINEER 10-17-14 DATE

11-26-14
PLANS APPROVAL DATE

REGISTERED PROFESSIONAL ENGINEER G. SLOCUM No. 44950 Exp. 3-31-16 CIVIL STATE OF CALIFORNIA

The State of California or its officers or agents shall not be responsible for the accuracy or completeness of scanned copies of this plan sheet.

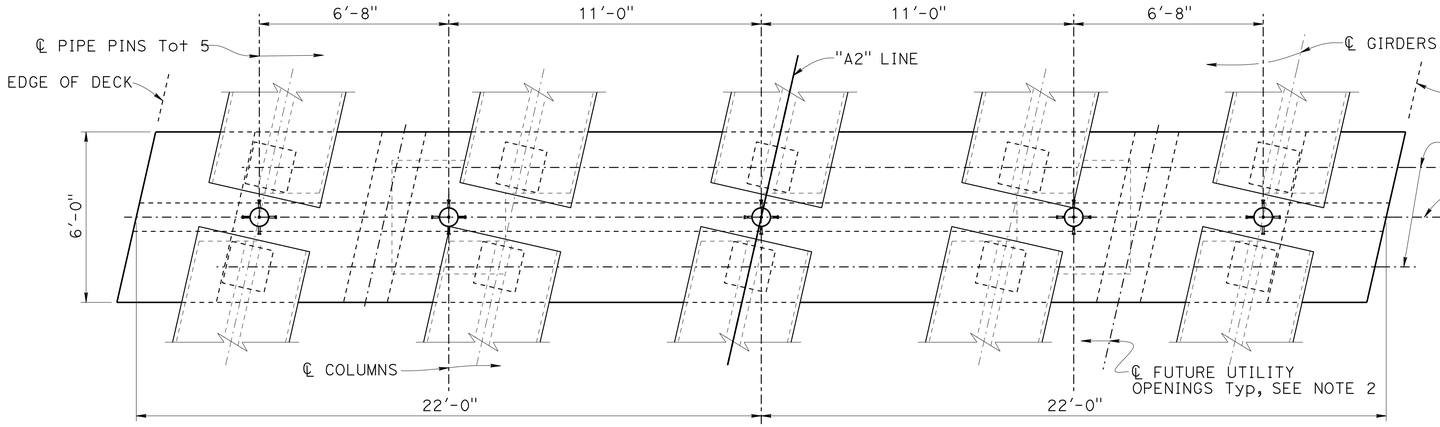

PLAN
3/8" = 1'-0"

NOTES:

1. For footings and columns, see "BENT DETAILS No. 2" sheet.
2. See "BENT DETAILS NO. 2".
3. For details not shown, see "SECTION H-H".
4. For SECTIONS K-K and L-L see "BENT DETAILS No. 1" sheet.
5. Bent Cap right end shown, left end similar.
6. See "SECTION J-J" for additional stirrup.
7. For pipe pin details, see "PIPE PIN DETAILS" sheet.
8. For details not shown, see "SECTION I-I".
9. No splices permitted in main cap bars.
10. Where conflict exists between bent cap and column bars, #9 total 12 may be placed in vertical bundles of 2, total 12 bars, to increase spacing.

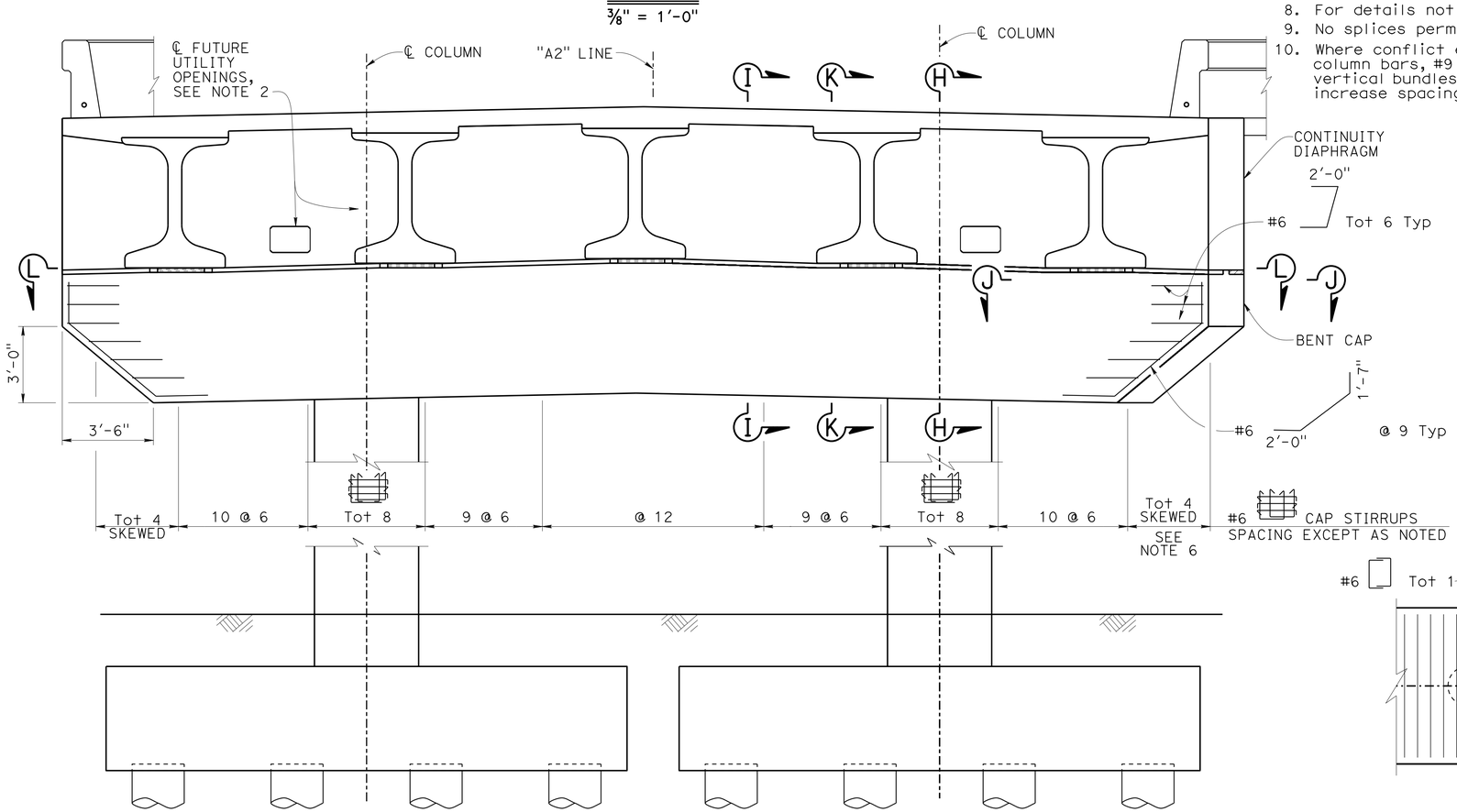

ELEVATION
3/8" = 1'-0"

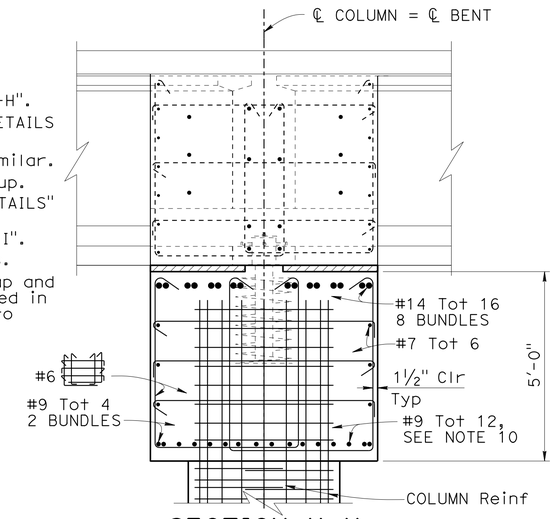

SECTION H-H
½" = 1'-0"
SEE NOTE 8

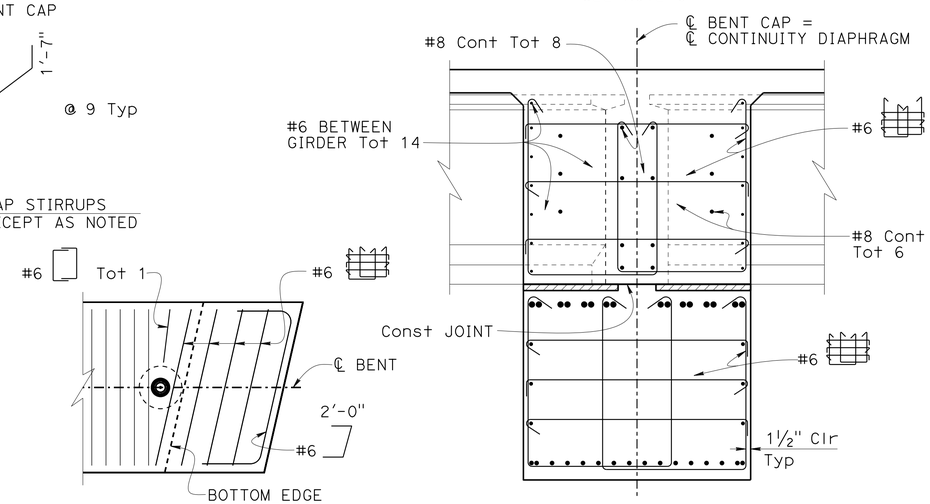

SECTION I-I
½" = 1'-0"
SEE NOTE 3

SECTION J-J
½" = 1'-0"
SEE NOTE 5

DESIGN	BY G. SLOCUM	CHECKED H. FANG	
DETAILS	BY C. FIGUERRES	CHECKED H. FANG	
QUANTITIES	BY G. ZUNIGA	CHECKED J. LEE	

STATE OF CALIFORNIA
DEPARTMENT OF TRANSPORTATION

DIVISION OF ENGINEERING SERVICES
STRUCTURE DESIGN
DESIGN BRANCH 2

BRIDGE NO. 02-0202
POST MILE 68.3

HILT ROAD OVERCROSSING (REPLACE)
BENT LAYOUT

STRUCTURES DESIGN DETAIL SHEET (ENGLISH) (REV. 09-01-10)

ORIGINAL SCALE IN INCHES FOR REDUCED PLANS 0 1 2 3

UNIT: 3577
PROJECT NUMBER & PHASE: 0200020157
CONTRACT NO.: 02-3E7301

DISREGARD PRINTS BEARING EARLIER REVISION DATES

REVISION DATES 3-27-14 4-4-14 4-25-14 6-16-14

SHEET 9 OF 20

FILE => 02-0202-n-b01_lo01.dgn

USERNAME => s123119 DATE PLOTTED => 23-JAN-2015 TIME PLOTTED => 12:48

DIST	COUNTY	ROUTE	POST MILES TOTAL PROJECT	SHEET No.	TOTAL SHEETS
02	Sis	5	68.3	110	120

REGISTERED CIVIL ENGINEER 10-17-14 DATE

11-26-14
PLANS APPROVAL DATE

REGISTERED PROFESSIONAL ENGINEER G. SLOCUM No. 44950 Exp. 3-31-16 CIVIL STATE OF CALIFORNIA

The State of California or its officers or agents shall not be responsible for the accuracy or completeness of scanned copies of this plan sheet.

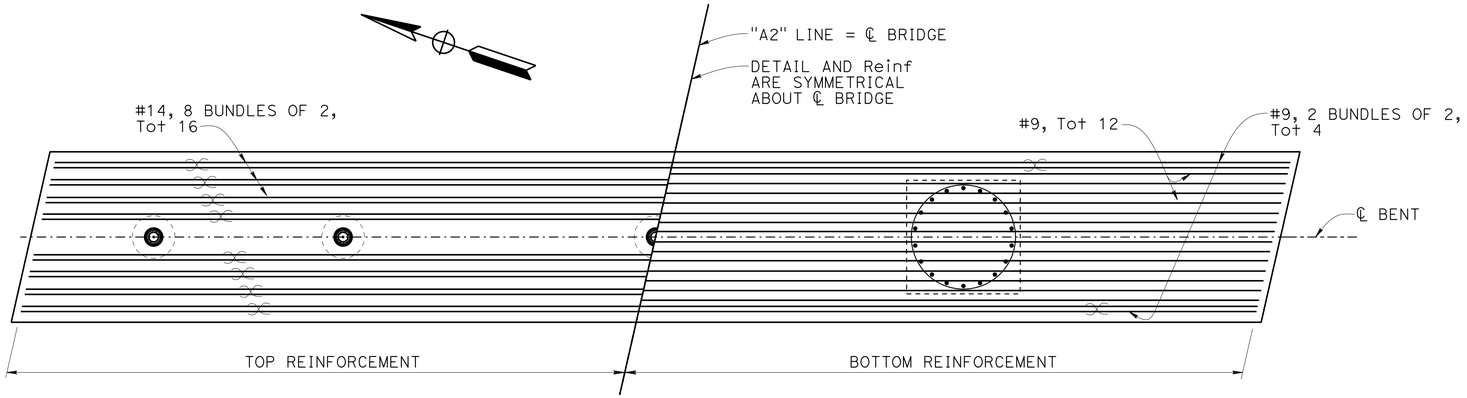

BENT CAP TOP AND BOTTOM REINFORCEMENT

3/8" = 1'-0"

NOTES:

1. For details not shown, see SECTION H-H and I-I on "BENT LAYOUT" sheet.
2. For pipe pin details, see "PIPE PIN DETAILS" sheet.
3. For locations of Section K-K and L-L, see "BENT LAYOUT" sheet.

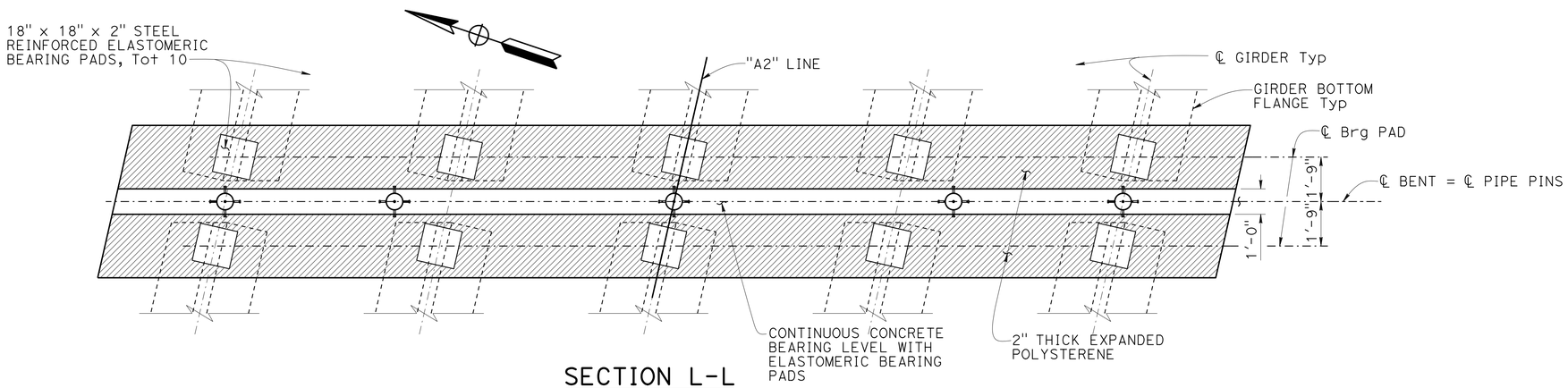

SECTION L-L

3/8" = 1'-0"

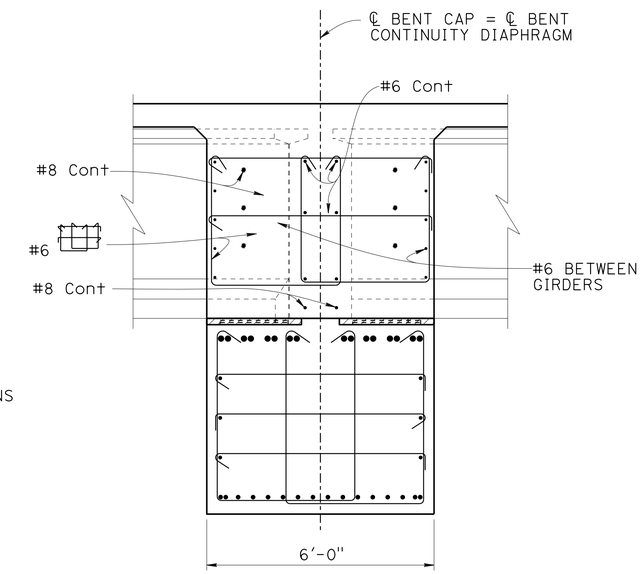

SECTION K-K

3/4" = 1'-0"

SEE NOTE 1

DESIGN	BY G. SLOCUM	CHECKED H. FANG	
DETAILS	BY C. FIGUERRES	CHECKED H. FANG	
QUANTITIES	BY G. ZUNIGA	CHECKED J. LEE	

STATE OF CALIFORNIA DEPARTMENT OF TRANSPORTATION

DIVISION OF ENGINEERING SERVICES STRUCTURE DESIGN DESIGN BRANCH 2

BRIDGE NO. 02-0202
POST MILE 68.3

HILT ROAD OVERCROSSING (REPLACE)
BENT DETAILS No. 1

STRUCTURES DESIGN DETAIL SHEET (ENGLISH) (REV. 09-01-10)

ORIGINAL SCALE IN INCHES FOR REDUCED PLANS 0 1 2 3

UNIT: 3577
PROJECT NUMBER & PHASE: 0200020157
CONTRACT NO.: 02-3E7301

DISREGARD PRINTS BEARING EARLIER REVISION DATES

REVISION DATES 3-22-14 7-8-14 4-21-14

SHEET 10 OF 20

FILE => 02-0202-h-bdet01.dgn

USERNAME => s123119 DATE PLOTTED => 23-JAN-2015 TIME PLOTTED => 12:48

DIST	COUNTY	ROUTE	POST MILES TOTAL PROJECT	SHEET No.	TOTAL SHEETS
02	Sis	5	68.3	111	120

REGISTERED CIVIL ENGINEER 10-17-14 DATE

11-26-14
PLANS APPROVAL DATE

REGISTERED PROFESSIONAL ENGINEER G. SLOCUM No. 44950 Exp. 3-31-16 CIVIL STATE OF CALIFORNIA

The State of California or its officers or agents shall not be responsible for the accuracy or completeness of scanned copies of this plan sheet.

NOTES:

1. Future utility opening 1'-0" H x 1'-6" W centered between giders.
2. Place all continuity diaphragm stirrups parallel to girders.
3. Splices in hoops must be "Ultimate Butt" splices.
4. No splices permitted in main column reinforcement.
5. For all pile specified elevations, see Pile Data Table on "INDEX TO PLANS" sheet.
6. For additional details, see notes and details for 200 kip pile B2-3 -

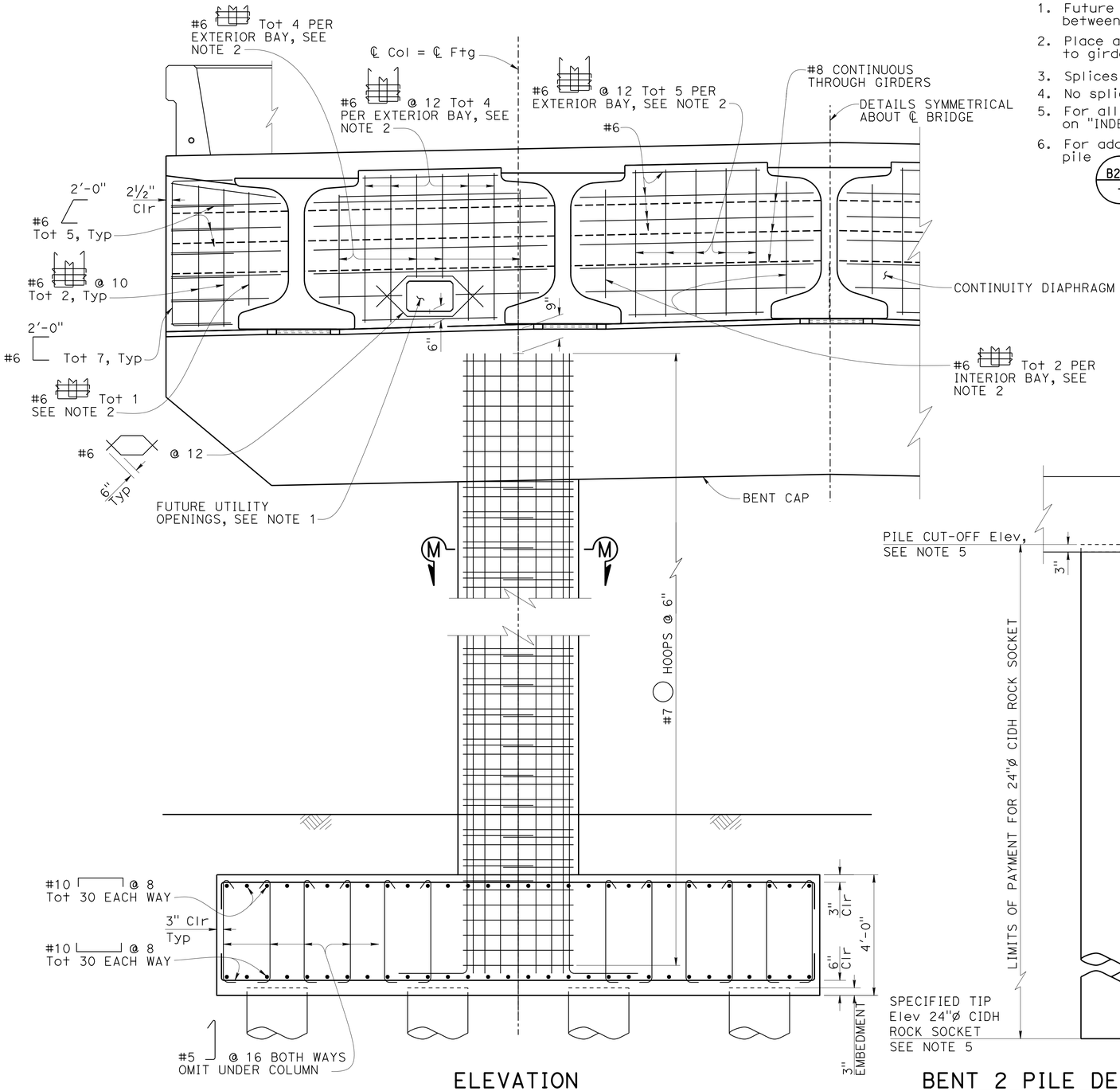

ELEVATION
½" = 1'-0"

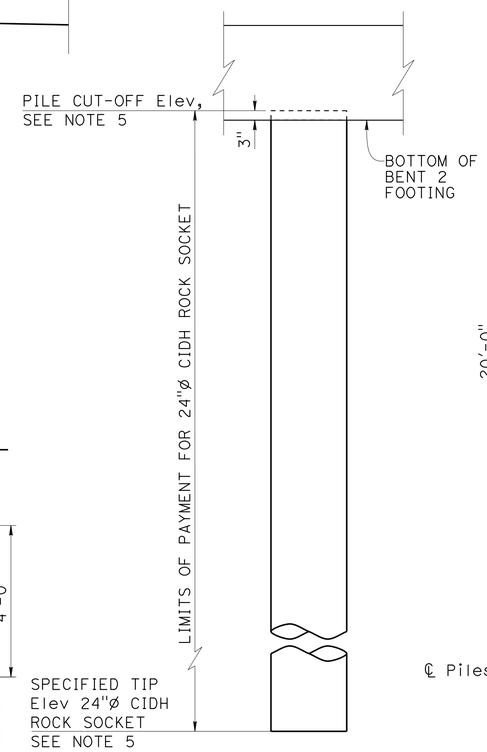

BENT 2 PILE DETAIL
½" = 1'-0"

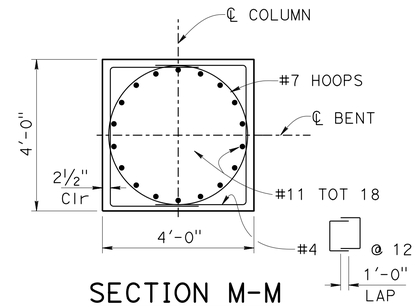

SECTION M-M
½" = 1'-0"

B2-3

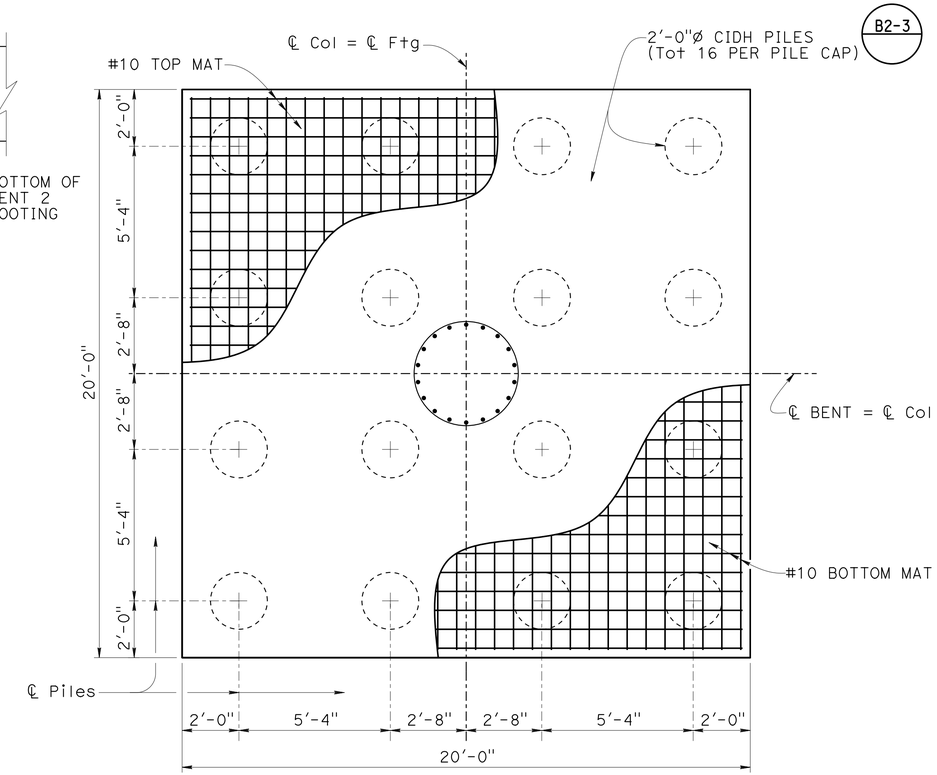

FOOTING PLAN
⅜" = 1'-0"

	BY	CHECKED
DESIGN	G. SLOCUM	H. FANG
DETAILS	C. FIGUERRES	H. FANG
QUANTITIES	G. ZUNIGA	J. LEE

STATE OF CALIFORNIA
DEPARTMENT OF TRANSPORTATION

DIVISION OF ENGINEERING SERVICES
STRUCTURE DESIGN
DESIGN BRANCH 2

BRIDGE NO. 02-0202
POST MILE 68.3

HILT ROAD OVERCROSSING (REPLACE)
BENT DETAILS No. 2

STRUCTURES DESIGN DETAIL SHEET (ENGLISH) (REV. 09-01-10)

ORIGINAL SCALE IN INCHES FOR REDUCED PLANS 0 1 2 3

UNIT: 3577
PROJECT NUMBER & PHASE: 0200020157
CONTRACT NO.: 02-3E7301

DISREGARD PRINTS BEARING EARLIER REVISION DATES

REVISION DATES 8-6-14 8-15-14 7-15-14

SHEET 11 OF 20

FILE => 02-0202-h-bdet02.dgn

USERNAME => s123119 DATE PLOTTED => 23-JAN-2015 TIME PLOTTED => 12:49

DIST	COUNTY	ROUTE	POST MILES TOTAL PROJECT	SHEET No.	TOTAL SHEETS
02	Sis	5	68.3	112	120

REGISTERED CIVIL ENGINEER 10-17-14 DATE

11-26-14
PLANS APPROVAL DATE

REGISTERED PROFESSIONAL ENGINEER G. SLOCUM No. 44950 Exp. 3-31-16 CIVIL STATE OF CALIFORNIA

The State of California or its officers or agents shall not be responsible for the accuracy or completeness of scanned copies of this plan sheet.

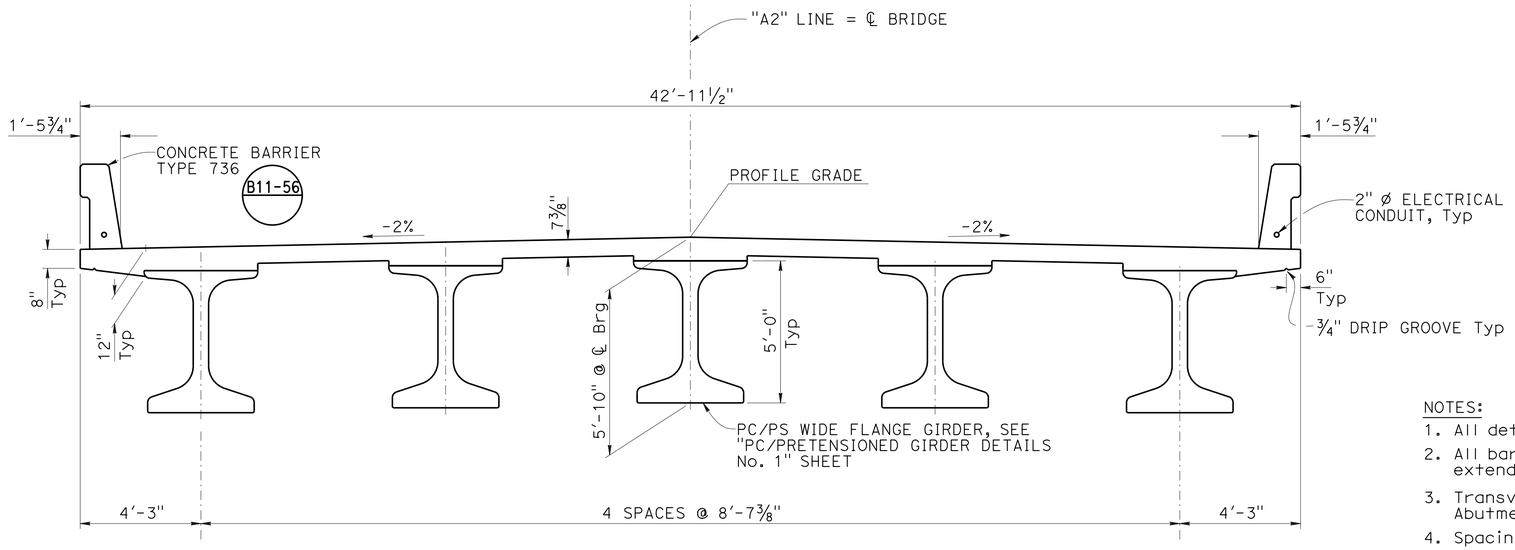

TYPICAL SECTION

⅜" = 1'-0"

NOTES:

1. All details are symmetrical about ℄ bridge.
2. All barrier reinforcement and all reinforcement within or extending into the deck must be epoxy coated in its entirety.
3. Transverse slab reinforcement must be placed parallel to Abutment ℄ Brg.
4. Spacing of all transverse bars is measured along "A2" Line.

o Indicates additional rebar, see "DECK REINFORCEMENT" sheet.

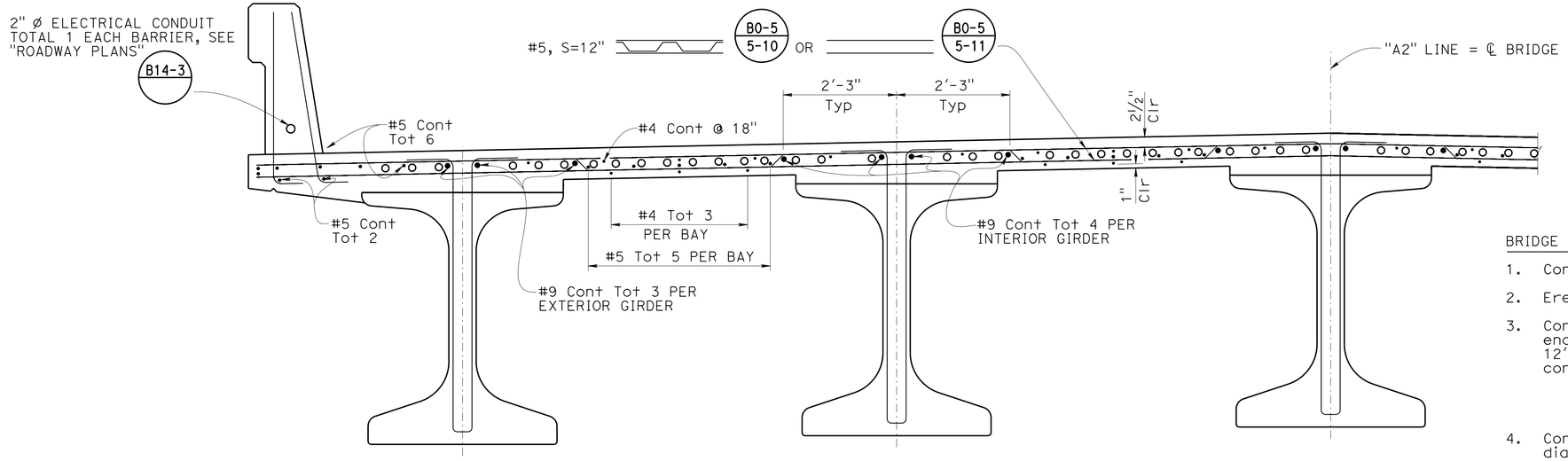

PART TYPICAL SECTION

¾" = 1'-0"

BRIDGE CONSTRUCTION SEQUENCE

1. Construct Abutments 1 and 3 and Bent 2.
2. Erect precast girders.
3. Construct the portion of Span 1 deck, including end and intermediate diaphragms, from BB to a point 12'-0" from center line of Bent 2, terminating in a construction joint. B0-5 / 5-2
4. Construct Span 2 deck, including end and intermediate diaphragms, and the remaining portion of Span 1 deck, starting at Abutment 3.
5. Install Type 736 barrier rail.

	BY	CHECKED
DESIGN	G. SLOCUM	H. FANG
DETAILS	C. FIGUERRES	H. FANG
QUANTITIES	G. ZUNIGA	J. LEE

STATE OF CALIFORNIA DEPARTMENT OF TRANSPORTATION

DIVISION OF ENGINEERING SERVICES STRUCTURE DESIGN DESIGN BRANCH 2

BRIDGE NO. 02-0202
POST MILE 68.3

HILT ROAD OVERCROSSING (REPLACE)
TYPICAL SECTION

STRUCTURES DESIGN DETAIL SHEET (ENGLISH) (REV. 09-01-10)

ORIGINAL SCALE IN INCHES FOR REDUCED PLANS 0 1 2 3

UNIT: 3577
PROJECT NUMBER & PHASE: 0200020157
CONTRACT NO.: 02-3E7301

DISREGARD PRINTS BEARING EARLIER REVISION DATES

REVISION DATES 6-16-14 7-7-14 4-29-14

SHEET 12 OF 20

FILE => 02-0202-k-ts01.dgn

USERNAME => s123119 DATE PLOTTED => 23-JAN-2015 TIME PLOTTED => 12:49

DIST	COUNTY	ROUTE	POST MILES TOTAL PROJECT	SHEET No.	TOTAL SHEETS
02	Sis	5	68.3	113	120

REGISTERED CIVIL ENGINEER 10-17-14 DATE

11-26-14
PLANS APPROVAL DATE

REGISTERED PROFESSIONAL ENGINEER G. SLOCUM No. 44950 Exp. 3-31-16 CIVIL STATE OF CALIFORNIA

The State of California or its officers or agents shall not be responsible for the accuracy or completeness of scanned copies of this plan sheet.

NOTE:

1. For intermediate diaphragm details, see "PC/PRETENSIONED GIRDER DETAILS NO. 2" sheet.

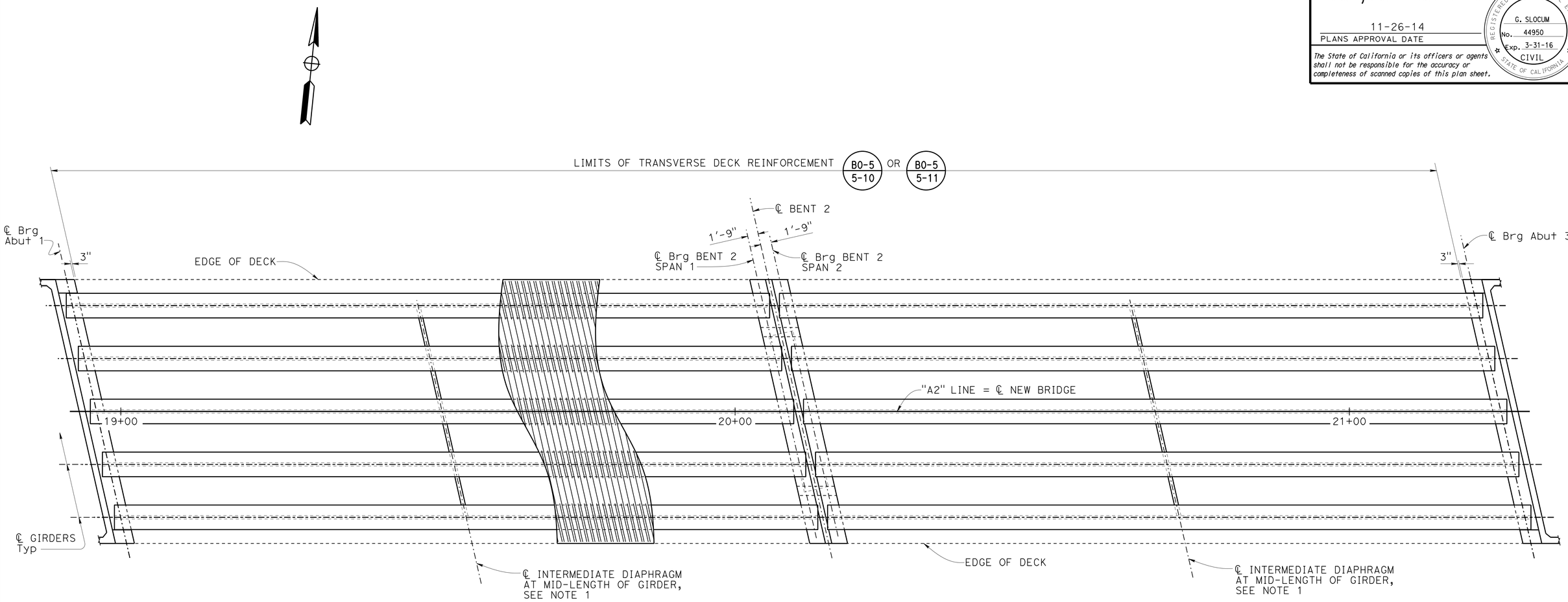

PLAN

1/8" = 1'-0"

DESIGN	BY G. SLOCUM	CHECKED H. FANG	
DETAILS	BY C. FIGUERRES	CHECKED H. FANG	
QUANTITIES	BY G. ZUNIGA	CHECKED J. LEE	

STATE OF CALIFORNIA
DEPARTMENT OF TRANSPORTATION

DIVISION OF ENGINEERING SERVICES
STRUCTURE DESIGN
DESIGN BRANCH 2

BRIDGE NO. 02-0202
POST MILE 68.3

HILT ROAD OVERCROSSING (REPLACE)
GIRDER LAYOUT

STRUCTURES DESIGN DETAIL SHEET (ENGLISH) (REV. 09-01-10)

ORIGINAL SCALE IN INCHES FOR REDUCED PLANS 0 1 2 3

UNIT: 3577
PROJECT NUMBER & PHASE: 0200020157
CONTRACT NO.: 02-3E7301

DISREGARD PRINTS BEARING EARLIER REVISION DATES

REVISION DATES 2-20-14 3-13-14

SHEET 13 OF 20

FILE => 02-0202-o-g_1001.dgn

USERNAME => s123119 DATE PLOTTED => 23-JAN-2015 TIME PLOTTED => 12:49

DIST	COUNTY	ROUTE	POST MILES TOTAL PROJECT	SHEET No.	TOTAL SHEETS
02	Sis	5	68.3	114	120

REGISTERED CIVIL ENGINEER 10-17-14 DATE

11-26-14
PLANS APPROVAL DATE

REGISTERED PROFESSIONAL ENGINEER G. SLOCUM No. 44950 Exp. 3-31-16 CIVIL STATE OF CALIFORNIA

The State of California or its officers or agents shall not be responsible for the accuracy or completeness of scanned copies of this plan sheet.

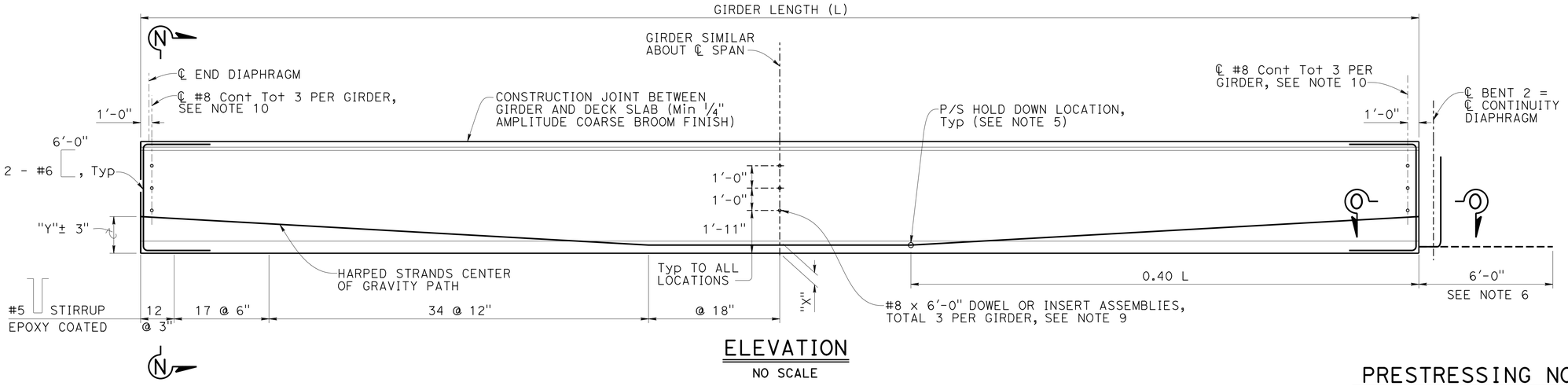

ELEVATION

NO SCALE

LOCATION	GIRDER LENGTH	GIRDER DEPTH	"X"	JACKING FORCE	"Y"	Min NUMBER OF 0.6"Ø STRANDS	CONCRETE STRENGTH		MIDSPAN DEAD LOAD DEFLECTION	
			(in)	(kips)	(in)		(ksi)		(in)	
	(L)	(D)		(P)			f'ci	f'c	DECK	RAIL
ALL GIRDERS	114'-6"	5'-0"	4½	1582	19¾	36	4.5	6.0	1.7	.06

PRESTRESSING NOTES

1. The Jacking Force (P) is the jacking force required at the point of control along the span. The jacking force does not include any fabrication specific losses.
2. Concrete strength:
   f'ci is at time of initial stressing
   f'c is at 28 days
3. Deflection components are informational and will be used to set screed line elevations.
4. Screed line elevations for deck concrete will be determined by the Engineer.
5. There must be a minimum of two hold downs per girder for the prestressing within the span.
6. Extend 5 strands each side of girder ℄ (Tot 10).
7. Prestressing strand must be uncoated; seven wire, low-relaxation steel strand of 0.6" nominal diameter, and must conform to the requirements of ASTM A416, Grade 270. Strands must be tensioned to 43.94 kips before release, unless specified otherwise. All methods and procedures employed in tensioning the strands must be authorized. The method chosen must be executed in a manner to assure that both ends of all strands in the girder are uniformly tensioned. The prestressed strand must be released in a manner that will minimize eccentricity.
8. Reinforcing steel must conform to the requirements of ASTM designation A706, Grade 60. Alternative stirrup shapes must be authorized.
9. At interior girders, form 1½"Ø holes for #8 x 6'-0" dowels and at exterior girders place insert assemblies. Holes and insert assemblies to be skewed to align with intermediate diaphragm. For insert assembly details, see "Insert Assembly" and for hole and insert assembly locations, see "intermediate diaphragm" on "PC/Pretensioned Girder Details No. 2" sheet.
10. Form 1½"Ø holes for #8 Cont skewed to align with end and continuity diaghragm centerlines.
11. Girder ends to be cast such that a level surface is provided at bearing pads.
12. For Section O-O, see "PC/PRETENSIONED GIRDER DETAILS No. 2" sheet.

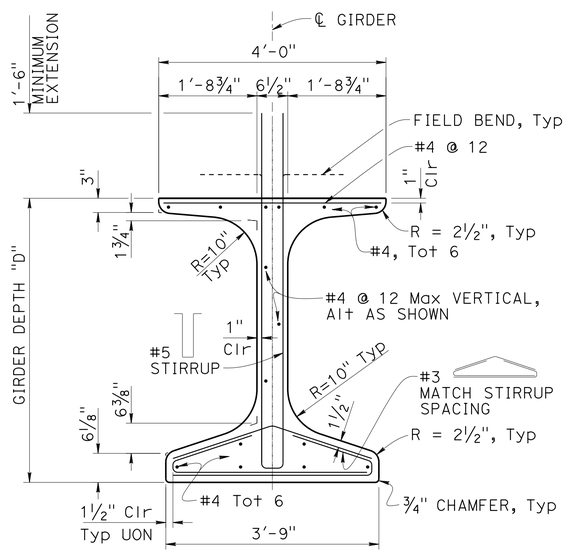

TYPICAL GIRDER SECTION

¾" = 1'-0"

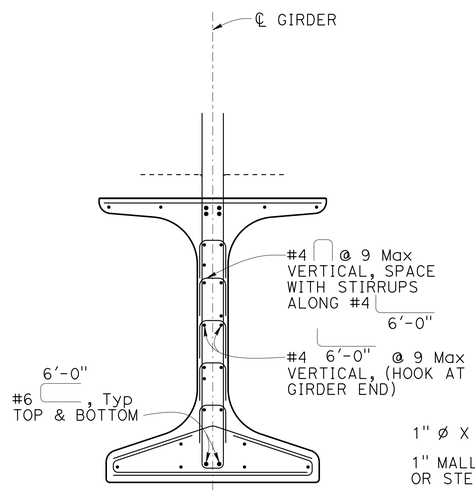

NOTE: FOR DETAILS NOT SHOWN, SEE "TYPICAL GIRDER SECTION"

SECTION N-N

(WITHIN 6'-0" OF GIRDER ENDS)
¾" = 1'-0"

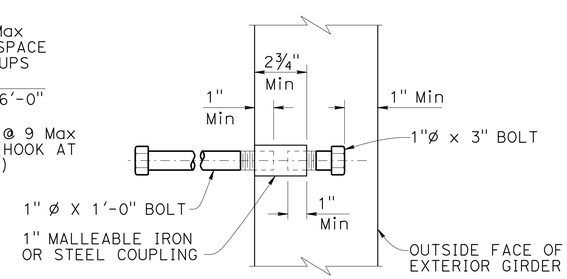

INSERT ASSEMBLY

3" = 1'-0"

	BY	CHECKED
DESIGN	G. SLOCUM	H. FANG
DETAILS	C. FIGUERRES	H. FANG
QUANTITIES	G. ZUNIGA	J. LEE

STATE OF CALIFORNIA DEPARTMENT OF TRANSPORTATION

DIVISION OF ENGINEERING SERVICES STRUCTURE DESIGN
DESIGN BRANCH 2

BRIDGE NO. 02-0202
POST MILE 68.3

HILT ROAD OVERCROSSING (REPLACE)
PC/PRETENSIONED GIRDER DETAILS No. 1

STRUCTURES DESIGN DETAIL SHEET (ENGLISH) (REV. 09-01-10)

ORIGINAL SCALE IN INCHES FOR REDUCED PLANS 0 1 2 3

UNIT: 3577
PROJECT NUMBER & PHASE: 0200020157
CONTRACT NO.: 02-3E7301

DISREGARD PRINTS BEARING EARLIER REVISION DATES

REVISION DATES 2-19-14 3-5-14 6-17-14

SHEET 14 OF 20

FILE => 02-0202-o-girderdtl01.dgn

USERNAME => s123119 DATE PLOTTED => 23-JAN-2015 TIME PLOTTED => 12:49

DIST	COUNTY	ROUTE	POST MILES TOTAL PROJECT	SHEET No.	TOTAL SHEETS
02	Sis	5	68.3	115	120

REGISTERED CIVIL ENGINEER 10-17-14 DATE

11-26-14
PLANS APPROVAL DATE

REGISTERED PROFESSIONAL ENGINEER G. SLOCUM No. 44950 Exp. 3-31-16 CIVIL STATE OF CALIFORNIA

The State of California or its officers or agents shall not be responsible for the accuracy or completeness of scanned copies of this plan sheet.

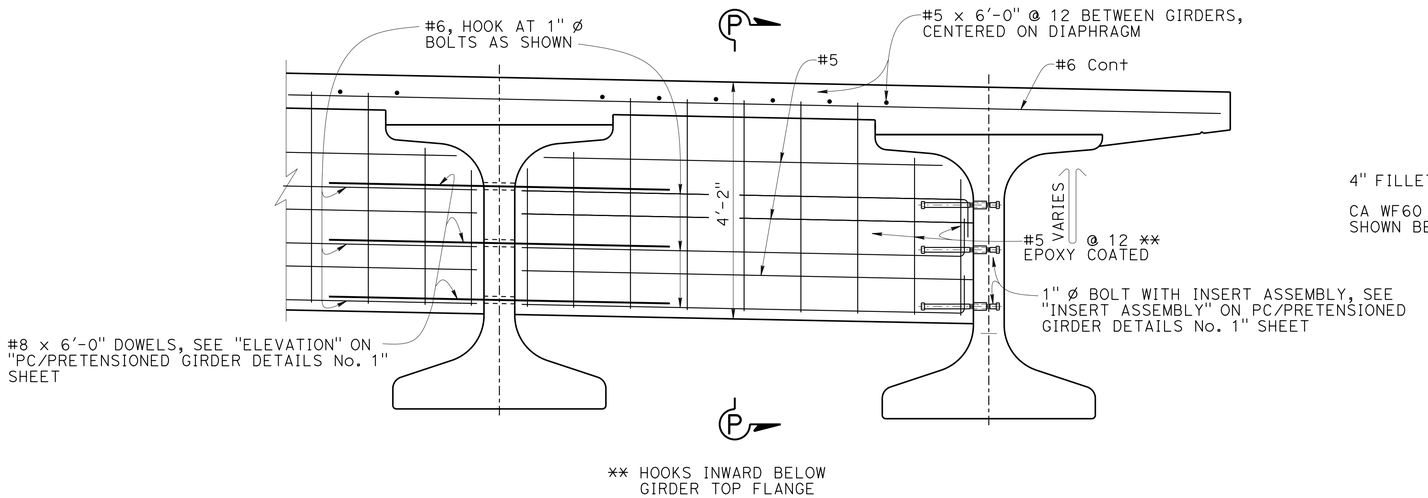

INTERMEDIATE DIAPHRAGM

3/4" = 1'-0"

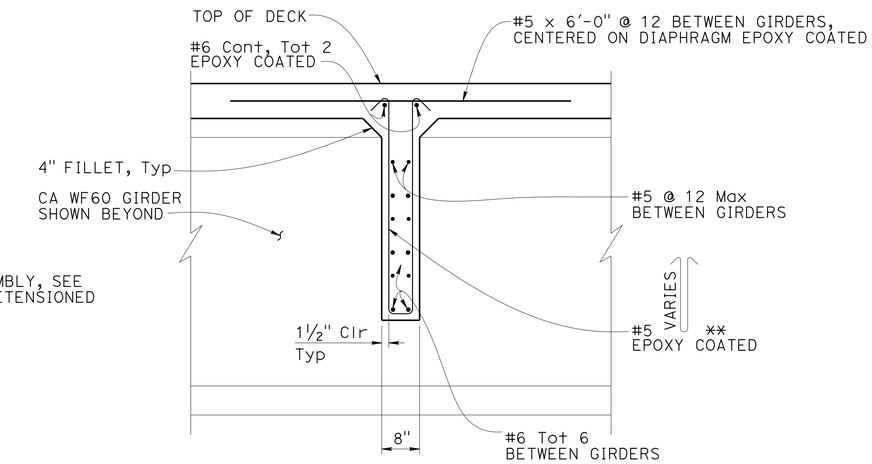

SECTION P-P

3/4" = 1'-0"

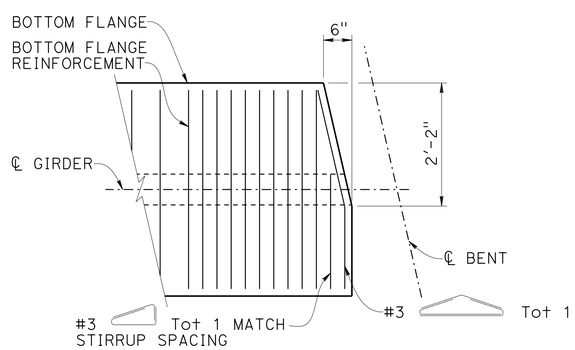

SECTION O-O

3/4" = 1'-0"

NOTES:

1. For location of Section O-O, see "PC/PRETENSIONED GIRDER DETAILS No. 1" sheet.

DESIGN	BY G. SLOCUM	CHECKED H. FANG	
DETAILS	BY C. FIGUERRES	CHECKED H. FANG	
QUANTITIES	BY G. ZUNIGA	CHECKED J. LEE	

STATE OF CALIFORNIA DEPARTMENT OF TRANSPORTATION

DIVISION OF ENGINEERING SERVICES STRUCTURE DESIGN DESIGN BRANCH 2

BRIDGE NO. 02-0202 POST MILE 68.3

HILT ROAD OVERCROSSING (REPLACE)

PC/PRETENSIONED GIRDER DETAILS No. 2

STRUCTURES DESIGN DETAIL SHEET (ENGLISH) (REV. 09-01-10)

ORIGINAL SCALE IN INCHES FOR REDUCED PLANS 0 1 2 3

UNIT: 3577
PROJECT NUMBER & PHASE: 0200020157 CONTRACT NO.: 02-3E7301

DISREGARD PRINTS BEARING EARLIER REVISION DATES

REVISION DATES 1-12-14 2-28-14 7-28-14 6-17-14

SHEET 15 OF 20

FILE => 02-0202-o-girderdt102.dgn

USERNAME => s123119 DATE PLOTTED => 23-JAN-2015 TIME PLOTTED => 12:49

DIST	COUNTY	ROUTE	POST MILES TOTAL PROJECT	SHEET No.	TOTAL SHEETS
02	Sis	5	68.3	116	120

REGISTERED CIVIL ENGINEER 10-17-14 DATE

11-26-14
PLANS APPROVAL DATE

REGISTERED PROFESSIONAL ENGINEER G. SLOCUM No. 44950 Exp. 3-31-16 CIVIL STATE OF CALIFORNIA

The State of California or its officers or agents shall not be responsible for the accuracy or completeness of scanned copies of this plan sheet.

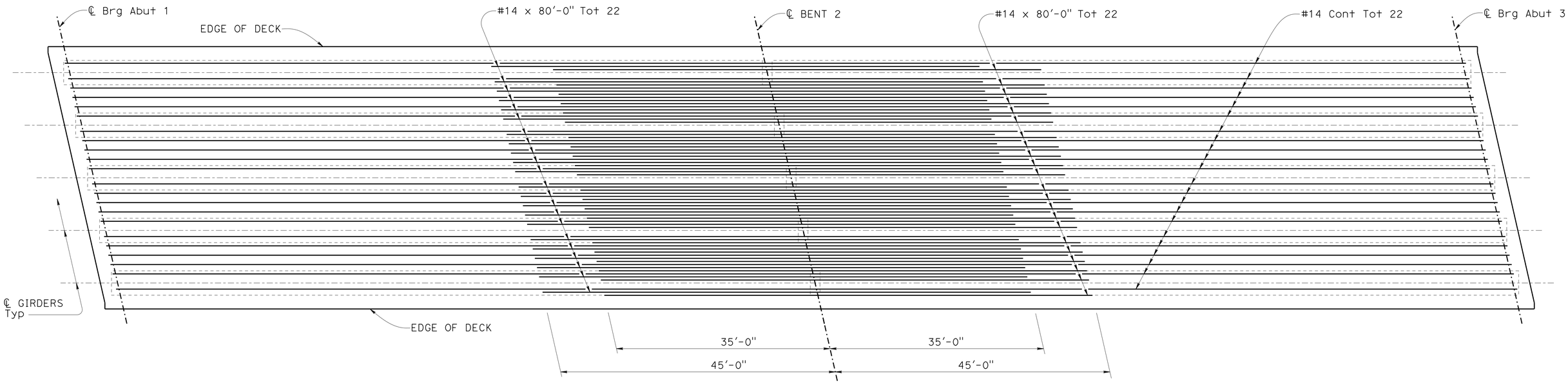

ADDITIONAL DECK REINFORCEMENT

1/8" = 1'-0"

NOTES:

1. All splices in #14 bars must be service level.

DESIGN	BY G. SLOCUM	CHECKED H. FANG	
DETAILS	BY C. FIGUERRES	CHECKED H. FANG	
QUANTITIES	BY G. ZUNIGA	CHECKED J. LEE	

STATE OF CALIFORNIA
DEPARTMENT OF TRANSPORTATION

DIVISION OF ENGINEERING SERVICES
STRUCTURE DESIGN
DESIGN BRANCH 2

BRIDGE NO. 02-0202
POST MILE 68.3

HILT ROAD OVERCROSSING (REPLACE)
DECK REINFORCEMENT

STRUCTURES DESIGN DETAIL SHEET (ENGLISH) (REV. 09-01-10)

ORIGINAL SCALE IN INCHES FOR REDUCED PLANS 0 1 2 3

UNIT: 3577
PROJECT NUMBER & PHASE: 0200020157
CONTRACT NO.: 02-3E7301

DISREGARD PRINTS BEARING EARLIER REVISION DATES

REVISION DATES: 2-19-14

SHEET 16 OF 20

FILE => 02-0202-p-gl01.dgn

USERNAME => s123119 DATE PLOTTED => 23-JAN-2015 TIME PLOTTED => 12:49

DIST	COUNTY	ROUTE	POST MILES TOTAL PROJECT	SHEET No.	TOTAL SHEETS
02	Sis	5	68.3	117	120

REGISTERED CIVIL ENGINEER 10-17-14 DATE

11-26-14
PLANS APPROVAL DATE

REGISTERED PROFESSIONAL ENGINEER G. SLOCUM No. 44950 Exp. 3-31-16 CIVIL STATE OF CALIFORNIA

The State of California or its officers or agents shall not be responsible for the accuracy or completeness of scanned copies of this plan sheet.

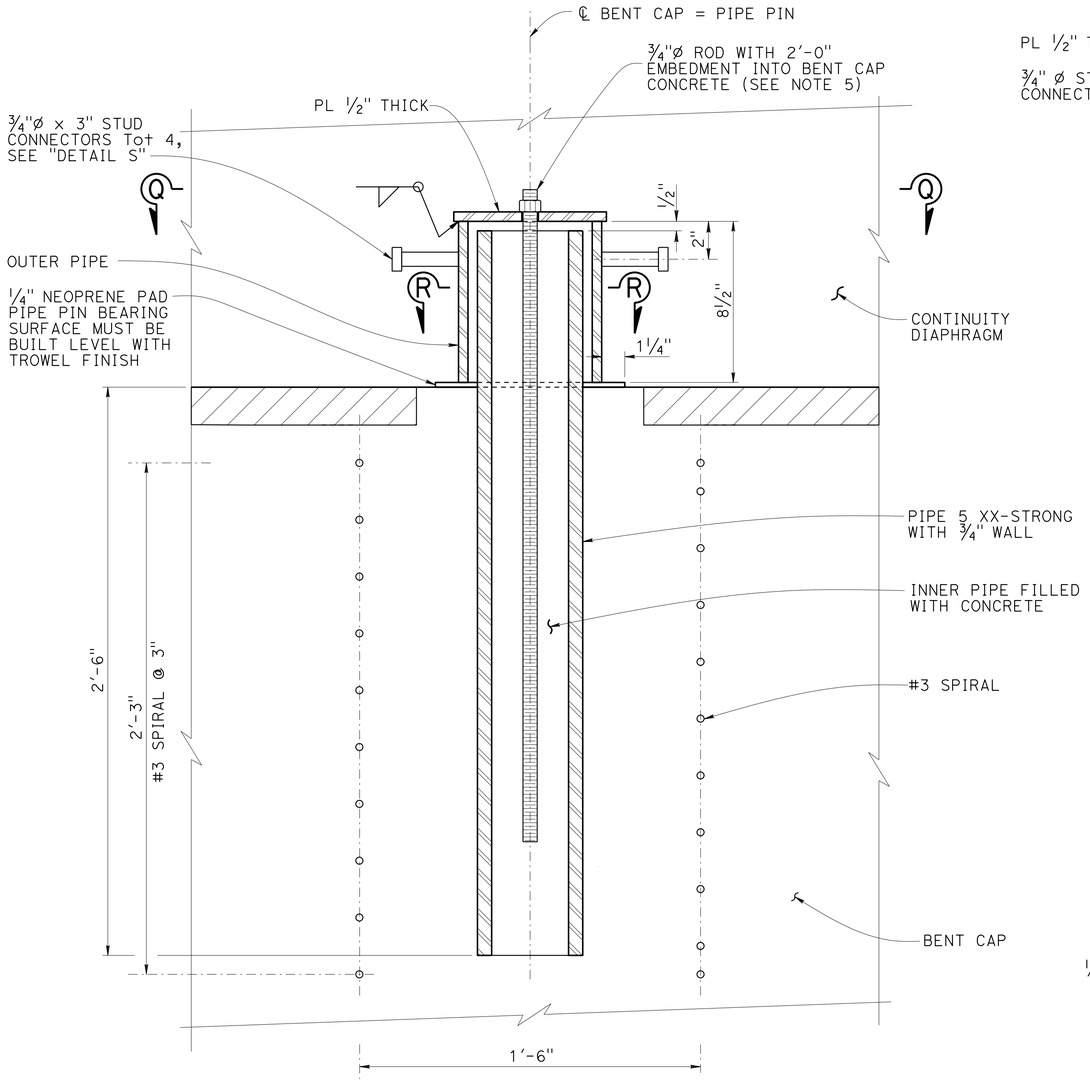

ELEVATION
3" = 1'-0"

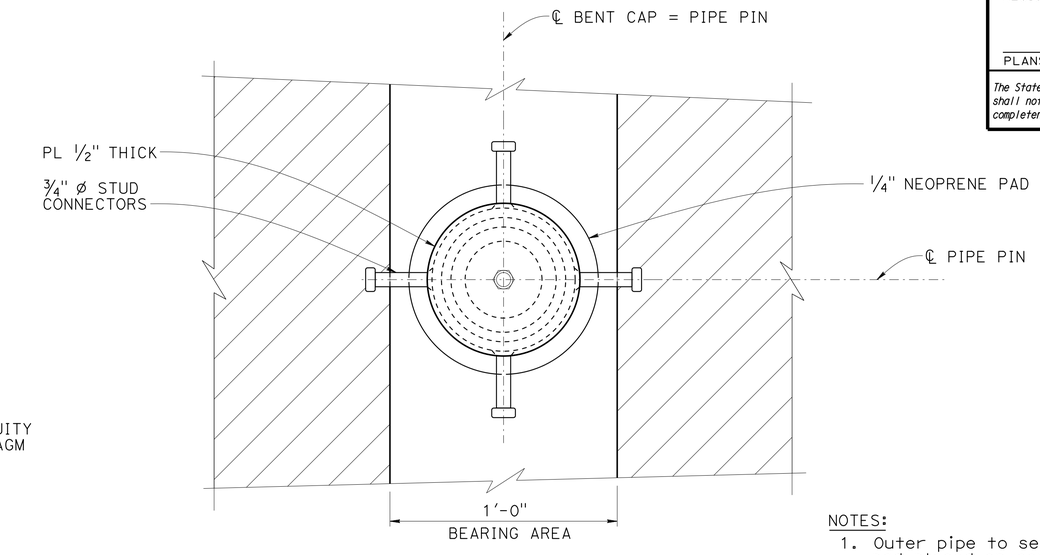

VIEW Q-Q
3" = 1'-0"

NOTES:

1. Outer pipe to seat tightly against ¼" thick neoprene pad placed on concrete around pipe pin.
2. Adjust spacing of bent cap main reinforcement to allow placement of pipe pin.
3. Details drawn showing level bent cap. Continuity diaphragm bearing surface may protrude below bottom of diaphragm when cap is not level.
4. Galvanize all pipe pin components, excluding inner spiral after fabrication
5. ¾" Nut to be hand torqued.

Indicates 2" expanded polystyrene with hard board surfacing to be removed after completion of bent cap. (B0-13 / 13-1)

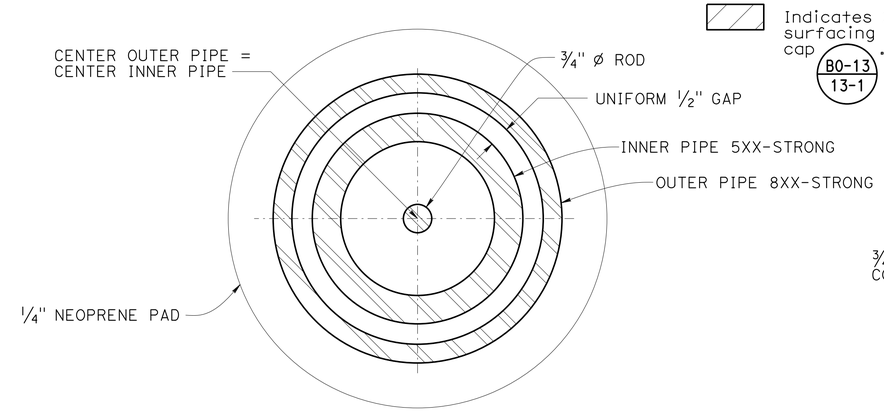

SECTION R-R
6" = 1'-0"

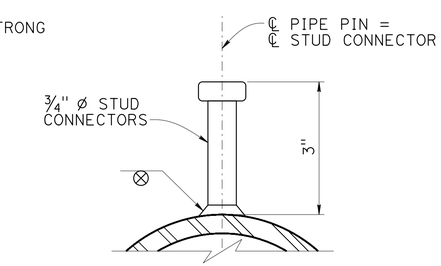

DETAIL S
6" = 1'-0"

DESIGN	BY G. SLOCUM	CHECKED H. FANG	
DETAILS	BY C. FIGUERRES	CHECKED H. FANG	
QUANTITIES	BY G. ZUNIGA	CHECKED J. LEE	

STATE OF CALIFORNIA
DEPARTMENT OF TRANSPORTATION

DIVISION OF ENGINEERING SERVICES
STRUCTURE DESIGN
DESIGN BRANCH 2

BRIDGE NO. 02-0202
POST MILE 68.3

HILT ROAD OVERCROSSING (REPLACE)
PIPE PIN DETAILS

STRUCTURES DESIGN DETAIL SHEET (ENGLISH) (REV. 09-01-10)

ORIGINAL SCALE IN INCHES FOR REDUCED PLANS 0 1 2 3

UNIT: 3577
PROJECT NUMBER & PHASE: 0200020157
CONTRACT NO.: 02-3E7301

DISREGARD PRINTS BEARING EARLIER REVISION DATES

REVISION DATES: 8-9-13 8-15-14 6-12-14

SHEET 17 OF 20

FILE => 02-0202-u-miscdt01.dgn

USERNAME => s123119 DATE PLOTTED => 23-JAN-2015 TIME PLOTTED => 12:49

DIST	COUNTY	ROUTE	POST MILES TOTAL PROJECT	SHEET No	TOTAL SHEETS
02	Sis	5	68.3	118	120

PROFESSIONAL GEOLOGIST 8-27-14

11-26-14
PLANS APPROVAL DATE

PROFESSIONAL GEOLOGIST Joseph Kaump No. 7837 Exp. 1-31-15 STATE OF CALIFORNIA

The State of California or its officers or agents shall not be responsible for the accuracy or completeness of electronic copies of this plan sheet.

This LOTB sheet was prepared in accordance with the Caltrans Soil & Rock Logging, Classification, & Presentation Manual (2010 Edition).

See 2010 Standard Plans A10F and A10G for Soil Legend, and A10H for Rock Legend.

BENCH MARK

2-5-592 (SUHV592)
CDH Brass Disk in Concrete
25.78 ft Lt Sta 38+44.91
"N1" Line Rte 5
Lat: 2,610,102.066531
Long: 6,395,818.901250
Elev; 3121.8
Vertical Datum: NAVD1988

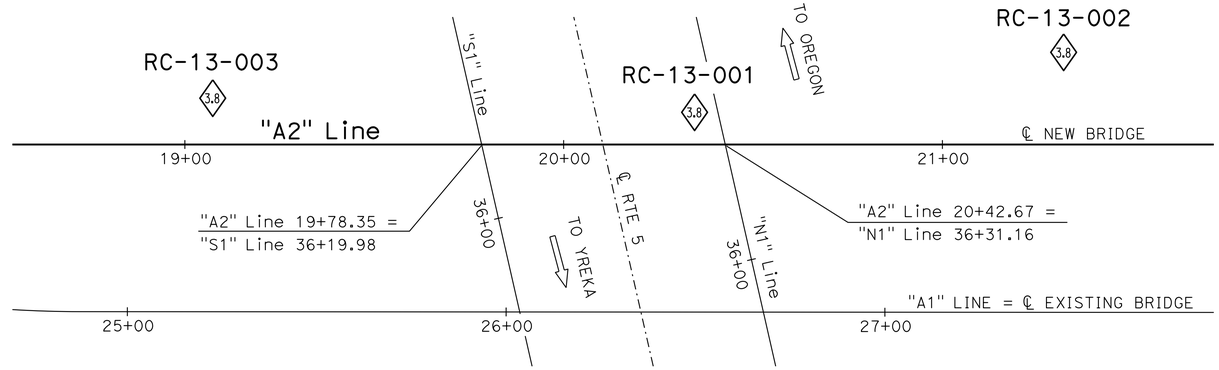

PLAN

1" = 20'

Notes:

1. Groundwater present but not encountered in Boring RC-13-002.
2. Refer to Borings RC-13-001 and RC-13-003 for groundwater data.

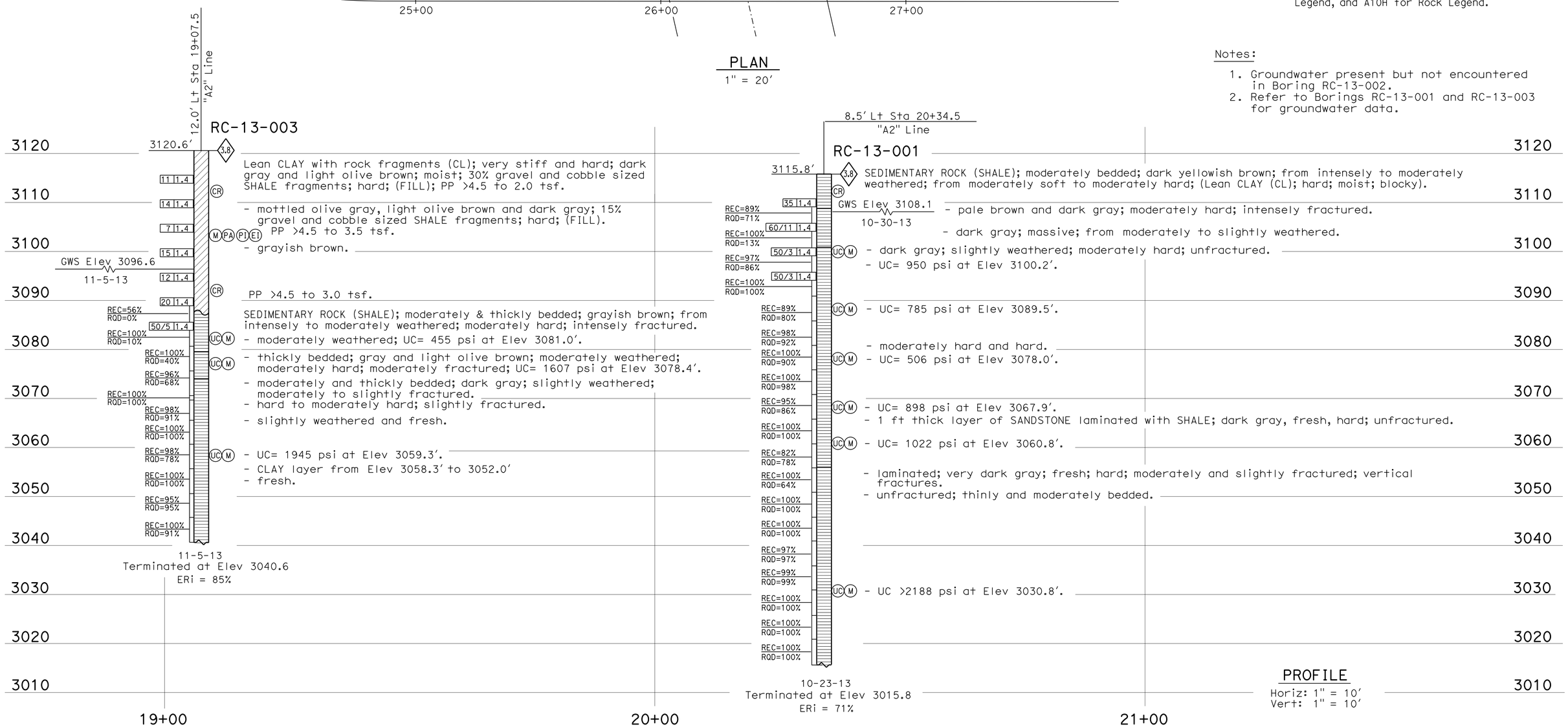

PROFILE

Horiz: 1" = 10'
Vert: 1" = 10'

ENGINEERING SERVICES	MATERIALS AND GEOTECHNICAL SERVICES	STATE OF CALIFORNIA DEPARTMENT OF TRANSPORTATION	DIVISION OF ENGINEERING SERVICES STRUCTURE DESIGN DESIGN BRANCH 2	BRIDGE NO. 02-0202 POST MILE R68.3	HILT ROAD OC (REPLACE)
FUNCTIONAL SUPERVISOR NAME: R. Buell	DRAWN BY: W. Tang 12/13 CHECKED BY: T. Alderman	FIELD INVESTIGATION BY: J. Kaump			LOG OF TEST BORINGS 1 OF 3

OGS CIVIL LOG OF TEST BORINGS SHEET

ORIGINAL SCALE IN INCHES FOR REDUCED PLANS 0 1 2 3

UNIT: 3643
PROJECT NUMBER & PHASE: 02000201571 CONTRACT NO.: 02-3E7304

DISREGARD PRINTS BEARING EARLIER REVISION DATES → REVISION DATES 06-20-14 06-27-14 08-27-14

SHEET 18 OF 20

FILE => 02-0202-x-ltb01.dgn

USERNAME => s123113 DATE PLOTTED => 23-JAN-2015 TIME PLOTTED => 12:49

DIST	COUNTY	ROUTE	POST MILES TOTAL PROJECT	SHEET No	TOTAL SHEETS
02	Sis	5	68.3	119	120

PROFESSIONAL GEOLOGIST 8-27-14

PROFESSIONAL GEOLOGIST Joseph Kaump No. 7837 Exp. 1-31-15 STATE OF CALIFORNIA

11-26-14
PLANS APPROVAL DATE

The State of California or its officers or agents shall not be responsible for the accuracy or completeness of electronic copies of this plan sheet.

This LOTB sheet was prepared in accordance with the Caltrans Soil & Rock Logging, Classification, & Presentation Manual (2010 Edition).

See 2010 Standard Plans A10F and A10G for Soil Legend, and A10H for Rock Legend.

FOR PLAN VIEW, SEE
"LOG OF TEST BORINGS 1 OF 2"

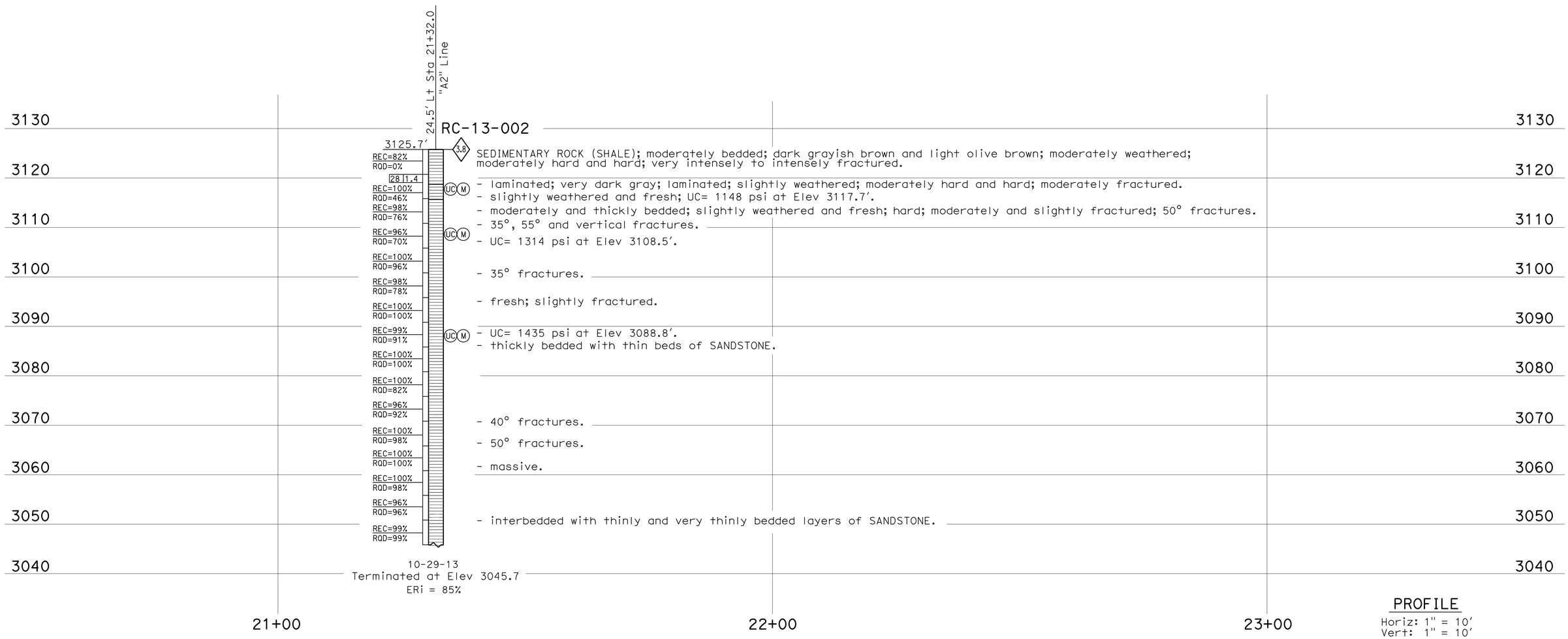

PROFILE
Horiz: 1" = 10'
Vert: 1" = 10'

ENGINEERING SERVICES	MATERIALS AND GEOTECHNICAL SERVICES	STATE OF CALIFORNIA DEPARTMENT OF TRANSPORTATION	DIVISION OF ENGINEERING SERVICES STRUCTURE DESIGN DESIGN BRANCH 2	BRIDGE NO. 02-0202 POST MILE R68.3	HILT ROAD OC (REPLACE)
FUNCTIONAL SUPERVISOR NAME: R. Buell	DRAWN BY: W. Tang 12/13 CHECKED BY: T. Alderman	FIELD INVESTIGATION BY: J. Kaump			LOG OF TEST BORINGS 2 OF 3

OGS CIVIL LOG OF TEST BORINGS SHEET

ORIGINAL SCALE IN INCHES FOR REDUCED PLANS 0 1 2 3

UNIT: 3643
PROJECT NUMBER & PHASE: 02000201571 CONTRACT NO.: 02-3E7304

DISREGARD PRINTS BEARING EARLIER REVISION DATES

REVISION DATES: 06-20-14 06-27-14 08-27-14

SHEET 19 OF 20

FILE => 02-0202-x-ltb02.dgn

USERNAME => s123119 DATE PLOTTED => 23-JAN-2015 TIME PLOTTED => 12:49

02	Sis	5	68.3	120	120

PLANS APPROVAL DATE: 11-26-14

DIST.	COUNTY	ROUTE	SECTION	SHEET No.	TOTAL SHEETS
02	Sis	5	68.3/Back	59	59

Date Approved December 7 1964

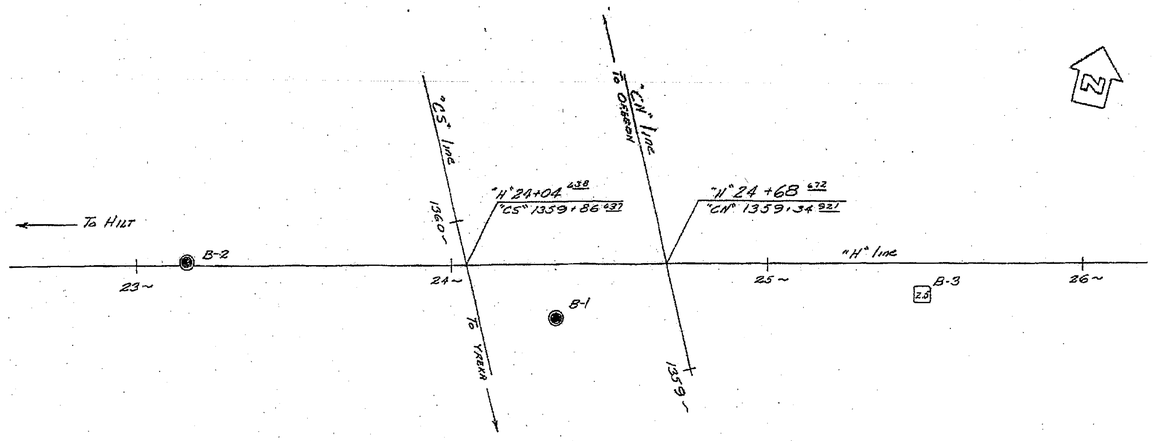

Plan
Horz.
Scale: 1" = 20'

CM "C-62"
Fd. T-bar & cap in conc.
85' Lt. "CN" 1363~ ±
Elev. 3146.963

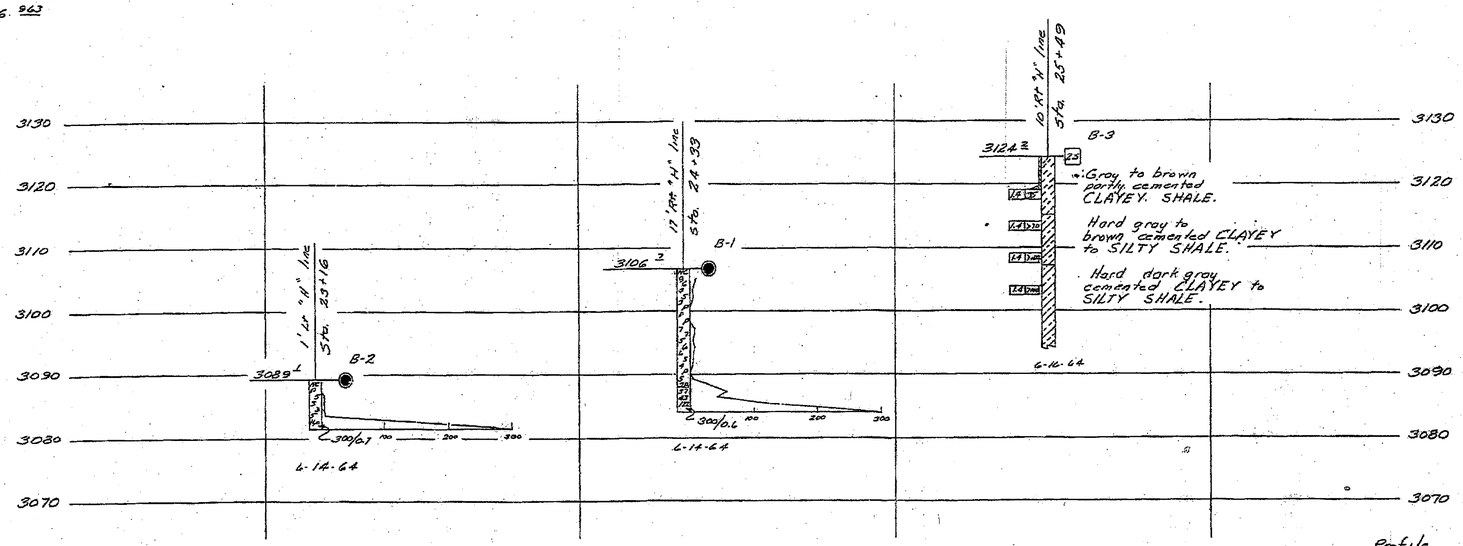

Profile
Scale Vert. 1" = 10'

INFORMATION ON ACTUAL FOUNDATION CONDITIONS ENCOUNTERED IS ON FILE IN BRIDGE GEOLOGY SECTION

LEGEND OF BORING OPERATIONS

- Penetrometer
- 2½" Cone Penetrometer
- Sampler Boring (dry)
- Rotary Boring (wet)
- Auger Boring (dry)
- Jet Boring
- Cone Boring
- Test Pit
- Penetration Resist.
- Rotary Boring
- 1" Soil Tube

LEGEND OF EARTH MATERIALS

- Gravel
- Sand
- Silt
- Clay
- Sandy Clay or Clayey Sand
- Sandy Silt or Silty Sand
- Silty Clay or Clayey Silt
- Peat and Organic Matter
- Fill Material
- Igneous Rock
- Sedimentary Rock
- Metamorphic Rock

CLASSIFICATION OF MATERIAL BASED ON STANDARD GRAIN SIZE LIMITS

Diagram showing the basis for estimate of the approximate limits of the principal of class names.
If about 1 percent of the material is larger than the class name, it shall be added to the class name, viz. "Gravel and Cobble", "Sand and Gravel", "Silty Sand and Boulders" etc. Where used to describe sands, see also Unified Soil Classification Chart.

NOTE: Classification of earth material as shown on this sheet is based upon field inspection and is not to be construed to imply mechanical analysis.

FIELD STUDY	by	W.T. Hofsing
DRAWN	by	W.R. Wilson
CHECKED	by	W.T. Hofsing

Approved Recommended by: [signature] Engineer-Geologist

BRIDGE DEPARTMENT
ENGINEERING GEOLOGY SECTION

9 of 59

DIVISION OF ENGINEERING SERVICES – MATERIALS AND GEOTECHNICAL SERVICES

As-Built Log of Test Borings sheet is considered an informational document only. As such, the State of California registration seal with signature, license number and registration certificate expiration date confirm that this is a true and accurate copy of the original document. It does not attest to the accuracy or validity of the information contained in the original document. This drawing is available and presented only for the convenience of any bidder, contractor or other interested party.

DIST.	COUNTY	ROUTE	POST MILE-TOTAL PROJECT	Sheet No.	Total Sheets
02	Sis	5			

Joseph Koump 8/26/14
PROFESSIONAL GEOLOGIST DATE

HILT ROAD OC (REPLACE)
LOG OF TEST BORINGS 3 OF 3

UNIT: 3643	CONTRACT No.	BRIDGE No.
PROJ. No. & PHASE: 02000201571	02-3E7304	02-0202

AS-BUILT VERT DATUM: NAVD29 CONVERSION: NAVD88++3.5 NAVD29 Sheet of

NOTE: A COPY OF THIS LOG OF TEST BORINGS IS AVAILABLE AT OFFICE OF STRUCTURE MAINTENANCE AND INVESTIGATIONS, SACRAMENTO, CALIFORNIA

PROFESSIONAL GEOLOGIST
Joseph Koump
No. 7637
Exp. 1-31-15
STATE OF CALIFORNIA

AS BUILT PLANS
Contract No. 02-031514
Date Completed
Document No. 2000 1018

SHEET	OF
11	11

STATE OF CALIFORNIA
DEPARTMENT OF PUBLIC WORKS
DIVISION OF HIGHWAYS

HILT ROAD OVERCROSSING

LOG OF TEST BORINGS

SCALE As Noted	BRIDGE 2-130	FILE	DRAWING 02130-8

Disregard prints bearing earlier numbers → PREL. DRAWING No. PR-2130-2

02205 031511

DATE PLOTTED => 23-JAN-2015
TIME PLOTTED => 12:49

USERNAME => s123119
DGN FILE => 02-0202-x-ltb03.dgn

P:\proj1\02\3E730_plans\pse\Structures_Files\02-0202-x-lt