Dist	COUNTY	ROUTE	POST MILES TOTAL PROJECT	SHEET No.	TOTAL SHEETS
02	Las,Mod	139	0.0/2.0, 20.7/27.9	1	20

STATE OF CALIFORNIA

DEPARTMENT OF TRANSPORTATION

PROJECT PLANS FOR CONSTRUCTION ON

STATE HIGHWAY

IN LASSEN AND MODOC COUNTIES FROM ROUTE 36 TO 1.4 NORTH OF HALL STREET AND FROM 1.1 MILES SOUTH OF HORSE CAMP ROAD TO TIONESTA ROAD

TO BE SUPPLEMENTED BY STANDARD PLANS DATED MAY 2006

INDEX OF PLANS

SHEET No.	DESCRIPTION
1	TITLE SHEET
2	TYPICAL CROSS SECTIONS
3	LAYOUT
4	CONSTRUCTION DETAILS
5	CONSTRUCTION AREA SIGNS
6	PAVEMENT DELINEATION DETAILS
7	PAVEMENT DELINEATION QUANTITIES
8	SUMMARY OF QUANTITIES
9-10	MODIFY SIGNAL TRAFFIC MONITORING STATION
11-20	REVISED AND NEW STANDARD PLANS

THE STANDARD PLANS LIST APPLICABLE TO THIS CONTRACT IS INCLUDED IN THE NOTICE TO BIDDERS AND SPECIAL PROVISIONS BOOK.

LOCATION MAP

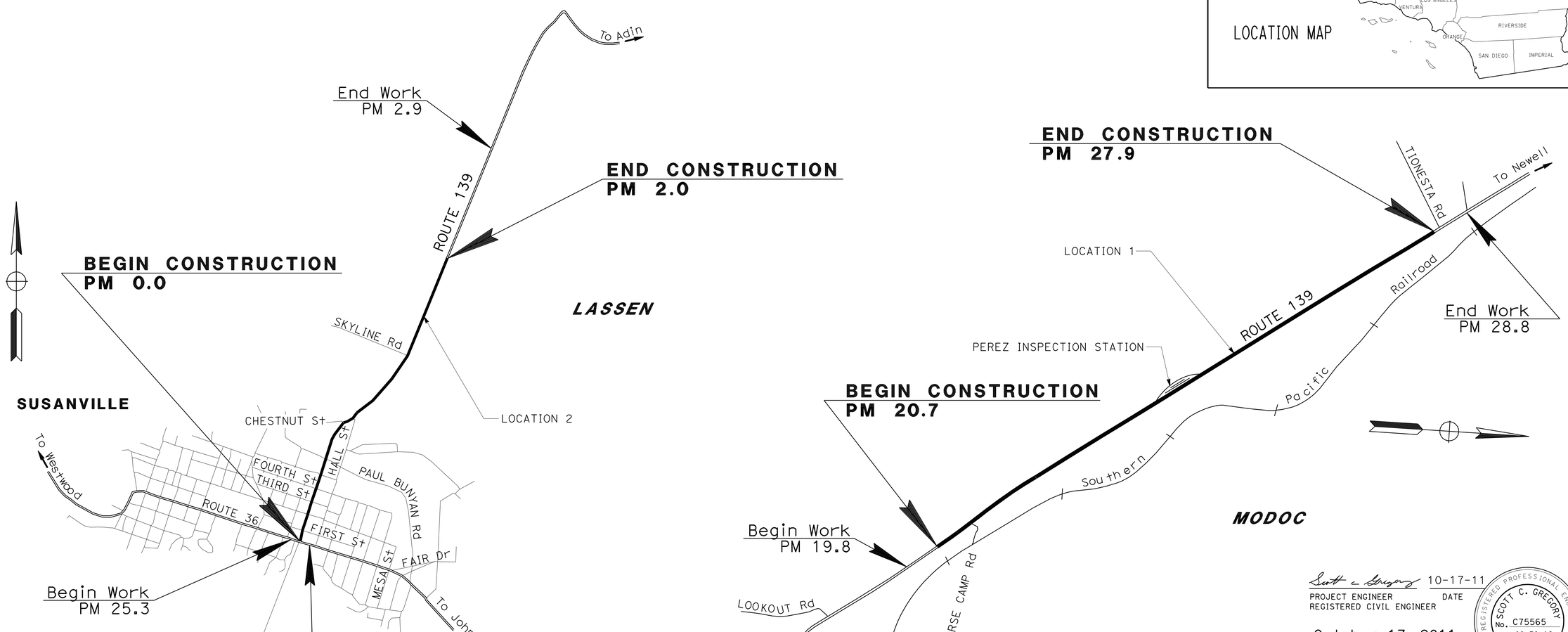

THE CONTRACTOR SHALL POSSESS THE CLASS (OR CLASSES) OF LICENSE AS SPECIFIED IN THE "NOTICE TO BIDDERS."

NO SCALE

Scott C. Gregory 10-17-11
PROJECT ENGINEER DATE
REGISTERED CIVIL ENGINEER

October 17, 2011
PLANS APPROVAL DATE

REGISTERED PROFESSIONAL ENGINEER SCOTT C. GREGORY No. C75565 Exp 06-30-12 CIVIL STATE OF CALIFORNIA

THE STATE OF CALIFORNIA OR ITS OFFICERS OR AGENTS SHALL NOT BE RESPONSIBLE FOR THE ACCURACY OR COMPLETENESS OF SCANNED COPIES OF THIS PLAN SHEET.

CONTRACT No.	02-3E8804
PROJECT ID	0200020202

PROJECT MANAGER: LANCE BROWN
DESIGN ENGINEER: LANCE BROWN

P:\proj1\02\3E880_plans\pse\23E880ab001.dgn

LAST REVISION 09-22-11 DATE PLOTTED => 24-OCT-2011 TIME PLOTTED => 16:41

Dist	COUNTY	ROUTE	POST MILES TOTAL PROJECT	SHEET No.	TOTAL SHEETS
02	Las,Mod	139	0.0/2.0 20.7/27.9	2	20

REGISTERED CIVIL ENGINEER 10-17-11 DATE

10-17-11
PLANS APPROVAL DATE

REGISTERED PROFESSIONAL ENGINEER SCOTT C. GREGORY No. C75565 Exp 06-30-12 CIVIL STATE OF CALIFORNIA

THE STATE OF CALIFORNIA OR ITS OFFICERS OR AGENTS SHALL NOT BE RESPONSIBLE FOR THE ACCURACY OR COMPLETENESS OF SCANNED COPIES OF THIS PLAN SHEET.

NOTES:

1. DIMENSIONS OF THE STRUCTURAL SECTIONS ARE SUBJECT TO TOLERANCES SPECIFIED IN THE STANDARD SPECIFICATIONS.
2. SUPERELEVATIONS AS SHOWN OR AS DIRECTED BY THE ENGINEER.
3. EXISTING UTILITY FACILITIES ARE NOT SHOWN ON THESE PLANS.
4. FOR ACCURATE RIGHT OF WAY DATA, CONTACT RIGHT OF WAY ENGINEERING AT THE DISTRICT OFFICE.

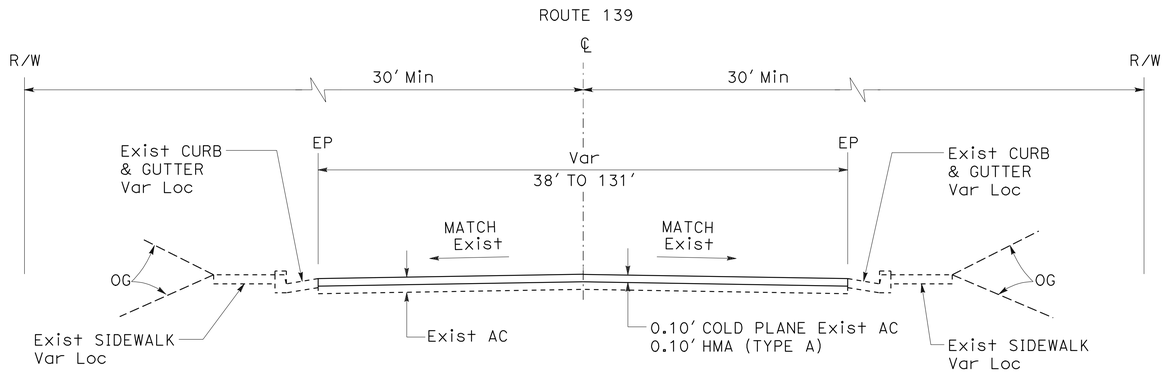

TYPICAL CROSS SECTION
LOCATION 2
PM 0.00 TO PM 0.63
PM 1.12 TO PM 1.17

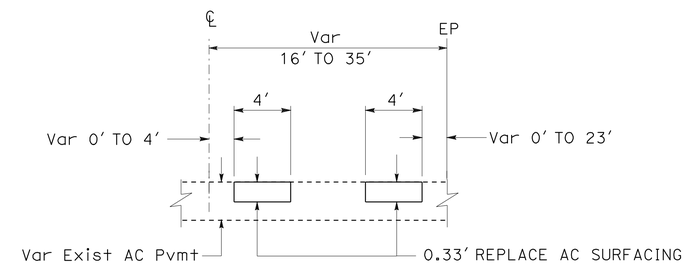

REPLACE AC SURFACING
(TYPICAL BOTH DIRECTIONS)
LOCATION 1 (PM 20.70 TO 27.90)
LOCATION 2 (PM 0.00 TO 2.00)

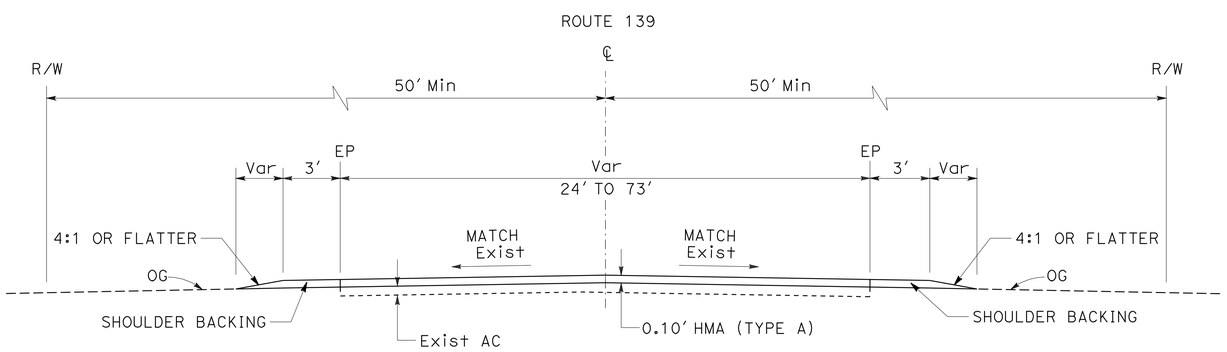

TYPICAL CROSS SECTION
LOCATION 2
PM 0.63 TO PM 1.12
PM 1.17 TO PM 2.00

TYPICAL CROSS SECTIONS

NO SCALE

X-1

REVISED BY | DATE REVISED
SCOTT GREGORY | DENISE FUZERE
CALCULATED-DESIGNED BY | CHECKED BY
FUNCTIONAL SUPERVISOR
LANCE BROWN

Caltrans® STATE OF CALIFORNIA - DEPARTMENT OF TRANSPORTATION **MAINTENANCE**

P:\proj1\02\3E880_plans\pse\23E880ca001.dgn

LAST REVISION 09-21-11 | DATE PLOTTED => 24-OCT-2011 TIME PLOTTED => 16:42

Dist	COUNTY	ROUTE	POST MILES TOTAL PROJECT	SHEET No.	TOTAL SHEETS
02	Las,Mod	139	0.0/2.0 20.7/27.9	3	20

Scott C. Gregory 10-17-11
REGISTERED CIVIL ENGINEER DATE

10-17-11
PLANS APPROVAL DATE

REGISTERED PROFESSIONAL ENGINEER SCOTT C. GREGORY No. C75565 Exp 06-30-12 CIVIL STATE OF CALIFORNIA

THE STATE OF CALIFORNIA OR ITS OFFICERS OR AGENTS SHALL NOT BE RESPONSIBLE FOR THE ACCURACY OR COMPLETENESS OF SCANNED COPIES OF THIS PLAN SHEET.

NOTES:

1. LOCATION OF UTILITY AND FACILITY SHOWN ON THESE PLANS ARE APPROXIMATE AND SHALL BE VERIFIED BY THE CONTRACTOR PRIOR TO CONSTRUCTION.
2. FOR ACCURATE RIGHT OF WAY DATA, CONTACT RIGHT OF WAY ENGINEERING AT THE DISTRICT OFFICE.

LEGEND:

COLD PLANE AC PAVEMENT 0.0' TO 0.10'

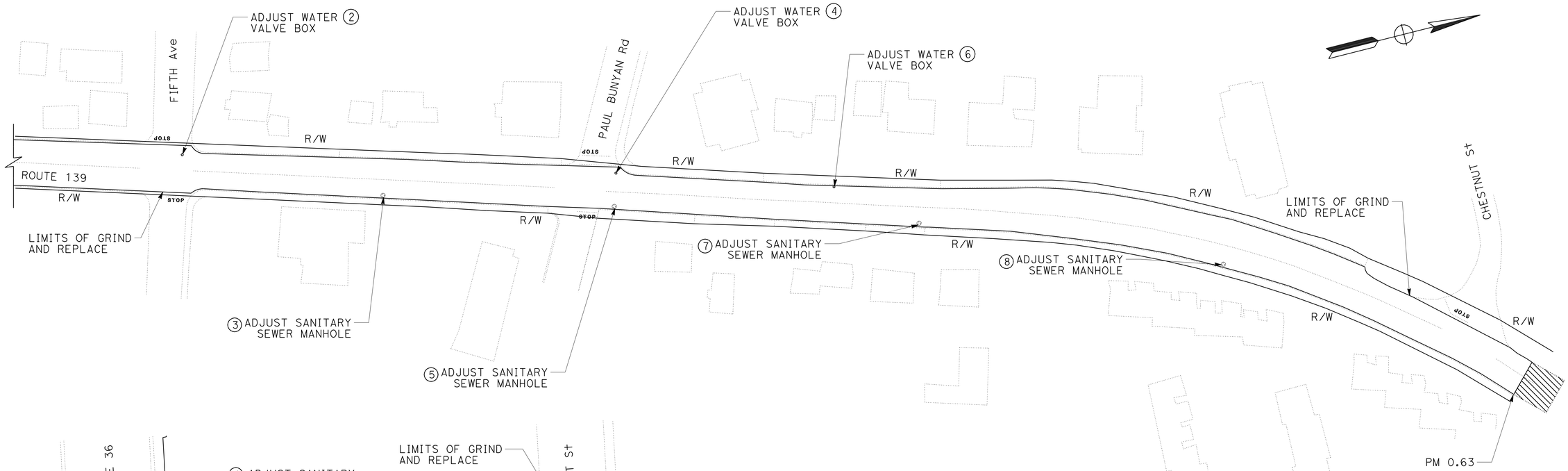

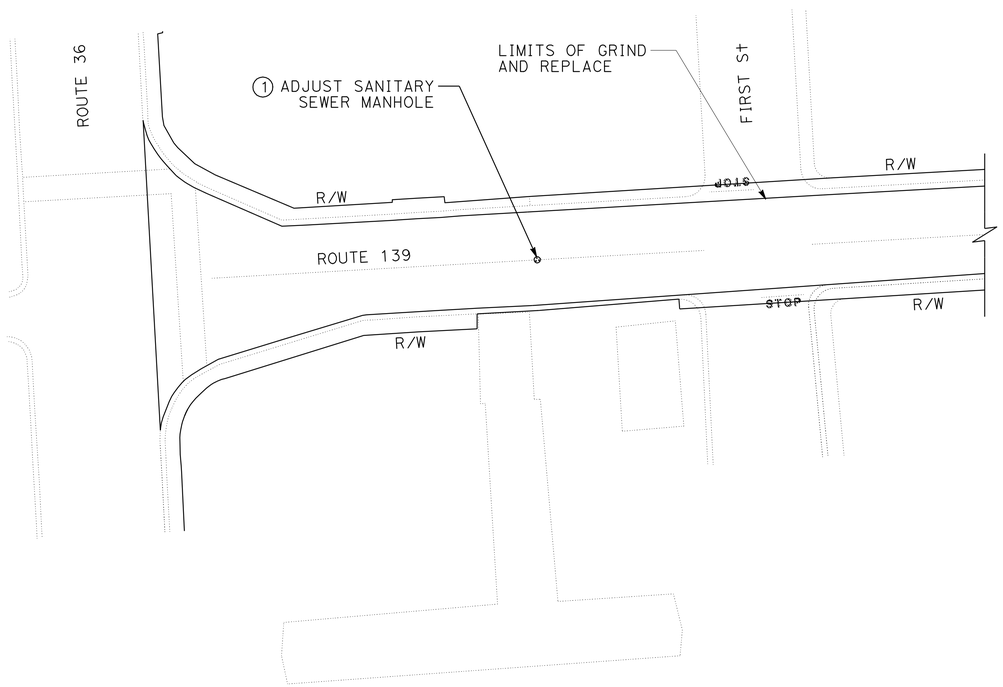

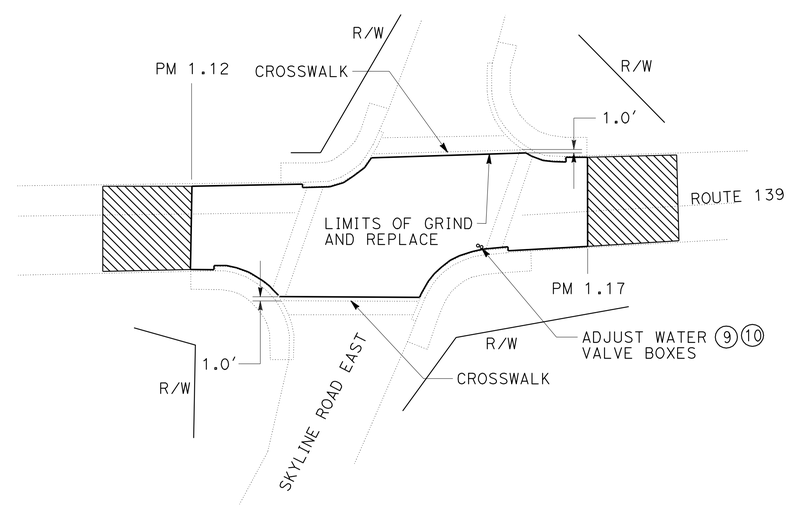

LAYOUT

NO SCALE **L-1**

REVISED BY	DATE REVISED
SCOTT GREGORY	DENISE FUZERE
CALCULATED-DESIGNED BY	CHECKED BY
FUNCTIONAL SUPERVISOR	LANCE BROWN

STATE OF CALIFORNIA - DEPARTMENT OF TRANSPORTATION
Caltrans® MAINTENANCE

P:\proj1\02\3E880_plans\pse\23E880ea001.dgn

LAST REVISION 09-21-11 DATE PLOTTED => 24-OCT-2011 TIME PLOTTED => 16:42

Dist	COUNTY	ROUTE	POST MILES TOTAL PROJECT	SHEET No.	TOTAL SHEETS
02	Las,Mod	139	0.0/2.0 20.7/27.9	4	20

REGISTERED CIVIL ENGINEER 10-17-11 DATE

10-17-11
PLANS APPROVAL DATE

REGISTERED PROFESSIONAL ENGINEER SCOTT C. GREGORY No. C75565 Exp 06-30-12 CIVIL STATE OF CALIFORNIA

THE STATE OF CALIFORNIA OR ITS OFFICERS OR AGENTS SHALL NOT BE RESPONSIBLE FOR THE ACCURACY OR COMPLETENESS OF SCANNED COPIES OF THIS PLAN SHEET.

NOTE:

1. EXISTING UTILITY FACILITIES ARE NOT SHOWN ON THESE PLANS.

LEGEND:

COLD PLANE AC PAVEMENT

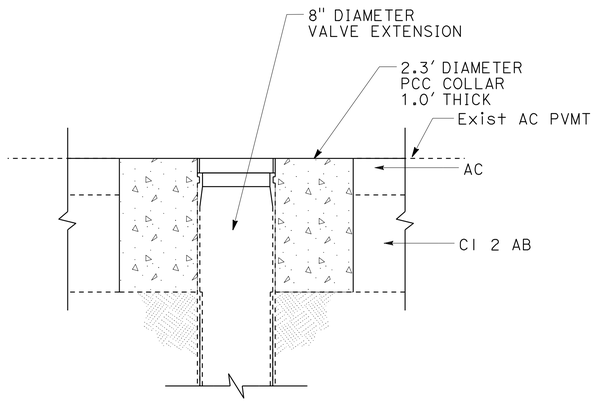

ADJUST WATER VALVE BOX DETAIL

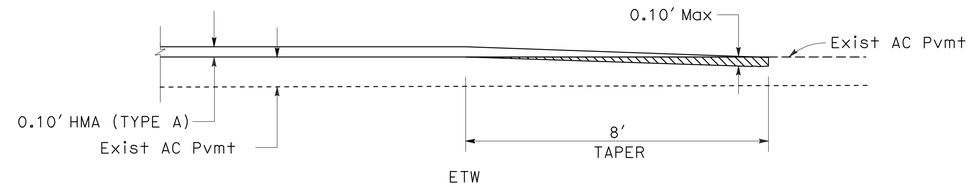

PAVED ROAD CONNECTION CONFORM TAPER

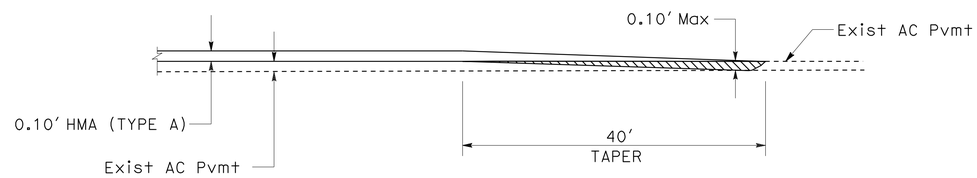

MAINLINE CONFORM TAPER

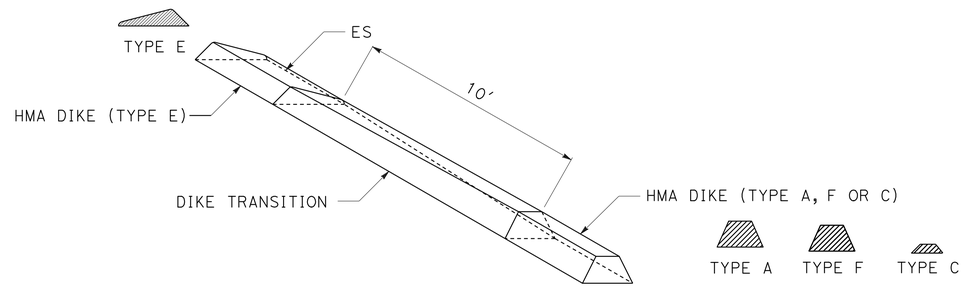

HMA DIKE TRANSITION

HMA DIKE (TYPE E) TO
HMA DIKE (TYPE A, F OR C)

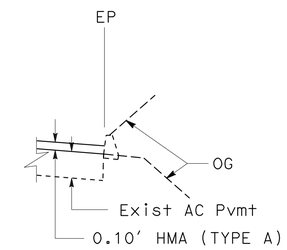

AC DIKE LOCATIONS

(TYPICAL BOTH DIRECTIONS)

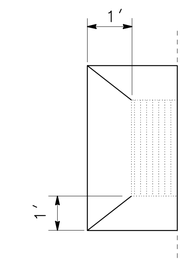

PLAN

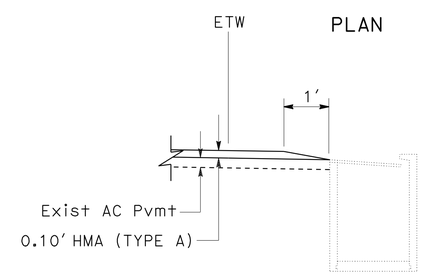

ELEVATION

TYPICAL DRAINAGE INLET CONFORM

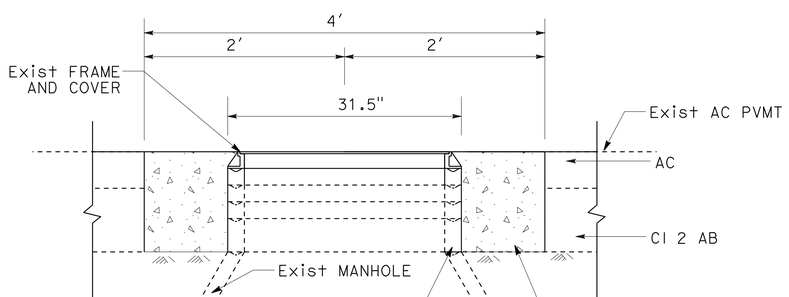

ADJUST MANHOLE DETAIL

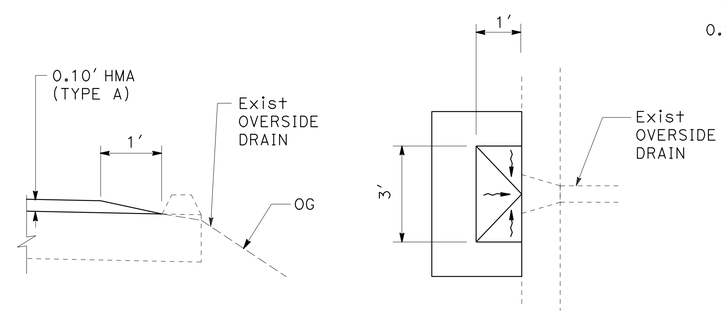

ELEVATION

PLAN

TYPICAL OVERSIDE DRAIN CONFORM

CONSTRUCTION DETAILS

NO SCALE

C-1

REVISED BY	DATE REVISED

CALCULATED-DESIGNED BY	CHECKED BY
SCOTT GREGORY	DENISE FUZERE

FUNCTIONAL SUPERVISOR: LANCE BROWN

STATE OF CALIFORNIA - DEPARTMENT OF TRANSPORTATION

Caltrans® MAINTENANCE

P:\proj1\02\3E880_plans\pse\23E880ga001.dgn

LAST REVISION 09-21-11 | DATE PLOTTED => 24-OCT-2011 | TIME PLOTTED => 16:42

Dist	COUNTY	ROUTE	POST MILES TOTAL PROJECT	SHEET No.	TOTAL SHEETS
02	Las,Mod	139	0.0/2.0 20.7/27.9	5	20

Scott C. Gregory 10-17-11
REGISTERED CIVIL ENGINEER DATE

10-17-11
PLANS APPROVAL DATE

REGISTERED PROFESSIONAL ENGINEER SCOTT C. GREGORY No. C75565 Exp. 06-30-12 CIVIL STATE OF CALIFORNIA

THE STATE OF CALIFORNIA OR ITS OFFICERS OR AGENTS SHALL NOT BE RESPONSIBLE FOR THE ACCURACY OR COMPLETENESS OF SCANNED COPIES OF THIS PLAN SHEET.

NOTES:

1. EXACT LOCATION OF ALL SIGNS TO BE DETERMINED BY THE ENGINEER.
2. CALIFORNIA CODES ARE DESIGNATED BY (CA), OTHERWISE FEDERAL CODES ARE SHOWN.
3. INTERMEDIATE G20-1 SIGNS SHOULD BE PLACED EVERY 3 TO 5 MILES AS NECESSARY.
4. EXISTING UTILITY FACILITIES ARE NOT SHOWN ON THESE PLANS.

LEGEND:

ONE POST STATIONARY MOUNTED SIGN.

DIRECTION OF TRAFFIC

CONSTRUCTION AREA SIGNS (STATIONARY MOUNTED)

TYPE	CODE	PANEL SIZE	SIGN MESSAGE	No. AND SIZE OF POST	No. OF SIGNS
Ⓐ	W20-1	48" x 48"	ROAD WORK AHEAD	1- 4" x 6"	4
Ⓑ	G20-1 C23B(CA)	36" x 18" 36" x 18"	ROAD WORK NEXT XX MILES "PAVEMENT MAINTENANCE"	1- 4" x 6"	2
Ⓒ	G20-1	36" x 18"	ROAD WORK NEXT XX MILES	1- 4" x 4"	2
Ⓓ	G20-2	36" x 18"	END ROAD WORK	1- 4" x 4"	2

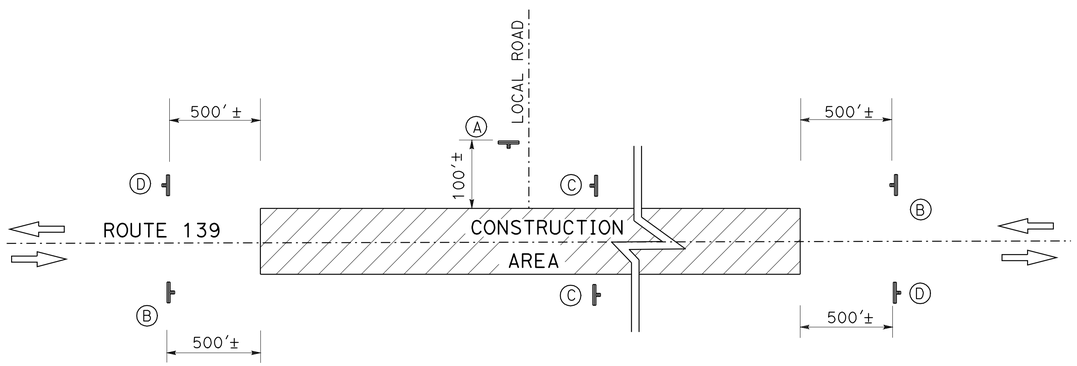

LOCATION 1

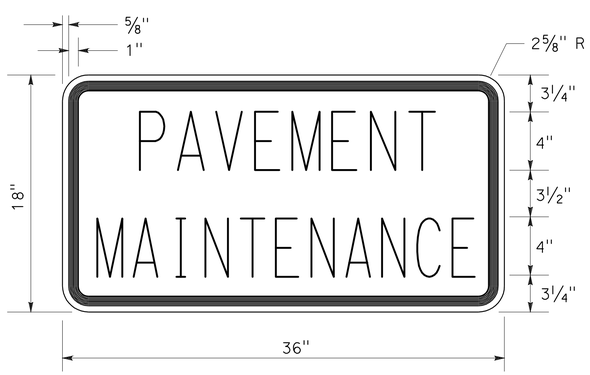

C23B(CA) SIGN PANEL DETAIL

ROAD CONNECTIONS

LOCATION	PM	DESCRIPTION
1	21.73	HORSE CAMP Rd - Rt
	24.39	SOUTH MEARS Rd - Rt
	26.42	NORTH MEARS Rd - Rt
	27.91	TOINESTA Rd - Lt
2	0.06	FIRST St - Lt & Rt
	0.14	NORTH St - Lt & Rt
	0.21	THIRD St - Lt & Rt
	0.28	FOURTH St - Lt & Rt
	0.35	FIFTH St - Lt & Rt
	0.42	PAUL BUNYAN Rd - Lt & Rt
	0.61	CHESTNUT St - Lt
	0.67	HALL St - Rt
	0.86	ASH St - Rt
	1.15	SKYLINE Rd - Lt & Rt
	1.42	LASSEN COLLEGE ENTRANCE - Rt
	1.88	SPRING RIDGE Dr - Lt & Rt

CONSTRUCTION AREA SIGNS (STATIONARY MOUNTED)

TYPE	CODE	PANEL SIZE	SIGN MESSAGE	No. AND SIZE OF POST	No. OF SIGNS
Ⓔ	W20-1 C23B(CA)	48" x 48" 36" x 18"	ROAD WORK AHEAD "PAVEMENT MAINTENANCE"	1- 4" x 6"	3
Ⓕ	W20-1	48" x 48"	ROAD WORK AHEAD	1- 4" x 6"	20
Ⓖ	G20-2	36" x 18"	END ROAD WORK	1- 4" x 4"	23

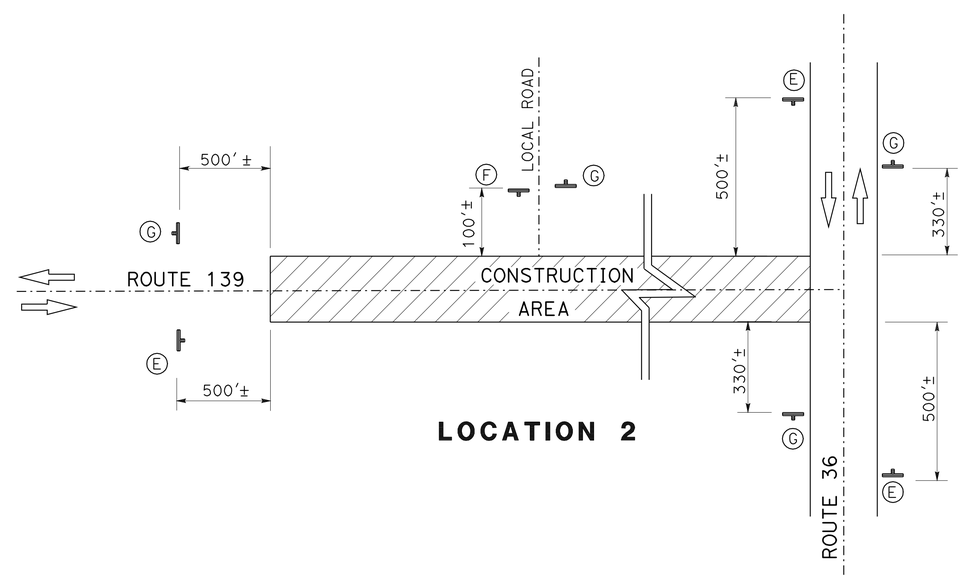

LOCATION 2

CONSTRUCTION AREA SIGNS

NO SCALE

CS-1

REVISED BY | DATE REVISED
SCOTT GREGORY | DENISE FUZERE
CALCULATED-DESIGNED BY | CHECKED BY
FUNCTIONAL SUPERVISOR | LANCE BROWN
STATE OF CALIFORNIA - DEPARTMENT OF TRANSPORTATION
Caltrans® MAINTENANCE
P:\proj1\02\3E880_plans\pse\23E8801a001.dgn

LAST REVISION 09-22-11 | DATE PLOTTED => 24-OCT-2011 | TIME PLOTTED => 16:42

Dist	COUNTY	ROUTE	POST MILES TOTAL PROJECT	SHEET No.	TOTAL SHEETS
02	Las,Mod	139	0.0/2.0 20.7/27.9	6	20

REGISTERED CIVIL ENGINEER 10-17-11 DATE

10-17-11
PLANS APPROVAL DATE

REGISTERED PROFESSIONAL ENGINEER SCOTT C. GREGORY No. C75565 Exp 06-30-12 CIVIL STATE OF CALIFORNIA

THE STATE OF CALIFORNIA OR ITS OFFICERS OR AGENTS SHALL NOT BE RESPONSIBLE FOR THE ACCURACY OR COMPLETENESS OF SCANNED COPIES OF THIS PLAN SHEET.

NOTE:

1. EXISTING UTILITY FACILITIES ARE NOT SHOWN ON THESE PLANS.
2. FOR ACCURATE RIGHT OF WAY DATA, CONTACT RIGHT OF WAY ENGINEERING AT THE DISTRICT OFFICE.

LEGEND:

⇨ DIRECTION OF TRAFFIC

27B TRAFFIC STRIPE DETAIL No.

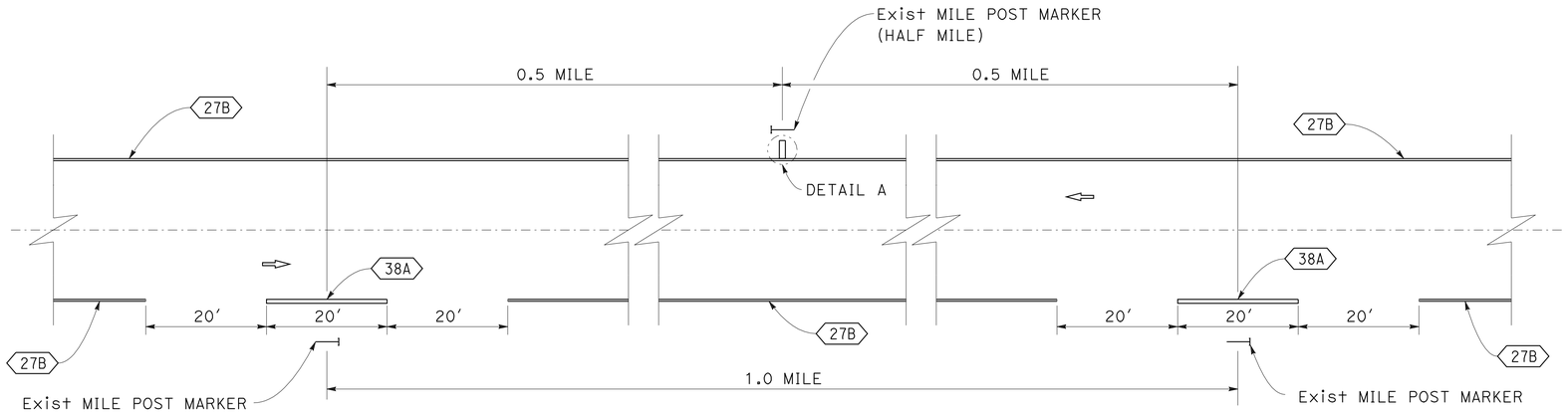

TYPICAL HALF MILE AND MILE POST STRIPE

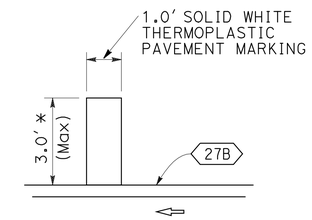

DETAIL A

* ACTUAL LENGTH MAY VARY
DUE TO PAVEMENT WIDTH

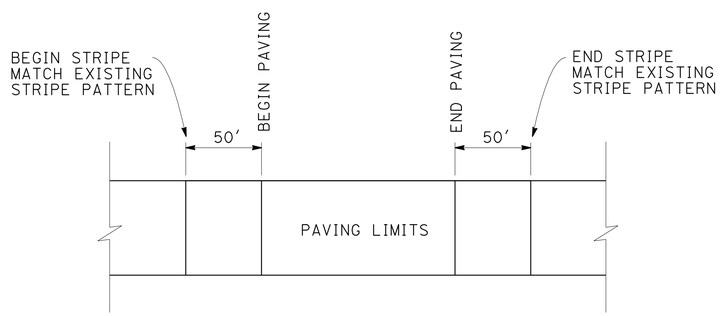

TRAFFIC STRIPE MATCH DETAIL

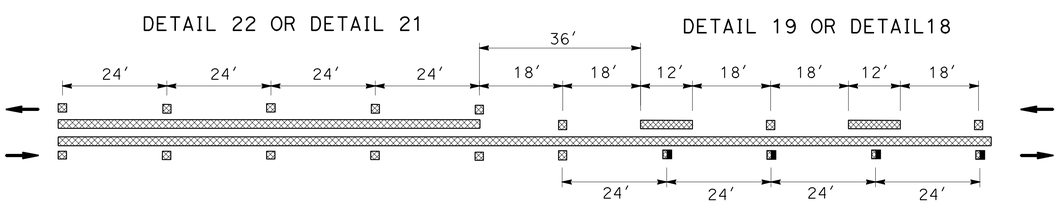

TYPICAL STRIPE TRANSITION DETAIL

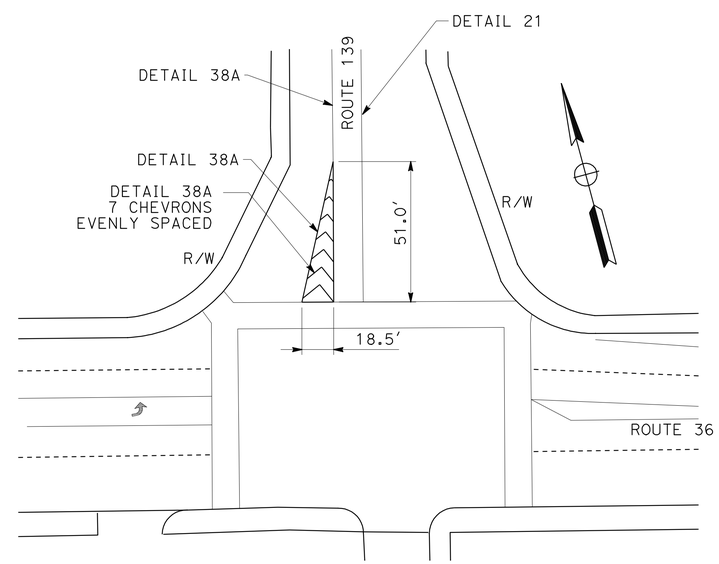

PAINTED TRAFFIC ISLAND DETAIL

PAVEMENT DELINEATION DETAILS

NO SCALE

PDD-1

REVISED BY | DATE REVISED
SCOTT GREGORY | DENISE FUZERE
CALCULATED-DESIGNED BY | CHECKED BY
FUNCTIONAL SUPERVISOR | LANCE BROWN

STATE OF CALIFORNIA - DEPARTMENT OF TRANSPORTATION
Caltrans® MAINTENANCE

P:\proj1\02\3E880_plans\pse\23E880nb001.dgn

LAST REVISION 09-22-11 | DATE PLOTTED => 24-OCT-2011 | TIME PLOTTED => 16:42

Dist	COUNTY	ROUTE	POST MILES TOTAL PROJECT	SHEET No.	TOTAL SHEETS
02	Las,Mod	139	0.0/2.0 20.7/27.9	7	20

Scott C. Gregory 10-17-11
REGISTERED CIVIL ENGINEER DATE

10-17-11
PLANS APPROVAL DATE

REGISTERED PROFESSIONAL ENGINEER SCOTT C. GREGORY No. C75565 Exp 06-30-12 CIVIL STATE OF CALIFORNIA

THE STATE OF CALIFORNIA OR ITS OFFICERS OR AGENTS SHALL NOT BE RESPONSIBLE FOR THE ACCURACY OR COMPLETENESS OF SCANNED COPIES OF THIS PLAN SHEET.

ABBREVIATIONS:

Mid MIDDLE

REMOVE THERMOPLASTIC PAVEMENT MARKING

LOCATION	PM	L+	Mid	R+	EA	SQFT	REMARKS
2	1.06		X		1	42	TYPE III (L) ARROW
	1.10			X	1	42	TYPE III (R) ARROW
	1.17		X		1	42	TYPE III (L) ARROW
	1.17	X			1	42	TYPE III (R) ARROW
	1.19	X			1	42	TYPE III (R) ARROW
	1.23		X		1	42	TYPE III (L) ARROW
	1.33			X	1	42	TYPE III (R) ARROW
	1.41			X	1	42	TYPE III (R) ARROW
	1.44		X		1	42	TYPE III (L) ARROW
	1.45			X	1	42	TYPE VI ARROW
	1.47			X	1	42	TYPE VI ARROW
	1.81		X		1	42	TYPE III (L) ARROW
	1.82			X	1	42	TYPE III (R) ARROW
	1.86		X		1	42	TYPE III (L) ARROW
	1.86			X	1	42	TYPE III (R) ARROW
	1.89		X		1	42	TYPE III (L) ARROW
	1.96		X		1	42	TYPE III (L) ARROW
TOTAL						714	

THERMOPLASTIC PAVEMENT MARKING

LOCATION	PM	L+	Mid	R+	EA	SQFT	REMARKS
2	0.02	X			1	42	TYPE III (R) ARROW
	0.04	X			1	42	TYPE III (R) ARROW
	0.06	X	X	X	1	104	CROSSWALK
	0.25			X	1	21	XING (YELLOW)
	0.25			X	1	35	SCHOOL (YELLOW)
	0.25			X	1	23	SLOW (YELLOW)
	0.27		X	X	1	24	LIMIT LINE
	0.28	X	X	X	1	94	CROSSWALK (YELLOW)
	0.28	X	X		1	24	LIMIT LINE
	0.31	X			1	21	XING (YELLOW)
	0.31	X			1	35	SCHOOL (YELLOW)
	0.31	X			1	23	SLOW (YELLOW)
	0.61	X			1	23	LIMIT LINE
	0.67		X		1	20	LIMIT LINE
	1.06		X		1	42	TYPE III (L) ARROW
	1.10			X	1	42	TYPE III (R) ARROW
	1.13		X		1	42	TYPE III (L) ARROW
	1.13			X	1	42	TYPE III (R) ARROW
	1.14	X	X	X	1	150	CROSSWALK
	1.16	X	X	X	1	150	CROSSWALK
	1.17		X		1	42	TYPE III (L) ARROW
	1.17	X			1	42	TYPE III (R) ARROW
	1.19	X			1	42	TYPE III (R) ARROW
	1.23		X		1	42	TYPE III (L) ARROW
	1.33			X	1	42	TYPE III (R) ARROW
	1.41			X	1	42	TYPE III (R) ARROW
	1.44		X		1	42	TYPE III (L) ARROW
	1.45			X	1	42	TYPE VI ARROW
	1.47			X	1	42	TYPE VI ARROW
	1.50	X			1	3	DETAL A
	1.81		X		1	42	TYPE III (L) ARROW
	1.82			X	1	42	TYPE III (R) ARROW
	1.86		X		1	42	TYPE III (L) ARROW
	1.86			X	1	42	TYPE III (R) ARROW
	1.88			X	1	33	LIMIT LINE
	1.88			X	1	22	STOP
	1.89		X		1	42	TYPE III (L) ARROW
	1.96		X		1	42	TYPE III (L) ARROW
TOTAL						1687	

THERMOPLASTIC TRAFFIC STRIPE (SPRAYABLE)

LOCATION	POST MILE LIMITS	DETAIL 11	DETAIL 18	DETAIL 21	DETAIL 27B	DETAIL 27C	DETAIL 28	DETAIL 38A
		LF	LF	LF	LF	LF	LF	LF
2	0.00/2.00	845	208	7190	20,196	2409	1754	4143
TOTAL		36,745						

PAVEMENT DELINEATION QUANTITIES
PDQ-1

REVISED BY | DATE REVISED
SCOTT GREGORY | DENISE FUZERE
CALCULATED-DESIGNED BY | CHECKED BY
FUNCTIONAL SUPERVISOR
LANCE BROWN

STATE OF CALIFORNIA - DEPARTMENT OF TRANSPORTATION
Caltrans® MAINTENANCE

P:\proj1\02\3E880_plans\pse\23E880nc001.dgn

LAST REVISION 09-22-11 | DATE PLOTTED => 24-OCT-2011 | TIME PLOTTED => 16:42

Dist	COUNTY	ROUTE	POST MILES TOTAL PROJECT	SHEET No.	TOTAL SHEETS
02	Las,Mod	139	0.0/2.0 20.7/27.9	8	20

Scott C. Gregory 10-17-11
REGISTERED CIVIL ENGINEER DATE

10-17-11
PLANS APPROVAL DATE

REGISTERED PROFESSIONAL ENGINEER SCOTT C. GREGORY No. C75565 Exp 06-30-12 CIVIL STATE OF CALIFORNIA

THE STATE OF CALIFORNIA OR ITS OFFICERS OR AGENTS SHALL NOT BE RESPONSIBLE FOR THE ACCURACY OR COMPLETENESS OF SCANNED COPIES OF THIS PLAN SHEET.

NOTES:

1. (N) - NOT A SEPARATE PAY ITEM, FOR INFORMATION ONLY.
2. ACTUAL LOCATIONS OF REPLACE ASPHALT CONCRETE SURFACING TO BE DETERMINED BY THE ENGINEER.

ROADWAY QUANTITIES

LOCATION	POST MILE LIMITS	(N) LENGTH	(N) WIDTH	HMA (TYPE A)	TACK COAT	SHOULDER BACKING
	PM - PM	LF	LF	TON	TON	TON
2	0.00-0.01	53	131.0-55.0	4128	17.4	350
	0.01-0.06	264	55.0-48.0			
	0.06-0.14	422	48.0-47.0			
	0.14-0.21	370	47.0-48.0			
	0.21-0.28	370	48.0-47.0			
	0.28-0.34	317	47.0-47.0			
	0.34-0.36	106	47.0-38.0			
	0.36-0.38	106	38.0-41.0			
	0.38-0.41	158	41.0-42.0			
	0.41-0.43	106	42.0-41.0			
	0.43-0.46	158	41.0-40.0			
	0.46-0.49	158	40.0-46.0			
	0.49-0.61	634	46.0-53.0			
	0.61-0.63	90	53.0-46.0			
	0.63-0.67	222	46.0-42.0			
	0.67-0.69	127	42.0-48.0			
	0.69-0.81	623	48.0-48.0			
	0.81-0.87	285	48.0-46.0			
	0.87-0.91	243	46.0-46.0			
	0.91-0.98	343	46.0-47.0			
	0.98-1.01	153	47.0-48.0			
	1.01-1.04	201	48.0-48.0			
	1.04-1.12	428	48.0-57.0			
	1.12-1.17	275	57.0-61.0			
	1.17-1.22	227	61.0-52.0			
	1.22-1.26	211	52.0-49.0			
	1.26-1.30	195	49.0-51.0			
	1.30-1.34	248	51.0-58.0			
	1.34-1.45	560	58.0-58.0			
	1.45-1.45	21	58.0-73.0			
	1.45-1.50	264	73.0-63.0			
	1.50-1.56	317	63.0-56.0			
	1.56-1.61	264	56.0-55.0			
	1.61-1.61	5	55.0-40.0			
	1.61-1.70	470	40.0-40.0			
	1.70-1.74	185	40.0-44.0			
	1.74-1.77	185	44.0-53.0			
	1.77-1.80	116	53.0-57.0			
	1.80-1.82	106	57.0-61.0			
	1.82-1.86	248	61.0-67.0			
	1.86-1.89	143	67.0-55.0			
	1.89-1.93	201	55.0-55.0			
	1.93-1.98	253	55.0-53.0			
	1.98-2.00	132	53.0-24.0			
	HMA DIKE (TYPE E)			99		
			TOTAL	4227	17.4	350

METAL BEAM GUARD RAILING

LOCATION	POST MILE LIMITS	SIDE	RECONSTRUCT MBGR	ALTERNATIVE INLINE TERMINAL SYSTEM
			LF	EA
2	0.87-1.05	R†	900	1
		TOTAL	900	1

REMOVE ASPHALT CONCRETE DIKE

LOCATION	POST MILE LIMITS	SIDE	LENGTH
			LF
2	0.63 TO 0.65	R†	106
	1.19 TO 1.41	R†	1162
	1.27 TO 1.44	L†	898
	1.44 TO 1.50	R†	317
	1.60 TO 1.72	R†	634
	1.61 TO 1.71	L†	528
		TOTAL	3645

PLACE HOT MIX ASPHALT DIKE (TYPE E)

LOCATION	POST MILE LIMITS	SIDE	LENGTH
			LF
2	0.63 TO 0.65	R†	106
	1.19 TO 1.41	R†	1162
	1.27 TO 1.44	L†	898
	1.44 TO 1.50	R†	317
	1.60 TO 1.72	R†	634
	1.61 TO 1.71	L†	528
		TOTAL	3645

COLD PLANE ASPHALT CONCRETE PAVEMENT

LOCATION	POST MILE LIMITS	(N) LENGTH	(N) WIDTH	AREA	REMARKS
		LF	LF	SQYD	
2	0.00-0.63	3327	38-131	17,712	MAINLINE GRIND OUT
	0.63	40	46	204	MAINLINE CONFORM TAPER
	0.67	8	100	89	PAVED ROAD CONNECTION CONFORM TAPER - R†
	0.86	8	116	103	PAVED ROAD CONNECTION CONFORM TAPER - R†
	1.12	40	57	253	MAINLINE CONFORM TAPER
	1.12-1.17	264	57-61	1731	MAINLINE GRIND OUT
	1.17	40	61	271	MAINLINE CONFORM TAPER
	1.42	8	160	142	PAVED ROAD CONNECTION CONFORM TAPER - R†
	1.88	8	105	93	PAVED ROAD CONNECTION CONFORM TAPER - L†
	1.88	8	66	59	PAVED ROAD CONNECTION COMFORM TAPER - R†
	2.00	40	24	107	MAINLINE CONFORM TAPER
			TOTAL	20,764	

REPLACE DRAINAGE GRATES

LOCATION	POST MILE	SIDE	GRATE TYPE	No. OF GRATES	Misc IRON & STEEL (LB)
2	0.13	R†	24-12X	1	239
	0.15	R†	24-12X	1	239
	0.36	R†	24-12X	1	239
	0.36	L†	24-12X	1	239
	0.41	R†	24-12X	1	239
	0.41	L†	24-12X	3	904
			18-9X	1	
	0.46	R†	24-12X	1	239
	0.47	L†	24-12X	1	239
	0.55	R†	24-12X	3	717
	0.63	R†	24-12X	1	239
				TOTAL	3533

ADJUST UTILITY COVER TO GRADE

Loc	POST MILE	UTILITY LOCATION	SHEET No.	WATER VALVE BOX	SANITARY SEWER MANHOLE
				EA	EA
2	0.04	1	L-1		1
	0.35	2	L-1	1	
	0.39	3	L-1		1
	0.42	4	L-1	1	
	0.43	5	L-1		1
	0.47	6	L-1	1	
	0.49	7	L-1		1
	0.56	8	L-1		1
	1.16	9	L-1	1	
	1.16	10	L-1	1	
	SUB TOTAL			5	5
	TOTAL			10	

REPLACE ASPHALT CONCRETE SURFACING

LOCATION	POST MILE LIMITS	(N) Approx No. OF DIGOUTS	(N) LENGTH	(N) WIDTH	(N) DEPTH	* REPLACE ASPHALT CONCRETE SURFACING
	PM - PM		LF	LF	LF	CY
1	20.70-27.90	146	100	4	0.33	714
2	0.00-2.00	82	100	4	0.33	401
				TOTAL		1115

* SEE NOTE 3

SUMMARY OF QUANTITIES

Q-1

STATE OF CALIFORNIA - DEPARTMENT OF TRANSPORTATION
Caltrans MAINTENANCE

FUNCTIONAL SUPERVISOR: LANCE BROWN
CALCULATED-DESIGNED BY / CHECKED BY: SCOTT GREGORY / DENISE FUZERE
REVISED BY / DATE REVISED

P:\proj1\02\3E880_plans\pse\23E880pa001.dgn

LAST REVISION 09-22-11 | DATE PLOTTED => 24-OCT-2011 | TIME PLOTTED => 16:42

Dist	COUNTY	ROUTE	POST MILES TOTAL PROJECT	SHEET No.	TOTAL SHEETS
2	Las,Mod	139	0.0/2.0 20.7/27.9	9	20

ART 10-17-11
REGISTERED ELECTRICAL ENGINEER DATE

10-17-11
PLANS APPROVAL DATE

REGISTERED PROFESSIONAL ENGINEER A.P. ROBLES No. E15293 Exp. 3-31-13 ELECTRICAL STATE OF CALIFORNIA

THE STATE OF CALIFORNIA OR ITS OFFICERS OR AGENTS SHALL NOT BE RESPONSIBLE FOR THE ACCURACY OR COMPLETENESS OF SCANNED COPIES OF THIS PLAN SHEET.

NOTES:

1. FOR ACCURATE RIGHT OF WAY DATA, CONTACT RIGHT OF WAY ENGINEERING AT THE DISTRICT OFFICE.
2. EXISTING UTILITY FACILITIES ARE NOT SHOWN ON THESE PLANS.
3. LOCATIONS ARE APPROXIMATE. FINAL LOOP LOCATIONS WILL BE DETERMINED BY THE ENGINEER.
4. AB EXISTING LOOPS.

EXISTING TRAFFIC MANAGEMENT SYSTEM ELEMENTS TO BE MAINTAINED

TYPE	LOCATION	DESCRIPTION
HAR FLASHERS	LAS-139-1.27	FNBT AND FSBT BACK-TO-BACK ON NB SIDE OF ROAD

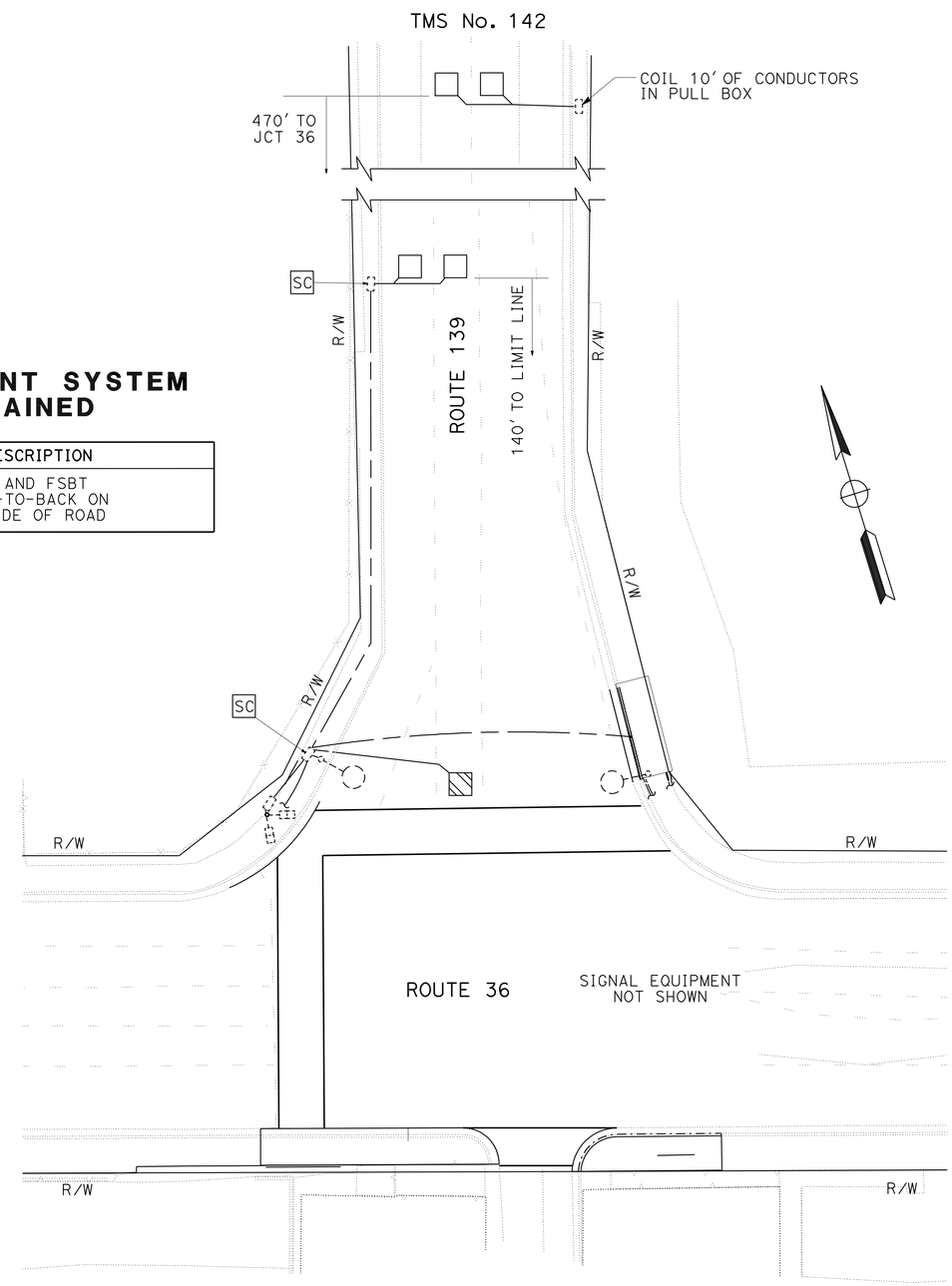

MODIFY SIGNAL TRAFFIC MONITORING STATION

THIS PLAN IS ACCURATE FOR ELECTRICAL WORK ONLY.

NO SCALE

E-1

REVISED BY | DATE REVISED
ARTURO P. ROBLES | JAMES M. ELGIN
CALCULATED-DESIGNED BY | CHECKED BY
FUNCTIONAL SUPERVISOR: ROB STINGER

STATE OF CALIFORNIA - DEPARTMENT OF TRANSPORTATION
Caltrans® ELECTRICAL DESIGN

P:\proj1\02\3E880_plans\pse\23e880ua001.dgn

LAST REVISION 07-07-10 | DATE PLOTTED => 24-OCT-2011 | TIME PLOTTED => 16:42

BORDER LAST REVISED 7/2/2010 | USERNAME => s123119 | DGN FILE => 23e880ua001.dgn | RELATIVE BORDER SCALE IS IN INCHES 0 1 2 3 | UNIT 0147 | PROJECT NUMBER & PHASE 02000202021

Dist	COUNTY	ROUTE	POST MILES TOTAL PROJECT	SHEET No.	TOTAL SHEETS
2	Las,Mod	139	0.0/2.0 20.7/27.9	10	20

ART 10-17-11
REGISTERED ELECTRICAL ENGINEER DATE

10-17-11
PLANS APPROVAL DATE

REGISTERED PROFESSIONAL ENGINEER A.P. ROBLES No. E15293 Exp. 3-31-13 ELECTRICAL STATE OF CALIFORNIA

THE STATE OF CALIFORNIA OR ITS OFFICERS OR AGENTS SHALL NOT BE RESPONSIBLE FOR THE ACCURACY OR COMPLETENESS OF SCANNED COPIES OF THIS PLAN SHEET.

NOTES:

1. FOR ACCURATE RIGHT OF WAY DATA, CONTACT RIGHT OF WAY ENGINEERING AT THE DISTRICT OFFICE.
2. EXISTING UTILITY FACILITIES ARE NOT SHOWN ON THESE PLANS.
3. LOCATIONS ARE APPROXIMATE. FINAL LOOP LOCATIONS WILL BE DETERMINED BY THE ENGINEER.

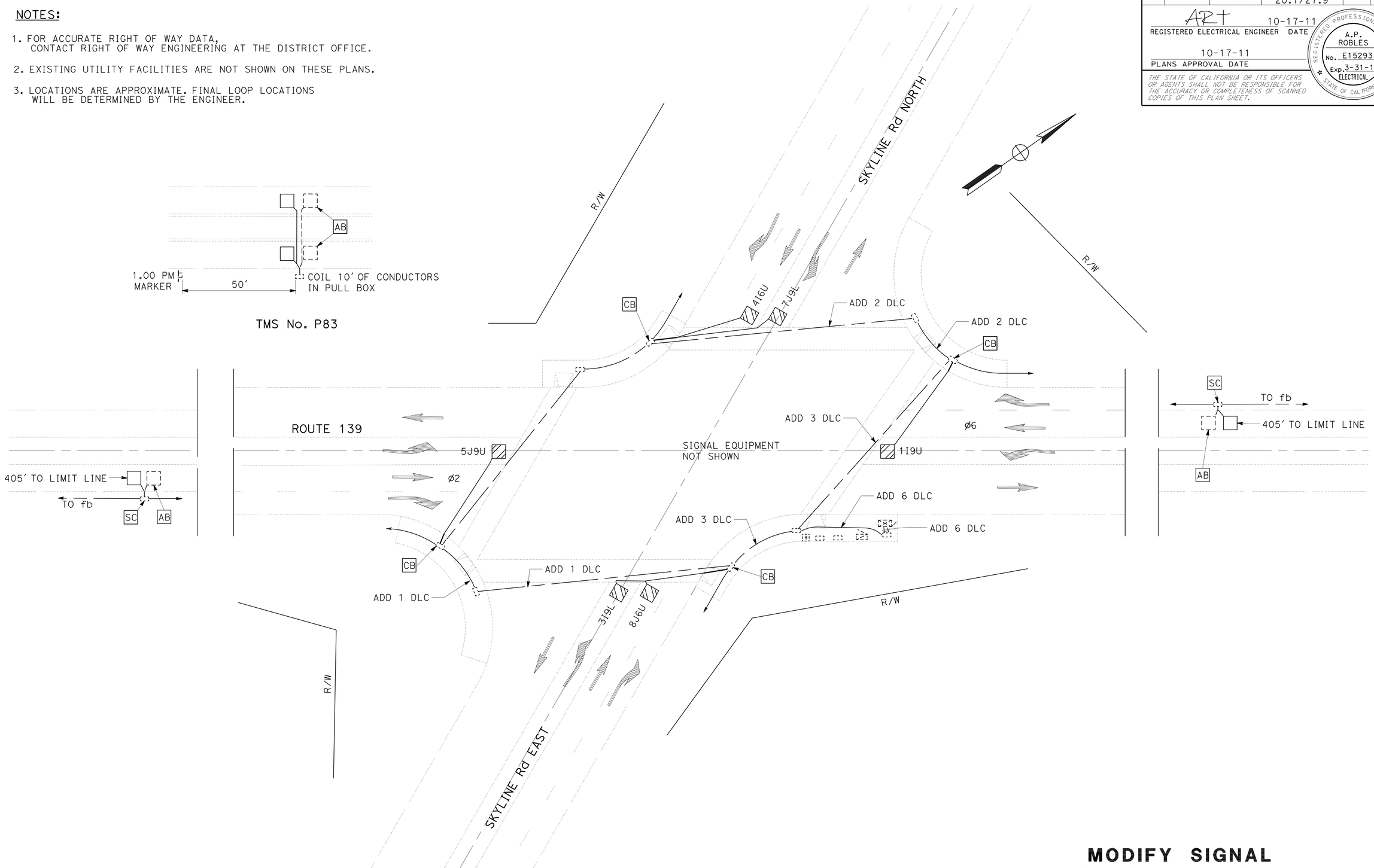

THIS PLAN IS ACCURATE FOR ELECTRICAL WORK ONLY.

MODIFY SIGNAL
TRAFFIC MONITORING STATION

NO SCALE

E-2

REVISED BY	DATE REVISED
ARTURO P. ROBLES	
JAMES M. ELGIN	
CALCULATED-DESIGNED BY	
CHECKED BY	
FUNCTIONAL SUPERVISOR	
ROB STINGER	

STATE OF CALIFORNIA - DEPARTMENT OF TRANSPORTATION
Caltrans® ELECTRICAL DESIGN

P:\proj1\02\3E880_plans\pse\23e880ua002.dgn

LAST REVISION 07-07-10 | DATE PLOTTED => 24-OCT-2011 | TIME PLOTTED => 16:42

Dist	COUNTY	ROUTE	POST MILES TOTAL PROJECT	SHEET No.	TOTAL SHEETS
02	Las, Mod	139	0.0/2.0, 20.7/27.9	11	20

Randell D. Hiatt
REGISTERED CIVIL ENGINEER

May 20, 2011
PLANS APPROVAL DATE

REGISTERED PROFESSIONAL ENGINEER Randell D. Hiatt No. C50200 Exp. 6-30-11 CIVIL STATE OF CALIFORNIA

The State of California or its officers or agents shall not be responsible for the accuracy or completeness of electronic copies of this plan sheet.

To accompany plans dated 10-17-11

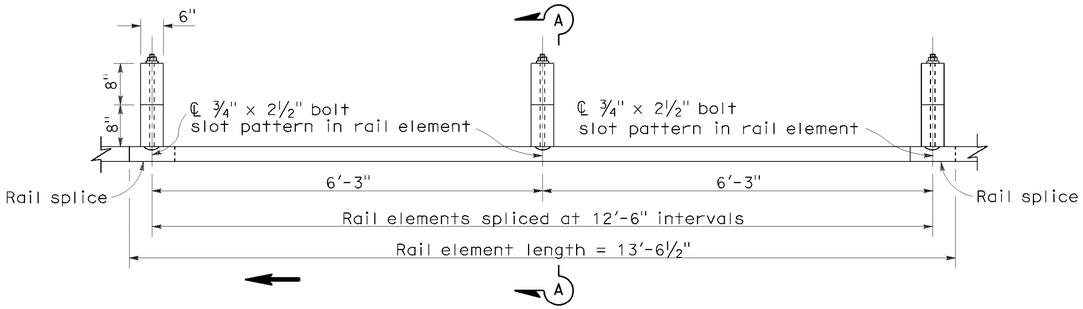

PLAN

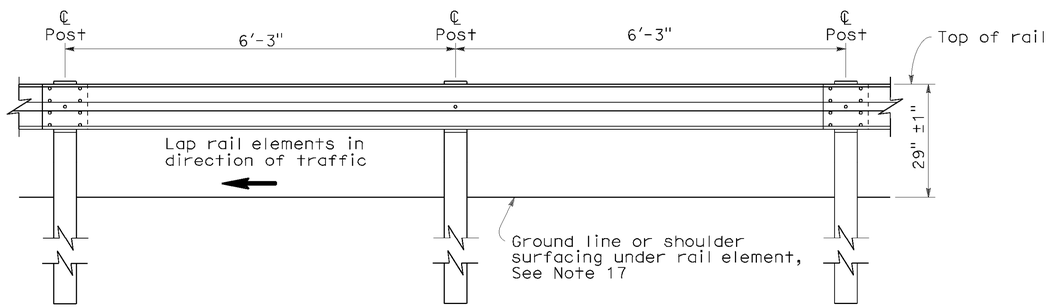

ELEVATION

METAL BEAM GUARD RAILING WITH WOOD POST AND BLOCKS

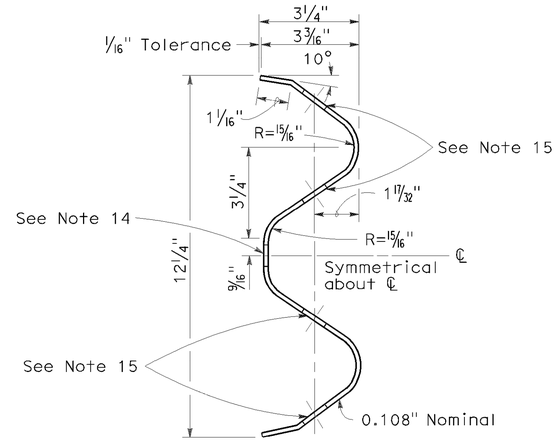

SECTION THRU RAIL ELEMENT

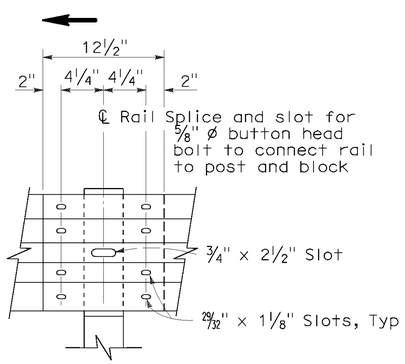

ELEVATION

RAIL ELEMENT SPLICE DETAIL

a) Connect the over lapped end of the rail elements with ⅝" ø x 1⅜" button head oval shoulder splice bolts inserted into the 29⁄32" x 1⅛" slots and bolted together with ⅝" ø recessed hex nuts. Recess of hex nut points toward rail element. A total of 8 bolts and nuts are to be used at each rail splice connection.

b) The ends of the rail elements are to be overlapped in the direction of traffic (see details).

c) Where end cap is to be attached to the end of a rail element, a total of 4 of the above described splice bolts and nuts are to be used.

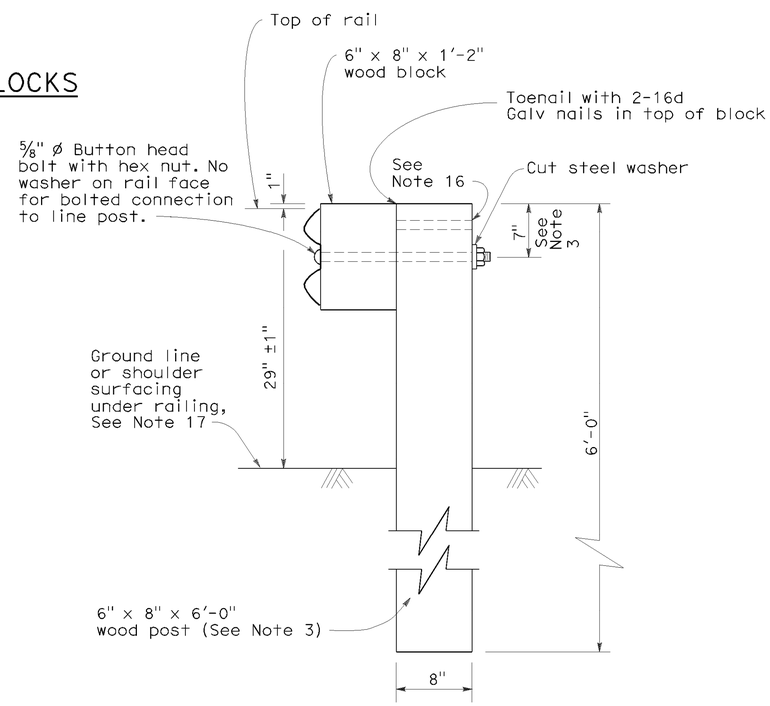

SECTION A-A

TYPICAL WOOD LINE POST INSTALLATION

See Note 4

NOTES:

1. For details of steel post installations, see Standard Plan A77A2.
2. For details of standard hardware used to construct guard railing, see Standard Plan A77B1.
3. For details of wood posts and wood blocks used to construct guard railing, see Standard Plan A77C1.
4. For additional installation details, see Standard Plan A77C3.
5. Guard railing post spacing to be 6'-3" center to center, except as otherwise noted.
6. For guard railing typical layouts, see the A77E, A77F and A77G Series of Standard Plans.
7. For terminal system end treatment details, see the A77L Series of Standard Plans. To connect railing to terminal system end treatment, transition the top of railing height at a ratio of 120:1 to terminal system end treatment height plus one 12'-6" standard railing section at the transitioned height for a horizontal connection to the end treatment.
8. For guard railing end anchor details, see Standard Plans A77H1 and A77I2.
9. For details of guard railing transition to bridge railing, see Standard Plan A77J4.
10. For additional details of guard railing connection to bridge railings, see Standard Plans A77J1, A77J2 and A77K1.
11. For guard railing connection details to abutments and walls, see Standard Plan A77J3.
12. Direction of adjacent traffic indicated by ➡.
13. For typical guard railing delineation and dike positioning details, see Standard Plan A77C4.
14. Slotted hole for bolted connection of rail element to block and post. See "Section Thru Rail Element".
15. Slotted holes for splice bolts to overlap ends of rail element. See "Section Thru Rail Element".
16. Additional hole in uppermost portion of line post is for potential future adjustments of railing height. See Standard Plan A77C1.
17. Install posts in soil.

STATE OF CALIFORNIA
DEPARTMENT OF TRANSPORTATION

METAL BEAM GUARD RAILING STANDARD RAILING SECTION (WOOD POST WITH WOOD BLOCK)

NO SCALE

RSP A77A1 DATED MAY 20, 2011 SUPERSEDES STANDARD PLAN A77A1 DATED MAY 1, 2006 - PAGE 41 OF THE STANDARD PLANS BOOK DATED MAY 2006.

REVISED STANDARD PLAN RSP A77A1

2006 REVISED STANDARD PLAN RSP A77A1

P:\proj1\02\3E880_plans\pse\23e880va001.dgn

3-10-11

To accompany plans dated 10-17-11

Dist	COUNTY	ROUTE	POST MILES TOTAL PROJECT	SHEET No.	TOTAL SHEETS
02	Las, Mod	139	0.0/2.0, 20.7/27.9	12	20

Randell D. Hiatt
REGISTERED CIVIL ENGINEER

May 20, 2011
PLANS APPROVAL DATE

REGISTERED PROFESSIONAL ENGINEER
Randell D. Hiatt
No. C50200
Exp. 6-30-11
CIVIL
STATE OF CALIFORNIA

The State of California or its officers or agents shall not be responsible for the accuracy or completeness of electronic copies of this plan sheet.

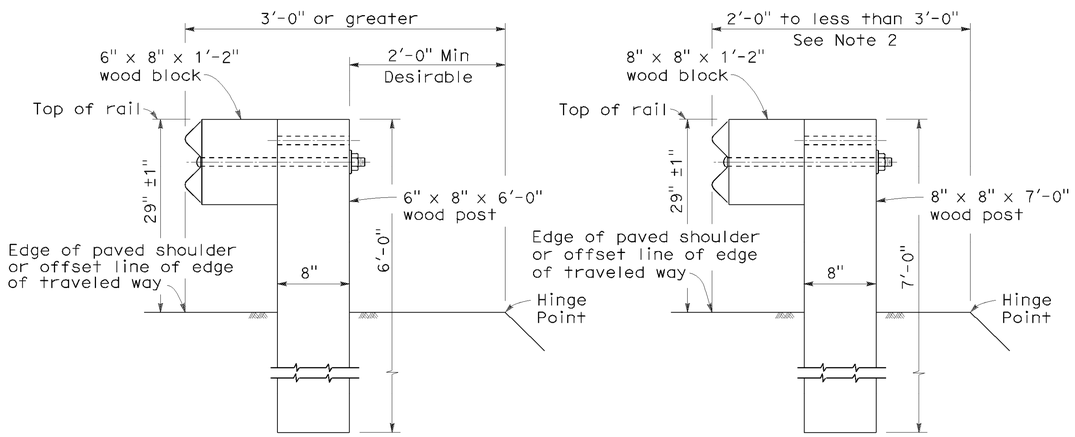

DETAIL A
TYPICAL ROADWAY INSTALLATION
See Note 1

DETAIL B
NARROW ROADWAY INSTALLATION
See Note 1

POST EMBEDMENT

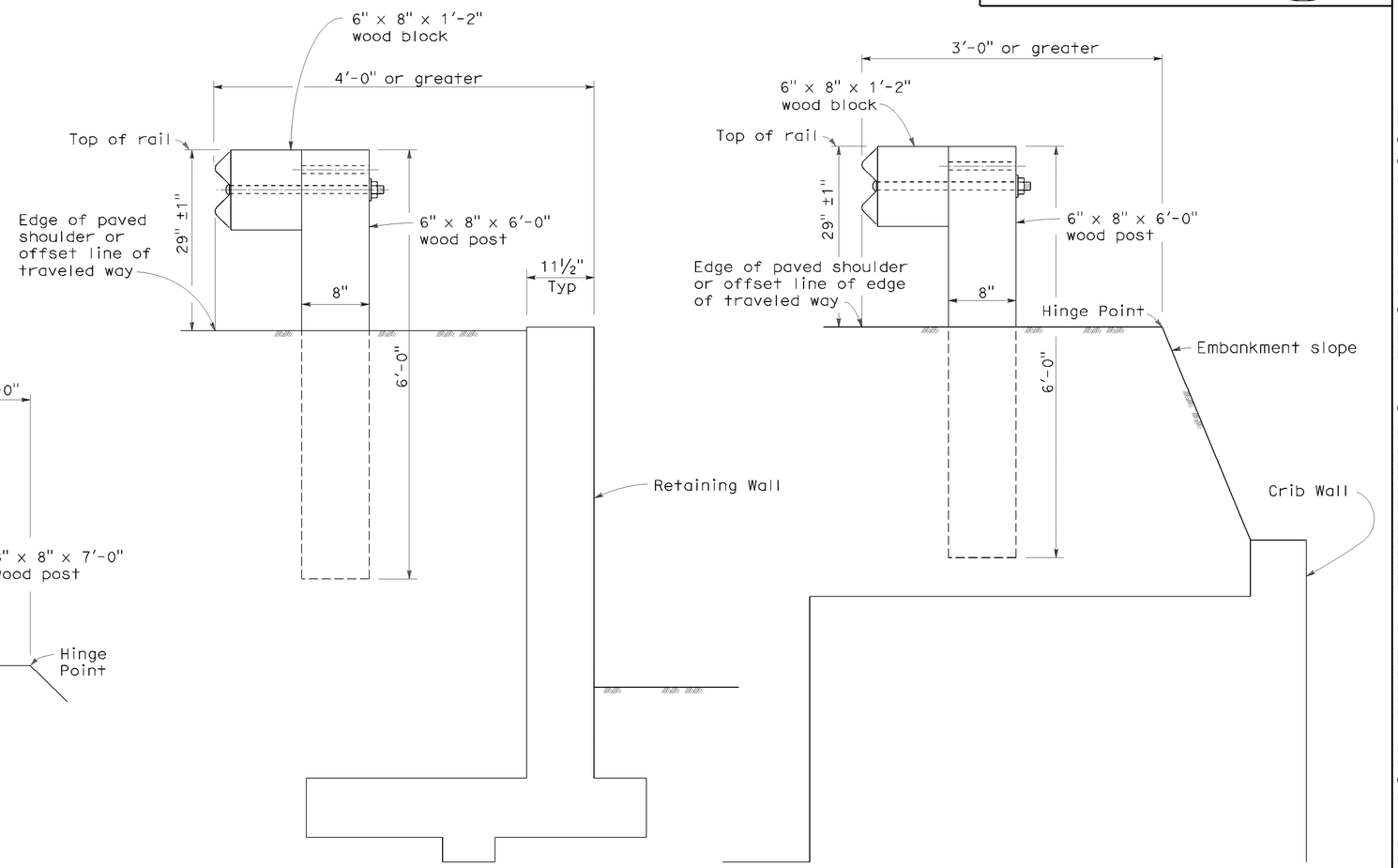

DETAIL C

DETAIL D

INSTALLATION AT EARTH RETAINING WALLS

NOTES:

1. These installation details also applicable to steel line post installations. For Detail A, C, and D, where steel line post installations are constructed, W6 x 9 steel post, 6'-0" in length, with 6" x 8" x 1'-2" notched wood blocks or notched recycled plastic blocks are to be used in place of the size of wood post and wood block shown. For Detail B, where steel line post installations are constructed, W6 x 9 steel post, 7'-0" in length, with 6" x 8" x 1'-2" notched wood blocks or notched recycled plastic blocks are to be used in place of the size of wood post and wood block shown. For additional installation details, see Standard Plans A77A1 and A77A2.
2. Where the distance between the face of the rail and the hinge point is less than 2'-0", see the Project Plans for special details.
3. For dike positioning with guard railing installations, see Standard Plan A77C4.

STATE OF CALIFORNIA
DEPARTMENT OF TRANSPORTATION

METAL BEAM GUARD RAILING TYPICAL LINE POST EMBEDMENT AND HINGE POINT OFFSET DETAILS

NO SCALE

RSP A77C3 DATED MAY 20, 2011 SUPERSEDES STANDARD PLAN A77C3
DATED MAY 1, 2006 - PAGE 46 OF THE STANDARD PLANS BOOK DATED MAY 2006.

REVISED STANDARD PLAN RSP A77C3

2006 REVISED STANDARD PLAN RSP A77C3

P:\proj1\02\3E880_plans\pse\23e880va002.dgn

3-10-11

DIST	COUNTY	ROUTE	POST MILES TOTAL PROJECT	SHEET NO.	TOTAL SHEETS
02	Las, Mod	139	0.0/2.0, 20.7/27.9	13	20

Randell D. Hiatt
REGISTERED CIVIL ENGINEER

June 6, 2008
PLANS APPROVAL DATE

REGISTERED PROFESSIONAL ENGINEER Randell D. Hiatt No. C50200 Exp. 6-30-09 CIVIL STATE OF CALIFORNIA

The State of California or its officers or agents shall not be responsible for the accuracy or completeness of electronic copies of this plan sheet.

To accompany plans dated 10-17-11

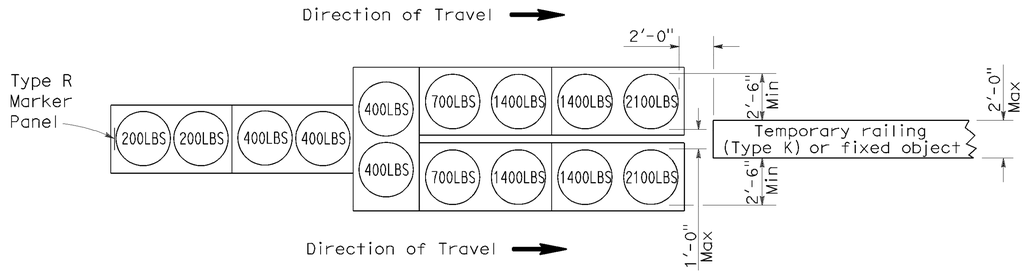

ARRAY 'TU14'

Approach speed 45 mph or more

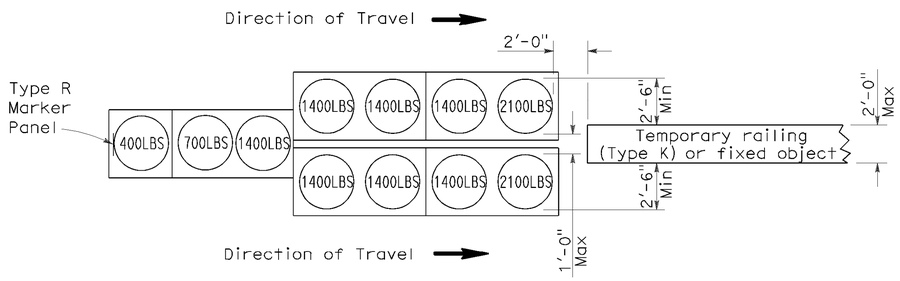

ARRAY 'TU11'

Approach speed less than 45 mph

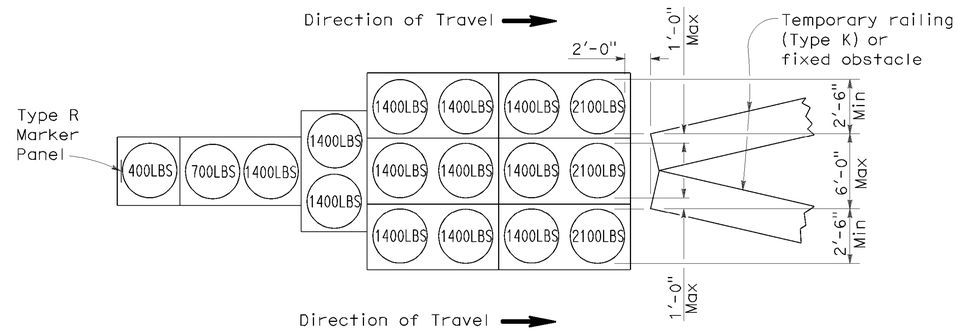

ARRAY 'TU17'

Approach speed less than 45 mph

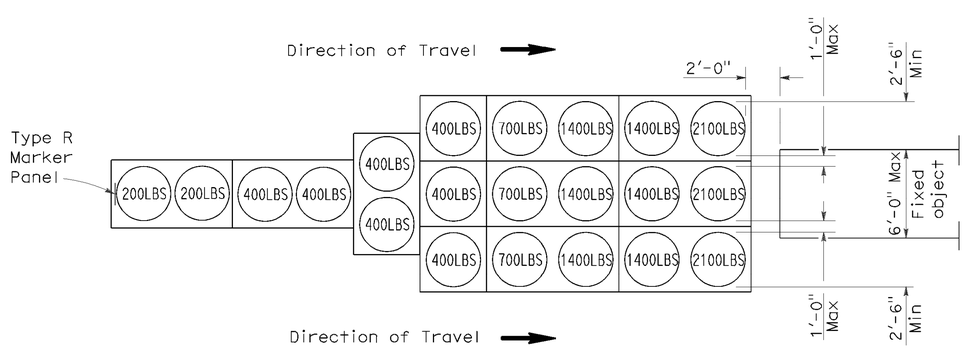

ARRAY 'TU21'

Approach speed 45 mph or more

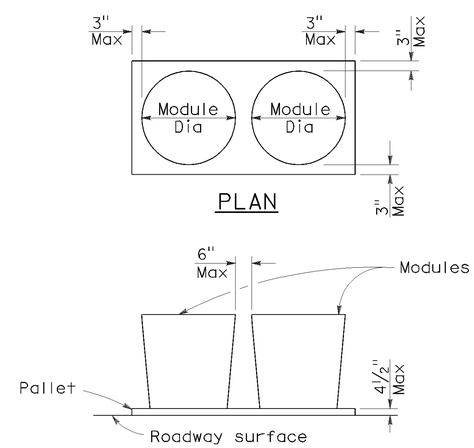

PLAN

ELEVATION

CRASH CUSHION PALLET DETAIL

See Note 7

NOTES:

1. (XXX) Indicates sand filled module location and weight of sand in pounds for each module. Module spacing is based on the greater diameter of the module.
2. All sand weights are nominal.
3. Temporary crash cushion arrays shall not encroach on the traveled way.
4. Place the top of Type R marker panel 1" below the module lid.
5. Refer to Standard Plan A73B for marker details.
6. Approach speeds indicated conform to NCHRP 350 Report criteria.
7. Use of pallets is optional.

STATE OF CALIFORNIA
DEPARTMENT OF TRANSPORTATION

TEMPORARY CRASH CUSHION, SAND FILLED (UNIDIRECTIONAL)

NO SCALE

RSP T1A DATED JUNE 6, 2008 SUPERSEDES STANDARD PLAN T1A
DATED MAY 1, 2006 - PAGE 211 OF THE STANDARD PLANS BOOK DATED MAY 2006.

REVISED STANDARD PLAN RSP T1A

2006 REVISED STANDARD PLAN RSP T1A

P:\proj1\02\3E880_plans\pse\23e880va003.dgn

5-15-08

DIST	COUNTY	ROUTE	POST MILES TOTAL PROJECT	SHEET NO.	TOTAL SHEETS
02	Las, Mod	139	0.0/2.0, 20.7/27.9	14	20

Randell D. Hiatt
REGISTERED CIVIL ENGINEER

June 6, 2008
PLANS APPROVAL DATE

REGISTERED PROFESSIONAL ENGINEER
Randell D. Hiatt
No. C50200
Exp. 6-30-09
CIVIL
STATE OF CALIFORNIA

The State of California or its officers or agents shall not be responsible for the accuracy or completeness of electronic copies of this plan sheet.

To accompany plans dated 10-17-11

2006 REVISED STANDARD PLAN RSP T1B

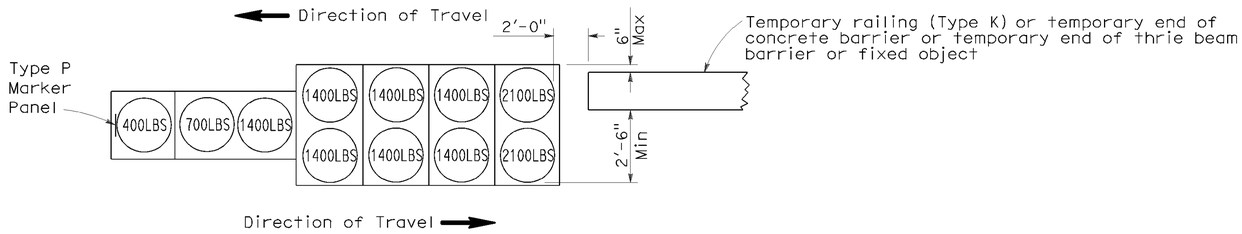

ARRAY 'TB11'

Approach speed less than 45 mph

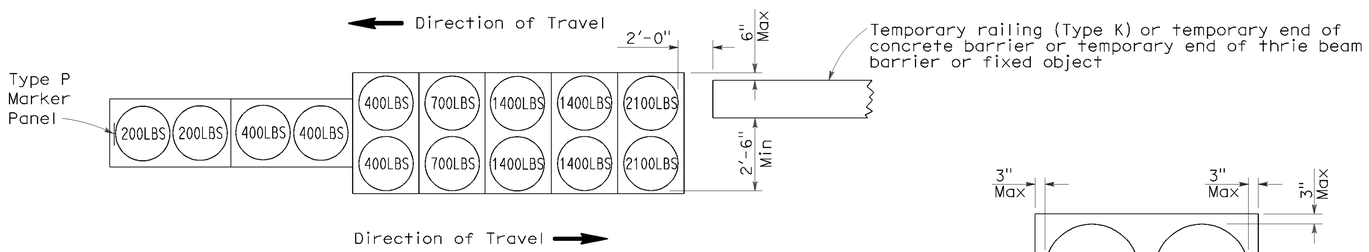

ARRAY 'TB14'

Approach speed 45 mph or more

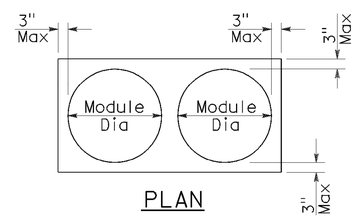

PLAN

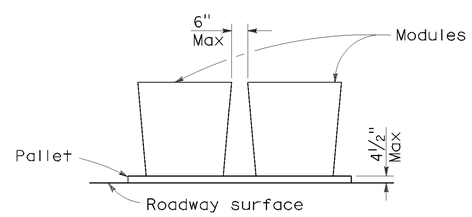

ELEVATION

CRASH CUSHION PALLET DETAIL

See Note 7

NOTES:

1. (XXX) Indicates sand filled module location and weight of sand in pounds for each module. Module spacing is based on the greater diameter of the module.
2. All sand weights are nominal.
3. Temporary crash cushion arrays shall not encroach on the traveled way.
4. Place the Type P marker panel so that the bottom of the panel rests upon the pallet.
5. Refer to Standard Plan A73B for marker details.
6. Approach speeds indicated conform to NCHRP 350 Report criteria.
7. Use of pallets is optional.

STATE OF CALIFORNIA
DEPARTMENT OF TRANSPORTATION

TEMPORARY CRASH CUSHION, SAND FILLED (BIDIRECTIONAL)

NO SCALE

RSP T1B DATED JUNE 6, 2008 SUPERSEDES STANDARD PLAN T1B
DATED MAY 1, 2006 - PAGE 212 OF THE STANDARD PLANS BOOK DATED MAY 2006.

REVISED STANDARD PLAN RSP T1B

P:\proj1\02\3E880_plans\pse\23e880va004.dgn

5-15-08

DIST	COUNTY	ROUTE	POST MILES TOTAL PROJECT	SHEET NO.	TOTAL SHEETS
02	Las, Mod	139	0.0/2.0, 20.7/27.9	15	20

Randell D. Hiatt
REGISTERED CIVIL ENGINEER

June 6, 2008
PLANS APPROVAL DATE

REGISTERED PROFESSIONAL ENGINEER
Randell D. Hiatt
No. C50200
Exp. 6-30-09
CIVIL
STATE OF CALIFORNIA

The State of California or its officers or agents shall not be responsible for the accuracy or completeness of electronic copies of this plan sheet.

To accompany plans dated 10-17-11

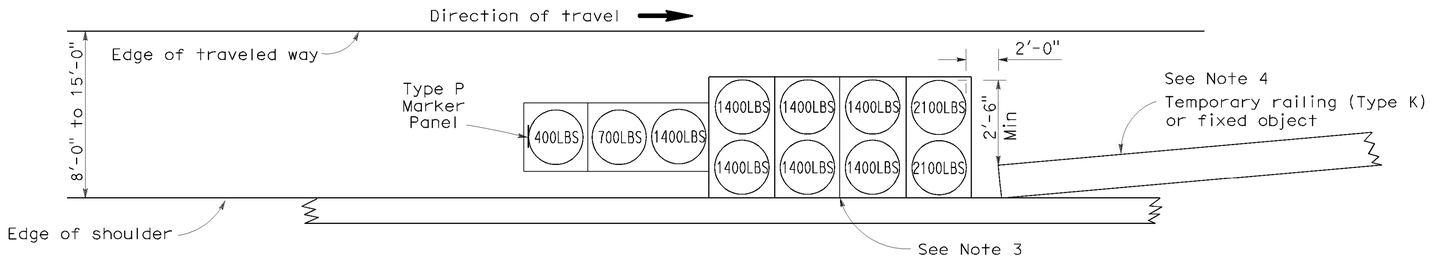

ARRAY 'TS11'

Approach speed less than 45 mph
See Note 9

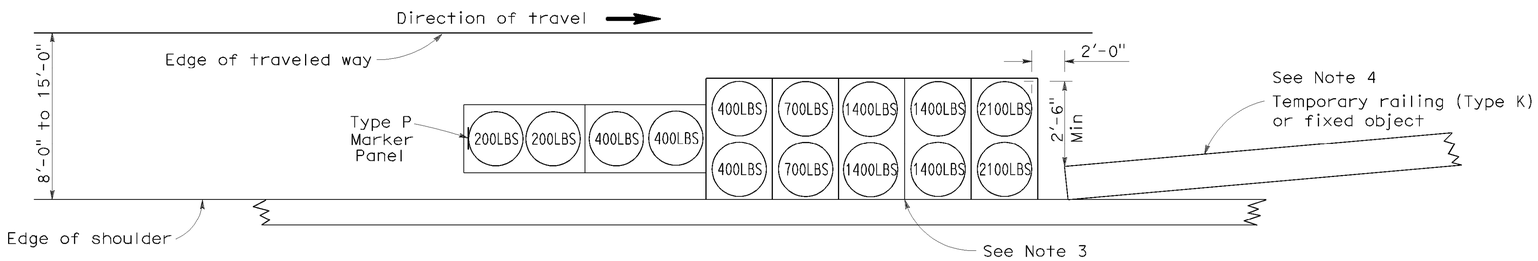

ARRAY 'TS14'

Approach speed 45 mph or more
See Note 9

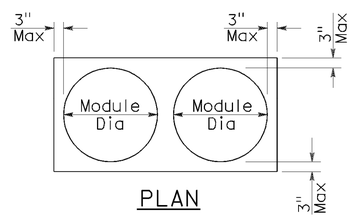

PLAN

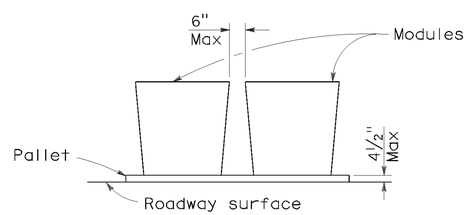

ELEVATION

CRASH CUSHION PALLET DETAIL

See Note 11

NOTES:

1. (XXX) Indicates sand filled module location and weight of sand in pounds for each module. Module spacing is based on the greater diameter of the module.
2. All sand weights are nominal.
3. The temporary crash cushion arrays shown on this plan shall be used only in locations where there will be traffic on one side of the temporary crash cushion array.
4. If the fixed object or approach end of the temporary railing is less than 15'-0" from the edge of traveled way, a temporary crash cushion is required in a construction or work zone.
5. Temporary crash cushion arrays shall not encroach on the traveled way.
6. Arrays for median shoulders shall conform to details shown on this plan for outside shoulders.
7. Place the Type P marker panel so that the bottom of the panel rests upon the pallet and faces traffic.
8. Refer to Standard Plan A73B for marker details.
9. For shoulder widths less than 8'-0", appropriate approved crash cushion protection, other than sand filled modules, shall be provided at fixed objects and at approach ends of temporary railing. The specific type of crash cushion shall be as shown on the project plans or as specified in the Special Provisions, or if not shown on the project plans or specified in the Special Provisions, shall be as approved by the Engineer.
10. Approach speeds indicated conform to NCHRP 350 Report criteria.
11. Use of pallets is optional.

STATE OF CALIFORNIA
DEPARTMENT OF TRANSPORTATION

TEMPORARY CRASH CUSHION, SAND FILLED (SHOULDER INSTALLATIONS)

NO SCALE

RSP T2 DATED JUNE 6, 2008 SUPERSEDES STANDARD PLAN T2
DATED MAY 1, 2006 - PAGE 213 OF THE STANDARD PLANS BOOK DATED MAY 2006.

REVISED STANDARD PLAN RSP T2

2006 REVISED STANDARD PLAN RSP T2

P:\proj1\02\3E880_plans\pse\23e880va005.dgn

5-15-08

Dist	COUNTY	ROUTE	POST MILES TOTAL PROJECT	SHEET No.	TOTAL SHEETS
02	Las, Mod	139	0.0/2.0, 20.7/27.9	16	20

Randell D. Hiatt
REGISTERED CIVIL ENGINEER

May 20, 2011
PLANS APPROVAL DATE

REGISTERED PROFESSIONAL ENGINEER
Randell D. Hiatt
No. C50200
Exp. 6-30-11
CIVIL
STATE OF CALIFORNIA

The State of California or its officers or agents shall not be responsible for the accuracy or completeness of electronic copies of this plan sheet.

To accompany plans dated 10-17-11

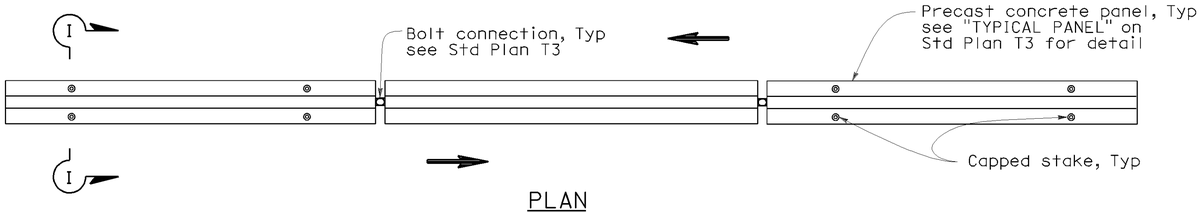

PLAN

RAILING STAKING CONFIGURATION FOR TWO-WAY TRAFFIC

See Note 1

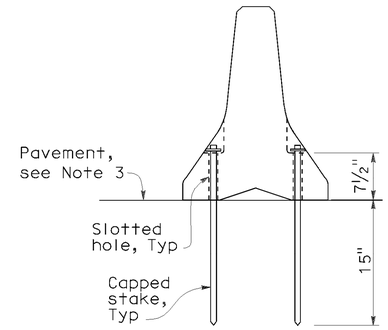

SECTION I-I

NOTES:

1. Where Type K Temporary Railing is placed as a temporary or long term barrier in two-way traffic on highways with less than 24" from the edge of traveled way, use four capped stakes per every other panel with end panels staked.
2. Where Type K Temporary Railing is placed 3" to 24" from the edge of an excavation on highways, use two capped stakes per panel along the traffic side.
3. Staked Type K Temporary Railing must be supported by at least 4" thick concrete, hot mix asphalt or existing asphalt concrete pavement.
4. The minimum yield strength for the washer must be 60,000 psi.
5. Direction of adjacent traffic indicated by ⟶.

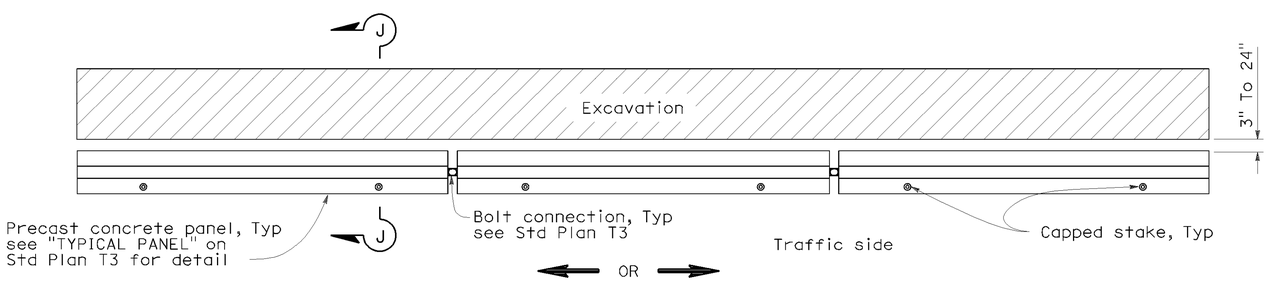

PLAN

RAILING STAKING CONFIGURATION ADJACENT TO AN EXCAVATION

See Note 2

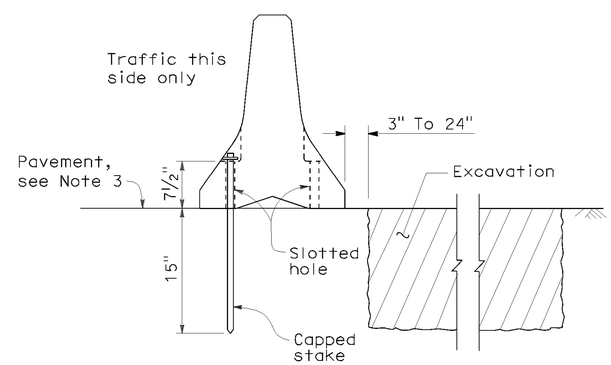

SECTION J-J

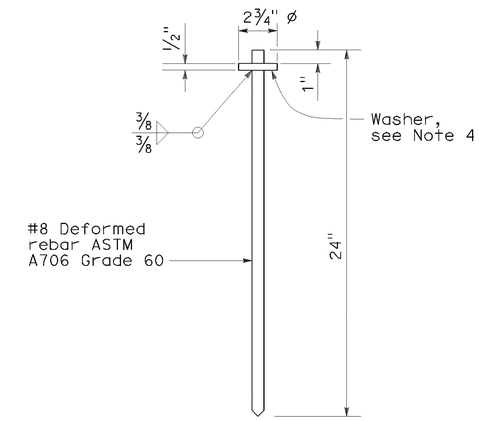

CAPPED STAKE DETAIL

STATE OF CALIFORNIA
DEPARTMENT OF TRANSPORTATION

TEMPORARY RAILING (TYPE K)

NO SCALE

NSP T3A DATED MAY 20, 2011 SUPPLEMENTS
THE STANDARD PLANS BOOK DATED MAY 2006.

NEW STANDARD PLAN NSP T3A

2006 NEW STANDARD PLAN NSP T3A

P:\proj1\02\3E880_plans\pse\23e880va006.dgn

8-31-10

DIST	COUNTY	ROUTE	POST MILES TOTAL PROJECT	SHEET NO.	TOTAL SHEETS
02	Las, Mod	139	0.0/2.0, 20.7/27.9	17	20

REGISTERED ELECTRICAL ENGINEER

October 5, 2007
PLANS APPROVAL DATE

REGISTERED PROFESSIONAL ENGINEER Jeffery G. McRae No. E14512 Exp. 6-30-08 ELECTRICAL STATE OF CALIFORNIA

The State of California or its officers or agents shall not be responsible for the accuracy or completeness of electronic copies of this plan sheet.

To accompany plans dated 10-17-11

ELECTROLIERS

STANDARD TYPES
15, 15D
15 STRUCTURE
21, 21D STRUCTURE
30
31
32
35
36-20A

High mast light pole

Double Arm lighting standard

Existing electrolier

Electrolier foundation (Future installation)

NOTES:

1. Luminaires shall be 310 W HPS when installed on Type 21, 21D, 30, 31, 32, 35 and 36-20A Standards, unless otherwise specified. Luminaires shall be 200 W HPS when installed on other type standards or poles, unless otherwise specified.
2. Luminaires shall be the cutoff type, ANSI Type Ⅲ medium cutoff lighting distribution, unless otherwise specified.
3. Variations noted adjacent to symbol on project plans.

Electrolier (see project notes or project plans)

Luminaire on wood pole

STANDARD NOTES:

- AB — Abandon. If applied to conduit, remove conductors.
- BC — Install pull box in existing conduit run.
- BP — Pedestrian barricade, type as indicated on plan.
- CB — Install conduit into existing pull box.
- CC — Connect new and existing conduit. Remove existing conductors and install conductors as indicated.
- CF — Conduit to remain for future use. Remove conductors. Install pull wire or rope.
- DH — Detector handhole.
- FA — Foundation to be abandoned.
- IS — Install sign on signal mast arm.
- NS — No slip base on standard.
- PEC — Photoelectric control.
- PEU — Photoelectric unit.
- RC — Equipment or material to be removed and become the property of the Contractor.
- RE — Remove electrolier, fuses and ballast. Tape ends of conductors.
- RL — Relocate equipment.
- RR — Remove and reuse equipment.
- RS — Remove and salvage equipment.
- SC — Splice new to existing conductors.
- SD — Service disconnect.
- SF — Standard to remain for future use. Remove luminaire, pole conductors, fuses and ballast.
- TSP — Telephone service point.

ABBREVIATIONS AND EQUIPMENT DESIGNATIONS

PROPOSED	EXISTING	
BBS	bbs	Battery backup system
BC	bc	Bolt circle
C	C	Conduit
CCTV	cctv	Closed circuit television
CKT	ckt	Circuit
CMS	cms	Changeable message sign
DLC	dlc	Loop detector lead-in cable
EMS	ems	Extinguishable message sign
EVC	evc	Emergency vehicle cable
EVD	evd	Emergency vehicle detector
FB	fb	Flashing beacon
FBCA	fbca	Flashing beacon control assembly
FBS	fbs	Flashing beacon with slip base
FO	fo	Fiber optic
G	G	Ground (Equipment Grounding Conductor)
GFCI	GFCI	Ground fault circuit interrupt
HAR	har	Highway advisory radio
HEX	hex	Hexagonal
HPS	hps	High pressure sodium
IISNS	iisns	Internally illuminated street name sign
ISL	isl	Induction sign lighting
LED	led	Light emitting diode
LMA	lma	Luminaire mast arm
LPS	lps	Low pressure sodium
LTG	ltg	Lighting
LUM	lum	Luminaire
MAT	mat	Mast arm mounting vehicle signal faces, top attachment
MAS	mas	Mast arm mounting vehicle signal faces, side attachment
MAS-4A	mas-4A	Mast arm mounting vehicle signal faces, side attachment - 4 signal section
MAS-4B	mas-4B	
MAS-4C	mas-4C	
MAS-5A	mas-5A	Mast arm mounting vehicle signal faces, side attachment - 5 signal section
MAS-5B	mas-5B	
MC	mc	Mercury contactor
M/M	m/m	Multiple to multiple transformer
MT	mt	Conduit with pull wire or rope only
MTG	mtg	Mounting
	mv	Mercury vapor lighting fixture
N	N	Neutral (Grounded Conductor)
NC	NC	Normally closed
NO	NO	Normally open
PB	pb	Pull box
PEC	pec	Photoelectric control (Type Ⅰ, Ⅱ, Ⅲ, Ⅳ or Ⅴ as shown)
PED	ped	Pedestrian
PEU	peu	Photoelectric unit
PPB	ppb	Pedestrian push button
RL		Relocated equipment
RM	rm	Ramp metering
SB	sb	Slip base
SIC	sic	Signal interconnect cable
SIG	sig	Signal
SMA	sma	Signal mast arm
SNS	sns	Street name sign
SP	sp	Service point
TDC	tdc	Telephone demarcation cabinet
TMS	tms	Traffic monitoring station
TOS	tos	Traffic Operations System
VEH	veh	Vehicle
XFMR	xfmr	Transformer
COMM	comm	Communication
RWIS	rwis	Roadway weather information system

SOFFIT AND WALL MOUNTED LUMINAIRES

Pendant, 70 W HPS unless otherwise specified.

Flush, 70 W HPS unless otherwise specified.

Wall surface, 70 W HPS unless otherwise specified.

Existing soffit or wall luminaire to remain unmodified.

Existing soffit or wall luminaire to be modified as specified.

NOTE:

Arrow indicates "street side" of luminaire.

STATE OF CALIFORNIA
DEPARTMENT OF TRANSPORTATION

ELECTRICAL SYSTEMS (SYMBOLS AND ABBREVIATIONS)

NO SCALE

RSP ES-1A DATED OCTOBER 5, 2007 SUPERSEDES STANDARD PLAN ES-1A DATED MAY 1, 2006 - PAGE 400 OF THE STANDARD PLANS BOOK DATED MAY 2006.

REVISED STANDARD PLAN RSP ES-1A

2006 REVISED STANDARD PLAN RSP ES-1A

P:\proj1\02\3E880_plans\pse\23e880va007.dgn

7-10-07

DIST	COUNTY	ROUTE	POST MILES TOTAL PROJECT	SHEET NO.	TOTAL SHEETS
02	Las, Mod	139	0.0/2.0, 20.7/27.9	18	20

REGISTERED ELECTRICAL ENGINEER

October 5, 2007
PLANS APPROVAL DATE

REGISTERED PROFESSIONAL ENGINEER Jeffery G. McRae No. E14512 Exp. 6-30-08 ELECTRICAL STATE OF CALIFORNIA

The State of California or its officers or agents shall not be responsible for the accuracy or completeness of electronic copies of this plan sheet.

To accompany plans dated 10-17-11

CONDUIT

PROPOSED	EXISTING	
		Lighting Conduit, unless otherwise indicated or noted
		Traffic signal conduit
C	c	Communication conduit
T	t	Telephone conduit
F	f	Fire alarm conduit
FO	fo	Fiber optic conduit
		Conduit termination (RSP ES-9A C)
R	r	Conduit riser in/on structure or service pole

SERVICE EQUIPMENT

PROPOSED	EXISTING	
OH	oh	Overhead lines
U	U	Wood pole "U" indicates utility owned
		Pole guy with anchor
		Utility transformer - ground mounted
III		Service equipment enclosure type
		Service equipment enclosure door indicates front of enclosure
T	t	Telephone demarcation cabinet

POLE-MOUNTED SERVICE DESIGNATION

Type of installation

TYPE H SERVICE - 28'-10" ← Pole height above grade

ILLUMINATED OVERHEAD SIGN

PROPOSED	EXISTING	
		Overhead sign - Single post
		Overhead sign - Two post
		Overhead sign - Mounted on structure
		Overhead sign with electrolier

SIGNAL EQUIPMENT

PROPOSED	EXISTING	
		Pedestrian signal face
		Pedestrian push button post
		Pedestrian barricade
		Vehicle signal face (with backplate, 3-Section: red, yellow and green)
		Vehicle signal face with angle visors
PV	PV	Modifications of basic symbols: "L" indicates all non-arrow sections louvered "LG" indicates louvered green section only "PV" indicates 12" programmed visibility sections "8" indicates all 8" sections (only when specified)
		Type 15TS and Vehicle signal face
		Vehicle signal face with red, yellow and green left arrow sections
		Vehicle signal face with red and yellow sections and up green arrow
		Vehicle signal face (5 Section) with red, yellow and green sections and yellow and green right arrows
		Type 1 Standard and attached vehicle signal faces
		Standard with signal mast arm only and attached vehicle signal faces and internally illuminated street name sign
		Type 33 Standard, Left-turn vehicle signal face and sign
		Standard with luminaire and signal mast arms and attached vehicle signal faces
		Cantilever flashing beacon Type 9 Frame, with a sign unless otherwise specified or indicated
		Type 15-FBS Standard with two vehicle signal face sections with lens, backplate and visor with a sign
R	Y	Flashing beacon. One vehicle signal face section with lens, backplate and visor. "R" indicates red indication, "Y" indicates yellow indication
		Controller assembly. Door indicates front of cabinet

SIGNAL EQUIPMENT Cont

PROPOSED	EXISTING	
		Guard post
		Type 1 Standard with "Meter On" sign
		Emergency Vehicle detector

NOTES:

1. All signal sections shall be 12" unless shown otherwise.
2. Signal heads shall be provided with backplates unless shown otherwise.
3. Signal indication shall be LED.

STATE OF CALIFORNIA
DEPARTMENT OF TRANSPORTATION

ELECTRICAL SYSTEMS (SYMBOLS AND ABBREVIATIONS)

NO SCALE

RSP ES-1B DATED OCTOBER 5, 2007 SUPERCEDES STANDARD PLAN ES-1B DATED MAY 1, 2006 - PAGE 401 OF THE STANDARD PLANS BOOK DATED MAY 2006.

REVISED STANDARD PLAN RSP ES-1B

2006 REVISED STANDARD PLAN RSP ES-1B

P:\proj1\02\3E880_plans\pse\23e880vd008.dgn

7-10-07

DIST	COUNTY	ROUTE	POST MILES TOTAL PROJECT	SHEET NO.	TOTAL SHEETS
02	Las, Mod	139	0.0/2.0, 20.7/27.9	19	20

REGISTERED ELECTRICAL ENGINEER

October 5, 2007
PLANS APPROVAL DATE

REGISTERED PROFESSIONAL ENGINEER Jeffery G. McRae No. E14512 Exp. 6-30-08 ELECTRICAL STATE OF CALIFORNIA

The State of California or its officers or agents shall not be responsible for the accuracy or completeness of electronic copies of this plan sheet.

To accompany plans dated 10-17-11

EQUIPMENT IDENTIFICATION

ILLUMINATED SIGN IDENTIFICATION NUMBER:

Sign No. 12345

10 ISL SCI 1.0

- Sign number - Place on post or structure
- Transformer rating (kVA)
- Lighting control type
- Number and type of fixtures

Do NOT place on standard or structure

ELECTROLIER OR EQUIPMENT IDENTIFICATION NUMBER:

12345 - 15'-0"

- Mast arm length, if shown. Do not place on standard or structure.
- Equipment number - Place on standard or structure. Existing equipment numbers are shown in parenthesis

CONDUIT AND CONDUCTOR IDENTIFICATION:

1½"C, 2#10, 15#14, 2 DLC

- Number and size of conductors and cables
- Size of conduit in inches

ø1, ø2, ø2P, etc.	Traffic phase identification for signal faces, detectors and phase diagrams
1 2 3	Project note numbers
A B C	Equipment description, installation or item numbers
1 2 3	Conduit run numbers

SIGNAL AND LIGHTING STANDARD (TYPICAL DESIGNATION):

19A - 3 - 100

- Wind velocity = 100 mph
- Case 3 arm loading
- Standard type
- Standard Plan sheet number
- Detail number or letter

MISCELLANEOUS EQUIPMENT

PROPOSED	EXISTING	
CMS	cms	Changeable message sign
		Closed circuit television camera
		Highway advisory radio pole and antenna
EMS	ems	Extinguishable message sign
M V	m v	Detection device M = Microwave sensor V = Video image sensor

WIRING DIAGRAM LEGEND

P	Pole
CB	Circuit breaker
A	Ampere
V	Volt
M	Metered
UM	Unmetered
NB	Neutral bus
GB	Ground bus
G	Equipment grounding conductor
N	Grounded conductor (Neutral)

- External conductor
- Conductor or bus
- Tie point
- Contactor coil
- Contactor, Contact NO
- Terminal blocks
- Contactor, Contact NC
- Enclosure bond
- Grounding electrode
- Circuit breaker
- Receptacle

PULL BOXES

PROPOSED	EXISTING	
		Pull box-No. 5 unless otherwise indicated or noted.
3	9A(21)	Pull box-Additional designations or descriptions

3 = No. 3½ pull box
5 = No. 5 pull box
6 = No. 6 pull box
7 = No. 7 (Ceiling pull box)
8 = No. 8 (Pendant soffit pull box)
9 = No. 9 pull box
9A = No. 9A pull box

(C) = Communications pull box
(E) = Pull box with extension
(S) = Sprinkler control pull box
(21) = Anchor bolts and conduit for future installation of Type 21 Standard
(T) = Traffic pull box

VEHICLE DETECTORS

5 J 9 U

- Vehicle detector designation
- U = Upper
  L = Lower
- Slot number in input file
- Input file (I or J)
- Phase

PROPOSED	EXISTING	
		Type A detector loop. Outline of sawcut shown.
		Type B detector loop. Outline of sawcut shown.
		Type C detector loop. Outline of sawcut shown.
		Type D detector loop. Outline of sawcut shown.
		Type E detector loop. Outline of sawcut shown.
		Type Q detector loop. Outline of sawcut shown.
		Magnetic detector
DH	dh	Detector handhole
		Microwave or video detection zone

STATE OF CALIFORNIA
DEPARTMENT OF TRANSPORTATION

ELECTRICAL SYSTEMS (SYMBOLS AND ABBREVIATIONS)

NO SCALE

RSP ES-1C DATED OCTOBER 5, 2007 SUPERCEDES STANDARD PLAN ES-1C DATED MAY 1, 2006 - PAGE 402 OF THE STANDARD PLANS BOOK DATED MAY 2006.

REVISED STANDARD PLAN RSP ES-1C

2006 REVISED STANDARD PLAN RSP ES-1C

P:\proj1\02\3E880_plans\pse\23e880va009.dgn

7-10-07

DIST	COUNTY	ROUTE	POST MILES TOTAL PROJECT	SHEET NO.	TOTAL SHEETS
02	Las, Mod	139	0.0/2.0, 20.7/27.9	20	20

REGISTERED ELECTRICAL ENGINEER

October 5, 2007
PLANS APPROVAL DATE

REGISTERED PROFESSIONAL ENGINEER Jeffery G. McRae No. E14512 Exp. 6-30-08 ELECTRICAL STATE OF CALIFORNIA

The State of California or its officers or agents shall not be responsible for the accuracy or completeness of electronic copies of this plan sheet.

To accompany plans dated 10-17-11

2006 REVISED STANDARD PLAN RSP ES-5A

LOOP INSTALLATION PROCEDURE

1. Loops shall be centered in lanes.
2. Saw slots in pavement for loop conductors as shown in details.
3. Distance between side of loop and a lead-in saw cut from adjacent detectors shall be 2'-0" minimum. Distance between lead-in saw cuts shall be 6" minimum.
4. Bottom of saw slot shall be smooth with no sharp edges.
5. Slots shall be washed until clean, blown out and thoroughly dried before installing loop conductors.
6. Adjacent loops on the same sensor unit channel shall be wound in opposite directions.
7. Identify and tag loop circuit pairs in the pull box with loop number, start (S) and finish (F) of conductor. Identify and tag lead-in-cable with sensor number and phase.
8. Install loop conductor in slot using a 3/16" to 1/4" thick wood paddle. Hold loop conductors with wood paddles (at the bottom of the sawed slot) during sealant placement.
9. No more than 2 twisted pairs shall be installed in one sawed slot.
10. Allow additional 5'-0" of slack length of conductor for the lead-in run to pull box.
11. The additional length of each conductor for each loop shall be twisted together into a pair (6 turns per 3'-4" minimum) before being placed in the slot and conduit leading to pull box.
12. Test each loop circuit for continuity, circuit resistance and insulation resistance at the pull box before filling slots.
13. Fill slots as shown in details.
14. Splice loop conductors to lead-in-cable. Splices shall be soldered.
15. End of lead-in-cable and Type 2 loop conductor shall be waterproofed prior to installing in conduit to prevent moisture from entering the cable.
16. Lead-in-cable shall not be spliced between the pull box and the controller cabinet terminals.
17. Test each loop circuit for continuity, circuit resistance and insulation resistance at the controller cabinet location.
18. Where loop conductors are not to be spliced to a lead-in-cable, the ends of the conductors shall be taped and waterproofed with electrical insulating coating.

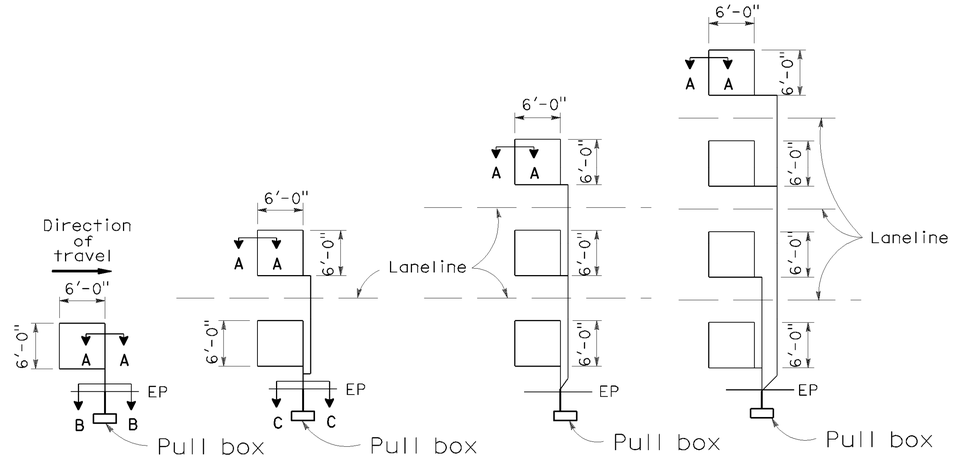

TYPE 1A INSTALLATION | TYPE 2A INSTALLATION | TYPE 3A INSTALLATION | TYPE 4A INSTALLATION

SAWCUT DETAILS

(Type A loop detector configurations illustrated)

1. 1A thru 4A = 1 Type A loop configuration in each lane.
2. 1B thru 4B = 1 Type B loop configuration in each lane.
3. 1C = 1 Type C loop configuration entering lanes as required.
4. 1D thru 4D = 1 Type D loop configuration in each lane.
5. 1E thru 4E = 1 Type E loop configuration in each lane.
6. 1Q thru 4Q = 1 Type Q loop configuration in each lane.
   (Use Type A, B, C, D, E or Q loop detector configurations only when specified or shown on plans)

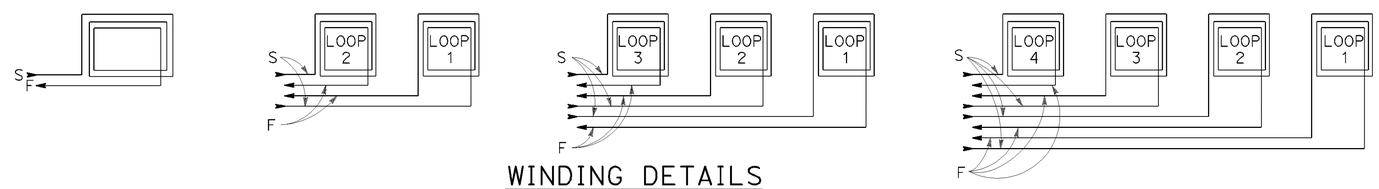

WINDING DETAILS

See Notes 6 and 7

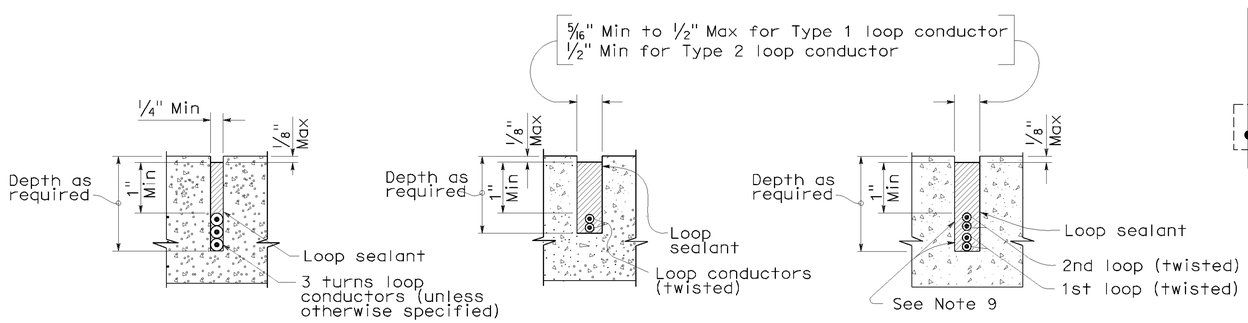

SECTION A-A | SECTION B-B | SECTION C-C

SLOT DETAILS - TYPE 1 AND TYPE 2 LOOP CONDUCTOR

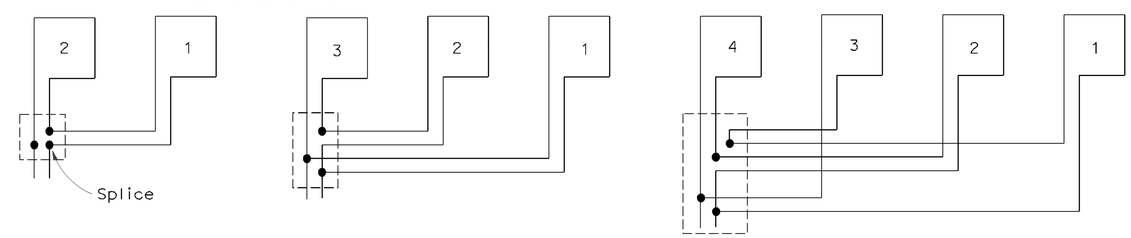

TYPICAL LOOP CONNECTIONS

(Dashed lines represent the pull box)

STATE OF CALIFORNIA
DEPARTMENT OF TRANSPORTATION

ELECTRICAL SYSTEMS (DETECTORS)

NO SCALE

RSP ES-5A DATED OCTOBER 5, 2007 SUPERCEDES STANDARD PLAN ES-5A DATED MAY 1, 2006 - PAGE 423 OF THE STANDARD PLANS BOOK DATED MAY 2006.

REVISED STANDARD PLAN RSP ES-5A

P:\proj1\02\3E880_plans\pse\23e880va010.dgn

8-17-07