Dist	COUNTY	ROUTE	POST MILES TOTAL PROJECT	SHEET No.	TOTAL SHEETS
02	Sis	97	40.1/54.1	3	114

Mark J. Miller 07-06-10
REGISTERED CIVIL ENGINEER DATE

7-12-10
PLANS APPROVAL DATE

REGISTERED PROFESSIONAL ENGINEER MARK MILLER No. C48454 Exp. 6-30-12 CIVIL STATE OF CALIFORNIA

THE STATE OF CALIFORNIA OR ITS OFFICERS OR AGENTS SHALL NOT BE RESPONSIBLE FOR THE ACCURACY OR COMPLETENESS OF SCANNED COPIES OF THIS PLAN SHEET.

3

NOTE:

1. WIDEN SHOULDER 3' ON LEFT SIDE OF ROADWAY ONLY. DO NOT WIDEN RIGHT SHOULDER.

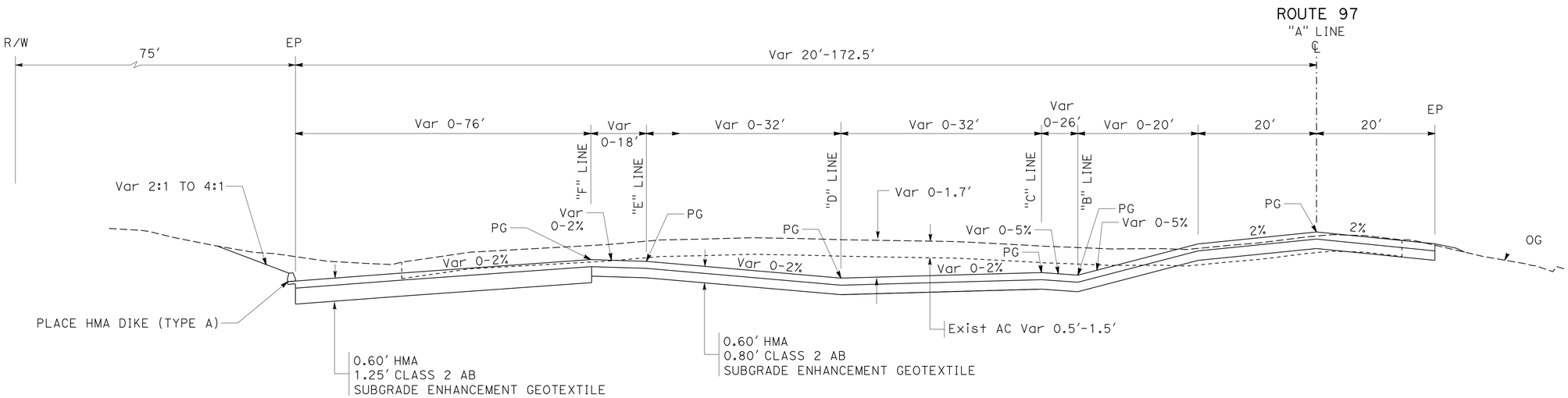

TYPICAL CROSS SECTION

"A" 40+28.29 TO "A" 43+60 (Sis-97 PM 49.77-49.83)

Sis 97 (Approx PM)	"A" LINE
49.7	37+50
49.8	42+50
49.9	48+00
50.0	53+00
50.1	58+50
50.2	64+00
50.3	69+00
50.4	74+50
50.5	79+50
50.6	85+00
50.7	90+00
50.8	95+50
50.9	101+00
51.0	106+00
51.1	111+50
51.2	116+50
51.3	122+00

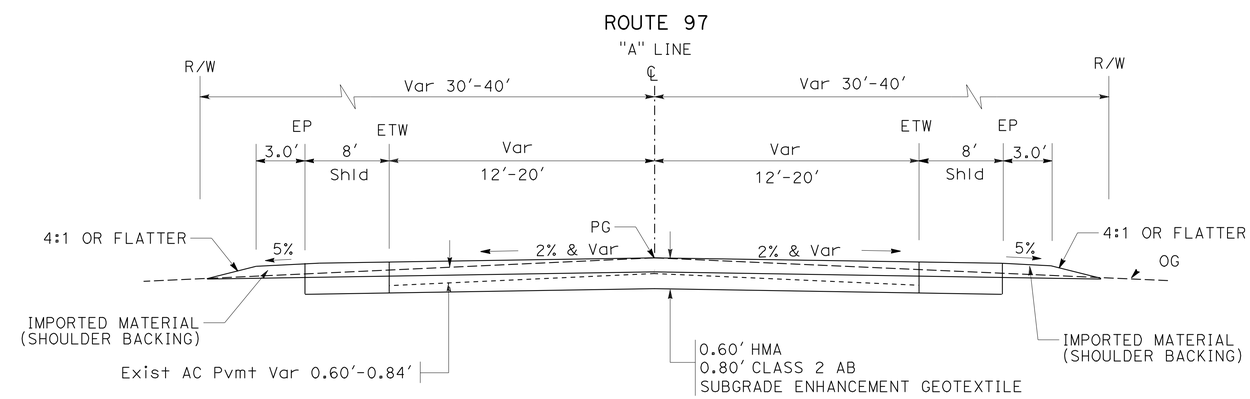

TYPICAL CROSS SECTION

"A" 32+14.46/40+28.29 (Sis-97 PM 49.6/49.77)
"A" 47+48/78+50 (Sis-97 PM 49.90/50.48)

3 **REVISED PER ADDENDUM No. 3 DATED DECEMBER 3, 2010**

TYPICAL CROSS SECTIONS

NO SCALE

X-2

REVISED BY | DATE REVISED
SAL PRIETO | MARK MILLER
CALCULATED-DESIGNED BY | CHECKED BY
FUNCTIONAL SUPERVISOR | MARK MILLER
STATE OF CALIFORNIA - DEPARTMENT OF TRANSPORTATION
Caltrans® ADVANCE PLANNING
24c010ca002.add

LAST REVISION 07-06-10 | DATE PLOTTED => 30-NOV-2010 | TIME PLOTTED => 16:24

Dist	COUNTY	ROUTE	POST MILES TOTAL PROJECT	SHEET No.	TOTAL SHEETS
02	Sis	97	40.1/54.1	4	114

Mark J. Miller 07-06-10
REGISTERED CIVIL ENGINEER DATE

7-12-10
PLANS APPROVAL DATE

REGISTERED PROFESSIONAL ENGINEER MARK MILLER No. C48454 Exp. 6-30-12 CIVIL STATE OF CALIFORNIA

THE STATE OF CALIFORNIA OR ITS OFFICERS OR AGENTS SHALL NOT BE RESPONSIBLE FOR THE ACCURACY OR COMPLETENESS OF SCANNED COPIES OF THIS PLAN SHEET.

3

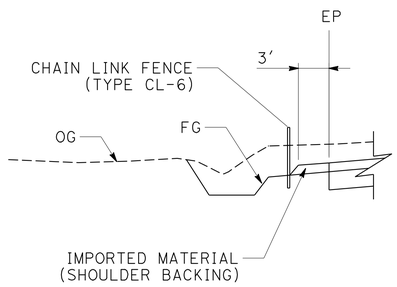

"I" 46+20 TO 47+31

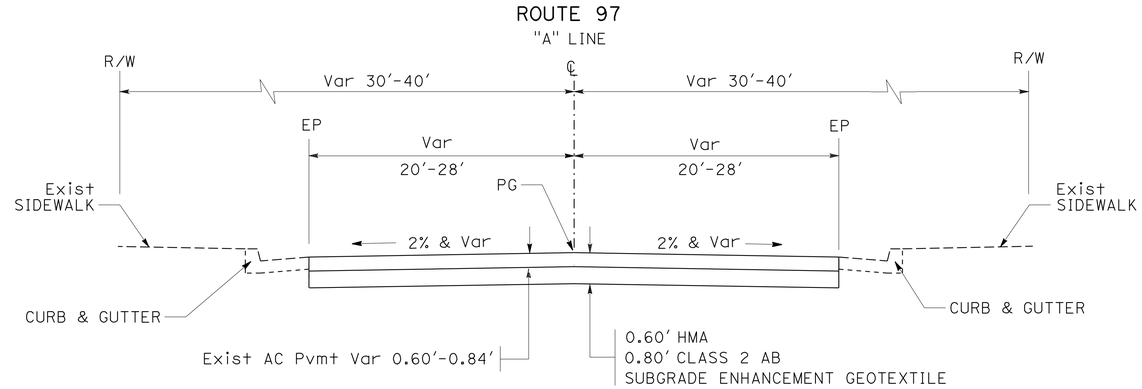

TYPICAL CITY STREET CROSS SECTIONS

"A" 78+50/103+90.48 (Sis-97 PM 50.48/50.96)

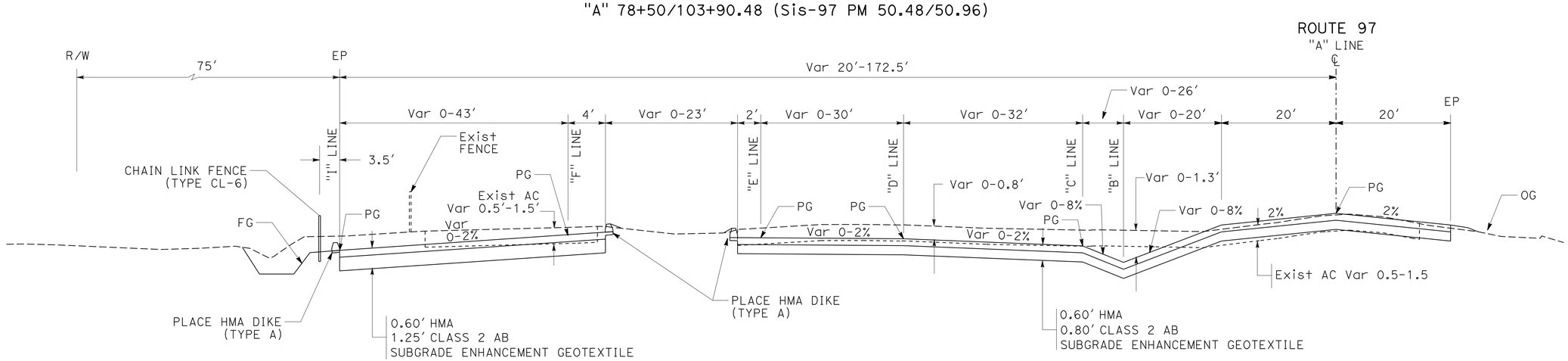

TYPICAL CROSS SECTION

"A" 43+60 TO "A" 47+48 (Sis-97 PM 49.83-49.90)

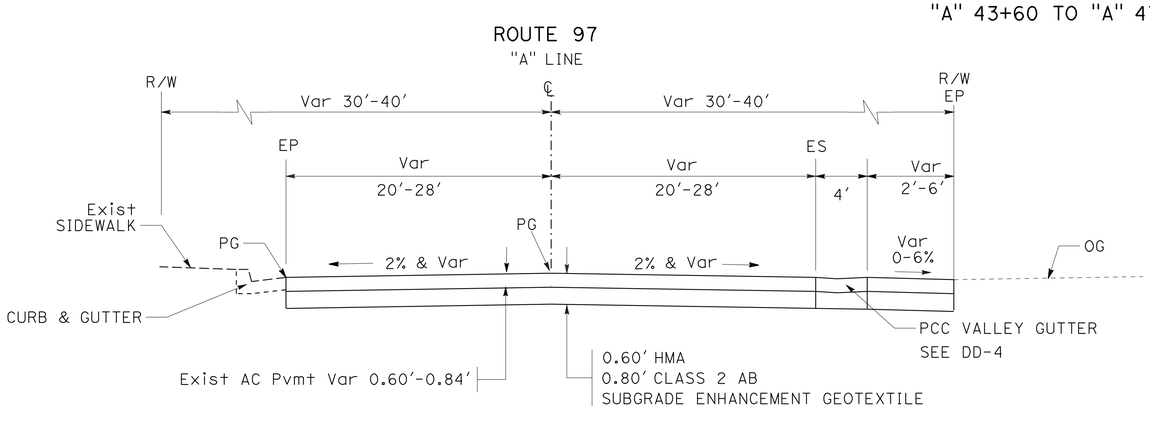

TYPICAL CROSS SECTIONS

"A" 103+90.48/107+35 (Sis-97 PM 50.96/51.03)

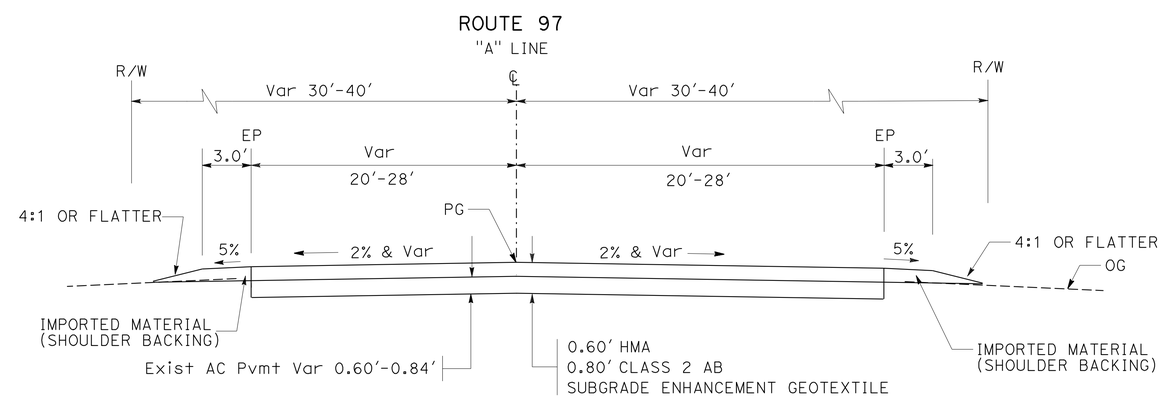

TYPICAL CROSS SECTIONS

"A" 107+35/111+34.4 (Sis-97 PM 51.03/51.1)

3 **REVISED PER ADDENDUM No. 3 DATED DECEMBER 3, 2010**

TYPICAL CROSS SECTIONS

NO SCALE

X-3

REVISED BY | DATE REVISED
SAL PRIETO | MARK MILLER
CALCULATED-DESIGNED BY | CHECKED BY
FUNCTIONAL SUPERVISOR: MARK MILLER

STATE OF CALIFORNIA - DEPARTMENT OF TRANSPORTATION
Caltrans® ADVANCE PLANNING

24c010ca003.add

LAST REVISION 07-06-10 | DATE PLOTTED => 30-NOV-2010 | TIME PLOTTED => 16:24

Dist	COUNTY	ROUTE	POST MILES TOTAL PROJECT	SHEET No.	TOTAL SHEETS
02	Sis	97	40.1/54.1	9	114

Mark J. Miller 07-06-10
REGISTERED CIVIL ENGINEER DATE

7-12-10
PLANS APPROVAL DATE

REGISTERED PROFESSIONAL ENGINEER MARK MILLER No. C48454 Exp. 6-30-12 CIVIL STATE OF CALIFORNIA

THE STATE OF CALIFORNIA OR ITS OFFICERS OR AGENTS SHALL NOT BE RESPONSIBLE FOR THE ACCURACY OR COMPLETENESS OF SCANNED COPIES OF THIS PLAN SHEET.

NOTE:

1. FOR ACCURATE RIGHT OF WAY DATA, CONTACT RIGHT OF WAY ENGINEERING AT THE DISTRICT OFFICE.

CITY OF DORRIS

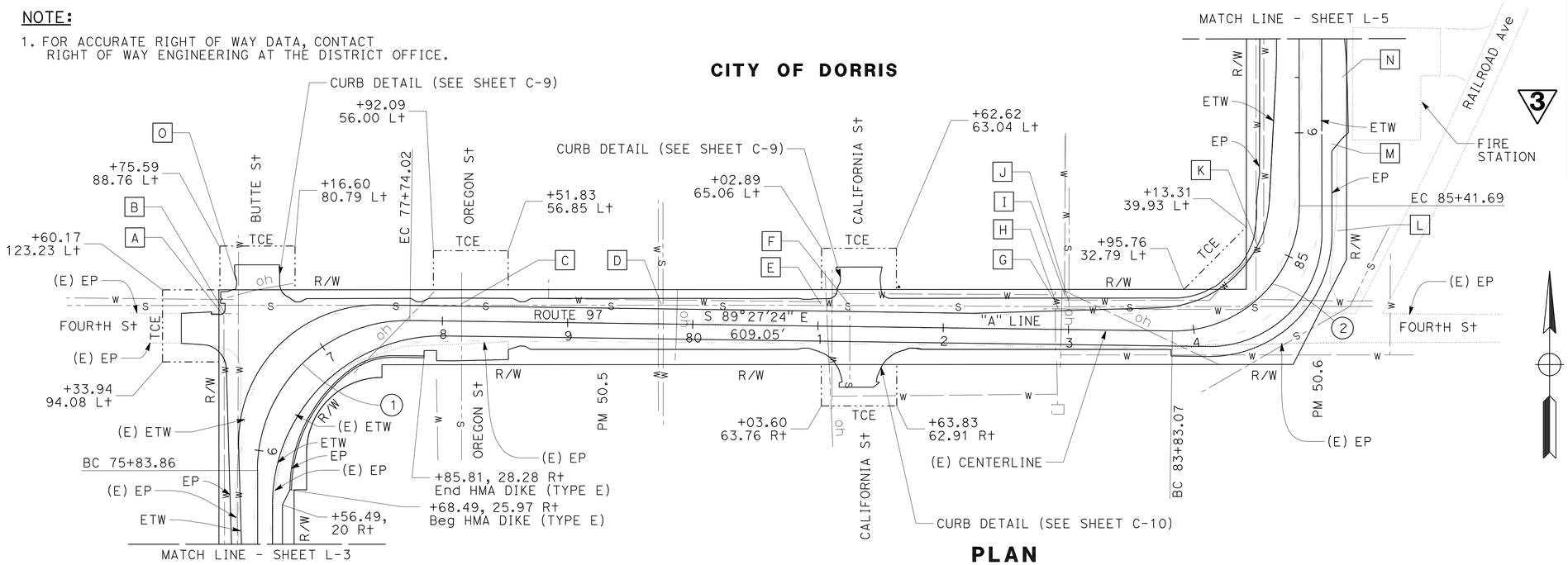

PLAN

SCALE: 1" = 50'

ADJUST UTILITY COVER TO GRADE

A	"A" 76+67, 71 Lt
B	"A" 76+69, 71 Lt
C	"A" 78+15, 11 Lt
D	"A" 79+75, 13 Lt
E	"A" 81+18, 22 Lt
F	"A" 81+25, 15 Lt
G	"A" 82+89, 22 Lt
H	"A" 82+92, 15 Lt
I	"A" 82+98, 24 Lt
J	"A" 83+00, 18 Lt
K	"A" 84+97, 25 Lt
L	"A" 85+27, 30 Rt
M	"A" 85+92, 26 Rt
N	"A" 86+44, 34 Rt
O	"A" 76+82, 81 Rt

CURVE DATA

No.	R	Δ	T	L
1	120'	90°47'33"	121.67'	190.16'
2	100'	90°53'01"	101.55'	158.62'

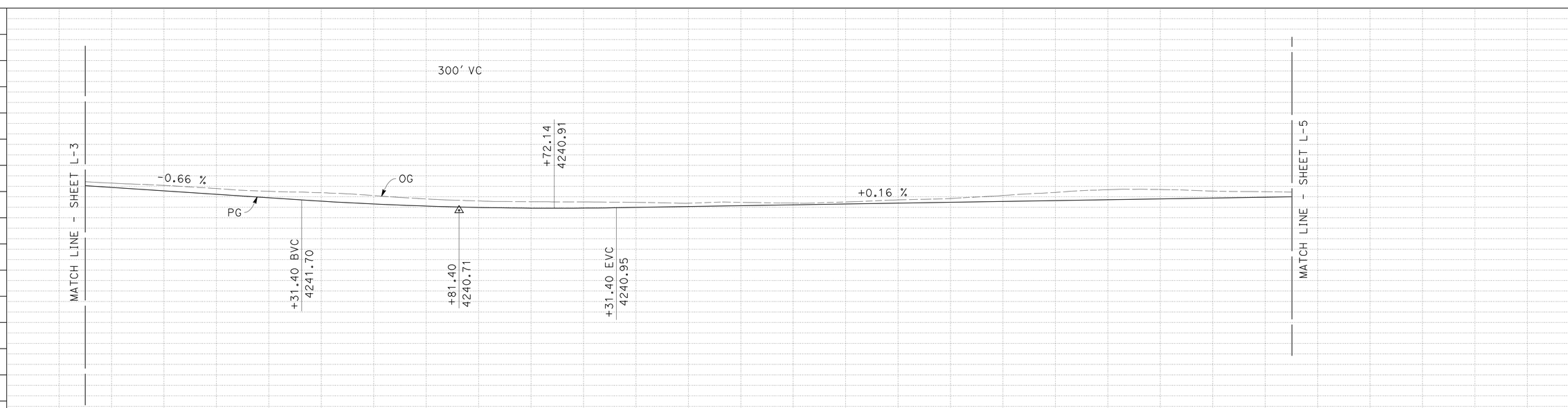

"A" LINE PROFILE

SCALE: 1" = 50' Horiz
1" = 5' VeRt

3 REVISED PER ADDENDUM No. 3
DATED DECEMBER 3, 2010

LAYOUT

SCALE AS SHOWN

L-4

STATION	76	77	78	79	80	81	82	83	84	85	86	TOTAL
CY Exc												
CY Emb												

REVISED BY | DATE REVISED
SAL PRIETO | MARK MILLER
CALCULATED-DESIGNED BY | CHECKED BY
FUNCTIONAL SUPERVISOR | MARK MILLER

STATE OF CALIFORNIA - DEPARTMENT OF TRANSPORTATION
Caltrans ADVANCE PLANNING

24c010ea004.add

LAST REVISION 07-06-10
DATE PLOTTED => 30-NOV-2010
TIME PLOTTED => 16:24

Dist	COUNTY	ROUTE	POST MILES TOTAL PROJECT	SHEET No.	TOTAL SHEETS
02	Sis	97	40.1/54.1	11	114

Mark J. Miller 07-06-10
REGISTERED CIVIL ENGINEER DATE

7-12-10
PLANS APPROVAL DATE

REGISTERED PROFESSIONAL ENGINEER MARK MILLER No. C48454 Exp. 6-30-12 CIVIL STATE OF CALIFORNIA

THE STATE OF CALIFORNIA OR ITS OFFICERS OR AGENTS SHALL NOT BE RESPONSIBLE FOR THE ACCURACY OR COMPLETENESS OF SCANNED COPIES OF THIS PLAN SHEET.

3

NOTE:

1. FOR ACCURATE RIGHT OF WAY DATA, CONTACT RIGHT OF WAY ENGINEERING AT THE DISTRICT OFFICE.

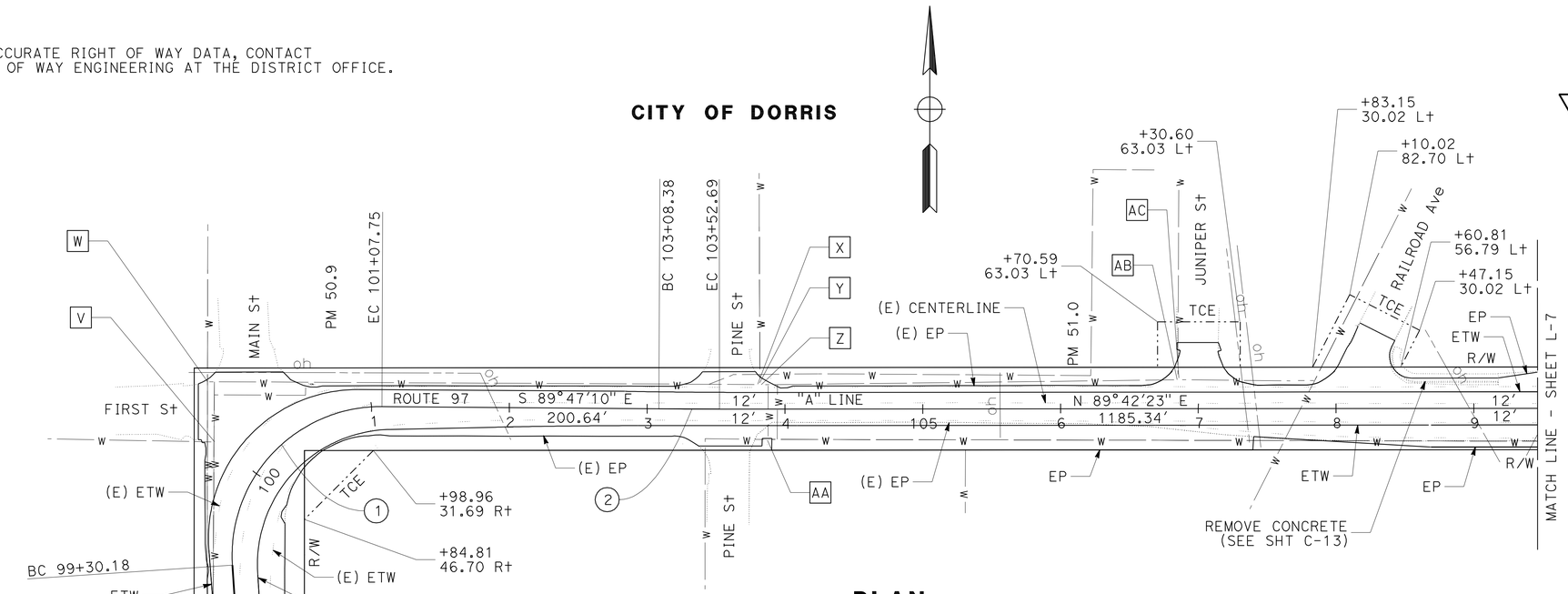

PLAN

SCALE: 1" = 50'

ADJUST UTILITY COVER TO GRADE

V	"A" 100+03, 35 Lt
W	"A" 110+24, 66 Lt
X	"A" 103+84, 17 Lt
Y	"A" 103+85, 18 Lt
Z	"A" 103+87, 17 Lt
AA	"A" 103+87, 23 Rt
AB	"A" 106+89, 20 Lt
AC	"A" 106+90, 21 Lt

CURVE DATA

No. ⊛	R	Δ	T	L
1	108'	94°12'03"	116.22'	177.56'
2	5000'	0°30'28"	22.15'	44.30'

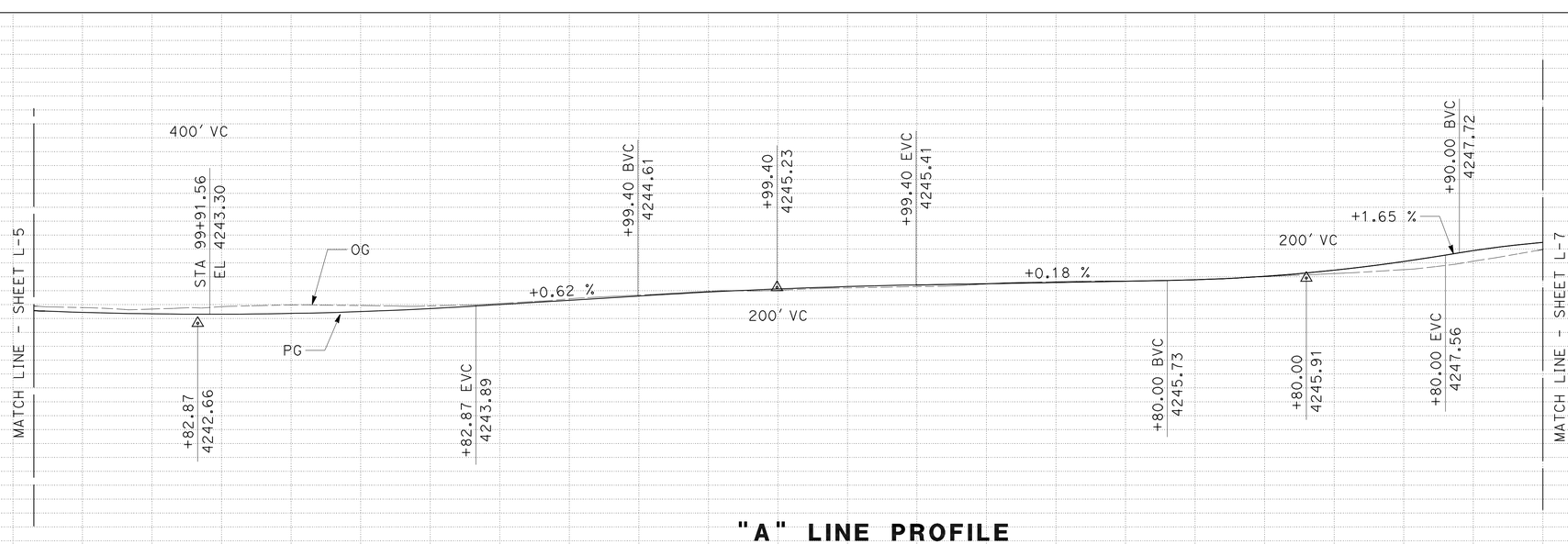

"A" LINE PROFILE

SCALE: 1" = 50' Horiz
1" = 5' Vert

3 **REVISED PER ADDENDUM No. 3 DATED DECEMBER 3, 2010**

LAYOUT

SCALE AS SHOWN **L-6**

STATION	99	100	101	102	103	104	105	106	107	108	109	TOTAL
CY Exc												
CY Emb												

STATE OF CALIFORNIA - DEPARTMENT OF TRANSPORTATION
Caltrans ADVANCE PLANNING

FUNCTIONAL SUPERVISOR: MARK MILLER
CALCULATED-DESIGNED BY: SAL PRIETO
CHECKED BY: MARK MILLER
REVISED BY
DATE REVISED

24c010ea006.add

LAST REVISION 07-06-10
DATE PLOTTED => 30-NOV-2010
TIME PLOTTED => 16:24

Dist	COUNTY	ROUTE	POST MILES TOTAL PROJECT	SHEET No.	TOTAL SHEETS
02	Sis	97	40.1/54.1	12	114

Mark J. Miller 07-06-10
REGISTERED CIVIL ENGINEER DATE

7-12-10
PLANS APPROVAL DATE

REGISTERED PROFESSIONAL ENGINEER MARK MILLER No. C48454 Exp. 6-30-12 CIVIL STATE OF CALIFORNIA

THE STATE OF CALIFORNIA OR ITS OFFICERS OR AGENTS SHALL NOT BE RESPONSIBLE FOR THE ACCURACY OR COMPLETENESS OF SCANNED COPIES OF THIS PLAN SHEET.

3

NOTE:

1. FOR ACCURATE RIGHT OF WAY DATA, CONTACT RIGHT OF WAY ENGINEERING AT THE DISTRICT OFFICE.

CURVE DATA

No. ⑪	R	Δ	T	L
1	608′	35°53′00"	196.87′	380.78′
2	635′	23°2′46"	129.46′	255.42′

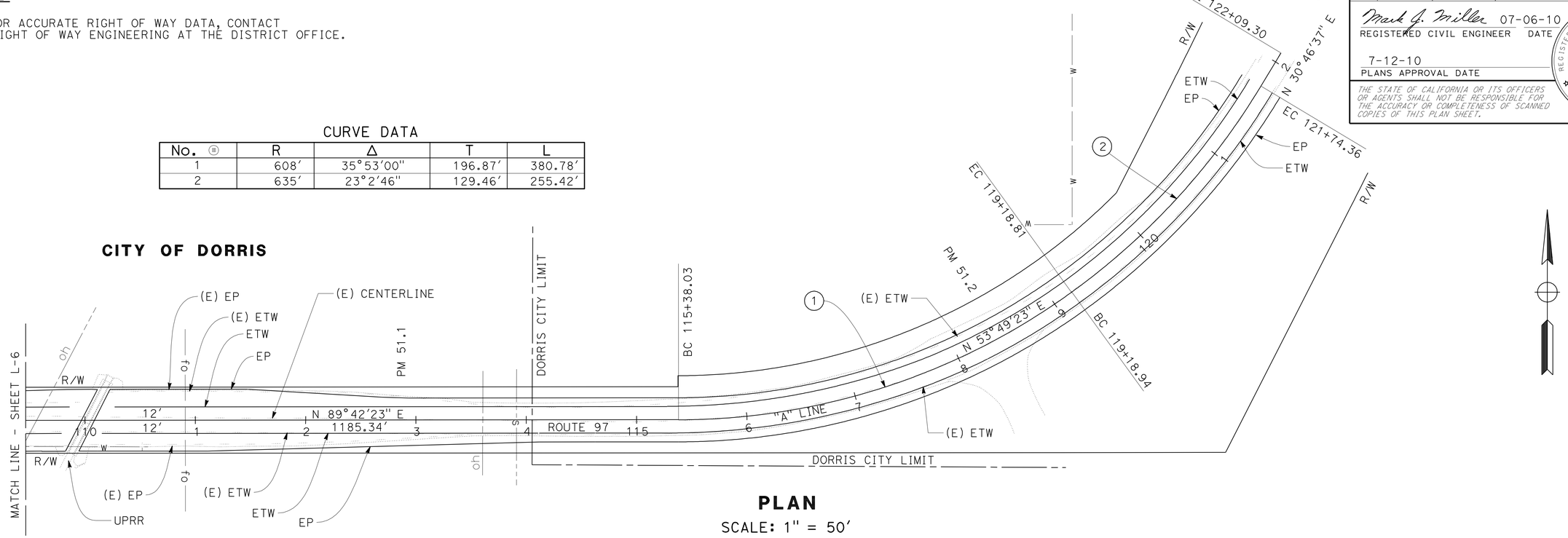

PLAN
SCALE: 1" = 50′

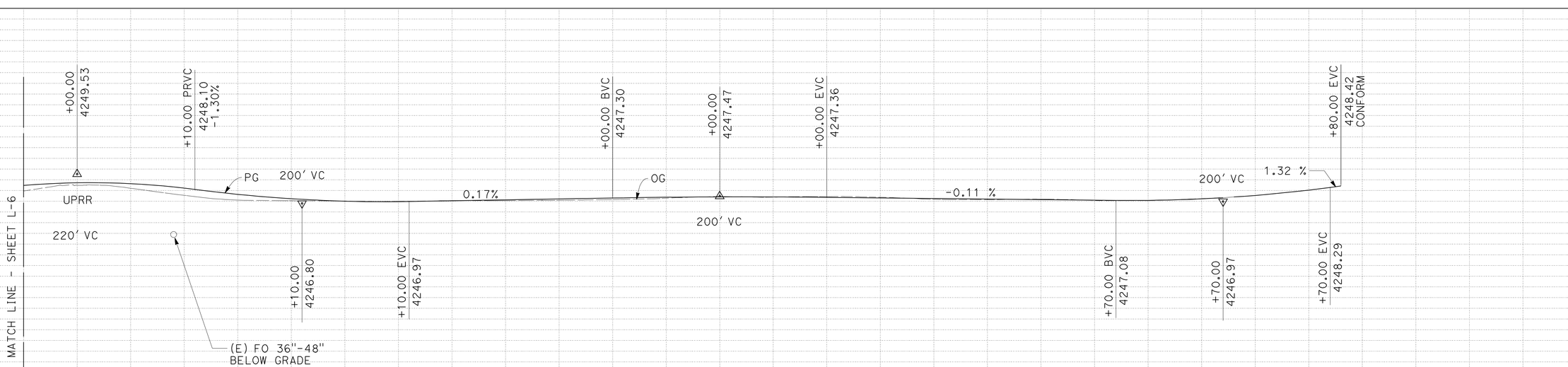

"A" LINE PROFILE
SCALE: 1" = 50′ Horiz
1" = 5′ Vert

3 REVISED PER ADDENDUM No. 3 DATED DECEMBER 3, 2010

LAYOUT
SCALE: AS SHOWN

L-7

STATION	110	111	112	113	114	115	116	117	118	119	120	121	122	TOTAL
CY Exc														
CY Emb														

REVISED BY | DATE REVISED
SAL PRIETO | MARK MILLER
CALCULATED-DESIGNED BY | CHECKED BY
FUNCTIONAL SUPERVISOR | MARK MILLER

STATE OF CALIFORNIA - DEPARTMENT OF TRANSPORTATION
Caltrans ADVANCE PLANNING

24c010ea007.add

LAST REVISION 07-06-10
DATE PLOTTED => 30-NOV-2010
TIME PLOTTED => 16:24

Dist	COUNTY	ROUTE	POST MILES TOTAL PROJECT	SHEET No.	TOTAL SHEETS
02	Sis	97	40.1/54.1	17	114

REGISTERED CIVIL ENGINEER 07-06-02 DATE

7-12-10
PLANS APPROVAL DATE

REGISTERED PROFESSIONAL ENGINEER GREG KINGSFIELD No. C76297 Exp 6-30-12 CIVIL STATE OF CALIFORNIA

THE STATE OF CALIFORNIA OR ITS OFFICERS OR AGENTS SHALL NOT BE RESPONSIBLE FOR THE ACCURACY OR COMPLETENESS OF SCANNED COPIES OF THIS PLAN SHEET.

3

NOTES:

1. FOR COMPLETE RIGHT OF WAY DATA, SEE RIGHT OF WAY RECORD MAPS AT DISTRICT OFFICE.
2. ALL ALIGNMENTS ARE GRADE BREAKS.
3. FOR DETAILS NOT SHOWN, SEE STAGE CONSTRUCTION SHEETS

CURVE DATA

No.	R	Δ	T	L
1	295.00′	9°43′49"	25.11′	50.10′
2	120.00′	57°08′45"	65.35′	119.69′
3	140.00′	65°23′21"	89.86′	159.78′
4	160.00′	35°26′19"	51.12′	98.96′
5	272.00′	19°28′36"	46.68′	92.46′
6	188.00′	30°43′08"	51.64′	100.80′
7	295.00′	37°20′06"	99.67′	192.22′
7a	165.00′	45°42′36"	69.55′	131.64′
8	320.00′	45°34′44"	134.44′	254.56′
9	140.00′	45°34′42"	58.82′	111.37′
10	174.00′	35°26′19"	55.59′	107.62′
11	120.00′	43°18′00"	47.63′	90.69′
12	170.00′	29°27′26"	44.69′	87.40′
13	400.00′	16°20′35"	57.44′	114.10′
14	340.00′	28°17′50"	85.71′	167.92′
15	105.00′	35°57′48"	34.08′	65.91′
16	180.00′	26°46′25"	42.84′	84.11′
17	600.00′	17°30′05"	92.36′	183.27′
18	360.00′	28°49′53"	92.54′	181.15′
19	90.00′	28°49′53"	23.13′	45.29′
20	190.00′	19°19′31"	32.35′	64.08′
21	800.00′	19°19′30"	136.21′	269.83′

LEGEND

- A N 26°52′34" E 122.25′
- B N 62°18′52" E 132.83′
- C N 26°52′34" E 38.64′
- D N 62°18′52" E 86.61′
- E N 26°52′34" E 47.07
- F N 26°52′34" E 46.03′
- G N 26°52′34" E 44.99′
- H N 29°59′29" E 36.80′
- I N 26°52′34" E 64.19′
- J N 26°52′33" E 60.00′
- K N 56°19′59" E 69.33′
- Q "F" 44+63.41, 4′ R+
- R "E" 44+54.79, 2′ L+
- S "E" 45+72.25, 9′ L+, R=7′
- C → MARKER (CULVERT)

ADJUST UTILITY COVER TO GRADE

- L "A" 44+13, 35.2 L+
- M "A" 44+15, 37.0 L+
- N "A" 44+15, 25.7 L+
- O "A" 43+09, 24.4 L+
- P "A" 43+22, 25.7 L+
- T "A" 43+37, 100.8 L+
- U "A" 44+19, 46.1 L+
- V "A" 45+27, 68.3 L+
- W "A" 44+80, 158.2 L+

ABBREVIATIONS

TCE TEMPORARY CONSTRUCTION EASEMENT

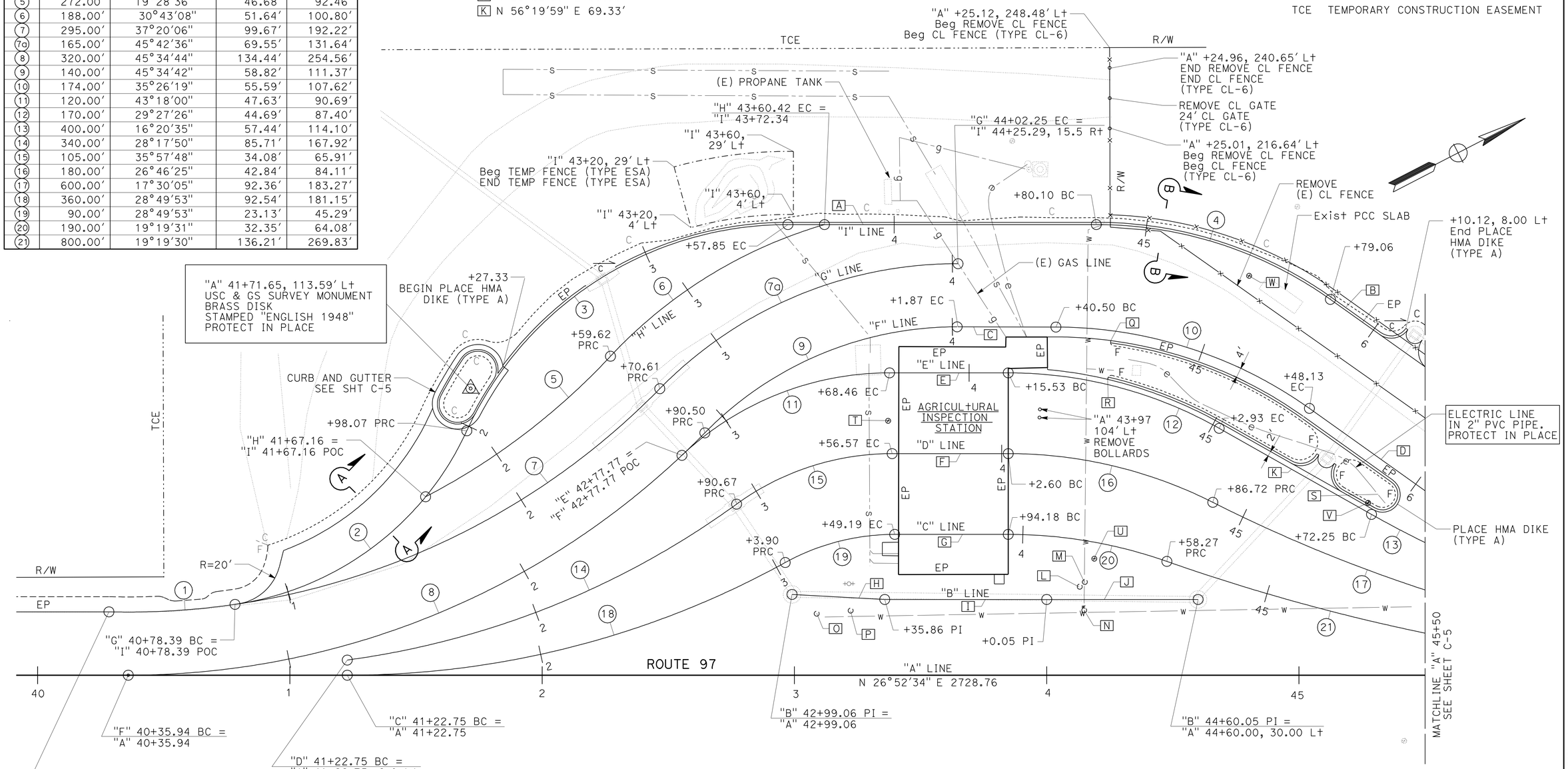

AGRICULTURAL INSPECTION STATION

"A" 40+28.29 TO "A" 47+59.38

3 **REVISED PER ADDENDUM No. 3 DATED DECEMBER 3, 2010**

CONSTRUCTION DETAILS

SCALE: 1" = 20′

C-4

STATE OF CALIFORNIA - DEPARTMENT OF TRANSPORTATION
Caltrans® HYDRAULICS DESIGN

FUNCTIONAL SUPERVISOR: STEVE THORNE
CALCULATED-DESIGNED BY: GREG KINGSFIELD
CHECKED BY: STEVE THORNE
REVISED BY
DATE REVISED

LAST REVISION 07-06-10 | DATE PLOTTED => 30-NOV-2010 | TIME PLOTTED => 16:25

24c010ga004.add

Dist	COUNTY	ROUTE	POST MILES TOTAL PROJECT	SHEET No.	TOTAL SHEETS
02	Sis	97	40.1/54.1	18	114

REGISTERED CIVIL ENGINEER 07-06-02 DATE

7-12-10
PLANS APPROVAL DATE

REGISTERED PROFESSIONAL ENGINEER GREG KINGSFIELD No. C76297 Exp 6-30-12 CIVIL STATE OF CALIFORNIA

THE STATE OF CALIFORNIA OR ITS OFFICERS OR AGENTS SHALL NOT BE RESPONSIBLE FOR THE ACCURACY OR COMPLETENESS OF SCANNED COPIES OF THIS PLAN SHEET.

3

NOTE:

1. FOR COMPLETE RIGHT OF WAY AND ACCURATE ACCESS DATA, SEE RIGHT OF WAY RECORD MAPS AT DISTRICT OFFICE.

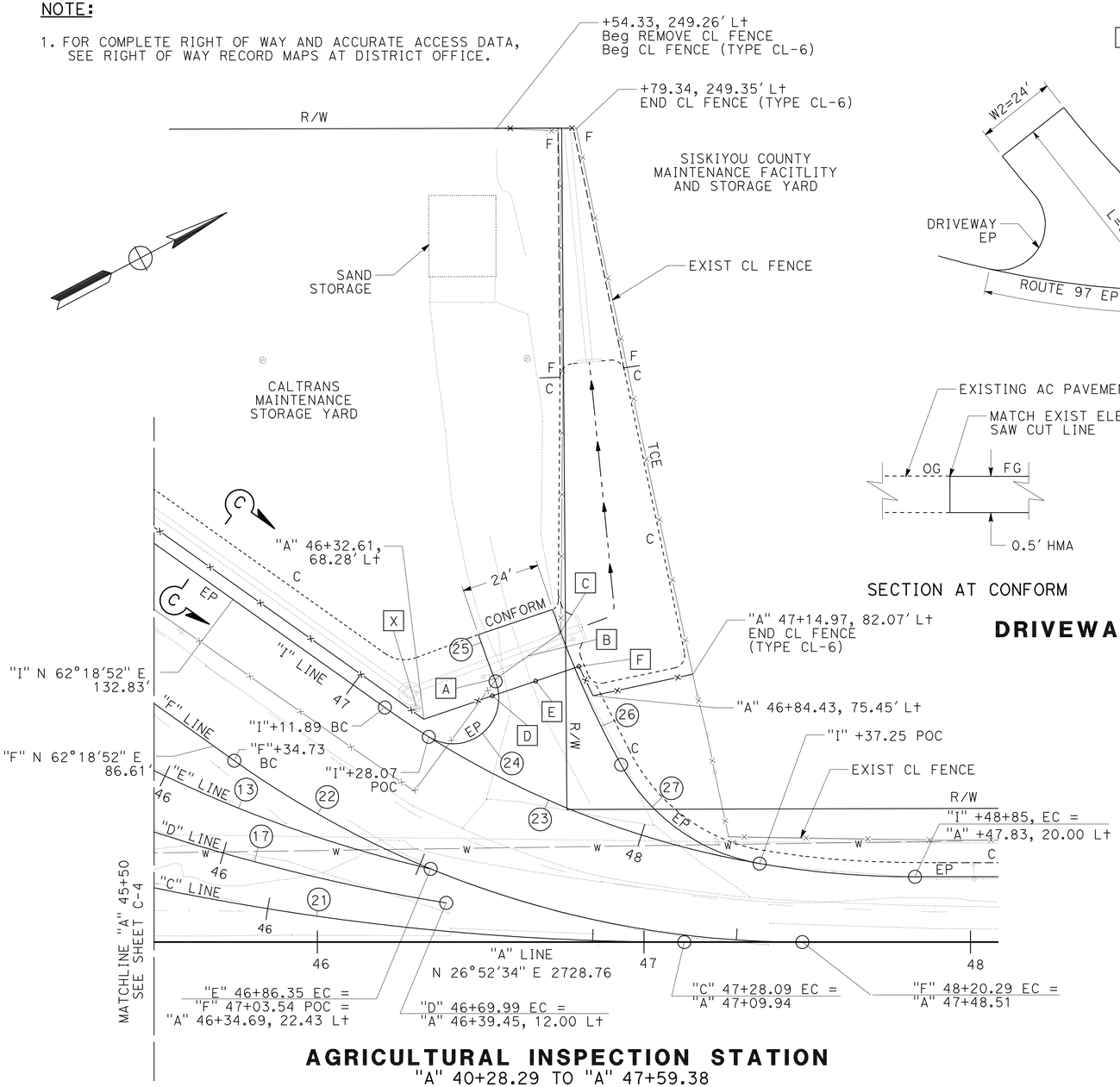

AGRICULTURAL INSPECTION STATION

"A" 40+28.29 TO "A" 47+59.38

ADJUST UTILITY COVER TO GRADE

X "A" 46+30.44, 71.62 Lt

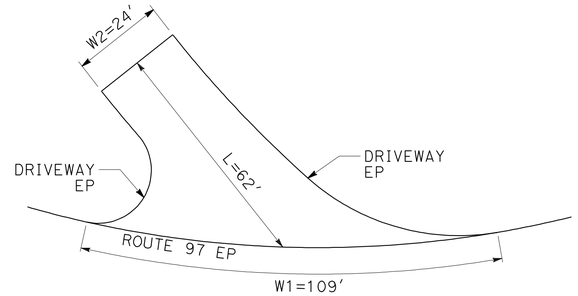

PLAN

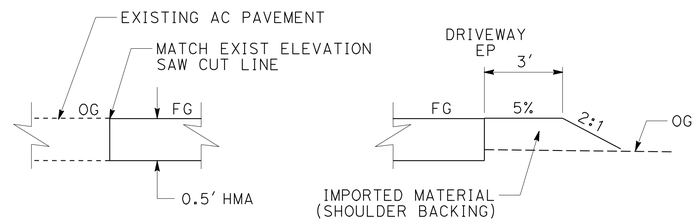

SECTION AT CONFORM

SECTION AT EP

DRIVEWAY DETAILS

LEGEND

A	"A" 46+54.96, 80.87' Lt END REMOVE CL FENCE
B	REMOVE CL GATE
C	"A" 46+74.55, 94.57 Lt END REMOVE CL FENCE
D	"A" 46+53.59, 75.43' Lt END CL FENCE (TYPE CL-6)
E	24' CL GATE (TYPE CL-6)
F	"A" 46+80.10, 84.46' Lt Beg CL FENCE (TYPE CL-6)

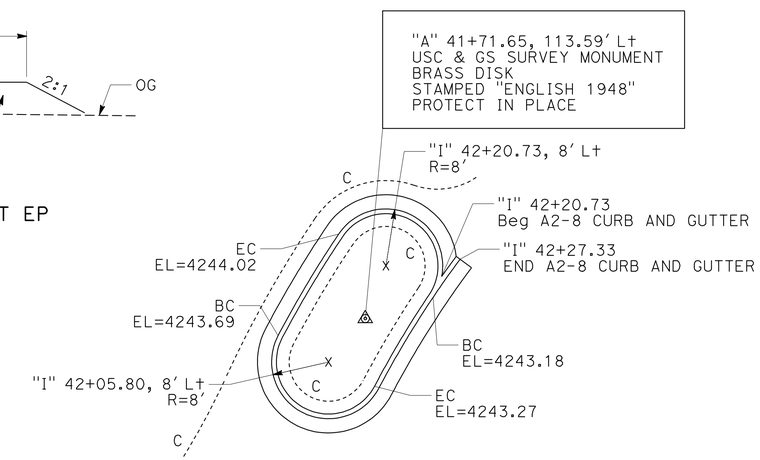

CURB AND GUTTER DETAIL

SEE SHEET C-4 FOR LOCATION.

3 **REVISED PER ADDENDUM No. 3 DATED DECEMBER 3, 2010**

CURVE DATA

No.	R	Δ	T	L
13	400.00'	16°20'35"	57.44'	114.10'
17	600.00'	17°30'05"	92.36'	183.27'
21	800.00'	19°19'30"	136.21'	269.83'
22	300.00'	35°26'19"	95.85'	185.56'
23	280.00'	35°26'19"	89.46'	173.19
24	14.00'	143°38'52"	42.64'	35.11'
25	324.00'	2°41'40"	7.62	15.24'
26	300.00'	9°56'49"	26.11'	52.08'
27	60.00'	51°26'30"	28.90'	53.87'

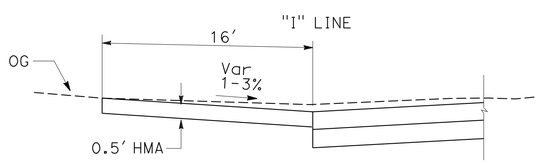

SECTION A-A

SEE SHEET C-4 FOR LOCATION.

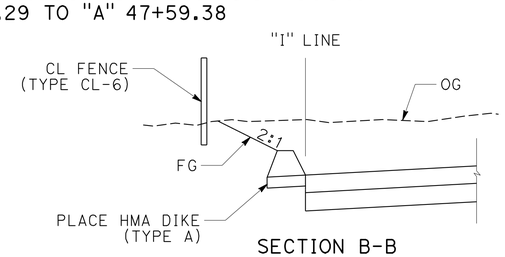

SECTION B-B

SEE SHEET C-4

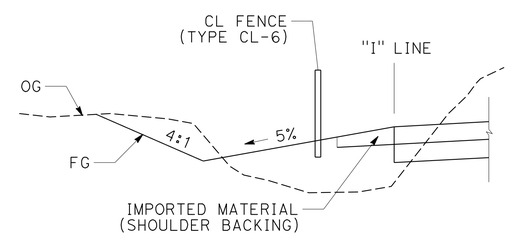

SECTION C-C

CONSTRUCTION DETAILS

SCALE: 1" = 20'

C-5

REVISED BY | DATE REVISED
GREG KINGSFIELD | STEVE THORNE
CALCULATED-DESIGNED BY | CHECKED BY
FUNCTIONAL SUPERVISOR | STEVE THORNE
STATE OF CALIFORNIA - DEPARTMENT OF TRANSPORTATION
Caltrans HYDRAULICS DESIGN

LAST REVISION 07-06-10 | DATE PLOTTED => 30-NOV-2010 | TIME PLOTTED => 16:25

24c010ga005.add

Dist	COUNTY	ROUTE	POST MILES TOTAL PROJECT	SHEET No.	TOTAL SHEETS
02	Sis	97	40.1/54.1	19	114

REGISTERED CIVIL ENGINEER 07-06-02 DATE

7-12-10
PLANS APPROVAL DATE

REGISTERED PROFESSIONAL ENGINEER GREG KINGSFIELD No. C76297 Exp 6-30-12 CIVIL STATE OF CALIFORNIA

THE STATE OF CALIFORNIA OR ITS OFFICERS OR AGENTS SHALL NOT BE RESPONSIBLE FOR THE ACCURACY OR COMPLETENESS OF SCANNED COPIES OF THIS PLAN SHEET.

3

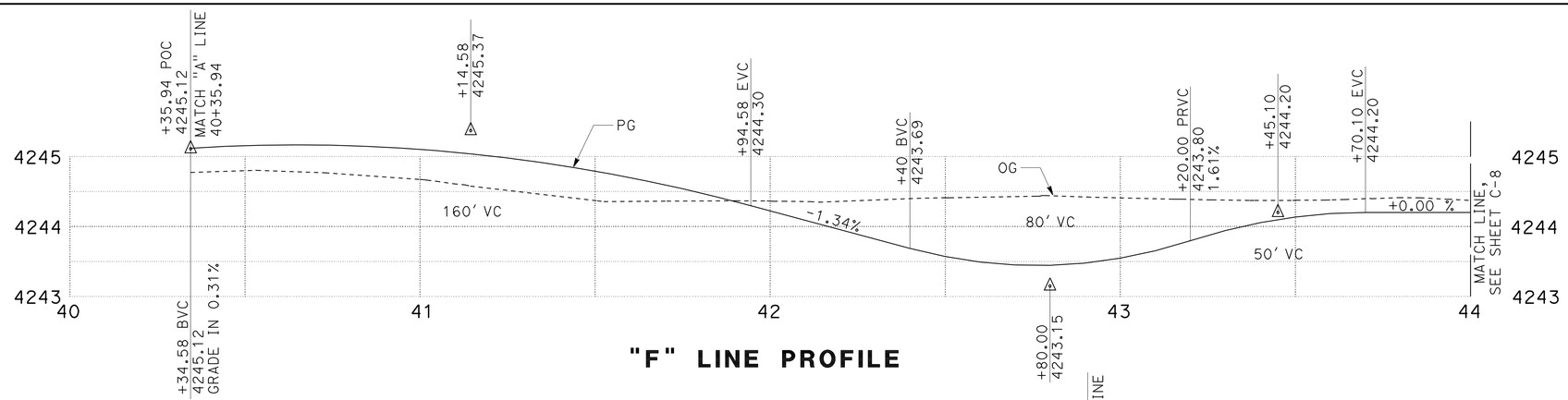

"F" LINE PROFILE

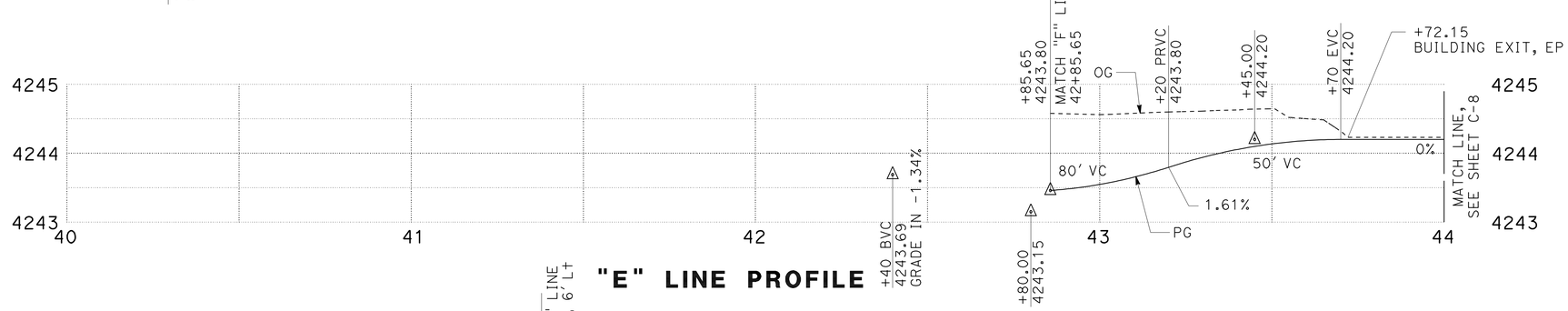

"E" LINE PROFILE

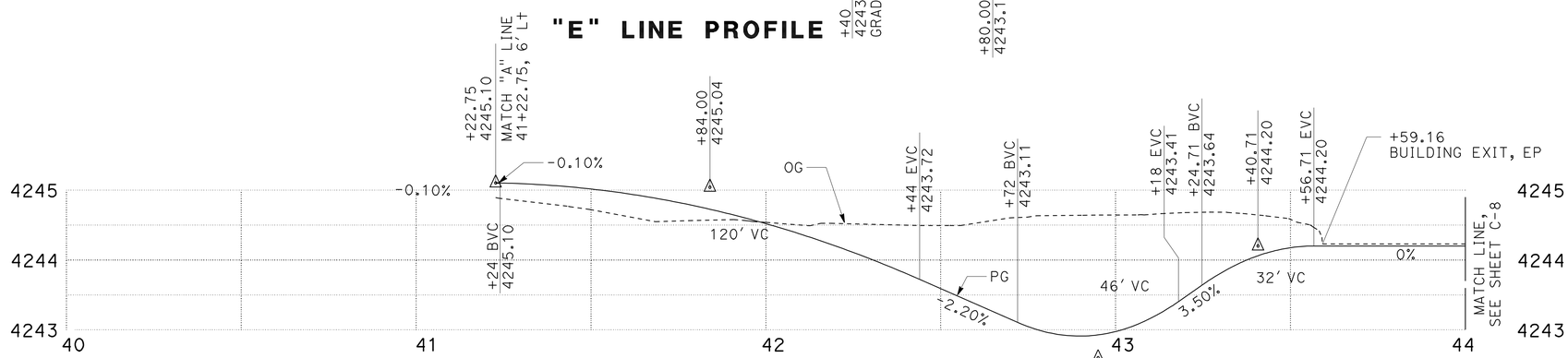

"D" LINE PROFILE

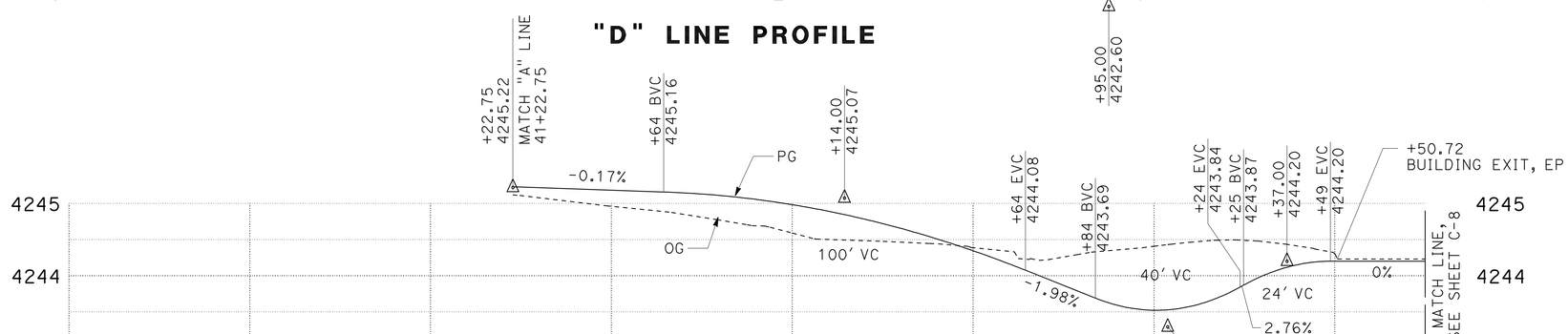

"C" LINE PROFILE

3 **REVISED PER ADDENDUM No. 3 DATED DECEMBER 3, 2010**

CONSTRUCTION DETAILS

SCALE: 1" = 20' HORIZ
1" = 2' VERT

C-6

STATE OF CALIFORNIA - DEPARTMENT OF TRANSPORTATION
Caltrans® HYDRAULICS DESIGN

FUNCTIONAL SUPERVISOR: STEVE THORNE
CALCULATED-DESIGNED BY: GREG KINGSFIELD
CHECKED BY: STEVE THORNE
REVISED BY
DATE REVISED

24c010ga006.add

LAST REVISION 07-06-10
DATE PLOTTED => 30-NOV-2010
TIME PLOTTED => 16:25

Dist	COUNTY	ROUTE	POST MILES TOTAL PROJECT	SHEET No.	TOTAL SHEETS
02	Sis	97	40.1/54.1	20	114

REGISTERED CIVIL ENGINEER 07-06-02 DATE

7-12-10
PLANS APPROVAL DATE

REGISTERED PROFESSIONAL ENGINEER GREG KINGSFIELD No. C76297 Exp 6-30-12 CIVIL STATE OF CALIFORNIA

THE STATE OF CALIFORNIA OR ITS OFFICERS OR AGENTS SHALL NOT BE RESPONSIBLE FOR THE ACCURACY OR COMPLETENESS OF SCANNED COPIES OF THIS PLAN SHEET.

3

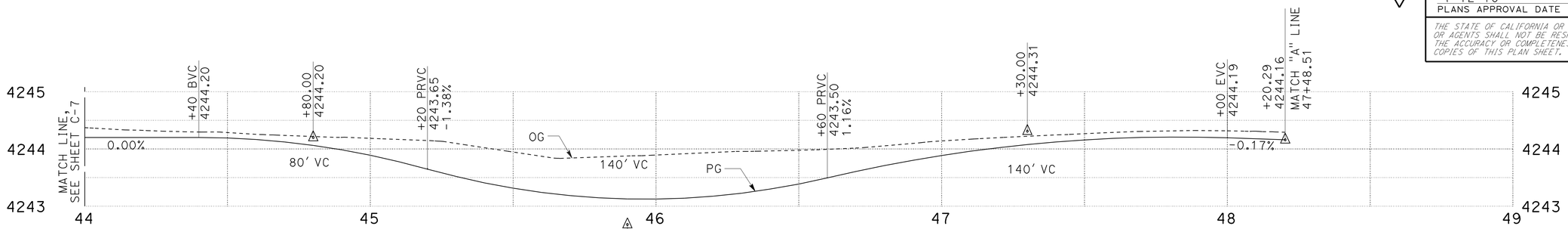

"F" LINE PROFILE

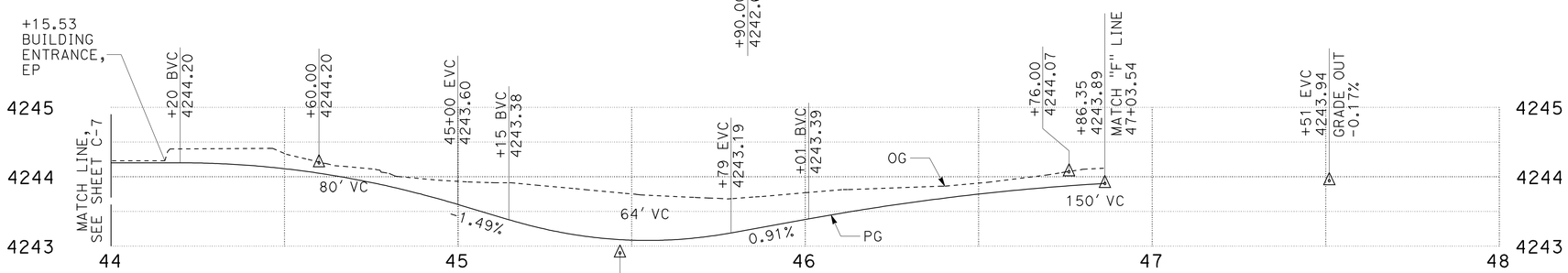

"E" LINE PROFILE

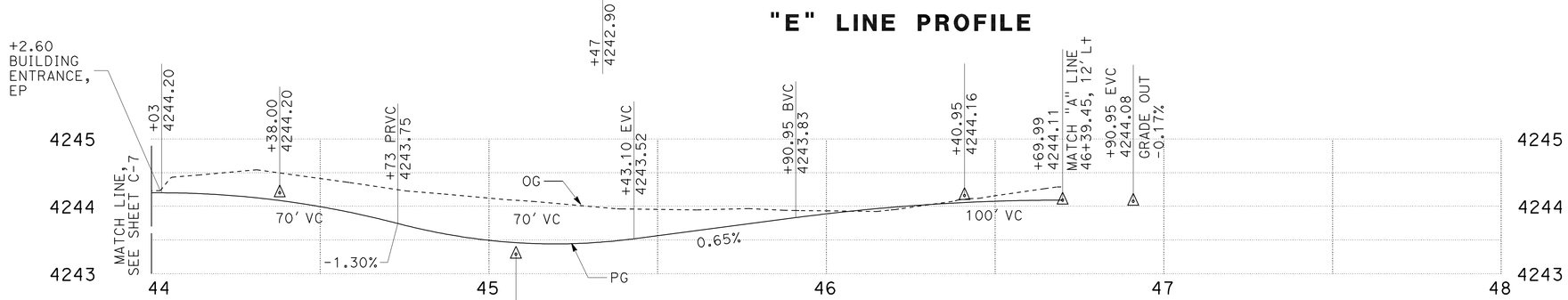

"D" LINE PROFILE

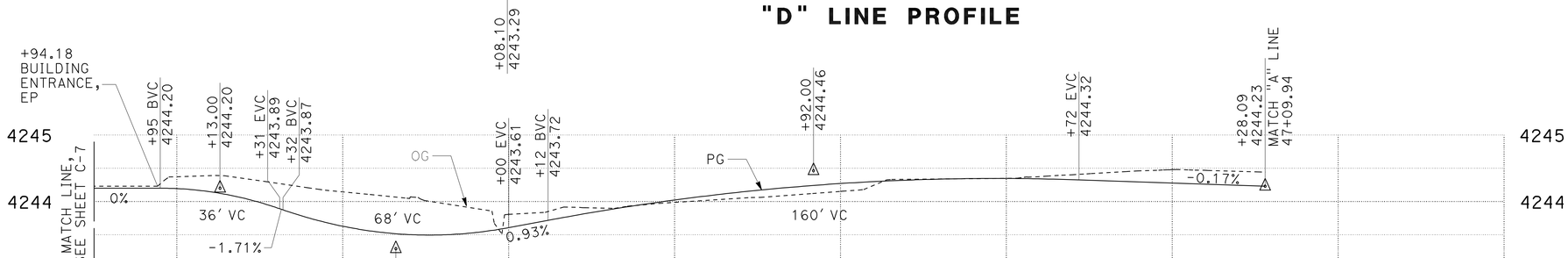

"C" LINE PROFILE

3 **REVISED PER ADDENDUM No. 3 DATED DECEMBER 3, 2010**

CONSTRUCTION DETAILS

SCALE: 1" = 20' HORIZ
1" = 2' VERT

C-7

REVISED BY	DATE REVISED

CALCULATED-DESIGNED BY	GREG KINGSFIELD
CHECKED BY	STEVE THORNE
FUNCTIONAL SUPERVISOR	STEVE THORNE

STATE OF CALIFORNIA - DEPARTMENT OF TRANSPORTATION
Caltrans HYDRAULICS DESIGN

24c010ga007.add

LAST REVISION 07-06-10
DATE PLOTTED => 30-NOV-2010
TIME PLOTTED => 16:25

Dist	COUNTY	ROUTE	POST MILES TOTAL PROJECT	SHEET No.	TOTAL SHEETS
02	Sis	97	40.1/54.1	21	114

REGISTERED CIVIL ENGINEER 07-06-02 DATE

7-12-10
PLANS APPROVAL DATE

REGISTERED PROFESSIONAL ENGINEER GREG KINGSFIELD No. C76297 Exp 6-30-12 CIVIL STATE OF CALIFORNIA

THE STATE OF CALIFORNIA OR ITS OFFICERS OR AGENTS SHALL NOT BE RESPONSIBLE FOR THE ACCURACY OR COMPLETENESS OF SCANNED COPIES OF THIS PLAN SHEET.

3

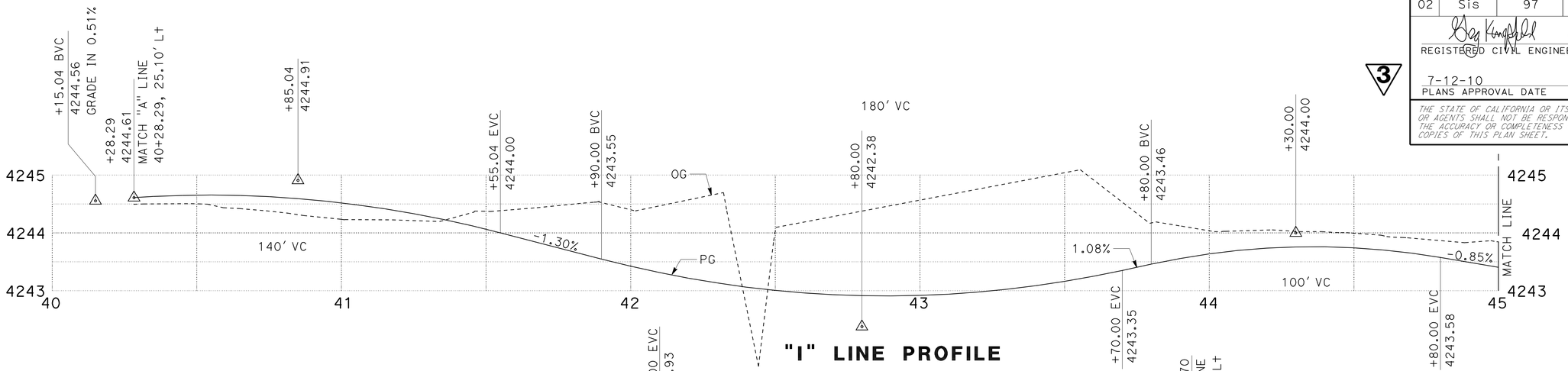

"I" LINE PROFILE

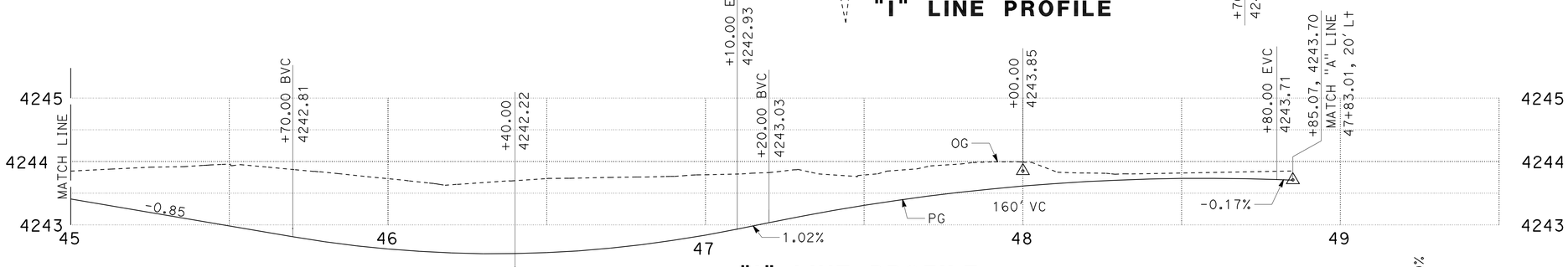

"I" LINE PROFILE

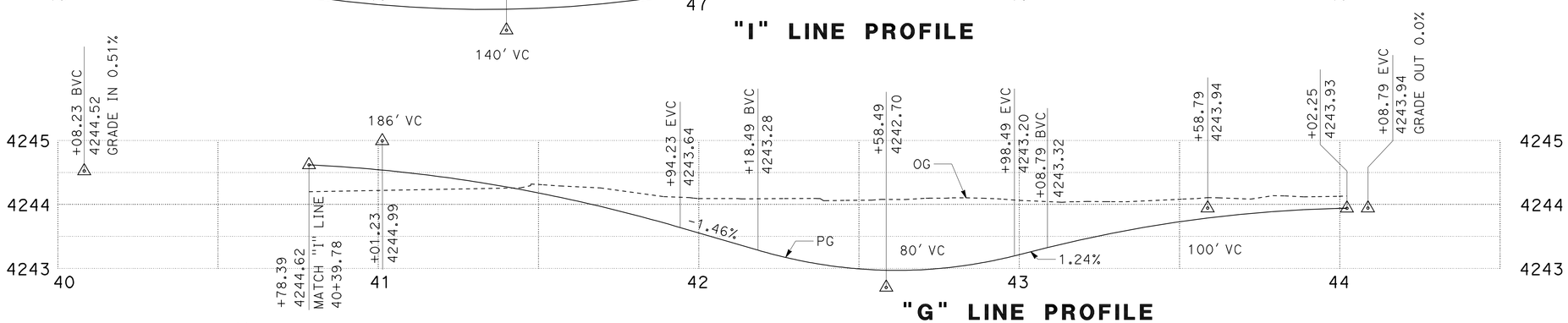

"G" LINE PROFILE

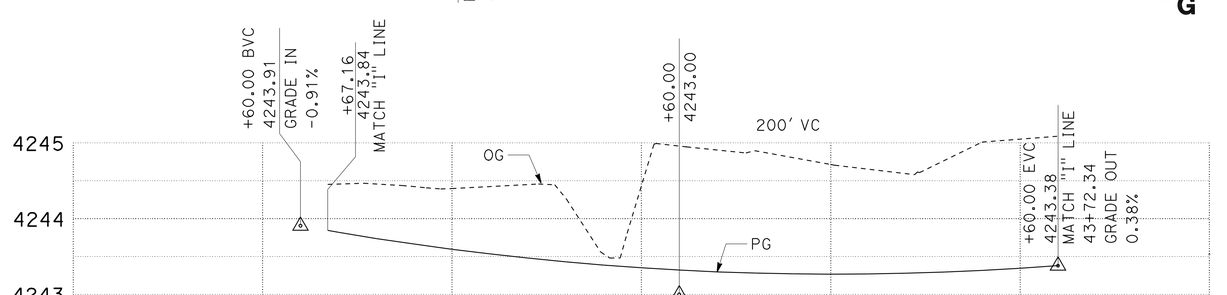

"H" LINE PROFILE

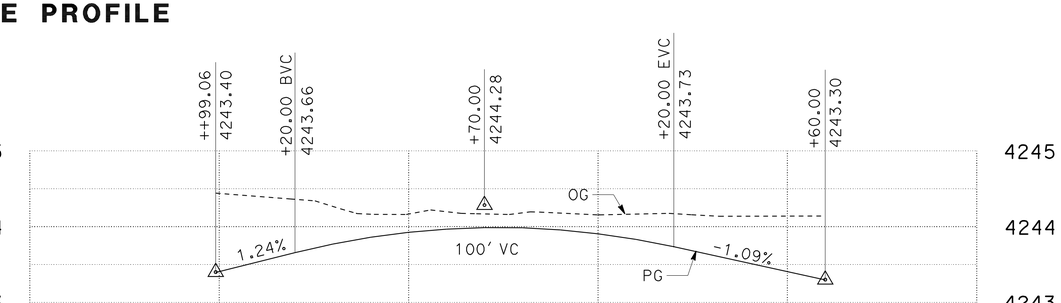

"B" LINE PROFILE

CONSTRUCTION DETAILS

SCALE: 1" = 20' HORIZ
1" = 2' VERT

C-8

3 REVISED PER ADDENDUM No. 3 DATED DECEMBER 3, 2010

REVISED BY	GREG KINGSFIELD
DATE REVISED	
CALCULATED-DESIGNED BY	STEVE THORNE
CHECKED BY	
FUNCTIONAL SUPERVISOR	STEVE THORNE

STATE OF CALIFORNIA - DEPARTMENT OF TRANSPORTATION
Caltrans HYDRAULICS DESIGN

24c010ga008.add

LAST REVISION | DATE PLOTTED => 30-NOV-2010
07-06-10 | TIME PLOTTED => 16:25

Dist	COUNTY	ROUTE	POST MILES TOTAL PROJECT	SHEET No.	TOTAL SHEETS
02	Sis	97	40.1/54.1	25	114

REGISTERED CIVIL ENGINEER 07-06-02 DATE

7-12-10
PLANS APPROVAL DATE

REGISTERED PROFESSIONAL ENGINEER GREG KINGSFIELD No. C76297 Exp 6-30-12 CIVIL STATE OF CALIFORNIA

THE STATE OF CALIFORNIA OR ITS OFFICERS OR AGENTS SHALL NOT BE RESPONSIBLE FOR THE ACCURACY OR COMPLETENESS OF SCANNED COPIES OF THIS PLAN SHEET.

NOTE:

1. FOR COMPLETE RIGHT OF WAY DATA, SEE RIGHT OF WAY RECORD MAPS AT DISTRICT OFFICE.

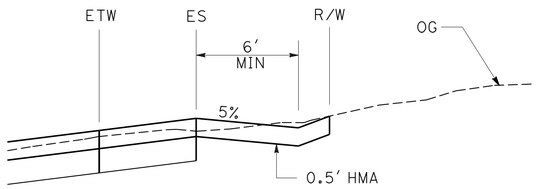

SECTION C-C

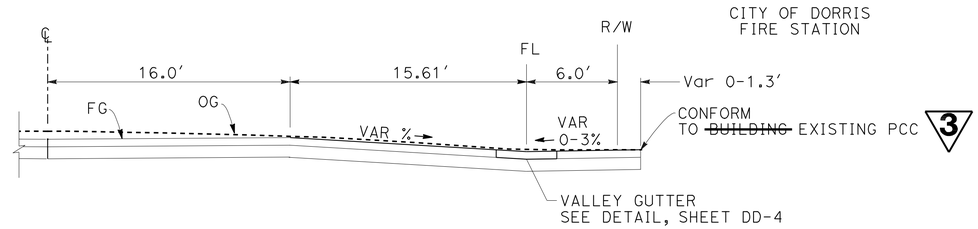

TYP SECTION A-A

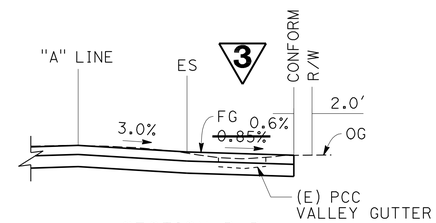

SECTION B-B

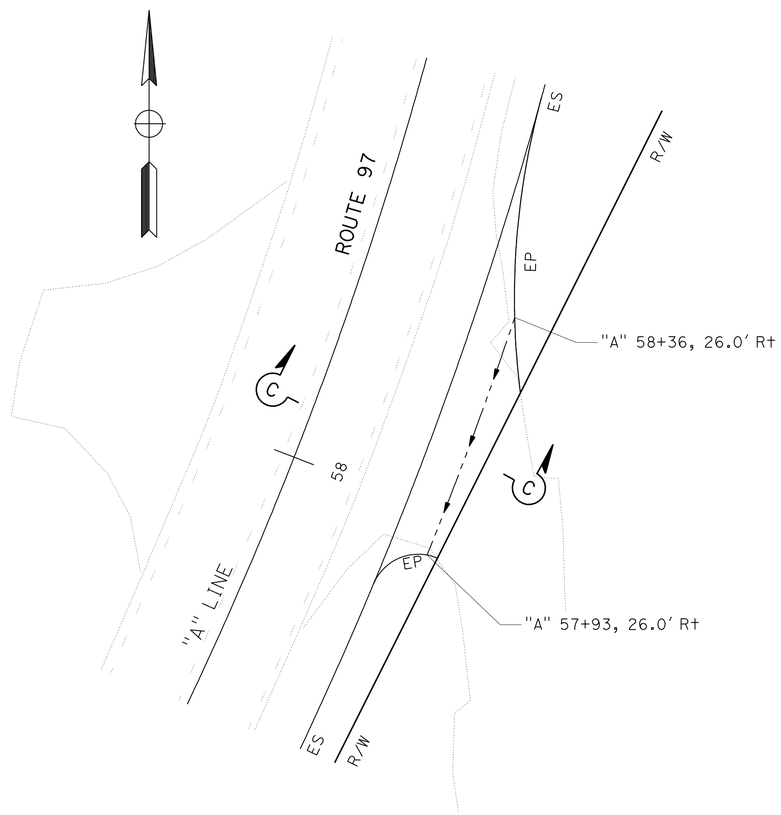

PLAN

FLOWLINE AT ROAD CONNECTION

"A" 57+93, 26.0' Rt TO "A" 58+36, 26.0' Rt

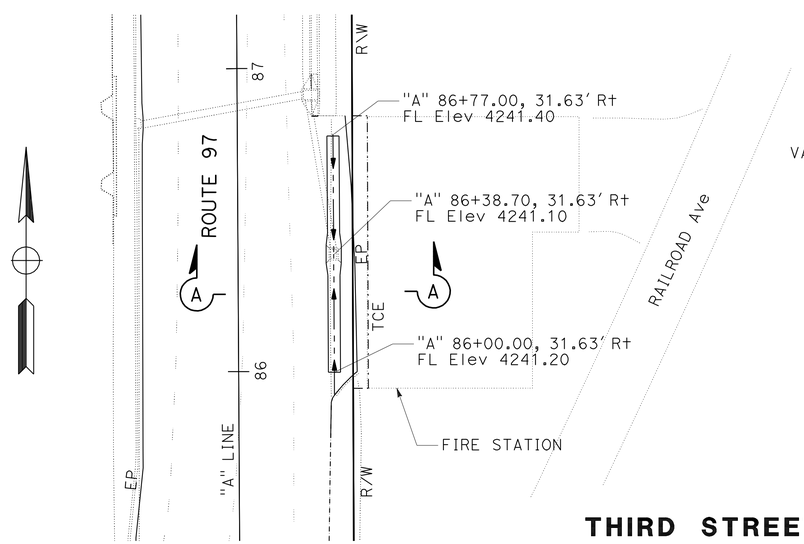

PLAN

FLOWLINE DETAIL 3

"A" 85+99.63, 31.63' Rt TO "A" 86+78.27,31.63' Rt

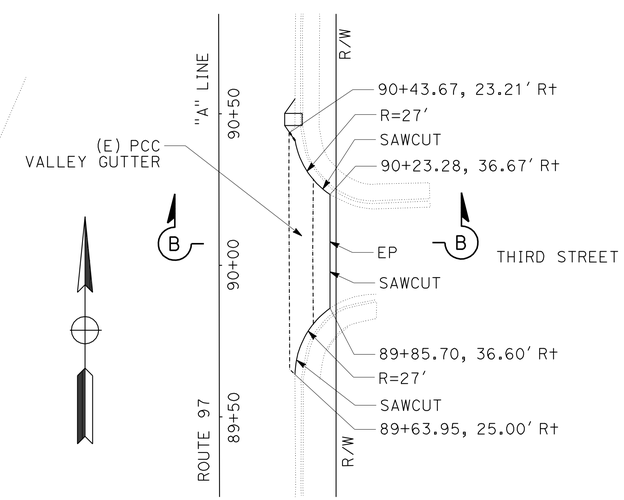

PLAN

THIRD STREET CONFORM 3
~~REMOVE CONCRETE~~ DETAIL

"A" 89+63.95, 25.00' Rt TO "A" 90+43.67, 23.21' Rt

3 **REVISED PER ADDENDUM No. 3 DATED DECEMBER 3, 2010**

CONSTRUCTION DETAILS

NO SCALE

C-12

REVISED BY	DATE REVISED
GREG KINGSFIELD	STEVE ALAWAR
CALCULATED-DESIGNED BY	CHECKED BY
FUNCTIONAL SUPERVISOR	STEVE THORNE

STATE OF CALIFORNIA - DEPARTMENT OF TRANSPORTATION
Caltrans® HYDRAULICS DESIGN

V:\Project\Plans\PSE\Working\d2\02-4c0101-add\24c010ga012.add

LAST REVISION DATE PLOTTED => 30-NOV-2010
07-06-10 TIME PLOTTED => 16:25

Dist	COUNTY	ROUTE	POST MILES TOTAL PROJECT	SHEET No.	TOTAL SHEETS
02	Sis	97	40.1/54.1	26	114

Mark J. Miller 07-06-10
REGISTERED CIVIL ENGINEER DATE

7-12-10
PLANS APPROVAL DATE

REGISTERED PROFESSIONAL ENGINEER MARK MILLER No. C48454 Exp. 6-30-12 CIVIL STATE OF CALIFORNIA

THE STATE OF CALIFORNIA OR ITS OFFICERS OR AGENTS SHALL NOT BE RESPONSIBLE FOR THE ACCURACY OR COMPLETENESS OF SCANNED COPIES OF THIS PLAN SHEET.

3

NOTE:

1. EXACT LOCATION TO BE DETERMINED BY THE ENGINEER.

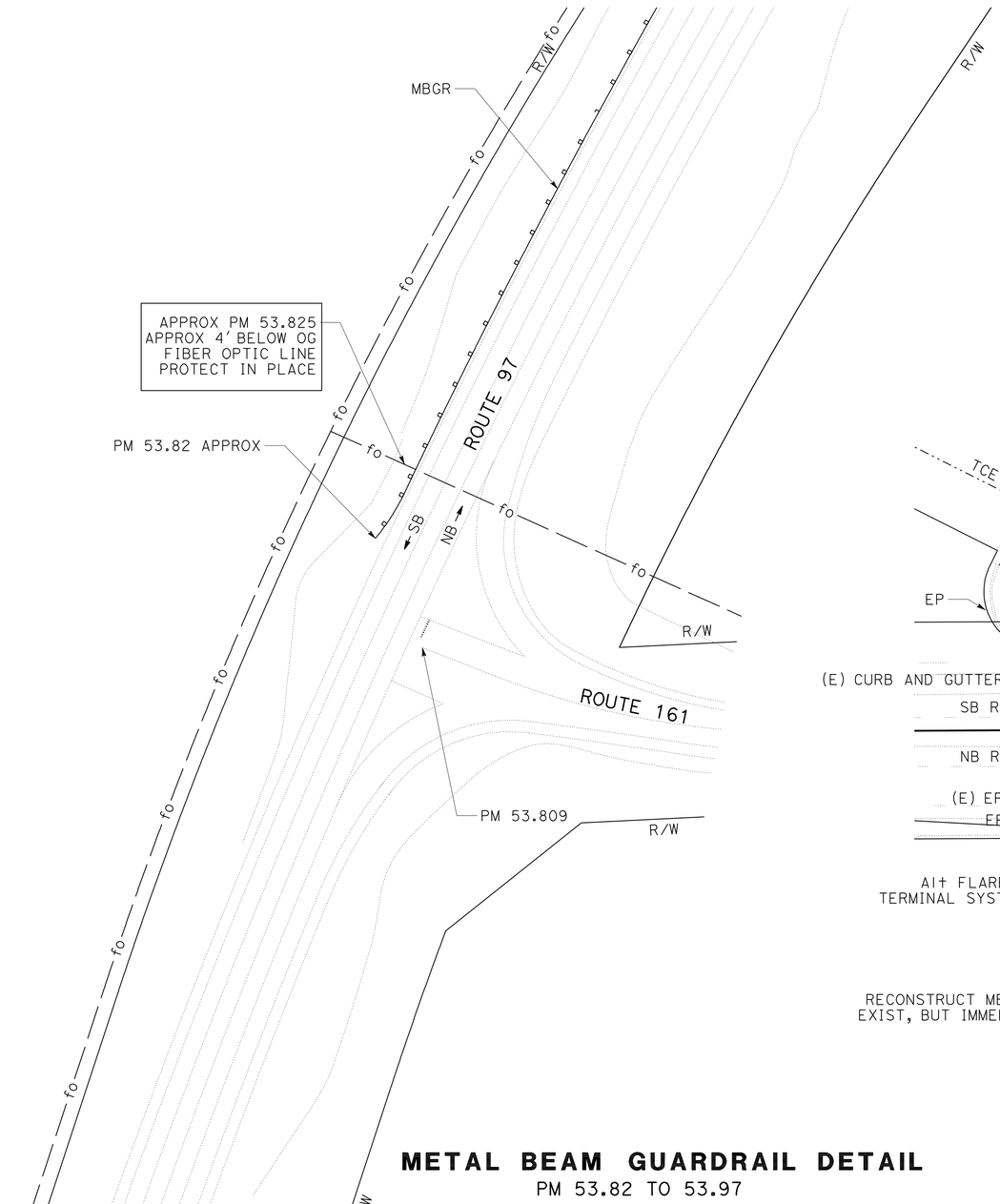

METAL BEAM GUARDRAIL DETAIL

PM 53.82 TO 53.97

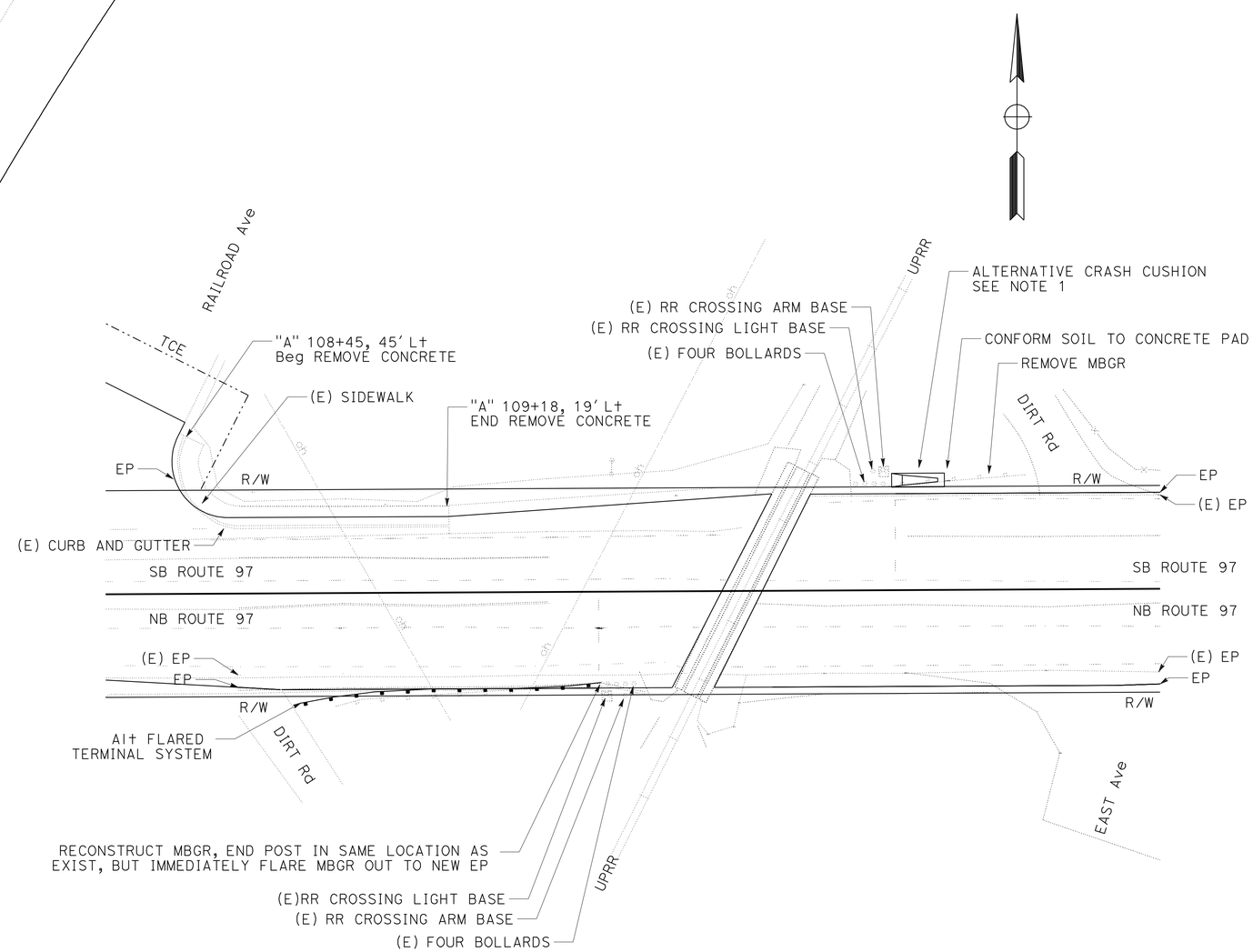

RAILROAD CROSSING DETAIL

Sis-97-51.07

3 **REVISED PER ADDENDUM No. 3 DATED DECEMBER 3, 2010**

CONSTRUCTION DETAILS

NO SCALE

C-13

REVISED BY | DATE REVISED
SSAL PRIETO | GRAMARKINGSEERLD
CALCULATED-DESIGNED BY | CHECKED BY
FUNCTIONAL SUPERVISOR: MARK MILLER

STATE OF CALIFORNIA - DEPARTMENT OF TRANSPORTATION
Caltrans® ADVANCE PLANNING

24c010ga013.add

LAST REVISION 07-06-10 | DATE PLOTTED => 30-NOV-2010 | TIME PLOTTED => 16:25

Dist	COUNTY	ROUTE	POST MILES TOTAL PROJECT	SHEET No.	TOTAL SHEETS
02	Sis	97	40.1/54.1	27	114

REGISTERED CIVIL ENGINEER 07-06-02 DATE

7-12-10
PLANS APPROVAL DATE

REGISTERED PROFESSIONAL ENGINEER GREG KINGSFIELD No. C76297 Exp 6-30-12 CIVIL STATE OF CALIFORNIA

THE STATE OF CALIFORNIA OR ITS OFFICERS OR AGENTS SHALL NOT BE RESPONSIBLE FOR THE ACCURACY OR COMPLETENESS OF SCANNED COPIES OF THIS PLAN SHEET.

3

NOTES:

1. FOR COMPLETE RIGHT OF WAY AND ACCURATE ACCESS DATA, SEE RIGHT OF WAY RECORD MAPS AT DISTRICT OFFICE.
2. DITCH EXC IS TO TCE ONLY, EXCAVATION BEYOND TCE BY OTHERS.

LEGEND

- DRAINAGE SYSTEM No.
- DRAINAGE UNIT
- FLOW DIRECTION
- MARKER (CULVERT)
- TCE — TEMPORARY CONSTRUCTION EASEMENT

ABBREVIATIONS

DD DRAINAGE DETAIL SHEET
TCE TEMPORARY CONSTRUCTION EASEMENT

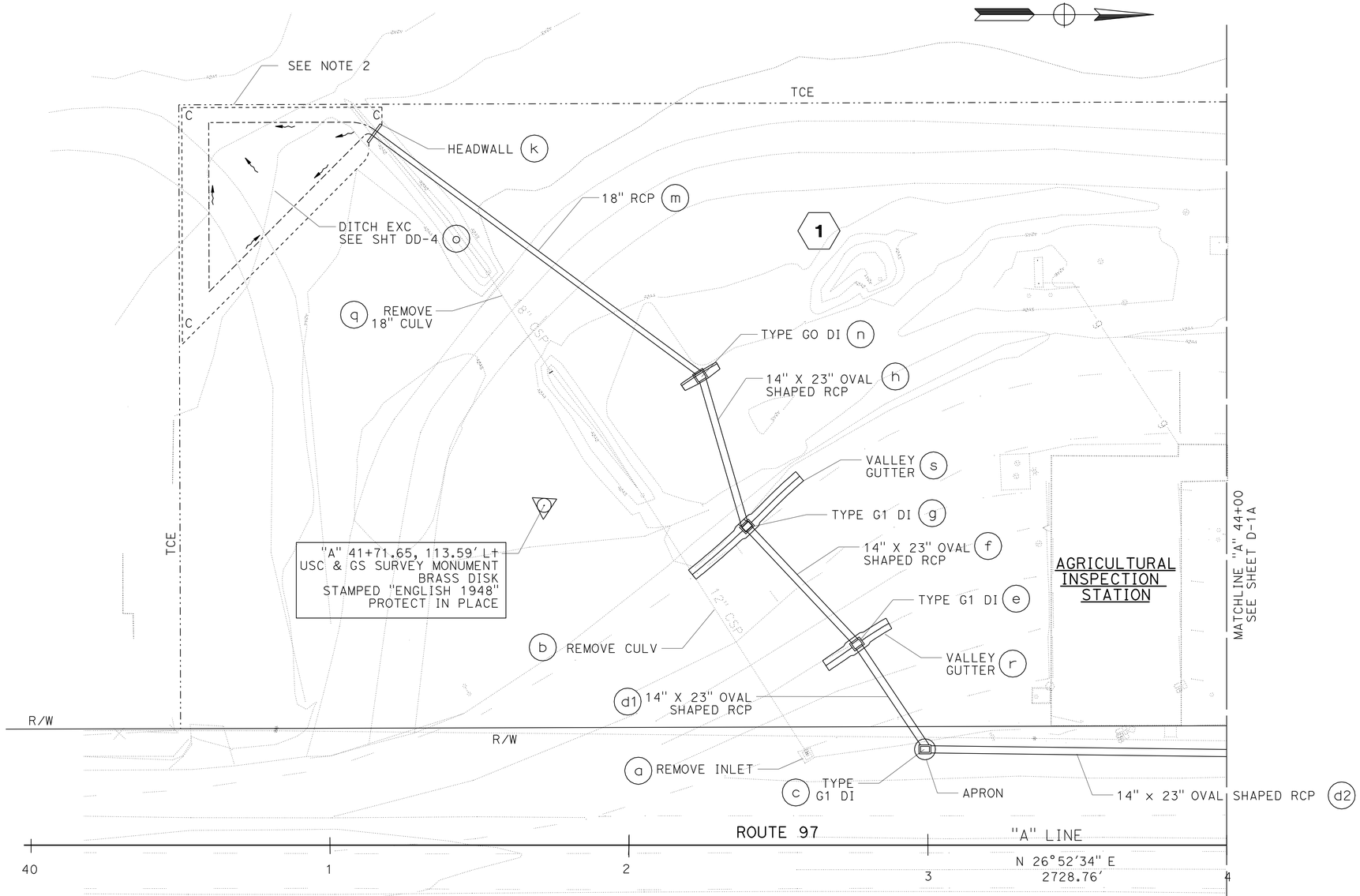

3 **REVISED PER ADDENDUM No. 3 DATED DECEMBER 3, 2010**

THIS PLAN ACCURATE FOR DRAINAGE WORK ONLY

DRAINAGE PLAN

SCALE: 1" = 20'

D-1

STATE OF CALIFORNIA - DEPARTMENT OF TRANSPORTATION
Caltrans HYDRAULICS DESIGN

FUNCTIONAL SUPERVISOR: STEVE THORNE
CALCULATED-DESIGNED BY: GREG KINGSFIELD
CHECKED BY: STEVE ALAWAR
REVISED BY
DATE REVISED

24c010ia001.dgn

LAST REVISION DATE PLOTTED => 30-NOV-2010
07-06-10 TIME PLOTTED => 16:25

BORDER LAST REVISED 7/2/2010
USERNAME => trstrk
DGN FILE => 24c010ia001.dgn
RELATIVE BORDER SCALE IS IN INCHES 0 1 2 3
UNIT 0361
PROJECT NUMBER & PHASE 020002002711

Dist	COUNTY	ROUTE	POST MILES TOTAL PROJECT	SHEET No.	TOTAL SHEETS
02	Sis	97	40.1/54.1	27A	114

REGISTERED CIVIL ENGINEER 09-22-10 DATE

7-12-10
PLANS APPROVAL DATE

REGISTERED PROFESSIONAL ENGINEER GREG KINGSFIELD No. C76297 Exp. 6-30-12 CIVIL STATE OF CALIFORNIA

THE STATE OF CALIFORNIA OR ITS OFFICERS OR AGENTS SHALL NOT BE RESPONSIBLE FOR THE ACCURACY OR COMPLETENESS OF SCANNED COPIES OF THIS PLAN SHEET.

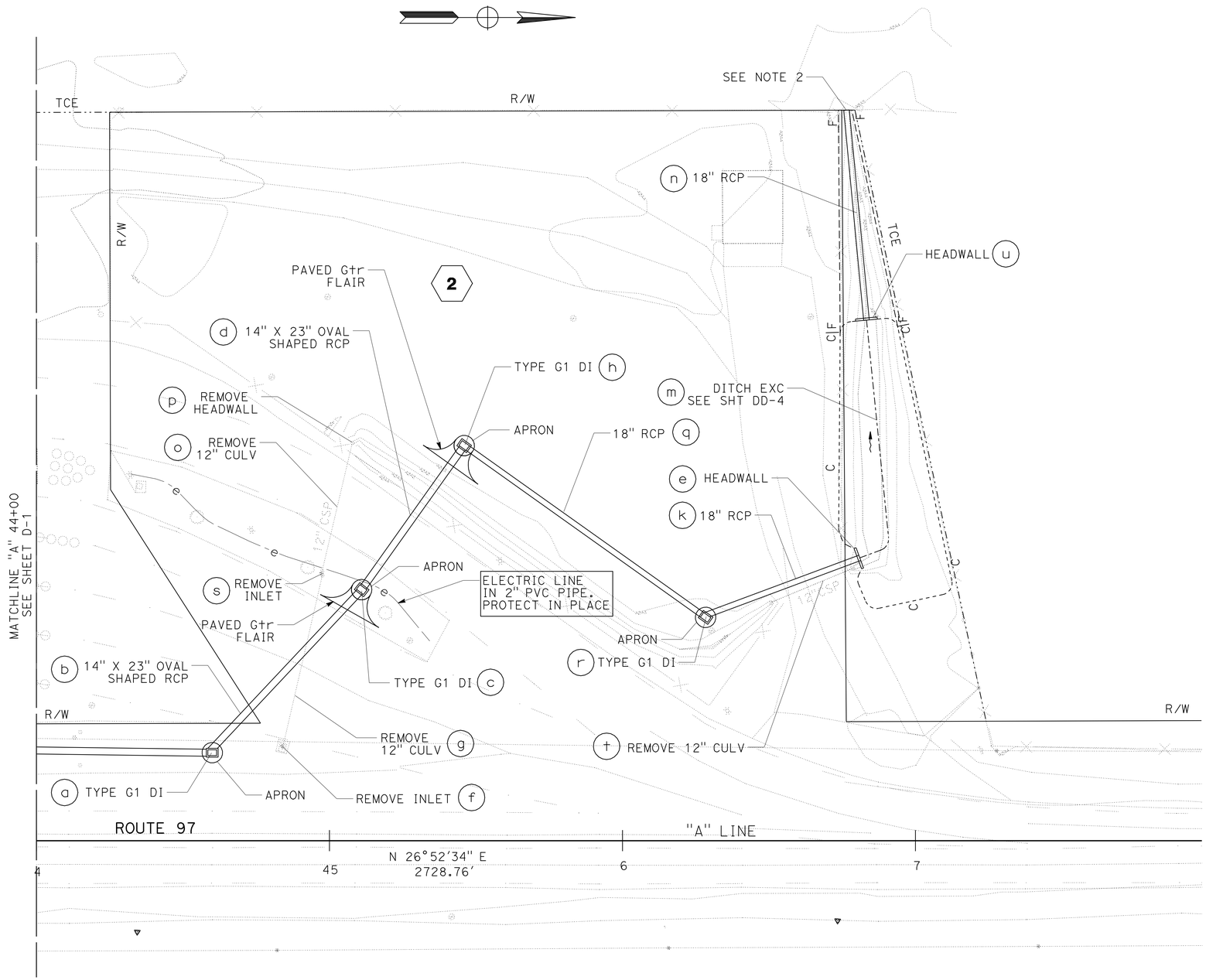

3 **ADDED PER ADDENDUM No. 3 DATED DECEMBER 3, 2010**

THIS PLAN ACCURATE FOR DRAINAGE WORK ONLY

DRAINAGE PLAN

SCALE: 1" = 20'

D-1A

REVISED BY	DATE REVISED
GREG KINGSFIELD	
STEVE ALAWAR	

CALCULATED-DESIGNED BY	
CHECKED BY	

FUNCTIONAL SUPERVISOR: STEVE THORNE

STATE OF CALIFORNIA - DEPARTMENT OF TRANSPORTATION

Caltrans® HYDRAULICS DESIGN

24c010ia001a.add

LAST REVISION DATE PLOTTED => 30-NOV-2010 TIME PLOTTED => 16:25

Dist	COUNTY	ROUTE	POST MILES TOTAL PROJECT	SHEET No.	TOTAL SHEETS
02	Sis	97	40.1/54.1	28	114

REGISTERED CIVIL ENGINEER 07-06-02 DATE

7-12-10
PLANS APPROVAL DATE

REGISTERED PROFESSIONAL ENGINEER GREG KINGSFIELD No. C76297 Exp 6-30-12 CIVIL STATE OF CALIFORNIA

THE STATE OF CALIFORNIA OR ITS OFFICERS OR AGENTS SHALL NOT BE RESPONSIBLE FOR THE ACCURACY OR COMPLETENESS OF SCANNED COPIES OF THIS PLAN SHEET.

3

NOTE:

1. FOR COMPLETE RIGHT OF WAY DATA, SEE RIGHT OF WAY RECORD MAPS AT DISTRICT OFFICE.

CITY OF DORRIS

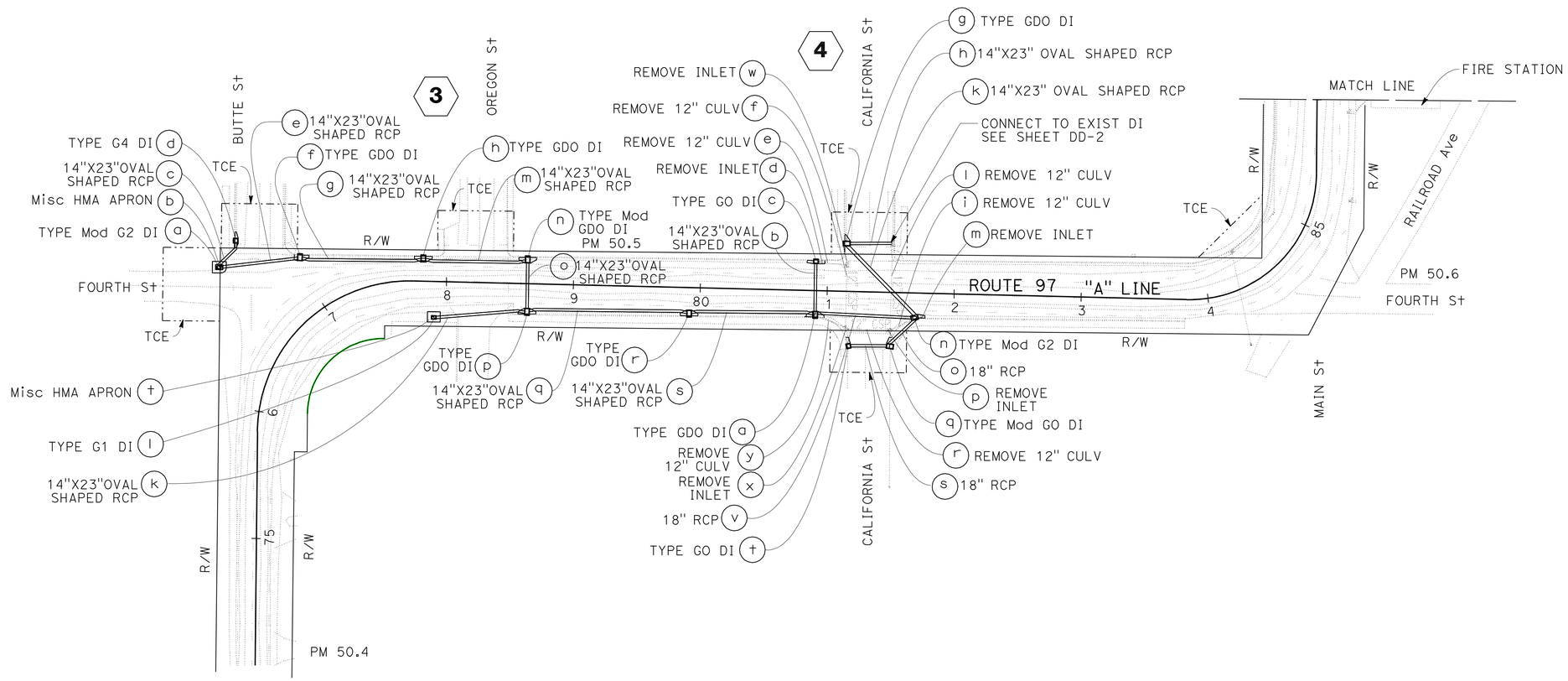

3 **REVISED PER ADDENDUM No. 3 DATED DECEMBER 3, 2010**

THIS PLAN ACCURATE FOR DRAINAGE WORK ONLY

DRAINAGE PLAN

SCALE: 1" = 50′ **D-2**

STATE OF CALIFORNIA - DEPARTMENT OF TRANSPORTATION
Caltrans® HYDRAULICS DESIGN

FUNCTIONAL SUPERVISOR: STEVE THORNE
CALCULATED-DESIGNED BY: GREG KINGSFIELD
CHECKED BY: STEVE ALAWAR
REVISED BY / DATE REVISED

24c010ia002.add

LAST REVISION 07-06-10 | DATE PLOTTED => 30-NOV-2010 | TIME PLOTTED => 16:26

Dist	COUNTY	ROUTE	POST MILES TOTAL PROJECT	SHEET No.	TOTAL SHEETS
02	Sis	97	40.1/54.1	29	114

REGISTERED CIVIL ENGINEER 07-06-02 DATE

7-12-10
PLANS APPROVAL DATE

REGISTERED PROFESSIONAL ENGINEER GREG KINGSFIELD No. C76297 Exp 6-30-12 CIVIL STATE OF CALIFORNIA

THE STATE OF CALIFORNIA OR ITS OFFICERS OR AGENTS SHALL NOT BE RESPONSIBLE FOR THE ACCURACY OR COMPLETENESS OF SCANNED COPIES OF THIS PLAN SHEET.

NOTE:

1. FOR COMPLETE RIGHT OF WAY DATA, SEE RIGHT OF WAY RECORD MAPS AT DISTRICT OFFICE.

CITY OF DORRIS

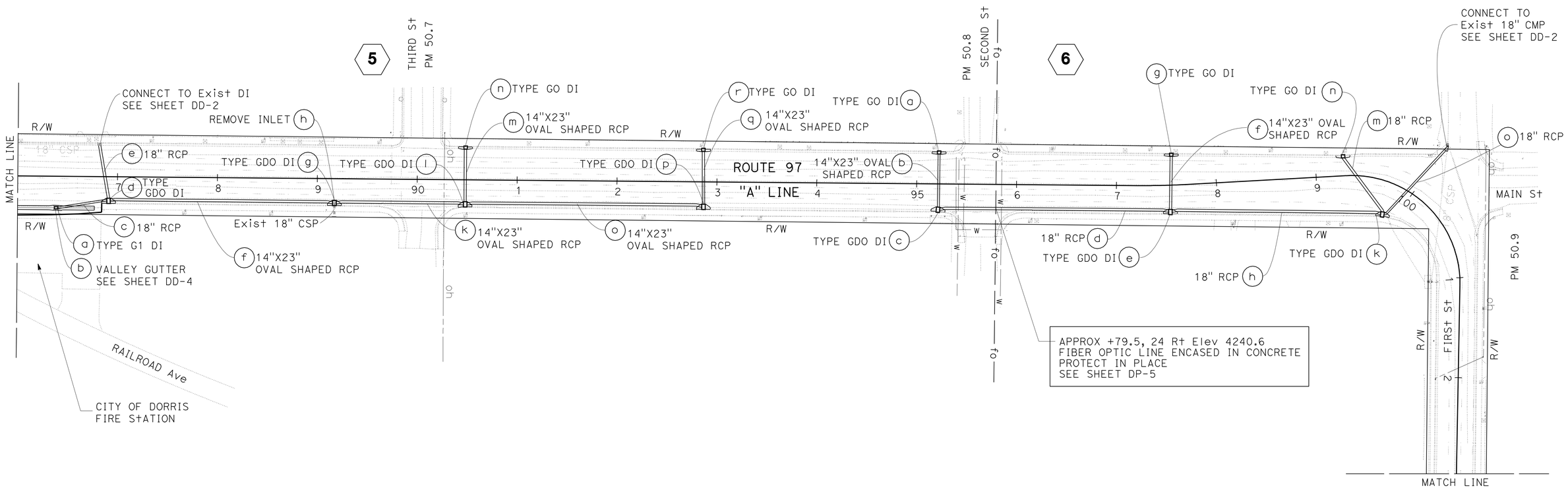

3 **REVISED PER ADDENDUM No. 3 DATED DECEMBER 3, 2010**

THIS PLAN ACCURATE FOR DRAINAGE WORK ONLY

DRAINAGE PLAN

SCALE: 1" = 50'

D-3

GREG KINGSFIELD | REVISED BY
STEVE ALAWAR | DATE REVISED
CALCULATED-DESIGNED BY | CHECKED BY
FUNCTIONAL SUPERVISOR
STEVE THORNE
STATE OF CALIFORNIA - DEPARTMENT OF TRANSPORTATION
Caltrans HYDRAULICS DESIGN

LAST REVISION 07-06-10 | DATE PLOTTED => 30-NOV-2010 | TIME PLOTTED => 16:26

24c010ia003.dgn

Dist	COUNTY	ROUTE	POST MILES TOTAL PROJECT	SHEET No.	TOTAL SHEETS
02	Sis	97	40.1/54.1	30	114

REGISTERED CIVIL ENGINEER 07-06-02 DATE

7-12-10
PLANS APPROVAL DATE

REGISTERED PROFESSIONAL ENGINEER GREG KINGSFIELD No. C76297 Exp 6-30-12 CIVIL STATE OF CALIFORNIA

THE STATE OF CALIFORNIA OR ITS OFFICERS OR AGENTS SHALL NOT BE RESPONSIBLE FOR THE ACCURACY OR COMPLETENESS OF SCANNED COPIES OF THIS PLAN SHEET.

3

NOTE:

1. FOR COMPLETE RIGHT OF WAY AND ACCURATE ACCESS DATA, SEE RIGHT OF WAY RECORD MAPS AT DISTRICT OFFICE.

CITY OF DORRIS

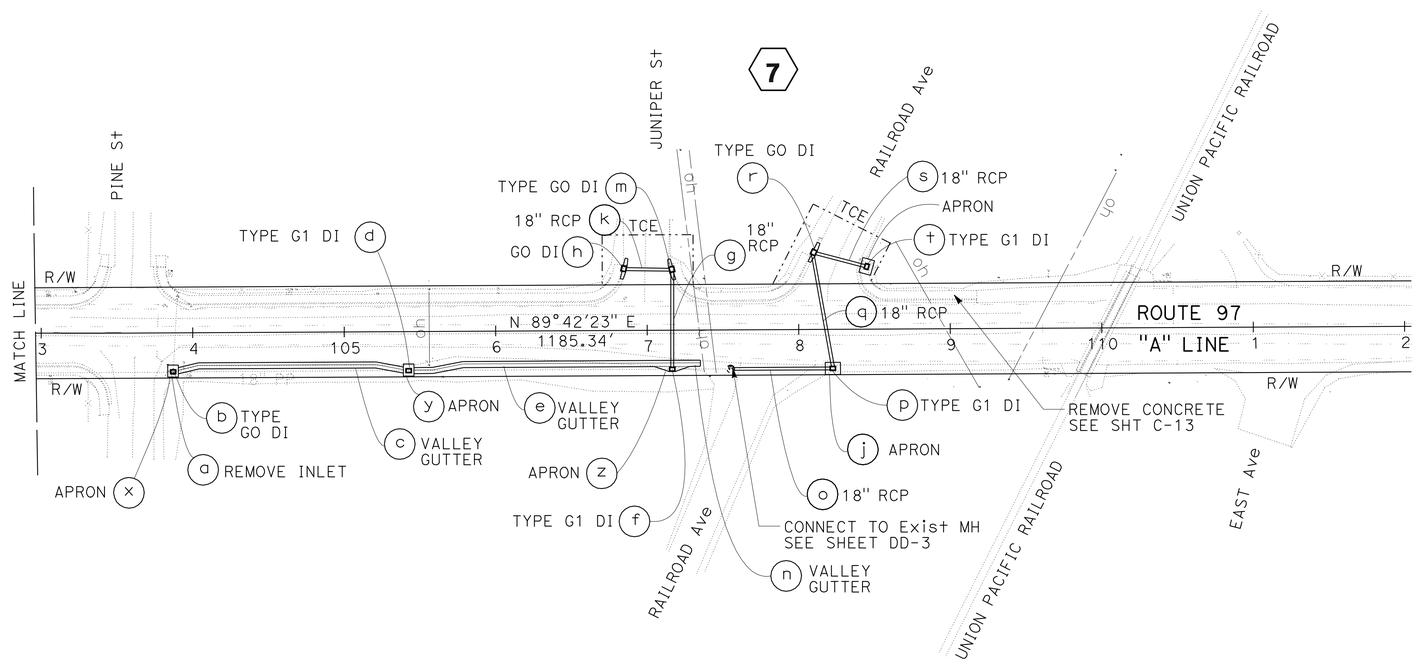

3 **REVISED PER ADDENDUM No. 3 DATED DECEMBER 3, 2010**

THIS PLAN ACCURATE FOR DRAINAGE WORK ONLY

DRAINAGE PLAN

SCALE: 1" = 50'

D-4

REVISED BY	DATE REVISED

CALCULATED-DESIGNED BY	GREG KINGSFIELD
CHECKED BY	STEVE ALAWAR
FUNCTIONAL SUPERVISOR	STEVE THORNE

STATE OF CALIFORNIA - DEPARTMENT OF TRANSPORTATION

Caltrans® **HYDRAULICS DESIGN**

24c010ia004.add

LAST REVISION 07-06-10 | DATE PLOTTED => 30-NOV-2010 | TIME PLOTTED => 16:26

Dist	COUNTY	ROUTE	POST MILES TOTAL PROJECT	SHEET No.	TOTAL SHEETS
02	Sis	97	40.1/54.1	31	114

REGISTERED CIVIL ENGINEER 07-06-02 DATE

7-12-10
PLANS APPROVAL DATE

REGISTERED PROFESSIONAL ENGINEER GREG KINGSFIELD No. C76297 Exp 6-30-12 CIVIL STATE OF CALIFORNIA

THE STATE OF CALIFORNIA OR ITS OFFICERS OR AGENTS SHALL NOT BE RESPONSIBLE FOR THE ACCURACY OR COMPLETENESS OF SCANNED COPIES OF THIS PLAN SHEET.

3

LEGEND

11.25° HORIZ ELBOW

VIEW LOOKING INTO PIPE

ABBREVIATIONS

DD DRAINAGE DETAIL SHEET
GFL UNDEPRESSED FLOW LINE
FLE FLOWLINE ELEVATION
EL ELEVATION
TCE TEMPORARY CONSTRUCTION EASEMENT

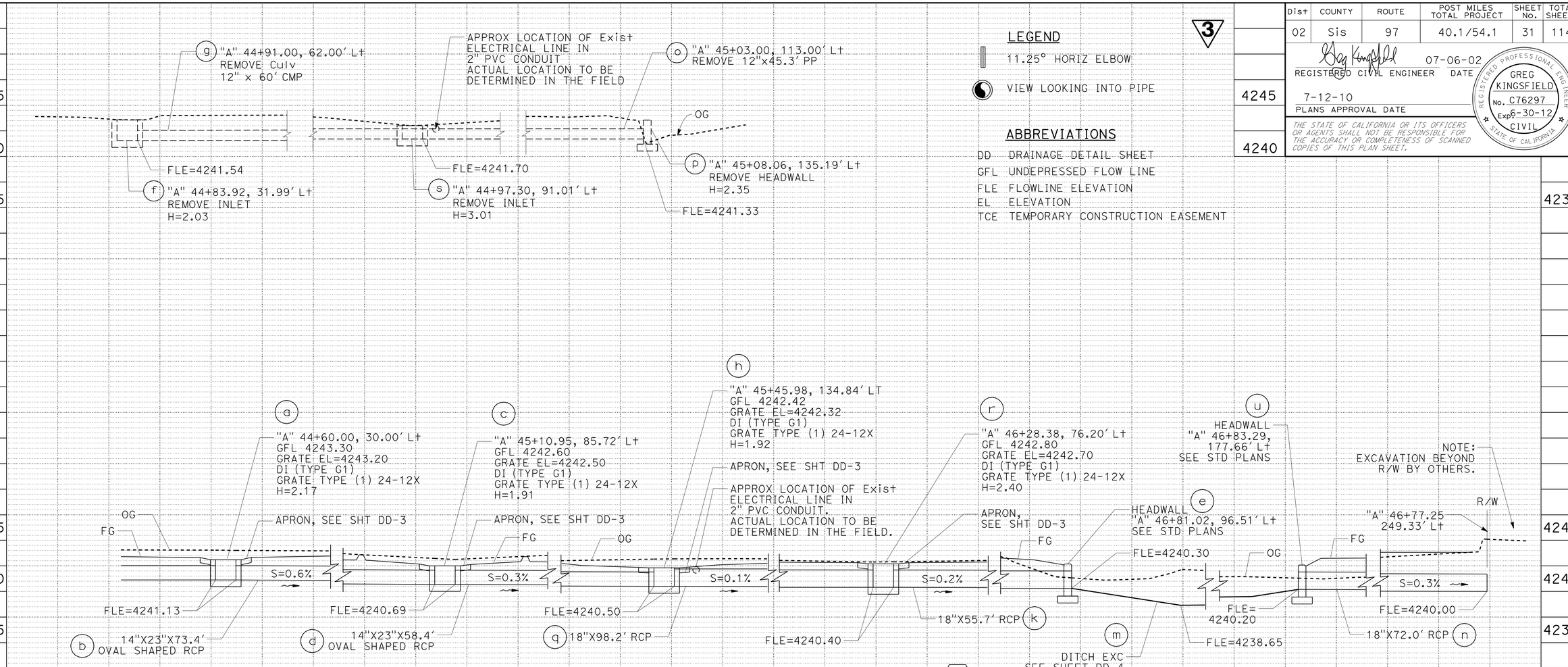

DRAINAGE SYSTEM NO. 2

"A" 44+60, 30' Lt TO "A" 46+77, 249' Lt

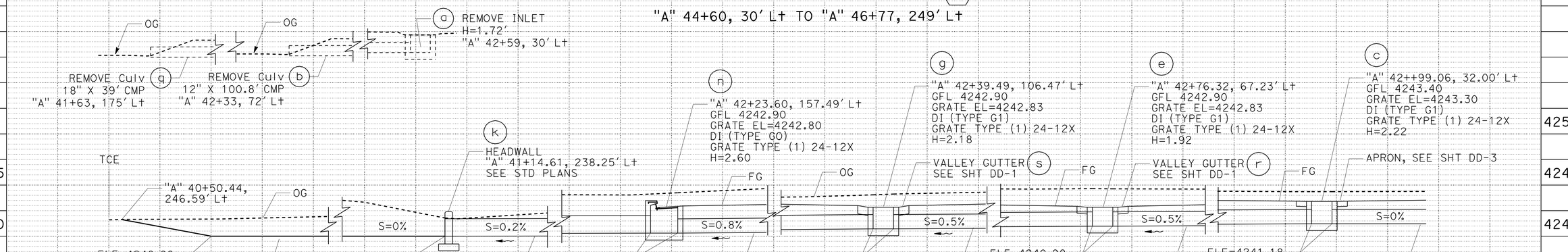

DRAINAGE SYSTEM NO. 1

"A" 40+49, 247' Lt TO "A" 44+60, 30' Lt

3 **REVISED PER ADDENDUM No. 3 DATED DECEMBER 3, 2010**

DRAINAGE PROFILES

SCALE: 1" = 5' HORIZ
1" = 5' VERT

DP-1

STATE OF CALIFORNIA - DEPARTMENT OF TRANSPORTATION
Caltrans® HYDRAULICS DESIGN

FUNCTIONAL SUPERVISOR: STEVE THORNE
CALCULATED-DESIGNED BY: STEVE ALAWAR
CHECKED BY: GREG KINGSFIELD
REVISED BY / DATE REVISED

24c010ib001.dgn

LAST REVISION DATE PLOTTED => 30-NOV-2010
TIME PLOTTED => 16:26
07-06-10

Dist	COUNTY	ROUTE	POST MILES TOTAL PROJECT	SHEET No.	TOTAL SHEETS
02	Sis	97	40.1/54.1	32	114

REGISTERED CIVIL ENGINEER 07-06-02 DATE

7-12-10
PLANS APPROVAL DATE

REGISTERED PROFESSIONAL ENGINEER GREG KINGSFIELD No. C76297 Exp 6-30-12 CIVIL STATE OF CALIFORNIA

THE STATE OF CALIFORNIA OR ITS OFFICERS OR AGENTS SHALL NOT BE RESPONSIBLE FOR THE ACCURACY OR COMPLETENESS OF SCANNED COPIES OF THIS PLAN SHEET.

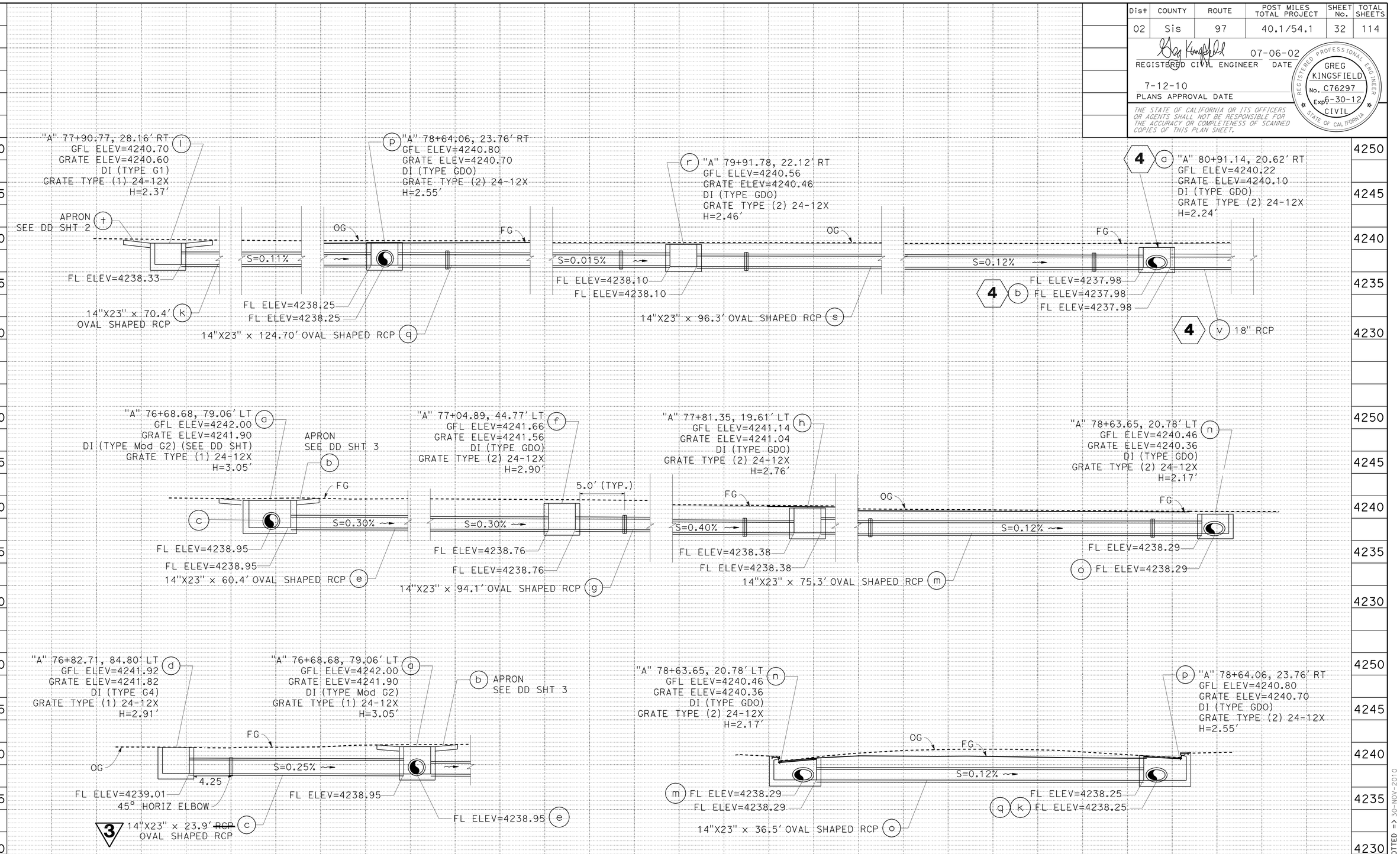

DRAINAGE SYSTEM NO. 3

"A" 77+04.89, 44.75' LT TO "A" 79+91.78, 22.12' RT

DRAINAGE PROFILES

SCALE: 1" = 5' HORIZ
1" = 5' VERT

DP-2

3 **REVISED PER ADDENDUM No. 3 DATED DECEMBER 3, 2010**

REVISED BY | DATE REVISED

STEVE ALAWAR | GREG KINGSFIELD

CALCULATED-DESIGNED BY | CHECKED BY

FUNCTIONAL SUPERVISOR: STEVE THORNE

STATE OF CALIFORNIA - DEPARTMENT OF TRANSPORTATION
Caltrans® HYDRAULICS DESIGN

V:\Project\Plans\PSEWorking\d2\02-4c0101-add\24c010ib002.add

LAST REVISION | DATE PLOTTED => 30-NOV-2010
07-06-10 | TIME PLOTTED => 16:26

Dist	COUNTY	ROUTE	POST MILES TOTAL PROJECT	SHEET No.	TOTAL SHEETS
02	Sis	97	40.1/54.1	33	114

REGISTERED CIVIL ENGINEER 07-06-02 DATE

7-12-10
PLANS APPROVAL DATE

REGISTERED PROFESSIONAL ENGINEER GREG KINGSFIELD No. C76297 Exp 6-30-12 CIVIL STATE OF CALIFORNIA

THE STATE OF CALIFORNIA OR ITS OFFICERS OR AGENTS SHALL NOT BE RESPONSIBLE FOR THE ACCURACY OR COMPLETENESS OF SCANNED COPIES OF THIS PLAN SHEET.

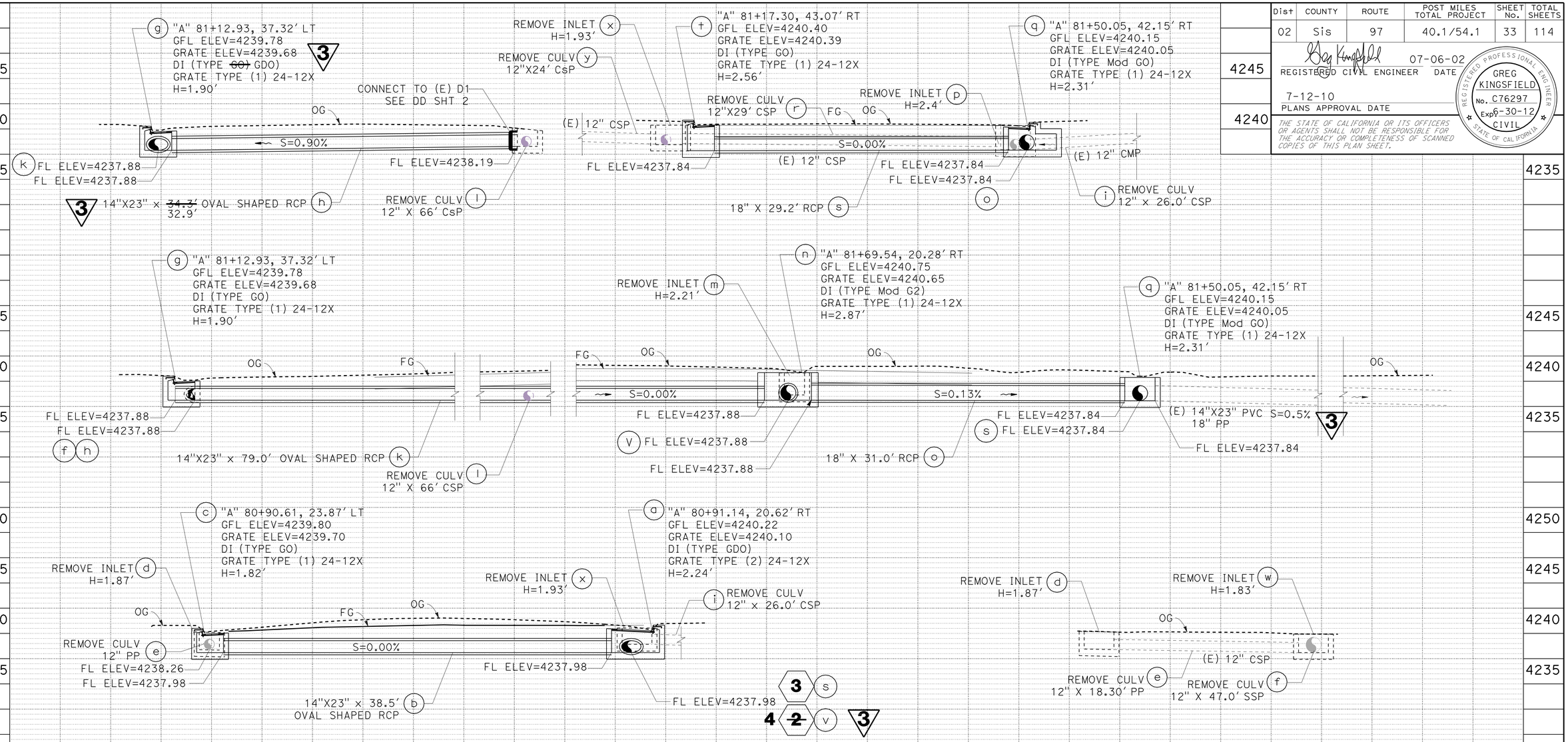

3 **REVISED PER ADDENDUM No. 3**
DATED DECEMBER 3, 2010

DRAINAGE SYSTEM NO. 4
"A" 79+91.78, 44.75'RT TO "A" 81+76.29, 19.50' RT

DRAINAGE PROFILES

SCALE: 1" = 5' HORIZ
1" = 5' VERT

DP-3

REVISED BY | DATE REVISED
STEVE ALAWAR | GREG KINGSFIELD
CALCULATED-DESIGNED BY | CHECKED BY
FUNCTIONAL SUPERVISOR
STEVE THORNE

STATE OF CALIFORNIA - DEPARTMENT OF TRANSPORTATION
Caltrans® HYDRAULICS DESIGN

V:\Project\Plans\PSEWorking\d2\02-4c0101-add\24c010ib003.add

LAST REVISION DATE PLOTTED => 30-NOV-2010
07-06-10 TIME PLOTTED => 16:37

Dist	COUNTY	ROUTE	POST MILES TOTAL PROJECT	SHEET No.	TOTAL SHEETS
02	Sis	97	40.1/54.1	36	114

REGISTERED CIVIL ENGINEER 07-06-02 DATE

7-12-10
PLANS APPROVAL DATE

REGISTERED PROFESSIONAL ENGINEER GREG KINGSFIELD No. C76297 Exp 6-30-12 CIVIL STATE OF CALIFORNIA

THE STATE OF CALIFORNIA OR ITS OFFICERS OR AGENTS SHALL NOT BE RESPONSIBLE FOR THE ACCURACY OR COMPLETENESS OF SCANNED COPIES OF THIS PLAN SHEET.

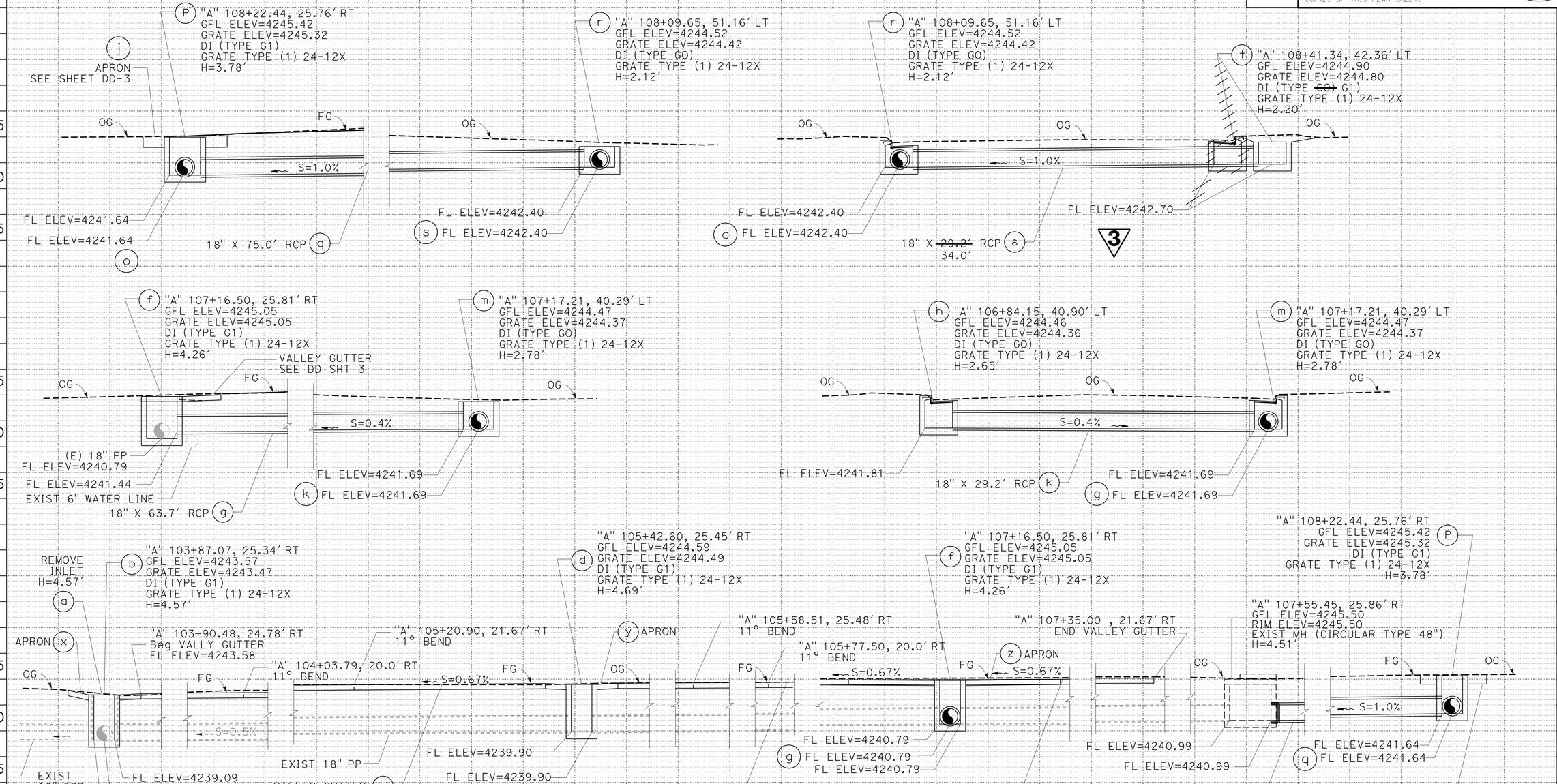

DRAINAGE SYSTEM NO. 7

"A" 103+87.08, 25.68' RT TO "A" 108+22.46, 25.80' LT

DRAINAGE PROFILES

SCALE: 1" = 5' HORIZ
1" = 5' VERT

DP-6

3 **REVISED PER ADDENDUM No. 3 DATED DECEMBER 3, 2010**

STATE OF CALIFORNIA - DEPARTMENT OF TRANSPORTATION
Caltrans® HYDRAULICS DESIGN

FUNCTIONAL SUPERVISOR: STEVE THORNE
CALCULATED-DESIGNED BY: STEVE ALAWAR
CHECKED BY: GREG KINGSFIELD
REVISED BY / DATE REVISED

V:\Project\Plans\PSEWorking\d2\02-4c0101-add\24c0101b006.add

LAST REVISION DATE PLOTTED => 01-DEC-2010
TIME PLOTTED => 09:45
07-06-10

Dist	COUNTY	ROUTE	POST MILES TOTAL PROJECT	SHEET No.	TOTAL SHEETS
02	Sis	97	40.1/54.1	37	114

REGISTERED CIVIL ENGINEER 07-06-02 DATE

7-12-10
PLANS APPROVAL DATE

REGISTERED PROFESSIONAL ENGINEER GREG KINGSFIELD No. C76297 Exp 6-30-12 CIVIL STATE OF CALIFORNIA

THE STATE OF CALIFORNIA OR ITS OFFICERS OR AGENTS SHALL NOT BE RESPONSIBLE FOR THE ACCURACY OR COMPLETENESS OF SCANNED COPIES OF THIS PLAN SHEET.

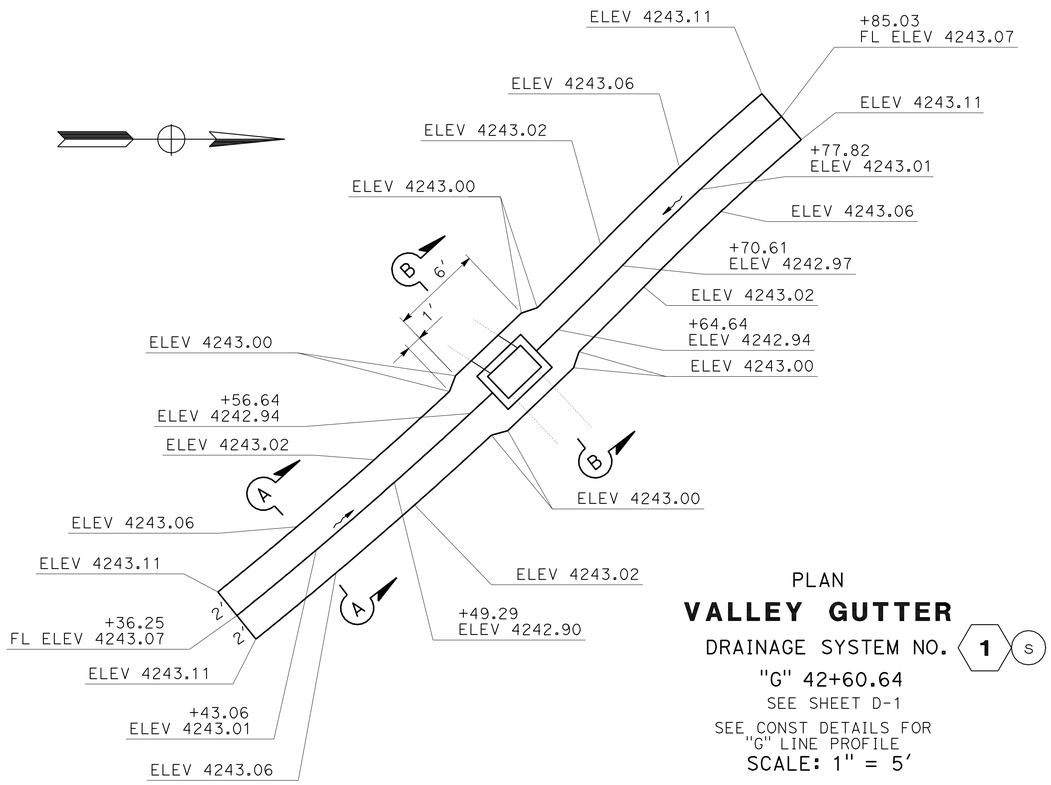

PLAN

VALLEY GUTTER

DRAINAGE SYSTEM NO. 1 S

"G" 42+60.64

SEE SHEET D-1

SEE CONST DETAILS FOR "G" LINE PROFILE

SCALE: 1" = 5'

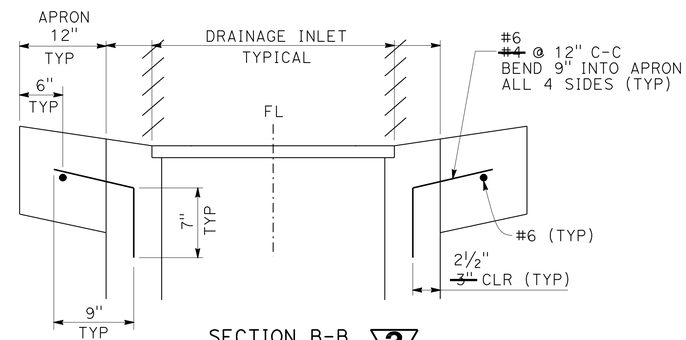

SECTION B-B
NO SCALE 3

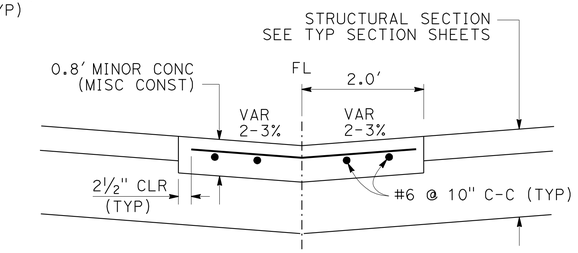

SECTION A-A
NO SCALE 3

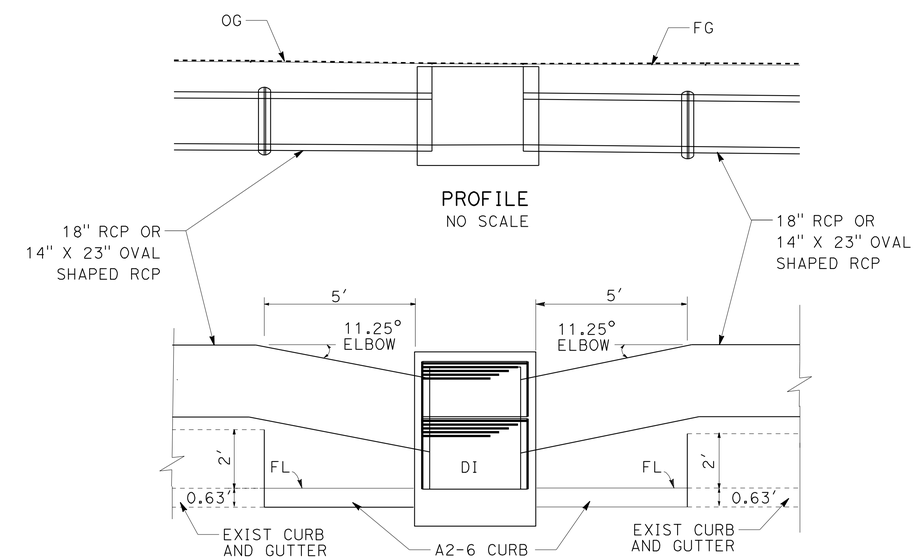

PLAN

11.25° HORIZONTAL ELBOW DETAIL

NO SCALE

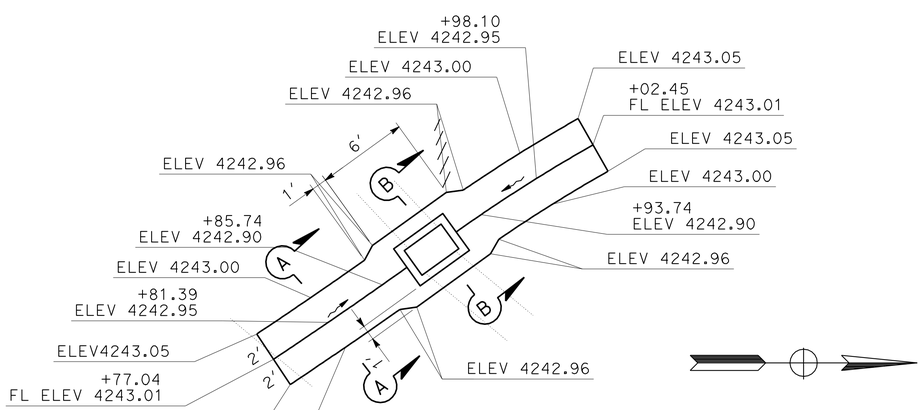

PLAN 3

VALLEY GUTTER

DRAINAGE SYSTEM NO. 1 r

"D" 42+87.74 ~~"G" 42+76.31~~

SEE SHEET D-1

SEE CONST DETAILS FOR "D" LINE PROFILE

SCALE: 1" = 5'

3 **REVISED PER ADDENDUM No. 3 DATED DECEMBER 3, 2010**

DRAINAGE DETAILS

SCALE: AS SHOWN **DD-1**

REVISED BY | DATE REVISED
GREG KINGSFIELEVD | STEVE ALAWAR
CALCULATED-DESIGNED BY | CHECKED BY
FUNCTIONAL SUPERVISOR | STEVE THORNE

STATE OF CALIFORNIA - DEPARTMENT OF TRANSPORTATION
Caltrans HYDRAULICS DESIGN

V:\ProjectPlans\PSEWorking\d2\02-4c0101-add\24c010ic001.add

LAST REVISION 07-06-10 | DATE PLOTTED => 01-DEC-2010 | TIME PLOTTED => 12:38

Dist	COUNTY	ROUTE	POST MILES TOTAL PROJECT	SHEET No.	TOTAL SHEETS
02	Sis	97	40.1/54.1	38	114

REGISTERED CIVIL ENGINEER 07-06-02 DATE

7-12-10
PLANS APPROVAL DATE

REGISTERED PROFESSIONAL ENGINEER GREG KINGSFIELD No. C76297 Exp 6-30-12 CIVIL STATE OF CALIFORNIA

THE STATE OF CALIFORNIA OR ITS OFFICERS OR AGENTS SHALL NOT BE RESPONSIBLE FOR THE ACCURACY OR COMPLETENESS OF SCANNED COPIES OF THIS PLAN SHEET.

3

NOTES:

1. (N) - NOT A SEPARATE PAY ITEM, FOR INFORMATION ONLY.
2. FOR DETAILS NOT SHOWN, SEE STD PLANS D73 AND D74B.

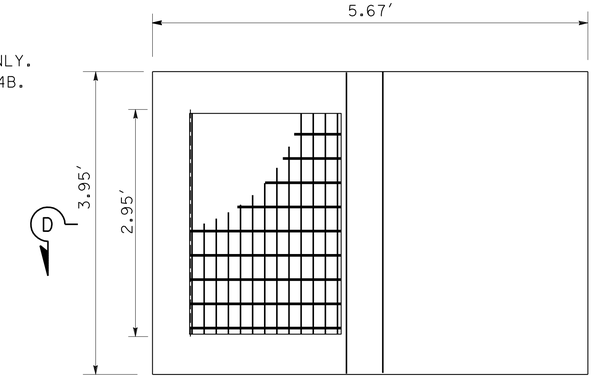

PLAN

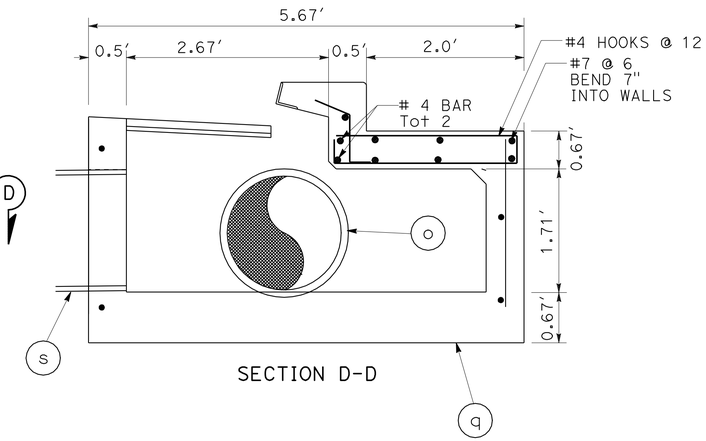

SECTION D-D

MODIFY TYPE GO DI

DRAINAGE SYSTEM No. 4 q
"A" 81+50.05 RT

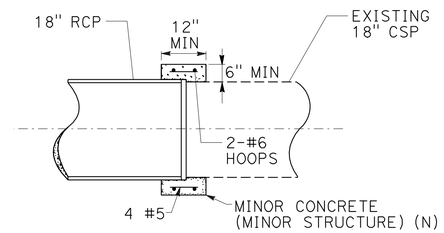

FIELD CAST CONCRETE COLLAR DETAIL

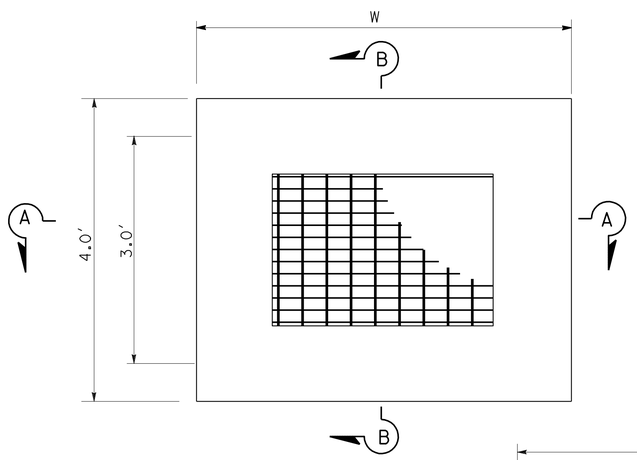

PLAN

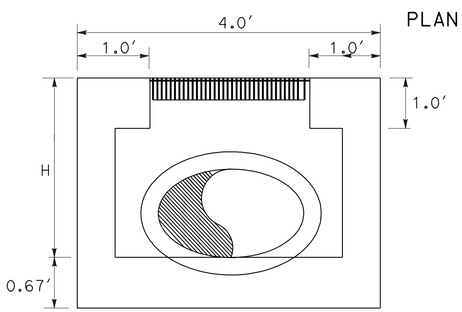

SECTION B-B

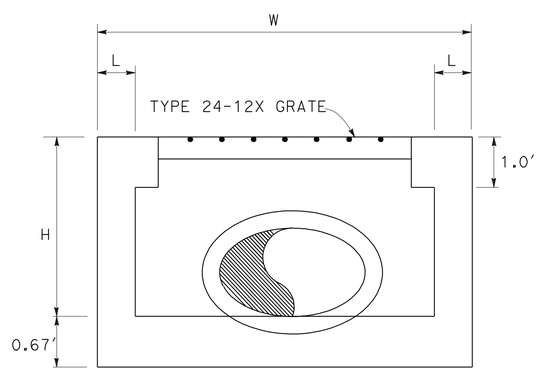

SECTION A-A

	H	W	L
3 a	3.05'	4.95'	0.50'
4 n	2.87'	5.95,	0.67'

MODIFY TYPE G2 DI

DRAINAGE SYSTEM No. 3 a
"A" 76+68.79

DRAINAGE SYSTEM No. 4 n
"A" 81+76.29

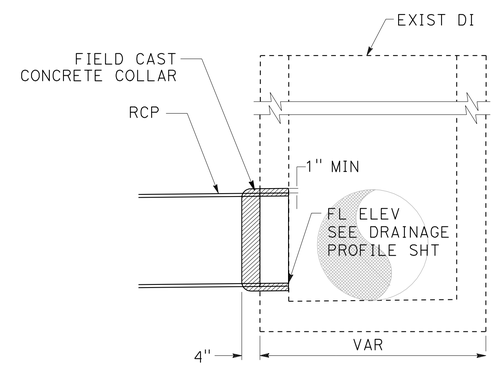

SECTION

CONNECT TO EXIST INLET

DRAINAGE SYSTEM NO.	STATION	STRUCTURE
4 h	"A" 81+12.93	TYPE G1 DI
5 e	"A" 86+82.20	TYPE G1 DI
7 o	"A" 107+55.45	48" CIRCULAR MH

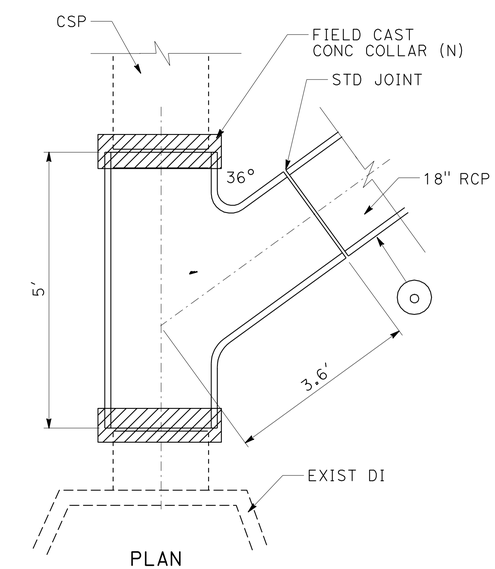

PLAN

18" RCP WYE

DRAINAGE SYSTEM No. 6 o
"A" 100+01.65, 60.27' RT

3 **REVISED PER ADDENDUM No. 3 DATED DECEMBER 3, 2010**

DRAINAGE DETAILS

NO SCALE

DD-2

STATE OF CALIFORNIA - DEPARTMENT OF TRANSPORTATION
Caltrans® HYDRAULICS DESIGN

FUNCTIONAL SUPERVISOR: STEVE THORNE
CALCULATED-DESIGNED BY: STEVE ALAWAR
CHECKED BY: GREG KINGSFIELD
REVISED BY
DATE REVISED

24c010ic002.add

LAST REVISION 07-06-10
DATE PLOTTED => 01-DEC-2010
TIME PLOTTED => 09:45

Dist	COUNTY	ROUTE	POST MILES TOTAL PROJECT	SHEET No.	TOTAL SHEETS
02	Sis	97	40.1/54.1	39	114

REGISTERED CIVIL ENGINEER 07-06-02 DATE

7-12-10
PLANS APPROVAL DATE

REGISTERED PROFESSIONAL ENGINEER GREG KINGSFIELD No. C76297 Exp 6-30-12 CIVIL STATE OF CALIFORNIA

THE STATE OF CALIFORNIA OR ITS OFFICERS OR AGENTS SHALL NOT BE RESPONSIBLE FOR THE ACCURACY OR COMPLETENESS OF SCANNED COPIES OF THIS PLAN SHEET.

3

NOTE:

1. SEE STD PLANS FOR CURB AND GUTTER DETAILS.

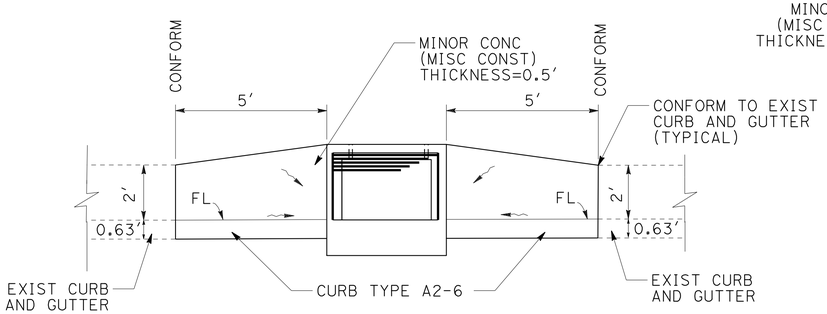

TYPE GO INLET- GUTTER DEPRESSION

DRAINAGE SYSTEM NO.	STATION	STRUCTURE	(N) AREA/SQFT
4c	"A" 80+90.61	TYPE GO DI	21.66
4g	"A" 81+12.93	TYPE GO DI	21.66
4t	"A" 81+17.30	TYPE GO DI	21.66
4q	"A" 81+50.05	TYPE GO DI	21.66
5n	"A" 90+48.06	TYPE GO DI	21.66
5r	"A" 92+86.14	TYPE GO DI	21.66
6a	"A" 95+26.05	TYPE GO DI	21.66
6g	"A" 97+55.93	TYPE GO DI	21.66
6n	"A" 99+28.14	TYPE GO DI	21.66
7h	"A" 106+86.99	TYPE GO DI	21.66
7m	"A" 107+20.69	TYPE GO DI	21.66
7r	"A" 108+13.23	TYPE GO DI	21.66

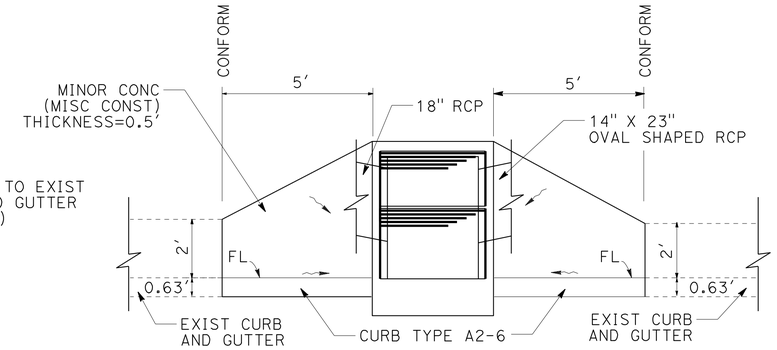

TYPE GDO INLET- GUTTER DEPRESSION AND PIPE CONNECTIONS

DRAINAGE SYSTEM NO.	STATION	STRUCTURE	(N) AREA/SQFT
3f	"A" 77+04.89	TYPE GDO DI	31.84
3h	"A" 77+81.35	TYPE GDO DI	31.84
3n	"A" 78+63.65	TYPE GDO DI	31.84
3p	"A" 78+64.06	TYPE GDO DI	31.84
3r	"A" 979+91.78	TYPE GDO DI	31.84
4a	"A" 80+91.14	TYPE GDO DI	31.84
4n	"A" 81+76.29	TYPE MOD G2 DI	25.03
5d	"A" 86+94.40	TYPE GDO DI	31.84
5g	"A" 89+17.20	TYPE GDO DI	31.84
5l	"A" 90+48.08	TYPE GDO DI	31.84
5p	"A" 92+86.59	TYPE GDO DI	31.84
6c	"A" 95+21.33	TYPE GDO DI	31.84
6e	"A" 97+53.08	TYPE GDO DI	31.84
6k	"A" 99+81.20	TYPE GDO DI	31.84

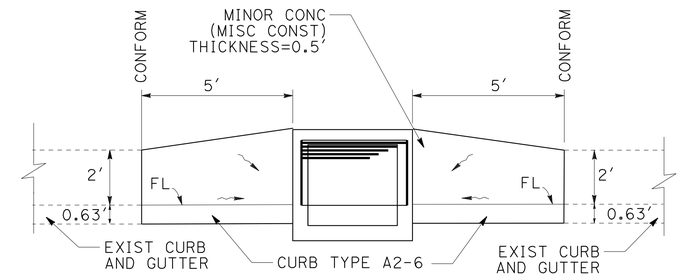

TYPE G4 INLET- GUTTER DEPRESSION

DRAINAGE SYSTEM NO.	STATION	STRUCTURE	(N) AREA/SQFT
3d	"A" 76+82.71	TYPE G4 DI	21.40

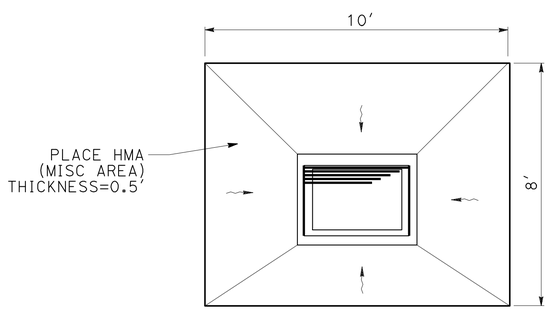

TYPE G1 AND TYPE G2 INLET - APRON

DRAINAGE SYSTEM NO.	STATION	STRUCTURE	PLACE HMA (MISC AREA) SQYD
3t	"A" 77+90.28	TYPE G2 DI	6.3
7j	"A" 108+26.02	TYPE G1 DI	7.6
7t	"A" 108.45.93	TYPE G1 DI	7.6

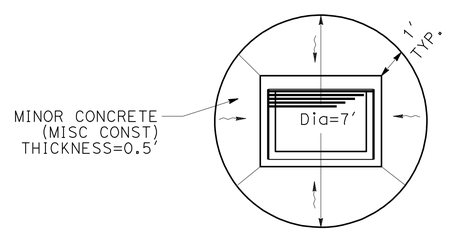

TYPE G1 INLET - APRON

DRAINAGE SYSTEM NO.	STATION	STRUCTURE	(N) AREA/SQFT
1c	"A" 42+99.00	TYPE G1 DI	26.48
2a	"A" 44+60.00	TYPE G1 DI	26.48
2c	"A" 45+11.00	TYPE G1 DI	26.48
2h	"A" 45+46.00	TYPE G1 DI	26.48
2r	"A" 46+28.00	TYPE G1 DI	26.48

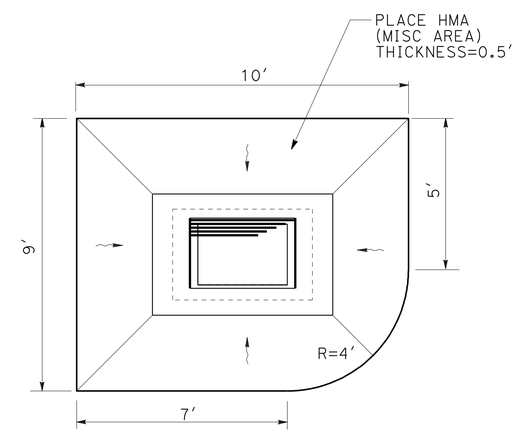

TYPE MOD G2 INLET - APRON

DRAINAGE SYSTEM NO.	STATION	STRUCTURE	PLACE HMA (MISC AREA) SQYD
3b	"A" 76+68.68	TYPE Mod G2 DI	7.9

3 **REVISED PER ADDENDUM No. 3 DATED DECEMBER 3, 2010**

DRAINAGE DETAILS

NO SCALE

DD-3

STATE OF CALIFORNIA - DEPARTMENT OF TRANSPORTATION
Caltrans® HYDRAULICS DESIGN
FUNCTIONAL SUPERVISOR: STEVE THORNE
CALCULATED-DESIGNED BY: STEVE ALAWAR
CHECKED BY: GREG KINGSFIELD
REVISED BY / DATE REVISED

LAST REVISION DATE PLOTTED => 01-DEC-2010
07-06-10 TIME PLOTTED => 09:45

24c010ic003.add

Dist	COUNTY	ROUTE	POST MILES TOTAL PROJECT	SHEET No.	TOTAL SHEETS
02	Sis	97	40.1/54.1	40	114

REGISTERED CIVIL ENGINEER 07-06-02 DATE

7-12-10
PLANS APPROVAL DATE

REGISTERED PROFESSIONAL ENGINEER GREG KINGSFIELD No. C76297 Exp 6-30-12 CIVIL STATE OF CALIFORNIA

THE STATE OF CALIFORNIA OR ITS OFFICERS OR AGENTS SHALL NOT BE RESPONSIBLE FOR THE ACCURACY OR COMPLETENESS OF SCANNED COPIES OF THIS PLAN SHEET.

3

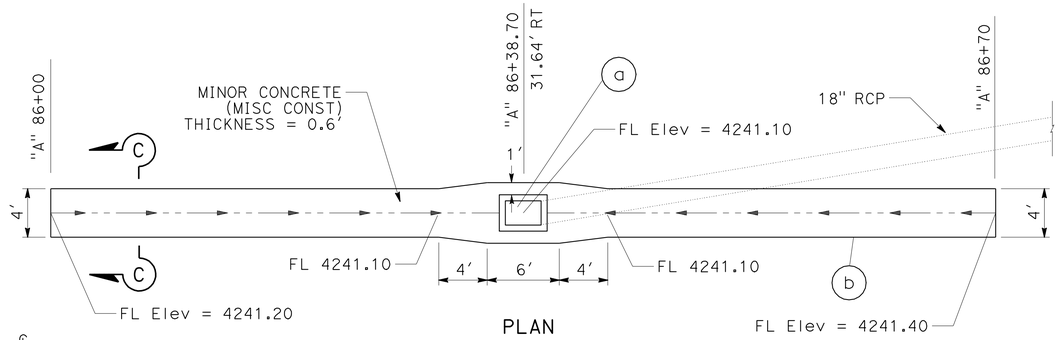

PLAN

VALLEY GUTTER

DRAINAGE SYSTEM No. 5 b

"A" 86+38.70, 31.64 RT

SEE SHEET C-12

SECTION C-C

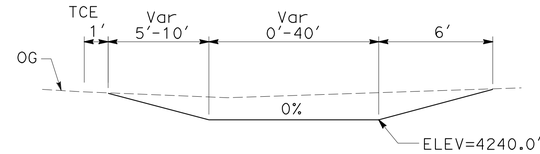

DRAINAGE SYSTEM No. 1 o

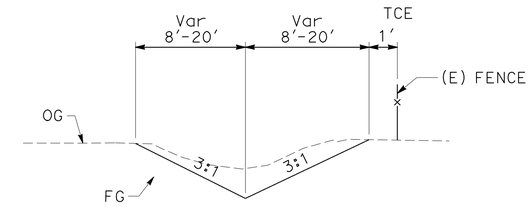

DRAINAGE SYSTEM No. 2 m

DITCH EXCAVATION DETAIL

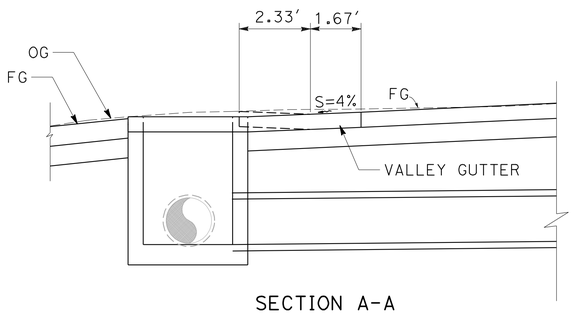

SECTION A-A

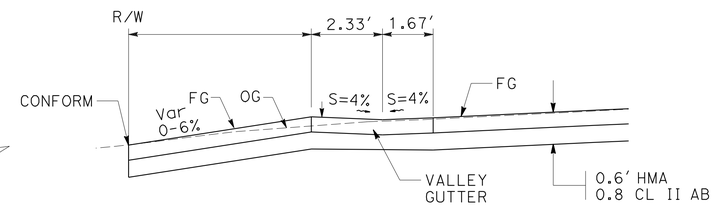

SECTION B-B

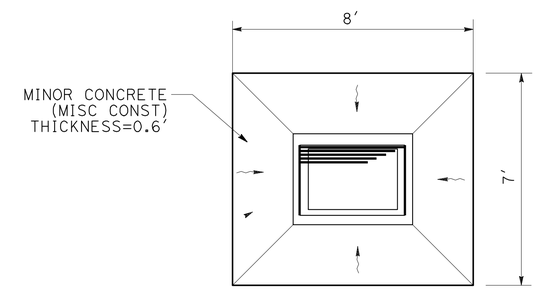

PLAN

TYPE G1 INLET- APRON

DRAINAGE SYSTEM NO.	STATION	STRUCTURE	(N) AREA/SQFT
7 x	"A" 103+87.07	TYPE G1 DI	43.80
7 y	"A" 105+42.60	TYPE G1 DI	43.80
7 z *	"A" 106+87.60	TYPE G1 DI	37.54

* VALLEY GUTTER AND APRON DETAIL

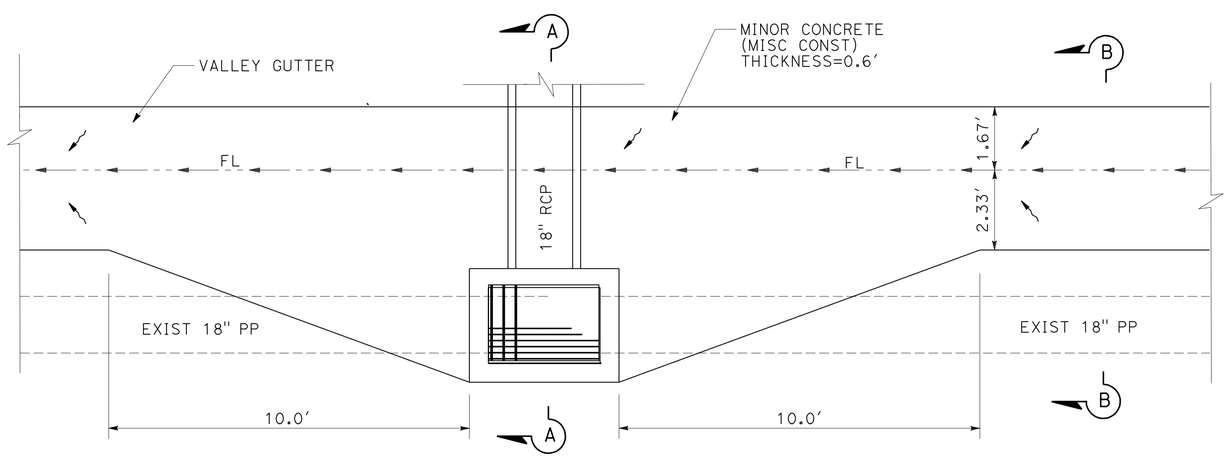

VALLEY GUTTER AND APRON DETAIL

DRAINAGE SYSTEM No. 7 c e z n

"A" 103+90.48, 24.78' RT TO "A" 107+35.00, 21.67' RT

3 **REVISED PER ADDENDUM No. 3 DATED DECEMBER 3, 2010**

DRAINAGE DETAILS

NO SCALE

DD-4

REVISED BY | DATE REVISED
GREG KINGSFIELD | STEVE ALAWAR
CALCULATED-DESIGNED BY | CHECKED BY
FUNCTIONAL SUPERVISOR | STEVE THORNE

STATE OF CALIFORNIA - DEPARTMENT OF TRANSPORTATION
Caltrans HYDRAULICS DESIGN

24c010ic004.add

LAST REVISION 07-06-10 | DATE PLOTTED => 01-DEC-2010 | TIME PLOTTED => 09:45

Dist	COUNTY	ROUTE	POST MILES TOTAL PROJECT	SHEET No.	TOTAL SHEETS
02	Sis	97	40.1/54.1	41	114

REGISTERED CIVIL ENGINEER 07-06-02 DATE

7-12-10
PLANS APPROVAL DATE

REGISTERED PROFESSIONAL ENGINEER GREG KINGSFIELD No. C76297 Exp 6-30-12 CIVIL STATE OF CALIFORNIA

THE STATE OF CALIFORNIA OR ITS OFFICERS OR AGENTS SHALL NOT BE RESPONSIBLE FOR THE ACCURACY OR COMPLETENESS OF SCANNED COPIES OF THIS PLAN SHEET.

NOTE:

1. (N) - NOT A SEPARATE PAY ITEM, FOR INFORMATION ONLY.

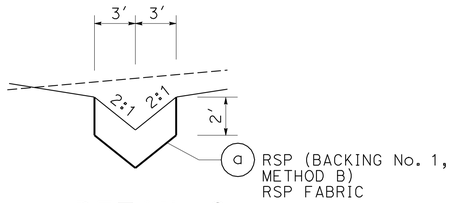

DETAIL C

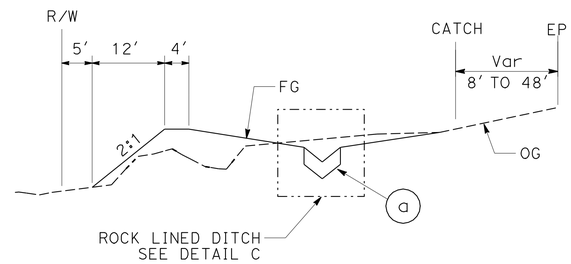

SECTION D-D

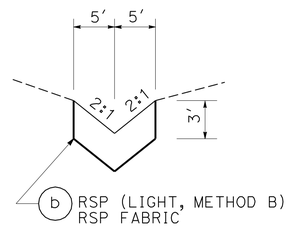

SECTION E-E

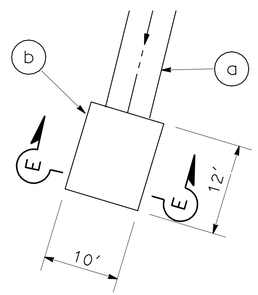

DETAIL B

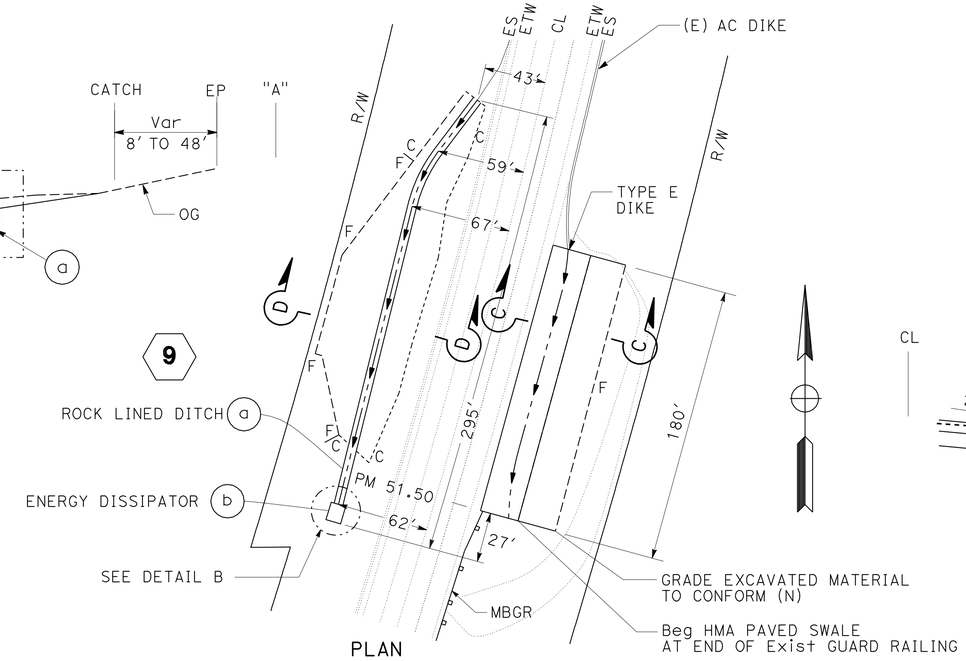

PLAN

ROCK LINED DITCH AND PAVED SWALE

ROUTE 97 PM 51.50

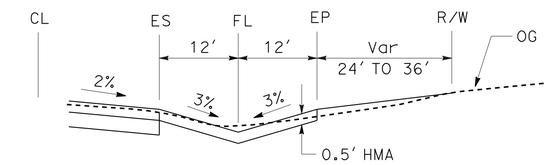

SECTION C-C

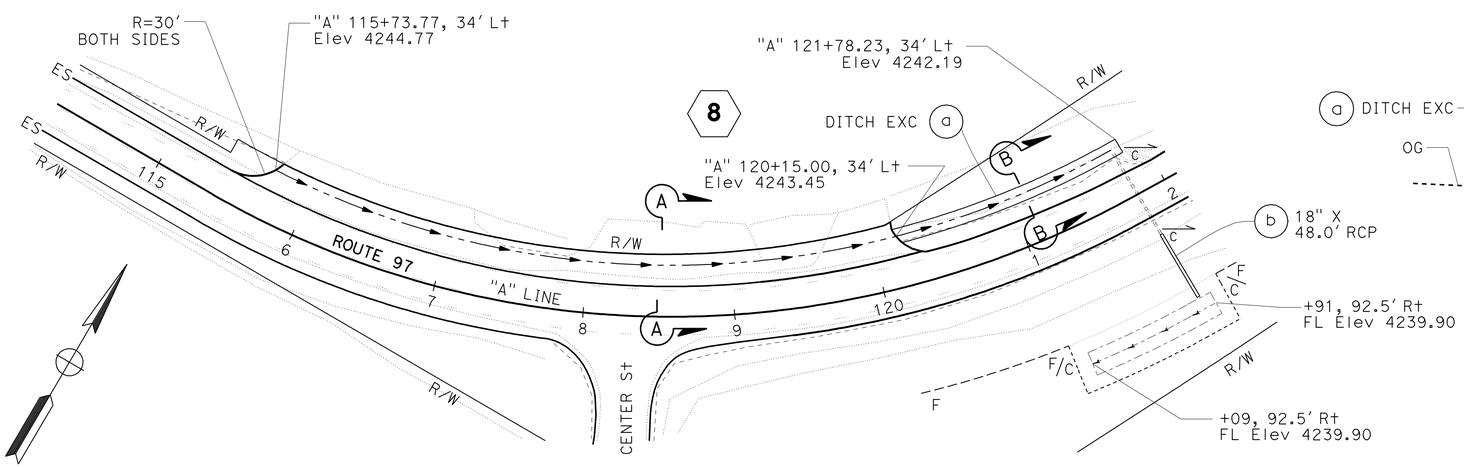

PLAN

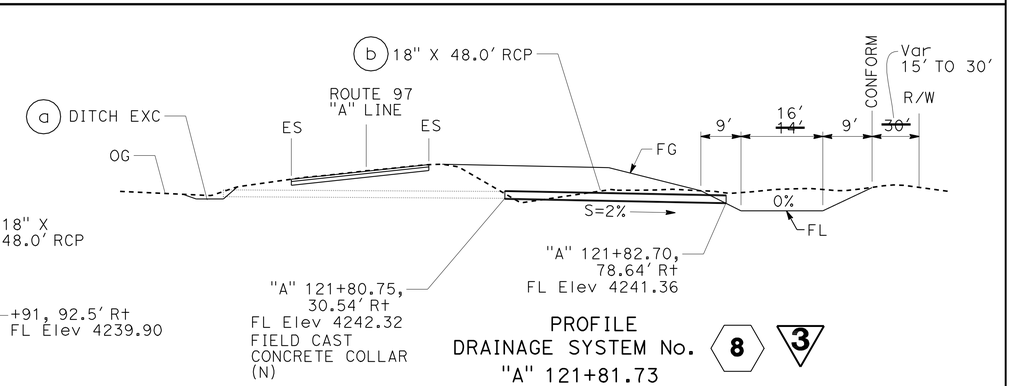

PROFILE
DRAINAGE SYSTEM No. 8 3
"A" 121+81.73

DETAIL D

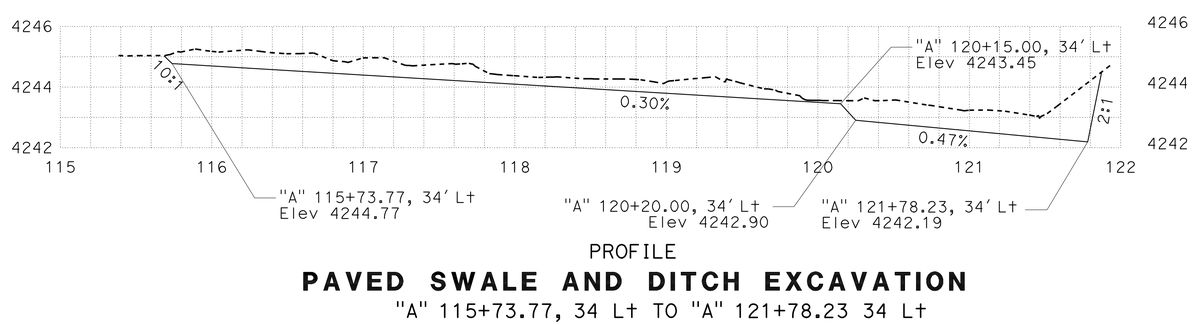

PROFILE

PAVED SWALE AND DITCH EXCAVATION

"A" 115+73.77, 34 Lt TO "A" 121+78.23 34 Lt

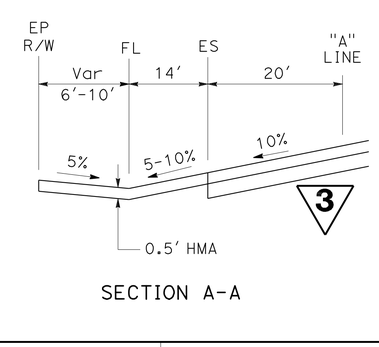

SECTION A-A

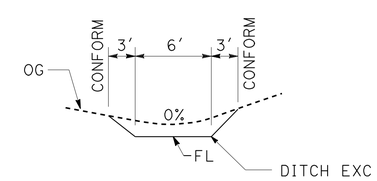

SECTION B-B

3 **REVISED PER ADDENDUM No. 3 DATED DECEMBER 3, 2010**

DRAINAGE DETAILS

NO SCALE

DD-5

REVISED BY	DATE REVISED
GREG KINGSFIELD	ALEX PETERSON
CALCULATED-DESIGNED BY	CHECKED BY
FUNCTIONAL SUPERVISOR	STEVE THORNE

STATE OF CALIFORNIA - DEPARTMENT OF TRANSPORTATION
Caltrans® HYDRAULICS DESIGN

V:\Project\Plans\PSE\Working\d2\02-4c0101-add\24c0101c005.add

LAST REVISION 07-06-10 | DATE PLOTTED => 01-DEC-2010 | TIME PLOTTED => 12:38

Dist	COUNTY	ROUTE	POST MILES TOTAL PROJECT	SHEET No.	TOTAL SHEETS
02	Sis	97	40.1/54.1	44	114

REGISTERED CIVIL ENGINEER 07-06-02 DATE

7-12-10
PLANS APPROVAL DATE

REGISTERED PROFESSIONAL ENGINEER GREG KINGSFIELD No. C76297 Exp 6-30-12 CIVIL STATE OF CALIFORNIA

THE STATE OF CALIFORNIA OR ITS OFFICERS OR AGENTS SHALL NOT BE RESPONSIBLE FOR THE ACCURACY OR COMPLETENESS OF SCANNED COPIES OF THIS PLAN SHEET.

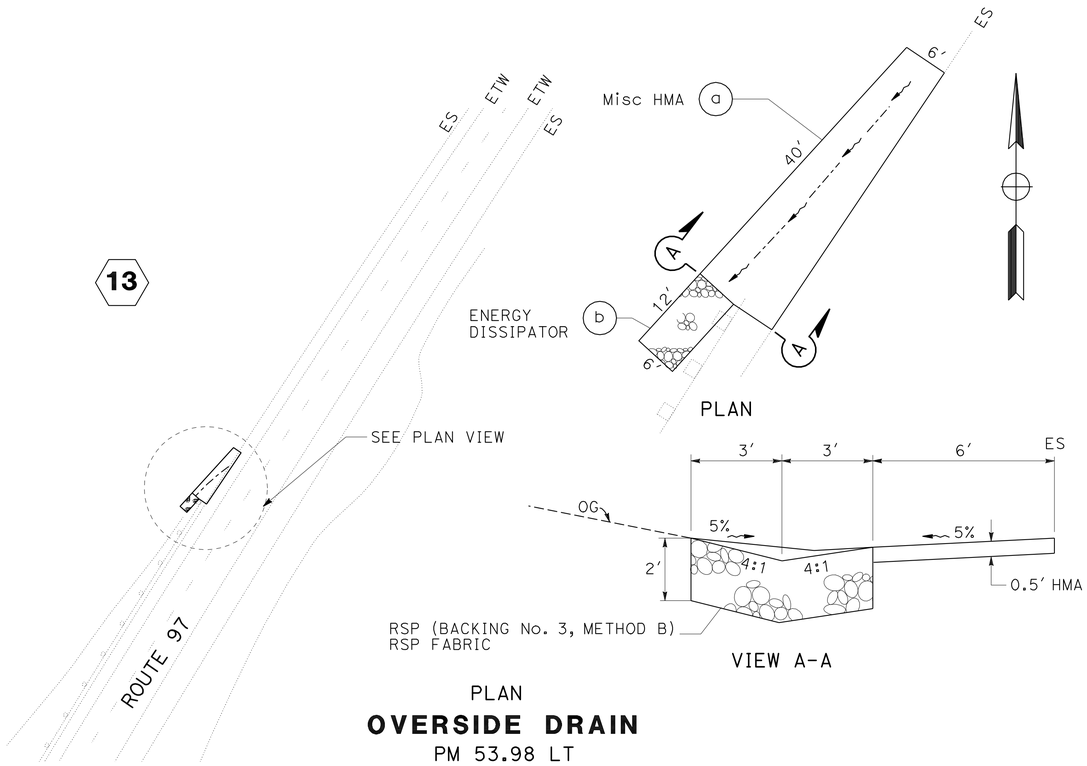

PLAN
OVERSIDE DRAIN
PM 53.98 LT

NOTE:
1. QUANTITIES ON SHEET Q-1.

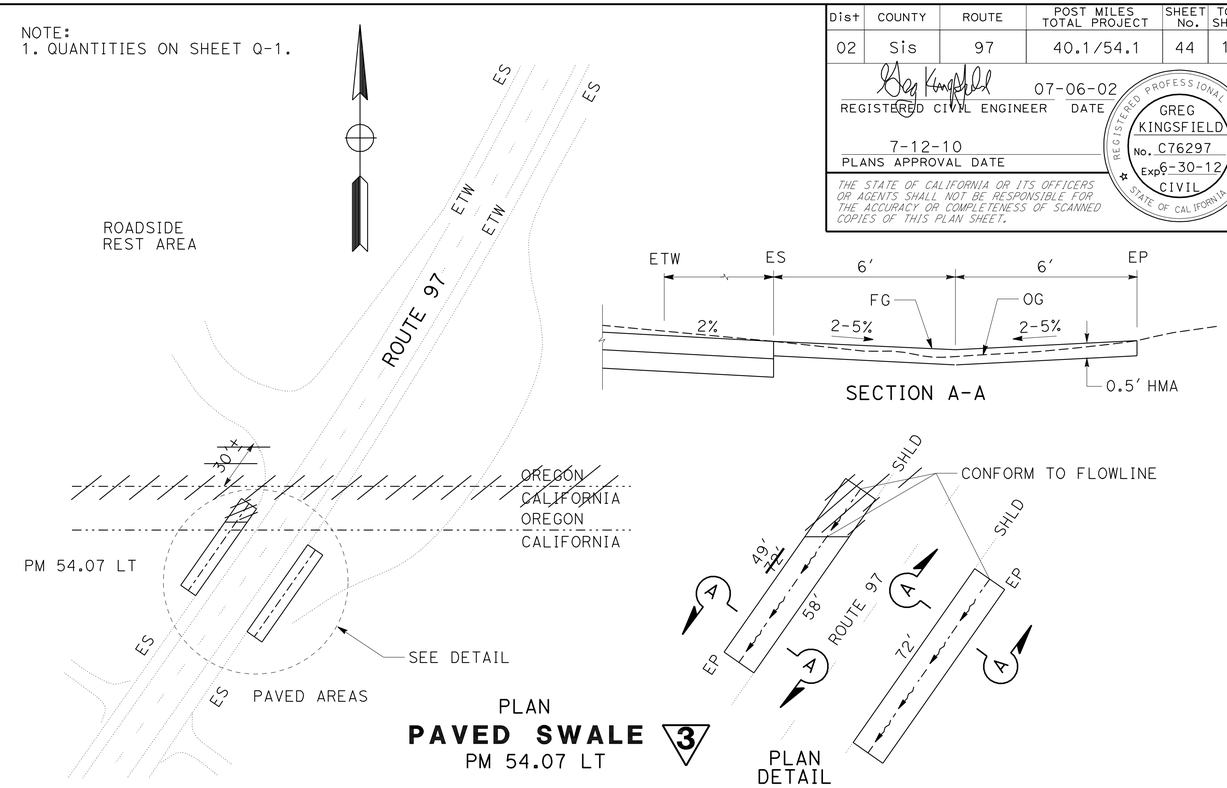

PLAN
PAVED SWALE 3
PM 54.07 LT

PLAN DETAIL

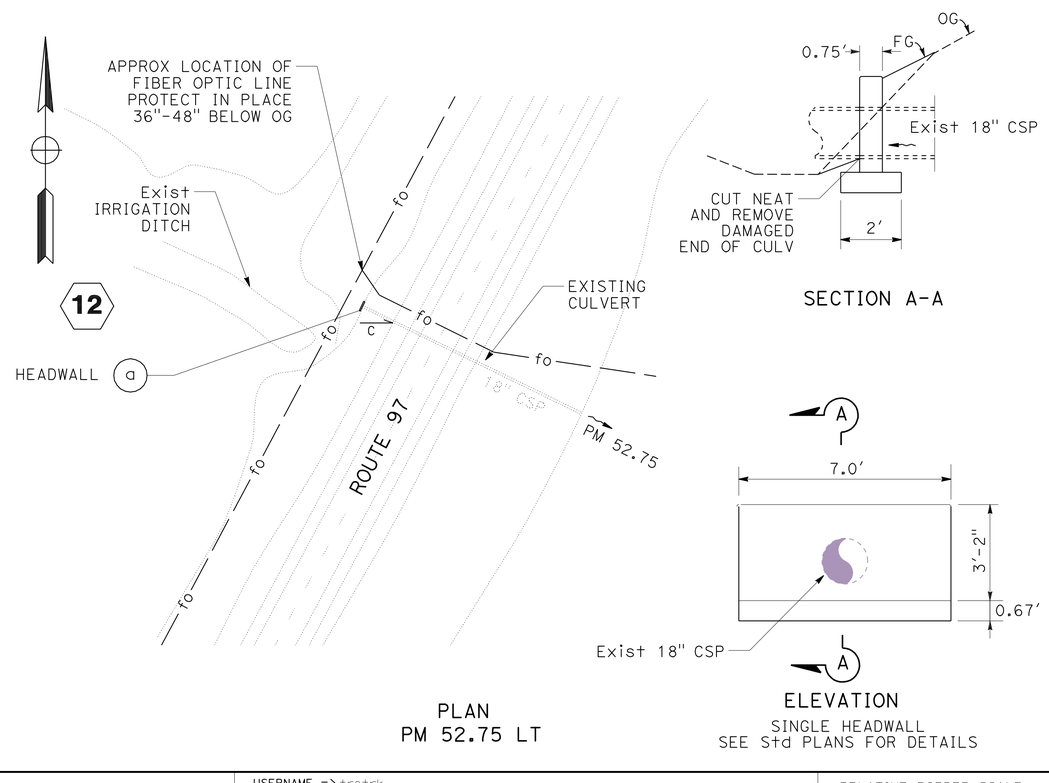

PLAN
PM 52.75 LT

ELEVATION
SINGLE HEADWALL
SEE Std PLANS FOR DETAILS

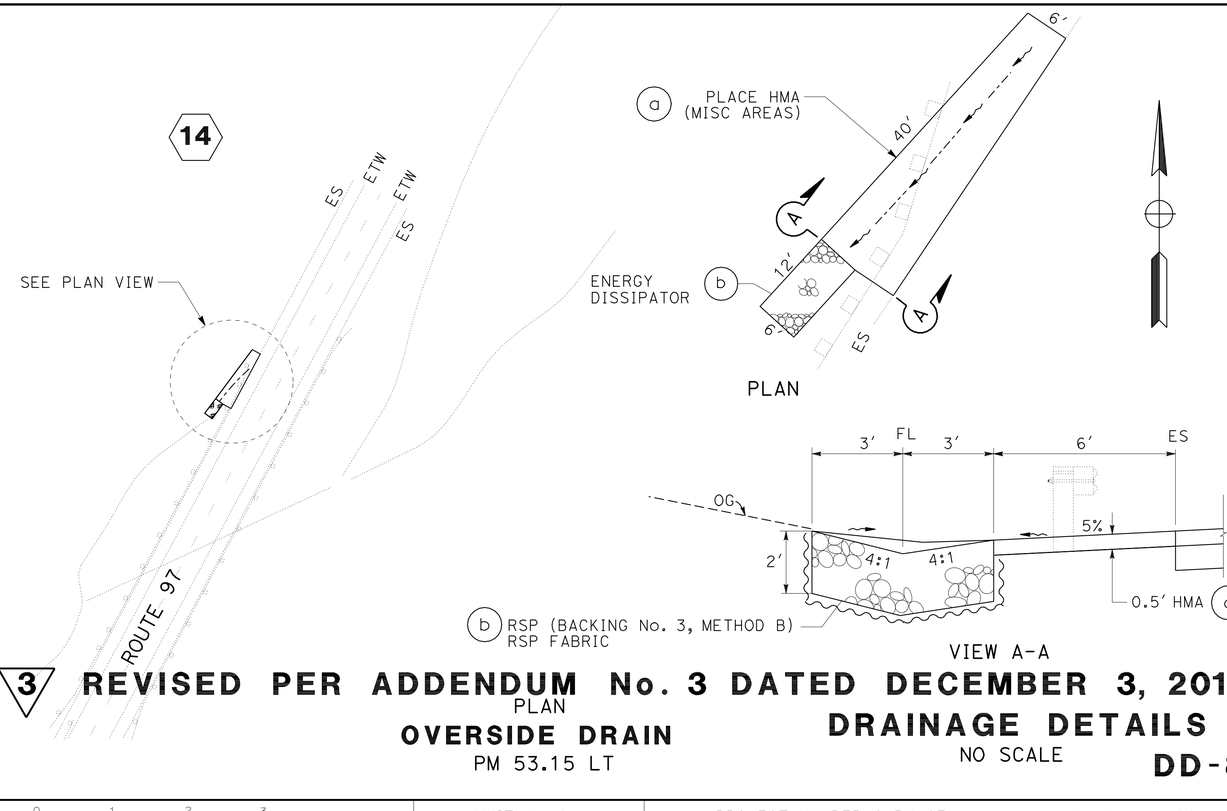

3 **REVISED PER ADDENDUM No. 3 DATED DECEMBER 3, 2010**

PLAN
OVERSIDE DRAIN
PM 53.15 LT

DRAINAGE DETAILS
NO SCALE
DD-8

REVISED BY | DATE REVISED
GREG KINGSFIELD | STEVE ALAWAR
CALCULATED-DESIGNED BY | CHECKED BY
FUNCTIONAL SUPERVISOR
STEVE THORNE

STATE OF CALIFORNIA - DEPARTMENT OF TRANSPORTATION
Caltrans® HYDRAULICS DESIGN

V:\ProjectPlans\PSEWorking\d2\02-4c0101-add\24c010ic008.add

LAST REVISION 07-06-10 | DATE PLOTTED => 01-DEC-2010 | TIME PLOTTED => 12:38

Dist	COUNTY	ROUTE	POST MILES TOTAL PROJECT	SHEET No.	TOTAL SHEETS
02	Sis	97	40.1/54.1	45	114

REGISTERED CIVIL ENGINEER 07-06-02 DATE

7-12-10
PLANS APPROVAL DATE

REGISTERED PROFESSIONAL ENGINEER GREG KINGSFIELD No. C76297 Exp 6-30-12 CIVIL STATE OF CALIFORNIA

THE STATE OF CALIFORNIA OR ITS OFFICERS OR AGENTS SHALL NOT BE RESPONSIBLE FOR THE ACCURACY OR COMPLETENESS OF SCANNED COPIES OF THIS PLAN SHEET.

3

DRAINAGE QUANTITIES

PLAN SHEET No.	DRAINAGE SYSTEM No. ⬡	DRAINAGE UNIT No. ○	REMOVE ASPHALT CONCRETE DIKE	REMOVE CULVERT	REMOVE INLET	REMOVE HEADWALL	REMOVE CONCRETE	DITCH EXCAVATION	PLACE HOT MIX ASPHALT DIKE (TYPE E)	PLACE HOT MIX ASPHALT (MISCELLANEOUS AREA)	HOT MIX ASPHALT	MINOR CONCRETE (MINOR STRUCTURE)	18" REINFORCED CONCRETE PIPE (CLASS II)	14" X 23" OVAL SHAPED REINFORCED CONCRETE PIPE (CLASS II)	8" CORRUGATED STEEL PIPE DOWNDRAIN (.064" THICK)	8" ENTRANCE TAPER	8" ANCHOR ASSEMBLY	ROCK SLOPE PROTECTION (LIGHT, METHOD B)	ROCK SLOPE PROTECTION (BACKING NO. 1, METHOD B)	ROCK SLOPE PROTECTION (BACKING NO. 3, METHOD B)	ROCK SLOPE PROTECTION FABRIC	MINOR CONCRETE (MISCELLANEOUS CONSTRUCTION)	MISCELLANEOUS IRON AND STEEL	BAR REINFORCING STEEL	SALVAGE GRATE (N)	HEIGHT OF INLET "H" (N)	INLET DEPRESION (N)	DESCRIPTION / COMMENT	STATION	DRAINAGE SYSTEM	DRAINAGE UNIT	PLAN SHEET No.
			LF	EA	EA	EA	CY	CY	LF	SQYD	TON	CY	LF	LF	LF	EA	EA	CY	CY	CY	SQYD	CY	LB	LB	EA	FT	FT					
D-1	1	a			1																				1	1.72			"A"42+60	1	a	D-1
	1	b		1																								12" x 101' CMP	"A"42+33	1	b	
	1	c										0.79										0.5	239			2.22	0.1	DI TYPE G1, GRATE TYPE 24-12X	"A"42+99	1	c	
	1	d1												39.7															"A"43+80	1	d1	
	1	d2												157.2															"A"42+88	1	d2	
	1	e										0.71											239			1.92	0.07	DI TYPE G1, GRATE, TYPE 24-12X	"A"42+76	1	e	
	1	f												51.9															"A"42+58	1	f	
	1	g										0.77											239			2.18	0.07	DI TYPE G1, GRATE, TYPE 24-12X	"A"42+39	1	g	
	1	h												50.6															"A"42+32	1	h	
	1	k										0.90																HEADWALL	"A"41+15	1	k	
	1	m											135.2																"A"41+70	1	m	
	1	n										1.14											239			2.60	0.1	DI TYPE GO, GRATE, TYPE 24-12X	"A"42+24	1	n	
	1	o						200																					"A"40+78	1	o	
	1	q		1																								18" x 39' CMP	"A"41+63	1	q	
	1	r																				3.1		255				VALLEY GUTTER	"A"42+76	1	r	
	1	s																				6.0		575				VALLEY GUTTER	"A"42+39	1	s	
D-1A	2	a										0.75											239			2.17	0.1	DI TYPE G1, GRATE, TYPE 24-12X	"A"44+60	2	a	D-1A
	2	b												73.4															"A"44+85	2	b	
	2	c								7.4	1.7	0.71										0.5	239			1.91	0.1	DI TYPE G1, GRATE, TYPE 24-12X	"A"45+11	2	c	
	2	d												58.4															"A"45+29	2	d	
	2	e										0.90																HEADWALL	"A"46+81	2	e	
	2	f			1																				1	2.03			"A"44+84	2	f	
	2	g		1																								12" x 60' CMP	"A"44+91	2	g	
	2	h								7.1	1.6	0.71										0.5	239			1.92	0.1	DI TYPE G1, GRATE, TYPE 24-12X	"A"45+46	2	h	
	2	k											55.7																"A"46+55	2	k	
	2	m						120																					"A"46+87	2	m	
	2	n											72.0																"A"46+80	2	n	
	2	o		1																								12" x 46' PLASTIC	"A"45+01	2	o	
	2	p				1																						REMOVE HEADWALL	"A"45+08	2	p	
	2	q											98.2																"A"45+87	2	q	
	2	r										0.82										0.5	239			2.40	0.1	DI TYPE G1, GRATE, TYPE 24-12X	"A"46+28	2	r	
	2	s			1																					1.36			"A"44+97	2	s	
	2	t		1																								12" x 30' CMP	"A"46+64	2	t	
	2	u										0.90																HEADWALL	"A"46+83	2	u	
D-2	3	a					0.9					1.58											239			3.05	0.1	DI TYPE Mod G2, GRATE, TYPE 24-12X	"A"76+68	3	a	D-2
	3	b								7.9	2.8																	APRON	"A"76+68	3	b	
	3	c												23.9															"A"76+82	3	c	
	3	d										1.27										0.7	239			2.91	0.1	DI TYPE G4, GRATE, TYPE 24-12X	"A"76+82	3	d	
	3	e												60.4															"A"76+83	3	e	
	3	f					0.9					1.59										0.7	473			2.90	0.1	DI TYPE GDO, 2 GRATES, TYPE 24-12X	"A"77+04	3	f	
	3	g												94.1															"A"77+06	3	g	
	3	h					0.9					1.54										0.7	473			2.76	0.1	DI TYPE GDO, 2 GRATES, TYPE 24-12X	"A"77+81	3	h	
	3	k												70.4															"A"77+90	3	k	
	3	l										0.82											239			2.37	0.1	DI TYPE G1, GRATE, TYPE 24-12X	"A"77+91	3	l	
	3	m												75.3															"A"77+81	3	m	
	3	n					0.9					1.35										0.7	473			2.17	0.1	DI TYPE GDO, 2 GRATES, TYPE 24-12X	"A"78+63	3	n	
	3	o												36.5															"A"78+64	3	o	
	3	p					0.9					1.48										0.7	473			2.55	0.1	DI TYPE GDO, 2 GRATES, TYPE 24-12X	"A"78+64	3	p	
	3	q												124.7															"A"78+65	3	q	
	3	r					0.9					1.45										0.7	473			2.46	0.1	DI TYPE GDO, 2 GRATES, TYPE 24-12X	"A"79+91	3	r	
	3	s												96.3															"A"79+92	3	s	
	3	t								6.3	2.2																	APRON	"A"77+90	3	t	
SHEET TOTAL				5	3	1	5.4	320		28.7	8.3	20.18	361.1	1012.8								15.3	4994	830	2							

NOTES:

1. (N) - NOT A SEPARATE PAY ITEM, FOR INFORMATION ONLY
2. * TOTAL SHOWN IN ROADWAY QUANTITIES
3. ** TOTAL SHOWN ON SHEET Q-5
4. ALL RCP IS STRAIGHT WALL TYPE.
5. ALL JOINTS ARE STANDARD.
6. LENGTHS OF PIPES AND ANGLES OF ELBOWS SHALL BE VERIFIED IN THE FIELD BY THE CONTRACTOR

3 **REVISED PER ADDENDUM No. 3 DATED DECEMBER 3, 2010**

DRAINAGE QUANTITIES

DQ-1

REVISED BY | DATE REVISED
GREG KINGSFIELD | STEVE ALAWAR
CALCULATED-DESIGNED BY | CHECKED BY
FUNCTIONAL SUPERVISOR: STEVE THORNE

STATE OF CALIFORNIA - DEPARTMENT OF TRANSPORTATION
Caltrans HYDRAULICS DESIGN

24c010id001.add

LAST REVISION 07-06-10 | DATE PLOTTED => 01-DEC-2010 | TIME PLOTTED => 09:46

Dist	COUNTY	ROUTE	POST MILES TOTAL PROJECT	SHEET No.	TOTAL SHEETS
02	Sis	97	40.1/54.1	46	114

REGISTERED CIVIL ENGINEER 07-06-02 DATE

7-12-10
PLANS APPROVAL DATE

REGISTERED PROFESSIONAL ENGINEER GREG KINGSFIELD No. C76297 Exp 6-30-12 CIVIL STATE OF CALIFORNIA

THE STATE OF CALIFORNIA OR ITS OFFICERS OR AGENTS SHALL NOT BE RESPONSIBLE FOR THE ACCURACY OR COMPLETENESS OF SCANNED COPIES OF THIS PLAN SHEET.

3

DRAINAGE QUANTITIES

PLAN SHEET No.	DRAINAGE SYSTEM No. ⬡	DRAINAGE UNIT No. ○	REMOVE ASPHALT CONCRETE DIKE LF	REMOVE CULVERT EA	REMOVE INLET EA	REMOVE HEADWALL EA	REMOVE CONCRETE CY	DITCH EXCAVATION CY	PLACE HOT MIX ASPHALT DIKE (TYPE E) LF	PLACE HOT MIX ASPHALT (MISCELLANEOUS AREA) SQYD	HOT MIX ASPHALT TON	MINOR CONCRETE (MINOR STRUCTURE) CY	18" REINFORCED CONCRETE PIPE (CLASS II) LF	14" X 23" OVAL SHAPED REINFORCED CONCRETE PIPE (CLASS II) LF	8" CORRUGATED STEEL PIPE DOWNDRAIN (.064" THICK) LF	8" ENTRANCE TAPER EA	8" ANCHOR ASSEMBLY EA	ROCK SLOPE PROTECTION (LIGHT, METHOD B) CY	ROCK SLOPE PROTECTION (BACKING NO. 1, METHOD B) CY	ROCK SLOPE PROTECTION (BACKING NO. 3, METHOD B) CY	ROCK SLOPE PROTECTION FABRIC SQYD	MINOR CONCRETE (MISCELLANEOUS CONSTRUCTION) CY	MISCELLANEOUS IRON AND STEEL LB	BAR REINFORCING STEEL LB	SALVAGE GRATE (N) EA	HEIGHT OF INLET "H" (N) FT	INLET DEPRESION (N) FT	DESCRIPTION / COMMENT	STATION	DRAINAGE SYSTEM	DRAINAGE UNIT	PLAN SHEET No.
D-2	4	a					0.9					1.38										0.7	473			2.24	0.1	DI TYPE GDO, 2 GRATES, TYPE 24-12X	"A"80+91	4	a	D-2
	4	b												38.5														14" x 23" OVAL SHAPED RCP	"A"80+92	4	b	
	4	c					0.9					0.95										0.7	239			1.82	0.1	DI TYPE GO, GRATE, TYPE 24-12X	"A"80+90	4	c	
	4	d			1																				1	1.87			"A"80+90	4	d	
	4	e		1																								12" x 18' PLASTIC	"A"80+90	4	e	
	4	f		1																								12" x 47' CSP	"A"80+91	4	f	
	4	g					0.9					1.27										0.7	473			1.90	0.1	DI TYPE GDO, GRATE, TYPE 24-12X	"A"81+12	4	g	
	4	h												32.9															"A"81+13	4	h	
	4	k												79.0															"A"81+13	4	k	
	4	l		1								0.10																12" x 66' CSP, REPAIR (E) DI	"A"81+14	4	l	
	4	i		1																								12" x 26' CSP	"A"81+50	4	i	
	4	m			1																				1	2.21			"A"81+76	4	m	
	4	n					0.9					2.06										0.7	239			2.87	0.1	DI TYPE Mod G2, GRATE, TYPE 24-12X	"A"81+69	4	n	
	4	o											31.0															18" RCP	"A"81+77	4	o	
	4	p			1																				1	2.40			"A"81+50	4	p	
	4	q					0.9					2.22										0.7	239			2.31	0.1	DI TYPE Mod GO, GRATE, TYPE 24-12X	"A"81+50	4	q	
	4	r		1																								12" x 29' CSP	"A"81+17	4	r	
	4	s											29.2															18" RCP	"A"81+18	4	s	
	4	t					0.9					1.14										0.7	239			2.56	0.1	DI TYPE GO, GRATE, TYPE 24-12X	"A"81+17	4	t	
	4	v											74.7															18" RCP	"A"80+90	4	v	
	4	x			1																				1	1.93			"A"81+17	4	x	
	4	y		1																								12" x 24' CSP	"A"81+18	4	y	
	4	w			1																				1	1.83			"A"81+13	4	w	
D-3	5	a										0.88											239			2.65	0.1	DI TYPE G1, GRATE, TYPE 24-12X	"A"86+38	5	a	D-3
	5	b																				6.8		859				VALLEY GUTTER	"A"86+38	5	b	
	5	c											50.2																"A"86+39	5	c	
	5	d					0.9					1.75										0.7	473			3.40	0.1	DI TYPE GDO, 2 GRATES, TYPE 24-12X	"A"86+94	5	d	
	5	e											55.0																"A"86+95	5	e	
	5	f												222.8															"A"86+38	5	f	
	5	g					0.9					1.34										0.7	473			2.11	0.1	DI TYPE GDO, 2 GRATES, TYPE 24-12X	"A"89+17	5	g	
	5	h			1																				1	2.09			"A"89+17	5	h	
	5	k												127.9															"A"89+18	5	k	
	5	l					0.9					1.32										0.7	473			2.05	0.1	DI TYPE GDO, 2 GRATES, TYPE 24-12X	"A"90+48	5	l	
	5	m												54.0															"A"90+49	5	m	
	5	n					0.9					0.96										0.7	239			1.84	0.1	DI TYPE GO, GRATE, TYPE 24-12X	"A"90+48	5	n	
	5	o												235.7															"A"90+49	5	o	
	5	p					0.9					1.47										0.7	473			2.54	0.1	DI TYPE GDO, 2 GRATES, TYPE 24-12X	"A"92+86	5	p	
	5	q												54.0															"A"92+87	5	q	
	5	r					0.9					1.04										0.7	239			2.15	0.1	DI TYPE GO, GRATE, TYPE 24-12X	"A"92+86	5	r	
	6	a					0.9					0.91										0.7	239			1.64	0.1	DI TYPE GO, GRATE, TYPE 24-12X	"A"95+26	6	a	
	6	b												53.7															"A"95+27	6	b	
	6	c					0.9					1.35										0.7	473			2.15	0.1	DI TYPE GDO, 2 GRATES, TYPE 24-12X	"A"95+21	6	c	
	6	d											230.0															18" RCP	"A"95+22	6	d	
	6	e					0.9					1.49										0.7	473			2.58	0.1	DI TYPE GDO, 2 GRATES, TYPE 24-12X	"A"97+53	6	e	
	6	f												53.8															"A"97+55	6	f	
	6	g					0.9					1.02										0.7	239			2.09	0.1	DI TYPE GO, GRATE, TYPE 24-12X	"A"97+55	6	g	
	6	h											209.5																"A"97+53	6	h	
	6	k					0.9					1.92										0.7	473			3.93	0.1	DI TYPE GDO, 2 GRATES, TYPE 24-12X	"A"99+81	6	k	
	6	m											67.5																"A"99+82	6	m	
	6	n					0.9					1.39										0.7	239			3.59	0.1	DI TYPE GO, GRATE, TYPE 24-12X	"A"99+28	6	n	
	6	o											91.8															INCLUDES 18" RCP WYE, SEE SHT DD-2	"A"99+82	6	o	
SHEET TOTAL				6	6		16.2					25.96	838.9	952.3								19.4	6647	859	6							

3 **REVISED PER ADDENDUM No. 3 DATED DECEMBER 3, 2010**

DRAINAGE QUANTITIES
DQ-2

REVISED BY | DATE REVISED
GREG KINGSFIELD | STEVE ALAWAR
CALCULATED-DESIGNED BY | CHECKED BY
FUNCTIONAL SUPERVISOR | STEVE THORNE

STATE OF CALIFORNIA - DEPARTMENT OF TRANSPORTATION
Caltrans® HYDRAULICS DESIGN

24c010id002.add

LAST REVISION 07-06-10 | DATE PLOTTED => 01-DEC-2010 | TIME PLOTTED => 09:46

Dist	COUNTY	ROUTE	POST MILES TOTAL PROJECT	SHEET No.	TOTAL SHEETS
02	Sis	97	40.1/54.1	47	114

REGISTERED CIVIL ENGINEER 07-06-02 DATE

7-12-10
PLANS APPROVAL DATE

REGISTERED PROFESSIONAL ENGINEER GREG KINGSFIELD No. C76297 Exp 6-30-12 CIVIL STATE OF CALIFORNIA

THE STATE OF CALIFORNIA OR ITS OFFICERS OR AGENTS SHALL NOT BE RESPONSIBLE FOR THE ACCURACY OR COMPLETENESS OF SCANNED COPIES OF THIS PLAN SHEET.

3

DRAINAGE QUANTITIES

PLAN SHEET No.	DRAINAGE SYSTEM No.	DRAINAGE UNIT No.	REMOVE ASPHALT CONCRETE DIKE	REMOVE CULVERT	REMOVE INLET	REMOVE HEADWALL	REMOVE CONCRETE	DITCH EXCAVATION	PLACE HOT MIX ASPHALT DIKE (TYPE E)	PLACE HOT MIX ASPHALT (MISCELLANEOUS AREA)	HOT MIX ASPHALT	MINOR CONCRETE (MINOR STRUCTURE)	18" REINFORCED CONCRETE PIPE (CLASS II)	14" X 23" OVAL SHAPED REINFORCED CONCRETE PIPE (CLASS II)	8" CORRUGATED STEEL PIPE DOWNDRAIN (.064" THICK)	8" ENTRANCE TAPER	8" ANCHOR ASSEMBLY	ROCK SLOPE PROTECTION (LIGHT, METHOD B)	ROCK SLOPE PROTECTION (BACKING NO. 1, METHOD B)	ROCK SLOPE PROTECTION (BACKING NO. 3, METHOD B)	ROCK SLOPE PROTECTION FABRIC	MINOR CONCRETE (MISCELLANEOUS CONSTRUCTION)	MISCELLANEOUS IRON AND STEEL	BAR REINFORCING STEEL	SALVAGE GRATE (N)	HEIGHT OF INLET "H" (N)	INLET DEPRESION (N)	DESCRIPTION / COMMENT	STATION	DRAINAGE SYSTEM	DRAINAGE UNIT	PLAN SHEET No.
			LF	EA	EA	EA	CY	CY	LF	SQYD	TON	CY	LF	LF	LF	EA	EA	CY	CY	CY	SQYD	CY	LB	LB	EA	FT	FT					
D-4	7	a			1																				1	4.57			"A"103+87	7	a	D-4
	7	b										1.30											239			4.57	0.1	DI TYPE G1, GRATE, TYPE 24-12X	"A"103+87	7	b	
	7	c																				13.4						VALLEY GUTTER	"A"103+90	7	c	
	7	d										1.33											239			4.69	0.1	DI TYPE G1, GRATE, TYPE 24-12X	"A"105+42	7	d	
	7	e																				15.3						VALLEY GUTTER	"A"105+45	7	e	
	7	f										1.23											239			4.26	0.0	DI TYPE G1, GRATE, TYPE 24-12X	"A"107+16	7	f	
	7	g											63.7																"A"106+87	7	g	
	7	h					0.9					1.16										0.7	239			2.65	0.1	DI TYPE GO , GRATE, TYPE 24-12X	"A"106+84	7	h	
	7	k											29.2																"A"106+85	7	k	
	7	m					0.9					1.19										0.7	239			2.78	0.1	DI TYPE GO, GRATE, TYPE 24-12X	"A"107+17	7	m	
	7	n																				1.7						VALLEY GUTTER	"A"106+91	7	n	
	7	o											64.0																"A"108+22	7	o	
	7	p										1.13											239			3.78	0.1	DI TYPE G1, GRATE, TYPE 24-12X	"A"108+22	7	p	
	7	q											75.0																"A"108+23	7	q	
	7	r					0.9					1.03										0.7	239			2.12	0.1	DI TYPE GO, GRATE, TYPE 24-12X	"A"108+09	7	r	
	7	s											29.2																"A"108+10	7	s	
	7	†					0.9			7.6	2.6	0.78											239			2.20	0.1	DI TYPE G1, GRATE, TYPE 24-12X	"A"108+41	7	†	
	7	x																				1.0						APRON	"A"103+87		x	
	7	y																				1.0						APRON	"A"105+43		y	
	7	z																				0.8						APRON	"A"106+88		z	
	7	j								7.6	2.6																	APRON	"A"108+23		j	
DD-5	8	a						55																					"A"121+78	8	a	DD-5
	8	b											48.0																"A"121+82	8	b	
	9	a																		131		330						RSP LINED DITCH	PM 51.50	9	a	
	9	b																14			32							ENERGY DISSIPATOR	PM 51.50	9	b	
DD-6	10	a	33																										PM 52.36	10	a	DD-6
	10	b								5.4	1.8																		PM 52.36	10	b	
	10	c							36		1.0																		PM 52.36	10	c	
	10	d														1													PM 52.36	10	d	
	10	e													10		2												PM 52.36	10	e	
	10	f																		4	14								PM 52.36	10	f	
DD-7	11	a							40		1.1																		PM 52.14	11	a	DD-7
	11	b																		9	27							ENERGY DISSIPATOR	PM 52.14	11	b	
	11	c																		9	27							ENERGY DISSIPATOR	PM 52.19	11	c	
	11	d																		61									PM 51.95	11	d	
DD-8	12	a										0.91																SINGLE HEADWALL	PM 52.75	12	a	DD-8
	13	a								40.0	13.5																	OVERSIDE DRAIN	PM 53.96	13	a	
	13	b																		6	18							ENERGY DISSIPATOR	PM 53.96	13	b	
	14	a								40.0	13.5																	OVERSIDE DRAIN	PM 53.15	14	a	
	14	b																		6	18							ENERGY DISSIPATOR	PM 53.15	14	b	
SHEET TOTAL			33		1		3.6	55	76	100.6	36.1	10.06	309.1		10	1	2	14	131	95	466	35.3	1912		1							
FROM DQ-1				5	3	1	5.4	320		28.7	8.3	20.18	361.1	1012.8								15.3	4994	830	2							
FROM DQ-2				6	6		16.2					25.96	838.9	952.3								19.4	6647	859	6							
TOTAL			33	11	10	1	25.2*	375	76*	129.3	44.4*	56.20	1509.1	1965.1	10	1	2	14	131	95	466	70.0**	13,553	1689	9							

3 **REVISED PER ADDENDUM No. 3 DATED DECEMBER 3, 2010**

DRAINAGE QUANTITIES
DQ-3

REVISED BY | DATE REVISED
GREG KINGSFIELD | STEVE ALAWAR
CALCULATED-DESIGNED BY | CHECKED BY
FUNCTIONAL SUPERVISOR: STEVE THORNE

STATE OF CALIFORNIA - DEPARTMENT OF TRANSPORTATION
Caltrans HYDRAULICS DESIGN

24c010id003.add

LAST REVISION | DATE PLOTTED => 01-DEC-2010
07-06-10 | TIME PLOTTED => 09:46

Dist	COUNTY	ROUTE	POST MILES TOTAL PROJECT	SHEET No.	TOTAL SHEETS
02	Sis	97	40.1/54.1	49	114

Mark J. Miller 07-06-10
REGISTERED CIVIL ENGINEER DATE

7-12-10
PLANS APPROVAL DATE

REGISTERED PROFESSIONAL ENGINEER MARK MILLER No. C48454 Exp. 6-30-12 CIVIL STATE OF CALIFORNIA

THE STATE OF CALIFORNIA OR ITS OFFICERS OR AGENTS SHALL NOT BE RESPONSIBLE FOR THE ACCURACY OR COMPLETENESS OF SCANNED COPIES OF THIS PLAN SHEET.

3

NOTE:
1. EXACT SIGN LOCATION TO BE DETERMINED BY THE ENGINEER.

CONSTRUCTION AREA SIGNS AT ROAD CONNECTIONS (STATIONARY MOUNTED)

Co-Rte	PM	Lt	Rt	LOCATION
Sis-97				
	40.09		X	JUNIPER KNOLL Rd
	40.10	X		JUNIPER KNOLL Rd
	40.15	X		CORTEZ St
	40.17		X	CORTEZ St
	40.28	X		W VERA CRUZ St
	40.28		X	E VERA CRUZ St
	40.28		X	OLD STATE HWY
	40.32	X		COLIMA St
	40.33		X	RAILROAD Ave
	41.37		X	SHEEP MOUNTAIN Rd
	43.03		X	SHADY DELL Rd
	44.63	X		BUTTE VALLEY Rd
	45.25	X		SAMS NECK Rd
	46.17		X	MERIDIAN Rd
	49.70	X		RICHARDSON Rd
	49.83		X	DORRIS INSPECTION STATION
	50.10		X	MT DIABLO Rd
	50.34		X	FIFTH St
	50.44	X		W 4TH St
	50.44	X		BUTTE St
	50.48	X		SOUTH OREGON St
	50.48		X	SOUTH OREGON St
	50.54	X		SOUTH CALIFORNIA St
	50.54		X	SOUTH CALIFORNIA St
	50.60		X	E 4TH St
	50.70	X		3Rd St
	50.70		X	3Rd St
	50.81	X		2ND St
	50.81		X	2ND St
	50.90	X		W 1St St
	50.90	X		N MAIN St
	50.95	X		N PINE St
	50.95		X	S PINE St
	50.99		X	ALLEY
	51.02	X		JUNIPER St
	51.03		X	RAILROAD Ave
	51.04	X		RAILROAD Ave
	51.10		X	EAST Ave
	51.23		X	CENTER St
	52.37	X		INDIAN TOM LAKE Rd
	52.37		X	INDIAN TOM LAKE Rd
	53.06	X		OWENS Rd
	53.85		X	STATE ROUTE 161

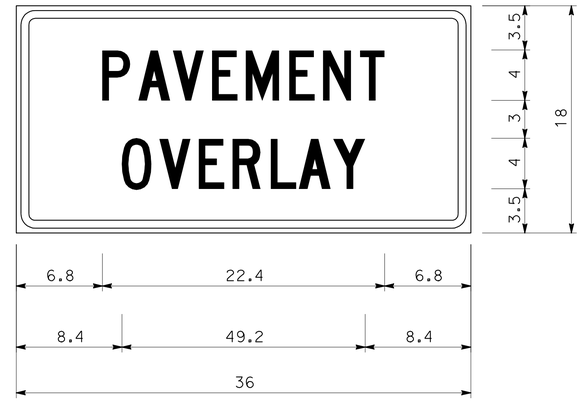

1.5" RADIUS, 0.6" BORDER, 0.4" INDENT, BLACK ON ORANGE;
[PAVEMENT] C;
[OVERLAY] C;

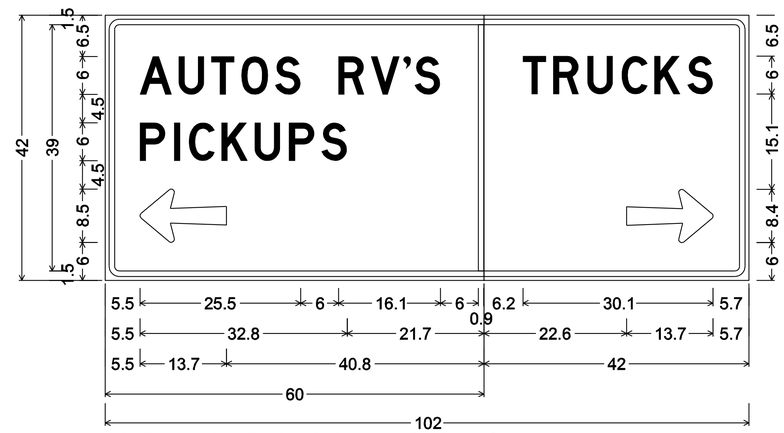

2.3" Radius, 0.9" Border, 0.6" Indent, Black on Orange;
[AUTOS RV'S] D; [PICKUPS] D; Arrow 6UC-2LV - 13.7" 180°;
2.3" Radius, 0.9" Border, 0.6" Indent, Black on White;
[TRUCKS] D; Arrow 6UC-2LV - 13.7" 0°;

SPL - AG STATION #5
FSBT PM 49.85

3 REVISED PER ADDENDUM No. 3 DATED DECEMBER 3, 2010

CONSTRUCTION AREA SIGNS
NO SCALE
CS-2

REVISED BY | DATE REVISED
SAL PRIETO | MARK MILLER
CALCULATED-DESIGNED BY | CHECKED BY
FUNCTIONAL SUPERVISOR | MARK MILLER
STATE OF CALIFORNIA - DEPARTMENT OF TRANSPORTATION
Caltrans ADVANCE PLANNING
24c0101a002.add

LAST REVISION 07-06-10 | DATE PLOTTED => 01-DEC-2010 | TIME PLOTTED => 09:46

Dist	COUNTY	ROUTE	POST MILES TOTAL PROJECT	SHEET No.	TOTAL SHEETS
02	Sis	97	40.1/54.1	50A	114

REGISTERED CIVIL ENGINEER 09-22-10 DATE

7-12-10
PLANS APPROVAL DATE

REGISTERED PROFESSIONAL ENGINEER GREG KINGSFIELD No. C76297 Exp. 6-30-12 CIVIL STATE OF CALIFORNIA

THE STATE OF CALIFORNIA OR ITS OFFICERS OR AGENTS SHALL NOT BE RESPONSIBLE FOR THE ACCURACY OR COMPLETENESS OF SCANNED COPIES OF THIS PLAN SHEET.

3

NOTES:

1. FOR DRAINAGE, SEE DRAINAGE SHEETS.
2. FOR FENCE, SEE CONSTRUCTION DETAILS.

LEGEND

- CONSTRUCT THIS STAGE
- CLEAR AND GRUB ONLY
- TRUCKS
- AUTOS AND RV'S
- TEMPORARY CRASH CUSHION MODULES
- TEMPORARY RAILING (TYPE K)
- TRAFFIC PLASTIC DRUM
- TEMP SIGN; TRUCKS / AUTOS
- ADJUST UTILITY COVER TO GRADE
- TEMPORARY CONSTRUCTION EASEMENT (TCE)

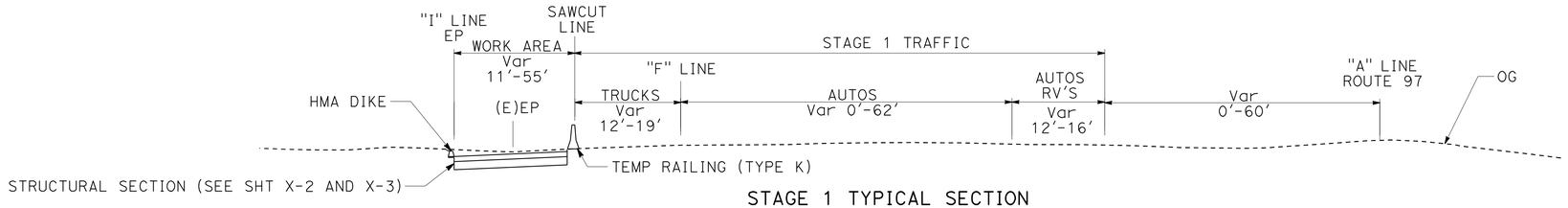

STAGE 1 TYPICAL SECTION

NO SCALE

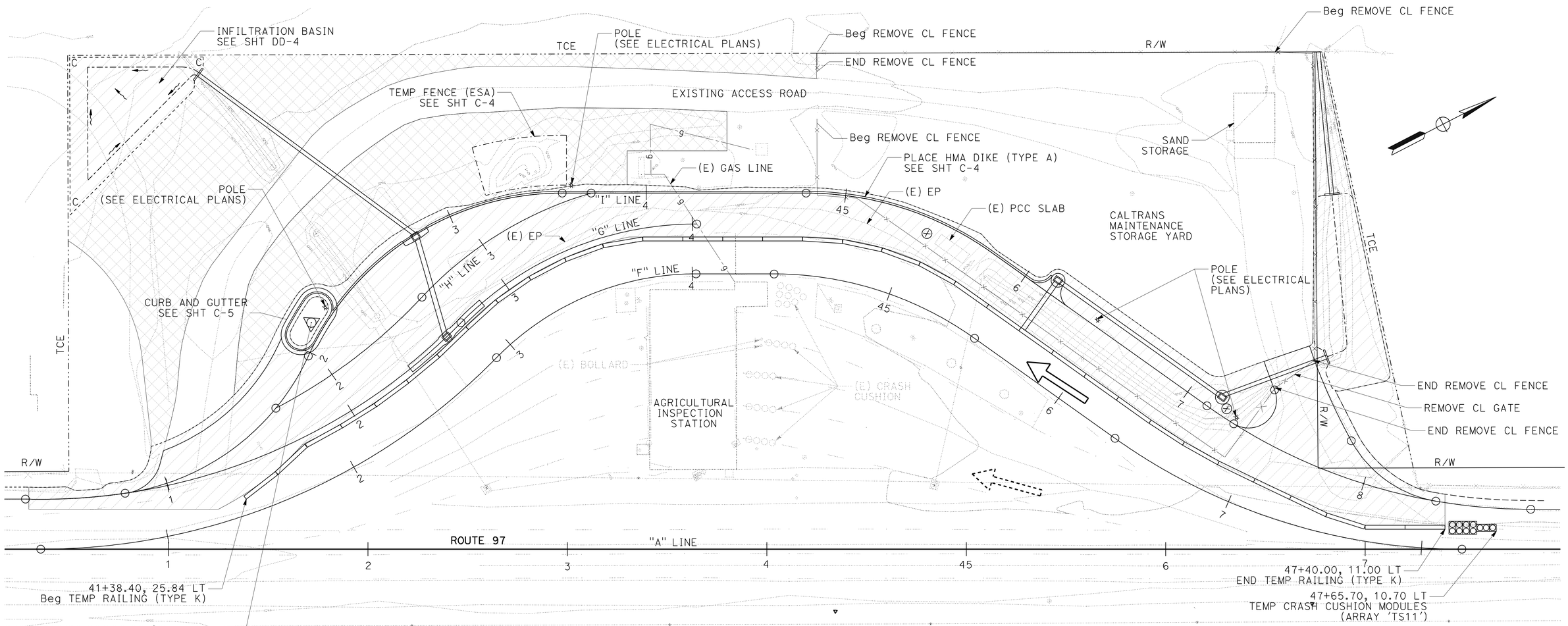

"A" 41+71.65, 113.59' Lt
USC & GS SURVEY MONUMENT
BRASS DISK
STAMPED "ENGLISH 1948"
PROTECT IN PLACE

3 **ADDED PER ADDENDUM No. 3 DATED DECEMBER 3, 2010**

THIS PLAN ACCURATE FOR STAGE CONSTRUCTION AND TRAFFIC HANDLING WORK ONLY

STAGE 1

STAGE CONSTRUCTION AND TRAFFIC HANDLING PLAN

SCALE: 1" = 25'

SC-1

REVISED BY | DATE REVISED
GREG KINGSFILED | STEVE ALAWAR
CALCULATED-DESIGNED BY | CHECKED BY
FUNCTIONAL SUPERVISOR | STEVE THORNE

STATE OF CALIFORNIA - DEPARTMENT OF TRANSPORTATION
Caltrans HYDRAULICS DESIGN

24c010ma001.add

LAST REVISION | DATE PLOTTED => 01-DEC-2010 | TIME PLOTTED => 09:46

Dist	COUNTY	ROUTE	POST MILES TOTAL PROJECT	SHEET No.	TOTAL SHEETS
02	Sis	97	40.1/54.1	50B	114

REGISTERED CIVIL ENGINEER 09-22-10 DATE

7-12-10
PLANS APPROVAL DATE

REGISTERED PROFESSIONAL ENGINEER GREG KINGSFIELD No. C76297 Exp. 6-30-12 CIVIL STATE OF CALIFORNIA

THE STATE OF CALIFORNIA OR ITS OFFICERS OR AGENTS SHALL NOT BE RESPONSIBLE FOR THE ACCURACY OR COMPLETENESS OF SCANNED COPIES OF THIS PLAN SHEET.

3

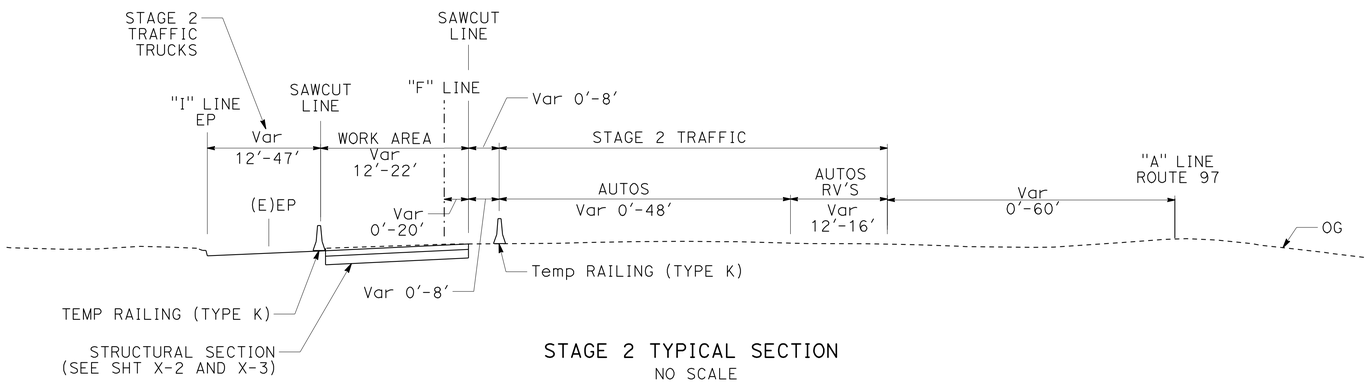

STAGE 2 TYPICAL SECTION
NO SCALE

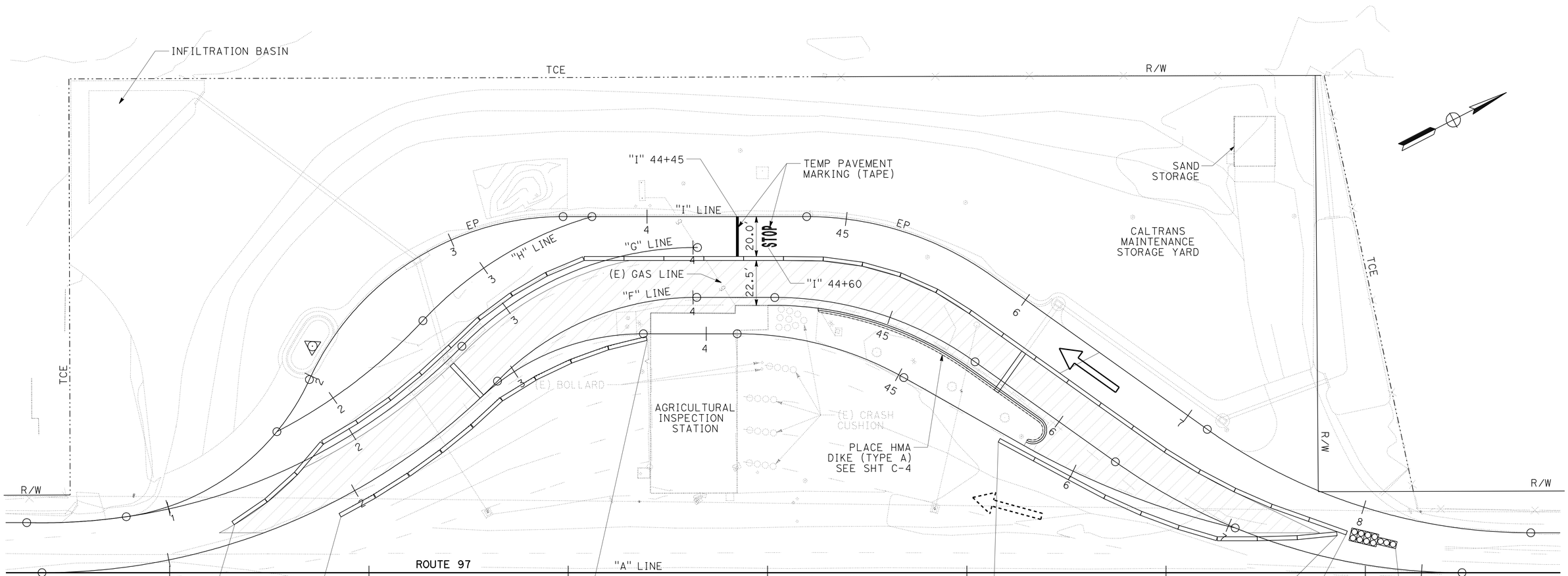

3 **ADDED PER ADDENDUM No. 3 DATED DECEMBER 3, 2010**

THIS PLAN ACCURATE FOR STAGE CONSTRUCTION AND TRAFFIC HANDLING WORK ONLY

STAGE 2
STAGE CONSTRUCTION AND TRAFFIC HANDLING PLAN
SCALE: 1" = 25'

SC-2

STATE OF CALIFORNIA - DEPARTMENT OF TRANSPORTATION
Caltrans® HYDRAULICS DESIGN

FUNCTIONAL SUPERVISOR: STEVE THORNE
CALCULATED-DESIGNED BY: GREG KINGSFILED
CHECKED BY: STEVE ALAWAR
REVISED BY
DATE REVISED

24c010ma002.add

LAST REVISION DATE PLOTTED => 01-DEC-2010
TIME PLOTTED => 09:46

Dist	COUNTY	ROUTE	POST MILES TOTAL PROJECT	SHEET No.	TOTAL SHEETS
02	Sis	97	40.1/54.1	50C	114

REGISTERED CIVIL ENGINEER 09-22-10 DATE

7-12-10
PLANS APPROVAL DATE

REGISTERED PROFESSIONAL ENGINEER GREG KINGSFIELD No. C76297 Exp. 6-30-12 CIVIL STATE OF CALIFORNIA

THE STATE OF CALIFORNIA OR ITS OFFICERS OR AGENTS SHALL NOT BE RESPONSIBLE FOR THE ACCURACY OR COMPLETENESS OF SCANNED COPIES OF THIS PLAN SHEET.

NOTE:

1. STAGE 4 IS PERMANENT PAVEMENT DELINEATION. SEE SHEET PD-1.

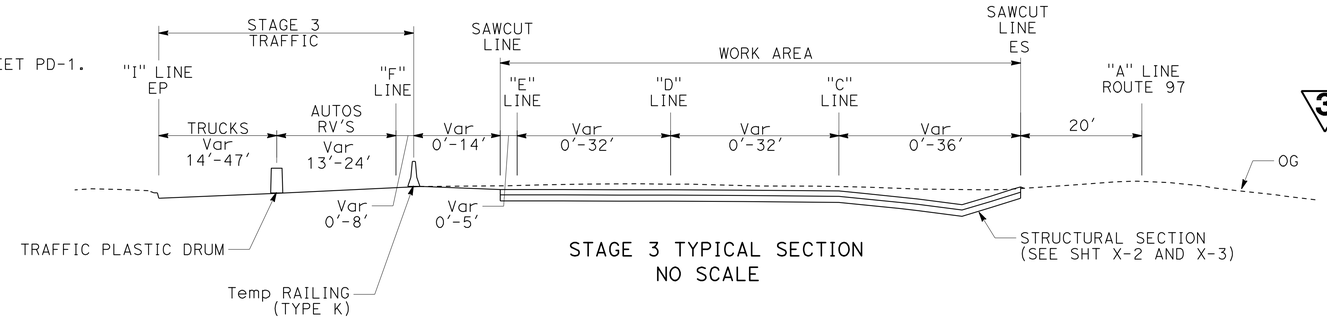

STAGE 3 TYPICAL SECTION
NO SCALE

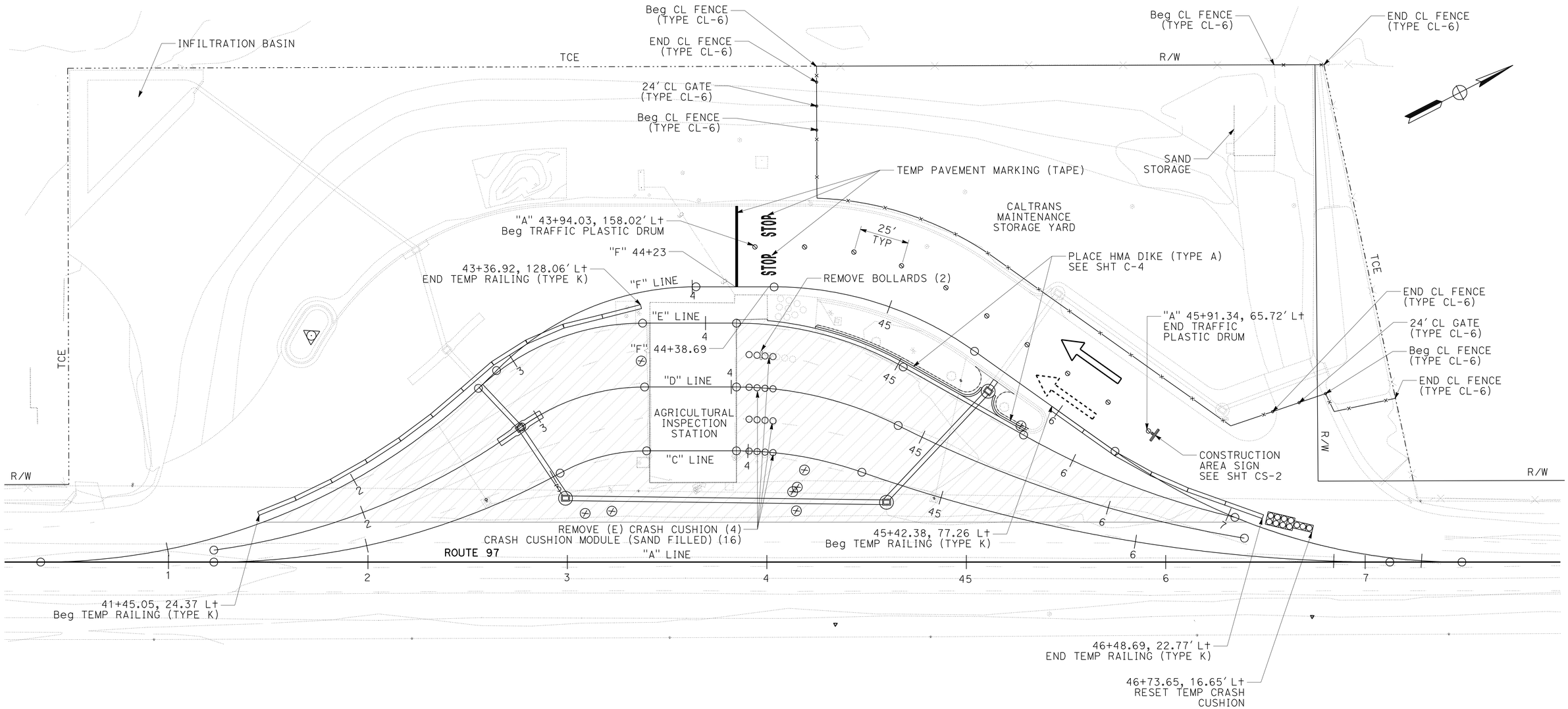

3 **ADDED PER ADDENDUM No. 3 DATED DECEMBER 3, 2010**

THIS PLAN ACCURATE FOR STAGE CONSTRUCTION AND TRAFFIC HANDLING WORK ONLY

STAGE 3

STAGE CONSTRUCTION AND TRAFFIC HANDLING PLAN

SCALE: 1" = 25'

SC-3

REVISED BY | DATE REVISED
GREG KINGSFILED | STEVE ALAWAR
CALCULATED-DESIGNED BY | CHECKED BY
FUNCTIONAL SUPERVISOR: STEVE THORNE

STATE OF CALIFORNIA - DEPARTMENT OF TRANSPORTATION
Caltrans HYDRAULICS DESIGN

24c010ma003.add

LAST REVISION | DATE PLOTTED => 01-DEC-2010 | TIME PLOTTED => 09:46

Dist	COUNTY	ROUTE	POST MILES TOTAL PROJECT	SHEET No.	TOTAL SHEETS
02	Sis	97	40.1/54.1	50D	114

REGISTERED CIVIL ENGINEER 09-22-10 DATE

7-12-10
PLANS APPROVAL DATE

REGISTERED PROFESSIONAL ENGINEER GREG KINGSFIELD No. C76297 Exp. 6-30-12 CIVIL STATE OF CALIFORNIA

THE STATE OF CALIFORNIA OR ITS OFFICERS OR AGENTS SHALL NOT BE RESPONSIBLE FOR THE ACCURACY OR COMPLETENESS OF SCANNED COPIES OF THIS PLAN SHEET.

3

NOTES:

1. (N) - NOT A SEPARATE PAY ITEM, FOR INFORMATION ONLY.
2. * SEE QUANTITY SHEETS DQ-1, PDD-3, PDD-4, AND Q-1 THRU Q-5 FOR ITEM TOTALS.

TEMPORARY PAVEMENT MARKING (TAPE) (N)

STAGE	MESSAGE	SQFT
2	STOP	22
2	LIMIT LINE	20
3	STOP	22
3	LIMIT LINE	21

STAGE CONSTRUCTION QUANTITIES

	TEMPORARY FENCE (TYPE ESA)	TEMPORARY PAVEMENT MARKING (TAPE)	TEMPORARY RAILING (TYPE K)	TEMPORARY CRASH CUSHION MODULE	TRAFFIC PLASTIC DRUM	REMOVE CHAIN LINK FENCE	REMOVE CHAIN LINK GATE	(N) ADJUST UTILITY COVER TO GRADE	REMOVE BOLLARD	RESET TEMP CRASH CUSHION	REMOVE CRASH CUSHION	RESET TEMPORARY RAILING (TYPE K)	ROADWAY EXCAVATION	(N) DITCH EXCAVATION	(N) IMPORTED MATERIAL (SHOULDER BACKING)	(N) SUBGRADE ENHANCEMENT GEOTEXTILE	(N) CLASS 2 AGGREGATE BASE	(N) HOT MIX ASPHALT	(N) PLACE HOT MIX ASPHALT DIKE (TYPE A)	CHAIN LINK FENCE(TYPE CL-6)	24' CHAIN LINK GATE (TYPE CL-6)	CRASH CUSHION MODULE (SAND FILLED)	(N) 4" TWO-COMPONENT PAINT TRAFFIC STRIPE	(N) 8" TWO-COMPONENT PAINT TRAFFIC STRIPE	(N) TWO-COMPONENT PAINT PAVEMENT MARKING
	LF	SQFT	LF	EA	EA	LF	EA	EA	EA	EA	EA	LF	CY	CY	TON	SQYD	CY	TON	LF	LF	EA	EA	LF	LF	SQFT
STAGE 1	138		700	11		372	2	1					1542	320	114	2500	1042	1048	376						
STAGE 2		42	300		10			1		1		700	1495			2055	857	862	262	374	2				
STAGE 3		43		16				7	2	1	4	340	1233			2000	833	837				16	2295	2311	541
TOTAL	138	85	1000	27	10	372	2	*	2	2	4	1040	*	*	*	*	*	*	*	374	2	16	*	*	*

3 ADDED PER ADDENDUM No. 3 DATED DECEMBER 3, 2010

STATE OF CALIFORNIA - DEPARTMENT OF TRANSPORTATION
Caltrans HYDRAULICS DESIGN

FUNCTIONAL SUPERVISOR: STEVE THORNE
CALCULATED-DESIGNED BY: GREG KINGSFILED
CHECKED BY: STEVE ALAWAR
REVISED BY
DATE REVISED

24c010mc001.dgn

STAGE CONSTRUCTION QUANTITIES
SCQ-1

LAST REVISION
DATE PLOTTED => 01-DEC-2010
TIME PLOTTED => 09:47

Dist	COUNTY	ROUTE	POST MILES TOTAL PROJECT	SHEET No.	TOTAL SHEETS
02	Sis	97	40.1/54.1	51	114

REGISTERED CIVIL ENGINEER 07-06-02 DATE

7-12-10
PLANS APPROVAL DATE

REGISTERED PROFESSIONAL ENGINEER GREG KINGSFIELD No. C76297 Exp 6-30-12 CIVIL STATE OF CALIFORNIA

THE STATE OF CALIFORNIA OR ITS OFFICERS OR AGENTS SHALL NOT BE RESPONSIBLE FOR THE ACCURACY OR COMPLETENESS OF SCANNED COPIES OF THIS PLAN SHEET.

3

NOTE:
1. EXACT LOCATION TO BE DETERMINED BY ENGINEER

LEGEND

XX	PAVEMENT DELINEATION STRIPE DETAIL No.
YIELD	TWO COMPONENT PAINT PAVEMENT MARKINGS (TYP)
	SINGLE STRIPE MARKER
	STRIPE CHANGE LOCATION
	ARROW (TYPE 5)
	ARROW (TYPE 3)
RR	RAILROAD CROSSING
	LIMIT LINE
	DOUBLE LIMIT LINE
	CROSSWALK

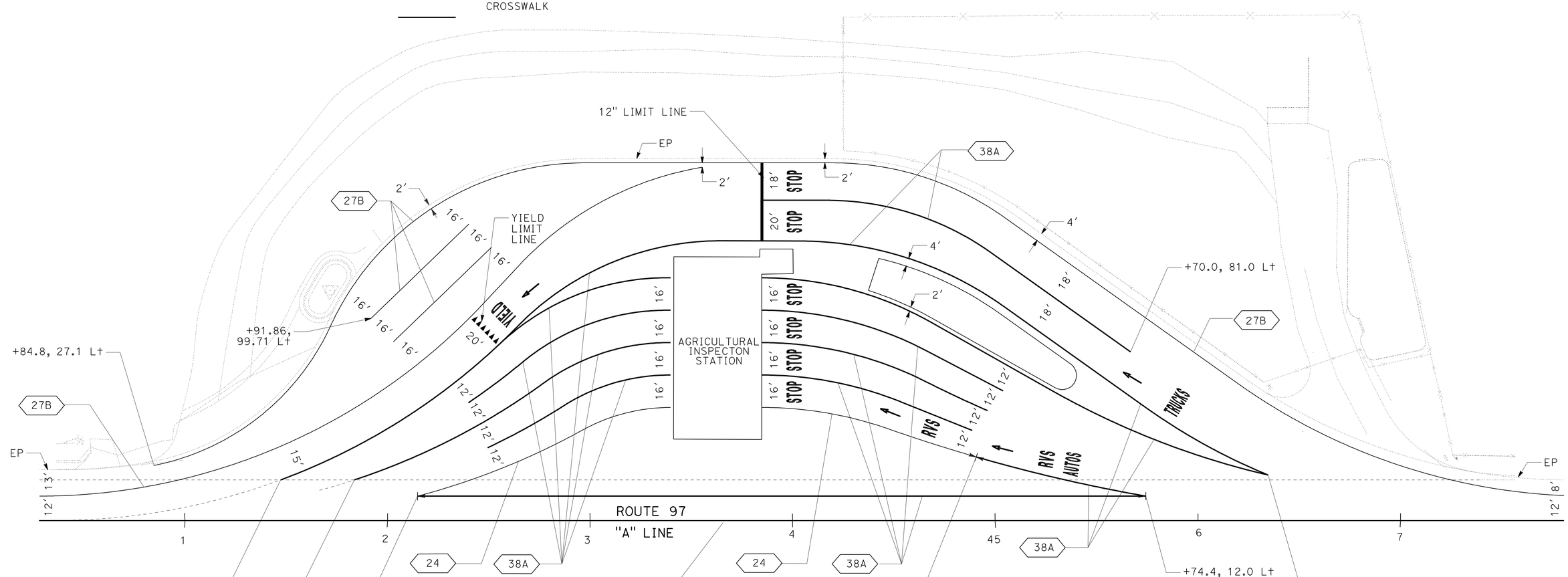

PLAN

3 **REVISED PER ADDENDUM No. 3 DATED DECEMBER 3, 2010**

THIS PLAN IS ACCURATE FOR PAVEMENT DELINEATION WORK ONLY.

PAVEMENT DELINEATION PLAN

NO SCALE

PD-1

REVISED BY | DATE REVISED
GREG KINGSFIELD | ALEX PETERSON
CALCULATED-DESIGNED BY | CHECKED BY
FUNCTIONAL SUPERVISOR: STEVE THORNE

STATE OF CALIFORNIA - DEPARTMENT OF TRANSPORTATION
Caltrans® HYDRAULICS DESIGN

24c010na001.add

LAST REVISION 07-06-10 | DATE PLOTTED => 01-DEC-2010 | TIME PLOTTED => 09:47

Dist	COUNTY	ROUTE	POST MILES TOTAL PROJECT	SHEET No.	TOTAL SHEETS
02	Sis	97	40.1/54.1	52	114

Mark J. Miller 07-06-10
REGISTERED CIVIL ENGINEER DATE

7-12-10
PLANS APPROVAL DATE

REGISTERED PROFESSIONAL ENGINEER MARK MILLER No. C48454 Exp. 6-30-12 CIVIL STATE OF CALIFORNIA

THE STATE OF CALIFORNIA OR ITS OFFICERS OR AGENTS SHALL NOT BE RESPONSIBLE FOR THE ACCURACY OR COMPLETENESS OF SCANNED COPIES OF THIS PLAN SHEET.

NOTE:

1. EXACT LOCATION TO BE DETERMINED BY ENGINEER.

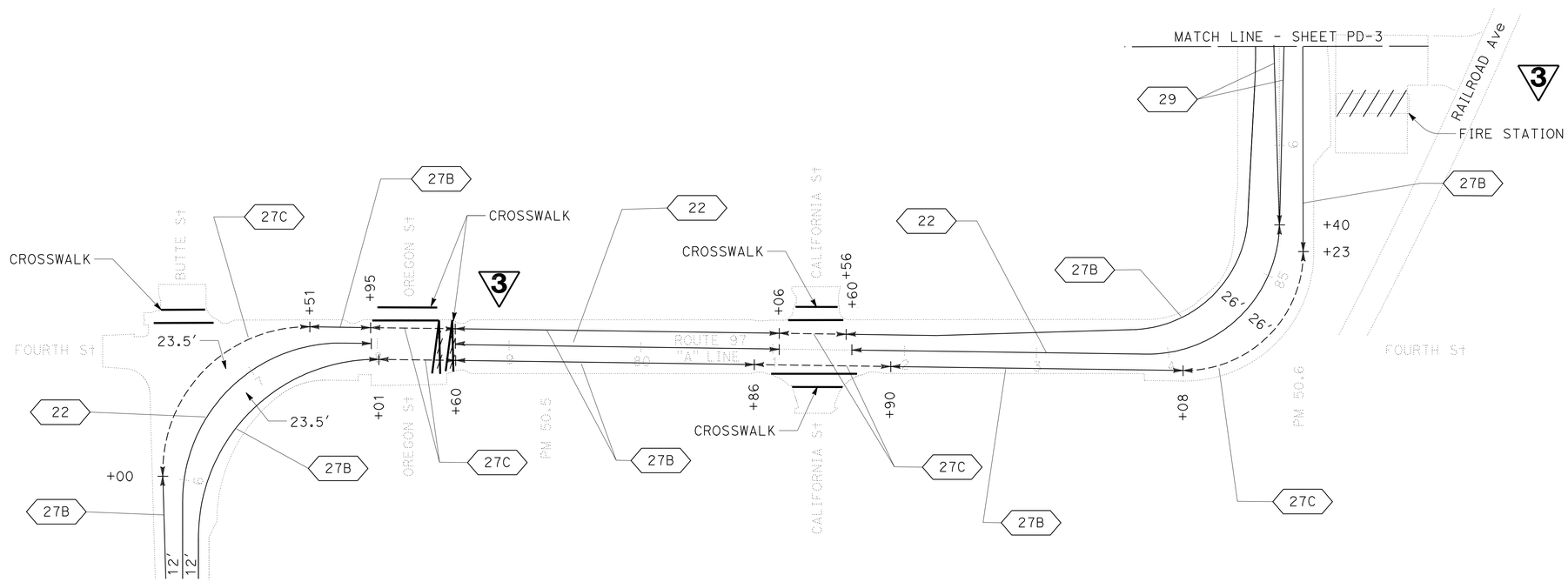

3 **REVISED PER ADDENDUM No. 3 DATED DECEMBER 3, 2010**

THIS PLAN ACCURATE FOR PAVEMENT DELINEATION WORK ONLY.

PAVEMENT DELINEATION PLAN

SCALE: 1" = 50'

PD-2

STATE OF CALIFORNIA - DEPARTMENT OF TRANSPORTATION
Caltrans ADVANCE PLANNING

FUNCTIONAL SUPERVISOR: MARK MILLER
CALCULATED-DESIGNED BY: SAL PRIETO
CHECKED BY: MARK MILLER
REVISED BY
DATE REVISED

V:\ProjectPlans\PSEWorking\d2\02-4c0101-add\24c010na002.add

LAST REVISION 07-06-10 | DATE PLOTTED => 01-DEC-2010 | TIME PLOTTED => 09:47

Dist	COUNTY	ROUTE	POST MILES TOTAL PROJECT	SHEET No.	TOTAL SHEETS
02	Sis	97	40.1/54.1	58	114

Mark J. Miller 07-06-10
REGISTERED CIVIL ENGINEER DATE

7-12-10
PLANS APPROVAL DATE

REGISTERED PROFESSIONAL ENGINEER MARK MILLER No. C48454 Exp. 6-30-12 CIVIL STATE OF CALIFORNIA

THE STATE OF CALIFORNIA OR ITS OFFICERS OR AGENTS SHALL NOT BE RESPONSIBLE FOR THE ACCURACY OR COMPLETENESS OF SCANNED COPIES OF THIS PLAN SHEET.

3

TWO-COMPONENT PAINT TRAFFIC STRIPE

LOCATION		4" TWO-COMPONENT PAINT TRAFFIC STRIPE									8" TWO-COMPONENT PAINT TRAFFIC STRIPE	
PM - PM		LF									LF	
		DETAIL 6	DETAIL 12	DETAIL 19	DETAIL 22	DETAIL 24	DETAIL 27B	DETAIL 27C	DETAIL 29	DETAIL 32	DETAIL 38	DETAIL 38A
40.10	40.59				2587		5174	1200				
40.59	40.87			1478			2957					
40.87	41.26	2059					4058					20
41.26	41.39				686		1373					
41.39	41.50			581			1161	150				
41.50	42.97	7762					15,463					20
42.97	43.11			739			1417	150				20
43.11	44.55	7603					15,146					20
44.55	44.78			1214			2428	150				
44.78	45.19	2165					4270					20
45.19	45.27			422			844	150				
45.27	45.37				528		1056					
45.37	45.56			1003			2006					
45.56	45.80				1267		2534					
45.80	46.11			1637			3214					20
46.11	46.15	211					422					
46.15	46.32			898			1794	150				
46.32	46.56				1267		2534					
46.56	46.74			950			1901					
46.74	49.63	15,259					30,338					60
49.63	49.70			370			739					
AG INSPECTION "A" 40+28 TO 47+53					725	244	1326					2311
49.70	50.20				2635		5207	300				20
50.20	50.67				2482		4956	1200				
50.67	50.89						2319	600		2323		
50.89	51.04				792		1519	750				20
51.04	51.07				158		317					
51.07	51.10				158		317					
51.10	51.15				264		527	150			264	
51.15	51.18				158		317					
51.18	51.36				950		1900	150				
51.36	51.54		950		950		1899	300				
51.54	52.39		8976		4488		8916					20
52.39	52.46				370		739					
52.46	52.59			686			1373					
52.59	53.04	2376					4692					20
53.04	53.10			317			633	150				
53.10	53.21				581		1162					
53.21	53.48			1426			2851					
53.48	53.57	475					950					
53.57	53.71			739			1478					
53.71	53.75				211		421	150			211	
53.75	53.82				370		739				370	
53.82	53.90				422		845				845	
53.90	53.93						316	150	317		158	
53.93	53.97						421	150	422			
53.97	54.02				264		467	150				20
54.02	54.10				422		845					
SUBTOTAL		37,910	9926	12,460	22,735	244	148,281	6150	739	2323	1848	2591
TOTAL		240,768									4439	

3 **REVISED PER ADDENDUM No. 3 DATED DECEMBER 3, 2010**

PAVEMENT DELINEATION DETAILS AND QUANTITIES

PDD-3

REVISED BY | DATE REVISED
SAL PRIETO | MARK MILLER
CALCULATED-DESIGNED BY | CHECKED BY
FUNCTIONAL SUPERVISOR: MARK MILLER

STATE OF CALIFORNIA - DEPARTMENT OF TRANSPORTATION
Caltrans® ADVANCE PLANNING

V:\ProjectPlans\PSEWorking\d2\02-4c0101-add\24c010nc003.add

LAST REVISION 07-06-10 | DATE PLOTTED => 01-DEC-2010 | TIME PLOTTED => 09:47

Dist	COUNTY	ROUTE	POST MILES TOTAL PROJECT	SHEET No.	TOTAL SHEETS
02	Sis	97	40.1/54.1	59	114

Mark J. Miller 07-06-10
REGISTERED CIVIL ENGINEER DATE

7-12-10
PLANS APPROVAL DATE

REGISTERED PROFESSIONAL ENGINEER MARK MILLER No. C48454 Exp. 6-30-12 CIVIL STATE OF CALIFORNIA

THE STATE OF CALIFORNIA OR ITS OFFICERS OR AGENTS SHALL NOT BE RESPONSIBLE FOR THE ACCURACY OR COMPLETENESS OF SCANNED COPIES OF THIS PLAN SHEET.

TWO-COMPONENT PAINT PAVEMENT MARKING 3

LOCATION PM	MESSAGE	SQFT	TOTAL NUMBER	TOTAL SQFT	REMARKS
49.86	"CARS"	17	1	17	AT AG INSPECTION STATION *
49.86	"TRUCKS"	35	1	35	AT AG INSPECTION STATION *
49.86	"YIELD"	24	1	24	AT AG INSPECTION STATION *
49.86 (3)	TYPE V ARROW	33	3	99	AT AG INSPECTION STATION *
51.50 (3), 52.30 (3), 53.88 (3)	TYPE VI ARROW	42	9	378	LANE DROP ARROWS
40.10, 40.14, 40.16, 40.23, 40.25, 40.31 (2) 41.34, 43.02, 49.67, 50.13, 50.59, 50.95, 51.23 52.36 (2), 53.05, 53.83,	"STOP"	22	18	396	ROAD CONNECTIONS
50.66 (2), 50.75 (2), 50.83 (2), 53.88,	TYPE IV ARROW	15	7	105	DORRIS BUSINESS AREA
51.00, 51.10	RAILROAD CROSSING SYMBOL	70	2	140	AT UPRR
51.00 (2), 51.10 (2)	RAILROAD CROSSING TRANSVERSE STRIPES	48	4	192	AT UPRR
50.46 (4), 50.52 (4), 50.69 (4), 50.95 (2),	"CROSSWALK STRIPE"	48	14	672	DORRIS BUSINESS AREA
40.10, 40.14, 40.16, 40.23, 40.25, 40.31 (2) 41.34, 43.02, 44.61, 45.20 49.67, 50.13, 51.06, 51.08, 50.59, 50.95, 51.23 52.36 (2), 53.05, 53.83,	"LIMIT LINE"	40	22	880	ROAD CONNECTIONS
"A" 42+55.40	YIELD LINE	15	1	15	AT AG INSPECTION STATION *
"A" 42+55.40	YIELD	24	1	24	AT AG INSPECTION STATION *
"A" 42+55.40, 44+53.66, 46+12.50 (2)	TYPE I 18'-0" ARROW	25	4	100	AT AG INSPECTION STATION *
"A" 43+84.75 (5)	STOP	22	5	110	AT AG INSPECTION STATION *
"A" 43+84.75	LIMIT LINE (1'-0" WHITE LINE)	15	1	15	AT AG INSPECTION STATION *
"A" 44+53.66, 46+12.50	RVS	18	2	36	AT AG INSPECTION STATION *
"A" 46+12.50	AUTOS	31	1	31	AT AG INSPECTION STATION *
"A" 46+12.50	TRUCKS	35	1	35	AT AG INSPECTION STATION *
40.50, 41.50, 42.50, 43.50, 44.50, 45.50, 46.50, 47.50, 48.50, 49.50, 50.50, 51.50, 52.50, 53.50	HALFMILE MARKING	3	14	42	SEE DETAIL B
TOTAL				3346	

* SEE STAGE CONSTRUCTION AND TRAFFIC HANDLING PLANS, STAGE 3.

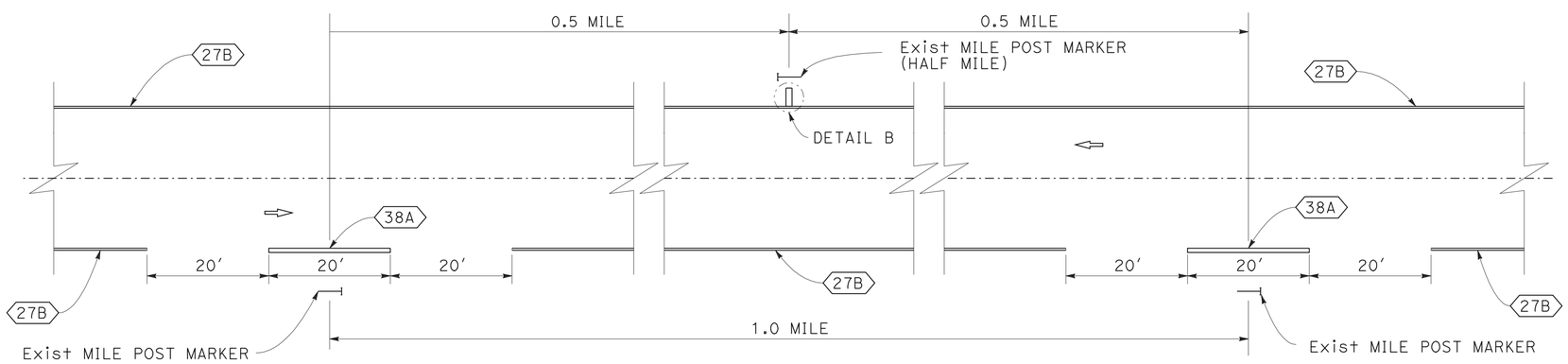

TYPICAL HALF MILE AND MILE POST STRIPE

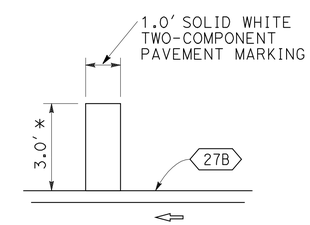

DETAIL B

* ACTUAL LENGTH MAY VARY DUE TO PAVEMENT WIDTH

3 **REVISED PER ADDENDUM No. 3 DATED DECEMBER 3, 2010**

PAVEMENT DELINEATION DETAILS AND QUANTITIES

PDD-4

REVISED BY | DATE REVISED
SAL PRIETO | MARK MILLER
CALCULATED-DESIGNED BY | CHECKED BY
FUNCTIONAL SUPERVISOR: MARK MILLER

STATE OF CALIFORNIA - DEPARTMENT OF TRANSPORTATION
Caltrans® ADVANCE PLANNING

V:\ProjectPlans\PSEWorking\d2\02-4c0101-add\24c010nc004.add

LAST REVISION 07-06-10 | DATE PLOTTED => 01-DEC-2010 | TIME PLOTTED => 09:47

Dist	COUNTY	ROUTE	POST MILES TOTAL PROJECT	SHEET No.	TOTAL SHEETS
02	Sis	97	40.1/54.1	75	114

Mark J. Miller 07-06-10
REGISTERED CIVIL ENGINEER DATE

7-12-10
PLANS APPROVAL DATE

REGISTERED PROFESSIONAL ENGINEER MARK MILLER No. C48454 Exp. 6-30-12 CIVIL STATE OF CALIFORNIA

THE STATE OF CALIFORNIA OR ITS OFFICERS OR AGENTS SHALL NOT BE RESPONSIBLE FOR THE ACCURACY OR COMPLETENESS OF SCANNED COPIES OF THIS PLAN SHEET.

3

NOTE:

1. (N) - NOT A SEPARATE PAY ITEM, FOR INFORMATION ONLY

ROADWAY QUANTITIES

LOCATION			(N) LENGTH	(N) WIDTH			ROADWAY EXCAVATION	COLD PLANE ASPHALT CONCRETE PAVEMENT	CLASS 2 AGGREGATE BASE	SUBGRADE ENHANCEMENT GEOTEXTILE	HOT MIX ASPHALT BINDER PG 64-28	HOT MIX ASPHALT BINDER PG 64-28 PM	TACK COAT	ASPHALT-RUBBER BINDER	SCREENINGS (HOT-APPLIED)	ASPHALTIC EMULSION (FOG SEAL COAT)	SAND COVER	IMPORTED MATERIAL (SHOULDER BACKING)
PM - PM			LF	LF			CY	SQ YD	CY	SQ YD	TON	TON	TON	TON	TON	TON	TON	TON
40.10	TO	40.20	528.0	41	TO	40												
40.20	TO	40.30	528.0	40	TO	41												
40.30	TO	41.00	3696.0	41	TO	41												
41.00	TO	42.00	5280.0	41	TO	40												
42.00	TO	43.00	5280.0	40	TO	40		225,557			39,331	31,465	19	589	2819	38	226	5142
43.00	TO	45.00	10560.0	40	TO	40												
45.00	TO	47.00	10560.0	40	TO	41												
47.00	TO	48.00	5280.0	41	TO	41												
48.00	TO	49.00	5280.0	41	TO	41												
49.00	TO	49.60	3153.6	40	TO	41												
49.60	TO	49.87	1435.6	40	TO	42	3359		1919	7197		3012	1					433
49.87	TO	50.20	1750.0	25	TO	42	3632		2076	7783		3257	1					540
50.20	TO	50.44	1250.0	26	TO	42	2590		1480	5550		2323	1					376
50.44	TO	50.48	200.0	35	TO	44	433		247	927		388						60
50.48	TO	50.96	2550.0	32	TO	68	6746		3855	14455		6050	2					
50.96	TO	51.04	400.0	24	TO	52	813		465	1743		729						56
51.04	TO	51.10	350.0	41	TO	52	813		465	1742		729						99
51.10	TO	51.23	670.8	30	TO	51	169	2728	96	3089	577	431	0.3	8.1	39	0.5	3.1	62
51.23	TO	51.30	360.4	30	TO	41		592			136	150	0.1	2.8	13	0.2	1.1	15
51.30	TO	51.40	537.2	31	TO	31												
51.40	TO	51.50	528.0	31	TO	56												
51.50	TO	52.10	3168.0	56	TO	52												
52.10	TO	52.30	1056.0	52	TO	54		34,742			7379	5830	3.5	109	522	7.0	42	760
52.30	TO	52.41	580.8	54	TO	54												
52.41	TO	52.51	528.0	54	TO	40												
52.51	TO	52.71	1059.2	40	TO	42												
52.71	TO	52.90	1000.0	40	TO	42	156	4556	89	333	887	682	0.4	13	61	0.8	4.9	105
52.90	TO	53.75	4488.0	42	TO	64												
53.75	TO	53.83	422.4	64	TO	64		36,895			6434	5147	3	96	461	6	37	617
53.83	TO	53.99	844.8	64	TO	40												
53.99	TO	54.10	580.8	40	TO	40												
FROM SCQ-1 (INSPECTION STATION)							4270		2732	6555		2747						114
"A" 115+73	TO	"A" 115+73										364						
"A" 121+90	TO	"A" 122+90					310											
51.50	TO	51.53					96											
51.50	TO	51.56					28					162						
52.14	TO	52.19					57					148						
"I" 42+10	TO	"I" 43+00																13
54.07							28					58						
FROM ROAD CONNECTIONS SUBTOTAL							1319	4275	753	2828		1779						83
FROM DIKE & MISC PAVING SUBTOTAL												154						
SUBTOTAL							24,819	309,345	14,177	52,202	54,744	65,605	32	818	3916	53	313	8475
TOTAL							24,819	309,345	14,177	52,202	120,349		32	818	3916	53	313	8475

SHOULDER RUMBLE STRIP

LOCATION		RUMBLE STRIP
PM - PM	L†/R†	STA
40.10 TO 50.24	L†/R†	1042
52.41 TO 54.10	L†/R†	172
TOTAL		1214

DIKE AND MISC PAVING

LOCATION		PLACE HOT MIX ASPHALT DIKE (TYPE A)	PLACE HOT MIX ASPHALT DIKE (TYPE E)	PLACE HOT MIX ASPHALT DIKE (TYPE F)	(N) HMA
PM - PM	L†/R†	LF	LF	LF	TON
51.30 TO 51.54	L†		1300		
51.53 TO 52.0	R†			2650	86
51.83 TO 51.94	L†			600	
52.10 TO 52.18	R†			400	
FROM SCQ-1	L†	638			18
"A" 75+68 TO 77+86	R†		174		5
FROM DQ-3			76		45
TOTAL		638	1550	3650	*154

* TOTAL SHOWN IN ROADWAY QUANTITIES TABLE

3 **REVISED PER ADDENDUM No. 3 DATED DECEMBER 3, 2010**

SUMMARY OF QUANTITIES

Q-1

REVISED BY | DATE REVISED
SAL PRIETO | MARK MILLER
CALCULATED-DESIGNED BY | CHECKED BY
FUNCTIONAL SUPERVISOR: MARK MILLER

STATE OF CALIFORNIA - DEPARTMENT OF TRANSPORTATION
Caltrans® ADVANCE PLANNING

24c010pa001.dgn

LAST REVISION DATE PLOTTED => 01-DEC-2010
TIME PLOTTED => 09:47
07-06-10

Dist	COUNTY	ROUTE	POST MILES TOTAL PROJECT	SHEET No.	TOTAL SHEETS
02	Sis	97	40.1/54.1	76	114

Mark J. Miller 07-06-10
REGISTERED CIVIL ENGINEER DATE

7-12-10
PLANS APPROVAL DATE

REGISTERED PROFESSIONAL ENGINEER MARK MILLER No. C48454 Exp. 6-30-12 CIVIL STATE OF CALIFORNIA

THE STATE OF CALIFORNIA OR ITS OFFICERS OR AGENTS SHALL NOT BE RESPONSIBLE FOR THE ACCURACY OR COMPLETENESS OF SCANNED COPIES OF THIS PLAN SHEET.

3

NOTES:

1. * SEE C-5, C-9, C-10
2. ** FOR TOTAL PAY QUANTITY, SEE SHEET Q-1

ROAD CONNECTION QUANTITIES

LOCATION	PM	LT	RT	CONFORM TYPE	PAVED	W1	W2	L	ROADWAY EXCAVATION	SUBGRADE ENHANCEMENT GEOTEXTILE	CLASS 2 AGG BASE	HMA	IMPORTED MATERIAL (SHOULDER BACKING)	COLD PLANE ASPHALT PAVEMENT
				A,B,C	Y / N	FT	FT	FT	CY	SQYD	CY	TONS	TONS	SQYD
JUNIPER KNOLL RD	40.10	X		B	Y	110	110	12				20	1	147
CORTEZ ST	40.15	X		B	Y	258	240	12				46	1	332
CORTEZ ST	40.17		X	B	Y	85	74	12				15	1	106
VERA CRUZ ST	40.28	X		B	Y	100	70	12				16	1	113
OLD STATE HWY	40.28		X	B	Y	205	124	12				31	1	219
DRIVEWAY	40.29	X		B	Y	46	26	12				7	1	48
COLIMA ST	40.32	X		B	Y	135	94	12				21	1	153
RAILROAD AVE	40.33		X	B	Y	220	196	12				39	1	277
SAN BLAS ST	40.39	X		B	Y	48	29	12				7	1	52
DRIVEWAY	41.33	X		B	Y	50	27	12				7	1	51
SHEEP MOUNTAIN RD	41.37		X	B	Y	178	101	12				26	1	186
DRIVEWAY	41.60	X		B	Y	60	36	12				9	1	64
DRIVEWAY	42.43		X	B	Y	51	34	12				8	1	56
SHADY DELL RD	43.03		X	B	Y	145	84	12				21	1	153
DRIVEWAY	43.03	X		B	Y	55	31	12				8	1	57
BUTTE VALLEY RD	44.63	X		B	Y	55	33	12				8	1	59
SAMS NECK RD	45.25	X		B	Y	150	108	12				24	1	172
DRIVEWAY	45.70		X	B	Y	65	41	12				10	1	71
DRIVEWAY	46.15		X	B	Y	60	39	12				9	1	66
DRIVEWAY	46.97	X		B	Y	50	29	12				7	1	53
DRIVEWAY	47.46	X		B	Y	55	31	12				8	1	57
DRIVEWAY	48.56	X		B	Y	50	28	12				7	1	52
DRIVEWAY	48.58	X		B	Y	56	33	12				8	1	59
DRIVEWAY	49.14	X		B	Y	58	33	12				9	1	61
RICHARDSON RD	49.70	X		A	Y	125	80	12	64	137	36	57		
DRIVEWAY	49.73	X			N	30	21	12						
DRIVEWAY	49.75	X			N	20	14	12						
SANDHOUSE DRIVEWAY	49.89	X		*	Y	109	24	62	214	458	122	192		
DRIVEWAY	49.98	X			N	60	48	12						
MT DIABLO RD	50.10		X	A	Y	73	64	9	32	69	18	29		
DRIVEWAY	50.10	X			N	53	39	9						
DRIVEWAY	50.15	X			N	88	58	9						
DRIVEWAY	50.16	X			N	130	103	9						
SIXTH ST	50.24		X	A	Y	70	59	9	30	65	17	27		
DRIVEWAY	50.24	X			N	115	111	9						
DRIVEWAY	50.35	X			N	28	34	9						
FIFTH ST	50.35		X	A	Y	42	35	9	18	38	10	16		
DRIVEWAY	50.37		X		N	20	16	9						
DRIVEWAY	50.38		X		N	35	31	9						
DRIVEWAY	50.39		X		N	20	16	9						
DRIVEWAY	50.40		X		N	100	82	9						
FOURTH ST	50.44	X		*C	Y	30	24	30	42	90	24	38		
BUTTE ST	50.44	X		*C	Y	39	36	20	39	83	22	35		
OREGON ST	50.48		X		N	45	41	9						
CALIFORNIA ST	50.54	X		*C	Y	35	37	18	34	72	19	30		
CALIFORNIA ST	50.54		X	*C	Y	37	28	18	30	65	17	27		
FOURTH ST	50.60		X	A	Y	110	97	9	48	103	28	43		
THIRD ST	50.70	X		A	Y	45	43	9	20	44	12	18		
THIRD ST	50.70		X	A	Y	60	47	9	25	53	14	22		
SECOND ST	50.81	X		A	Y	50	41	9	21	46	12	19		
SECOND ST	50.81		X	A	Y	60	47	9	25	53	14	22		
FIRST ST	50.90	X		A	Y	44	38	9	19	41	11	17		
MAIN ST	50.90	X		A	Y	67	54	9	28	60	16	25		
PINE ST	50.95	X		A	Y	82	60	9	33	71	19	30		
PINE ST	50.95		X	A	Y	60	48	9	25	54	14	23		
ALLEY	50.99		X	A	Y	370	370	9	173	370	99	155		
JUNIPER ST	51.02	X		*C	Y	35	30	18	30	65	17	27		
RAILROAD AVE	51.03		X		N	62	52	9						
RAILROAD AVE	51.04	X		*C	Y	39	29	26	46	98	26	41	7	
EAST AVE	51.10		X	A	Y	110	83	9	45	97	26	40	2	
DRIVEWAY	51.10	X			N	20	20	9						
DRIVEWAY	51.21	X		A	Y	45	27	12	22	48	13	20	3	
DRIVEWAY	51.23	X		A	Y	370	331	12	218	467	125	196	3	
CENTER ST	51.23		X	A	Y	71	51	12	38	81	22	34	3	
DRIVEWAY	51.96	X			N	56	34	12					8	
INDIAN TOM LAKE RD	52.37	X		B	Y	210	180	12				36	1	260
INDIAN TOM LAKE RD	52.37		X	B	Y	235	157	12				36	1	261
DRIVEWAY	52.90	X			N	46	28	12					6	
DRIVEWAY	52.90		X	B	Y	74	52	12				12	1	84
OWENS RD	53.06	X		B	Y	90	53	12				13	1	95
PORTABLE SCALE SITE	53.30		X	B	Y	220	196	12				39	1	277
PORTABLE SCALE SITE	53.48		X	B	Y	300	234	12				50	1	356
DRIVEWAY	53.54	X			N	52	36	12					7	
DRIVEWAY	53.54		X		N	54	37	12					8	
HWY 161	53.85		X	B	Y	240	176	12				39	1	278
DRIVEWAY	54.06		X		N	40	25	12					5	
SUBTOTAL THIS SHEET **									1319	2828	753	1779	83	4275

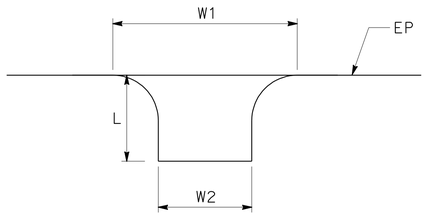

TYPICAL ROAD CONNECTION

3 **REVISED PER ADDENDUM No. 3 DATED DECEMBER 3, 2010**

SUMMARY OF QUANTITIES

Q-2

STATE OF CALIFORNIA - DEPARTMENT OF TRANSPORTATION
Caltrans® ADVANCE PLANNING

FUNCTIONAL SUPERVISOR: MARK MILLER
CALCULATED-DESIGNED BY: SAL PRIETO
CHECKED BY: MARK MILLER
REVISED BY
DATE REVISED

24c010pa002.add

LAST REVISION 07-06-10
DATE PLOTTED => 01-DEC-2010
TIME PLOTTED => 09:48

Dist	COUNTY	ROUTE	POST MILES TOTAL PROJECT	SHEET No.	TOTAL SHEETS
02	Sis	97	40.1/54.1	77	114

Mark J. Miller 07-06-10
REGISTERED CIVIL ENGINEER DATE

7-12-10
PLANS APPROVAL DATE

REGISTERED PROFESSIONAL ENGINEER MARK MILLER No. C48454 Exp. 6-30-12 CIVIL STATE OF CALIFORNIA

THE STATE OF CALIFORNIA OR ITS OFFICERS OR AGENTS SHALL NOT BE RESPONSIBLE FOR THE ACCURACY OR COMPLETENESS OF SCANNED COPIES OF THIS PLAN SHEET.

3

ADJUST UTILITY COVER TO GRADE

LOCATION	STATION	OFFSET (FT)	R+/L+	EA	COMMENTS
Sis-97	"A" 44+13	35	L+	1	WATER VALVE
	"A" 44+15	37	L+	1	WATER VALVE
	"A" 44+15	26	L+	1	WATER VALVE
	"A" 43+09	24	L+	1	WATER VALVE
	"A" 43+37	100.8	L+	1	MONITORING WELL
	"A" 44+19	46.1	L+	1	MONITORING WELL
	"A" 45+27	68.3	L+	1	MONITORING WELL
	"A" 49+80	158.2	L+	1	MONITORING WELL
	"A" 46+30	71.6	L+	1	MONITORING WELL
	"A" 43+22	26	L+	1	WATER VALVE
	"A" 76+67	71	L+	1	WATER VALVE
	"A" 76+69	71	L+	1	WATER VALVE
	"A" 78+15	11	L+	1	MANHOLE
	"A" 79+75	13	L+	1	MANHOLE
	"A" 81+18	22	L+	1	WATER VALVE
	"A" 81+25	15	L+	1	MANHOLE
	"A" 82+89	22	L+	1	WATER VALVE
	"A" 82+92	15	L+	1	WATER VALVE
	"A" 82+98	24	L+	1	WATER VALVE
	"A" 83+00	18	L+	1	MANHOLE
	"A" 84+97	25	L+	1	MANHOLE
	"A" 85+27	30	R+	1	MONITORING WELL
	"A" 85+92	26	R+	1	MONITORING WELL
	"A" 86+44	34	R+	1	MONITORING WELL
	"A" 89+86	28	L+	1	WATER VALVE
	"A" 89+86	42	L+	1	WATER VALVE
	"A" 95+45	24	L+	1	WATER VALVE
	"A" 95+45	29	L+	1	WATER VALVE
	"A" 95+47	26	L+	1	WATER VALVE
	"A" 95+85	24	L+	1	WATER VALVE
	"A" 95+85	26	L+	1	WATER VALVE
	"A" 100+03	35	L+	1	WATER VALVE
	"A" 100+24	66	L+	1	WATER VALVE
	"A" 103+84	17	L+	1	WATER VALVE
	"A" 103+85	18	L+	1	WATER VALVE
	"A" 103+87	17	L+	1	WATER VALVE
	"A" 103+87	23	R+	1	WATER VALVE
	"A" 106+89	20	L+	1	WATER VALVE
	"A" 106+90	21	L+	1	WATER VALVE
TOTAL				39	

3 REVISED PER ADDENDUM No. 3 DATED DECEMBER 3, 2010

SUMMARY OF QUANTITIES

Q-3

REVISED BY | DATE REVISED
SAL PRIETO | MARK MILLER
CALCULATED-DESIGNED BY | CHECKED BY
FUNCTIONAL SUPERVISOR | MARK MILLER
STATE OF CALIFORNIA - DEPARTMENT OF TRANSPORTATION
Caltrans ADVANCE PLANNING

V:\Project\Plans\PSEWorking\d2\02-4c0101-add\24c010pa003.add

LAST REVISION 07-06-10 | DATE PLOTTED => 01-DEC-2010 | TIME PLOTTED => 09:48

Dist	COUNTY	ROUTE	POST MILES TOTAL PROJECT	SHEET No.	TOTAL SHEETS
02	Sis	97	40.1/54.1	78	114

Mark J. Miller 07-06-10
REGISTERED CIVIL ENGINEER DATE

7-12-10
PLANS APPROVAL DATE

REGISTERED PROFESSIONAL ENGINEER MARK MILLER No. C48454 Exp. 6-30-12 CIVIL STATE OF CALIFORNIA

THE STATE OF CALIFORNIA OR ITS OFFICERS OR AGENTS SHALL NOT BE RESPONSIBLE FOR THE ACCURACY OR COMPLETENESS OF SCANNED COPIES OF THIS PLAN SHEET.

3

DELINEATORS

POST MILES	L†	R†	REMOVE DELINEATOR (EA)	DELINEATOR CLASS 2 (EA)			DELINEATOR CLASS 1 (EA)
				On Tangent	In Curves	Road Connections	
40.1 TO 54.1	X	X	384	247	100	135	
50.45		X					10
TOTAL			384	482			10

MARKERS

LOCATION	REMOVE MARKER	PAVEMENT MARKER (RETROREFLECTIVE-RECESSED)	MILEPOST MARKER	OBJECT MARKER (TYPE L-2)	REMARKS
PM - PM	EA	EA	EA	EA	
40.1 TO 54.1		3850	28	20	
40.1 TO 54.1	48				OBJECT MARKERS, MILEPOST MARKERS

METAL BEAM GUARD RAILING

Co-Rte	LOCATION		RECONSTRUCT MBGR		MBGR (7' POST)	REMOVE MBGR	ALTERNATIVE FLARED TERMINAL SYSTEM	ALTERNATIVE CRASH CUSHION	TERMINAL ANCHOR ASSEMBLY (TYPE SFT)	REMARKS
		DIRECTION	LF	LF	LF	LF	EA	EA	EA	
			7' POST	6' POST						
SIS-97	51.05 TO 51.06	NB		50		25.0	1		1	PERPETUATE END POINT, THEN FLARE OUT TO NEW EP
	51.08 TO 51.09	SB				37.5		1		REPLACE MBGR WITH CRASH CUSHION SYSTEM
	51.24 TO 51.49	NB				1350				REMOVE AFTER EMBANKMENT PLACED BEHIND
	51.95 TO 52.14	SB	350.0	400	250		1		1	EXTEND MBGR 250' NORTH OF EXISTING MBGR - PLUS TERMINAL SECTION
	52.18 TO 52.36	NB	350.0	600					1	PERPETUATE EXIST BURIED POST END ANCHOR
	53.10 TO 53.15	SB		275					1	PERPETUATE EXIST BURIED POST END ANCHOR
	53.11 TO 53.18	NB		325					1	PERPETUATE EXIST BURIED POST END ANCHOR
	53.82 TO 53.97	SB	754.5			37.5	1		1	
		SUBTOTAL	1454.5	1650						
		TOTAL	3104.5		250	1450.0	3	1	6	

3 **REVISED PER ADDENDUM No. 3 DATED DECEMBER 3, 2010**

SUMMARY OF QUANTITIES
Q-4

REVISED BY | DATE REVISED
SAL PRIETO | MARK MILLER
CALCULATED-DESIGNED BY | CHECKED BY
FUNCTIONAL SUPERVISOR | MARK MILLER
STATE OF CALIFORNIA - DEPARTMENT OF TRANSPORTATION
Caltrans® ADVANCE PLANNING
24c010pa004.add

LAST REVISION | DATE PLOTTED => 01-DEC-2010 | TIME PLOTTED => 09:48
07-06-10

Dist	COUNTY	ROUTE	POST MILES TOTAL PROJECT	SHEET No.	TOTAL SHEETS
02	Sis	97	40.1/54.1	79	114

REGISTERED CIVIL ENGINEER 07-06-02 DATE

7-12-10
PLANS APPROVAL DATE

REGISTERED PROFESSIONAL ENGINEER GREG KINGSFIELD No. C76297 Exp 6-30-12 CIVIL STATE OF CALIFORNIA

THE STATE OF CALIFORNIA OR ITS OFFICERS OR AGENTS SHALL NOT BE RESPONSIBLE FOR THE ACCURACY OR COMPLETENESS OF SCANNED COPIES OF THIS PLAN SHEET.

3

NOTE:

1. (N) - NOT A SEPARATE PAY ITEM, FOR INFORMATION ONLY

MARKER (CULVERT)

LOCATION	EA
"A" 42+23, 161 Lt	1
"A" 45+38, 138 Lt	1
"A" 121+91, 55 Rt	1
"A" 121+91, 22 Lt	1
PM 52.75, 40 Lt	1
TOTAL	5

VEGETATION CONTROL (MINOR CONCRETE)

LOCATION	
	SQYD
PM 51.95 TO 52.14	357
TOTAL	357

TEMPORARY EROSION CONTROL

LOCATION	TEMP FIBER ROLL	TEMP GRAVEL BAG BERM	TEMP COVER	TEMP DRAINAGE INLET PROTECTION	TEMP HYDRAULIC MULCH (POLYMER STABILIZED FIBER MATRIX)
	LF	LF	SQYD	EA	SQYD
SIS 97+40.1 TO 97+54.1	2610	110	1730	43	3462
TOTAL					

CURB AND GUTTER

LOCATION	REMOVE CONCRETE	MINOR CONCRETE (Misc Const)	COMMENTS
	CY	CY	
"A" 41+70 Lt		5.6	CURB AND GUTTER
"A" 77+00 Lt	1.6	1.6	CURB AND GUTTER
"A" 81+10 Lt	3.2	3.2	SIDEWALK, CURB AND GUTTER
"A" 81+50 Rt	4.7	4.7	SIDEWALK, CURB AND GUTTER
"A" 82+80 Lt	1.2	1.2	CURB AND GUTTER
"A" 82+80 Rt	1.2	1.2	CURB AND GUTTER
"A" 108+45 Lt	13.4		SIDEWALK, CURB AND GUTTER
FROM DRAINAGE QUANTITIES	25.2	70.0	
TOTAL	50.5	87.5	

3 REVISED PER ADDENDUM No. 3 DATED DECEMBER 3, 2010

SUMMARY OF QUANTITIES

Q-5

REVISED BY | DATE REVISED
GREG KINGSFIELD | ALEX PETERSON
CALCULATED-DESIGNED BY | CHECKED BY
FUNCTIONAL SUPERVISOR
STEVE THORNE

STATE OF CALIFORNIA - DEPARTMENT OF TRANSPORTATION
Caltrans HYDRAULICS DESIGN

24c010pa005.add

LAST REVISION 07-06-10 | DATE PLOTTED => 01-DEC-2010 | TIME PLOTTED => 09:48

Dist	COUNTY	ROUTE	POST MILES TOTAL PROJECT	SHEET No.	TOTAL SHEETS
02	Sis	97	40.1/54.1	80A	114

ART 09-22-10
REGISTERED ELECTRICAL ENGINEER DATE

7-12-10
PLANS APPROVAL DATE

REGISTERED PROFESSIONAL ENGINEER A.P. ROBLES No. E15293 Exp. 3-31-11 ELECTRICAL STATE OF CALIFORNIA

THE STATE OF CALIFORNIA OR ITS OFFICERS OR AGENTS SHALL NOT BE RESPONSIBLE FOR THE ACCURACY OR COMPLETENESS OF SCANNED COPIES OF THIS PLAN SHEET.

3

NOTES: (SHEETS E-2 AND E-3)

1. EXISTING 30 A, 2P CB ("TRUCK LANE LIGHTS") IN PANEL B.
2. INSTALL CONDUIT ON POLE. SPLICE OVERHEAD CONDUCTORS TO NEW CONDUCTORS.
3. ADD #4G FROM EXISTING PANEL TO OVERHEAD CABLE FOR CONTINUOUS GROUNDING SYSTEM.
4. 1½"C, 2#4, 1#4G.

LEGEND

EXISTING FLOOD LIGHT(S) ON EXISTING WOOD POLE

RELOCATED FLOOD LIGHT ON NEW WOOD POLE

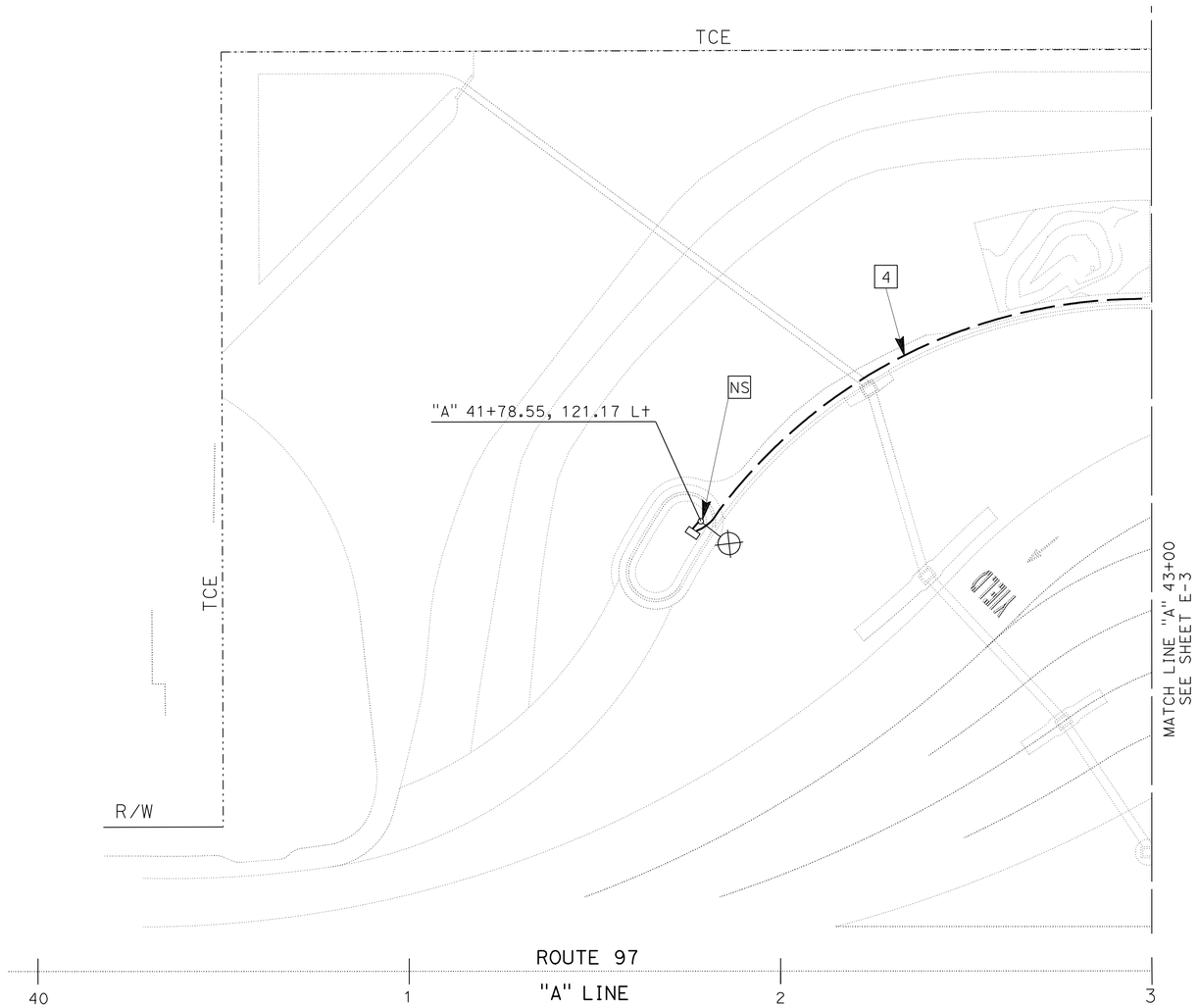

3 **ADDED PER ADDENDUM No. 3 DATED DECEMBER 3, 2010**

THIS PLAN IS ACCURATE FOR ELECTRICAL WORK ONLY.

LIGHTING (AREA)

SCALE: 1" = 20'

E-2

STATE OF CALIFORNIA - DEPARTMENT OF TRANSPORTATION
Caltrans® **ELECTRICAL DESIGN**

FUNCTIONAL SUPERVISOR: ROB STINGER
CALCULATED-DESIGNED BY: ARTURO P. ROBLES
CHECKED BY: ROB STINGER
REVISED BY
DATE REVISED

24c010ua002.add

LAST REVISION 07-07-10
DATE PLOTTED => 01-DEC-2010
TIME PLOTTED => 09:48

Dist	COUNTY	ROUTE	POST MILES TOTAL PROJECT	SHEET No.	TOTAL SHEETS
02	Sis	97	40.1/54.1	80B	114

ART 09-22-10
REGISTERED ELECTRICAL ENGINEER DATE

7-12-10
PLANS APPROVAL DATE

REGISTERED PROFESSIONAL ENGINEER A.P. ROBLES No. E15293 Exp. 3-31-11 ELECTRICAL STATE OF CALIFORNIA

THE STATE OF CALIFORNIA OR ITS OFFICERS OR AGENTS SHALL NOT BE RESPONSIBLE FOR THE ACCURACY OR COMPLETENESS OF SCANNED COPIES OF THIS PLAN SHEET.

3

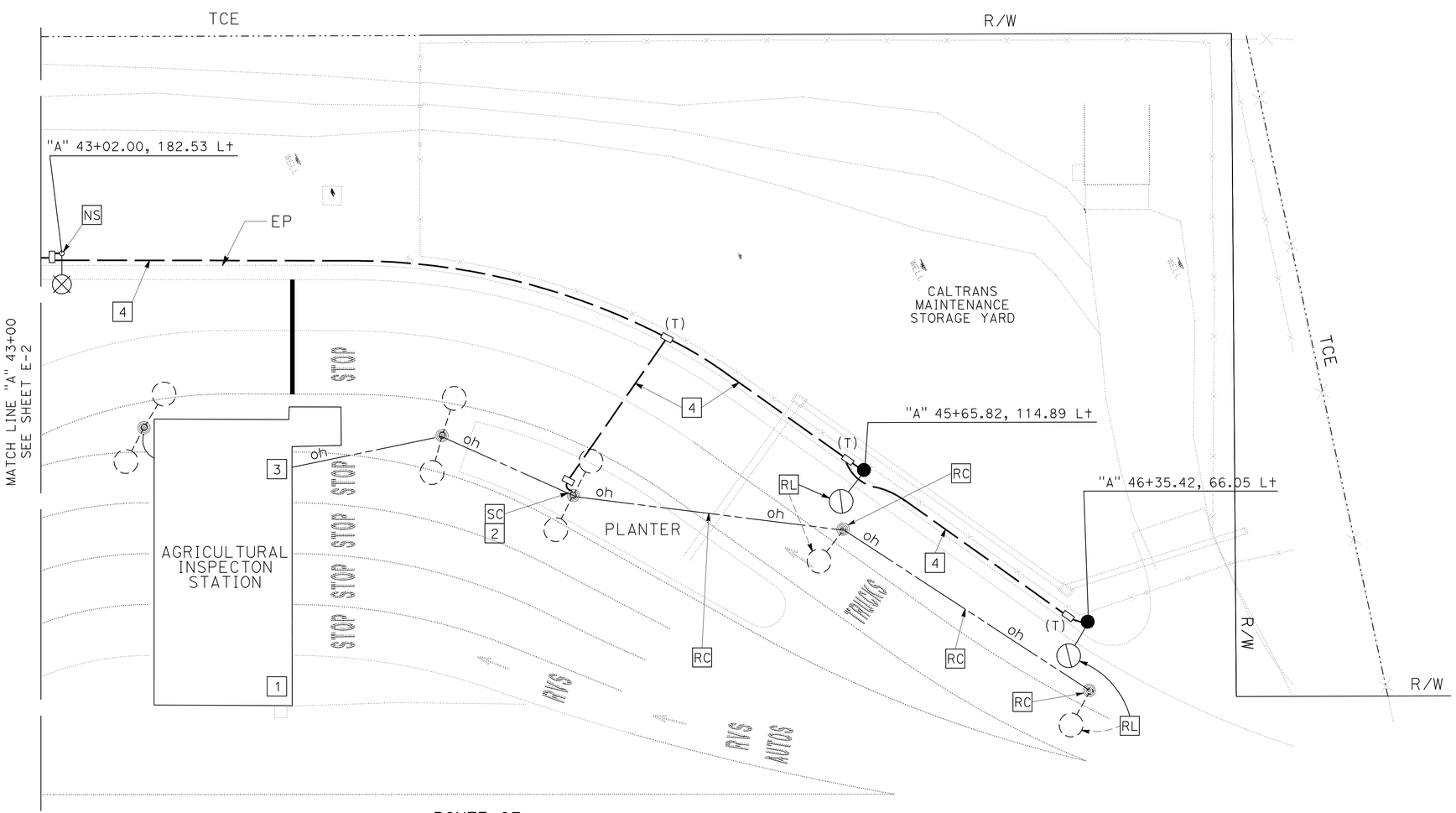

PLAN
SCALE: 1" = 20'

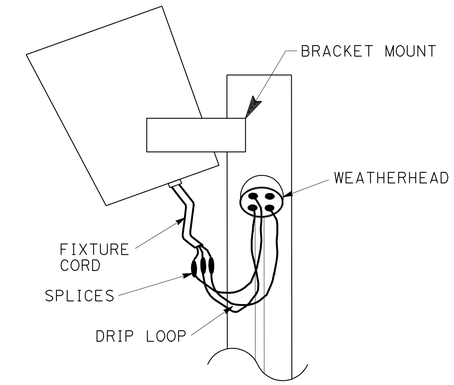

DETAIL A

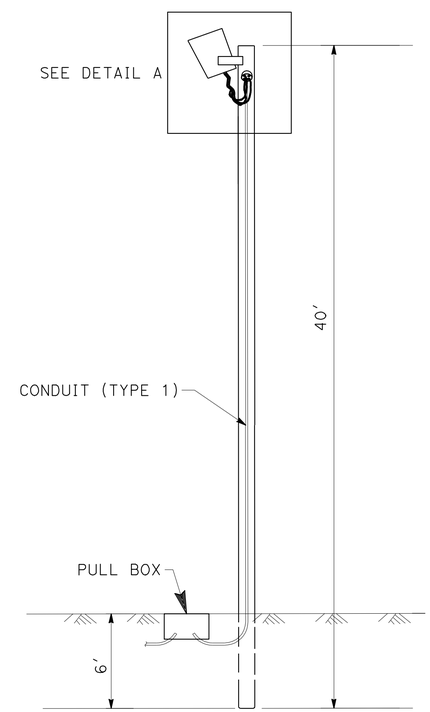

FLOOD LIGHT ON WOOD POLE
NO SCALE

3 **ADDED PER ADDENDUM No. 3 DATED DECEMBER 3, 2010**

THIS PLAN IS ACCURATE FOR ELECTRICAL WORK ONLY.

LIGHTING (AREA)

SCALE AS SHOWN

E-3

REVISED BY	DATE REVISED

CALCULATED-DESIGNED BY	CHECKED BY
ARTURO P. ROBLES	ROB STINGER

FUNCTIONAL SUPERVISOR: ROB STINGER

STATE OF CALIFORNIA - DEPARTMENT OF TRANSPORTATION
Caltrans® **ELECTRICAL DESIGN**

24c010ua003.add

LAST REVISION 07-07-10 | DATE PLOTTED => 01-DEC-2010 | TIME PLOTTED => 09:48

DIST	COUNTY	ROUTE	POST MILES TOTAL PROJECT	SHEET NO.	TOTAL SHEETS
02	Sis	97	40.1/54.1	105A	114

REGISTERED CIVIL ENGINEER

January 18, 2008
PLANS APPROVAL DATE

REGISTERED PROFESSIONAL ENGINEER
Stanley P. Johnson
No. C57793
Exp. 03-31-08
CIVIL
STATE OF CALIFORNIA

The State of California or its officers or agents shall not be responsible for the accuracy or completeness of electronic copies of this plan sheet.

3

To accompany plans dated 7-12-10

LUMINAIRE ARM DATA

PROJECTED LENGTH	THICKNESS	MINIMUM OD @ POLE	MOUNTING HEIGHT
* 6'-0"	0.1196"	3¼"	36'-9"±
8'-0"		3½"	37'-3"±
10'-0"		3¾"	38'-0"±
12'-0"		3¾"	39'-0"±
15'-0"		4¼"	39'-6"±
** 20'-0"	0.1793"	5"	37'-0"±

* Type 30 - arm length 6'-0" - 15'-0" maximum
** Type 31 - arm lengths 20'-0"

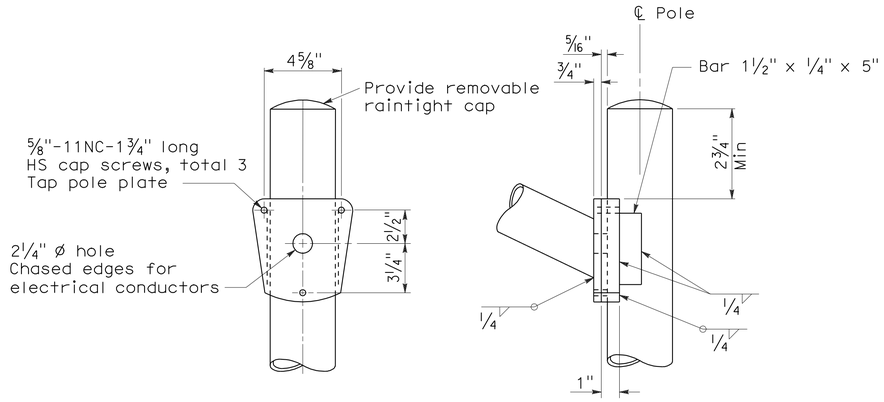

DETAIL A - TYPE 30

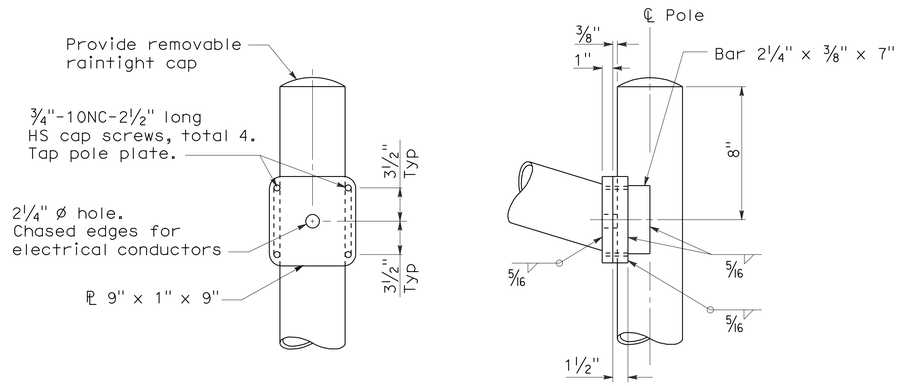

DETAIL A - TYPE 31

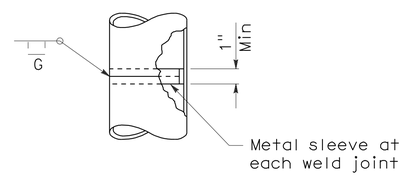

POLE SPLICE

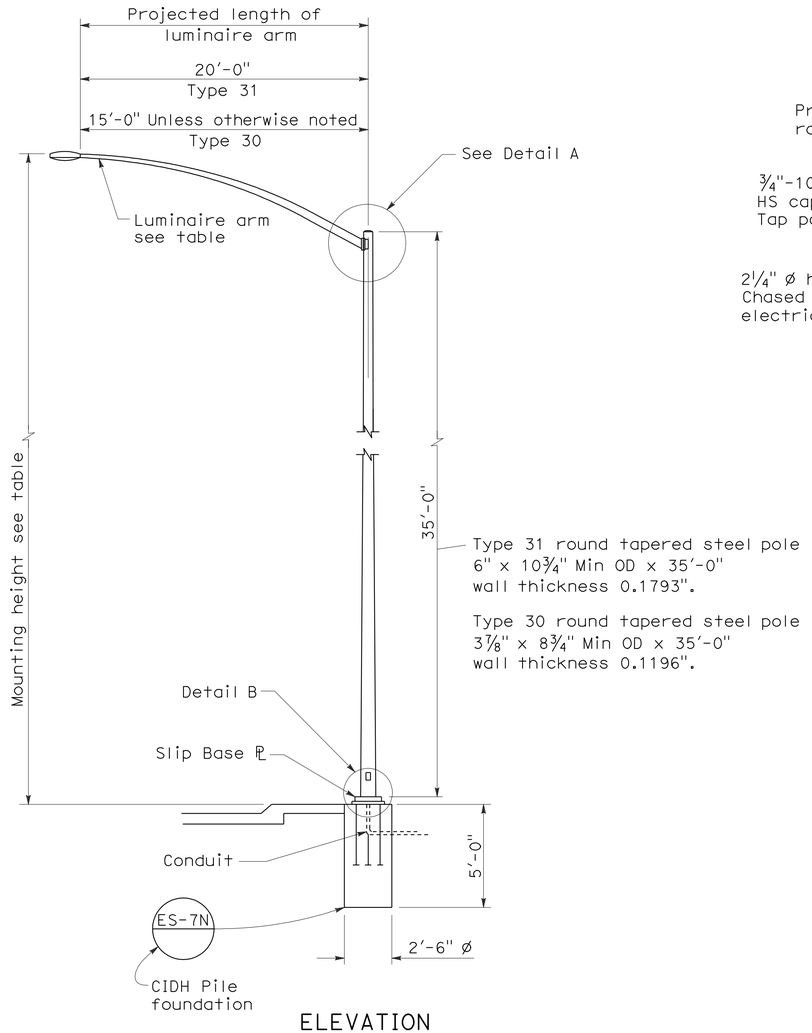

ELEVATION

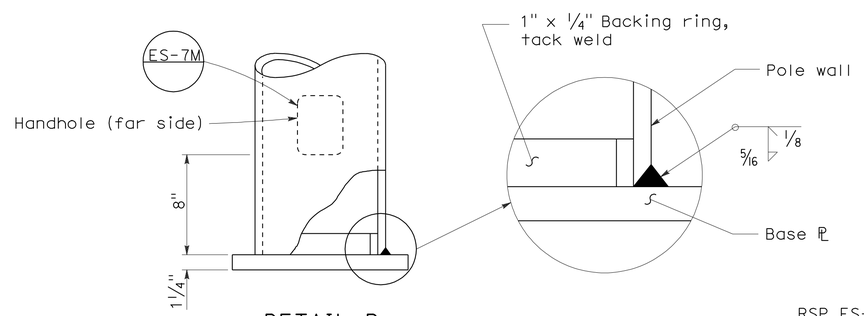

DETAIL B

NOTES:

1. Sheet steel shall have a minimum yield of 48,000 psi.
2. For slip base details see Standard Plan ES-6F.
3. For Type 30 fixed base use Type 15 base plate, and foundation shown on Revised Standard Plan RSP ES-6A. Use 1¼" Dia x 3'-6" x 4" anchor bolts.
4. For Type 31 fixed base use Type 32 base plate, anchor bolts and foundation on Standard Plan ES-6G.
5. Handhole shall be located on downstream side of traffic unless noted otherwise on plans.
6. For additional general notes refer to Standard Plan ES-7M.

STATE OF CALIFORNIA
DEPARTMENT OF TRANSPORTATION

ELECTRICAL SYSTEMS (LIGHTING STANDARD TYPES 30 AND 31)

NO SCALE

RSP ES-6E DATED JANUARY 18, 2008 SUPERCEDES STANDARD PLAN ES-6E DATED MAY 1, 2006 - PAGE 430 OF THE STANDARD PLANS BOOK DATED MAY 2006.

3 **ADDED PER ADDENDUM No. 3 DATED DECEMBER 3, 2010**

REVISED STANDARD PLAN RSP ES-6E

2006 REVISED STANDARD PLAN RSP ES-6E

11-19-07

DIST	COUNTY	ROUTE	POST MILES TOTAL PROJECT	SHEET NO.	TOTAL SHEETS
02	Sis	97	40.1/54.1	114A	114

LICENSED LANDSCAPE ARCHITECT

April 3, 2009
PLANS APPROVAL DATE

The State of California or its officers or agents shall not be responsible for the accuracy or completeness of electronic copies of this plan sheet.

LICENSED LANDSCAPE ARCHITECT — Robert B. Schott — 3025 — Signature — 11-30-10 Renewal Date — 2-25-09 Date — STATE OF CALIFORNIA

3

To accompany plans dated 7-12-10

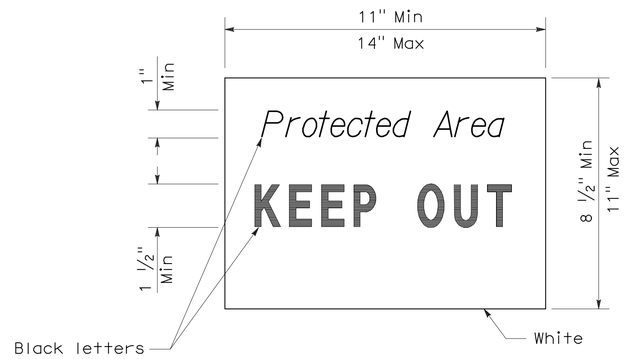

SIGN DETAIL

NOTE:

1. Temporary silt fence and temporary straw bale barrier shown for reference purposes only.

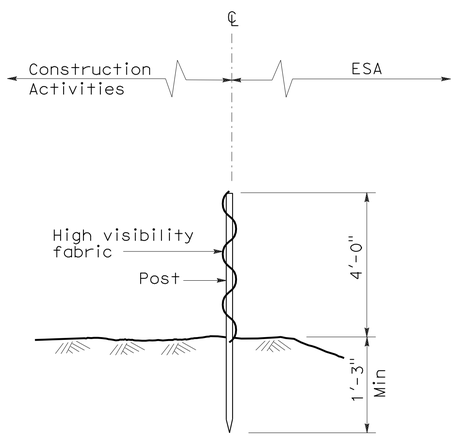

SECTION
TEMPORARY FENCE (TYPE ESA)

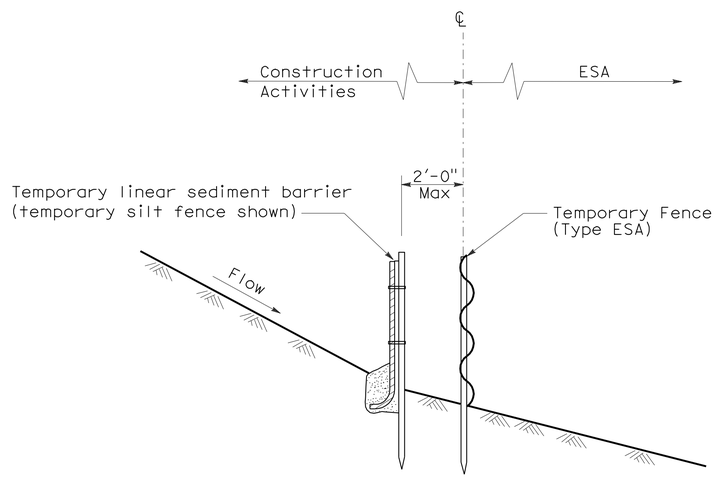

SECTION
PLACEMENT DETAIL
FOR TEMPORARY LINEAR SEDIMENT BARRIER
USED WITH TEMPORARY
FENCE (TYPE ESA)
(See Note 1)

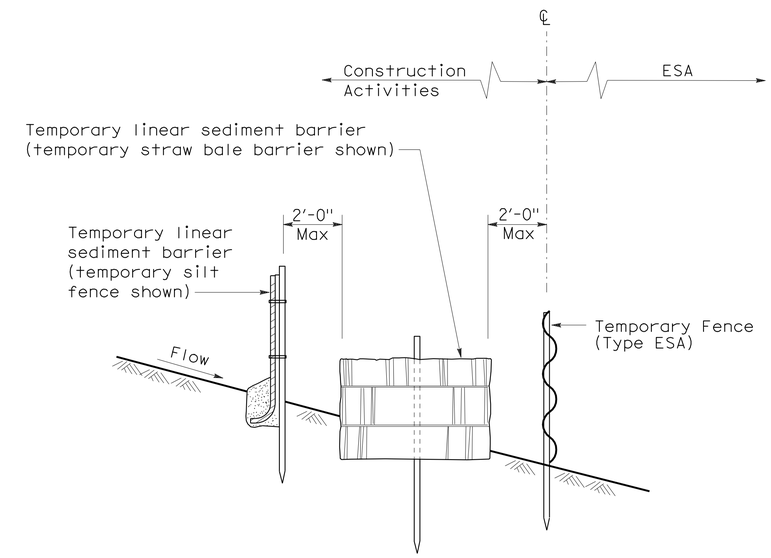

SECTION
PLACEMENT DETAIL
FOR TEMPORARY SILT FENCE
AND TEMPORARY STRAW BALE BARRIER
USED WITH TEMPORARY FENCE (TYPE ESA)
(See Note 1)

STATE OF CALIFORNIA
DEPARTMENT OF TRANSPORTATION

TEMPORARY WATER POLLUTION CONTROL DETAILS [TEMPORARY FENCE (TYPE ESA)]

NO SCALE

NSP T65 DATED APRIL 3, 2009 SUPPLEMENTS
THE STANDARD PLANS BOOK DATED MAY 2006.

NEW STANDARD PLAN NSP T65

3 **ADDED PER ADDENDUM No. 3 DATED DECEMBER 3, 2010**

2006 NEW STANDARD PLAN NSP T65