Dist	COUNTY	ROUTE	POST MILES TOTAL PROJECT	SHEET No.	TOTAL SHEETS
02	Sis	5	R45.6/R47.3 R62.0/R62.8	1	78

STATE OF CALIFORNIA

DEPARTMENT OF TRANSPORTATION

ACIM-005-9(172)E

PROJECT PLANS FOR CONSTRUCTION ON

STATE HIGHWAY

IN SISKIYOU COUNTY IN AND NEAR YREKA FROM YREKA CREEK BRIDGE TO 0.2 MILE SOUTH OF MINER STREET UNDERCROSSING AND FROM 1.0 MILE SOUTH TO 0.1 MILE SOUTH OF DITCH CREEK ROAD OVERCROSSING

TO BE SUPPLEMENTED BY STANDARD PLANS DATED MAY 2010

INDEX OF PLANS

SHEET No.	DESCRIPTION
1	TITLE SHEET AND LOCATION MAP
2	TYPICAL CROSS SECTIONS
3-10	LAYOUTS
11-25	CONSTRUCTION DETAILS
26-33	UTILITY PLANS
34	CONSTRUCTION AREA SIGNS
35-41	SIGN DETAILS AND QUANTITIES
42-43	SUMMARY OF QUANTITIES
44-51	EROSION CONTROL PLAN AND QUANTITIES
52-67	ELECTRICAL
68-70	ELECTRICAL/STRUCTURAL
71-78	REVISED STANDARD PLANS

THE STANDARD PLANS LIST APPLICABLE TO THIS CONTRACT IS INCLUDED IN THE NOTICE TO BIDDERS AND SPECIAL PROVISIONS BOOK.

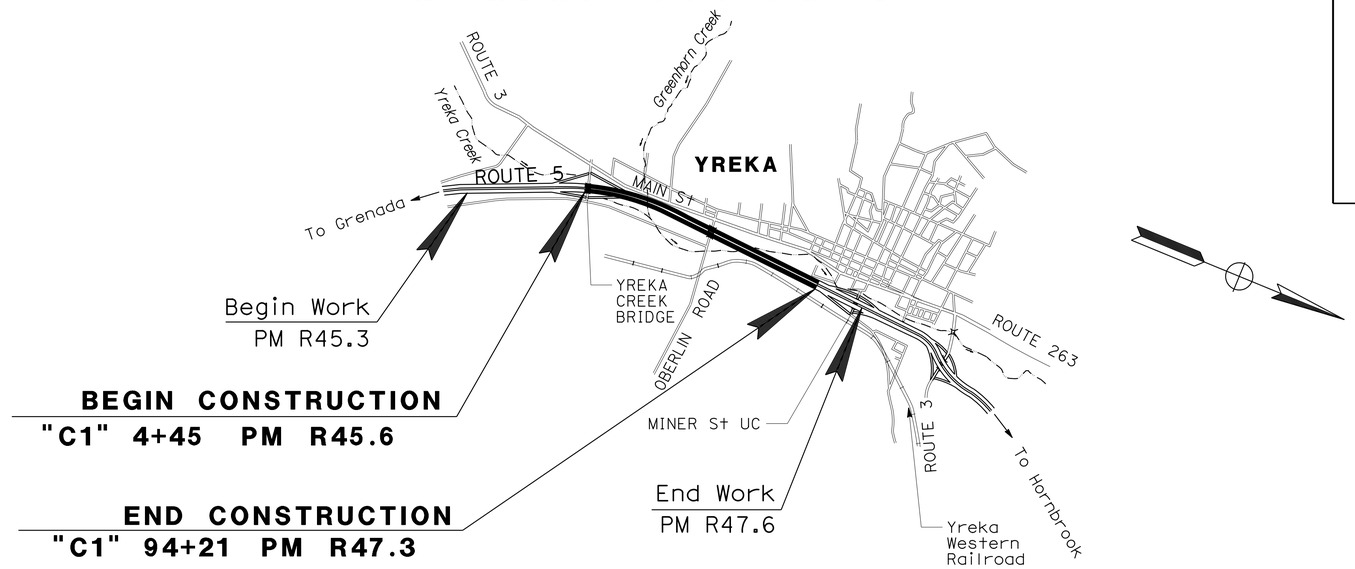

LOCATION 1

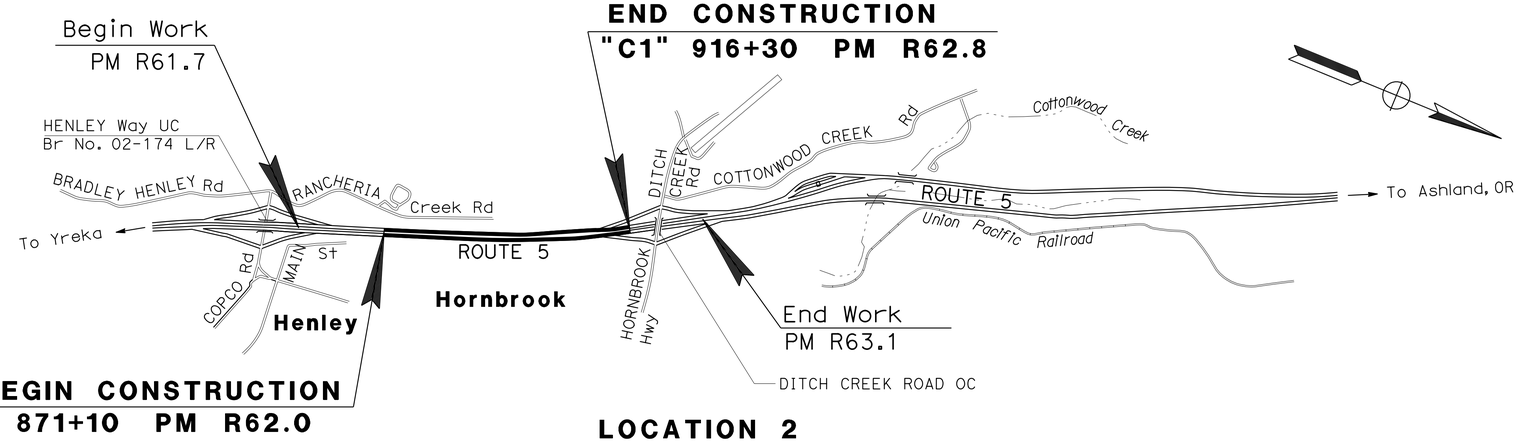

LOCATION 2

NO SCALE

THE CONTRACTOR SHALL POSSESS THE CLASS (OR CLASSES) OF LICENSE AS SPECIFIED IN THE "NOTICE TO BIDDERS."

PROJECT MANAGER: DEREK WILLIS

DESIGN ENGINEER: JULIE CASEY

P:\proj1\02\4E280_plans\pse\24e280ab001.dgn

PROJECT ENGINEER REGISTERED CIVIL ENGINEER — DATE 10-16-13

October 16, 2013
PLANS APPROVAL DATE

REGISTERED PROFESSIONAL ENGINEER — MICHAEL ZDENEK — No. C76156 — Exp. 06-30-14 — CIVIL — STATE OF CALIFORNIA

THE STATE OF CALIFORNIA OR ITS OFFICERS OR AGENTS SHALL NOT BE RESPONSIBLE FOR THE ACCURACY OR COMPLETENESS OF SCANNED COPIES OF THIS PLAN SHEET.

CONTRACT No.	02-4E2804
PROJECT ID	0200020247

LAST REVISION 10-16-13 — DATE PLOTTED => 13-DEC-2013 — TIME PLOTTED => 07:14

Dist	COUNTY	ROUTE	POST MILES TOTAL PROJECT	SHEET No.	TOTAL SHEETS
02	Sis	5	R45.6/R47.3 R62.0/R62.8	2	78

REGISTERED CIVIL ENGINEER 10-16-13 DATE

10-16-13
PLANS APPROVAL DATE

REGISTERED PROFESSIONAL ENGINEER MICHAEL ZDENEK No. C76156 Exp. 06-30-14 CIVIL STATE OF CALIFORNIA

THE STATE OF CALIFORNIA OR ITS OFFICERS OR AGENTS SHALL NOT BE RESPONSIBLE FOR THE ACCURACY OR COMPLETENESS OF SCANNED COPIES OF THIS PLAN SHEET.

NOTE:

1. DIMENSIONS OF THE PAVEMENT STRUCTURES (STRUCTURAL SECTIONS) ARE SUBJECT TO TOLERANCES SPECIFIED IN THE STANDARD SPECIFICATIONS.

STRUCTURAL SECTION NOTES:

[a] Exist OUTSIDE SHOULDER
Var 0.60' TO 0.90' AC
0.40' AB
Var 0.30' TO 0.80' AS

ABBREVIATIONS:

(E) EXISTING

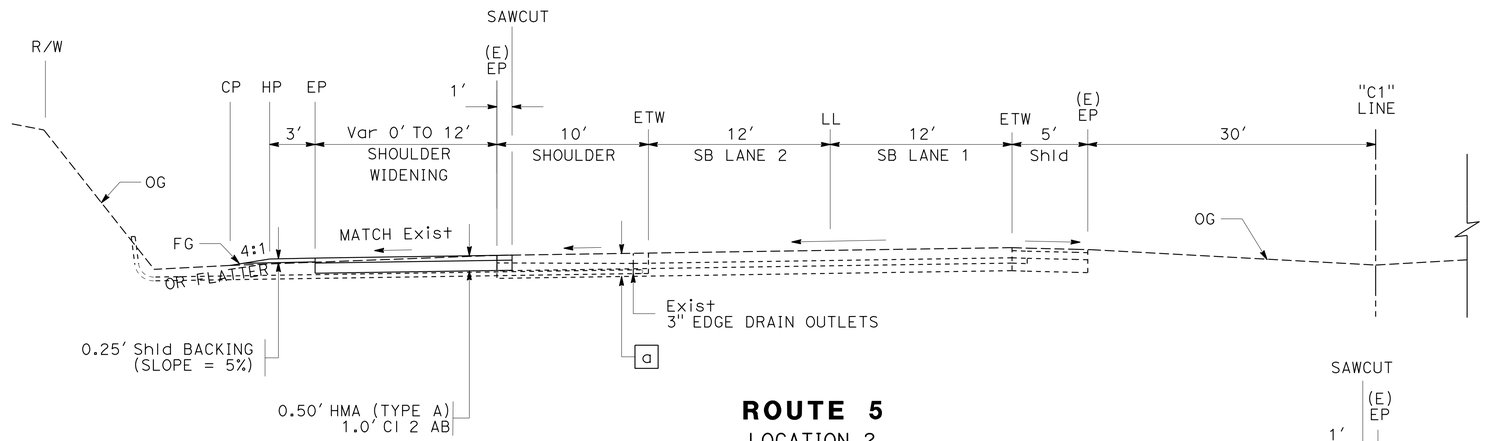

ROUTE 5
LOCATION 2
"C1" 875+48.6 TO "C1" 898+65.6, Lt

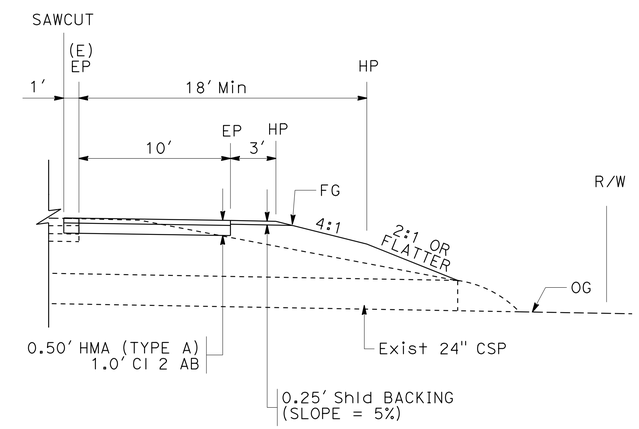

"C1" 76+40, Rt
"C1" 83+93, Rt

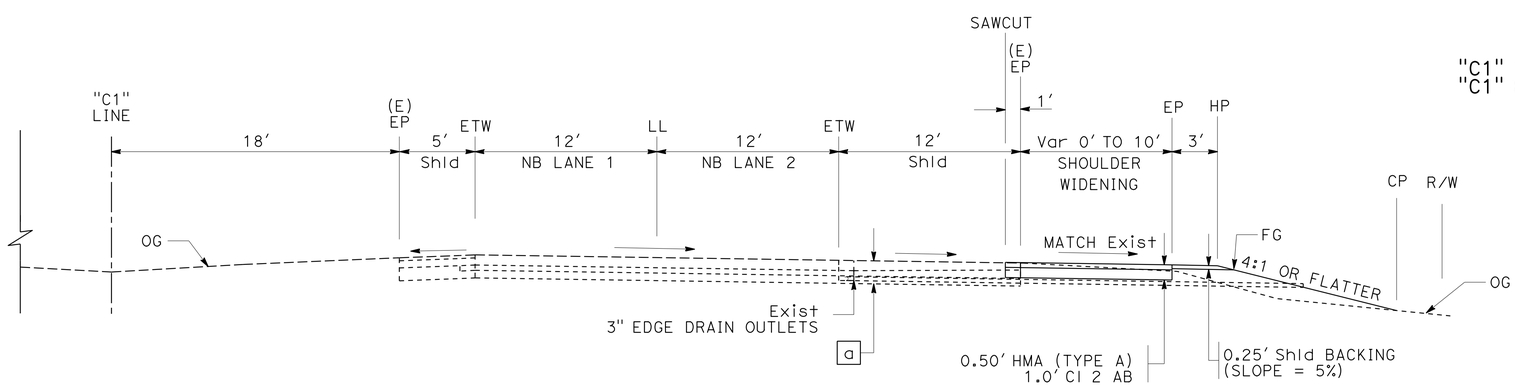

ROUTE 5
LOCATION 1
"C1" 71+62.0 TO "C1" 93+04.0, Rt

TYPICAL CROSS SECTIONS

NO SCALE

X-1

REVISED BY | DATE REVISED
MIKE ZDENEK | JEANNIE STEFFAN
CALCULATED-DESIGNED BY | CHECKED BY
FUNCTIONAL SUPERVISOR: JULIE CASEY

STATE OF CALIFORNIA - DEPARTMENT OF TRANSPORTATION
Caltrans DESIGN

P:\proj1\02\4E280_plans\pse\24e280ca001.dgn

LAST REVISION 10-16-13 | DATE PLOTTED => 13-DEC-2013 | TIME PLOTTED => 07:14

BORDER LAST REVISED 7/2/2010 | USERNAME => s123119 | DGN FILE => 24e280ca001.dgn | RELATIVE BORDER SCALE IS IN INCHES 0 1 2 3 | UNIT 0318 | PROJECT NUMBER & PHASE 02-0002-0247-1 | EA: 02-4E2801

Dist	COUNTY	ROUTE	POST MILES TOTAL PROJECT	SHEET No.	TOTAL SHEETS
02	Sis	5	R45.6/R47.3 R62.0/R62.8	3	78

REGISTERED CIVIL ENGINEER 10-16-13 DATE

10-16-13
PLANS APPROVAL DATE

REGISTERED PROFESSIONAL ENGINEER
MICHAEL ZDENEK
No. C76156
Exp. 06-30-14
CIVIL
STATE OF CALIFORNIA

THE STATE OF CALIFORNIA OR ITS OFFICERS OR AGENTS SHALL NOT BE RESPONSIBLE FOR THE ACCURACY OR COMPLETENESS OF SCANNED COPIES OF THIS PLAN SHEET.

LEGEND

- (1-1) ROADSIDE SIGN
- EXISTING ROADSIDE SIGN (1-POST)
- EXISTING ROADSIDE SIGN (2-POST)
- ROADSIDE SIGN (1-POST)
- ROADSIDE SIGN (2-POST)
- REMOVE ROADSIDE SIGN
- RELOCATE ROADSIDE SIGN
- EXISTING TURNABLE METAL ROADSIDE SIGN
- TURNABLE METAL (ROADSIDE SIGN)
- ADVANCED FLASHING BEACON (SEE ELECTRICAL PLANS)
- ADVANCED FLASHING BEACON WITH VARIABLE SPEED LIMIT SIGN (SEE ELECTRICAL PLANS)
- TCE
- MARKER (CULVERT)
- DELINEATOR (CLASS 2)
- OBJECT MARKER
- MILEPOST MARKER
- +XX EDGE DRAIN STATION
- O OUTLET/CLEANOUT/VENT
- C TYPE OF OUTLET
- X X LENGTH

NOTE:

1. FOR ACCURATE RIGHT OF WAY DATA, CONTACT RIGHT OF WAY ENGINEERING AT THE DISTRICT OFFICE.

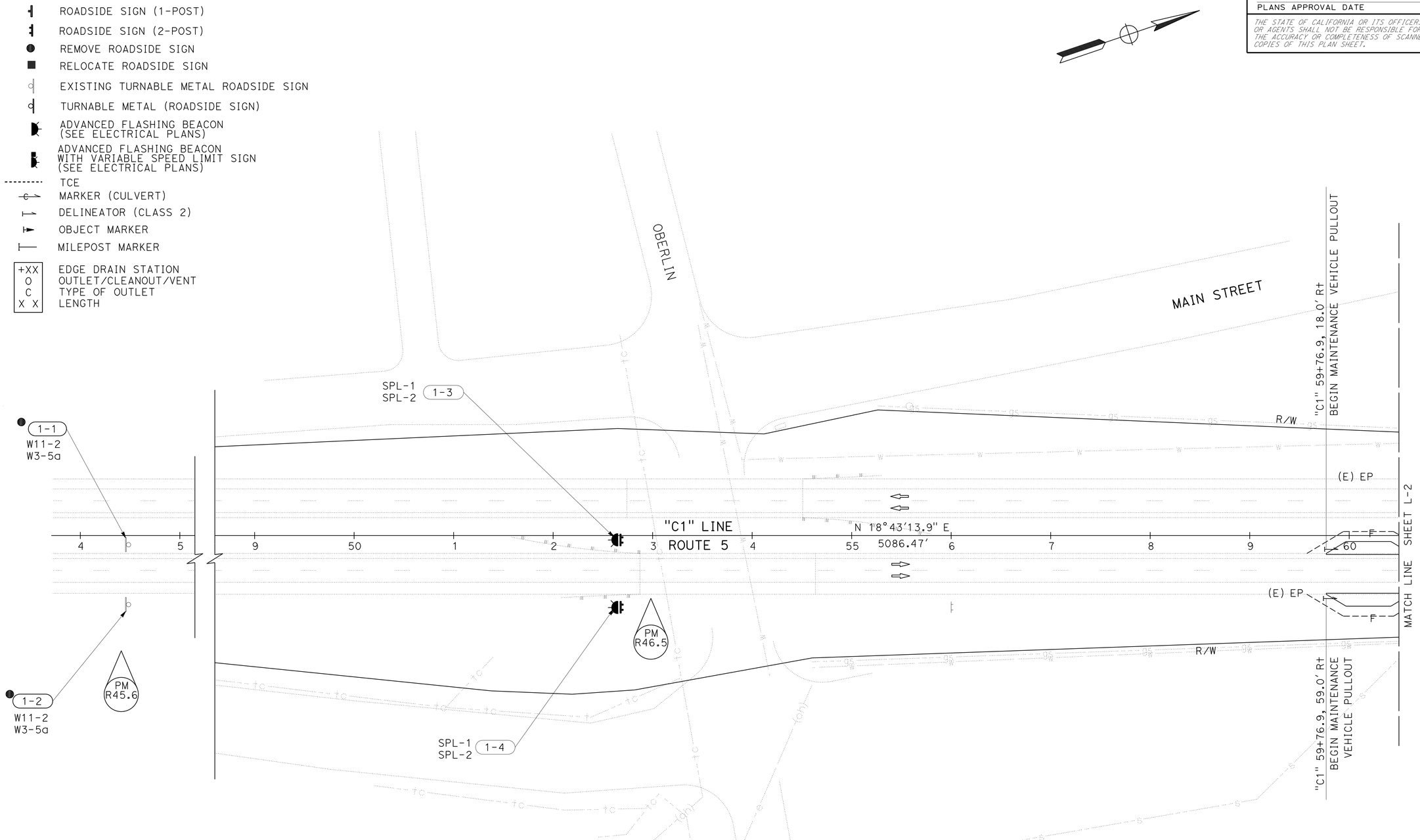

LAYOUT
(LOCATION 1)
SCALE: 1" = 50'

L-1

REVISED BY	DATE REVISED
MIKE ZDENEK	JEANNIE STEFFAN
CALCULATED-DESIGNED BY	CHECKED BY
FUNCTIONAL SUPERVISOR	JULIE CASEY

STATE OF CALIFORNIA - DEPARTMENT OF TRANSPORTATION
Caltrans
DESIGN

P:\proj1\02\4E280_plans\pse\24e280ea001.dgn

LAST REVISION 10-16-13 | DATE PLOTTED => 13-DEC-2013 | TIME PLOTTED => 07:14

Dist	COUNTY	ROUTE	POST MILES TOTAL PROJECT	SHEET No.	TOTAL SHEETS
02	Sis	5	R45.6/R47.3 R62.0/R62.8	4	78

REGISTERED CIVIL ENGINEER 10-16-13 DATE

10-16-13
PLANS APPROVAL DATE

REGISTERED PROFESSIONAL ENGINEER MICHAEL ZDENEK No. C76156 Exp. 06-30-14 CIVIL STATE OF CALIFORNIA

THE STATE OF CALIFORNIA OR ITS OFFICERS OR AGENTS SHALL NOT BE RESPONSIBLE FOR THE ACCURACY OR COMPLETENESS OF SCANNED COPIES OF THIS PLAN SHEET.

NOTE:

1. FOR ACCURATE RIGHT OF WAY DATA, CONTACT RIGHT OF WAY ENGINEERING AT THE DISTRICT OFFICE.

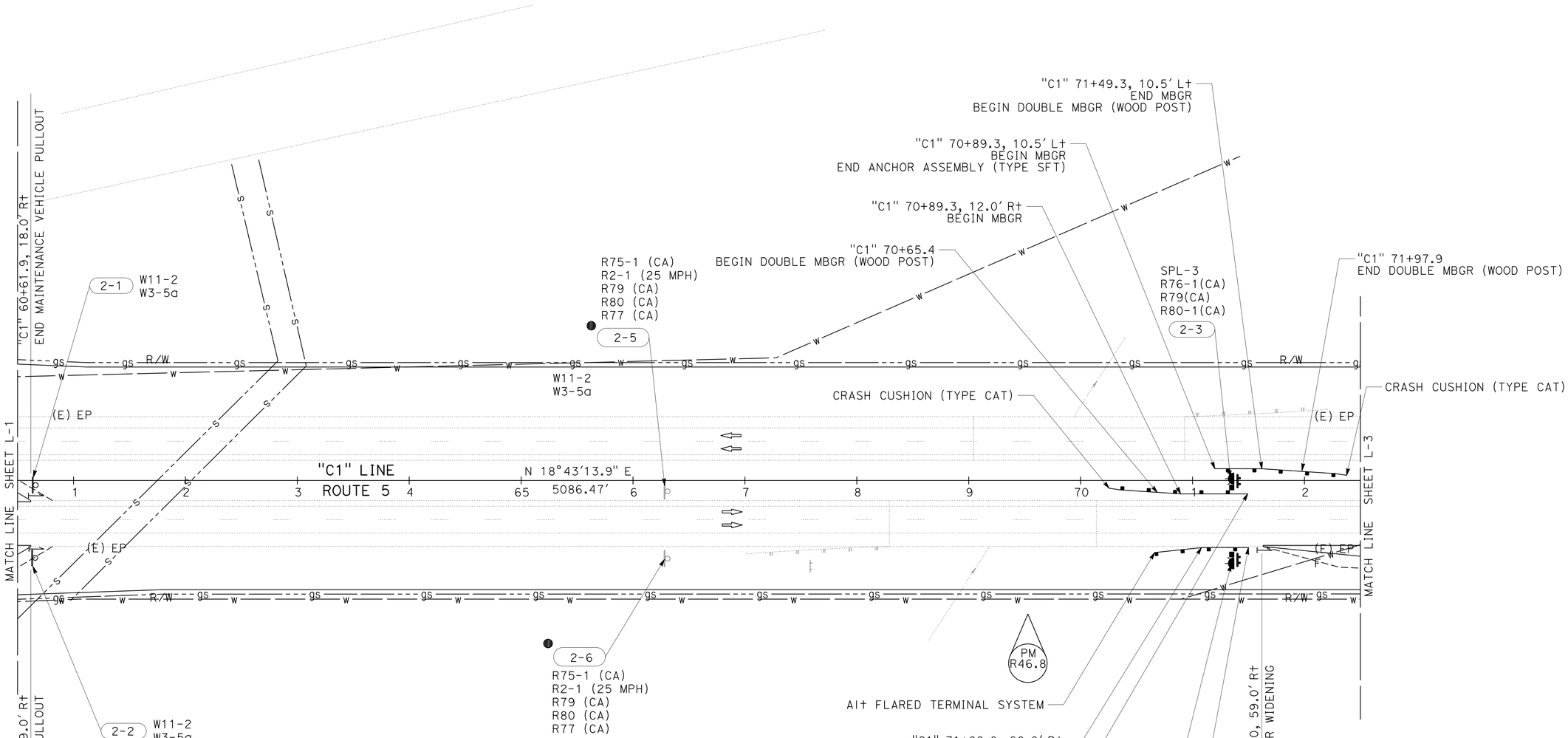

LAYOUT

(LOCATION 1)

SCALE: 1" = 50'

L-2

REVISED BY | DATE REVISED

MIKE ZDENEK | JEANNIE STEFFAN

CALCULATED-DESIGNED BY | CHECKED BY

FUNCTIONAL SUPERVISOR: JULIE CASEY

STATE OF CALIFORNIA - DEPARTMENT OF TRANSPORTATION

Caltrans® **DESIGN**

P:\proj1\02\4E280_plans\pse\24e280ea002.dgn

LAST REVISION 10-16-13 | DATE PLOTTED => 13-DEC-2013 | TIME PLOTTED => 07:14

Dist	COUNTY	ROUTE	POST MILES TOTAL PROJECT	SHEET No.	TOTAL SHEETS
02	Sis	5	R45.6/R47.3 R62.0/R62.8	5	78

REGISTERED CIVIL ENGINEER 10-16-13 DATE

10-16-13
PLANS APPROVAL DATE

REGISTERED PROFESSIONAL ENGINEER MICHAEL ZDENEK No. C76156 Exp. 06-30-14 CIVIL STATE OF CALIFORNIA

THE STATE OF CALIFORNIA OR ITS OFFICERS OR AGENTS SHALL NOT BE RESPONSIBLE FOR THE ACCURACY OR COMPLETENESS OF SCANNED COPIES OF THIS PLAN SHEET.

NOTE:

1. FOR ACCURATE RIGHT OF WAY DATA, CONTACT RIGHT OF WAY ENGINEERING AT THE DISTRICT OFFICE.

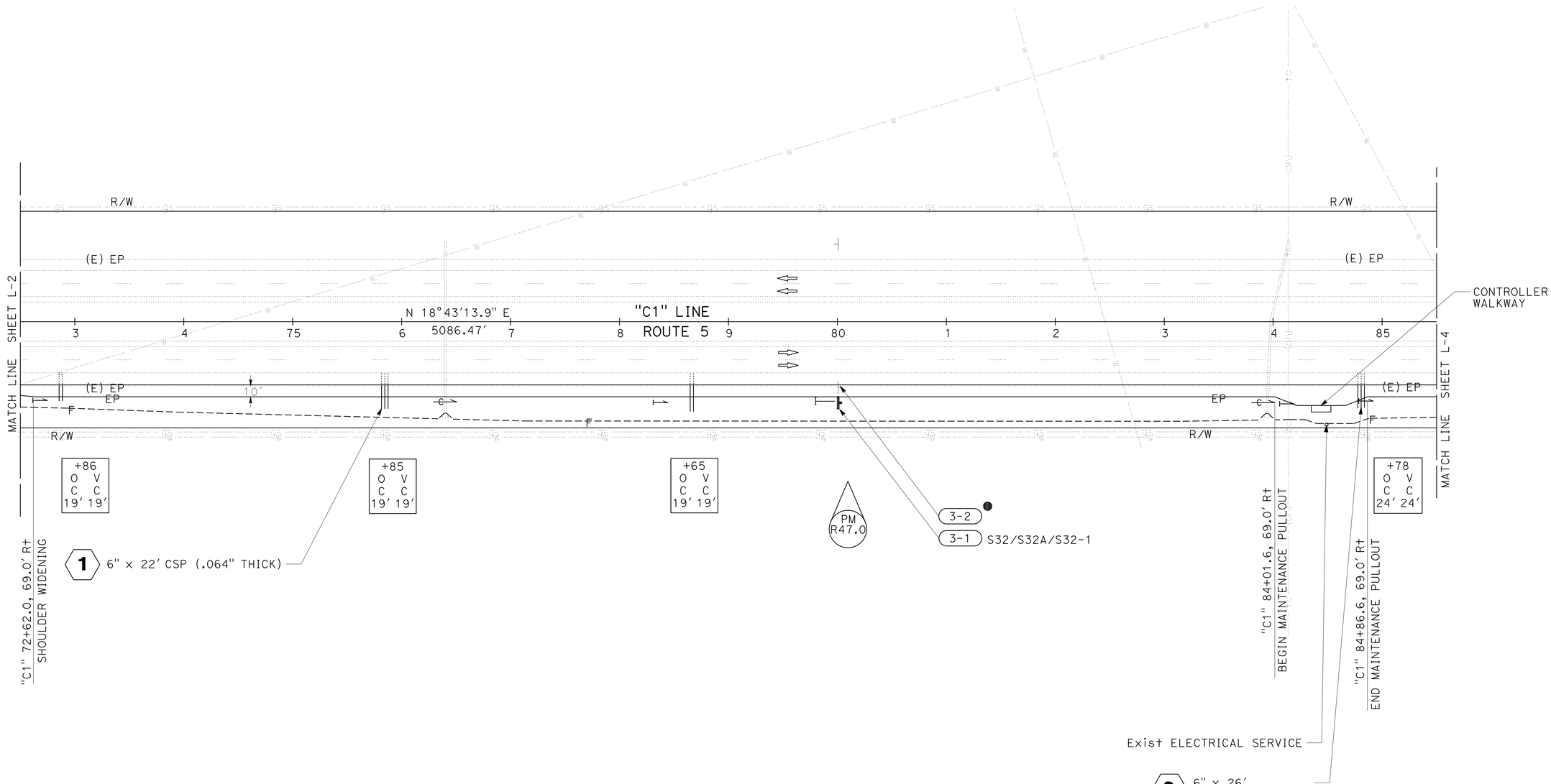

LAYOUT

(LOCATION 1)

SCALE: 1" = 50'

L-3

REVISED BY	DATE REVISED
MIKE ZDENEK	JEANNIE STEFFAN

CALCULATED-DESIGNED BY	CHECKED BY

FUNCTIONAL SUPERVISOR: JULIE CASEY

STATE OF CALIFORNIA - DEPARTMENT OF TRANSPORTATION

Caltrans® **DESIGN**

P:\proj1\02\4E280_plans\pse\24e280ea003.dgn

LAST REVISION 10-16-13 | DATE PLOTTED => 13-DEC-2013 | TIME PLOTTED => 07:14

Dist	COUNTY	ROUTE	POST MILES TOTAL PROJECT	SHEET No.	TOTAL SHEETS
02	Sis	5	R45.6/R47.3 R62.0/R62.8	6	78

REGISTERED CIVIL ENGINEER 10-16-13 DATE

10-16-13
PLANS APPROVAL DATE

REGISTERED PROFESSIONAL ENGINEER
MICHAEL ZDENEK
No. C76156
Exp. 06-30-14
CIVIL
STATE OF CALIFORNIA

THE STATE OF CALIFORNIA OR ITS OFFICERS OR AGENTS SHALL NOT BE RESPONSIBLE FOR THE ACCURACY OR COMPLETENESS OF SCANNED COPIES OF THIS PLAN SHEET.

NOTE:

1. FOR ACCURATE RIGHT OF WAY DATA, CONTACT RIGHT OF WAY ENGINEERING AT THE DISTRICT OFFICE.

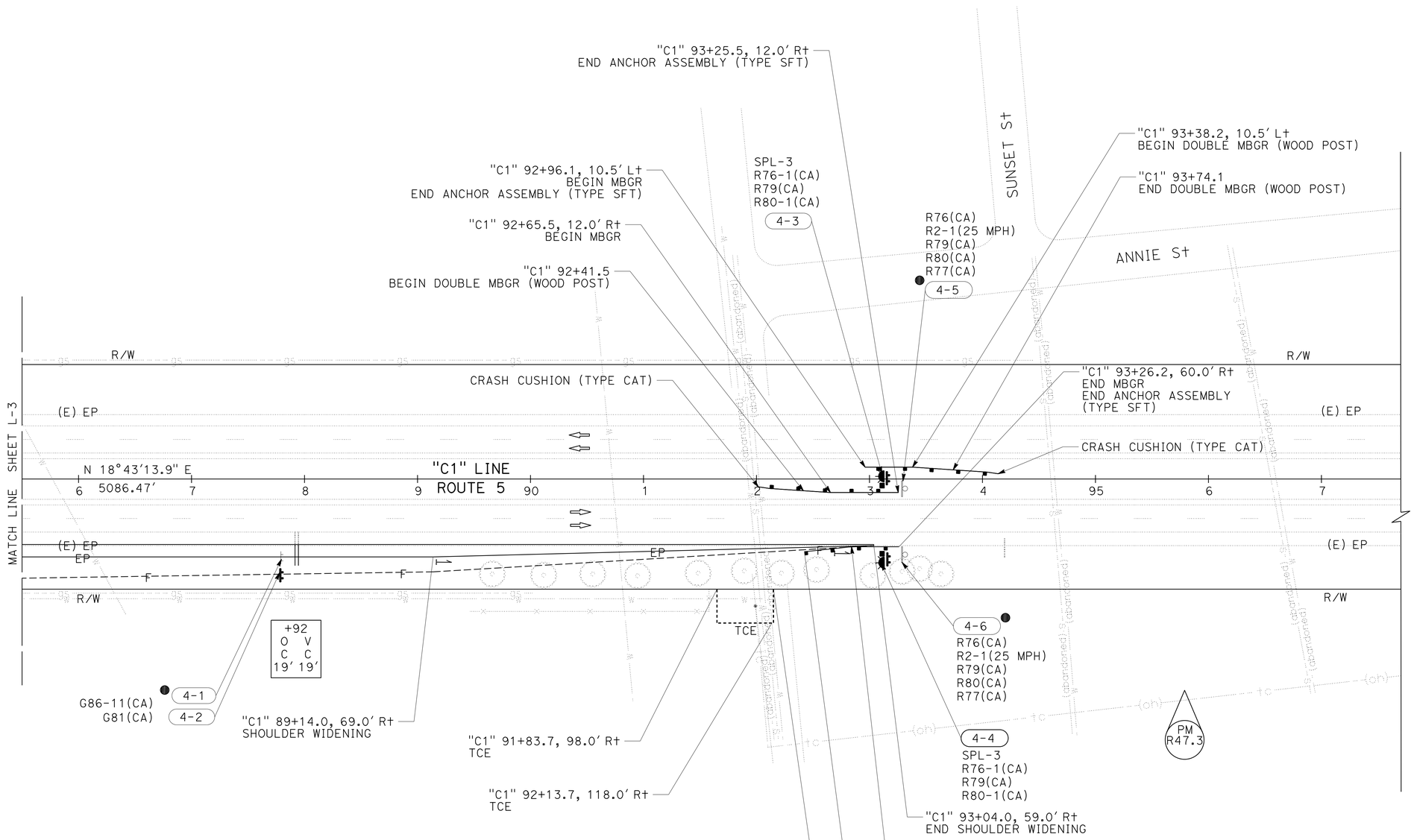

LAYOUT
(LOCATION 1)
SCALE: 1" = 50'

L-4

REVISED BY	DATE REVISED
MIKE ZDENEK	JEANNIE STEFFAN

CALCULATED-DESIGNED BY / CHECKED BY

FUNCTIONAL SUPERVISOR: JULIE CASEY

STATE OF CALIFORNIA - DEPARTMENT OF TRANSPORTATION
Caltrans
DESIGN

P:\proj1\02\4E280_plans\pse\24e280ea004.dgn

LAST REVISION 10-16-13 | DATE PLOTTED => 13-DEC-2013 | TIME PLOTTED => 07:14

Dist	COUNTY	ROUTE	POST MILES TOTAL PROJECT	SHEET No.	TOTAL SHEETS
02	Sis	5	R45.6/R47.3 R62.0/R62.8	7	78

REGISTERED CIVIL ENGINEER 10-16-13 DATE

10-16-13
PLANS APPROVAL DATE

REGISTERED PROFESSIONAL ENGINEER MICHAEL ZDENEK No. C76156 Exp. 06-30-14 CIVIL STATE OF CALIFORNIA

THE STATE OF CALIFORNIA OR ITS OFFICERS OR AGENTS SHALL NOT BE RESPONSIBLE FOR THE ACCURACY OR COMPLETENESS OF SCANNED COPIES OF THIS PLAN SHEET.

NOTE:

1. FOR ACCURATE RIGHT OF WAY DATA, CONTACT RIGHT OF WAY ENGINEERING AT THE DISTRICT OFFICE.
2. (N) - NOT A SEPARATE PAY ITEM, FOR INFORMATION ONLY

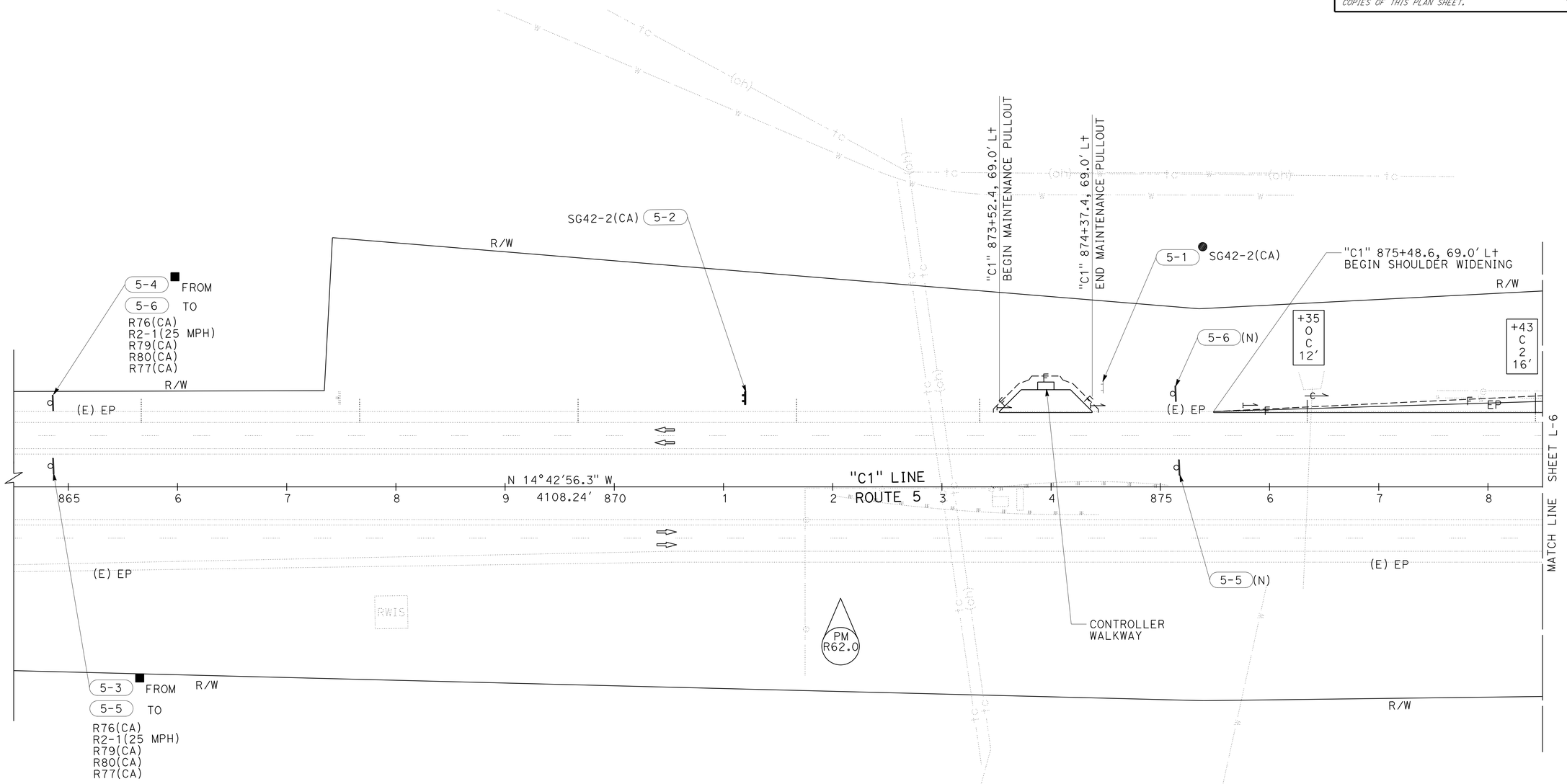

LAYOUT

(LOCATION 2)

SCALE: 1" = 50'

L-5

REVISED BY	DATE REVISED

CALCULATED-DESIGNED BY: MIKE ZDENEK
CHECKED BY: JEANNIE STEFFAN
FUNCTIONAL SUPERVISOR: JULIE CASEY

STATE OF CALIFORNIA - DEPARTMENT OF TRANSPORTATION
Caltrans® DESIGN

P:\proj1\02\4E280_plans\pse\24e280ea005.dgn

LAST REVISION 10-16-13 | DATE PLOTTED => 13-DEC-2013 | TIME PLOTTED => 07:14

Dist	COUNTY	ROUTE	POST MILES TOTAL PROJECT	SHEET No.	TOTAL SHEETS
02	Sis	5	R45.6/R47.3 R62.0/R62.8	8	78

REGISTERED CIVIL ENGINEER 10-16-13 DATE

10-16-13
PLANS APPROVAL DATE

REGISTERED PROFESSIONAL ENGINEER MICHAEL ZDENEK No. C76156 Exp. 06-30-14 CIVIL STATE OF CALIFORNIA

THE STATE OF CALIFORNIA OR ITS OFFICERS OR AGENTS SHALL NOT BE RESPONSIBLE FOR THE ACCURACY OR COMPLETENESS OF SCANNED COPIES OF THIS PLAN SHEET.

NOTE:

1. FOR ACCURATE RIGHT OF WAY DATA, CONTACT RIGHT OF WAY ENGINEERING AT THE DISTRICT OFFICE.

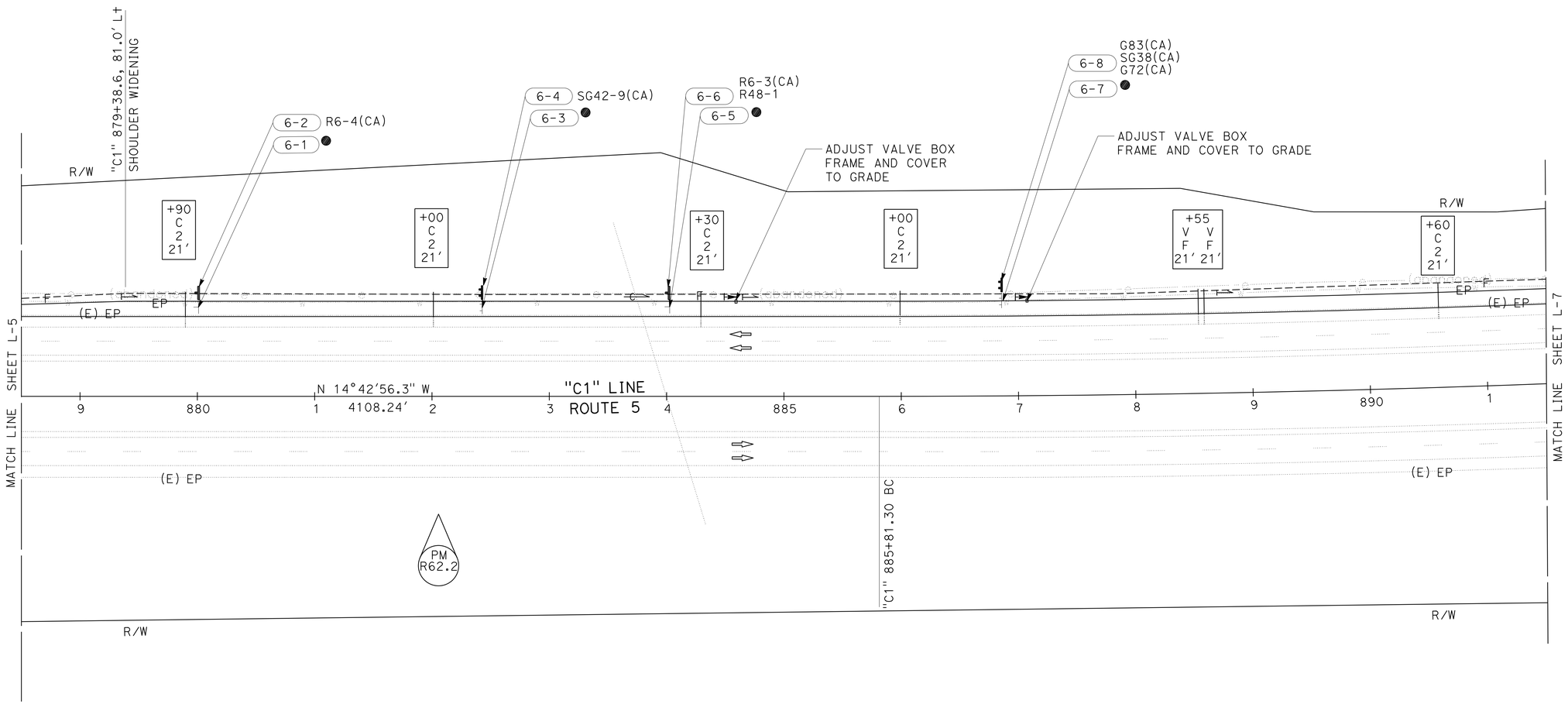

LAYOUT
(LOCATION 2)
SCALE: 1" = 50'

L-6

STATE OF CALIFORNIA - DEPARTMENT OF TRANSPORTATION
Caltrans
DESIGN

FUNCTIONAL SUPERVISOR: JULIE CASEY
CALCULATED-DESIGNED BY: MIKE ZDENEK
CHECKED BY: JEANNIE STEFFAN
REVISED BY
DATE REVISED

P:\proj1\02\4E280_plans\pse\24e280ea006.dgn

LAST REVISION 10-16-13
DATE PLOTTED => 13-DEC-2013
TIME PLOTTED => 07:14

Dist	COUNTY	ROUTE	POST MILES TOTAL PROJECT	SHEET No.	TOTAL SHEETS
02	Sis	5	R45.6/R47.3 R62.0/R62.8	9	78

REGISTERED CIVIL ENGINEER 10-16-13 DATE

10-16-13
PLANS APPROVAL DATE

REGISTERED PROFESSIONAL ENGINEER
MICHAEL ZDENEK
No. C76156
Exp. 06-30-14
CIVIL
STATE OF CALIFORNIA

THE STATE OF CALIFORNIA OR ITS OFFICERS OR AGENTS SHALL NOT BE RESPONSIBLE FOR THE ACCURACY OR COMPLETENESS OF SCANNED COPIES OF THIS PLAN SHEET.

NOTE:

1. FOR ACCURATE RIGHT OF WAY DATA, CONTACT RIGHT OF WAY ENGINEERING AT THE DISTRICT OFFICE.

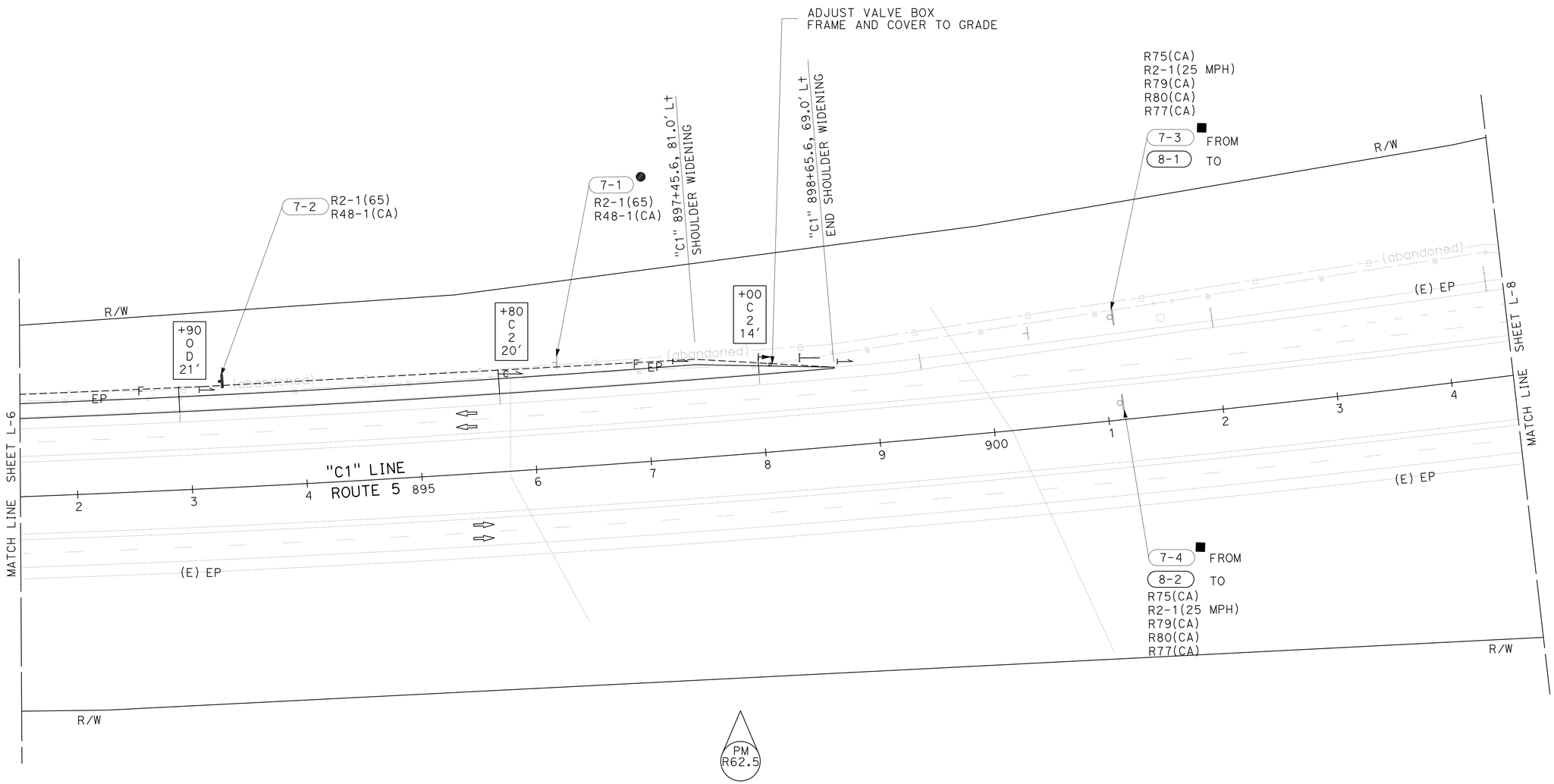

LAYOUT

(LOCATION 2)

SCALE: 1" = 50'

L-7

REVISED BY	DATE REVISED
MIKE ZDENEK	JEANNIE STEFFAN

CALCULATED-DESIGNED BY
CHECKED BY

FUNCTIONAL SUPERVISOR
JULIE CASEY

STATE OF CALIFORNIA - DEPARTMENT OF TRANSPORTATION
Caltrans
DESIGN

P:\proj\02\4E280_plans\pse\24e280ea007.dgn

LAST REVISION 10-16-13
DATE PLOTTED => 13-DEC-2013
TIME PLOTTED => 07:14

Dist	COUNTY	ROUTE	POST MILES TOTAL PROJECT	SHEET No.	TOTAL SHEETS
02	Sis	5	R45.6/R47.3 R62.0/R62.8	10	78

REGISTERED CIVIL ENGINEER 10-16-13 DATE

10-16-13
PLANS APPROVAL DATE

REGISTERED PROFESSIONAL ENGINEER MICHAEL ZDENEK No. C76156 Exp. 06-30-14 CIVIL STATE OF CALIFORNIA

THE STATE OF CALIFORNIA OR ITS OFFICERS OR AGENTS SHALL NOT BE RESPONSIBLE FOR THE ACCURACY OR COMPLETENESS OF SCANNED COPIES OF THIS PLAN SHEET.

NOTE:

1. FOR ACCURATE RIGHT OF WAY DATA, CONTACT RIGHT OF WAY ENGINEERING AT THE DISTRICT OFFICE.

1. (N) - NOT A SEPARATE PAY ITEM, FOR INFORMATION ONLY

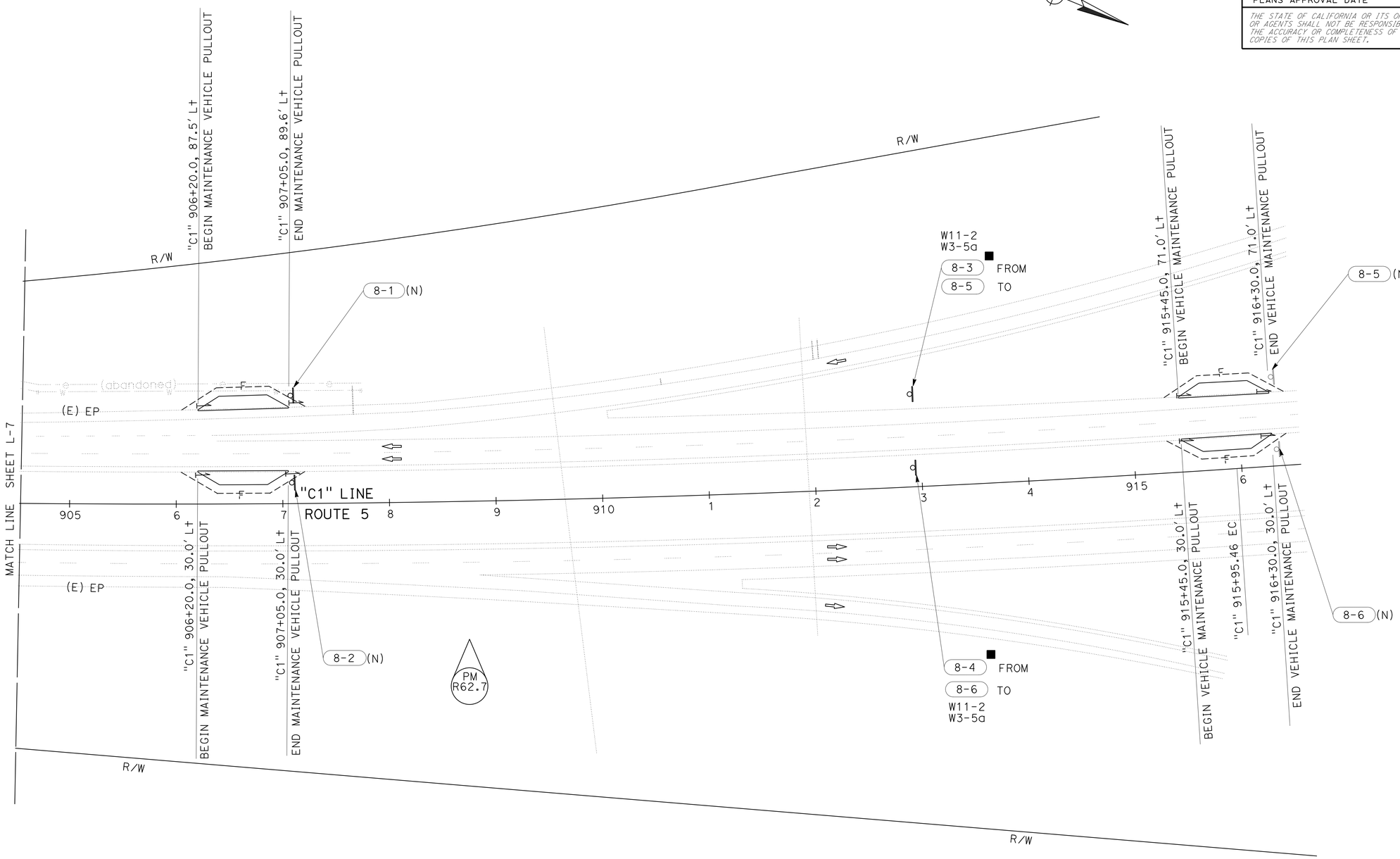

LAYOUT
(LOCATION 2)
SCALE: 1" = 50'

L-8

CALCULATED-DESIGNED BY	MIKE ZDENEK	REVISED BY
CHECKED BY	JEANNIE STEFFAN	DATE REVISED

FUNCTIONAL SUPERVISOR: JULIE CASEY

STATE OF CALIFORNIA - DEPARTMENT OF TRANSPORTATION
Caltrans
DESIGN

P:\proj1\02\4E280_plans\pse\24e280ea008.dgn

LAST REVISION 10-16-13 | DATE PLOTTED => 13-DEC-2013 | TIME PLOTTED => 07:14

Dist	COUNTY	ROUTE	POST MILES TOTAL PROJECT	SHEET No.	TOTAL SHEETS
02	Sis	5	R45.6/R47.3 R62.0/R62.8	11	78

REGISTERED CIVIL ENGINEER 10-16-13 DATE

10-16-13
PLANS APPROVAL DATE

REGISTERED PROFESSIONAL ENGINEER MICHAEL ZDENEK No. C76156 Exp. 06-30-14 CIVIL STATE OF CALIFORNIA

THE STATE OF CALIFORNIA OR ITS OFFICERS OR AGENTS SHALL NOT BE RESPONSIBLE FOR THE ACCURACY OR COMPLETENESS OF SCANNED COPIES OF THIS PLAN SHEET.

NOTE:

1. (N) - NOT A SEPARATE PAY ITEM, FOR INFORMATION ONLY

ABBREVIATIONS;

(E) EXISTING

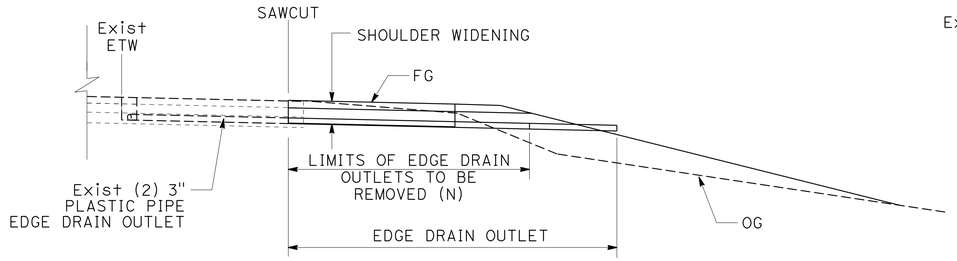

REPLACE AND EXTEND EDGE DRAIN OUTLET AND VENT (TYPICAL TYPE C)

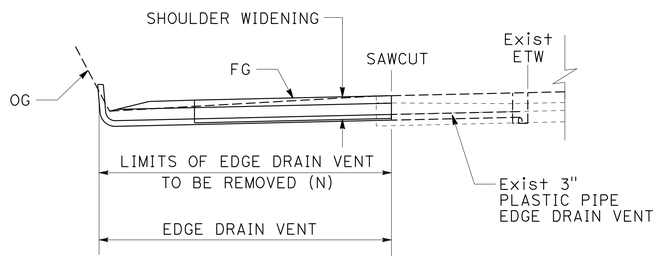

REPLACE AND EXTEND EDGE DRAIN VENT (TYPICAL TYPE F)

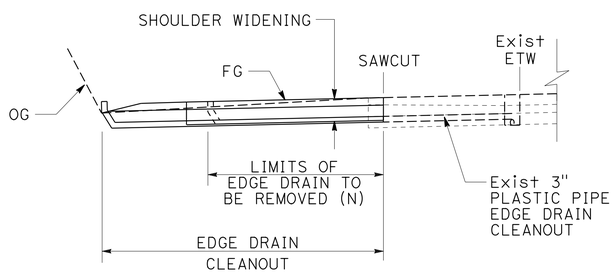

REPLACE AND EXTEND EDGE DRAIN CLEANOUT (TYPICAL TYPE 2)

EDGE DRAIN

SEE Std PLAN FOR ADDITION DETAILS NOT SHOWN

+XX	STA
O V	OUTLET/CLEANOUT/VENT
C C	TYPE
X X	LENGTH (TO BE PLACED)

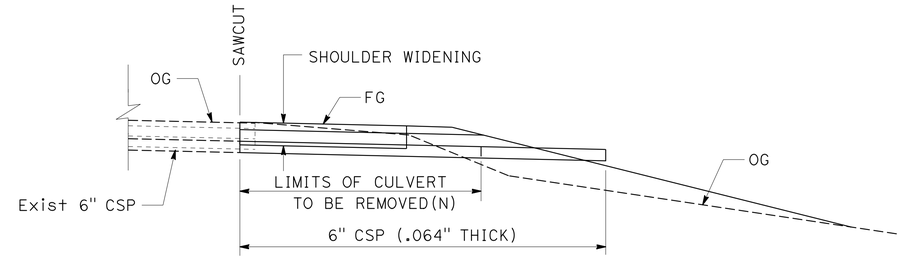

DRAINAGE SYSTEM No. 1 2

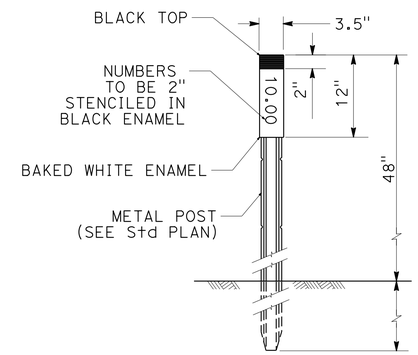

MARKER (CULVERT)

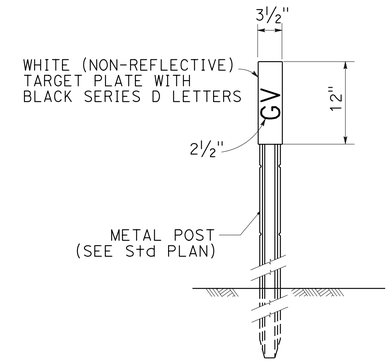

OBJECT MARKER

NOTE: PLACE MARKER 2" OUTSIDE PAVING ON SIDE AWAY FROM TRAFFIC. SEE ADJUST VALVE BOX FRAME AND COVER TO GRADE DETAIL.

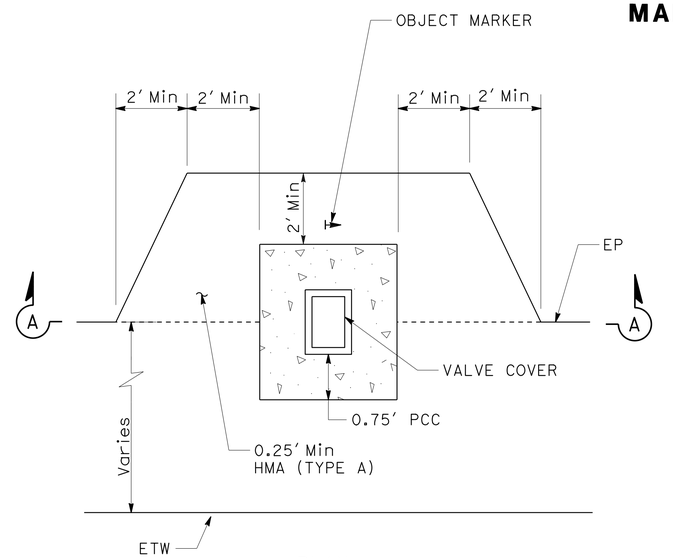

PLAN

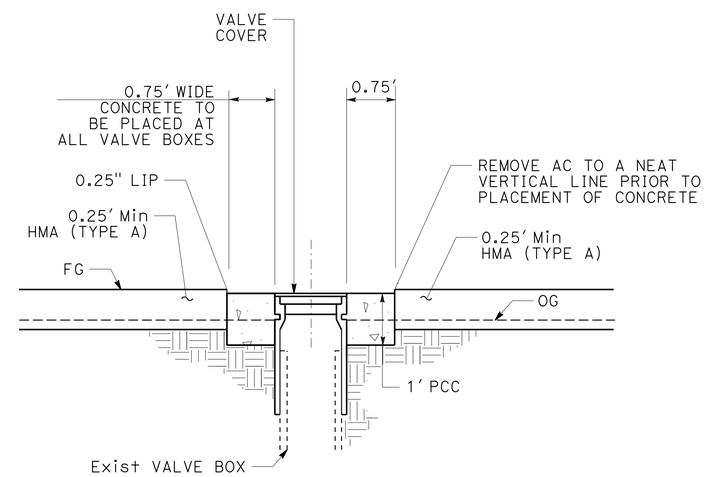

SECTION A-A

ADJUST VALVE BOX FRAME AND COVER TO GRADE (TYPICAL)

CONSTRUCTION DETAILS

NO SCALE

C-1

REVISED BY | DATE REVISED
MIKE ZDENEK | JEANNIE STEFFAN
CALCULATED-DESIGNED BY | CHECKED BY
FUNCTIONAL SUPERVISOR
JULIE CASEY

STATE OF CALIFORNIA - DEPARTMENT OF TRANSPORTATION
DESIGN
Caltrans

P:\proj1\02\4E280_plans\pse\24e280ga001.dgn

LAST REVISION | DATE PLOTTED => 13-DEC-2013 | TIME PLOTTED => 07:14
10-16-13

Dist	COUNTY	ROUTE	POST MILES TOTAL PROJECT	SHEET No.	TOTAL SHEETS
02	Sis	5	R45.6/R47.3 R62.0/R62.8	12	78

REGISTERED CIVIL ENGINEER 10-16-13 DATE

10-16-13
PLANS APPROVAL DATE

REGISTERED PROFESSIONAL ENGINEER MICHAEL ZDENEK No. C76156 Exp. 06-30-14 CIVIL STATE OF CALIFORNIA

THE STATE OF CALIFORNIA OR ITS OFFICERS OR AGENTS SHALL NOT BE RESPONSIBLE FOR THE ACCURACY OR COMPLETENESS OF SCANNED COPIES OF THIS PLAN SHEET.

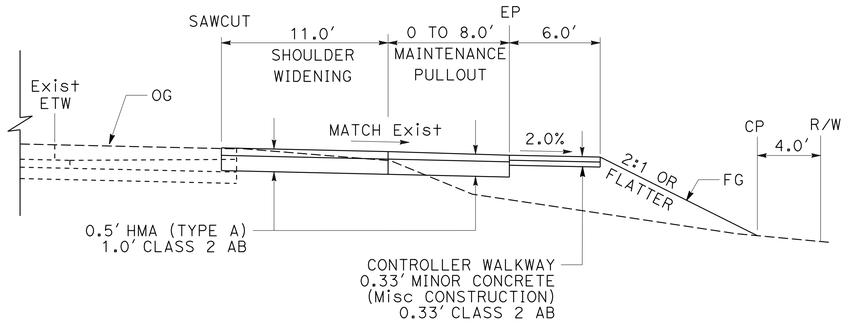

SECTION A-A

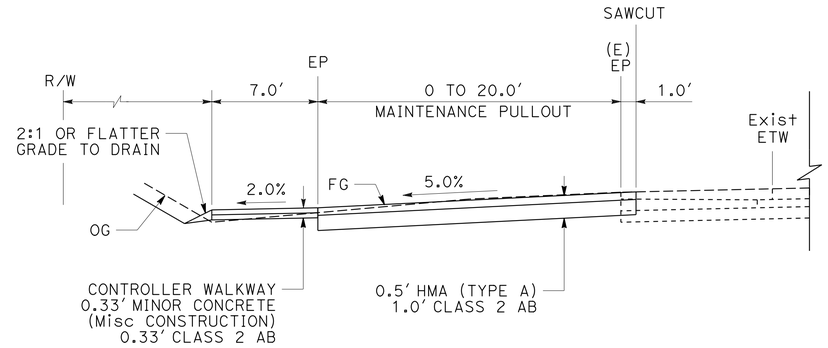

SECTION B-B

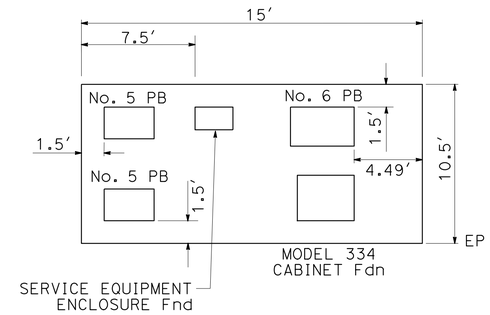

DETAIL B
LOCATION 2

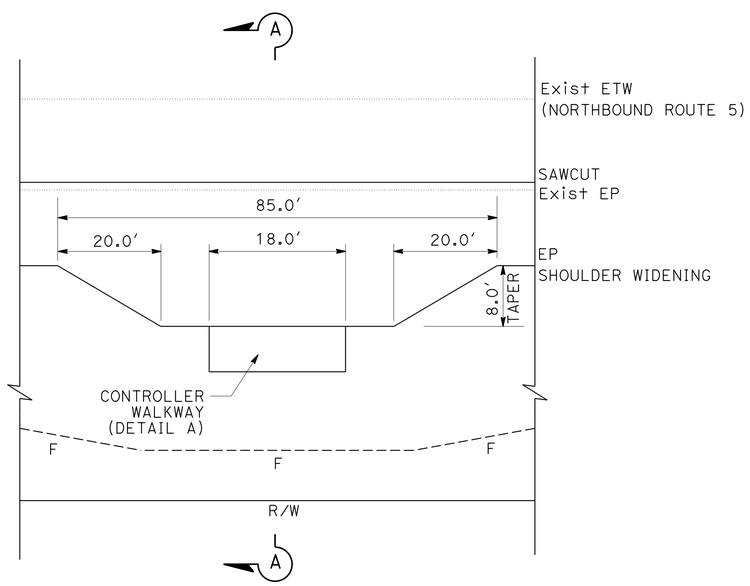

PLAN
LOCATION 1
"C1" 84+01.6 TO 84+86.6, 69.0′ Rt

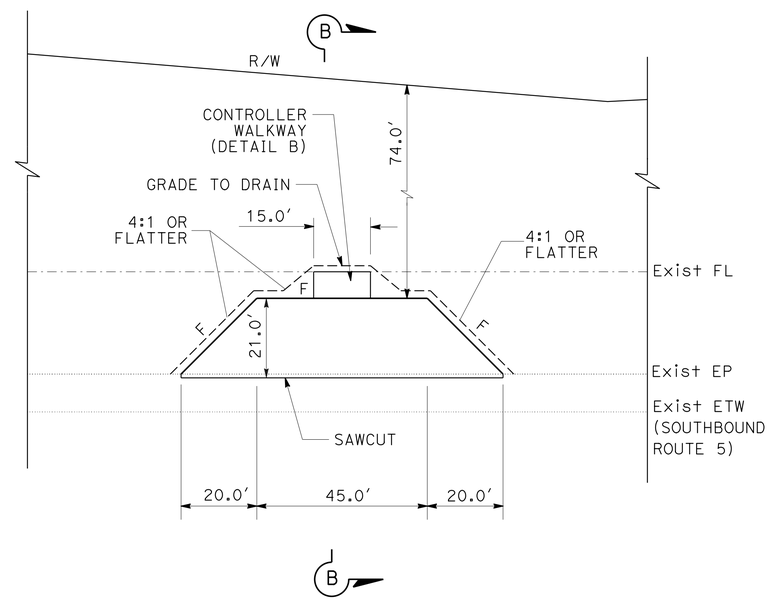

PLAN
LOCATION 2
"C1" 873+52.4 TO 874+37.4, 69.0′ Lt

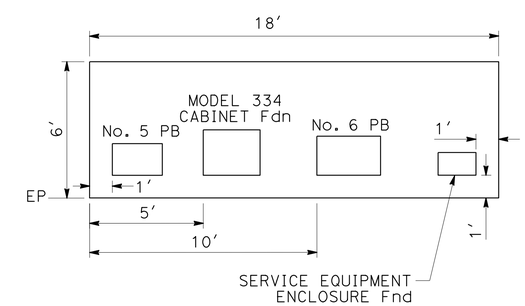

DETAIL A
LOCATION 1

MAINTENANCE PULLOUT AND CONTROLLER WALKWAY

CONSTRUCTION DETAILS

NO SCALE

C-2

REVISED BY | DATE REVISED
MIKE ZDENEK | JEANNIE STEFFAN
CALCULATED-DESIGNED BY | CHECKED BY
FUNCTIONAL SUPERVISOR: JULIE CASEY

STATE OF CALIFORNIA - DEPARTMENT OF TRANSPORTATION
Caltrans DESIGN

P:\proj\02\4E280_plans\pse\24e280ga002.dgn

LAST REVISION 10-16-13 | DATE PLOTTED => 13-DEC-2013 | TIME PLOTTED => 07:14

Dist	COUNTY	ROUTE	POST MILES TOTAL PROJECT	SHEET No.	TOTAL SHEETS
02	Sis	5	R45.6/R47.3 R62.0/R62.8	13	78

REGISTERED CIVIL ENGINEER 10-16-13 DATE

10-16-13
PLANS APPROVAL DATE

REGISTERED PROFESSIONAL ENGINEER MICHAEL ZDENEK No. C76156 Exp. 06-30-14 CIVIL STATE OF CALIFORNIA

THE STATE OF CALIFORNIA OR ITS OFFICERS OR AGENTS SHALL NOT BE RESPONSIBLE FOR THE ACCURACY OR COMPLETENESS OF SCANNED COPIES OF THIS PLAN SHEET.

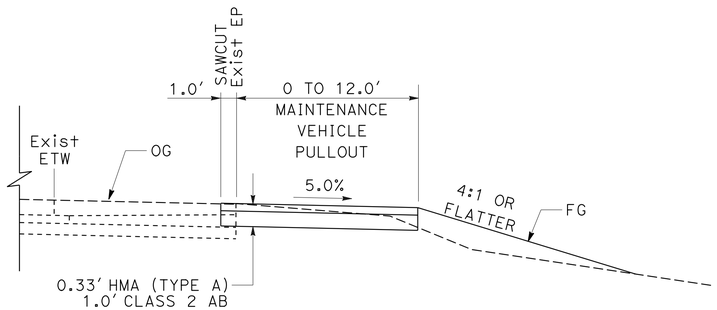

SECTION A-A

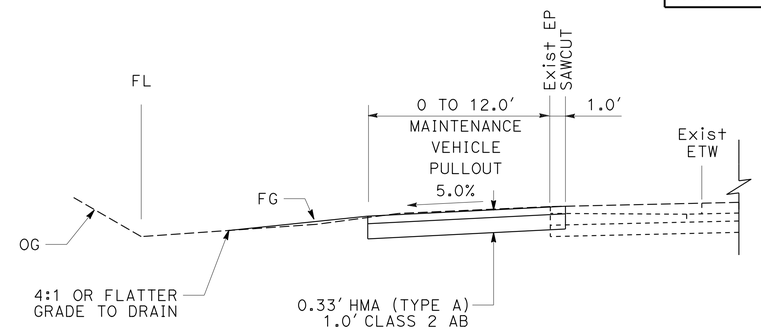

SECTION B-B

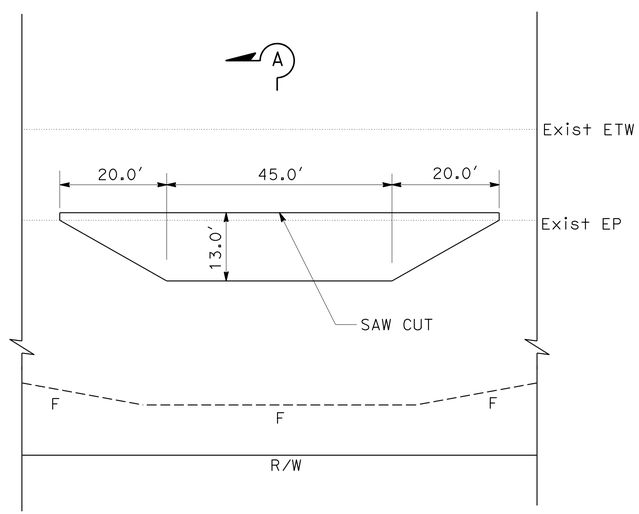

PLAN

LOCATION 1
"C1" 59+76.9 TO 60+61.9, 18.0'/59.0' Rt

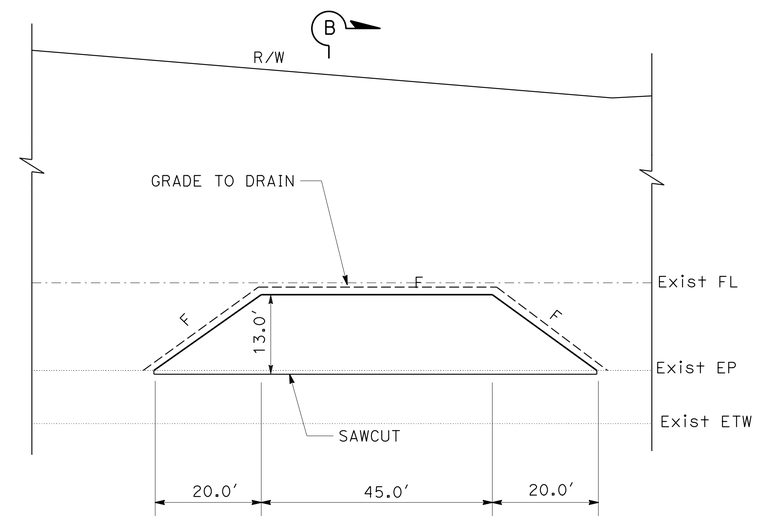

PLAN

LOCATION 2
"C1" 906+20.0 TO 907+05.0, 30.0'/87.5' Lt
"C1" 915+45.0 TO 916+30.0, 30.0'/71.0' Lt

MAINTENANCE VEHICLE PULLOUT
(TYPICAL)

CONSTRUCTION DETAILS
NO SCALE

C-3

REVISED BY | DATE REVISED
MIKE ZDENEK | JEANNIE STEFFAN
CALCULATED-DESIGNED BY | CHECKED BY
FUNCTIONAL SUPERVISOR: JULIE CASEY

STATE OF CALIFORNIA - DEPARTMENT OF TRANSPORTATION
Caltrans® **DESIGN**

P:\proj1\02\4E280_plans\pse\24e280ga003.dgn

LAST REVISION 10-16-13 | DATE PLOTTED => 13-DEC-2013 | TIME PLOTTED => 07:14

Dist	COUNTY	ROUTE	POST MILES TOTAL PROJECT	SHEET No.	TOTAL SHEETS
02	Sis	5	R45.6/R47.3 R62.0/R62.8	14	78

REGISTERED CIVIL ENGINEER 10-16-13 DATE

10-16-13
PLANS APPROVAL DATE

REGISTERED PROFESSIONAL ENGINEER MICHAEL ZDENEK No. C76156 Exp. 06-30-14 CIVIL STATE OF CALIFORNIA

THE STATE OF CALIFORNIA OR ITS OFFICERS OR AGENTS SHALL NOT BE RESPONSIBLE FOR THE ACCURACY OR COMPLETENESS OF SCANNED COPIES OF THIS PLAN SHEET.

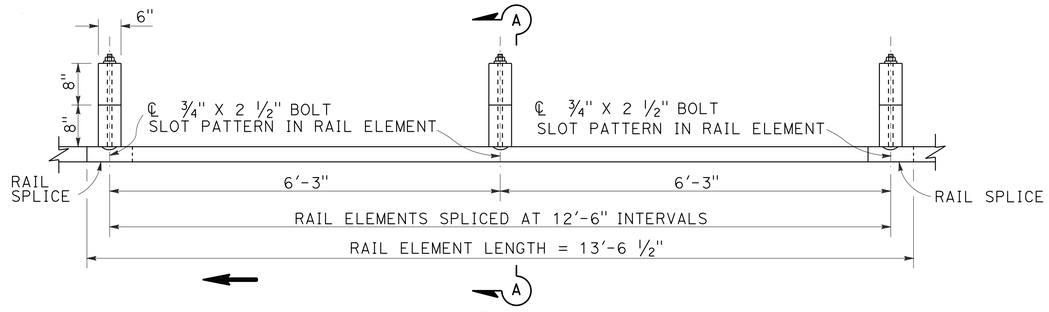

PLAN

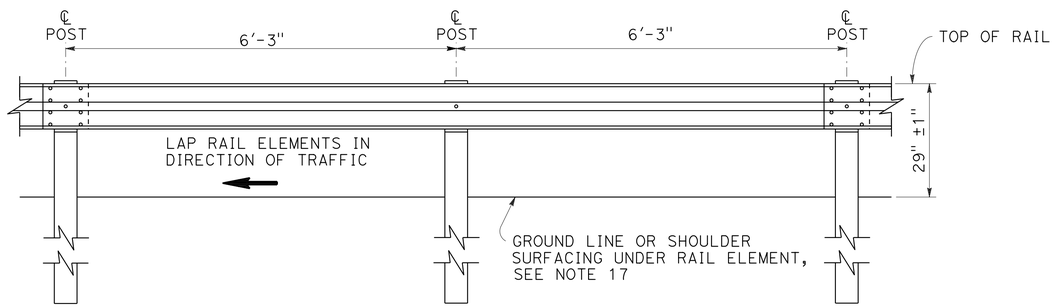

ELEVATION

METAL BEAM GUARD RAILING WITH WOOD POST AND BLOCKS

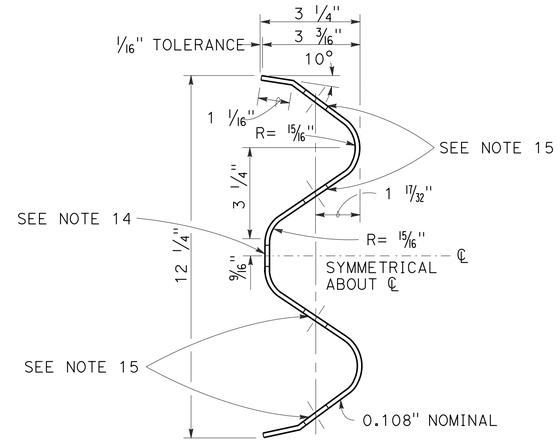

SECTION THRU RAIL ELEMENT

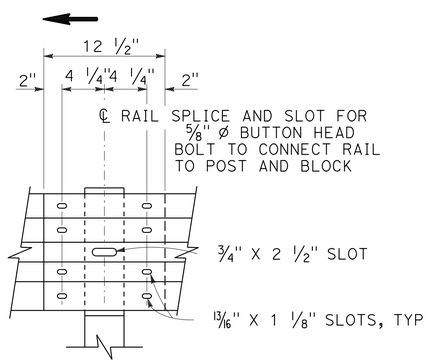

ELEVATION

RAIL ELEMENT SPLICE DETAIL

A) CONNECT THE OVER LAPPED END OF THE RAIL ELEMENTS WITH ⅝" Ø X 1 ⅜" BUTTON HEAD OVAL SHOULDER SPLICE BOLTS INSERTED INTO THE 13/16" X 1 ⅛" SLOTS AND BOLTED TOGETHER WITH ⅝" Ø RECESSED HEX NUTS. RECESS OF HEX NUT POINTS TOWARD RAIL ELEMENT. A TOTAL OF 8 BOLTS AND NUTS ARE TO BE USED AT EACH RAIL SPLICE CONNECTION.

B) THE ENDS OF THE RAIL ELEMENTS ARE TO BE OVERLAPPED IN THE DIRECTION OF TRAFFIC (SEE DETAILS).

C) WHERE END CAP IS TO BE ATTACHED TO THE END OF A RAIL ELEMENT, A TOTAL OF 4 OF THE ABOVE DESCRIBED SPLICE BOLTS AND NUTS ARE TO BE USED.

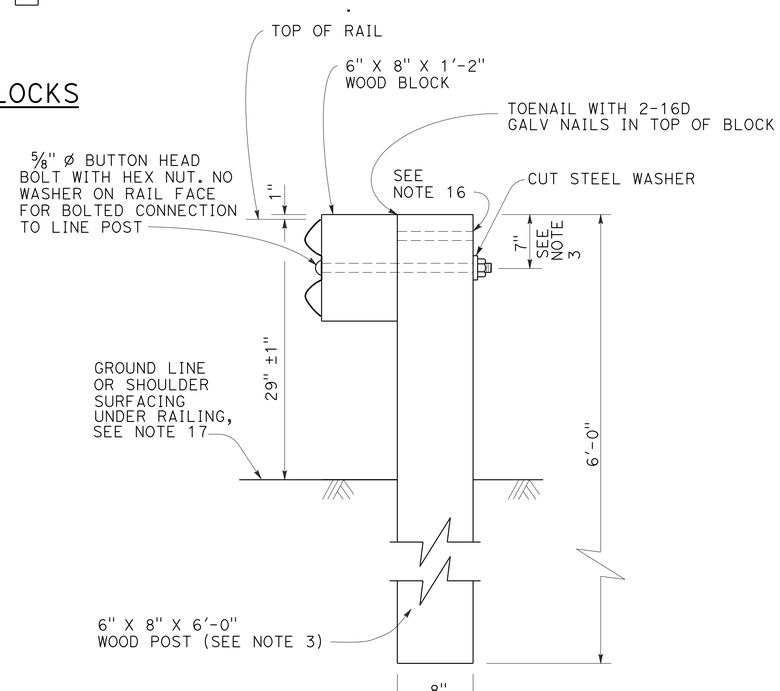

SECTION A-A

TYPICAL WOOD LINE POST INSTALLATION

SEE NOTE 4

NOTES:

1. FOR DETAILS OF STEEL POST INSTALLATIONS, SEE CONSTRUCTION DETAILS.
2. FOR DETAILS OF STANDARD HARDWARE USED TO CONSTRUCT GUARD RAILING, SEE CONSTRUCTION DETAILS.
3. FOR DETAILS OF WOOD POSTS AND WOOD BLOCKS USED TO CONSTRUCT GUARD RAILING, SEE CONSTRUCTION DETAILS.
4. FOR ADDITIONAL INSTALLATION DETAILS, SEE Const DETAILS.
5. GUARD RAILING POST SPACING TO BE 6'-3" CENTER TO CENTER, EXCEPT AS OTHERWISE NOTED.
6. FOR GUARD RAILING TYPICAL LAYOUTS, SEE Const DETAILS.
7. TO CONNECT RAILING TO TERMINAL SYSTEM END TREATMENT, TRANSITION THE TOP OF RAILING HEIGHT AT A RATIO OF 120:1 TO TERMINAL SYSTEM END TREATMENT HEIGHT PLUS ONE 12'-6" STANDARD RAILING SECTION AT THE TRANSITIONED HEIGHT FOR A HORIZONTAL CONNECTION TO THE END TREATMENT.
8. FOR GUARD RAILING END ANCHOR DETAILS, SEE Const DETAILS.
9. FOR DETAILS OF GUARD RAILING TRANSITION TO BRIDGE RAILING, SEE Const DETAILS.
10. FOR ADDITIONAL DETAILS OF GUARD RAILING CONNECTION TO BRIDGE RAILINGS, SEE Const DETAILS.
11. FOR GUARD RAILING CONNECTION DETAILS TO ABUTMENTS AND WALLS, SEE Const DETAILS.
12. DIRECTION OF ADJACENT TRAFFIC INDICATED BY ⟶.
13. FOR TYPICAL GUARD RAILING DELINEATION AND DIKE POSITIONING DETAILS, SEE Const DETAILS.
14. SLOTTED HOLE FOR BOLTED CONNECTION OF RAIL ELEMENT TO BLOCK AND POST. SEE "SECTION THRU RAIL ELEMENT".
15. SLOTTED HOLES FOR SPLICE BOLTS TO OVERLAP ENDS OF RAIL ELEMENT. SEE "SECTION THRU RAIL ELEMENT".
16. ADDITIONAL HOLE IN UPPERMOST PORTION OF LINE POST IS FOR POTENTIAL FUTURE ADJUSTMENTS OF RAILING HEIGHT. SEE Const DETAILS.
17. INSTALL POSTS IN SOIL.

CONSTRUCTION DETAILS
METAL BEAM GUARD RAILING STANDARD RAILING SECTION (WOOD POST WITH WOOD BLOCK)

NO SCALE

C-4

REVISED BY	DATE REVISED

MIKE ZDENEK — JEANNIE STEFFAN — CALCULATED-DESIGNED BY — CHECKED BY — FUNCTIONAL SUPERVISOR — JULIE CASEY

STATE OF CALIFORNIA - DEPARTMENT OF TRANSPORTATION — Caltrans — DESIGN

P:\proj1\02\4E280_plans\pse\24e280ga004.dgn

LAST REVISION 10-16-13 — DATE PLOTTED => 13-DEC-2013 — TIME PLOTTED => 07:14

Dist	COUNTY	ROUTE	POST MILES TOTAL PROJECT	SHEET No.	TOTAL SHEETS
02	Sis	5	R45.6/R47.3 R62.0/R62.8	15	78

REGISTERED CIVIL ENGINEER 10-16-13 DATE

10-16-13
PLANS APPROVAL DATE

REGISTERED PROFESSIONAL ENGINEER MICHAEL ZDENEK No. C76156 Exp. 06-30-14 CIVIL STATE OF CALIFORNIA

THE STATE OF CALIFORNIA OR ITS OFFICERS OR AGENTS SHALL NOT BE RESPONSIBLE FOR THE ACCURACY OR COMPLETENESS OF SCANNED COPIES OF THIS PLAN SHEET.

NOTE:

1. SLOTTED HOLES FOR SPLICE BOLTS TO OVERLAP ENDS OF RAIL ELEMENT.

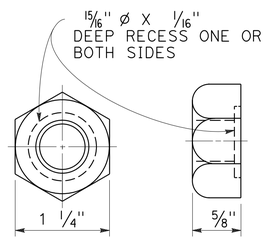

5/8" ø RECESS NUT

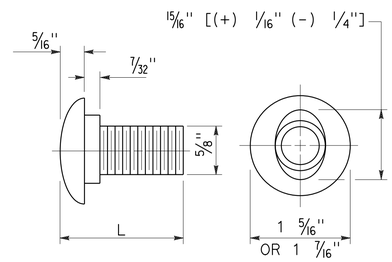

5/8" ø BUTTON HEAD BOLT

L	THREAD LENGTH
1 3/8"	FULL THREAD LENGTH
2"	FULL THREAD LENGTH
10"	4" MIN THREAD LENGTH
18"	4" MIN THREAD LENGTH
20"	4" MIN THREAD LENGTH
22"	4" MIN THREAD LENGTH
** 2 3/4"	2" MIN THREAD LENGTH
** 19"	4" MIN THREAD LENGTH

** FOR NESTED RAIL APPLICATIONS.

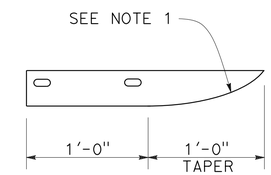

PLAN

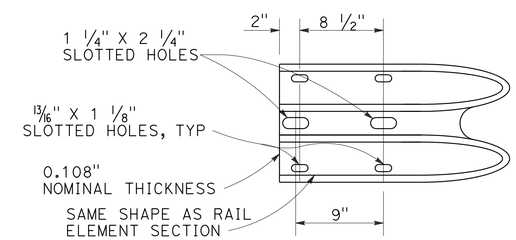

ELEVATION

END CAP

(TYPE A)

CONSTRUCTION DETAILS
METAL BEAM GUARD RAILING
STANDARD HARDWARE

NO SCALE

C-5

MIKE ZDENEK — REVISED BY
JEANNIE STEFFAN — DATE REVISED
CALCULATED-DESIGNED BY
CHECKED BY
JULIE CASEY — FUNCTIONAL SUPERVISOR

STATE OF CALIFORNIA - DEPARTMENT OF TRANSPORTATION
Caltrans
DESIGN

P:\proj1\02\4E280_plans\pse\24e280ga005.dgn

LAST REVISION 10-16-13 | DATE PLOTTED => 13-DEC-2013 | TIME PLOTTED => 07:14

Dist	COUNTY	ROUTE	POST MILES TOTAL PROJECT	SHEET No.	TOTAL SHEETS
02	Sis	5	R45.6/R47.3 R62.0/R62.8	16	78

REGISTERED CIVIL ENGINEER 10-16-13 DATE

10-16-13
PLANS APPROVAL DATE

REGISTERED PROFESSIONAL ENGINEER MICHAEL ZDENEK No. C76156 Exp. 06-30-14 CIVIL STATE OF CALIFORNIA

THE STATE OF CALIFORNIA OR ITS OFFICERS OR AGENTS SHALL NOT BE RESPONSIBLE FOR THE ACCURACY OR COMPLETENESS OF SCANNED COPIES OF THIS PLAN SHEET.

NOTES:

1. ALL HOLES IN WOOD POSTS AND BLOCKS SHALL BE ¾" DIA ± 1/16".
2. DIMENSIONS SHOWN FOR WOOD POST ARE NOMINAL.
3. THIS POST AND BLOCK COMBINATION USED FOR STANDARD LINE POST SECTIONS OF GUARD RAILING.
4. THIS POST AND 8" X 8" BLOCK COMBINATION USED FOR LINE POST SECTIONS OF GUARD RAILING ON NARROW ROADWAYS.
5. THIS POST AND 8" X 8" BLOCK COMBINATION IS TYPICALLY USED WHERE STRENGTHENED LINE POST SECTIONS OF GUARD RAILINGS ARE WARRANTED TO SHIELD FIXED OBJECTS.

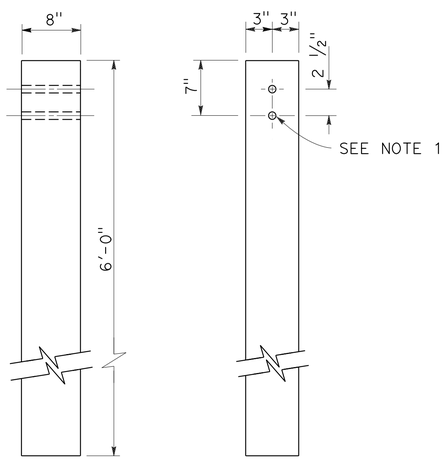

SIDE FRONT

6" X 8" WOOD POST

SEE NOTE 3

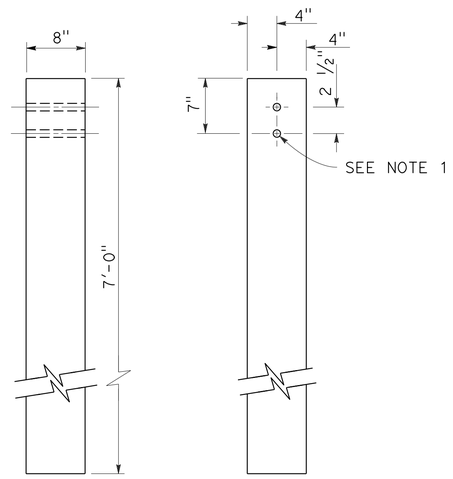

SIDE FRONT

8" X 8" WOOD POST

SEE NOTE 4

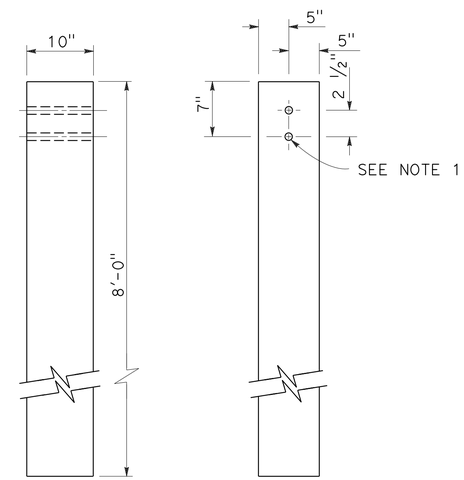

SIDE FRONT

10" X 10" WOOD POST

SEE NOTE 5

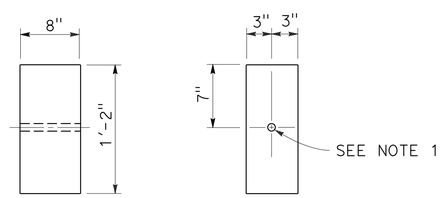

SIDE FRONT

6" X 8" WOOD BLOCK

SEE NOTE 3

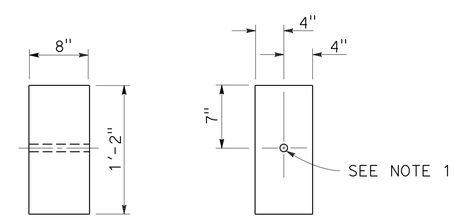

SIDE FRONT

8" X 8" WOOD BLOCK

CONSTRUCTION DETAILS METAL BEAM GUARD RAILING WOOD POST AND WOOD BLOCK DETAILS

NO SCALE

C-6

REVISED BY | DATE REVISED

MIKE ZDENEK | JEANNIE STEFFAN

CALCULATED-DESIGNED BY | CHECKED BY

FUNCTIONAL SUPERVISOR: JULIE CASEY

STATE OF CALIFORNIA - DEPARTMENT OF TRANSPORTATION

Caltrans® DESIGN

P:\proj1\02\4E280_plans\pse\24e280ga006.dgn

LAST REVISION 10-16-13 | DATE PLOTTED => 13-DEC-2013 | TIME PLOTTED => 07:14

Dist	COUNTY	ROUTE	POST MILES TOTAL PROJECT	SHEET No.	TOTAL SHEETS
02	Sis	5	R45.6/R47.3 R62.0/R62.8	17	78

REGISTERED CIVIL ENGINEER 10-16-13 DATE

10-16-13
PLANS APPROVAL DATE

REGISTERED PROFESSIONAL ENGINEER MICHAEL ZDENEK No. C76156 Exp. 06-30-14 CIVIL STATE OF CALIFORNIA

THE STATE OF CALIFORNIA OR ITS OFFICERS OR AGENTS SHALL NOT BE RESPONSIBLE FOR THE ACCURACY OR COMPLETENESS OF SCANNED COPIES OF THIS PLAN SHEET.

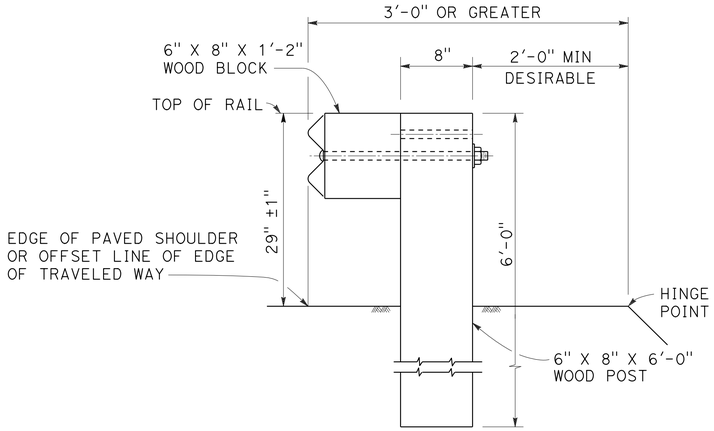

DETAIL A

TYPICAL ROADWAY INSTALLATION

SEE NOTE 1

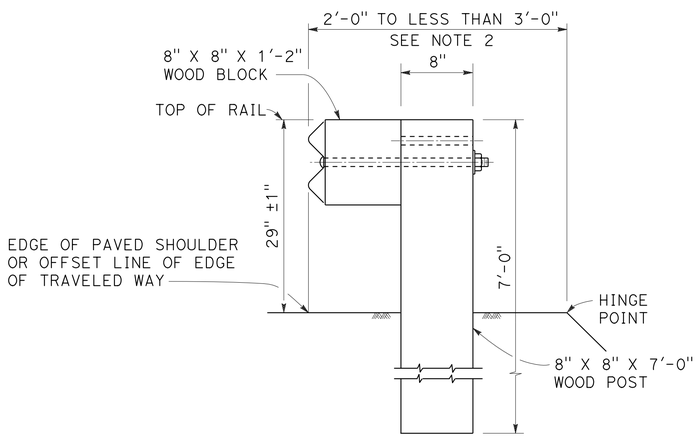

DETAIL B

NARROW ROADWAY INSTALLATION

SEE NOTE 1

POST EMBEDMENT

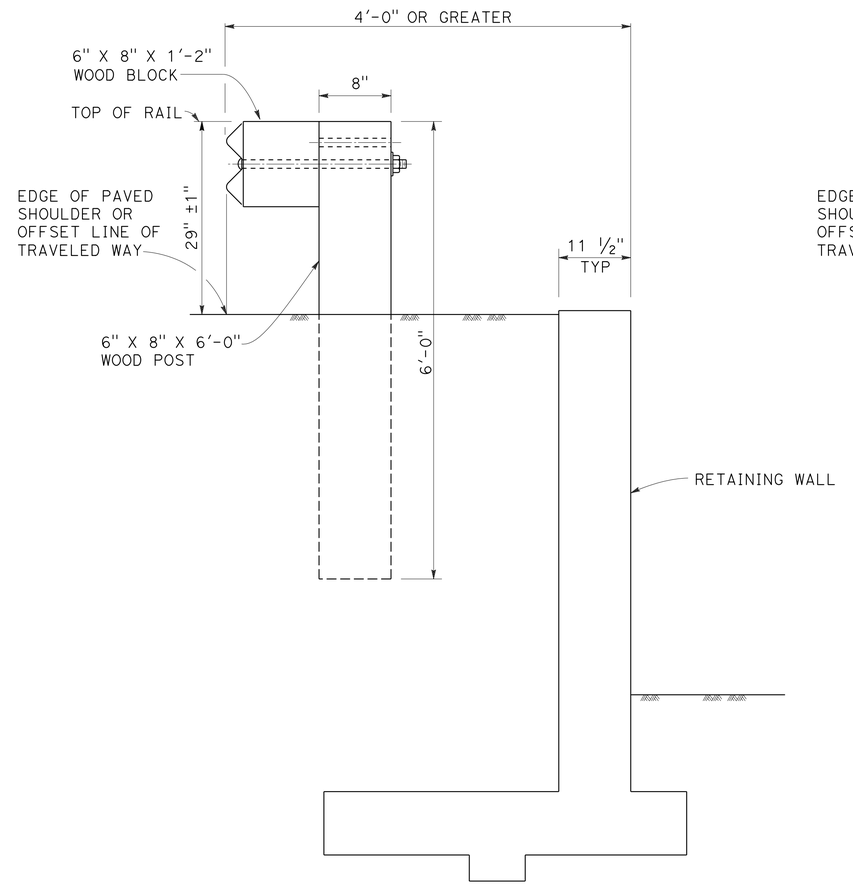

DETAIL C

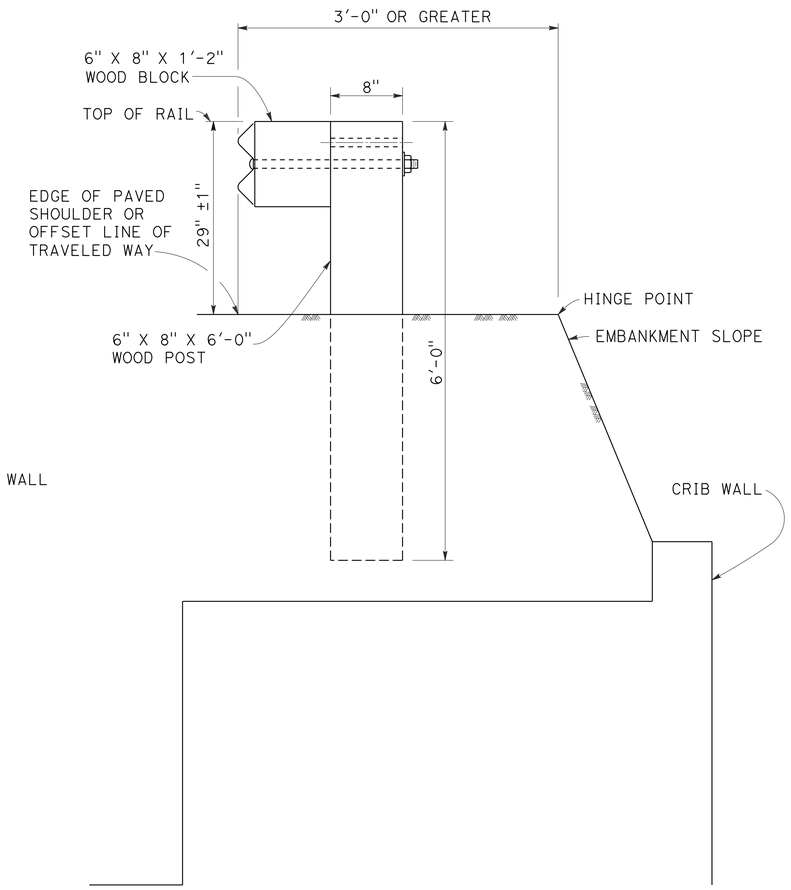

DETAIL D

INSTALLATION AT EARTH RETAINING WALLS

NOTES:

1. THESE INSTALLATION DETAILS ALSO APPLICABLE TO STEEL LINE POST INSTALLATIONS. FOR DETAIL A, C, AND D, WHERE STEEL LINE POST INSTALLATIONS ARE CONSTRUCTED, W6 X 9 STEEL POST, 6'-0" IN LENGTH, WITH 6" X 8" X 1'-2" NOTCHED WOOD BLOCKS OR NOTCHED RECYCLED PLASTIC BLOCKS ARE TO BE USED IN PLACE OF THE SIZE OF WOOD POST AND WOOD BLOCK SHOWN. FOR DETAIL B, WHERE STEEL LINE POST INSTALLATIONS ARE CONSTRUCTED, W6 X 9 STEEL POST, 7'-0" IN LENGTH, WITH 6" X 8" X 1'-2" NOTCHED WOOD BLOCKS OR NOTCHED RECYCLED PLASTIC BLOCKS ARE TO BE USED IN PLACE OF THE SIZE OF WOOD POST AND WOOD BLOCK SHOWN. FOR ADDITIONAL INSTALLATION DETAILS, SEE Const DETAILS.
2. WHERE THE DISTANCE BETWEEN THE FACE OF THE RAIL AND THE HINGE POINT IS LESS THAN 2'-0", SEE THE PROJECT PLANS FOR SPECIAL DETAILS.
3. FOR DIKE POSITIONING WITH GUARD RAILING INSTALLATIONS, SEE Const DETAILS.

CONSTRUCTION DETAILS
METAL BEAM GUARD RAILING
TYPICAL LINE POST EMBEDMENT AND HINGE POINT OFFSET DETAILS

NO SCALE

C-7

REVISED BY	DATE REVISED	MIKE ZDENEK	JEANNIE STEFFAN	CALCULATED-DESIGNED BY	CHECKED BY	FUNCTIONAL SUPERVISOR	JULIE CASEY

STATE OF CALIFORNIA - DEPARTMENT OF TRANSPORTATION

Caltrans DESIGN

P:\proj1\02\4E280_plans\pse\24e280ga007.dgn

LAST REVISION 10-16-13 | DATE PLOTTED => 13-DEC-2013 | TIME PLOTTED => 07:14

Dist	COUNTY	ROUTE	POST MILES TOTAL PROJECT	SHEET No.	TOTAL SHEETS
02	Sis	5	R45.6/R47.3 R62.0/R62.8	18	78

REGISTERED CIVIL ENGINEER 10-16-13 DATE

10-16-13
PLANS APPROVAL DATE

REGISTERED PROFESSIONAL ENGINEER MICHAEL ZDENEK No. C76156 Exp. 06-30-14 CIVIL STATE OF CALIFORNIA

THE STATE OF CALIFORNIA OR ITS OFFICERS OR AGENTS SHALL NOT BE RESPONSIBLE FOR THE ACCURACY OR COMPLETENESS OF SCANNED COPIES OF THIS PLAN SHEET.

NOTES:

1. LINE POST, BLOCKS AND HARDWARE TO BE USED ARE SHOWN. SEE Const DETAILS.
2. GUARD RAILING POST SPACING TO BE 6'-3" CENTER TO CENTER, EXCEPT AS OTHERWISE NOTED.
3. EXCEPT AS NOTED, LINE POSTS ARE 6" X 8" X 6'-0" WOOD WITH 6" X 8" X 1'-2" WOOD BLOCKS. W6 X 9 STEEL POSTS, 6'-0" IN LENGTH, WITH 6" X 8" X 1'-2" NOTCHED WOOD BLOCKS OR NOTCHED RECYCLED PLASTIC BLOCKS MAY BE USED FOR 6" X 8" X 6'-0" WOOD LINE POSTS WITH 6" X 8" X 1'-2" WOOD BLOCKS WHERE APPLICABLE AND WHEN SPECIFIED.
4. A 4'-0" MINIMUM CLEARANCE IS REQUIRED BETWEEN THE FACE OF THE RAILING AND THE FACE OF A FIXED OBJECT LOCATED DIRECTLY BEHIND STANDARD GUARD RAILING SECTIONS WITH POST SPACING OF 6'-3". CONSTRUCT GUARD RAILING AS SHOWN IN THE DETAIL "STRENGTHENED RAILING SECTIONS FOR FIXED OBJECTS" ON THIS PLAN, WHERE THE CLEARANCE BETWEEN THE FACE OF THE RAILING AND THE FACE OF A FIXED OBJECT IS LESS THAN 4'-0", BUT NOT LESS THAN 2'-3". WHERE THE CLEARANCE IS LESS THAN 2'-3", A CONCRETE WALL OR BARRIER SHOULD BE CONSTRUCTED TO SHIELD THE FIXED OBJECT(S).
5. DIRECTION OF ADJACENT TRAFFIC INDICATED BY ➡.
6. FOR END ANCHOR ASSEMBLY (TYPE SFT) DETAILS, SEE Const DETAILS.
7. FOR DETAILS OF RAIL TENSIONING ASSEMBLY, SEE Const DETAILS.
8. THE TYPE OF CRASH CUSHION TO BE USED WILL BE SHOWN ON THE PROJECT PLANS.
9. TYPE 14A LAYOUT IS TYPICALLY USED ON MULTILANE FREEWAYS OR EXPRESSWAYS TO SHIELD FIXED OBJECTS WHERE A MEDIAN TYPE BARRIER IS NOT CONSTRUCTED BETWEEN THE SEPARATED ROADBEDS.
10. FOR TYPICAL FLARE OFFSETS FOR 25'-0" LENGTH PARABOLA WITH MAXIMUM OFFSET OF 1'-0", SEE Const DETAILS.
11. THE 15:1 OR FLATTER FLARE IS MEASURED OFF OF THE EDGE OF TRAVELED WAY.
12. W6 X 15 STEEL POST, 8'-0" IN LENGTH, WITH 8" X 8" X 1'-2" NOTCHED WOOD BLOCK OR NOTCHED RECYCLED PLASTIC BLOCK MAY BE USED IN PLACE OF THE 10" X 10" X 8'-0" WOOD POST WITH 8" X 8" X 1'-2" WOOD BLOCK SHOWN IN THE "STRENGTHENED RAILING SECTIONS DETAIL".

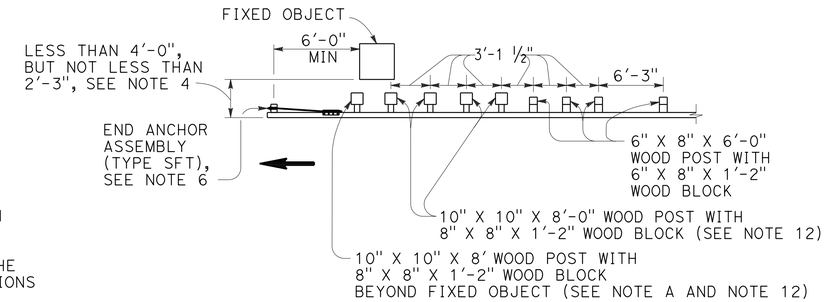

NOTE A: FOR A SERIES OF FIXED OBJECTS (BRIDGE COLUMNS, OVERHEAD SIGN SUPPORTS, ETC.) ADDITIONAL 10" X 10" X 8'-0" WOOD POST WITH 8" X 8" X 1'-2" WOOD BLOCKS AT 3'-1 1/2" CENTER TO CENTER SPACING ARE TO BE USED BETWEEN FIXED OBJECTS.

STRENGTHENED RAILING SECTIONS FOR FIXED OBJECT

USE STRENGTHENED RAILING SECTIONS WITH TYPE 14A LAYOUT WHERE MINIMUM CLEARANCE BETWEEN THE FACE OF THE GUARD RAILING AND FIXED OBJECT(S) IS LESS THAN 4'-0", BUT NOT LESS THAN 2'-3", SEE NOTE 4.

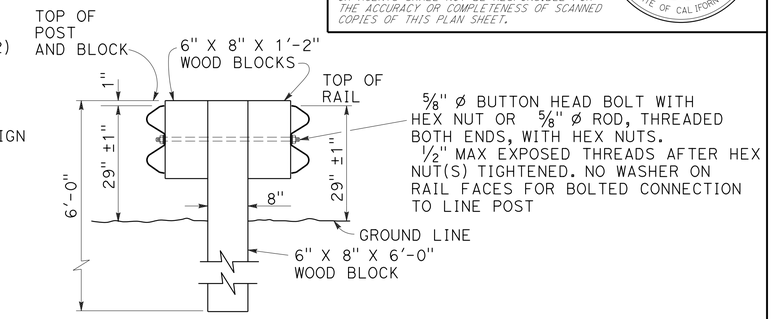

SECTION A-A
TYPICAL DOUBLE METAL BEAM GUARD RAILING

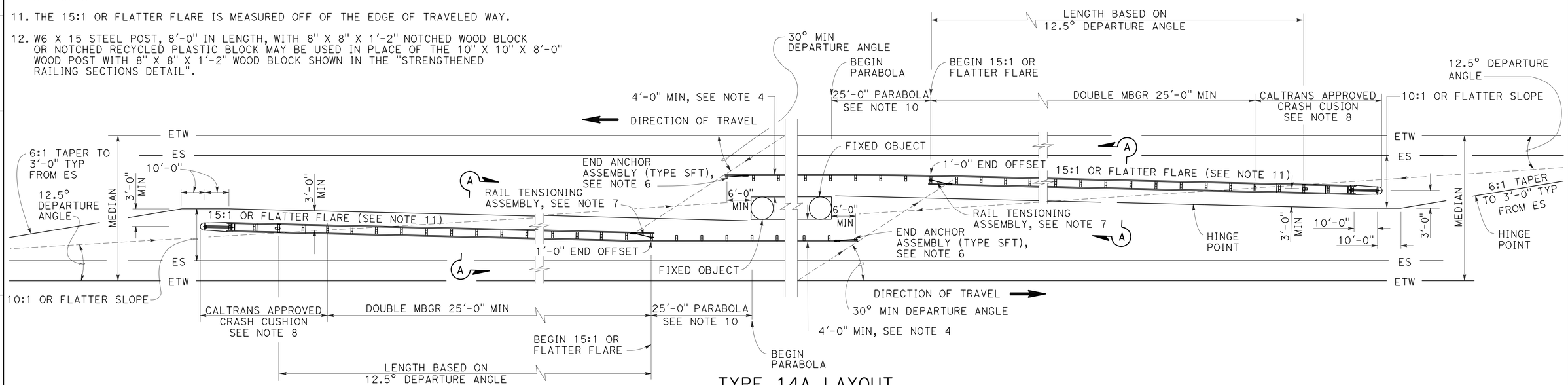

TYPE 14A LAYOUT

SEE NOTE 9

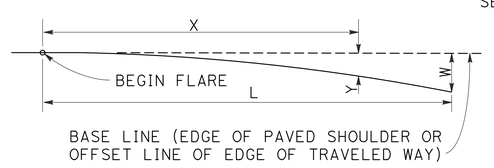

$$Y = \frac{WX^2}{L^2}$$

Y = OFFSET FROM BASE LINE
W = MAXIMUM OFFSET
X = DISTANCE ALONG BASE LINE
L = LENGTH OF FLARE

PARABOLIC FLARE OFFSETS

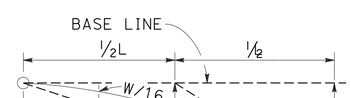

TYPICAL PARABOLIC LAYOUT

CONSTRUCTION DETAILS
METAL BEAM GUARD RAILING
TYPICAL LAYOUTS FOR FIXED OBJECTS BETWEEN SEPARATE ROADBEDS (TWO-WAY TRAFFIC)

NO SCALE

C-8

REVISED BY | DATE REVISED
MIKE ZDENEK | JEANNIE STEFFAN
CALCULATED-DESIGNED BY | CHECKED BY
FUNCTIONAL SUPERVISOR: JULIE CASEY

STATE OF CALIFORNIA - DEPARTMENT OF TRANSPORTATION
Caltrans DESIGN

P:\proj1\02\4E280_plans\pse\24e280ga008.dgn

LAST REVISION 10-16-13 | DATE PLOTTED => 13-DEC-2013 | TIME PLOTTED => 07:14

Dist	COUNTY	ROUTE	POST MILES TOTAL PROJECT	SHEET No.	TOTAL SHEETS
02	Sis	5	R45.6/R47.3 R62.0/R62.8	19	78

REGISTERED CIVIL ENGINEER 10-16-13 DATE

10-16-13
PLANS APPROVAL DATE

REGISTERED PROFESSIONAL ENGINEER MICHAEL ZDENEK No. C76156 Exp. 06-30-14 CIVIL STATE OF CALIFORNIA

THE STATE OF CALIFORNIA OR ITS OFFICERS OR AGENTS SHALL NOT BE RESPONSIBLE FOR THE ACCURACY OR COMPLETENESS OF SCANNED COPIES OF THIS PLAN SHEET.

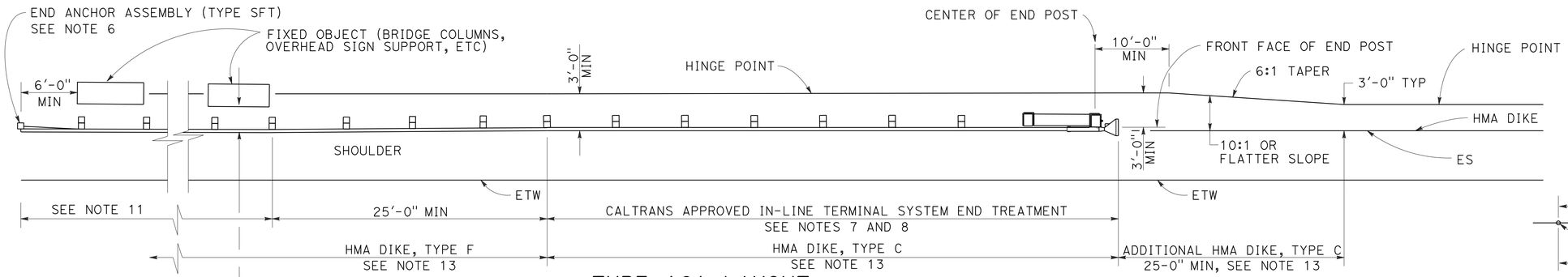

TYPE 16A LAYOUT

(GUARD RAILING INSTALLATION AT ROADSIDE FIXED OBJECT OR OBJECTS WITH AN IN-LINE END TREATMENT AT TRAFFIC APPROACH END OF RAILING)
SEE NOTES 12 AND 13

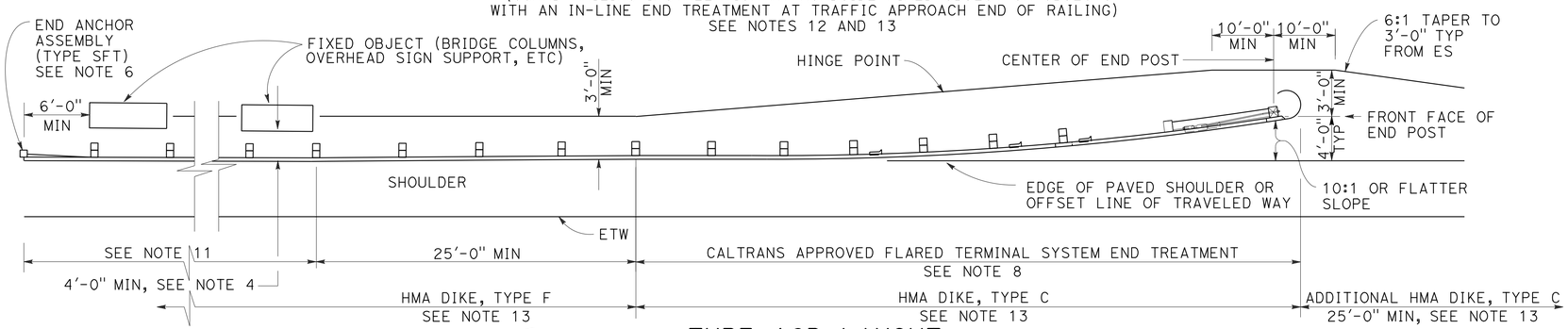

TYPE 16B LAYOUT

(GUARD RAILING INSTALLATION AT ROADSIDE FIXED OBJECT OR OBJECTS WITH A FLARED END TREATMENT AT TRAFFIC APPROACH END OF RAILING)
SEE NOTES 12 AND 13

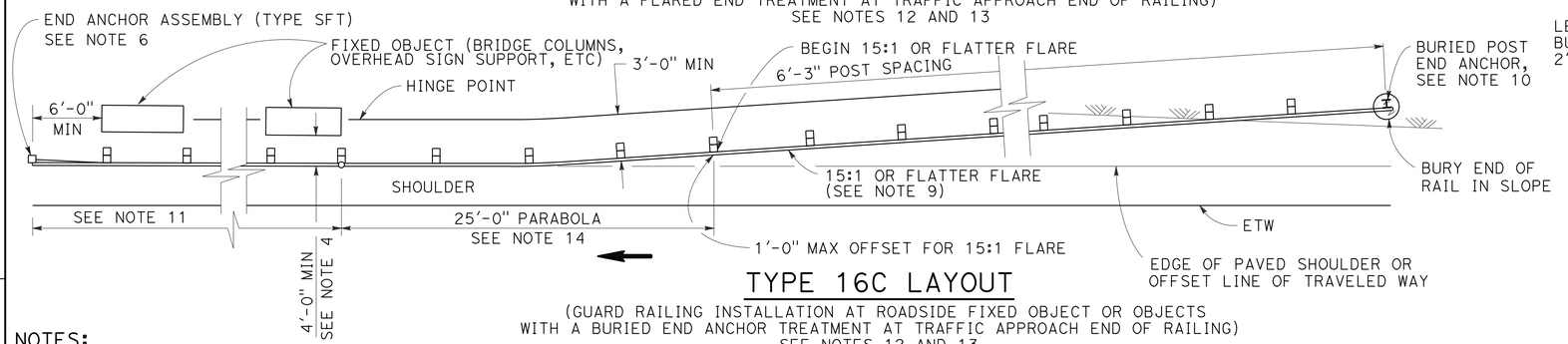

TYPE 16C LAYOUT

(GUARD RAILING INSTALLATION AT ROADSIDE FIXED OBJECT OR OBJECTS WITH A BURIED END ANCHOR TREATMENT AT TRAFFIC APPROACH END OF RAILING)
SEE NOTES 12 AND 13

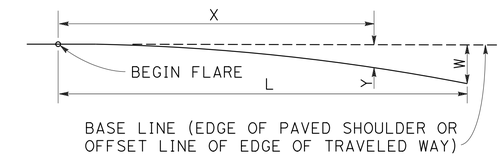

$$Y = \frac{WX^2}{L^2}$$

Y = OFFSET FROM BASE LINE
W = MAXIMUM OFFSET
X = DISTANCE ALONG BASE LINE
L = LENGTH OF FLARE

PARABOLIC FLARE OFFSETS

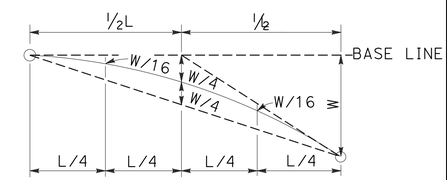

TYPICAL PARABOLIC LAYOUT

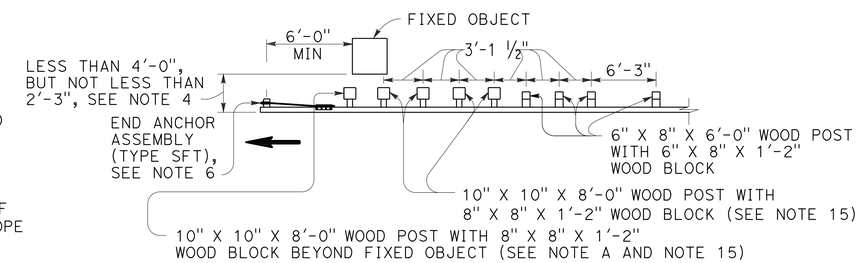

NOTE A: FOR A SERIES OF FIXED OBJECTS (BRIDGE COLUMNS, OVERHEAD SIGN SUPPORTS, ETC.) ADDITIONAL 10" X 10" X 8'-0" WOOD POST WITH 8" X 8" X 1'-2" WOOD BLOCKS AT 3'-1 ½" CENTER TO CENTER SPACING ARE TO BE USED BETWEEN FIXED OBJECTS.

STRENGTHENED RAILING SECTIONS FOR FIXED OBJECT

USE STRENGTHENED RAILING SECTIONS WITH TYPES 16A, 16B OR 16C LAYOUTS WHERE MINIMUM CLEARANCE BETWEEN THE FACE OF THE GUARD RAILING AND FIXED OBJECT(S) IS LESS THAN 4'-0", BUT NOT LESS THAN 2'-3". SEE NOTE 4

NOTES:

1. LINE POST, BLOCKS AND HARDWARE TO BE USED ARE SHOWN ON Const DETAILS.
2. GUARD RAILING POST SPACING TO BE 6'-3" CENTER TO CENTER, EXCEPT AS OTHERWISE NOTED.
3. EXCEPT AS NOTED, LINE POSTS ARE 6" X 8" X 6'-0" WOOD WITH 6" X 8" X 1'-2" WOOD BLOCKS. W6 X 9 STEEL POSTS, 6'-0" IN LENGTH, WITH 6" X 8" X 1'-2" NOTCHED WOOD BLOCKS OR NOTCHED RECYCLED PLASTIC BLOCKS MAY BE USED FOR 6" X 8" X 6'-0" WOOD LINE POSTS WITH 6" X 8" X 1'-2" WOOD BLOCKS WHERE APPLICABLE AND WHEN SPECIFIED.
4. A 4'-0" MINIMUM CLEARANCE IS REQUIRED BETWEEN THE FACE OF THE RAILING AND THE FACE OF A FIXED OBJECT LOCATED DIRECTLY BEHIND STANDARD GUARD RAILING SECTIONS WITH POST SPACING OF 6'-3". CONSTRUCT GUARD RAILING AS SHOWN IN THE DETAIL "STRENGTHENED RAILING SECTIONS FOR FIXED OBJECTS" ON THIS PLAN, WHERE THE CLEARANCE BETWEEN THE FACE OF THE RAILING AND THE FACE OF A FIXED OBJECT IS LESS THAN 4'-0", BUT NOT LESS THAN 2'-3". WHERE THE CLEARANCE IS LESS THAN 2'-3", A CONCRETE WALL OR BARRIER SHOULD BE CONSTRUCTED TO SHIELD THE FIXED OBJECT(S).
5. DIRECTION OF ADJACENT TRAFFIC INDICATED BY ⟶ .
6. FOR END ANCHOR ASSEMBLY (TYPE SFT) DETAILS, SEE Const DETAILS.
7. IN-LINE TERMINAL SYSTEM END TREATMENTS ARE USED WHERE SITE CONDITIONS WILL NOT ACCOMMODATE A FLARED END TREATMENT.
8. THE TYPE OF TERMINAL SYSTEM TO BE USED WILL BE SHOWN ON THE PROJECT PLANS.
9. THE 15:1 OR FLATTER FLARE USED WITH TYPE 16C LAYOUT IS BASED ON THE EDGE OF THE PAVED SHOULDER OR OFFSET LINE OF EDGE OF THE TRAVELED WAY. THE LENGTH OF GUARD RAILING WITHIN THE 15:1 OR FLATTER FLARE IS BASED ON SITE CONDITIONS AND SHOULD BE A LENGTH EQUAL TO MULTIPLES OF 12'-6".
10. FOR DETAILS OF THE BURIED POST END ANCHOR USED WITH TYPE 16C LAYOUT, SEE Const DETAILS.
11. AS SITE CONDITIONS DICTATE, CONSTRUCT ADDITIONAL GUARD RAILING TO SHIELD FIXED OBJECT(S). ADDITIONAL GUARD RAILING LENGTH EQUAL TO MULTIPLES OF 12'-6". POST SPACING AT 6'-3" EXCEPT AS SPECIFIED IN NOTE 4.
12. LAYOUT TYPES 16A, 16B OR 16C ARE TYPICALLY USED WHERE GUARD RAILING IS RECOMMENDED TO SHIELD ROADSIDE FIXED OBJECT(S) AND A CRASHWORTHY END TREATMENT IS REQUIRED FOR ONLY ONE DIRECTION OF TRAFFIC.
13. WHERE PLACEMENT OF DIKE IS REQUIRED WITH GUARD RAILING, SEE Const DETAILS FOR DIKE POSITIONING DETAILS.
14. FOR TYPICAL FLARE OFFSETS FOR 25'-0" LENGTH PARABOLA WITH MAXIMUM OFFSET OF 1'-0", SEE Const DETAILS.
15. W6 X 15 STEEL POST, 8'-0" IN LENGTH, WITH 8" X 8" X 1'-2" NOTCHED WOOD BLOCK OR NOTCHED RECYCLED PLASTIC BLOCKS MAY BE USED IN PLACE OF THE 10" X 10" X 8'-0" WOOD POST WITH 8" X 8" X 1'-2" WOOD BLOCK SHOWN IN THE "STRENGTHENED RAILING SECTIONS DETAIL".

CONSTRUCTION DETAILS
METAL BEAM GUARD RAILING
TYPICAL LAYOUTS FOR ROADSIDE FIXED OBJECTS

NO SCALE

C-9

REVISED BY | DATE REVISED
MIKE ZDENEK | JEANNIE STEFFAN
CALCULATED-DESIGNED BY | CHECKED BY
FUNCTIONAL SUPERVISOR: JULIE CASEY

STATE OF CALIFORNIA - DEPARTMENT OF TRANSPORTATION
Caltrans® DESIGN

P:\proj\02\4E280_plans\pse\24e280ga009.dgn

LAST REVISION 10-16-13 | DATE PLOTTED => 13-DEC-2013 | TIME PLOTTED => 07:14

Dist	COUNTY	ROUTE	POST MILES TOTAL PROJECT	SHEET No.	TOTAL SHEETS
02	Sis	5	R45.6/R47.3 R62.0/R62.8	20	78

REGISTERED CIVIL ENGINEER 10-16-13 DATE

10-16-13
PLANS APPROVAL DATE

REGISTERED PROFESSIONAL ENGINEER MICHAEL ZDENEK No. C76156 Exp. 06-30-14 CIVIL STATE OF CALIFORNIA

THE STATE OF CALIFORNIA OR ITS OFFICERS OR AGENTS SHALL NOT BE RESPONSIBLE FOR THE ACCURACY OR COMPLETENESS OF SCANNED COPIES OF THIS PLAN SHEET.

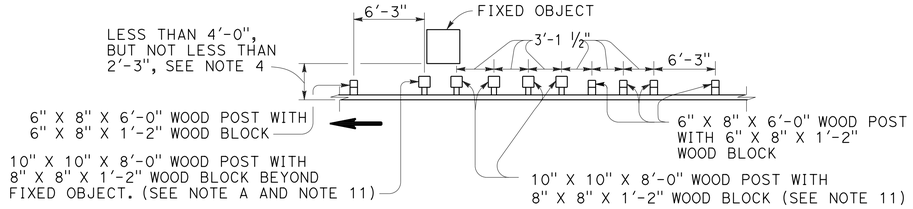

NOTE A: FOR A SERIES OF FIXED OBJECTS (BRIDGE COLUMNS, OVERHEAD SIGN SUPPORTS, ETC.) ADDITIONAL 10" X 10" X 8'-0" WOOD POST WITH 8" X 8" X 1'-2" WOOD BLOCKS AT 3'-1 1/2" CENTER TO CENTER SPACING ARE TO BE USED BETWEEN FIXED OBJECT(S).

STRENGTHENED RAILING SECTIONS FOR FIXED OBJECT

USE STRENGTHENED RAILING SECTIONS WITH LAYOUT TYPES 16D OR 16E WHERE MINIMUM CLEARANCE BETWEEN THE FACE OF THE GUARD RAILING AND FIXED OBJECT(S) IS LESS THAN 4'-0", BUT NOT LESS THAN 2'-3". SEE NOTE 4.

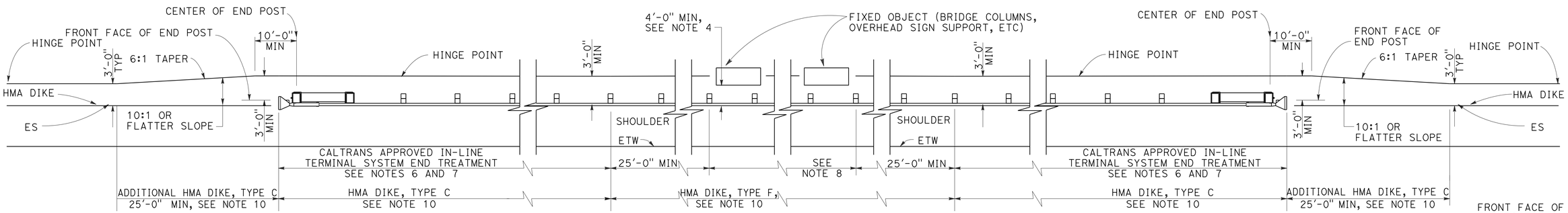

TYPE 16D LAYOUT

(GUARD RAILING INSTALLATION AT ROADSIDE FIXED OBJECT OR OBJECTS WITH AN IN-LINE END TREATMENT AT EACH END OF RAILING) SEE NOTE 9

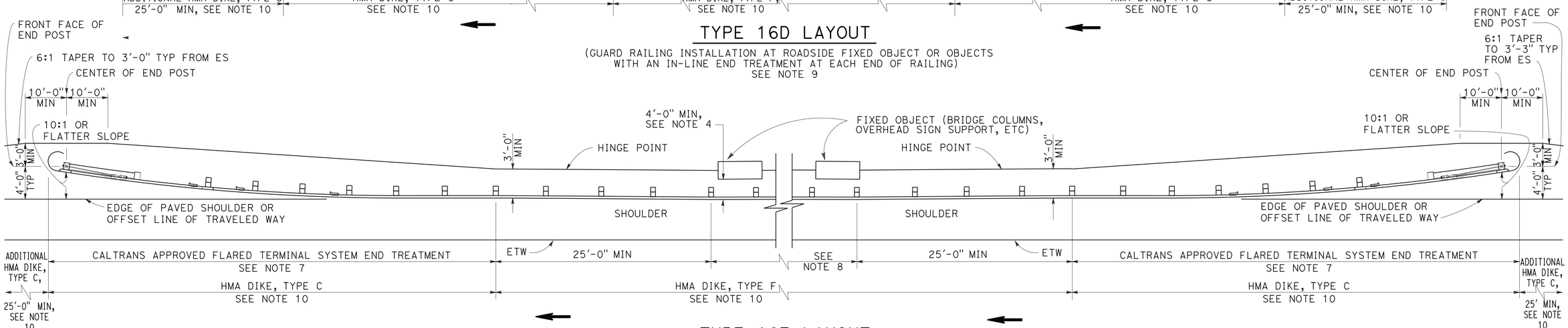

TYPE 16E LAYOUT

(GUARD RAILING INSTALLATION AT ROADSIDE FIXED OBJECT OR OBJECTS WITH A FLARED END TREATMENT AT EACH END OF RAILING) SEE NOTE 9

NOTES:

1. LINE POST, BLOCKS AND HARDWARE TO BE USED ARE SHOWN ON Const DETAILS.
2. GUARD RAILING POST SPACING TO BE 6'-3" C-C, EXCEPT AS NOTED.
3. EXCEPT AS NOTED, LINE POSTS ARE 6" X 8" X 6'-0" WOOD WITH 6" X 8" X 1'-2" WOOD BLOCKS. W6 X 9 STEEL POSTS, 6'-0" IN LENGTH, WITH 6" X 8" X 1'-2" NOTCHED WOOD BLOCKS OR NOTCHED RECYCLED PLASTIC BLOCKS MAY BE USED FOR 6" X 8" X 6'-0" WOOD LINE POSTS WITH 6" X 8" X 1'-2" WOOD BLOCKS WHERE APPLICABLE AND WHEN SPECIFIED.
4. A 4'-0" MINIMUM CLEARANCE IS REQUIRED BETWEEN THE FACE OF THE RAILING AND THE FACE OF A FIXED OBJECT LOCATED DIRECTLY BEHIND STANDARD GUARD RAILING SECTIONS WITH POST SPACING AT 6'-3". CONSTRUCT GUARD RAILING AS SHOWN IN THE DETAIL "STRENGTHENED RAILNG SECTIONS FOR FIXED OBJECTS" ON THIS PLAN, WHERE THE CLEARANCE BETWEEN THE FACE OF THE RAILING AND THE FACE OF A FIXED OBJECT IS LESS THAN 4'-0", BUT NOT LESS THAN 2'-3". WHERE THE CLEARANCE IS LESS THAN 2'-3", A CONCRETE WALL OR BARRIER SHOULD BE CONSTRUCTED TO SHIELD THE FIXED OBJECT(S).
5. DIRECTION OF ADJACENT TRAFFIC INDICATED BY ⟶ .
6. IN-LINE TERMINAL SYSTEM END TREATMENTS ARE USED WHERE SITE CONDITIONS WILL NOT ACCOMMODATE A FLARED END TREATMENT.
7. THE TYPE OF TERMINAL SYSTEM TO BE USED WILL BE SHOWN ON THE PROJECT PLANS.
8. AS SITE CONDITIONS DICTATE, CONSTRUCT ADDITIONAL GUARD RAILING TO SHIELD FIXED OBJECT(S). ADDITIONAL GUARD RAILING LENGTH EQUAL TO MULTIPLES OF 12'-6". POST SPACING AT 6'-3", EXCEPT AS SPECIFIED IN NOTE 4.
9. LAYOUT TYPES 16D THROUGH 16L SHOWN ON Const DETAILS ARE TYPICALLY USED WHERE GUARD RAILING IS RECOMMENDED TO SHIELD ROADSIDE FIXED OBJECT(S) AND A CRASHWORTHY END TREATMENT IS REQUIRED FOR BOTH DIRECTIONS OF TRAFFIC.
10. WHERE PLACEMENT OF DIKE IS REQUIRED WITH GUARD RAILING, SEE Const DETAILS FOR DIKE POSITIONING DETAILS.
11. W6 X 15 STEEL POST, 8'-0" IN LENGTH, WITH 8" X 8" X 1'-2" NOTCHED WOOD BLOCK OR NOTCHED RECYCLED PLASTIC BLOCK MAY BE USED IN PLACE OF THE 10" X 10" X 8'-0" WOOD POST WITH 8" X 8" X 1'-2" WOOD BLOCK SHOWN IN THE "STRENGTHENED RAILING SECTIONS DETAIL."

CONSTRUCTION DETAILS
METAL BEAM GUARD RAILING
TYPICAL LAYOUTS FOR ROADSIDE FIXED OBJECTS

NO SCALE

C-10

REVISED BY	DATE REVISED

MIKE ZDENEK — JEANNIE STEFFAN — JULIE CASEY

CALCULATED-DESIGNED BY — CHECKED BY — FUNCTIONAL SUPERVISOR

STATE OF CALIFORNIA - DEPARTMENT OF TRANSPORTATION — DESIGN

P:\proj1\02\4E280_plans\pse\24e280ga010.dgn

LAST REVISION 10-16-13 — DATE PLOTTED => 13-DEC-2013 — TIME PLOTTED => 07:14

Dist	COUNTY	ROUTE	POST MILES TOTAL PROJECT	SHEET No.	TOTAL SHEETS
02	Sis	5	R45.6/R47.3 R62.0/R62.8	21	78

REGISTERED CIVIL ENGINEER 10-16-13 DATE

10-16-13
PLANS APPROVAL DATE

REGISTERED PROFESSIONAL ENGINEER MICHAEL ZDENEK No. C76156 Exp. 06-30-14 CIVIL STATE OF CALIFORNIA

THE STATE OF CALIFORNIA OR ITS OFFICERS OR AGENTS SHALL NOT BE RESPONSIBLE FOR THE ACCURACY OR COMPLETENESS OF SCANNED COPIES OF THIS PLAN SHEET.

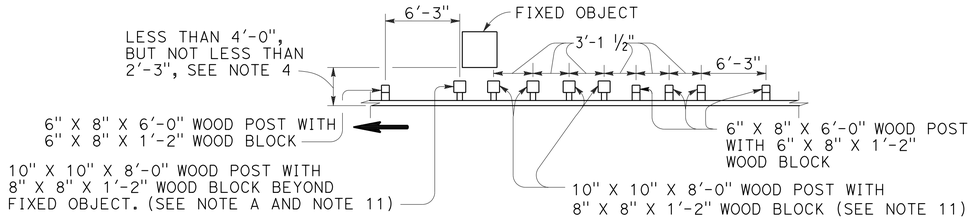

NOTE A: FOR A SERIES OF FIXED OBJECTS (BRIDGE COLUMNS, OVERHEAD SIGN SUPPORTS, ETC.) ADDITIONAL 10" X 10" X 8'-0" WOOD POST WITH 8" X 8" X 1'-2" WOOD BLOCKS AT 3'-1 1/2" CENTER TO CENTER SPACING ARE TO BE USED BETWEEN FIXED OBJECT(S).

STRENGTHENED RAILING SECTIONS FOR FIXED OBJECT

USE STRENGTHENED RAILING SECTIONS WITH LAYOUT TYPE 16H WHERE MINIMUM CLEARANCE BETWEEN THE FACE OF THE GUARD RAILING AND FIXED OBJECT(S) IS LESS THAN 4'-0", BUT NOT LESS THAN 2'-3". SEE NOTE 4.

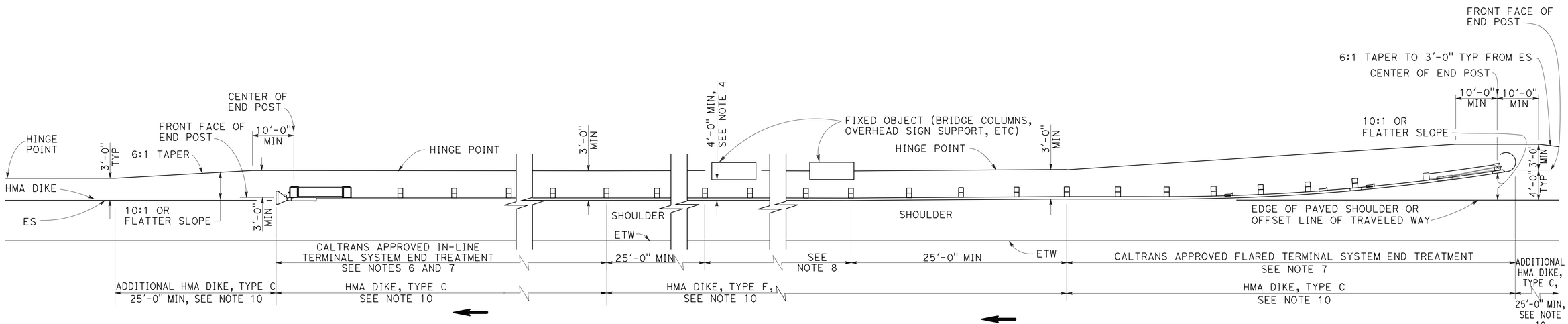

TYPE 16H LAYOUT

(GUARD RAILING INSTALLATION AT ROADSIDE FIXED OBJECT OR OBJECTS WITH A FLARED END TREATMENT AND AN IN-LINE TREATMENT AT THE ENDS OF RAILING) SEE NOTE 9

NOTES:

1. LINE POST, BLOCKS AND HARDWARE TO BE USED ARE SHOWN ON CONSTRUCTION DETAILS.
2. GUARD RAILING POST SPACING TO BE 6'-3" CENTER TO CENTER, EXCEPT AS OTHERWISE NOTED.
3. EXCEPT AS NOTED, LINE POSTS ARE 6" X 8" X 6'-0" WOOD WITH 6" X 8" X 1'-2" WOOD BLOCKS. W6 X 9 STEEL POSTS, 6'-0" IN LENGTH, WITH 6" X 8" X 1'-2" NOTCHED WOOD BLOCKS OR NOTCHED RECYCLED PLASTIC BLOCKS MAY BE USED FOR 6" X 8" X 6'-0" WOOD POSTS WITH 6" X 8" X 1'-2" WOOD BLOCKS WHERE APPLICABLE AND WHEN SPECIFIED.
4. A 4'-0" MINIMUM CLEARANCE IS REQUIRED BETWEEN THE FACE OF THE RAILING AND THE FACE OF A FIXED OBJECT LOCATED DIRECTLY BEHIND STANDARD GUARD RAILING SECTIONS WITH POST SPACING AT 6'-3". CONSTRUCT GUARD RAILING AS SHOWN IN THE DETAIL "STRENGTHENED RAILING SECTIONS FOR FIXED OBJECTS" ON THIS PLAN, WHERE THE CLEARANCE BETWEEN THE FACE OF THE RAILING AND THE FACE OF A FIXED OBJECT IS LESS THAN 4'-0", BUT NOT LESS THAN 2'-3". WHERE THE CLEARANCE IS LESS THAN 2'-3", A CONCRETE WALL OR BARRIER SHOULD BE CONSTRUCTED TO SHIELD THE FIXED OBJECT(S).
5. DIRECTION OF ADJACENT TRAFFIC INDICATED BY → .
6. IN-LINE TERMINAL SYSTEM END TREATMENTS ARE USED WHERE SITE CONDITIONS WILL NOT ACCOMMODATE A FLARED END TREATMENT.
7. THE TYPE OF TERMINAL SYSTEM TO BE USED WILL BE SHOWN ON THE PROJECT PLANS.
8. AS SITE CONDITIONS DICTATE, CONSTRUCT ADDITIONAL GUARD RAILING TO SHIELD FIXED OBJECT(S). ADDITIONAL GUARD RAILING LENGTH EQUAL TO MULTIPLES OF 12'-6". POST SPACING AT 6'-3", EXCEPT AS SPECIFIED IN NOTE 4.
9. LAYOUT TYPES 16D THROUGH 16L, SHOWN ON CONSTRUCTION DETAILS TYPICALLY USED WHERE GUARD RAILING IS RECOMMENDED TO SHIELD ROADSIDE FIXED OBJECT(S) AND A CRASHWORTHY END TREATMENT IS REQUIRED FOR BOTH DIRECTIONS OF TRAFFIC.
10. WHERE PLACEMENT OF DIKE IS REQUIRED WITH GUARD RAILING, SEE CONSTRUCTION DETAILS FOR DIKE POSITIONING DETAILS.
11. W6 X 15 STEEL POST, 8'-0" IN LENGTH, WITH 8" X 8" X 1'-2" NOTCHED WOOD BLOCK OR NOTCHED RECYCLED PLASTIC BLOCKS MAY BE USED IN PLACE OF THE 10" X 10" X 8'-0" WOOD POST WITH 8" X 8" X 1'-2" WOOD BLOCK SHOWN IN THE "STRENGTHENED RAILING SECTIONS DETAIL".

CONSTRUCTION DETAILS METAL BEAM GUARD RAILING TYPICAL LAYOUTS FOR ROADSIDE FIXED OBJECTS

NO SCALE

C-11

REVISED BY | DATE REVISED
MIKE ZDENEK | JEANNIE STEFFAN
CALCULATED-DESIGNED BY | CHECKED BY
FUNCTIONAL SUPERVISOR: JULIE CASEY

STATE OF CALIFORNIA - DEPARTMENT OF TRANSPORTATION
Caltrans® DESIGN

P:\proj\02\4E280_plans\pse\24e280ga011.dgn

LAST REVISION 10-16-13 | DATE PLOTTED => 13-DEC-2013 | TIME PLOTTED => 07:14

Dist	COUNTY	ROUTE	POST MILES TOTAL PROJECT	SHEET No.	TOTAL SHEETS
02	Sis	5	R45.6/R47.3 R62.0/R62.8	22	78

REGISTERED CIVIL ENGINEER 10-16-13 DATE

10-16-13
PLANS APPROVAL DATE

REGISTERED PROFESSIONAL ENGINEER MICHAEL ZDENEK C76156 No. 06-30-14 Exp. CIVIL STATE OF CALIFORNIA

THE STATE OF CALIFORNIA OR ITS OFFICERS OR AGENTS SHALL NOT BE RESPONSIBLE FOR THE ACCURACY OR COMPLETENESS OF SCANNED COPIES OF THIS PLAN SHEET.

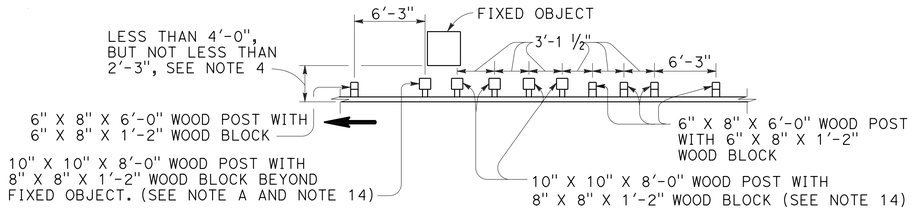

NOTE A: FOR A SERIES OF FIXED OBJECTS (BRIDGE COLUMNS, OVERHEAD SIGN SUPPORTS, ETC.) ADDITIONAL 10" X 10" X 8'-0" WOOD POST WITH 8" X 8" X 1'-2" WOOD BLOCKS AT 3'-1 ½" CENTER TO CENTER SPACING ARE TO BE USED BETWEEN FIXED OBJECT(S).

STRENGTHENED RAILING SECTIONS FOR FIXED OBJECT

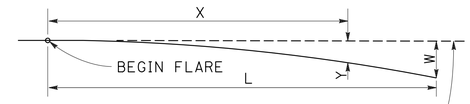

BASE LINE (EDGE OF PAVED SHOULDER OR OFFSET LINE OF EDGE OF TRAVELED WAY)

$$Y = \frac{WX^2}{L^2}$$

Y = OFFSET FROM BASE LINE
W = MAXIMUM OFFSET
X = DISTANCE ALONG BASE LINE
L = LENGTH OF FLARE

PARABOLIC FLARE OFFSETS

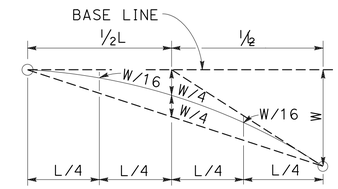

TYPICAL PARABOLIC LAYOUT

USE STRENGTHENED RAILING SECTIONS WITH LAYOUT TYPES 16I OR 16J LAYOUTS WHERE MINIMUM CLEARANCE BETWEEN THE FACE OF THE GUARD RAILING AND FIXED OBJECT(S) IS LESS THAN 4'-0", BUT NOT LESS THAN 2'-3". SEE NOTE 4.

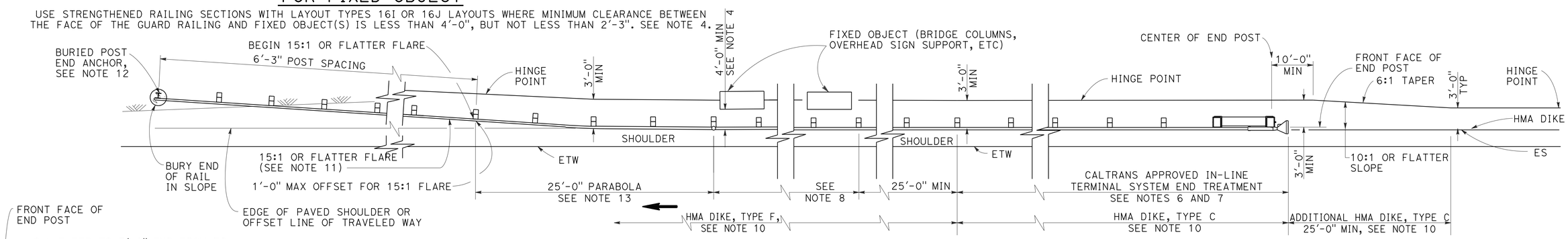

TYPE 16I LAYOUT

(GUARD RAILING INSTALLATION AT ROADSIDE FIXED OBJECT OR OBJECTS WITH AN IN-LINE END TREATMENT AND A BURIED END ANCHOR TREATMENT AT THE ENDS OF RAILING) SEE NOTE 9

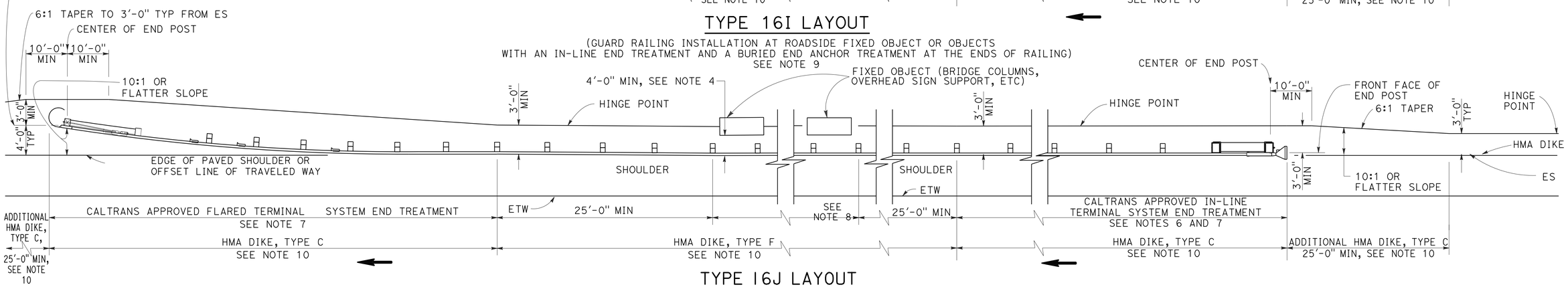

TYPE 16J LAYOUT

(GUARD RAILING INSTALLATION AT ROADSIDE FIXED OBJECT OR OBJECTS WITH AN IN-LINE END TREATMENT AND A FLARED END TREATMENT AT THE ENDS OF RAILING) SEE NOTE 9

NOTES:

1. LINE POST, BLOCKS AND HARDWARE TO BE USED ARE SHOWN ON CONSTRUCTION DETAILS.
2. GUARD RAILING POST SPACING TO BE 6'-3" CENTER TO CENTER, EXCEPT AS OTHERWISE NOTED.
3. EXCEPT AS NOTED, LINE POSTS ARE 6" X 8" X 6'-0" WOOD WITH 6" X 8" X 1'-2" WOOD BLOCKS. W6 X 9 STEEL POSTS, 6'-0" IN LENGTH, WITH 6" X 8" X 1'-2" NOTCHED WOOD BLOCKS OR NOTCHED RECYCLED PLASTIC BLOCKS MAY BE USED FOR 6" X 8" X 6'-0" WOOD POSTS WITH 6" X 8" X 1'-2" WOOD BLOCKS WHERE APPLICABLE AND WHEN SPECIFIED.
4. A 4'-0" MINIMUM CLEARANCE IS REQUIRED BETWEEN THE FACE OF THE RAILING AND THE FACE OF A FIXED OBJECT LOCATED DIRECTLY BEHIND STANDARD GUARD RAILING SECTIONS WITH POST SPACING AT 6'-3". CONSTRUCT GUARD RAILING AS SHOWN IN THE DETAIL "STRENGTHENED RAILING SECTIONS FOR FIXED OBJECTS" ON THIS PLAN, WHERE THE CLEARANCE BETWEEN THE FACE OF THE RAILING AND THE FACE OF A FIXED OBJECT IS LESS THAN 4'-0", BUT NOT LESS THAN 2'-3". WHERE THE CLEARANCE IS LESS THAN 2'-3", A CONCRETE WALL OR BARRIER SHOULD BE CONSTRUCTED TO SHIELD THE FIXED OBJECT(S).
5. DIRECTION OF ADJACENT TRAFFIC INDICATED BY ⟶ .
6. IN-LINE TERMINAL SYSTEM END TREATMENTS ARE USED WHERE SITE CONDITIONS WILL NOT ACCOMMODATE A FLARED END TREATMENT.
7. THE TYPE OF TERMINAL SYSTEM TO BE USED WILL BE SHOWN ON THE PROJECT PLANS.
8. AS SITE CONDITIONS DICTATE, CONSTRUCT ADDITIONAL GUARD RAILING TO SHIELD FIXED OBJECT(S). ADDITIONAL GUARD RAILING LENGTH EQUAL TO MULTIPLES OF 12'-6". POST SPACING AT 6'-3", EXCEPT AS SPECIFIED IN NOTE 4.
9. LAYOUT TYPES 16D THROUGH 16L, SHOWN ON CONSTRUCTION DETAILS, ARE TYPICALLY USED WHERE GUARD RAILING IS RECOMMENDED TO SHIELD ROADSIDE FIXED OBJECT(S) AND A CRASHWORTHY END TREATMENT IS REQUIRED FOR BOTH DIRECTIONS OF TRAFFIC.
10. WHERE PLACEMENT OF DIKE IS REQUIRED WITH GUARD RAILING, SEE CONSTRUCTION DETAILS FOR DIKE POSITIONING DETAILS.
11. THE 15:1 OR FLATTER FLARE FOR THE BURIED POST ANCHOR IS BASED ON THE EDGE OF THE PAVED SHOULDER OR OFFSET LINE OF EDGE OF THE TRAVELED WAY. THE LENGTH OF GUARD RAILING WITHIN THE 15:1 OR FLATTER FLARE IS BASED ON SITE CONDITIONS AND SHOULD BE A LENGTH EQUAL TO MULTIPLES OF 12'-6".
12. FOR DETAILS OF BURIED POST END ANCHOR DETAILS, SEE CONSTRUCTION DETAILS
13. FOR TYPICAL FLARE OFFSETS FOR 25'-0" LENGTH PARABOLA WITH MAXIMUM OFFSET OF 1'-0", SEE CONSTRUCTION DETAILS.
14. W6 X 15 STEEL POST, 8'-0" IN LENGTH, WITH 8" X 8" X 1'-2" NOTCHED WOOD BLOCK OR NOTCHED RECYCLED PLASTIC BLOCKS MAY BE USED IN PLACE OF THE 10" X 10" X 8'-0" WOOD POST WITH 8" X 8" X 1'-2" WOOD BLOCK SHOWN IN THE "STRENGTHENED RAILING SECTIONS DETAIL".

CONSTRUCTION DETAILS
METAL BEAM GUARD RAILING
TYPICAL LAYOUTS FOR ROADSIDE FIXED OBJECTS

NO SCALE

C-12

REVISED BY | DATE REVISED
MIKE ZDENEK | JEANNIE STEFFAN
CALCULATED-DESIGNED BY | CHECKED BY
FUNCTIONAL SUPERVISOR: JULIE CASEY

STATE OF CALIFORNIA - DEPARTMENT OF TRANSPORTATION
Caltrans DESIGN

P:\proj1\02\4E280_plans\pse\24e280ga012.dgn

LAST REVISION 10-16-13 | DATE PLOTTED => 13-DEC-2013 | TIME PLOTTED => 07:14

Dist	COUNTY	ROUTE	POST MILES TOTAL PROJECT	SHEET No.	TOTAL SHEETS
02	Sis	5	R45.6/R47.3 R62.0/R62.8	23	78

REGISTERED CIVIL ENGINEER 10-16-13 DATE

10-16-13
PLANS APPROVAL DATE

REGISTERED PROFESSIONAL ENGINEER MICHAEL ZDENEK No. C76156 Exp. 06-30-14 CIVIL STATE OF CALIFORNIA

THE STATE OF CALIFORNIA OR ITS OFFICERS OR AGENTS SHALL NOT BE RESPONSIBLE FOR THE ACCURACY OR COMPLETENESS OF SCANNED COPIES OF THIS PLAN SHEET.

NOTES:

1. SEE CONSTRUCTION DETAILS FOR TYPICAL USE OF END ANCHOR ASSEMBLY (TYPE SFT).
2. FOR DETAILS OF THE ANCHOR PLATE AND ¾" CABLE, SEE CONSTRUCTION DETAILS.
3. A 6'-0" LENGTH STEEL FOUNDATION TUBE, TS 8 X 6 X 3/16, WITHOUT A SOIL PLATE, MAY BE FURNISHED AND INSTALLED IN PLACE OF THE 4'-6" LENGTH STEEL FOUNDATION TUBE AND SOIL PLATE SHOWN. MINIMUM EMBEDMENT OF THE 6'-0" LENGTH TUBE SHALL BE 5'-9". A ⅝" * HEX HEAD BOLT AND NUT SHALL BE INSTALLED IN THE HOLE IN THE 6'-0" LENGTH TUBE TO KEEP THE WOOD POST FROM DROPPING INTO THE TUBE.
4. DIRECTION OF TRAFFIC INDICATED BY ⟹.
5. INSTALL LINE POST, STEEL FOUNDATION TUBE AND SOIL PLATE IN SOIL.

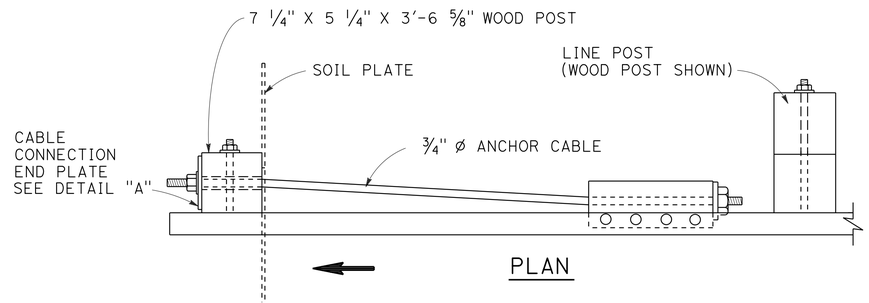

PLAN

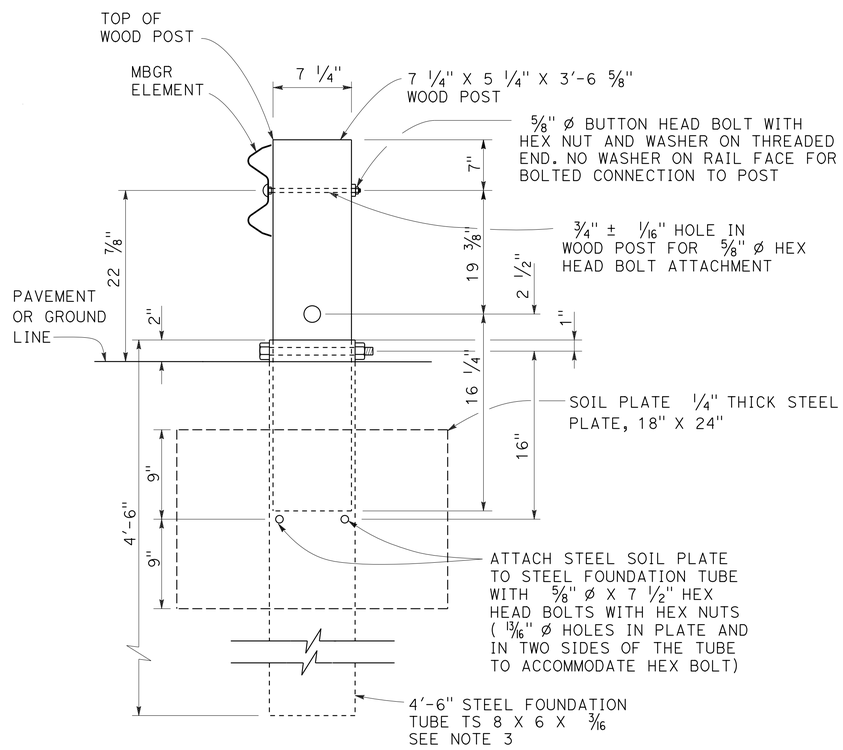

SECTION A-A

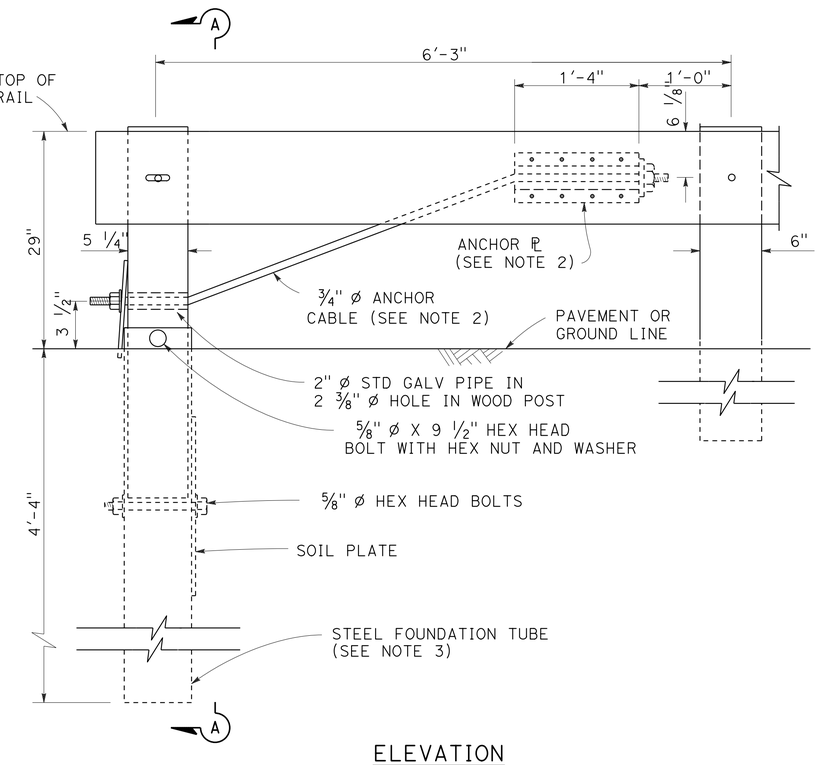

ELEVATION
END ANCHOR
ASSEMBLY (TYPE SFT)
SEE NOTE 1

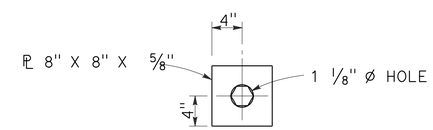

DETAIL "A"
CABLE CONNECTION
END PLATE

CONSTRUCTION DETAILS
METAL RAILING
END ANCHOR ASSEMBLY
(TYPE SFT)

NO SCALE

C-13

REVISED BY	DATE REVISED

CALCULATED-DESIGNED BY	CHECKED BY
MIKE ZDENEK	JEANNIE STEFFAN

FUNCTIONAL SUPERVISOR: JULIE CASEY

STATE OF CALIFORNIA - DEPARTMENT OF TRANSPORTATION
Caltrans® DESIGN

P:\proj1\02\4E280_plans\pse\24e280ga013.dgn

LAST REVISION 10-16-13 | DATE PLOTTED => 13-DEC-2013 | TIME PLOTTED => 07:14

Dist	COUNTY	ROUTE	POST MILES TOTAL PROJECT	SHEET No.	TOTAL SHEETS
02	Sis	5	R45.6/R47.3 R62.0/R62.8	24	78

REGISTERED CIVIL ENGINEER 10-16-13 DATE

10-16-13
PLANS APPROVAL DATE

REGISTERED PROFESSIONAL ENGINEER MICHAEL ZDENEK C76156 No. 06-30-14 Exp. CIVIL STATE OF CALIFORNIA

THE STATE OF CALIFORNIA OR ITS OFFICERS OR AGENTS SHALL NOT BE RESPONSIBLE FOR THE ACCURACY OR COMPLETENESS OF SCANNED COPIES OF THIS PLAN SHEET.

NOTES:

1. SEE CONSTRUCTION DETAILS FOR TYPICAL USE OF RAIL TENSIONING ASSEMBLY.
2. FOR DETAILS OF THE ANCHOR PLATE AND ¾" CABLE, SEE CONSTRUCTION DETAILS.
3. DIRECTION OF TRAFFIC INDICATED BY ⟶ .

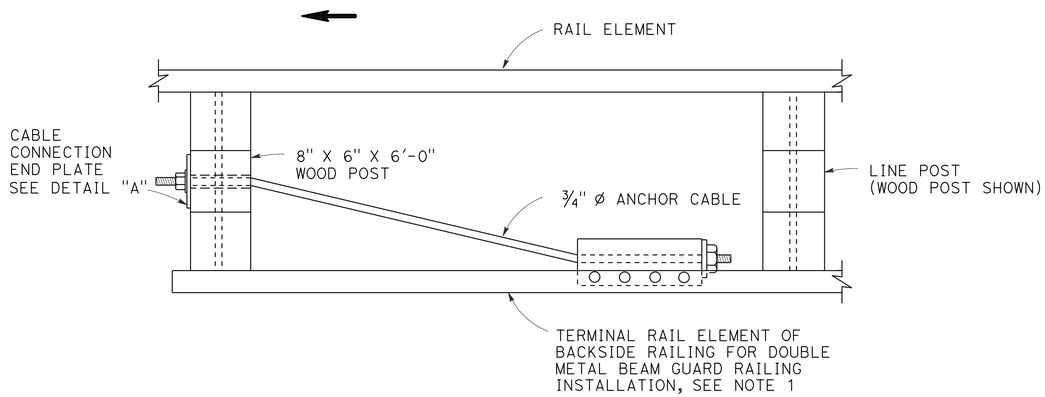

PLAN

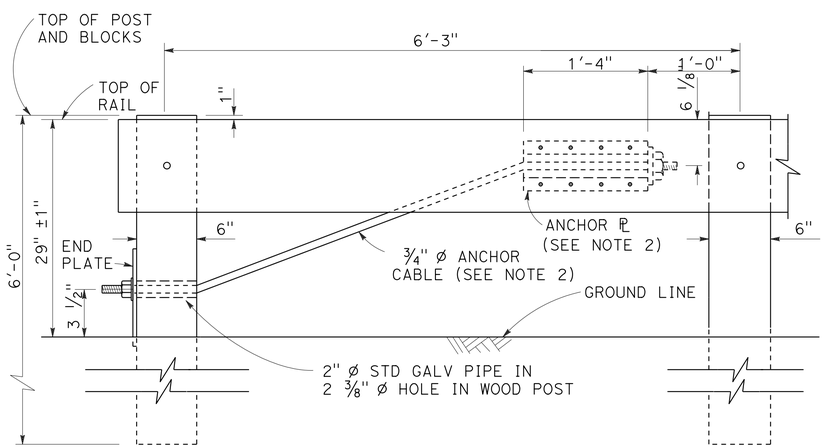

ELEVATION
RAIL TENSIONING ASSEMBLY
SEE NOTE 1

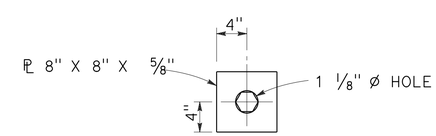

DETAIL "A"
CABLE CONNECTION END PLATE

CONSTRUCTION DETAILS
METAL RAILING
RAIL TENSIONING ASSEMBLY

NO SCALE

C-14

REVISED BY	DATE REVISED
MIKE ZDENEK	JEANNIE STEFFAN

CALCULATED-DESIGNED BY	CHECKED BY

FUNCTIONAL SUPERVISOR: JULIE CASEY

STATE OF CALIFORNIA - DEPARTMENT OF TRANSPORTATION
Caltrans® DESIGN

P:\proj1\02\4E280_plans\pse\24e280ga014.dgn

LAST REVISION 10-16-13 | DATE PLOTTED => 13-DEC-2013 | TIME PLOTTED => 07:14

Dist	COUNTY	ROUTE	POST MILES TOTAL PROJECT	SHEET No.	TOTAL SHEETS
02	Sis	5	R45.6/R47.3 R62.0/R62.8	25	78

REGISTERED CIVIL ENGINEER 10-16-13 DATE

10-16-13
PLANS APPROVAL DATE

REGISTERED PROFESSIONAL ENGINEER MICHAEL ZDENEK No. C76156 Exp. 06-30-14 CIVIL STATE OF CALIFORNIA

THE STATE OF CALIFORNIA OR ITS OFFICERS OR AGENTS SHALL NOT BE RESPONSIBLE FOR THE ACCURACY OR COMPLETENESS OF SCANNED COPIES OF THIS PLAN SHEET.

NOTE:

1. SEE CONSTRUCTION DETAILS FOR TYPICAL USE OF ANCHOR CABLE AND ANCHOR PLATE.

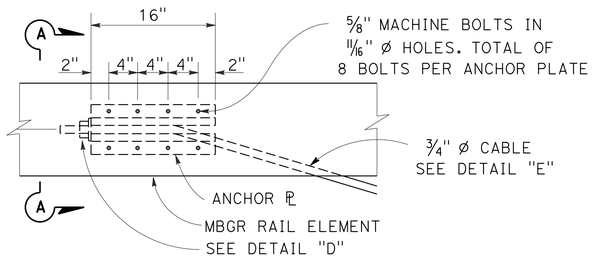

ANCHOR PLATE DETAIL
(MBGR SHOWN, TBB SIMILAR)

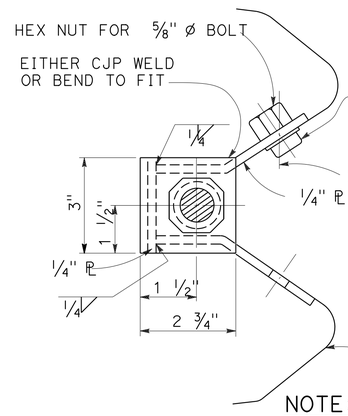

SECTION A-A
(ALTERNATIVE TYPE 1)

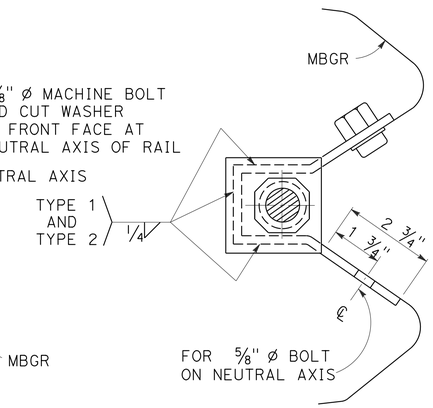

SECTION A-A
(ALTERNATIVE TYPE 2)

NOTE:
DIMENSIONING APPLIES TO BOTH TYPES.

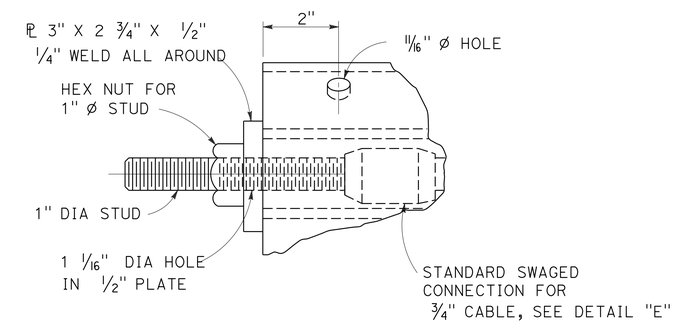

DETAIL "D"

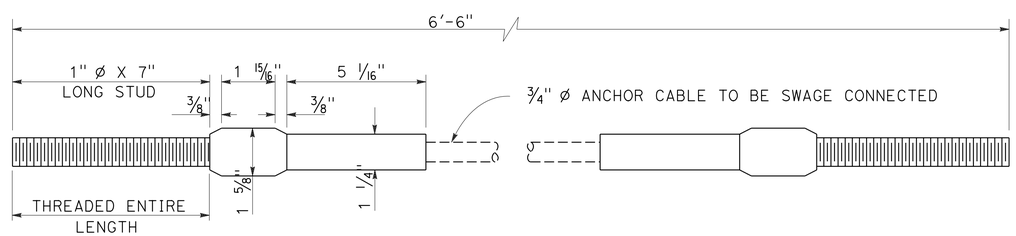

ANCHOR CABLE WITH
SWAGED FITTING AND STUD
DETAIL "E"

CONSTRUCTION DETAILS
METAL RAILING
ANCHOR CABLE AND
ANCHOR PLATE DETAILS

NO SCALE

C-15

REVISED BY | DATE REVISED
MIKE ZDENEK | JEANNIE STEFFAN
CALCULATED-DESIGNED BY | CHECKED BY
FUNCTIONAL SUPERVISOR
JULIE CASEY

STATE OF CALIFORNIA - DEPARTMENT OF TRANSPORTATION
Caltrans
DESIGN

P:\proj1\02\4E280_plans\pse\24e280ga015.dgn

LAST REVISION 10-16-13
DATE PLOTTED => 13-DEC-2013
TIME PLOTTED => 07:14

Dist	COUNTY	ROUTE	POST MILES TOTAL PROJECT	SHEET No.	TOTAL SHEETS
02	Sis	5	R45.6/R47.3 R62.0/R62.8	26	78

REGISTERED CIVIL ENGINEER 10-16-13 DATE

10-16-13
PLANS APPROVAL DATE

REGISTERED PROFESSIONAL ENGINEER
MICHAEL ZDENEK
No. C76156
Exp. 06-30-14
CIVIL
STATE OF CALIFORNIA

THE STATE OF CALIFORNIA OR ITS OFFICERS OR AGENTS SHALL NOT BE RESPONSIBLE FOR THE ACCURACY OR COMPLETENESS OF SCANNED COPIES OF THIS PLAN SHEET.

NOTE:

1. FOR ACCURATE RIGHT OF WAY DATA, CONTACT RIGHT OF WAY ENGINEERING AT THE DISTRICT OFFICE.

LEGEND

- —— w —— ——	Exist CITY OF YREKA WATER
—— - - - gs —— ——	Exist SUBURBAN PROPANE
—— - e —— ——	Exist PACIFIC POWER
—— - - s —— - - -	Exist CITY OF YREKA SEWER
—— - - tc —— ——	Exist AT&T, NORTHLAND COMMUNICATION
—— - - tc ——(oh)	Exist AT&T, NORTHLAND COMMUNICATION (OVERHEAD)
—— (abandoned) ——	Exist UTILITY ABANDONED

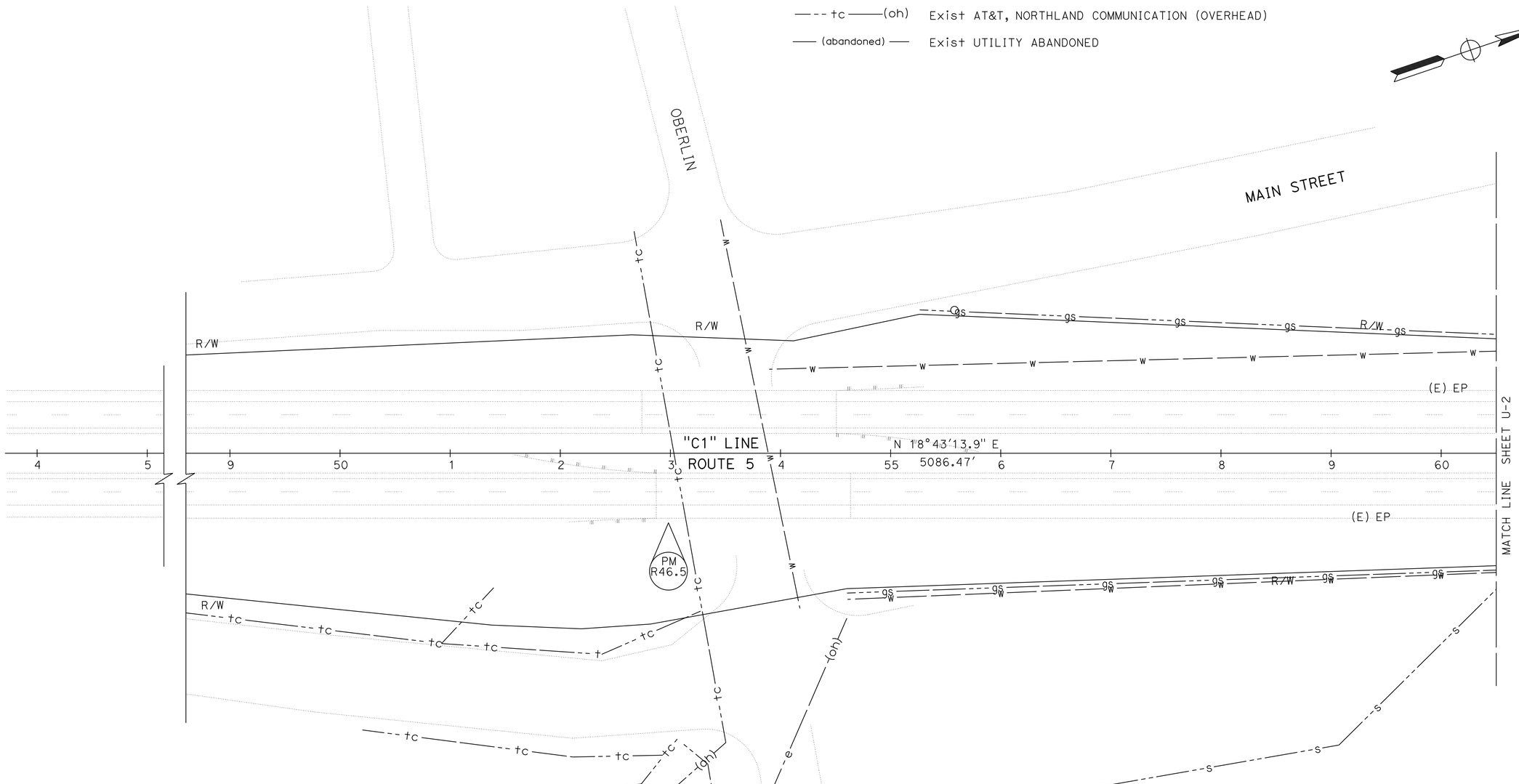

UTILITY PLAN

(LOCATION 1)

SCALE: 1" = 50'

U-1

APPROVED FOR UTILITY WORK ONLY

REVISED BY | DATE REVISED

MIKE ZDENEK | JEANNIE STEFFAN

CALCULATED-DESIGNED BY | CHECKED BY

FUNCTIONAL SUPERVISOR: JULIE CASEY

STATE OF CALIFORNIA - DEPARTMENT OF TRANSPORTATION

Caltrans® DESIGN

P:\proj\02\4E280_plans\pse\24e280ka001.dgn

LAST REVISION 10-16-13 | DATE PLOTTED => 13-DEC-2013 | TIME PLOTTED => 07:14

Dist	COUNTY	ROUTE	POST MILES TOTAL PROJECT	SHEET No.	TOTAL SHEETS
02	Sis	5	R45.6/R47.3 R62.0/R62.8	27	78

REGISTERED CIVIL ENGINEER 10-16-13 DATE

10-16-13
PLANS APPROVAL DATE

REGISTERED PROFESSIONAL ENGINEER MICHAEL ZDENEK No. C76156 Exp. 06-30-14 CIVIL STATE OF CALIFORNIA

THE STATE OF CALIFORNIA OR ITS OFFICERS OR AGENTS SHALL NOT BE RESPONSIBLE FOR THE ACCURACY OR COMPLETENESS OF SCANNED COPIES OF THIS PLAN SHEET.

NOTE:

1. FOR ACCURATE RIGHT OF WAY DATA, CONTACT RIGHT OF WAY ENGINEERING AT THE DISTRICT OFFICE.

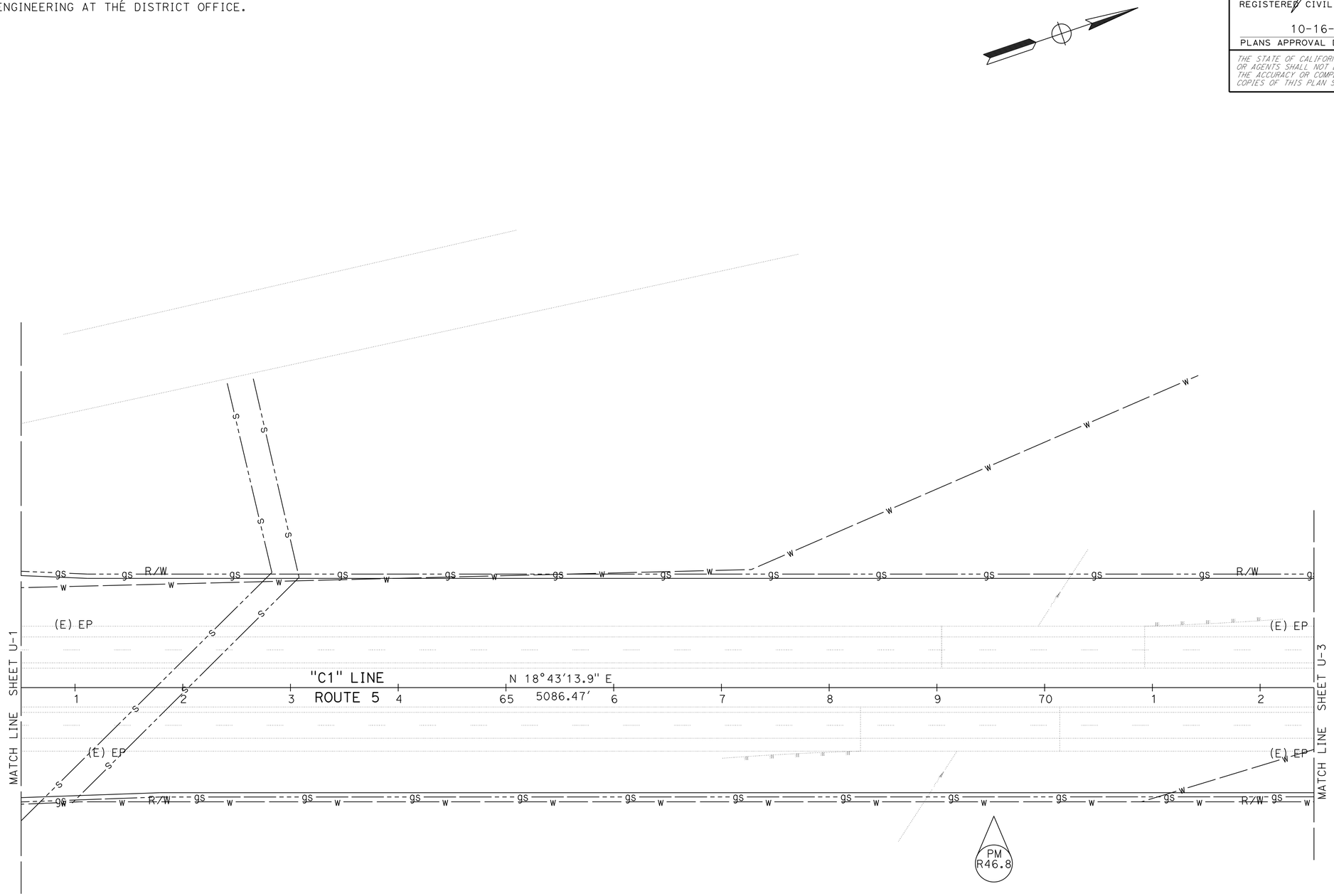

UTILITY PLAN

(LOCATION 1)

SCALE: 1" = 50' **U-2**

APPROVED FOR UTILITY WORK ONLY

STATE OF CALIFORNIA - DEPARTMENT OF TRANSPORTATION

Caltrans **DESIGN**

FUNCTIONAL SUPERVISOR: JULIE CASEY

CALCULATED-DESIGNED BY: MIKE ZDENEK

CHECKED BY: JEANNIE STEFFAN

REVISED BY

DATE REVISED

P:\proj1\02\4E280_plans\pse\24e280ka002.dgn

LAST REVISION 10-16-13 | DATE PLOTTED => 13-DEC-2013 | TIME PLOTTED => 07:14

BORDER LAST REVISED 7/2/2010 | USERNAME => s123119 | DGN FILE => 24e280ka002.dgn | RELATIVE BORDER SCALE IS IN INCHES 0 1 2 3 | UNIT 0318 | PROJECT NUMBER & PHASE 02-0002-0247-1 | EA: 02-4E2801

Dist	COUNTY	ROUTE	POST MILES TOTAL PROJECT	SHEET No.	TOTAL SHEETS
02	Sis	5	R45.6/R47.3 R62.0/R62.8	28	78

REGISTERED CIVIL ENGINEER 10-16-13 DATE

10-16-13
PLANS APPROVAL DATE

REGISTERED PROFESSIONAL ENGINEER
MICHAEL ZDENEK
No. C76156
Exp. 06-30-14
CIVIL
STATE OF CALIFORNIA

THE STATE OF CALIFORNIA OR ITS OFFICERS OR AGENTS SHALL NOT BE RESPONSIBLE FOR THE ACCURACY OR COMPLETENESS OF SCANNED COPIES OF THIS PLAN SHEET.

NOTE:

1. FOR ACCURATE RIGHT OF WAY DATA, CONTACT RIGHT OF WAY ENGINEERING AT THE DISTRICT OFFICE.

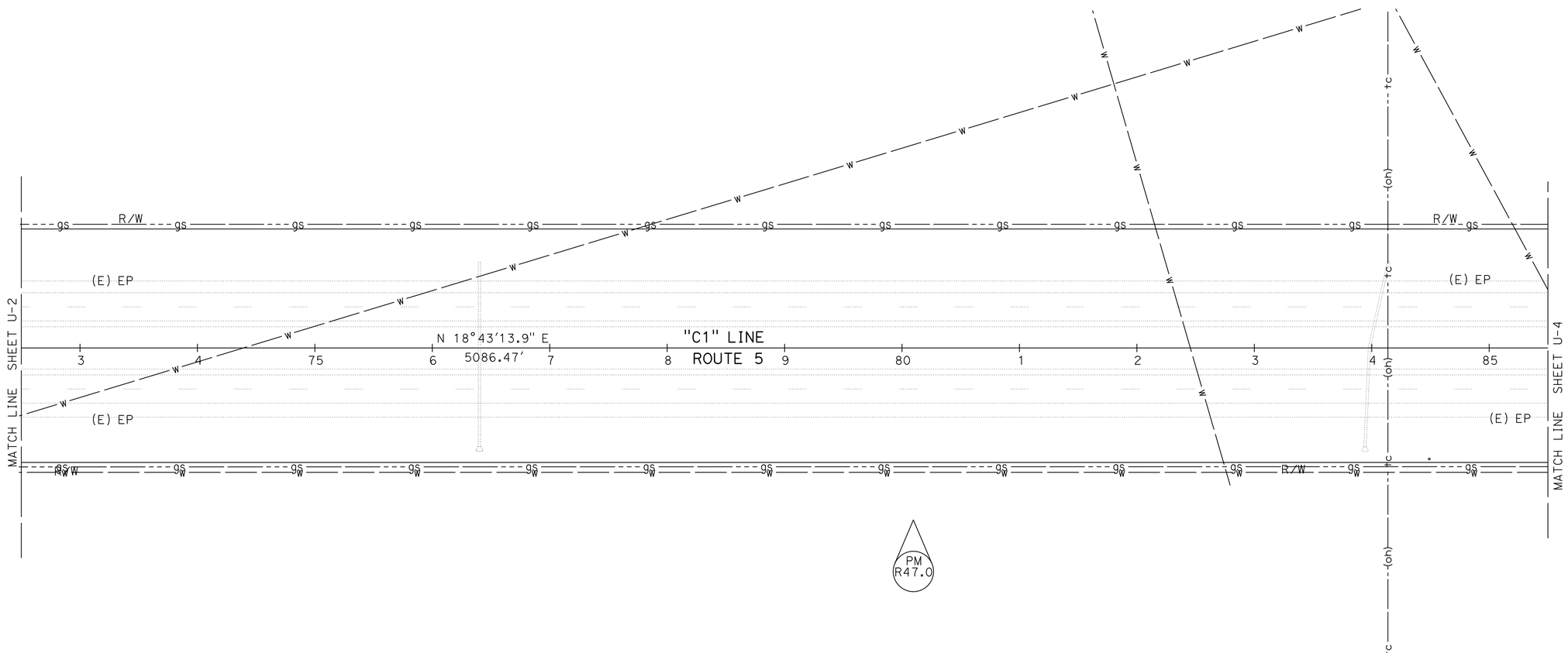

APPROVED FOR UTILITY WORK ONLY

UTILITY PLAN

(LOCATION 1)

SCALE: 1" = 50'

U-3

REVISED BY	DATE REVISED

CALCULATED-DESIGNED BY	CHECKED BY
MIKE ZDENEK	JEANNIE STEFFAN

FUNCTIONAL SUPERVISOR: JULIE CASEY

STATE OF CALIFORNIA - DEPARTMENT OF TRANSPORTATION

Caltrans®

DESIGN

P:\proj1\02\4E280_plans\pse\24e280ka003.dgn

LAST REVISION 10-16-13 | DATE PLOTTED => 13-DEC-2013 | TIME PLOTTED => 07:14

Dist	COUNTY	ROUTE	POST MILES TOTAL PROJECT	SHEET No.	TOTAL SHEETS
02	Sis	5	R45.6/R47.3 R62.0/R62.8	29	78

REGISTERED CIVIL ENGINEER 10-16-13 DATE

10-16-13
PLANS APPROVAL DATE

REGISTERED PROFESSIONAL ENGINEER MICHAEL ZDENEK No. C76156 Exp. 06-30-14 CIVIL STATE OF CALIFORNIA

THE STATE OF CALIFORNIA OR ITS OFFICERS OR AGENTS SHALL NOT BE RESPONSIBLE FOR THE ACCURACY OR COMPLETENESS OF SCANNED COPIES OF THIS PLAN SHEET.

NOTE:

1. FOR ACCURATE RIGHT OF WAY DATA, CONTACT RIGHT OF WAY ENGINEERING AT THE DISTRICT OFFICE.

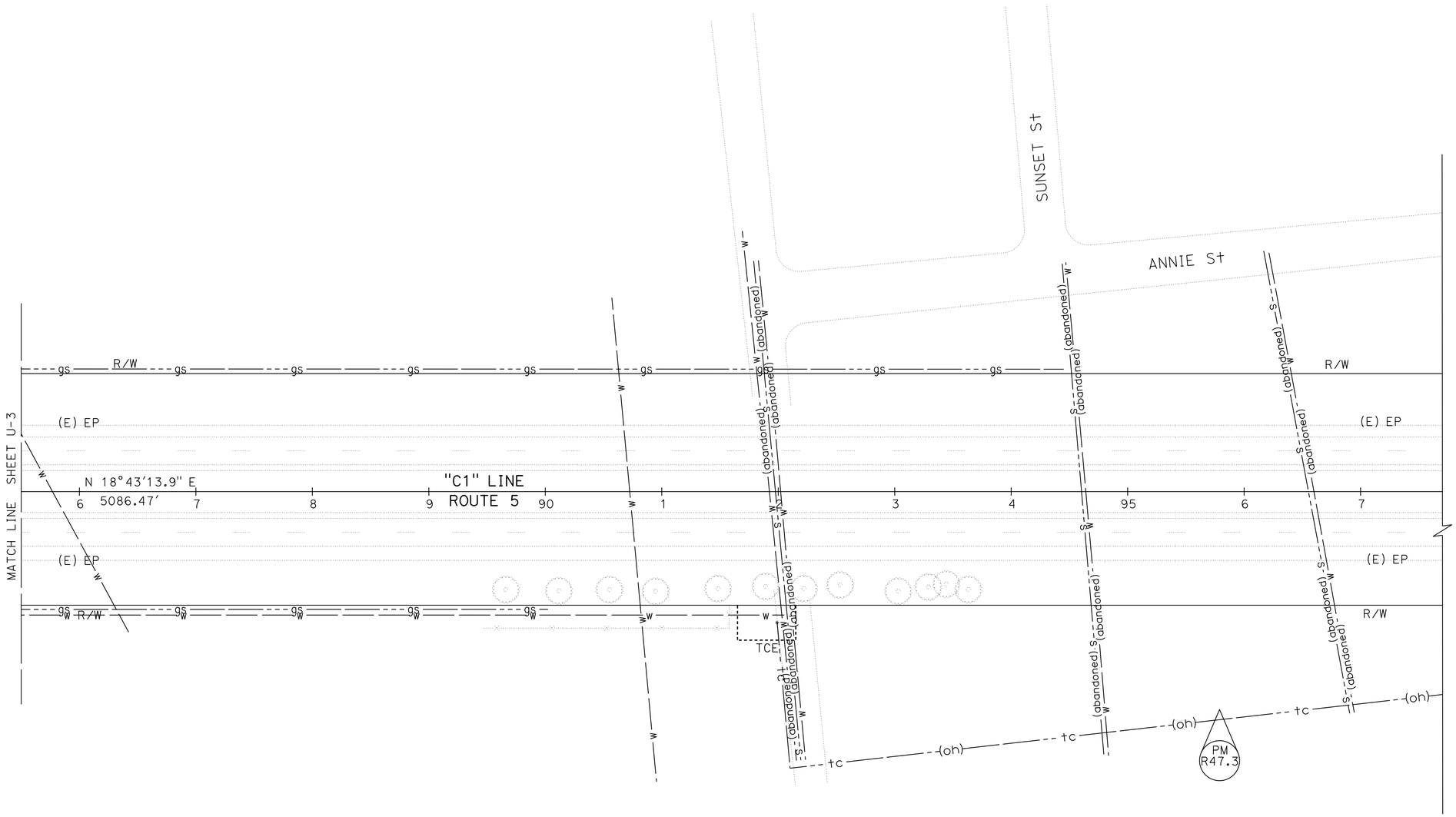

APPROVED FOR UTILITY WORK ONLY

UTILITY PLAN

(LOCATION 1)

SCALE: 1" = 50' **U-4**

REVISED BY	DATE REVISED

CALCULATED-DESIGNED BY: MIKE ZDENEK
CHECKED BY: JEANNIE STEFFAN
FUNCTIONAL SUPERVISOR: JULIE CASEY

STATE OF CALIFORNIA - DEPARTMENT OF TRANSPORTATION
Caltrans
DESIGN

P:\proj1\02\4E280_plans\pse\24e280ka004.dgn

LAST REVISION 10-16-13 DATE PLOTTED => 13-DEC-2013 TIME PLOTTED => 07:14

Dist	COUNTY	ROUTE	POST MILES TOTAL PROJECT	SHEET No.	TOTAL SHEETS
02	Sis	5	R45.6/R47.3 R62.0/R62.8	30	78

REGISTERED CIVIL ENGINEER 10-16-13 DATE

10-16-13
PLANS APPROVAL DATE

REGISTERED PROFESSIONAL ENGINEER MICHAEL ZDENEK No. C76156 Exp. 06-30-14 CIVIL STATE OF CALIFORNIA

THE STATE OF CALIFORNIA OR ITS OFFICERS OR AGENTS SHALL NOT BE RESPONSIBLE FOR THE ACCURACY OR COMPLETENESS OF SCANNED COPIES OF THIS PLAN SHEET.

NOTE:

1. FOR ACCURATE RIGHT OF WAY DATA, CONTACT RIGHT OF WAY ENGINEERING AT THE DISTRICT OFFICE.

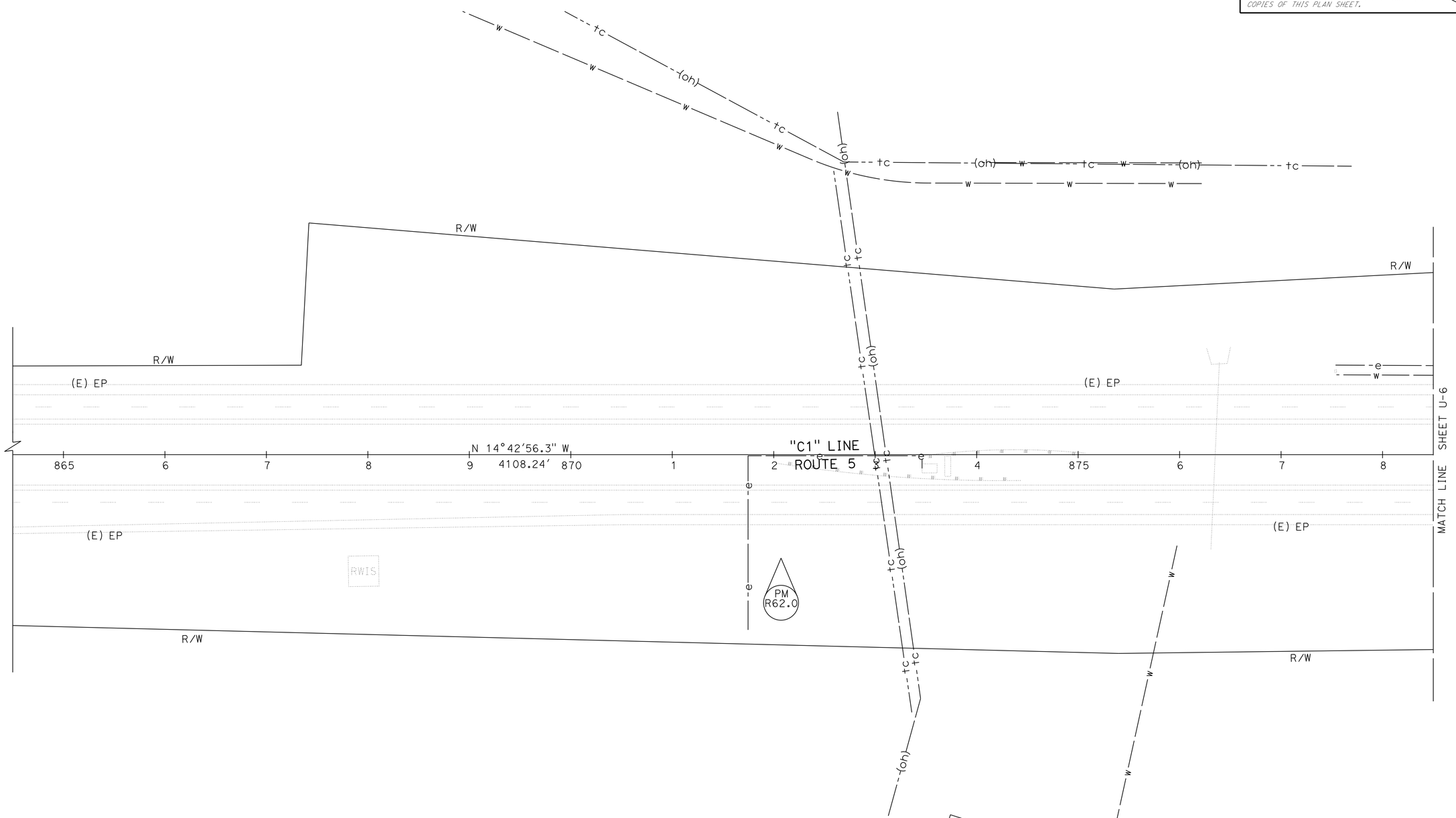

APPROVED FOR UTILITY WORK ONLY

UTILITY PLAN

(LOCATION 2)

SCALE: 1" = 50' **U-5**

REVISED BY	DATE REVISED

CALCULATED-DESIGNED BY: MIKE ZDENEK
CHECKED BY: JEANNIE STEFFAN
FUNCTIONAL SUPERVISOR: JULIE CASEY

STATE OF CALIFORNIA - DEPARTMENT OF TRANSPORTATION
Caltrans® DESIGN

P:\proj1\02\4E280_plans\pse\24e280ka005.dgn

LAST REVISION 10-16-13
DATE PLOTTED => 13-DEC-2013
TIME PLOTTED => 07:14

Dist	COUNTY	ROUTE	POST MILES TOTAL PROJECT	SHEET No.	TOTAL SHEETS
02	Sis	5	R45.6/R47.3 R62.0/R62.8	31	78

REGISTERED CIVIL ENGINEER 10-16-13 DATE

10-16-13
PLANS APPROVAL DATE

REGISTERED PROFESSIONAL ENGINEER MICHAEL ZDENEK No. C76156 Exp. 06-30-14 CIVIL STATE OF CALIFORNIA

THE STATE OF CALIFORNIA OR ITS OFFICERS OR AGENTS SHALL NOT BE RESPONSIBLE FOR THE ACCURACY OR COMPLETENESS OF SCANNED COPIES OF THIS PLAN SHEET.

NOTE:

1. FOR ACCURATE RIGHT OF WAY DATA, CONTACT RIGHT OF WAY ENGINEERING AT THE DISTRICT OFFICE.

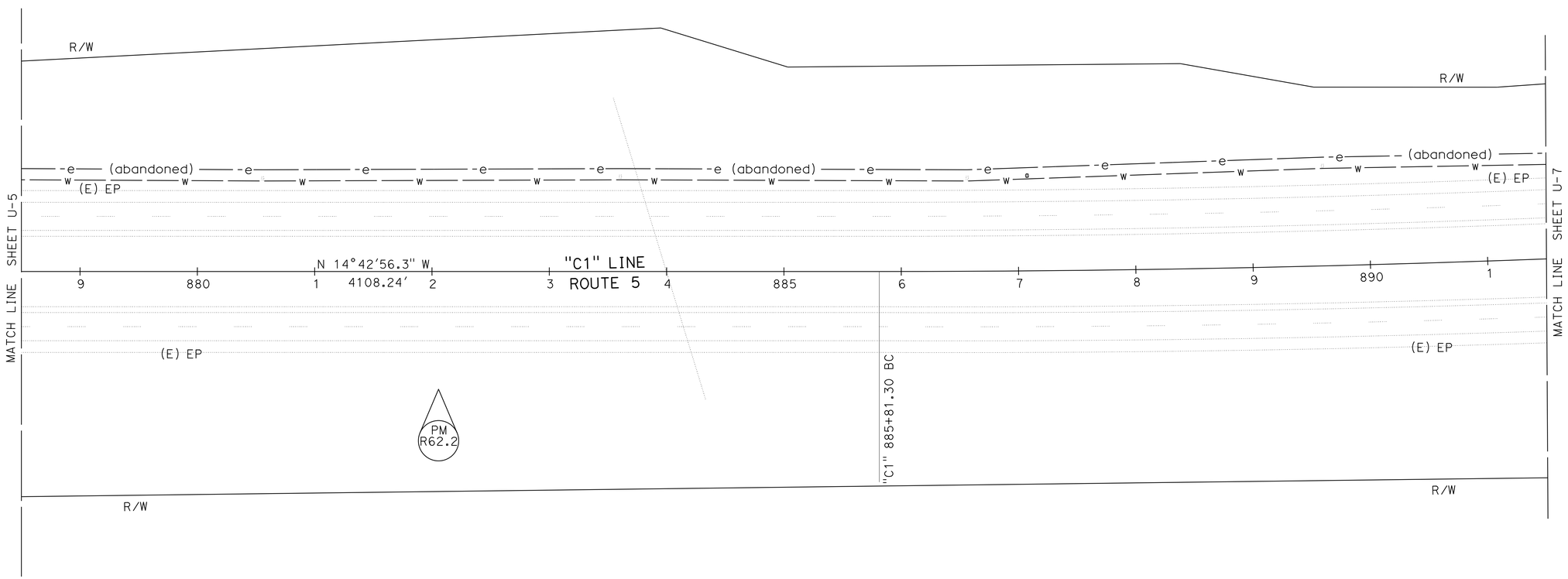

UTILITY PLAN
(LOCATION 2)

SCALE: 1" = 50'

U-6

APPROVED FOR UTILITY WORK ONLY

STATE OF CALIFORNIA - DEPARTMENT OF TRANSPORTATION
Caltrans
DESIGN

FUNCTIONAL SUPERVISOR: JULIE CASEY
CALCULATED-DESIGNED BY: MIKE ZDENEK
CHECKED BY: JEANNIE STEFFAN
REVISED BY
DATE REVISED

P:\proj1\02\4E280_plans\pse\24e280ka006.dgn

LAST REVISION 10-16-13
DATE PLOTTED => 13-DEC-2013
TIME PLOTTED => 07:14

Dist	COUNTY	ROUTE	POST MILES TOTAL PROJECT	SHEET No.	TOTAL SHEETS
02	Sis	5	R45.6/R47.3 R62.0/R62.8	32	78

REGISTERED CIVIL ENGINEER 10-16-13 DATE

10-16-13
PLANS APPROVAL DATE

REGISTERED PROFESSIONAL ENGINEER
MICHAEL ZDENEK
No. C76156
Exp. 06-30-14
CIVIL
STATE OF CALIFORNIA

THE STATE OF CALIFORNIA OR ITS OFFICERS OR AGENTS SHALL NOT BE RESPONSIBLE FOR THE ACCURACY OR COMPLETENESS OF SCANNED COPIES OF THIS PLAN SHEET.

NOTE:

1. FOR ACCURATE RIGHT OF WAY DATA, CONTACT RIGHT OF WAY ENGINEERING AT THE DISTRICT OFFICE.

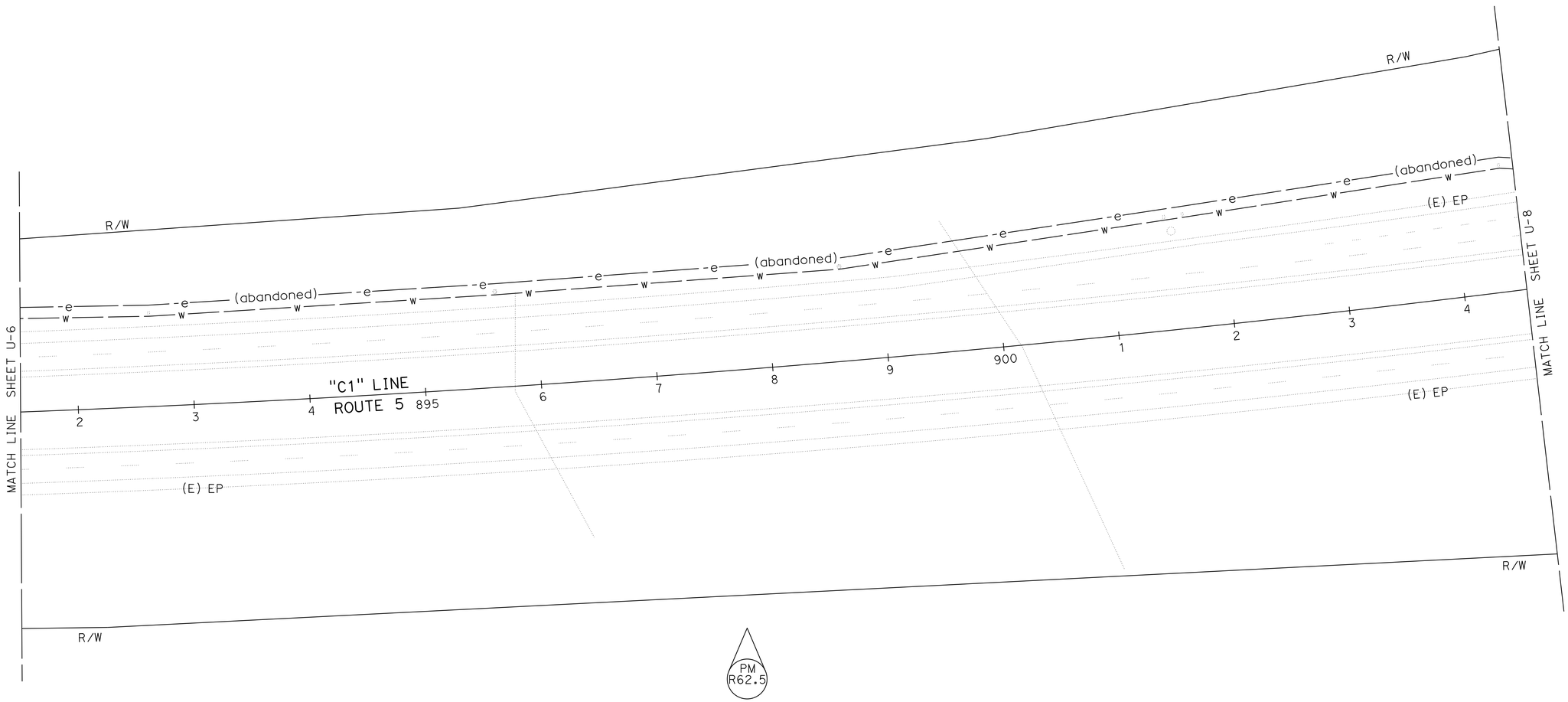

APPROVED FOR UTILITY WORK ONLY

UTILITY PLAN

(LOCATION 2)

SCALE: 1" = 50′ **U-7**

CALCULATED-DESIGNED BY	MIKE ZDENEK
CHECKED BY	JEANNIE STEFFAN
REVISED BY	
DATE REVISED	
FUNCTIONAL SUPERVISOR	JULIE CASEY

STATE OF CALIFORNIA - DEPARTMENT OF TRANSPORTATION
Caltrans
DESIGN

P:\proj1\02\4E280_plans\pse\24e280ka007.dgn

LAST REVISION 10-16-13 | DATE PLOTTED => 13-DEC-2013 | TIME PLOTTED => 07:14

Dist	COUNTY	ROUTE	POST MILES TOTAL PROJECT	SHEET No.	TOTAL SHEETS
02	Sis	5	R45.6/R47.3 R62.0/R62.8	33	78

REGISTERED CIVIL ENGINEER 10-16-13 DATE

10-16-13
PLANS APPROVAL DATE

REGISTERED PROFESSIONAL ENGINEER MICHAEL ZDENEK No. C76156 Exp. 06-30-14 CIVIL STATE OF CALIFORNIA

THE STATE OF CALIFORNIA OR ITS OFFICERS OR AGENTS SHALL NOT BE RESPONSIBLE FOR THE ACCURACY OR COMPLETENESS OF SCANNED COPIES OF THIS PLAN SHEET.

NOTE:

1. FOR ACCURATE RIGHT OF WAY DATA, CONTACT RIGHT OF WAY ENGINEERING AT THE DISTRICT OFFICE.

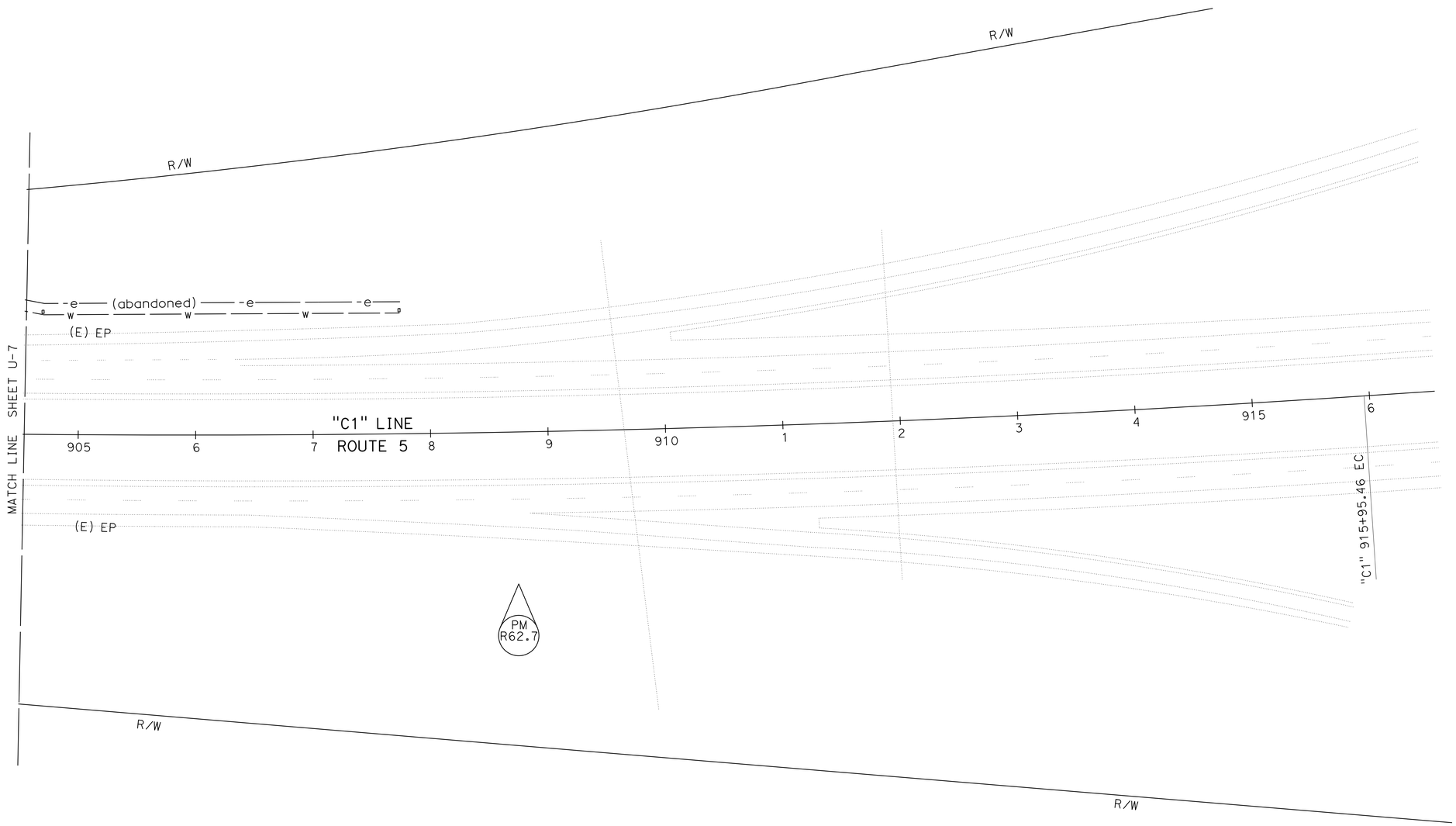

UTILITY PLAN

(LOCATION 2)

SCALE: 1" = 50'

U-8

APPROVED FOR UTILITY WORK ONLY

STATE OF CALIFORNIA - DEPARTMENT OF TRANSPORTATION

Caltrans® **DESIGN**

FUNCTIONAL SUPERVISOR: JULIE CASEY

CALCULATED-DESIGNED BY: MIKE ZDENEK

CHECKED BY: JEANNIE STEFFAN

REVISED BY

DATE REVISED

P:\proj1\02\4E280_plans\pse\24e280ka008.dgn

LAST REVISION 10-16-13 | DATE PLOTTED => 13-DEC-2013 | TIME PLOTTED => 07:14

Dist	COUNTY	ROUTE	POST MILES TOTAL PROJECT	SHEET No.	TOTAL SHEETS
02	Sis	5	R45.6/R47.3 R62.0/R62.8	34	78

REGISTERED CIVIL ENGINEER 10-16-13 DATE

10-16-13
PLANS APPROVAL DATE

REGISTERED PROFESSIONAL ENGINEER MICHAEL ZDENEK No. C76156 Exp. 06-30-14 CIVIL STATE OF CALIFORNIA

THE STATE OF CALIFORNIA OR ITS OFFICERS OR AGENTS SHALL NOT BE RESPONSIBLE FOR THE ACCURACY OR COMPLETENESS OF SCANNED COPIES OF THIS PLAN SHEET.

NOTE:

1. EXACT LOCATION OF ALL SIGNS TO BE DETERMINED BY THE ENGINEER.

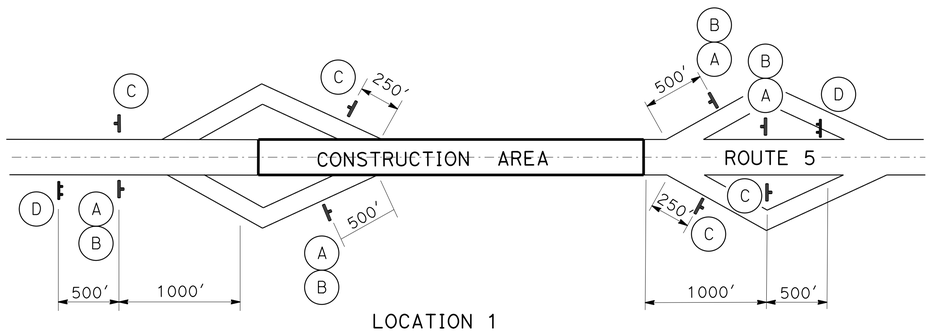

LOCATION 1

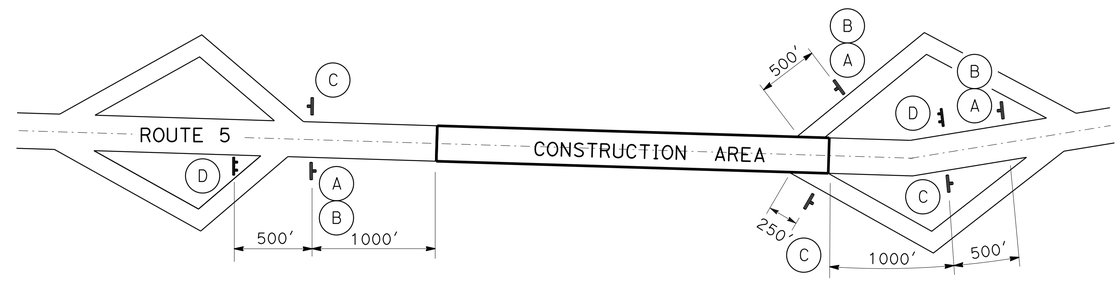

LOCATION 2

CONSTRUCTION AREA SIGN PLAN

CONSTRUCTION AREA SIGNS (STATIONARY MOUNTED)

TYPE	CODE	PANEL SIZE	SIGN MESSAGE	No. AND SIZE OF POSTS	No. OF SIGNS
A	W20-1	48" x 48"	ROAD WORK AHEAD	1 - 4" x 6"	7
B	C23B(CA)	48" x 24"	OPERATIONAL IMPROVEMENTS		7
C	C14(CA)	48" x 48"	END ROAD WORK	1 - 4" x 4"	7
D	C40(CA)	72" x 36"	FINES DOUBLED IN CONSTRUCTION ZONE	2 - 4" x 6"	4

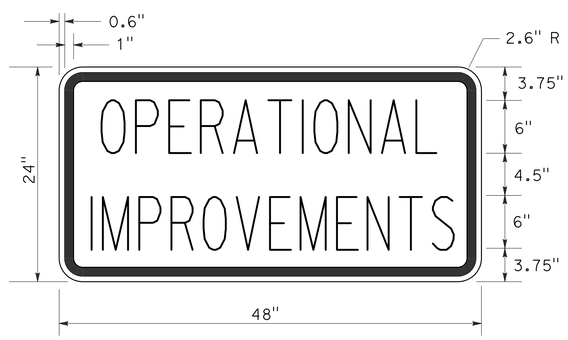

C23B SIGN PANEL DETAIL

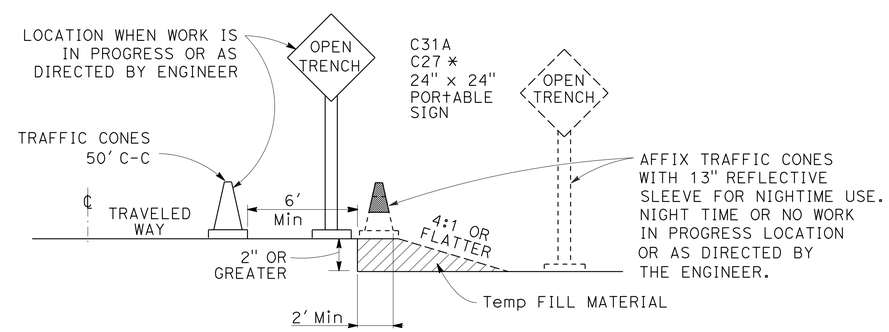

OPEN TRENCH SIGNING AND MARKING

* PLACE AT 250' INTERVALS THROUGH THE OPEN TRENCH AREA, ALTERNATE C27 (OPEN TRENCH) AND C31A (NO SHOULDER) SIGNS

CONSTRUCTION AREA SIGNS

NO SCALE

CS-1

REVISED BY | DATE REVISED
MIKE ZDENEK | JEANNIE STEFFAN
CALCULATED-DESIGNED BY | CHECKED BY
FUNCTIONAL SUPERVISOR: JULIE CASEY

STATE OF CALIFORNIA - DEPARTMENT OF TRANSPORTATION
Caltrans® DESIGN

P:\proj1\02\4E280_plans\pse\24e2801a001.dgn

LAST REVISION 10-16-13 | DATE PLOTTED => 13-DEC-2013 | TIME PLOTTED => 07:14

Dist	COUNTY	ROUTE	POST MILES TOTAL PROJECT	SHEET No.	TOTAL SHEETS
02	Sis	5	R45.6/R47.3 R62.0/R62.8	35	78

Frank J. Rivas 10-16-13
REGISTERED CIVIL ENGINEER DATE

10-16-13
PLANS APPROVAL DATE

REGISTERED PROFESSIONAL ENGINEER
FRANK RIVAS
No. C53592
Exp. 03-30-15
CIVIL
STATE OF CALIFORNIA

THE STATE OF CALIFORNIA OR ITS OFFICERS OR AGENTS SHALL NOT BE RESPONSIBLE FOR THE ACCURACY OR COMPLETENESS OF SCANNED COPIES OF THIS PLAN SHEET.

NOTE:

1. ALL DIMENSIONS ARE IN INCHES.

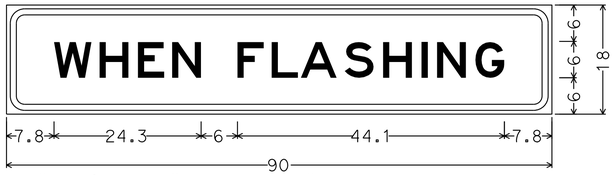

3.0" Radius, 1.0" Border, 0.6" Indent, Black on Yellow;
[WHEN FLASHING] E;

SPL-1
1-3 1-4

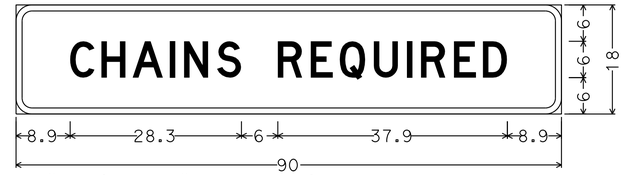

2.6" Radius, 1.0" Border, White on Black;
[CHAINS REQUIRED] D;

SPL-2
1-3 1-4

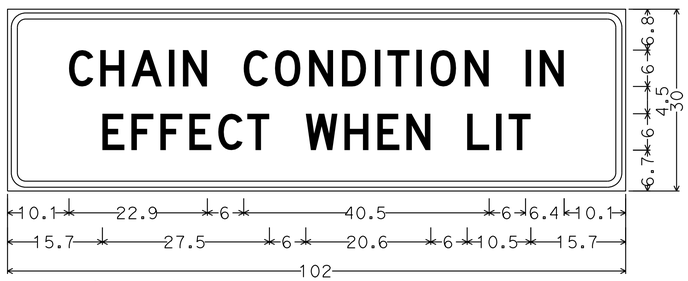

3.0" Radius, 1.0" Border, 0.6" Indent, Black on Yellow;
[CHAIN CONDITION IN] D; [EFFECT WHEN LIT] D;

SPL-3
2-3 2-4
4-3 4-4

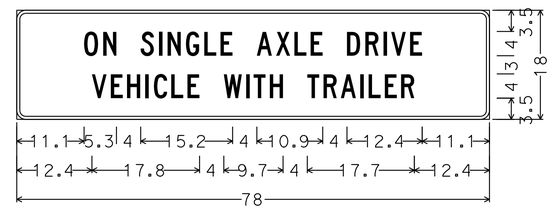

1.5" Radius, 0.5" Border, White on Black;
[ON SINGLE AXLE DRIVE] C;
[VEHICLE WITH TRAILER] C;

R76-1(CA)
2-3 2-4
4-3 4-4

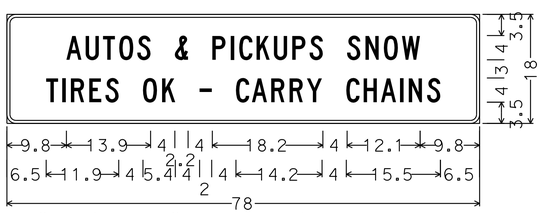

1.5" Radius, 0.5" Border, White on Black;
[AUTOS & PICKUPS SNOW] C;
[TIRES OK - CARRY CHAINS] C;

R79(CA)
2-3 2-4
4-3 4-4

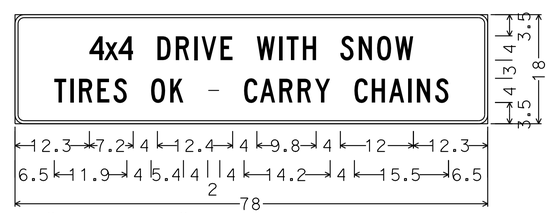

1.5" Radius, 0.5" Border, White on Black;
[4x4 DRIVE WITH SNOW] C;
[TIRES OK - CARRY CHAINS] C;

R80-1(CA)
2-3 2-4
4-3 4-4

SIGN DETAILS

NO SCALE

SD-1

REVISED BY	DATE REVISED

CALCULATED-DESIGNED BY	CHECKED BY
FRANK RIVAS	TERI ANDERSON

FUNCTIONAL SUPERVISOR: ROB STINGER

STATE OF CALIFORNIA - DEPARTMENT OF TRANSPORTATION
Caltrans® TRAFFIC OPS

P:\proj1\02\4E280_plans\pse\24e280ob001.dgn

LAST REVISION 10-16-13 | DATE PLOTTED => 13-DEC-2013 | TIME PLOTTED => 07:14

Dist	COUNTY	ROUTE	POST MILES TOTAL PROJECT	SHEET No.	TOTAL SHEETS
02	Sis	5	R45.6/R47.3 R62.0/R62.8	36	78

Frank J. Rivas 10-16-13
REGISTERED CIVIL ENGINEER DATE

10-16-13
PLANS APPROVAL DATE

REGISTERED PROFESSIONAL ENGINEER FRANK RIVAS No. C53592 Exp. 03-30-15 CIVIL STATE OF CALIFORNIA

THE STATE OF CALIFORNIA OR ITS OFFICERS OR AGENTS SHALL NOT BE RESPONSIBLE FOR THE ACCURACY OR COMPLETENESS OF SCANNED COPIES OF THIS PLAN SHEET.

NOTE:

1. ALL DIMENSIONS ARE IN INCHES.

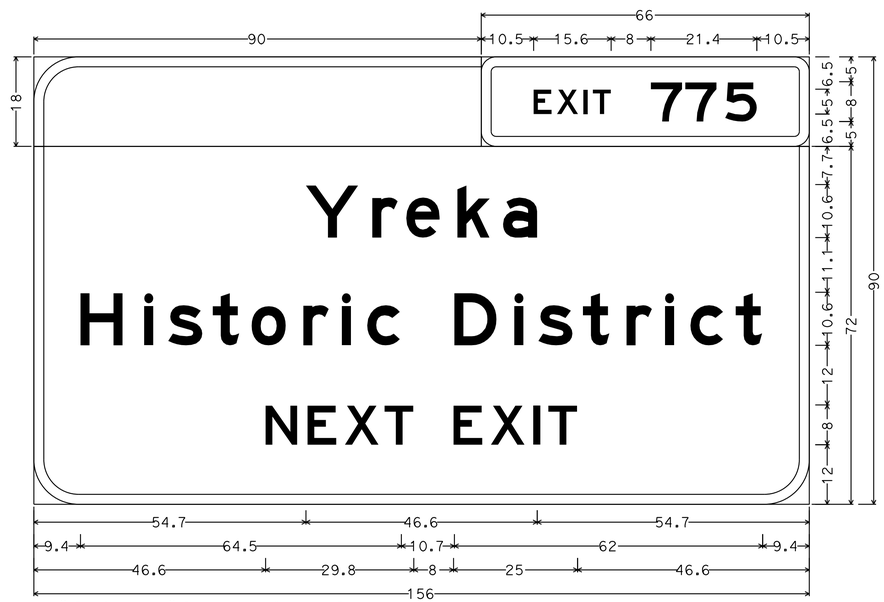

9.0" Radius, 2.0" Border, White on Brown;
3.0" Radius, 2.0" Border, White on Brown;
[EXIT] E; [775] E;
9.0" Radius, 2.0" Border, White on Brown;
[Yreka] E; [Historic District] E; [NEXT EXIT] E;

G86-11(CA)

4-2

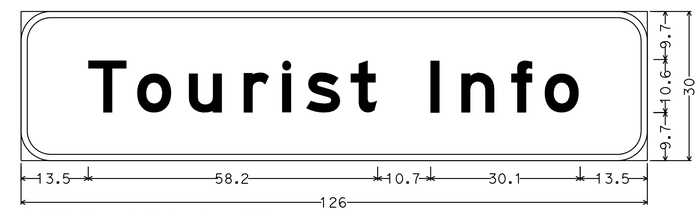

6.0" Radius, 1.3" Border, White on Blue;
[Tourist Info] E;

G81(CA)

4-2

SIGN DETAILS

NO SCALE

SD-2

REVISED BY | DATE REVISED
FRANK RIVAS | TERI ANDERSON
CALCULATED-DESIGNED BY | CHECKED BY
FUNCTIONAL SUPERVISOR
ROB STINGER

STATE OF CALIFORNIA - DEPARTMENT OF TRANSPORTATION
Caltrans® TRAFFIC OPS

P:\proj1\02\4E280_plans\pse\24e280ob002.dgn

LAST REVISION 10-16-13 | DATE PLOTTED => 13-DEC-2013 TIME PLOTTED => 07:14

Dist	COUNTY	ROUTE	POST MILES TOTAL PROJECT	SHEET No.	TOTAL SHEETS
02	Sis	5	R45.6/R47.3 R62.0/R62.8	37	78

REGISTERED CIVIL ENGINEER 10-16-13 DATE

10-16-13
PLANS APPROVAL DATE

REGISTERED PROFESSIONAL ENGINEER MICHAEL ZDENEK No. C76156 Exp. 06-30-14 CIVIL STATE OF CALIFORNIA

THE STATE OF CALIFORNIA OR ITS OFFICERS OR AGENTS SHALL NOT BE RESPONSIBLE FOR THE ACCURACY OR COMPLETENESS OF SCANNED COPIES OF THIS PLAN SHEET.

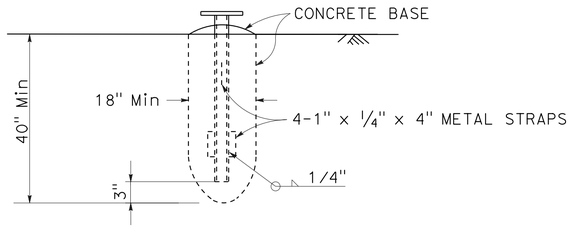

FOUNDATION DETAIL

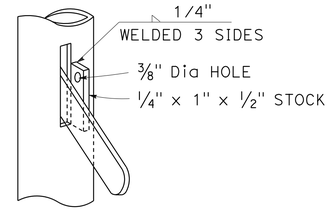

HANDLE LOCK

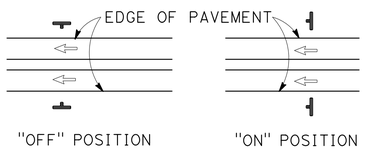

POSITION OF SIGNS

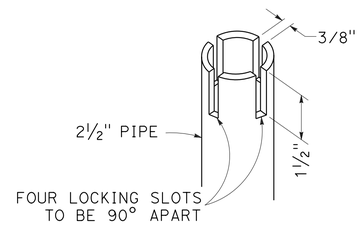

KEYED LOCK

NOTE: BEFORE POURING PCC BASE, HAVE ONE SET OF SLOTS PARALLEL WITH ROAD.

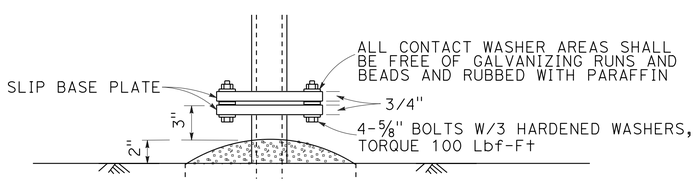

ELEVATION

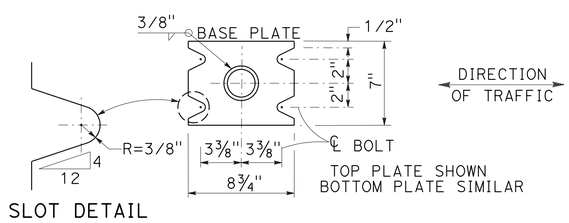

PLAN

DETAIL A

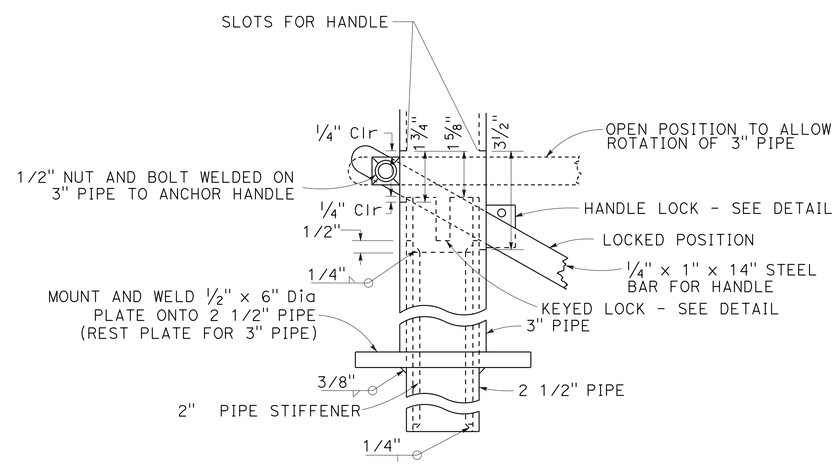

DETAIL B

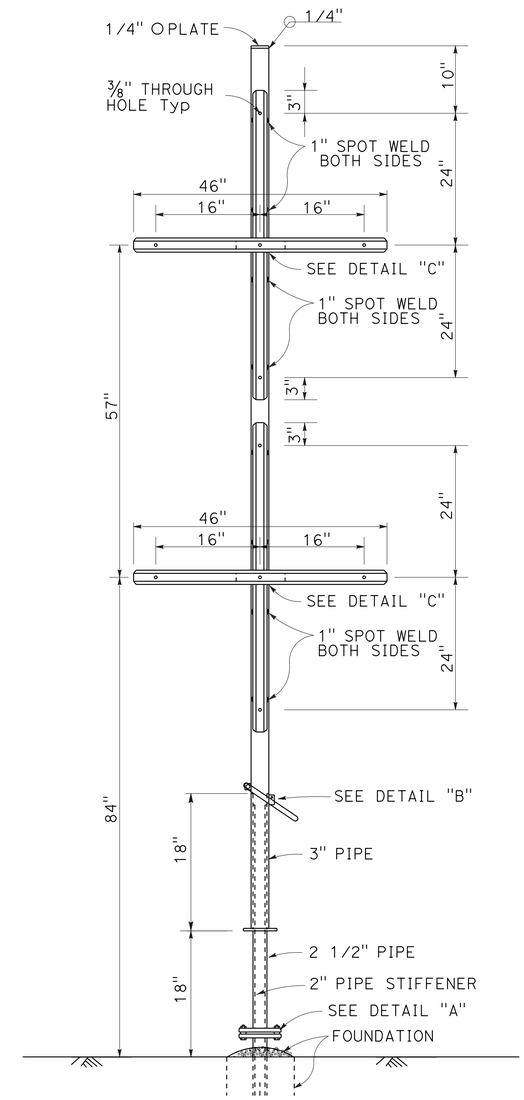

MOUNTING DETAIL FOR TURNABLE METAL (ROADSIDE SIGN)

TURNABLE METAL (ROADSIDE SIGN)

SIGN DETAILS

NO SCALE

SD-3

REVISED BY	DATE REVISED

CALCULATED-DESIGNED BY	CHECKED BY
MIKE ZDENEK	JEANNIE STEFFAN

FUNCTIONAL SUPERVISOR: JULIE CASEY

STATE OF CALIFORNIA - DEPARTMENT OF TRANSPORTATION

Caltrans® DESIGN

P:\proj1\02\4E280_plans\pse\24e280ob003.dgn

LAST REVISION 10-16-13 | DATE PLOTTED => 13-DEC-2013 | TIME PLOTTED => 07:15

Dist	COUNTY	ROUTE	POST MILES TOTAL PROJECT	SHEET No.	TOTAL SHEETS
02	Sis	5	R45.6/R47.3 R62.0/R62.8	38	78

REGISTERED CIVIL ENGINEER 10-16-13 DATE

10-16-13
PLANS APPROVAL DATE

REGISTERED PROFESSIONAL ENGINEER MICHAEL ZDENEK No. C76156 Exp. 06-30-14 CIVIL STATE OF CALIFORNIA

THE STATE OF CALIFORNIA OR ITS OFFICERS OR AGENTS SHALL NOT BE RESPONSIBLE FOR THE ACCURACY OR COMPLETENESS OF SCANNED COPIES OF THIS PLAN SHEET.

NOTES:

1. USE A 2¼" Sq TUBE x 30" LONG, 3/16" THICK ANCHOR FOR 2" POSTS.
   USE A 3" Sq TUBE x 3' LONG, 3/16" THICK ANCHOR FOR 2-1/2 " POSTS.
2. USE A 5/16" CORNER BOLT OR TWO DRIVE RIVETS TO FASTEN ASSEMBLED SIGN AND POST INTO ANCHOR. INSTALL CORNER BOLT OR DRIVE RIVETS INTO THE SIDES FACING TRAFFIC.
3. REMOVE EXISTING AC OR PCC, DRIVE ANCHOR SLEEVE INTO SOIL AND RECAP WITH LIKE MATERIAL, MATCHING EXISTING THICKNESS.
4. 2" POSTS ARE TO BE 1/8" THICK, PERFORATIONS OF 7/16" IN DIAMETER ARE 1" ON CENTER ON ALL SIDES, LENGTHS ARE 10' AND 12'.
5. 2-1/2" POSTS ARE TO BE 1/8" THICK, PERFORATIONS OF 7/16" IN DIAMETER ARE 1" ON CENTER ON ALL SIDES, 2-1/2" POSTS ARE 12' AND 14' IN LENGTH.
6. FOR DETAILS NOT SHOWN, REFER TO THE STANDARD PLANS.
7. 2-1/2" POSTS SHALL BE USED IN SIDEWALK AND HIGH PEDESTRIAN USE PLACEMENTS.
8. ALL ANCHOR SLEEVES SHALL BE EMBEDDED IN PCC, EXCEPT FOR INSTALLATIONS IN PAVEMENTS OR SIDEWALKS.

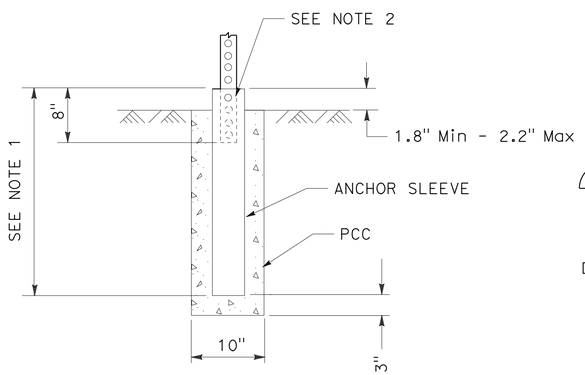

INSTALLATION IN SOIL (PCC)
(SEE NOTE 8)

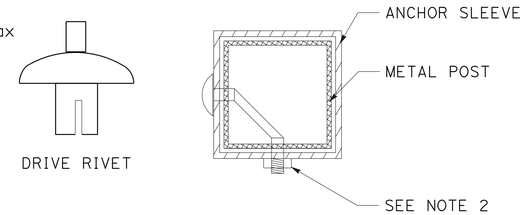

FASTENER DETAILS

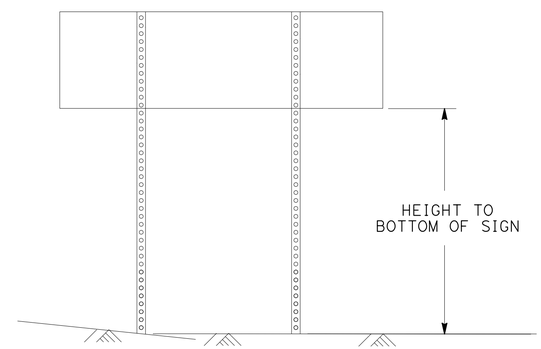

TWO POSTS INSTALLATION
(POST SIZE, SEE CHART BELOW)

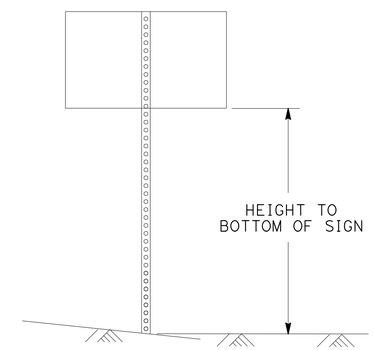

SINGLE POST INSTALLATION
(POST SIZE, SEE CHART BELOW)

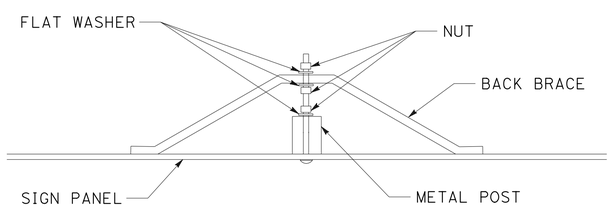

BACK BRACE MOUNTING DETAIL

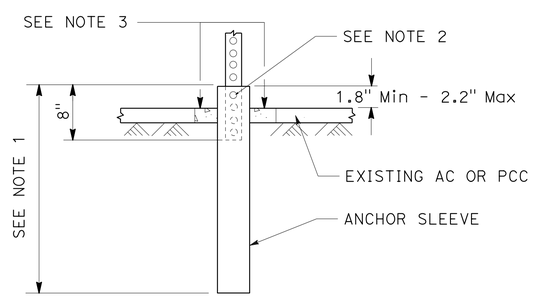

INSTALLATION IN EXISTING AC OR PCC

Max Sq Ft OF SIGN

POST SIZE	60"	72"	84"	96"	108"	120"
2"	18	16	14	12	10	8
2.5"	35	32	28	24	21	21

HEIGHT TO BOTTOM OF SIGN
DOUBLE POST GROUND SIGNS
70 MPH WIND SPEED

Max Sq Ft OF SIGN

POST SIZE	60"	72"	84"	96"	108"	120"
2"	10.5	10	8.7	7.4	6.2	5
2.5"	16	16	16	16	12	12

HEIGHT TO BOTTOM OF SIGN
SINGLE POST GROUND SIGNS
70 MPH WIND SPEED

METAL SIGN POST DETAIL

METAL SIGN POST INSTALLATION DETAILS

SIGN DETAILS
NO SCALE

SD-4

REVISED BY | DATE REVISED
MIKE ZDENEK | JEANNIE STEFFAN
CALCULATED-DESIGNED BY | CHECKED BY
FUNCTIONAL SUPERVISOR: JULIE CASEY

STATE OF CALIFORNIA - DEPARTMENT OF TRANSPORTATION
Caltrans
DESIGN

P:\proj1\02\4E280_plans\pse\24e280ob004.dgn

LAST REVISION | DATE PLOTTED => 13-DEC-2013
10-16-13 | TIME PLOTTED => 07:15

Dist	COUNTY	ROUTE	POST MILES TOTAL PROJECT	SHEET No.	TOTAL SHEETS
02	Sis	5	R45.6/R47.3 R62.0/R62.8	39	78

REGISTERED CIVIL ENGINEER 10-16-13 DATE

10-16-13
PLANS APPROVAL DATE

REGISTERED PROFESSIONAL ENGINEER MICHAEL ZDENEK No. C76156 Exp. 06-30-14 CIVIL STATE OF CALIFORNIA

THE STATE OF CALIFORNIA OR ITS OFFICERS OR AGENTS SHALL NOT BE RESPONSIBLE FOR THE ACCURACY OR COMPLETENESS OF SCANNED COPIES OF THIS PLAN SHEET.

NOTES:

1. (N) - NOT A SEPARATE PAY ITEM, FOR INFORMATION ONLY
2. EXACT LOCATION OF SIGNS SHALL BE DETERMINED BY THE ENGINEER.
3. CONTRACTOR TO VERIFY POST LENGTH PRIOR TO FABRICATION

ROADSIDE SIGNS

SIGN No. (#)	SIGN CODE	PANEL SIZE In x In	RELOCATE ROADSIDE SIGN (EA)	REMOVE ROADSIDE SIGN (EA)	ROADSIDE SIGN (ONE POST) (EA)	ROADSIDE SIGN (TWO POST) (EA)	TURNABLE METAL (ROADSIDE SIGN) (EA)	INSTALL ROADSIDE SIGN (LAMINATED WOOD BOX POST) (EA)	(N) POST SIZE AND LENGTH (Ft) METAL POST 2.5" x 2.5"	WOOD POST 6" x 6"	WOOD POST 6" x 8"	CONTRACTOR FURNISHED SIGNS: SINGLE FACED	SIGN FACING MATERIAL: BACKGROUND SHEETING COLOR	BACKGROUND RETROREFLECTIVE ASTM TYPE	LEGEND SHEETING COLOR	LEGEND RETROREFLECTIVE ASTM TYPE	PROTECTIVE FILM STANDARD	PROTECTIVE FILM PREMIUM	SIGN PANEL SUBSTRATE MATERIAL (SQFT) ROADSIDE: FURNISH SINGLE SHEET ALUMINUM SIGN (0.080" - FRAMED) (SQFT)	FURNISH SINGLE SHEET ALUMINUM SIGN (0.080" - UNFRAMED) (SQFT)	FURNISH LAMINATED PANEL SIGN (1" - TYPE B) (SQFT)	MESSAGE	DESCRIPTION/NOTES
1-1	W11-2/W3-5a			1																		25 MPH / PED (SYMBOL)	TURNABLE METAL ROADSIDE SIGN
1-2	W11-2/W3-5a			1																		25 MPH / PED (SYMBOL)	TURNABLE METAL ROADSIDE SIGN
1-3	SPL-1	90 x 18				1					24,27	X	YELLOW	IV	BLACK	II		X	11.3			WHEN FLASHING	ADVANCED FLASHING BEACONS*
	SPL-2	90 x 18										X	BLACK	II	WHITE	IV		X	11.3			CHAINS REQUIRED	
1-4	SPL-1	90 x 18				1					27,24	X	YELLOW	IV	BLACK	II		X	11.3			WHEN FLASHING	ADVANCED FLASHING BEACONS*
	SPL-2	90 x 18										X	BLACK	II	WHITE	IV		X	11.3			CHAINS REQUIRED	
2-1	W11-2	36 x 36					1					X	YELLOW	IV	BLACK	II				9.0		PED (SYMBOL)	TURNABLE METAL (ROADSIDE SIGN)
	W3-5a	36 x 36										X	YELLOW	IV	BLACK	II				9.0		25 MPH SPEED ZONE AHEAD	
2-2	W11-2	36 x 36					1					X	YELLOW	IV	BLACK	II				9.0		PED (SYMBOL)	TURNABLE METAL (ROADSIDE SIGN)
	W3-5a	36 x 36										X	YELLOW	IV	BLACK	II				9.0		25 MPH SPEED ZONE AHEAD	
2-3	SPL-3	102 x 30			1			1		20		X	YELLOW	IV	BLACK	II		X	21.3			CHAIN CONDITION IN EFFECT WHEN LIT	CHAIN CONTROL BEACONS WITH VARIABLE SPEED LIMIT SIGN*
	R76-1(CA)	78 x 18										X	BLACK	II	WHITE	IV		X	9.8			ON SINGLE AXLE DRIVE VEHICLE WITH TRAILER	
	R79(CA)	78 x 18										X	BLACK	II	WHITE	IV		X	9.8			AUTOS & PICKUPS SNOW TIRES OK - CARRY CHAINS	
	R80-1(CA)	78 x 18										X	BLACK	II	WHITE	IV		X	9.8			4x4 DRIVE WITH SNOW TIRES OK - CARRY CHAINS	
2-4	SPL-3	102 x 30			1			1		20		X	YELLOW	IV	BLACK	II		X	21.3			CHAIN CONDITION IN EFFECT WHEN LIT	CHAIN CONTROL BEACONS WITH VARIABLE SPEED LIMIT SIGN*
	R76-1(CA)	78 x 18										X	BLACK	II	WHITE	IV		X	9.8			ON SINGLE AXLE DRIVE VEHICLE WITH TRAILER	
	R79(CA)	78 x 18										X	BLACK	II	WHITE	IV		X	9.8			AUTOS & PICKUPS SNOW TIRES OK - CARRY CHAINS	
	R80-1(CA)	78 x 18										X	BLACK	II	WHITE	IV		X	9.8			4x4 DRIVE WITH SNOW TIRES OK - CARRY CHAINS	
2-5	R75-1(CA)/R2-1			1																			CHAIN CONTROL TURNABLE METAL ROADSIDE SIGN
	R79(CA)/R80(CA)/R77(CA)																						
2-6	R75-1(CA)/R2-1			1																			CHAIN CONTROL TURNABLE METAL ROADSIDE SIGN
	R79(CA)/R80(CA)/R77(CA)																						
	SHEET TOTAL			4	2	2	2	2											146.6	36			

* SEE STRUCTURE PLANS AND ELECTRICAL PLANS FOR MORE DETAIL.

SIGN QUANTITIES SQ-1

REVISED BY | DATE REVISED
MIKE ZDENEK | JEANNIE STEFFAN
CALCULATED-DESIGNED BY | CHECKED BY
FUNCTIONAL SUPERVISOR: JULIE CASEY

STATE OF CALIFORNIA - DEPARTMENT OF TRANSPORTATION
Caltrans DESIGN

P:\proj\02\4E280_plans\pse\24e280od001.dgn

LAST REVISION 10-16-13 | DATE PLOTTED => 13-DEC-2013 | TIME PLOTTED => 07:15

Dist	COUNTY	ROUTE	POST MILES TOTAL PROJECT	SHEET No.	TOTAL SHEETS
02	Sis	5	R45.6/R47.3 R62.0/R62.8	40	78

REGISTERED CIVIL ENGINEER 10-16-13 DATE

10-16-13
PLANS APPROVAL DATE

REGISTERED PROFESSIONAL ENGINEER MICHAEL ZDENEK No. C76156 Exp. 06-30-14 CIVIL STATE OF CALIFORNIA

THE STATE OF CALIFORNIA OR ITS OFFICERS OR AGENTS SHALL NOT BE RESPONSIBLE FOR THE ACCURACY OR COMPLETENESS OF SCANNED COPIES OF THIS PLAN SHEET.

NOTES:

1. (N) - NOT A SEPARATE PAY ITEM, FOR INFORMATION ONLY
2. EXACT LOCATION OF SIGNS SHALL BE DETERMINED BY THE ENGINEER.
3. CONTRACTOR TO VERIFY POST LENGTH PRIOR TO FABRICATION.

ROADSIDE SIGNS

SIGN No. (#)	SIGN CODE	PANEL SIZE In x In	RELOCATE ROADSIDE SIGN (EA)	REMOVE ROADSIDE SIGN (EA)	ROADSIDE SIGN - ONE POST (EA)	ROADSIDE SIGN - TWO POST (EA)	TURNABLE METAL (ROADSIDE SIGN) (EA)	INSTALL ROADSIDE SIGN (LAMINATED WOOD BOX POST) (EA)	(N) POST SIZE AND LENGTH (Ft) METAL POST 2.5" x 2.5"	WOOD POST 6" x 6"	WOOD POST 6" x 8"	CONTRACTOR FURNISHED SIGNS: SINGLE FACED	SIGN FACING MATERIAL: BACKGROUND SHEETING COLOR	BACKGROUND RETROREFLECTIVE ASTM TYPE	LEGEND SHEETING COLOR	LEGEND RETROREFLECTIVE ASTM TYPE	PROTECTIVE FILM STANDARD	PROTECTIVE FILM PREMIUM	SIGN PANEL SUBSTRATE MATERIAL (SQFT) ROADSIDE: FURNISH SINGLE SHEET ALUMINUM SIGN (0.080" - FRAMED) (SQFT)	FURNISH SINGLE SHEET ALUMINUM SIGN (0.080" - UNFRAMED) (SQFT)	FURNISH LAMINATED PANEL SIGN (1" - TYPE B) (SQFT)	MESSAGE	DESCRIPTION/NOTES
3-1	S32/S32A				1				14													ADOPT-A-HWY	USE SAVED PANEL FROM (3-2)
	S32-1																					PED LITER (SYMBOL)	
3-2	S32/S32A/S32-1			1																			SAVE PANEL FOR REUSE ON (3-1)
4-1	G86-11(CA)	156 x 72		1																			
	G81(CA)	126 x 30																					
4-2	G86-11(CA)	156 x 90						1				X	BROWN	III	WHITE	III		X			97.5	YREKA HISTORICAL DISTRICT NEXT RIGHT	
	G81(CA)	126 x 30										X	BLUE	III	WHITE	III		X	26.3			TOURIST INFORMATION	
4-3	SPL-3	102 x 30			1			1		20		X	YELLOW	IV	BLACK	II		X	21.3			CHAIN CONDITION IN EFFECT WHEN LIT	CHAIN CONTROL BEACONS WITH VARIABLE SPEED LIMIT SIGN*
	R76-1(CA)	78 x 18										X	BLACK	II	WHITE	IV		X	9.8			ON SINGLE AXLE DRIVE VEHICLES WITH TRAILERS	
	R79(CA)	78 x 18										X	BLACK	II	WHITE	IV		X	9.8			AUTOS & PICKUPS SNOW TIRES OK - CARRY CAHINS	
	R80-1(CA)	78 x 18										X	BLACK	II	WHITE	IV		X	9.8			4x4 DRIVE WITH SNOW TIRES OK - CARRY CHAINS	
4-4	SPL-3	102 x 30			1			1		20		X	YELLOW	IV	BLACK	II		X	21.3			CHAIN CONDITION IN EFFECT WHEN LIT	CHAIN CONTROL BEACONS WITH VARIABLE SPEED LIMIT SIGN*
	R76-1(CA)	78 x 18										X	BLACK	II	WHITE	IV		X	9.8			ON SINGLE AXLE DRIVE VEHICLES WITH TRAILERS	
	R79(CA)	78 x 18										X	BLACK	II	WHITE	IV		X	9.8			AUTOS & PICKUPS SNOW TIRES OK - CARRY CAHINS	
	R80-1(CA)	78 x 18										X	BLACK	II	WHITE	IV		X	9.8			4x4 DRIVE WITH SNOW TIRES OK - CARRY CHAINS	
4-5				1																		CHAIN CONTROL	TURNABLE METAL ROADSIDE SIGN
4-6				1																		CHAIN CONTROL	TURNABLE METAL ROADSIDE SIGN
5-1	SG42-2(CA)	180 x 72		1																			SAVE PANEL FOR REUSE ON (5-2)
5-2	SG42-2(CA)	180 x 72				1					23,24												USE SAVED PANEL FROM (5-1)
5-3			1																			CHAIN CONTROL	TURNABLE METAL ROADSIDE SIGN, TO LOCATION (5-5)
5-4			1																			CHAIN CONTROL	TURNABLE METAL ROADSIDE SIGN, TO LOCATION (5-6)
SHEET TOTAL			2	5	3	1		3											127.7		97.5		

* SEE STRUCTURE PLANS AND ELECTRICAL PLANS FOR MORE DETAIL.

SIGN QUANTITIES

SQ-2

REVISED BY | DATE REVISED
MIKE ZDENEK | JEANNIE STEFFAN
CALCULATED-DESIGNED BY | CHECKED BY
FUNCTIONAL SUPERVISOR: JULIE CASEY
STATE OF CALIFORNIA - DEPARTMENT OF TRANSPORTATION
Caltrans DESIGN

P:\proj\02\4E280_plans\pse\24e280od002.dgn

LAST REVISION 10-16-13 | DATE PLOTTED => 13-DEC-2013 | TIME PLOTTED => 07:15

Dist	COUNTY	ROUTE	POST MILES TOTAL PROJECT	SHEET No.	TOTAL SHEETS
02	Sis	5	R45.6/R47.3 R62.0/R62.8	41	78

REGISTERED CIVIL ENGINEER 10-16-13 DATE

10-16-13
PLANS APPROVAL DATE

REGISTERED PROFESSIONAL ENGINEER MICHAEL ZDENEK No. C76156 Exp. 06-30-14 CIVIL STATE OF CALIFORNIA

THE STATE OF CALIFORNIA OR ITS OFFICERS OR AGENTS SHALL NOT BE RESPONSIBLE FOR THE ACCURACY OR COMPLETENESS OF SCANNED COPIES OF THIS PLAN SHEET.

NOTES:

1. (N) - NOT A SEPARATE PAY ITEM, FOR INFORMATION ONLY
2. EXACT LOCATION OF SIGNS SHALL BE DETERMINED BY THE ENGINEER.

ROADSIDE SIGNS

SIGN No. (#)	SIGN CODE	PANEL SIZE In x In	RELOCATE ROADSIDE SIGN (EA)	REMOVE ROADSIDE SIGN (EA)	ROADSIDE SIGN - ONE POST (EA)	ROADSIDE SIGN - TWO POST (EA)	TURNABLE METAL (ROADSIDE SIGN) (EA)	INSTALL ROADSIDE SIGN (LAMINATED WOOD BOX POST) (EA)	(N) POST SIZE AND LENGTH (Ft) METAL POST 2.5" x 2.5"	WOOD POST 6" x 6"	WOOD POST 6" x 8"	CONTRACTOR FURNISHED SIGNS: SINGLE FACED	SIGN FACING MATERIAL: BACKGROUND: SHEETING COLOR	BACKGROUND: RETROREFLECTIVE ASTM TYPE	LEGEND: SHEETING COLOR	LEGEND: RETROREFLECTIVE ASTM TYPE	PROTECTIVE FILM: STANDARD	PROTECTIVE FILM: PREMIUM	SIGN PANEL SUBSTRATE MATERIAL (SQFT) ROADSIDE: FURNISH SINGLE SHEET ALUMINUM SIGN (0.080" - FRAMED) (SQFT)	FURNISH SINGLE SHEET ALUMINUM SIGN (0.080" - UNFRAMED) (SQFT)	FURNISH LAMINATED PANEL SIGN (1" - TYPE B) (SQFT)	MESSAGE	DESCRIPTION/NOTES
6-1	R6-4(CA)	48 x 60		1																				SAVE PANEL FOR REUSE ON (6-2)
6-2	R6-4(CA)	48 x 60			1				14															USE SAVED PANEL FROM (6-1)
6-3	SG42-9(CA)	66 x 84		1																				SAVE PANEL FOR REUSE ON (6-4)
6-4	SG42-9(CA)	66 x 84				1					23,24													USE SAVED PANEL FROM (6-3)
6-5	R6-3(CA)	48 x 60		1																				SAVE PANEL FOR REUSE ON (6-6)
6-6	R6-3(CA)	48 x 60			1				14															USE SAVED PANEL FROM (6-5)
6-7	G83(CA)	144 x 102		1																				SAVE PANELS FOR REUSE ON (6-8)
	SG38(CA)	168 x 30																						
	G72(CA)	132 x 42																						
6-8	G83(CA)	144 x 102						1																USE SAVED PANELS FROM (6-7)
	SG38(CA)	168 x 30																						
	G72(CA)	132 x 42																						
7-1	R2-1(65)	48 x 60		1																				SAVE PANELS FOR REUSE ON (7-2)
	R48-1(CA)	36 x 18																						
7-2	R2-1(65)	48 x 60			1				16															USE SAVED PANELS FROM (7-1)
	R48-1(CA)	36 x 18																						
7-3			1																			CHAIN CONTROL	TURNABLE METAL ROADSIDE SIGN, RELOCATE TO LOCATION (8-1)
7-4			1																			CHAIN CONTROL	TURNABLE METAL ROADSIDE SIGN, RELOCATE TO LOCATION (8-2)
8-3			1																			CHAIN CONTROL	TURNABLE METAL ROADSIDE SIGN, RELOCATE TO LOCATION (8-5)
8-4			1																			CHAIN CONTROL	TURNABLE METAL ROADSIDE SIGN, RELOCATE TO LOCATION (8-6)
SHEET TOTAL			4	5	3	1		1															
GRAND TOTAL			6	14	8	4	2	6											274.3	36	97.5		

SIGN QUANTITIES
SQ-3

REVISED BY | DATE REVISED
MIKE ZDENEK | JEANNIE STEFFAN
CALCULATED-DESIGNED BY | CHECKED BY
FUNCTIONAL SUPERVISOR: JULIE CASEY

STATE OF CALIFORNIA - DEPARTMENT OF TRANSPORTATION
Caltrans DESIGN

P:\proj1\02\4E280_plans\pse\24e280od003.dgn

LAST REVISION 10-16-13 | DATE PLOTTED => 13-DEC-2013 | TIME PLOTTED => 07:15

Dist	COUNTY	ROUTE	POST MILES TOTAL PROJECT	SHEET No.	TOTAL SHEETS
02	Sis	5	R45.6/R47.3 R62.0/R62.8	42	78

REGISTERED CIVIL ENGINEER 10-16-13 DATE

10-16-13
PLANS APPROVAL DATE

REGISTERED PROFESSIONAL ENGINEER MICHAEL ZDENEK No. C76156 Exp. 06-30-14 CIVIL STATE OF CALIFORNIA

THE STATE OF CALIFORNIA OR ITS OFFICERS OR AGENTS SHALL NOT BE RESPONSIBLE FOR THE ACCURACY OR COMPLETENESS OF SCANNED COPIES OF THIS PLAN SHEET.

NOTES:

1. (N) - NOT A SEPARATE PAY ITEM, FOR INFORMATION ONLY
2. EXACT LOCATION OF SIGNS SHALL BE DETERMINED BY THE ENGINEER.

DRAINAGE QUANTITIES

DRAINAGE SYSTEM No.	STATION	6" CSP (.064" THICK)**
		LF
1	"C1" 75+81.6, R†	22
2	"C1" 84+77.8, R†	26
	TOTAL	48

** USE POSITIVE JOINT TYPE

MINOR CONCRETE (Misc CONSTRUCTION)

STATION	DESCRIPTION	(N) LENGTH x WIDTH x DEPTH (LF)	CY
"C1" 84+29.1, R†	CONTROLLER WALKWAY	18 x 6 x 0.33	1.3
"C1" 874+22.6, L†	CONTROLLER WALKWAY	15 x 10.5 x 0.33	1.9
		TOTAL	3.2

ROADWAY ITEMS

LOCATION	STATION	HMA (TYPE A)	CLASS 2 AB (CY)	TACK COAT	SHOULDER BACKING	ROADWAY EXCAVATION	(N) EMBANKMENT
		TON	CY	TON	TON	CY	CY
	SHOULDER WIDENING "C1" 71+62.00 TO "C1" 93+04.00, R†	791.7	781.9	0.5	225	1002.4	630.6
1	MAINTENANCE PULLOUT & CONTROLLER WALKWAY "C1" 84+01.6 TO "C1" 84+86.6, 69.0' R†	11.4	13.1				29.8
	MAINTENANCE VEHICLE PULLOUT "C1" 59+76.9 TO "C1" 60+61.9, 18.0'/59.0' R†	38.6	57.8			21.0	15.0
	SHOULDER WIDENING "C1" 875+48.6 TO "C1" 898+65.6, L†	1014.8	1002.3	0.5	241	1299.7	93.1
2	MAINTENANCE PULLOUT & CONTROLLER WALKWAY "C1" 873+52.4 TO "C1" 874+37.4, 69.0' L†	52.9	52.8			76.2	1.2
	MAINTENANCE VEHICLE PULLOUTS "C1" 906+20.0 TO "C1" 907+05.0, 30.0'/87.5' L†	38.6	57.8			28.5	0.5
	MAINTENANCE VEHICLE PULLOUTS "C1" 915+45.0 TO "C1" 916+30.0, 30.0'/71.0' L†	38.6	57.8			29.2	0.7
	TOTAL	1920.9	2023.5	1.0	466	2457.0	770.9

MILEPOST MARKER

PM	EA
47.0	1
62.5	1
TOTAL	2

DELINEATOR (CLASS 2)

LOCATION	EA	DESCRIPTION
1	11	TYPE F
2	17	TYPE F
TOTAL	28	

MARKER (CULVERT)

LOCATION	STATION	EA	PM
1	"C1" 75+82, R†	1	46.92
	"C1" 76+40, R†	1	46.93
	"C1" 84+00, R†	1	47.08
	"C1" 84+77, R†	1	47.09
2	"C1" 876+36, L†	1	62.08
	"C1" 883+77, L†	1	62.22
	"C1" 895+80, L†	1	62.45
	TOTAL	7	

ADJUST VALVE BOX FRAME AND COVER TO GRADE

LOCATION	STATION	EA	DESCRIPTION
2	"C1" 884+59.6, L†	1	GATE VALVE
2	"C1" 887+07.5, L†	1	AIR VALVE
2	"C1" 895+64.3, L†	1	GATE VALVE
	TOTAL	3	

OBJECT MARKER

LOCATION	STATION	EA	DESCRIPTION
2	"C1" 884+59.6, L†	1	GATE VALVE, (GV)
2	"C1" 887+07.5, L†	1	AIR VALVE, (AV)
2	"C1" 895+64.3, L†	1	GATE VALVE, (GV)
	TOTAL	3	

SUMMARY OF QUANTITIES

Q-1

REVISED BY | DATE REVISED
MIKE ZDENEK | JEANNIE STEFFAN
CALCULATED-DESIGNED BY | CHECKED BY
FUNCTIONAL SUPERVISOR: JULIE CASEY

STATE OF CALIFORNIA - DEPARTMENT OF TRANSPORTATION
Caltrans DESIGN

P:\proj1\02\4E280_plans\pse\24e280pa001.dgn

LAST REVISION | DATE PLOTTED => 13-DEC-2013
10-16-13 | TIME PLOTTED => 07:15

Dist	COUNTY	ROUTE	POST MILES TOTAL PROJECT	SHEET No.	TOTAL SHEETS
02	Sis	5	R45.6/R47.3 R62.0/R62.8	43	78

REGISTERED CIVIL ENGINEER 10-16-13 DATE

10-16-13
PLANS APPROVAL DATE

REGISTERED PROFESSIONAL ENGINEER MICHAEL ZDENEK No. C76156 Exp. 06-30-14 CIVIL STATE OF CALIFORNIA

THE STATE OF CALIFORNIA OR ITS OFFICERS OR AGENTS SHALL NOT BE RESPONSIBLE FOR THE ACCURACY OR COMPLETENESS OF SCANNED COPIES OF THIS PLAN SHEET.

NOTE:

1. (N) - NOT A SEPARATE PAY ITEM, FOR INFORMATION ONLY

EDGE DRAIN

LOCATION	STATION	DESCRIPTION	3" PLASTIC PIPE (EDGE DRAIN OUTLET) (LF)	(N) TYPE A PAVEMENT MARKER (EA)
1	"C1" 72+86, R+	OUTLET	19	1
	"C1" 72+86, R+	VENT	19	
	"C1" 75+85, R+	OUTLET	19	1
	"C1" 75+85, R+	VENT	19	
	"C1" 78+65, R+	OUTLET	19	1
	"C1" 78+65, R+	VENT	19	
	"C1" 84+78, R+	OUTLET	24	1
	"C1" 84+78, R+	VENT	24	
	"C1" 87+92, R+	OUTLET	19	1
	"C1" 87+92, R+	VENT	19	
2	"C1" 876+35, L+	CLEANOUT	12	1
	"C1" 878+40, L+	CLEANOUT	16	1
	"C1" 879+95, L+	CLEANOUT	21	1
	"C1" 882+00, L+	CLEANOUT	21	1
	"C1" 884+35, L+	CLEANOUT	21	1
	"C1" 886+00, L+	CLEANOUT	21	1
	"C1" 888+55, L+	VENT	21	1
	"C1" 888+58, L+	VENT	21	
	"C1" 890+65, L+	CLEANOUT	21	1
	"C1" 892+95, L+	CLEANOUT	21	1
	"C1" 895+70, L+	CLEANOUT	20	1
	"C1" 898+00, L+	CLEANOUT	14	1
		TOTAL	430	16

METAL BEAM GUARDRAIL

LOCATION	STATION	MBGR	DOUBLE MBGR (WOOD POST)	END ANCHOR ASSEMBLY (TYPE SFT)	CRASH CUSHION (TYPE CAT)	A1+ FLARED TERMINAL SYSTEM	(N) OBJECT MARKER (TYPE L-1)	(N) GUARD RAILING DELINEATOR	RAIL TENSIONING ASSEMBLY	CRASH CUSHION (TYPE CAT) BACKUP
		LF	LF	EA	EA	EA	EA	EA	EA	EA
1	"C1" 70+65.4 TO "C1" 71+49.3, R+	62.5	25.0	1	1		1	2	1	1
1	"C1" 71+08.0 TO "C1" 71+50.0, R+	37.5		1		1	1	2		
1	"C1" 70+89.3 TO "C1" 71+97.9, L+	37.5	37.5	1	1		1	2	1	
1	"C1" 92+41.5 TO "C1" 93+25.5, R+	62.5	25.0	1	1		1	2	1	1
1	"C1" 92+84.2 TO "C1" 93+26.2, R+	37.5		1		1	1	2		
1	"C1" 92+96.1 TO "C1" 93+74.1, L+	37.5	37.5	1	1		1	2	1	
	TOTAL	275.0	125.0	6	4	2	6	12	4	2

SUMMARY OF QUANTITIES
Q-2

REVISED BY | DATE REVISED
MIKE ZDENEK | JEANNIE STEFFAN
CALCULATED-DESIGNED BY | CHECKED BY
FUNCTIONAL SUPERVISOR: JULIE CASEY
STATE OF CALIFORNIA - DEPARTMENT OF TRANSPORTATION
Caltrans DESIGN
P:\proj1\02\4E280_plans\pse\24e280pa002.dgn

LAST REVISION | DATE PLOTTED => 13-DEC-2013 | TIME PLOTTED => 07:15
10-16-13

Dist	COUNTY	ROUTE	POST MILES TOTAL PROJECT	SHEET No.	TOTAL SHEETS
02	Sis	5	R45.6/R47.3 R62.0/R62.8	44	78

LICENSED LANDSCAPE ARCHITECT

10-16-13

PLANS APPROVAL DATE

LICENSED LANDSCAPE ARCHITECT J. PATRICK SULLIVAN #3125 Signature 07/31/14 Renewal Date 10/14/13 Date STATE OF CALIFORNIA

THE STATE OF CALIFORNIA OR ITS OFFICERS OR AGENTS SHALL NOT BE RESPONSIBLE FOR THE ACCURACY OR COMPLETENESS OF SCANNED COPIES OF THIS PLAN SHEET.

NOTE:

1. FOR ACCURATE RIGHT OF WAY DATA, CONTACT RIGHT OF WAY ENGINEERING AT THE DISTRICT OFFICE.

LEGEND

HYDROSEED

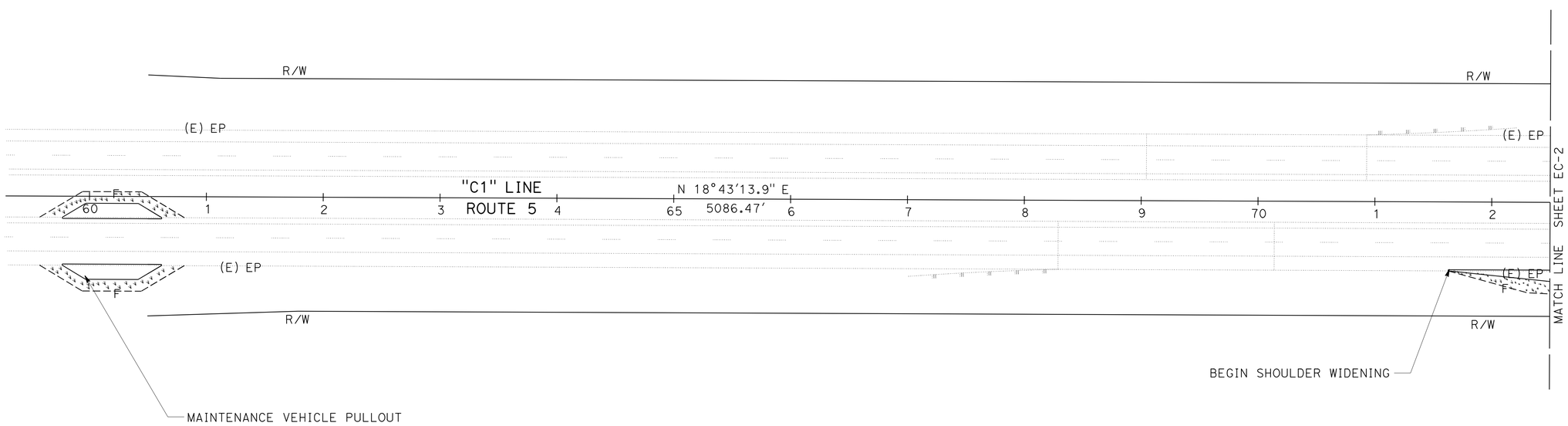

EROSION CONTROL PLAN

(LOCATION 1)

SCALE: 1" = 50'

EC-1

APPROVED FOR LANDSCAPE WORK ONLY

REVISED BY | DATE REVISED

J. PATRICK SULLIVAN | RON FLORY

CALCULATED-DESIGNED BY | CHECKED BY

SENIOR LANDSCAPE ARCHITECT | RON FLORY

STATE OF CALIFORNIA - DEPARTMENT OF TRANSPORTATION

Caltrans® LANDSCAPE ARCHITECTURE

P:\proj1\02\4e280_plans\pse\24e280te001.dgn

LAST REVISION 10-14-13 | DATE PLOTTED => 13-DEC-2013 | TIME PLOTTED => 07:15

BORDER LAST REVISED 7/2/2010 | USERNAME => s123119 | DGN FILE => 24e280te001.dgn | RELATIVE BORDER SCALE IS IN INCHES 0 1 2 3 | UNIT 0382 | PROJECT NUMBER & PHASE 02-0002-0247-1

Dist	COUNTY	ROUTE	POST MILES TOTAL PROJECT	SHEET No.	TOTAL SHEETS
02	Sis	5	R45.6/R47.3 R62.0/R62.8	45	78

LICENSED LANDSCAPE ARCHITECT

10-16-13

PLANS APPROVAL DATE

LICENSED LANDSCAPE ARCHITECT J. PATRICK SULLIVAN #3125 Signature 07/31/14 Renewal Date 10/14/13 Date STATE OF CALIFORNIA

THE STATE OF CALIFORNIA OR ITS OFFICERS OR AGENTS SHALL NOT BE RESPONSIBLE FOR THE ACCURACY OR COMPLETENESS OF SCANNED COPIES OF THIS PLAN SHEET.

NOTE:

1. FOR ACCURATE RIGHT OF WAY DATA, CONTACT RIGHT OF WAY ENGINEERING AT THE DISTRICT OFFICE.

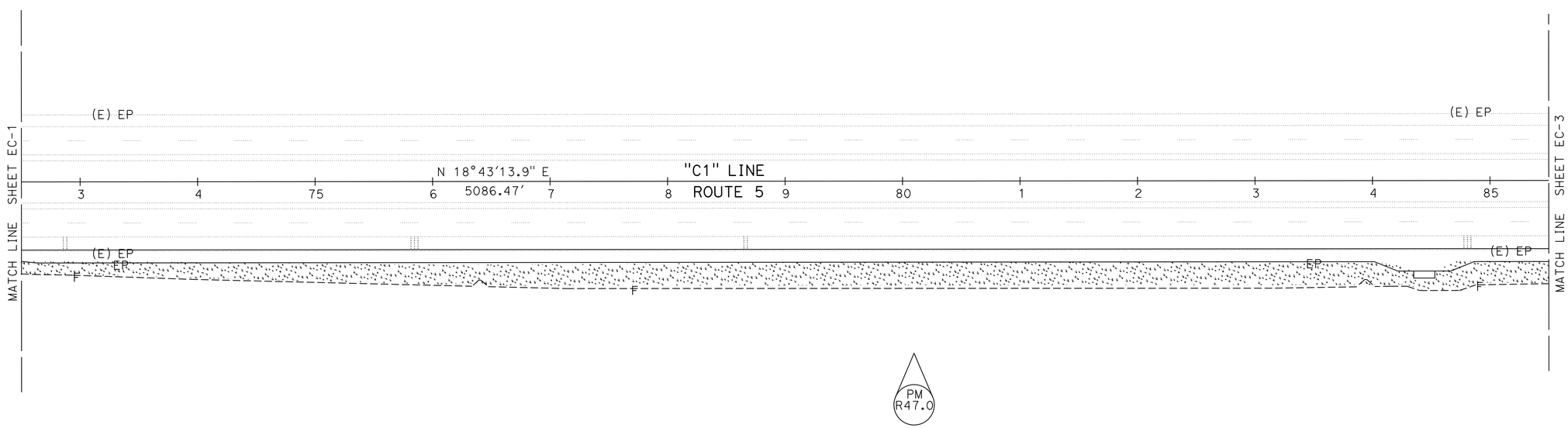

EROSION CONTROL PLAN

(LOCATION 1)

SCALE: 1" = 50'

EC-2

APPROVED FOR LANDSCAPE WORK ONLY

J. PATRICK SULLIVAN — REVISED BY
RON FLORY — DATE REVISED
CALCULATED-DESIGNED BY
CHECKED BY
RON FLORY — SENIOR LANDSCAPE ARCHITECT

STATE OF CALIFORNIA - DEPARTMENT OF TRANSPORTATION
Caltrans® LANDSCAPE ARCHITECTURE

P:\proj\02\4e280_plans\pse\24e280te002.dgn

LAST REVISION 10-14-13 | DATE PLOTTED => 13-DEC-2013 | TIME PLOTTED => 07:15

Dist	COUNTY	ROUTE	POST MILES TOTAL PROJECT	SHEET No.	TOTAL SHEETS
02	Sis	5	R45.6/R47.3 R62.0/R62.8	46	78

LICENSED LANDSCAPE ARCHITECT

10-16-13
PLANS APPROVAL DATE

LICENSED LANDSCAPE ARCHITECT
J. PATRICK SULLIVAN
#3125
Signature
07/31/14
Renewal Date
10/14/13
Date
STATE OF CALIFORNIA

THE STATE OF CALIFORNIA OR ITS OFFICERS OR AGENTS SHALL NOT BE RESPONSIBLE FOR THE ACCURACY OR COMPLETENESS OF SCANNED COPIES OF THIS PLAN SHEET.

NOTE:

1. FOR ACCURATE RIGHT OF WAY DATA, CONTACT RIGHT OF WAY ENGINEERING AT THE DISTRICT OFFICE.

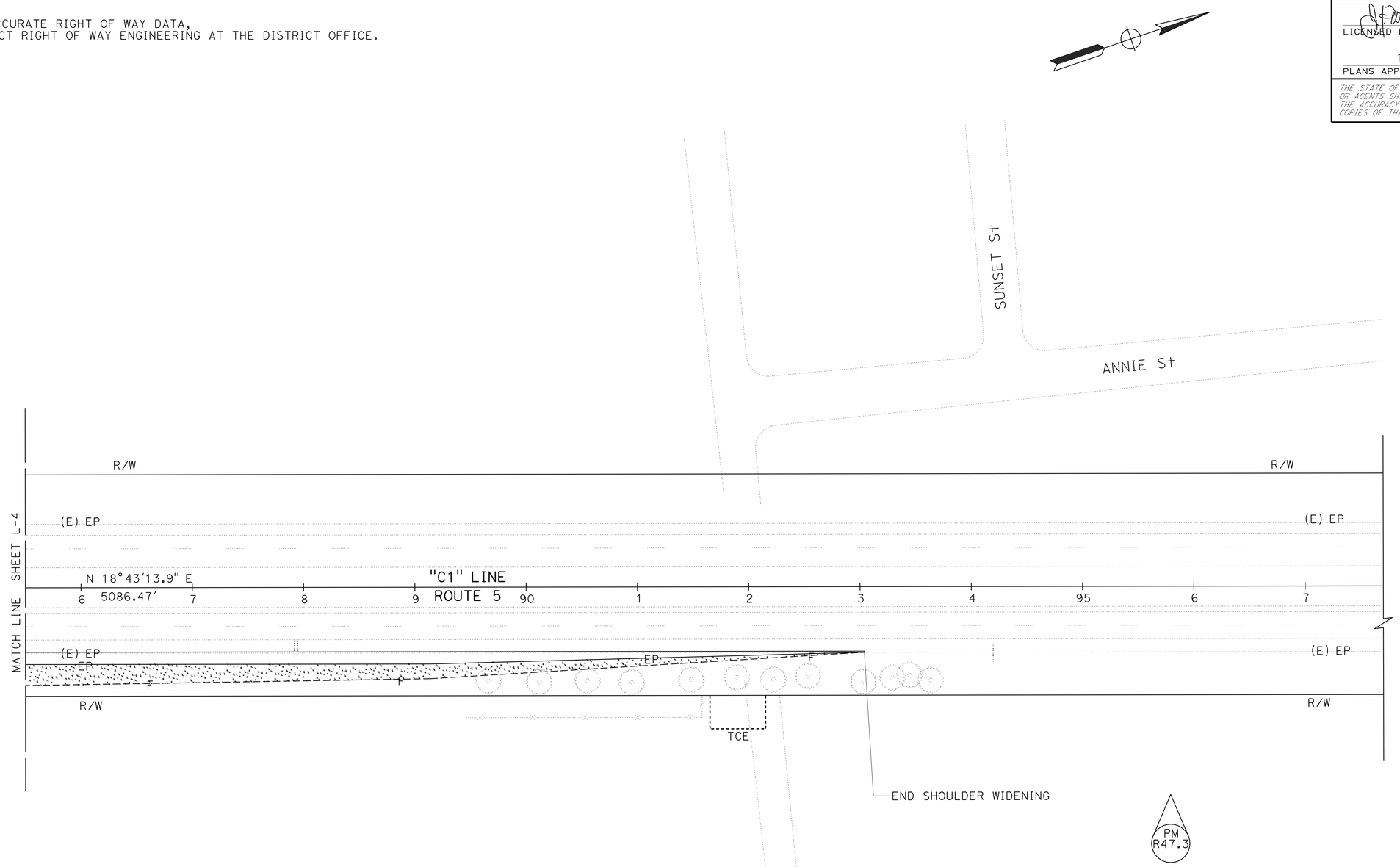

EROSION CONTROL PLAN

(LOCATION 1)

SCALE: 1" = 50'

EC-3

APPROVED FOR LANDSCAPE WORK ONLY

STATE OF CALIFORNIA - DEPARTMENT OF TRANSPORTATION
Caltrans® LANDSCAPE ARCHITECTURE

SENIOR LANDSCAPE ARCHITECT: RON FLORY
CALCULATED-DESIGNED BY: J. PATRICK SULLIVAN
CHECKED BY: RON FLORY
REVISED BY
DATE REVISED

P:\proj\02\4e280_plans\pse\24e280te003.dgn

LAST REVISION 10-14-13
DATE PLOTTED => 13-DEC-2013
TIME PLOTTED => 07:15

Dist	COUNTY	ROUTE	POST MILES TOTAL PROJECT	SHEET No.	TOTAL SHEETS
02	Sis	5	R45.6/R47.3 R62.0/R62.8	47	78

LICENSED LANDSCAPE ARCHITECT

10-16-13
PLANS APPROVAL DATE

LICENSED LANDSCAPE ARCHITECT
J. PATRICK SULLIVAN
#3125
Signature
07/31/14
Renewal Date
10/14/13
Date
STATE OF CALIFORNIA

THE STATE OF CALIFORNIA OR ITS OFFICERS OR AGENTS SHALL NOT BE RESPONSIBLE FOR THE ACCURACY OR COMPLETENESS OF SCANNED COPIES OF THIS PLAN SHEET.

NOTE:

1. FOR ACCURATE RIGHT OF WAY DATA, CONTACT RIGHT OF WAY ENGINEERING AT THE DISTRICT OFFICE.

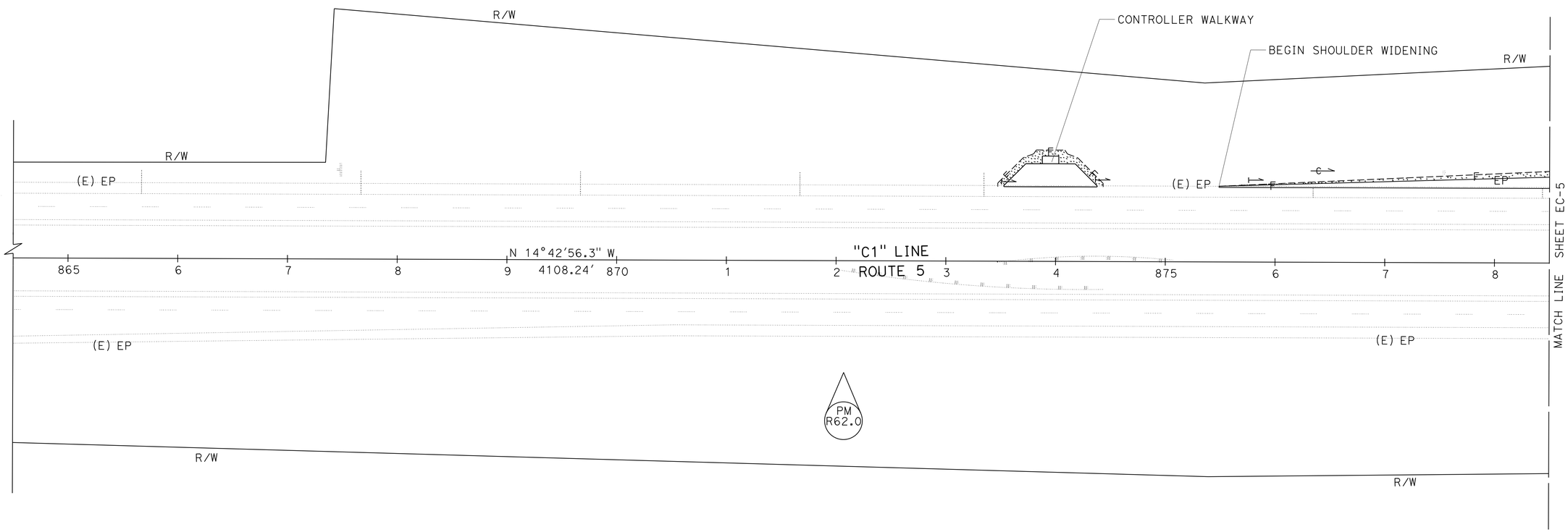

EROSION CONTROL PLAN

(LOCATION 2)

SCALE: 1" = 50'

EC-4

APPROVED FOR LANDSCAPE WORK ONLY

STATE OF CALIFORNIA - DEPARTMENT OF TRANSPORTATION
Caltrans® LANDSCAPE ARCHITECTURE

SENIOR LANDSCAPE ARCHITECT: RON FLORY
CALCULATED-DESIGNED BY: J. PATRICK SULLIVAN
CHECKED BY: RON FLORY
REVISED BY
DATE REVISED

P:\proj1\02\4E280_plans\pse\24e280te004.dgn

LAST REVISION 10-14-13
DATE PLOTTED => 13-DEC-2013
TIME PLOTTED => 07:15

Dist	COUNTY	ROUTE	POST MILES TOTAL PROJECT	SHEET No.	TOTAL SHEETS
02	Sis	5	R45.6/R47.3 R62.0/R62.8	48	78

LICENSED LANDSCAPE ARCHITECT

10-16-13
PLANS APPROVAL DATE

THE STATE OF CALIFORNIA OR ITS OFFICERS OR AGENTS SHALL NOT BE RESPONSIBLE FOR THE ACCURACY OR COMPLETENESS OF SCANNED COPIES OF THIS PLAN SHEET.

LICENSED LANDSCAPE ARCHITECT
J. PATRICK SULLIVAN
#3125
Signature
07/31/14
Renewal Date
10/14/13
Date
STATE OF CALIFORNIA

NOTE:

1. FOR ACCURATE RIGHT OF WAY DATA, CONTACT RIGHT OF WAY ENGINEERING AT THE DISTRICT OFFICE.

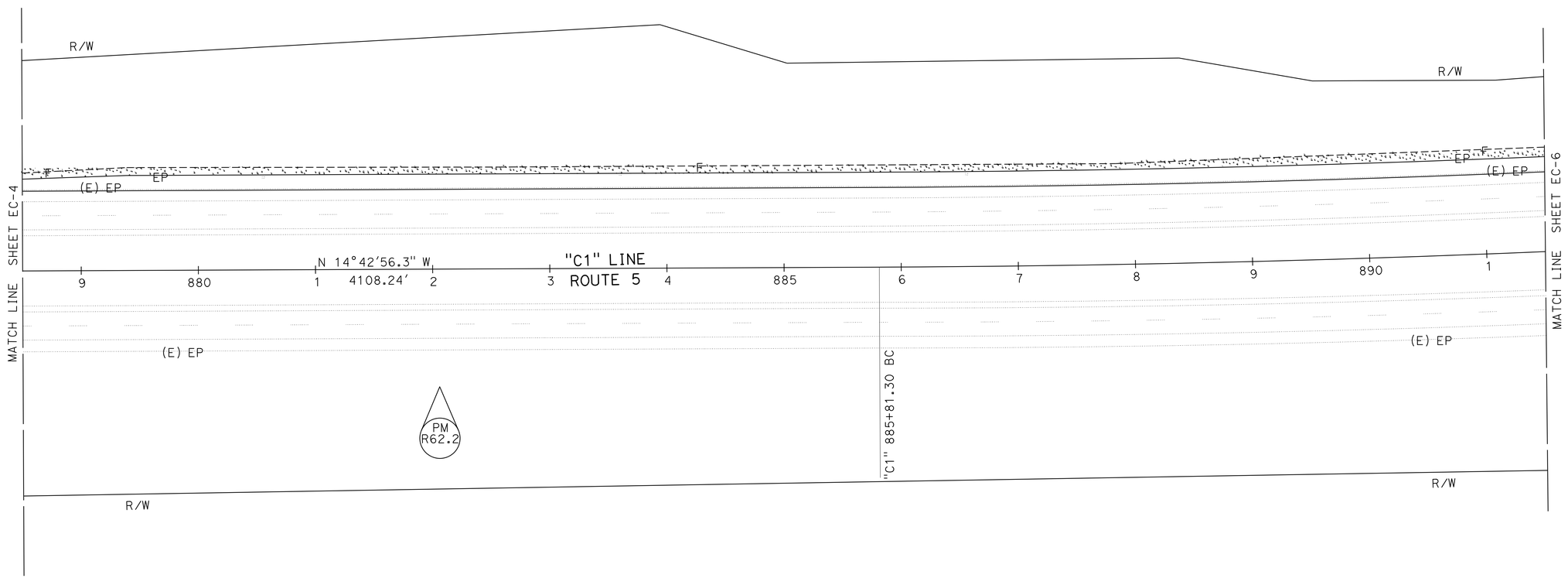

EROSION CONTROL PLAN

(LOCATION 2)

SCALE: 1" = 50'

EC-5

APPROVED FOR LANDSCAPE WORK ONLY

STATE OF CALIFORNIA - DEPARTMENT OF TRANSPORTATION
Caltrans® LANDSCAPE ARCHITECTURE

SENIOR LANDSCAPE ARCHITECT: RON FLORY

CALCULATED-DESIGNED BY: J. PATRICK SULLIVAN
CHECKED BY: RON FLORY

REVISED BY
DATE REVISED

P:\proj\02\4E280_plans\pse\24e280te005.dgn

LAST REVISION 10-14-13
DATE PLOTTED => 13-DEC-2013
TIME PLOTTED => 07:15

Dist	COUNTY	ROUTE	POST MILES TOTAL PROJECT	SHEET No.	TOTAL SHEETS
02	Sis	5	R45.6/R47.3 R62.0/R62.8	49	78

LICENSED LANDSCAPE ARCHITECT

10-16-13
PLANS APPROVAL DATE

THE STATE OF CALIFORNIA OR ITS OFFICERS OR AGENTS SHALL NOT BE RESPONSIBLE FOR THE ACCURACY OR COMPLETENESS OF SCANNED COPIES OF THIS PLAN SHEET.

LICENSED LANDSCAPE ARCHITECT
J. PATRICK SULLIVAN
#3125
Signature
07/31/14
Renewal Date
10/14/13
Date
STATE OF CALIFORNIA

NOTE:

1. FOR ACCURATE RIGHT OF WAY DATA,
   CONTACT RIGHT OF WAY ENGINEERING AT THE DISTRICT OFFICE.

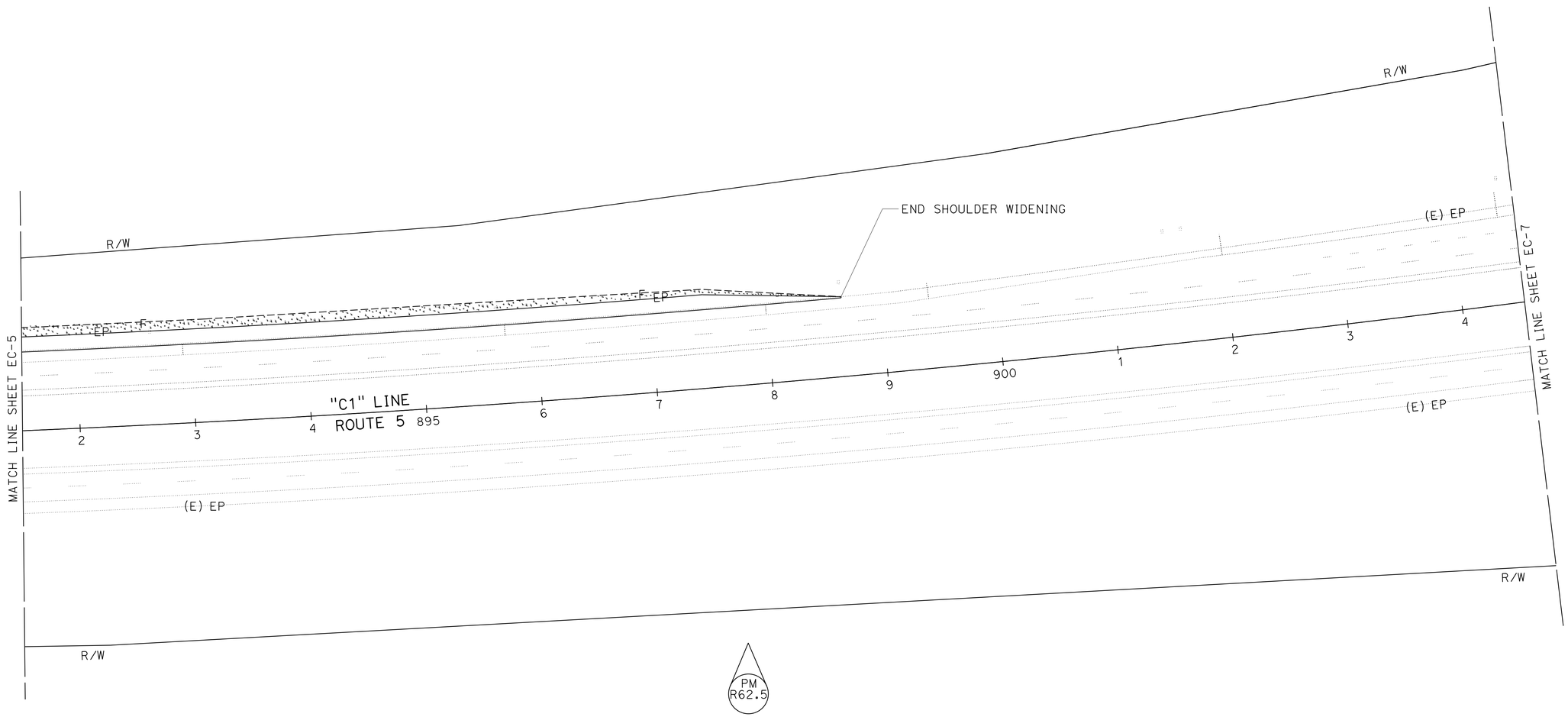

EROSION CONTROL PLAN

(LOCATION 2)

SCALE: 1" = 50'

EC-6

APPROVED FOR LANDSCAPE WORK ONLY

CALCULATED-DESIGNED BY	J. PATRICK SULLIVAN
CHECKED BY	RON FLORY
SENIOR LANDSCAPE ARCHITECT	RON FLORY
REVISED BY	
DATE REVISED	

STATE OF CALIFORNIA - DEPARTMENT OF TRANSPORTATION
Caltrans® LANDSCAPE ARCHITECTURE

P:\proj1\02\4E280_plans\pse\24e280te006.dgn

LAST REVISION 10-14-13
DATE PLOTTED => 13-DEC-2013
TIME PLOTTED => 07:15

Dist	COUNTY	ROUTE	POST MILES TOTAL PROJECT	SHEET No.	TOTAL SHEETS
02	Sis	5	R45.6/R47.3 R62.0/R62.8	50	78

LICENSED LANDSCAPE ARCHITECT

10-16-13
PLANS APPROVAL DATE

LICENSED LANDSCAPE ARCHITECT
J. PATRICK SULLIVAN
#3125
Signature
07/31/14
Renewal Date
10/14/13
Date
STATE OF CALIFORNIA

THE STATE OF CALIFORNIA OR ITS OFFICERS OR AGENTS SHALL NOT BE RESPONSIBLE FOR THE ACCURACY OR COMPLETENESS OF SCANNED COPIES OF THIS PLAN SHEET.

NOTE:

1. FOR ACCURATE RIGHT OF WAY DATA, CONTACT RIGHT OF WAY ENGINEERING AT THE DISTRICT OFFICE.

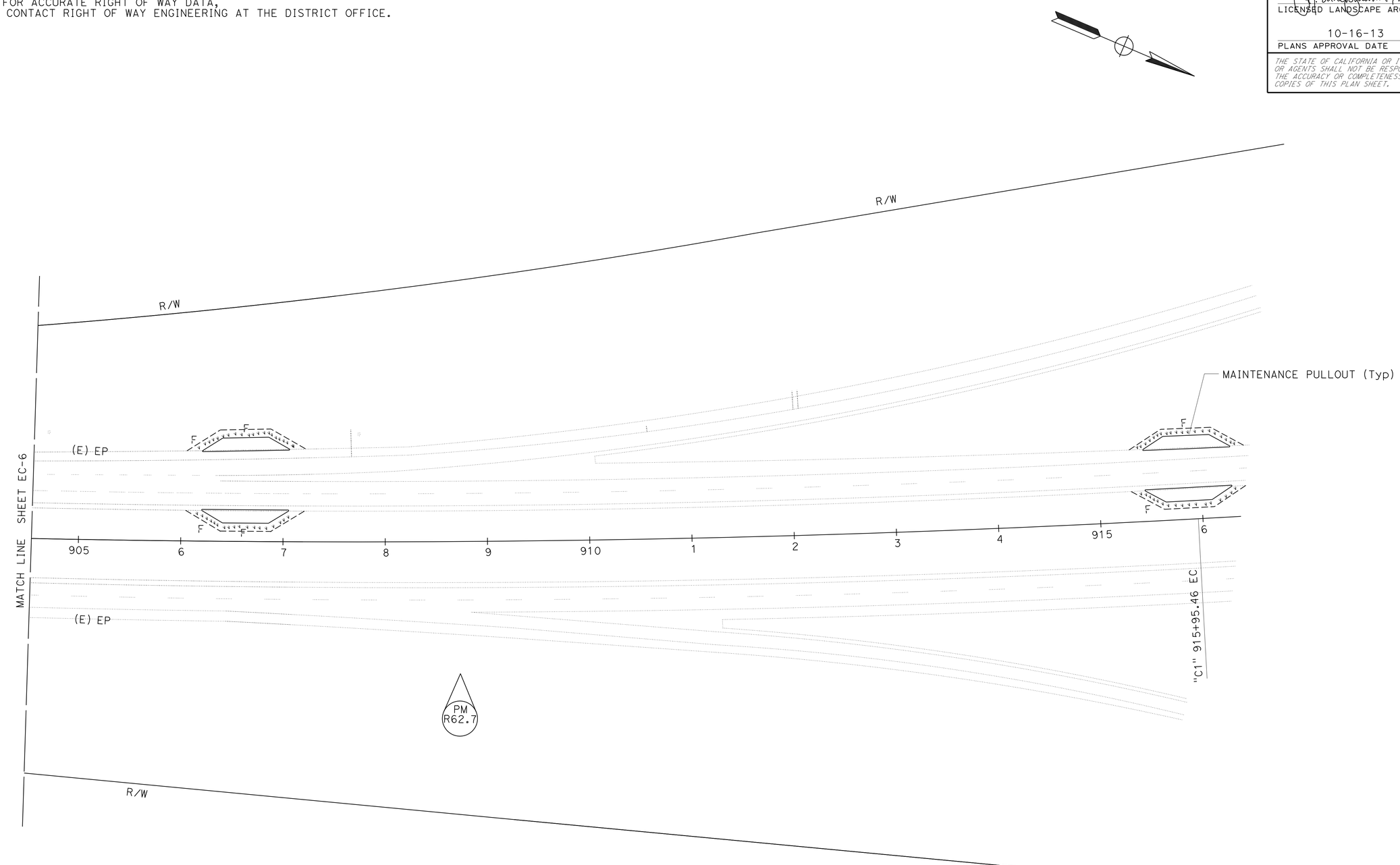

EROSION CONTROL PLAN

(LOCATION 2)

SCALE: 1" = 50'

EC-7

APPROVED FOR LANDSCAPE WORK ONLY

STATE OF CALIFORNIA - DEPARTMENT OF TRANSPORTATION
Caltrans® LANDSCAPE ARCHITECTURE

SENIOR LANDSCAPE ARCHITECT: RON FLORY
CALCULATED-DESIGNED BY: J. PATRICK SULLIVAN
CHECKED BY: RON FLORY
REVISED BY
DATE REVISED

P:\proj1\02\4E280_plans\pse\24e280te007.dgn

LAST REVISION 10-14-13
DATE PLOTTED => 13-DEC-2013
TIME PLOTTED => 07:15

Dist	COUNTY	ROUTE	POST MILES TOTAL PROJECT	SHEET No.	TOTAL SHEETS
02	Sis	5	R45.6/R47.3 R62.0/R62.8	51	78

LICENSED LANDSCAPE ARCHITECT

10-16-13
PLANS APPROVAL DATE

LICENSED LANDSCAPE ARCHITECT J. PATRICK SULLIVAN #3125 Signature 07/31/14 Renewal Date 10/14/13 Date STATE OF CALIFORNIA

THE STATE OF CALIFORNIA OR ITS OFFICERS OR AGENTS SHALL NOT BE RESPONSIBLE FOR THE ACCURACY OR COMPLETENESS OF SCANNED COPIES OF THIS PLAN SHEET.

NOTE:

1. (N) - NOT A SEPARATE PAY ITEM, FOR INFORMATION ONLY

HYDROSEED SEQUENCE/APPLICATION RATES (N)

SEQUENCE	ITEM	MATERIAL DESCRIPTION	MATERIAL TYPE	APPLICATION RATE (N)
STEP 1	HYDROSEED APPLICATION	PURE LIVE SEED	MIX	54 LB/ACRE
		FIBER	ALTERNATE	2000 LB/ACRE
		SLOW RELEASE FERTLIZER	GRANULAR 15-15-15	150 LB/ACRE
STEP 2	HYDROSEED APPLICATION	COMPOST	WOOD PRODUCT	1.2 CY/ACRE
		FIBER	ALTERNATE	1500 LB/ACRE
		TACKIFIER	PSYLLIUM	150 LB/ACRE

SEED MIX (N)

BOTANICAL NAME (COMMON NAME)	PERCENT GERMINATION (MINIMUM)	POUNDS PURE LIVE SEED PER ACRE (N) (SLOPE MEASUREMENT)
ACHILLEA MILLEFOLIUM (COMMON YARROW)	60	2
ELYMUS ELYMOIDES (SQUIRRELTAIL)	60	8
FESTUCA IDAHOENSIS (WESTERN FESCUE)	60	15
LASTHENIA CALIFORNICA (DWARF GOLDFIELDS)	50	2
LOTUS PURSHIANUS (PURSHING's LOTUS)	70	2
VULPIA MICROSTACHYS (SMALL FESCUE)	80	25
TOTAL		54

EROSION CONTROL TOTALS

MATERIAL DESCRIPTION	MATERIAL TYPE	TOTALS	
PURE LIVE SEED	MIX	70.04 LB (N)	HYDROSEED
FIBER	ALTERNATE	4540 LB (N)	
SLOW RELEASE FERTLIZER	GRANULAR 15-15-15	194.6 LB (N)	
COMPOST	WOOD PRODUCT	1.556 CY (N)	
TACKIFIER	PSYLLIUM	194.6 LB (N)	
FROM "C1" 59+76.9 TO 93+04.0		36,950 SQFT	
FROM "C1" 873+52.4 TO 916+30.0		19,550 SQFT	
		TOTAL SQFT	56,500

EROSION CONTROL QUANTITIES

ECQ-1

REVISED BY | DATE REVISED
J. PATRICK SULLIVAN | RON FLORY
CALCULATED-DESIGNED BY | CHECKED BY
SENIOR LANDSCAPE ARCHITECT | RON FLORY
STATE OF CALIFORNIA - DEPARTMENT OF TRANSPORTATION
Caltrans® LANDSCAPE ARCHITECTURE
P:\proj1\02\4E280_plans\pse\24e280tg001.dgn

LAST REVISION 10-14-13 | DATE PLOTTED => 13-DEC-2013 TIME PLOTTED => 07:15

Dist	COUNTY	ROUTE	POST MILES TOTAL PROJECT	SHEET No.	TOTAL SHEETS
02	Sis	5	R45.6/R47.3 R62.0/R62.8	52	78

ART 10-16-13
REGISTERED ELECTRICAL ENGINEER DATE

10-16-13
PLANS APPROVAL DATE

REGISTERED PROFESSIONAL ENGINEER A.P. ROBLES No. E15293 Exp. 3-31-15 ELECTRICAL STATE OF CALIFORNIA

THE STATE OF CALIFORNIA OR ITS OFFICERS OR AGENTS SHALL NOT BE RESPONSIBLE FOR THE ACCURACY OR COMPLETENESS OF SCANNED COPIES OF THIS PLAN SHEET.

NOTE:

1. FOR ACCURATE RIGHT OF WAY DATA, CONTACT RIGHT OF WAY ENGINEERING AT THE DISTRICT OFFICE.

LEGEND:

- (PB) OBJECT MARKER (TYPE PB) AND PULL BOX PAVING
- Y, Y — ADVANCE FLASHING BEACONS
- 3Y, 3Y — CHAIN CONDITION BEACONS
- VARIABLE SPEED LIMIT SIGN AND COMMUNICATION ENCLOSURE
- EXISTING PAVEMENT SENSOR AND SUBSURFACE TEMPERATURE PROBE
- EXISTING PAVEMENT SENSOR

ABBREVIATIONS;

AFB	ADVANCE FLASHING BEACONS
CCB	CHAIN CONDITION BEACONS
VSLS	VARIABLE SPEED LIMIT SIGN
ITS	INTELLIGENT TRANSPORTATION SYSTEMS
TC	TELEPHONE CABLE

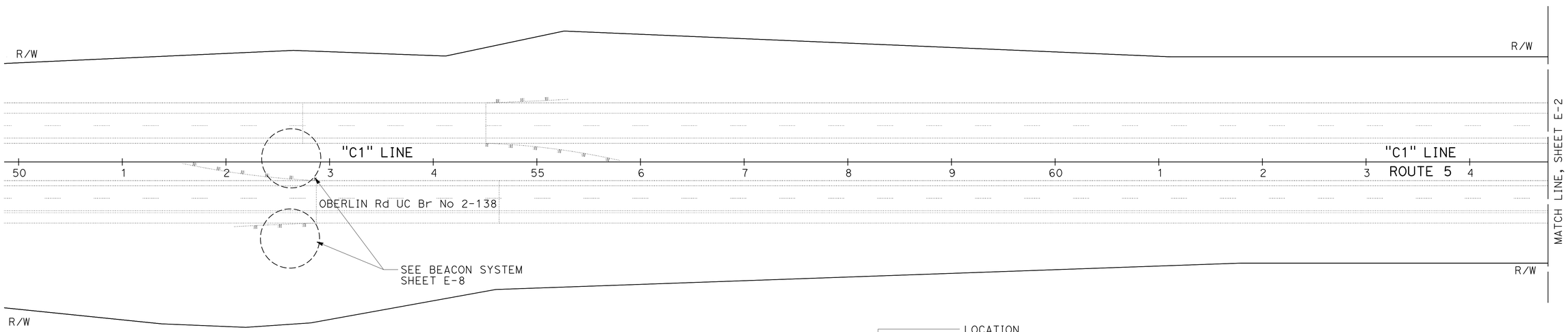

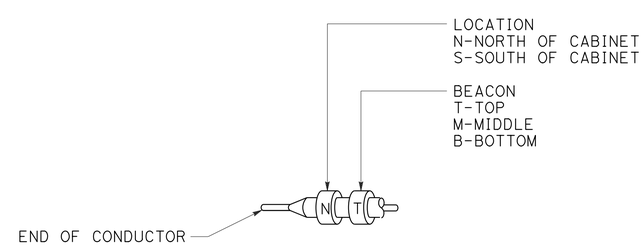

TYPICAL BANDING OF CONDUCTOR ENDS

NO SCALE

LIGHTING

SCALE: 1" = 50'

E-1

APPROVED FOR ELECTRICAL WORK ONLY

REVISED BY | DATE REVISED
ARTURO P. ROBLES | JAMES M. HANNIGAN
CALCULATED-DESIGNED BY | CHECKED BY
FUNCTIONAL SUPERVISOR: ROB STINGER

STATE OF CALIFORNIA - DEPARTMENT OF TRANSPORTATION
Caltrans® ELECTRICAL DESIGN

P:\proj1\02\4E280_plans\pse\24e280ua001.dgn

LAST REVISION 10-16-13 | DATE PLOTTED => 13-DEC-2013 | TIME PLOTTED => 07:15

Dist	COUNTY	ROUTE	POST MILES TOTAL PROJECT	SHEET No.	TOTAL SHEETS
02	Sis	5	R45.6/R47.3 R62.0/R62.8	53	78

ART 10-16-13
REGISTERED ELECTRICAL ENGINEER DATE

10-16-13
PLANS APPROVAL DATE

REGISTERED PROFESSIONAL ENGINEER
A.P. ROBLES
No. E15293
Exp. 3-31-15
ELECTRICAL
STATE OF CALIFORNIA

THE STATE OF CALIFORNIA OR ITS OFFICERS OR AGENTS SHALL NOT BE RESPONSIBLE FOR THE ACCURACY OR COMPLETENESS OF SCANNED COPIES OF THIS PLAN SHEET.

NOTES:

1. FOR ACCURATE RIGHT OF WAY DATA, CONTACT RIGHT OF WAY ENGINEERING AT THE DISTRICT OFFICE.
2. SEE PULL BOX PAVING DETAILS, SHEET E-11.

LEGEND (THIS SHEET):

1. SEE BEACON SYSTEM, SHEET E-8.
2. 1½"C, 2#8 (LTG), 1#8G.
3. 1½"C, 2#6 (LTG), 1#6G.
4. LED LUMINAIRE ROADWAY 2.
5. 1½"C, 2#4 (LTG), 1#4G.

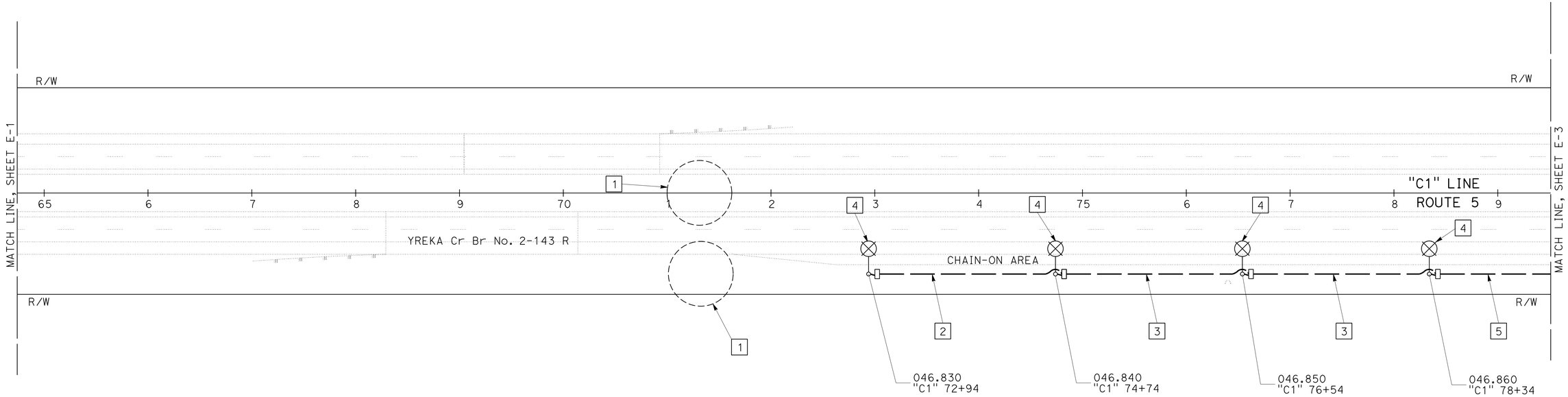

LIGHTING

SCALE: 1" = 50'

E-2

APPROVED FOR ELECTRICAL WORK ONLY

STATE OF CALIFORNIA - DEPARTMENT OF TRANSPORTATION
Caltrans® ELECTRICAL DESIGN

FUNCTIONAL SUPERVISOR: ROB STINGER
CALCULATED-DESIGNED BY: ARTURO P. ROBLES
CHECKED BY: JAMES M. HANNIGAN
REVISED BY
DATE REVISED

P:\proj1\02\4E280_plans\pse\24e280ua002.dgn

LAST REVISION 10-16-13 | DATE PLOTTED => 13-DEC-2013 | TIME PLOTTED => 07:15

Dist	COUNTY	ROUTE	POST MILES TOTAL PROJECT	SHEET No.	TOTAL SHEETS
02	Sis	5	R45.6/R47.3 R62.0/R62.8	54	78

ART 10-16-13
REGISTERED ELECTRICAL ENGINEER DATE

10-16-13
PLANS APPROVAL DATE

REGISTERED PROFESSIONAL ENGINEER A.P. ROBLES No. E15293 Exp. 3-31-15 ELECTRICAL STATE OF CALIFORNIA

THE STATE OF CALIFORNIA OR ITS OFFICERS OR AGENTS SHALL NOT BE RESPONSIBLE FOR THE ACCURACY OR COMPLETENESS OF SCANNED COPIES OF THIS PLAN SHEET.

NOTES:

1. FOR ACCURATE RIGHT OF WAY DATA, CONTACT RIGHT OF WAY ENGINEERING AT THE DISTRICT OFFICE.
2. SEE PULL BOX PAVING DETAILS, SHEET E-11.

LEGEND (THIS SHEET):

1. SEE BEACON SYSTEM, SHEET E-10.
2. 1½"C, 2#8 (LTG), 1#8G.
3. 1½"C, 2#4 (LTG), 1#4G.
4. LED LUMINAIRE - ROADWAY 2.
5. 2"C, 2#4, 1#4G (LTG), 2#6, 1#6G (LTG). SEE SHEET E-10.
6. MAINTENANCE VEHICLE PULL-OUT. SEE CONSTRUCTION DETAILS.
7. CONNECT TO #4 CONDUCTORS.

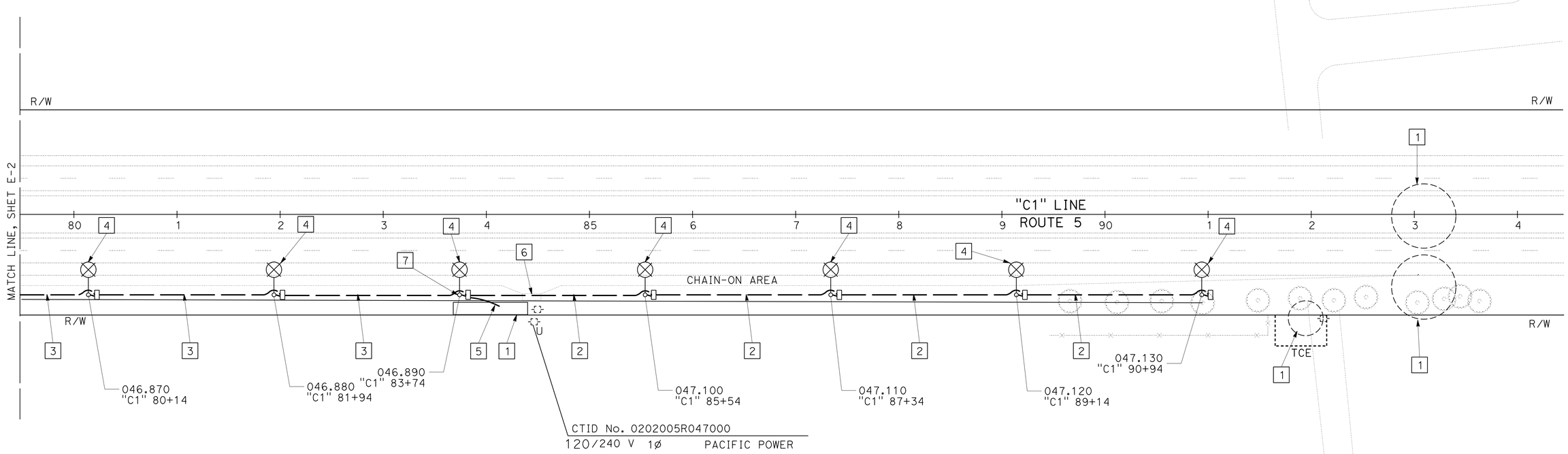

LIGHTING

SCALE: 1" = 50'

E-3

APPROVED FOR ELECTRICAL WORK ONLY

REVISED BY | DATE REVISED
ARTURO P. ROBLES | JAMES M. HANNIGAN
CALCULATED-DESIGNED BY | CHECKED BY
FUNCTIONAL SUPERVISOR: ROB STINGER

STATE OF CALIFORNIA - DEPARTMENT OF TRANSPORTATION
Caltrans® ELECTRICAL DESIGN

P:\proj1\02\4E280_plans\pse\24e280ua003.dgn

LAST REVISION 10-16-13 | DATE PLOTTED => 13-DEC-2013 | TIME PLOTTED => 07:15

Dist	COUNTY	ROUTE	POST MILES TOTAL PROJECT	SHEET No.	TOTAL SHEETS
02	Sis	5	R45.6/R47.3 R62.0/R62.8	55	78

ART 10-16-13
REGISTERED ELECTRICAL ENGINEER DATE

10-16-13
PLANS APPROVAL DATE

REGISTERED PROFESSIONAL ENGINEER A.P. ROBLES No. E15293 Exp. 3-31-15 ELECTRICAL STATE OF CALIFORNIA

THE STATE OF CALIFORNIA OR ITS OFFICERS OR AGENTS SHALL NOT BE RESPONSIBLE FOR THE ACCURACY OR COMPLETENESS OF SCANNED COPIES OF THIS PLAN SHEET.

NOTES:

1. FOR ACCURATE RIGHT OF WAY DATA, CONTACT RIGHT OF WAY ENGINEERING AT THE DISTRICT OFFICE.
2. SEE PULL BOX PAVING DETAILS, SHEET E-11.

LEGEND (THIS SHEET):

1. Exist 2"C, 3#2 (CMS), ADD 3#1 (SUBPANEL), 1#1G.
2. Exist 2"C, TC.
3. 3"C, 3#4/0 (SUBPANEL), 1#4/0G.
4. 2"C, PT.
5. PROTECT PAVEMENT SENSORS IN PLACE.
6. 2"C, 2#1 (LTG), 1#1G.
7. LED LUMINAIRE - ROADWAY 2.
8. MAINTENANCE VEHICLE PULL OUT. SEE CONSTRUCTION DETAILS.
9. SERVICE EQUIPMENT ENCLOSURE (20" WIDE) WITHOUT METERING SECTION.
10. 2"C, PT.
11. 3-3"C, PT.
12. MODEL 334 CABINET Fdn FOR FUTURE USE. CAP CONDUITS.
13. ITS NODE PULL BOX.
14. 1½"C, PT.

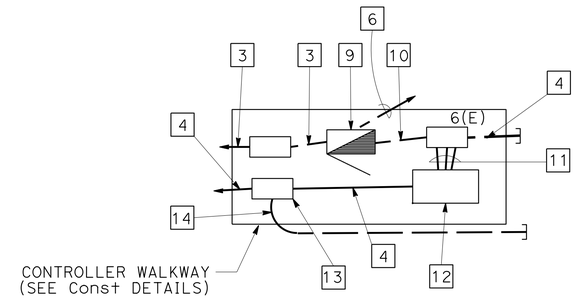

DETAIL A
NO SCALE

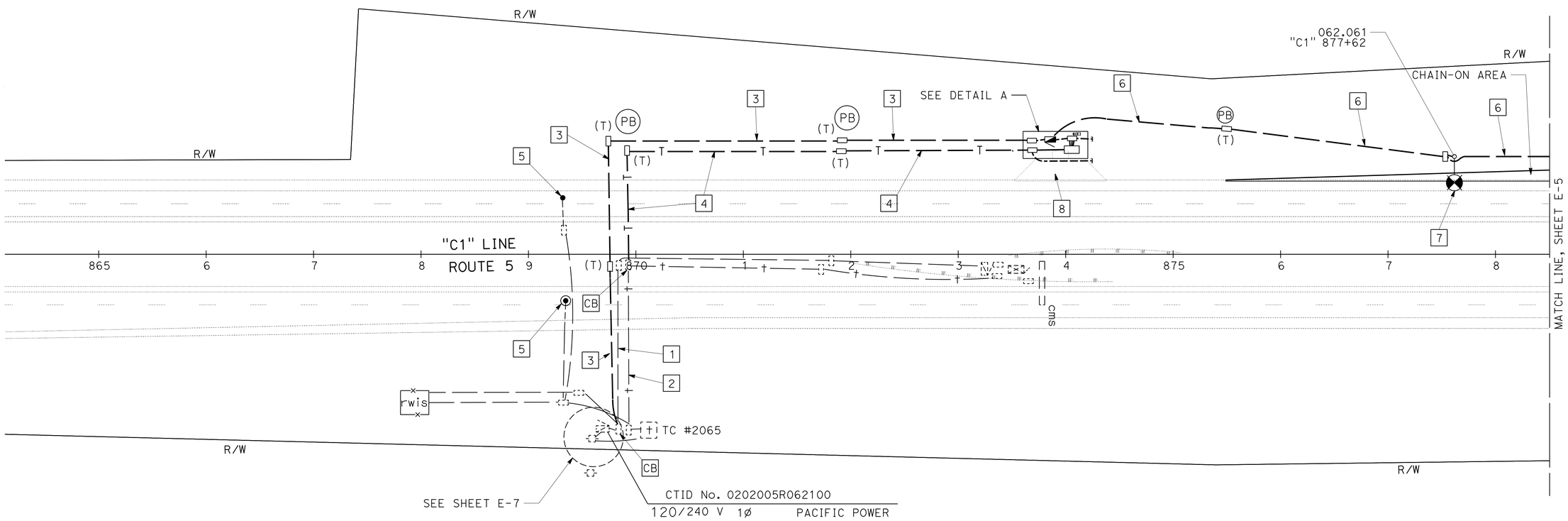

LIGHTING
SCALE: 1" = 50'

E-4

APPROVED FOR ELECTRICAL WORK ONLY

ARTURO P. ROBLES — REVISED BY
JAMES M. HANNIGAN — DATE REVISED
CALCULATED-DESIGNED BY
CHECKED BY
FUNCTIONAL SUPERVISOR
ROB STINGER

STATE OF CALIFORNIA - DEPARTMENT OF TRANSPORTATION
Caltrans® **ELECTRICAL DESIGN**

P:\proj1\02\4E280_plans\pse\24e280ua004.dgn

LAST REVISION 10-16-13 | DATE PLOTTED => 13-DEC-2013 | TIME PLOTTED => 07:15

Dist	COUNTY	ROUTE	POST MILES TOTAL PROJECT	SHEET No.	TOTAL SHEETS
02	Sis	5	R45.6/R47.3 R62.0/R62.8	56	78

ART 10-16-13
REGISTERED ELECTRICAL ENGINEER DATE

10-16-13
PLANS APPROVAL DATE

REGISTERED PROFESSIONAL ENGINEER
A.P. ROBLES
No. E15293
Exp. 3-31-15
ELECTRICAL
STATE OF CALIFORNIA

THE STATE OF CALIFORNIA OR ITS OFFICERS OR AGENTS SHALL NOT BE RESPONSIBLE FOR THE ACCURACY OR COMPLETENESS OF SCANNED COPIES OF THIS PLAN SHEET.

NOTES:

1. FOR ACCURATE RIGHT OF WAY DATA, CONTACT RIGHT OF WAY ENGINEERING AT THE DISTRICT OFFICE.
2. SEE PULL BOX PAVING DETAILS, SHEET E-11.

LEGEND (THIS SHEET):

1 2"C, 2#1 (LTG),1#1G.

2 1½"C, 2#2 (LTG), 1#2G.

3 LED LUMINAIRE - ROADWAY 2.

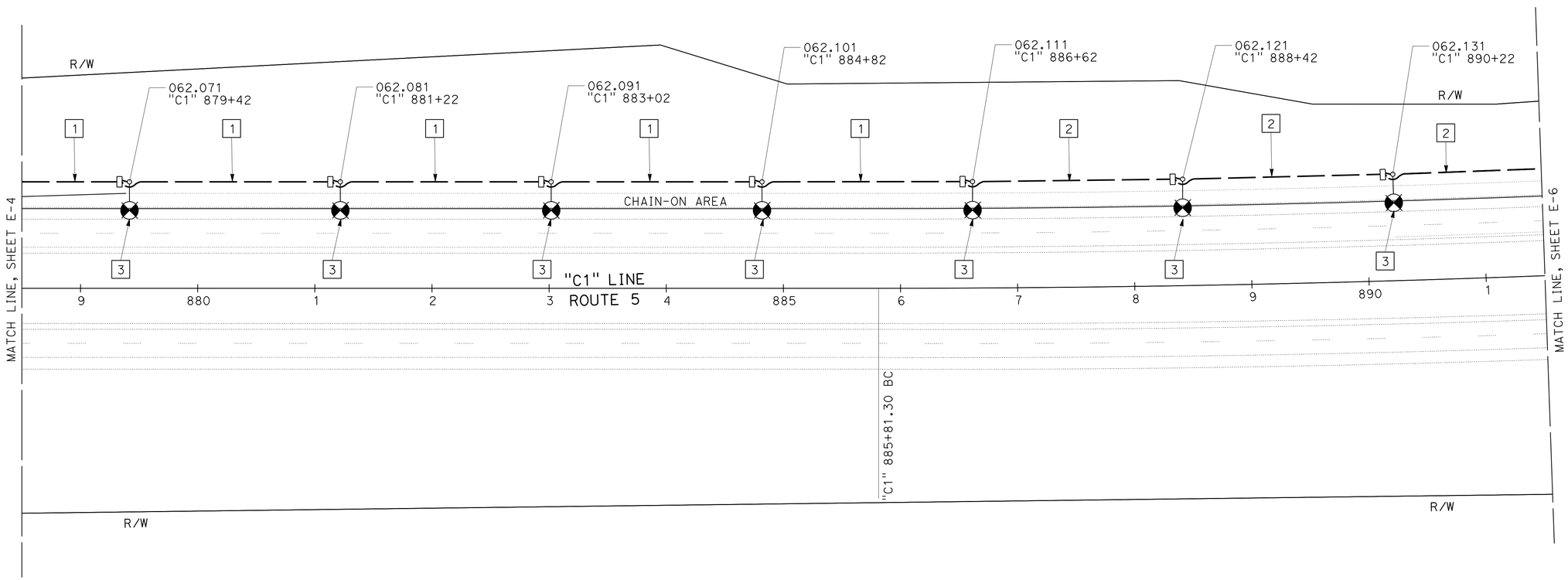

LIGHTING

SCALE: 1" = 50'

E-5

APPROVED FOR ELECTRICAL WORK ONLY

ARTURO P. ROBLES
JAMES M. HANNIGAN
ROB STINGER
REVISED BY
DATE REVISED
CALCULATED-DESIGNED BY
CHECKED BY
FUNCTIONAL SUPERVISOR

STATE OF CALIFORNIA - DEPARTMENT OF TRANSPORTATION
Caltrans
ELECTRICAL DESIGN

P:\proj\02\4E280_plans\pse\24e280ua005.dgn

LAST REVISION 10-16-13
DATE PLOTTED => 13-DEC-2013
TIME PLOTTED => 07:15

Dist	COUNTY	ROUTE	POST MILES TOTAL PROJECT	SHEET No.	TOTAL SHEETS
02	Sis	5	R45.6/R47.3 R62.0/R62.8	57	78

ART 10-16-13
REGISTERED ELECTRICAL ENGINEER DATE

10-16-13
PLANS APPROVAL DATE

REGISTERED PROFESSIONAL ENGINEER
A.P. ROBLES
No. E15293
Exp. 3-31-15
ELECTRICAL
STATE OF CALIFORNIA

THE STATE OF CALIFORNIA OR ITS OFFICERS OR AGENTS SHALL NOT BE RESPONSIBLE FOR THE ACCURACY OR COMPLETENESS OF SCANNED COPIES OF THIS PLAN SHEET.

NOTES:

1. FOR ACCURATE RIGHT OF WAY DATA, CONTACT RIGHT OF WAY ENGINEERING AT THE DISTRICT OFFICE.
2. SEE PULL BOX PAVING DETAILS, SHEET E-11.

LEGEND (THIS SHEET):

[1] 1½"C, 2#2 (LTG), 1#2G.

[2] 1½"C, 2#6 (LTG), 1#6G.

[3] LED LUMINAIRE - ROADWAY 2.

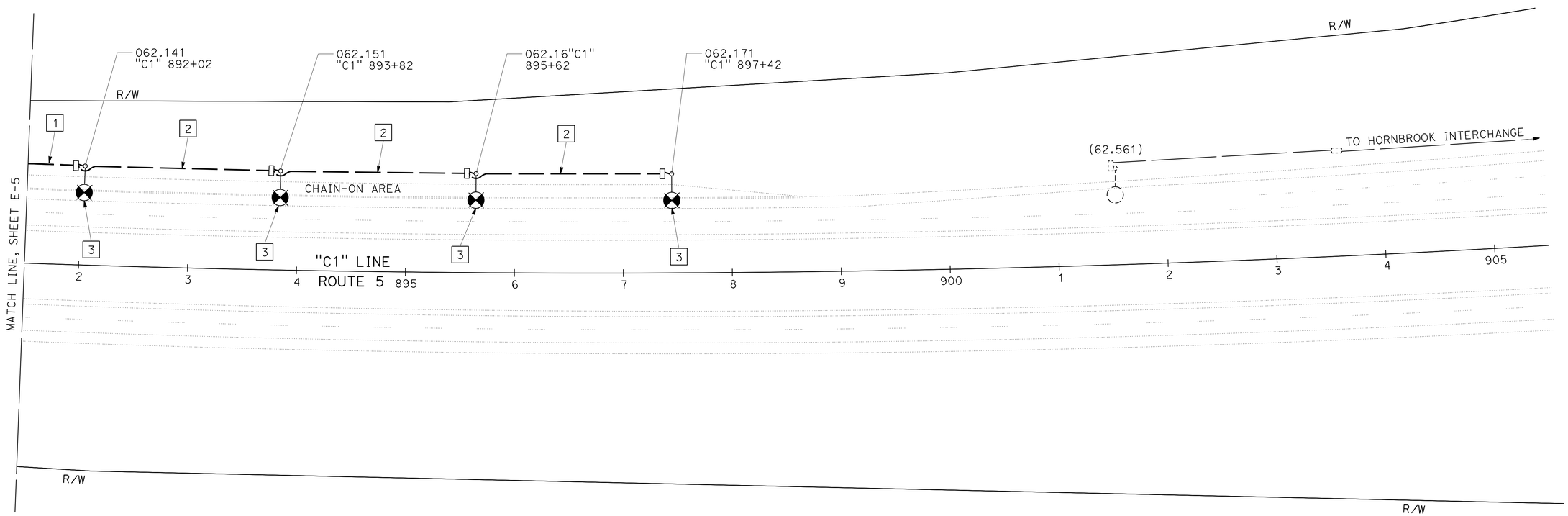

LIGHTING

SCALE: 1" = 50'

E-6

APPROVED FOR ELECTRICAL WORK ONLY

ARTURO P. ROBLES
JAMES M. HANNIGAN
ROB STINGER

REVISED BY | DATE REVISED
CALCULATED-DESIGNED BY | CHECKED BY
FUNCTIONAL SUPERVISOR

STATE OF CALIFORNIA - DEPARTMENT OF TRANSPORTATION
Caltrans® ELECTRICAL DESIGN

P:\proj\02\4E280_plans\pse\24e280ua006.dgn

LAST REVISION 10-16-13 | DATE PLOTTED => 13-DEC-2013 | TIME PLOTTED => 07:15

Dist	COUNTY	ROUTE	POST MILES TOTAL PROJECT	SHEET No.	TOTAL SHEETS
02	Sis	5	R45.6/R47.3 R62.0/R62.8	58	78

REGISTERED ELECTRICAL ENGINEER 10-16-13 DATE

10-16-13
PLANS APPROVAL DATE

REGISTERED PROFESSIONAL ENGINEER A.P. ROBLES No. E15293 Exp. 3-31-15 ELECTRICAL STATE OF CALIFORNIA

THE STATE OF CALIFORNIA OR ITS OFFICERS OR AGENTS SHALL NOT BE RESPONSIBLE FOR THE ACCURACY OR COMPLETENESS OF SCANNED COPIES OF THIS PLAN SHEET.

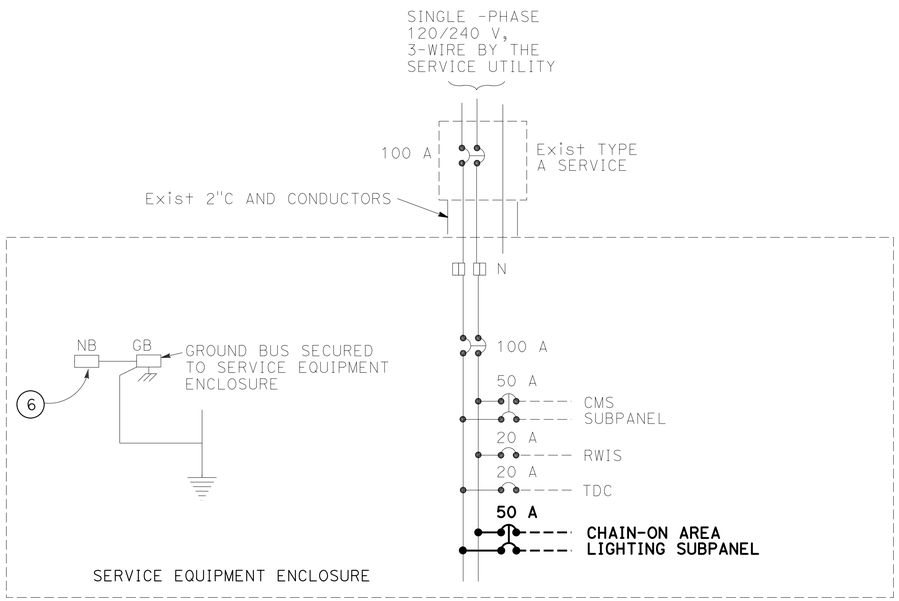

EXISTING MAIN SUBPANEL

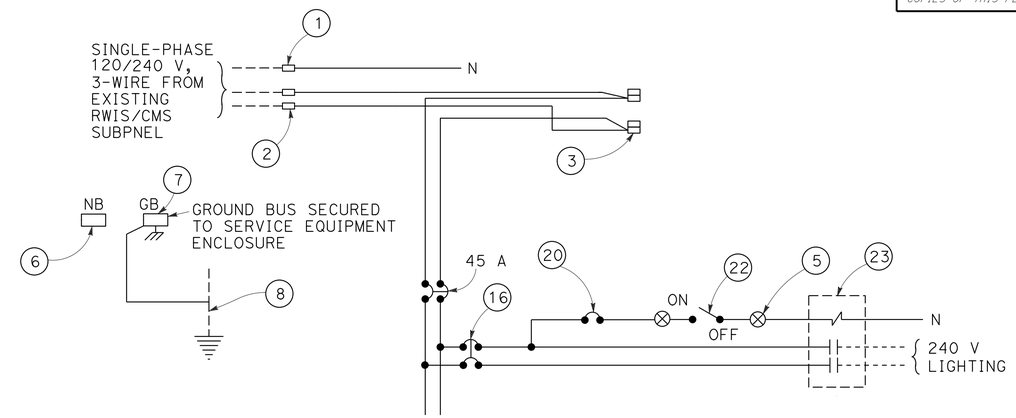

CHAIN-ON AREA SUBPANEL

HORNBROOK

CTID No. 0202005R047000

FOR ADDITIONAL INFORMATION SEE RSP ES-2D

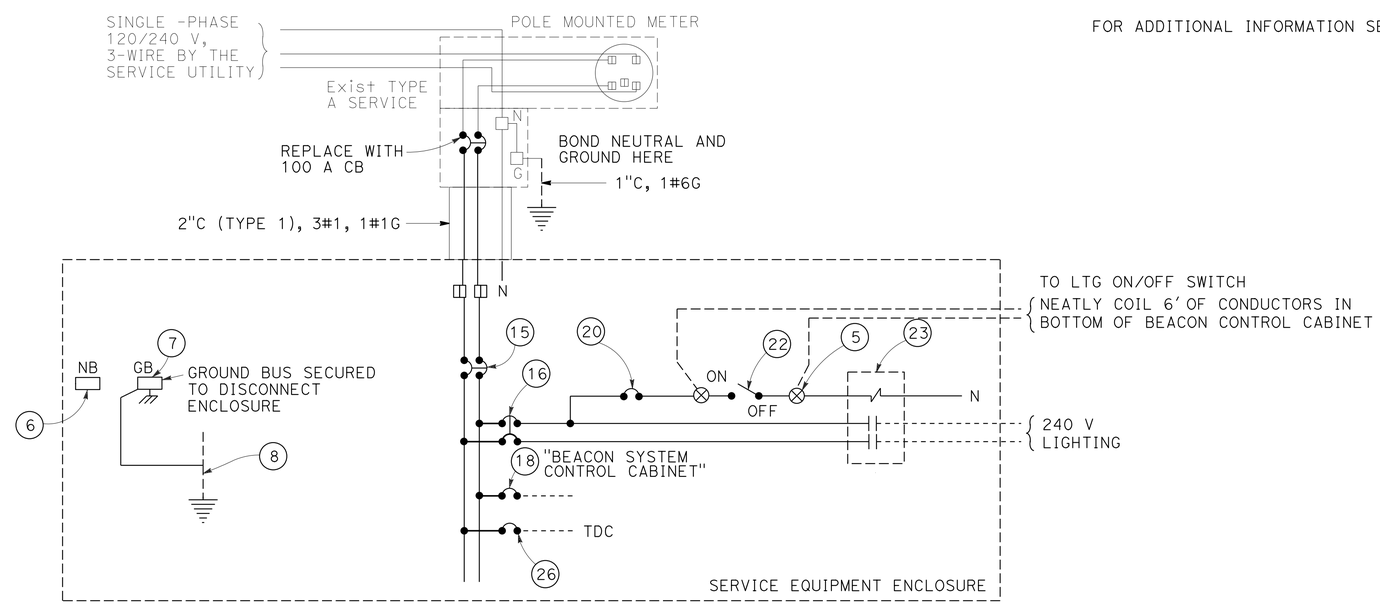

YREKA

CTID No. 0202005R062100

ELECTRICAL DETAILS

NO SCALE

E-7

REVISED BY | DATE REVISED
ARTURO P. ROBLES | JAMES M. HANNIGAN
CALCULATED-DESIGNED BY | CHECKED BY
FUNCTIONAL SUPERVISOR: ROB STINGER

STATE OF CALIFORNIA - DEPARTMENT OF TRANSPORTATION
Caltrans® ELECTRICAL DESIGN

P:\proj1\02\4E280_plans\pse\24e280ua007.dgn

LAST REVISION 10-16-13 | DATE PLOTTED => 13-DEC-2013 | TIME PLOTTED => 07:15

Dist	COUNTY	ROUTE	POST MILES TOTAL PROJECT	SHEET No.	TOTAL SHEETS
02	Sis	5	R45.6/R47.3 R62.0/R62.8	59	78

ART 10-16-13
REGISTERED ELECTRICAL ENGINEER DATE

10-16-13
PLANS APPROVAL DATE

REGISTERED PROFESSIONAL ENGINEER
A.P. ROBLES
No. E15293
Exp. 3-31-15
ELECTRICAL
STATE OF CALIFORNIA

THE STATE OF CALIFORNIA OR ITS OFFICERS OR AGENTS SHALL NOT BE RESPONSIBLE FOR THE ACCURACY OR COMPLETENESS OF SCANNED COPIES OF THIS PLAN SHEET.

NOTES:

1. FOR ACCURATE RIGHT OF WAY DATA, CONTACT RIGHT OF WAY ENGINEERING AT THE DISTRICT OFFICE.
2. SEE PULL BOX PAVING DETAILS, SHEET E-11.

LEGEND (THIS SHEET):

[1] 1½"C, 3#8, 1#8G.

[2] 2"C, 3#8, 1#8G.

[3] 2"C (TYPE 1), SURFACE MOUNTED, 3#8, 1#8G.

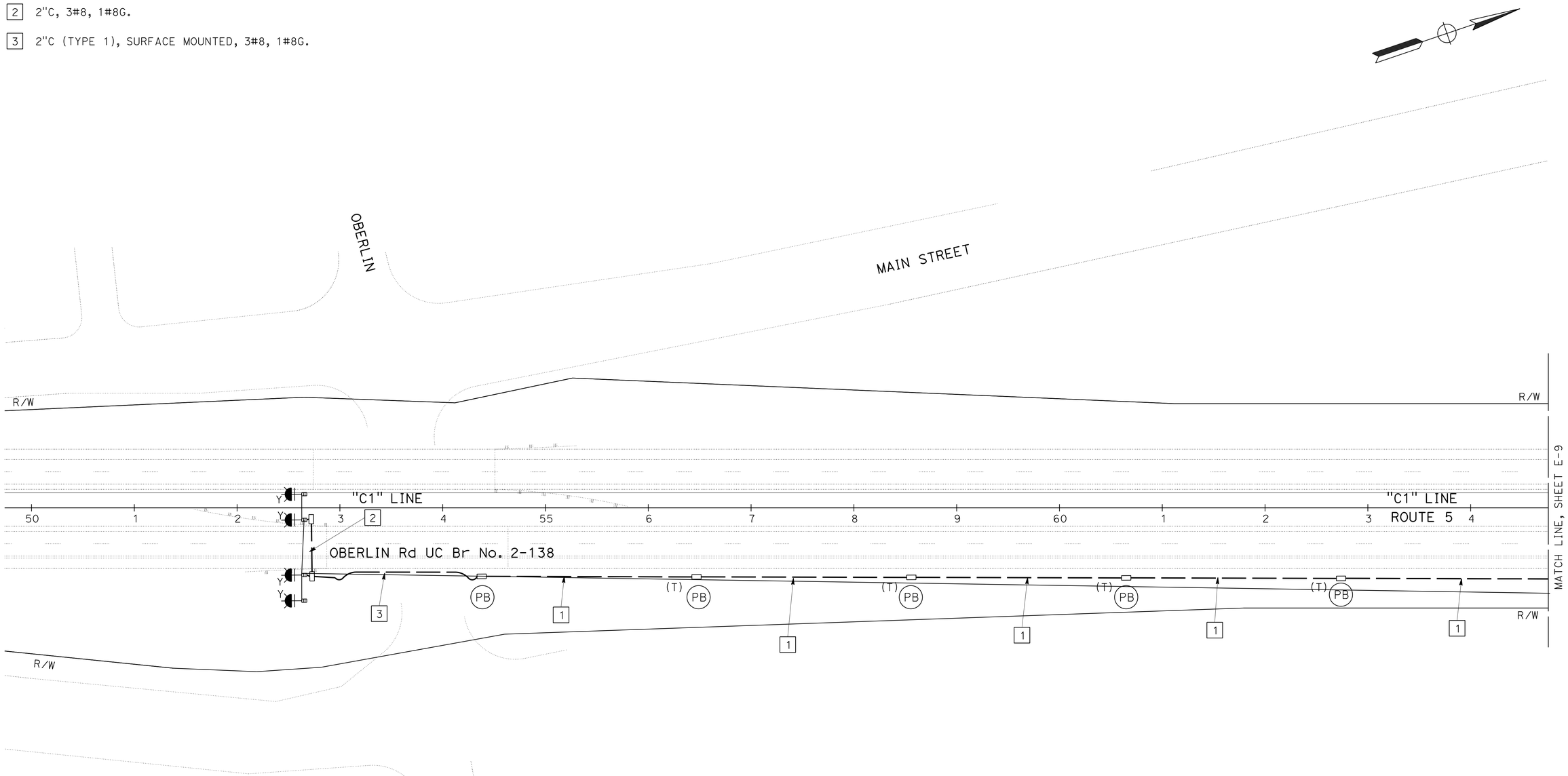

BEACON SYSTEM

SCALE: 1" = 50'

E-8

APPROVED FOR ELECTRICAL WORK ONLY

STATE OF CALIFORNIA - DEPARTMENT OF TRANSPORTATION
Caltrans® ELECTRICAL DESIGN

FUNCTIONAL SUPERVISOR: ROB STINGER
CALCULATED-DESIGNED BY: ARTURO P. ROBLES
CHECKED BY: JAMES M. HANNIGAN
REVISED BY
DATE REVISED

P:\proj1\02\4E280_plans\pse\24e280ua008.dgn

LAST REVISION 10-16-13
DATE PLOTTED => 13-DEC-2013
TIME PLOTTED => 07:15

BORDER LAST REVISED 7/2/2010
USERNAME => s123119
DGN FILE => 24e280ua008.dgn
RELATIVE BORDER SCALE IS IN INCHES 0 1 2 3
UNIT 0147
PROJECT NUMBER & PHASE 02-0002-0247-1
EA 02-4E2801

Dist	COUNTY	ROUTE	POST MILES TOTAL PROJECT	SHEET No.	TOTAL SHEETS
02	Sis	5	R45.6/R47.3 R62.0/R62.8	60	78

ART 10-16-13
REGISTERED ELECTRICAL ENGINEER DATE

10-16-13
PLANS APPROVAL DATE

REGISTERED PROFESSIONAL ENGINEER
A.P. ROBLES
No. E15293
Exp. 3-31-15
ELECTRICAL
STATE OF CALIFORNIA

THE STATE OF CALIFORNIA OR ITS OFFICERS OR AGENTS SHALL NOT BE RESPONSIBLE FOR THE ACCURACY OR COMPLETENESS OF SCANNED COPIES OF THIS PLAN SHEET.

NOTES:

1. FOR ACCURATE RIGHT OF WAY DATA, CONTACT RIGHT OF WAY ENGINEERING AT THE DISTRICT OFFICE.
2. SEE PULL BOX PAVING DETAILS, SHEET E-11.
3. SEE LIGHTING SHEET E-2.
4. SEE CCB AND VSLS DETAIL, SHEET E-14 AND SES SHEETS.

LEGEND (THIS SHEET):

1. 1½"C, 3#8, 1#8G.
2. 2"C (TYPE 1), SURFACE MOUNTED, 3#8, 1#8G.
3. 2"C, 2#6 (VSLS), 4#10 (CCB), 1#6G.
4. 2"C, 2#4 (VSLS), 4#10 (CCB), 3#8 (AFB), 1#4G.
5. 1½"C, 2#6 (VSLS), 1#6G.
6. ITS NODE PULL BOX.
7. 2", PT

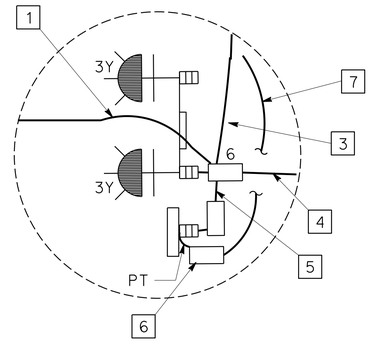

DETAIL A
NO SCALE

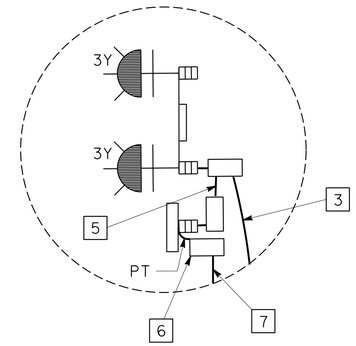

DETAIL B
NO SCALE

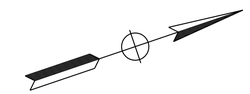

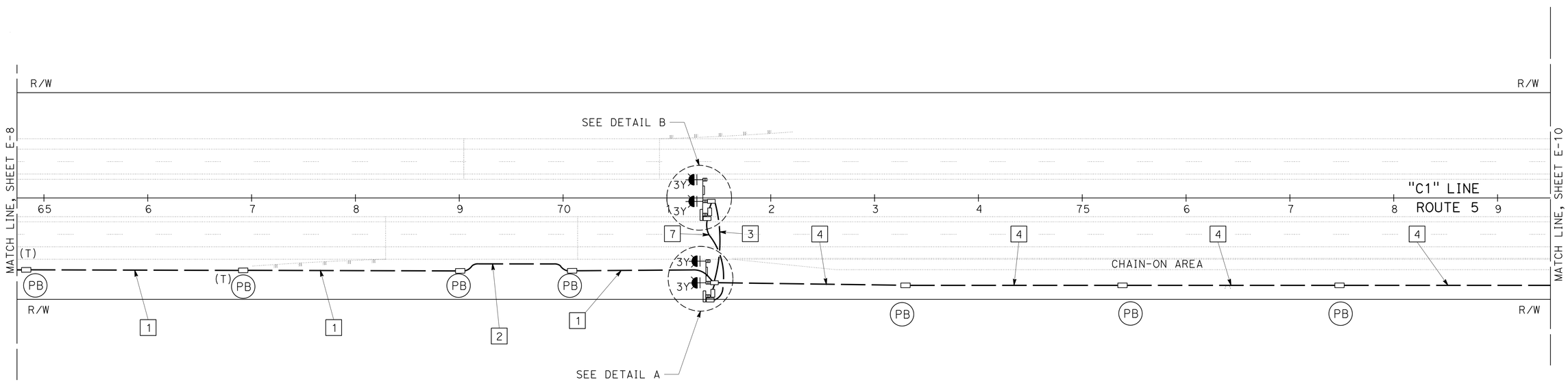

BEACON SYSTEM

SCALE: 1" = 50'

APPROVED FOR ELECTRICAL WORK ONLY

E-9

REVISED BY	DATE REVISED
ARTURO P. ROBLES	JAMES M. HANNIGAN

CALCULATED-DESIGNED BY
CHECKED BY

FUNCTIONAL SUPERVISOR: ROB STINGER

STATE OF CALIFORNIA - DEPARTMENT OF TRANSPORTATION
Caltrans® ELECTRICAL DESIGN

P:\proj1\02\4E280_plans\pse\24e280ua009.dgn

LAST REVISION 10-16-13
DATE PLOTTED => 13-DEC-2013
TIME PLOTTED => 07:15

Dist	COUNTY	ROUTE	POST MILES TOTAL PROJECT	SHEET No.	TOTAL SHEETS
02	Sis	5	R45.6/R47.3 R62.0/R62.8	61	78

ART 10-16-13
REGISTERED ELECTRICAL ENGINEER DATE

10-16-13
PLANS APPROVAL DATE

REGISTERED PROFESSIONAL ENGINEER A.P. ROBLES No. E15293 Exp. 3-31-15 ELECTRICAL STATE OF CALIFORNIA

THE STATE OF CALIFORNIA OR ITS OFFICERS OR AGENTS SHALL NOT BE RESPONSIBLE FOR THE ACCURACY OR COMPLETENESS OF SCANNED COPIES OF THIS PLAN SHEET.

NOTES:

1. FOR ACCURATE RIGHT OF WAY DATA, CONTACT RIGHT OF WAY ENGINEERING AT THE DISTRICT OFFICE.
2. SEE PULL BOX PAVING DETAILS, SHEET E-16.
3. SEE LIGHTING SHEET E-3.

LEGEND (THIS SHEET):

1. 2"C, 2#4 (VSLS), 4#10 (CCB), 3#8 (AFB), 1#4G.
2. 3-3"C, 2#4 (VSLS), 2#6 (VSLS), 8#10 (CCB), 3#8 (AFB), 2#6 (BEACON SYSTEM CONTROL CABINET), 2#14 (LTG ON/OFF SWITCH), 1#4G.
3. 2"C, 1 TC.
4. 1½"C, PT.
5. 2"C, 2#6 (BEACON SYSTEM CONTROL CABINET), 2#10 (TDC), 2#14 (LTG ON/OFF SWITCH), 1#6G.
6. TYPE III-AF SERVICE EQUIPMENT ENCLOSURE (20" WIDE) WITHOUT METERING SECTION.
7. 1½"C, 2#10, 1#10G.
8. 1½"C, 1 TC.
9. 2"C, 2#4, 1#4G (LTG), 2#6, 1#6G (LTG).
10. 2"C, 2#6 (VSLS), 4#10 (CCB), 1#6G.
11. 2"C, PT.
12. ITS NODE PULL BOX.
13. 1½"C, 2#6 (VSLS), 4#10 (CCB), 2#10 (TDC), 1#6G.
14. 1½"C, 2#6 (VSLS), 4#10 (CCB), 1#6G.
15. 1½"C, 2#6 (VSLS), 1#6G.
16. INSTALL DEPARTMENT-FURNISHED BEACON SYSTEM CONTROL CABINET. NEATLY COIL 6' OF CONDUCTORS IN THE BOTTOM OF THE CABINET.

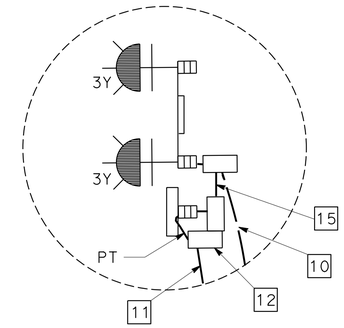

DETAIL D
NO SCALE

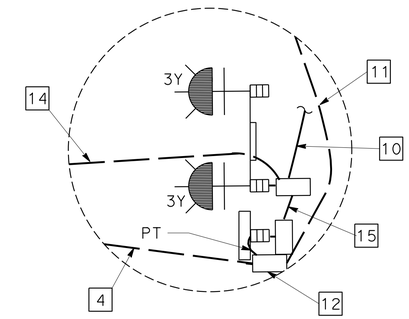

DETAIL C
NO SCALE

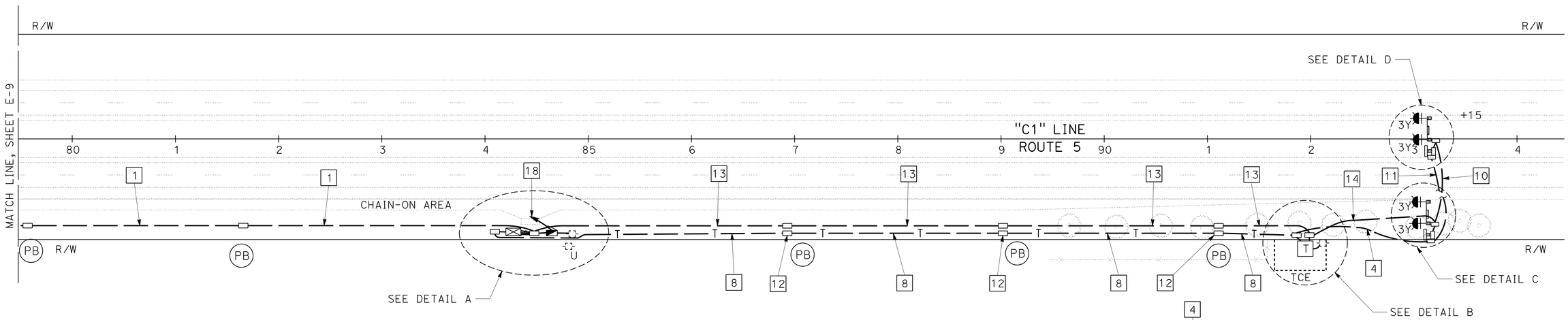

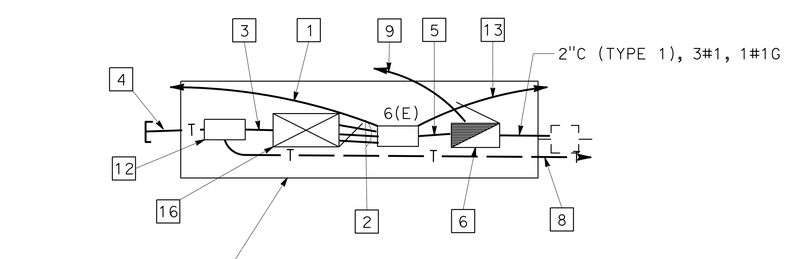

DETAIL A
NO SCALE

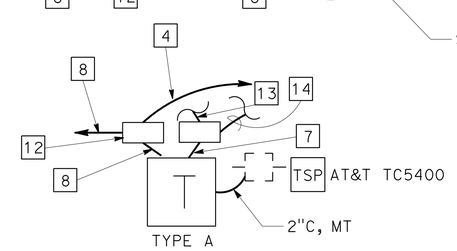

DETAIL B
NO SCALE

APPROVED FOR ELECTRICAL WORK ONLY

BEACON SYSTEM

SCALE: 1" = 50'

E-10

STATE OF CALIFORNIA - DEPARTMENT OF TRANSPORTATION
Caltrans® ELECTRICAL DESIGN

FUNCTIONAL SUPERVISOR: ROB STINGER
CALCULATED-DESIGNED BY: ARTURO P. ROBLES
CHECKED BY: JAMES M. HANNIGAN
REVISED BY
DATE REVISED

P:\proj\02\4E280_plans\pse\24e280ua010.dgn

LAST REVISION 10-16-13
DATE PLOTTED => 13-DEC-2013
TIME PLOTTED => 07:15

Dist	COUNTY	ROUTE	POST MILES TOTAL PROJECT	SHEET No.	TOTAL SHEETS
02	Sis	5	R45.6/R47.3 R62.0/R62.8	62	78

ART 10-16-13
REGISTERED ELECTRICAL ENGINEER DATE

10-16-13
PLANS APPROVAL DATE

REGISTERED PROFESSIONAL ENGINEER A.P. ROBLES No. E15293 Exp. 3-31-15 ELECTRICAL STATE OF CALIFORNIA

THE STATE OF CALIFORNIA OR ITS OFFICERS OR AGENTS SHALL NOT BE RESPONSIBLE FOR THE ACCURACY OR COMPLETENESS OF SCANNED COPIES OF THIS PLAN SHEET.

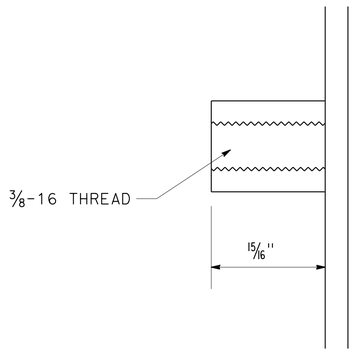

STAND-OFF

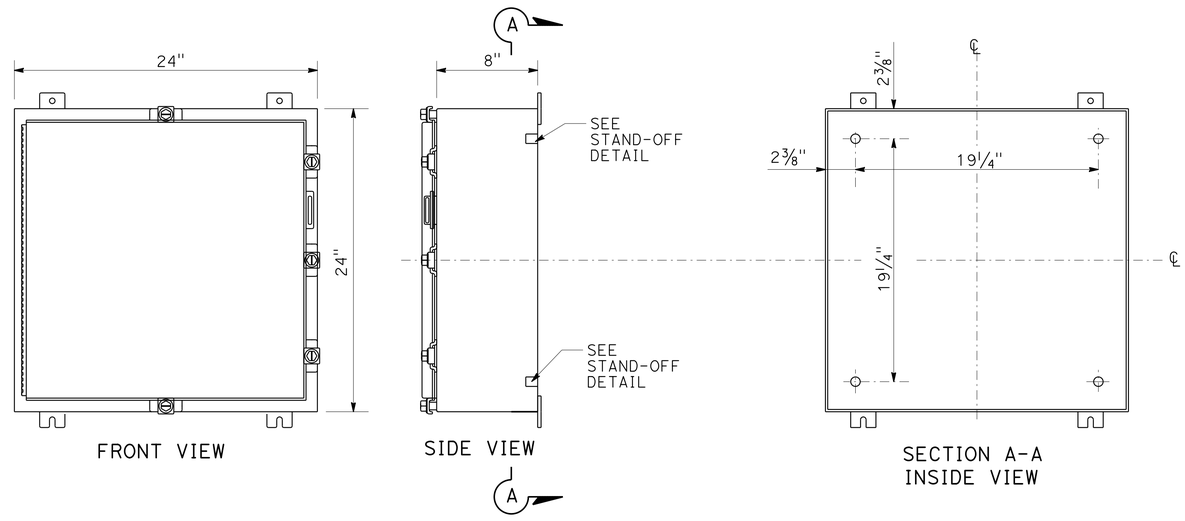

COMMUNICATION ENCLOSURE

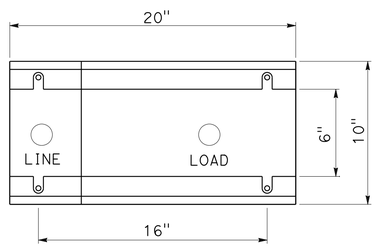

BASE DETAIL FOR TYPE III-AF SERVICE EQUIPMENT ENCLOSURE (20" WIDE)

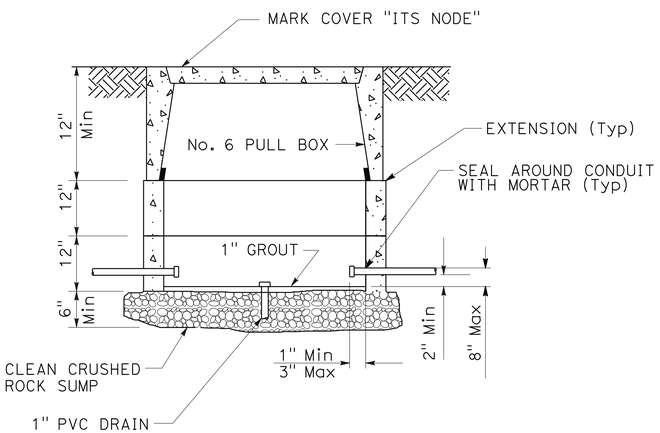

ITS NODE PULL BOX

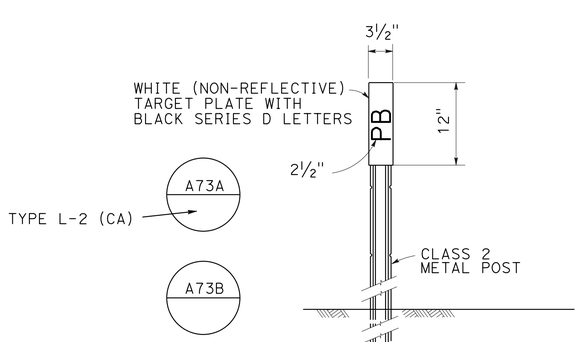

NOTE: PLACE MARKER 2" OUTSIDE PULL BOX PAVING ON SIDE AWAY FROM TRAFFIC. SEE PULL BOX PAVING DETAIL.

OBJECT MARKER (TYPE PB)

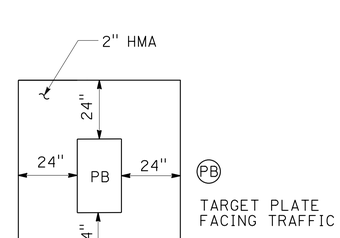

NOTE: APPLIES TO ALL INSTALLATIONS IN UNPAVED AREAS

PULL BOX PAVING

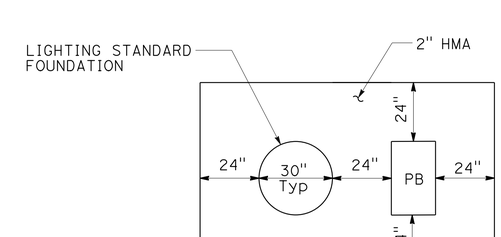

NOTE: APPLIES TO ALL INSTALLATIONS IN UNPAVED AREAS

PULL BOX AND LIGHT STANDARD PAVING

ELECTRICAL DETAILS

NO SCALE

E-11

REVISED BY	DATE REVISED
ARTURO P. ROBLES	
JAMES M. HANNIGAN	
CALCULATED-DESIGNED BY	
CHECKED BY	
FUNCTIONAL SUPERVISOR	
ROB STINGER	

STATE OF CALIFORNIA - DEPARTMENT OF TRANSPORTATION
Caltrans® ELECTRICAL DESIGN

P:\proj\02\4E280_plans\pse\24e280ua011.dgn

LAST REVISION 10-16-13 | DATE PLOTTED => 13-DEC-2013 | TIME PLOTTED => 07:15

Dist	COUNTY	ROUTE	POST MILES TOTAL PROJECT	SHEET No.	TOTAL SHEETS
02	Sis	5	R45.6/R47.3 R62.0/R62.8	63	78

ART 10-16-13
REGISTERED ELECTRICAL ENGINEER DATE

10-16-13
PLANS APPROVAL DATE

REGISTERED PROFESSIONAL ENGINEER A.P. ROBLES No. E15293 Exp. 3-31-15 ELECTRICAL STATE OF CALIFORNIA

THE STATE OF CALIFORNIA OR ITS OFFICERS OR AGENTS SHALL NOT BE RESPONSIBLE FOR THE ACCURACY OR COMPLETENESS OF SCANNED COPIES OF THIS PLAN SHEET.

NOTE:

1. FOR ADDITIONAL DETAILS, SEE SES SHEETS.

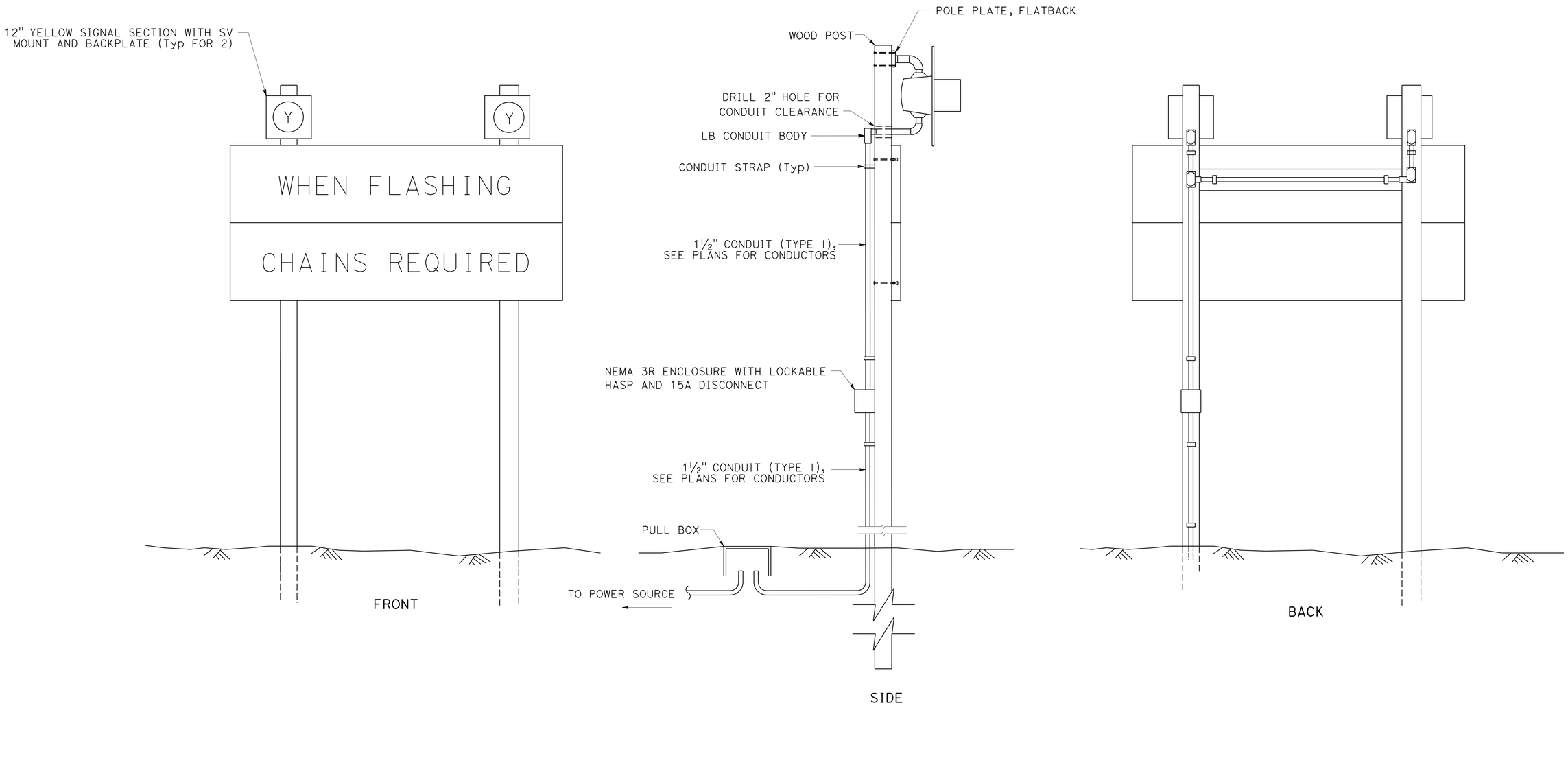

ADVANCE FLASHING BEACON INSTALLATION

ELECTRICAL DETAILS

NO SCALE

E-12

REVISED BY | DATE REVISED
ARTURO P. ROBLES | JAMES M. HANNIGAN
CALCULATED-DESIGNED BY | CHECKED BY
FUNCTIONAL SUPERVISOR: ROB STINGER

STATE OF CALIFORNIA - DEPARTMENT OF TRANSPORTATION
Caltrans® ELECTRICAL DESIGN

P:\proj1\02\4E280_plans\pse\24e280ua012.dgn

LAST REVISION 10-16-13 | DATE PLOTTED => 13-DEC-2013 | TIME PLOTTED => 07:15

Dist	COUNTY	ROUTE	POST MILES TOTAL PROJECT	SHEET No.	TOTAL SHEETS
02	Sis	5	R45.6/R47.3 R62.0/R62.8	64	78

ART 10-16-13
REGISTERED ELECTRICAL ENGINEER DATE

10-16-13
PLANS APPROVAL DATE

REGISTERED PROFESSIONAL ENGINEER A.P. ROBLES No. E15293 Exp. 3-31-15 ELECTRICAL STATE OF CALIFORNIA

THE STATE OF CALIFORNIA OR ITS OFFICERS OR AGENTS SHALL NOT BE RESPONSIBLE FOR THE ACCURACY OR COMPLETENESS OF SCANNED COPIES OF THIS PLAN SHEET.

NOTES:

1. SEE PLANS FOR CONDUCTORS.
2. FOR ADDITIONAL INFORMATION, SEE SES SHEETS.

LEGEND (THIS SHEET):

1. 12" YELLOW SIGNAL SECTION WITH SV MOUNT AND BACKPLATE (Typ FOR 6)
2. VARIABLE SPEED LIMIT SIGN
3. COMMUNICATON ENCLOSURE
4. 14" x 16" x 6" NEMA 3R ENCLOSURE, WITH LOCKABLE HASP, (3) 15 A DIN RAIL MOUNTED CBs, NEUTRAL BUS AND GROUND BUS
5. 1½"C (TYPE 1), CONDUCTORS AS REQUIRED
6. POLE PLATE, FLATBACK (Typ FOR 6)
7. DRILL 2" HOLE FOR CONDUIT CLEARANCE (Typ FOR 6)
8. T CONDUIT BODY (Typ FOR 4)
9. LB CONDUIT BODY (Typ FOR 5)
10. CONDUIT STRAP (Typ)
11. CONDUIT ENTRY PER SIGN MANUFACTURER'S RECOMMENDATION

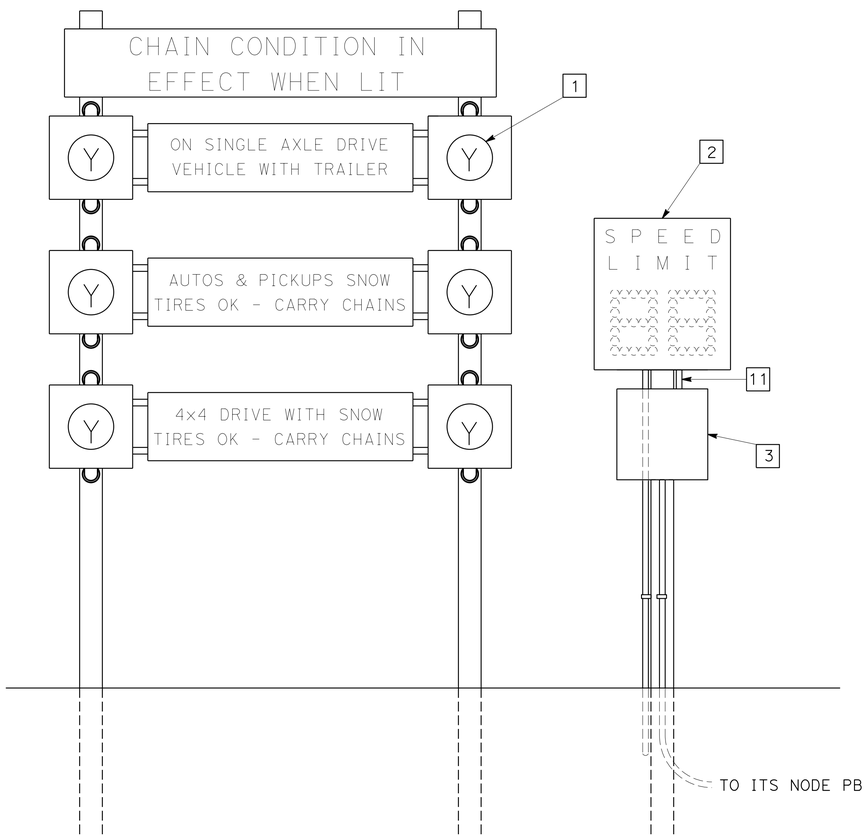

FRONT

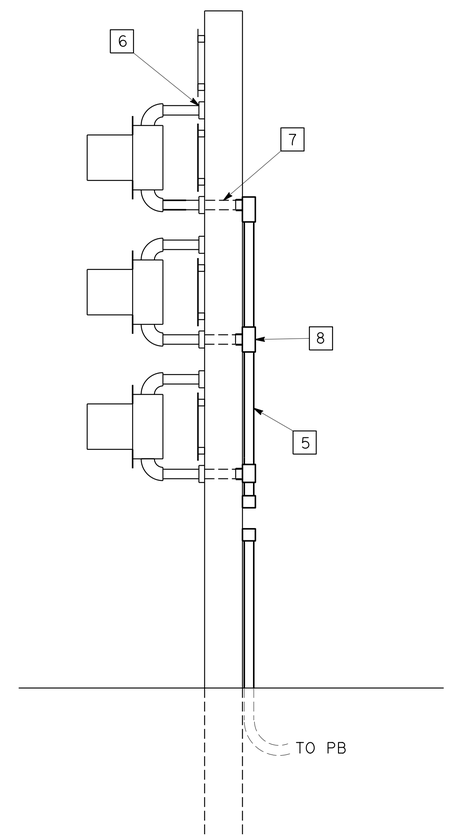

SIDE

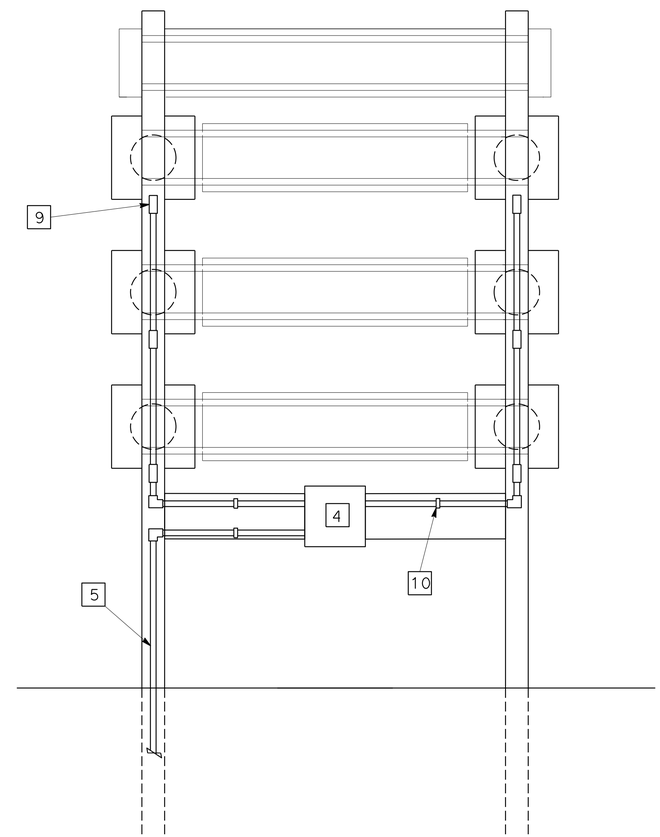

BACK

ELECTRICAL DETAILS

NO SCALE

E-13

STATE OF CALIFORNIA - DEPARTMENT OF TRANSPORTATION
Caltrans® ELECTRICAL DESIGN

FUNCTIONAL SUPERVISOR: ROB STINGER
CALCULATED-DESIGNED BY: ARTURO P. ROBLES
CHECKED BY: JAMES M. HANNIGAN
REVISED BY / DATE REVISED

P:\proj1\02\4E280_plans\pse\24e280ua013.dgn

LAST REVISION 10-16-13 | DATE PLOTTED => 13-DEC-2013 | TIME PLOTTED => 07:15

Dist	COUNTY	ROUTE	POST MILES TOTAL PROJECT	SHEET No.	TOTAL SHEETS
02	Sis	5	R45.6/R47.3 R62.0/R62.8	65	78

ART 10-16-13
REGISTERED ELECTRICAL ENGINEER DATE

10-16-13
PLANS APPROVAL DATE

REGISTERED PROFESSIONAL ENGINEER A.P. ROBLES No. E15293 Exp. 3-31-15 ELECTRICAL STATE OF CALIFORNIA

THE STATE OF CALIFORNIA OR ITS OFFICERS OR AGENTS SHALL NOT BE RESPONSIBLE FOR THE ACCURACY OR COMPLETENESS OF SCANNED COPIES OF THIS PLAN SHEET.

LIGHTING

SHEET No.	TRENCHING (6" X 30") (N)	BORING (N)	1½" CONDUIT (TYPE 3) (N)	TERMINATE 1½" CONDUIT (N)	2" CONDUIT (TYPE 3) (N)	TERMINATE 2" CONDUIT (N)	3" CONDUIT (TYPE 3) (N)	TERMINATE 3" CONDUIT (N)	No. 5 PB (N)	No. 5 PULL BOX WITH TRAFFIC COVER (N)	No. 6 PB WITH EXTENSION (N)	ITS NODE PB (N)	OBJECT MARKER (TYPE PB) (N)	PB PAVING (N)	PB AND LIGHT POLE PAVING (N)	No. 10 CONDUCTOR (N)	No. 8 CONDUCTOR (N)	No. 8 GROUND (N)	No. 6 CONDUCTOR (N)	No. 6 GROUND (N)	No. 4 CONDUCTOR (N)	No. 4 GROUND (N)	No. 2 CONDUCTOR (N)	No. 2 GROUND (N)	No. 1 CONDUCTOR (N)	No. 1 GROUND (N)	No. 4/0 CONDUCTOR (N)	No. 4/0 GROUND (N)	WARNING TAPE (N)	ANCHOR BOLTS-SET OF 4 (N)	STANDARD FOUNDATION 30/31 (N)	TYPE 30/15' LMA (N)	TYPE 31/20' LMA (N)	LED LUMINARE ROADWAY 2 (N)	FUSED SPLICE CONNECTOR 2-POLE (N)	TYPE III-A SERVICE FOUNDATION WITH ANCHOR BOLTS (N)	TYPE III-A SERVICE ENCLOSURE (ES-2D) (N)	60A, 2P CONTRACTOR (120/240/480V LIGHTING) (N)	15A, 1P TEST SWITCH (600V) (N)	30A, 1P CB (600V) (N)	45A, 2P CB (600V) (N)
	LF	LF	LF	EA	LF	LF	LF	EA	EA	EA	EA	EA	EA	EA	EA	LF	LF	LF	LF	LF	LF	LF	LF	LF	LF	LF	LF	LF	LF	EA	EA	EA	EA	EA	EA	EA	EA	EA	EA	EA	EA	EA
E-2	660		660	8	20	8			4						4	240	360	180	720	360	240	120								660	4	4	4		4	4						
E-3	1185		1150	14	80				7						7	420	1450	725			920	460								1185	7	7	7		7	7						
E-4	880	120			985	12	700	9	2	6	1	1	3	5	1	60									920	460	1400	700	880	1	1		1	1	1	1	1	1	1	1	1
E-5	1310		500	6	840	10			7						7	420							1000	500	1680	840			1310	7	7		7	7	7						
E-6	620		600	8	20	8			4						4	240			1200	600			100	50					620	4	4		4	4	4						
TOTALS	4655	120	2910	36	1950	38	700	9	26	5	1	1	3	5	23	1380	1810	905	1920	960	1160	580	1100	550	2600	1300	1400	700	4655	23	23	11	12	23	23	1	1	1	1	1	1

(N) - NOT A SEPARATE PAY ITEM. FOR INFORMATION ONLY

ELECTRICAL QUANTITIES
E-14

ARTURO P. ROBLES — REVISED BY
JAMES M. HANNIGAN — DATE REVISED
CALCULATED-DESIGNED BY
CHECKED BY
FUNCTIONAL SUPERVISOR
ROB STINGER

STATE OF CALIFORNIA - DEPARTMENT OF TRANSPORTATION
Caltrans® ELECTRICAL DESIGN

P:\proj1\02\4E280_plans\pse\24e280ua014.dgn

LAST REVISION 10-16-13 | DATE PLOTTED => 13-DEC-2013 | TIME PLOTTED => 07:15

Dist	COUNTY	ROUTE	POST MILES TOTAL PROJECT	SHEET No.	TOTAL SHEETS
02	Sis	5	R45.6/R47.3 R62.0/R62.8	66	78

ART 10-16-13
REGISTERED ELECTRICAL ENGINEER DATE

10-16-13
PLANS APPROVAL DATE

REGISTERED PROFESSIONAL ENGINEER A.P. ROBLES No. E15293 Exp. 3-31-15 ELECTRICAL STATE OF CALIFORNIA

THE STATE OF CALIFORNIA OR ITS OFFICERS OR AGENTS SHALL NOT BE RESPONSIBLE FOR THE ACCURACY OR COMPLETENESS OF SCANNED COPIES OF THIS PLAN SHEET.

BEACON SYSTEM

SHEET No.	TRENCHING	BOORING	1 ½" C (TYPE 3)	TERMINATE 1 ½" C	3"C (TYPE 1)	TERMINATE 3"C	2"C (TYPE 3)	TERMINATE 2"C	2"C (TYPE 1)	TERMINATE 2"C (TYPE 1)	INSTALL CONDUIT ON STRUCTURE	No. 5 PB	No. 5 PULL BOX WITH TRAFFIC COVER	No. 6 PB	ITS NODE PULL BOX	No. 6 PB WITH EXTENSION	OBJECT MARKER (TYPE PB)	PB PAVING	No. 10 CONDUCTOR	No. 8 CONDUCTOR	No. 8 GROUND	No. 6 CONDUCTOR	No. 6 GROUND	No. 4 CONDUCTOR	No. 4 GROUND
	(N)	(N)	(N)	(N)	(N)	(N)	(N)	(N)	(N)	(N)	(N)	(N)	(N)	(N)	(N)	(N)	(N)	(N)	(N)	(N)	(N)	(N)	(N)	(N)	(N)
	LF	LF	LF	EA	LF	EA	LF	EA	LF	EA	LF	EA	EA	EA	EA	EA	EA	EA	LF	LF	LF	LF	LF	LF	LF
E-8	1040	60	1060	11			65	4	160	2	160	2	5				5	7		3900	1300				
E-9	1390	120	650	15			1090	13	100	2	100	8	2	1	2		7	13	3480	4500	675	200	100	1600	800
E-10	1500	120	1740	29	30	6	600	13				10			7	1	5	16	7800	1600		2160	1080	1040	520
TOTALS	3930	300	3450	55	30	6	1755	30	260	4	260	20	7	1	9	1	17	36	10880	10000	1975	2360	1180	2640	1320

(N) - NOT A SEPARATE PAY ITEM, FOR INFORMATION ONLY.

ELECTRICAL QUANTITIES
E-15

REVISED BY | DATE REVISED
ARTURO P. ROBLES | JAMES M. HANNIGAN
CALCULATED-DESIGNED BY | CHECKED BY
FUNCTIONAL SUPERVISOR: ROB STINGER

STATE OF CALIFORNIA - DEPARTMENT OF TRANSPORTATION
Caltrans® ELECTRICAL DESIGN

P:\proj1\02\4E280_plans\pse\24e280ua015.dgn

LAST REVISION 10-16-13 | DATE PLOTTED => 13-DEC-2013 | TIME PLOTTED => 07:15

Dist	COUNTY	ROUTE	POST MILES TOTAL PROJECT	SHEET No.	TOTAL SHEETS
02	Sis	5	R45.6/R47.3 R62.0/R62.8	67	78

ART 10-16-13
REGISTERED ELECTRICAL ENGINEER DATE

10-16-13
PLANS APPROVAL DATE

REGISTERED PROFESSIONAL ENGINEER A.P. ROBLES No. E15293 Exp. 3-31-15 ELECTRICAL STATE OF CALIFORNIA

THE STATE OF CALIFORNIA OR ITS OFFICERS OR AGENTS SHALL NOT BE RESPONSIBLE FOR THE ACCURACY OR COMPLETENESS OF SCANNED COPIES OF THIS PLAN SHEET.

LOOP DETECTORS TO REMAIN IN PLACE AND OPERATIONAL (N)

ID No.	LOCATION	TYPE	DESCRIPTION	EQUIPMENT
R331	Sis-R47.454	RAMP	MINOR St UC SB ON-RAMP (PROPOSED LOOP)	1 LOOP
R332	Sis-5-R47.473	RAMP	MINOR St UC NB OFF-RAMP (PROPOSED LOOP)	1 LOOP
R345	Sis-5-R61.404	RAMP	HENLEY WAY SB ON-RAMP	1 LOOP
R346	Sis-5-R61.721	RAMP	HENLEY WAY NB ON-RAMP	1 LOOP
R347	Sis-5-R61.745	RAMP	HENLEY WAY Rd SB OFF-RAMP	1 LOOP
R348	Sis-5-R62.724	RAMP	DITCH CREEK Rd SB ON-RAMP	1 LOOP
R349	Sis-5-R62.751	RAMP	DITCH CREEK Rd NB OFF-RAMP	1 LOOP

(N) NOT A SEPARATE PAY ITEM, FOR INFORMATION ONLY.

MAINTAIN EXISTING TRAFFIC MANAGEMENT SYSTEM ELEMENTS DURING CONSTRUCTION

TYPE	LOCATION	DESCRIPTION
RWIS	Sis-5-R61.93	HORNBROOK, N OF HENLEY Rd UC
CMS	Sis-5-R62.04	HENLEY Rd, FACING NB TRAFFIC

BEACON SYSTEM

SHEET No.	WARNING TAPE (N)	SV MOUNT (N)	YELLOW BEACON (HOUSING AND LED) (N)	TYPE III-A SERVICE Fnd WITH ANCHOR BOLTS (N)	TYPE III-A SERVICE ENCLOSURE (20"WIDE) (N)	60A, 2P CONTACTOR (120/240/480V LIGHTING) (N)	15A, 1P TEST SWITCH (600V) (N)	30A, 1P CB (600V) (N)	100A, 2P CB (600V) (N)	CONTROLLER 332/334 Fdn WITH ANCHOR BOLTS (N)	INSTALL CONTROLLER CABINET (N)	TDC CABINET Fnd WITH ANCHOR BOLTS (N)	TDC TYPE A (N)	TELEPHONE CABLE (N)	24"X24"X8" COMMUNICATION ENCLOSURE (N)	VARIABLE SPEED LIMIT SIGN (N)	14"X14"X6" NEMA 3 ENCLOSURE (N)	15A DIN RAIL MOUNTED CB (N)
	LF	EA	EA	EA	EA	EA	EA	EA	EA	EA	EA	EA	EA	LF	EA	EA	EA	EA
E-8	1040	2	2															
E-9	1390	6	6												2	2	2	6
E-10	1500	6	6	1	1	1	1	1	2	1	1	1	1	800	2	2	2	6
TOTALS	3930	14	14	1	1	1	1	1	2	1	1	1	1	800	4	4	4	12

(N) NOT A SEPARATE PAY ITEM, FOR INFORMATION ONLY.

ELECTRICAL QUANTITIES
E-16

REVISED BY | DATE REVISED
ARTURO P. ROBLES | JAMES M. HANNIGAN
CALCULATED-DESIGNED BY | CHECKED BY
FUNCTIONAL SUPERVISOR: ROB STINGER

STATE OF CALIFORNIA - DEPARTMENT OF TRANSPORTATION
Caltrans® ELECTRICAL DESIGN

P:\proj1\02\4E280_plans\pse\24e280ua016.dgn

LAST REVISION 10-16-13 | DATE PLOTTED => 13-DEC-2013 TIME PLOTTED => 07:15

DIST	COUNTY	ROUTE	POST MILES TOTAL PROJECT	SHEET No.	TOTAL SHEETS
02	SIS	5	R45.6/R47.3 R62.0/R62.8	68	78

REGISTERED CIVIL ENGINEER 8/28/13 DATE

10-16-13
PLANS APPROVAL DATE

The State of California or its officers or agents shall not be responsible for the accuracy or completeness of electronic copies of this plan sheet.

REGISTERED PROFESSIONAL ENGINEER ATMAN MALAK No. C73369 Exp. 12-31-2014 CIVIL STATE OF CALIFORNIA

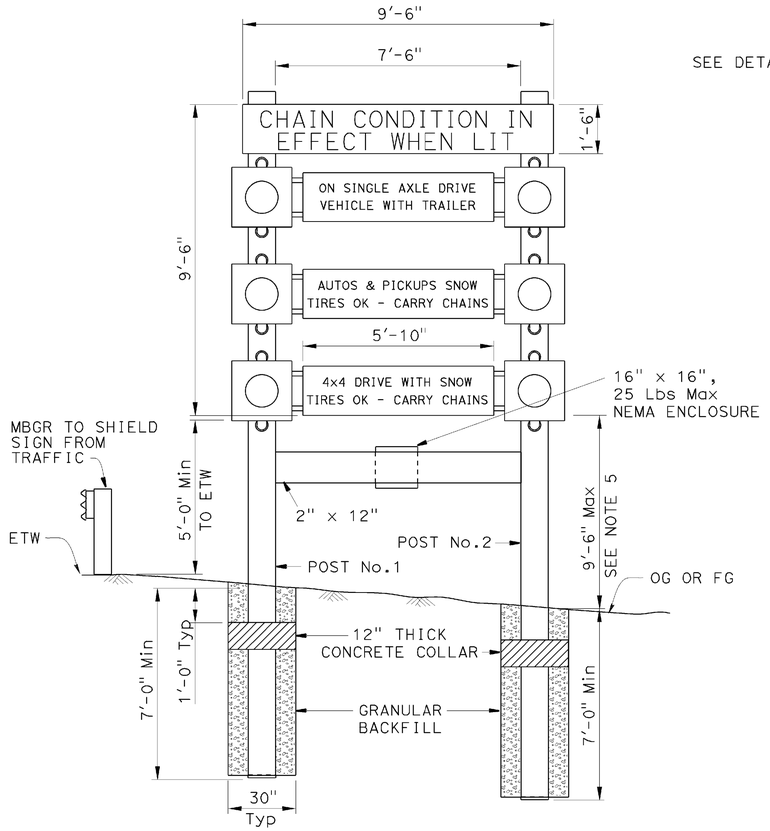

ELEVATION

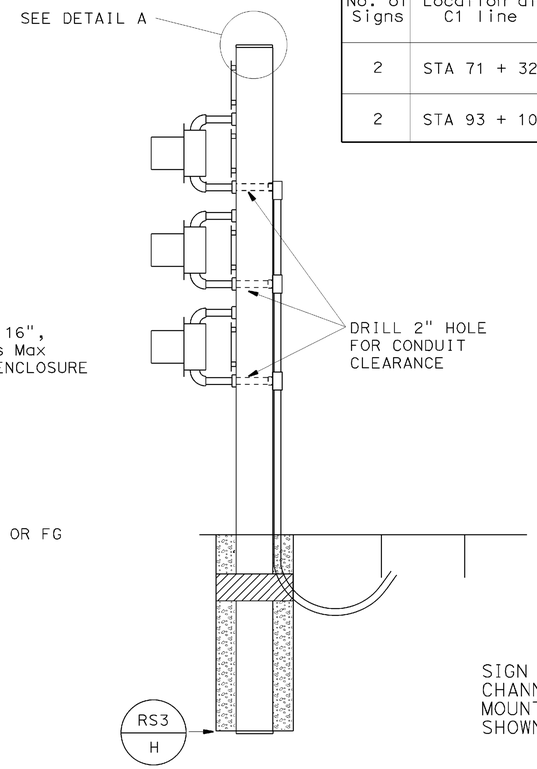

SIDE VIEW

ROAD SIDE SIGN WITH MULTIPLE BEACON

POST DATA, See Note 5

No. of Signs	Location at C1 line	Laminated Wood, Box Post Type	Section Dimensions	Length, Ft		Weight, Lb		Breakaway System	Mounting Bolt Size
				Post No. 1	Post No. 2	Post No. 1	Post No. 2		
2	STA 71 + 32	"L"	14⅞" x 7⅞"	24	26	385	400	No	⅜"ø
2	STA 93 + 10	"L"	14⅞" x 7⅞"	24	26	390	405	No	⅜"ø

Total Wt = 6300 Lbs

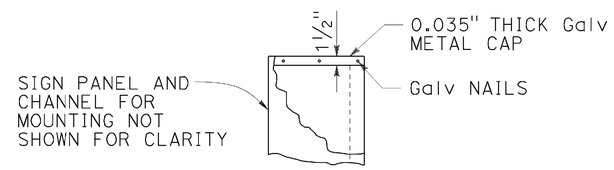

DETAIL A

GENERAL NOTES:

DESIGN:

AASHTO Specifications for Structural Supports for Highway Signs, Luminaires and Traffic Signals dated 2009 and 2010 Interim Revisions.

CONSTRUCTION:

Standard Specifications and the Special Provisions State of California Department of Transportation Dated 2010 Standard Plans State of California Department of Transportation Dated 2010

LOADING:

WIND LOADING
25 psf applied load combinations per 3.9 AASHTO specifications for Structural Supports for Highway Signs, Luminaires and Traffic Signals, dated 2009 and 2010 Interim Revisions

STANDARD PLANS DATED 2010:

A10A	ABBREVIATIONS (A-L)
A10B	ABBREVIATIONS (M-Z)
RS1	ROADSIDE SIGNS TYPICAL INSTALLATION DETAIL NO. 1
RS2	ROADSIDE SIGNS TYPICAL INSTALLATION DETAIL NO. 2
RS3	ROADSIDE SIGNS TYPICAL INSTALLATION DETAIL NO. 3
S93	FRAMING DETAILS FOR FRAMED SINGLE SHEET ALUMINUM SIGNS
S94	ROAD SIDE FRAMED SINGLE SHEET ALUMINUM SIGNS RECTANGULAR SHAPE

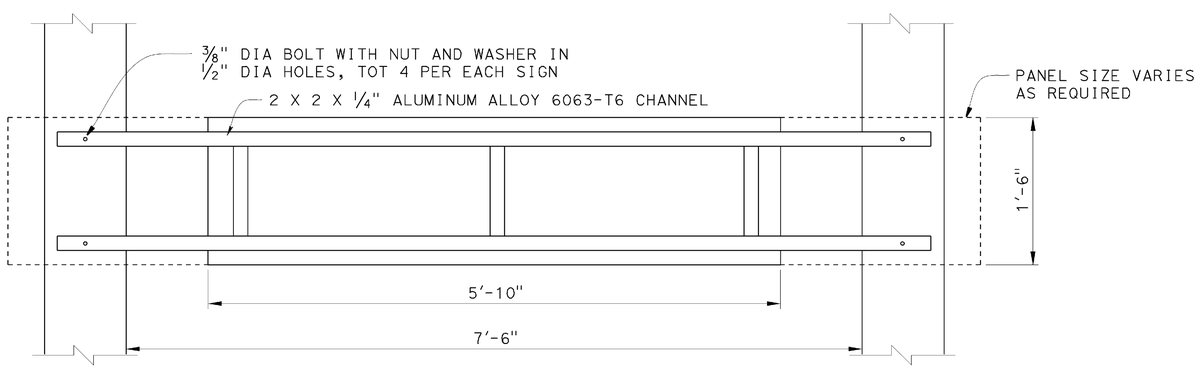

TYPICAL SIGN PANEL DETAILS

NOTES:

1. For details not shown, see "STANDARD PLANS 2010".
2. For sign location see "Project Plans". Breakaway feature is not provided for post being shielded by guardrail per Highway Design Manual 309.1.
3. All members to be welded at joints as shown on Standard Plan S93.
4. All rivets shall be 3/16" in diameter at 8" spacing and anodized aluminum. See Standard Plan S93 for rivets layout.
5. Design is based on 1V:2H Max slope Contractor to verify before post fabricating.
6. Refer to sign Manufacturer to verify bolt hole layout and length.
7. For laminated wood box post type "L" see Standard Plan RS3.

NOTE:
THE CONTRACTOR SHALL VERIFY ALL CONTROLLING FIELD DIMENSIONS BEFORE ORDERING OR FABRICATING ANY MATERIAL.

BRANCH CHIEF	JAMES SAGAR	DESIGN	BY A MALAK	CHECKED T MARCHENKO
		DETAILS	BY H NGUYEN	CHECKED A MALAK
		QUANTITIES	BY A MALAK	CHECKED T MARCHENKO

STATE OF CALIFORNIA
DEPARTMENT OF TRANSPORTATION

DIVISION OF ENGINEERING SERVICES
STRUCTURE DESIGN
SPECIAL DESIGN BRANCH

BRIDGE NO. N/A
POST MILE 46.8/47.3

BEACON SYSTEM
ROADSIDE SIGN WITH BEACON SYSTEM

SES-1

STRUCTURES DESIGN SPECIAL DESIGN SHEET (ENGLISH) (REV. 09-01-10)

ORIGINAL SCALE IN INCHES FOR REDUCED PLANS 0 1 2 3

UNIT: 3619
PROJECT NUMBER & PHASE: 0200020247 CONTRACT NO.: 02-4E2801

DISREGARD PRINTS BEARING EARLIER REVISION DATES 10-10-12

SHEET 1 OF 3

DIST	COUNTY	ROUTE	POST MILES TOTAL PROJECT	SHEET No.	TOTAL SHEETS
02	SIS	5	R45.6/R47.3 R62.0/R62.8	69	78

REGISTERED CIVIL ENGINEER — DATE 8/28/12

10-16-13
PLANS APPROVAL DATE

The State of California or its officers or agents shall not be responsible for the accuracy or completeness of electronic copies of this plan sheet.

REGISTERED PROFESSIONAL ENGINEER — ATMAN MALAK — No. C73369 — Exp. 12-31-2014 — CIVIL — STATE OF CALIFORNIA

POST DATA, See Note 3

No. of Signs	Location at C1 line	WOOD POST	Length, Ft	Breakaway System	Mounting Bolt Size
4	STA 71 + 32 STA 93 + 10	6" x 6"	19 Ft	No	1/2"Ø

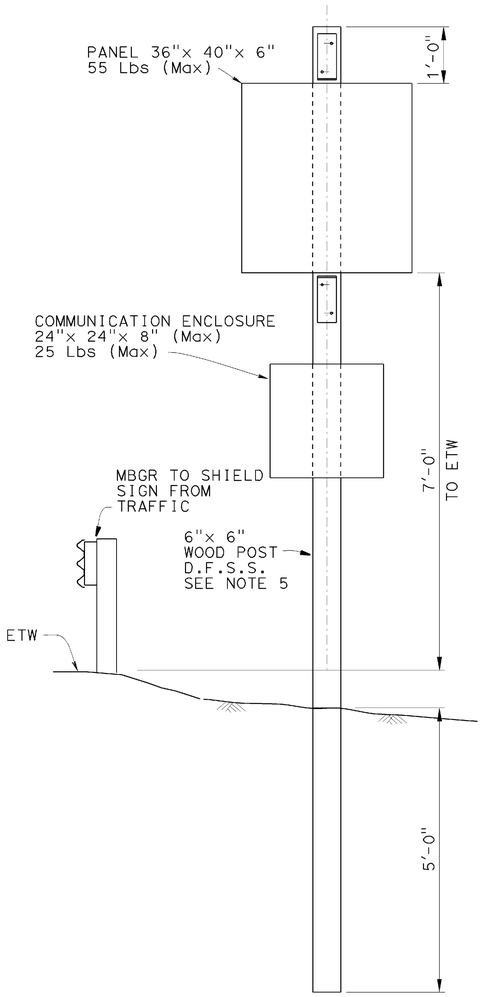

ELEVATION

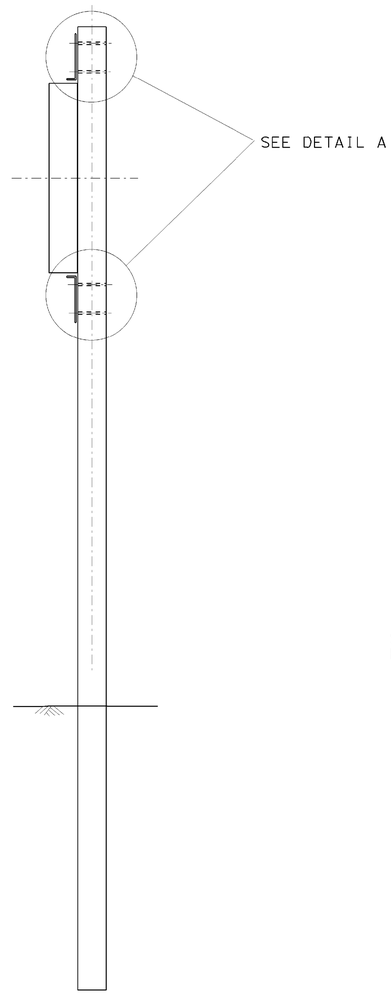

SIDE VIEW

VARIABLE SPEED LIMIT SIGN

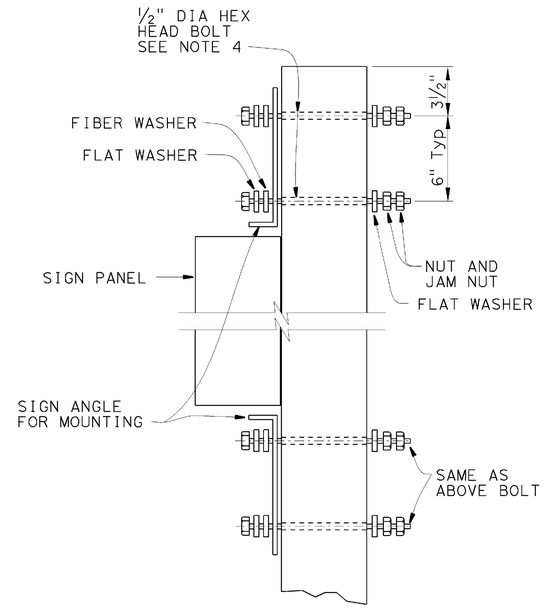

DETAIL A

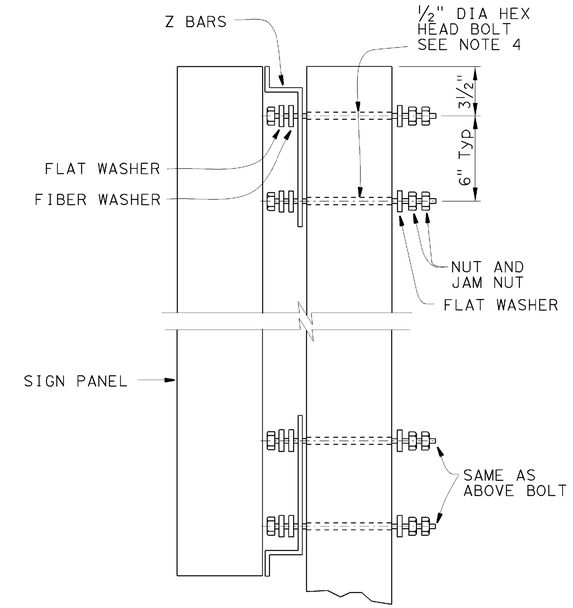

DETAIL A
(ALTERNATIVE)

NOTES:

1. For details not shown, see "STANDARD PLANS 2010".
2. For sign location see "Project Plans". Breakaway feature is not provided for post being shielded by guardrail per Highway Design Manual 309.1.
3. Design is based on 1V:4H Max slope
   Contractor to verify before post fabricating.
4. Refer to sign Manufacturer to verify bolt hole layout.
5. D.F.S.S. is Douglas Fir-Larch Select Structural.

NOTE:
THE CONTRACTOR SHALL VERIFY ALL CONTROLLING FIELD DIMENSIONS BEFORE ORDERING OR FABRICATING ANY MATERIAL.

	BY	CHECKED
DESIGN	A MALAK	T MARCHENKO
DETAILS	H NGUYEN	A MALAK
QUANTITIES	A MALAK	T MARCHENKO

STATE OF CALIFORNIA
DEPARTMENT OF TRANSPORTATION

DIVISION OF ENGINEERING SERVICES
STRUCTURE DESIGN
SPECIAL DESIGN BRANCH

BRIDGE NO. N/A
POST MILE 46.8/47.3

BEACON SYSTEM
VARIABLE SPEED LIMIT SIGN

SES-2

STRUCTURES DESIGN SPECIAL DESIGN SHEET (ENGLISH) (REV. 09-01-10)

ORIGINAL SCALE IN INCHES FOR REDUCED PLANS 0 1 2 3

UNIT: 3619
PROJECT NUMBER & PHASE: 0200020247
CONTRACT NO.: 02-4E2801

DISREGARD PRINTS BEARING EARLIER REVISION DATES → 10-10-12

REVISION DATES | SHEET 2 | OF 3

DIST	COUNTY	ROUTE	POST MILES TOTAL PROJECT	SHEET No.	TOTAL SHEETS
02	SIS	5	R45.6/R47.3 R62.0/R62.8	70	78

REGISTERED CIVIL ENGINEER — 8/28/13 DATE

10-16-13
PLANS APPROVAL DATE

The State of California or its officers or agents shall not be responsible for the accuracy or completeness of electronic copies of this plan sheet.

REGISTERED PROFESSIONAL ENGINEER — ATMAN MALAK — No. C73369 — Exp. 12-31-2014 — CIVIL — STATE OF CALIFORNIA

POST DATA, See Note 6

No. of Signs	Location at C1 line	WOOD POST	Length, Ft		Breakaway System	Mounting Bolt Size
			POST No.1	POST No.2		
2	STA 52 + 63	6" x 8"	23.5	27.0	No	3/8"ø

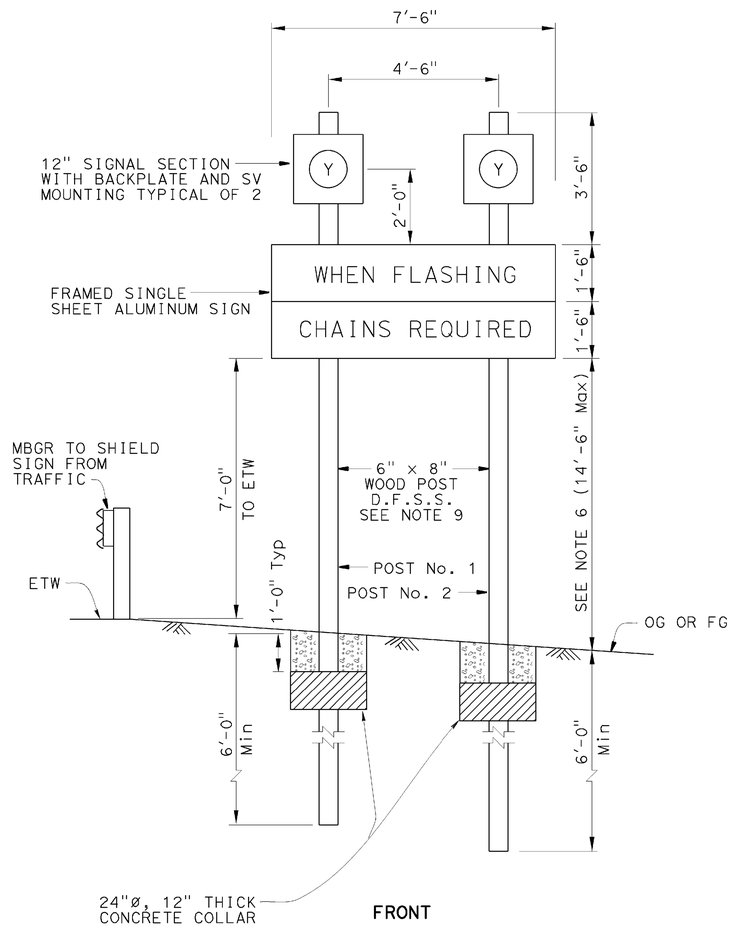

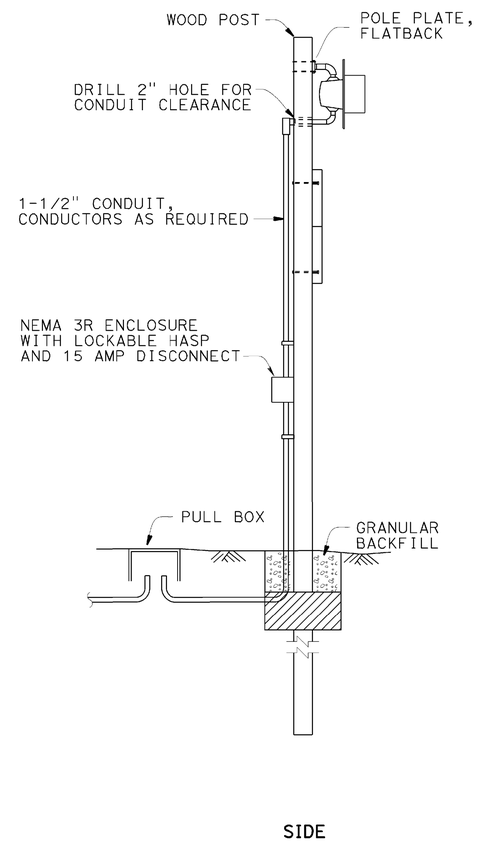

ADVANCE SIGN AT STA 52+63

NOTES:

1. For details not shown, see "STANDARD PLANS 2010".
2. For sign location see "Project Plans". Breakaway feature is not provided for post being shielded by guardrail per Highway Design Manual 309.1.
3. For sign framing details see Standard Plan S94.
4. All members to be welded at joints as shown on Standard Plan S93.
5. All rivets shall be 3/16" in diameter at 8" spacing and anodized aluminum. See Standard Plan S93 for rivets layout.
6. Design is based on 1V:2H Max slope Contractor to verify before post fabricating.
7. Refer to sign Manufacturer to verify bolt hole layout.
8. Place long dimension of post cross section normal to sign axis. See Standard Plan RS2.
9. D.F.S.S. is Douglas Fir-Larch Select Structural.

NOTE:
THE CONTRACTOR SHALL VERIFY ALL CONTROLLING FIELD DIMENSIONS BEFORE ORDERING OR FABRICATING ANY MATERIAL.

	BY	CHECKED
DESIGN	A MALAK	T MARCHENKO
DETAILS	H NGUYEN	A MALAK
QUANTITIES	A MALAK	T MARCHENKO

STATE OF CALIFORNIA
DEPARTMENT OF TRANSPORTATION

DIVISION OF ENGINEERING SERVICES
STRUCTURE DESIGN
SPECIAL DESIGN BRANCH

BRIDGE NO. N/A
POST MILE 46.8/47.3

BEACON SYSTEM
ADVANCE ROADSIDE SIGN

SES-3

STRUCTURES DESIGN SPECIAL DESIGN SHEET (ENGLISH) (REV. 09-01-10)

ORIGINAL SCALE IN INCHES FOR REDUCED PLANS 0 1 2 3

UNIT: 3619
PROJECT NUMBER & PHASE: 0200020247
CONTRACT NO.: 02-4E2801

DISREGARD PRINTS BEARING EARLIER REVISION DATES 11-26-12

SHEET 3 OF 3

M

Maint	MAINTENANCE
Max	MAXIMUM
MB	METAL BEAM
MBB	METAL BEAM BARRIER
MBGR	METAL BEAM GUARD RAILING
Med	MEDIAN
MGS	MIDWEST GUARDRAIL SYSTEM
MH	MANHOLE
Min	MINIMUM
Misc	MISCELLANEOUS
Misc I & S	MISCELLANEOUS IRON AND STEEL
Mkr	MARKER
Mod	MODIFIED,
	MODIFY
Mon	MONUMENT
MP	METAL PLATE
MPGR	METAL PLATE GUARD RAILING
MR	MOVEMENT RATING
MSE	MECHANICALLY STABILIZED EMBANKMENT
Mt	MOUNTAIN, MOUNT
Mtl	MATERIAL
MVP	MAINTENANCE VEHICLE PULLOUT

N

N	NORTH
NB	NORTHBOUND
No.	NUMBER (MUST HAVE PERIOD)
Nos.	NUMBERS (MUST HAVE PERIOD)
NPS	NOMINAL PIPE SIZE
NS	NEAR SIDE
NSP	NEW STANDARD PLAN
NTS	NOT TO SCALE

O

Oblr	OBLITERATE
OC	OVERCROSSING
OD	OUTSIDE DIAMETER
OF	OUTSIDE FACE
OG	ORIGINAL GROUND
OGAC	OPEN GRADED ASPHALT CONCRETE
OGFC	OPEN GRADED FRICTION COURSE
OH	OVERHEAD
OHWM	ORDINARY HIGH WATER MARK
O-O	OUT TO OUT
Opp	OPPOSITE
OSD	OVERSIDE DRAIN

P

P	PAGE
PAP	PERFORATED ALUMINUM PIPE
PB	PULL BOX
PC	POINT OF CURVATURE,
	PRECAST
PCC	POINT OF COMPOUND CURVE,
	PORTLAND CEMENT CONCRETE
PCMS	PORTABLE CHANGEABLE MESSAGE SIGN
PCP	PERFORATED CONCRETE PIPE,
	PRESTRESSED CONCRETE PIPE
PCVC	POINT OF COMPOUND VERTICAL CURVE
PEC	PERMIT TO ENTER AND CONSTRUCT
Ped	PEDESTRIAN
Ped OC	PEDESTRIAN OVERCROSSING
Ped UC	PEDESTRIAN UNDERCROSSING
Perm Mtl	PERMEABLE MATERIAL

P continued

PG	PROFILE GRADE
PI	POINT OF INTERSECTION
PJP	PARTIAL JOINT PENETRATION
Pkwy	PARKWAY
ℙL,PL	PLATE
P/L	PROPERTY LINE
PM	POST MILE,
	TIME FROM NOON TO MIDNIGHT
PN	PAVING NOTCH
POC	POINT OF HORIZONTAL CURVE
POT	POINT OF TANGENT
POVC	POINT OF VERTICAL CURVE
PP	PIPE PILE,
	PLASTIC PIPE,
	POWER POLE
PPL	PREFORMED PERMEABLE LINER
PPP	PERFORATED PLASTIC PIPE
PRC	POINT OF REVERSE CURVE
PRF	PAVEMENT REINFORCING FABRIC
PRVC	POINT OF REVERSE VERTICAL CURVE
PS&E	PLANS, SPECIFICATIONS AND ESTIMATES
PS, P/S	PRESTRESSED
PSP	PERFORATED STEEL PIPE
PT	POINT OF TANGENCY
PVC	POLYVINYL CHLORIDE
Pvmt	PAVEMENT

Q

Qty	QUANTITY

R

R	RADIUS
R & D	REMOVE AND DISPOSE
R & S	REMOVE AND SALVAGE
R/C	RATE OF CHANGE
RCA	REINFORCED CONCRETE ARCH
RCB	REINFORCED CONCRETE BOX
RCP	REINFORCED CONCRETE PIPE
RCPA	REINFORCED CONCRETE PIPE ARCH
Rd	ROAD
Reinf	REINFORCED,
	REINFORCEMENT,
	REINFORCING
Rel	RELOCATE
Repl	REPLACEMENT
Ret	RETAINING
Rev	REVISED, REVISION
Rdwy	ROADWAY
RHMA	RUBBERIZED HOT MIX ASPHALT
Riv	RIVER
RM	ROAD-MIXED
RP	RADIUS POINT,
	REFERENCE POINT
RR	RAILROAD
RSP	ROCK SLOPE PROTECTION,
	REVISED STANDARD PLAN
Rt	RIGHT
Rte	ROUTE
RW	REDWOOD,
	RETAINING WALL
R/W	RIGHT OF WAY
Rwy	RAILWAY

S

S	SOUTH,
	SUPPLEMENT
SAE	STRUCTURE APPROACH EMBANKMENT
Salv	SALVAGE
SAPP	STRUCTURAL ALUMINUM PLATE PIPE
SB	SOUTHBOUND
SC	SAND CUSHION
SCSP	SLOTTED CORRUGATED STEEL PIPE
SD	STORM DRAIN
Sec	SECOND,
	SECTION
Sep	SEPARATION
SG	SUBGRADE
Shld	SHOULDER
Sht	SHEET
Sim	SIMILAR
℄	STATION LINE
SM	SELECTED MATERIAL
Spec	SPECIAL,
	SPECIFICATIONS
SPP	SLOTTED PLASTIC PIPE
SS	SLOPE STAKE
SSBM	STRAP AND SADDLE BRACKET METHOD
SSD	STRUCTURAL SECTION DRAIN
SSPA	STRUCTURAL STEEL PLATE ARCH
SSPP	STRUCTURAL STEEL PLATE PIPE
SSPPA	STRUCTURAL STEEL PLATE PIPE ARCH
SSRP	STEEL SPIRAL RIB PIPE
St	STREET
Sta	STATION
STBB	SINGLE THRIE BEAM BARRIER
Std	STANDARD
Str	STRUCTURE
Surf	SURFACING
SW	SIDEWALK,
	SOUND WALL
Swr	SEWER
Sym	SYMMETRICAL
S4S	SURFACE 4 SIDES

T

T	SEMI-TANGENT
Tan	TANGENT
TBB	THRIE BEAM BARRIER
Tbr	TIMBER
TC	TOP OF CURB
TCB	TRAFFIC CONTROL BOX
TCE	TEMPORARY CONSTRUCTION EASEMENT
Tel	TELEPHONE
Temp	TEMPORARY
TG	TOP OF GRADE
Tot	TOTAL
TP	TELEPHONE POLE
TPB	TREATED PERMEABLE BASE
TPM	TREATED PERMEABLE MATERIAL
Trans	TRANSITION

T continued

TS	TRANSVERSE,
	TRAFFIC SIGNAL,
	TUBULAR STEEL
Typ	TYPICAL

U

UC	UNDERCROSSING
UD	UNDERDRAIN
UG	UNDERGROUND
UON	UNLESS OTHERWISE NOTED
UP	UNDERPASS

V

V	VALVE,
	DESIGN SPEED
Var	VARIABLE,
	VARIES
VC	VERTICAL CURVE
VCP	VITRIFIED CLAY PIPE
Vert	VERTICAL
Via	VIADUCT
Vol	VOLUME

W

W	WEST,
	WIDTH
WB	WESTBOUND
WH	WEEP HOLE
WM	WIRE MESH
WS	WATER SURFACE
WSP	WELDED STEEL PIPE
Wt	WEIGHT
WV	WATER VALVE
WW	WINGWALL
WWLOL	WINGWALL LAYOUT LINE

X

X Sec	CROSS SECTION
Xing	CROSSING

Y

Yr	YEAR
Yrs	YEARS

Dist	COUNTY	ROUTE	POST MILES TOTAL PROJECT	SHEET No.	TOTAL SHEETS
02	Sis	5	R45.6/R47.3 R62.0/R62.8	71	78

Grace M. Tsushima
REGISTERED CIVIL ENGINEER

July 19, 2013
PLANS APPROVAL DATE

REGISTERED PROFESSIONAL ENGINEER
Grace M. Tsushima
No. C49814
Exp. 9-30-14
CIVIL
STATE OF CALIFORNIA

THE STATE OF CALIFORNIA OR ITS OFFICERS OR AGENTS SHALL NOT BE RESPONSIBLE FOR THE ACCURACY OR COMPLETENESS OF SCANNED COPIES OF THIS PLAN SHEET.

TO ACCOMPANY PLANS DATED 10-16-13

UNIT OF MEASUREMENT SYMBOLS:

Some of the symbols used in the project plan quantity tables and in the Bid Item List are:

TABLE A

SYMBOL USED	DEFINITIONS
ACRE	ACRE
CF	CUBIC FOOT
CY	CUBIC YARD
EA	EACH
GAL	GALLON
LB	POUND
LF	LINEAR FOOT
SQFT	SQUARE FOOT
SQYD	SQUARE YARD
STA	100 FEET
TAB	TABLET
TON	2,000 POUNDS

Some of the symbols used in the plans other than in the project plan quantity tables are:

TABLE B

SYMBOL USED	DEFINITIONS
ksi	KIPS PER SQUARE INCH
ksf	KIPS PER SQUARE FOOT
psi	POUNDS PER SQUARE INCH
psf	POUNDS PER SQUARE FOOT
lb/ft^3, pcf	POUNDS PER CUBIC FOOT
tsf	TONS PER SQUARE FOOT
mph, MPH *	MILES PER HOUR
ø	NOMINAL DIAMETER
oz	OUNCE
lb	POUND
kip	1,000 POUNDS
cal	CALORIE
ft	FOOT OR FEET
gal	GALLON

* For use on a sign panel only

STATE OF CALIFORNIA
DEPARTMENT OF TRANSPORTATION

ABBREVIATIONS (SHEET 2 OF 2)

NO SCALE

RSP A10B DATED JULY 19, 2013 SUPERSEDES STANDARD PLAN A10B
DATED MAY 20, 2011 - PAGE 2 OF THE STANDARD PLANS BOOK DATED 2010.

REVISED STANDARD PLAN RSP A10B

2010 REVISED STANDARD PLAN RSP A10B

DATE PLOTTED => 13-DEC-2013
TIME PLOTTED => 07:16
P:\proj1\02\4E280_plans\pse\24e280va001.dgn

USERNAME => s123119
DGN FILE => 24e280va001.dgn

6-7-13

Dist	COUNTY	ROUTE	POST MILES TOTAL PROJECT	SHEET No.	TOTAL SHEETS
02	Sis	5	R45.6/R47.3 R62.0/R62.8	72	78

REGISTERED CIVIL ENGINEER

July 19, 2013
PLANS APPROVAL DATE

REGISTERED PROFESSIONAL ENGINEER
Gurinderpal Bhullar
No. C48815
Exp. 9-30-14
CIVIL
STATE OF CALIFORNIA

THE STATE OF CALIFORNIA OR ITS OFFICERS OR AGENTS SHALL NOT BE RESPONSIBLE FOR THE ACCURACY OR COMPLETENESS OF SCANNED COPIES OF THIS PLAN SHEET.

TO ACCOMPANY PLANS DATED 10-16-13

2010 REVISED STANDARD PLAN RSP T9

TABLE 1

TAPER LENGTH CRITERIA AND CHANNELIZING DEVICE SPACING

SPEED (S)	MINIMUM TAPER LENGTH * FOR WIDTH OF OFFSET 12 FEET (W)				MAXIMUM CHANNELIZING DEVICE SPACING		
					X	Y	Z **
	TANGENT 2L	MERGING L	SHIFTING L/2	SHOULDER L/3	TAPER	TANGENT	CONFLICT
mph	ft	ft	ft	ft	ft	ft	ft
20	160	80	40	27	20	40	10
25	250	125	63	42	25	50	12
30	360	180	90	60	30	60	15
35	490	245	123	82	35	70	17
40	640	320	160	107	40	80	20
45	1080	540	270	180	45	90	22
50	1200	600	300	200	50	100	25
55	1320	660	330	220	55	110	27
60	1440	720	360	240	60	120	30
65	1560	780	390	260	65	130	32
70	1680	840	420	280	70	140	35

* - For other offsets, use the following merging taper length formula for L:
For speed of 40 mph or less, $L = WS^2/60$
For speed of 45 mph or more, $L = WS$

Where: L = Taper length in feet
W = Width of offset in feet
S = Posted speed limit, off-peak 85th-percentile speed prior to work starting, or the anticipated operating speed in mph

** - Use for taper and tangent sections where there are no pavement markings or where there is a conflict between existing pavement markings and channelizers (CA).

TABLE 2

LONGITUDINAL BUFFER SPACE AND FLAGGER STATION SPACING

SPEED *	Min D **	DOWNGRADE Min D ***		
		-3%	-6%	-9%
mph	ft	ft	ft	ft
20	115	116	120	126
25	155	158	165	173
30	200	205	215	227
35	250	257	271	287
40	305	315	333	354
45	360	378	400	427
50	425	446	474	507
55	495	520	553	593
60	570	598	638	686
65	645	682	728	785
70	730	771	825	891

* - Speed is posted speed limit, off-peak 85th-percentile speed prior to work starting, or the anticipated operating speed in mph

** - Longitudinal buffer space or flagger station spacing

*** - Use on sustained downgrade steeper than -3 percent and longer than 1 mile.

TABLE 3

ADVANCE WARNING SIGN SPACING

ROAD TYPE	DISTANCE BETWEEN SIGNS *		
	A	B	C
	ft	ft	ft
URBAN - 25 mph OR LESS	100	100	100
URBAN - MORE THAN 25 mph TO 40 mph	250	250	250
URBAN - MORE THAN 40 mph	350	350	350
RURAL	500	500	500
EXPRESSWAY / FREEWAY	1000	1500	2640

* - The distances are approximate, are intended for guidance purposes only, and should be applied with engineering judgment. These distances should be adjusted by the Engineer for field conditions, if necessary, by increasing or decreasing the recommmended distances.

STATE OF CALIFORNIA
DEPARTMENT OF TRANSPORTATION

TRAFFIC CONTROL SYSTEM TABLES FOR LANE AND RAMP CLOSURES

NO SCALE

RSP T9 DATED JULY 19, 2013 SUPERSEDES RSP T9 DATED APRIL 19, 2013 THAT SUPPLEMENTS THE STANDARD PLANS BOOK DATED 2010.

REVISED STANDARD PLAN RSP T9

TO ACCOMPANY PLANS DATED 10-16-13

Dist	COUNTY	ROUTE	POST MILES TOTAL PROJECT	SHEET No.	TOTAL SHEETS
02	Sis	5	R45.6/R47.3 R62.0/R62.8	73	78

REGISTERED CIVIL ENGINEER

April 19, 2013
PLANS APPROVAL DATE

REGISTERED PROFESSIONAL ENGINEER Gurinderpal Bhullar No. C48815 Exp. 9-30-14 CIVIL STATE OF CALIFORNIA

THE STATE OF CALIFORNIA OR ITS OFFICERS OR AGENTS SHALL NOT BE RESPONSIBLE FOR THE ACCURACY OR COMPLETENESS OF SCANNED COPIES OF THIS PLAN SHEET.

NOTES:

See Revised Standard Plan RSP T9 for tables.

Use cone spacing X for taper segment, Y for tangent segment or Z for conflict situations, as approriate, per Table 1, unless X, Y, or Z cone spacing is shown on this sheet.

Unless otherwise specified in the special provisions, all temporary warning signs shall have black legend on fluorescent orange background.

California codes are designated by (CA). Otherwise, Federal (MUTCD) codes are shown.

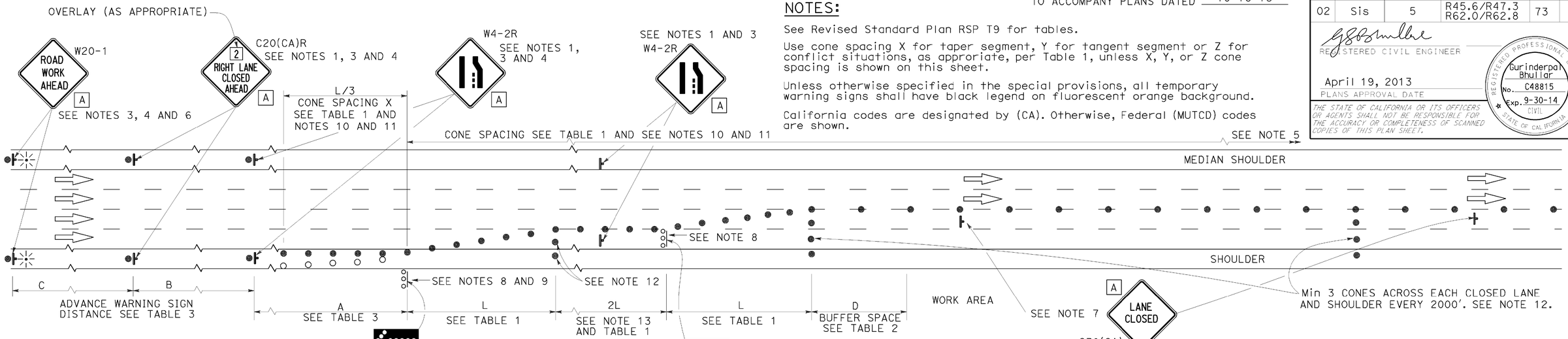

LANE CLOSURE

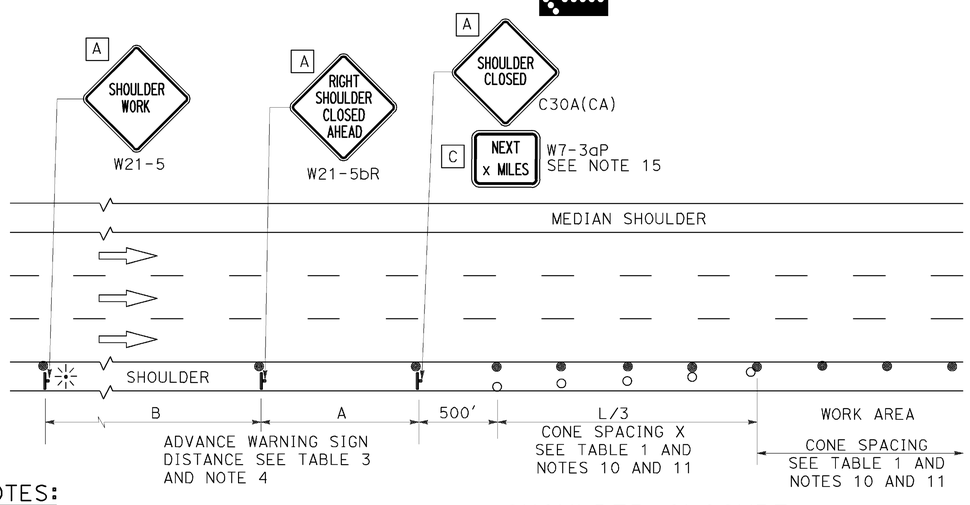

SHOULDER CLOSURE

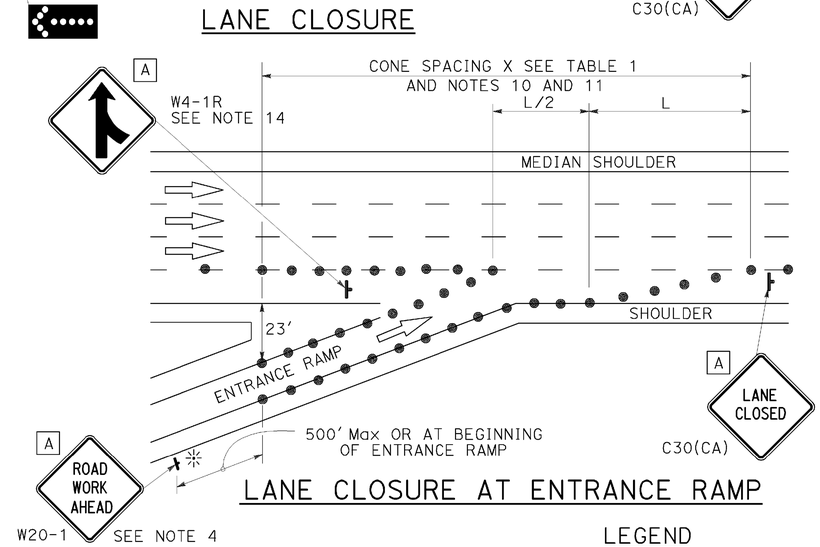

LANE CLOSURE AT ENTRANCE RAMP

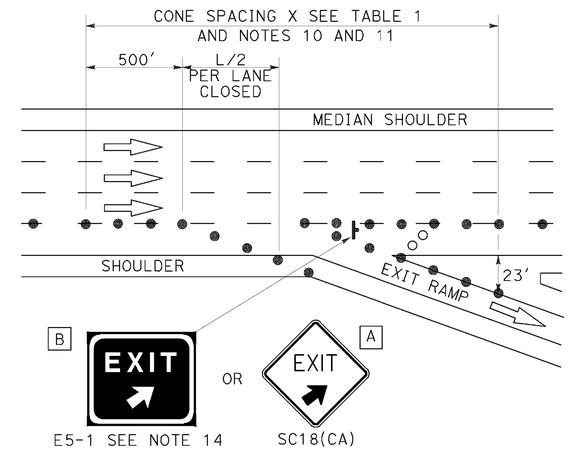

LANE CLOSURE AT EXIT RAMP

NOTES:

1. Median lane closures shall conform to the details as shown except that C20(CA)L and W4-2L signs shall be used.
2. At least one person shall be assigned to provide full time maintenance of traffic control devices for lane closures.
3. Duplicate sign installations are not required:
   a) On opposite shoulder if at least one-half of the available lanes remain open to traffic.
   b) In the median if the width of the median shoulder is less than 8' and the outside lanes are to be closed.
4. Each advance warning sign on each side of the roadway shall be equipped with at least two flags for daytime closure. Each flag shall be at least 16" x 16" in size and shall be orange or fluorescent red-orange in color. Flashing beacons shall be placed at the locations indicated for lane closure during hours of darkness.
5. A G20-2 "END ROAD WORK" sign, with minimum size of 48" x 24" as appropriate, shall be placed at the end of the lane closure unless the end of work area is obvious or ends within a larger project's limits.
6. If the W20-1 sign would follow within 2000' of a stationary W20-1 or G20-1 "ROAD WORK NEXT _____ MILES", use a C20(CA) sign for the first advance warning sign.
7. Place a C30(CA) sign every 2000' throughout length of lane closure.
8. One flashing arrow sign for each lane closed. The flashing arrow signs shall be Type I.
9. A minimum 1500' of sight distance shall be provided where possible for vehicles approaching the first flashing arrow sign. Lane closures shall not begin at top of crest vertical curve or on a horizontal curve.
10. All cones used for lane closures during the hours of darkness shall be fitted with retroreflective bands (or sleeves) as specified in the specifications.
11. Portable delineators, placed at one-half the spacing indicated for traffic cones may be used instead of cones for daytime closures only.
12. Unless otherwise specified in the special provisions, a minimum of 3 cones shall be placed transversely across each closed lane and shoulder at each location where a taper across a traffic lane ends and every 2000' as shown on the "Lane Closure" detail. Two Type II barricades may be used instead of the 3 cones. The transverse alignment of the cones or barricades on the closed shoulder may be shifted from the transverse alignment to provide access to the work.
13. Unless otherwise specified in the special provisions, the 2L tangent shown along lane lines shall be used between the L tapers required for each closed traffic lane.
14. Unless otherwise specified in the special provisions, the E5-1 or SC18(CA) and W4-1 signs shall be used as shown.
15. A W7-3aP "NEXT____MILES" plaque must be used if theshoulder closure extends beyond the distance that can be perceived by road users.

LEGEND

- TRAFFIC CONE
- TRAFFIC CONE (OPTIONAL TAPER)
- TEMPORARY TRAFFIC CONTROL SIGN
- FLASHING ARROW SIGN (FAS)
- FAS SUPPORT OR TRAILER
- PORTABLE FLASHING BEACON

SIGN PANEL SIZE (Min)

A	48" x 48"
B	72" x 60"
C	36" x 30"

STATE OF CALIFORNIA
DEPARTMENT OF TRANSPORTATION

TRAFFIC CONTROL SYSTEM FOR LANE CLOSURE ON FREEWAYS AND EXPRESSWAYS

NO SCALE

RSP T10 DATED APRIL 19, 2013 SUPERSEDES STANDARD PLAN T10 DATED MAY 20, 2011 - PAGE 237 OF THE STANDARD PLANS BOOK DATED 2010.

REVISED STANDARD PLAN RSP T10

2010 REVISED STANDARD PLAN RSP T10

DATE PLOTTED => 13-DEC-2013
TIME PLOTTED => 07:16
P:\proj\02\4E280_plans\pse\24e280va003.dgn

USERNAME => s123119
DGN FILE => 24e280va003.dgn

12-18-12

Dist	COUNTY	ROUTE	POST MILES TOTAL PROJECT	SHEET No.	TOTAL SHEETS
02	Sis	5	R45.6/R47.3 R62.0/R62.8	74	78

Theresa Gabriel
REGISTERED ELECTRICAL ENGINEER

July 19, 2013
PLANS APPROVAL DATE

REGISTERED PROFESSIONAL ENGINEER
Theresa Aziz Gabriel
No. E15129
Exp. 6-30-14
ELECTRICAL
STATE OF CALIFORNIA

THE STATE OF CALIFORNIA OR ITS OFFICERS OR AGENTS SHALL NOT BE RESPONSIBLE FOR THE ACCURACY OR COMPLETENESS OF SCANNED COPIES OF THIS PLAN SHEET.

TO ACCOMPANY PLANS DATED 10-16-13

LEGEND:

AB	ABANDON. IF APPLIED TO CONDUIT, REMOVE CONDUCTORS
BC	INSTALL PULL BOX IN EXISTING CONDUIT RUN
BP	PEDESTRIAN BARRICADE, TYPE AS INDICATED ON PLAN
CB	INSTALL CONDUIT INTO EXISTING PULL BOX
CC	CONNECT NEW AND EXISTING CONDUIT. REMOVE EXISTING CONDUCTORS AND INSTALL CONDUCTORS AS INDICATED
CF	CONDUIT TO REMAIN FOR FUTURE USE. REMOVE CONDUCTORS. INSTALL PULL TAPE
DH	DETECTOR HANDHOLE
FA	FOUNDATION TO BE ABANDONED
IS	INSTALL SIGN ON SIGNAL MAST ARM
NS	NO SLIP BASE ON STANDARD
PEC	PHOTOELECTRIC CONTROL
PEU	PHOTOELECTRIC UNIT
RC	EQUIPMENT OR MATERIAL TO BE REMOVED AND BECOME THE PROPERTY OF THE CONTRACTOR
RE	REMOVE ELECTROLIER, FUSES AND BALLAST. TAPE ENDS OF CONDUCTORS
RL	RELOCATE EQUIPMENT
RR	REMOVE AND REUSE EQUIPMENT
RS	REMOVE AND SALVAGE EQUIPMENT
SC	SPLICE NEW TO EXISTING CONDUCTORS
SD	SERVICE DISCONNECT
TSP	TELEPHONE SERVICE POINT

ABBREVIATIONS

APS	ACCESSIBLE PEDESTRIAN SIGNAL
BBS	BATTERY BACKUP SYSTEM
BC	BOLT CIRCLE
BPB	BICYCLE PUSH BUTTON
C	CONDUIT
CB	CIRCUIT BREAKER
CCTV	CLOSED CIRCUIT TELEVISION
Ckt	CIRCUIT
CMS	CHANGEABLE MESSAGE SIGN
Ctid	CALTRANS IDENTIFICATION
Comm	COMMUNICATION
DLC	LOOP DETECTOR LEAD-IN CABLE
EMS	EXTINGUISHABLE MESSAGE SIGN
EVUC	EMERGENCY VEHICLE UNIT CABLE
EVUD	EMERGENCY VEHICLE UNIT DETECTOR
FB	FLASHING BEACON
FBCA	FLASHING BEACON CONTROL ASSEMBLY
FBS	FLASHING BEACON WITH SLIP BASE
FO	FIBER OPTIC
G	EQUIPMENT GROUNDING CONDUCTOR
GB	GROUND BUS
GFCI	GROUND FAULT CIRCUIT INTERRUPTER
HAR	HIGHWAY ADVISORY RADIO
Hex	HEXAGONAL
HPS	HIGH PRESSURE SODIUM
IISNS	INTERNALLY ILLUMINATED STREET NAME SIGN
ISL	INDUCTION SIGN LIGHTING
LED	LIGHT EMITTING DIODE
LMA	LUMINAIRE MAST ARM
LPS	LOW PRESSURE SODIUM
Ltg	LIGHTING
Lum	LUMINAIRE
M	METERED
MAT	MAST ARM MOUNTING TOP ATTACHMENT
MAS	MAST ARM MOUNTING SIDE ATTACHMENT
M/M	MULTIPLE TO MULTIPLE TRANSFORMER
Mtg	MOUNTING
MV	MERCURY VAPOR LIGHTING FIXTURE
MVDS	MICROWAVE VEHICLE DETECTION SYSTEM
N	NEUTRAL (GROUNDED CONDUCTOR)
NB	NEUTRAL BUS
NC	NORMALLY CLOSE
NO	NORMALLY OPEN
P	CIRCUIT BREAKER'S POLE
PB	PULL BOX
PBA	PUSH BUTTON ASSEMBLY
PEC	PHOTOELECTRIC CONTROL
Ped	PEDESTRIAN
PEU	PHOTOELECTRIC UNIT
PT	CONDUIT WITH PULL TAPE
RE	RELOCATED EQUIPMENT
RM	RAMP METERING
RWIS	ROADSIDE WEATHER INFORMATION SYSTEM
SB	SLIP BASE
SIC	SIGNAL INTERCONNECT CABLE
Sig	SIGNAL
SMA	SIGNAL MAST ARM
SNS	STREET NAME SIGN
SP	SERVICE POINT
TDC	TELEPHONE DEMARCATION CABINET
TMS	TRAFFIC MONITORING STATION
TOS	TRAFFIC OPERATIONS SYSTEM
Veh	VEHICLE
VIVDS	VIDEO IMAGE VEHICLE DETECTION SYSTEM
WIM	WEIGH-IN-MOTION
Xfmr	TRANSFORMER

SOFFIT AND WALL MOUNTED LUMINAIRES

PENDANT, 70 W HPS UNLESS OTHERWISE SPECIFIED

FLUSH, 70 W HPS UNLESS OTHERWISE SPECIFIED

WALL SURFACE, 70 W HPS UNLESS OTHERWISE SPECIFIED

EXISTING SOFFIT OR WALL LUMINAIRE TO REMAIN UNMODIFIED

EXISTING SOFFIT OR WALL LUMINAIRE TO BE MODIFIED AS SPECIFIED

NOTE:
Arrow indicates "street side" of luminaire.

MISCELLANEOUS ELECTROLIERS

NEW	EXISTING	
		LUMINAIRE ON WOOD POLE
		NON-STANDARD ELECTROLIER (SEE PROJECT NOTES OR PROJECT PLANS)
		CITY ELECTROLIER
		ELECTROLIER FOUNDATION (FUTURE INSTALLATION)

NOTES:

1. HPS luminaires shall be 310 W HPS when installed on Type 21, 21D, 30, 31 and 32 Standards, unless otherwise specified. HPS luminaires shall be 200 W when installed on other type standards or poles, unless otherwise specified.
2. LED luminaires shall be 235 W when installed on Type 21, 21D, 30, 31 and 32 Standards, unless otherwise specified. LED luminaires shall be 165 W when installed on other type standards or poles, unless otherwise specified.
3. Luminaires shall be the cutoff type, ANSI Type III medium cutoff lighting distribution, unless otherwise specified.

STANDARD ELECTROLIER

NEW	EXISTING	STANDARD TYPE
		15
		15D
		15 STRUCTURE
		15D STRUCTURE
		21
		21D
		21 STRUCTURE
		21D STRUCTURE
		30
		31
		32

COMMONLY USED SYMBOLS FOR UNITED STATES CUSTOMARY UNITS OF MEASUREMENT:

SYMBOL USED	DEFINITIONS
Ω	OHMS
min	MINUTE
s	SECOND
bps	BITS PER SECOND
Bps	BYTES PER SECOND
A	AMPERE
V	VOLT
$V_{(dc)}$	VOLT (DIRECT CURRENT)
$V_{(ac)}$	VOLT (ALTERNATING CURRENT)
FC	FOOT - CANDLE
W	WATTS
VA	VOLT-AMPERE
M	MEGA
k	KILO
m	MILLI
μ	MICRO
P	PICO
Hz	HERTZ

STATE OF CALIFORNIA
DEPARTMENT OF TRANSPORTATION

ELECTRICAL SYSTEMS (LEGEND AND ABBREVIATIONS)

NO SCALE

RSP ES-1A DATED JULY 19, 2013 SUPERSEDES STANDARD PLAN ES-1A DATED MAY 20, 2011 - PAGE 425 OF THE STANDARD PLANS BOOK DATED 2010.

REVISED STANDARD PLAN RSP ES-1A

2010 REVISED STANDARD PLAN RSP ES-1A

Dist	COUNTY	ROUTE	POST MILES TOTAL PROJECT	SHEET No.	TOTAL SHEETS
02	Sis	5	R45.6/R47.3 R62.0/R62.8	75	78

Theresa Gabriel
REGISTERED ELECTRICAL ENGINEER

July 19, 2013
PLANS APPROVAL DATE

REGISTERED PROFESSIONAL ENGINEER
Theresa Aziz Gabriel
No. E15129
Exp. 6-30-14
ELECTRICAL
STATE OF CALIFORNIA

THE STATE OF CALIFORNIA OR ITS OFFICERS OR AGENTS SHALL NOT BE RESPONSIBLE FOR THE ACCURACY OR COMPLETENESS OF SCANNED COPIES OF THIS PLAN SHEET.

TO ACCOMPANY PLANS DATED 10-16-13

CONDUIT

NEW	EXISTING	
		LIGHTING CONDUIT, UNLESS OTHERWISE INDICATED OR NOTED
		TRAFFIC SIGNAL CONDUIT
C	c	COMMUNICATION CONDUIT
T	t	TELEPHONE CONDUIT
F	f	FIRE ALARM CONDUIT
FO	fo	FIBER OPTIC CONDUIT
		CONDUIT TERMINATION
R	r	CONDUIT RISER ATTACHED TO THE STRUCTURE OR SERVICE POLE

SERVICE EQUIPMENT

NEW	EXISTING	
OH	oh	OVERHEAD LINES
U	U	WOOD POLE, "U" INDICATES UTILITY OWNED
		POLE GUY WITH ANCHOR
		UTILITY TRANSFORMER - GROUND MOUNTED
III	III	SERVICE EQUIPMENT ENCLOSURE TYPE. DOOR INDICATES FRONT OF ENCLOSURE
T	t	TELEPHONE DEMARCATION CABINET

POLE-MOUNTED SERVICE DESIGNATION

TYPE H SERVICE, 28'-10" — TYPE OF INSTALLATION AND POLE HEIGHT ABOVE GRADE

FLASHING BEACON

NEW	EXISTING	
R	R	FLASHING BEACON (ONE VEHICLE SIGNAL HEAD WITH BACKPLATE AND VISOR) "R" INDICATES RED INDICATION, "Y" INDICATES YELLOW INDICATION
Y Y	Y Y	FLASHING BEACON WITH TYPE 15-FBS STANDARD AND A SIGN.
R R	R R	FLASHING BEACON WITH TYPES 9, 9A OR 9B SIGN UNLESS OTHERWISE SPECIFIED OR INDICATED

SIGNAL EQUIPMENT

NEW	EXISTING	
C	C	PEDESTRIAN SIGNAL HEAD "C" INDICATES COUNTDOWN PEDESTRIAN HEAD
		PUSH BUTTON ASSEMBLY POST
		PEDESTRIAN BARRICADE
		VEHICLE SIGNAL HEAD (WITH BACKPLATE AND 3-SECTIONS: RED, YELLOW AND GREEN)
		VEHICLE SIGNAL HEAD WITH ANGLE VISOR
PV	PV	MODIFICATIONS OF BASIC SYMBOL: "L" INDICATES ALL NON-ARROW SECTIONS LOUVERED "LG" INDICATES LOUVERED GREEN SECTION ONLY "PV" INDICATES ALL 12" SECTIONS PROGRAMMED VISIBILITY "8" INDICATES ALL 8" SECTIONS (ONLY WHEN SPECIFIED)
		VEHICLE SIGNAL HEAD CONSISTING OF RED, YELLOW AND GREEN LEFT ARROW SECTIONS
		VEHICLE SIGNAL HEAD CONSISTING OF RED AND YELLOW SECTIONS WITH AN UP GREEN ARROW SECTION
		VEHICLE SIGNAL HEAD (5 SECTION) CONSISTING OF RED, YELLOW AND GREEN SECTIONS WITH YELLOW AND GREEN RIGHT ARROW SECTIONS
		TYPE 15TS STANDARD WITH VEHICLE SIGNAL HEAD AND LUMINAIRE
		TYPE 21TS STANDARD WITH VEHICLE SIGNAL HEAD AND LUMINAIRE
		STANDARD WITH LUMINAIRE AND SIGNAL MAST ARMS AND ATTACHED VEHICLE SIGNAL HEADS
		TYPE 1 STANDARD WITH ATTACHED VEHICLE SIGNAL HEADS
		STANDARD WITH A SIGNAL MAST ARM, ATTACHED VEHICLE SIGNAL HEADS AND INTERNALLY ILLUMINATED STREET NAME SIGN
		CONTROLLER ASSEMBLY. DOOR INDICATES FRONT OF CABINET

SIGNAL EQUIPMENT Cont

NEW	EXISTING	
		GUARD POST
		TYPE 1 STANDARD WITH RAMP METERING SIGN
		OPTICAL DETECTOR FOR THE EMERGENCY VEHICLE DETECTION SYSTEM

NOTES:

1. All signal sections shall be 12" unless shown otherwise.
2. Signal heads shall be provided with backplates unless shown otherwise.

ILLUMINATED OVERHEAD SIGN

NEW	EXISTING	
		SINGLE POST, SINGLE ILLUMINATED SIGN, BALANCED BUTTERFLY
		SINGLE POST, DOUBLE ILLUMINATED SIGN, BALANCED BUTTERFLY
		SINGLE POST, SINGLE ILLUMINATED SIGN, FULL CANTILEVER
		DOUBLE POST, SINGLE ILLUMINATED SIGN
		SINGLE ILLUMINATED SIGN MOUNTED ON STRUCTURE
		DOUBLE POST, SINGLE ILLUMINATED SIGN WITH ELECTROLIER

STATE OF CALIFORNIA
DEPARTMENT OF TRANSPORTATION

ELECTRICAL SYSTEMS (LEGEND AND ABBREVIATIONS)

NO SCALE

RSP ES-1B DATED JULY 19, 2013 SUPERSEDES STANDARD PLAN ES-1B DATED MAY 20, 2011 - PAGE 426 OF THE STANDARD PLANS BOOK DATED 2010.

REVISED STANDARD PLAN RSP ES-1B

2010 REVISED STANDARD PLAN RSP ES-1B

Dist	COUNTY	ROUTE	POST MILES TOTAL PROJECT	SHEET No.	TOTAL SHEETS
02	Sis	5	R45.6/R47.3 R62.0/R62.8	76	78

Theresa Gabriel
REGISTERED ELECTRICAL ENGINEER

July 19, 2013
PLANS APPROVAL DATE

REGISTERED PROFESSIONAL ENGINEER
Theresa Aziz Gabriel
No. E15129
Exp. 6-30-14
ELECTRICAL
STATE OF CALIFORNIA

THE STATE OF CALIFORNIA OR ITS OFFICERS OR AGENTS SHALL NOT BE RESPONSIBLE FOR THE ACCURACY OR COMPLETENESS OF SCANNED COPIES OF THIS PLAN SHEET.

TO ACCOMPANY PLANS DATED 10-16-13

EQUIPMENT IDENTIFICATION

ILLUMINATED SIGN IDENTIFICATION NUMBER:

SIGN No. 12345

10 ISL SCI 1.0

- SIGN NUMBER - PLACE ON POST OR STRUCTURE
- TRANSFORMER RATING (kVA)
- LIGHTING CONTROL TYPE
- NUMBER AND TYPE OF FIXTURES

DO NOT PLACE ON STANDARD OR STRUCTURE

ELECTROLIER OR EQUIPMENT IDENTIFICATION NUMBER:

12345 - 15'-0"

- MAST ARM LENGTH, IF SHOWN. DO NOT PLACE ON STANDARD OR STRUCTURE
- EQUIPMENT NUMBER - PLACE ON STANDARD OR STRUCTURE. EXISTING EQUIPMENT NUMBERS ARE SHOWN IN PARENTHESIS

CONDUIT AND CONDUCTOR IDENTIFICATION:

1½"C, 2#10, 15#14, 2 DLC, 12P#18

- PAIR
- NUMBER AND SIZE OF CONDUCTORS AND CABLES
- SIZE OF CONDUIT IN INCHES

ø1, ø2, ø2P, etc.	TRAFFIC PHASE IDENTIFICATION FOR SIGNAL FACES, DETECTORS AND PHASE DIAGRAMS
1 2 3	LEGEND NUMBERS
A B C	EQUIPMENT, SIGNAL POLES, INSTALLATION OR ITEMS
1 2 3	CONDUIT RUN NUMBERS

SIGNAL AND LIGHTING STANDARD (TYPICAL DESIGNATION):

19A - 3 - 100

- WIND VELOCITY = 100 mph
- CASE 3 ARM LOADING
- STANDARD TYPE
- STANDARD PLAN SHEET NUMBER
- DETAIL, NUMBER, SECTION, TYPE OR ELEVATION

MISCELLANEOUS EQUIPMENT

NEW	EXISTING	
CMS	cms	CHANGEABLE MESSAGE SIGN
		CLOSED CIRCUIT TELEVISION CAMERA
		HIGHWAY ADVISORY RADIO POLE AND ANTENNA
EMS	ems	EXTINGUISHABLE MESSAGE SIGN
M V	m v	DETECTION DEVICE M = MICROWAVE SENSOR V = VIDEO IMAGE SENSOR

WIRING DIAGRAM LEGEND

----	EXTERNAL CONDUCTOR
	CONDUCTOR OR BUS
	TIE POINT
	CONTACTOR COIL
	CONTACTOR, NO CONTACT
	TERMINAL BLOCKS
	CONTACTOR, NC CONTACT
	ENCLOSURE BOND
	GROUNDING ELECTRODE
	CIRCUIT BREAKER
	RECEPTACLE

PULL BOXES

NEW	EXISTING	
		PULL BOX, No. 5 UNLESS OTHERWISE INDICATED OR NOTED
3	9A(21)	PULL BOX, ADDITIONAL DESIGNATIONS OR DESCRIPTIONS

3 No. 3½ PULL BOX
5 No. 5 PULL BOX
6 No. 6 PULL BOX
7 No. 7 (CEILING PULL BOX)
8 No. 8 (PENDANT SOFFIT PULL BOX)
9 No. 9 PULL BOX
9A No. 9A PULL BOX

(C) COMMUNICATIONS PULL BOX
(E) PULL BOX WITH EXTENSION
(S) SPRINKLER CONTROL PULL BOX
(21) ANCHOR BOLTS AND CONDUIT FOR FUTURE INSTALLATION OF TYPE 21 STANDARD
(T) TRAFFIC PULL BOX

VEHICLE DETECTORS

5 J 9 U

- VEHICLE DETECTOR DESIGNATION
- U = UPPER
  L = LOWER
- SLOT NUMBER IN INPUT FILE
- INPUT FILE (I OR J)
- PHASE

NEW	EXISTING	
		TYPE A DETECTOR LOOP. OUTLINE OF SAWCUT SHOWN
		TYPE B DETECTOR LOOP. OUTLINE OF SAWCUT SHOWN
		TYPE C DETECTOR LOOP. OUTLINE OF SAWCUT SHOWN
		TYPE D DETECTOR LOOP. OUTLINE OF SAWCUT SHOWN
		TYPE E DETECTOR LOOP. OUTLINE OF SAWCUT SHOWN
		TYPE Q DETECTOR LOOP. OUTLINE OF SAWCUT SHOWN
		MAGNETIC DETECTOR
DH	dh	DETECTOR HANDHOLE
		MICROWAVE OR VIDEO DETECTION ZONE

STATE OF CALIFORNIA
DEPARTMENT OF TRANSPORTATION

ELECTRICAL SYSTEMS (LEGEND AND ABBREVIATIONS)

NO SCALE

RSP ES-1C DATED JULY 19, 2013 SUPERSEDES STANDARD PLAN ES-1C DATED MAY 20, 2011 - PAGE 427 OF THE STANDARD PLANS BOOK DATED 2010.

REVISED STANDARD PLAN RSP ES-1C

2010 REVISED STANDARD PLAN RSP ES-1C

DIST	COUNTY	ROUTE	POST MILES TOTAL PROJECT	SHEET NO.	TOTAL SHEETS
02	Sis	5	R45.6/R47.3 R62.0/R62.8	77	78

Theresa Gabriel
REGISTERED ELECTRICAL ENGINEER

July 19, 2013
PLANS APPROVAL DATE

Theresa Aziz Gabriel No. E15129 Exp. 6-30-14 ELECTRICAL — REGISTERED PROFESSIONAL ENGINEER — STATE OF CALIFORNIA

THE STATE OF CALIFORNIA OR ITS OFFICERS OR AGENTS SHALL NOT BE RESPONSIBLE FOR THE ACCURACY OR COMPLETENESS OF SCANNED COPIES OF THIS PLAN SHEET.

TO ACCOMPANY PLANS DATED 10-16-13

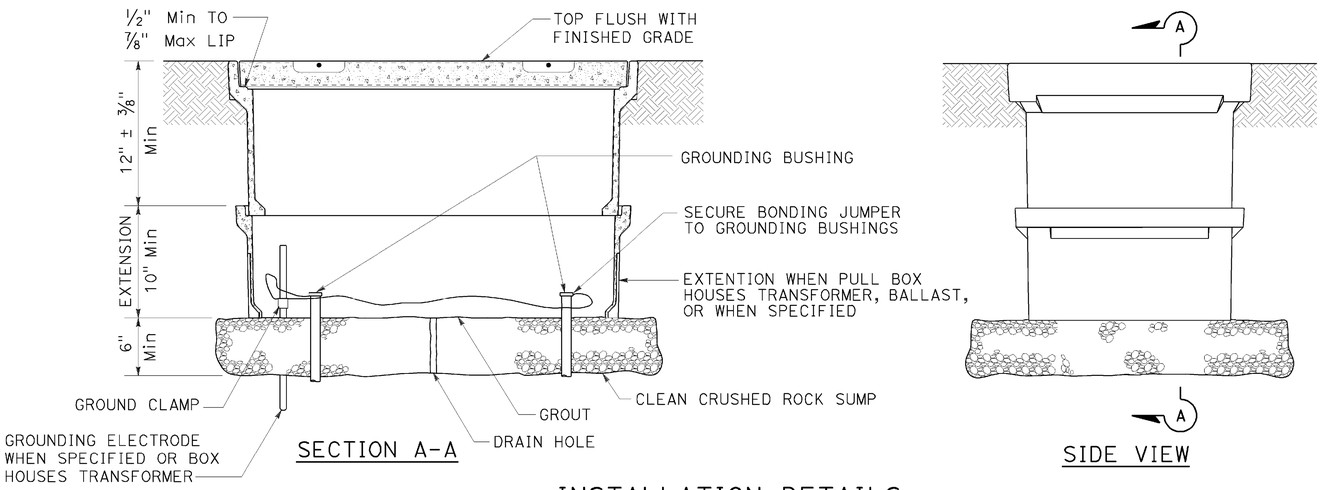

SECTION A-A

SIDE VIEW

INSTALLATION DETAILS

DETAIL A

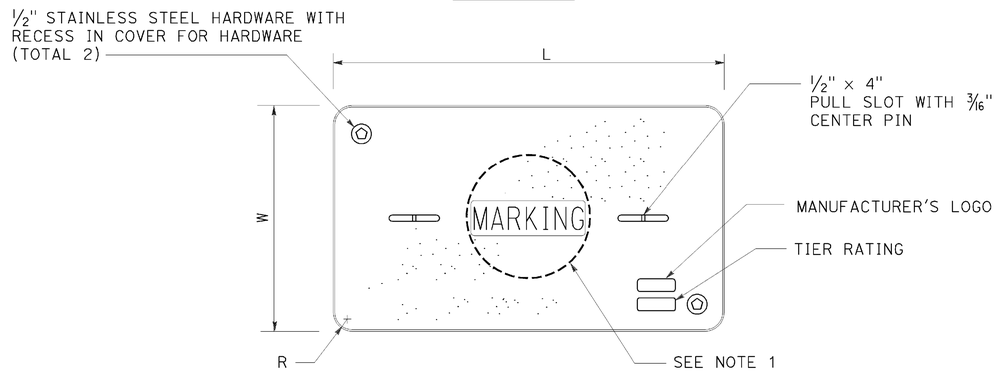

COVER TOP VIEW

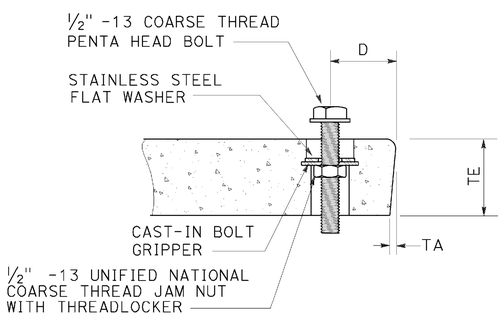

TYPICAL COVER CAPTIVE BOLT

OR SIMILAR

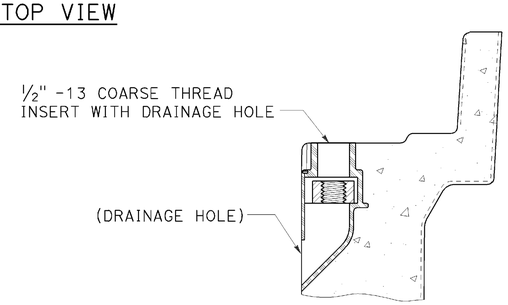

TYPICAL THREADED INSERT

OR SIMILAR

DIMENSION TABLE

PULL BOX	PULL BOX			COVER						
	MINIMUM DEPTH BOX	MINIMUM DEPTH EXTENSION	MAXIMUM WEIGHT	L	W	R	TE	TA	D	MAXIMUM WEIGHT
No. 3½	12"	N/A	40 lb	1′ - 3⅜"	10⅛"	1⅜"	2"	⅛"	1¾"	30 lb
No. 5	12"	10"	55 lb	1′ - 11¼"	1′ - 1¾"	1⅜"	2"	⅛"	1¾"	60 lb
No. 6	12"	10"	70 lb	2′ - 6½"	1′ - 5½"	1⅜"	2"	⅛"	2"	85 lb

NOTES:

1. Pull box covers shall be marked as follows: "SERVICE" Service circuits between service point and service disconnect; "SPRINKLER-CONTROL" sprinkler control circuits, 50 V or less; "CALTRANS" on all pull boxes, except pull boxes marked "SPRINKLER-CONTROL"; and "TELEPHONE" Telephone service;
   - A) No. 3½ pull box.
     - 1) "SIGNAL" - Traffic signal circuits with or without lighting or sign lighting circuits.
     - 2) "LIGHTING" - Lighting or sign lighting circuits where voltage is under 600 V.
   - B) No. 5, 6, 9 or 9A pull box.
     - 1) "TRAFFIC SIGNAL" - Traffic signal circuits with or without lighting or sign lighting circuits.
     - 2) "LIGHTING" - Lighting or sign lighting circuits where voltage is under 600 V.
     - 3) "LIGHTING-HIGH VOLTAGE" - Lighting or sign lighting circuits where voltage is above 600 V.
     - 4) "IRRIGATION" - Circuits to irrigation controller 120 V or more.
     - 5) "RAMP METER" - Ramp meter circuits.
     - 6) "COUNT STATION" - Count or speed monitor circuits.
     - 7) "COMMUNICATIONS" - Communication circuits.
     - 8) "TOS COMMUNICATIONS" - TOS communication line.
     - 9) "TOS POWER" - TOS power.
     - 10) "TDC POWER" - Telephone demarcation cabinet power.
     - 11) "CCTV" - Closed circuit television circuits.
     - 12) "TMS" - Traffic monitoring station circuits.
     - 13) "CMS" - Changeable message sign circuits.
     - 14) "HAR" - Highway advisory radio circuits.
     - 15) "BOOSTER PUMP" - Booster pump circuit.
2. The nominal dimensions of the opening in which the cover sets shall be the same as the cover dimensions except the length and width dimensions shall be ⅛" greater.
3. Covers and boxes shall be interchangeable with California standard male and female gages. When interchanged with a standard male or female gage, the top surfaces shall be flush within ⅛". Top outside radius of covers and pull boxes shall have a ⅛" radius.
4. Pull box extension may be another pull box as long as the bottom edge of the pull box can fit into the cover opening.
5. All dimensions for the cover for non-traffic pull box are nominal values.

STATE OF CALIFORNIA
DEPARTMENT OF TRANSPORTATION

ELECTRICAL SYSTEMS (NON-TRAFFIC PULL BOX)

NO SCALE

RSP ES-8A DATED JULY 19, 2013 SUPERSEDES RSP ES-8A DATED JANUARY 20, 2012 THAT SUPPLEMENTS THE STANDARD PLANS BOOK DATED 2010.

REVISED STANDARD PLAN RSP ES-8A

2010 REVISED STANDARD PLAN RSP ES-8A

DATE PLOTTED => 13-DEC-2013
TIME PLOTTED => 07:17
P:\proj1\02\4E280_plans\pse\24e280va007.dgn
USERNAME => s123119
DGN FILE => 24e280va007.dgn

DIST	COUNTY	ROUTE	POST MILES TOTAL PROJECT	SHEET NO.	TOTAL SHEETS
02	Sis	5	R45.6/R47.3 R62.0/R62.8	78	78

Theresa Gabriel
REGISTERED ELECTRICAL ENGINEER

July 19, 2013
PLANS APPROVAL DATE

REGISTERED PROFESSIONAL ENGINEER
Theresa Aziz Gabriel
No. E15129
Exp. 6-30-14
ELECTRICAL
STATE OF CALIFORNIA

THE STATE OF CALIFORNIA OR ITS OFFICERS OR AGENTS SHALL NOT BE RESPONSIBLE FOR THE ACCURACY OR COMPLETENESS OF SCANNED COPIES OF THIS PLAN SHEET.

TO ACCOMPANY PLANS DATED 10-16-13

2010 REVISED STANDARD PLAN RSP ES-8B

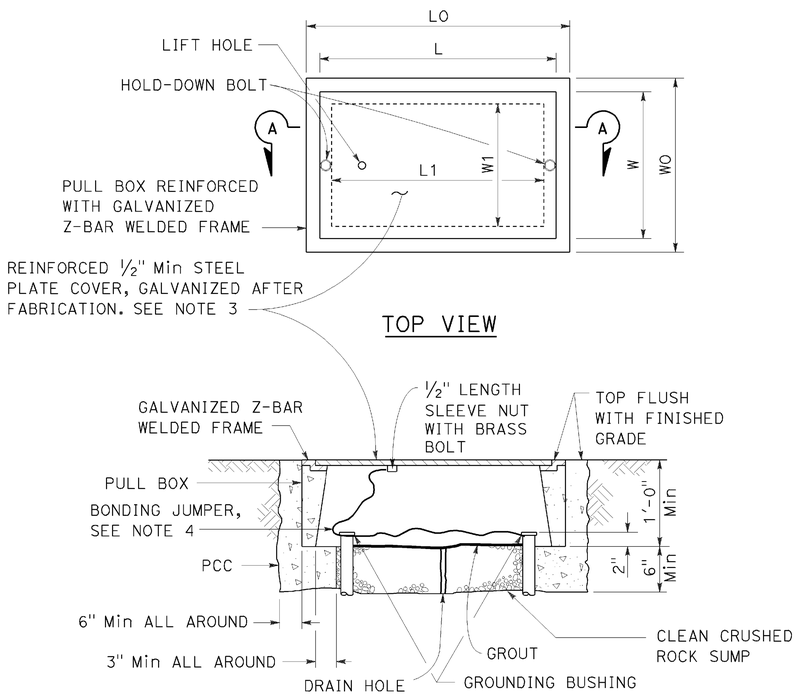

SECTION A-A

No. 3½(T), No. 5(T) AND No. 6(T) TRAFFIC PULL BOX

NOTES:

1. Traffic pull box shall be provided with steel cover and special concrete footing. Steel cover shall have embossed non-skid pattern.
2. Steel reinforcing shall be as regularly used in the standard products of the respective manufacturer.
3. Pull box covers shall be marked as follows: "SERVICE" Service circuits between service point and service disconnect; "SPRINKLER-CONTROL" Sprinkler control circuits, 50 V or less; "CALTRANS" On all pull boxes, except pull boxes marked "SPRINKLER-CONTROL"; and "TELEPHONE" Telephone service.
   - A) No. 3½(T) pull box.
     - 1) "SIGNAL" - Traffic signal circuits with or without lighting or sign lighting circuits.
     - 2) "LIGHTING" - Lighting or sign lighting circuits where voltage is under 600 V.
   - B) No. 5(T) or 6(T) pull box.
     - 1) "TRAFFIC SIGNAL" - Traffic signal circuits with or without lighting or sign lighting circuits.
     - 2) "LIGHTING" - Lighting or sign lighting circuits where voltage is under 600 V.
     - 3) "LIGHTING-HIGH VOLTAGE" - Lighting or sign lighting circuits where voltage is above 600 V.
     - 4) "IRRIGATION" - Circuits to irrigation controller 120 V or more.
     - 5) "RAMP METER" - Ramp meter circuits.
     - 6) "COUNT STATION" - Count or speed monitor circuits.
     - 7) "COMMUNICATION" - Communication circuits.
     - 8) "TOS COMMUNICATIONS" - TOS communications line.
     - 9) "TOS POWER" - TOS power.
     - 10) "TDC POWER" - Telephone demarcation cabinet power.
     - 11) "CCTV" - Closed circuit television circuits.
     - 12) "TMS" - Traffic monitoring station circuits.
     - 13) "CMS" - Changeable message sign circuits.
     - 14) "HAR" - Highway advisory radio circuits.
     - 15) "BOOSTER PUMP" - Booster pump circuit.
4. Bonding jumper for metal covers shall be 3' long, minimum.
5. The nominal dimensions of the opening in which the cover sets shall be the same as the cover dimensions except the length and width dimensions shall be ⅛" greater.
6. Covers and boxes shall be interchangeable with California standard male and female gages. When interchanged with a standard male or female gage, the top surfaces shall be flush within ⅛".

DIMENSION TABLE

PULL BOX	PULL BOX						COVER				
	MINIMUM * THICKNESS	MINIMUM DEPTH BOX AND EXTENSION	WO	LO	L1	W1	L **	W **	R	EDGE THICKNESS	EDGE TAPER
No. 3½(T)	1½"	1'-0"	1'-5"± 1"	1'-8⅞"±	1'-2½"±	10⅝"± 1"	1'-8"±	1'-1¾"±	0"	½"	NONE
No. 5(T)	1¾"	1'-0"	1'-11½"± 1"	2'-5½"±	1'-7"±	1'-1"± 1"	2'-3"±	1'-4"±	0"	½"	NONE
No. 6(T)	2"	1'-0"	2'-6"± 1"	2'-11½"±	1'-11½"±	1'-5"± 1"	2'-9"±	1'-8"±	0"	½"	NONE

* EXCLUDING CONDUIT WEB ** TOP DIMENSION

STATE OF CALIFORNIA
DEPARTMENT OF TRANSPORTATION

ELECTRICAL SYSTEMS (TRAFFIC PULL BOX)

NO SCALE

RSP ES-8B DATED JULY 19, 2013 SUPERSEDES RSP ES-8B DATED JANUARY 20, 2012 THAT SUPPLEMENTS THE STANDARD PLANS BOOK DATED 2010.

REVISED STANDARD PLAN RSP ES-8B