Dist	COUNTY	ROUTE	POST MILES TOTAL PROJECT	SHEET No.	TOTAL SHEETS
02	Sha	151	R5.8/R6.9	1	50

ACSTP-P151(003)E

STATE OF CALIFORNIA

DEPARTMENT OF TRANSPORTATION

PROJECT PLANS FOR CONSTRUCTION ON

STATE HIGHWAY

IN SHASTA COUNTY IN SHASTA LAKE CITY FROM LOCUST AVENUE TO ROUTE 5

TO BE SUPPLEMENTED BY STANDARD PLANS DATED MAY 2006

INDEX OF PLANS

SHEET No.	DESCRIPTION
1	TITLE SHEET
2-4	TYPICAL CROSS SECTIONS
5-7	LAYOUT
8-13	CONSTRUCTION DETAILS
14-18	UTILITY PLANS
19	CONSTRUCTION AREA SIGNS
20-22	DETOUR PLANS
23-27	PAVEMENT DELINEATION AND SIGN PLANS
28	SUMMARY OF QUANTITIES
29-31	ELECTRICAL PLANS
32-50	NEW AND REVISED STANDARD PLANS

THE STANDARD PLANS LIST APPLICABLE TO THIS CONTRACT IS INCLUDED IN THE NOTICE TO BIDDERS AND SPECIAL PROVISIONS BOOK.

LOCATION MAP

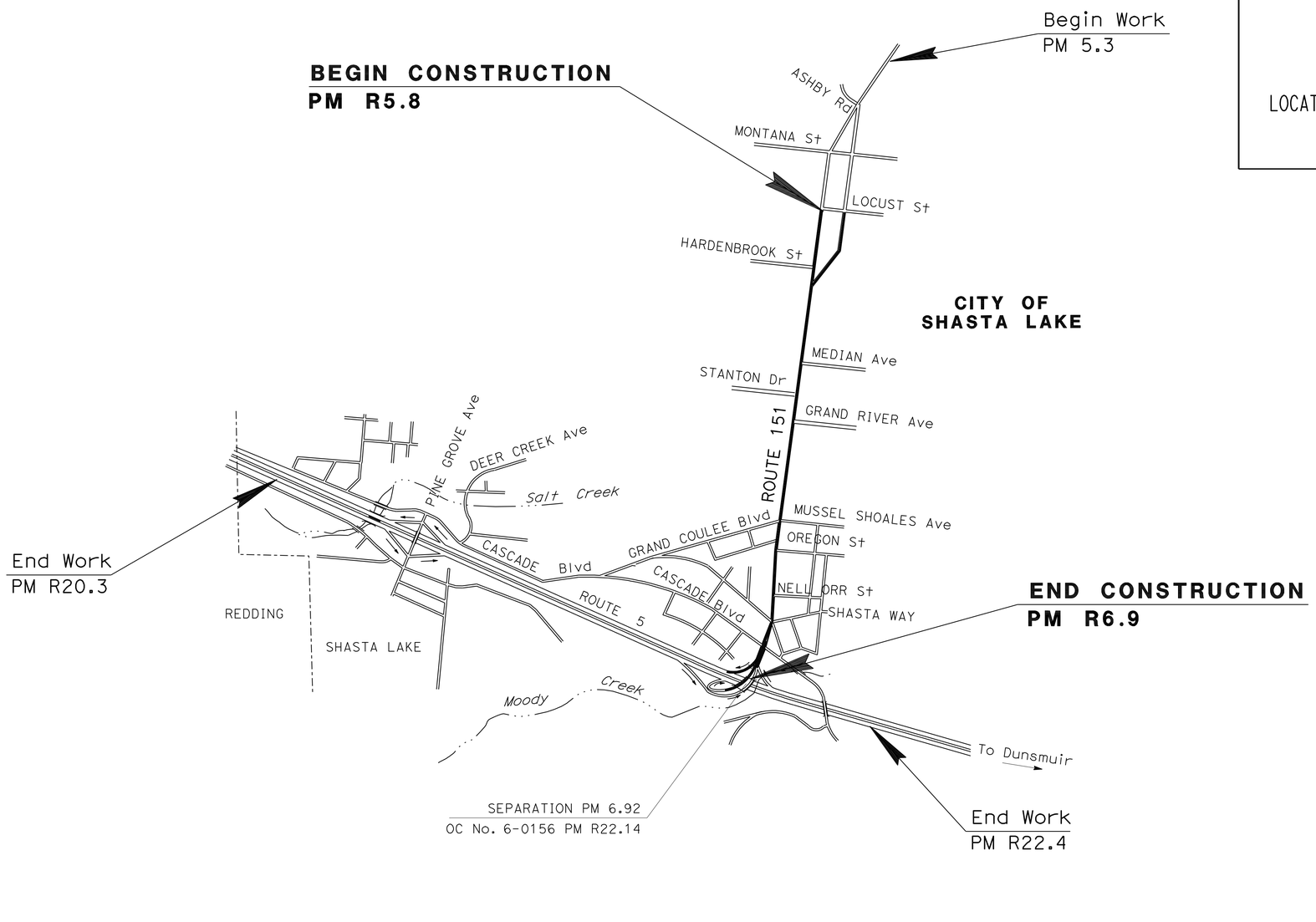

THE CONTRACTOR SHALL POSSESS THE CLASS (OR CLASSES) OF LICENSE AS SPECIFIED IN THE "NOTICE TO BIDDERS."

NO SCALE

Kathryn B. Eckard 01-09-12
PROJECT ENGINEER DATE
REGISTERED CIVIL ENGINEER

JANUARY 9, 2012
PLANS APPROVAL DATE

REGISTERED PROFESSIONAL ENGINEER K.B. ECKARD No. C60268 Exp. 6-30-12 CIVIL STATE OF CALIFORNIA

THE STATE OF CALIFORNIA OR ITS OFFICERS OR AGENTS SHALL NOT BE RESPONSIBLE FOR THE ACCURACY OR COMPLETENESS OF SCANNED COPIES OF THIS PLAN SHEET.

CONTRACT No.	02-4E3804
PROJECT ID	0200020278

LAST REVISION 01-09-12 | DATE PLOTTED => 23-JAN-2012 | TIME PLOTTED => 10:58

PROJECT MANAGER PHIL BAKER | DESIGN ENGINEER JULIE CASEY

P:\proj\02\4E380_plans\pse\24e380ab001.dgn

Dist	COUNTY	ROUTE	POST MILES TOTAL PROJECT	SHEET No.	TOTAL SHEETS
02	Sha	151	R5.8/R6.9	2	50

Kathryn B. Eckard 01-09-12
REGISTERED CIVIL ENGINEER DATE

01-09-12
PLANS APPROVAL DATE

REGISTERED PROFESSIONAL ENGINEER
K.B. ECKARD
No. C60268
Exp. 6-30-12
CIVIL
STATE OF CALIFORNIA

THE STATE OF CALIFORNIA OR ITS OFFICERS OR AGENTS SHALL NOT BE RESPONSIBLE FOR THE ACCURACY OR COMPLETENESS OF SCANNED COPIES OF THIS PLAN SHEET.

NOTES:

1. FOR ACCURATE RIGHT OF WAY DATA, CONTACT RIGHT OF WAY ENGINEERING AT THE DISTRICT OFFICE.
2. DIMENSIONS OF THE PAVEMENT STRUCTURES (STRUCTURAL SECTIONS) ARE SUBJECT TO TOLERANCES SPECIFIED IN THE STANDARD SPECIFICATIONS.
3. SUPERELEVATIONS ARE SHOWN ON THE SUPERELEVATION DIAGRAM.

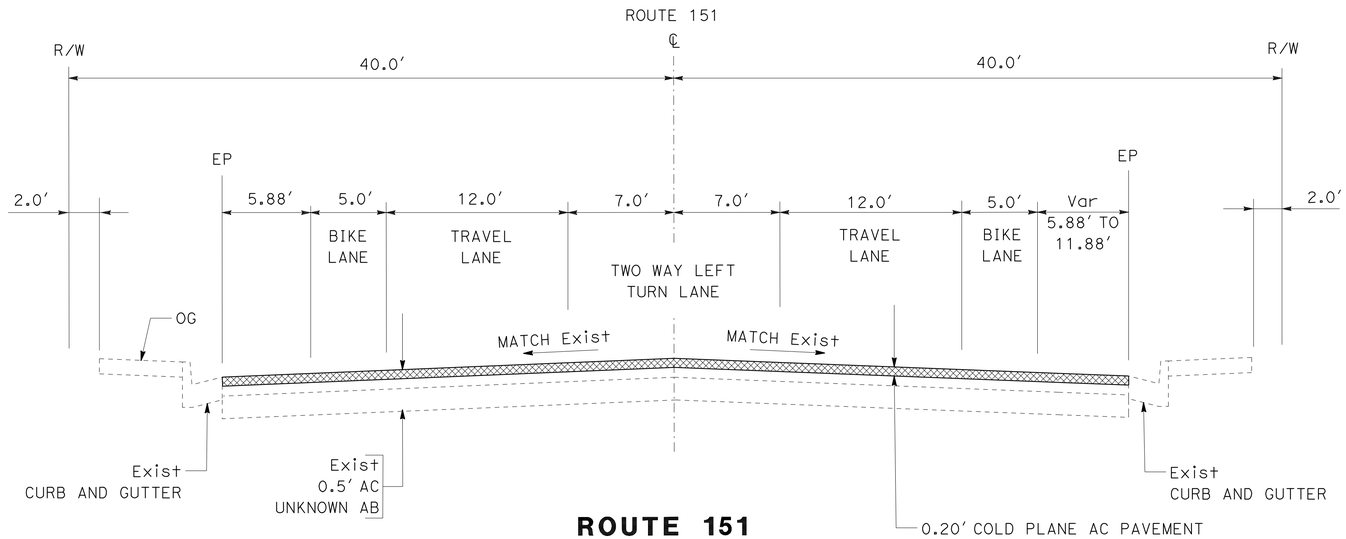

ROUTE 151
PM 6.00 TO PM 6.39

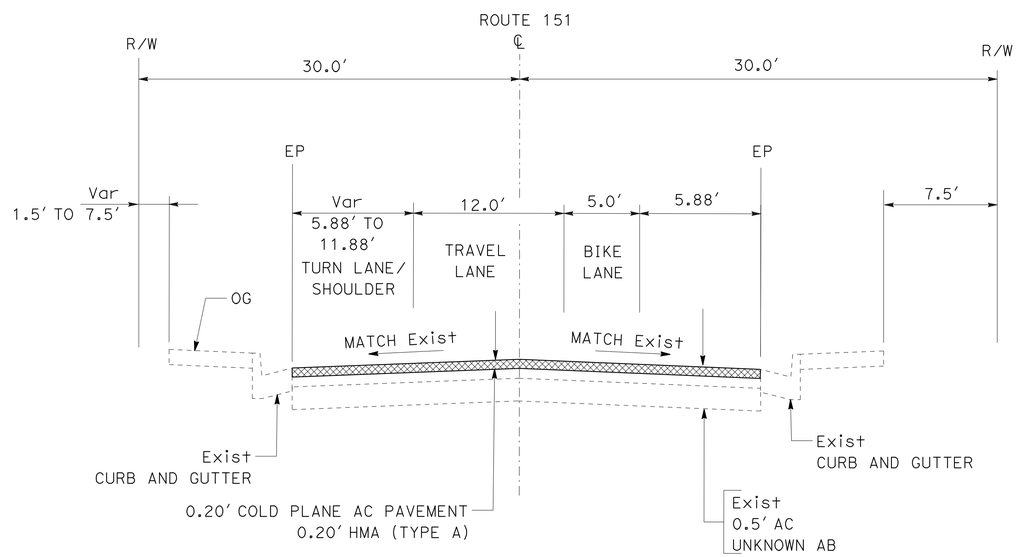

ROUTE 151 - WESTBOUND
PM 5.85 TO PM 6.00

ROUTE 151 - EASTBOUND
PM 5.85 TO PM 6.00

TYPICAL CROSS SECTIONS

SCALE: 1" = 5′ **X-1**

REVISED BY	DATE REVISED
JEANNIE STEFFAN	KATHY ECKARD
CALCULATED-DESIGNED BY	CHECKED BY
FUNCTIONAL SUPERVISOR	JULIE CASEY

STATE OF CALIFORNIA - DEPARTMENT OF TRANSPORTATION
Caltrans® DESIGN

P:\proj1\02\4E380_plans\pse\24e380ca001.dgn

LAST REVISION 01-09-12 | DATE PLOTTED => 10-JAN-2012 | TIME PLOTTED => 15:08

Dist	COUNTY	ROUTE	POST MILES TOTAL PROJECT	SHEET No.	TOTAL SHEETS
02	Sha	151	R5.8/R6.9	3	50

Kathryn B. Eckard 01-09-12
REGISTERED CIVIL ENGINEER DATE

01-09-12
PLANS APPROVAL DATE

REGISTERED PROFESSIONAL ENGINEER K.B. ECKARD No. C60268 Exp. 6-30-12 CIVIL STATE OF CALIFORNIA

THE STATE OF CALIFORNIA OR ITS OFFICERS OR AGENTS SHALL NOT BE RESPONSIBLE FOR THE ACCURACY OR COMPLETENESS OF SCANNED COPIES OF THIS PLAN SHEET.

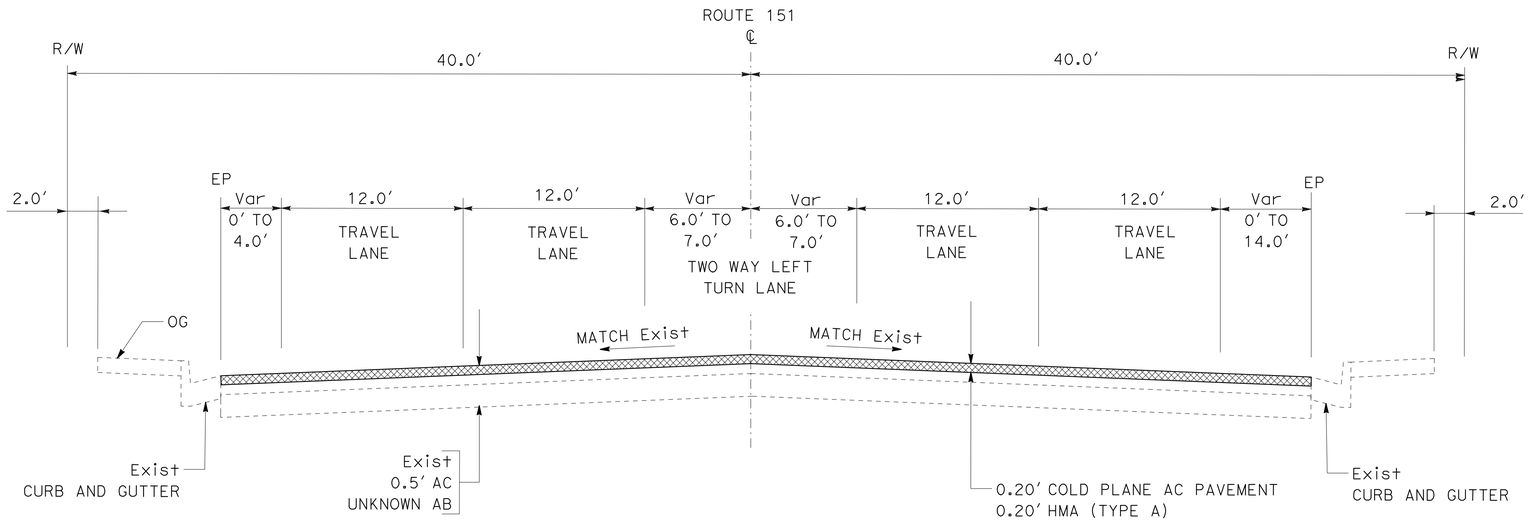

ROUTE 151

SHASTA TO CASCADE
PM 6.71 TO PM 6.80

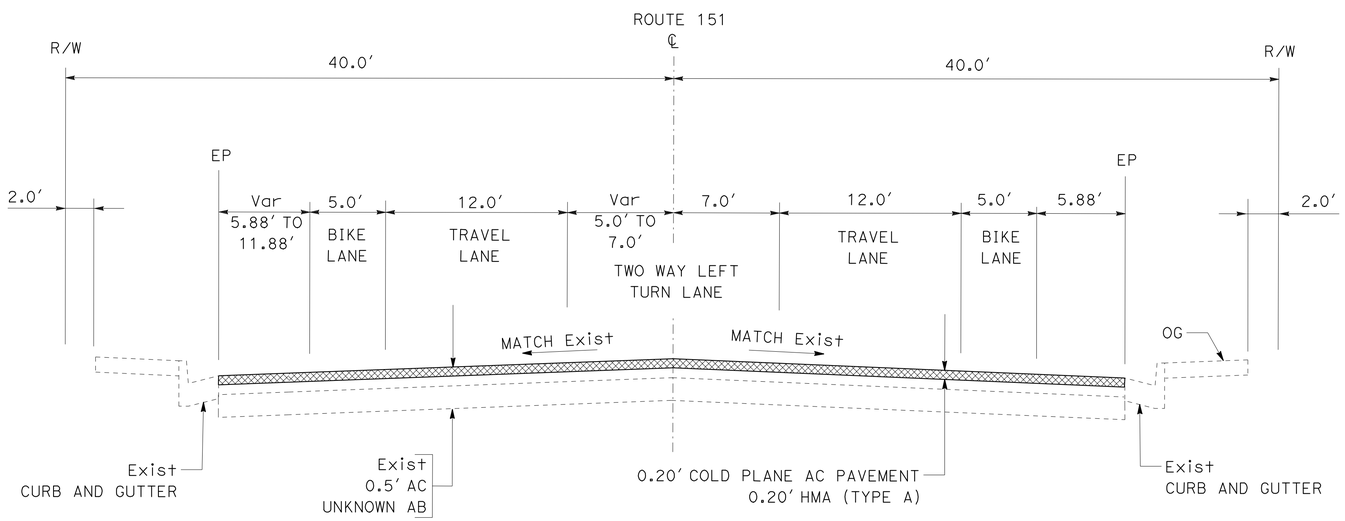

ROUTE 151

PM 6.39 TO PM 6.71

TYPICAL CROSS SECTIONS

SCALE: 1" = 5′ **X-2**

REVISED BY | DATE REVISED
JEANNIE STEFFAN | KATHY ECKARD
CALCULATED-DESIGNED BY | CHECKED BY
FUNCTIONAL SUPERVISOR: JULIE CASEY

STATE OF CALIFORNIA - DEPARTMENT OF TRANSPORTATION
Caltrans DESIGN

P:\proj1\02\4E380_plans\pse\24e380ca002.dgn

LAST REVISION 01-09-12 | DATE PLOTTED => 10-JAN-2012 | TIME PLOTTED => 15:08

Dist	COUNTY	ROUTE	POST MILES TOTAL PROJECT	SHEET No.	TOTAL SHEETS
02	Sha	151	R5.8/R6.9	4	50

Kathryn B. Eckard 01-09-12
REGISTERED CIVIL ENGINEER DATE

01-09-12
PLANS APPROVAL DATE

REGISTERED PROFESSIONAL ENGINEER
K.B. ECKARD
No. C60268
Exp. 6-30-12
CIVIL
STATE OF CALIFORNIA

THE STATE OF CALIFORNIA OR ITS OFFICERS OR AGENTS SHALL NOT BE RESPONSIBLE FOR THE ACCURACY OR COMPLETENESS OF SCANNED COPIES OF THIS PLAN SHEET.

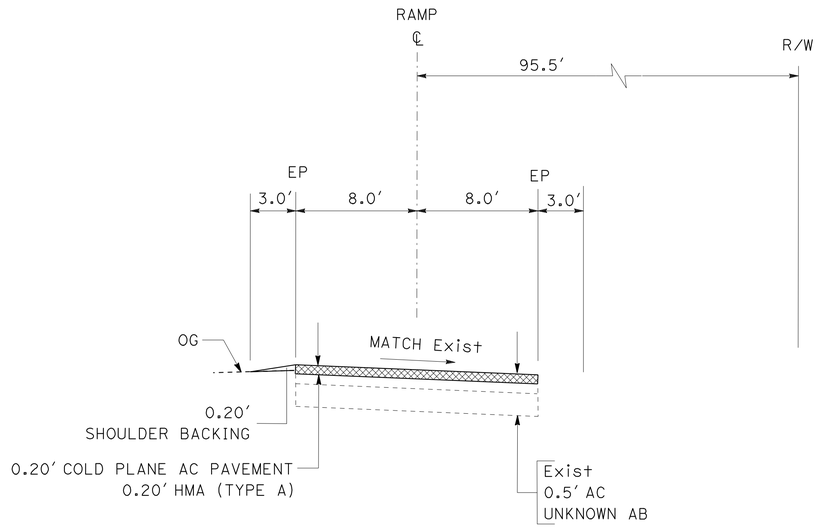

SOUTHBOUND ROUTE 5 ON RAMP

PM 6.80 TO PM 6.81

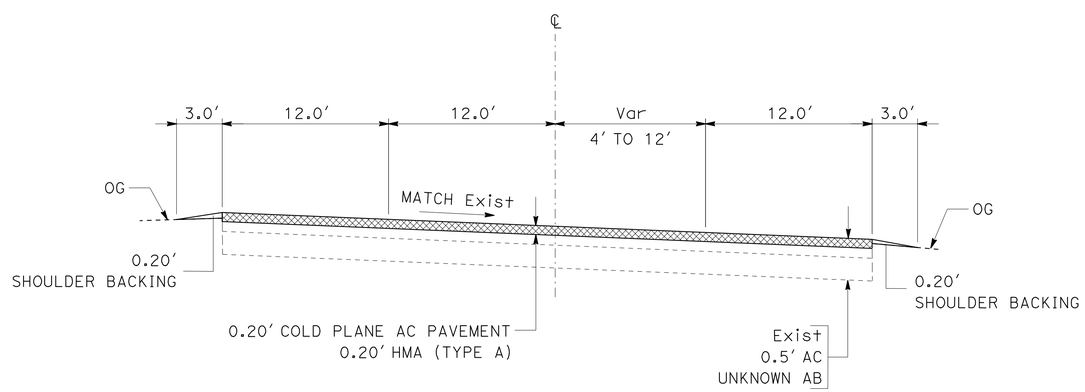

NORTHBOUND ROUTE 5 ON RAMP AND NORTHBOUND ROUTE 5 OFF RAMP TO ROUTE 151

PM 6.80 TO PM 6.92

TYPICAL CROSS SECTIONS

SCALE: 1" = 5′ **X-3**

REVISED BY	DATE REVISED
JEANNIE STEFFAN	
KATHY ECKARD	

CALCULATED-DESIGNED BY
CHECKED BY

FUNCTIONAL SUPERVISOR
JULIE CASEY

STATE OF CALIFORNIA - DEPARTMENT OF TRANSPORTATION
Caltrans
DESIGN

P:\proj1\02\4E380_plans\pse\24e380ca003.dgn

LAST REVISION 01-09-12 | DATE PLOTTED => 10-JAN-2012 | TIME PLOTTED => 15:08

Dist	COUNTY	ROUTE	POST MILES TOTAL PROJECT	SHEET No.	TOTAL SHEETS
02	Sha	151	R5.8/R6.9	5	50

Kathryn B. Eckard 01-09-12
REGISTERED CIVIL ENGINEER DATE

01-09-12
PLANS APPROVAL DATE

REGISTERED PROFESSIONAL ENGINEER K.B. ECKARD No. C60268 Exp. 6-30-12 CIVIL STATE OF CALIFORNIA

THE STATE OF CALIFORNIA OR ITS OFFICERS OR AGENTS SHALL NOT BE RESPONSIBLE FOR THE ACCURACY OR COMPLETENESS OF SCANNED COPIES OF THIS PLAN SHEET.

NOTES:

1. FOR ACCURATE RIGHT OF WAY DATA, CONTACT RIGHT OF WAY ENGINEERING AT THE DISTRICT OFFICE.
2. FOR COMPLETE ENCROACHMENT PERMIT DATA, SEE RIGHT OF WAY DEPARTMENT AT THE DISTRICT OFFICE.
3. EXISTING SURVEY MONUMENTS MAY BE IMBEDDED IN CONCRETE BLOCKS 0.15' TO 0.20' BELOW THE PAVEMENT SURFACE.

LEGEND:

- # — LOCATION OF WORK NUMBER
- PM No. — POST MILE
- Exist SURVEY MONUMENT
- LIMITS OF COLD PLANE AC PAVEMENT AND HMA (TYPE A)

ABBREVIATIONS:

TCE TEMPORARY CONSTRUCTION EASEMENT

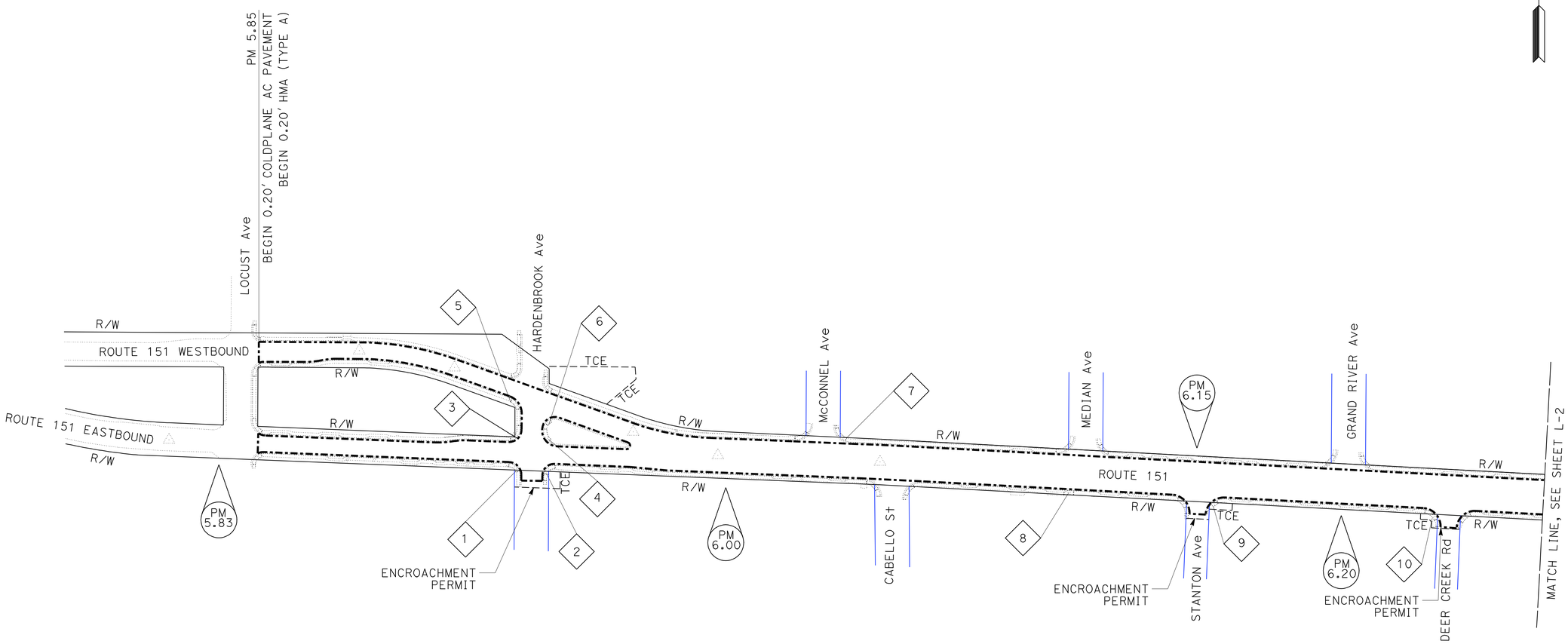

LAYOUT

SCALE: 1" = 100'

L-1

REVISED BY	DATE REVISED

CALCULATED-DESIGNED BY	CHECKED BY
JEANNIE STEFFAN	KATHY ECKARD

FUNCTIONAL SUPERVISOR: JULIE CASEY

STATE OF CALIFORNIA - DEPARTMENT OF TRANSPORTATION

Caltrans® DESIGN

P:\proj1\02\4E380_plans\pse\24e380ea001.dgn

LAST REVISION 01-09-12 | DATE PLOTTED => 10-JAN-2012 TIME PLOTTED => 15:08

Dist	COUNTY	ROUTE	POST MILES TOTAL PROJECT	SHEET No.	TOTAL SHEETS
02	Sha	151	R5.8/R6.9	6	50

Kathryn B. Eckard 01-09-12
REGISTERED CIVIL ENGINEER DATE

01-09-12
PLANS APPROVAL DATE

REGISTERED PROFESSIONAL ENGINEER K.B. ECKARD No. C60268 Exp. 6-30-12 CIVIL STATE OF CALIFORNIA

THE STATE OF CALIFORNIA OR ITS OFFICERS OR AGENTS SHALL NOT BE RESPONSIBLE FOR THE ACCURACY OR COMPLETENESS OF SCANNED COPIES OF THIS PLAN SHEET.

NOTES:

1. FOR ACCURATE RIGHT OF WAY DATA, CONTACT RIGHT OF WAY ENGINEERING AT THE DISTRICT OFFICE.
2. FOR COMPLETE ENCROACHMENT PERMIT DATA, SEE RIGHT OF WAY DEPARTMENT AT THE DISTRICT OFFICE.
3. SURVEY MONUMENTS MAY BE IMBEDDED IN CONCRETE BLOCKS 0.15' TO 0.20' BELOW THE PAVEMENT SURFACE.

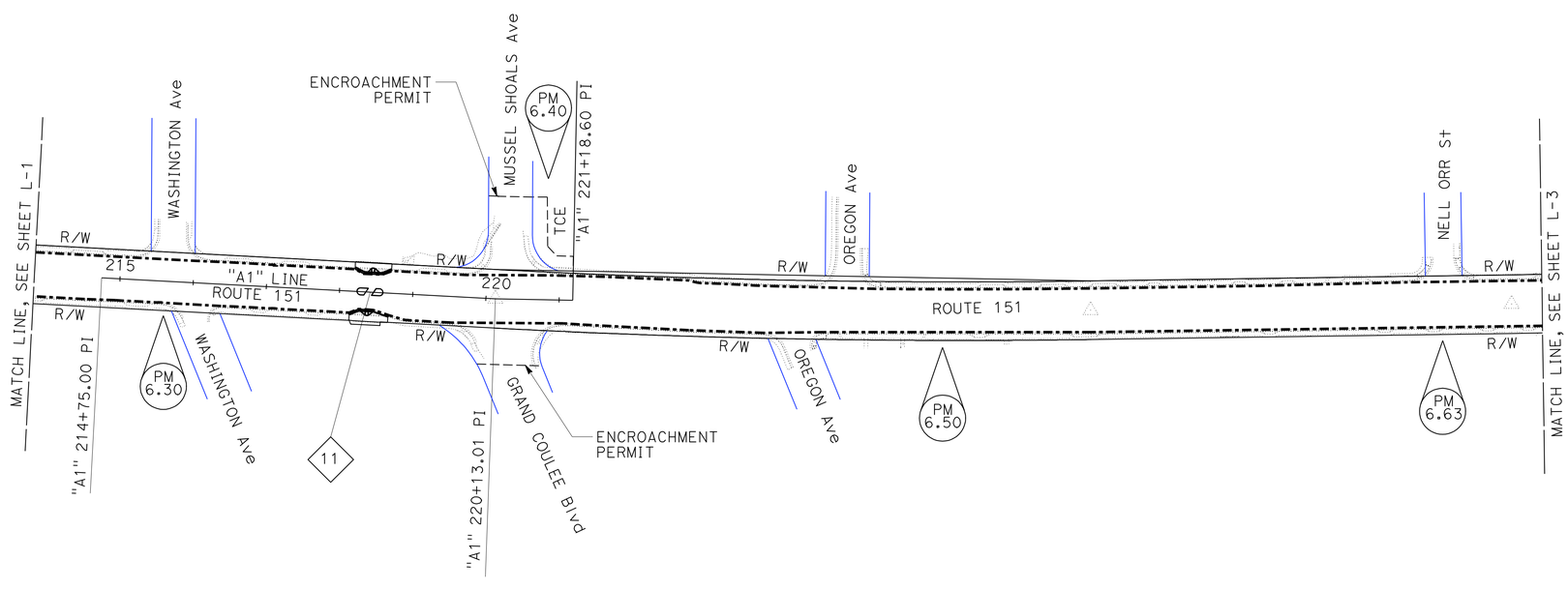

LAYOUT

SCALE: 1" = 100'

L-2

REVISED BY	DATE REVISED
JEANNIE STEFFAN	KATHY ECKARD

CALCULATED-DESIGNED BY
CHECKED BY

FUNCTIONAL SUPERVISOR
JULIE CASEY

STATE OF CALIFORNIA - DEPARTMENT OF TRANSPORTATION
Caltrans®
DESIGN

P:\proj1\02\4E380_plans\pse\24e380ea002.dgn

LAST REVISION 01-09-12
DATE PLOTTED => 10-JAN-2012
TIME PLOTTED => 15:08

Dist	COUNTY	ROUTE	POST MILES TOTAL PROJECT	SHEET No.	TOTAL SHEETS
02	Sha	151	R5.8/R6.9	7	50

Kathryn B. Eckard 01-09-12
REGISTERED CIVIL ENGINEER DATE

01-09-12
PLANS APPROVAL DATE

REGISTERED PROFESSIONAL ENGINEER
K.B. ECKARD
No. C60268
Exp. 6-30-12
CIVIL
STATE OF CALIFORNIA

THE STATE OF CALIFORNIA OR ITS OFFICERS OR AGENTS SHALL NOT BE RESPONSIBLE FOR THE ACCURACY OR COMPLETENESS OF SCANNED COPIES OF THIS PLAN SHEET.

NOTES:

1. FOR ACCURATE RIGHT OF WAY DATA, CONTACT RIGHT OF WAY ENGINEERING AT THE DISTRICT OFFICE.
2. FOR COMPLETE ENCROACHMENT PERMIT DATA, SEE RIGHT OF WAY DEPARTMENT AT THE DISTRICT OFFICE.
3. SURVEY MONUMENTS MAY BE IMBEDDED IN CONCRETE BLOCKS 0.15' TO 0.20' BELOW THE PAVEMENT SURFACE.

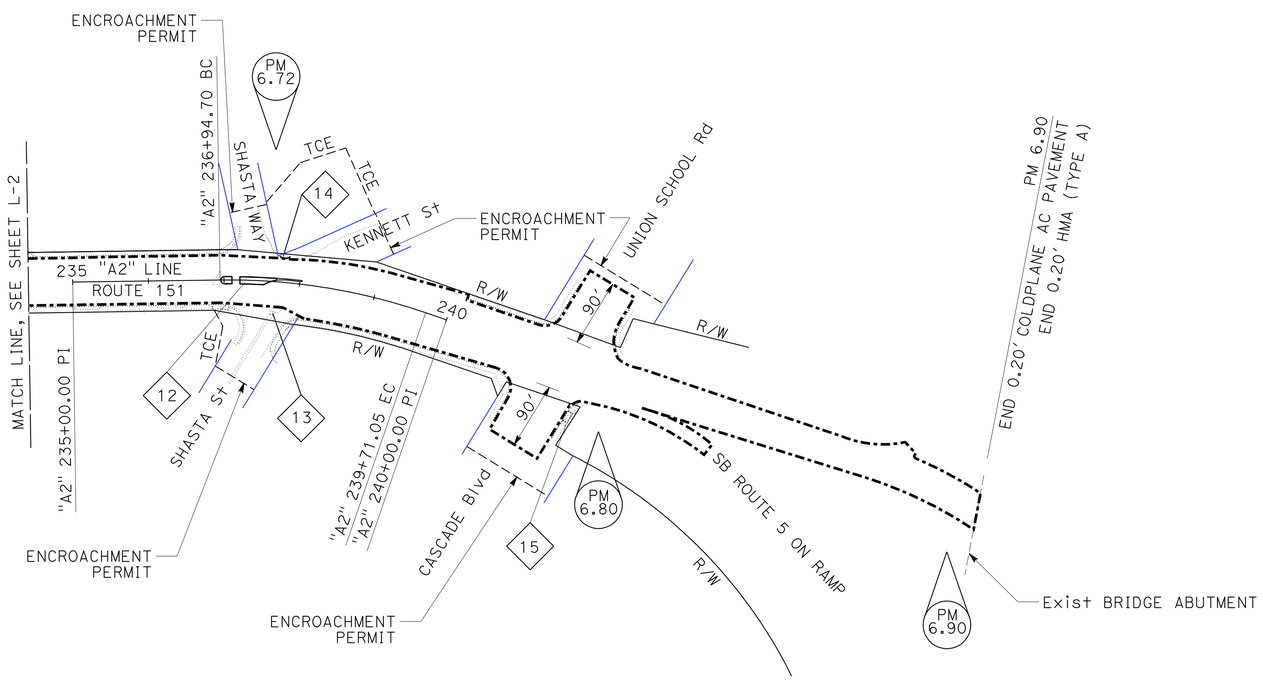

LAYOUT
SCALE: 1" = 100'

L-3

REVISED BY	DATE REVISED
JEANNIE STEFFAN	KATHY ECKARD

CALCULATED-DESIGNED BY
CHECKED BY

FUNCTIONAL SUPERVISOR
JULIE CASEY

STATE OF CALIFORNIA - DEPARTMENT OF TRANSPORTATION
Caltrans
DESIGN

P:\proj\02\4E380_plans\pse\24e380ea003.dgn

LAST REVISION 01-09-12 DATE PLOTTED => 10-JAN-2012 TIME PLOTTED => 15:08

BORDER LAST REVISED 7/2/2010 | USERNAME => s115152 DGN FILE => 24e380ea003.dgn | RELATIVE BORDER SCALE IS IN INCHES 0 1 2 3 | UNIT 0318 | PROJECT NUMBER & PHASE 02000202781 | EA: 02-4E3801

Dist	COUNTY	ROUTE	POST MILES TOTAL PROJECT	SHEET No.	TOTAL SHEETS
02	Sha	151	R5.8/R6.9	8	50

Kathryn B. Eckard 01-09-12
REGISTERED CIVIL ENGINEER DATE

01-09-12
PLANS APPROVAL DATE

REGISTERED PROFESSIONAL ENGINEER K.B. ECKARD No. C60268 Exp. 6-30-12 CIVIL STATE OF CALIFORNIA

THE STATE OF CALIFORNIA OR ITS OFFICERS OR AGENTS SHALL NOT BE RESPONSIBLE FOR THE ACCURACY OR COMPLETENESS OF SCANNED COPIES OF THIS PLAN SHEET.

LEGEND:

- # LOCATION OF WORK
- DETECTABLE WARNING SURFACE
- DIRECTION OF FLOW
- LIMITS OF CONCRETE REMOVAL (CURB, GUTTER, AND SIDEWALK)

ABBREVIATIONS:

LG LIP OF GUTTER
TBC TOP BACK OF CURB

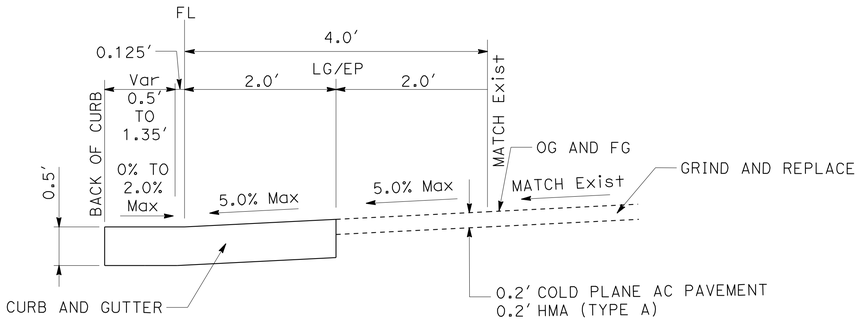

CURB AND GUTTER (Mod TYPE A2-6)

NOTE: SEE Std PLAN FOR ADDITIONAL DETAILS NOT SHOWN

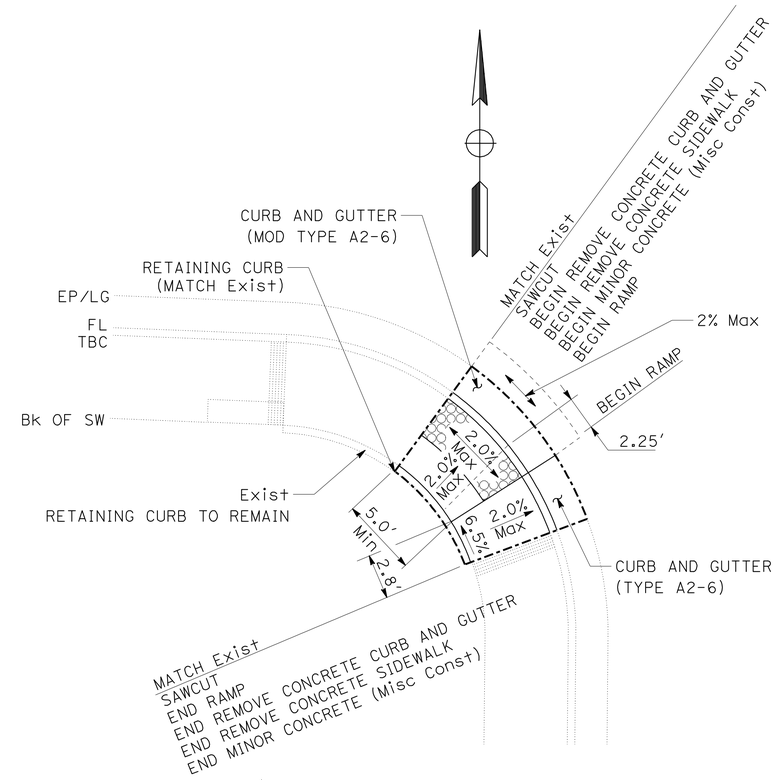

1 CURB RAMP

(CASE C)
EAST BOUND
SW CORNER AT ROUTE 151 AND HARDENBROOK Ave

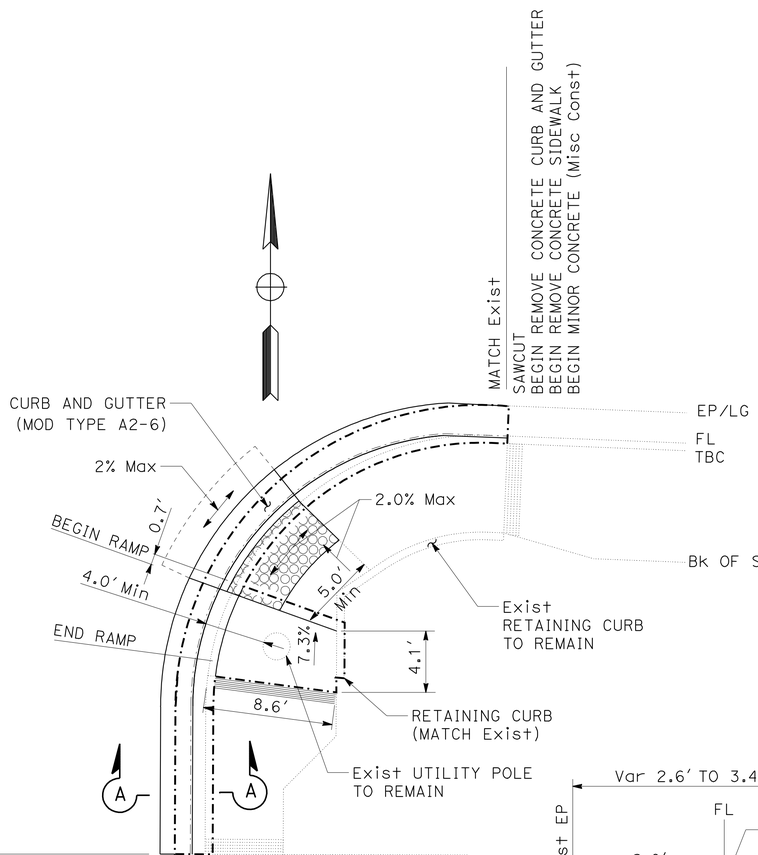

2 CURB RAMP

(CASE C)
EAST BOUND
SE CORNER AT ROUTE 151 AND HARDENBROOK Ave

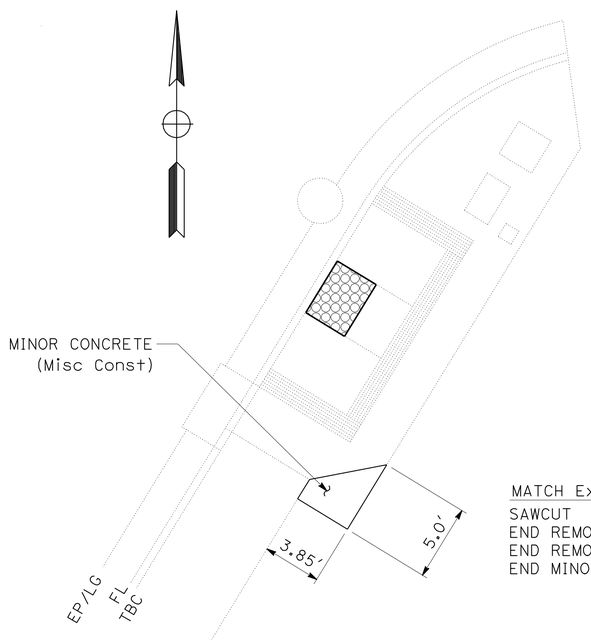

15 CURB RAMP

SE CORNER AT ROUTE 151 AND CASCADE Blvd

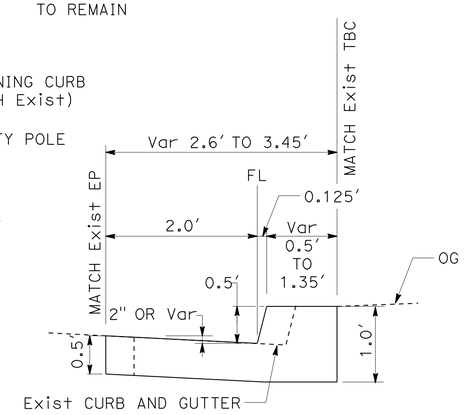

SECTION A-A

NOTE: SEE Std PLAN FOR ADDITIONAL DETAILS NOT SHOWN

CONSTRUCTION DETAILS

NO SCALE

C-1

REVISED BY	DATE REVISED

CALCULATED-DESIGNED BY	CHECKED BY
JEANNIE STEFFAN	KATHY ECKARD

FUNCTIONAL SUPERVISOR: JULIE CASEY

STATE OF CALIFORNIA - DEPARTMENT OF TRANSPORTATION
Caltrans
DESIGN

P:\proj1\02\4E380_plans\pse\24e380ga001.dgn

LAST REVISION 01-09-12 | DATE PLOTTED => 10-JAN-2012 | TIME PLOTTED => 15:08

Dist	COUNTY	ROUTE	POST MILES TOTAL PROJECT	SHEET No.	TOTAL SHEETS
02	Sha	151	R5.8/R6.9	9	50

Kathryn B. Eckard 01-09-12
REGISTERED CIVIL ENGINEER DATE

01-09-12
PLANS APPROVAL DATE

REGISTERED PROFESSIONAL ENGINEER K.B. ECKARD No. C60268 Exp. 6-30-12 CIVIL STATE OF CALIFORNIA

THE STATE OF CALIFORNIA OR ITS OFFICERS OR AGENTS SHALL NOT BE RESPONSIBLE FOR THE ACCURACY OR COMPLETENESS OF SCANNED COPIES OF THIS PLAN SHEET.

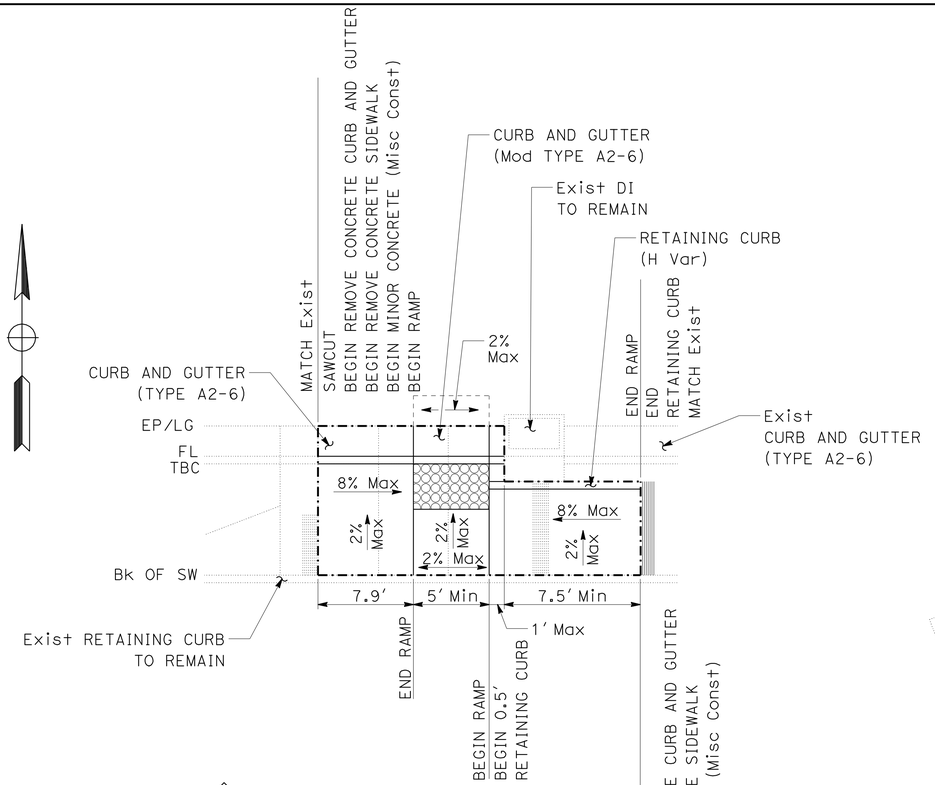

8 CURB RAMP

(CASE C)

SOUTH SIDE OF ROUTE 151 AT MEDIAN Ave

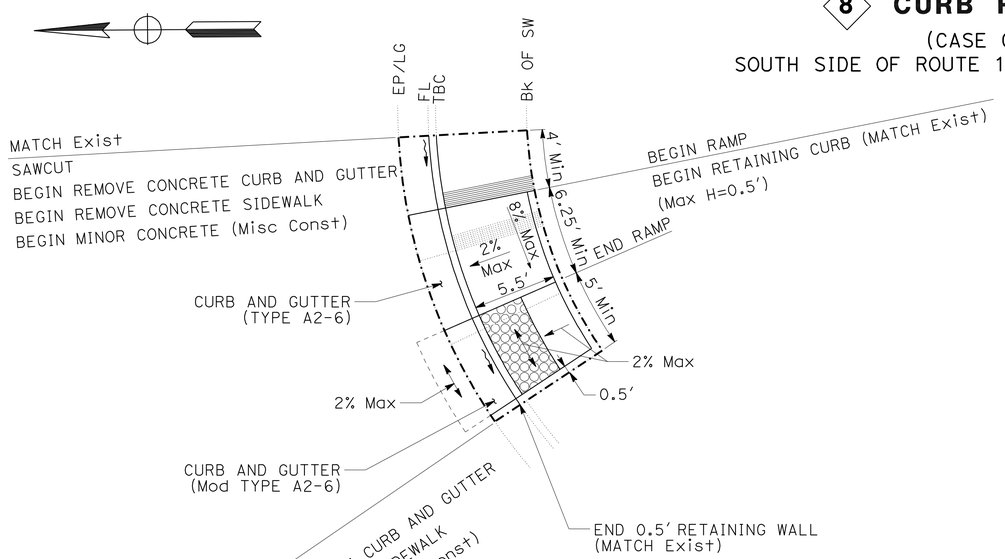

9 CURB RAMP

SE CORNER AT ROUTE 151 AND STANTON Ave

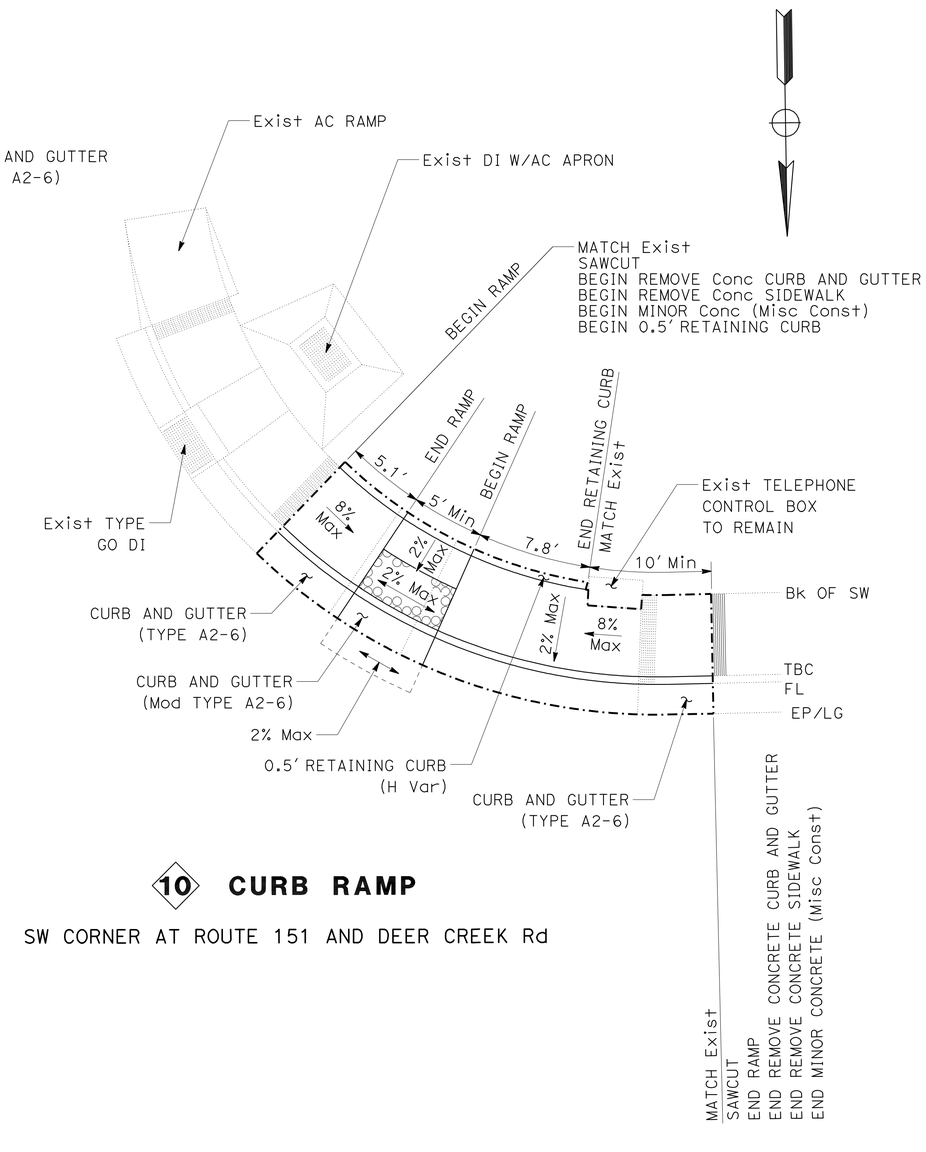

10 CURB RAMP

SW CORNER AT ROUTE 151 AND DEER CREEK Rd

CONSTRUCTION DETAILS

NO SCALE

C-2

REVISED BY	DATE REVISED

CALCULATED-DESIGNED BY	JEANNIE STEFFAN
CHECKED BY	KATHY ECKARD
FUNCTIONAL SUPERVISOR	JULIE CASEY

STATE OF CALIFORNIA - DEPARTMENT OF TRANSPORTATION

Caltrans® DESIGN

P:\proj\02\4E380_plans\pse\24e380ga002.dgn

LAST REVISION 01-09-12 DATE PLOTTED => 10-JAN-2012 TIME PLOTTED => 15:08

Dist	COUNTY	ROUTE	POST MILES TOTAL PROJECT	SHEET No.	TOTAL SHEETS
02	Sha	151	R5.8/R6.9	10	50

Kathryn B. Eckard 01-09-12
REGISTERED CIVIL ENGINEER DATE

01-09-12
PLANS APPROVAL DATE

REGISTERED PROFESSIONAL ENGINEER K.B. ECKARD No. C60268 Exp. 6-30-12 CIVIL STATE OF CALIFORNIA

THE STATE OF CALIFORNIA OR ITS OFFICERS OR AGENTS SHALL NOT BE RESPONSIBLE FOR THE ACCURACY OR COMPLETENESS OF SCANNED COPIES OF THIS PLAN SHEET.

NOTE:

1. FOR ACCURATE RIGHT OF WAY DATA, CONTACT RIGHT OF WAY ENGINEERING AT THE DISTRICT OFFICE.

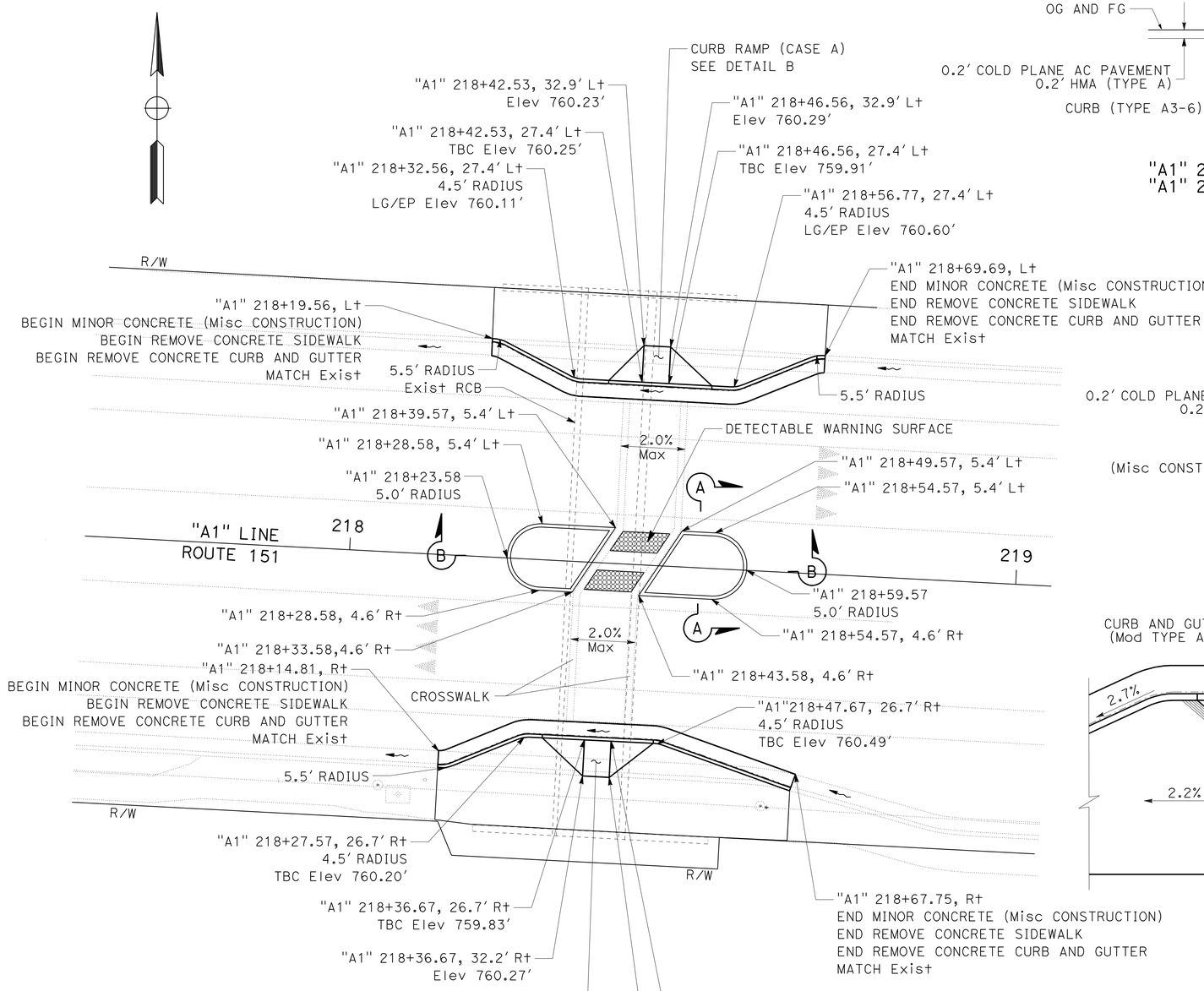

PLAN

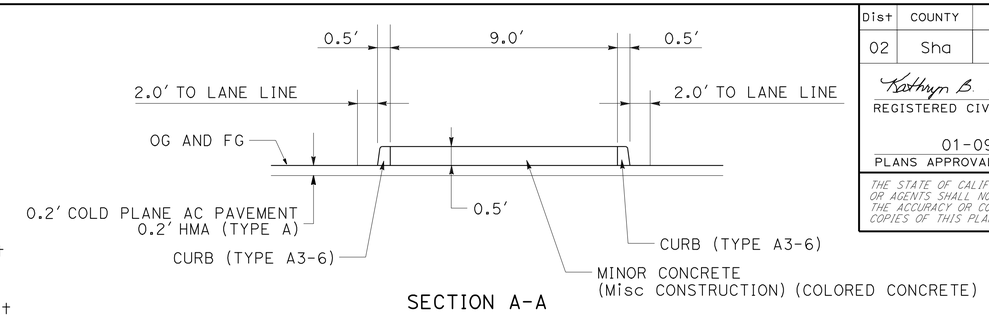

SECTION A-A
"A1" 218+23.58 TO "A1" 218+39.57
"A1" 218+43.58 TO "A1" 218+59.57

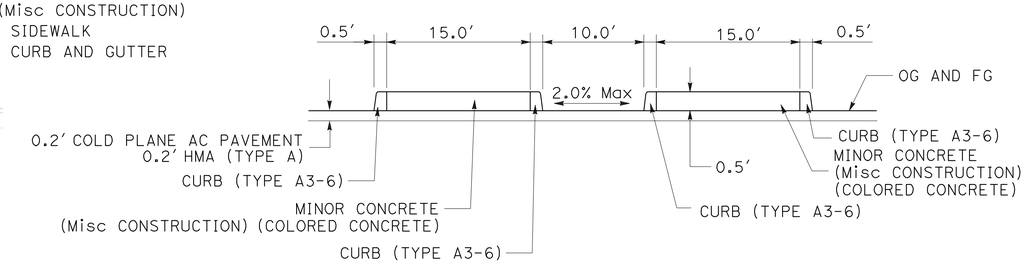

SECTION B-B
"A1" 218+23.58 TO "A1" 218+59.57

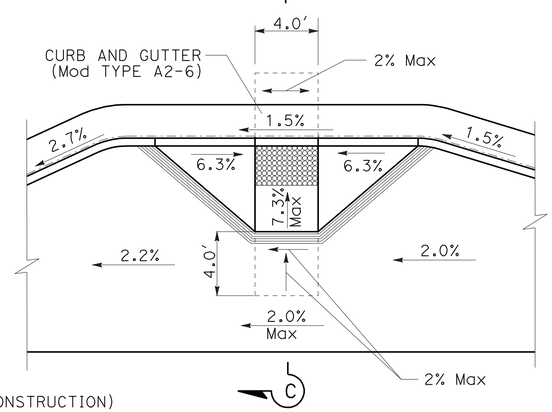

DETAIL A

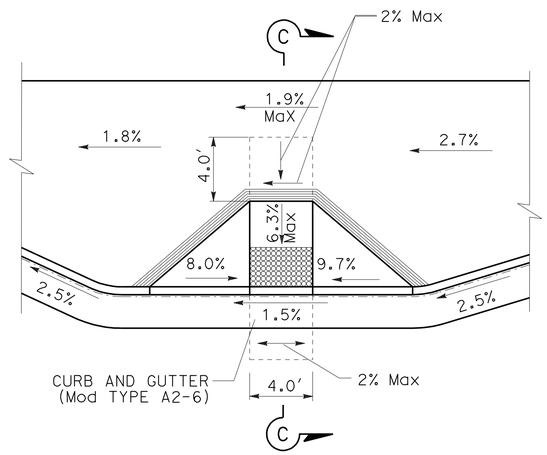

DETAIL B

SECTION C-C

11 PEDESTRIAN REFUGE

CONSTRUCTION DETAILS

NO SCALE

C-3

REVISED BY	DATE REVISED

CALCULATED-DESIGNED BY: JEANNIE STEFFAN
CHECKED BY: KATHY ECKARD
FUNCTIONAL SUPERVISOR: JULIE CASEY

STATE OF CALIFORNIA - DEPARTMENT OF TRANSPORTATION
Caltrans
DESIGN

P:\proj1\02\4E380_plans\pse\24e380ga003.dgn

LAST REVISION 01-09-12
DATE PLOTTED => 10-JAN-2012
TIME PLOTTED => 15:08

Dist	COUNTY	ROUTE	POST MILES TOTAL PROJECT	SHEET No.	TOTAL SHEETS
02	Sha	151	R5.8/R6.9	11	50

Kathryn B. Eckard 01-09-12
REGISTERED CIVIL ENGINEER DATE

01-09-12
PLANS APPROVAL DATE

REGISTERED PROFESSIONAL ENGINEER K.B. ECKARD No. C60268 Exp. 6-30-12 CIVIL STATE OF CALIFORNIA

THE STATE OF CALIFORNIA OR ITS OFFICERS OR AGENTS SHALL NOT BE RESPONSIBLE FOR THE ACCURACY OR COMPLETENESS OF SCANNED COPIES OF THIS PLAN SHEET.

NOTE:

1. FOR ACCURATE RIGHT OF WAY DATA, CONTACT RIGHT OF WAY ENGINEERING AT THE DISTRICT OFFICE.

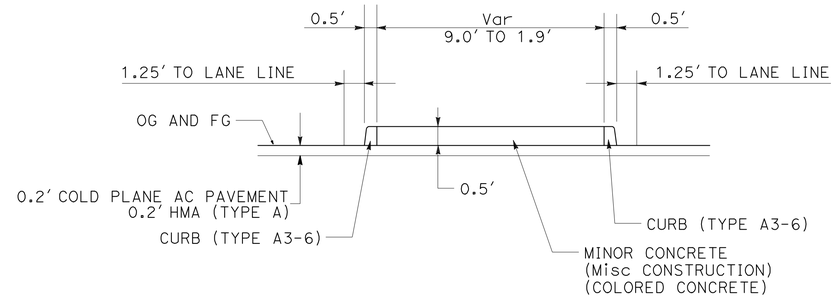

SECTION A-A
"A2" 236+95.37 TO "A2" 237+69.57

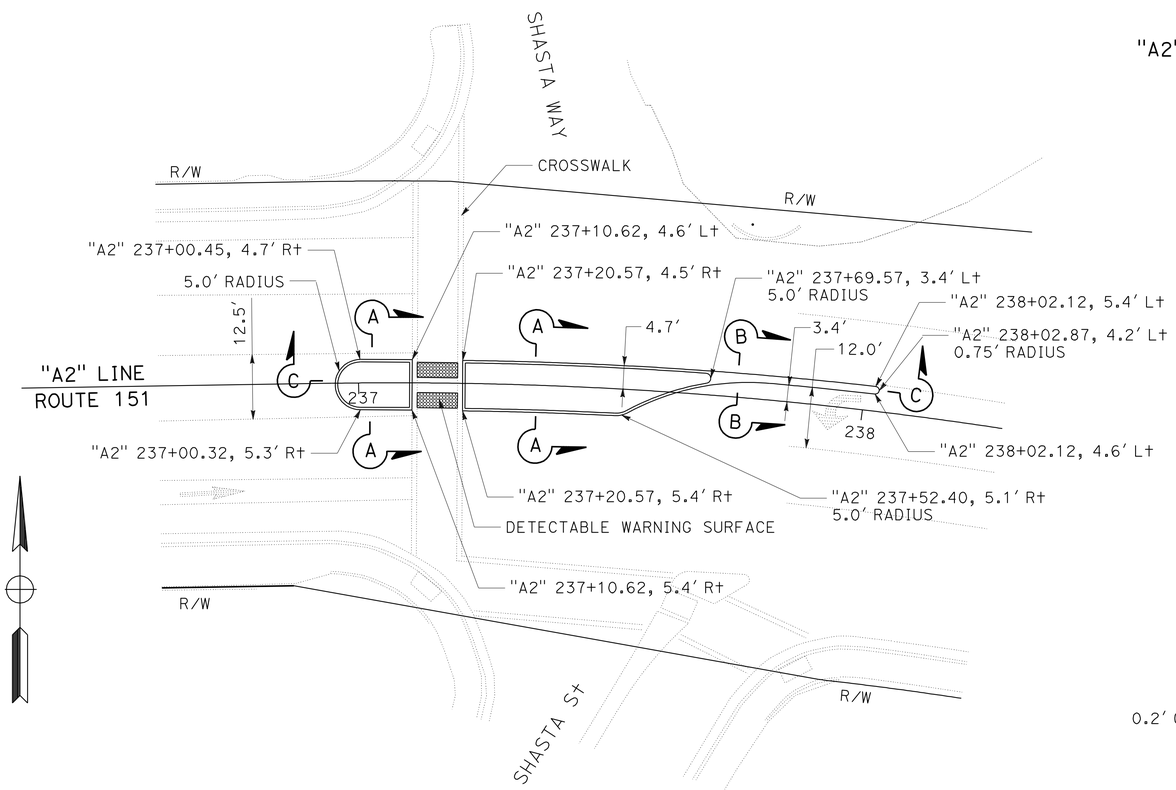

PLAN

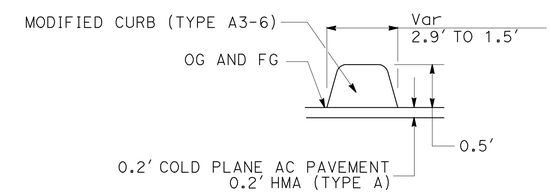

SECTION B-B
"A2" 237+69.57 TO "A2" 238+02.87

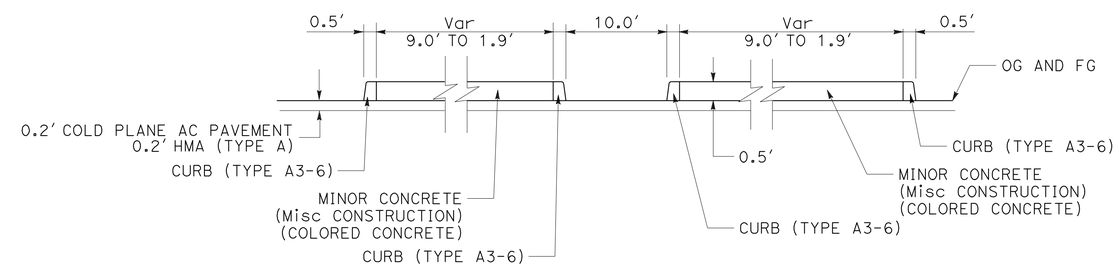

SECTION C-C
"A2" 236+95.37 TO "A2" 238+02.87

12 PEDESTRIAN REFUGE

CONSTRUCTION DETAILS

NO SCALE

C-4

REVISED BY	DATE REVISED

CALCULATED-DESIGNED BY	CHECKED BY
JEANNIE STEFFAN	KATHY ECKARD

FUNCTIONAL SUPERVISOR: JULIE CASEY

STATE OF CALIFORNIA - DEPARTMENT OF TRANSPORTATION
Caltrans
DESIGN

P:\proj1\02\4E380_plans\pse\24e380ga004.dgn

LAST REVISION 01-09-12 | DATE PLOTTED => 10-JAN-2012 | TIME PLOTTED => 15:08

Dist	COUNTY	ROUTE	POST MILES TOTAL PROJECT	SHEET No.	TOTAL SHEETS
02	Sha	151	R5.8/R6.9	12	50

Kathryn B. Eckard 01-09-12
REGISTERED CIVIL ENGINEER DATE

01-09-12
PLANS APPROVAL DATE

REGISTERED PROFESSIONAL ENGINEER K.B. ECKARD No. C60268 Exp. 6-30-12 CIVIL STATE OF CALIFORNIA

THE STATE OF CALIFORNIA OR ITS OFFICERS OR AGENTS SHALL NOT BE RESPONSIBLE FOR THE ACCURACY OR COMPLETENESS OF SCANNED COPIES OF THIS PLAN SHEET.

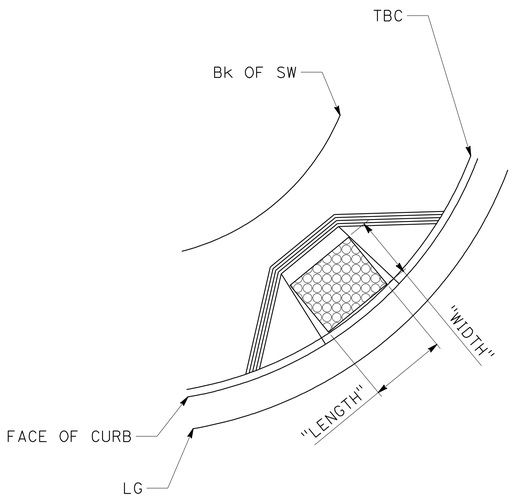

CASE A
(TYPICAL)

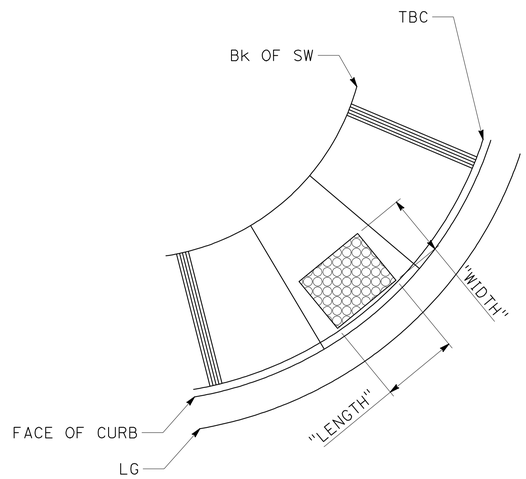

CASE C
(TYPICAL)

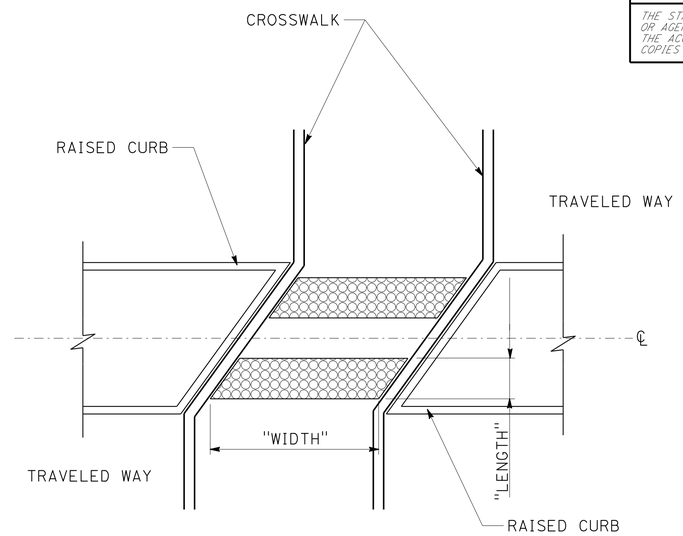

PEDESTRIAN REFUGE
(TYPICAL)

DETECTABLE WARNING SURFACE

#	CURB RAMP LOCATION	SIZE LENGTH x WIDTH	DESCRIPTION
1	SW CORNER AT EASTBOUND ROUTE 151 AND HARDENBROOK Ave	5′ x 3′	CASE C
2	SE CORNER AT EASTBOUND ROUTE 151 AND HARDENBROOK Ave	5′ x 3′	CASE C
3	NW CORNER AT EASTBOUND ROUTE 151 AND HARDENBROOK Ave	5′ x 3′	CASE C
4	NE CORNER AT EASTBOUND ROUTE 151 AND HARDENBROOK Ave	5′ x 3′	CASE C
5	SW CORNER AT WESTBOUND ROUTE 151 AND HARDENBROOK Ave	5′ x 3′	CASE C
6	SE CORNER AT WESTBOUND ROUTE 151 AND HARDENBROOK Ave	5′ x 3′	CASE C
7	NE CORNER AT ROUTE 151 AND MCCONNEL Ave	5′ x 3′	CASE C
8	SOUTH SIDE OF ROUTE 151 AT MEDIAN Ave	5′ x 3′	CASE C
9	SE CORNER AT ROUTE 151 AND STANTON Ave	5′ x 3′	CASE C
10	SW CORNER AT ROUTE 151 AND DEER CREEK Rd	5′ x 3′	CASE C
11	SOUTH SIDE OF ROUTE 151 WEST OF GRAND COULEE Blvd	4′ x 3′	CASE A
11	NORTH SIDE OF ROUTE 151 WEST OF MUSSEL SHOULS Ave	4′ x 3′	CASE A
11	CENTER OF ROUTE 151 WEST OF MUSSEL SHOULS Ave	2 - 3′ x 9′	PEDESTRIAN REFUGE
12	CENTER OF ROUTE 151 AT SHASTA	2 - 3′ x 9′	PEDESTRIAN REFUGE
13	CENTER OF SHASTA St ON THE SOUTH SIDE OF ROUTE 151	4′ x 6′	Exist PEDESTRIAN REFUGE
15	SE CORNER AT ROUTE 151 AND CASCADE Blvd	4′ x 3′	Exist CASE A

CONSTRUCTION DETAILS

NO SCALE

C-5

REVISED BY | DATE REVISED
JEANNIE STEFFAN | KATHY ECKARD
CALCULATED-DESIGNED BY | CHECKED BY
FUNCTIONAL SUPERVISOR
JULIE CASEY

STATE OF CALIFORNIA - DEPARTMENT OF TRANSPORTATION
Caltrans
DESIGN

P:\proj1\02\4E380_plans\pse\24e380ga005.dgn

LAST REVISION | DATE PLOTTED => 10-JAN-2012 | TIME PLOTTED => 15:08
01-09-12

Dist	COUNTY	ROUTE	POST MILES TOTAL PROJECT	SHEET No.	TOTAL SHEETS
02	Sha	151	R5.8/R6.9	13	50

Kathryn B. Eckard 01-09-12
REGISTERED CIVIL ENGINEER DATE

01-09-12
PLANS APPROVAL DATE

REGISTERED PROFESSIONAL ENGINEER K.B. ECKARD No. C60268 Exp. 6-30-12 CIVIL STATE OF CALIFORNIA

THE STATE OF CALIFORNIA OR ITS OFFICERS OR AGENTS SHALL NOT BE RESPONSIBLE FOR THE ACCURACY OR COMPLETENESS OF SCANNED COPIES OF THIS PLAN SHEET.

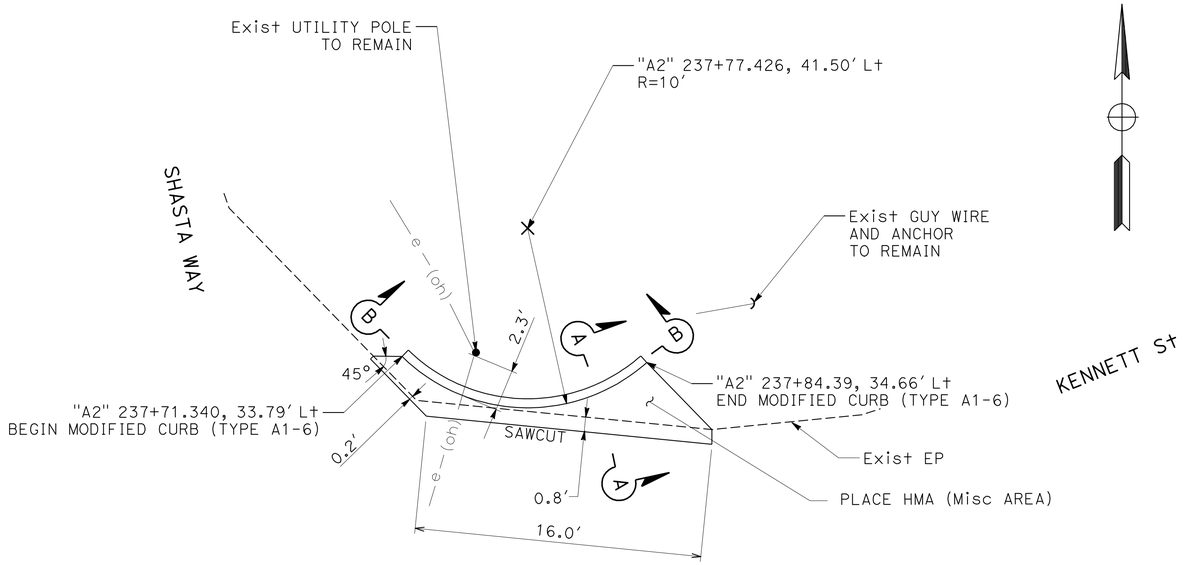

PLAN

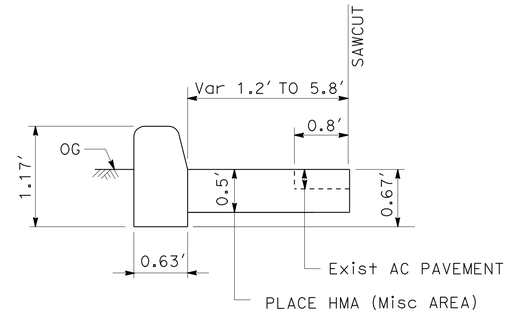

SECTION A-A

NOTE: SEE Std PLAN FOR ADDITIONAL CURB DETAILS NOT SHOWN

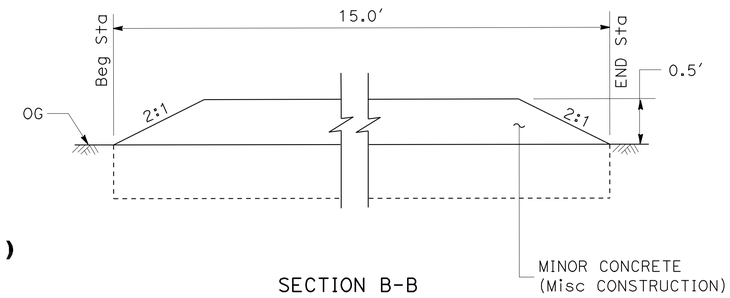

SECTION B-B

14 MODIFIED CURB (TYPE A1-6)

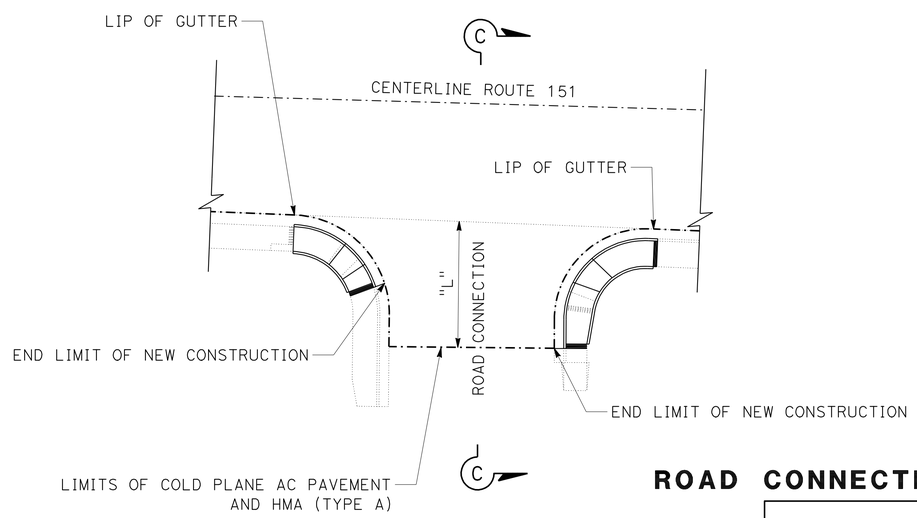

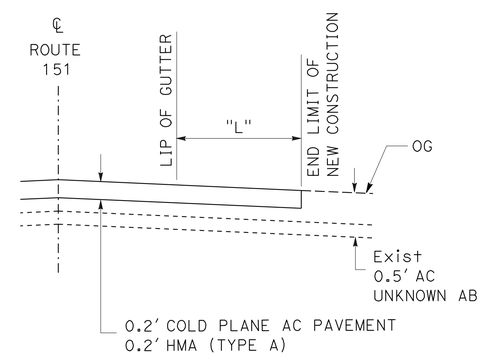

SECTION C-C

ROAD CONNECTION CONFORM

LOCATION	"L" (LF)
HARDENBROOCK Ave	32
STANTON Ave	32
DEER CREEK Rd	32
CASCADE Blvd	90
UNION SCHOOL Rd	90
SB I5 OFF RAMP	15

CONSTRUCTION DETAILS

NO SCALE

C-6

REVISED BY | DATE REVISED
JEANNIE STEFFAN | KATHY ECKARD
CALCULATED-DESIGNED BY | CHECKED BY
FUNCTIONAL SUPERVISOR: JULIE CASEY

STATE OF CALIFORNIA - DEPARTMENT OF TRANSPORTATION
Caltrans DESIGN

P:\proj1\02\4E380_plans\pse\24e380ga006.dgn

LAST REVISION 01-09-12 | DATE PLOTTED => 10-JAN-2012 | TIME PLOTTED => 15:08

Dist	COUNTY	ROUTE	POST MILES TOTAL PROJECT	SHEET No.	TOTAL SHEETS
02	Sha	151	R5.8/R6.9	14	50

Kathryn B. Eckard 01-09-12
REGISTERED CIVIL ENGINEER DATE

01-09-12
PLANS APPROVAL DATE

REGISTERED PROFESSIONAL ENGINEER
K.B. ECKARD
No. C60268
Exp. 6-30-12
CIVIL
STATE OF CALIFORNIA

THE STATE OF CALIFORNIA OR ITS OFFICERS OR AGENTS SHALL NOT BE RESPONSIBLE FOR THE ACCURACY OR COMPLETENESS OF SCANNED COPIES OF THIS PLAN SHEET.

NOTE:

1. FOR ACCURATE RIGHT OF WAY DATA, CONTACT RIGHT OF WAY ENGINEERING AT THE DISTRICT OFFICE.

LEGEND:

—e—(oh)—e—(oh)—	AERIAL ELECTRICAL (CITY OF SHASTA LAKE)
—e— —e—	UNDERGROUND ELECTRICAL (CITY OF SHASTA LAKE)
—t— —t—	UNDERGROUND CONDUIT (AT&T)
—fo— —fo—	UNDERGROUND FIBER/CABLE (AT&T)
—fo— —(oh)—	AERIAL FIBER/CABLE (AT&T)
—w— —w—	WATER (CITY OF SHASTA LAKE)
—s— —s—	SEWER (CITY OF SHASTA LAKE)
—g— —g—	NATURAL GAS

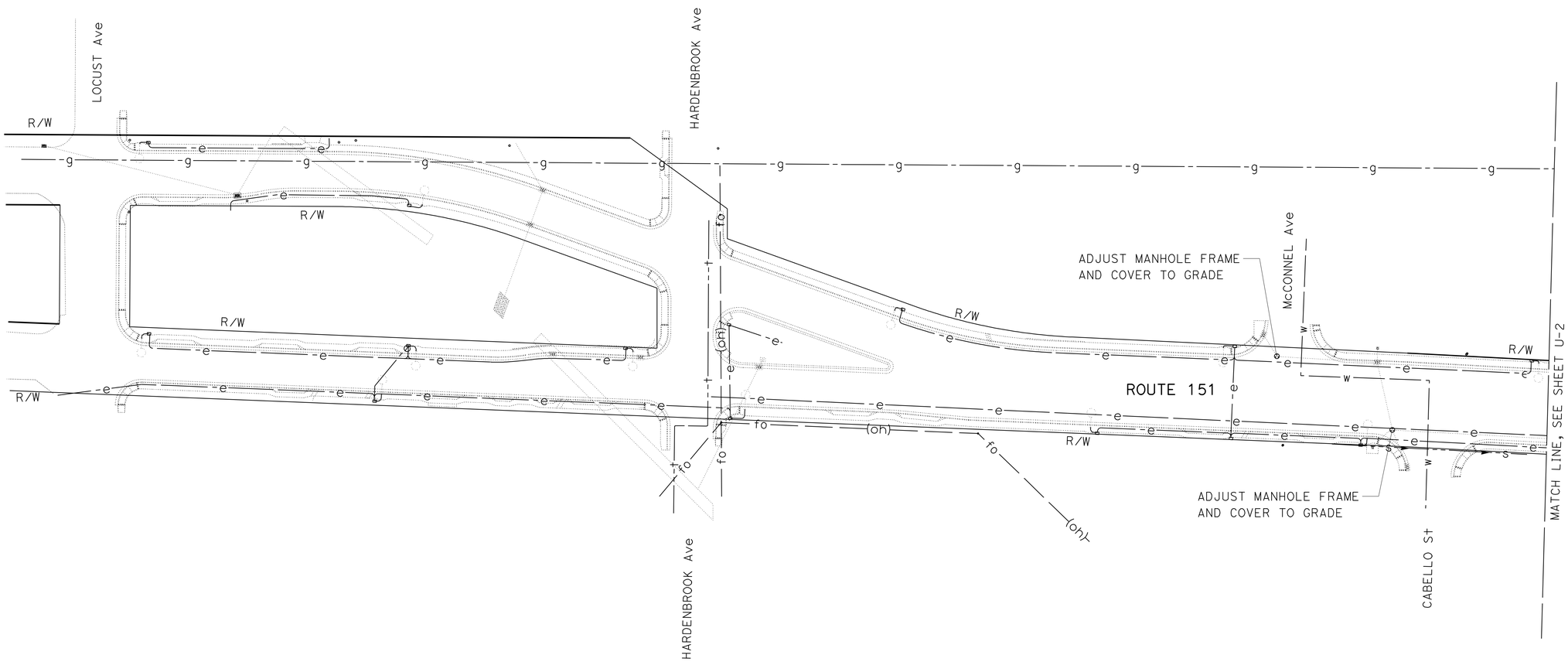

APPROVED FOR UTILITY WORK ONLY

UTILITY PLAN

SCALE: 1" = 50'

U-1

REVISED BY	DATE REVISED

CALCULATED-DESIGNED BY: JEANNIE STEFFAN
CHECKED BY: KATHY ECKARD
FUNCTIONAL SUPERVISOR: JULIE CASEY

STATE OF CALIFORNIA - DEPARTMENT OF TRANSPORTATION
Caltrans
DESIGN

P:\proj1\02\4E380_plans\pse\24e380ka001.dgn

LAST REVISION 01-09-12 | DATE PLOTTED => 10-JAN-2012 | TIME PLOTTED => 15:08

Dist	COUNTY	ROUTE	POST MILES TOTAL PROJECT	SHEET No.	TOTAL SHEETS
02	Sha	151	R5.8/R6.9	15	50

Kathryn B. Eckard 01-09-12
REGISTERED CIVIL ENGINEER DATE

01-09-12
PLANS APPROVAL DATE

REGISTERED PROFESSIONAL ENGINEER K.B. ECKARD No. C60268 Exp. 6-30-12 CIVIL STATE OF CALIFORNIA

THE STATE OF CALIFORNIA OR ITS OFFICERS OR AGENTS SHALL NOT BE RESPONSIBLE FOR THE ACCURACY OR COMPLETENESS OF SCANNED COPIES OF THIS PLAN SHEET.

NOTE:

1. FOR ACCURATE RIGHT OF WAY DATA, CONTACT RIGHT OF WAY ENGINEERING AT THE DISTRICT OFFICE.

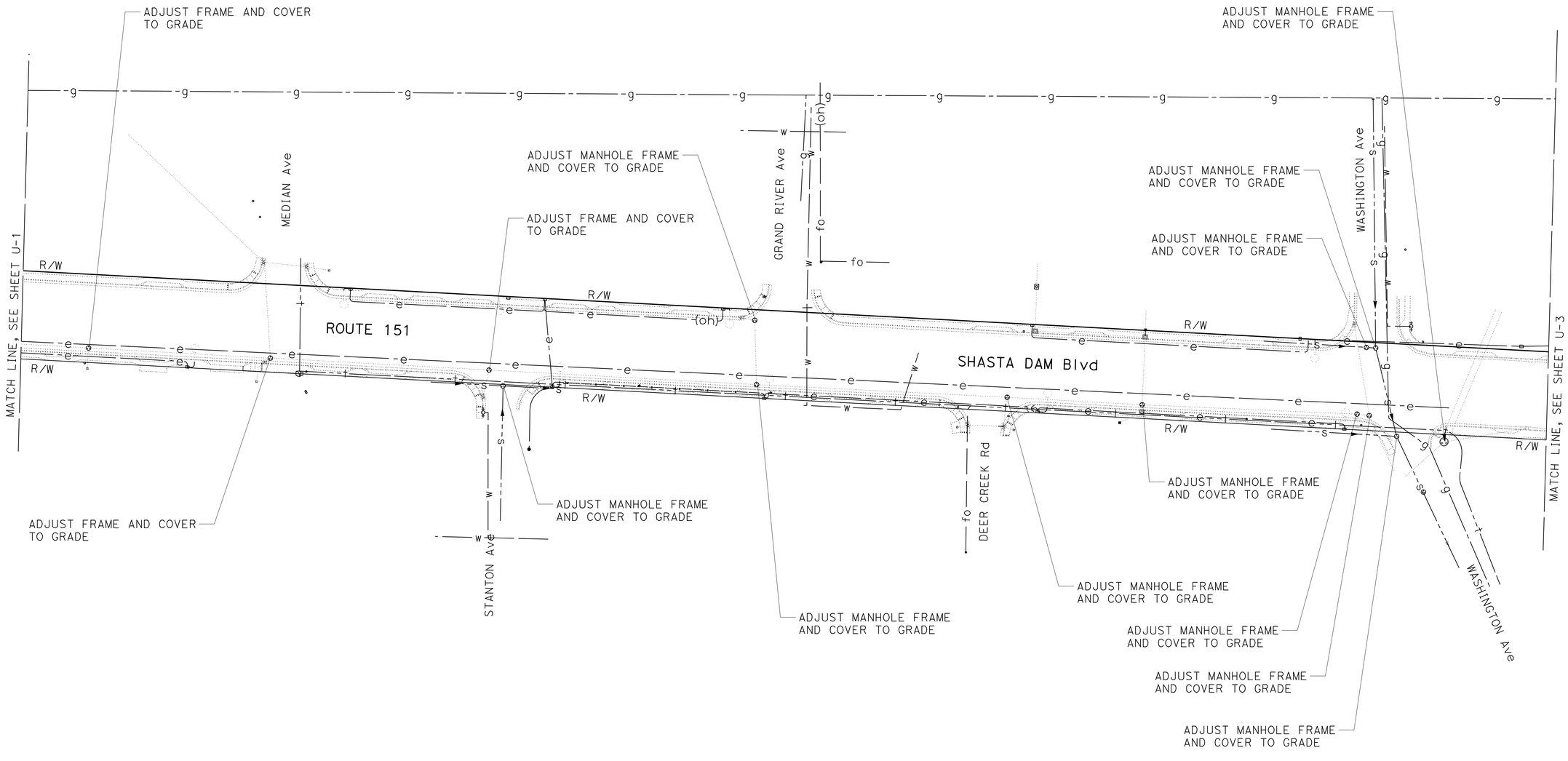

UTILITY PLAN

SCALE: 1" = 50'

U-2

REVISED BY	DATE REVISED
JEANNIE STEFFAN	
KATHY ECKARD	

CALCULATED-DESIGNED BY
CHECKED BY

FUNCTIONAL SUPERVISOR
JULIE CASEY

STATE OF CALIFORNIA - DEPARTMENT OF TRANSPORTATION
Caltrans
DESIGN

P:\proj1\02\4E380_plans\pse\24e380ka002.dgn

LAST REVISION 01-09-12
DATE PLOTTED => 10-JAN-2012
TIME PLOTTED => 15:08

Dist	COUNTY	ROUTE	POST MILES TOTAL PROJECT	SHEET No.	TOTAL SHEETS
02	Sha	151	R5.8/R6.9	16	50

Kathryn B. Eckard 01-09-12
REGISTERED CIVIL ENGINEER DATE

01-09-12
PLANS APPROVAL DATE

REGISTERED PROFESSIONAL ENGINEER
K.B. ECKARD
No. C60268
Exp. 6-30-12
CIVIL
STATE OF CALIFORNIA

THE STATE OF CALIFORNIA OR ITS OFFICERS OR AGENTS SHALL NOT BE RESPONSIBLE FOR THE ACCURACY OR COMPLETENESS OF SCANNED COPIES OF THIS PLAN SHEET.

NOTE:

1. FOR ACCURATE RIGHT OF WAY DATA, CONTACT RIGHT OF WAY ENGINEERING AT THE DISTRICT OFFICE.

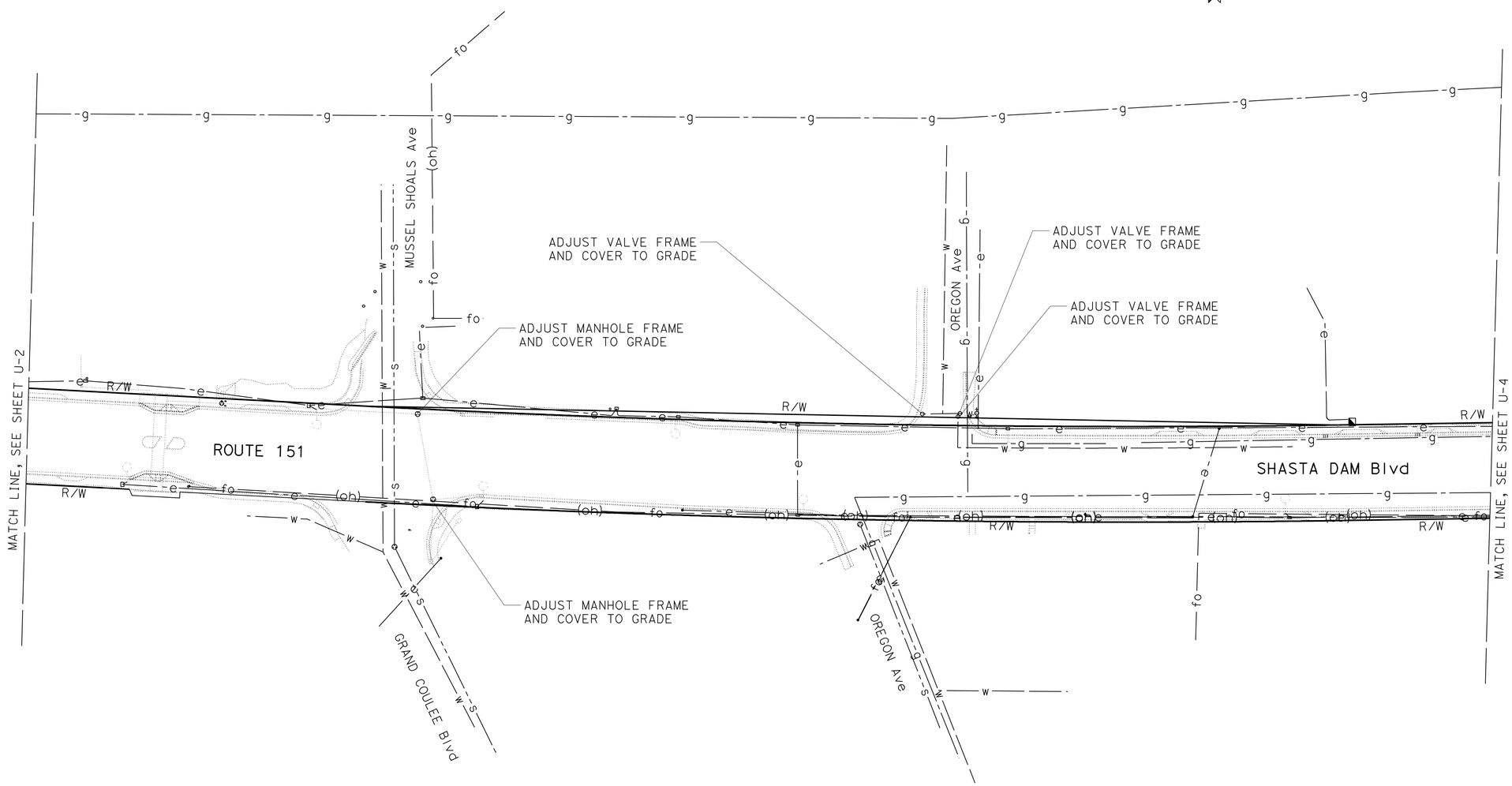

UTILITY PLAN

SCALE: 1" = 50'

U-3

REVISED BY	DATE REVISED

CALCULATED-DESIGNED BY	JEANNIE STEFFAN
CHECKED BY	KATHY ECKARD
FUNCTIONAL SUPERVISOR	JULIE CASEY

STATE OF CALIFORNIA - DEPARTMENT OF TRANSPORTATION
Caltrans
DESIGN

P:\proj1\02\4E380_plans\pse\24e380ka003.dgn

LAST REVISION 01-09-12 | DATE PLOTTED => 10-JAN-2012 | TIME PLOTTED => 15:08

Dist	COUNTY	ROUTE	POST MILES TOTAL PROJECT	SHEET No.	TOTAL SHEETS
02	Sha	151	R5.8/R6.9	17	50

Kathryn B. Eckard 01-09-12
REGISTERED CIVIL ENGINEER DATE

01-09-12
PLANS APPROVAL DATE

REGISTERED PROFESSIONAL ENGINEER K.B. ECKARD No. C60268 Exp. 6-30-12 CIVIL STATE OF CALIFORNIA

THE STATE OF CALIFORNIA OR ITS OFFICERS OR AGENTS SHALL NOT BE RESPONSIBLE FOR THE ACCURACY OR COMPLETENESS OF SCANNED COPIES OF THIS PLAN SHEET.

NOTE:

1. FOR ACCURATE RIGHT OF WAY DATA, CONTACT RIGHT OF WAY ENGINEERING AT THE DISTRICT OFFICE.

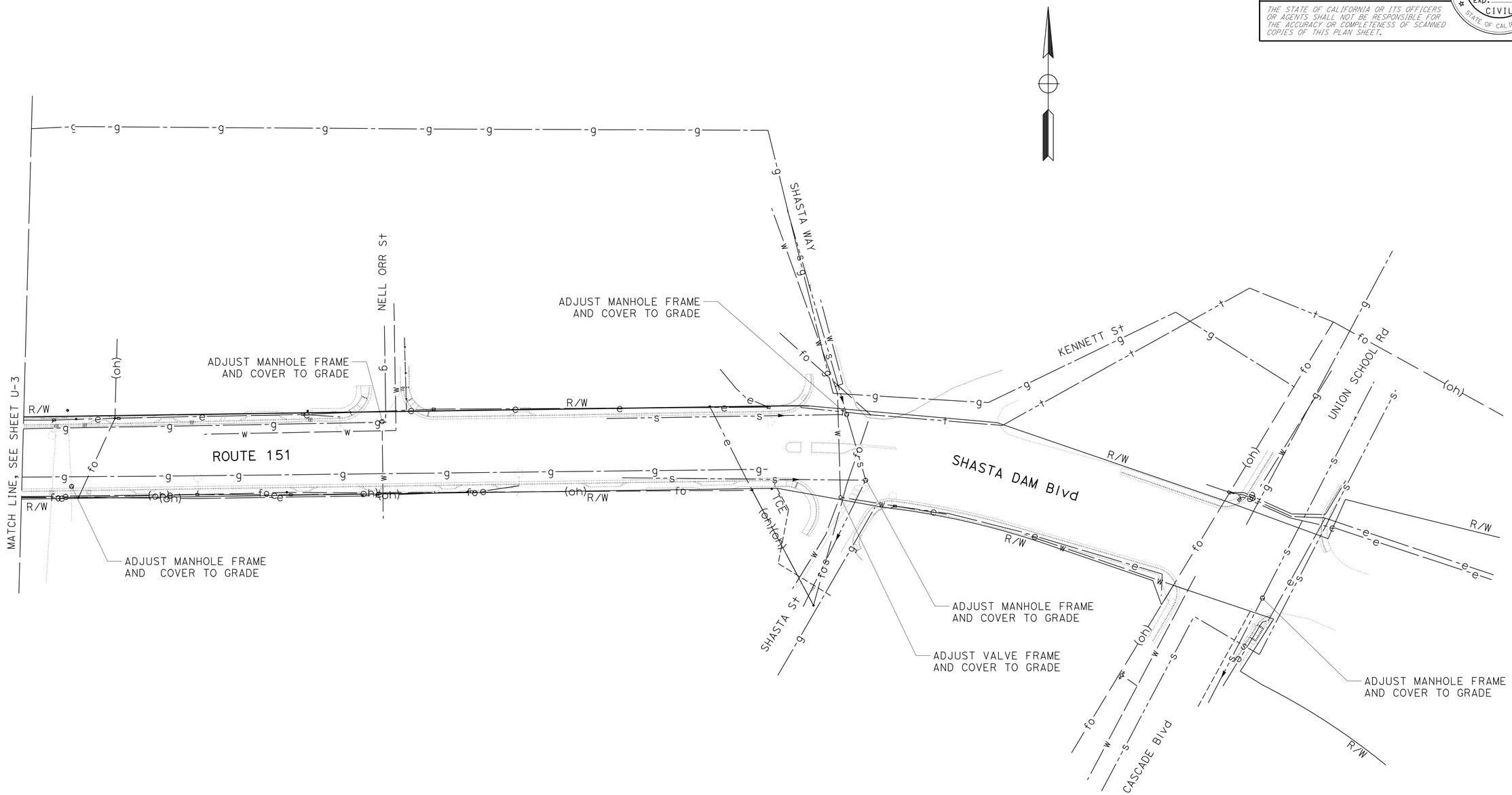

UTILITY PLAN

SCALE: 1" = 50'

U-4

REVISED BY	DATE REVISED

CALCULATED-DESIGNED BY	CHECKED BY
JEANNIE STEFFAN	KATHY ECKARD

FUNCTIONAL SUPERVISOR: JULIE CASEY

STATE OF CALIFORNIA - DEPARTMENT OF TRANSPORTATION

Caltrans® DESIGN

P:\proj1\02\4E380_plans\pse\24e380ka004.dgn

LAST REVISION 01-09-12 | DATE PLOTTED => 10-JAN-2012 | TIME PLOTTED => 15:08

Dist	COUNTY	ROUTE	POST MILES TOTAL PROJECT	SHEET No.	TOTAL SHEETS
02	Sha	151	R5.8/R6.9	18	50

Kathryn B. Eckard 01-09-12
REGISTERED CIVIL ENGINEER DATE

01-09-12
PLANS APPROVAL DATE

REGISTERED PROFESSIONAL ENGINEER K.B. ECKARD No. C60268 Exp. 6-30-12 CIVIL STATE OF CALIFORNIA

THE STATE OF CALIFORNIA OR ITS OFFICERS OR AGENTS SHALL NOT BE RESPONSIBLE FOR THE ACCURACY OR COMPLETENESS OF SCANNED COPIES OF THIS PLAN SHEET.

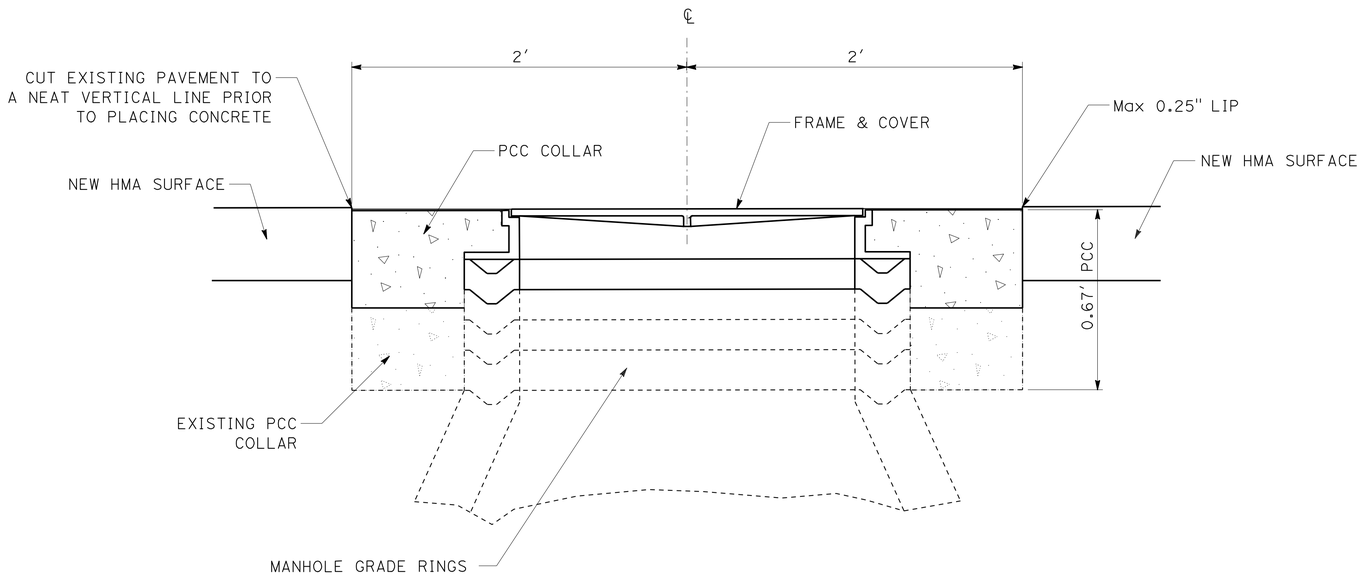

ADJUST MANHOLE FRAME AND COVER TO GRADE

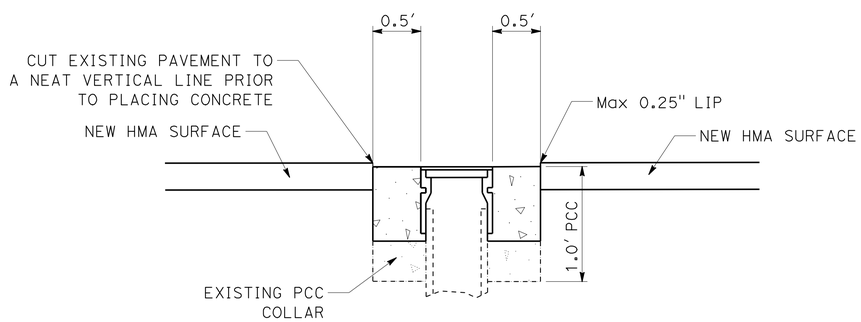

ADJUST VALVE FRAME AND COVER TO GRADE

ADJUST FRAME AND COVER TO GRADE

SHEET No.	DESCRIPTION	ADJUST MANHOLE FRAME AND COVER TO GRADE	ADJUST VALVE FRAME AND COVER TO GRADE
		EA	EA
U-1	STORM DRAIN MANHOLE	1	
U-1	STORM DRAIN MANHOLE	1	
U-2	STORM DRAIN MANHOLE	1	
U-2	STORM DRAIN MANHOLE	1	
U-2	STORM DRAIN MANHOLE	1	
U-2	STORM DRAIN MANHOLE	1	
U-2	SEWER MANHOLE	1	
U-2	STORM DRAIN MANHOLE	1	
U-2	STORM DRAIN MANHOLE	1	
U-2	STORM DRAIN MANHOLE	1	
U-2	STORM DRAIN MANHOLE	1	
U-2	STORM DRAIN MANHOLE	1	
U-2	STORM DRAIN MANHOLE	1	
U-2	SEWER MANHOLE	1	
U-2	SEWER MANHOLE	1	
U-2	SEWER MANHOLE	1	
U-2	STORM DRAIN MANHOLE	1	
U-3	STORM DRAIN MANHOLE	1	
U-3	STORM DRAIN MANHOLE	1	
U-3	WATER VALVE		1
U-3	WATER VALVE		1
U-3	WATER VALVE		1
U-4	STORM DRAIN MANHOLE	1	
U-4	STORM DRAIN MANHOLE	1	
U-4	WATER VALVE		1
U-4	SEWER MANHOLE	1	
U-4	SEWER MANHOLE	1	
U-4	SEWER MANHOLE	1	
SUBTOTAL		23	4
TOTAL		27	

UTILITY DETAILS AND QUANTITIES

NO SCALE

UD-1

REVISED BY | DATE REVISED
JEANNIE STEFFAN | KATHY ECKARD
CALCULATED-DESIGNED BY | CHECKED BY
FUNCTIONAL SUPERVISOR: JULIE CASEY

STATE OF CALIFORNIA - DEPARTMENT OF TRANSPORTATION
Caltrans®
DESIGN

P:\proj1\02\4E380_plans\pse\24e380kb001.dgn

LAST REVISION 01-09-12 | DATE PLOTTED => 10-JAN-2012 | TIME PLOTTED => 15:08

Dist	COUNTY	ROUTE	POST MILES TOTAL PROJECT	SHEET No.	TOTAL SHEETS
02	Sha	151	R5.8/R6.9	19	50

Kathryn B. Eckard 01-09-12
REGISTERED CIVIL ENGINEER DATE

01-09-12
PLANS APPROVAL DATE

REGISTERED PROFESSIONAL ENGINEER K.B. ECKARD No. C60268 Exp. 6-30-12 CIVIL STATE OF CALIFORNIA

THE STATE OF CALIFORNIA OR ITS OFFICERS OR AGENTS SHALL NOT BE RESPONSIBLE FOR THE ACCURACY OR COMPLETENESS OF SCANNED COPIES OF THIS PLAN SHEET.

NOTE:

1. EXACT LOCATION OF ALL SIGNS TO BE DETERMINED BY THE ENGINEER.

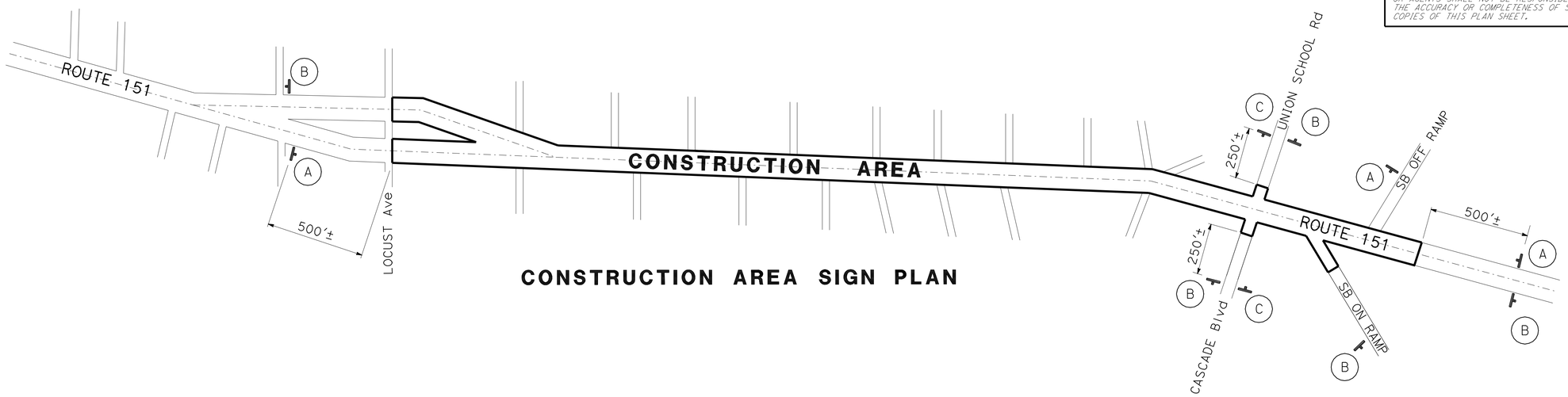

CONSTRUCTION AREA SIGN PLAN

CONSTRUCTION AREA SIGNS (STATIONARY MOUNTED)

TYPE	CODE	PANEL SIZE	SIGN MESSAGE	No. AND SIZE OF POSTS	No. OF SIGNS
(A)	W20-1 C23B	48" x 48" 48" x 24"	ROAD WORK AHEAD HIGHWAY IMPROVEMENTS	1 - 4" x 6"	3
(B)	C20-2	48" x 18"	END ROAD WORK	1 - 4" x 4"	5
(C)	W20-1	48" x 48"	ROAD WORK AHEAD	1 - 4" x 6"	2

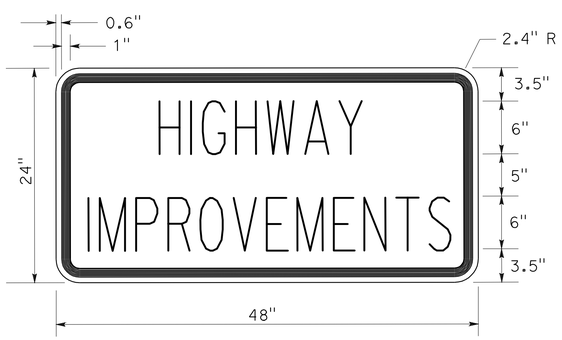

C23B SIGN PANEL DETAIL

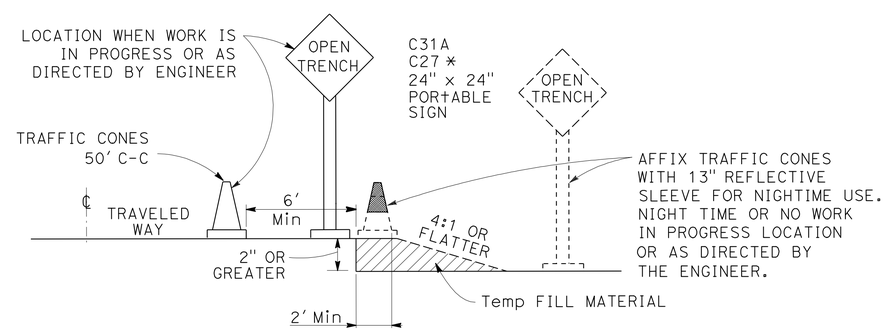

OPEN TRENCH SIGNING AND MARKING

* PLACE AT 250' INTERVALS THROUGH THE OPEN TRENCH AREA, ALTERNATE C27 (OPEN TRENCH) AND C31A (NO SHOULDER) SIGNS

CONSTRUCTION AREA SIGNS

NO SCALE

CS-1

REVISED BY | DATE REVISED
JEANNIE STEFFAN | KATHY ECKARD
CALCULATED-DESIGNED BY | CHECKED BY
FUNCTIONAL SUPERVISOR: JULIE CASEY

STATE OF CALIFORNIA - DEPARTMENT OF TRANSPORTATION
Caltrans
DESIGN

P:\proj\02\4E380_plans\pse\24e3801a001.dgn

LAST REVISION 01-09-12 | DATE PLOTTED => 10-JAN-2012 | TIME PLOTTED => 15:08

Dist	COUNTY	ROUTE	POST MILES TOTAL PROJECT	SHEET No.	TOTAL SHEETS
02	Sha	151	R5.8/R6.9	20	50

Kathryn B. Eckard 01-09-12
REGISTERED CIVIL ENGINEER DATE

01-09-12
PLANS APPROVAL DATE

REGISTERED PROFESSIONAL ENGINEER K.B. ECKARD No. C60268 Exp. 6-30-12 CIVIL STATE OF CALIFORNIA

THE STATE OF CALIFORNIA OR ITS OFFICERS OR AGENTS SHALL NOT BE RESPONSIBLE FOR THE ACCURACY OR COMPLETENESS OF SCANNED COPIES OF THIS PLAN SHEET.

CONSTRUCTION AREA SIGNS (PORTABLE)

SIGN No.	CODE	PANEL SIZE (INCHES)	REMARKS	(EA)
A	M4-10R	36 x 18	DETOUR →	1
B	M4-10L	36 x 18	← DETOUR	2
C	W20-2	36 x 36	DETOUR AHEAD	3
D	M4-8A	24 x 18	END DETOUR	2
E	C2(CA) M4-10R	36 x 24 36 x 18	RAMP CLOSED DETOUR →	1
F	C2(CA) SC3(CA)	36 x 24 36 x 18	RAMP CLOSED ↑ DETOUR	1
G	M1-1 M4-10L	SHIELD 36 x 18	INTERSTATE 5 ← DETOUR	1
H	M1-1 SC3(CA)	SHIELD 36 x 18	INTERSTATE 5 ↑ DETOUR	1
I	W20-2 SC3(CA)	SHIELD 36 x 18	ROUTE 151 ↑ DETOUR	2
J	W20-2 M4-10R	SHIELD 36 x 18	ROUTE 151 DETOUR →	2

LEGEND:

xx ROUTE CLOSURE

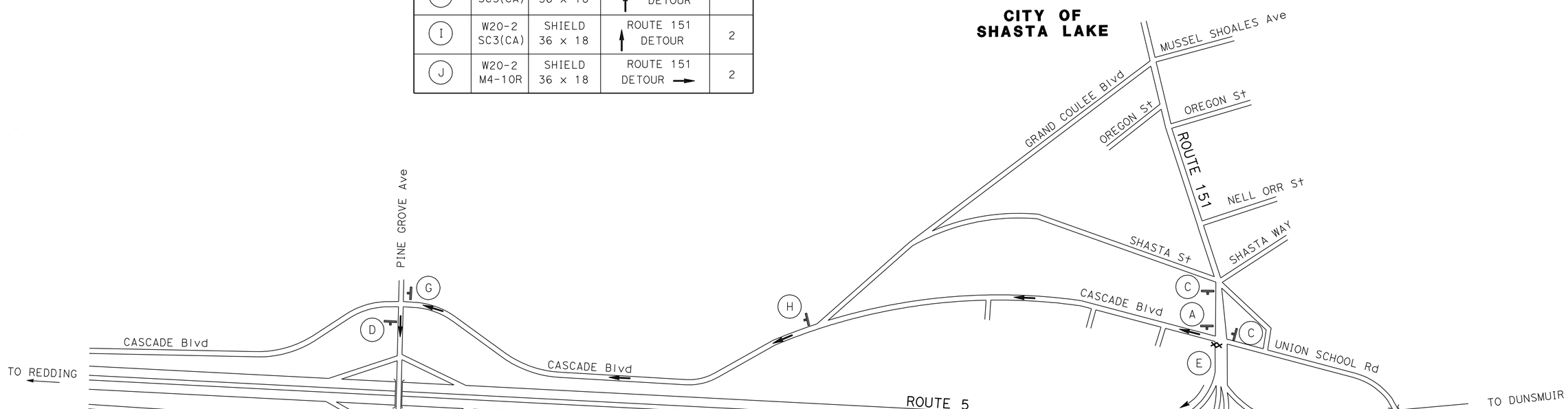

DETOUR FOR CLOSURE OF ROUTE 151 ON RAMP TO SOUTHBOUND ROUTE 5
AND
DETOUR FOR CLOSURE OF ROUTE 151 ON RAMP TO NORTHBOUND ROUTE 5

DETOUR PLAN

NO SCALE

DE-1

REVISED BY | DATE REVISED
JEANNIE STEFFAN | KATHY ECKARD
CALCULATED-DESIGNED BY | CHECKED BY
FUNCTIONAL SUPERVISOR
JULIE CASEY

STATE OF CALIFORNIA - DEPARTMENT OF TRANSPORTATION
Caltrans
DESIGN

P:\proj1\02\4E380_plans\pse\24e380mg001.dgn

LAST REVISION | DATE PLOTTED => 10-JAN-2012
01-09-12 | TIME PLOTTED => 15:08

Dist	COUNTY	ROUTE	POST MILES TOTAL PROJECT	SHEET No.	TOTAL SHEETS
02	Sha	151	R5.8/R6.9	21	50

Kathryn B. Eckard 01-09-12
REGISTERED CIVIL ENGINEER DATE

01-09-12
PLANS APPROVAL DATE

REGISTERED PROFESSIONAL ENGINEER
K.B. ECKARD
No. C60268
Exp. 6-30-12
CIVIL
STATE OF CALIFORNIA

THE STATE OF CALIFORNIA OR ITS OFFICERS OR AGENTS SHALL NOT BE RESPONSIBLE FOR THE ACCURACY OR COMPLETENESS OF SCANNED COPIES OF THIS PLAN SHEET.

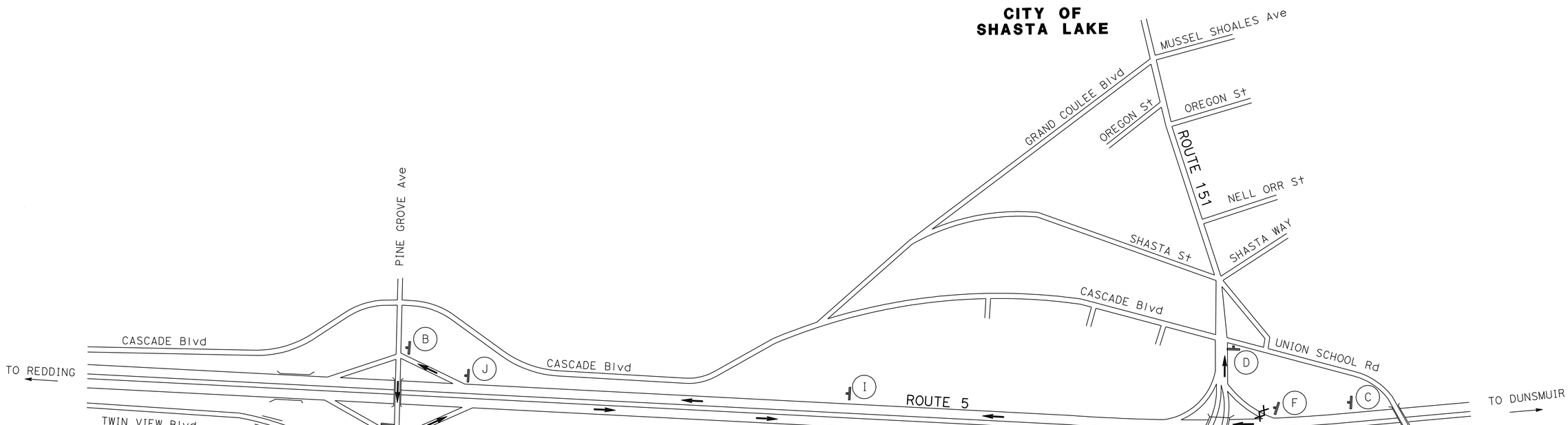

DETOUR FOR CLOSURE OF SOUTHBOUND OFF RAMP FROM ROUTE 5 TO ROUTE 151

DETOUR PLAN

NO SCALE

DE-2

REVISED BY	DATE REVISED

CALCULATED-DESIGNED BY	JEANNIE STEFFAN
CHECKED BY	KATHY ECKARD
FUNCTIONAL SUPERVISOR	JULIE CASEY

STATE OF CALIFORNIA - DEPARTMENT OF TRANSPORTATION
Caltrans
DESIGN

P:\proj1\02\4E380_plans\pse\24e380mg002.dgn

LAST REVISION 01-09-12 | DATE PLOTTED => 10-JAN-2012 | TIME PLOTTED => 15:08

Dist	COUNTY	ROUTE	POST MILES TOTAL PROJECT	SHEET No.	TOTAL SHEETS
02	Sha	151	R5.8/R6.9	22	50

Kathryn B. Eckard 01-09-12
REGISTERED CIVIL ENGINEER DATE

01-09-12
PLANS APPROVAL DATE

REGISTERED PROFESSIONAL ENGINEER K.B. ECKARD No. C60268 Exp. 6-30-12 CIVIL STATE OF CALIFORNIA

THE STATE OF CALIFORNIA OR ITS OFFICERS OR AGENTS SHALL NOT BE RESPONSIBLE FOR THE ACCURACY OR COMPLETENESS OF SCANNED COPIES OF THIS PLAN SHEET.

LEGEND:

TYPE II BARRICADE

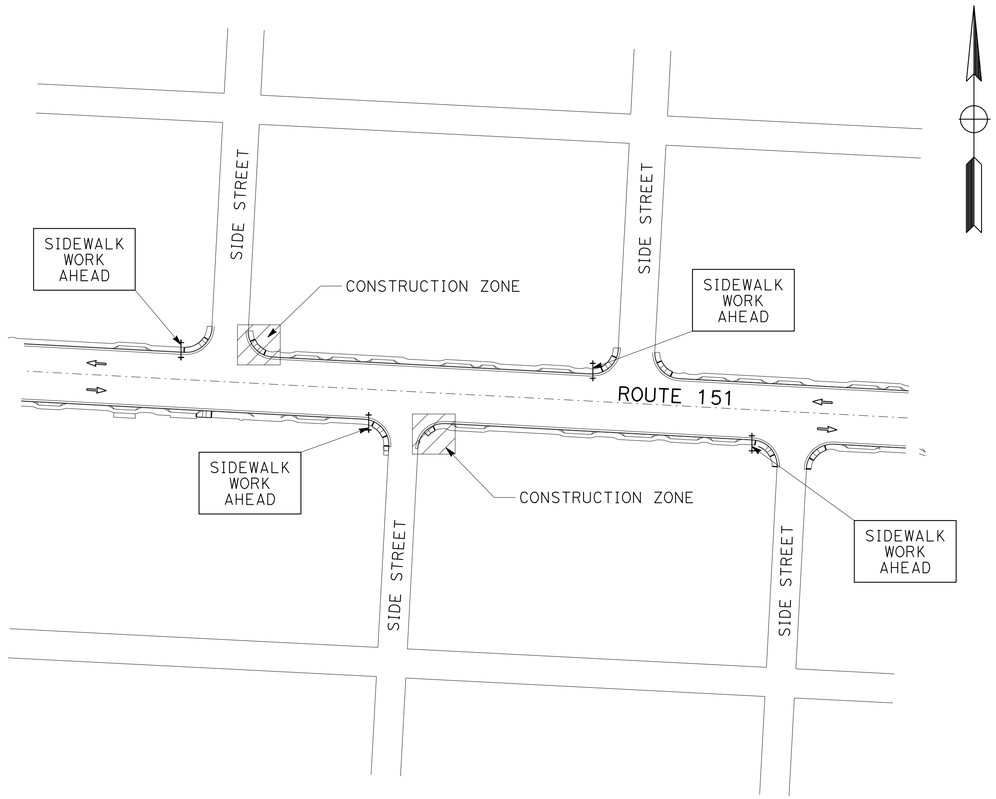

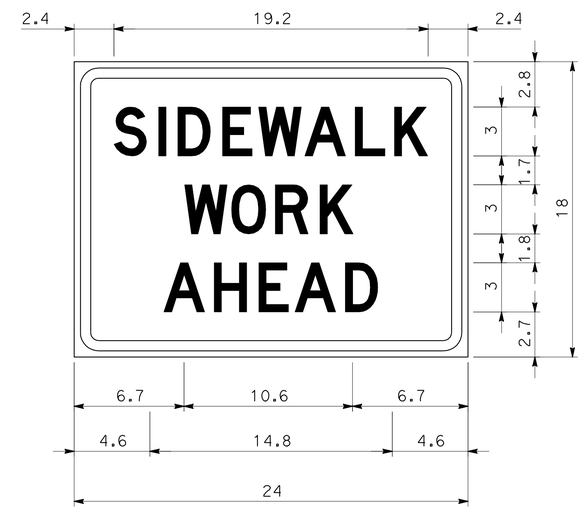

1.5" RADIUS, 0.6" BORDER, 0.4" INDENT, BLACK ON WHITE

SPEC SIGN PANEL DETAIL

CONSTRUCTION AREA SIGNS (PORTABLE)

CODE	PANEL SIZE	MESSAGE	No. OF SIGNS
SPEC	24" x 18"	SIDEWALK WORK AHEAD	4

TYPE II BARRICADE

	EA
TOTAL	4

PEDESTRIAN DETOUR PLAN

NO SCALE

DE-3

REVISED BY | DATE REVISED

CALCULATED-DESIGNED BY: JEANNIE STEFFAN | CHECKED BY: KATHY ECKARD

FUNCTIONAL SUPERVISOR: JULIE CASEY

STATE OF CALIFORNIA - DEPARTMENT OF TRANSPORTATION

Caltrans® DESIGN

P:\proj\02\4E380_plans\pse\24e380mg003.dgn

LAST REVISION 01-09-12 | DATE PLOTTED => 10-JAN-2012 | TIME PLOTTED => 15:08

Dist	COUNTY	ROUTE	POST MILES TOTAL PROJECT	SHEET No.	TOTAL SHEETS
02	Sha	151	R5.8/R6.9	23	50

Kathryn B. Eckard 01-09-12
REGISTERED CIVIL ENGINEER DATE

01-09-12
PLANS APPROVAL DATE

REGISTERED PROFESSIONAL ENGINEER K.B. ECKARD No. C60268 Exp. 6-30-12 CIVIL STATE OF CALIFORNIA

THE STATE OF CALIFORNIA OR ITS OFFICERS OR AGENTS SHALL NOT BE RESPONSIBLE FOR THE ACCURACY OR COMPLETENESS OF SCANNED COPIES OF THIS PLAN SHEET.

NOTES:

1. USE A 3" Sq TUBE x 1′ LONG, 3/16" THICK ANCHOR FOR 2½" POSTS.
2. USE A 5/16" CORNER BOLT OR TWO DRIVE RIVETS TO FASTEN ASSEMBLED MARKER POST INTO ANCHOR. INSTALL CORNER BOLT OR DRIVE RIVETS INTO THE SIDES FACING TRAFFIC.
3. 2½" POSTS ARE TO BE ⅛" THICK, PERFORATIONS OF 7/16" IN DIAMETER ARE 1" ON CENTER ON ALL SIDES, 2½" POSTS ARE 12′ AND 14′ IN LENGTH.
4. FOR DETAILS NOT SHOWN, REFER TO THE STANDARD PLANS.
5. 2½" POSTS SHALL BE USED.
6. ALL ANCHOR SLEEVES SHALL BE EMBEDDED IN PCC, EXCEPT FOR INSTALLATIONS IN PAVEMENTS OR SIDEWALKS.

LEGEND:

- # — PAVEMENT DELINEATION STRIPE DETAIL No.
- XW — CROSSWALK
- YL — YIELD LINE
- # — ROADSIDE SIGN
- OBJECT MARKER (TYPE K)
- LIMITS OF COLD PLANE AC PAVEMENT AND HMA (TYPE A)

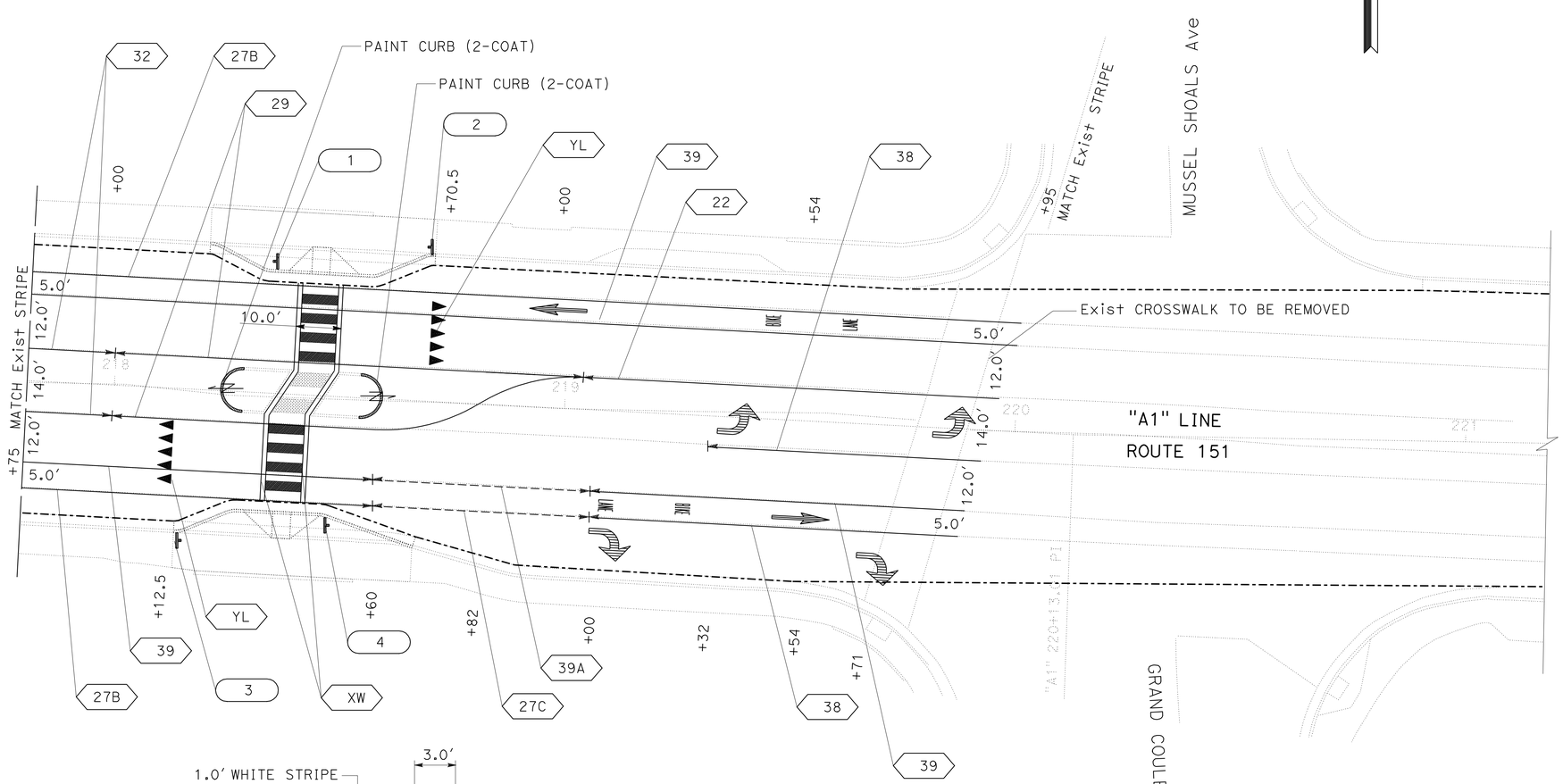

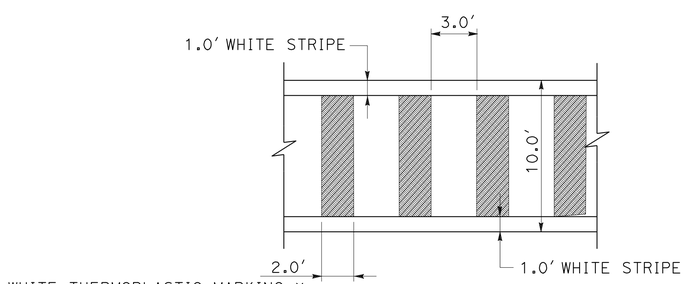

CROSSWALK
(Typ)
* WHITE THERMOPLASTIC CROSSWALK PAVEMENT MARKINGS SHOULD AVOID THE WHEEL PATHS

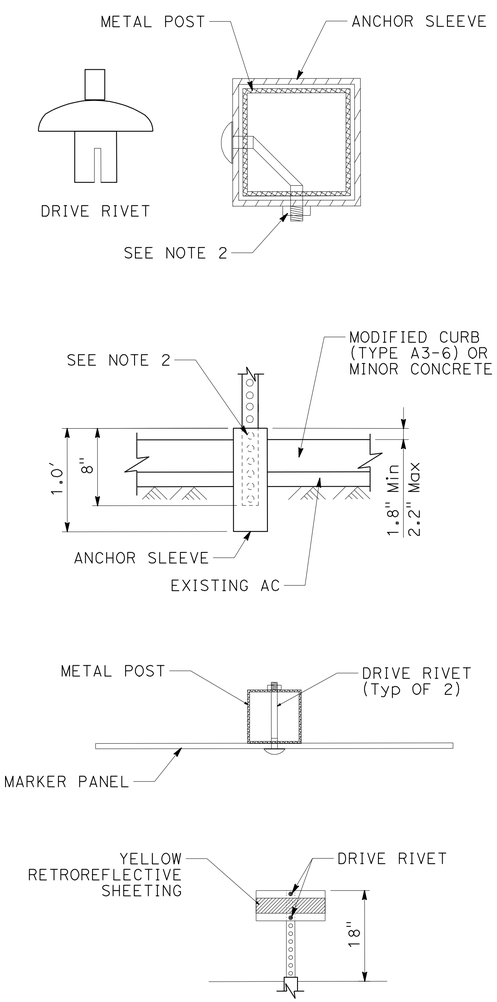

OBJECT MARKER (TYPE K) INSTALLATION

APPROVED FOR PAVEMENT DELINEATION WORK ONLY

PAVEMENT DELINEATION AND SIGN PLAN

NO SCALE

PD-1

REVISED BY	DATE REVISED
JEANNIE STEFFAN	KATHY ECKARD
CALCULATED-DESIGNED BY	CHECKED BY
FUNCTIONAL SUPERVISOR	JULIE CASEY

STATE OF CALIFORNIA - DEPARTMENT OF TRANSPORTATION
Caltrans®
DESIGN

P:\proj1\02\4E380_plans\pse\24e380na001.dgn

LAST REVISION 01-09-12 | DATE PLOTTED => 10-JAN-2012 | TIME PLOTTED => 15:08

Dist	COUNTY	ROUTE	POST MILES TOTAL PROJECT	SHEET No.	TOTAL SHEETS
02	Sha	151	R5.8/R6.9	24	50

Kathryn B. Eckard 01-09-12
REGISTERED CIVIL ENGINEER DATE

01-09-12
PLANS APPROVAL DATE

REGISTERED PROFESSIONAL ENGINEER K.B. ECKARD No. C60268 Exp. 6-30-12 CIVIL STATE OF CALIFORNIA

THE STATE OF CALIFORNIA OR ITS OFFICERS OR AGENTS SHALL NOT BE RESPONSIBLE FOR THE ACCURACY OR COMPLETENESS OF SCANNED COPIES OF THIS PLAN SHEET.

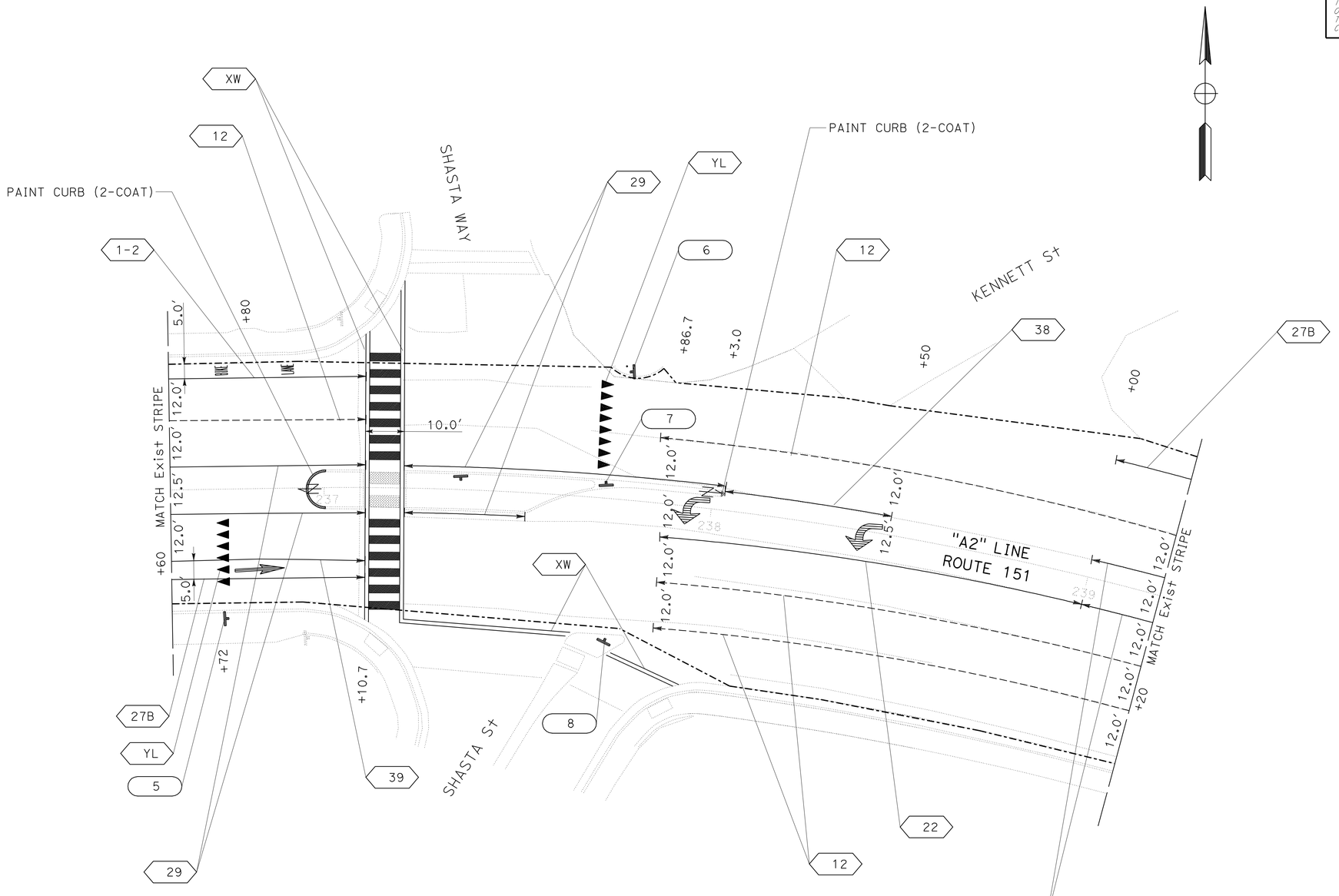

APPROVED FOR PAVEMENT DELINEATION WORK ONLY

PAVEMENT DELINEATION AND SIGN PLAN

NO SCALE

PD-2

REVISED BY	DATE REVISED

CALCULATED-DESIGNED BY	CHECKED BY
JEANNIE STEFFAN	KATHY ECKARD

FUNCTIONAL SUPERVISOR: JULIE CASEY

STATE OF CALIFORNIA - DEPARTMENT OF TRANSPORTATION

Caltrans® DESIGN

P:\proj1\02\4E380_plans\pse\24e380na002.dgn

LAST REVISION 01-09-12 | DATE PLOTTED => 10-JAN-2012 | TIME PLOTTED => 15:08

Dist	COUNTY	ROUTE	POST MILES TOTAL PROJECT	SHEET No.	TOTAL SHEETS
02	Sha	151	R5.8/R6.9	25	50

Kathryn B. Eckard 01-09-12
REGISTERED CIVIL ENGINEER DATE

01-09-12
PLANS APPROVAL DATE

REGISTERED PROFESSIONAL ENGINEER K.B. ECKARD No. C60268 Exp. 6-30-12 CIVIL STATE OF CALIFORNIA

THE STATE OF CALIFORNIA OR ITS OFFICERS OR AGENTS SHALL NOT BE RESPONSIBLE FOR THE ACCURACY OR COMPLETENESS OF SCANNED COPIES OF THIS PLAN SHEET.

CONTRACTOR FURNISHED SIGNS

SIGN No. #	SIGN CODE	PANEL SIZE In x In	SINGLE FACED	DOUBLE FACED	SIGN FACING MATERIAL: BACKGROUND SHEETING COLOR	SIGN FACING MATERIAL: BACKGROUND RETROREFLECTIVE ASTM TYPE	SIGN FACING MATERIAL: LEGEND SHEETING COLOR	SIGN FACING MATERIAL: LEGEND RETROREFLECTIVE ASTM TYPE	SIGN PANEL SUBSTRATE MATERIAL (SQFT) ROADSIDE: SINGLE SHEET ALUMINUM SIGN (UNFRAMED) (SQFT) 0.063"	0.080"	0.125"	ROADSIDE SIGN ONE POST EA	(N) POST SIZE AND LENGTH (Ft) METAL POST 2½" x 2½"	MESSAGE
1	W11-2 W16-7p	30 x 30 24 x 12	X X		YELLOW YELLOW	III III	BLACK BLACK		6.3 2			1	11.2	PED CROSSING ↙
2	R1-5a	18 x 24	X		WHITE	III	BLACK/RED	III	3			1	9.7	YIELD TO PEDS
3	R1-5a	18 x 24	X		WHITE	III	BLACK/RED	III	3			1	9.7	YIELD TO PEDS
4	W11-2 W16-7p	30 x 30 24 x 12	X X		YELLOW YELLOW	III III	BLACK BLACK		6.3 2			1	11.2	PED CROSSING ↙
5	R1-5a	18 x 24	X		WHITE	III	BLACK/RED	III	3			1	9.7	YIELD TO PEDS
6	R1-5a	18 x 24	X		WHITE	III	BLACK/RED	III	3			1	9.7	YIELD TO PEDS
7	R3-2	24 x 24	X		WHITE	III	BLACK/RED	III	4			1	9.7	NO LEFT TURN
8	R6-2	24 x 18	X		WHITE	III	BLACK		3			1	9.2	ONE WAY →
TOTAL									35.6			8		

NOTE:

1. (N) - NOT A SEPARATE PAY ITEM, FOR INFORMATION ONLY

PAINT CURB (2-COAT)

LOCATION ◇ #	LENGTH (LF)	DESCRIPTION
11	31.6	PAINT CURB FACE YELLOW
12	45.0	PAINT CURB FACE YELLOW
TOTAL	76.6	

PAVEMENT DELINEATION QUANTITIES

THERMOPLASTIC TRAFFIC STRIPE (SPRAYABLE)

LOCATION: POST MILE	TO POST MILE	EB/WB	DETAIL 12 LF	DETAIL 22 LF	DETAIL 25 LF	DETAIL 27B LF	DETAIL 29 LF	DETAIL 32 LF	DETAIL 38 LF	DETAIL 38B LF	DETAIL 39 LF	DETAIL 39A LF
PM 5.83	PM 5.92	WB			460	460			180		540	150
PM 5.83	PM 5.92	EB			445	445			110		515	150
PM 5.92	PM 6.02	WB		200	186	381		688	210		558	131
PM 5.92	PM 6.02	EB			173	445			100		668	
PM 6.02	PM 6.15	WB				550		1000			525	300
PM 6.02	PM 6.15	EB		400		600					603	300
PM 6.15	PM 6.30	WB				718		1708	100		930	150
PM 6.15	PM 6.30	EB		200		700			120		734	300
PM 6.30	PM 6.38	WB				395		640	110		437	150
PM 6.30	PM 6.38	EB		203		237	180		250		442	221
PM 6.38	PM 6.47	WB				320		1160	100		480	195
PM 6.38	PM 6.47	EB				316					353	121
PM 6.47	PM 6.63	WB	158	200		768		2920			548	150
PM 6.47	PM 6.63	EB				850			100		1275	
PM 6.63	PM 6.70	WB	368				200	1264				128
PM 6.63	PM 6.70	EB				400					479	120
PM 6.70	PM 6.80	WB	322	258		211	178	360	86			
PM 6.70	PM 6.80	EB	330	224		174			114	200		
PM 6.81: CASCADE Blvd		-		140					100	140		
PM 6.81: UNION SCHOOL Rd		-		110					110	110		
PM 6.81	PM 6.90	WB & EB	527	350		1074	1448			340		
SB I5 ONRAMP		-				283						
		SUBTOTAL	1705	2285	1264	9327	2006	9740	1790	790	9037	2566
		TOTAL	40,510									

PAVEMENT MARKERS (RETROREFLECTIVE)

POST MILE	TO POST MILE	EB/WB	TYPE D DETAIL 22 EA	TYPE D DETAIL 29 EA	TYPE D DETAIL 32 EA	TYPE G DETAIL 12 EA	TYPE G DETAIL 38 EA	TYPE G DETAIL 38B EA	TYPE H DETAIL 25 EA
PM 5.83	PM 5.92	WB					5		11
PM 5.83	PM 5.92	EB					4		11
PM 5.92	PM 6.02	WB	11		21		6		5
PM 5.92	PM 6.02	EB					3		5
PM 6.02	PM 6.15	WB			29				
PM 6.02	PM 6.15	EB	19						
PM 6.15	PM 6.30	WB			48		3		
PM 6.15	PM 6.30	EB	11				4		
PM 6.30	PM 6.38	WB			20		4		
PM 6.30	PM 6.38	EB	11				8		
PM 6.38	PM 6.47	WB			34		3		
PM 6.38	PM 6.47	EB							
PM 6.47	PM 6.63	WB	11		79	5			
PM 6.47	PM 6.63	EB					3		
PM 6.63	PM 6.70	WB		7	36	9			
PM 6.63	PM 6.70	EB							
PM 6.70	PM 6.80	WB	15	7	13	8	3		
PM 6.70	PM 6.80	EB	12			8	4	11	
PM 6.81: CASCADE Blvd		-	8				3	8	
PM 6.81: UNION SCHOOL Rd		-	7				4	7	
PM 6.81	PM 6.90	WB & EB	17	33		12		17	
SB I5 ONRAMP		-							
		SUBTOTAL	122	47	280	42	57	43	32
		TOTAL	623						

OBJECT MARKER (TYPE K)

SHEET	EA
PD-1	2
PD-2	2
TOTAL	4

PAVEMENT DELINEATION AND SIGN QUANTITIES

PDQ-1

REVISED BY | DATE REVISED
JEANNIE STEFFAN | KATHY ECKARD
CALCULATED-DESIGNED BY | CHECKED BY
FUNCTIONAL SUPERVISOR: JULIE CASEY

STATE OF CALIFORNIA - DEPARTMENT OF TRANSPORTATION
Caltrans® DESIGN

P:\proj\02\4E380_plans\pse\24e380nc001.dgn

LAST REVISION 01-09-12 | DATE PLOTTED => 10-JAN-2012 | TIME PLOTTED => 15:08

Dist	COUNTY	ROUTE	POST MILES TOTAL PROJECT	SHEET No.	TOTAL SHEETS
02	Sha	151	R5.8/R6.9	26	50

Kathryn B. Eckard 01-09-12
REGISTERED CIVIL ENGINEER DATE

01-09-12
PLANS APPROVAL DATE

REGISTERED PROFESSIONAL ENGINEER K.B. ECKARD No. C60268 Exp. 6-30-12 CIVIL STATE OF CALIFORNIA

THE STATE OF CALIFORNIA OR ITS OFFICERS OR AGENTS SHALL NOT BE RESPONSIBLE FOR THE ACCURACY OR COMPLETENESS OF SCANNED COPIES OF THIS PLAN SHEET.

NOTE:

(N) - NOT A SEPARATE PAY ITEM, FOR INFORMATION ONLY

THERMOPLASTIC PAVEMENT MARKINGS

LOCATION		DESCRIPTION / MESSAGE	SQFT
INTERSECTION/STREET	POST MILE		
LOCUST (WB)	PM 5.83	CROSSWALK (1' WIDE WHITE)	76
LOCUST (EB)	PM 5.83	CROSSWALK (1' WIDE WHITE)	74
LOCUST (WB)	PM 5.85	(2) TYPE IV (L) ARROW	30
LOCUST (WB)	PM 5.85	TYPE V ARROW	33
LOCUST (WB)	PM 5.85	BIKE LANE SYMBOL AND ARROW	25
HARDENBROOK (WB)	PM 5.91	BIKE LANE SYMBOL AND ARROW	25
HARDENBROOK (EB)	PM 5.91	BIKE LANE SYMBOL AND ARROW	25
HARDENBROOK (EB)	PM 5.91	(2) TYPE IV (L) ARROW	30
HARDENBROOK (EB)	PM 5.91	TYPE V ARROW	33
HARDENBROOK (WB)	PM 5.92	TYPE V ARROW	33
HARDENBROOK (WB)	PM 5.92	(2) TYPE IV (L) ARROW	30
HARDENBROOK (WB)	PM 5.92	CROSSWALK (1' WIDE YELLOW)	334
HARDENBROOK (EB)	PM 5.92	CROSSWALK (1' WIDE YELLOW)	343
HARDENBROOK	PM 5.92	(2) STOP	44
HARDENBROOK (WB)	PM 5.92	BIKE LANE SYMBOL AND ARROW	25
HARDENBROOK (EB)	PM 5.92	BIKE LANE SYMBOL AND ARROW	25
	PM 6.00	(2) TYPE IV (L) ARROW	30
McCONNEL	PM 6.03	(4) TYPE IV (L) ARROW	60
McCONNEL	PM 6.03	CROSSWALK (1' WIDE WHITE)	234
McCONNEL (WB)	PM 6.03	(2) BIKE LANE SYMBOL AND ARROW	50
CABELLO (EB)	PM 6.04	(2) BIKE LANE SYMBOL AND ARROW	50
MEDIAN	PM 6.05	(2) TYPE IV (L) ARROW	30
CABELLO (WB)	PM 6.12	(2) TYPE IV (L) ARROW	30
MEDIAN (WB)	PM 6.12	(2) BIKE LANE SYMBOL AND ARROW	50
MEDIAN (EB)	PM 6.12	BIKE LANE SYMBOL AND ARROW	25
MEDIAN	PM 6.12	CROSSWALK (1' WIDE WHITE)	228
STANTON	PM 6.14	(2) TYPE IV (L) ARROW	30
MEDIAN (EB)	PM 6.14	(2) TYPE IV (L) ARROW	30
STANTON	PM 6.15	BIKE LANE SYMBOL AND ARROW	25
STANTON	PM 6.15	TYPE IV (L) ARROW	15
GRAND RIVER	PM 6.20	TYPE IV (L) ARROW	15
GRAND RIVER (WB)	PM 6.20	(2) BIKE LANE SYMBOL AND ARROW	50
	PM 6.22	(2) TYPE IV (L) ARROW	30
DEER CREEK	PM 6.23	(2) TYPE IV (L) ARROW	30
DEER CREEK (EB)	PM 6.23	(2) BIKE LANE SYMBOL AND ARROW	50
	PM 6.27	(2) TYPE IV (L) ARROW	30
WASHINGTON (WB)	PM 6.30	(2) BIKE LANE SYMBOL AND ARROW	50
WASHINGTON (EB)	PM 6.30	(2) BIKE LANE SYMBOL AND ARROW	50
WASHINGTON (WB)	PM 6.30	(2) TYPE IV (L) ARROW	30
WASHINGTON (EB)	PM 6.30	(2) TYPE IV (L) ARROW	30
PEDESTRIAN REFUGE	PM 6.35	YIELD LINE	15
PEDESTRIAN REFUGE	PM 6.35	YIELD LINE	15
GRAND COULEE (EB)	PM 6.38	(2) BIKE LANE SYMBOL AND ARROW	50
MUSSEL SHOALS (WB)	PM 6.38	(2) BIKE LANE SYMBOL AND ARROW	50
GRAND COULE (WB)	PM 6.38	(2) TYPE IV (L) ARROW	30
		SUBTOTAL	2597

THERMOPLASTIC PAVEMENT MARKINGS

LOCATION		DESCRIPTION / MESSAGE	SQFT
INTERSECTION/STREET	POST MILE		
GRAND COULE (WB)	PM 6.38	(2) TYPE IV (R) ARROW	30
GRAND COULE (EB)	PM 6.38	TYPE IV (R) ARROW	15
GRAND COULE (EB)	PM 6.38	(2) TYPE IV (L) ARROW	30
	PM 6.40	YIELD LINE	18
	PM 6.40	YIELD LINE	18
PEDESTRIAN REFUGE	PM 6.40	CROSSWALK	389
OREGON (EB)	PM 6.48	(2) BIKE LANE SYMBOL AND ARROW	50
OREGON (WB)	PM 6.48	(2) BIKE LANE SYMBOL AND ARROW	50
OREGON	PM 6.48	(2) TYPE IV (L) ARROW	30
	PM 6.50	(2) TYPE IV (L) ARROW	30
	PM 6.54	(2) TYPE IV (L) ARROW	30
(WB)	PM 6.56	BIKE LANE SYMBOL AND ARROW	25
(EB)	PM 6.56	BIKE LANE SYMBOL AND ARROW	25
	PM 6.59	(2) TYPE IV (L) ARROW	30
NELL ORR	PM 6.63	(2) TYPE IV (L) ARROW	30
NELL ORR (WB)	PM 6.63	(3) TYPE VI (L) ARROW	126
NELL ORR (WB)	PM 6.63	(2) BIKE LANE SYMBOL AND ARROW	50
NELL ORR (EB)	PM 6.63	BIKE LANE SYMBOL AND ARROW	25
	PM 6.64	(2) TYPE IV (L) ARROW	30
	PM 6.68	(2) TYPE IV (L) ARROW	30
PEDESTRIAN REFUGE	PM 6.70	CROSSWALK	451
SHASTA	PM 6.72	CROSSWALK (1' WIDE WHITE)	63
SHASTA (NORTH)	PM 6.72	LIMIT LINE	36
SHASTA (WB)	PM 6.72	BIKE LANE SYMBOL AND ARROW	25
SHASTA (EB)	PM 6.72	BIKE LANE SYMBOL AND ARROW	25
HW 151 (WB) AT SHASTA	PM 6.72	(2) TYPE IV (L) ARROW	30
SHASTA (NORTH)	PM 6.72	STOP	22
KENNETT	PM 6.73	LIMIT LINE	34
KENNETT	PM 6.73	STOP	22
HW 151 (EB) AT CASCADE	PM 6.79	TYPE IV (L) ARROW	15
HW 151 (EB) AT CASCADE	PM 6.79	(2) TYPE IV (R) ARROW	30
CASCADE Blvd	PM 6.79	TYPE IV (L) ARROW	15
CASCADE Blvd	PM 6.79	TYPE IV (R) ARROW	15
UNION SCHOOL Rd	PM 6.79	TYPE IV (R) ARROW	15
UNION SCHOOL Rd	PM 6.79	TYPE IV (L) ARROW	15
HWY 151	PM 6.80	LIMIT LINE	90
UNION SCHOOL Rd	PM 6.80	CROSSWALK (1' WIDE WHITE)	148
CASCADE Blvd	PM 6.80	CROSSWALK (1' WIDE WHITE)	170
HW 151 (WB)	PM 6.80	TYPE II (R) ARROW	45
HW 151 (WB)	PM 6.80	TYPE III (L) ARROW	42
		SUBTOTAL	2369
		TOTAL	4966

PAVEMENT DELINEATION AND SIGN QUANTITIES

PDQ-2

REVISED BY | DATE REVISED
JEANNIE STEFFAN | KATHY ECKARD
CALCULATED-DESIGNED BY | CHECKED BY
FUNCTIONAL SUPERVISOR
JULIE CASEY

STATE OF CALIFORNIA - DEPARTMENT OF TRANSPORTATION
Caltrans
DESIGN

P:\proj1\02\4E380_plans\pse\24e380nc002.dgn

LAST REVISION 01-09-12 | DATE PLOTTED => 10-JAN-2012 | TIME PLOTTED => 15:08

Dist	COUNTY	ROUTE	POST MILES TOTAL PROJECT	SHEET No.	TOTAL SHEETS
02	Sha	151	R5.8/R6.9	27	50

Kathryn B. Eckard 01-09-12
REGISTERED CIVIL ENGINEER DATE

01-09-12
PLANS APPROVAL DATE

REGISTERED PROFESSIONAL ENGINEER K.B. ECKARD No. C60268 Exp. 6-30-12 CIVIL STATE OF CALIFORNIA

THE STATE OF CALIFORNIA OR ITS OFFICERS OR AGENTS SHALL NOT BE RESPONSIBLE FOR THE ACCURACY OR COMPLETENESS OF SCANNED COPIES OF THIS PLAN SHEET.

NOTES:

1. USE A 2¼" Sq TUBE x 30" LONG, 3/16" THICK ANCHOR FOR 2" POSTS. USE A 3" Sq TUBE x 3′ LONG, 3/16" THICK ANCHOR FOR 2½" POSTS.
2. USE A 5/16" CORNER BOLT OR TWO DRIVE RIVETS TO FASTEN ASSEMBLED SIGN AND POST INTO ANCHOR. INSTALL CORNER BOLT OR DRIVE RIVETS INTO THE SIDES FACING TRAFFIC.
3. REMOVE EXISTING AC OR PCC, DRIVE ANCHOR SLEEVE INTO SOIL AND RECAP WITH LIKE MATERIAL, MATCHING EXISTING THICKNESS.
4. 2" POSTS ARE TO BE 1/8" THICK, PERFORATIONS OF 7/16" IN DIAMETER ARE 1" ON CENTER ON ALL SIDES, LENGTHS ARE 10′ AND 12′.
5. 2½" POSTS ARE TO BE 1/8" THICK, PERFORATIONS OF 7/16" IN DIAMETER ARE 1" ON CENTER ON ALL SIDES, 2½" POSTS ARE 12′ AND 14′ IN LENGTH.
6. FOR DETAILS NOT SHOWN, REFER TO THE STANDARD PLANS.
7. 2½" POSTS SHALL BE USED IN SIDEWALK AND HIGH PEDESTRIAN USE PLACEMENTS.
8. ALL ANCHOR SLEEVES SHALL BE EMBEDDED IN PCC, EXCEPT FOR INSTALLATIONS IN PAVEMENTS OR SIDEWALKS.

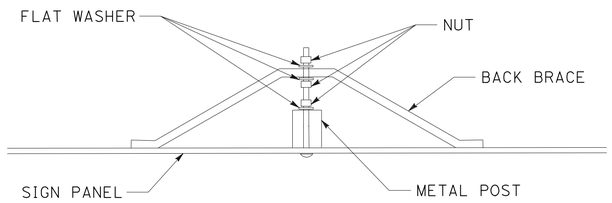

BACK BRACE MOUNTING DETAIL

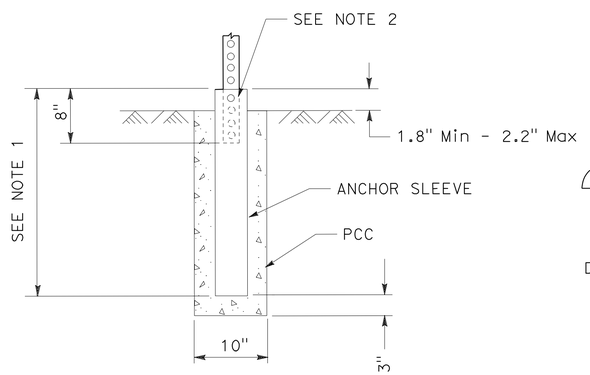

INSTALLATION IN SOIL (PCC)
(SEE NOTE 8)

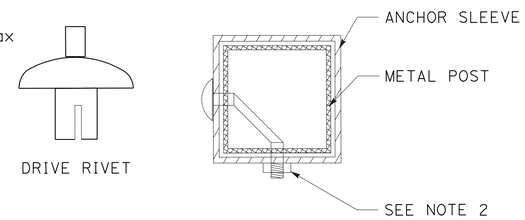

FASTENER DETAILS

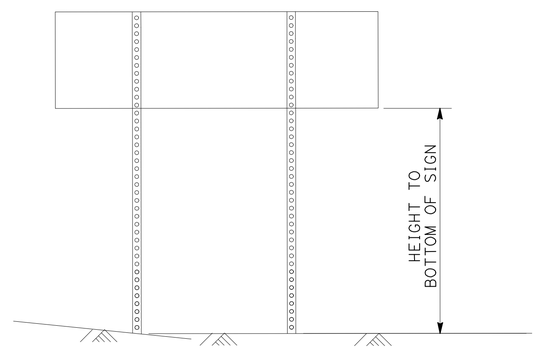

TWO POSTS INSTALLATION
(POST SIZE, SEE CHART BELOW)

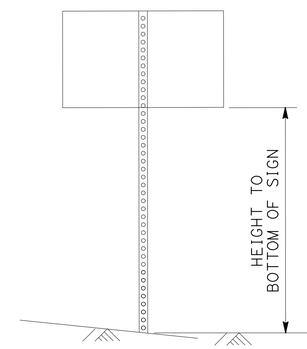

SINGLE POST INSTALLATION
(POST SIZE, SEE CHART BELOW)

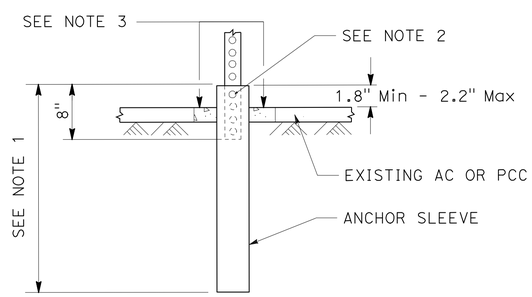

INSTALLATION IN EXISTING AC OR PCC

Max Sq Ft OF SIGN

POST SIZE	60"	72"	84"	96"	108"	120"
2"	18	16	14	12	10	8
2.5"	35	32	28	24	21	21

HEIGHT TO BOTTOM OF SIGN
DOUBLE POST GROUND SIGNS
70 MPH WIND SPEED

Max Sq Ft OF SIGN

POST SIZE	60"	72"	84"	96"	108"	120"
2"	10.5	10	8.7	7.4	6.2	5
2.5"	16	16	16	16	12	12

HEIGHT TO BOTTOM OF SIGN
SINGLE POST GROUND SIGNS
70 MPH WIND SPEED

METAL SIGN POST DETAIL

METAL SIGN POST INSTALLATION DETAILS

SIGN DETAILS

NO SCALE **SD-1**

REVISED BY | DATE REVISED
JEANNIE STEFFAN | KATHY ECKARD
CALCULATED-DESIGNED BY | CHECKED BY
FUNCTIONAL SUPERVISOR
JULIE CASEY

STATE OF CALIFORNIA - DEPARTMENT OF TRANSPORTATION
Caltrans
DESIGN

P:\proj1\02\4E380_plans\pse\24e380ob001.dgn

LAST REVISION 01-09-12 | DATE PLOTTED => 10-JAN-2012 TIME PLOTTED => 15:08

Dist	COUNTY	ROUTE	POST MILES TOTAL PROJECT	SHEET No.	TOTAL SHEETS
02	Sha	151	R5.8/R6.9	28	50

Kathryn B. Eckard 01-09-12
REGISTERED CIVIL ENGINEER DATE

01-09-12
PLANS APPROVAL DATE

REGISTERED PROFESSIONAL ENGINEER K.B. ECKARD No. C60268 Exp. 6-30-12 CIVIL STATE OF CALIFORNIA

THE STATE OF CALIFORNIA OR ITS OFFICERS OR AGENTS SHALL NOT BE RESPONSIBLE FOR THE ACCURACY OR COMPLETENESS OF SCANNED COPIES OF THIS PLAN SHEET.

NOTE:

1. (N) - NOT A SEPARATE PAY ITEM, FOR INFORMATION ONLY

ROADWAY ITEMS

POST MILE	HMA (TYPE A)	TACK COAT	SHOULDER BACKING
	TON	TON	TON
PM 5.85 TO PM 6.90	5530.0	18.8	
PLACE HMA (Misc AREA) - LOCATION 14	3.2		
PM 6.72 TO PM 6.90			41.0
TOTAL	5533.2	18.8	41.0

PLACE HMA (Misc AREA)

LOCATION ◇#	(N) DEPTH (LF)	(N) (CY)	AREA (SQYD)
14	0.5	0.66	3.92
		TOTAL	3.92

COLD PLANE AC PAVEMENT

STATION	(N) DEPTH (LF)	SQYD
PM 5.85 TO PM 6.90	0.2	40,962
	TOTAL	40,962

SIDEWALK ITEMS

	MINOR CONCRETE (Misc CONSTRUCTION)														
						COLORED CONCRETE									
CURB RAMP ◇#	CURB AND GUTTER (TYPE A2-6)	CURB AND GUTTER (MODIFIED TYPE A2-6)	CURB (TYPE A1-6)	CURB (TYPE A3-6)	SIDEWALK (4")	PEDESTRIAN REFUGE	CURB RAMP (4") *	RETAINING CURB (6")	CLASS 2 AB (4") **	REMOVE CONCRETE SIDEWALK	REMOVE CONCRETE (CURB AND GUTTER)	DETECTABLE WARNING SURFACE	REMOVE DETECTABLE WARNING SURFACE	(N) EMBANKMENT	DESCRIPTION
	CY	CY	CY	CY	CY	CY	CY	CY	CY	SQYD	LF	SQFT	SQFT	CY	
1	0.28	0.39					0.65	0.08	0.72	7.0	12.8	15	12	1.4	
2	1.95	0.44					0.50	0.03	0.55	4.8	43.0	15	12	0.7	
3												15	12		
4												15	12		
5												15	12		
6												15	12		
7												15	12		
8	0.43	0.24					1.71	0.09	1.88	16.9	12.3	15	12	1.8	
9	0.81	0.31			0.33		0.87	0.16	1.31	11.4	20.1	15	12	3.1	
10	1.56	0.31					1.86	0.17	2.05	18.6	33.9	15	12	3.4	
11	2.85	0.19			6.88		0.66		7.77	44.2	50.0	12			NORTH OF ROUTE 151
11	3.05	0.19			6.38		0.69		8.29	47.8	53.8	12			SOUTH OF ROUTE 151
11				0.90		2.41						54			PEDESTRIAN REFUGE CENTER OF ROUTE 151
12				1.88		5.90						54			
13												24	12		
14			0.39												
15					0.15							12			
SUBTOTAL	10.93	2.07	0.39	2.78	13.74	8.31	6.94	0.53	22.57	150.7	225.9	318	132	10.4	
TOTAL	29.91					15.78			22.57	150.7	225.9	318	132	10.4	

* GROOVING DETAIL IS OUTSIDE OF COLORED CONCRETE CURB RAMP LIMITS
** CLASS 2 AB TO BE PLACED UNDER SIDEWALK AND CURB RAMPS

TEMPORARY DRAINAGE INLET PROTECTION

INLET LOCATION	EA
ROUTE 151	21
CABELLO St	1
MEDIAN Ave	2
STANTON Ave	2
DEER CREEK Rd	1
WASHINGTON Ave	1
NELL ORR St	1
CASCADE Blvd	2
UNION SCHOOL Rd	2
TOTAL	33

SUMMARY OF QUANTITIES
Q-1

REVISED BY | DATE REVISED
JEANNIE STEFFAN | KATHY ECKARD
CALCULATED-DESIGNED BY | CHECKED BY
FUNCTIONAL SUPERVISOR: JULIE CASEY
STATE OF CALIFORNIA - DEPARTMENT OF TRANSPORTATION
Caltrans DESIGN
P:\proj1\02\4E380_plans\pse\24e380pa001.dgn

LAST REVISION 01-09-12 | DATE PLOTTED => 10-JAN-2012 | TIME PLOTTED => 15:08

Dist	COUNTY	ROUTE	POST MILES TOTAL PROJECT	SHEET No.	TOTAL SHEETS
02	Sha	151	R5.8/R6.9	29	50

ART 01-09-12
REGISTERED ELECTRICAL ENGINEER DATE

01-09-12
PLANS APPROVAL DATE

REGISTERED PROFESSIONAL ENGINEER A.P. ROBLES No. E15293 Exp. 3-31-13 ELECTRICAL STATE OF CALIFORNIA

THE STATE OF CALIFORNIA OR ITS OFFICERS OR AGENTS SHALL NOT BE RESPONSIBLE FOR THE ACCURACY OR COMPLETENESS OF SCANNED COPIES OF THIS PLAN SHEET.

NOTE:

1. FOR ACCURATE RIGHT OF WAY DATA, CONTACT RIGHT OF WAY ENGINEERING AT THE DISTRICT OFFICE.

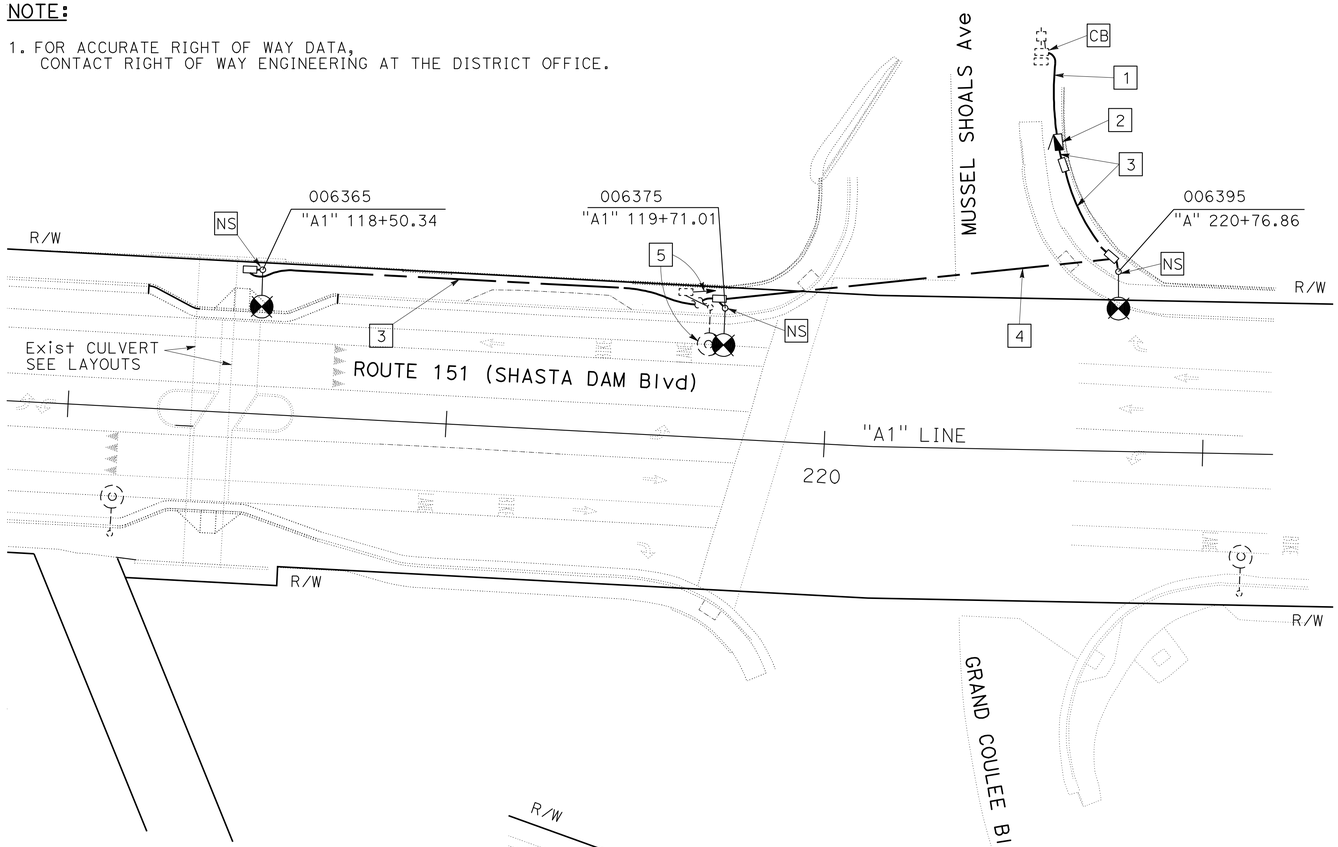

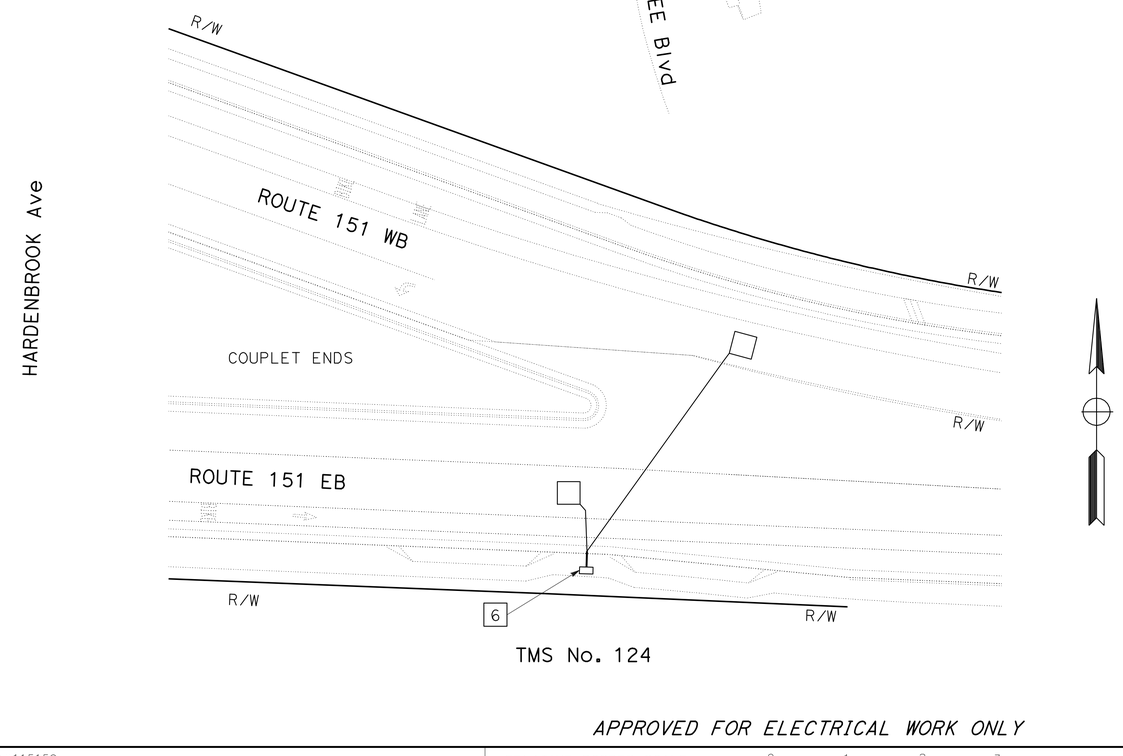

TMS No. 124

NOTES (THIS SHEET):

1. 2"C, 1/0 Al XLPE TRIPLEX. INSTALL PER CITY OF SHASTA LAKE ELECTRIC DEPARTMENT REQUIREMENTS.
2. INSTALL TYPE III-AF SERVICE EQUIPMENT ENCLOSURE (20" WIDE). CALTRANS ID No. 02061510006385. SEE WIRING DIAGRAM, SHEET E-2.
3. 1½"C, 2#8, 1#8 G.
4. 2"C, 2#8, 1#8 G.
5. COORDINATE WITH THE CITY OF SHASTA LAKE ELECTRIC DEPARTMENT FOR REMOVAL OF CITY ELECTROLIER AND CONDUCTORS.
6. COIL 10' OF CONDUCTORS IN PULL BOX.
7. FINAL LOOP LOCATIONS WILL BE DETERMINED BY THE ENGINEER.

APPROVED FOR ELECTRICAL WORK ONLY

LIGHTING
TRAFFIC MONITORING STATION

SCALE: 1" = 20'

E-1

REVISED BY | DATE REVISED
ARTURO ROBLES | JIM ELGIN / KAREN CARMO
CALCULATED-DESIGNED BY | CHECKED BY
FUNCTIONAL SUPERVISOR: ROB STINGER

STATE OF CALIFORNIA - DEPARTMENT OF TRANSPORTATION
Caltrans® ELECTRICAL DESIGN

P:\proj1\02\4E380_plans\pse\24e380ua001.dgn

LAST REVISION 01-09-12 | DATE PLOTTED => 10-JAN-2012 | TIME PLOTTED => 15:08

BORDER LAST REVISED 7/2/2010 | USERNAME => s115152 | DGN FILE => 24e380ua001.dgn | RELATIVE BORDER SCALE IS IN INCHES 0 1 2 3 | UNIT 0147 | PROJECT NUMBER & PHASE 02000202781

Dist	COUNTY	ROUTE	POST MILES TOTAL PROJECT	SHEET No.	TOTAL SHEETS
02	Sha	151	R5.8/R6.9	30	50

ART 01-09-12
REGISTERED ELECTRICAL ENGINEER DATE

01-09-12
PLANS APPROVAL DATE

REGISTERED PROFESSIONAL ENGINEER A.P. ROBLES No. E15293 Exp. 3-31-13 ELECTRICAL STATE OF CALIFORNIA

THE STATE OF CALIFORNIA OR ITS OFFICERS OR AGENTS SHALL NOT BE RESPONSIBLE FOR THE ACCURACY OR COMPLETENESS OF SCANNED COPIES OF THIS PLAN SHEET.

NOTE:

1. FOR ACCURATE RIGHT OF WAY DATA, CONTACT RIGHT OF WAY ENGINEERING AT THE DISTRICT OFFICE.

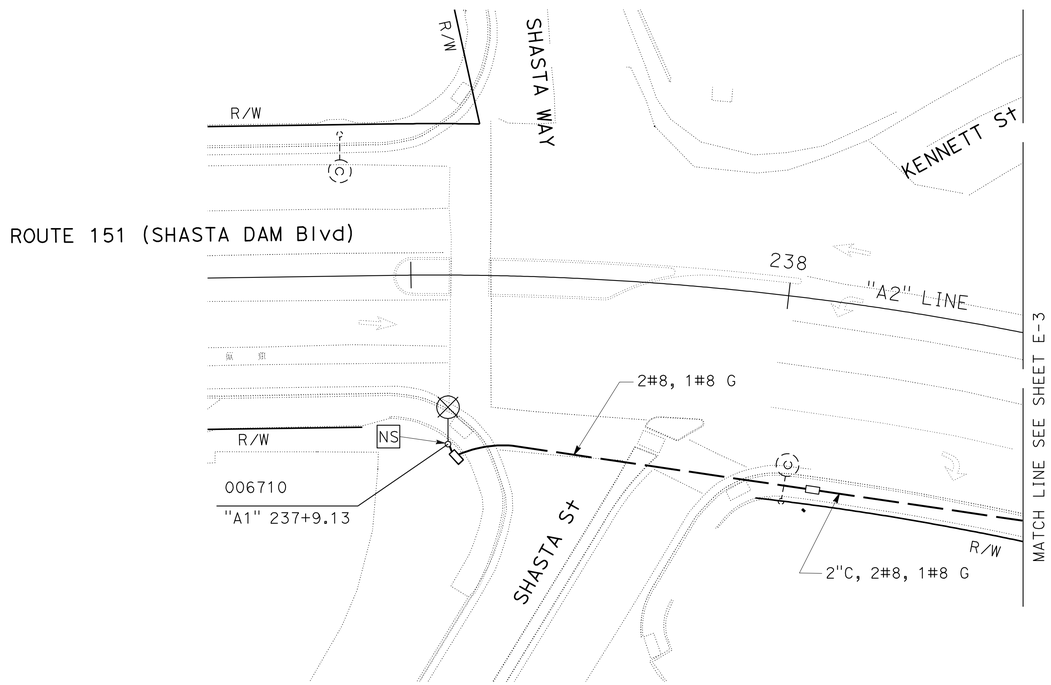

PLAN
SCALE: 1" = 20'

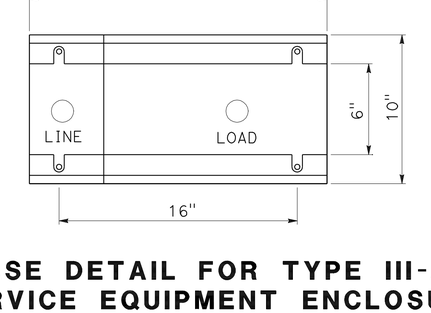

BASE DETAIL FOR TYPE III-AF SERVICE EQUIPMENT ENCLOSURE (20" WIDE)

NO SCALE

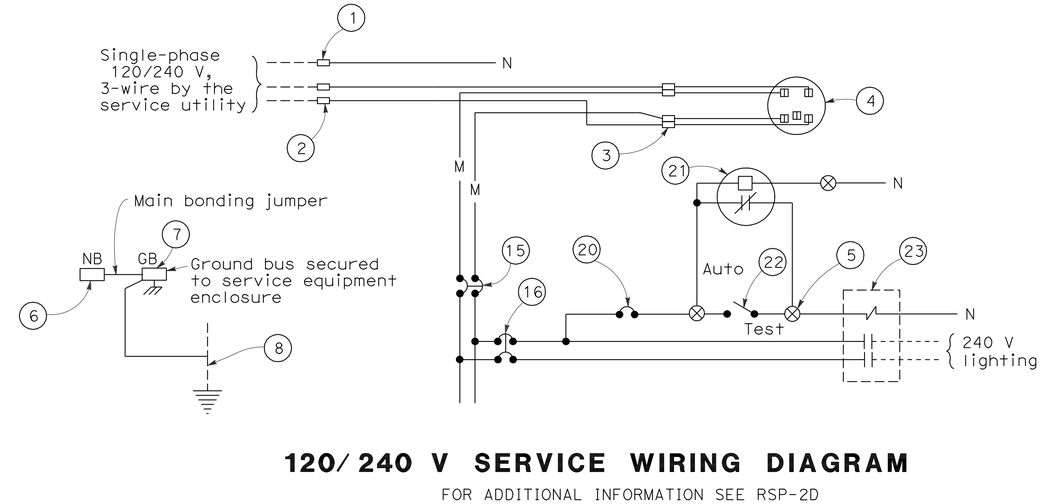

120/240 V SERVICE WIRING DIAGRAM

FOR ADDITIONAL INFORMATION SEE RSP-2D

NO SCALE

LIGHTING

SCALE: AS NOTED

E-2

APPROVED FOR ELECTRICAL WORK ONLY

STATE OF CALIFORNIA - DEPARTMENT OF TRANSPORTATION
Caltrans® ELECTRICAL DESIGN

FUNCTIONAL SUPERVISOR: ROB STINGER
CALCULATED-DESIGNED BY: ARTURO ROBLES
CHECKED BY: JIM ELGIN / KAREN CARMO
REVISED BY
DATE REVISED

P:\proj1\02\4E380_plans\pse\24e380ua002.dgn

LAST REVISION 01-09-12
DATE PLOTTED => 10-JAN-2012
TIME PLOTTED => 15:08

Dist	COUNTY	ROUTE	POST MILES TOTAL PROJECT	SHEET No.	TOTAL SHEETS
02	Sha	151	R5.8/R6.9	31	50

ART 01-09-12
REGISTERED ELECTRICAL ENGINEER DATE

01-09-12
PLANS APPROVAL DATE

REGISTERED PROFESSIONAL ENGINEER A.P. ROBLES No. E15293 Exp. 3-31-13 ELECTRICAL STATE OF CALIFORNIA

THE STATE OF CALIFORNIA OR ITS OFFICERS OR AGENTS SHALL NOT BE RESPONSIBLE FOR THE ACCURACY OR COMPLETENESS OF SCANNED COPIES OF THIS PLAN SHEET.

NOTE:

1. FOR ACCURATE RIGHT OF WAY DATA, CONTACT RIGHT OF WAY ENGINEERING AT THE DISTRICT OFFICE.

LEGEND:

(PB) OBJECT MARKER (TYPE PB)

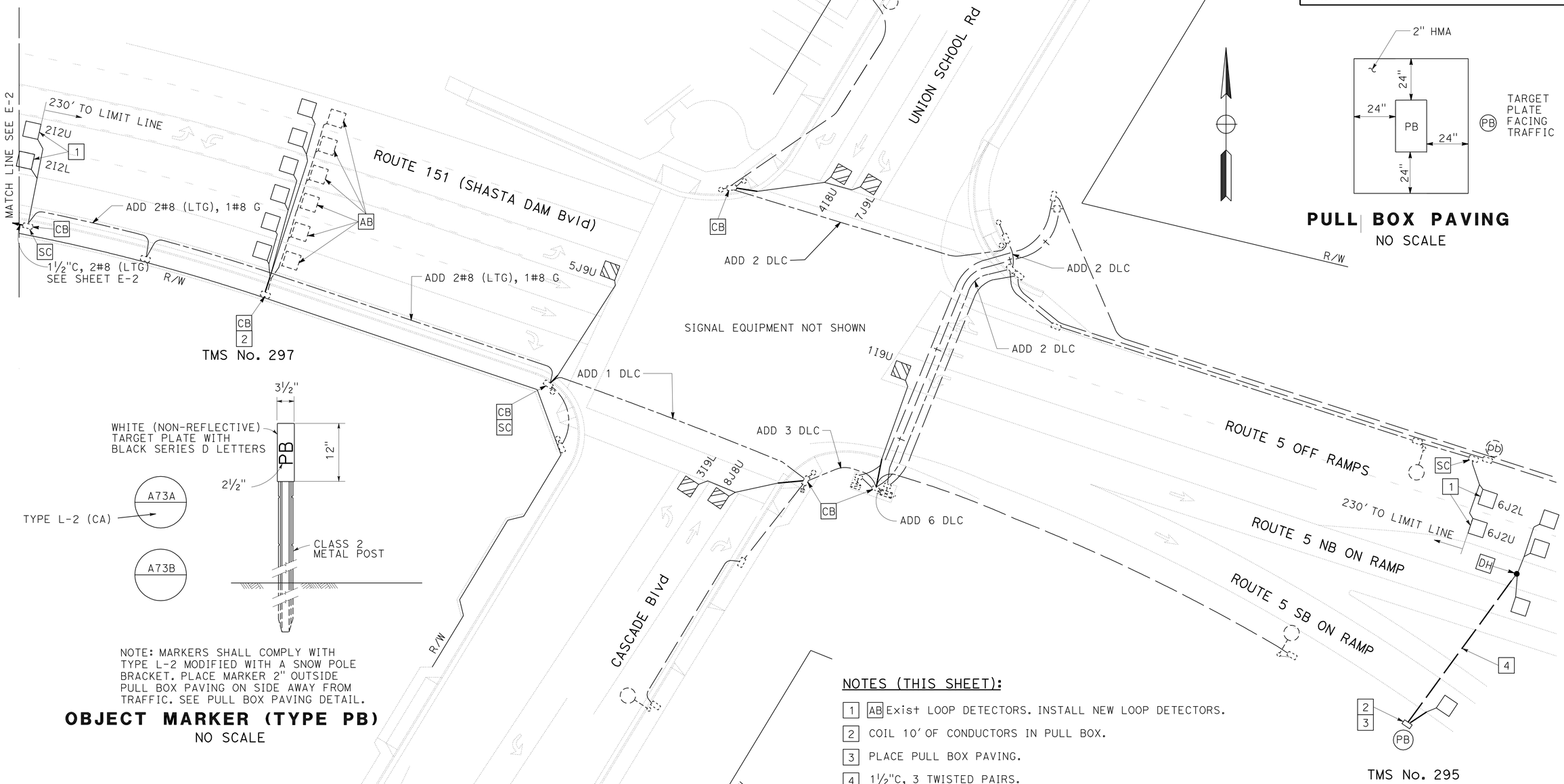

PULL BOX PAVING
NO SCALE

NOTE: MARKERS SHALL COMPLY WITH TYPE L-2 MODIFIED WITH A SNOW POLE BRACKET. PLACE MARKER 2" OUTSIDE PULL BOX PAVING ON SIDE AWAY FROM TRAFFIC. SEE PULL BOX PAVING DETAIL.

OBJECT MARKER (TYPE PB)
NO SCALE

NOTES (THIS SHEET):

1 AB Exist LOOP DETECTORS. INSTALL NEW LOOP DETECTORS.

2 COIL 10' OF CONDUCTORS IN PULL BOX.

3 PLACE PULL BOX PAVING.

4 1½"C, 3 TWISTED PAIRS.

5. FINAL LOOP LOCATIONS WILL BE DETERMINED BY THE ENGINEER.

MODIFY SIGNAL TRAFFIC MONITORING STATION

SCALE: 1" = 20'

E-3

APPROVED FOR ELECTRICAL WORK ONLY

REVISED BY | DATE REVISED
ARTURO ROBLES | JIM ELGIN / KAREN CARMO
CALCULATED-DESIGNED BY | CHECKED BY
FUNCTIONAL SUPERVISOR: ROB STINGER

STATE OF CALIFORNIA - DEPARTMENT OF TRANSPORTATION
Caltrans® ELECTRICAL DESIGN

P:\proj1\02\4E380_plans\pse\24e380ua003.dgn

LAST REVISION 01-09-12 | DATE PLOTTED => 10-JAN-2012 TIME PLOTTED => 15:09

BORDER LAST REVISED 7/2/2010 | USERNAME => s115152 DGN FILE => 24e380ua003.dgn | RELATIVE BORDER SCALE IS IN INCHES 0 1 2 3 | UNIT 0147 | PROJECT NUMBER & PHASE 02000202781

DIST	COUNTY	ROUTE	POST MILES TOTAL PROJECT	SHEET NO.	TOTAL SHEETS
02	Sha	151	R5.8/R6.9	32	50

REGISTERED CIVIL ENGINEER

June 6, 2008
PLANS APPROVAL DATE

REGISTERED PROFESSIONAL ENGINEER Donald E. Howe No. C46402 Exp. 3-31-09 CIVIL STATE OF CALIFORNIA

The State of California or its officers or agents shall not be responsible for the accuracy or completeness of electronic copies of this plan sheet.

To accompany plans dated 01-09-12

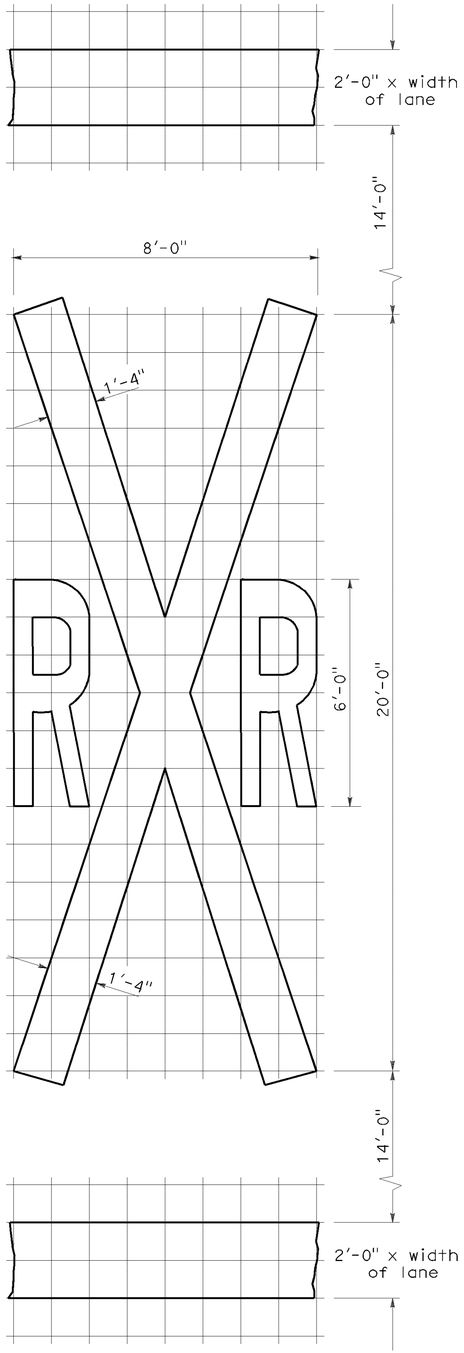

RAILROAD CROSSING SYMBOL

✳70 sq ft DOES NOT INCLUDE THE 2'-0" x VARIABLE WIDTH TRANSVERSE LINES.

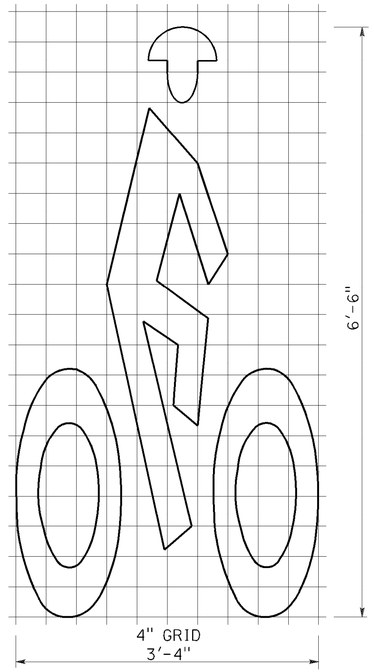

BIKE LANE SYMBOL

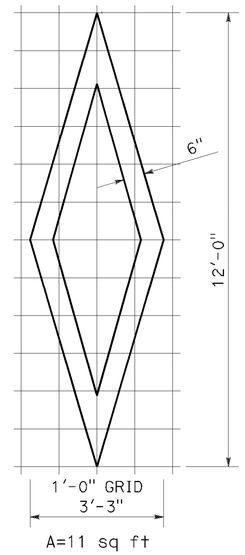

DIAMOND SYMBOL

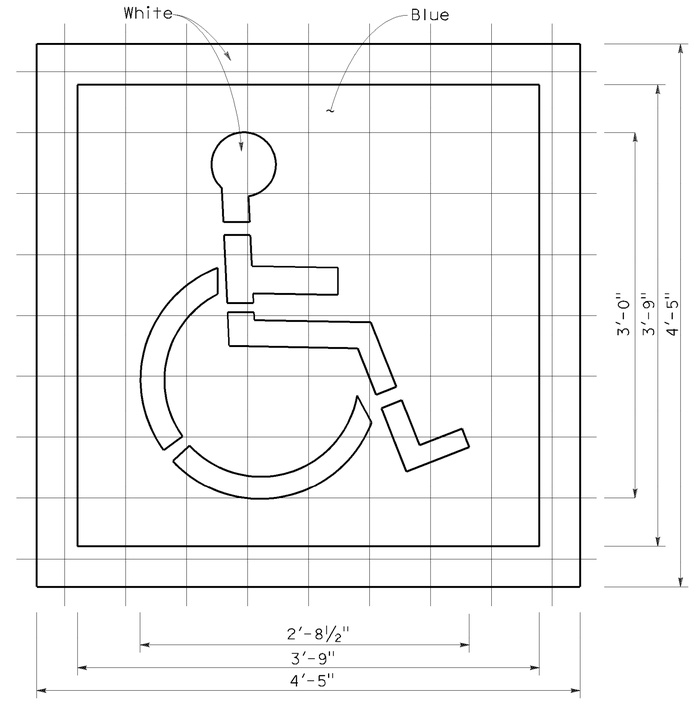

INTERNATIONAL SYMBOL OF ACCESSIBILITY MARKING

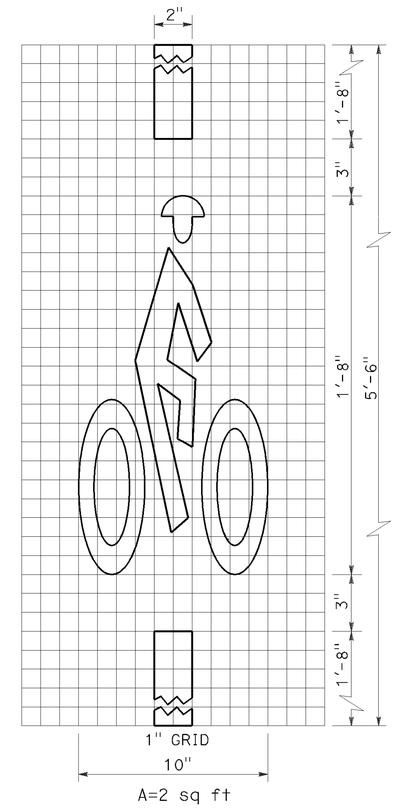

BICYCLE LOOP DETECTOR SYMBOL

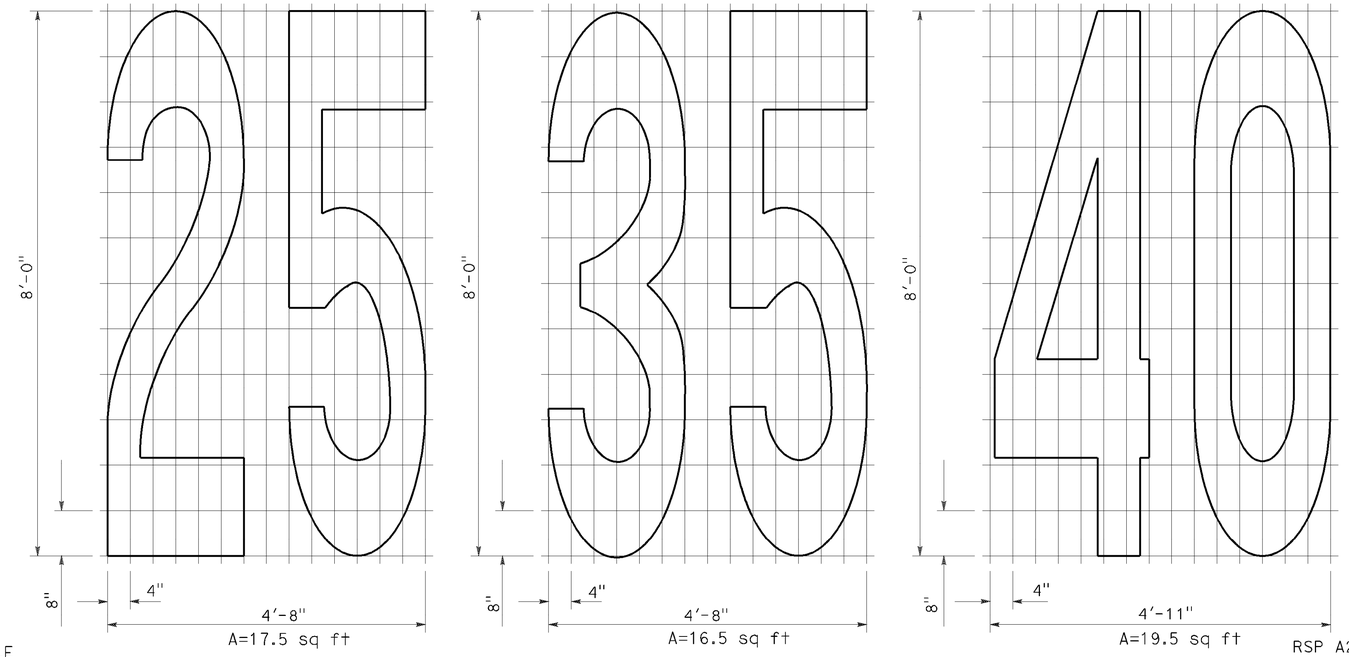

NUMERALS

NOTE:

1. Minor variations in dimensions may be accepted by the Engineer.

STATE OF CALIFORNIA
DEPARTMENT OF TRANSPORTATION

PAVEMENT MARKINGS SYMBOLS AND NUMERALS

NO SCALE

RSP A24C DATED JUNE 6, 2008 SUPERSEDES STANDARD PLAN A24C DATED MAY 1, 2006 - PAGE 11 OF THE STANDARD PLANS BOOK DATED MAY 2006.

REVISED STANDARD PLAN RSP A24C

2006 REVISED STANDARD PLAN RSP A24C

P:\proj1\02\4E380_plans\pse\24e380va001.dgn

5-27-08

DIST	COUNTY	ROUTE	POST MILES TOTAL PROJECT	SHEET NO.	TOTAL SHEETS
02	Sha	151	R5.8/R6.9	33	50

REGISTERED CIVIL ENGINEER

November 17, 2006
PLANS APPROVAL DATE

REGISTERED PROFESSIONAL ENGINEER Michael Janzen No. 44788 Exp. 03-31-08 CIVIL STATE OF CALIFORNIA

The State of California or its officers or agents shall not be responsible for the accuracy or completeness of electronic copies of this plan sheet.

To accompany plans dated 01-09-12

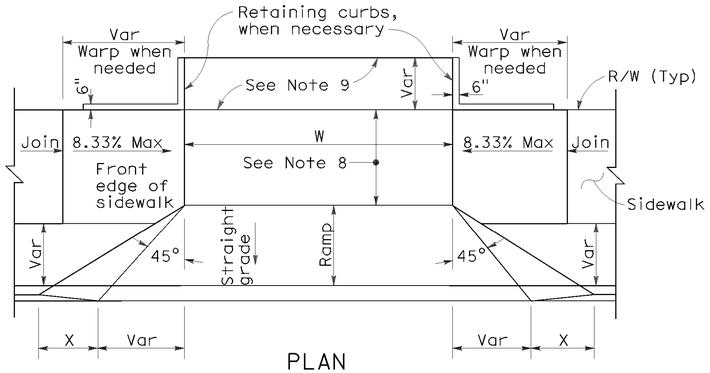

PLAN

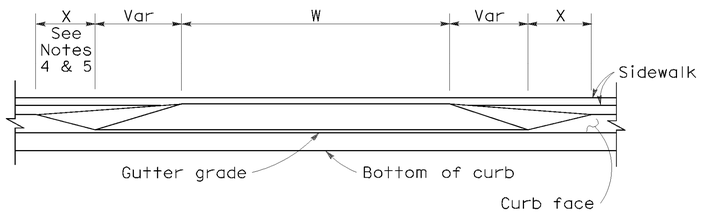

ELEVATION

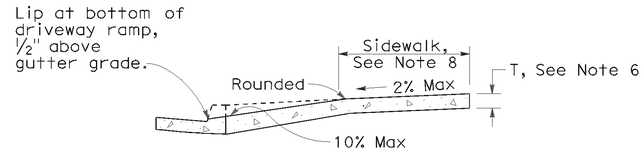

CASE A

Typical driveway, sidewalk not depressed

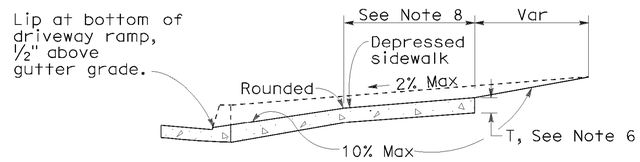

CASE B

Driveway with depressed sidewalk

SECTIONS

CURB QUANTITIES

TYPE	CUBIC YARDS PER LINEAR FOOT
A1-6	0.02585
A1-8	0.03084
A2-6	0.05903
A2-8	0.06379
A3-6	0.01036
A3-8	0.01435
B1-4	0.02185
B1-6	0.02930
B2-4	0.05515
B2-6	0.06171
B3-4	0.00641
B3-6	0.01074
B4	0.05709
D-4	0.04083
D-6	0.06804
E	0.06661

TABLE A

CURB TYPE	DIMENSIONS "H1"	"H2"	"W1"	"W2"
A1-6	1'-2"	6"	7½"	1½"
A1-8	1'-4"	8"	8"	2"
A2-6	1'-0"	6"	2'-7½"	1½"
A2-8	1'-2"	8"	2'-8"	2"
A3-6	6"	5"	7¼"	1¼"
A3-8	8"	7"	7¾"	1¾"
B1-4	1'-0"	4"	7½"	2½"
B1-6	1'-2"	6"	9"	4"
B2-4	10"	4"	2'-7½"	2½"
B2-6	1'-0"	6"	2'-9"	4"
B3-4	4"	3"	7"	2"
B3-6	6"	5"	8½"	3½"
D-4	10"	4"	1'-6"	1'-1"
D-6	1'-0"	6"	2'-2"	1'-8"

DRIVEWAYS

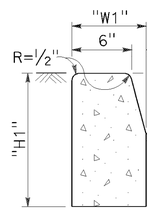

TYPE A1 CURBS

See Table A

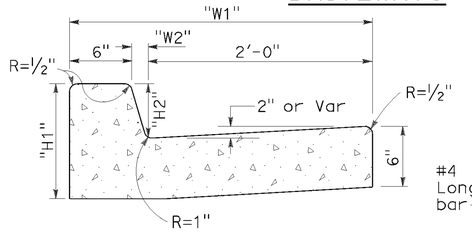

TYPE A2 CURBS

See Table A

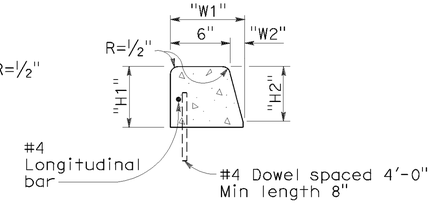

TYPE A3 CURBS

Superimposed on existing pavement
See Table A

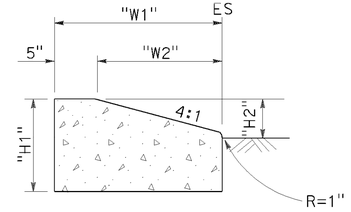

TYPE D CURBS

See Table A

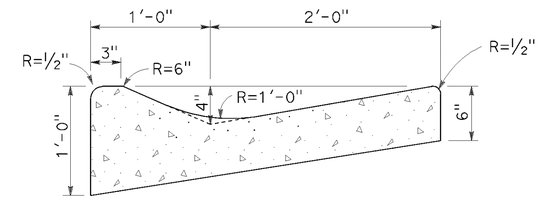

TYPE E CURB

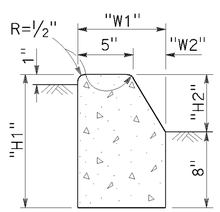

TYPE B1 CURBS

See Table A

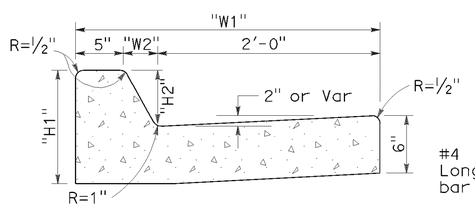

TYPE B2 CURBS

See Table A

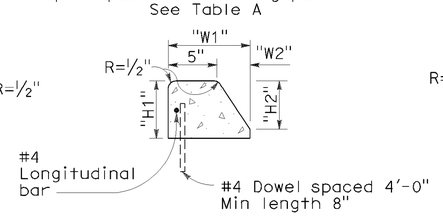

TYPE B3 CURBS

Superimposed on existing pavement
See Table A

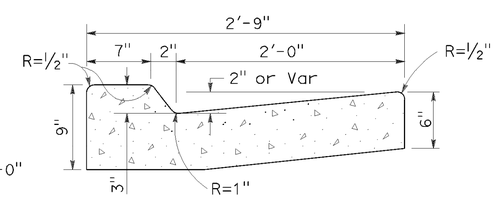

TYPE B4 CURBS

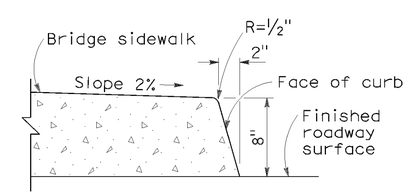

TYPE H CURB

On Bridges

CURBS

NOTES:

1. Case A driveway section typically applies.
2. Use Case B driveway section when ramp slopes would exceed 10% in Case A.
3. Use Case B driveway section when sidewalk cross slope would exceed 2% in Case A.
4. X=3'-0" except for curb heights over 10" where 4:1 slopes shall be used on curb slope.
5. X is a variable when sidewalk is located where wheelchairs may traverse the surface. Slopes shall not exceed 8.33%.
6. Sidewalk and ramp thickness "T" at driveway shall be 4" for residental and 6" for commercial.
7. Difference in slope of the driveway ramp and the slope of a line between the gutter and a point on the roadway 5'-0" from gutter line shall not exceed 15%. Reduce driveway ramp slope, not gutter slope, where required.
8. Minimum width of clear passageway for sidewalk shall be 4'-0".
9. Retaining curbs and acquisition of construction easement may be necessary for narrow sidewalks or curb heights in excess of 6".
10. Across the pedestrian route at curb ramp locations, the gutter pan slope shall not exceed 1" of depth for each 2'-0" of width.

STATE OF CALIFORNIA
DEPARTMENT OF TRANSPORTATION

CURBS AND DRIVEWAYS

NO SCALE

RSP A87A DATED NOVEMBER 17, 2006 SUPERSEDES STANDARD PLAN A87A DATED MAY 1, 2006 - PAGE 113 OF THE STANDARD PLANS BOOK DATED MAY 2006.

REVISED STANDARD PLAN RSP A87A

2006 REVISED STANDARD PLAN RSP A87A

P:\proj11\02\4E380_plans\pse\24e380va002.dgn

10-25-06

DIST	COUNTY	ROUTE	POST MILES TOTAL PROJECT	SHEET NO.	TOTAL SHEETS
02	Sha	151	R5.8/R6.9	34	50

REGISTERED CIVIL ENGINEER

September 1, 2006
PLANS APPROVAL DATE

REGISTERED PROFESSIONAL ENGINEER Hector David Cordova No. C41957 Exp. 3-31-08 CIVIL STATE OF CALIFORNIA

The State of California or its officers or agents shall not be responsible for the accuracy or completeness of electronic copies of this plan sheet.

To accompany plans dated 01-09-12

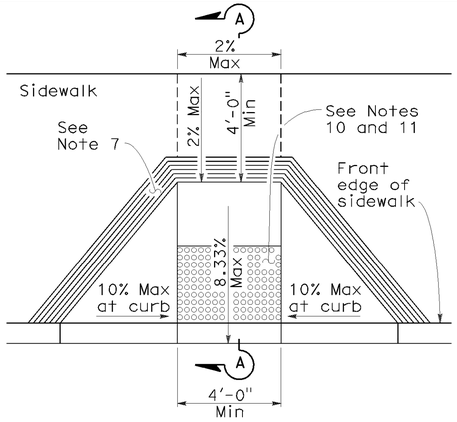

CASE A

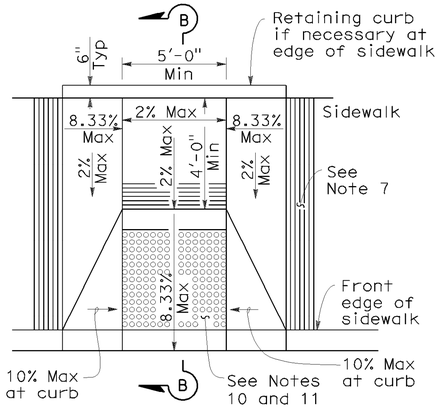

CASE B

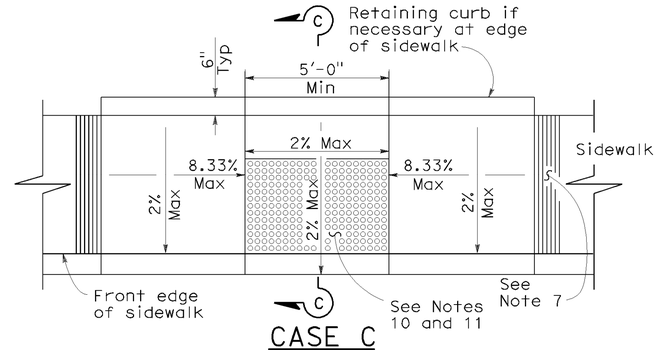

CASE C

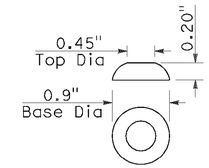

RAISED TRUNCATED DOME

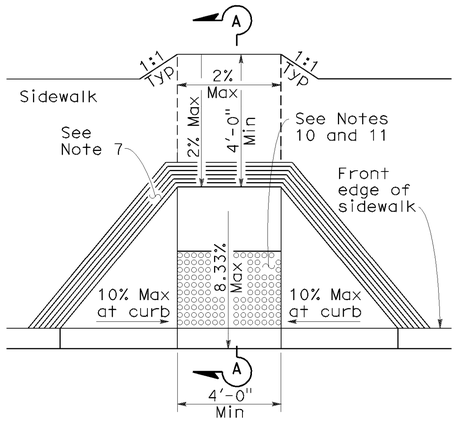

CASE D

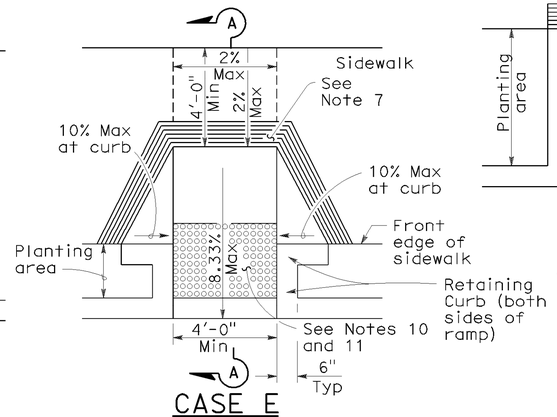

CASE E

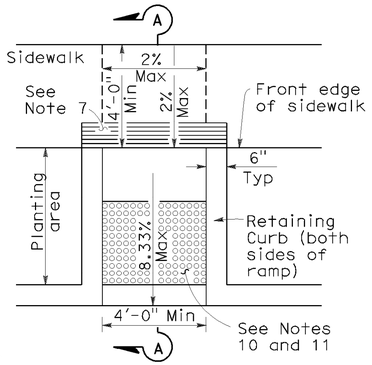

CASE F

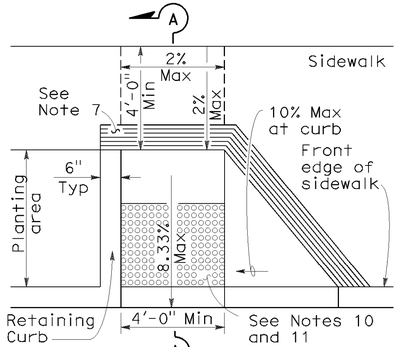

CASE G
See Note 4

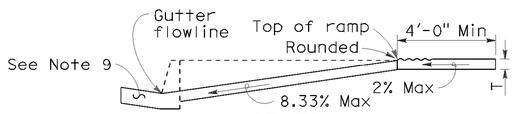

SECTION A-A

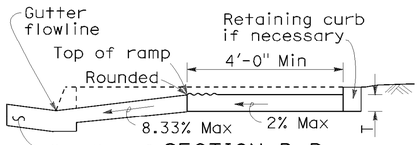

SECTION B-B

Depress entire sidewalk as required

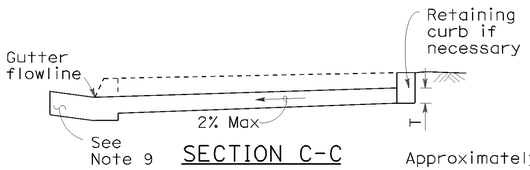

SECTION C-C

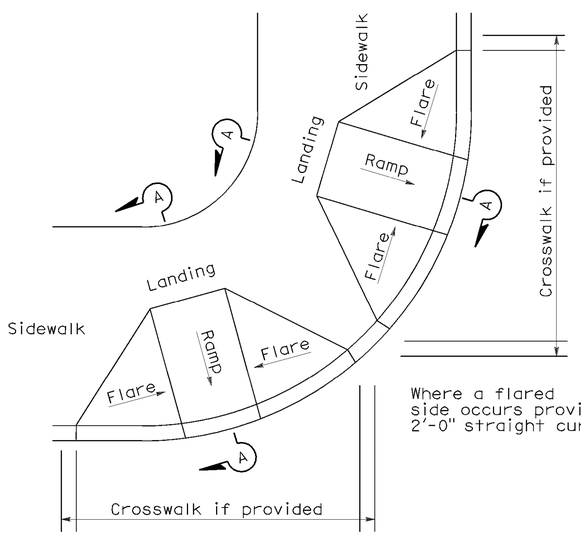

DETAIL A

TYPICAL TWO-RAMP CORNER INSTALLATION

See Note 1

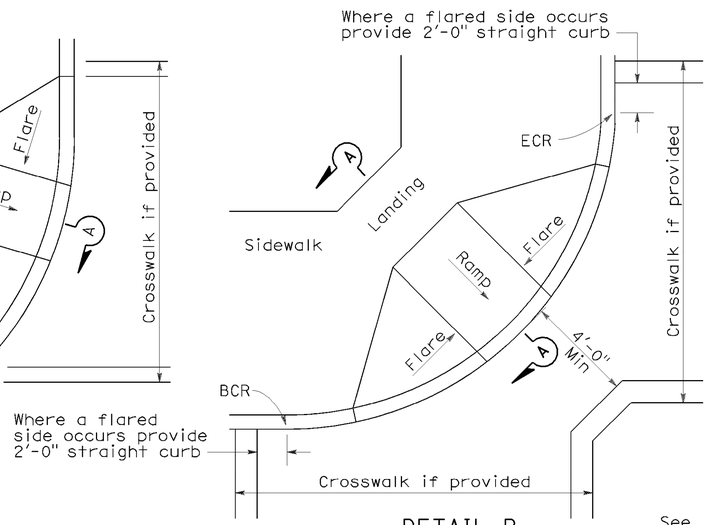

DETAIL B

TYPICAL ONE-RAMP CORNER INSTALLATION

See Notes 1 and 3

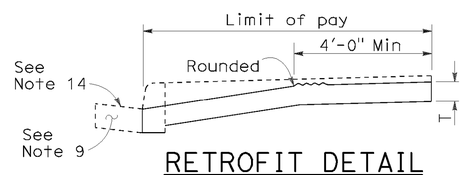

RETROFIT DETAIL

Existing curb and sidewalk

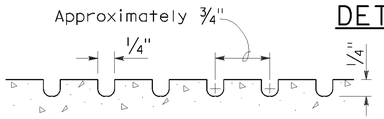

GROOVING DETAIL

NOTES:

1. As site conditions dictate, Case A through Case G curb ramps may be used for corner installations similar to those shown in Detail A and Detail B. The case of curb ramps used in Detail A do not have to be the same. Case A through Case G curb ramps also may be used at mid block locations, as site conditions dictate.
2. If distance from curb to back of sidewalk is too short to accommodate ramp and 4'-0" platform (landing) as shown in Case A, the sidewalk may be depressed longitudinally as in Case B, or C or may be widened as in Case D.
3. When ramp is located in center of curb return, crosswalk configuration must be similar to that shown for Detail B.
4. As site conditions dictate, the retaining curb side and the flared side of the Case G ramp shall be constructed in reversed position.
5. If located on a curve, the sides of the ramp need not be parallel, but the minimum width of the ramp shall be 4'-0".
6. Side slope of ramp flares vary uniformly from a maximum of 10% at curb to conform with longitudinal sidewalk slope adjacent to top of the ramp, except in Case C and Case F.
7. The curb ramp shall be outlined, as shown, with a 1'-0" wide border with 1/4" grooves approximately 3/4" on center. See grooving detail.
8. Transitions from ramps and landing to walks, gutters or streets shall be flush and free of abrupt changes.
9. Maximum slopes of adjoining gutters, the road surface immediately adjacent to the curb ramp or accessible route shall not exceed 5 percent within 4'-0" of the top and bottom of the curb ramp.
10. Curb ramps shall have a detectable warning surface that extends the full width and 3'-0" depth of the ramp. Detectable Warning Surfaces shall conform to the details on this plan and the requirements in the Special Provisions.
11. The edge of the detectable warning surface nearest the street shall be between 6" and 8" from the gutter flowline.
12. Sidewalk and ramp thickness, "T", shall be 3½" minimum.
13. Utility pull boxes, manholes, vaults and all other utility facilities within the boundaries of the curb ramp will be relocated or adjusted to grade by the owner prior to, or in conjunction with, curb ramp construction.
14. For retrofit conditions, removal and replacement of curb apron will be at the Contractor's option, unless otherwise shown on project plans.

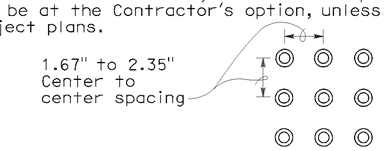

RAISED TRUNCATED DOME PATTERN (IN-LINE)

DETECTABLE WARNING SURFACE

See Note 10

STATE OF CALIFORNIA
DEPARTMENT OF TRANSPORTATION

CURB RAMP DETAILS

NO SCALE

RSP A88A DATED SEPTEMBER 1, 2006 SUPERSEDES STANDARD PLAN A88A DATED MAY 1, 2006 - PAGE 115 OF THE STANDARD PLANS BOOK DATED MAY 2006.

REVISED STANDARD PLAN RSP A88A

2006 REVISED STANDARD PLAN RSP A88A

P:\proj1\02\4E380_plans\pse\24e380va003.dgn

8-3-06

DIST	COUNTY	ROUTE	POST MILES TOTAL PROJECT	SHEET NO.	TOTAL SHEETS
02	Sha	151	R5.8/R6.9	35	50

Randell D. Hiatt
REGISTERED CIVIL ENGINEER

June 6, 2008
PLANS APPROVAL DATE

REGISTERED PROFESSIONAL ENGINEER
Randell D. Hiatt
No. C50200
Exp. 6-30-09
CIVIL
STATE OF CALIFORNIA

The State of California or its officers or agents shall not be responsible for the accuracy or completeness of electronic copies of this plan sheet.

To accompany plans dated 01-09-12

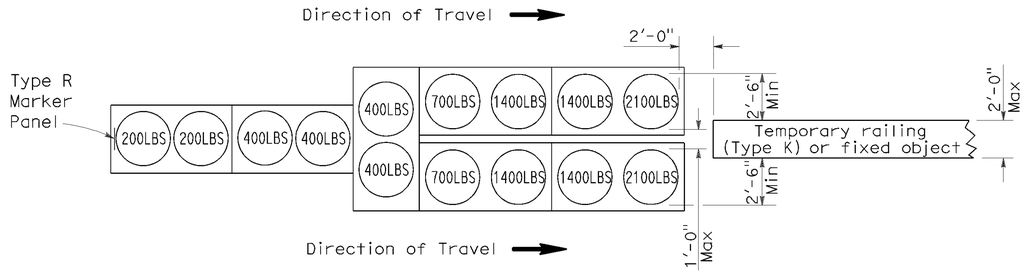

ARRAY 'TU14'

Approach speed 45 mph or more

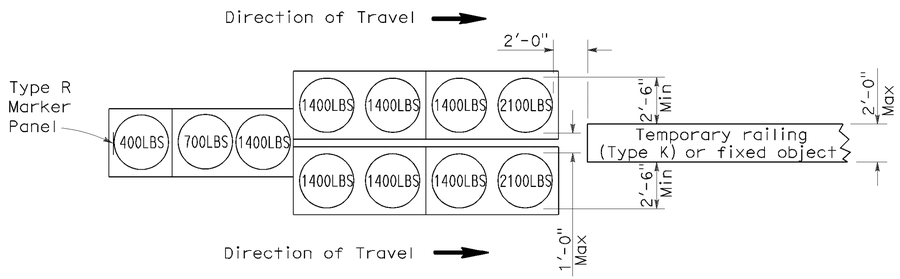

ARRAY 'TU11'

Approach speed less than 45 mph

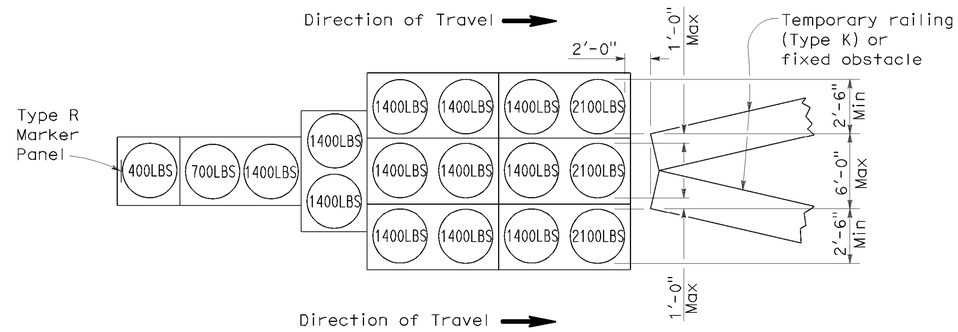

ARRAY 'TU17'

Approach speed less than 45 mph

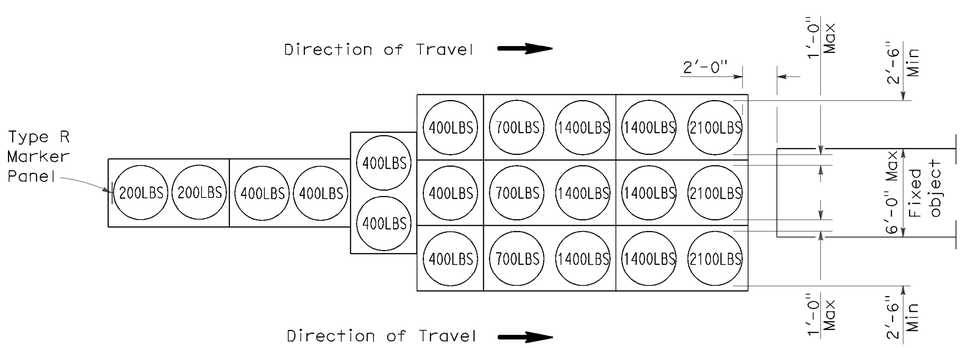

ARRAY 'TU21'

Approach speed 45 mph or more

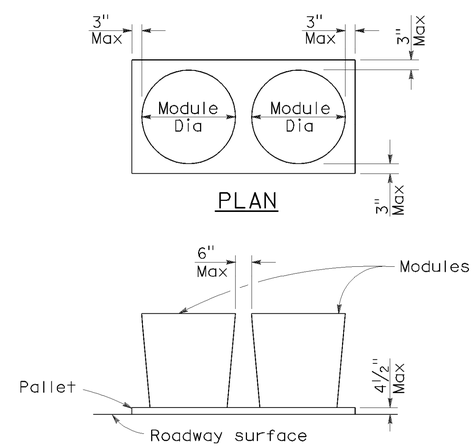

PLAN

ELEVATION

CRASH CUSHION PALLET DETAIL

See Note 7

NOTES:

1. (XXX) Indicates sand filled module location and weight of sand in pounds for each module. Module spacing is based on the greater diameter of the module.
2. All sand weights are nominal.
3. Temporary crash cushion arrays shall not encroach on the traveled way.
4. Place the top of Type R marker panel 1" below the module lid.
5. Refer to Standard Plan A73B for marker details.
6. Approach speeds indicated conform to NCHRP 350 Report criteria.
7. Use of pallets is optional.

STATE OF CALIFORNIA
DEPARTMENT OF TRANSPORTATION

TEMPORARY CRASH CUSHION, SAND FILLED (UNIDIRECTIONAL)

NO SCALE

RSP T1A DATED JUNE 6, 2008 SUPERSEDES STANDARD PLAN T1A
DATED MAY 1, 2006 - PAGE 211 OF THE STANDARD PLANS BOOK DATED MAY 2006.

REVISED STANDARD PLAN RSP T1A

2006 REVISED STANDARD PLAN RSP T1A

P:\proj1\02\4E380_plans\pse\24e380va004.dgn

5-15-08

DIST	COUNTY	ROUTE	POST MILES TOTAL PROJECT	SHEET NO.	TOTAL SHEETS
02	Sha	151	R5.8/R6.9	36	50

Randell D. Hiatt
REGISTERED CIVIL ENGINEER

June 6, 2008
PLANS APPROVAL DATE

REGISTERED PROFESSIONAL ENGINEER
Randell D. Hiatt
No. C50200
Exp. 6-30-09
CIVIL
STATE OF CALIFORNIA

The State of California or its officers or agents shall not be responsible for the accuracy or completeness of electronic copies of this plan sheet.

To accompany plans dated 01-09-12

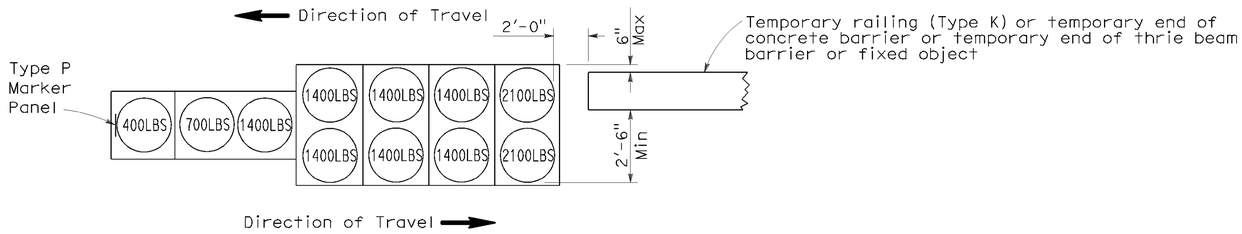

ARRAY 'TB11'

Approach speed less than 45 mph

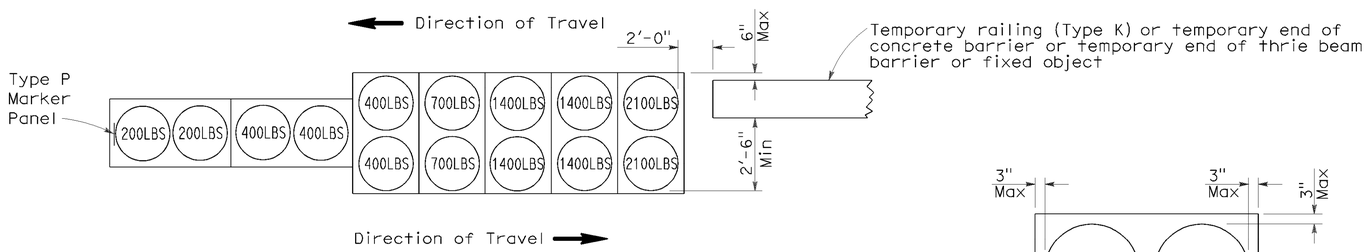

ARRAY 'TB14'

Approach speed 45 mph or more

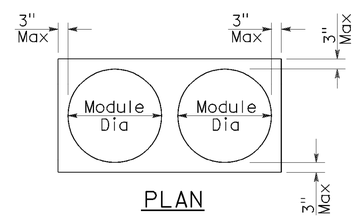

PLAN

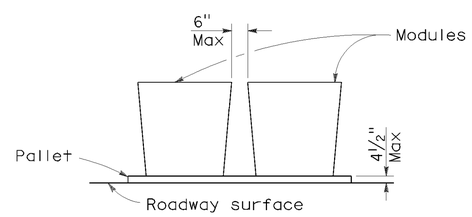

ELEVATION

CRASH CUSHION PALLET DETAIL

See Note 7

NOTES:

1. (XXX) Indicates sand filled module location and weight of sand in pounds for each module. Module spacing is based on the greater diameter of the module.
2. All sand weights are nominal.
3. Temporary crash cushion arrays shall not encroach on the traveled way.
4. Place the Type P marker panel so that the bottom of the panel rests upon the pallet.
5. Refer to Standard Plan A73B for marker details.
6. Approach speeds indicated conform to NCHRP 350 Report criteria.
7. Use of pallets is optional.

STATE OF CALIFORNIA
DEPARTMENT OF TRANSPORTATION

TEMPORARY CRASH CUSHION, SAND FILLED (BIDIRECTIONAL)

NO SCALE

RSP T1B DATED JUNE 6, 2008 SUPERSEDES STANDARD PLAN T1B
DATED MAY 1, 2006 - PAGE 212 OF THE STANDARD PLANS BOOK DATED MAY 2006.

REVISED STANDARD PLAN RSP T1B

2006 REVISED STANDARD PLAN RSP T1B

P:\proj1\02\4E380_plans\pse\24e380va005.dgn

5-15-08

DIST	COUNTY	ROUTE	POST MILES TOTAL PROJECT	SHEET NO.	TOTAL SHEETS
02	Sha	151	R5.8/R6.9	37	50

Randell D. Hiatt
REGISTERED CIVIL ENGINEER

June 6, 2008
PLANS APPROVAL DATE

REGISTERED PROFESSIONAL ENGINEER
Randell D. Hiatt
No. C50200
Exp. 6-30-09
CIVIL
STATE OF CALIFORNIA

The State of California or its officers or agents shall not be responsible for the accuracy or completeness of electronic copies of this plan sheet.

To accompany plans dated 01-09-12

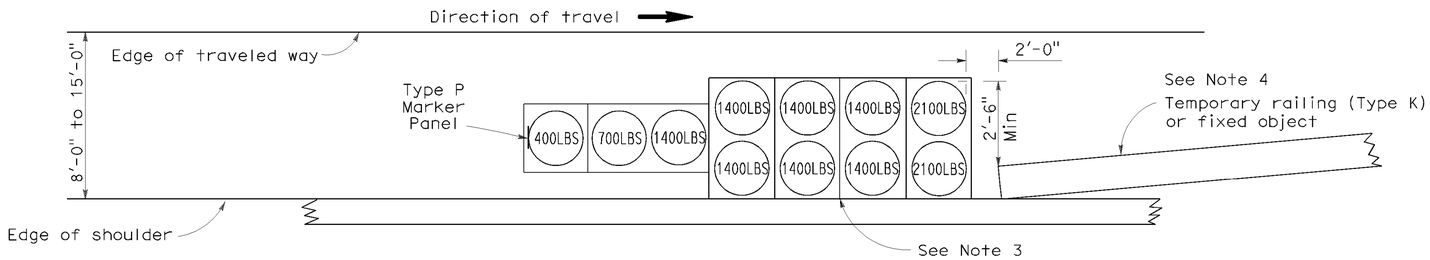

ARRAY 'TS11'

Approach speed less than 45 mph
See Note 9

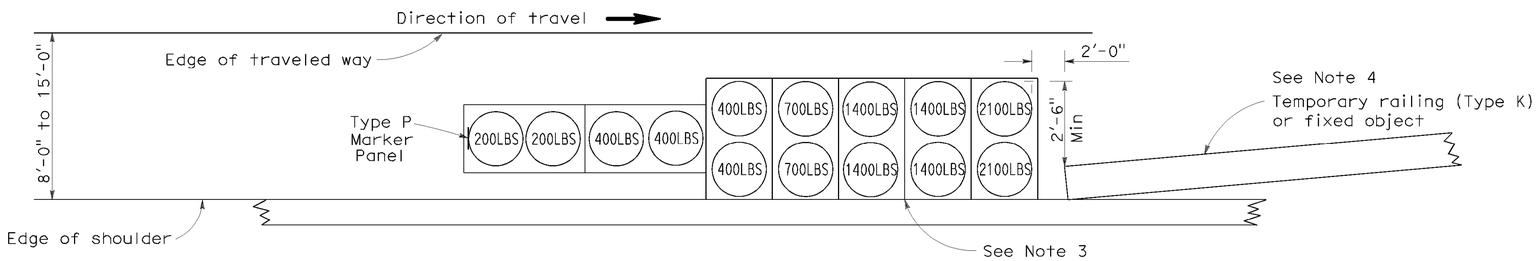

ARRAY 'TS14'

Approach speed 45 mph or more
See Note 9

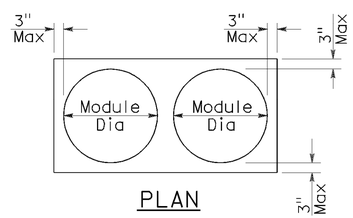

PLAN

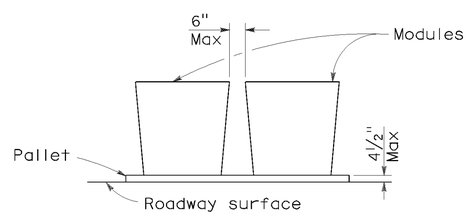

ELEVATION

CRASH CUSHION PALLET DETAIL

See Note 11

NOTES:

1. (XXX) Indicates sand filled module location and weight of sand in pounds for each module. Module spacing is based on the greater diameter of the module.
2. All sand weights are nominal.
3. The temporary crash cushion arrays shown on this plan shall be used only in locations where there will be traffic on one side of the temporary crash cushion array.
4. If the fixed object or approach end of the temporary railing is less than 15'-0" from the edge of traveled way, a temporary crash cushion is required in a construction or work zone.
5. Temporary crash cushion arrays shall not encroach on the traveled way.
6. Arrays for median shoulders shall conform to details shown on this plan for outside shoulders.
7. Place the Type P marker panel so that the bottom of the panel rests upon the pallet and faces traffic.
8. Refer to Standard Plan A73B for marker details.
9. For shoulder widths less than 8'-0", appropriate approved crash cushion protection, other than sand filled modules, shall be provided at fixed objects and at approach ends of temporary railing. The specific type of crash cushion shall be as shown on the project plans or as specified in the Special Provisions, or if not shown on the project plans or specified in the Special Provisions, shall be as approved by the Engineer.
10. Approach speeds indicated conform to NCHRP 350 Report criteria.
11. Use of pallets is optional.

STATE OF CALIFORNIA
DEPARTMENT OF TRANSPORTATION

TEMPORARY CRASH CUSHION, SAND FILLED (SHOULDER INSTALLATIONS)

NO SCALE

RSP T2 DATED JUNE 6, 2008 SUPERSEDES STANDARD PLAN T2
DATED MAY 1, 2006 - PAGE 213 OF THE STANDARD PLANS BOOK DATED MAY 2006.

REVISED STANDARD PLAN RSP T2

2006 REVISED STANDARD PLAN RSP T2

P:\proj1\02\4E380_plans\pse\24e380va006.dgn

5-15-08

Dist	COUNTY	ROUTE	POST MILES TOTAL PROJECT	SHEET No.	TOTAL SHEETS
02	Sha	151	R5.8/R6.9	38	50

Randell D. Hiatt
REGISTERED CIVIL ENGINEER

May 20, 2011
PLANS APPROVAL DATE

REGISTERED PROFESSIONAL ENGINEER
Randell D. Hiatt
No. C50200
Exp. 6-30-11
CIVIL
STATE OF CALIFORNIA

The State of California or its officers or agents shall not be responsible for the accuracy or completeness of electronic copies of this plan sheet.

To accompany plans dated 01-09-12

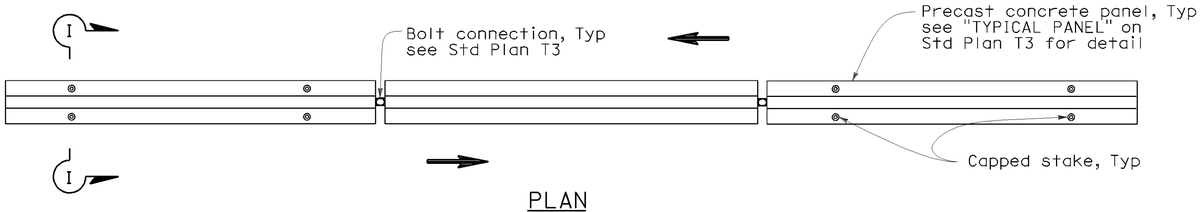

PLAN

RAILING STAKING CONFIGURATION FOR TWO-WAY TRAFFIC

See Note 1

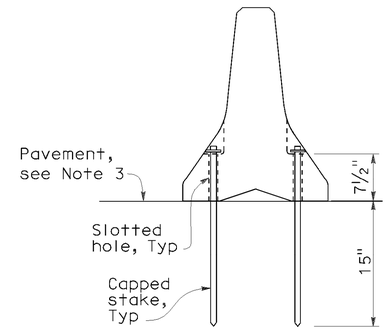

SECTION I-I

NOTES:

1. Where Type K Temporary Railing is placed as a temporary or long term barrier in two-way traffic on highways with less than 24" from the edge of traveled way, use four capped stakes per every other panel with end panels staked.
2. Where Type K Temporary Railing is placed 3" to 24" from the edge of an excavation on highways, use two capped stakes per panel along the traffic side.
3. Staked Type K Temporary Railing must be supported by at least 4" thick concrete, hot mix asphalt or existing asphalt concrete pavement.
4. The minimum yield strength for the washer must be 60,000 psi.
5. Direction of adjacent traffic indicated by ⟶.

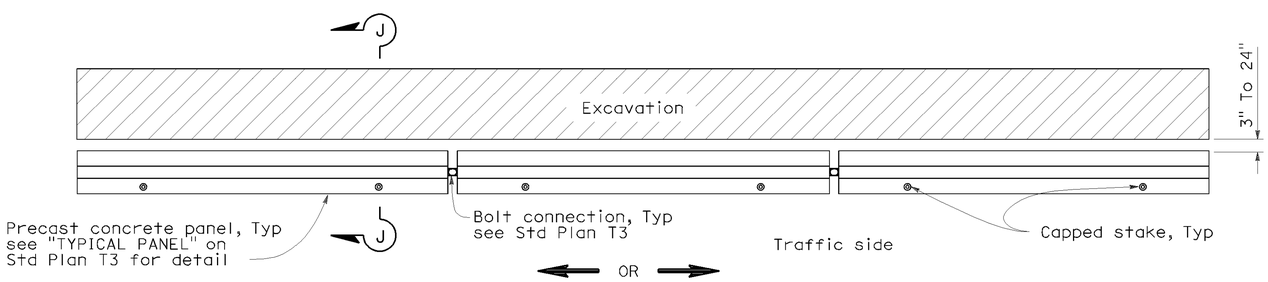

PLAN

RAILING STAKING CONFIGURATION ADJACENT TO AN EXCAVATION

See Note 2

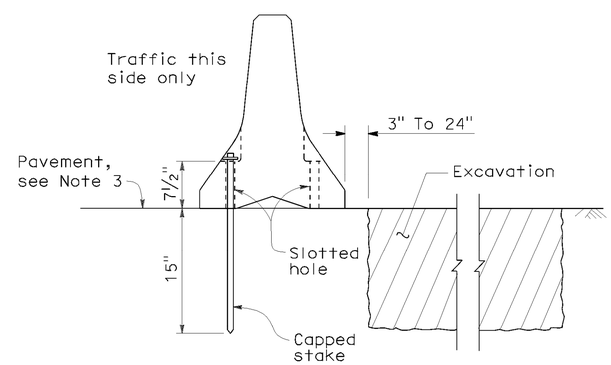

SECTION J-J

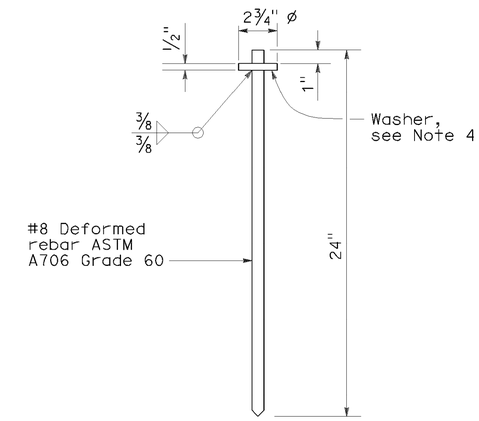

CAPPED STAKE DETAIL

STATE OF CALIFORNIA
DEPARTMENT OF TRANSPORTATION

TEMPORARY RAILING (TYPE K)

NO SCALE

NSP T3A DATED MAY 20, 2011 SUPPLEMENTS
THE STANDARD PLANS BOOK DATED MAY 2006.

NEW STANDARD PLAN NSP T3A

2006 NEW STANDARD PLAN NSP T3A

P:\proj1\02\4E380_plans\pse\24e380va007.dgn

8-31-10

DIST	COUNTY	ROUTE	POST MILES TOTAL PROJECT	SHEET NO.	TOTAL SHEETS
02	Sha	151	R5.8/R6.9	39	50

Robert B Schott
LICENSED LANDSCAPE ARCHITECT

August 15, 2008
PLANS Approval DATE

LICENSED LANDSCAPE ARCHITECT
Robert B. Schott 3625
Robert B Schott
Signature
11-04-08
Renewal Date
08-11-08
Date
STATE OF CALIFORNIA

The State of California or its officers or agents shall not be responsible for the accuracy or completeness of electronic copies of this plan sheet.

To accompany plans dated 01-09-12

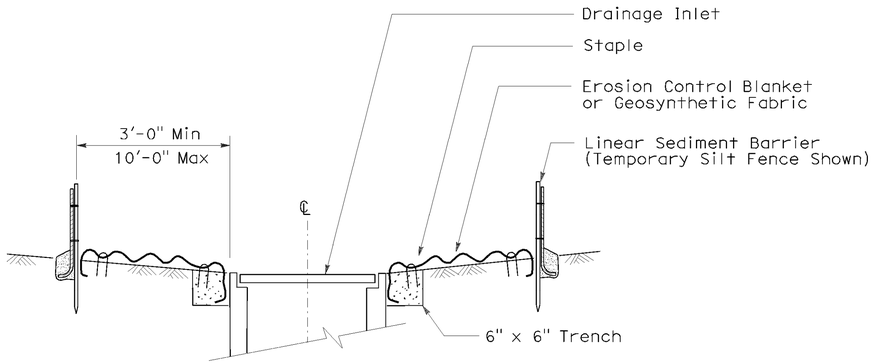

SECTION A-A

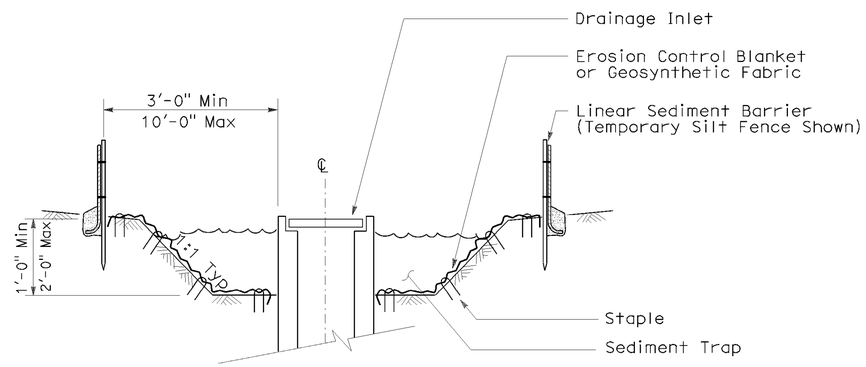

SECTION B-B

NOTES:

1. See Standard Plan T51 for Temporary Silt Fence.
2. Dimensions may vary to fit field conditions.

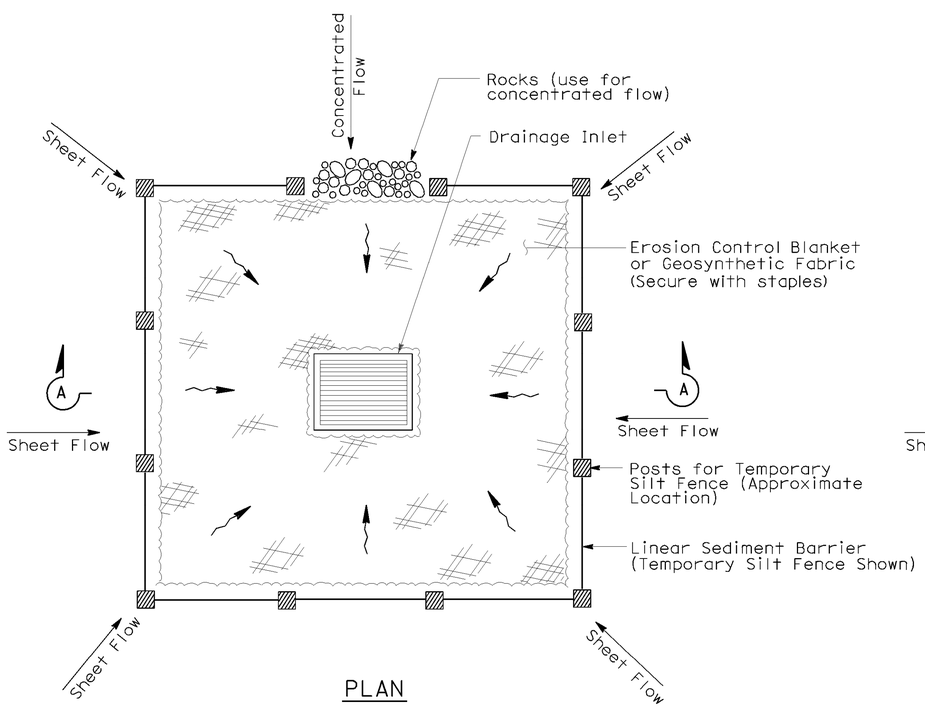

PLAN

TEMPORARY DRAINAGE
INLET PROTECTION (TYPE 1)

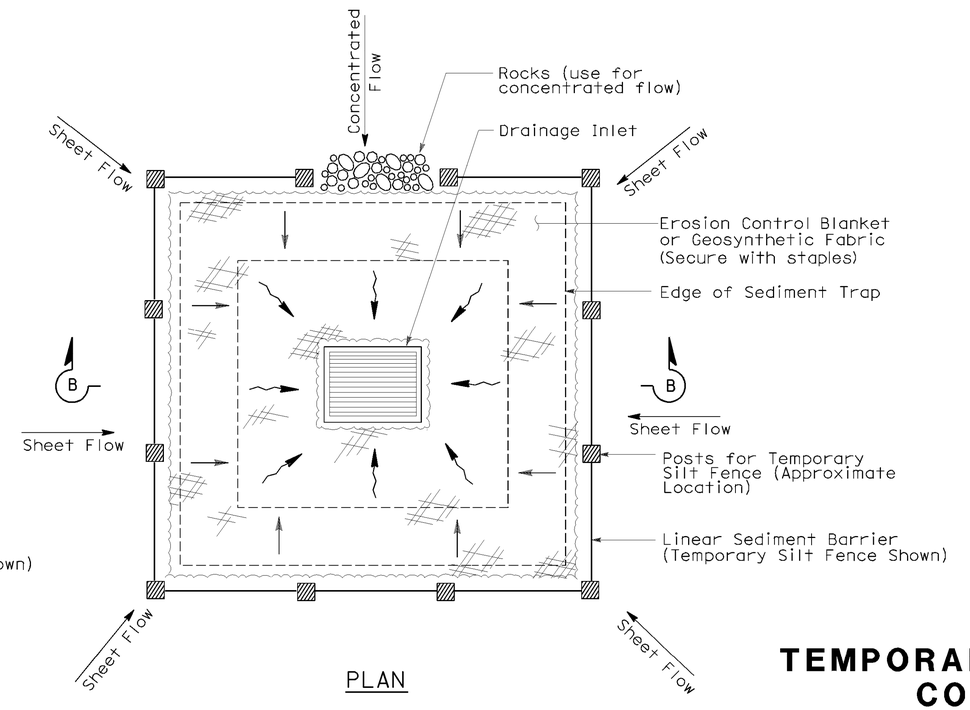

PLAN

TEMPORARY DRAINAGE
INLET PROTECTION (TYPE 2)
(EXCAVATED SEDIMENT TRAP)

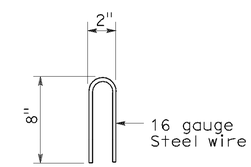

STAPLE DETAIL

STATE OF CALIFORNIA
DEPARTMENT OF TRANSPORTATION

TEMPORARY WATER POLLUTION CONTROL DETAILS (TEMPORARY DRAINAGE INLET PROTECTION)

NO SCALE

Nsp t61 dated august 15, 2008 supplements the standard plans book dated may 2006.

NEW STANDARD PLAN NSP T61

2006 NEW STANDARD PLAN NSP T61

P:\proj1\02\4E380_plans\pse\24e380va008.dgn

7-11-08

DIST	COUNTY	ROUTE	POST MILES TOTAL PROJECT	SHEET NO.	TOTAL SHEETS
02	Sha	151	R5.8/R6.9	40	50

LICENSED LANDSCAPE ARCHITECT

August 15, 2008
PLANS APPROVAL DATE

LICENSED LANDSCAPE ARCHITECT Robert B. Schott 3625 Signature 11-04-08 Renewal Date 08-11-08 Date STATE OF CALIFORNIA

The State of California or its officers or agents shall not be responsible for the accuracy or completeness of electronic copies of this plan sheet.

To accompany plans dated 01-09-12

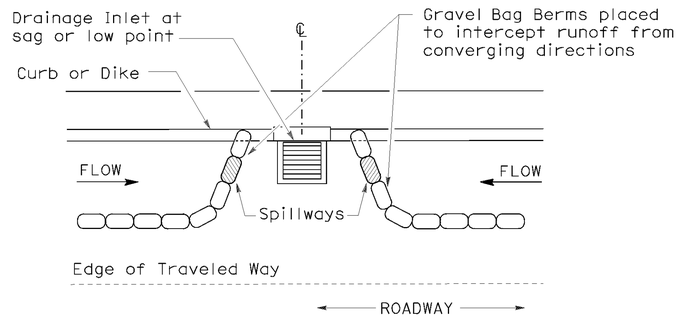

PLAN

CONFIGURATION FOR SAG POINT INLET (GRAVEL BAG BERM)

GRAVEL BAG BERM (TYPE 3A) SPACING TABLE

SLOPE OF ROADWAY (PERCENT)	1 to 3.9	4 to 5.9	6 to 7.9	8 to 10	10+
INTERVAL BETWEEN BERM	100′	75′	50′	25′	12′

For slope of less than 1%, install barriers only if erosion/sediment is prevalent

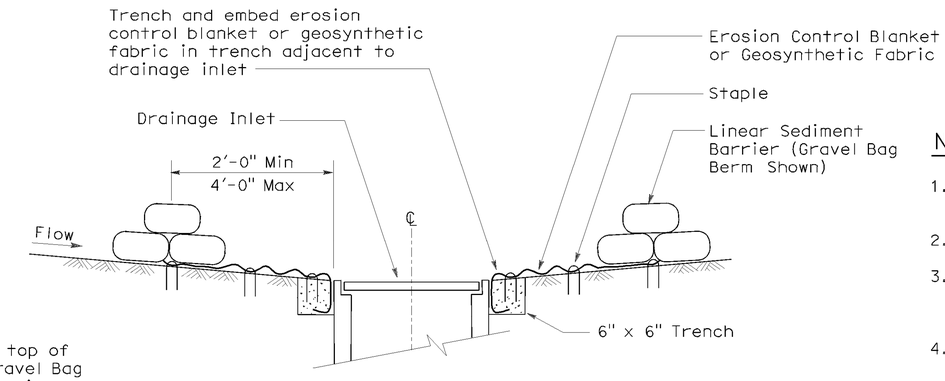

SECTION A-A

NOTES:

1. Place safety cones adjacent to drainage inlet protection.
2. Dimensions may vary to fit field conditions.
3. Install a minimum of 3 gravel bag berms upstream of each drainage inlet to be protected.
4. Position erosion control blanket or geosynthetic fabric at edge of concrete apron and secure in trench.
5. Erosion control blanket or geosynthetic fabric is not required if the area adjacent to the drainage inlet is vegetated or paved.

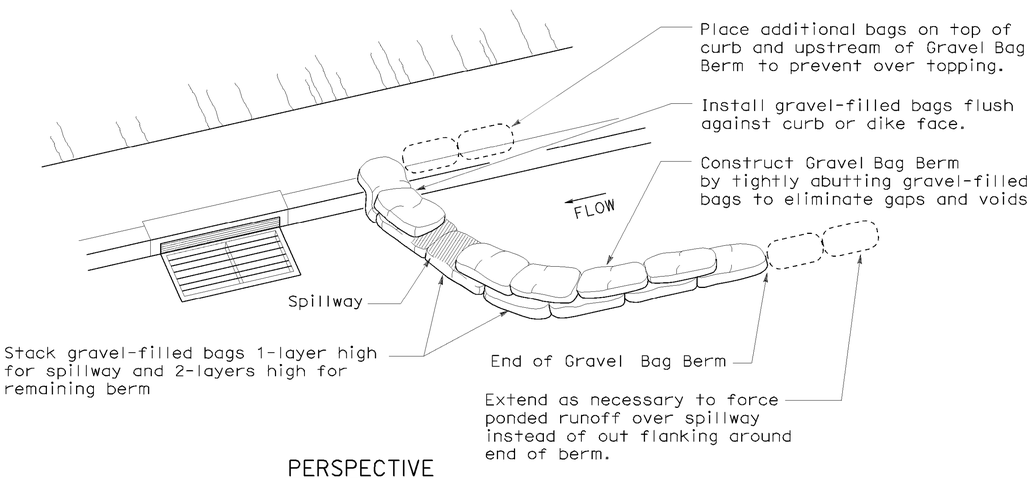

PERSPECTIVE

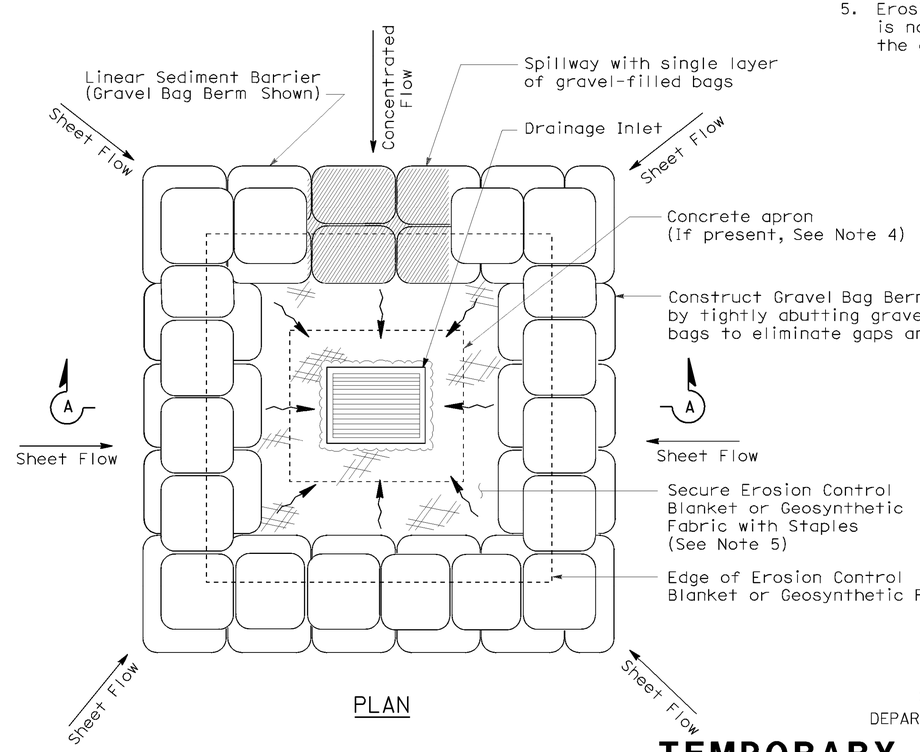

PLAN

TEMPORARY DRAINAGE INLET PROTECTION (TYPE 3B)

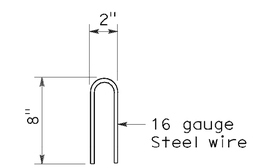

STAPLE DETAIL

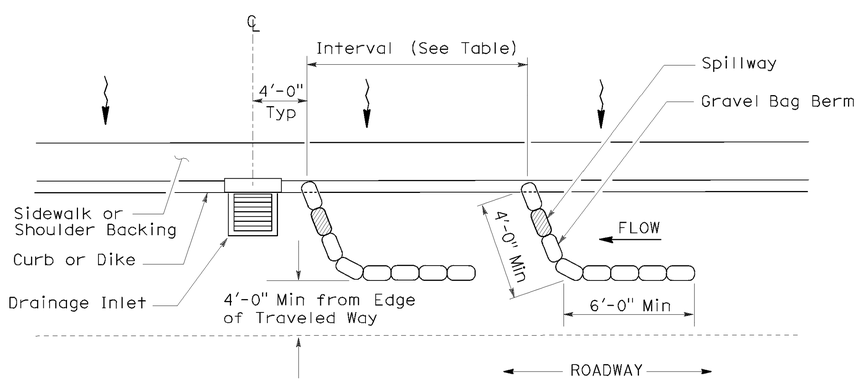

PLAN

TEMPORARY DRAINAGE INLET PROTECTION (TYPE 3A) (GRAVEL BAG BERM)

STATE OF CALIFORNIA
DEPARTMENT OF TRANSPORTATION

TEMPORARY WATER POLLUTION CONTROL DETAILS (TEMPORARY DRAINAGE INLET PROTECTION)

NO SCALE

NSP T62 DATED AUGUST 15, 2008 SUPPLEMENTS THE STANDARD PLANS BOOK DATED MAY 2006.

NEW STANDARD PLAN NSP T62

2006 NEW STANDARD PLAN NSP T62

P:\proj1\02\4E380_plans\pse\24e380va009.dgn

7-11-08

DIST	COUNTY	ROUTE	POST MILES TOTAL PROJECT	SHEET NO.	TOTAL SHEETS
02	Sha	151	R5.8/R6.9	41	50

LICENSED LANDSCAPE ARCHITECT

August 15, 2008
PLANS APPROVAL DATE

LICENSED LANDSCAPE ARCHITECT Robert B. Schott 3825 Registered Expires 11-04-08 Renewal Date 08-11-08 Date STATE OF CALIFORNIA

The State of California or its officers or agents shall not be responsible for the accuracy or completeness of electronic copies of this plan sheet.

To accompany plans dated 01-09-12

FLEXIBLE SEDIMENT BARRIER SPACING TABLE

SLOPE OF ROADWAY (PERCENT)	0 to 0.9	1 to 1.9	2 to 2.9	3 to 4	5+
INTERVAL BETWEEN BARRIERS	50′	35′	30′	25′	20′
ANGLE FROM FACE OF CURB	70°	70°	70°	45°	45°
SUGGESTED BARRIER LENGTH	6′	6′	6′	6′	6′

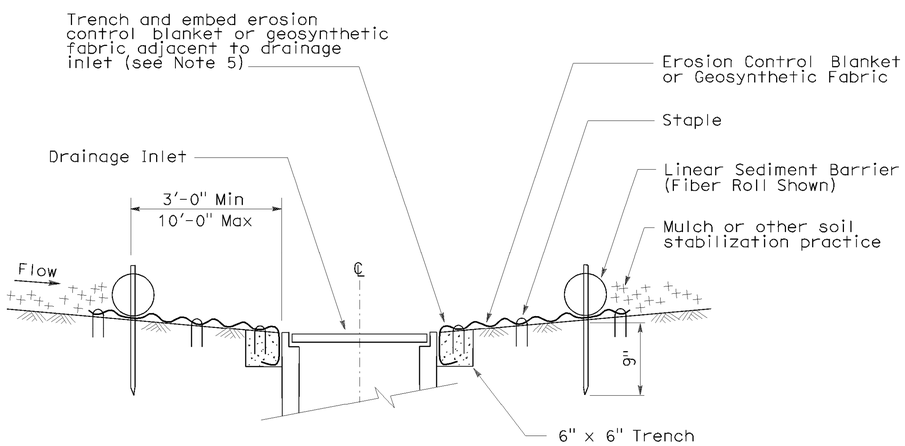

SECTION A-A

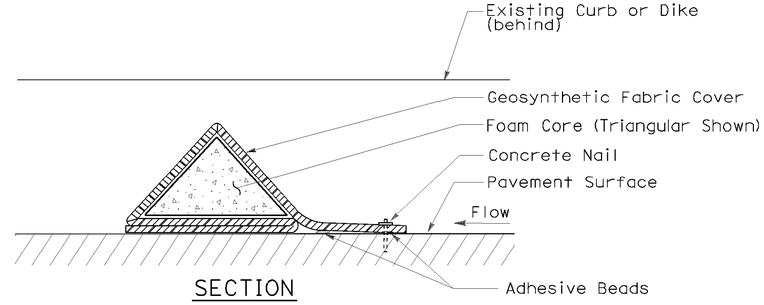

SECTION

FLEXIBLE SEDIMENT BARRIER DETAIL (FOAM BARRIER SHOWN)

NOTES:

1. See Standard Plan T51 for Temporary Silt Fence.
2. Dimensions may vary to fit field conditions.
3. Install a minimum of 3 flexible sediment barriers upstream of each drainage inlet to be protected.
4. Position erosion control blanket or geosynthetic fabric at edge of concrete apron and secure in trench.
5. Erosion control blanket or geosynthetic fabric is not required if the area adjacent to the drainage inlet is vegetated.

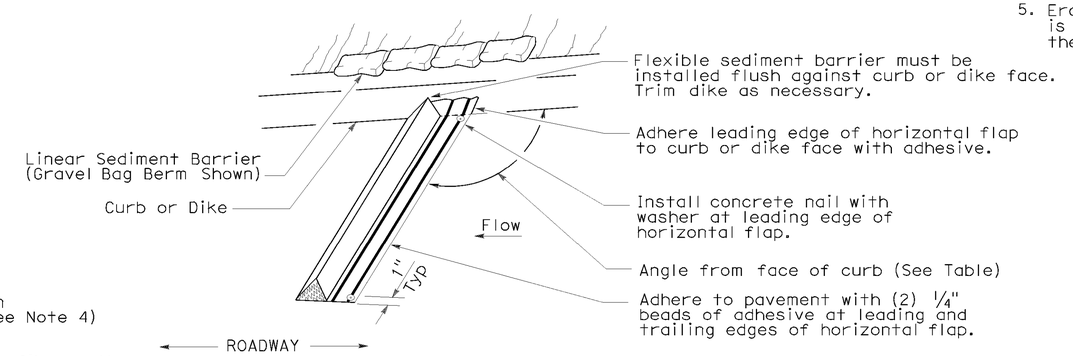

PERSPECTIVE

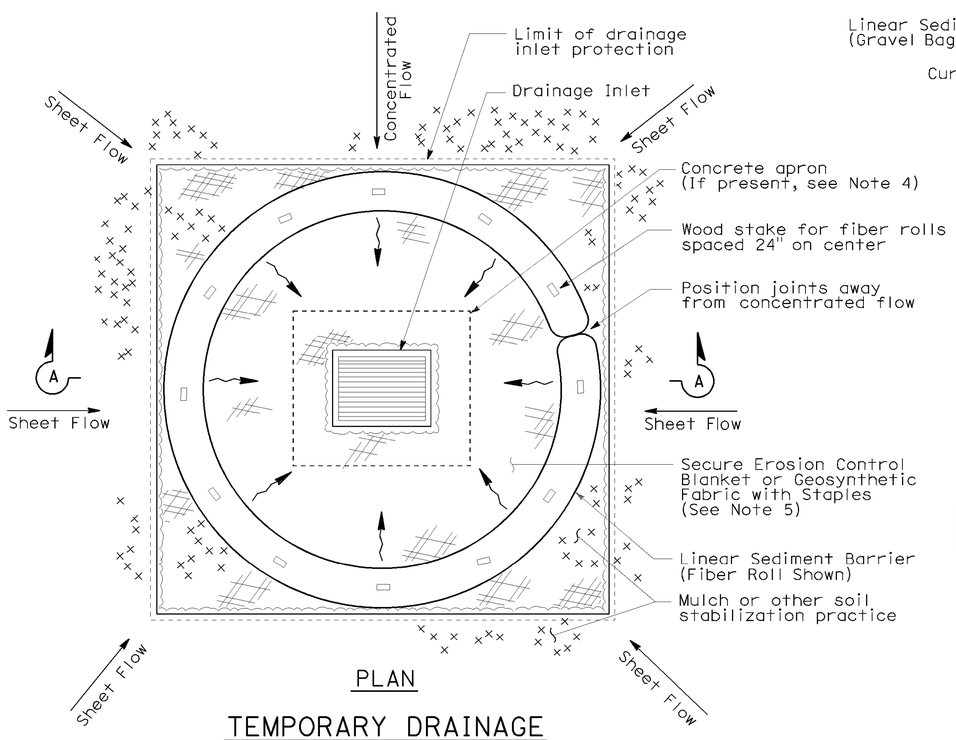

PLAN

TEMPORARY DRAINAGE INLET PROTECTION (TYPE 4A)

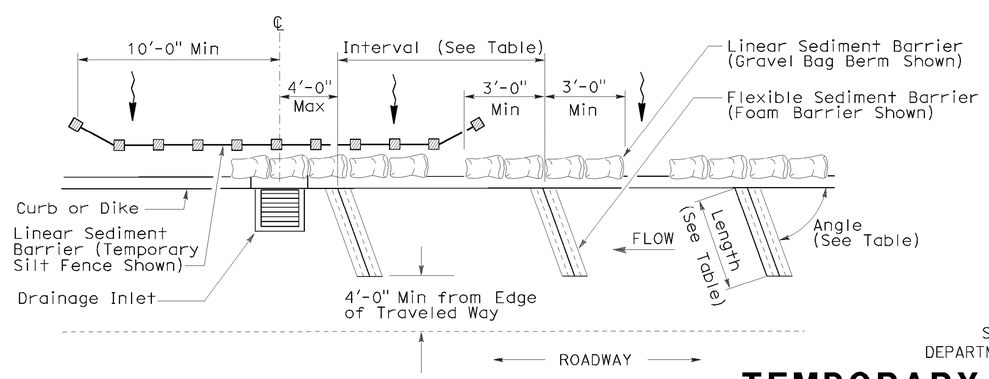

PLAN

TEMPORARY DRAINAGE INLET PROTECTION (TYPE 4B) FLEXIBLE SEDIMENT BARRIER

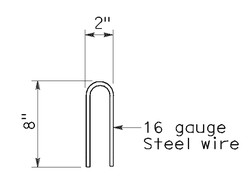

STAPLE DETAIL

STATE OF CALIFORNIA
DEPARTMENT OF TRANSPORTATION

TEMPORARY WATER POLLUTION CONTROL DETAILS (TEMPORARY DRAINAGE INLET PROTECTION)

NO SCALE

NSP T63 DATED AUGUST 15, 2008 SUPPLEMENTS THE STANDARD PLANS BOOK DATED MAY 2006.

NEW STANDARD PLAN NSP T63

2006 NEW STANDARD PLAN NSP T63

P:\proj1\02\4E380_plans\pse\24e380va010.dgn

7-11-08

DIST	COUNTY	ROUTE	POST MILES TOTAL PROJECT	SHEET NO.	TOTAL SHEETS
02	Sha	151	R5.8/R6.9	42	50

LICENSED LANDSCAPE ARCHITECT

August 15, 2008
PLANS APPROVAL DATE

LICENSED LANDSCAPE ARCHITECT
Robert B. Schott 3625
Signature
11-04-08
Renewal Date
08-11-08
Date
STATE OF CALIFORNIA

The State of California or its officers or agents shall not be responsible for the accuracy or completeness of electronic copies of this plan sheet.

To accompany plans dated 01-09-12

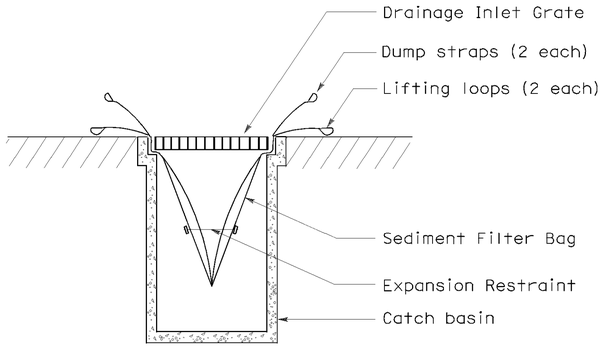

SECTION B-B

SEDIMENT FILTER BAG DETAIL

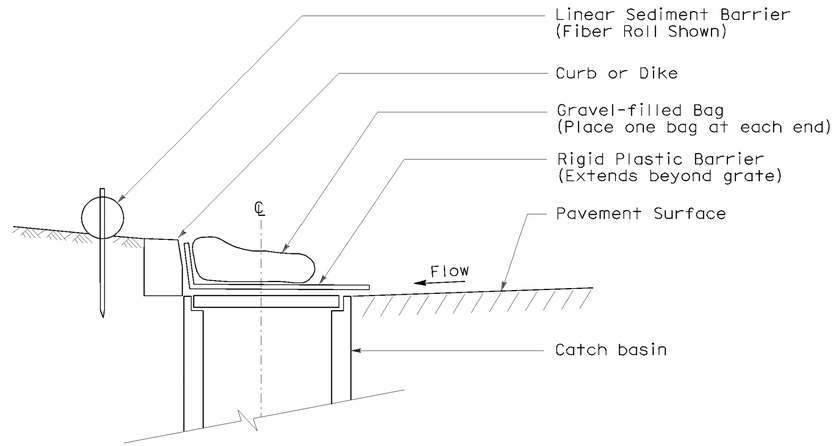

SECTION

TEMPORARY DRAINAGE INLET PROTECTION (TYPE 6A) (CATCH BASIN WITH GRATE)

NOTES:

1. See Standard Plan T51 for Temporary Silt Fence.
2. Dimensions may vary to fit field conditions.

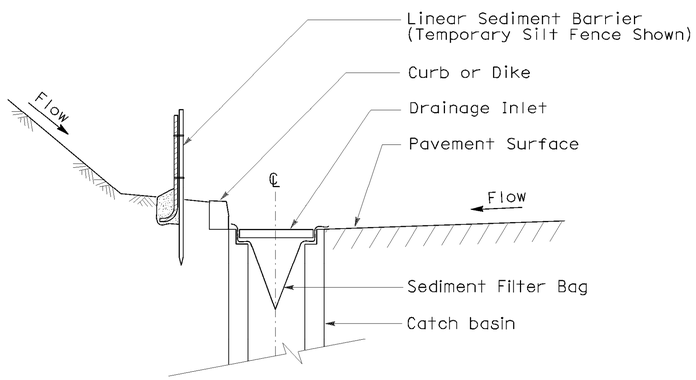

SECTION A-A

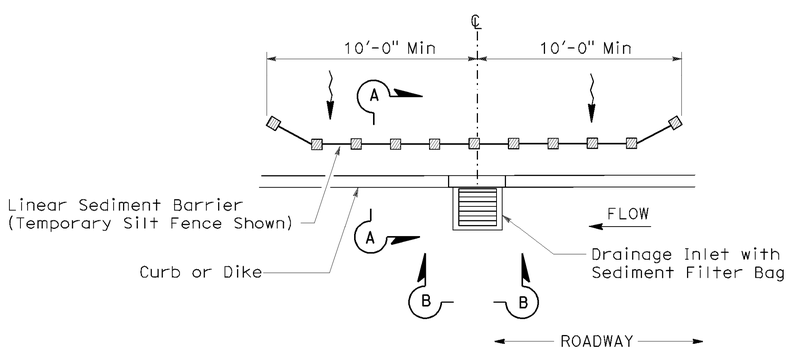

PLAN

TEMPORARY DRAINAGE INLET PROTECTION (TYPE 5) (SEDIMENT FILTER BAG)

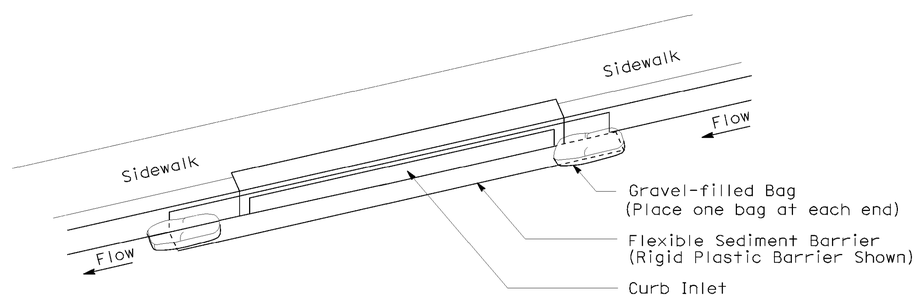

PERSPECTIVE

TEMPORARY DRAINAGE INLET PROTECTION (TYPE 6B) (CURB INLET WITHOUT GRATE)

STATE OF CALIFORNIA
DEPARTMENT OF TRANSPORTATION

TEMPORARY WATER POLLUTION CONTROL DETAILS (TEMPORARY DRAINAGE INLET PROTECTION)

NO SCALE

NSP T64 DATED AUGUST 15, 2008 SUPPLEMENTS THE STANDARD PLANS BOOK DATED MAY 2006.

NEW STANDARD PLAN NSP T64

2006 NEW STANDARD PLAN NSP T64

P:\proj1\02\4E380_plans\pse\24e380va011.dgn

7-11-08

DIST	COUNTY	ROUTE	POST MILES TOTAL PROJECT	SHEET NO.	TOTAL SHEETS
02	Sha	151	R5.8/R6.9	43	50

REGISTERED ELECTRICAL ENGINEER

October 5, 2007
PLANS APPROVAL DATE

REGISTERED PROFESSIONAL ENGINEER Jeffery G. McRae No. E14512 Exp. 6-30-08 ELECTRICAL STATE OF CALIFORNIA

The State of California or its officers or agents shall not be responsible for the accuracy or completeness of electronic copies of this plan sheet.

To accompany plans dated 01-09-12

ELECTROLIERS

STANDARD TYPES
15, 15D
15 STRUCTURE
21, 21D STRUCTURE
30
31
32
35
36-20A

High mast light pole

Double Arm lighting standard

Existing electrolier

Electrolier foundation (Future installation)

NOTES:

1. Luminaires shall be 310 W HPS when installed on Type 21, 21D, 30, 31, 32, 35 and 36-20A Standards, unless otherwise specified. Luminaires shall be 200 W HPS when installed on other type standards or poles, unless otherwise specified.
2. Luminaires shall be the cutoff type, ANSI Type Ⅲ medium cutoff lighting distribution, unless otherwise specified.
3. Variations noted adjacent to symbol on project plans.

Electrolier (see project notes or project plans)

Luminaire on wood pole

STANDARD NOTES:

- AB Abandon. If applied to conduit, remove conductors.
- BC Install pull box in existing conduit run.
- BP Pedestrian barricade, type as indicated on plan.
- CB Install conduit into existing pull box.
- CC Connect new and existing conduit. Remove existing conductors and install conductors as indicated.
- CF Conduit to remain for future use. Remove conductors. Install pull wire or rope.
- DH Detector handhole.
- FA Foundation to be abandoned.
- IS Install sign on signal mast arm.
- NS No slip base on standard.
- PEC Photoelectric control.
- PEU Photoelectric unit.
- RC Equipment or material to be removed and become the property of the Contractor.
- RE Remove electrolier, fuses and ballast. Tape ends of conductors.
- RL Relocate equipment.
- RR Remove and reuse equipment.
- RS Remove and salvage equipment.
- SC Splice new to existing conductors.
- SD Service disconnect.
- SF Standard to remain for future use. Remove luminaire, pole conductors, fuses and ballast.
- TSP Telephone service point.

ABBREVIATIONS AND EQUIPMENT DESIGNATIONS

PROPOSED	EXISTING	
BBS	bbs	Battery backup system
BC	bc	Bolt circle
C	C	Conduit
CCTV	cctv	Closed circuit television
CKT	ckt	Circuit
CMS	cms	Changeable message sign
DLC	dlc	Loop detector lead-in cable
EMS	ems	Extinguishable message sign
EVC	evc	Emergency vehicle cable
EVD	evd	Emergency vehicle detector
FB	fb	Flashing beacon
FBCA	fbca	Flashing beacon control assembly
FBS	fbs	Flashing beacon with slip base
FO	fo	Fiber optic
G	G	Ground (Equipment Grounding Conductor)
GFCI	GFCI	Ground fault circuit interrupt
HAR	har	Highway advisory radio
HEX	hex	Hexagonal
HPS	hps	High pressure sodium
IISNS	iisns	Internally illuminated street name sign
ISL	isl	Induction sign lighting
LED	led	Light emitting diode
LMA	lma	Luminaire mast arm
LPS	lps	Low pressure sodium
LTG	ltg	Lighting
LUM	lum	Luminaire
MAT	mat	Mast arm mounting vehicle signal faces, top attachment
MAS	mas	Mast arm mounting vehicle signal faces, side attachment
MAS-4A	mas-4A	Mast arm mounting vehicle signal faces, side attachment - 4 signal section
MAS-4B	mas-4B	
MAS-4C	mas-4C	
MAS-5A	mas-5A	Mast arm mounting vehicle signal faces, side attachment - 5 signal section
MAS-5B	mas-5B	
MC	mc	Mercury contactor
M/M	m/m	Multiple to multiple transformer
MT	mt	Conduit with pull wire or rope only
MTG	mtg	Mounting
	mv	Mercury vapor lighting fixture
N	N	Neutral (Grounded Conductor)
NC	NC	Normally closed
NO	NO	Normally open
PB	pb	Pull box
PEC	pec	Photoelectric control (Type Ⅰ, Ⅱ, Ⅲ, Ⅳ or Ⅴ as shown)
PED	ped	Pedestrian
PEU	peu	Photoelectric unit
PPB	ppb	Pedestrian push button
RL		Relocated equipment
RM	rm	Ramp metering
SB	sb	Slip base
SIC	sic	Signal interconnect cable
SIG	sig	Signal
SMA	sma	Signal mast arm
SNS	sns	Street name sign
SP	sp	Service point
TDC	tdc	Telephone demarcation cabinet
TMS	tms	Traffic monitoring station
TOS	tos	Traffic Operations System
VEH	veh	Vehicle
XFMR	xfmr	Transformer
COMM	comm	Communication
RWIS	rwis	Roadway weather information system

SOFFIT AND WALL MOUNTED LUMINAIRES

Pendant, 70 W HPS unless otherwise specified.

Flush, 70 W HPS unless otherwise specified.

Wall surface, 70 W HPS unless otherwise specified.

Existing soffit or wall luminaire to remain unmodified.

Existing soffit or wall luminaire to be modified as specified.

NOTE:

Arrow indicates "street side" of luminaire.

STATE OF CALIFORNIA
DEPARTMENT OF TRANSPORTATION

ELECTRICAL SYSTEMS (SYMBOLS AND ABBREVIATIONS)

NO SCALE

RSP ES-1A DATED OCTOBER 5, 2007 SUPERSEDES STANDARD PLAN ES-1A DATED MAY 1, 2006 - PAGE 400 OF THE STANDARD PLANS BOOK DATED MAY 2006.

REVISED STANDARD PLAN RSP ES-1A

2006 REVISED STANDARD PLAN RSP ES-1A

P:\proj1\02\4E380_plans\pse\24e380va012.dgn

7-10-07

DIST	COUNTY	ROUTE	POST MILES TOTAL PROJECT	SHEET NO.	TOTAL SHEETS
02	Sha	151	R5.8/R6.9	44	50

REGISTERED ELECTRICAL ENGINEER

October 5, 2007
PLANS APPROVAL DATE

REGISTERED PROFESSIONAL ENGINEER Jeffery G. McRae No. E14512 Exp. 6-30-08 ELECTRICAL STATE OF CALIFORNIA

The State of California or its officers or agents shall not be responsible for the accuracy or completeness of electronic copies of this plan sheet.

To accompany plans dated 01-09-12

CONDUIT

PROPOSED	EXISTING	
		Lighting Conduit, unless otherwise indicated or noted
		Traffic signal conduit
C	c	Communication conduit
T	t	Telephone conduit
F	f	Fire alarm conduit
FO	fo	Fiber optic conduit
		Conduit termination (RSP ES-9A C)
R	r	Conduit riser in/on structure or service pole

SERVICE EQUIPMENT

PROPOSED	EXISTING	
OH	oh	Overhead lines
U	U	Wood pole "U" indicates utility owned
		Pole guy with anchor
		Utility transformer - ground mounted
III		Service equipment enclosure type
		Service equipment enclosure door indicates front of enclosure
T	t	Telephone demarcation cabinet

POLE-MOUNTED SERVICE DESIGNATION

Type of installation

TYPE H SERVICE - 28'-10" ← Pole height above grade

ILLUMINATED OVERHEAD SIGN

PROPOSED	EXISTING	
		Overhead sign - Single post
		Overhead sign - Two post
		Overhead sign - Mounted on structure
		Overhead sign with electrolier

SIGNAL EQUIPMENT

PROPOSED	EXISTING	
		Pedestrian signal face
		Pedestrian push button post
		Pedestrian barricade
		Vehicle signal face (with backplate, 3-Section: red, yellow and green)
		Vehicle signal face with angle visors
PV	PV	Modifications of basic symbols: "L" indicates all non-arrow sections louvered "LG" indicates louvered green section only "PV" indicates 12" programmed visibility sections "8" indicates all 8" sections (only when specified)
		Type 15TS and Vehicle signal face
		Vehicle signal face with red, yellow and green left arrow sections
		Vehicle signal face with red and yellow sections and up green arrow
		Vehicle signal face (5 Section) with red, yellow and green sections and yellow and green right arrows
		Type 1 Standard and attached vehicle signal faces
		Standard with signal mast arm only and attached vehicle signal faces and internally illuminated street name sign
		Type 33 Standard, Left-turn vehicle signal face and sign
		Standard with luminaire and signal mast arms and attached vehicle signal faces
		Cantilever flashing beacon Type 9 Frame, with a sign unless otherwise specified or indicated
		Type 15-FBS Standard with two vehicle signal face sections with lens, backplate and visor with a sign
R	Y	Flashing beacon. One vehicle signal face section with lens, backplate and visor. "R" indicates red indication, "Y" indicates yellow indication
		Controller assembly. Door indicates front of cabinet

SIGNAL EQUIPMENT Cont

PROPOSED	EXISTING	
		Guard post
		Type 1 Standard with "Meter On" sign
		Emergency Vehicle detector

NOTES:

1. All signal sections shall be 12" unless shown otherwise.
2. Signal heads shall be provided with backplates unless shown otherwise.
3. Signal indication shall be LED.

STATE OF CALIFORNIA
DEPARTMENT OF TRANSPORTATION

ELECTRICAL SYSTEMS (SYMBOLS AND ABBREVIATIONS)

NO SCALE

RSP ES-1B DATED OCTOBER 5, 2007 SUPERCEDES STANDARD PLAN ES-1B DATED MAY 1, 2006 - PAGE 401 OF THE STANDARD PLANS BOOK DATED MAY 2006.

REVISED STANDARD PLAN RSP ES-1B

2006 REVISED STANDARD PLAN RSP ES-1B

P:\proj1\02\4E380_plans\pse\24e380va013.dgn

7-10-07

DIST	COUNTY	ROUTE	POST MILES TOTAL PROJECT	SHEET NO.	TOTAL SHEETS
02	Sha	151	R5.8/R6.9	45	50

REGISTERED ELECTRICAL ENGINEER

October 5, 2007
PLANS APPROVAL DATE

REGISTERED PROFESSIONAL ENGINEER Jeffery G. McRae No. E14512 Exp. 6-30-08 ELECTRICAL STATE OF CALIFORNIA

The State of California or its officers or agents shall not be responsible for the accuracy or completeness of electronic copies of this plan sheet.

To accompany plans dated 01-09-12

EQUIPMENT IDENTIFICATION

ILLUMINATED SIGN IDENTIFICATION NUMBER:

Sign No. 12345

10 ISL SCI 1.0

- Sign number - Place on post or structure
- Transformer rating (kVA)
- Lighting control type
- Number and type of fixtures

Do NOT place on standard or structure

ELECTROLIER OR EQUIPMENT IDENTIFICATION NUMBER:

12345 - 15'-0"

- Mast arm length, if shown. Do not place on standard or structure.
- Equipment number - Place on standard or structure. Existing equipment numbers are shown in parenthesis

CONDUIT AND CONDUCTOR IDENTIFICATION:

1½"C, 2#10, 15#14, 2 DLC

- Number and size of conductors and cables
- Size of conduit in inches

ø1, ø2, ø2P, etc.	Traffic phase identification for signal faces, detectors and phase diagrams
1 2 3	Project note numbers
A B C	Equipment description, installation or item numbers
1 2 3	Conduit run numbers

SIGNAL AND LIGHTING STANDARD (TYPICAL DESIGNATION):

19A - 3 - 100

- Wind velocity = 100 mph
- Case 3 arm loading
- Standard type
- Standard Plan sheet number
- Detail number or letter

MISCELLANEOUS EQUIPMENT

PROPOSED	EXISTING	
CMS	cms	Changeable message sign
		Closed circuit television camera
		Highway advisory radio pole and antenna
EMS	ems	Extinguishable message sign
M V	m v	Detection device M = Microwave sensor V = Video image sensor

WIRING DIAGRAM LEGEND

P	Pole
CB	Circuit breaker
A	Ampere
V	Volt
M	Metered
UM	Unmetered
NB	Neutral bus
GB	Ground bus
G	Equipment grounding conductor
N	Grounded conductor (Neutral)

- External conductor
- Conductor or bus
- Tie point
- Contactor coil
- Contactor, Contact NO
- Terminal blocks
- Contactor, Contact NC
- Enclosure bond
- Grounding electrode
- Circuit breaker
- Receptacle

PULL BOXES

PROPOSED	EXISTING	
		Pull box-No. 5 unless otherwise indicated or noted.
3	9A(21)	Pull box-Additional designations or descriptions

3 = No. 3½ pull box
5 = No. 5 pull box
6 = No. 6 pull box
7 = No. 7 (Ceiling pull box)
8 = No. 8 (Pendant soffit pull box)
9 = No. 9 pull box
9A = No. 9A pull box

(C) = Communications pull box
(E) = Pull box with extension
(S) = Sprinkler control pull box
(21) = Anchor bolts and conduit for future installation of Type 21 Standard
(T) = Traffic pull box

VEHICLE DETECTORS

5 J 9 U

- U = Upper
- L = Lower
- Slot number in input file
- Input file (I or J)
- Phase

PROPOSED	EXISTING	
		Type A detector loop. Outline of sawcut shown.
		Type B detector loop. Outline of sawcut shown.
		Type C detector loop. Outline of sawcut shown.
		Type D detector loop. Outline of sawcut shown.
		Type E detector loop. Outline of sawcut shown.
		Type Q detector loop. Outline of sawcut shown.
		Magnetic detector
DH	dh	Detector handhole
		Microwave or video detection zone

STATE OF CALIFORNIA
DEPARTMENT OF TRANSPORTATION

ELECTRICAL SYSTEMS (SYMBOLS AND ABBREVIATIONS)

NO SCALE

RSP ES-1C DATED OCTOBER 5, 2007 SUPERCEDES STANDARD PLAN ES-1C DATED MAY 1, 2006 - PAGE 402 OF THE STANDARD PLANS BOOK DATED MAY 2006.

REVISED STANDARD PLAN RSP ES-1C

2006 REVISED STANDARD PLAN RSP ES-1C

P:\proj1\02\4E380_plans\pse\24e380va014.dgn

7-10-07

DIST	COUNTY	ROUTE	POST MILES TOTAL PROJECT	SHEET NO.	TOTAL SHEETS
02	Sha	151	R5.8/R6.9	46	50

REGISTERED ELECTRICAL ENGINEER

October 5, 2007
PLANS APPROVAL DATE

REGISTERED PROFESSIONAL ENGINEER
Jeffery G. McRae
No. E14512
Exp. 6-30-08
ELECTRICAL
STATE OF CALIFORNIA

The State of California or its officers or agents shall not be responsible for the accuracy or completeness of electronic copies of this plan sheet.

To accompany plans dated 01-09-12

NOTES-TYPE III SERVICE EQUIPMENT ENCLOSURES:

1. Service equipment enclosure and metering equipment shall meet the requirements of the service utility. The meter area shall have a sealable, lockable, weathertight cover that can be removed without the use of tools.

2. Service equipment enclosures shall be factory wired and conform to NEMA standards.

3. Dimensions of service equipment enclosures shall meet the requirements of the service utility.

4. The dead front panels on Type III service equipment enclosures shall have a continuous stainless steel or aluminum piano hinge. The panel in front of the breakers shall be secured with a latch or captive screws. No live parts shall be mounted on the dead front panel.

5. The exterior door shall have provisions for padlocking. The padlock hole shall be a minimum diameter of 7/16".

6. Enclosures housing transformers of more than one kVA shall have effective screened ventilation louver of not less than 50 square inches. Screen shall be stainless steel No. 304, with a No. 10 size mesh. Framed screen shall be secured with at least four bolts.

7. Fasteners on the exterior of the enclosure shall be vandal-resistant and shall not be removable from the exterior. Exterior screws, nuts, bolts and washers shall be stainless steel.

8. Landing lugs for incoming service conductors shall be compatible with either copper or aluminum conductors sized to suit the conductors shown on the plan. Landing lugs shall be copper or tin-plated aluminum. Neutral bus shall be rated for 125 A and be suitable for copper or aluminum conductors unless otherwise specified. The terminal shall include but not be limited to:

   a) Incoming terminals (landing lugs)
   b) Neutral lugs
   c) Solid neutral terminal strip

9. At least 6 standard single pole circuit breaker spaces, 3/4" nominal, shall be provided for branch circuits. Circuit breaker interiors shall be copper. Interiors of enclosure shall accept plug-in or cable-in/cable-out circuit breakers.

10. Control wiring shall be 600 V, 14 stranded machine tool wire. Where subject to flexing, 19 strand wire shall be used.

11. Main bus shall be rated for 125 A and shall be tin-plated copper.

12. A plastic laminated wiring diagram shall be provided with brass mounting eyelets and attached to the inside of the enclosure and the wiring diagram shall be affixed to the interior with a UL or ETL approved method.

13. An engraved phenolic nameplate on the dead front panel indicating the function of each circuit or device shall be installed with stainless steel rivets or stainless steel screws:

    a) Adjacent to the breaker or device with character size a minimum of 1/8".

    b) At the top of the exterior door panel indicating State system number, voltage level and number of phases with character size a minimum of 3/16".

14. The plan shows the approximate location of devices within the enclosure. Components may be rearranged, however, the "working" clearances within the service equipment enclosure shall be maintained.

15. In unpaved areas a raised portland cement concrete pad 2'-0" x 4" x width of foundation shall be constructed in front of new service equipment enclosure installation. Pad shall be set to elevation of foundation.

16. Foundation shall extend 2" minimum beyond edge of service equipment enclosure.

17. Internal bus, where shown, is typical only. Alternative design of proposed service equipment enclosure shall be submitted to the Engineer for approval.

18. Plug-in circuit breakers may be mounted in the vertical or horizontal position. Cable-in/cable-out circuit breakers shall be mounted in the vertical position.

19. Type III-AF and Type III-BF service equipment enclosures shall have the meter viewing windows located on the front side of the service equipment enclosures.

20. Type III-AR and Type III-BR service equipment enclosures shall be similarly constructed as Type III-AF and Type III-BF respectively, except the meter viewing windows shall be located on the back side of the service equipment enclosures.

21. Minimum clearance shall be required for front and back of service equipment enclosure per National Electrical Code, Article 110.26, "Spaces About Electric Equipment (600 Volts, Nominal, or Less)."

STATE OF CALIFORNIA
DEPARTMENT OF TRANSPORTATION

ELECTRICAL SYSTEMS (SERVICE EQUIPMENT NOTES TYPE III SERIES)

NO SCALE

RSP ES-2C DATED OCTOBER 5, 2007 SUPERCEDES STANDARD PLAN ES-2C DATED MAY 1, 2006 - PAGE 405 OF THE STANDARD PLANS BOOK DATED MAY 2006.

REVISED STANDARD PLAN RSP ES-2C

2006 REVISED STANDARD PLAN RSP ES-2C

P:\proj1\02\4E380_plans\pse\24e380va015.dgn

7-10-07

DIST	COUNTY	ROUTE	POST MILES TOTAL PROJECT	SHEET NO.	TOTAL SHEETS
02	Sha	151	R5.8/R6.9	47	50

REGISTERED ELECTRICAL ENGINEER

October 5, 2007
PLANS APPROVAL DATE

REGISTERED PROFESSIONAL ENGINEER Jeffery G. McRae No. E14512 Exp. 6-30-08 ELECTRICAL STATE OF CALIFORNIA

The State of California or its officers or agents shall not be responsible for the accuracy or completeness of electronic copies of this plan sheet.

To accompany plans dated 01-09-12

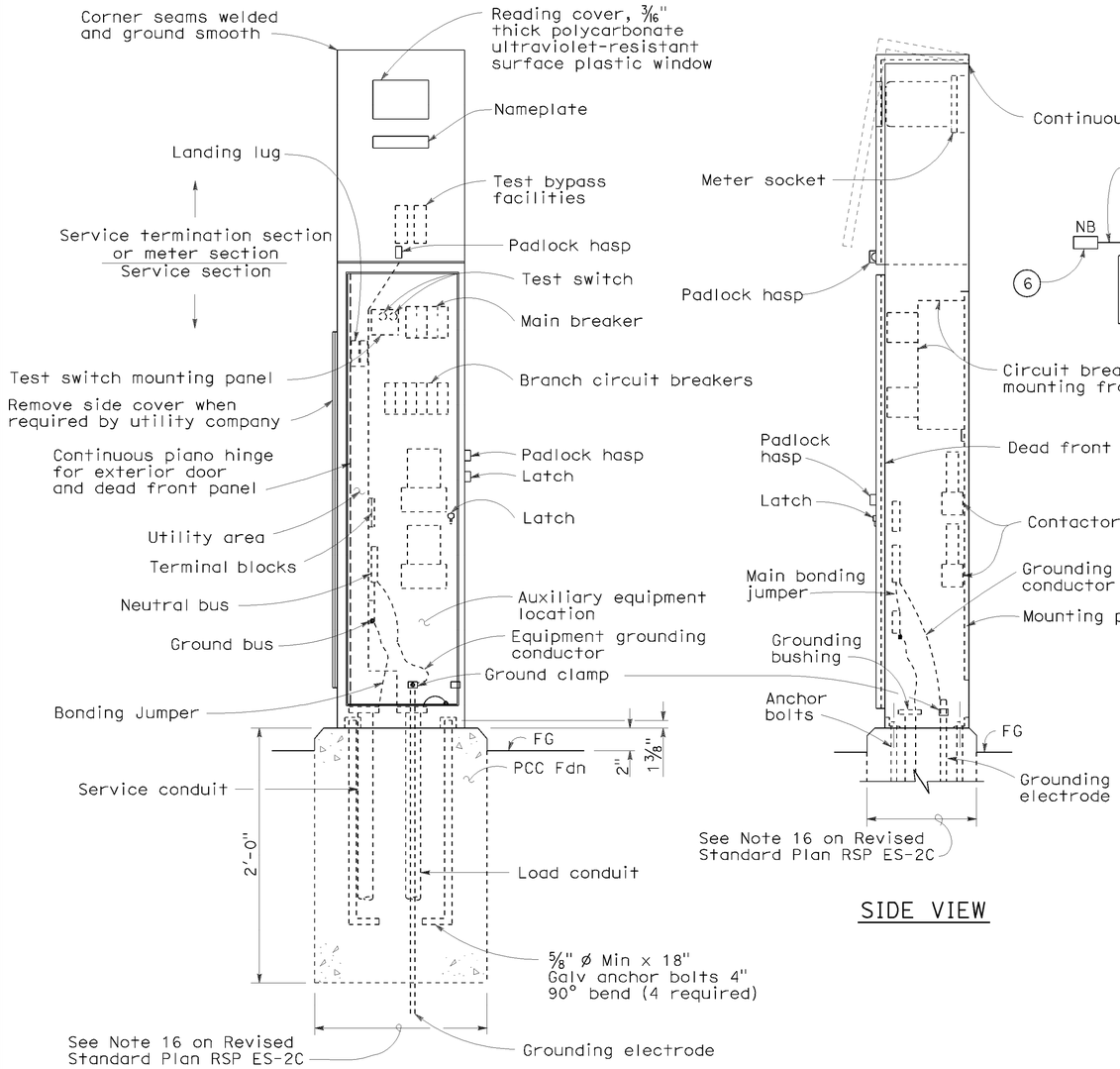

TYPE III-AF SERVICE EQUIPMENT ENCLOSURE (TYPICAL)

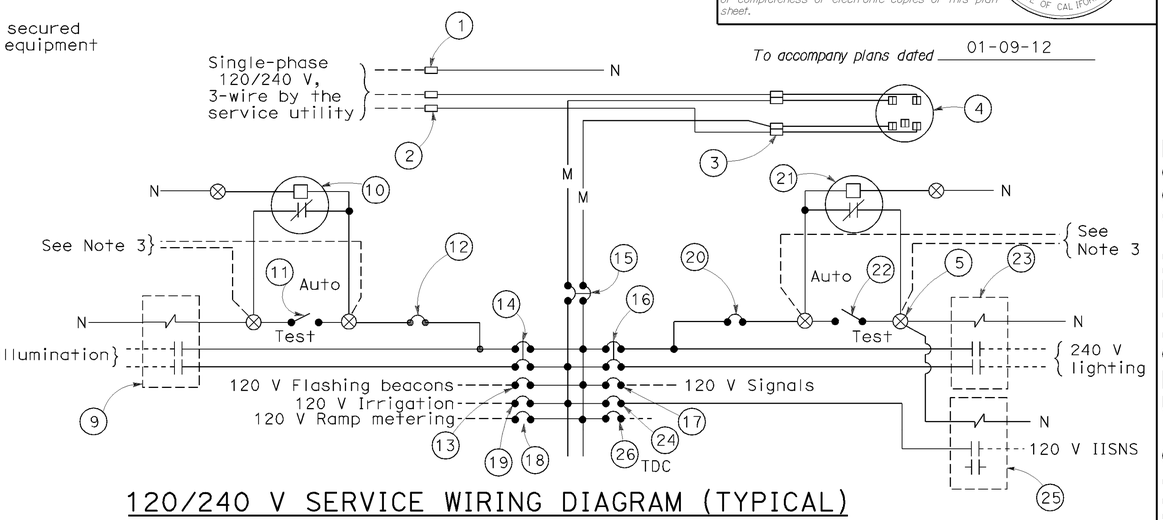

120/240 V SERVICE WIRING DIAGRAM (TYPICAL)

TYPE III-A SERVICE (120/240 V) EQUIPMENT LEGEND

ITEM No.	COMPONENT	NAME PLATE DESCRIPTION	ITEM No.	COMPONENT	NAME PLATE DESCRIPTION
1	Neutral lug		14	30 A, 240 V, 2P, CB	Sign Illumination
2	Landing lug (Note 6)		15	100 A, 240 V, 2P, CB	Main Breaker
3	Test bypass facility		16	30 A, 240 V, 2P, CB	Lighting
4	Meter socket and support		17	50 A, 120 V, 1P, CB	Signals
5	Terminal blocks		18	30 A, 120 V, 1P, CB	Ramp Metering
6	Neutral bus		19	20 A, 120 V, 1P, CB	Irrigation
7	Ground bus		20	15 A, 120 V, 1P, CB	Lighting Control
8	Grounding electrode		21	Photoelectric unit (Note 7)	
9	30 A, 2PNO Contactor	Sign Illumination	22	15 A, 1P, Test switch	Lighting Test Switch
10	Photoelectric unit (Note 7)		23	60 A, 2PNO Contactor	Lighting
11	15 A, 1P, Test switch	Sign Illumination Test Switch	24	15 A, 120 V, 1P, CB	IISNS
12	15 A, 120 V, 1P, CB	Sign Illumination Control	25	30 A, 2PNO Contactor	IISNS
13	15 A, 120 V, 1P, CB	Flashing Beacon	26	20 A, 120 V, 1P, CB	Telephone Demarcation Cabinet

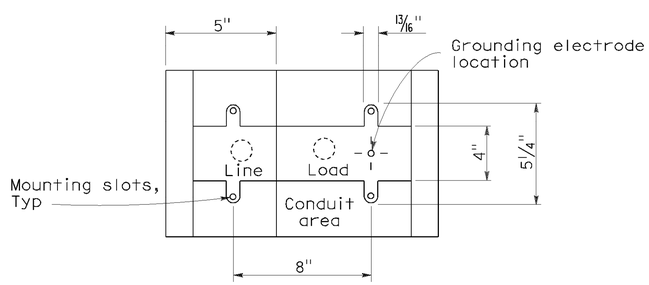

BASE FOR TYPE III-A SERVICE EQUIPMENT ENCLOSURE

NOTES: (FOR SERVICE EQUIPMENT ENCLOSURE)

1. Voltage ratings of service equipment shall conform to the service voltages indicated on the plans.
2. Unless otherwise indicated on the plans, service equipment items shall be provided for each service equipment enclosure as shown.
3. Connect to remote test switch mounted on lighting standards, sign post or structure when required.
4. Items No. 1 and 6 shall be isolated from the service equipment enclosure.
5. Meter sockets shall be 5 clip type.
6. The landing lug shall be suitable for multiple conductors.
7. Type V photoelectric control shall be used unless otherwise indicated on the plans.

STATE OF CALIFORNIA
DEPARTMENT OF TRANSPORTATION

ELECTRICAL SYSTEMS (SERVICE EQUIPMENT AND TYPICAL WIRING DIAGRAM, TYPE III-A SERIES)

NO SCALE

RSP ES-2D DATED OCTOBER 5, 2007 SUPERCEDES STANDARD PLAN ES-2D DATED MAY 1, 2006 - PAGE 406 OF THE STANDARD PLANS BOOK DATED MAY 2006.

REVISED STANDARD PLAN RSP ES-2D

2006 REVISED STANDARD PLAN RSP ES-2D

P:\proj1\02\4E380_plans\pse\24e380va016.dgn

7-10-07

DIST	COUNTY	ROUTE	POST MILES TOTAL PROJECT	SHEET NO.	TOTAL SHEETS
02	Sha	151	R5.8/R6.9	48	50

REGISTERED ELECTRICAL ENGINEER

October 5, 2007
PLANS APPROVAL DATE

REGISTERED PROFESSIONAL ENGINEER Jeffery G. McRae No. E14512 Exp. 6-30-08 ELECTRICAL STATE OF CALIFORNIA

The State of California or its officers or agents shall not be responsible for the accuracy or completeness of electronic copies of this plan sheet.

To accompany plans dated 01-09-12

LOOP INSTALLATION PROCEDURE

1. Loops shall be centered in lanes.
2. Saw slots in pavement for loop conductors as shown in details.
3. Distance between side of loop and a lead-in saw cut from adjacent detectors shall be 2'-0" minimum. Distance between lead-in saw cuts shall be 6" minimum.
4. Bottom of saw slot shall be smooth with no sharp edges.
5. Slots shall be washed until clean, blown out and thoroughly dried before installing loop conductors.
6. Adjacent loops on the same sensor unit channel shall be wound in opposite directions.
7. Identify and tag loop circuit pairs in the pull box with loop number, start (S) and finish (F) of conductor. Identify and tag lead-in-cable with sensor number and phase.
8. Install loop conductor in slot using a 3/16" to 1/4" thick wood paddle. Hold loop conductors with wood paddles (at the bottom of the sawed slot) during sealant placement.
9. No more than 2 twisted pairs shall be installed in one sawed slot.
10. Allow additional 5'-0" of slack length of conductor for the lead-in run to pull box.
11. The additional length of each conductor for each loop shall be twisted together into a pair (6 turns per 3'-4" minimum) before being placed in the slot and conduit leading to pull box.
12. Test each loop circuit for continuity, circuit resistance and insulation resistance at the pull box before filling slots.
13. Fill slots as shown in details.
14. Splice loop conductors to lead-in-cable. Splices shall be soldered.
15. End of lead-in-cable and Type 2 loop conductor shall be waterproofed prior to installing in conduit to prevent moisture from entering the cable.
16. Lead-in-cable shall not be spliced between the pull box and the controller cabinet terminals.
17. Test each loop circuit for continuity, circuit resistance and insulation resistance at the controller cabinet location.
18. Where loop conductors are not to be spliced to a lead-in-cable, the ends of the conductors shall be taped and waterproofed with electrical insulating coating.

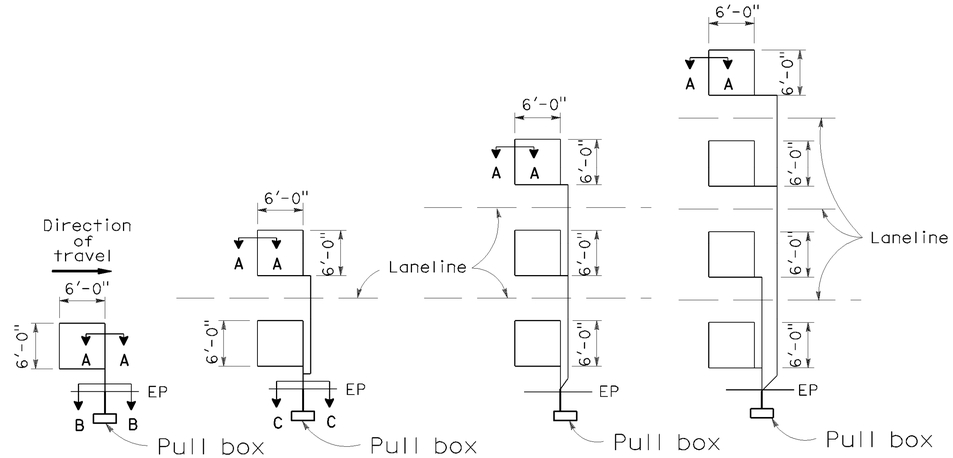

TYPE 1A INSTALLATION | TYPE 2A INSTALLATION | TYPE 3A INSTALLATION | TYPE 4A INSTALLATION

SAWCUT DETAILS

(Type A loop detector configurations illustrated)

1. 1A thru 4A = 1 Type A loop configuration in each lane.
2. 1B thru 4B = 1 Type B loop configuration in each lane.
3. 1C = 1 Type C loop configuration entering lanes as required.
4. 1D thru 4D = 1 Type D loop configuration in each lane.
5. 1E thru 4E = 1 Type E loop configuration in each lane.
6. 1Q thru 4Q = 1 Type Q loop configuration in each lane. (Use Type A, B, C, D, E or Q loop detector configurations only when specified or shown on plans)

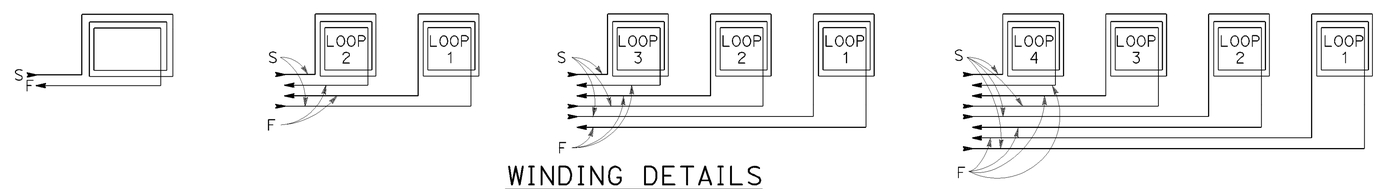

WINDING DETAILS

See Notes 6 and 7

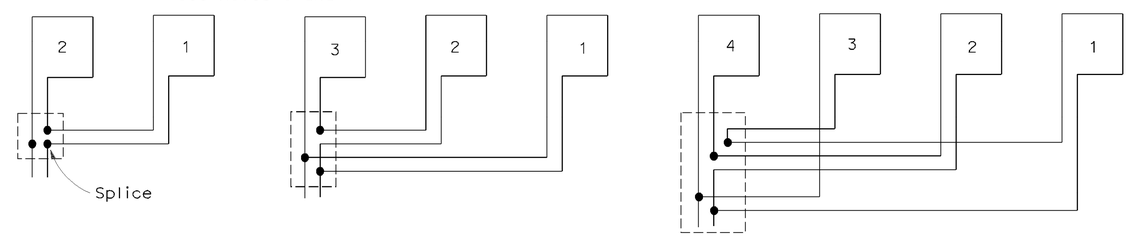

TYPICAL LOOP CONNECTIONS

(Dashed lines represent the pull box)

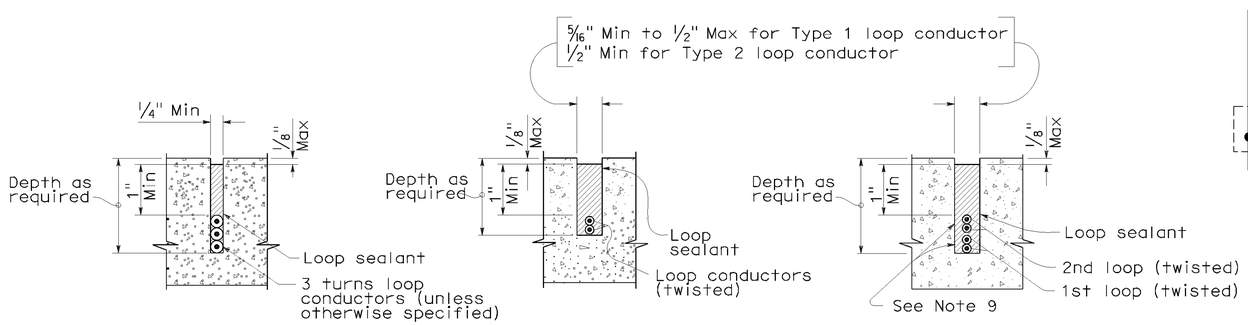

SECTION A-A | SECTION B-B | SECTION C-C

SLOT DETAILS - TYPE 1 AND TYPE 2 LOOP CONDUCTOR

STATE OF CALIFORNIA
DEPARTMENT OF TRANSPORTATION

ELECTRICAL SYSTEMS (DETECTORS)

NO SCALE

RSP ES-5A DATED OCTOBER 5, 2007 SUPERCEDES STANDARD PLAN ES-5A DATED MAY 1, 2006 - PAGE 423 OF THE STANDARD PLANS BOOK DATED MAY 2006.

REVISED STANDARD PLAN RSP ES-5A

2006 REVISED STANDARD PLAN RSP ES-5A

P:\proj1\02\4E380_plans\pse\24e380va017.dgn

8-17-07

DIST	COUNTY	ROUTE	POST MILES TOTAL PROJECT	SHEET NO.	TOTAL SHEETS
02	Sha	151	R5.8/R6.9	49	50

REGISTERED CIVIL ENGINEER

October 5, 2007
PLANS APPROVAL DATE

REGISTERED PROFESSIONAL ENGINEER
Stanley P. Johnson
No. C57793
Exp. 3-31-08
CIVIL
STATE OF CALIFORNIA

The State of California or its officers or agents shall not be responsible for the accuracy or completeness of electronic copies of this plan sheet.

To accompany plans dated 01-09-12

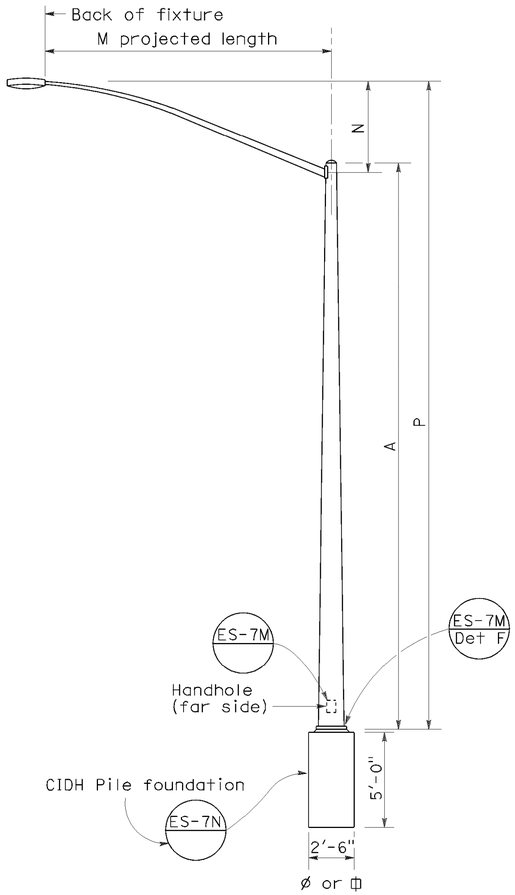

ELEVATION
TYPE 15 AND TYPE 21

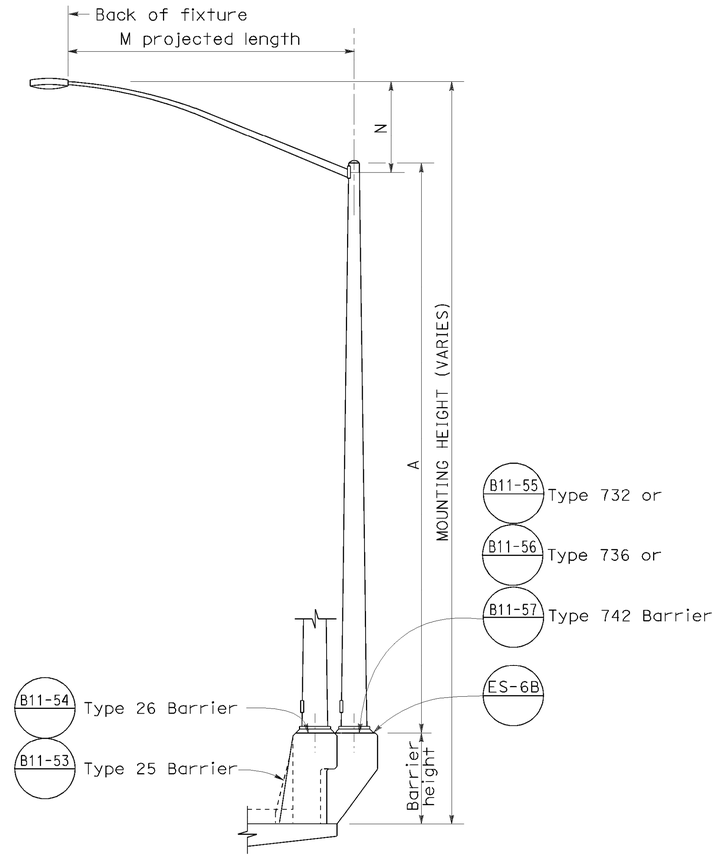

ELEVATION
TYPE 15 AND TYPE 21 BARRIER RAIL MOUNTED

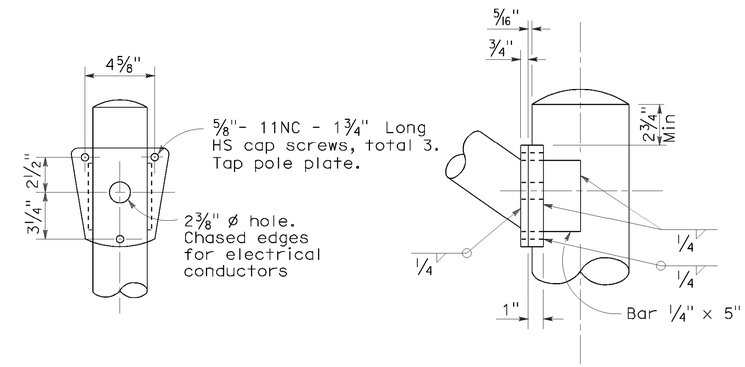

DETAIL R
LUMINAIRE ARM CONNECTION

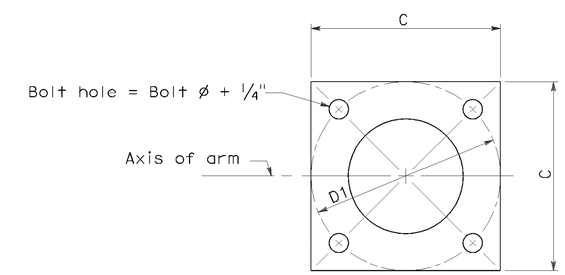

BASE PLATE

POLE TYPE	POLE DATA				BASE PLATE DATA				LUMINAIRE ARM
	A Height	Min OD Base	Min OD Top	Wall Thickness	C	D1 Bolt Circle	Thickness	Anchor Bolts Size	
15	30′	8"	3 7/8"	0.1196"	1′-0"	1′-0"	1"	1" ø x 3′-0" x 4"*	6′ - 15′ [12′]
21	35′	8 5/8"	3 7/8"	0.1196"	1′-0"	1′-0"	1"	1 1/4"ø x 3′-0" x 4"*	6′ - 15′ [12′]

* For barrier rail bolts, see Standard Plan ES-6B.

LUMINAIRE ARM DATA					
M Projected Length	N Rise	Min OD At Pole	Nominal Thickness	P Type 15	P Type 21
6′-0"	2′-0"±	3 1/4"	0.1196"	31′-6"±	36′-6"±
8′-0"	2′-6"±	3 1/2"	0.1196"	32′-0"±	37′-0"±
10′-0"	3′-3"±	3 7/8"	0.1196"	32′-9"±	37′-9"±
12′-0"	4′-3"±	3 7/8"	0.1196"	33′-9"±	38′-9"±
15′-0"	4′-9"±	4 1/4"	0.1196"	34′-3"±	39′-3"±

NOTES:

1. ☐ Indicates arm length to be used unless otherwise noted on the plans.
2. For Type 15-SB, use Type 15 standard with Type 30 slip base plate details, see Standard Plan ES-6F.
3. For additional notes, see Standard Plan ES-7M and ES-7N.

STATE OF CALIFORNIA
DEPARTMENT OF TRANSPORTATION

ELECTRICAL SYSTEMS (LIGHTING STANDARD TYPES 15 AND 21)

NO SCALE

RSP ES-6A DATED OCTOBER 5, 2007 SUPERCEDES STANDARD PLAN ES-6A DATED MAY 1, 2006 - PAGE 427 OF THE STANDARD PLANS BOOK DATED MAY 2006.

REVISED STANDARD PLAN RSP ES-6A

2006 REVISED STANDARD PLAN RSP ES-6A

P:\proj1\02\4E380_plans\pse\24e380va018.dgn

7-10-07

DIST	COUNTY	ROUTE	POST MILES TOTAL PROJECT	SHEET NO.	TOTAL SHEETS
02	Sha	151	R5.8/R6.9	50	50

REGISTERED CIVIL ENGINEER

January 18, 2008
PLANS APPROVAL DATE

REGISTERED PROFESSIONAL ENGINEER Stanley P. Johnson No. C57793 Exp. 03-31-08 CIVIL STATE OF CALIFORNIA

The State of California or its officers or agents shall not be responsible for the accuracy or completeness of electronic copies of this plan sheet.

To accompany plans dated 01-09-12

LUMINAIRE ARM DATA

PROJECTED LENGTH	THICKNESS	MINIMUM OD @ POLE	MOUNTING HEIGHT
* 6'-0"	0.1196"	3¼"	36'-9"±
8'-0"		3½"	37'-3"±
10'-0"		3¾"	38'-0"±
12'-0"		3¾"	39'-0"±
15'-0"		4¼"	39'-6"±
** 20'-0"	0.1793"	5"	37'-0"±

* Type 30 - arm length 6'-0" - 15'-0" maximum
** Type 31 - arm lengths 20'-0"

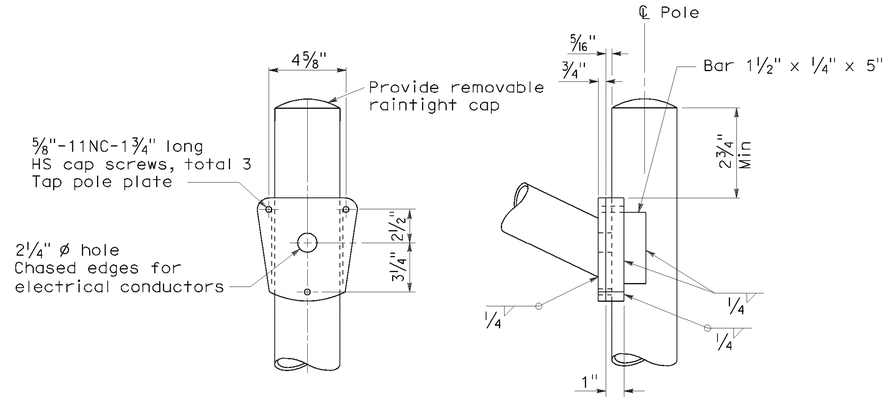

DETAIL A - TYPE 30

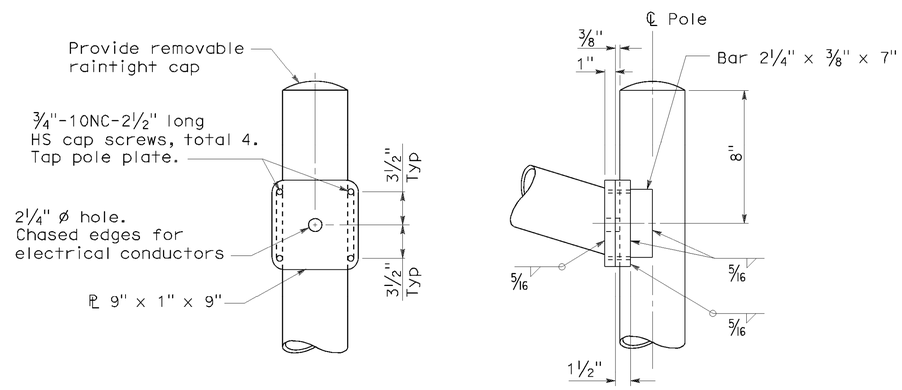

DETAIL A - TYPE 31

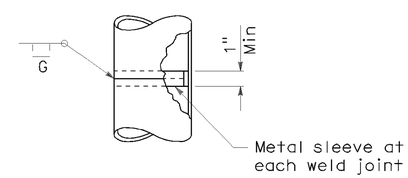

POLE SPLICE

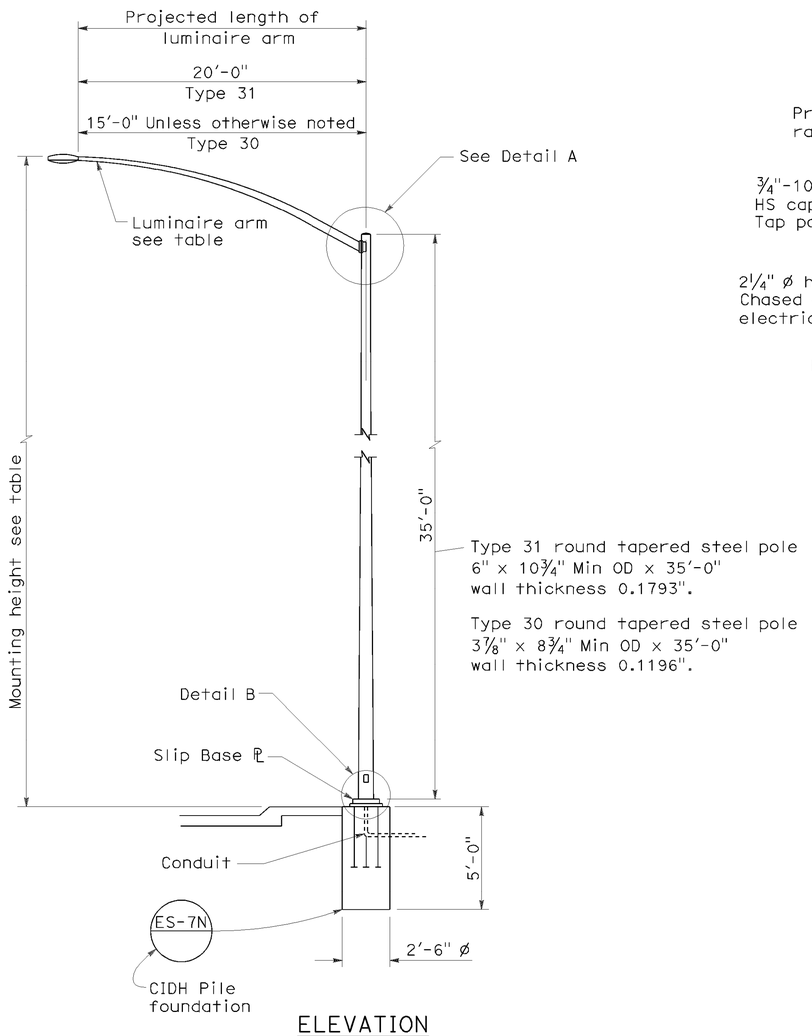

ELEVATION

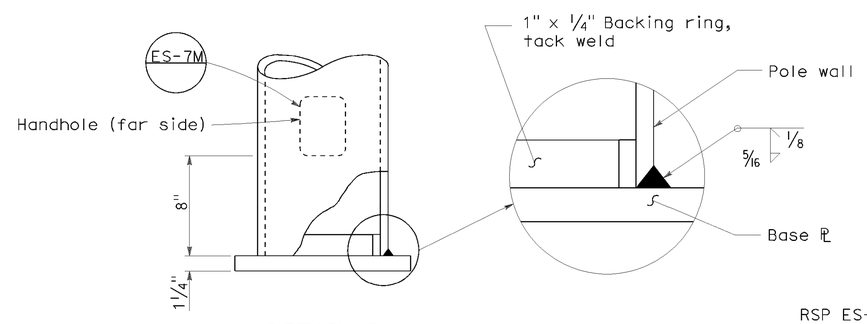

DETAIL B

NOTES:

1. Sheet steel shall have a minimum yield of 48,000 psi.
2. For slip base details see Standard Plan ES-6F.
3. For Type 30 fixed base use Type 15 base plate, and foundation shown on Revised Standard Plan RSP ES-6A. Use 1¼" Dia x 3'-6" x 4" anchor bolts.
4. For Type 31 fixed base use Type 32 base plate, anchor bolts and foundation on Standard Plan ES-6G.
5. Handhole shall be located on downstream side of traffic unless noted otherwise on plans.
6. For additional general notes refer to Standard Plan ES-7M.

STATE OF CALIFORNIA
DEPARTMENT OF TRANSPORTATION

ELECTRICAL SYSTEMS (LIGHTING STANDARD TYPES 30 AND 31)

NO SCALE

RSP ES-6E DATED JANUARY 18, 2008 SUPERCEDES STANDARD PLAN ES-6E DATED MAY 1, 2006 - PAGE 430 OF THE STANDARD PLANS BOOK DATED MAY 2006.

REVISED STANDARD PLAN RSP ES-6E

2006 REVISED STANDARD PLAN RSP ES-6E

P:\proj1\02\4E380_plans\pse\24e380va019.dgn

11-19-07