Dist	COUNTY	ROUTE	POST MILES TOTAL PROJECT	SHEET No.	TOTAL SHEETS
02	Tri	299	53.5/64.0	12	70

Heidi Borders 11-06-13
REGISTERED CIVIL ENGINEER DATE

11-06-13
PLANS APPROVAL DATE

REGISTERED PROFESSIONAL ENGINEER
HEIDI E. BORDERS
No. C64194
Exp. 6-30-15
CIVIL
STATE OF CALIFORNIA

THE STATE OF CALIFORNIA OR ITS OFFICERS OR AGENTS SHALL NOT BE RESPONSIBLE FOR THE ACCURACY OR COMPLETENESS OF SCANNED COPIES OF THIS PLAN SHEET.

LEGEND:

COLD PLANE AC PAVEMENT

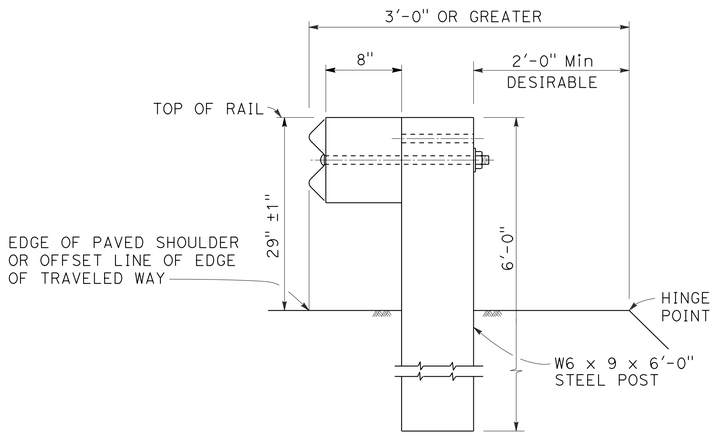

MBGR POST EMBEDMENT
TYPICAL ROADWAY INSTALLATION

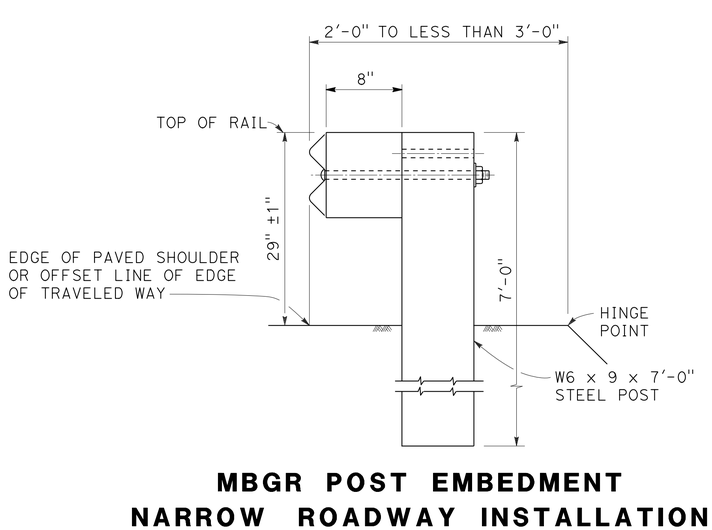

MBGR POST EMBEDMENT
NARROW ROADWAY INSTALLATION

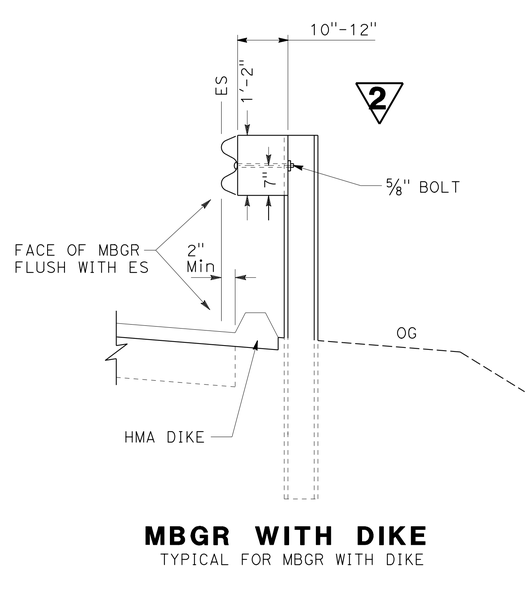

MBGR WITH DIKE
TYPICAL FOR MBGR WITH DIKE

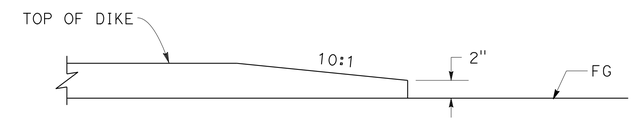

DIKE END TAPER
TYPICAL

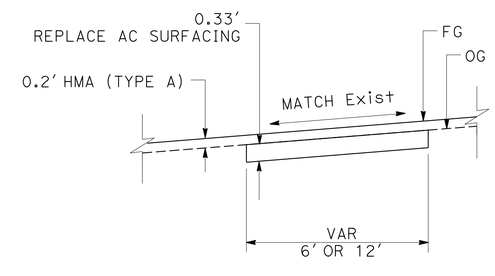

REPLACE AC SURFACING
PM 60.8 TO 64.0

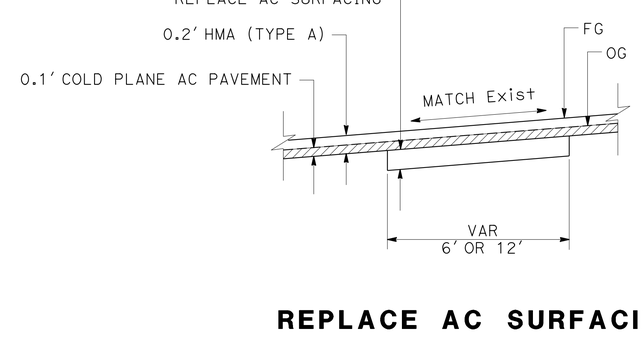

REPLACE AC SURFACING
PM 53.5 TO 60.8

2 **REVISED PER ADDENDUM NO. 2 DATED JANUARY 31, 2014**

CONSTRUCTION DETAILS
NO SCALE **C-6**

REVISED BY	DATE REVISED

CALCULATED-DESIGNED BY	CHECKED BY
JEANNIE STEFFAN	HEIDI BORDERS

FUNCTIONAL SUPERVISOR: JULIE CASEY

STATE OF CALIFORNIA - DEPARTMENT OF TRANSPORTATION
Caltrans
DESIGN

P:\proj1\02\4E410_plans\contract_plans\addenda 01-29-14\24e410ga006.dgn

LAST REVISION 11-06-13 | DATE PLOTTED => 31-JAN-2014 | TIME PLOTTED => 09:50

Dist	COUNTY	ROUTE	POST MILES TOTAL PROJECT	SHEET No.	TOTAL SHEETS
02	Tri	299	53.5/64.0	16	70

Heidi Borders 11-06-13
REGISTERED CIVIL ENGINEER DATE

11-06-13
PLANS APPROVAL DATE

REGISTERED PROFESSIONAL ENGINEER HEIDI E. BORDERS No. C64194 Exp. 6-30-15 CIVIL STATE OF CALIFORNIA

THE STATE OF CALIFORNIA OR ITS OFFICERS OR AGENTS SHALL NOT BE RESPONSIBLE FOR THE ACCURACY OR COMPLETENESS OF SCANNED COPIES OF THIS PLAN SHEET.

2

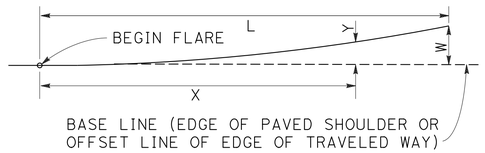

$$Y = \frac{WX^2}{L^2}$$

Y = OFFSET FROM BASE LINE
W = MAXIMUM OFFSET
X = DISTANCE ALONG BASE LINE
L = LENGTH OF FLARE

PARABOLIC FLARE OFFSETS

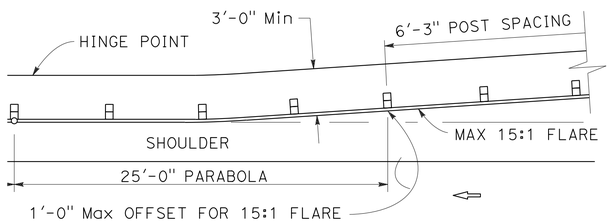

GUARDRAIL WITH FLARED ALIGNMENT

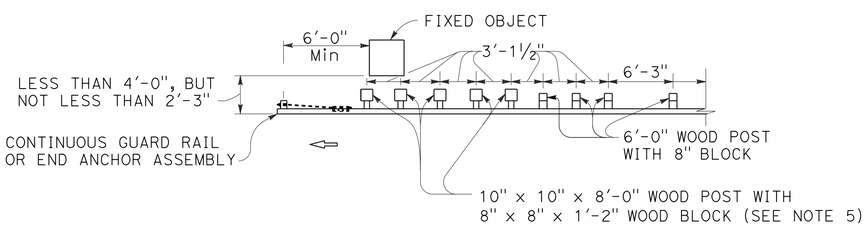

NOTE A: For a series of fixed objects (bridge columns, overhead sign supports, etc.) additional 10" x 10" x 8'-0" wood post with 8" x 8" x 1'-2" wood blocks at 3'-1½" center to center spacing are to be used between fixed objects.

STRENGTHENED RAILING SECTIONS FOR FIXED OBJECT

Use strengthened railing sections where minimum clearance between the face of the guard railing and fixed object(s) is less than 4'-0", but not less than 2'-3".

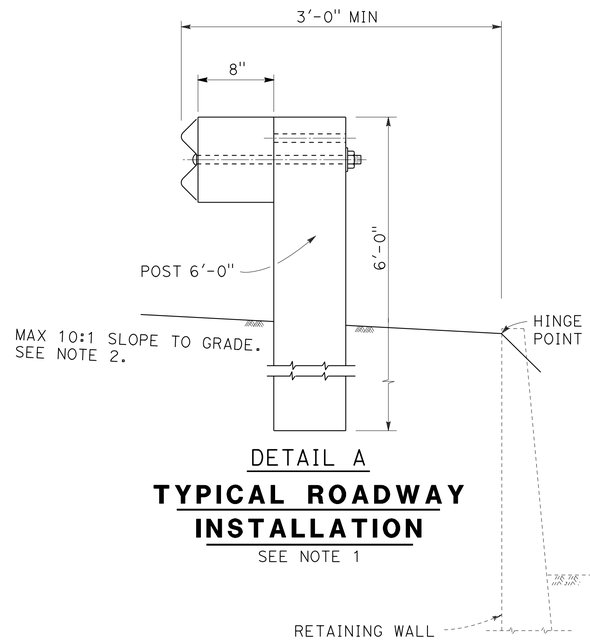

DETAIL A

TYPICAL ROADWAY INSTALLATION

SEE NOTE 1

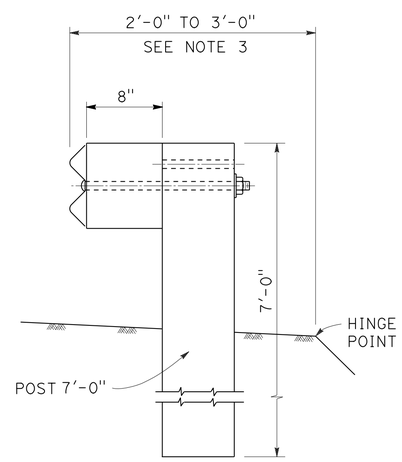

DETAIL B

NARROW ROADWAY INSTALLATION

SEE NOTE 1

POST EMBEDMENT

NOTES:

1. THESE INSTALLATION DETAILS APPLICABLE TO WOOD AND STEEL LINE POST INSTALLATIONS.
2. SEE ENGINEER IF SLOPE INFRONT OF GUARD RAIL IS STEEPER THAN 10:1.
3. SEE ENGINEER FOR ALTERNATIVES IF LESS THAN 2' FROM FACE OF RAIL TO HP.
4. WHEN THERE IS A BREAK POINT INFRONT OF GUARDRAIL BETWEEN 4'-8' CONTACT ENGINEER.
5. W6 x 15 STEEL POST, 8'-0" IN LENGTH, WITH 8" NOTCHED BLOCKS MAY BE USED IN PLACE OF THE 10" x 10" x 8'-0" WOOD POST WITH 8" BLOCK SHOWN IN THE "STRENGTHENED RAILING SECTIONS DETAILS".
6. PLACE RUB RAIL (GUARD RAIL ELEMENT) AND ATTACH TO POST WITH NO BLOCK WHEN HEIGHT OF GUARD RAIL IS MIN 32" ABOVE FINISH GRADE UNDER FACE OF RAIL.

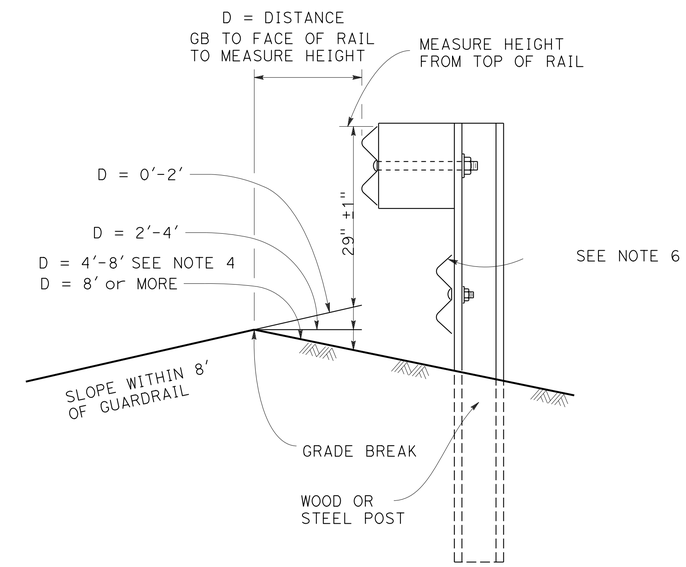

MEASURE HEIGHT DETAIL AT GRADE BREAK (GB)

WHEN THERE IS A BREAK POINT IN FRONT OF GUARDRAIL MEASURE HEIGHT OF GUARD RAIL BASED ON DISTANCE FROM GRADE BREAK TO ADJUST FOR TRAJECTORY.

CONSTRUCTON DETAILS METAL BEAM GUARD RAILING TYPICAL LINE POST EMBEDMENT AND HINGE POINT OFFSET DETAILS

NO SCALE

C-10

2 REVISED PER ADDENDUM NO. 2 DATED JANUARY 31, 2014

STATE OF CALIFORNIA - DEPARTMENT OF TRANSPORTATION
Caltrans DESIGN
FUNCTIONAL SUPERVISOR: JULIE CASEY
CALCULATED-DESIGNED BY: JEANNIE STEFFAN
CHECKED BY: HEIDI BORDERS
REVISED BY
DATE REVISED

P:\proj1\02\4E410_plans\contract_plans\addenda 01-29-14\24e410ga010.dgn

LAST REVISION 11-06-13 DATE PLOTTED => 31-JAN-2014 TIME PLOTTED => 09:50

Dist	COUNTY	ROUTE	POST MILES TOTAL PROJECT	SHEET No.	TOTAL SHEETS
02	Tri	299	53.5/64.0	45	70

Heidi Borders 11-06-13
REGISTERED CIVIL ENGINEER DATE

11-06-13
PLANS APPROVAL DATE

REGISTERED PROFESSIONAL ENGINEER HEIDI E. BORDERS No. C64194 Exp. 6-30-15 CIVIL STATE OF CALIFORNIA

THE STATE OF CALIFORNIA OR ITS OFFICERS OR AGENTS SHALL NOT BE RESPONSIBLE FOR THE ACCURACY OR COMPLETENESS OF SCANNED COPIES OF THIS PLAN SHEET.

2

COLD PLANE AC PAVEMENT

LOCATION	(N) DEPTH (LF)	SQYD	DESCRIPTION
PM 53.5	0.1	200	MAINLINE CONFORM
* PM 53.5 TO 60.8	0.1	182,988	REMOVE MAINLINE OPEN GRADE AC EP TO EP
MOON LIM LEE REST AREA	0.2	2924	
PM 53.5 TO PM 64.0	0.2	1311	ROAD CONNECTION CONFORMS
PM R58.11	0.5	1135	ROUTE 299/Hwy 3
PM 64.0	0.2	320	MAINLINE CONFORM
TOTAL		188,878	

* QUANTITIY FOR ADDITIONAL SHOULDER WIDTH LOCATIONS INCLUDED

REPLACE AC SURFACING

LOCATION	EB/WB LANES	(N) DEPTH (FT)	(N) WIDTH (FT)	Avg (N) LENGTH (FT)	CY
PM 53.5 TO PM 54.0	WB	0.33	6.0	25.0	67
PM 53.5 TO PM 54.0	EB	0.33	6.0	25.0	67
PM 58.0 TO PM 59.0	WB	0.33	6.0	25.0	390
PM 58.0 TO PM 59.0	EB	0.33	6.0	25.0	390
PM 62.0 TO PM 63.0	WB	0.33	6.0	25.0	190
PM 62.0 TO PM 63.0	EB	0.33	6.0	25.0	190
TOTAL					1294

REMOVE CONCRETE (PARKING BUMPER)

LOCATION	EA	DESCRIPTION
MOON LIM LEE REST AREA	10	PARKING BUMPERS
TOTAL	10	

REMOVE CONCRETE SIDEWALK (SQYD)

LOCATION	SQYD	DESCRIPTION
MOON LIM LEE REST AREA	10.1	ADA RAMP
TOTAL	10.1	

COLD PLANE AC PAVEMENT (PROFILE CORRECTION)

LOCATION	(N) DEPTH (LF)	SQYD	DESCRIPTION
* LITTLE BROWNS CREEK BRIDGE, PM 54.54	0.30' TO 0.67'	3045	BRIDGE PROFILE CONFORM
* WEAVER CREEK BRIDGE, PM 56.50	0.33' TO 0.73'	2055	BRIDGE PROFILE CONFORM
TRINITY RIVER BRIDGE, PM R57.99	0.34' TO 0.88'	4752	BRIDGE PROFILE CONFORM
INDIAN CREEK BRIDGE, PM 59.69	0.41' TO 0.73'	3527	BRIDGE PROFILE CONFORM
MOON LIM LEE REST AREA, PM 56.67	0.33' TO 0.93'	288	DRAINAGE CORRECTION
TOTAL		13,667	

* QUANTITY FOR ROAD CONNECTION CONFORM IS INCLUDED

ROADWAY ITEMS

LOCATION	(N) LANE WIDTH LF	(N) (Typ) SHLDR WIDTH LF	HMA TON	TACK COAT TON	SHOULDER BACKING TON	ROADWAY EXCAVATION CY	REMOVE RETAINING WALL (PORTION)(CY) CY
** PM 53.5 TO PM 54.3	24.0 - 36.0	4.0	2502.7		274		
PM 54.3 TO PM 54.6	36.0	8.0	1235.5		103		
PM 54.6 TO PM 56.4	24.0 - 40.0	2.0 - 4.0	5290.4		616		
PM 56.4 TO PM 56.8	24.0	4.0 - 8.0	1045.4		137		
PM 56.8 TO PM 57.0	48.0	4.0 - 10.0	1203.8		68		
PM 57.0 TO PM 57.8	24.0 - 40.0	4.0 - 8.0	2946.1		274		
PM 57.8 TO PM 58.4	48.0	2.0 - 6.0	2756.2	120	205		
PM 58.4 TO PM 60.8	24.0	4.0 - 6.0	6494.4		821		
PM 60.8 TO PM 61.1	60.0	2.0 - 4.0	1568.2		103		
PM 61.1 TO PM 62.2	37.0	2.0	3589.3		376		
PM 62.2 TO PM 63.6	24.0 - 48.0	4.0 - 8.0	5449.0		479		
** PM 63.6 TO PM 64.0	24.0	6.0 - 12.0	1235.5		137		
ADDITIONAL SHOULDER WIDTH LOCATIONS		15.0 - 40.0	1228.9		111		
MOON LIM LEE REST AREA			458.9				
HMA DIKE			170.0				
COLD PLANE AC PAVEMENT: ROUTE 299/Hwy 3			383.4				
COLD PLANE AC PAVEMENT (PROFILE CORRECTION)			4554.3		89	15	
RECONSTRUCT SHOULDER: PM 62.28 TO PM 62.57			206.0		49	41	
PLACE HMA (Misc AREA) FROM DRAINAGE ITEMS			11.8				
DRIVEWAY CONNECTIONS			93.6			4	
ROAD CONNECTION CONFORMS			154.3				
REMOVE CONCRETE WALL: PM 62.44 TO PM 62.45						940	25.2
TOTAL			42,577.7	120	3842	1000	25.2

** HMA QUANTITY FOR MAINLINE CONFORMS IS INCLUDED

HMA DIKE

LOCATION	PLACE HMA DIKE TYPE A LF	TYPE C LF	TYPE D LF	TYPE E LF	TYPE F LF	REMOVE AC DIKE LF	*** HMA TON
PM R57.78, L†					1153		170
PM 60.05, L†					3010	3010	
PM 60.85, L†		59		345	319	723	
PM 61.07, L†		31		245	855	1131	
PM 62.70, L†					265	265	
PM 62.70, R†					435	435	
PM 63.12, R†			898			898	
PM 63.64, L†					1210	1210	
FROM DRAINAGE QUANTITY SHEET	103						
TOTAL	103	90	898	590	7247	7672	170

*** SEE ROADWAY QUANTITIES FOR HMA

MINOR CONCRETE SIDEWALK

LOCATION	CY	(N) DEPTH (LF)	DESCRIPTION
MOON LIM LEE REST AREA	1.1	0.33	ADA RAMP
TOTAL	1.1		

2 REVISED PER ADDENDUM NO. 2 DATED JANUARY 31, 2014

SUMMARY OF QUANTITIES

Q-1

REVISED BY | DATE REVISED
JEANNIE STEFFAN | HEIDI BORDERS
CALCULATED-DESIGNED BY | CHECKED BY
FUNCTIONAL SUPERVISOR
JULIE CASEY

STATE OF CALIFORNIA - DEPARTMENT OF TRANSPORTATION
Caltrans DESIGN

P:\proj1\02\4E410_plans\contract_plans\addenda 01-29-14\24e410pa001.dgn

LAST REVISION 11-06-13 | DATE PLOTTED => 31-JAN-2014 | TIME PLOTTED => 09:50

Dist	COUNTY	ROUTE	POST MILES TOTAL PROJECT	SHEET No.	TOTAL SHEETS
02	Tri	299	53.5/64.0	46	70

Heidi Borders 11-06-13
REGISTERED CIVIL ENGINEER DATE

11-06-13
PLANS APPROVAL DATE

REGISTERED PROFESSIONAL ENGINEER HEIDI E. BORDERS No. C64194 Exp. 6-30-15 CIVIL STATE OF CALIFORNIA

THE STATE OF CALIFORNIA OR ITS OFFICERS OR AGENTS SHALL NOT BE RESPONSIBLE FOR THE ACCURACY OR COMPLETENESS OF SCANNED COPIES OF THIS PLAN SHEET.

NOTE:

1. (N) - NOT A SEPARATE PAY ITEM, FOR INFORMATION ONLY

2 **REVISED PER ADDENDUM NO. 2 DATED JANUARY 31, 2014**

METAL BEAM GUARD RAILING

BEGIN POST MILE	LOCATION DESCRIPTION	R/L	RECONSTRUCT METAL BEAM GUARD RAILING LF	ADJUST METAL BEAM GUARD RAILING LF	RECONSTRUCT TRANSITION RAILING (TYPE WB) EA	(N) BURIED END ANCHOR EA	RECONSTRUCT END ANCHOR (TYPE SFT) EA	RECONSTRUCT TYPE ET TERMINAL SYSTEM EA	RECONSTRUCT TYPE SRT TERMINAL SYSTEM EA	TREATED WOOD WASTE LB	TRANSITION RAILING (TYPE WB) EA	REMOVE METAL BEAM GUARD RAILING LF	RECONSTRUCT METAL BEAM GUARD RAILING (7' STEEL POST) LF	* MINOR CONCRETE MINOR STRUCTURE CY	EARTH RETAINING SYSTEM (RAILING COMPONENTS) SQFT	NOTES
54.36		R	375			1			1							
54.52	LITTLE BROWNS CREEK BRIDGE	R	80		1				1							
54.52	LITTLE BROWNS CREEK BRIDGE	L	75		1				1							
54.55	LITTLE BROWNS CREEK BRIDGE	R	105		1				1							
54.55	LITTLE BROWNS CREEK BRIDGE	L	105		1				1							
56.48	WEAVER CREEK BRIDGE	R	75		1				1							
56.49	WEAVER CREEK BRIDGE	L	70		1											
56.55	WEAVER CREEK BRIDGE	L	60		1	1			1							
56.54	WEAVER CREEK BRIDGE	R	50		1	1										
R57.78	TRINITY RIVER BRIDGE	L	1153						1							SEE MBGR WITH DIKE DETAIL
57.93	TRINITY RIVER BRIDGE	R	345						1		1			0.90		SEE TRANSITION BLOCK DETAIL
R58.19	TRINITY RIVER BRIDGE	R	38			1										AT Exist CONCRETE BARRIER
58.00	TRINITY RIVER BRIDGE	L	360						1		1			0.80		SEE TRANSITION BLOCK DETAIL
59.67	INDIAN CREEK BRIDGE	L	90		1				1							
59.67	INDIAN CREEK BRIDGE	R	90		1				1							
59.71	INDIAN CREEK BRIDGE	L	140		1				1							
59.71	INDIAN CREEK BRIDGE	R	85		1			1								
60.05		L					2						3010			SEE MBGR WITH DIKE DETAIL
60.85	STEEL BRIDGE ROAD	L	528					1	1							SEE MBGR WITH DIKE DETAIL
60.87	STEEL BRIDGE ROAD	R		580		2										
61.07		L	900			1			1							SEE MBGR WITH DIKE DETAIL
61.09	VITZTHUM GULCH Rd	R	370			1			1							
62.28	POKER BAR Rd	L	1400						2				640		200	SEE RECONSTRUCT SHOULDER DETAIL **
61.38		L	634			1			1							
62.43		R										63				AT LOCATION OF REMOVE CONCRETE WALL
62.69		L											562			
62.70		R				2							425			SEE MBGR WITH DIKE DETAIL
63.12		R							2				263			
63.51	LEWISTON Rd	L				1							237			SEE MBGR WITH DIKE DETAIL
63.64		L				2			1				1210			SEE MBGR WITH DIKE DETAIL
63.65		R							2				594			
	TOTAL		7128	580	12	14	2	2	24	177,432	2	63	6941	1.70	200	

* FOR ADDITIONAL QUANTITY SEE DRAINAGE QUANTITIES
** EXACT POST LOCATION TO BE DETERMINED BY ENGINEER

SUMMARY OF QUANTITIES

Q-2

REVISED BY | DATE REVISED
JEANNIE STEFFAN | HEIDI BORDERS
CALCULATED-DESIGNED BY | CHECKED BY
FUNCTIONAL SUPERVISOR: JULIE CASEY

STATE OF CALIFORNIA - DEPARTMENT OF TRANSPORTATION
Caltrans® DESIGN

P:\proj1\02\4E410_plans\contract_plans\addenda 01-29-14\24e410pa002.dgn

LAST REVISION 11-06-13 | DATE PLOTTED => 31-JAN-2014 | TIME PLOTTED => 09:50