FOR CONTRACT NO.: 02-4E9904

INFORMATION HANDOUT

ENCROACHMENT PERMITS

City of Susanville Public Works
720 South Street
Susanville, Ca 96130

ROUTE: 02-Las-36-26.0/R26.6

State of California
DEPARTMENT OF TRANSPORTATION

Business, Transportation and Housing Agency

Memorandum

Flex your power!
Be energy efficient!

To: Michael Conner
Design Engineer

Date: December 6, 2012

File: 02-Las 36, PM 26.515/26.22
EA 4E9909

From: DEPARTMENT OF TRANSPORTATION
LISA HARVEY, Senior Right of Way Agent
Project Delivery, Redding

Subject: Right of Way Contract

Project Limits: Susanville and Chilcoot Traffic Signal Loops

Attached is a copy of the Encroachment Permit signed by:

Bill Hoffman, Encroachment Permits
City of Susanville Public Works
720 South Street
Susanville, CA 96130

Improvements Purchased: None.

Construction Contract Work: None.

Excess Land Acquired: None.

Excess Land Exchanged: None.

Acquisition Agent: Kelly Babcock

***Note- The contractor will need to get their own encroachment permit for the work on City property. The contractor must also get a business license through the City of Susanville to work on City property.**
Attachment

c. RE file w/attachments

City of Susanville

Department of Public Works
720 South Street
Susanville, CA 96130

(530) 257-1041 Fax (530) 257-1057

Permit Number:	EP-12-49
Date Issued:	12/3/2012
Expiration Date:	12/3/2013
Fee Paid:	$0.00
Deposit Paid	$0.00

Encroachment Permit

In accordance with your application dated: 11/23/2012

Issued To: Department of Transportation
1031 Butte St. Suite 205
Redding, CA 96001, **PERMITTEE**

and subject to the following, PERMISSION IS HEREBY GRANTED to:
Work in City right of way at the intersection of East Riverside Dr. and the entrance into Walmart off Hwy 36.
To replace traffic loops

PERMITTEE RESPONSIBILITIES:
It is understood and agreed by the Permittee, that all work will comply with the conditions set forth on special conditions and that non-compliance will be cause for revocation of this permit and forfeiture of all or part of fees and deposits. Permittee agrees further to comply with all ordinances of the City of Susanville and state laws pertaining to the above application, and hereby agrees that in the event of injury to persons or property by reason of the above work, Permittee indemnifies the City of Susanville and the officials thereof, free from all liability against any and all such claims which might be asserted against it, or them, or any of them by reason of such injury.

GENERAL SPECIFICATIONS:
NOTIFY CITY'S REPRESENTATIVE: At least 24hrs before starting any work **(48 hrs if any lane closures or traffic control will be necessary),** notify Permit Inspector Bill Hoffman, telephone (530) 257-1041, 720 South Street Susanville, CA 96130, who will arrange for inspection and approval of the work covered by this permit.

DETAIL AND SPECIFICATIONS:
All work shall be done in accordance with City of Susanville Standard Details and Specifications: The following detail's are attached for your convenience. S-20, S-21, W-6

This permit is void unless the work is completed on or before: 12/3/2013
This permit is to be strictly construed and no other work other than that specifically mentioned is hereby authorized. No project work shall be commenced until all other necessary permits have been obtained.

I, WE agree to comply with the requirements and conditions set forth above and understand non-compliance will be cause for revocation of this permit and forfeiture of all or part of fees and deposits.

Signature: X Lisa Harvey Date: 12-6-12
Permittee / Owner

Signature: Date:
Contractor

Approved: Bill Hoffman 12-5-12
Dan Newton, City Engineer Date

SPECIAL CONDITIONS

1	Permittee must comply with the general conditions set forth in Exhibit B of the permit application.
2	PROSECUTION OF WORK: Once work authorized by this permit is begun, it shall be diligently prosecuted to completion. Should suspension of work be necessary for any reason, trenches and excavations shall be closed (backfilled and compacted), and the area graded, obstructions removed, and erosion control measures installed to the satisfaction of the City inspector.
3	CONDITION OF WORK SITE: When the permitted work is complete, the area within the City right of way Shall be left in a neat and non-erodible condition to the satisfaction of the City inspector. All surplus Material and debris shall be disposed of in a lawful manner outside the City right of way.
4	Contractor doing work will need to have business license and encroachment permit from the City.

RECOMMEND USING LATEST METHODOLOGY FROM CALIFORNIA MANUAL ON UNIFORM TRAFFIC CONTROL DEVICES

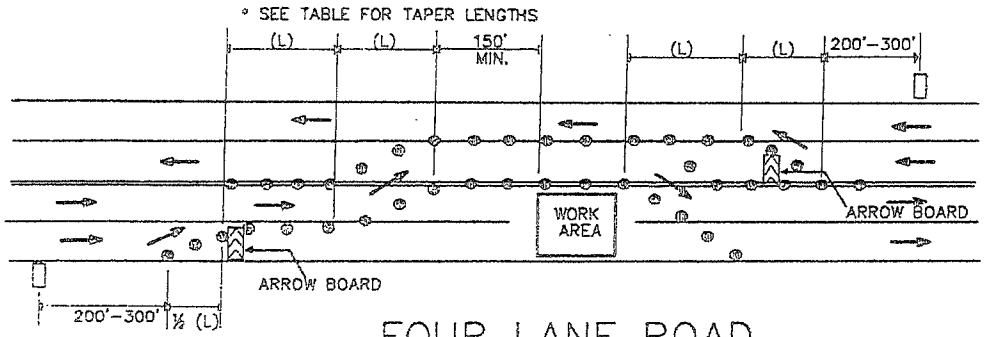

FOUR LANE ROAD

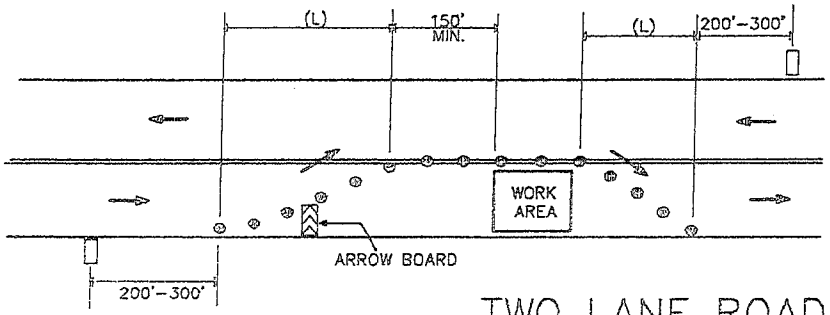

TWO LANE ROAD

NOTES

1. ALL ADVANCED WARNING SIGNS SHALL BE EQUIPPED WITH FLAGS FOR DAYTIME CLOSURES.
2. PORTABLE DELINEATORS PLACED AT ONE-HALF (½) THE SPACING INDICATED FOR TRAFFIC CONES MAY BE USED IN-LIEU OF CONES FOR DAYTIME CLOSURES ONLY.
3. TRAVEL LANES SHALL BE A MINIMUM OF 10' WIDE.
4. WARNING SIGNS SHALL BE C23 "ROAD WORK AHEAD" OR C18 "ROAD CONSTRUCTION AHEAD".
5. FLAGGERS SHALL BE USED IF DEEMED NECESSARY BY THE CITY.

TAPER TABLE

APPROACH SPEED (MPH)	TAPER LENGTH (L)	CONES PER TAPER	CONE SPACING (FEET)
0-25	125'	6	25
25-40	320'	9	40
45-50	600'	13	50

LEGEND

- WARNING SIGN
- TRAFFIC CONE
- DIRECTION OF TRAVEL

REVISIONS	TRAFFIC CONTROL	
	CITY OF SUSANVILLE	
	APPROVED FEBRUARY 4, 2009	S-20
	RESOLUTION 09-4480	

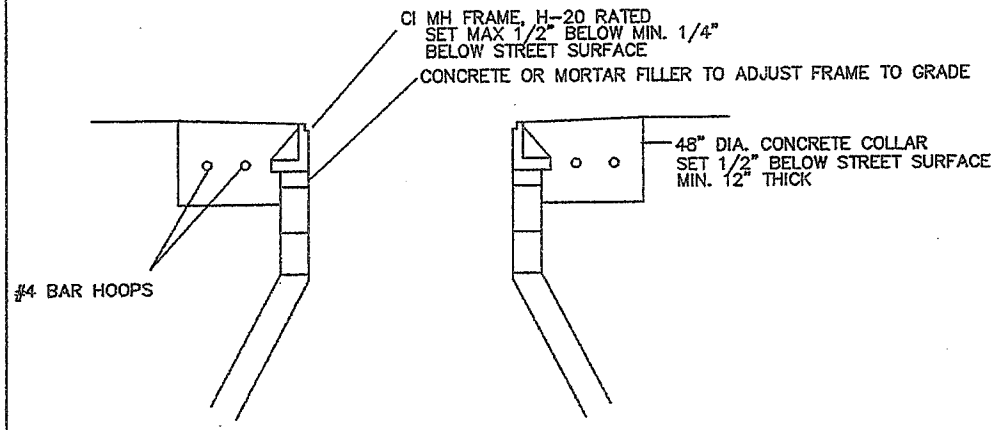

CONCRETE MANHOLE DETAIL

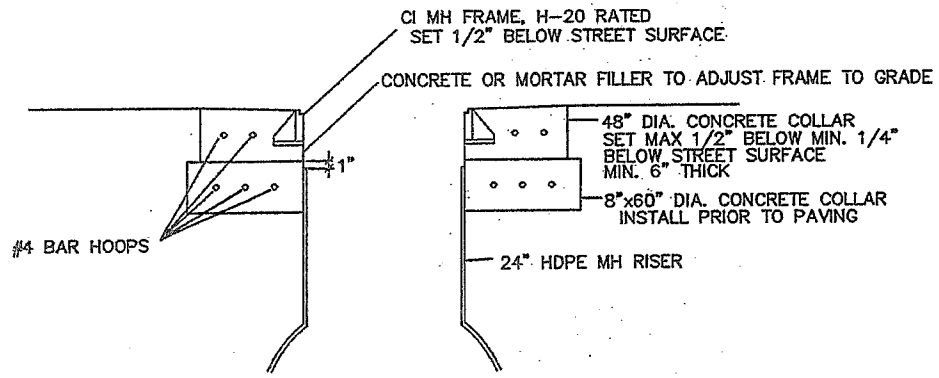

HDPE MANHOLE DETAIL

REVISIONS	SEWER MANHOLES	
	CITY OF SUSANVILLE	
	APPROVED FEBRUARY 4, 2009	S-21
	RESOLUTION 09-4480	

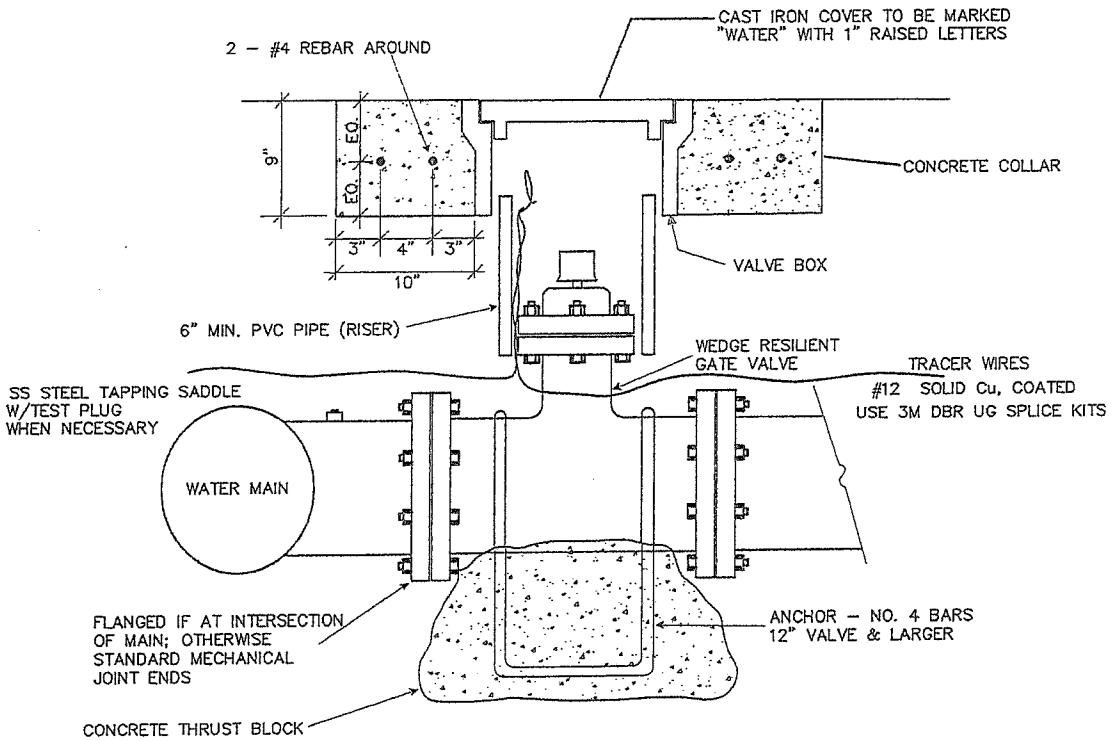

NOTES

1. VALVE SHALL BE MUELLER RESILIENT WEDGE AWWA C–509–01 OR CITY APPROVED EQUAL. ALL INTERIOR PARTS, INCLUDING DISCS, SHALL BE CONSTRUCTED OF BRONZE. GATE VALVES SHALL BE NON–RISING STEM AND FURNISHED WITH "O" RING SEALS.
2. VALVE BOX SHALL BE COOKS NO. C12 OR CITY APPROVED EQUAL.
3. MECHANICAL JOINT END DIMENSIONS SHALL CONFORM TO CLASS 150 CAST IRON O.D. PIPE; AWWA TABLE 2, C–510–98.
4. FLANGE DIMENSIONS AND DRILLING SHALL COMPLY TO ANSI B16.1, CLASS 150 FOR FLANGED ENDS.
5. GATE VALVE SHALL REMAIN CLOSED UNTIL INSTALLATION IS COMPLETE.
6. VALVES SHALL BE PLACED ALL SIDES OF TEES AND CROSSES.
7. AFTER INSTALLATION & BEFORE PRESSURIZATION, AN INSPECTION SHALL BE PERFORMED BY THE CITY.
8. VALVE EXCAVATION AREA SHALL NOT BE BACKFILLED UNTIL AFTER PRESSURE TESTS HAVE BEEN MADE.
9. ANY SUBSTITUTIONS SHALL BE SUBMITTED TO THE CITY FOR APPROVAL PRIOR TO INSTALLATION OR USE.
10. CONCRETE COLLAR SHALL BE A 6 SACK MIX WITH 4 ½ – 6% AIR ENTRAINMENT.
11. IF MORE THAN ONE VALVE IS ENCLOSED BY CONCRETE COLLAR, ENTIRE DEPTH OF COLLAR SHALL BE 9" AND COLLAR CORNERS SHALL HAVE MINIMUM RADII OF 16".
12. TAPPING SADDLES, WHEN NECESSARY, SHALL BE ROMAC SST 304 WITH TEST PLUG, OR APPROVED EQUAL.
13. MAXIMUM VALVE SPACING IS 1000 FEET.

REVISIONS	VALVES & BOXES	
	CITY OF SUSANVILLE	
	APPROVED FEBRUARY 4, 2009	W–6
	RESOLUTION 09–4480	