Dist	COUNTY	ROUTE	POST MILES TOTAL PROJECT	SHEET No.	TOTAL SHEETS
02	Sis	3	36.0/R46.9	1	20

STATE OF CALIFORNIA

DEPARTMENT OF TRANSPORTATION

PROJECT PLANS FOR CONSTRUCTION ON

STATE HIGHWAY

IN SISKIYOU COUNTY IN AND NEAR YREKA FROM 0.2 MILE NORTH OF REIDEL RANCH ROAD TO 0.6 MILE NORTH OF LAURA LANE

TO BE SUPPLEMENTED BY STANDARD PLANS DATED MAY 2010

INDEX OF PLANS

SHEET No.	DESCRIPTION
1	TITLE AND LOCATION MAP
2	TYPICAL CROSS SECTIONS
3-7	CONSTRUCTION DETAILS
8	CONSTRUCTION AREA SIGNS
9	PAVEMENT DELINEATION DETAILS & QUANTITIES
10	SUMMARY OF QUANTITIES
11-20	REVISED STANDARD PLANS

THE STANDARD PLANS LIST APPLICABLE TO THIS CONTRACT IS INCLUDED IN THE NOTICE TO BIDDERS AND SPECIAL PROVISIONS BOOK.

LOCATION MAP

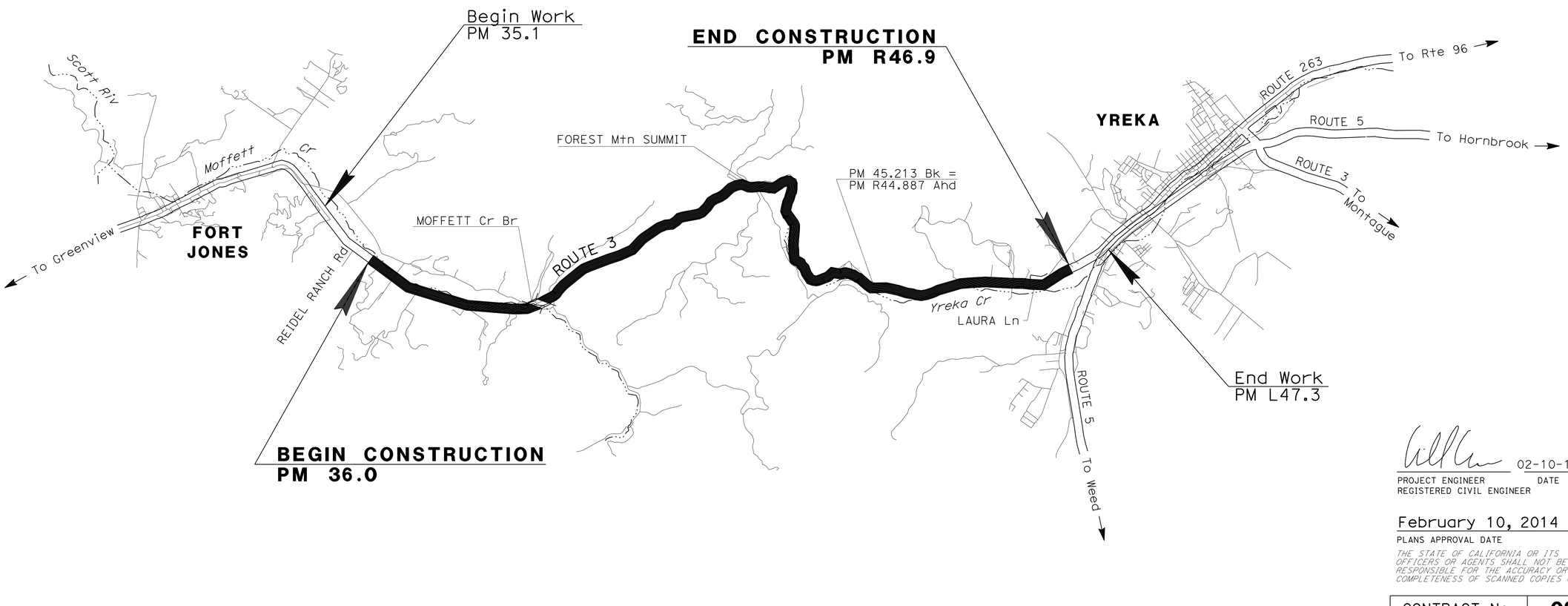

NO SCALE

THE CONTRACTOR SHALL POSSESS THE CLASS (OR CLASSES) OF LICENSE AS SPECIFIED IN THE "NOTICE TO BIDDERS."

02-10-14

PROJECT ENGINEER DATE
REGISTERED CIVIL ENGINEER

February 10, 2014

PLANS APPROVAL DATE

REGISTERED PROFESSIONAL ENGINEER MICHAEL A. CONNER No. C73123 Exp. 12-31-14 CIVIL STATE OF CALIFORNIA

THE STATE OF CALIFORNIA OR ITS OFFICERS OR AGENTS SHALL NOT BE RESPONSIBLE FOR THE ACCURACY OR COMPLETENESS OF SCANNED COPIES OF THIS PLAN SHEET.

CONTRACT No.	02-4G2704
PROJECT ID	0213000091

PROJECT MANAGER: LANCE BROWN
DESIGN ENGINEER: LANCE BROWN

P:\proj1\02\4G270_plans\pse\24g270ab001.dgn

LAST REVISION 02-10-14 | DATE PLOTTED => 18-FEB-2014 | TIME PLOTTED => 14:07

Dist	COUNTY	ROUTE	POST MILES TOTAL PROJECT	SHEET No.	TOTAL SHEETS
02	Sis	3	36.0/R46.9	2	20

REGISTERED CIVIL ENGINEER 02-10-14 DATE

02-10-14
PLANS APPROVAL DATE

REGISTERED PROFESSIONAL ENGINEER MICHAEL A. CONNER No. C73123 Exp. 12-31-14 CIVIL STATE OF CALIFORNIA

THE STATE OF CALIFORNIA OR ITS OFFICERS OR AGENTS SHALL NOT BE RESPONSIBLE FOR THE ACCURACY OR COMPLETENESS OF SCANNED COPIES OF THIS PLAN SHEET.

NOTES:

1. DIMENSIONS OF THE PAVEMENT STRUCTURES (STRUCTURAL SECTIONS) ARE SUBJECT TO TOLERANCES SPECIFIED IN THE STANDARD SPECIFICATIONS.
2. SEE SUMMARY OF QUANTITIES SHEETS FOR LOCATIONS.

ABBREVIATIONS:

RHMA-SP-G RUBBERIZED HOT MIX ASPHALT, SUPERPAVE (GAP GRADED)

PAVEMENT CLIMATE REGION

HIGH MOUNTAIN
HIGH DESERT

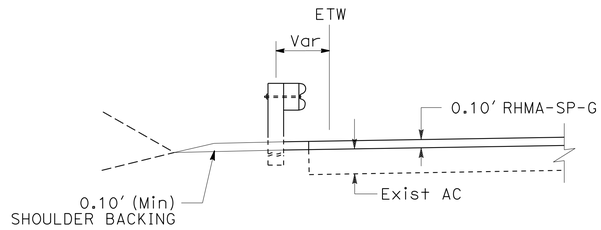

GUARDRAIL LOCATION
WITHOUT DIKE
(TYPICAL BOTH DIRECTIONS)

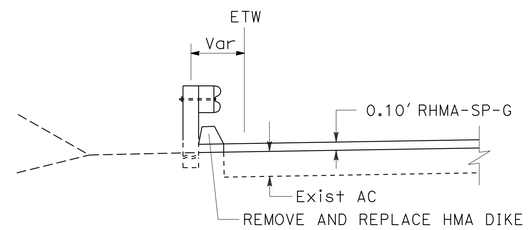

GUARDRAIL LOCATION
WITH DIKE
(TYPICAL BOTH DIRECTIONS)

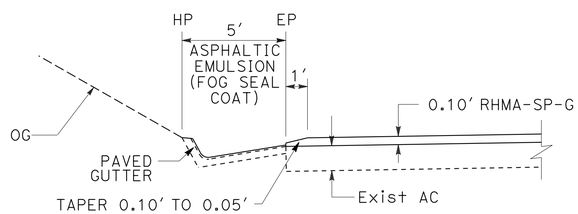

PAVED GUTTER LOCATION
SEE NOTE 2

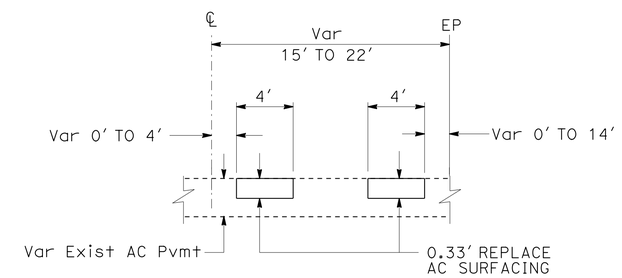

REPLACE AC SURFACING
(TYPICAL BOTH DIRECTIONS)

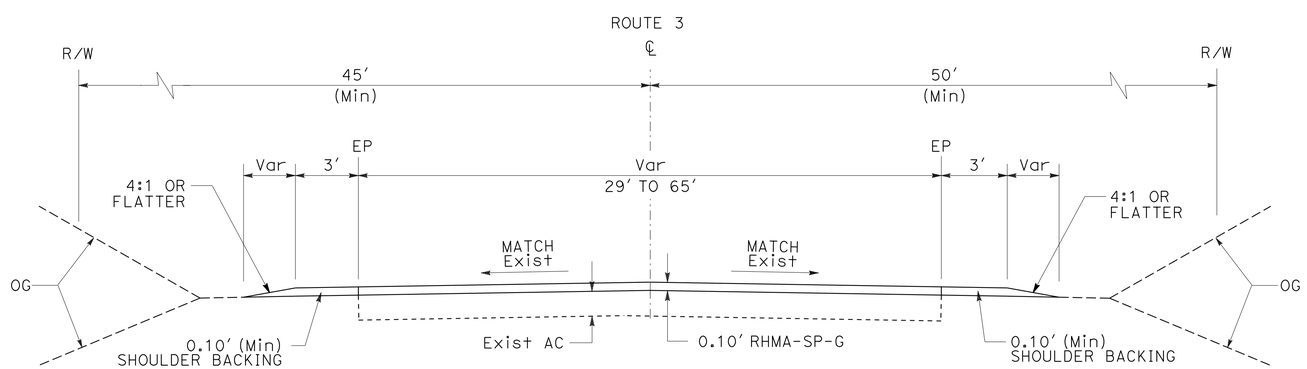

TYPICAL CROSS SECTION

TYPICAL CROSS SECTIONS

NO SCALE

X-1

REVISED BY | DATE REVISED
MICHAEL CONNER | KARLIE SMITH
CALCULATED-DESIGNED BY | CHECKED BY
FUNCTIONAL SUPERVISOR | LANCE BROWN

STATE OF CALIFORNIA - DEPARTMENT OF TRANSPORTATION
Caltrans® MAINTENANCE

P:\proj1\02\4G270_plans\pse\24g270ca001.dgn

LAST REVISION 02-10-14 | DATE PLOTTED => 18-FEB-2014 | TIME PLOTTED => 14:07

Dist	COUNTY	ROUTE	POST MILES TOTAL PROJECT	SHEET No.	TOTAL SHEETS
02	Sis	3	36.0/R46.9	3	20

REGISTERED CIVIL ENGINEER 02-10-14 DATE

02-10-14
PLANS APPROVAL DATE

REGISTERED PROFESSIONAL ENGINEER MICHAEL A. CONNER No. C73123 Exp. 12-31-14 CIVIL STATE OF CALIFORNIA

THE STATE OF CALIFORNIA OR ITS OFFICERS OR AGENTS SHALL NOT BE RESPONSIBLE FOR THE ACCURACY OR COMPLETENESS OF SCANNED COPIES OF THIS PLAN SHEET.

NOTE:

1. EXISTING UTILITY FACILITIES ARE NOT SHOWN ON THESE PLANS.

LEGEND:

COLD PLANE ASPHALT CONCRETE PAVEMENT (0.00' TO 0.10')

ABBREVIATIONS:

RHMA-SP-G RUBBERIZED HOT MIX ASPHALT, SUPERPAVE (GAP GRADED)

ROAD CONNECTIONS

ROAD CONNECTION	SIDE	POST MILE	DIMENSIONS (LF)			CASE
			A	B	C	
DRIVEWAY	L†	36.03	87	35	20	B
DRIVEWAY	R†	36.06	55	35	19	B
OAK VIEW Ln	R†	36.31	76	35	21	B
DRIVEWAY	L†	36.31	53	20	15	B
MINERAL RANGE Rd	R†	36.69	70	30	25	B
AIR FORCE WAY	R†	36.84	60	30	15	B
DRIVEWAY	R†	37.07	41	30	16	B
DRIVEWAY	L†	37.12	34	20	16	B
DRIVEWAY	R†	37.36	38	35	19	B
BEAR SPRINGS Rd	R†	37.37	72	35	21	B
DRIVEWAY	R†	37.41	44	33	12	B
DRIVEWAY	L†	37.46	36	26	12	B
DRIVEWAY	R†	37.68	47	35	11	B
DRIVEWAY	L†	37.74	47	32	11	B
DRIVEWAY	R†	37.98	32	32	13	B
DRIVEWAY	L†	37.99	61	35	14	B
PULLOUT	R†	38.00	514	18	443	B
PEACH ORCHARD Rd	R†	38.16	74	40	40	A
WEST MOFFETT Cr Rd	L†	38.30	235	48	73	A
DRIVEWAY	R†	38.37	67	40	14	C
SOAP CREEK Rd	L†	38.50	270	56	22	C
PEACH ORCHARD Rd	R†	38.57	186	65	23	A
PULLOUT	R†	40.50	470	60	115	B
UPPER SOAP CREEK Rd	L†	41.82	53	29	32	B
PULLOUT	L†	42.46	230	60	90	B
PULLOUT	R†	42.98	270	17	150	B
PULLOUT	L†	43.47	305	19	130	B
ROAD CONNECTION	R†	44.44	138	40	37	C
DRIVEWAY	L†	44.72	82	55	16	B
ROAD CONNECTION	R†	44.86	114	60	16	C
PULLOUT/CHAIN-ON	L†	44.88	590	15.5	300	B
DRIVEWAY	R†	45.00	66	55	16	B
DRIVEWAY	L†	R45.06	48	35	13	C
PULLOUT	R†	R45.10	176	10	176	B
DRIVEWAY	L†	R45.11	37	30	14	C
DRIVEWAY	R†	R45.29	42	52	12	B
DRIVEWAY	L†	R45.32	44	30	13	B
DRIVEWAY	L†	R45.40	43	30	20	C
DRIVEWAY	L†	R45.44	49	30	12	B
DRIVEWAY	L†	R45.52	42	30	14	B
DRIVEWAY	L†	R45.54	43	30	11	B
DRIVEWAY	L†	R45.57	39	30	12	B
DRIVEWAY	R†	R45.57	49	30	13	B
DRIVEWAY	L†	R45.78	44	30	12	B
EASTMAN Ln	L†	R45.82	69	30	17	A
DRIVEWAY	R†	R45.93	45	30	13	B
DRIVEWAY	L†	R45.93	38	30	33	B
DRIVEWAY	R†	R46.02	48	30	12	B
DRIVEWAY	R†	R46.07	47	30	22	C
DRIVEWAY	L†	R46.07	49	30	13	B
DRIVEWAY	R†	R46.09	46	30	12	C
DRIVEWAY	L†	R46.11	59	30	22	C
DRIVEWAY	L†	R46.18	47	30	12	B
DRIVEWAY	R†	R46.20	36	30	14	B
RICHMAN Ln	L†	R46.22	118	30	35	A
DRIVEWAY	L†	R46.28	40	22	17	C
LAURA Ln	L†	R46.32	120	24	44	A
LAURA Ln	R†	R46.32	96	25	35	A

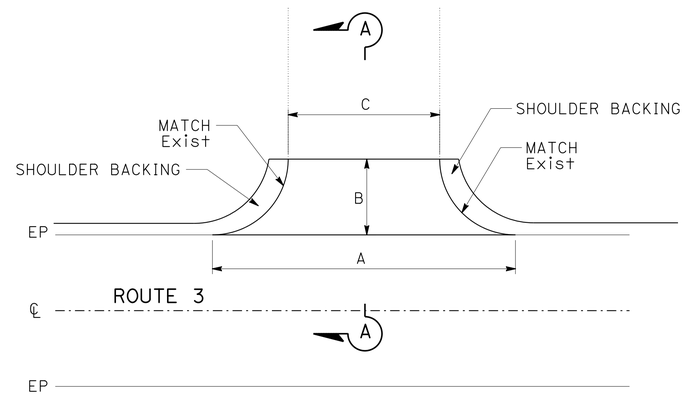

PAVED ROAD CONNECTIONS

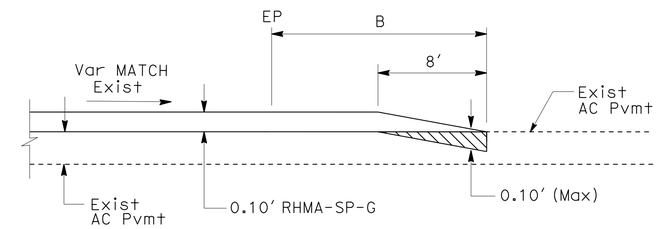

CASE A
SECTION A-A

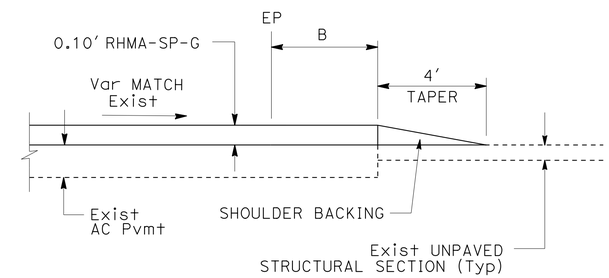

CASE B
SECTION A-A

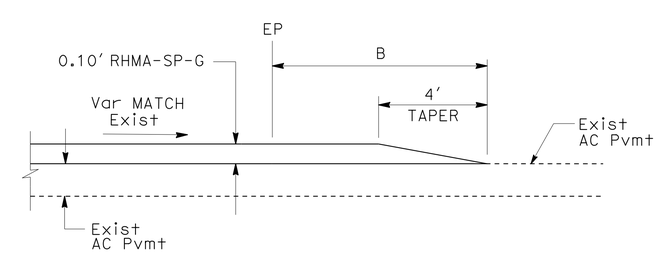

CASE C
SECTION A-A

ROAD CONNECTIONS

ROAD CONNECTION	SIDE	POST MILE	DIMENSIONS (LF)			CASE
			A	B	C	
DRIVEWAY	R†	R46.52	47	55	11	C
DRIVEWAY	R†	R46.53	42	50	20	C
DRIVEWAY	R†	R46.55	37	50	12	C
DRIVEWAY	R†	R46.57	47	50	15	C
DRIVEWAY	R†	R46.60	37	29	13	C
DRIVEWAY	R†	R46.65	71	30	13	C
DRIVEWAY	R†	R46.69	49	20	20	C
DRIVEWAY	L†	R46.70	60	24	21	C
DRIVEWAY	R†	R46.72	105	25	16&35	C
WESTSIDE Rd	R†	R46.78	400	33	62	A
DRIVEWAY	R†	R46.85	64	45	17	B

CONSTRUCTION DETAILS

NO SCALE

C-1

REVISED BY | DATE REVISED
MICHAEL CONNER | KARLIE SMITH
CALCULATED-DESIGNED BY | CHECKED BY
FUNCTIONAL SUPERVISOR
LANCE BROWN

STATE OF CALIFORNIA - DEPARTMENT OF TRANSPORTATION
Caltrans® MAINTENANCE

P:\proj1\02\46270_plans\pse\24g270ga001.dgn

LAST REVISION 02-10-14 | DATE PLOTTED => 18-FEB-2014 | TIME PLOTTED => 14:07

Dist	COUNTY	ROUTE	POST MILES TOTAL PROJECT	SHEET No.	TOTAL SHEETS
02	Sis	3	36.0/R46.9	4	20

REGISTERED CIVIL ENGINEER 02-10-14 DATE

02-10-14
PLANS APPROVAL DATE

REGISTERED PROFESSIONAL ENGINEER MICHAEL A. CONNER No. C73123 Exp. 12-31-14 CIVIL STATE OF CALIFORNIA

THE STATE OF CALIFORNIA OR ITS OFFICERS OR AGENTS SHALL NOT BE RESPONSIBLE FOR THE ACCURACY OR COMPLETENESS OF SCANNED COPIES OF THIS PLAN SHEET.

NOTES:

1. EXISTING UTILITY FACILITIES ARE NOT SHOWN ON THESE PLANS.
2. PLACE THE OBJECT MARKER WHERE THE GUARDRAIL BECOMES CLOSEST TO THE ETW (IN LINE WITH FACE OF GUARDRAIL)

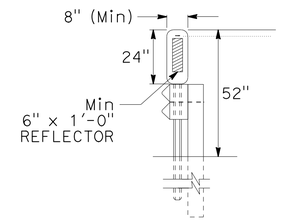

PLACE NEAR EDGE OF OBJECT MARKER IN LINE WITH THE EDGE OF OBJECT

OBJECT MARKER DETAIL

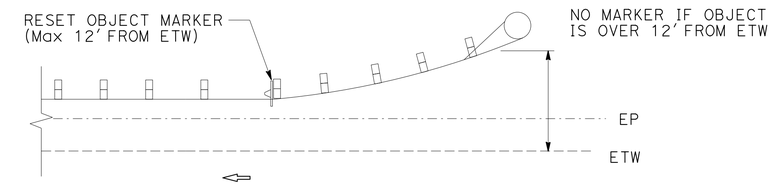

TYPICAL GUARDRAIL OBJECT MARKERS

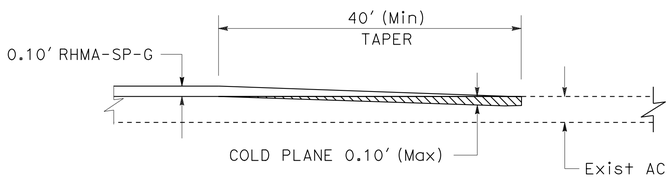

MAINLINE CONFORM TAPER

PM 36.00
PM R46.88

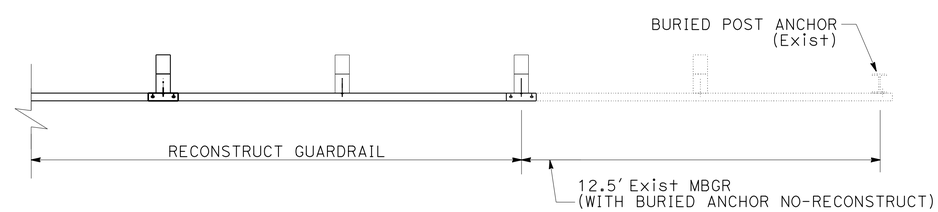

BURIED POST END ANCHOR DETAIL

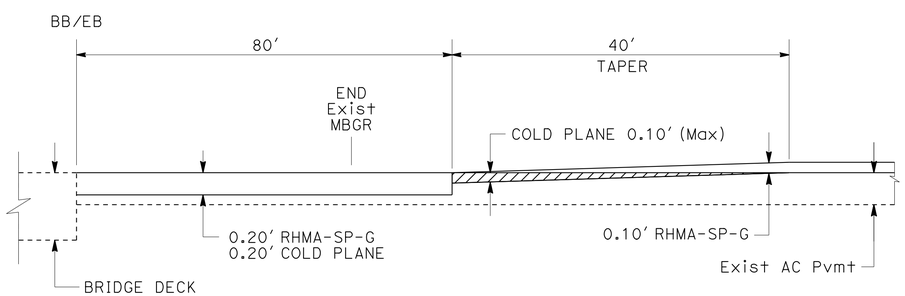

MAINLINE CONFORM TAPER

PM 38.24
PM 38.28

CONSTRUCTION DETAILS

NO SCALE

C-2

REVISED BY | DATE REVISED
MICHAEL CONNER | KARLIE SMITH
CALCULATED-DESIGNED BY | CHECKED BY
FUNCTIONAL SUPERVISOR
LANCE BROWN

STATE OF CALIFORNIA - DEPARTMENT OF TRANSPORTATION
Caltrans® MAINTENANCE

P:\proj1\02\4G270_plans\pse\24g270ga002.dgn

LAST REVISION 02-10-14 | DATE PLOTTED => 18-FEB-2014 | TIME PLOTTED => 14:07

Dist	COUNTY	ROUTE	POST MILES TOTAL PROJECT	SHEET No.	TOTAL SHEETS
02	Sis	3	36.0/R46.9	5	20

REGISTERED CIVIL ENGINEER 02-10-14 DATE

02-10-14
PLANS APPROVAL DATE

REGISTERED PROFESSIONAL ENGINEER MICHAEL A. CONNER No. C73123 Exp. 12-31-14 CIVIL STATE OF CALIFORNIA

THE STATE OF CALIFORNIA OR ITS OFFICERS OR AGENTS SHALL NOT BE RESPONSIBLE FOR THE ACCURACY OR COMPLETENESS OF SCANNED COPIES OF THIS PLAN SHEET.

NOTES:

1. EXISTING UTILITY FACILITIES ARE NOT SHOWN ON THESE PLANS.
2. LAP ALL RAILS AT EXISTING RAIL LAPS.
3. A 2-POST OPTION IS AVAILABLE, BUT NOT SHOWN.
4. LAPPED ELEMENTS MUST BE SUPPORTED BY A Min OF 2 POSTS ON EACH SIDE OF THE OMITTED POST(S).

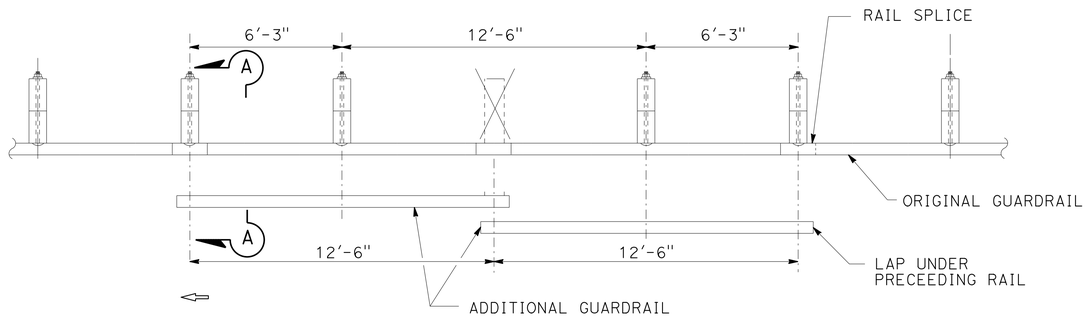

CASE 1 (ONE POST OMITTED AT JUNCTION OF TWO ELEMENTS)

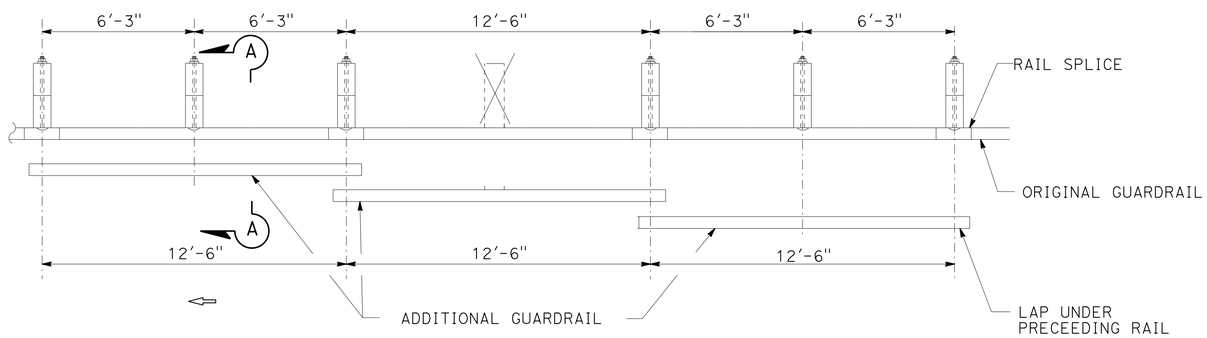

CASE 2 (ONE POST OMITTED AT CENTER OF ELEMENT)

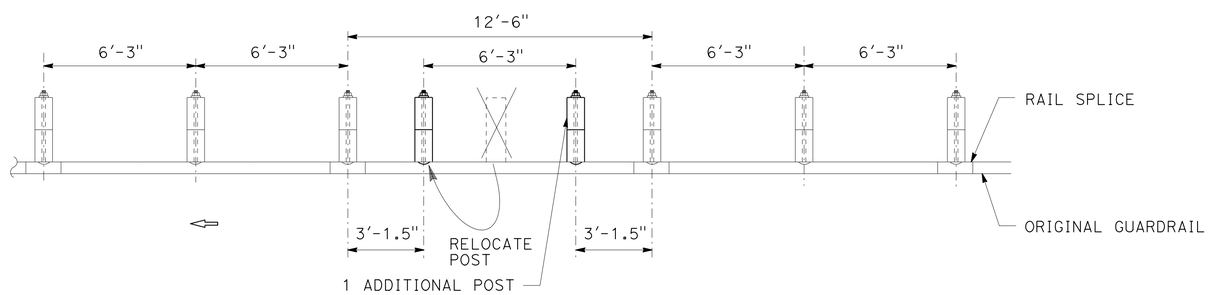

CASE 3 (ONE POST OMITTED, MOVE THE POST AND ADD ONE POST)
(NO NESTED RAIL REQUIRED)

LONG SPAN NESTED GUARDRAIL

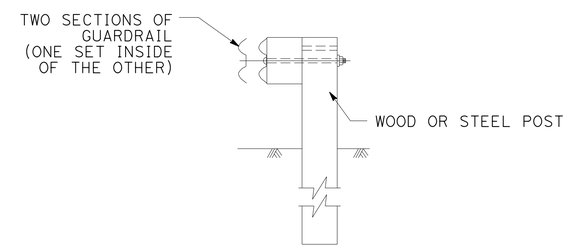

SECTION A-A

TYPICAL RAILING OVERLAP INSTALLATION AT POST

CONSTRUCTION DETAILS

NO SCALE

C-3

REVISED BY | DATE REVISED
MICHAEL CONNER | KARLIE SMITH
CALCULATED-DESIGNED BY | CHECKED BY
FUNCTIONAL SUPERVISOR
LANCE BROWN

STATE OF CALIFORNIA - DEPARTMENT OF TRANSPORTATION
Caltrans® **MAINTENANCE**

P:\proj1\02\4G270_plans\pse\24g270ga003.dgn

LAST REVISION 02-10-14 | DATE PLOTTED => 18-FEB-2014 | TIME PLOTTED => 14:07

Dist	COUNTY	ROUTE	POST MILES TOTAL PROJECT	SHEET No.	TOTAL SHEETS
02	Sis	3	36.0/R46.9	6	20

REGISTERED CIVIL ENGINEER 02-10-14 DATE

02-10-14
PLANS APPROVAL DATE

REGISTERED PROFESSIONAL ENGINEER MICHAEL A. CONNER No. C73123 Exp. 12-31-14 CIVIL STATE OF CALIFORNIA

THE STATE OF CALIFORNIA OR ITS OFFICERS OR AGENTS SHALL NOT BE RESPONSIBLE FOR THE ACCURACY OR COMPLETENESS OF SCANNED COPIES OF THIS PLAN SHEET.

NOTES:

1. SEE MEASURE HEIGHT DETAIL.
2. FOR DETAILS OF STANDARD HARDWARE USED TO CONSTRUCT GUARDRAIL, SEE STANDARD PLAN A77M1.
3. FOR DETAILS OF POSTS (WOOD OR STEEL) AND BLOCKS (WOOD OR COMPOSITE) USED TO CONSTRUCT GUARDRAIL SEE STANDARD PLAN A77N1 OR A77N2.
4. A SINGLE LINE POST MAY BE MOVED UP TO 12" ALONG THE GUARDRAIL.
5. DIRECTION OF ADJACENT TRAFFIC INDICATED BY ⇨ .
6. PLACE TYPE F DIKE UNDER GUARDRAIL AND PLACE TYPE C DIKE IF MORE THAN 2" IN FRONT OF FACE OF GUARDRAIL.
7. SLOTTED HOLE FOR BOLTED CONNECTION OF RAIL ELEMENT TO BLOCK AND POST. SEE "RAIL ELEMENT SPLICE DETAIL".
8. SLOTTED HOLES FOR SPLICE BOLTS TO OVERLAP ENDS OF RAIL ELEMENT. SEE "RAIL ELEMENT SPLICE DETAIL".
9. ADDITIONAL HOLE IN UPPERMOST PORTION OF LINE POST IS FOR POTENTIAL FUTURE ADJUSTMENTS OF RAILING HEIGHT. SEE STANDARD PLAN A77N1, A77N2.
10. INSTALL POST IN SOIL.
11. TO CONNECT RAILING TO TERMINAL SYSTEM END TREATMENT, TRANSITION THE TOP OF RAILING HEIGHT AT A RATIO OF 120:1 TO TERMINAL SYSTEM END TREATMENT HEIGHT PLUS ONE 12'-6" STANDARD RAILING SECTION AT THE TRANSITIONED HEIGHT FOR A HORIZONTAL CONNECTION TO THE END TREATMENT.
12. EXISTING UTILITY FACILITIES ARE NOT SHOWN ON THESE PLANS.
13. PLACE RUB RAIL (GUARDRAIL ELEMENT) AND ATTACH TO POST WITH NO BLOCK WHEN HEIGHT OF GUARDRAIL IS 32" OR MORE ABOVE FINISHED GRADE UNDER FACE OF RAIL.

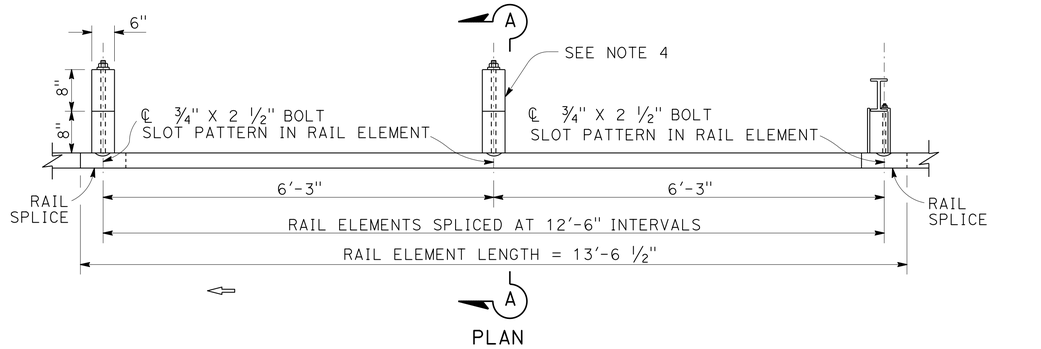

PLAN

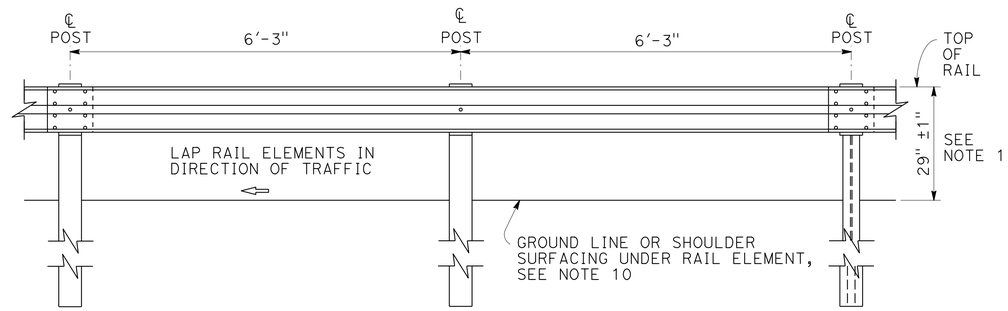

ELEVATION

GUARDRAIL

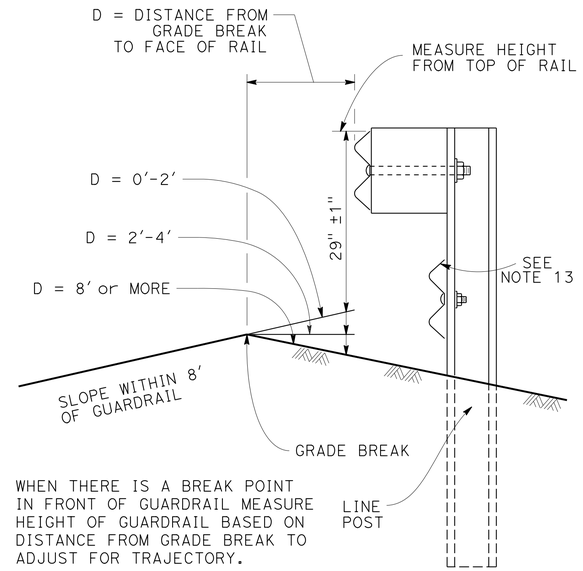

WHEN THERE IS A BREAK POINT IN FRONT OF GUARDRAIL MEASURE HEIGHT OF GUARDRAIL BASED ON DISTANCE FROM GRADE BREAK TO ADJUST FOR TRAJECTORY.

MEASURE HEIGHT DETAIL AT GRADE BREAK

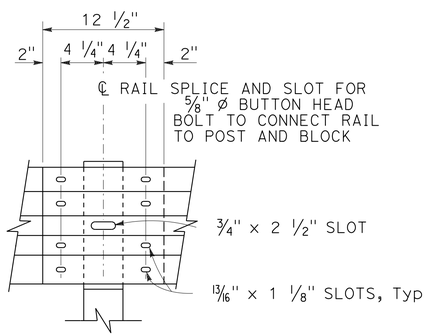

ELEVATION

RAIL ELEMENT SPLICE DETAIL

1. CONNECT THE OVER LAPPED END OF THE RAIL ELEMENTS WITH ⅝" ø x 1 ¾" BUTTON HEAD OVAL SHOULDER SPLICE BOLTS INSERTED INTO THE 13/16" x 1 ⅛" SLOTS AND BOLTED TOGETHER WITH ⅝" ø RECESSED HEX NUTS. RECESS OF HEX NUT POINTS TOWARD RAIL ELEMENT. A TOTAL OF 8 BOLTS AND NUTS ARE TO BE USED AT EACH RAIL SPLICE CONNECTION.
2. THE ENDS OF THE RAIL ELEMENTS ARE TO BE OVERLAPPED IN THE DIRECTION OF TRAFFIC (SEE DETAILS).
3. WHERE END CAP IS TO BE ATTACHED TO THE END OF A RAIL ELEMENT, A TOTAL OF 4 OF THE ABOVE DESCRIBED SPLICE BOLTS AND NUTS ARE TO BE USED.

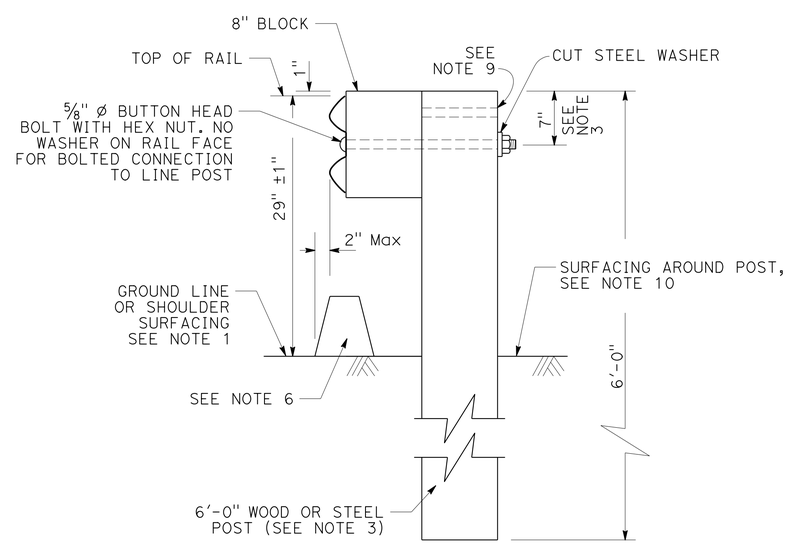

SECTION A-A

TYPICAL LINE POST INSTALLATION

SEE NOTE 4

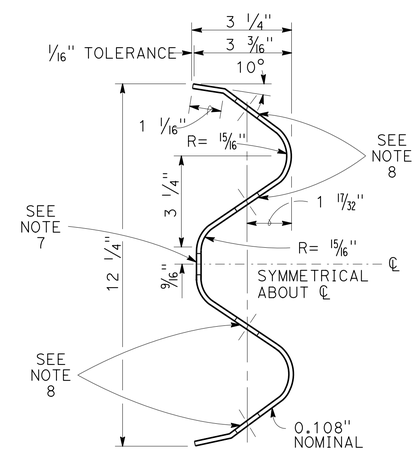

SECTION THRU RAIL ELEMENT

CONSTRUCTION DETAILS

NO SCALE

C-4

REVISED BY	DATE REVISED

CALCULATED-DESIGNED BY	CHECKED BY
MICHAEL CONNER	KARLIE SMITH

FUNCTIONAL SUPERVISOR: LANCE BROWN

STATE OF CALIFORNIA - DEPARTMENT OF TRANSPORTATION
Caltrans MAINTENANCE

P:\proj1\02\4G270_plans\pse\24g270ga004.dgn

LAST REVISION 02-10-14 | DATE PLOTTED => 18-FEB-2014 | TIME PLOTTED => 14:07

Dist	COUNTY	ROUTE	POST MILES TOTAL PROJECT	SHEET No.	TOTAL SHEETS
02	Sis	3	36.0/R46.9	7	20

REGISTERED CIVIL ENGINEER 02-10-14 DATE

02-10-14
PLANS APPROVAL DATE

REGISTERED PROFESSIONAL ENGINEER MICHAEL A. CONNER No. C73123 Exp. 12-31-14 CIVIL STATE OF CALIFORNIA

THE STATE OF CALIFORNIA OR ITS OFFICERS OR AGENTS SHALL NOT BE RESPONSIBLE FOR THE ACCURACY OR COMPLETENESS OF SCANNED COPIES OF THIS PLAN SHEET.

NOTES:

1. THESE INSTALLATION DETAILS ARE APPLICABLE TO WOOD AND STEEL LINE POST INSTALLATIONS. USE W6X9 FOR 7' STEEL POSTS.
2. SLOPE IN FRONT OF GUARDRAIL MUST BE 10:1 OR FLATTER.
3. W6 x 15 STEEL POST, 8'-0" IN LENGTH, WITH 8" NOTCHED BLOCKS MAY BE USED IN PLACE OF THE 10" x 10" x 8'-0" WOOD POST WITH 8" BLOCK SHOWN IN THE "STRENGTHENED RAILING SECTIONS DETAILS".
4. DIRECTION OF ADJACENT TRAFFIC INDICATED BY ⇦ .
5. EXISTING UTILITY FACILITIES ARE NOT SHOWN ON THESE PLANS.

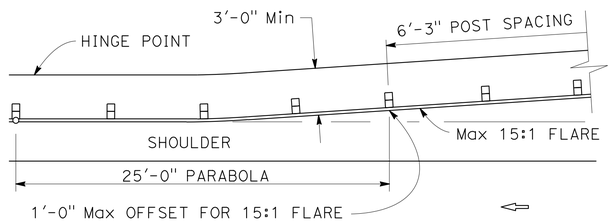

GUARDRAIL WITH FLARED ALIGNMENT

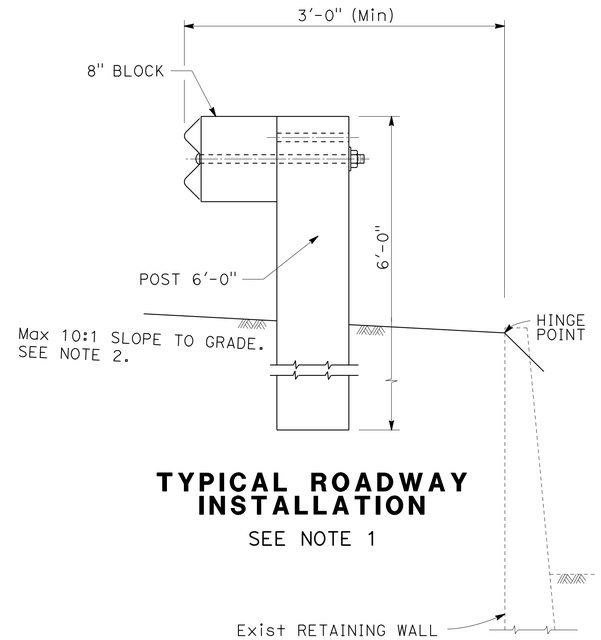

TYPICAL ROADWAY INSTALLATION

SEE NOTE 1

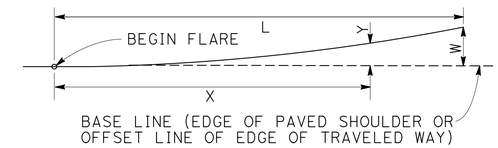

$$Y = \frac{WX^2}{L^2}$$

Y = OFFSET FROM BASE LINE
W = MAXIMUM OFFSET
X = DISTANCE ALONG BASE LINE
L = LENGTH OF FLARE

PARABOLIC FLARE OFFSETS

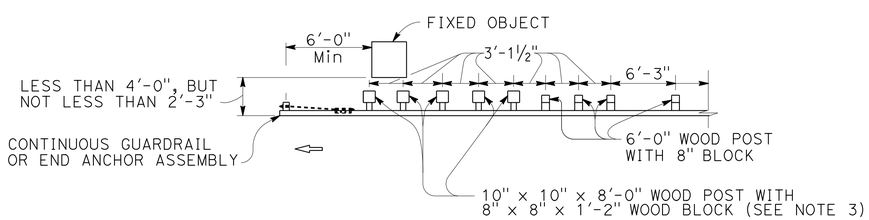

NOTE A: FOR A SERIES OF FIXED OBJECTS (BRIDGE COLUMNS, OVERHEAD SIGN SUPPORTS, Etc) ADDITIONAL 10" x 10" x 8'-0" WOOD POST WITH 8" x 8" x 1'-2" WOOD BLOCKS AT 3'-1 ½" CENTER TO CENTER SPACING ARE TO BE USED BETWEEN FIXED OBJECTS.

STRENGTHENED RAILING SECTIONS FOR FIXED OBJECT

USE STRENGTHENED RAILING SECTIONS WHERE MINIMUM CLEARANCE BETWEEN THE FACE OF THE GUARDRAIL AND FIXED OBJECT(S) IS LESS THAN 4'-0", BUT NOT LESS THAN 2'-3".

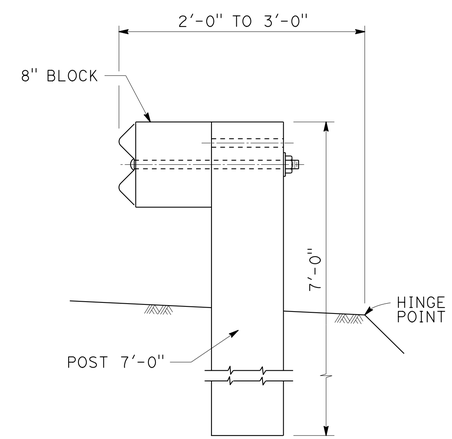

NARROW ROADWAY INSTALLATION

SEE NOTE 1

POST EMBEDMENT

CONSTRUCTON DETAILS

NO SCALE

C-5

REVISED BY | DATE REVISED
MICHAEL CONNER | KARLIE SMITH
CALCULATED-DESIGNED BY | CHECKED BY
FUNCTIONAL SUPERVISOR: LANCE BROWN

STATE OF CALIFORNIA - DEPARTMENT OF TRANSPORTATION
Caltrans MAINTENANCE

P:\proj1\02\4G270_plans\pse\24g270ga005.dgn

LAST REVISION 02-10-14 | DATE PLOTTED => 18-FEB-2014 | TIME PLOTTED => 14:07

Dist	COUNTY	ROUTE	POST MILES TOTAL PROJECT	SHEET No.	TOTAL SHEETS
02	Sis	3	36.0/R46.9	8	20

REGISTERED CIVIL ENGINEER 02-10-14 DATE

02-10-14
PLANS APPROVAL DATE

REGISTERED PROFESSIONAL ENGINEER MICHAEL A. CONNER No. C73123 Exp. 12-31-14 CIVIL STATE OF CALIFORNIA

THE STATE OF CALIFORNIA OR ITS OFFICERS OR AGENTS SHALL NOT BE RESPONSIBLE FOR THE ACCURACY OR COMPLETENESS OF SCANNED COPIES OF THIS PLAN SHEET.

NOTES:

1. EXACT LOCATION OF ALL SIGNS TO BE DETERMINED BY THE ENGINEER.
2. CALIFORNIA CODES ARE DESIGNATED BY (CA), OTHERWISE FEDERAL CODES ARE SHOWN.
3. INTERMEDIATE G20-1 SIGNS SHOULD BE PLACED EVERY 3 TO 5 MILES AS NECESSARY.

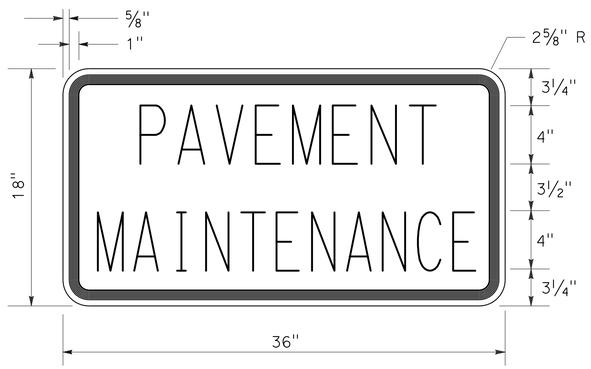

C23B(CA) SIGN PANEL DETAIL

CONSTRUCTION AREA SIGNS (STATIONARY MOUNTED)

TYPE	CODE	PANEL SIZE	SIGN MESSAGE	NUMBER AND SIZE OF POST	No. OF SIGNS
A	G20-1 C23B(CA)	36" x 18" 36" x 18"	ROAD WORK NEXT XX MILES PAVEMENT MAINTENANCE	1-4" x 6"	2
B	W20-1	48" x 48"	ROAD WORK AHEAD	1-4" x 6"	14
C	G20-1	36" x 18"	ROAD WORK NEXT XX MILES	1-4" x 4"	4
D	G20-2	36" x 18"	END ROAD WORK	1-4" x 4"	16

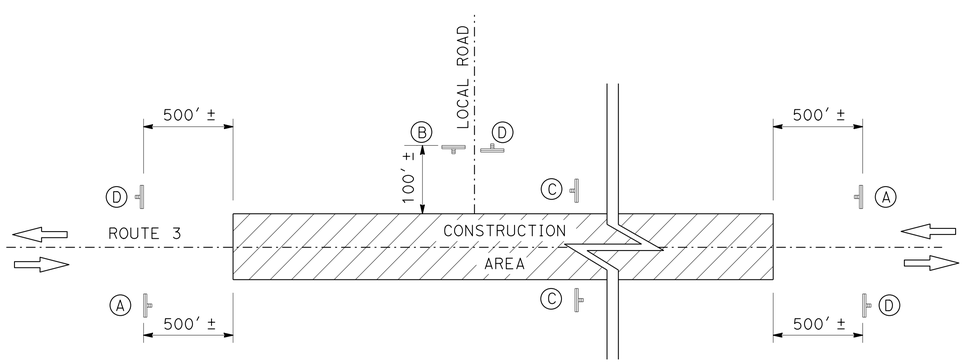

CONSTRUCTION AREA SIGNS (STATIONARY MOUNTED)

ROAD CONNECTIONS

POST MILE	DESCRIPTION	SIDE	B	D
36.31	OAK VIEW Ln	R†	1	1
36.69	MINERAL RANGE Rd	R†	1	1
36.84	AIR FORCE WAY	R†	1	1
36.37	BEAR SPRINGS Rd	R†	1	1
38.16	PEACH ORCHARD Rd	R†	1	1
38.30	WEST MOFFETT Cr Rd	L†	1	1
38.50	SOAP CREEK Rd	L†	1	1
38.57	PEACH ORCHARD Rd	R†	1	1
41.82	UPPER SOAP CREEK Rd	L†	1	1
R45.82	EASTMAN Ln	L†	1	1
R46.22	RICHMAN Ln	L†	1	1
R46.32	LAURA Ln	L†	1	1
R46.32	LAURA Ln	R†	1	1
R46.78	WESTSIDE Rd	R†	1	1

CONSTRUCTION AREA SIGNS

NO SCALE

CS-1

REVISED BY | DATE REVISED
MICHAEL CONNER | KARLIE SMITH
CALCULATED-DESIGNED BY | CHECKED BY
FUNCTIONAL SUPERVISOR | LANCE BROWN

STATE OF CALIFORNIA - DEPARTMENT OF TRANSPORTATION
Caltrans® MAINTENANCE

P:\proj\02\4G270_plans\pse\24g2701a001.dgn

LAST REVISION 02-10-14 | DATE PLOTTED => 18-FEB-2014 | TIME PLOTTED => 14:07

Dist	COUNTY	ROUTE	POST MILES TOTAL PROJECT	SHEET No.	TOTAL SHEETS
02	Sis	3	36.0/R46.9	9	20

REGISTERED CIVIL ENGINEER 02-10-14 DATE

02-10-14
PLANS APPROVAL DATE

REGISTERED PROFESSIONAL ENGINEER MICHAEL A. CONNER No. C73123 Exp. 12-31-14 CIVIL STATE OF CALIFORNIA

THE STATE OF CALIFORNIA OR ITS OFFICERS OR AGENTS SHALL NOT BE RESPONSIBLE FOR THE ACCURACY OR COMPLETENESS OF SCANNED COPIES OF THIS PLAN SHEET.

NOTE:

1. (N) - NOT A SEPARATE PAY ITEM, FOR INFORMATION ONLY.

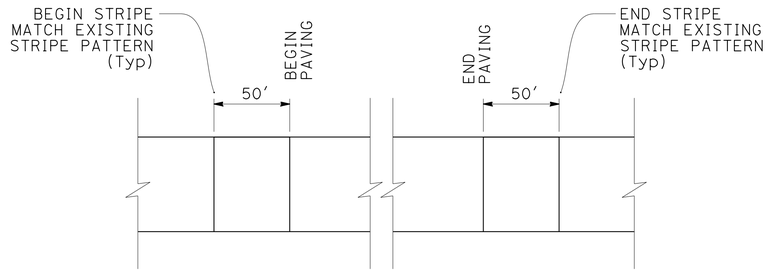

TRAFFIC STRIPE MATCH DETAIL

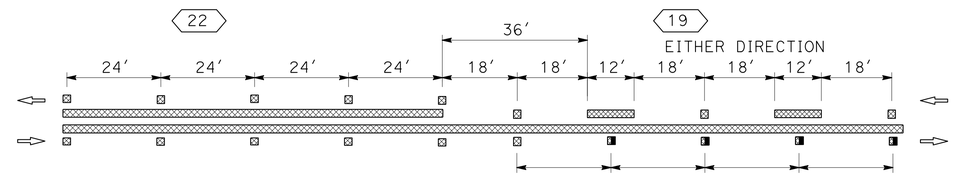

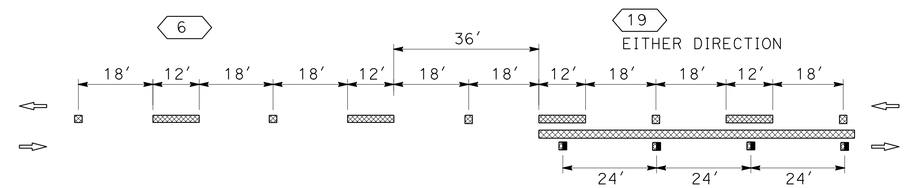

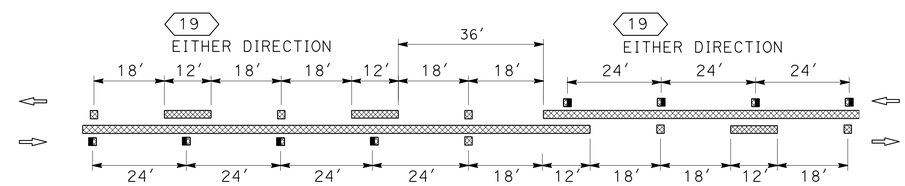

TYPICAL STRIPE TRANSITION DETAILS

PAVEMENT MARKER (RETROREFLECTIVE-RECESSED)

POST MILE LIMITS	TYPE D	TYPE G	TYPE H
	EA	EA	EA
36.00-R46.88	3327	239	382
TOTAL	3948		

THERMOPLASTIC PAVEMENT MARKING

POST MILE	L†	R†	(N) EA	SQFT	REMARKS
38.16		X	1	44.0	ROAD CONNECTION LIMIT LINE
38.16		X	1	22.0	STOP
38.30	X		1	56.0	ROAD CONNECTION LIMIT LINE
38.30	X		1	22.0	STOP
38.50	X		1	30.0	ROAD CONNECTION LIMIT LINE
38.50	X		1	22.0	STOP
38.57		X	1	38.0	ROAD CONNECTION LIMIT LINE
38.57		X	1	22.0	STOP
39.73		X	1	42.0	TYPE VI ARROW
39.76		X	1	42.0	TYPE VI ARROW
39.79		X	1	42.0	TYPE VI ARROW
41.55		X	1	42.0	TYPE VI ARROW
41.58		X	1	42.0	TYPE VI ARROW
41.61		X	1	42.0	TYPE VI ARROW
41.71	X		1	42.0	TYPE VI ARROW
41.74	X		1	42.0	TYPE VI ARROW
41.77	X		1	42.0	TYPE VI ARROW
41.82	X		1	28.0	ROAD CONNECTION LIMIT LINE
41.82	X		1	22.0	STOP
43.00	X		1	42.0	TYPE VI ARROW
43.04	X		1	42.0	TYPE VI ARROW
43.08	X		1	42.0	TYPE VI ARROW
R45.82	X		1	24.0	ROAD CONNECTION LIMIT LINE
R45.82	X		1	22.0	STOP
R46.22	X		1	32.0	ROAD CONNECTION LIMIT LINE
R46.22	X		1	22.0	STOP
R46.32	X	X	2	84.0	TYPE III (L) ARROW
R46.32	X	X	2	68.0	ROAD CONNECTION LIMIT LINE
R46.32	X	X	2	44.0	STOP
R46.76		X	1	42.0	TYPE III (R) ARROW
R46.78		X	1	42.0	TYPE III (R) ARROW
R46.78		X	2	56.0	ROAD CONNECTION LIMIT LINE
R46.78		X	1	22.0	STOP
R46.78	X		1	42.0	TYPE III (L) ARROW
R46.84	X		1	42.0	TYPE III (L) ARROW
TOTAL				1352.0	

REMOVE THERMOPLASTIC PAVEMENT MARKING

POST MILE	L†	R†	(N) EA	SQFT	REMARKS
38.16		X	1	44.0	ROAD CONNECTION LIMIT LINE
38.16		X	1	22.0	STOP
38.30	X		1	56.0	ROAD CONNECTION LIMIT LINE
38.30	X		1	22.0	STOP
38.50	X		1	30.0	ROAD CONNECTION LIMIT LINE
38.50	X		1	22.0	STOP
38.57		X	1	38.0	ROAD CONNECTION LIMIT LINE
38.57		X	1	22.0	STOP
39.73		X	1	42.0	TYPE VI ARROW
39.76		X	1	42.0	TYPE VI ARROW
39.79		X	1	42.0	TYPE VI ARROW
41.55		X	1	42.0	TYPE VI ARROW
41.58		X	1	42.0	TYPE VI ARROW
41.61		X	1	42.0	TYPE VI ARROW
41.71	X		1	42.0	TYPE VI ARROW
41.74	X		1	42.0	TYPE VI ARROW
41.77	X		1	42.0	TYPE VI ARROW
41.82	X		1	28.0	ROAD CONNECTION LIMIT LINE
41.82	X		1	22.0	STOP
43.00	X		1	42.0	TYPE VI ARROW
43.04	X		1	42.0	TYPE VI ARROW
43.08	X		1	42.0	TYPE VI ARROW
R45.82	X		1	24.0	ROAD CONNECTION LIMIT LINE
R45.82	X		1	22.0	STOP
R46.22	X		1	32.0	ROAD CONNECTION LIMIT LINE
R46.22	X		1	22.0	STOP
R46.32	X	X	2	84.0	TYPE III (L) ARROW
R46.32	X	X	2	68.0	ROAD CONNECTION LIMIT LINE
R46.32	X	X	2	44.0	STOP
R46.76		X	1	42.0	TYPE III (R) ARROW
R46.78		X	1	42.0	TYPE III (R) ARROW
R46.78		X	2	56.0	ROAD CONNECTION LIMIT LINE
R46.78		X	1	22.0	STOP
R46.78	X		1	42.0	TYPE III (L) ARROW
R46.84	X		1	42.0	TYPE III (L) ARROW
TOTAL				1352.0	

THERMOPLASTIC TRAFFIC STRIPE (SPRAYABLE)

POST MILE LIMITS	DETAIL 6	DETAIL 12	DETAIL 19	DETAIL 21	DETAIL 22	DETAIL 27B	DETAIL 27C	DETAIL 29	DETAIL 38
	LF	LF	LF	LF	LF	LF	LF	LF	LF
36.00-R46.88	17,636	7657	9135	33	32,472	116,530	1426	687	1849
TOTAL	187,425								

PAVEMENT DELINEATION DETAILS AND QUANTITIES

NO SCALE

PDQ-1

REVISED BY | DATE REVISED
MICHAEL CONNER | KARLIE SMITH
CALCULATED-DESIGNED BY | CHECKED BY
FUNCTIONAL SUPERVISOR
LANCE BROWN

STATE OF CALIFORNIA - DEPARTMENT OF TRANSPORTATION
Caltrans® MAINTENANCE

P:\proj1\02\40270_plans\pse\24g270nc001.dgn

LAST REVISION 02-10-14 | DATE PLOTTED => 18-FEB-2014 | TIME PLOTTED => 14:07

Dist	COUNTY	ROUTE	POST MILES TOTAL PROJECT	SHEET No.	TOTAL SHEETS
02	Sis	3	36.0/R46.9	10	20

REGISTERED CIVIL ENGINEER 02-10-14 DATE

02-10-14
PLANS APPROVAL DATE

REGISTERED PROFESSIONAL ENGINEER MICHAEL A. CONNER No. C73123 Exp. 12-31-14 CIVIL STATE OF CALIFORNIA

THE STATE OF CALIFORNIA OR ITS OFFICERS OR AGENTS SHALL NOT BE RESPONSIBLE FOR THE ACCURACY OR COMPLETENESS OF SCANNED COPIES OF THIS PLAN SHEET.

NOTES:

1. (N) - NOT A SEPARATE PAY ITEM, FOR INFORMATION ONLY.
2. EXACT LOCATIONS OF REPLACE ASPHALT CONCRETE SURFACING TO BE DETERMINED BY THE ENGINEER.

ABBREVIATIONS:

RHMA-SP-G	RUBBERIZED HOT MIX ASPHALT, SUPERPAVE (GAP GRADED)
HMA-SP (TYPE A)	HOT MIX ASPHALT, SUPERPAVE (TYPE A)

DIKE QUANTITIES

POST MILE LIMITS	SIDE	PLACE HMA DIKE (TYPE F)	REMOVE AC DIKE
		LF	LF
38.50-38.61	L+	581	581
42.22-42.35	L+	686	686
42.93-42.98	L+	264	264
44.05-44.24	R+	1003	1003
TOTAL		2534	2534

Exist LOOP DETECTORS TO REMAIN IN PLACE AND OPERATIONAL (N)

ID#	POST MILE	DESCRIPTION
237	R45.01	151' NORTH OF FOREST M+ RANCH Rd

GUARDRAIL ITEMS

POST MILE	SIDE R+/L+	RECONSTRUCT GUARDRAIL (STEEL POST)	RECONSTRUCT GUARDRAIL (7' POST) (STEEL POST)	RECONSTRUCT TERMINAL SYSTEM (TYPE SRT)	(N) Exist BURIED POST END ANCHOR *	(N) CONNECT TO Exist	RESET OBJECT MARKER	TREATED WOOD WASTE	REMARKS
		LF	LF	EA	EA	EA	EA	LB	
38.48	R+		475.2	1		1	2	6840	Exist VEGETATION CONTROL MAT
38.50	L+		580.8	2			2	8244	Exist VEGETATION CONTROL MAT
38.98	L+		792.0	1	1		2	11,225	Exist VEGETATION CONTROL MAT
40.57	L+	580.8		1	1		2	7066	Exist VEGETATION CONTROL MAT
40.84	R+	150.0	272.4	1	1		2	5626	
41.38	L+	844.8		1	1		2	10,298	
42.22	L+	186.4	500.0		2		2	9258	
42.59	R+	664.2	75.0	2			2	9041	
42.93	L+	264.0			2		2	3308	
43.73	R+	95.0	327.4	1	1		2	5737	
44.05	R+	1003.2		1	1		2	12,177	
44.09	L+	686.4		2			2	8344	
TOTAL		4474.8	3022.8	13			24	97,164	

* SEE BURIED POST END ANCHOR DETAIL ON SHEET C-2

ROADWAY QUANTITIES

POST MILE LIMITS	(N) WIDTH	(N) LENGTH	RHMA-SP-G	HMA-SP (TYPE A)	TACK COAT	SHOULDER BACKING
PM - PM	LF	LF	TON	TON	TON	TON
36.00-36.70	32-33	3696.0				
36.70-37.00	33-33	1584.0				
37.00-37.50	33-34	2640.0				
37.50-38.00	34-33	2640.0				
38.00-38.26	33-30.5	1372.8				
38.28-38.59	31-31	1636.8				
38.59-39.00	31-31	2164.8				
39.00-39.13	31-35	686.4				
39.13-39.19	35-41	316.8				
39.19-39.83	41-42	3379.2				
39.83-39.91	42-30	422.4				
39.91-40.50	30-31	3115.2				
40.50-40.93	31-32	2270.4				
40.93-41.30	32-32	1953.6				
41.30-41.31	32-38	52.8				
41.31-41.36	38-42	264.0				
41.36-41.69	42-44	1742.4				
41.69-41.89	44-36	1056.0				
41.89-41.95	36-36	316.8				
41.95-42.75	36-34	4224.0	15,896		69	3980
42.75-42.98	34-34	1214.4				
42.98-43.00	34-40	105.6				
43.00-43.34	40-40	1795.2				
43.34-43.40	40-33	316.8				
43.40-43.50	33-33	528.0				
43.50-43.86	33-32	1900.8				
43.86-44.88	32-29	5385.6				
44.88-45.00	29-30	633.6				
45.00-45.21	30-35	1124.6				
R44.89-R45.00	35-42	596.6				
R45.00-R45.50	42-41	2640.0				
R45.50-R46.00	41-42	2640.0				
R46.00-R46.23	42-43	1214.4				
R46.23-R46.33	43-53	528.0				
R46.33-R46.45	53-43	633.6				
R46.45-R46.59	43-42	739.2				
R46.59-R46.71	42-59	633.6				
R46.71-R46.88	59-65	897.6				
ROAD CONNECTIONS/DRIVEWAYS/PULLOUTS			1191		10	159
DIKE				34		
TOTAL			17,087	34	79	4139

REPLACE ASPHALT CONCRETE SURFACING

POST MILE LIMITS	(N) Approx No. OF DIGOUTS	(N) LENGTH Avg	(N) WIDTH	(N) DEPTH	REPLACE ASPHALT CONCRETE SURFACING
PM - PM		LF	LF	LF	CY
36.00-37.00	10	100	4	0.33	49
37.00-38.00	10	100	4	0.33	49
38.00-39.00	10	100	4	0.33	49
39.00-40.00	10	100	4	0.33	49
40.00-41.00	10	100	4	0.33	49
41.00-42.00	10	100	4	0.33	49
42.00-43.00	10	100	4	0.33	49
43.00-44.00	10	100	4	0.33	49
44.00-45.21	10	100	4	0.33	49
R44.89-R46.00	10	100	4	0.33	49
R46.00-R46.88	10	100	4	0.33	49
TOTAL					539

COLD PLANE ASPHALT CONCRETE PAVEMENT

POST MILE	(N) LENGTH	(N) WIDTH	AREA	REMARKS
	LF	LF	SQYD	
36.00	40	32	142	MAINLINE CONFORM TAPER
38.16	8	40	36	ROAD CONNECTION CONFORM TAPER - R+
38.24	120	30.5	407	MOFFETT CREEK Br BB CONFORM TAPER
38.28	120	31	413	MOFFETT CREEK Br EB CONFORM TAPER
38.30	8	73	65	ROAD CONNECTION CONFORM TAPER - L+
38.57	8	23	20	ROAD CONNECTION CONFORM TAPER - R+
R45.82	8	17	15	ROAD CONNECTION CONFORM TAPER - L+
R46.23	8	35	31	ROAD CONNECTION CONFORM TAPER - L+
R46.33	8	44	39	ROAD CONNECTION CONFORM TAPER - L+
R46.33	8	35	31	ROAD CONNECTION CONFORM TAPER - R+
R46.78	8	62	55	ROAD CONNECTION CONFORM TAPER - R+
R46.88	40	65	289	MAINLINE CONFORM TAPER
TOTAL			1543	

ASPHALTIC EMULSION (FOG SEAL COAT)

POST MILE LIMITS	SIDE R+/L+	(N) WIDTH	(N) LENGTH	ASPHALTIC EMULSION (FOG SEAL COAT)
PM - PM		LF	LF	TON
38.32-38.45	L+	5	686	
38.64-38.98	R+	5	1795	
39.04-39.20	R+	5	845	
39.30-39.42	R+	5	634	
39.45-39.58	L+	5	686	
39.47-39.67	R+	5	1056	
39.81-40.00	R+	5	1003	
39.91-39.97	L+	5	317	
40.04-40.20	R+	5	845	
40.27-40.33	L+	5	317	
40.27-40.38	R+	5	581	
40.48-40.54	R+	5	317	
40.64-40.80	R+	5	845	
40.70-40.76	L+	5	317	
40.90-41.19	R+	5	1531	7.6
41.05-41.11	L+	5	317	
41.27-41.72	R+	5	2376	
41.47-41.75	L+	5	1478	
41.85-42.12	L+	5	1426	
42.03-42.16	R+	5	686	
42.25-42.30	L+	5	264	
42.40-42.82	L+	5	2218	
42.89-43.12	L+	5	1214	
43.23-43.42	L+	5	1003	
43.52-43.87	L+	5	1848	
43.95-44.02	L+	5	370	
44.20-44.26	L+	5	317	
44.32-44.55	L+	5	1214	
44.68-44.86	L+	5	950	
TOTAL				7.6

SUMMARY OF QUANTITIES

Q-1

REVISED BY | DATE REVISED

MICHAEL CONNER | KARLIE SMITH

CALCULATED-DESIGNED BY | CHECKED BY

FUNCTIONAL SUPERVISOR: LANCE BROWN

STATE OF CALIFORNIA - DEPARTMENT OF TRANSPORTATION
Caltrans® MAINTENANCE

P:\proj\02\40270_plans\pse\24g270pa001.dgn

LAST REVISION 02-10-14 | DATE PLOTTED => 18-FEB-2014 | TIME PLOTTED => 14:07

M

Maint	MAINTENANCE
Max	MAXIMUM
MB	METAL BEAM
MBB	METAL BEAM BARRIER
MBGR	METAL BEAM GUARD RAILING
Med	MEDIAN
MGS	MIDWEST GUARDRAIL SYSTEM
MH	MANHOLE
Min	MINIMUM
Misc	MISCELLANEOUS
Misc I & S	MISCELLANEOUS IRON AND STEEL
Mkr	MARKER
Mod	MODIFIED,
	MODIFY
Mon	MONUMENT
MP	METAL PLATE
MPGR	METAL PLATE GUARD RAILING
MR	MOVEMENT RATING
MSE	MECHANICALLY STABILIZED EMBANKMENT
Mt	MOUNTAIN, MOUNT
Mtl	MATERIAL
MVP	MAINTENANCE VEHICLE PULLOUT

N

N	NORTH
NB	NORTHBOUND
No.	NUMBER (MUST HAVE PERIOD)
Nos.	NUMBERS (MUST HAVE PERIOD)
NPS	NOMINAL PIPE SIZE
NS	NEAR SIDE
NSP	NEW STANDARD PLAN
NTS	NOT TO SCALE

O

Oblr	OBLITERATE
OC	OVERCROSSING
OD	OUTSIDE DIAMETER
OF	OUTSIDE FACE
OG	ORIGINAL GROUND
OGAC	OPEN GRADED ASPHALT CONCRETE
OGFC	OPEN GRADED FRICTION COURSE
OH	OVERHEAD
OHWM	ORDINARY HIGH WATER MARK
O-O	OUT TO OUT
Opp	OPPOSITE
OSD	OVERSIDE DRAIN

P

P	PAGE
PAP	PERFORATED ALUMINUM PIPE
PB	PULL BOX
PC	POINT OF CURVATURE,
	PRECAST
PCC	POINT OF COMPOUND CURVE,
	PORTLAND CEMENT CONCRETE
PCMS	PORTABLE CHANGEABLE MESSAGE SIGN
PCP	PERFORATED CONCRETE PIPE,
	PRESTRESSED CONCRETE PIPE
PCVC	POINT OF COMPOUND VERTICAL CURVE
PEC	PERMIT TO ENTER AND CONSTRUCT
Ped	PEDESTRIAN
Ped OC	PEDESTRIAN OVERCROSSING
Ped UC	PEDESTRIAN UNDERCROSSING
Perm Mtl	PERMEABLE MATERIAL

P continued

PG	PROFILE GRADE
PI	POINT OF INTERSECTION
PJP	PARTIAL JOINT PENETRATION
Pkwy	PARKWAY
₱,PL	PLATE
P/L	PROPERTY LINE
PM	POST MILE,
	TIME FROM NOON TO MIDNIGHT
PN	PAVING NOTCH
POC	POINT OF HORIZONTAL CURVE
POT	POINT OF TANGENT
POVC	POINT OF VERTICAL CURVE
PP	PIPE PILE,
	PLASTIC PIPE,
	POWER POLE
PPL	PREFORMED PERMEABLE LINER
PPP	PERFORATED PLASTIC PIPE
PRC	POINT OF REVERSE CURVE
PRF	PAVEMENT REINFORCING FABRIC
PRVC	POINT OF REVERSE VERTICAL CURVE
PS&E	PLANS, SPECIFICATIONS AND ESTIMATES
PS, P/S	PRESTRESSED
PSP	PERFORATED STEEL PIPE
PT	POINT OF TANGENCY
PVC	POLYVINYL CHLORIDE
Pvmt	PAVEMENT

Q

Qty	QUANTITY

R

R	RADIUS
R & D	REMOVE AND DISPOSE
R & S	REMOVE AND SALVAGE
R/C	RATE OF CHANGE
RCA	REINFORCED CONCRETE ARCH
RCB	REINFORCED CONCRETE BOX
RCP	REINFORCED CONCRETE PIPE
RCPA	REINFORCED CONCRETE PIPE ARCH
Rd	ROAD
Reinf	REINFORCED,
	REINFORCEMENT,
	REINFORCING
Rel	RELOCATE
Repl	REPLACEMENT
Ret	RETAINING
Rev	REVISED, REVISION
Rdwy	ROADWAY
RHMA	RUBBERIZED HOT MIX ASPHALT
Riv	RIVER
RM	ROAD-MIXED
RP	RADIUS POINT,
	REFERENCE POINT
RR	RAILROAD
RSP	ROCK SLOPE PROTECTION,
	REVISED STANDARD PLAN
Rt	RIGHT
Rte	ROUTE
RW	REDWOOD,
	RETAINING WALL
R/W	RIGHT OF WAY
Rwy	RAILWAY

S

S	SOUTH,
	SUPPLEMENT
SAE	STRUCTURE APPROACH EMBANKMENT
Salv	SALVAGE
SAPP	STRUCTURAL ALUMINUM PLATE PIPE
SB	SOUTHBOUND
SC	SAND CUSHION
SCSP	SLOTTED CORRUGATED STEEL PIPE
SD	STORM DRAIN
Sec	SECOND,
	SECTION
Sep	SEPARATION
SG	SUBGRADE
Shld	SHOULDER
Sht	SHEET
Sim	SIMILAR
₺	STATION LINE
SM	SELECTED MATERIAL
Spec	SPECIAL,
	SPECIFICATIONS
SPP	SLOTTED PLASTIC PIPE
SS	SLOPE STAKE
SSBM	STRAP AND SADDLE BRACKET METHOD
SSD	STRUCTURAL SECTION DRAIN
SSPA	STRUCTURAL STEEL PLATE ARCH
SSPP	STRUCTURAL STEEL PLATE PIPE
SSPPA	STRUCTURAL STEEL PLATE PIPE ARCH
SSRP	STEEL SPIRAL RIB PIPE
St	STREET
Sta	STATION
STBB	SINGLE THRIE BEAM BARRIER
Std	STANDARD
Str	STRUCTURE
Surf	SURFACING
SW	SIDEWALK,
	SOUND WALL
Swr	SEWER
Sym	SYMMETRICAL
S4S	SURFACE 4 SIDES

T

T	SEMI-TANGENT
Tan	TANGENT
TBB	THRIE BEAM BARRIER
Tbr	TIMBER
TC	TOP OF CURB
TCB	TRAFFIC CONTROL BOX
TCE	TEMPORARY CONSTRUCTION EASEMENT
Tel	TELEPHONE
Temp	TEMPORARY
TG	TOP OF GRADE
Tot	TOTAL
TP	TELEPHONE POLE
TPB	TREATED PERMEABLE BASE
TPM	TREATED PERMEABLE MATERIAL
Trans	TRANSITION

T continued

TS	TRANSVERSE,
	TRAFFIC SIGNAL,
	TUBULAR STEEL
Typ	TYPICAL

U

UC	UNDERCROSSING
UD	UNDERDRAIN
UG	UNDERGROUND
UON	UNLESS OTHERWISE NOTED
UP	UNDERPASS

V

V	VALVE,
	DESIGN SPEED
Var	VARIABLE,
	VARIES
VC	VERTICAL CURVE
VCP	VITRIFIED CLAY PIPE
Vert	VERTICAL
Via	VIADUCT
Vol	VOLUME

W

W	WEST,
	WIDTH
WB	WESTBOUND
WH	WEEP HOLE
WM	WIRE MESH
WS	WATER SURFACE
WSP	WELDED STEEL PIPE
Wt	WEIGHT
WV	WATER VALVE
WW	WINGWALL
WWLOL	WINGWALL LAYOUT LINE

X

X Sec	CROSS SECTION
Xing	CROSSING

Y

Yr	YEAR
Yrs	YEARS

Dist	COUNTY	ROUTE	POST MILES TOTAL PROJECT	SHEET No.	TOTAL SHEETS
02	Sis	3	36.0/R46.9	11	20

Grace M. Tsushima
REGISTERED CIVIL ENGINEER

July 19, 2013
PLANS APPROVAL DATE

REGISTERED PROFESSIONAL ENGINEER Grace M. Tsushima No. C49814 Exp. 9-30-14 CIVIL STATE OF CALIFORNIA

THE STATE OF CALIFORNIA OR ITS OFFICERS OR AGENTS SHALL NOT BE RESPONSIBLE FOR THE ACCURACY OR COMPLETENESS OF SCANNED COPIES OF THIS PLAN SHEET.

TO ACCOMPANY PLANS DATED 02-10-14

2010 REVISED STANDARD PLAN RSP A10B

UNIT OF MEASUREMENT SYMBOLS:

Some of the symbols used in the project plan quantity tables and in the Bid Item List are:

TABLE A

SYMBOL USED	DEFINITIONS
ACRE	ACRE
CF	CUBIC FOOT
CY	CUBIC YARD
EA	EACH
GAL	GALLON
LB	POUND
LF	LINEAR FOOT
SQFT	SQUARE FOOT
SQYD	SQUARE YARD
STA	100 FEET
TAB	TABLET
TON	2,000 POUNDS

Some of the symbols used in the plans other than in the project plan quantity tables are:

TABLE B

SYMBOL USED	DEFINITIONS
ksi	KIPS PER SQUARE INCH
ksf	KIPS PER SQUARE FOOT
psi	POUNDS PER SQUARE INCH
psf	POUNDS PER SQUARE FOOT
lb/ft^3, pcf	POUNDS PER CUBIC FOOT
tsf	TONS PER SQUARE FOOT
mph, MPH *	MILES PER HOUR
ø	NOMINAL DIAMETER
oz	OUNCE
lb	POUND
kip	1,000 POUNDS
cal	CALORIE
ft	FOOT OR FEET
gal	GALLON

* For use on a sign panel only

STATE OF CALIFORNIA
DEPARTMENT OF TRANSPORTATION

ABBREVIATIONS (SHEET 2 OF 2)

NO SCALE

RSP A10B DATED JULY 19, 2013 SUPERSEDES STANDARD PLAN A10B DATED MAY 20, 2011 - PAGE 2 OF THE STANDARD PLANS BOOK DATED 2010.

REVISED STANDARD PLAN RSP A10B

DATE PLOTTED => 18-FEB-2014
TIME PLOTTED => 14:07

Dist	COUNTY	ROUTE	POST MILES TOTAL PROJECT	SHEET No.	TOTAL SHEETS
02	Sis	3	36.0/R46.9	12	20

REGISTERED CIVIL ENGINEER

April 20, 2012
PLANS APPROVAL DATE

REGISTERED PROFESSIONAL ENGINEER
Roberta L. McLaughlin
No. C40375
Exp. 3-31-13
CIVIL
STATE OF CALIFORNIA

THE STATE OF CALIFORNIA OR ITS OFFICERS OR AGENTS SHALL NOT BE RESPONSIBLE FOR THE ACCURACY OR COMPLETENESS OF SCANNED COPIES OF THIS PLAN SHEET.

TO ACCOMPANY PLANS DATED 02-10-14

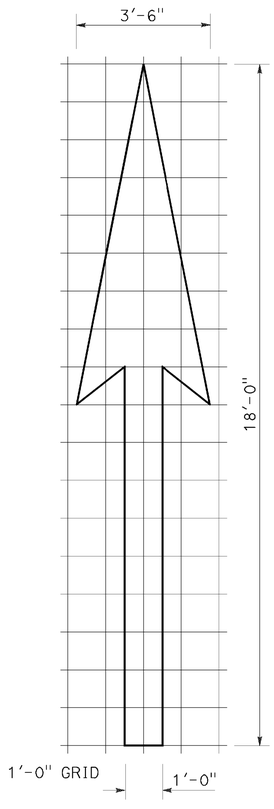

A=25 ft²

TYPE I 18'-0" ARROW

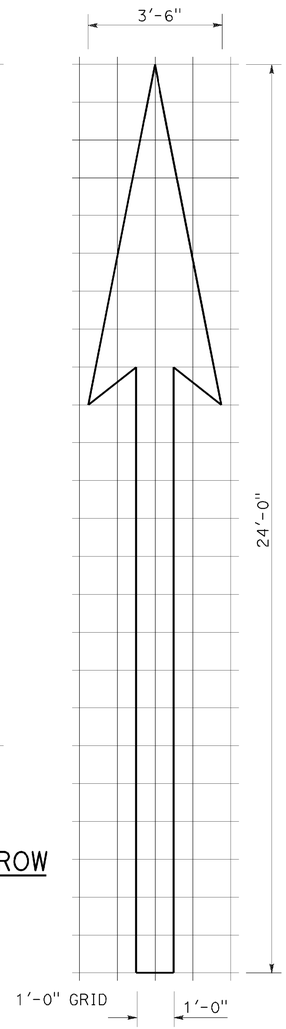

A=31 ft²

TYPE I 24'-0" ARROW

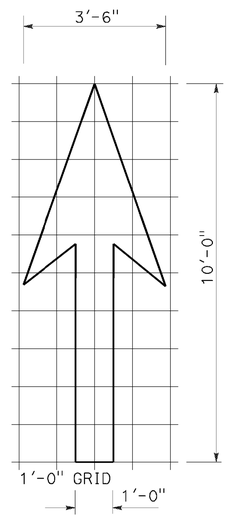

A=14 ft²

TYPE I 10'-0" ARROW

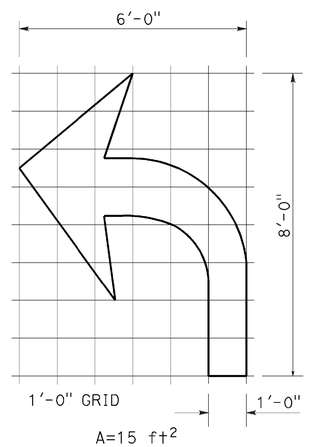

A=15 ft²

TYPE IV (L) ARROW

(For Type IV (R) arrow, use mirror image)

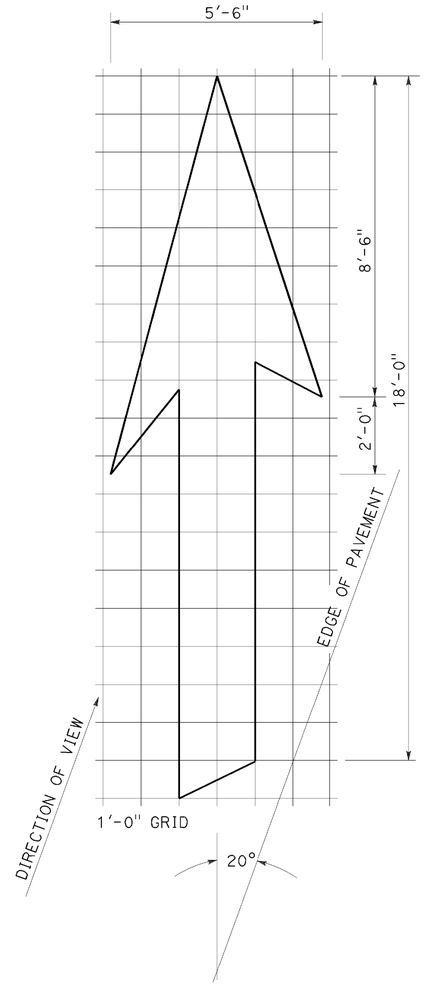

A=42 ft²

TYPE VI ARROW

Right lane drop arrow
(For left lane, use mirror image)

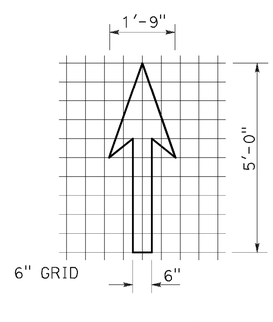

A=3.5 ft²

BIKE LANE ARROW

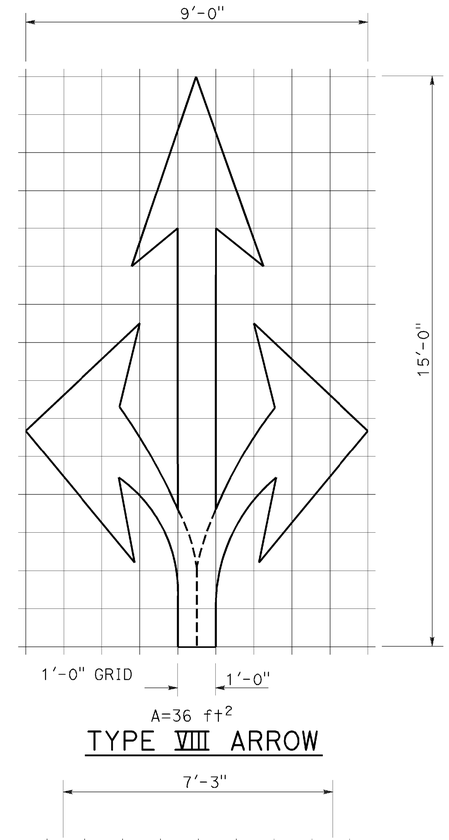

A=36 ft²

TYPE VIII ARROW

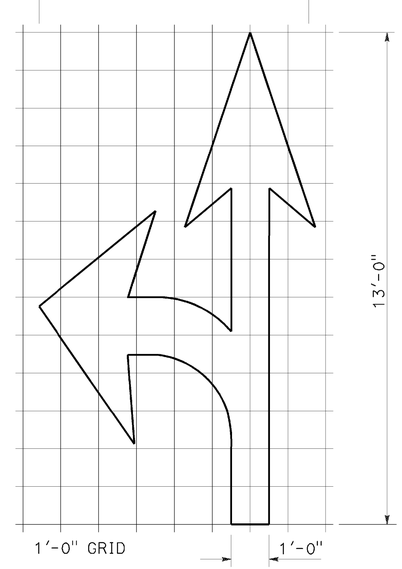

A=27 ft²

TYPE VII (L) ARROW

(For Type VII (R) arrow, use mirror image)

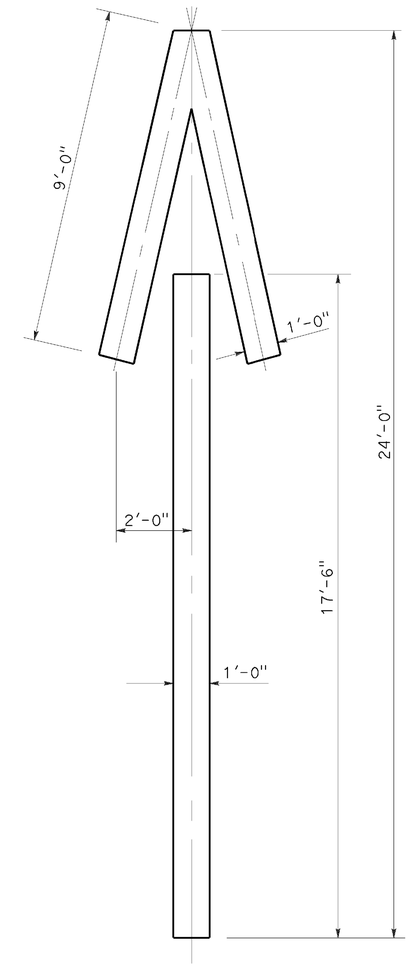

A=33 ft²

TYPE V ARROW

NOTE:
Minor variations in dimensions may be accepted by the Engineer.

STATE OF CALIFORNIA
DEPARTMENT OF TRANSPORTATION

PAVEMENT MARKINGS ARROWS

NO SCALE

RSP A24A DATED APRIL 20, 2012 SUPERSEDES STANDARD PLAN A24A DATED MAY 20, 2011 - PAGE 13 OF THE STANDARD PLANS BOOK DATED 2010.

REVISED STANDARD PLAN RSP A24A

2010 REVISED STANDARD PLAN RSP A24A

DATE PLOTTED => 18-FEB-2014
TIME PLOTTED => 14:07

Dist	COUNTY	ROUTE	POST MILES TOTAL PROJECT	SHEET No.	TOTAL SHEETS
02	Sis	3	36.0/R46.9	13	20

REGISTERED CIVIL ENGINEER

July 20, 2012
PLANS APPROVAL DATE

REGISTERED PROFESSIONAL ENGINEER
Roberta L. McLaughlin
No. C40375
Exp. 3-31-13
CIVIL
STATE OF CALIFORNIA

THE STATE OF CALIFORNIA OR ITS OFFICERS OR AGENTS SHALL NOT BE RESPONSIBLE FOR THE ACCURACY OR COMPLETENESS OF SCANNED COPIES OF THIS PLAN SHEET.

TO ACCOMPANY PLANS DATED 02-10-14

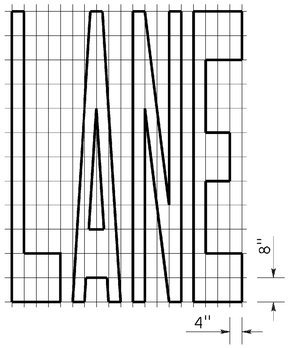

A=24 ft^2

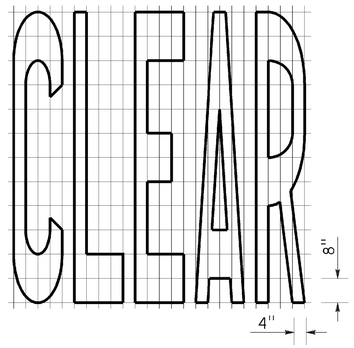

A=27 ft^2

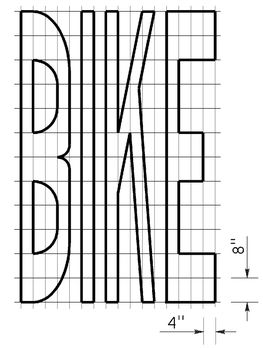

A=21 ft^2

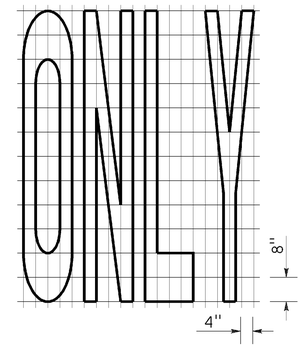

A=22 ft^2

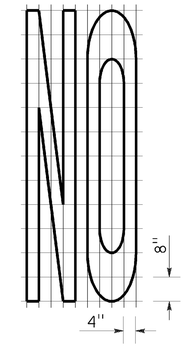

A=14 ft^2

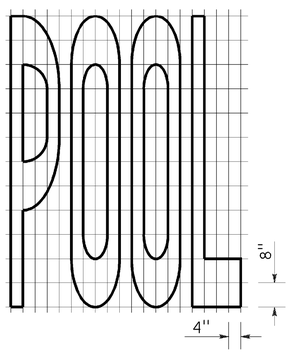

A=23 ft^2

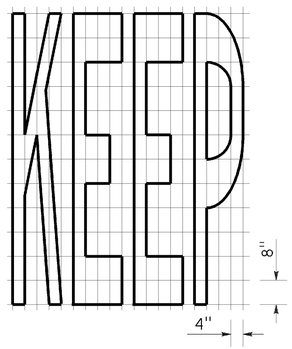

A=24 ft^2

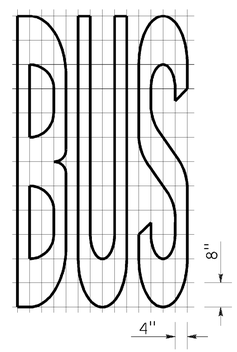

A=20 ft^2

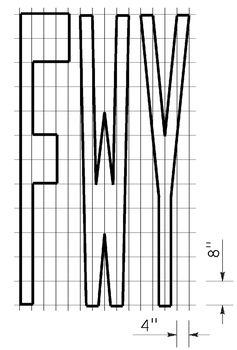

A=16 ft^2

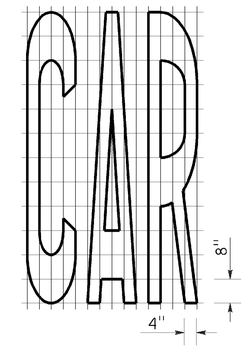

A=17 ft^2

WORD MARKINGS			
ITEM	ft^2	ITEM	ft^2
LANE	24	NO	14
POOL	23	BIKE	21
CAR	17	BUS	20
CLEAR	27	ONLY	22
KEEP	24	FWY	16

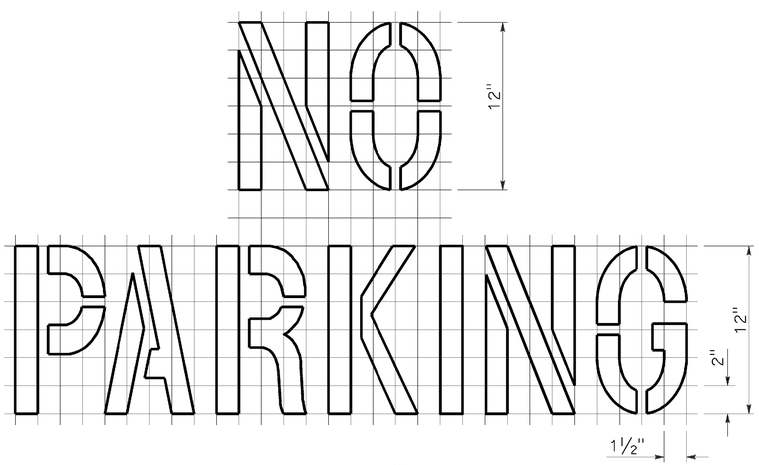

A=2 ft^2

See Notes 6 and 7

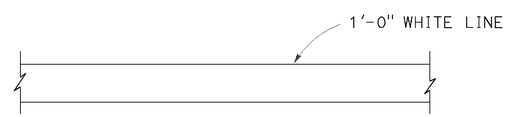

LIMIT LINE (STOP LINE)

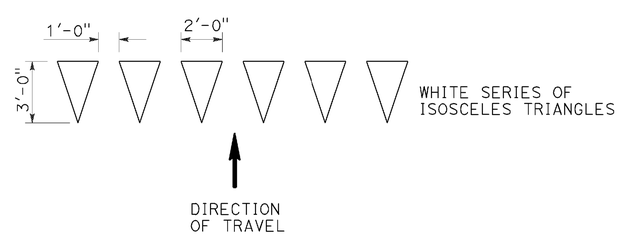

YIELD LINE

NOTES:

1. If a message consists of more than one word, it should read "UP", i.e., the first word should be nearest the driver.
2. The space between words should be at least four times the height of the characters for low speed roads, but not more than ten times the height of the characters. The space may be reduced appropriately where there is limited space because of local conditions.
3. Minor variations in dimensions may be accepted by the Engineer.
4. Portions of a letter, number or symbol may be separated by connecting segments not to exceed 2" in width.
5. The words "NO PARKING" pavement marking is to be used for parking facilities. For typical locations of markings, see Standard Plans A90A and A90B.
6. The words "NO PARKING", shall be painted in white letters no less than 1'-0" high on a contrasting background and located so that it is visible to traffic enforcement officials.

STATE OF CALIFORNIA
DEPARTMENT OF TRANSPORTATION

PAVEMENT MARKINGS WORDS, LIMIT AND YIELD LINES

NO SCALE

RSP A24E DATED JULY 20, 2012 SUPERSEDES STANDARD PLAN A24E
DATED MAY 20, 2011 - PAGE 17 OF THE STANDARD PLANS BOOK DATED 2010.

REVISED STANDARD PLAN RSP A24E

2010 REVISED STANDARD PLAN RSP A24E

DATE PLOTTED => 18-FEB-2014
TIME PLOTTED => 14:07

Dist	COUNTY	ROUTE	POST MILES TOTAL PROJECT	SHEET No.	TOTAL SHEETS
02	Sis	3	36.0/R46.9	14	20

Randell D. Hiatt
REGISTERED CIVIL ENGINEER

July 19, 2013
PLANS APPROVAL DATE

REGISTERED PROFESSIONAL ENGINEER
Randell D. Hiatt
No. C50200
Exp. 6-30-15
CIVIL
STATE OF CALIFORNIA

THE STATE OF CALIFORNIA OR ITS OFFICERS OR AGENTS SHALL NOT BE RESPONSIBLE FOR THE ACCURACY OR COMPLETENESS OF SCANNED COPIES OF THIS PLAN SHEET.

TO ACCOMPANY PLANS DATED 02-10-14

2010 REVISED STANDARD PLAN RSP A77L3

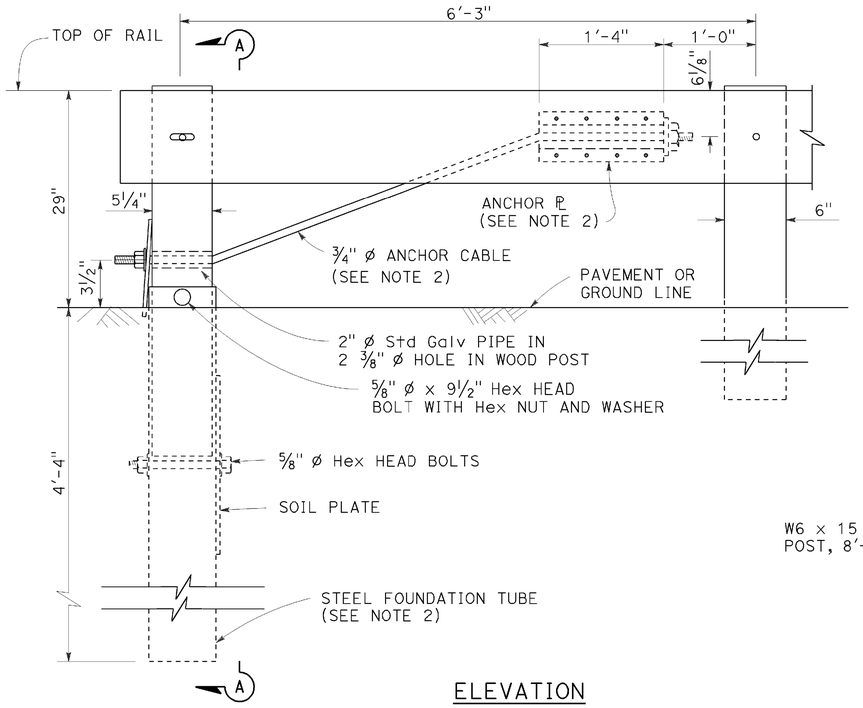

ELEVATION
END ANCHOR
ASSEMBLY (TYPE SFT)

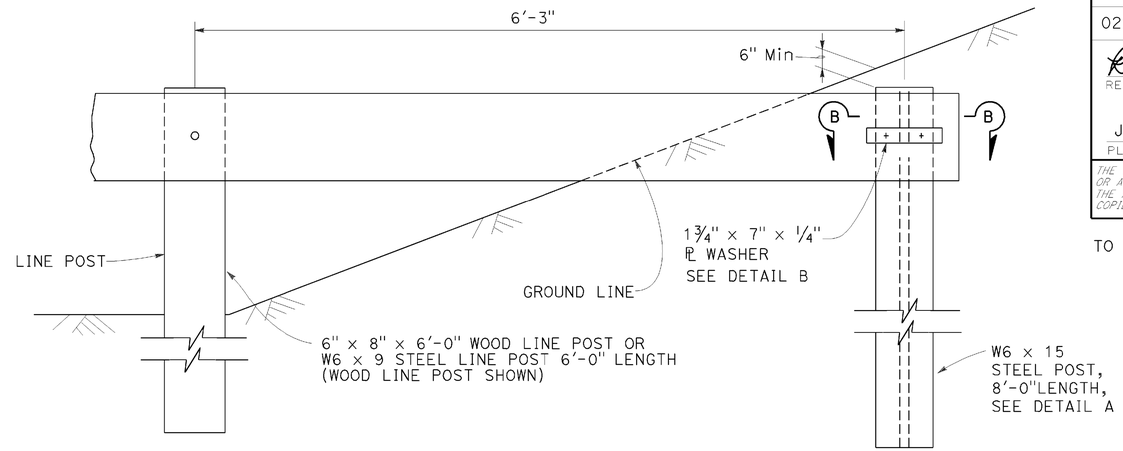

BURIED POST END ANCHOR

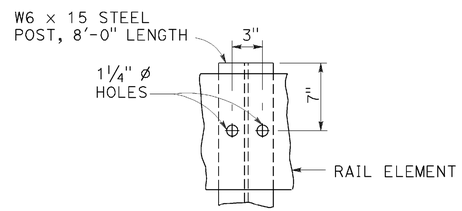

DETAIL A

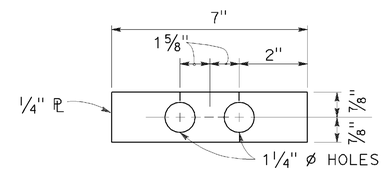

DETAIL B

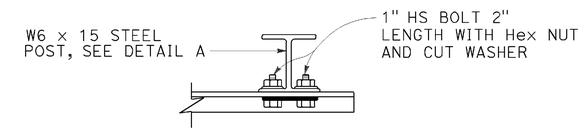

SECTION B-B

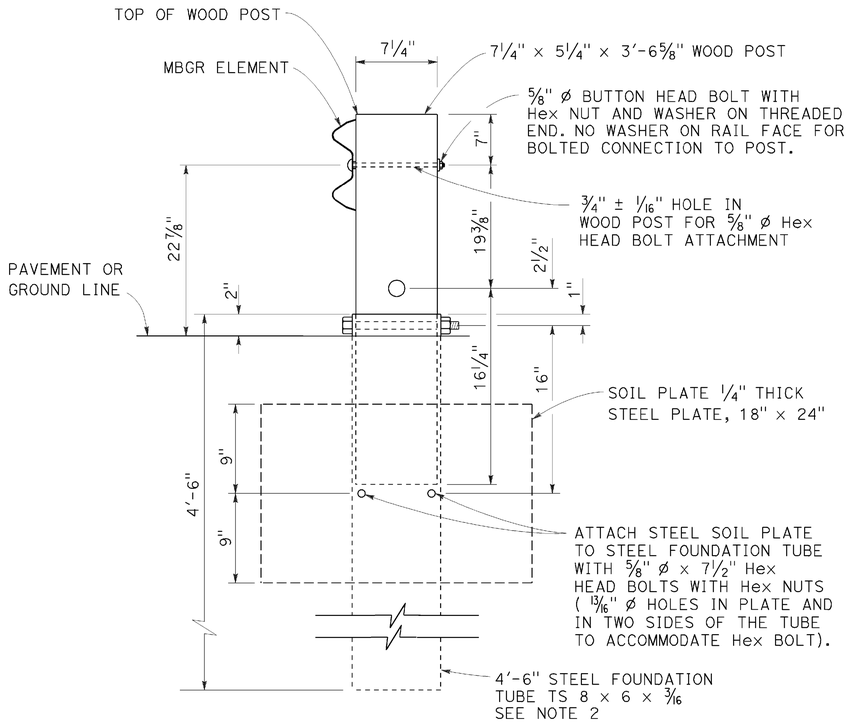

SECTION A-A

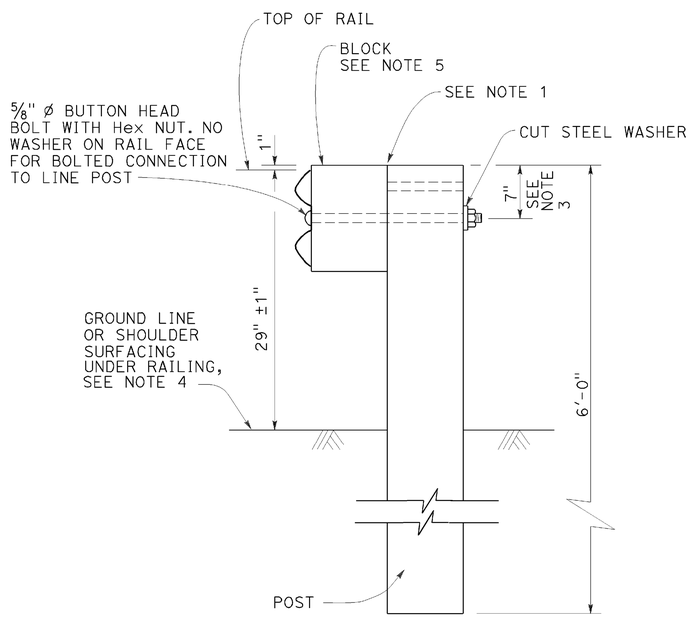

TYPICAL LINE
POST INSTALLATION

NOTES:

1. For wood post and wood block, toenail with 2-16d Galv nails in top of block. For steel post and notched wood or plastic block, notched face of block faces steel post.
2. A 6'-0" Length steel foundation tube, TS 8 x 6 x 3/16, without a soil plate, may be furnished and installed in place of the 4'-6" length steel foundation tube and soil plate shown, Minimum embadment of the 6'-0" length tube shall be 5'-9". A 5/8" ø Hex head bolt and nut shall be installed in the hole in the 6'-0" length tube to keep the wood post from dropping into the tube.
3. To connect railing to 27" terminal system end treatment, transition the top of railing height at a ratio of 120:1 to terminal system end treatment height plus one 12'-6" standard railing section at the transitioned height for a horizontal connection to the end treatment.
4. Install posts in soil.
5. See Revised Standard Plans RSP A77N1 and RSP A77N2 for details.
6. Holes excavation in the slope to construct the buried post end anchor shall be backfilled with selected earth, placed in layers approximately 1'-0" thick. Each layer shall be moistened and thoroughly compacted.

STATE OF CALIFORNIA
DEPARTMENT OF TRANSPORTATION

METAL BEAM GUARD RAILING RECONSTRUCT INSTALLATION

NO SCALE

RSP A77L3 DATED JULY 19, 2013 SUPPLEMENTS THE STANDARD PLANS BOOK DATED 2010.

REVISED STANDARD PLAN RSP A77L3

DATE PLOTTED => 18-FEB-2014
TIME PLOTTED => 14:08

Dist	COUNTY	ROUTE	POST MILES TOTAL PROJECT	SHEET No.	TOTAL SHEETS
02	Sis	3	36.0/R46.9	15	20

Randell D. Hiatt
REGISTERED CIVIL ENGINEER

July 19, 2013
PLANS APPROVAL DATE

REGISTERED PROFESSIONAL ENGINEER
Randell D. Hiatt
No. C50200
Exp. 6-30-15
CIVIL
STATE OF CALIFORNIA

THE STATE OF CALIFORNIA OR ITS OFFICERS OR AGENTS SHALL NOT BE RESPONSIBLE FOR THE ACCURACY OR COMPLETENESS OF SCANNED COPIES OF THIS PLAN SHEET.

TO ACCOMPANY PLANS DATED 02-10-14

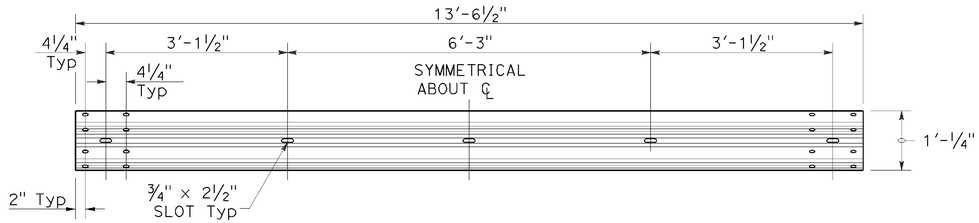

TYPICAL RAIL ELEMENT

NOTE:

1. Slotted holes for splice bolts to overlap ends of rail element.

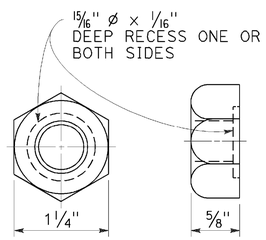

⅝" ø RECESS NUT

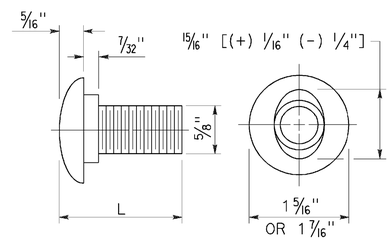

⅝" ø BUTTON HEAD BOLT

BUTTON HEAD BOLT

L	THREAD LENGTH
1⅜"	FULL THREAD LENGTH
2"	FULL THREAD LENGTH
10"	4" Min THREAD LENGTH
18"	4" Min THREAD LENGTH
20"	4" Min THREAD LENGTH
22"	4" Min THREAD LENGTH
26"	4" Min THREAD LENGTH
36"	4" Min THREAD LENGTH
** 2¾"	2" Min THREAD LENGTH
** 19"	4" Min THREAD LENGTH

** For nested rail applications.

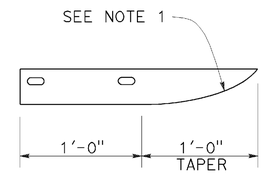

PLAN

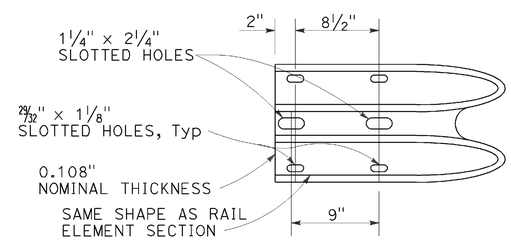

ELEVATION

END CAP
(TYPE A)

STATE OF CALIFORNIA
DEPARTMENT OF TRANSPORTATION

MIDWEST GUARDRAIL SYSTEM STANDARD HARDWARE

NO SCALE

RSP A77M1 DATED JULY 19, 2013 SUPPLEMENTS THE STANDARD PLANS BOOK DATED 2010.

REVISED STANDARD PLAN RSP A77M1

2010 REVISED STANDARD PLAN RSP A77M1

DATE PLOTTED => 18-FEB-2014
TIME PLOTTED => 14:08

Dist	COUNTY	ROUTE	POST MILES TOTAL PROJECT	SHEET No.	TOTAL SHEETS
02	Sis	3	36.0/R46.9	16	20

Randell D. Hiatt
REGISTERED CIVIL ENGINEER

November 15, 2013
PLANS APPROVAL DATE

REGISTERED PROFESSIONAL ENGINEER
Randell D. Hiatt
No. C50200
Exp. 6-30-15
CIVIL
STATE OF CALIFORNIA

THE STATE OF CALIFORNIA OR ITS OFFICERS OR AGENTS SHALL NOT BE RESPONSIBLE FOR THE ACCURACY OR COMPLETENESS OF SCANNED COPIES OF THIS PLAN SHEET.

TO ACCOMPANY PLANS DATED 02-10-14

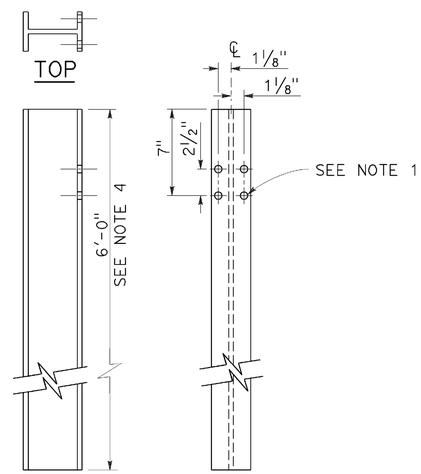

W6 x 9 OR W6 x 8.5
STEEL POST
See Note 4

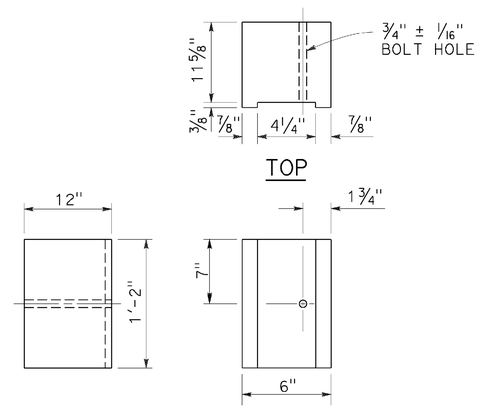

6" x 12"
NOTCHED WOOD BLOCK
See Notes 2 and 3

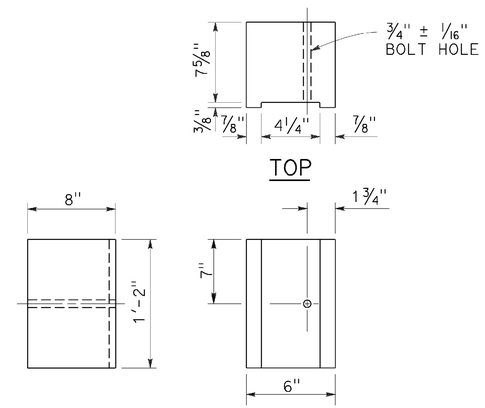

6" x 8"
NOTCHED WOOD BLOCK
Only for use with metal beam guard railing. See Note 5

NOTES:

1. All holes in steel post shall be 13/16" Dia maximum.
2. Dimensions shown for wood block are nominal.
3. Notched face of block faces steel post.
4. 6'-0" length posts to be used for typical roadway installation. See Revised Standard Plan RSP A77N3.
5. See Revised Standard Plan RSP A77L3 for use of 6" x 8" and 8" x 8" notched wood blocks.
6. This post and 8" x 12" block combination to be used for line post sections of MGS on narrow roadways and where strengthened line post sections of MGS are warranted to shield fixed objects.

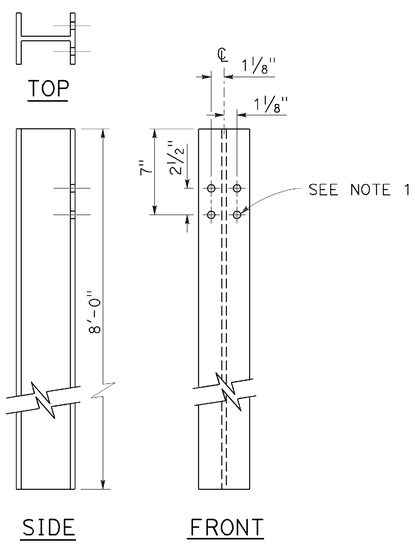

W6 x 15
STEEL POST
See Note 6

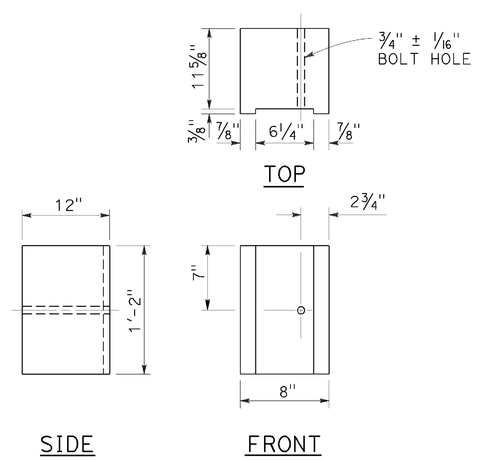

8" x 12"
NOTCHED WOOD BLOCK
See Notes 2 and 3

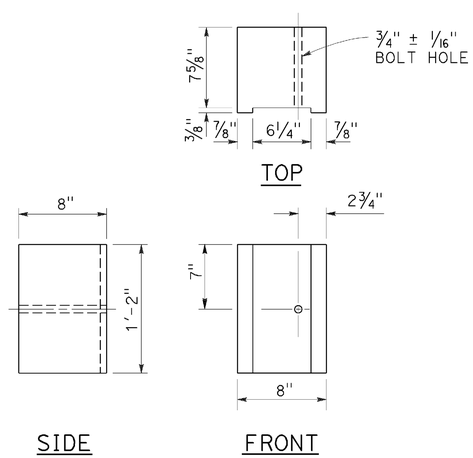

8" x 8"
NOTCHED WOOD BLOCK
Only for use with metal beam guard railing. See Note 5

STATE OF CALIFORNIA
DEPARTMENT OF TRANSPORTATION

MIDWEST GUARDRAIL SYSTEM STEEL POST AND NOTCHED WOOD BLOCK DETAILS

NO SCALE

RSP A77N2 DATED NOVEMBER 15, 2013 SUPERSEDES RSP A77N2
DATED JULY 19, 2013 THAT SUPPLEMENTS THE STANDARD PLANS BOOK DATED 2010.

REVISED STANDARD PLAN RSP A77N2

2010 REVISED STANDARD PLAN RSP A77N2

DATE PLOTTED => 18-FEB-2014
TIME PLOTTED => 14:08

Dist	COUNTY	ROUTE	POST MILES TOTAL PROJECT	SHEET No.	TOTAL SHEETS
02	Sis	3	36.0/R46.9	17	20

REGISTERED CIVIL ENGINEER

July 19, 2013
PLANS APPROVAL DATE

REGISTERED PROFESSIONAL ENGINEER
Michael Janzen
No. 44788
Exp. 03-31-14
CIVIL
STATE OF CALIFORNIA

THE STATE OF CALIFORNIA OR ITS OFFICERS OR AGENTS SHALL NOT BE RESPONSIBLE FOR THE ACCURACY OR COMPLETENESS OF SCANNED COPIES OF THIS PLAN SHEET.

TO ACCOMPANY PLANS DATED 02-10-14

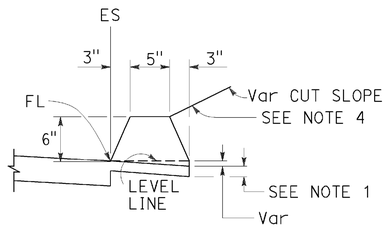

TYPE A
See Note 3

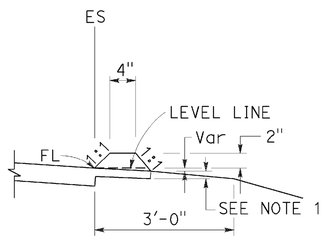

TYPE C

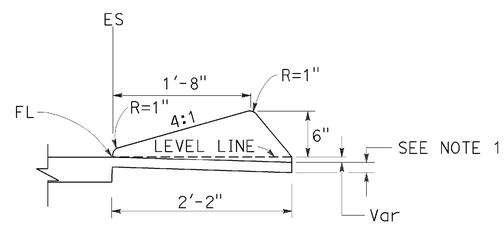

TYPE D

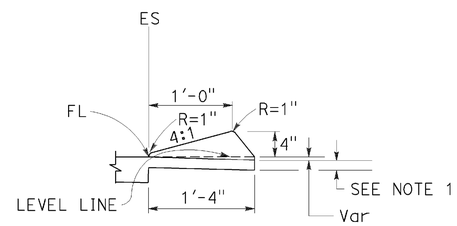

TYPE E

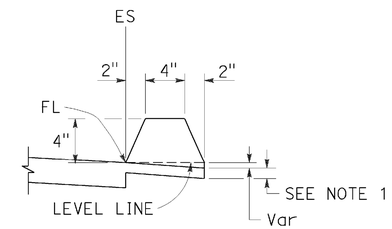

TYPE F
See Note 5

DIKES

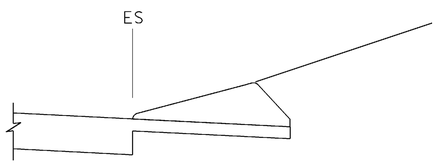

CASE C-1
Cut Slope

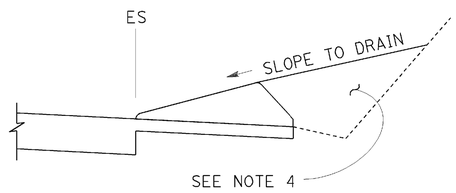

CASE C-2
Cut Slope

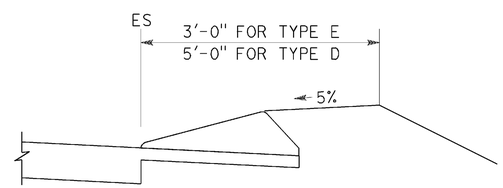

CASE F

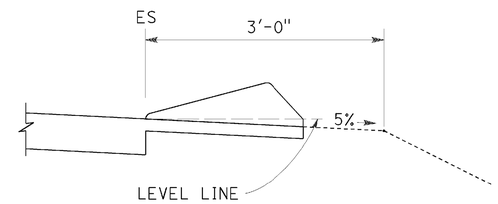

CASE R
See Note 2

TYPE D AND E BACKFILL DETAILS

NOTES:

1. For HMA shoulders only, extend top layer of HMA placed on the shoulder under dike with no joint at the ES. For projects with OGFC shoulders, do not extend OGFC under dike. See project plans for modified dike detail.
2. Case R applies to retrofit only projects where restrictive conditions do not provide enough width for Case F backfill.
3. Type A dike only to be used where restrictive slope conditions do not provide enough width to use Type D or Type E dike.
4. Fill and compact with excavated material to top of dike.
5. Use Type F dike, where dike is required with guard railing installations. See Revised Standard Plan RSP A77N4 for dike positioning details.

DIKE QUANTITIES

TYPE	CUBIC YARDS PER LINEAR FOOT
A	0.0135
C	0.0038
D	0.0293
E	0.0130
F	0.0066

Quantities based on 5% cross slope.

STATE OF CALIFORNIA
DEPARTMENT OF TRANSPORTATION

HOT MIX ASPHALT DIKES

NO SCALE

RSP A87B DATED JULY 19, 2013 SUPERSEDES STANDARD PLAN A87B
DATED MAY 20, 2011 - PAGE 120 OF THE STANDARD PLANS BOOK DATED 2010.

REVISED STANDARD PLAN RSP A87B

2010 REVISED STANDARD PLAN RSP A87B

DATE PLOTTED => 18-FEB-2014
TIME PLOTTED => 14:08

Dist	COUNTY	ROUTE	POST MILES TOTAL PROJECT	SHEET No.	TOTAL SHEETS
02	Sis	3	36.0/R46.9	18	20

REGISTERED CIVIL ENGINEER

July 19, 2013
PLANS APPROVAL DATE

REGISTERED PROFESSIONAL ENGINEER
Gurinderpal Bhullar
No. C48815
Exp. 9-30-14
CIVIL
STATE OF CALIFORNIA

THE STATE OF CALIFORNIA OR ITS OFFICERS OR AGENTS SHALL NOT BE RESPONSIBLE FOR THE ACCURACY OR COMPLETENESS OF SCANNED COPIES OF THIS PLAN SHEET.

TO ACCOMPANY PLANS DATED 02-10-14

2010 REVISED STANDARD PLAN RSP T9

TABLE 1

TAPER LENGTH CRITERIA AND CHANNELIZING DEVICE SPACING

SPEED (S)	MINIMUM TAPER LENGTH * FOR WIDTH OF OFFSET 12 FEET (W)				MAXIMUM CHANNELIZING DEVICE SPACING		
					X	Y	Z **
	TANGENT 2L	MERGING L	SHIFTING L/2	SHOULDER L/3	TAPER	TANGENT	CONFLICT
mph	ft	ft	ft	ft	ft	ft	ft
20	160	80	40	27	20	40	10
25	250	125	63	42	25	50	12
30	360	180	90	60	30	60	15
35	490	245	123	82	35	70	17
40	640	320	160	107	40	80	20
45	1080	540	270	180	45	90	22
50	1200	600	300	200	50	100	25
55	1320	660	330	220	55	110	27
60	1440	720	360	240	60	120	30
65	1560	780	390	260	65	130	32
70	1680	840	420	280	70	140	35

* - For other offsets, use the following merging taper length formula for L:
For speed of 40 mph or less, $L = WS^2/60$
For speed of 45 mph or more, $L = WS$

Where: L = Taper length in feet
W = Width of offset in feet
S = Posted speed limit, off-peak 85th-percentile speed prior to work starting, or the anticipated operating speed in mph

** - Use for taper and tangent sections where there are no pavement markings or where there is a conflict between existing pavement markings and channelizers (CA).

TABLE 2

LONGITUDINAL BUFFER SPACE AND FLAGGER STATION SPACING

SPEED *	Min D **	DOWNGRADE Min D ***		
		-3%	-6%	-9%
mph	ft	ft	ft	ft
20	115	116	120	126
25	155	158	165	173
30	200	205	215	227
35	250	257	271	287
40	305	315	333	354
45	360	378	400	427
50	425	446	474	507
55	495	520	553	593
60	570	598	638	686
65	645	682	728	785
70	730	771	825	891

* - Speed is posted speed limit, off-peak 85th-percentile speed prior to work starting, or the anticipated operating speed in mph

** - Longitudinal buffer space or flagger station spacing

*** - Use on sustained downgrade steeper than -3 percent and longer than 1 mile.

TABLE 3

ADVANCE WARNING SIGN SPACING

ROAD TYPE	DISTANCE BETWEEN SIGNS *		
	A	B	C
	ft	ft	ft
URBAN - 25 mph OR LESS	100	100	100
URBAN - MORE THAN 25 mph TO 40 mph	250	250	250
URBAN - MORE THAN 40 mph	350	350	350
RURAL	500	500	500
EXPRESSWAY / FREEWAY	1000	1500	2640

* - The distances are approximate, are intended for guidance purposes only, and should be applied with engineering judgment. These distances should be adjusted by the Engineer for field conditions, if necessary, by increasing or decreasing the recommmended distances.

STATE OF CALIFORNIA
DEPARTMENT OF TRANSPORTATION

TRAFFIC CONTROL SYSTEM TABLES FOR LANE AND RAMP CLOSURES

NO SCALE

RSP T9 DATED JULY 19, 2013 SUPERSEDES RSP T9 DATED APRIL 19, 2013 THAT SUPPLEMENTS THE STANDARD PLANS BOOK DATED 2010.

REVISED STANDARD PLAN RSP T9

DATE PLOTTED => 18-FEB-2014
TIME PLOTTED => 14:08

Dist	COUNTY	ROUTE	POST MILES TOTAL PROJECT	SHEET No.	TOTAL SHEETS
02	Sis	3	36.0/R46.9	19	20

REGISTERED CIVIL ENGINEER

April 19, 2013
PLANS APPROVAL DATE

REGISTERED PROFESSIONAL ENGINEER Gurinderpal Bhullar No. C48815 Exp. 9-30-14 CIVIL STATE OF CALIFORNIA

THE STATE OF CALIFORNIA OR ITS OFFICERS OR AGENTS SHALL NOT BE RESPONSIBLE FOR THE ACCURACY OR COMPLETENESS OF SCANNED COPIES OF THIS PLAN SHEET.

TO ACCOMPANY PLANS DATED 02-10-14

NOTES:

See Revised Standard Plan RSP T9 for tables.

Use cone spacing X for taper segment, Y for tangent segment or Z for conflict situations, as approriate, per Table 1, unless X, Y, or Z cone spacing is shown on this sheet.

Unless otherwise specified in the special provisions, all temporary warning signs shall have black legend on fluorescent orange background.

California codes are designated by (CA). Otherwise, Federal (MUTCD) codes are shown.

TYPICAL LANE CLOSURE WITH REVERSIBLE CONTROL

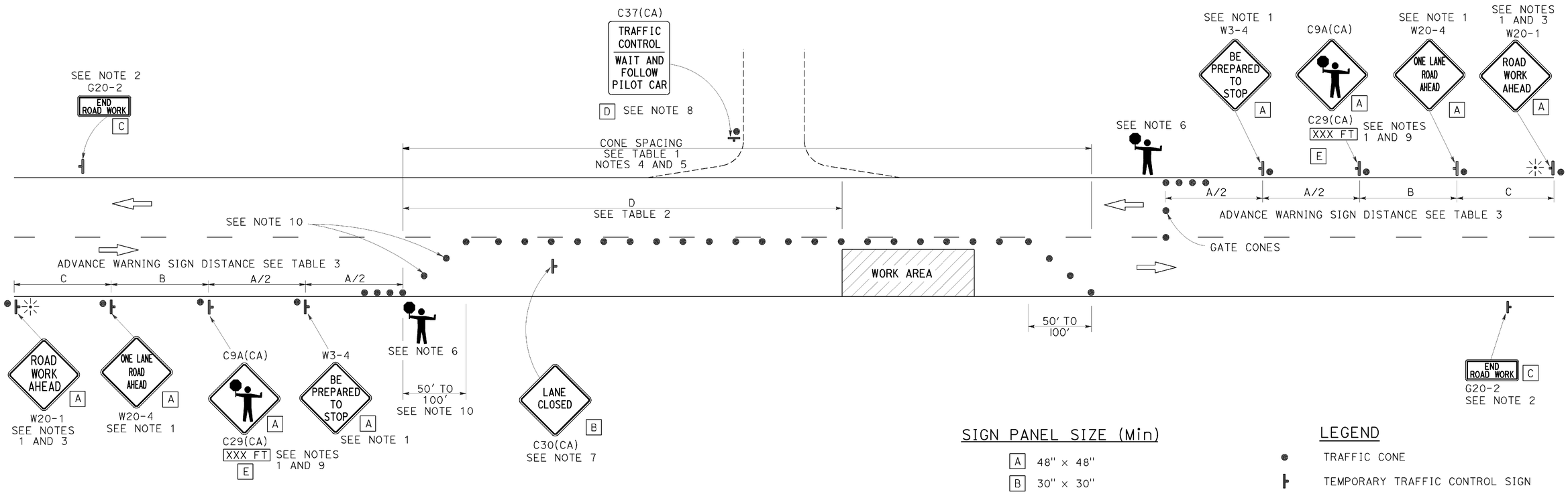

SIGN PANEL SIZE (Min)

A	48" × 48"
B	30" × 30"
C	36" × 18"
D	36" × 42"
E	20" × 7"

LEGEND

- TRAFFIC CONE
- TEMPORARY TRAFFIC CONTROL SIGN
- PORTABLE FLASHING BEACON
- FLAGGER

NOTES:

1. Each advance warning sign in each direction of travel shall be equipped with at least two flags for daytime closure. Each flag shall be at least 16" x 16" in size and shall be orange or fluorescent red-orange in color. Flashing beacons shall be placed at the locations indicated for lane closure during hours of darkness.
2. A G20-2 "END ROAD WORK" sign, as appropriate, shall be placed at the end of the lane control unless the end of work area is obvious, or ends within a larger project's limits.
3. If the W20-1 sign would follow within 2000' of a stationary W20-1 or G20-1 "ROAD WORK NEXT _____ MILES", use a W20-4 sign for the first advance warning sign.
4. All cones used for lane closures during the hours of darkness shall be fitted with retroreflective bands (or sleeves) as specified in the specifications.
5. Portable delineators, placed at one-half the spacing indicated for traffic cones, may be used instead of cones for daytime closures only.
6. Additional advance flaggers may be required. Flagger should stand in a conspicuous place, be visible to approaching traffic as well as approaching vehicles after the first vehicle has stopped. During the hours of darkness, the flagging-station and flagger shall be illuminated and clearly visible to approaching traffic. The illumination footprint of the lighting on the ground shall be at least 20' in diameter. Place a minimum of four cones at 50' intervals in advance of flagger station as shown.
7. Place C30(CA) "LANE CLOSED" sign at 500' to 1000' intervals throughout extended work areas. They are optional if the work area is visible from the flagger station.
8. When a pilot car is used, place a C37(CA) "TRAFFIC CONTROL-WAIT AND FOLLOW PILOT CAR" sign with black legend on white background at all intersections, driveways and alleys without a flagger within traffic control area. Signs shall be clean and visible at all times. Where traffic can not be effectively self-regulated, at least one flagger shall be used at each intersection within traffic control area.
9. An optional C29(CA) sign may be placed below the C9A(CA) sign.
10. Either traffic cones or barricades shall be placed on the taper. Barricades shall be Type I, II, or III.

STATE OF CALIFORNIA
DEPARTMENT OF TRANSPORTATION

TRAFFIC CONTROL SYSTEM FOR LANE CLOSURE ON TWO LANE CONVENTIONAL HIGHWAYS

NO SCALE

RSP T13 DATED APRIL 19, 2013 SUPERSEDES STANDARD PLAN T13 DATED MAY 20, 2011 - PAGE 241 OF THE STANDARD PLANS BOOK DATED 2010.

REVISED STANDARD PLAN RSP T13

2010 REVISED STANDARD PLAN RSP T13

DATE PLOTTED => 18-FEB-2014
TIME PLOTTED => 14:08

Dist	COUNTY	ROUTE	POST MILES TOTAL PROJECT	SHEET No.	TOTAL SHEETS
02	Sis	3	36.0/R46.9	20	20

REGISTERED CIVIL ENGINEER

April 19, 2013
PLANS APPROVAL DATE

REGISTERED PROFESSIONAL ENGINEER
Gurinderpal Bhullar
No. C48815
Exp. 9-30-14
CIVIL
STATE OF CALIFORNIA

THE STATE OF CALIFORNIA OR ITS OFFICERS OR AGENTS SHALL NOT BE RESPONSIBLE FOR THE ACCURACY OR COMPLETENESS OF SCANNED COPIES OF THIS PLAN SHEET.

TO ACCOMPANY PLANS DATED 02-10-14

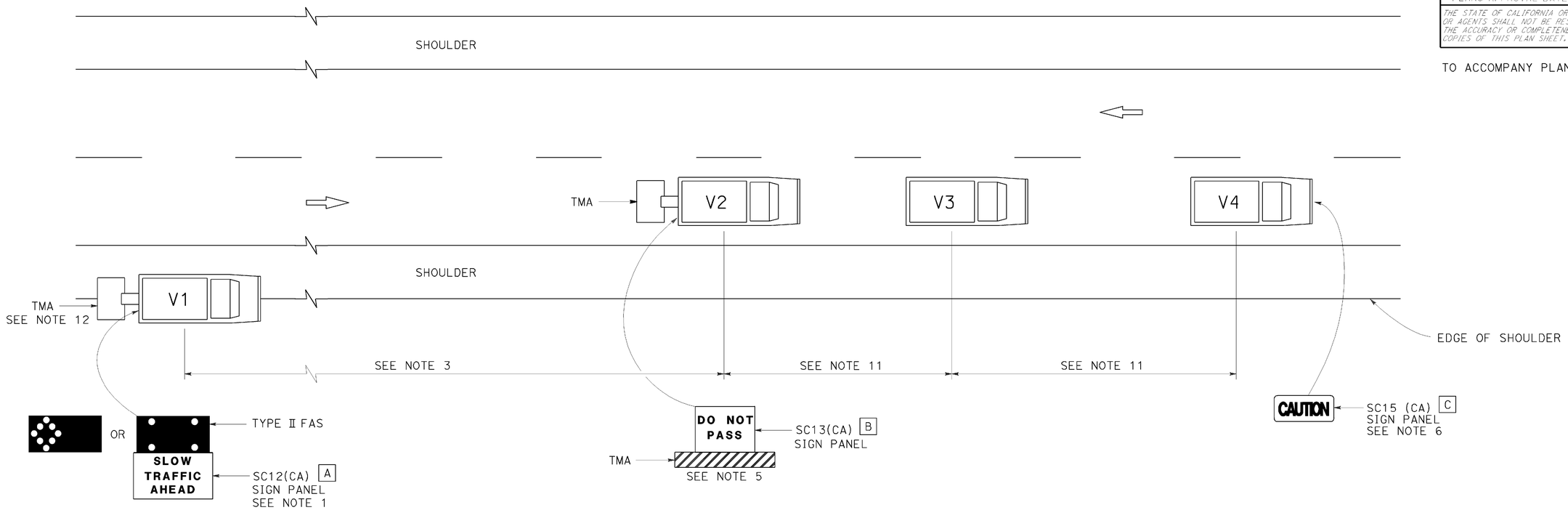

LEGEND

V1	SIGN VEHICLE
V2	SHADOW VEHICLE
V3	WORK/APPLICATION VEHICLE
V4	SIGN VEHICLE
TMA	TRUCK-MOUNTED ATTENUATOR
	FLASHING ARROW SIGN (FAS) IN FLASHING CAUTION MODE
	FLASHING ARROW SIGN (FAS) IN ALTERNATING DIAMOND CAUTION

SIGN PANEL SIZE (Min)

A	72" x 42"
B	54" x 42"
C	54" x 24"

NOTES:

1. Either a changeable message sign or a SC12(CA) "SLOW TRAFFIC AHEAD" sign shall be mounted on the rear of sign vehicle V1. The changeable message sign shall be sequenced to show the "CAUTION" message first, follow by the "SLOW TRAFFIC AHEAD" message. A Type II flashing arrow sign may be used with the SC12(CA) sign panel.
2. Sign vehicle V1 should be positioned where highly visible when shoulders are not available.
3. If traffic queues develop, sign vehicle V1 should be positioned upstream from the end of queue.
4. Vehicle-mounted sign panels shall have Type III or above retroreflective sheeting, black on white, or black on fluorescent orange, with 6" minimum series D letters per Caltrans sign specifications.
5. Shadow vehicle shall be equipped with a truck-mounted attenuator. The sign panel shown shall be mounted on the rear of shadow vehicle V2. The message "LANE CLOSED" may be used in place of the "DO NOT PASS" message.
6. The sign panel shown shall be mounted on the front of sign vehicle V4, facing opposing traffic.
7. All vehicles shall be equipped with flashing or rotating amber lights.
8. Sign vehicle V4 will not be required when the work and vehicles V2 and V3 are 2' or more from the centerline of the highway during the work or application operations.
9. All vehicles used for lane closures shall be equipped with two-way radios and the vehicle operators shall maintain communication during the work or application operation.
10. This plan shall not be used where workers would be on foot in the work area. Use a stationary type lane closure (Revised Standard Plan T13) for this condition.
11. Minimize spacing between vehicles V2 and V3 and vehicles V3 and V4 to deter road users from driving in between them.
12. If sign vehicle V1 encroaches into the traffic lane due to insufficient shoulder width, sign vehicle V1 shall be equipped with a truck-mounted attenuator. Sign vehicle V1 shall stay as close to the edge of shoulder as practicable.

STATE OF CALIFORNIA
DEPARTMENT OF TRANSPORTATION

TRAFFIC CONTROL SYSTEM FOR MOVING LANE CLOSURE ON TWO LANE HIGHWAYS

NO SCALE

RSP T17 DATED APRIL 19, 2013 SUPERSEDES STANDARD PLAN T17
DATED MAY 20, 2011 - PAGE 245 OF THE STANDARD PLANS BOOK DATED 2010.

REVISED STANDARD PLAN RSP T17

2010 REVISED STANDARD PLAN RSP T17

DATE PLOTTED => 18-FEB-2014
TIME PLOTTED => 14:08