Dist	COUNTY	ROUTE	POST MILES TOTAL PROJECT	SHEET No.	TOTAL SHEETS
04	SF	101	9.0	1	38

ACNHP-X075(045)N

STATE OF CALIFORNIA
DEPARTMENT OF TRANSPORTATION

PROJECT PLANS FOR DRAINAGE CONSTRUCTION NEAR
STATE HIGHWAY

IN THE CITY AND COUNTY OF SAN FRANCISCO AT CRISSY FIELD

TO BE SUPPLEMENTED BY STANDARD PLANS DATED 2010

INDEX OF PLANS

SHEET No.	DESCRIPTION
1	TITLE AND LOCATION MAP
2	LAYOUTS
3	CONSTRUCTION DETAILS
4-6	TEMPORARY WATER POLLUTION CONTROL
7-12	DRAINAGE PLANS, PROFILES, DETAILS AND QUANTITIES
13	CONSTRUCTION AREA SIGNS
14-15	STAGE CONSTRUCTION PLANS
16	TRAFFIC HANDLING PLAN
17	SUMMARY OF QUANTITIES
18-22	LOG OF TEST BORINGS
23	ROADSIDE CLEARING PLAN
24-27	IRRIGATION SPRINKLER SCHEDULE,REMOVAL PLAN PLANS (CONSTRUCTION STAGING AREA) AND QUANTITIES
28-29	PLANTING LIST AND PLANS
30-31	EROSION CONTROL LEGEND, QUANTITIES AND PLAN
32-38	REVISED STANDARD PLANS

THE STANDARD PLANS LIST APPLICABLE TO THIS CONTRACT IS INCLUDED IN THE NOTICE TO BIDDERS AND SPECIAL PROVISIONS BOOK.

LOCATION MAP

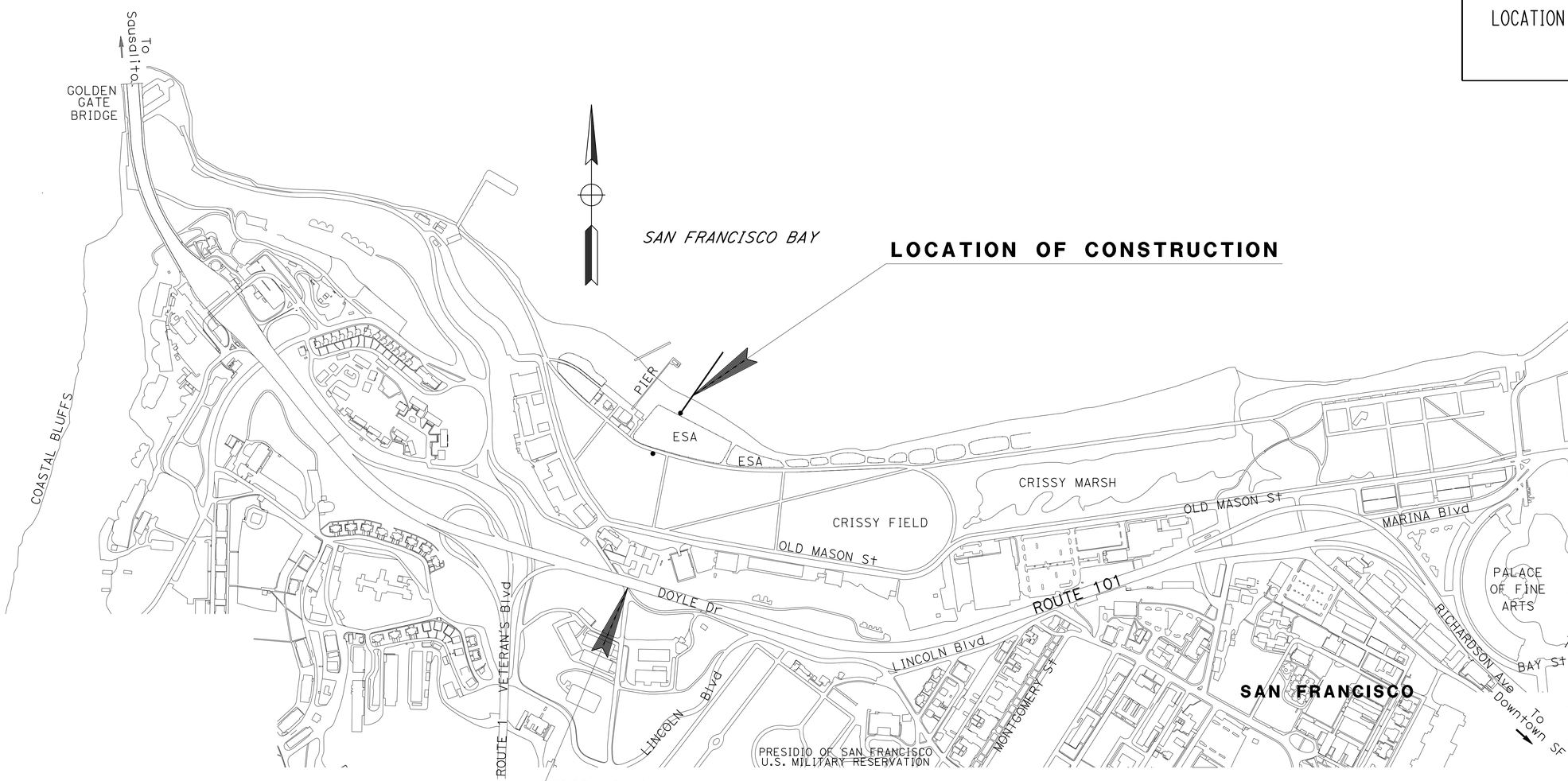

PM 9.0

NO SCALE

Peter Aguilera 10/24/14
PROJECT ENGINEER DATE
REGISTERED CIVIL ENGINEER

February 17, 2015
PLANS APPROVAL DATE

REGISTERED PROFESSIONAL ENGINEER
Peter Aguilera
No. 55287
Exp. 12-31-16
CIVIL
STATE OF CALIFORNIA

THE STATE OF CALIFORNIA OR ITS OFFICERS OR AGENTS SHALL NOT BE RESPONSIBLE FOR THE ACCURACY OR COMPLETENESS OF SCANNED COPIES OF THIS PLAN SHEET.

THE CONTRACTOR SHALL POSSESS THE CLASS (OR CLASSES) OF LICENSE AS SPECIFIED IN THE "NOTICE TO BIDDERS."

CONTRACT No.	04-1637N4
PROJECT ID	0400020923

PROJECT MANAGER: NIDAL TUQAN
DESIGN MANAGER: ARLISSA PANG

LAST REVISION 01-17-15
DATE PLOTTED => 18-FEB-2015
TIME PLOTTED => 09:07

Dist	COUNTY	ROUTE	POST MILES TOTAL PROJECT	SHEET No.	TOTAL SHEETS
04	SF	101	9.0	2	38

Peter Aguilera 10/24/14
REGISTERED CIVIL ENGINEER DATE

2-17-15
PLANS APPROVAL DATE

REGISTERED PROFESSIONAL ENGINEER Peter Aguilera No. 55287 Exp. 12-31-16 CIVIL STATE OF CALIFORNIA

THE STATE OF CALIFORNIA OR ITS OFFICERS OR AGENTS SHALL NOT BE RESPONSIBLE FOR THE ACCURACY OR COMPLETENESS OF SCANNED COPIES OF THIS PLAN SHEET.

NOTE:

FOR ACCURATE RIGHT OF WAY DATA, CONTACT RIGHT OF WAY ENGINEERING AT THE DISTRICT OFFICE.

ABBREVIATIONS:

ACOE	US ARMY CORPS OF ENGINEERS
AMA	ARCHAEOLOGICAL MONITORING AREA
BCDC	SAN FRANCISCO BAY CONSERVATION AND DEVELOPMENT COMMISSION
EOP	EDGE OF PATH
HTL	HIGH TIDE LINE
KTL	KING TIDE LINE
MHHW	MEAN HIGHER HIGH WATER
MLLW	MEAN LOWER LOW WATER
SPA	SPECIES PROTECTION AREA

LEGEND:

STAGING AREA (NO CONTRACTOR VEHICLE PARKING)

ACCESS PATH

NOTES:

1. PLACE Temp FENCE (TYPE CL-6) WEST OF Exist FENCE.
2. MARINE VESSELS SHOWN ARE CONCEPTUAL ONLY.
3. BATHYMETRIC CONTOURS ARE BASED UPON BATHYMETRIC SURVEY AND LIDAR DATA CONDUCTED IN MAY AND JUNE 2013. DATUM IN NAVD88.
4. DO NOT BLOCK OR HINDER SF BAY TRAIL AND OLD MASON STREET.
5. EXACT LOCATION OF WILDLIFE PROTECTION AREA, Temp FENCE (TYPE ESA), AND Temp FENCE (CL-6) TO BE DETERMINED BY THE ENGINEER.
6. SPA 1 IS ENTIRE PROJECT LIMIT. SPA 2 IS 100′ FROM ALL PILES FROM MHHW INTO SF BAY AS SHOWN. SPA 3 IS 1300′ RADIUS FROM LAST PILES.

CHAIN LINK FENCE

POINT	NORTHING	EASTING
1	2121449.59	5993318.91
2	2121361.20	5993486.70
3	2121303.14	5993672.94
4	2121435.23	5993719.32
5	2121470.44	5993606.29
6	2121479.99	5993609.27
7	2121485.95	5993590.18
8	2121476.40	5993587.20
9	2121494.76	5993528.38
10	2121531.49	5993456.05
11	2121572.17	5993405.36

LAYOUT

SCALE: 1" = 100′

L-1

REVISED BY	DATE REVISED
PA	9/30/14

PETER AGUILERA — SUSANA ONATE — CALCULATED-DESIGNED BY — CHECKED BY

FUNCTIONAL SUPERVISOR: ARLISSA PANG

STATE OF CALIFORNIA - DEPARTMENT OF TRANSPORTATION — DESIGN

LAST REVISION 01-18-15 — DATE PLOTTED => 18-FEB-2015 — TIME PLOTTED => 09:07

Dist	COUNTY	ROUTE	POST MILES TOTAL PROJECT	SHEET No.	TOTAL SHEETS
04	SF	101	9.0	3	38

Peter Aguilera 1/16/15
REGISTERED CIVIL ENGINEER DATE

2-17-15
PLANS APPROVAL DATE

REGISTERED PROFESSIONAL ENGINEER Peter Aguilera No. 55287 Exp. 12-31-16 CIVIL STATE OF CALIFORNIA

THE STATE OF CALIFORNIA OR ITS OFFICERS OR AGENTS SHALL NOT BE RESPONSIBLE FOR THE ACCURACY OR COMPLETENESS OF SCANNED COPIES OF THIS PLAN SHEET.

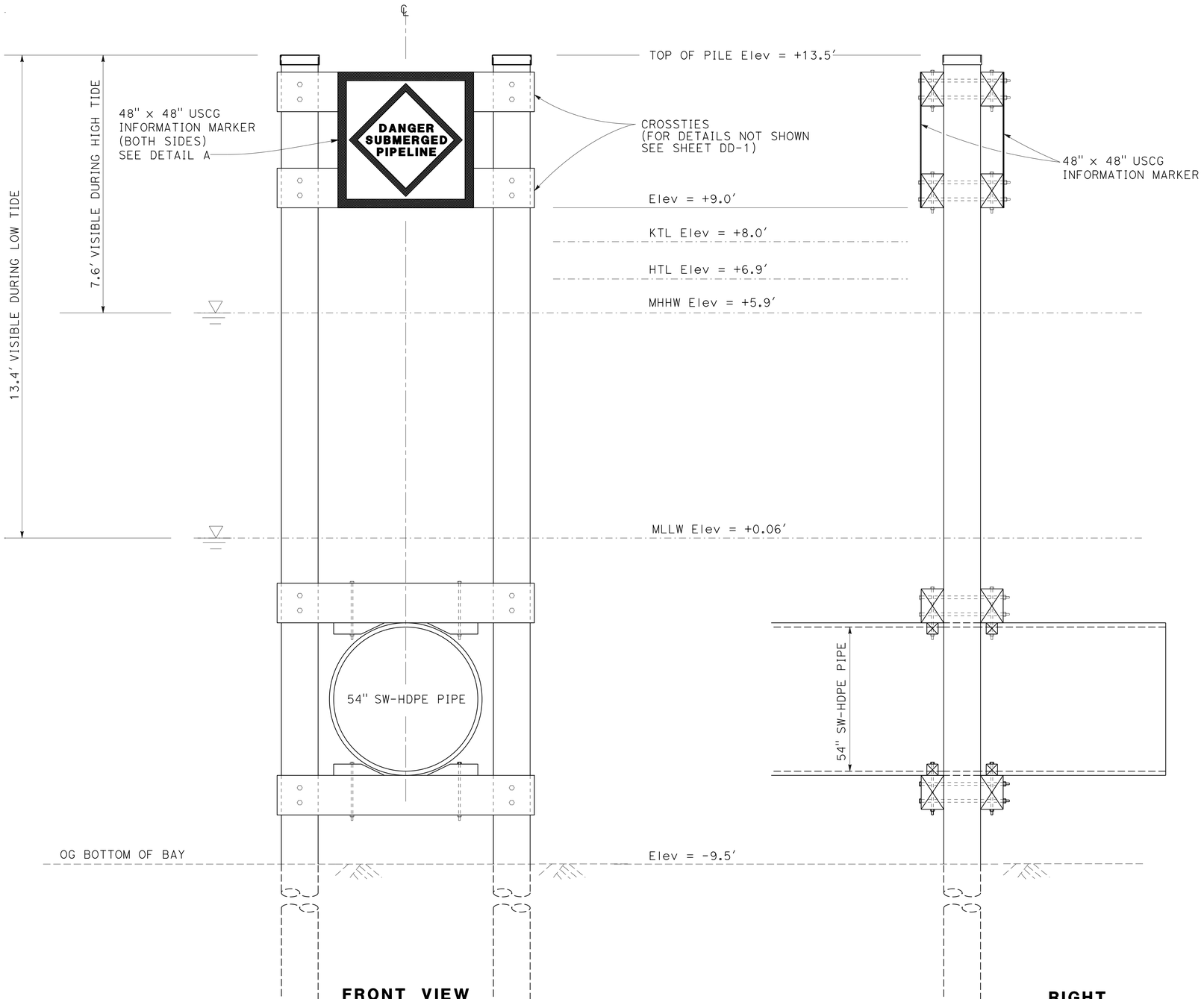

FRONT VIEW AND BACK VIEW

RIGHT SIDE VIEW

HDPE PILES
"IJKL" 24+62

NOTES:

1. ALL THREADED RODS FOR USCG SIGN MUST RECEIVE WASHERS AND DOUBLE NUTS ON BOTH SIDES.
2. CUT AND DEBURR THREADED ROD SO THAT IT END EXTENDS ½" BEYOND OUTSIDE OF NUT.
3. SECURE USCG SIGN WITH DEPARTMENT FURNISHED ½" STAINLESS STEEL TYPE 316 THREADED ROD, FLAT WASHERS AND HEX NUTS.

ABBREVIATIONS:

HDPE	HIGH DENSITY POLYETHLENE
HTL	HIGH TIDE LINE
KTL	KING TIDE LINE
MHHW	MEAN HIGHER HIGH WATER
MLLW	MEAN LOWER LOW WATER
SW-HDPE	SOLID WALL HIGH DENSITY POLYETHYLENE
USCG	UNITED STATES COAST GUARD

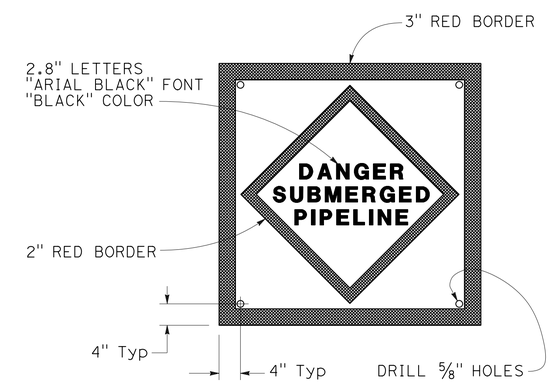

DETAIL A

CONSTRUCTION DETAILS
NO SCALE

C-1

REVISED BY	DATE REVISED
PA	1/17/15

PETER AGUILERA — CALCULATED-DESIGNED BY
SUSANA ONATE — CHECKED BY
FUNCTIONAL SUPERVISOR: ARLISSA PANG

STATE OF CALIFORNIA - DEPARTMENT OF TRANSPORTATION
Caltrans
DESIGN

LAST REVISION 01-18-15 | DATE PLOTTED => 19-FEB-2015 | TIME PLOTTED => 07:49

Dist	COUNTY	ROUTE	POST MILES TOTAL PROJECT	SHEET No.	TOTAL SHEETS
04	SF	101	9.0	4	38

REGISTERED CIVIL ENGINEER 10/24/14 DATE

2-17-15
PLANS APPROVAL DATE

REGISTERED PROFESSIONAL ENGINEER Jiangfan Chen No. 77248 Exp. 6-30-15 CIVIL STATE OF CALIFORNIA

THE STATE OF CALIFORNIA OR ITS OFFICERS OR AGENTS SHALL NOT BE RESPONSIBLE FOR THE ACCURACY OR COMPLETENESS OF SCANNED COPIES OF THIS PLAN SHEET.

NOTE:

FOR ACCURATE RIGHT OF WAY DATA, CONTACT RIGHT OF WAY ENGINEERING AT THE DISTRICT OFFICE.

ABBREVIATIONS:

HTL	HIGH TIDE LINE
KTL	KING TIDE LINE
MHHW	MEAN HIGHER HIGH WATER
MLLW	MEAN LOWER LOW WATER

LEGEND:

- Temp TURBIDITY CONTROL CURTAIN
- Temp DRAINAGE INLET PROTECTION
- Temp CONSTRUCTION ENTRANCE
- —xx—TSF— Temp SILT FENCE
- Temp TIMBER CONSTRUCTION MAT

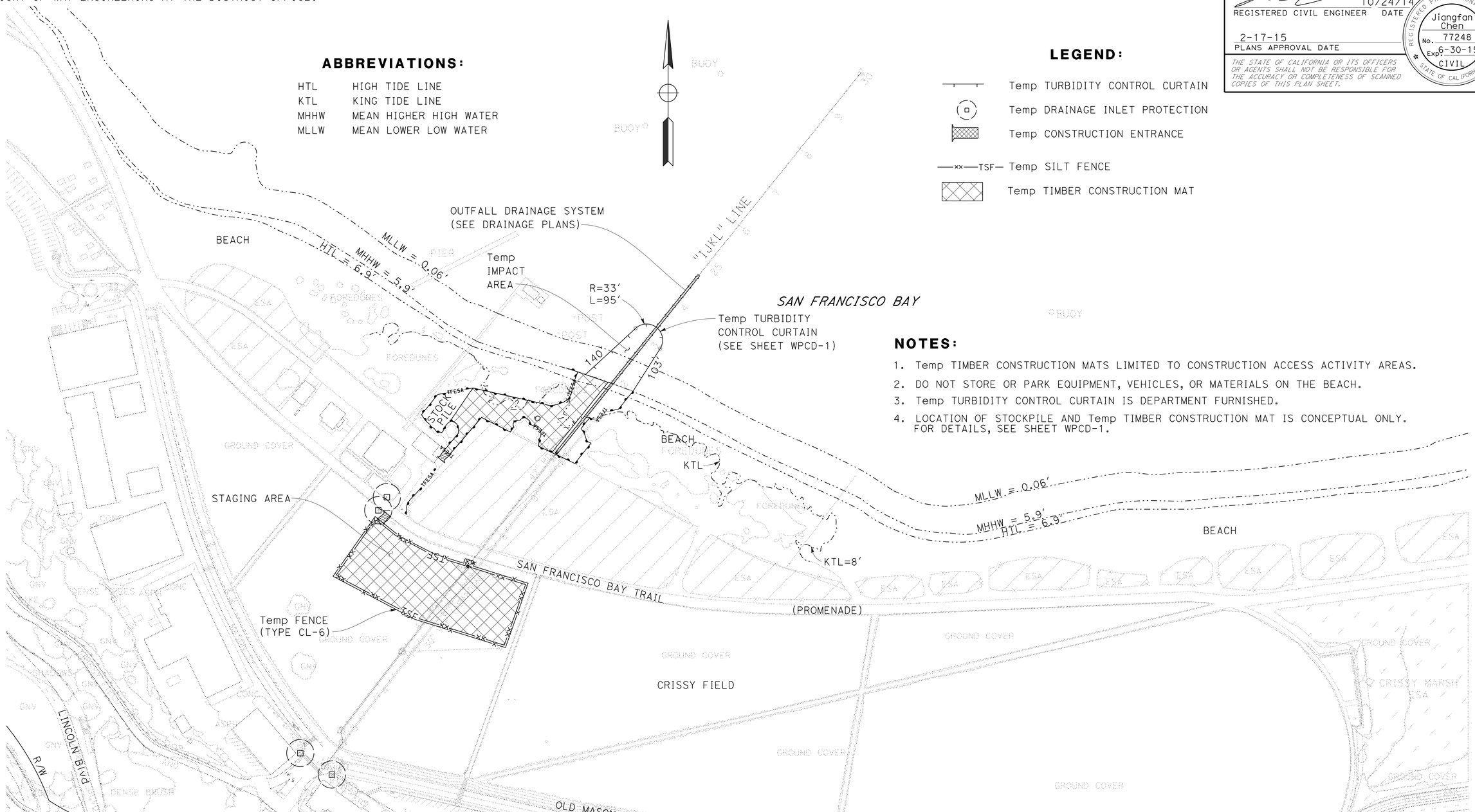

NOTES:

1. Temp TIMBER CONSTRUCTION MATS LIMITED TO CONSTRUCTION ACCESS ACTIVITY AREAS.
2. DO NOT STORE OR PARK EQUIPMENT, VEHICLES, OR MATERIALS ON THE BEACH.
3. Temp TURBIDITY CONTROL CURTAIN IS DEPARTMENT FURNISHED.
4. LOCATION OF STOCKPILE AND Temp TIMBER CONSTRUCTION MAT IS CONCEPTUAL ONLY. FOR DETAILS, SEE SHEET WPCD-1.

TEMPORARY WATER POLLUTION CONTROL PLAN

SCALE: 1" = 100'

APPROVED FOR TEMPORARY WATER POLLUTION CONTROL WORK ONLY

WPC-1

REVISED BY	DATE REVISED
JC	10/23/14

JENNIFER CHEN — KAMRAN NAKHJIRI — CALCULATED-DESIGNED BY
CHECKED BY
FUNCTIONAL SUPERVISOR — KAMRAN NAKHJIRI

STATE OF CALIFORNIA - DEPARTMENT OF TRANSPORTATION
Caltrans® WATER QUALITY

LAST REVISION 01-18-15 | DATE PLOTTED => 18-FEB-2015 | TIME PLOTTED => 09:07

Dist	COUNTY	ROUTE	POST MILES TOTAL PROJECT	SHEET No.	TOTAL SHEETS
04	SF	101	9.0	5	38

REGISTERED CIVIL ENGINEER 10/24/14 DATE

2-17-15
PLANS APPROVAL DATE

REGISTERED PROFESSIONAL ENGINEER Jiangfan Chen No. 77248 Exp. 6-30-15 CIVIL STATE OF CALIFORNIA

THE STATE OF CALIFORNIA OR ITS OFFICERS OR AGENTS SHALL NOT BE RESPONSIBLE FOR THE ACCURACY OR COMPLETENESS OF SCANNED COPIES OF THIS PLAN SHEET.

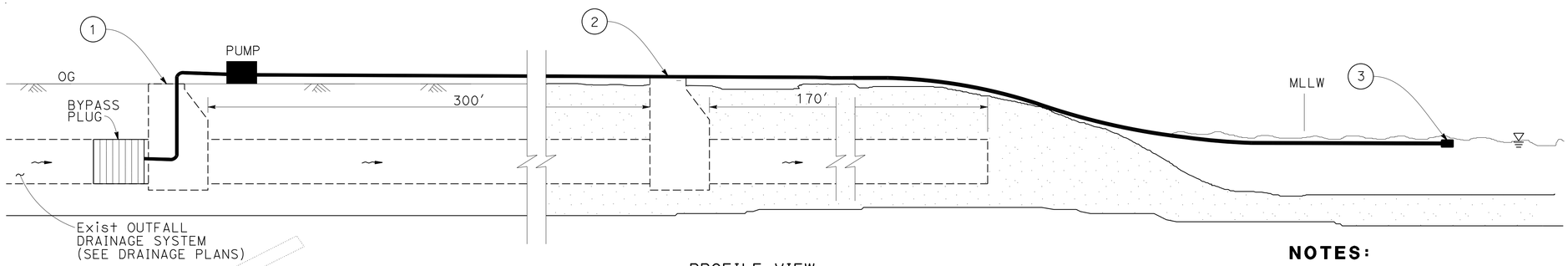

PROFILE VIEW
TEMPORARY DIVERSION SYSTEM (CRISSY FIELD MH)

NOTES:

1. BURY Temp DIVERSION SYSTEM WHEN CROSSING ANY PUBLIC PATHWAY.
2. INSTALL Temp DIVERSION SYSTEM BEFORE STARTING DRAINAGE SYSTEM CONSTRUCTION. SEE DRAINAGE PLANS.
3. LOCATE OUTLET OF Temp DIVERSION SYSTEM ABOVE THE BAY BOTTOM AND FAR ENOUGH INTO THE BAY TO NOT CAUSE TURBIDITY.

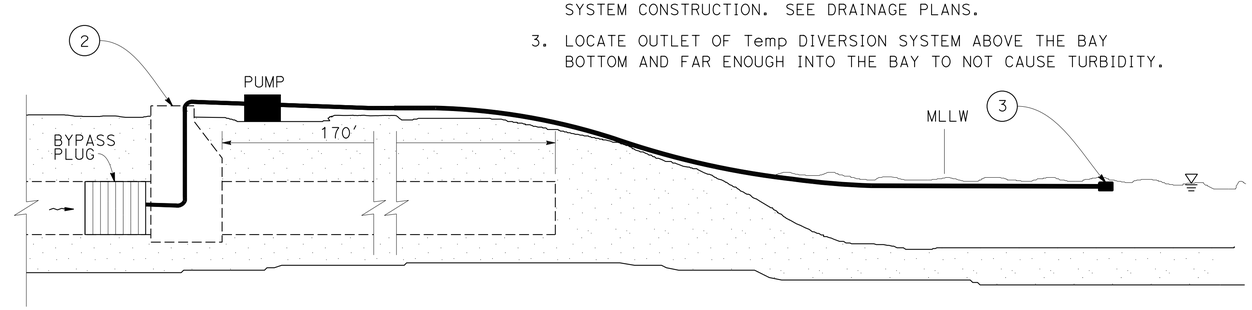

PROFILE VIEW
TEMPORARY DIVERSION SYSTEM

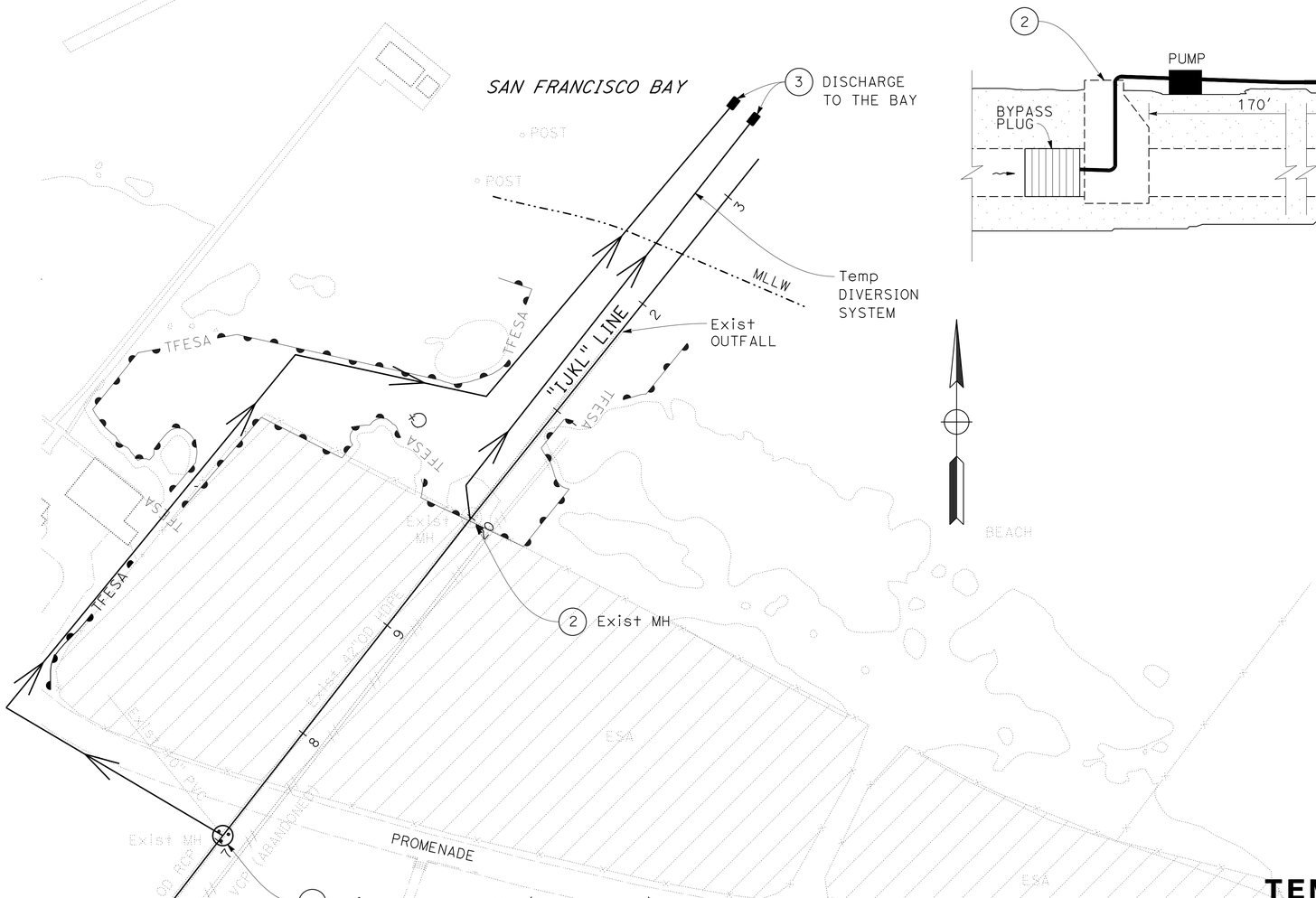

PLAN VIEW

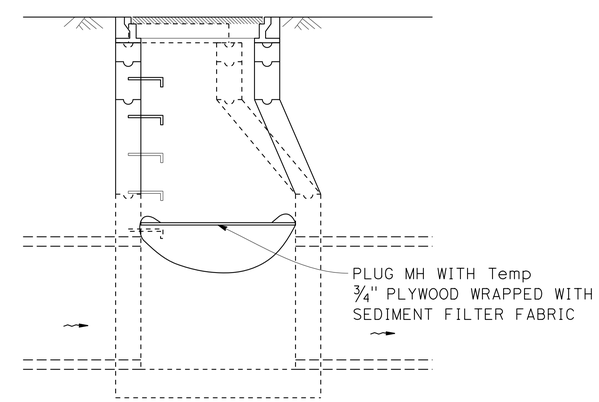

DETAIL A

TEMPORARY WATER POLLUTION CONTROL PLAN
(TEMPORARY MANHOLE PROTECTION AND DIVERSION SYSTEM)

NO SCALE

APPROVED FOR TEMPORARY WATER POLLUTION CONTROL WORK ONLY

FOR ABBREVIATIONS AND LEGEND, SEE SHEET WPC-1

WPC-2

STATE OF CALIFORNIA - DEPARTMENT OF TRANSPORTATION
Caltrans® **WATER QUALITY**

FUNCTIONAL SUPERVISOR: KAMRAN NAKHJIRI
CALCULATED-DESIGNED BY: JENNIFER CHEN
CHECKED BY: KAMRAN NAKHJIRI
REVISED BY: JC
DATE REVISED: 10/23/14

LAST REVISION DATE PLOTTED => 18-FEB-2015
TIME PLOTTED => 09:07
01-18-15

Dist	COUNTY	ROUTE	POST MILES TOTAL PROJECT	SHEET No.	TOTAL SHEETS
04	SF	101	9.0	6	38

10/24/14
REGISTERED CIVIL ENGINEER DATE

2-17-15
PLANS APPROVAL DATE

REGISTERED PROFESSIONAL ENGINEER Jiangfan Chen No. 77248 Exp. 6-30-15 CIVIL STATE OF CALIFORNIA

THE STATE OF CALIFORNIA OR ITS OFFICERS OR AGENTS SHALL NOT BE RESPONSIBLE FOR THE ACCURACY OR COMPLETENESS OF SCANNED COPIES OF THIS PLAN SHEET.

ABBREVIATIONS:

MHHW MEAN HIGHER HIGH WATER
MLLW MEAN LOWER LOW WATER

NOTES:

1. REFER TO Std PLAN T53 FOR Temp COVER ON STOCKPILE.
2. FOR Temp TURBIDITY CONTROL CURTAIN DETAILS, REFER TO MANUFACTURERS INSTALLATION MANUAL.
3. REFER TO JOB SITE MANAGEMENT FOR STOCKPILE MANAGEMENT.
4. PROTECT Exist UTILITIES IN PLACE.

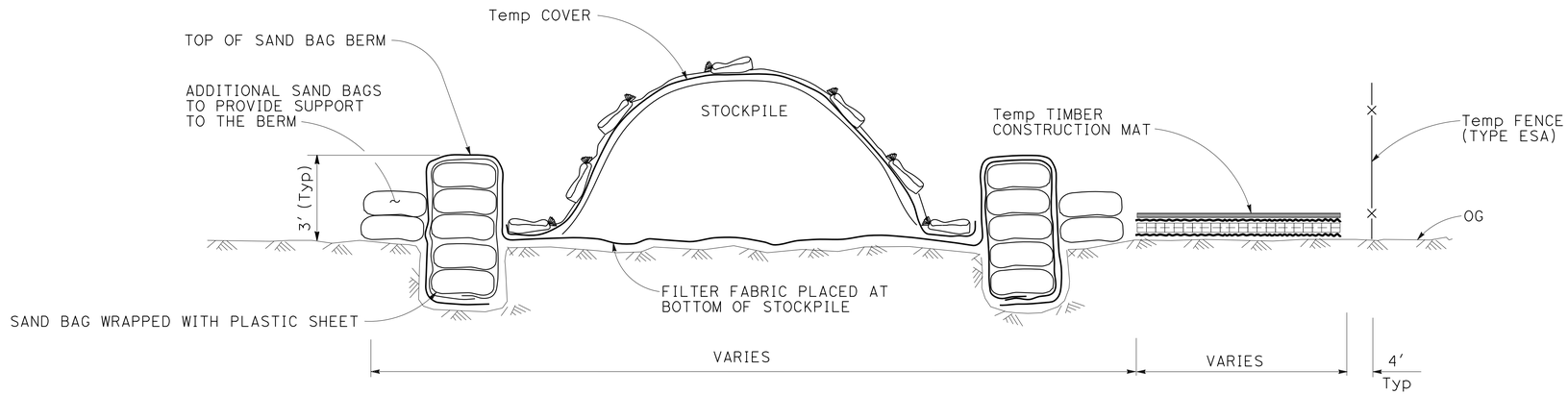

SECTION A-A

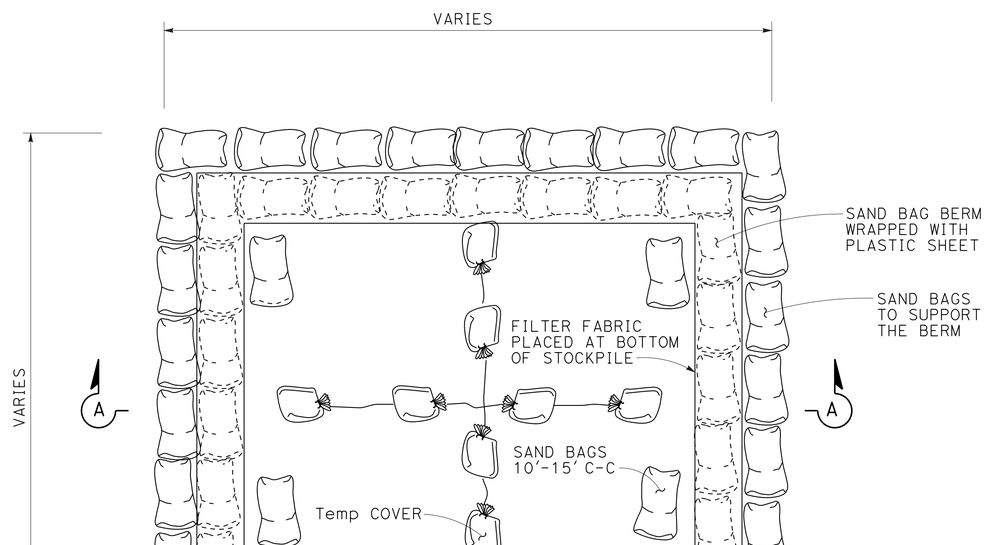

PLAN
TEMPORARY STOCKPILE DETAIL

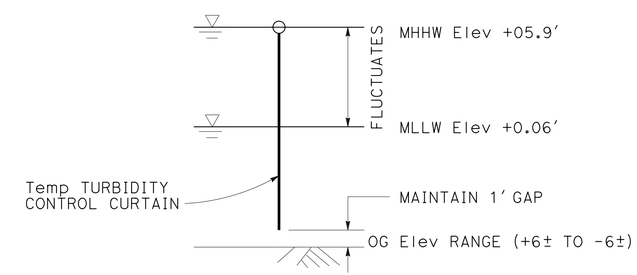

TEMPORARY TURBIDITY CONTROL CURTAIN DEPTH DETAIL

TEMPORARY WATER POLLUTION CONTROL DETAILS

NO SCALE

WPCD-1

STATE OF CALIFORNIA - DEPARTMENT OF TRANSPORTATION
Caltrans® WATER QUALITY

FUNCTIONAL SUPERVISOR: KAMRAN NAKHJIRI
CALCULATED-DESIGNED BY: JENNIFER CHEN
CHECKED BY: KAMRAN NAKHJIRI
REVISED BY: JC
DATE REVISED: 10/23/14

LAST REVISION 10-23-14
DATE PLOTTED => 18-FEB-2015
TIME PLOTTED => 09:07

Dist	COUNTY	ROUTE	POST MILES TOTAL PROJECT	SHEET No.	TOTAL SHEETS
04	SF	101	9.0	7	38

REGISTERED CIVIL ENGINEER DATE 10/29/14

2-17-15
PLANS APPROVAL DATE

REGISTERED PROFESSIONAL ENGINEER Robin L. Amatya No. 71006 Exp. 6-30-15 CIVIL STATE OF CALIFORNIA

THE STATE OF CALIFORNIA OR ITS OFFICERS OR AGENTS SHALL NOT BE RESPONSIBLE FOR THE ACCURACY OR COMPLETENESS OF SCANNED COPIES OF THIS PLAN SHEET.

NOTE:

FOR ACCURATE RIGHT OF WAY DATA, CONTACT RIGHT OF WAY ENGINEERING AT THE DISTRICT OFFICE.

LEGEND:

- Temp FENCE (TYPE CL-6)
- Temp TURBIDITY CONTROL CURTAIN
- STAGING AREA

NOTES:

1. ALL PIPE DIAMETER DIMENSIONS REFERENCED ARE TO THE OUTSIDE PIPE DIAMETER.
2. FOR SW-HDPE PIPE, A MAXIMUM OF TWO MARINE GRADE MECHANICAL JOINTS ARE PERMITTED. ALL OTHER JOINTS FOR HDPE PIPE MUST BE THERMAL BUTT-FUSION WELDED.
3. 54" HDPE PIPE IS DEPARTMENT FURNISHED SOLID WALL HIGH DENSITY POLYETHYLENE PIPE.

ABBREVIATIONS:

HDPE	HIGH DENSITY POLYETHLENE
HTL	HIGH TIDE LINE
KTL	KING TIDE LINE
MHHW	MEAN HIGHER HIGH WATER
MLLW	MEAN LOWER LOW WATER
SW-HDPE	SOLID WALL HIGH DENSITY POLYETHYLENE
USCG	UNITED STATES COAST GUARD

DRAINAGE PLAN

SCALE: 1" = 20'

APPROVED FOR DRAINAGE WORK ONLY

D-1

REVISED BY	DATE REVISED
JS	10/6/14

CALCULATED-DESIGNED BY: JASJEET SIKAND
CHECKED BY: ROBIN AMATYA
FUNCTIONAL SUPERVISOR: JOSEPH PETERSON

STATE OF CALIFORNIA - DEPARTMENT OF TRANSPORTATION
Caltrans
HYDRAULICS

LAST REVISION 01-17-15
DATE PLOTTED => 18-FEB-2015
TIME PLOTTED => 09:07

Dist	COUNTY	ROUTE	POST MILES TOTAL PROJECT	SHEET No.	TOTAL SHEETS
04	SF	101	9.0	8	38

REGISTERED CIVIL ENGINEER DATE 10/29/14

2-17-15
PLANS APPROVAL DATE

REGISTERED PROFESSIONAL ENGINEER Robin L. Amatya No. 71006 Exp 6-30-15 CIVIL STATE OF CALIFORNIA

THE STATE OF CALIFORNIA OR ITS OFFICERS OR AGENTS SHALL NOT BE RESPONSIBLE FOR THE ACCURACY OR COMPLETENESS OF SCANNED COPIES OF THIS PLAN SHEET.

NOTE:
FOR ACCURATE RIGHT OF WAY DATA, CONTACT RIGHT OF WAY ENGINEERING AT THE DISTRICT OFFICE.

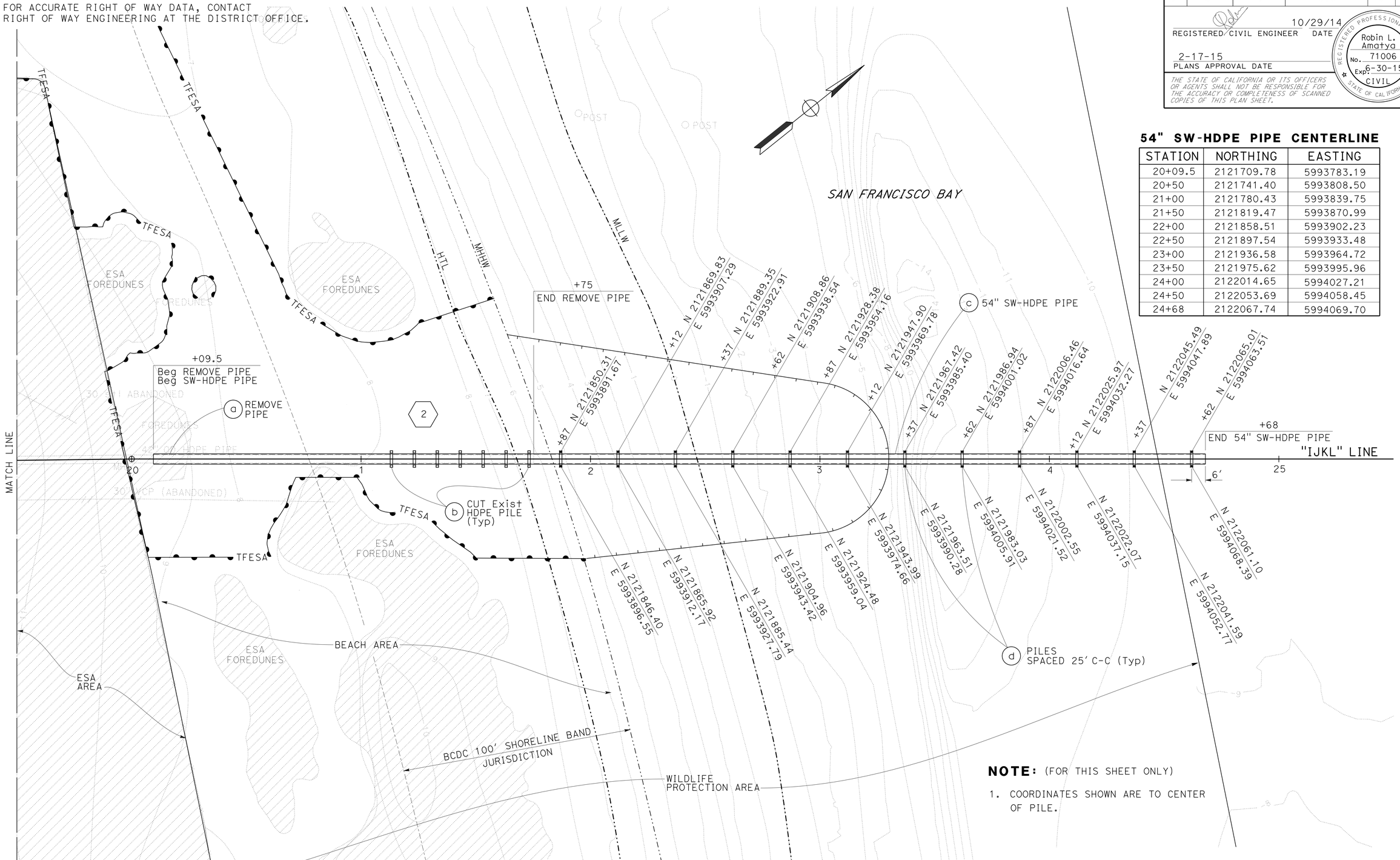

54" SW-HDPE PIPE CENTERLINE

STATION	NORTHING	EASTING
20+09.5	2121709.78	5993783.19
20+50	2121741.40	5993808.50
21+00	2121780.43	5993839.75
21+50	2121819.47	5993870.99
22+00	2121858.51	5993902.23
22+50	2121897.54	5993933.48
23+00	2121936.58	5993964.72
23+50	2121975.62	5993995.96
24+00	2122014.65	5994027.21
24+50	2122053.69	5994058.45
24+68	2122067.74	5994069.70

NOTE: (FOR THIS SHEET ONLY)

1. COORDINATES SHOWN ARE TO CENTER OF PILE.

DRAINAGE PLAN

SCALE: 1" = 20'

APPROVED FOR DRAINAGE WORK ONLY

FOR NOTES, ABBREVIATIONS AND LEGEND, SEE SHEET D-1

D-2

STATE OF CALIFORNIA - DEPARTMENT OF TRANSPORTATION
Caltrans
HYDRAULICS

FUNCTIONAL SUPERVISOR: JOSEPH PETERSON
CALCULATED-DESIGNED BY: SUSANA ONATE
CHECKED BY: JASJEET SIKAND
REVISED BY: SO
DATE REVISED: 10/6/14

LAST REVISION 10-29-14
DATE PLOTTED => 18-FEB-2015
TIME PLOTTED => 09:07

Dist	COUNTY	ROUTE	POST MILES TOTAL PROJECT	SHEET No.	TOTAL SHEETS
04	SF	101	9.0	9	38

Peter Aguilera 10/24/14
REGISTERED CIVIL ENGINEER DATE

2-17-15
PLANS APPROVAL DATE

REGISTERED PROFESSIONAL ENGINEER Peter Aguilera No. 55287 Exp. 12-31-16 CIVIL STATE OF CALIFORNIA

THE STATE OF CALIFORNIA OR ITS OFFICERS OR AGENTS SHALL NOT BE RESPONSIBLE FOR THE ACCURACY OR COMPLETENESS OF SCANNED COPIES OF THIS PLAN SHEET.

LEGEND:

- CUT Exist PILES 18" FROM TOP OF 54" SW-HDPE PIPE
- MARINE DREDGING
- Temp TURBIDITY CONTROL CURTAIN

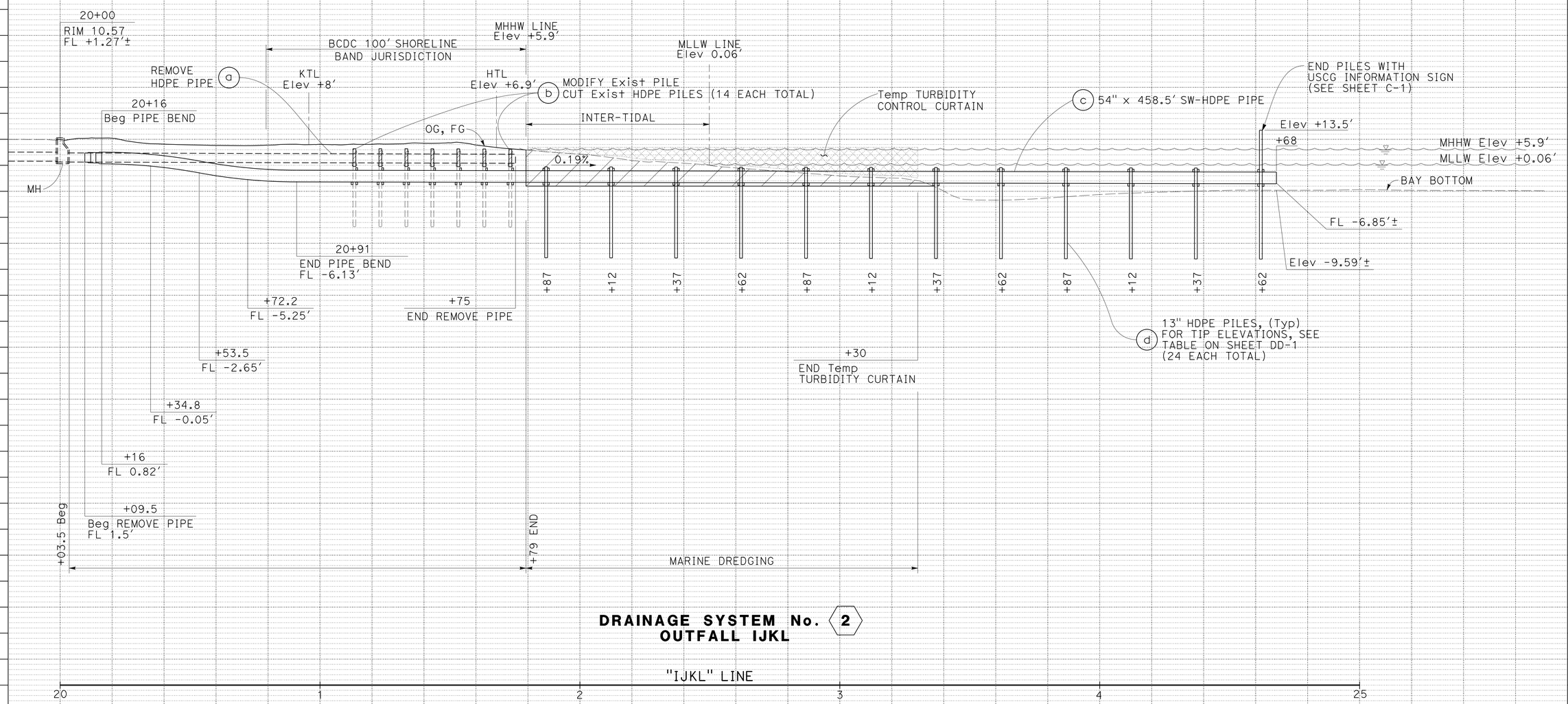

DRAINAGE SYSTEM No. 2
OUTFALL IJKL

DRAINAGE PROFILES

SCALE: Horiz 1" = 20'
Vert 1" = 20'

DP-1

STATE OF CALIFORNIA - DEPARTMENT OF TRANSPORTATION
Caltrans® DESIGN

FUNCTIONAL SUPERVISOR: ARLISSA PANG
CALCULATED-DESIGNED BY: PETER AGUILERA
CHECKED BY: SUSANA ONATE
REVISED BY: SO
DATE REVISED: 10/6/14

LAST REVISION 01-18-15
DATE PLOTTED => 18-FEB-2015
TIME PLOTTED => 09:08

Dist	COUNTY	ROUTE	POST MILES TOTAL PROJECT	SHEET No.	TOTAL SHEETS
04	SF	101	9.0	10	38

REGISTERED CIVIL ENGINEER 10/29/14 DATE

2-17-15
PLANS APPROVAL DATE

REGISTERED PROFESSIONAL ENGINEER Robin L. Amatya No. 71006 Exp. 6-30-15 CIVIL STATE OF CALIFORNIA

THE STATE OF CALIFORNIA OR ITS OFFICERS OR AGENTS SHALL NOT BE RESPONSIBLE FOR THE ACCURACY OR COMPLETENESS OF SCANNED COPIES OF THIS PLAN SHEET.

NOTES:

1. ALL THREADED RODS FOR CROSSTIES AND CHOCKS MUST RECEIVE WASHERS AND DOUBLE NUTS ON BOTH SIDES.
2. CUT AND DEBURR THREADED ROD SO THAT ITS END EXTENDS 1" BEYOND THE OUTSIDE NUT.
3. FOR PILE CAP INSTALLATION, PREDRILL AND USE 10 GAUGE 1½" STAINLESS STEEL RING SHANK NAILS ALONG THE RIM AND EQUALLY SPACED (3 PER PILING).
4. HDPE PILES WITH DRIVING SHOES, SW-HDPE PIPE AND PIPE TRANSITION, CROSSTIES, CHOCKS, PILE CAPS, AND MISCELLANEOUS STAINLESS STEEL HARDWARE (THREADED RODS, WASHERS, BOLTS) ARE DEPARTMENT FURNISHED.
5. INSTALL DEPARTMENT FURNISHED PILE CAPS ON ALL Exist CUT PILES AND NEW PILES.

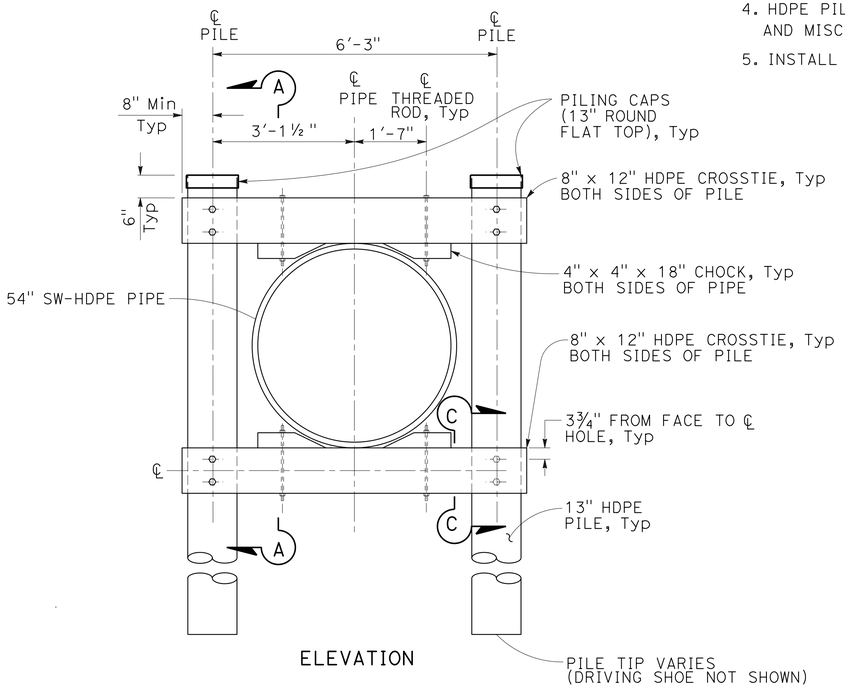

ELEVATION

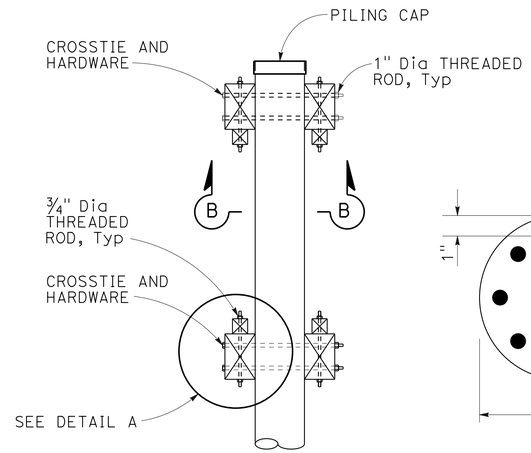

SECTION A-A

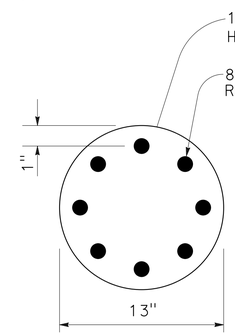

HDPE PILE
SECTION B-B

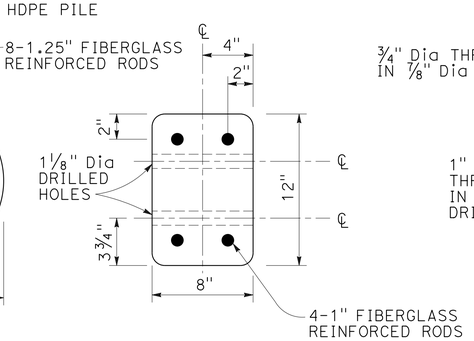

HDPE CROSSTIE
SECTION C-C

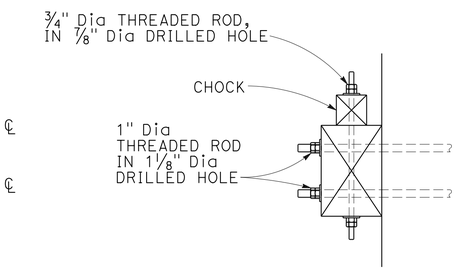

DETAIL A

HDPE PILE DETAIL

2 d

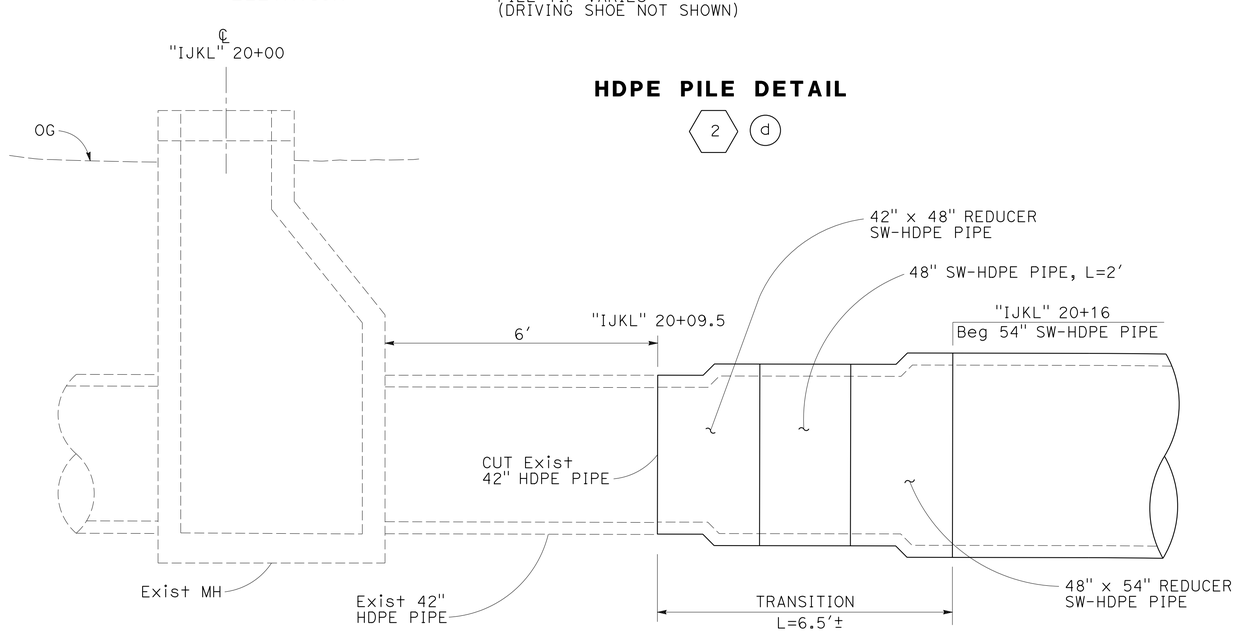

TRANSITION DETAIL

2 c

13" DIAMETER HDPE PILE AND CROSSTIE

STATION	TOP OF LOWER CROSSTIE	TOP HDPE PILE	HDPE PILE TIP ✳
	Elev (FT)		
21+87	-6.56	-0.56	-35.56
22+12	-6.61	-0.61	-35.61
22+37	-6.66	-0.66	-35.66
22+62	-6.70	-0.70	-35.70
22+87	-6.75	-0.75	-35.75
23+12	-6.80	-0.80	-35.80
23+37	-6.85	-0.85	-35.85
23+62	-6.89	-0.89	-35.89
23+87	-6.94	-0.94	-35.94
24+12	-6.99	-0.99	-35.99
24+37	-7.04	-1.04	-36.04
24+62	-7.08	13.50	-36.08

✳ PILE TIP ELEVATION IS TO BOTTOM OF PILE NOT INCLUDING DRIVING SHOE.
NOMINAL DRIVING RESISTANCE IS 170 KIPS FOR THE PURPOSE OF SELECTING DRIVING SYSTEM.

DRAINAGE DETAILS
NO SCALE

DD-1

STATE OF CALIFORNIA - DEPARTMENT OF TRANSPORTATION
Caltrans® HYDRAULICS

FUNCTIONAL SUPERVISOR: JOSEPH PETERSON
CALCULATED-DESIGNED BY: JASJEET SIKAND
CHECKED BY: ROBIN AMATYA
REVISED BY: JS
DATE REVISED: 10/6/14

LAST REVISION 01-18-15
DATE PLOTTED => 18-FEB-2015
TIME PLOTTED => 09:08

Dist	COUNTY	ROUTE	POST MILES TOTAL PROJECT	SHEET No.	TOTAL SHEETS
04	SF	101	9.0	11	38

REGISTERED CIVIL ENGINEER DATE 10/29/14

2-17-15
PLANS APPROVAL DATE

REGISTERED PROFESSIONAL ENGINEER Robin L. Amatya No. 71006 Exp. 6-30-15 CIVIL STATE OF CALIFORNIA

THE STATE OF CALIFORNIA OR ITS OFFICERS OR AGENTS SHALL NOT BE RESPONSIBLE FOR THE ACCURACY OR COMPLETENESS OF SCANNED COPIES OF THIS PLAN SHEET.

NOTE:

1. THREADED RODS MUST BE INSTALLED WITH WASHERS ON BOTH SIDES AND DOUBLE NUTS.

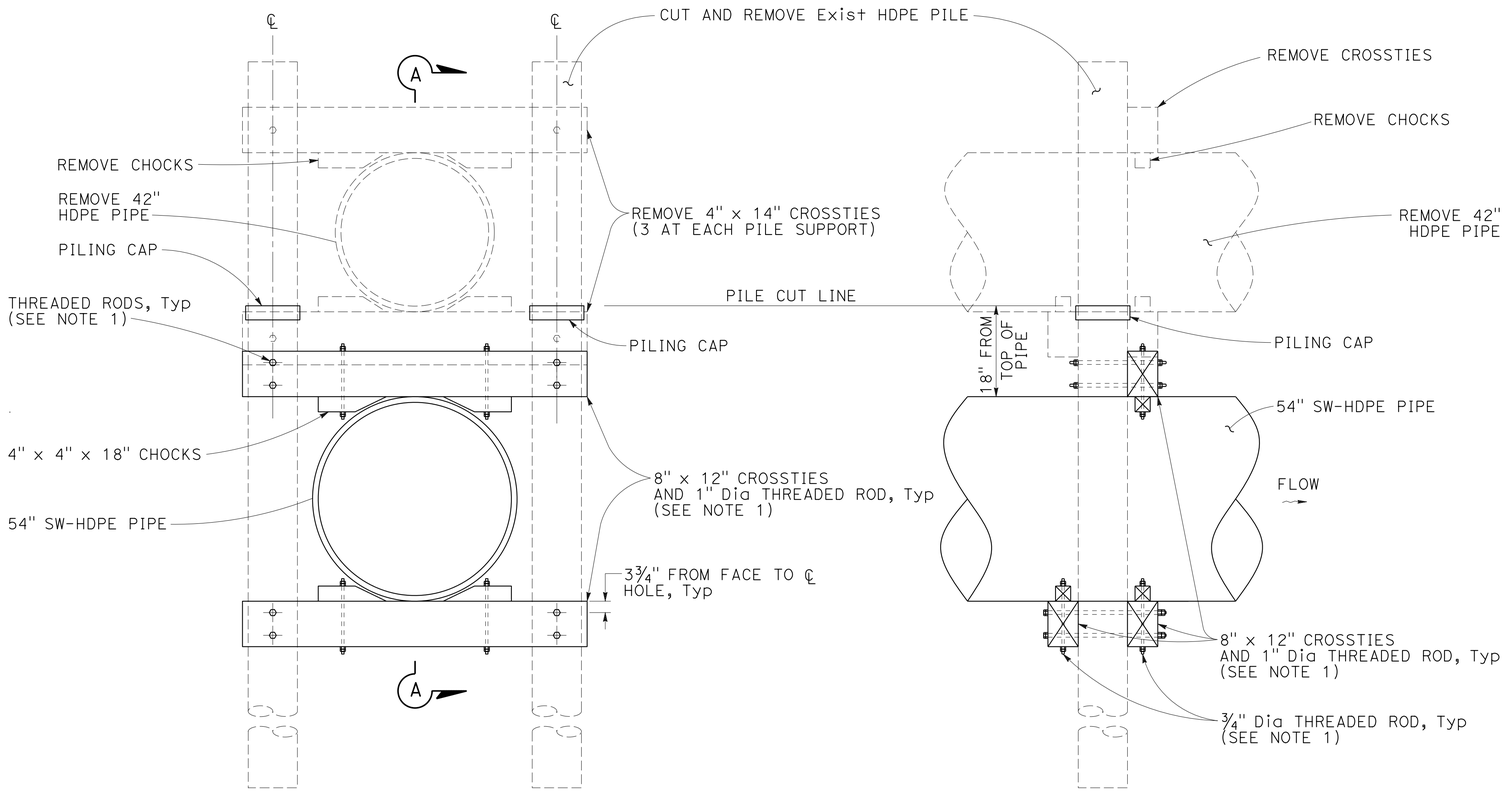

SECTION A-A

MODIFY PILE SUPPORTS

2 b

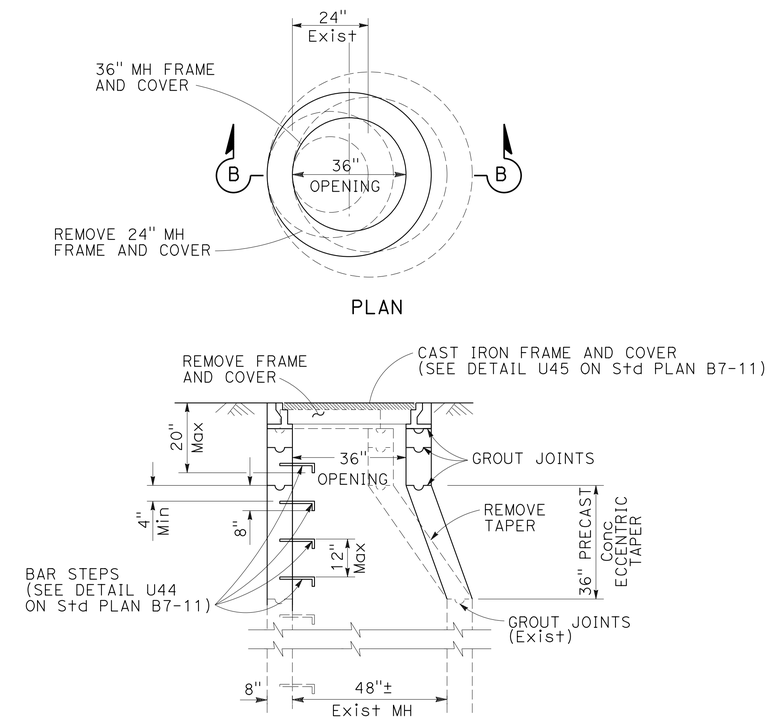

SECTION B-B

MODIFY MANHOLE

1 a

DRAINAGE DETAILS

NO SCALE

DD-2

REVISED BY	DATE REVISED
JS	10/6/14

CALCULATED-DESIGNED BY: JASJEET SIKAND
CHECKED BY: ROBIN AMATYA
FUNCTIONAL SUPERVISOR: JOSEPH PETERSON

STATE OF CALIFORNIA - DEPARTMENT OF TRANSPORTATION
Caltrans
HYDRAULICS

LAST REVISION 01-20-15 | DATE PLOTTED => 18-FEB-2015 | TIME PLOTTED => 09:08

Dist	COUNTY	ROUTE	POST MILES TOTAL PROJECT	SHEET No.	TOTAL SHEETS
04	SF	101	9.0	12	38

Peter Aguilera 10/24/14
REGISTERED CIVIL ENGINEER DATE

2-17-15
PLANS APPROVAL DATE

REGISTERED PROFESSIONAL ENGINEER Peter Aguilera No. 55287 Exp. 12-31-16 CIVIL STATE OF CALIFORNIA

THE STATE OF CALIFORNIA OR ITS OFFICERS OR AGENTS SHALL NOT BE RESPONSIBLE FOR THE ACCURACY OR COMPLETENESS OF SCANNED COPIES OF THIS PLAN SHEET.

DRAINAGE QUANTITIES

DRAINAGE SHEET No.	DRAINAGE SYSTEM No. ⬡	DRAINAGE UNIT ○	MODIFY MANHOLE	INSTALL 54" SW-HDPE PIPE	REMOVE PIPE	CUT EXISTING HDPE PILE (N)	DRIVE 13" HDPE PILE	42" x 48" SW-HDPE PIPE REDUCER (N)	48" SW-HDPE PIPE (N)	48" x 54" SW-HDPE PIPE REDUCER (N)	54" SW-HDPE PIPE (N)	13" HDPE PILE AND CAPS (N)	8" x 12" HDPE CROSSTIE (N)	4" x 4" x 18" HDPE CHOCK (N)	MISCELLANEOUS METAL (STAINLESS STEEL HARDWARE) (N)	MISCELLANEOUS IRON AND STEEL	MAXIMUM COVER (N)	36" MANHOLE FRAME AND COVER (N)	DESCRIPTION	STATION	DRAINAGE SYSTEM No. ⬡	DRAINAGE UNIT ○
								DEPARTMENT FURNISHED														
			EA	LF		EA			FT	EA	FT		EA		LB		LF	EA				
D-1	1	a	1													435		1	MODIFY MANHOLE	"IJKL" 17+05	1	a
D-2	2	a			166														REMOVE 42" HDPE PIPE	"IJKL" 20+09.5 TO 21+75	2	a
		b				14													CUT Exist 13" HDPE PILE AND INSTALL PILE CAP	"IJKL" 21+10 TO 21+75		b
		c		458.5				1	2	1	458.5						10		54" SW-HDPE PIPE	"IJKL" 20+09.5 TO 24+68		c
		d					24					870			2000				13" HDPE PILES WITH DRIVING SHOE, INSTALL PILE CAP AND DRIVING SHOE	"IJKL" 21+10 TO 24+62		d
													73						HDPE CROSSTIE	"IJKL" 21+10 TO 24+62		
														138					HDPE CHOCK	"IJKL" 21+10 TO 24+62		
TOTAL			1	458.5	166		24									435						

(N) NOT A SEPARATE PAY ITEM, FOR INFORMATION ONLY

CALCULATED-DESIGNED BY	SUSANA ONATE	REVISED BY	SO
CHECKED BY	PETER AGUILERA	DATE REVISED	10/6/14

FUNCTIONAL SUPERVISOR: ARLISSA PANG

STATE OF CALIFORNIA - DEPARTMENT OF TRANSPORTATION
Caltrans® DESIGN

DRAINAGE QUANTITIES

DQ-1

LAST REVISION 01-20-15 | DATE PLOTTED => 18-FEB-2015 | TIME PLOTTED => 09:08

Dist	COUNTY	ROUTE	POST MILES TOTAL PROJECT	SHEET No.	TOTAL SHEETS
04	SF	101	9.0	13	38

REGISTERED CIVIL ENGINEER 10/24/14 DATE

2-17-15
PLANS APPROVAL DATE

REGISTERED PROFESSIONAL ENGINEER Jerilyn L. Struven No. 49964 Exp. 12-31-16 CIVIL STATE OF CALIFORNIA

THE STATE OF CALIFORNIA OR ITS OFFICERS OR AGENTS SHALL NOT BE RESPONSIBLE FOR THE ACCURACY OR COMPLETENESS OF SCANNED COPIES OF THIS PLAN SHEET.

NOTE:

FOR ACCURATE RIGHT OF WAY DATA, CONTACT RIGHT OF WAY ENGINEERING AT THE DISTRICT OFFICE.

LEGEND:

No. CONSTRUCTION AREA SIGN NUMBER

CONSTRUCTION AREA SIGNS

SIGN	CODE	PANEL SIZE (INCH x INCH)	SIGN MESSAGE	NUMBER OF SIGNS	No. OF POSTS AND SIZE (EA-INCH x INCH)
1	Spec 1	48 x 18	SEE SPECIAL 1	7	(ONE) - 4 x 6
2	Spec 2A, 2B	48 x 18	SEE SPECIAL 2A, 2B	2	(ONE) - 4 x 6

NOTES:

1. LOCATION OF CONSTRUCTION AREA SIGNS ARE APPROXIMATE. EXACT LOCATION WILL BE DETERMINED BY THE ENGINEER.
2. POST LENGTH GIVEN IS APPROXIMATE. EXACT SIZE AND LENGTH OF WOOD POSTS TO BE DETERMINED BY THE ENGINEER.

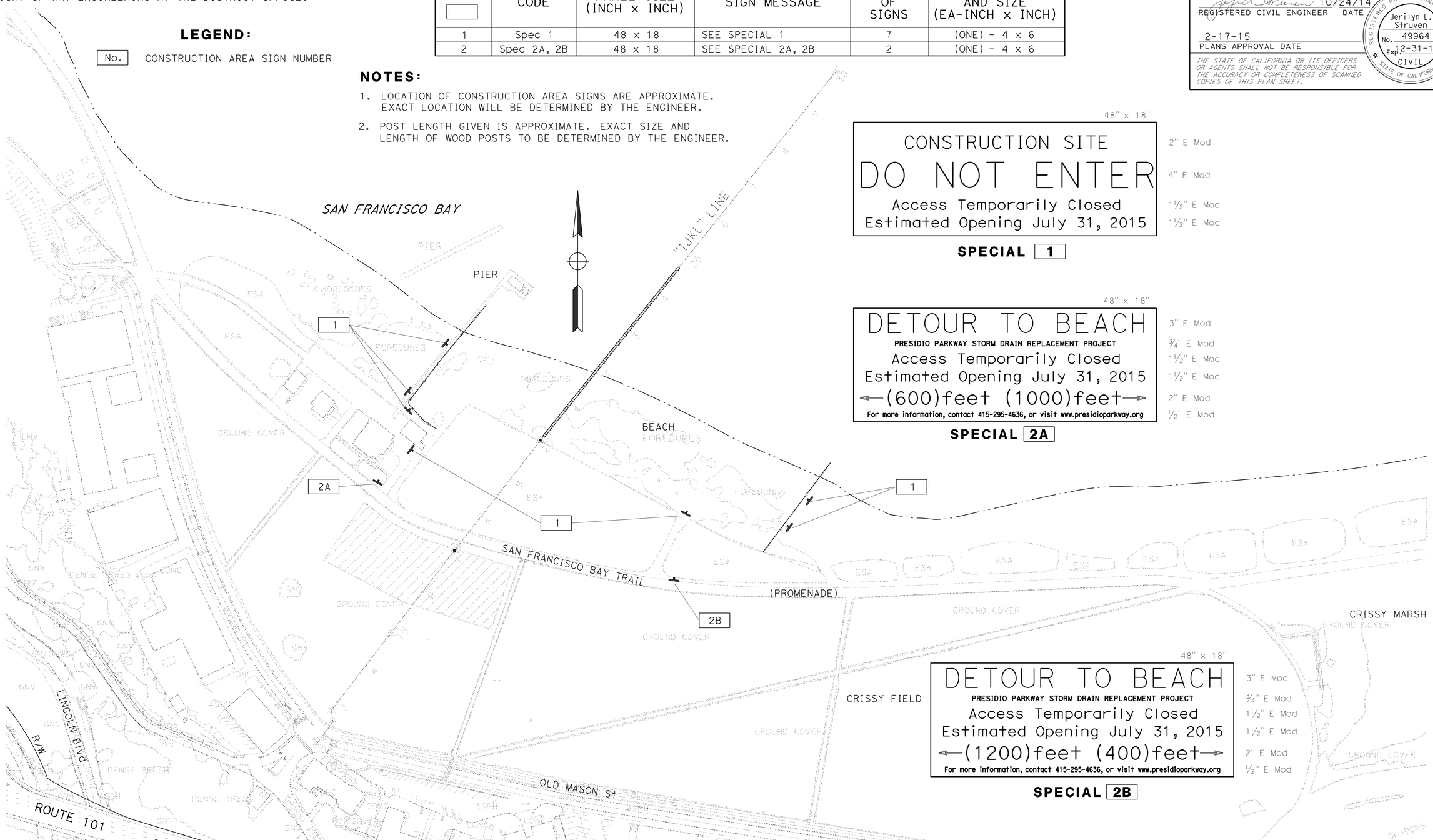

48" x 18"

CONSTRUCTION SITE
DO NOT ENTER
Access Temporarily Closed
Estimated Opening July 31, 2015

2" E Mod
4" E Mod
1½" E Mod
1½" E Mod

SPECIAL 1

48" x 18"

DETOUR TO BEACH
PRESIDIO PARKWAY STORM DRAIN REPLACEMENT PROJECT
Access Temporarily Closed
Estimated Opening July 31, 2015
←(600)feet (1000)feet→
For more information, contact 415-295-4636, or visit www.presidioparkway.org

3" E Mod
¾" E Mod
1½" E Mod
1½" E Mod
2" E Mod
½" E Mod

SPECIAL 2A

48" x 18"

DETOUR TO BEACH
PRESIDIO PARKWAY STORM DRAIN REPLACEMENT PROJECT
Access Temporarily Closed
Estimated Opening July 31, 2015
←(1200)feet (400)feet→
For more information, contact 415-295-4636, or visit www.presidioparkway.org

3" E Mod
¾" E Mod
1½" E Mod
1½" E Mod
2" E Mod
½" E Mod

SPECIAL 2B

CONSTRUCTION AREA SIGNS

NO SCALE

APPROVED FOR CONSTRUCTION AREA SIGN WORK ONLY

CS-1

PA	9/30/14
REVISED BY	DATE REVISED
ULICES VEGA	JERILYN STRUVEN
CALCULATED-DESIGNED BY	CHECKED BY
FUNCTIONAL SUPERVISOR	JERILYN STRUVEN

STATE OF CALIFORNIA - DEPARTMENT OF TRANSPORTATION
Caltrans
TRAFFIC

LAST REVISION 01-20-15 | DATE PLOTTED => 18-FEB-2015 | TIME PLOTTED => 09:08

Dist	COUNTY	ROUTE	POST MILES TOTAL PROJECT	SHEET No.	TOTAL SHEETS
04	SF	101	9.0	14	38

Peter Aguilera 10/24/14
REGISTERED CIVIL ENGINEER DATE

2-17-15
PLANS APPROVAL DATE

REGISTERED PROFESSIONAL ENGINEER Peter Aguilera No. 55287 Exp. 12-31-16 CIVIL STATE OF CALIFORNIA

THE STATE OF CALIFORNIA OR ITS OFFICERS OR AGENTS SHALL NOT BE RESPONSIBLE FOR THE ACCURACY OR COMPLETENESS OF SCANNED COPIES OF THIS PLAN SHEET.

NOTES:

1. LAND ACCESS AND STAGE 1 AND STAGE 2 CONSTRUCTION ACTIVITIES NOT ALLOWED AFTER JULY 31ST.
2. THE CONTRACTOR IS RESPONSIBLE FOR VERIFYING THE GROUNDWATER LEVEL DURING CONSTRUCTION. GROUNDWATER AND BAYWATER WILL BE PRESENT AND WILL FLUCTUATE WITH SEASONAL AND TIDAL CONDITIONS.
3. LIMIT OF MARINE DREDGING SHOWN IS APPROXIMATE AND MAY BE ADJUSTED TO SUIT SITE CONDITIONS WITH APPROVAL BY THE ENGINEER.
4. STAGE WORK IS LIMITED TO THE LIMITS SHOWN. BEFORE JUNE 1ST NO WORK IS ALLOWED WITHIN INTERTIDAL ZONE OR BAY WATER.
5. ANY Temp SHORING PLAN MUST BE AUTHORIZED BY THE ENGINEER BEFORE STARTING WORK AND MUST NOT EXTEND BEYOND STAGE 1 LIMITS (MHHW).
6. ANY Temp TRESTLE PLAN MUST BE AUTHORIZED BY THE ENGINEER AND MUST NOT EXTEND BEYOND STAGE 2 LIMITS, MUST BE REMOVED, AND BEACH RESTORED BY JULY 31.
7. LIMITS OF Temp TURBIDITY CONTROL CURTAIN MUST NOT EXTEND BEYOND ELEVATION -6′.

STAGE 1
WORK WINDOW
MAY 15 TO JULY 31

1. INSTALL TFESA, Temp FENCE (TYPE CL-6), Temp DIVERSION SYSTEM (WPC-2), INSTALL Temp TIMBER CONSTRUCTION MATS.
2. EXCAVATE AND REMOVE CULVERT
3. CUT AND MODIFY Exist PILES
4. INSTALL 54" SW-HDPE PIPE AND BACKFILL WITH Exc M+I TO OG
5. REMOVE TF (ESA), Temp FENCE (TYPE CL-6), AND Temp TIMBER CONSTRUCTION MATS.

STAGE 2
WORK WINDOW
JUNE 1 TO JULY 31

1. INSTALL Temp TURBIDITY CONTROL CURTAIN
2. DREDGE AND DISPOSE OF MARINE DREDGING M+I
3. INSTALL AIR BUBBLE SYSTEM IF REQUIRED DUE TO TIDE ELEVATION)
4. DRIVE 13" HDPE PILING
5. REMOVE AIR BUBBLE SYSTEM
6. INSTALL 54" SW-HDPE PIPE
7. REMOVE Temp TURBIDITY CURTAIN.

STAGE 3
WORK WINDOW
JUNE 1 TO OCTOBER 31

1. INSTALL AIR BUBBLE SYSTEM
2. DRIVE 13" HDPE PILES
3. REMOVE AIR BUBBLE SYSTEM
4. INSTALL 54" SW-HDPE PIPE

LEGEND:

- MARINE DREDGING
- CUT Exist HDPE PILE
- Temp TURBIDITY CONTROL CURTAIN

ABBREVIATIONS:

HTL	HIGH TIDE LINE
KTL	KING TIDE LINE
MHHW	MEAN HIGHER HIGH WATER
MLLW	MEAN LOWER LOW WATER
SW-HDPE	SOLID WALL HIGH DENSITY POLYETHYLENE

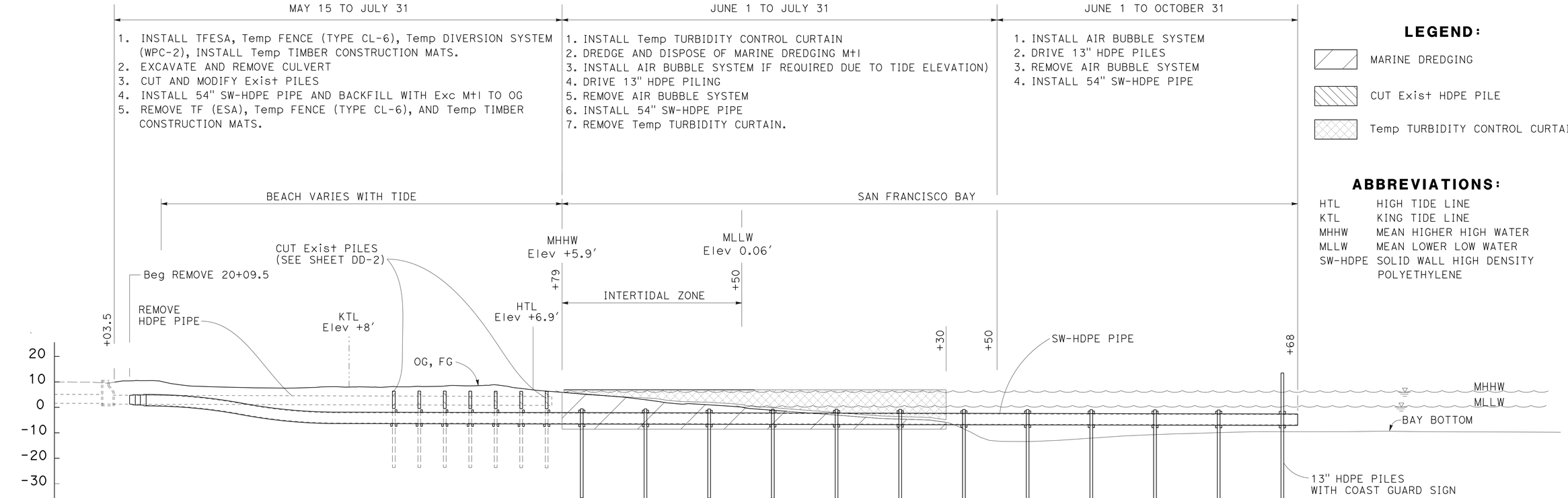

PROFILE

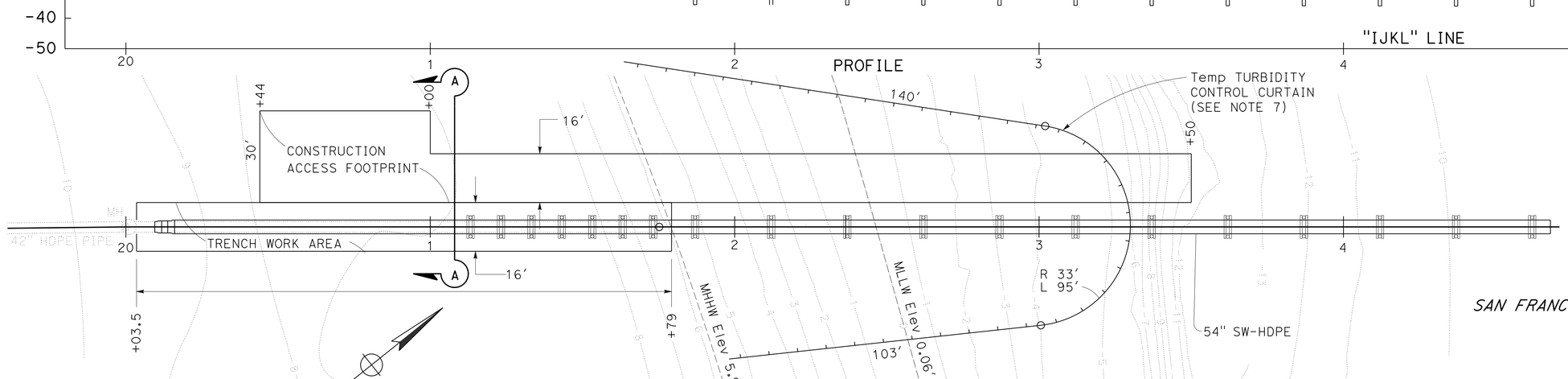

PLAN
(FOR STAGE SECTION VIEWS, SEE SHEET SC-2)

APPROVED FOR STAGE CONSTRUCTION WORK ONLY

STAGE CONSTRUCTION PLAN
SCALE: 1" = 20′

SC-1

STATE OF CALIFORNIA - DEPARTMENT OF TRANSPORTATION
Caltrans® DESIGN

FUNCTIONAL SUPERVISOR: ARLISSA PANG
CALCULATED-DESIGNED BY: PETER AGUILERA
CHECKED BY: SUSANA ONATE
REVISED BY: PA
DATE REVISED: 9/30/14

LAST REVISION 01-20-15
DATE PLOTTED => 19-FEB-2015
TIME PLOTTED => 07:49

Dist	COUNTY	ROUTE	POST MILES TOTAL PROJECT	SHEET No.	TOTAL SHEETS
04	SF	101	9.0	15	38

Peter Aguilera 10/24/14
REGISTERED CIVIL ENGINEER DATE

2-17-15
PLANS APPROVAL DATE

REGISTERED PROFESSIONAL ENGINEER Peter Aguilera No. 55287 Exp. 12-31-16 CIVIL STATE OF CALIFORNIA

THE STATE OF CALIFORNIA OR ITS OFFICERS OR AGENTS SHALL NOT BE RESPONSIBLE FOR THE ACCURACY OR COMPLETENESS OF SCANNED COPIES OF THIS PLAN SHEET.

NOTES:

1. PLAN SHOWS RELATIONSHIP BETWEEN OG, BOTTOM OF EXCAVATION, EXCAVATED MATERIAL, MARINE DREDGING, MHHW, MLLW, Exist AND NEW DRAINAGE SYSTEMS WITHIN THE VARIOUS STAGES.
2. EXCAVATION AND MARINE DREDGING LIMITS SHOWN MAY VARY DUE TO SEASONAL AND TIDAL FLUCTUATION. TO BE FIELD VERIFIED BY THE CONTRACTOR.

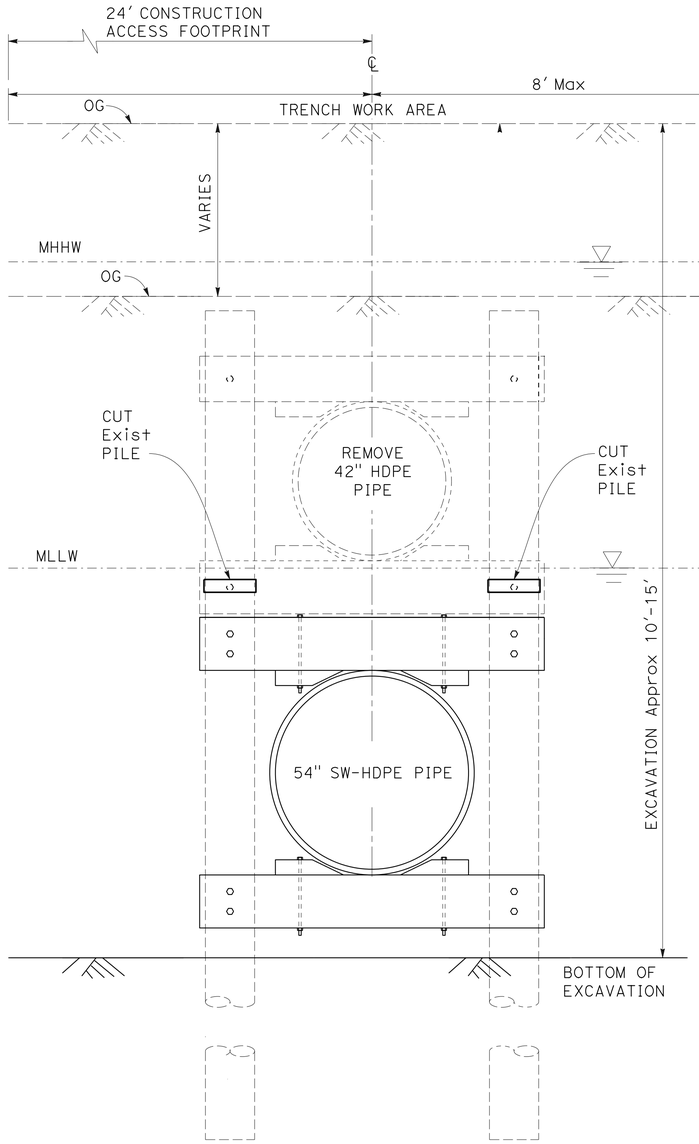

OUTFALL STAGE 1

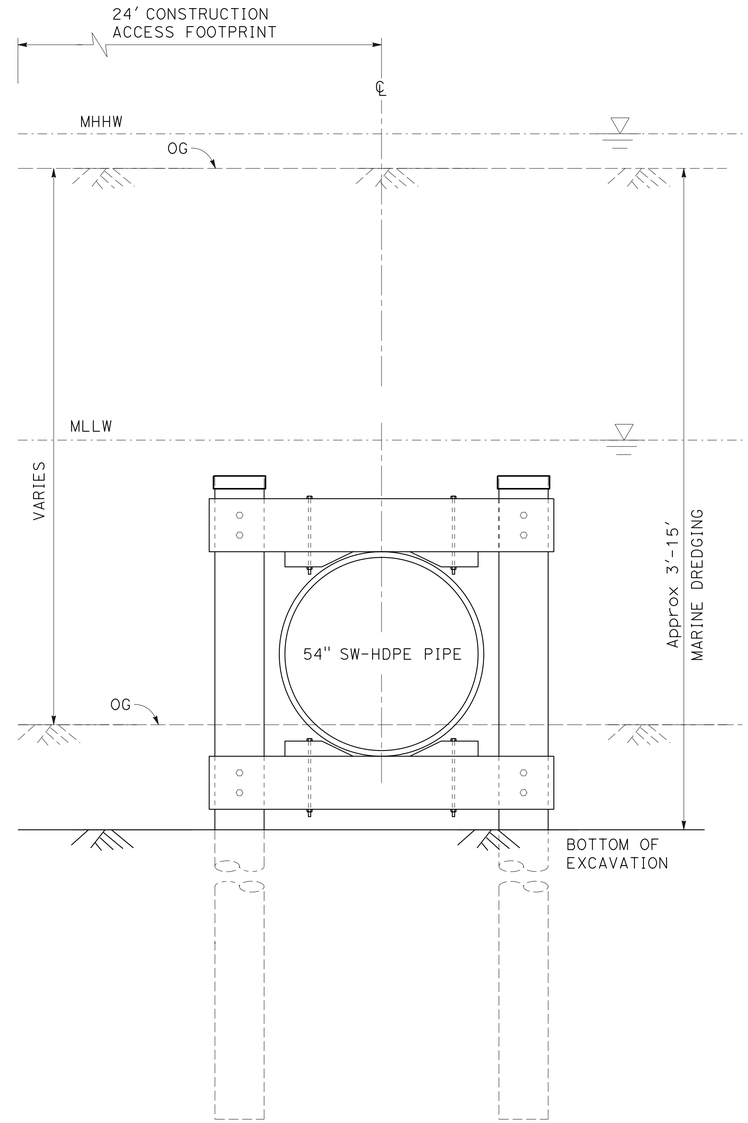

OUTFALL STAGE 2

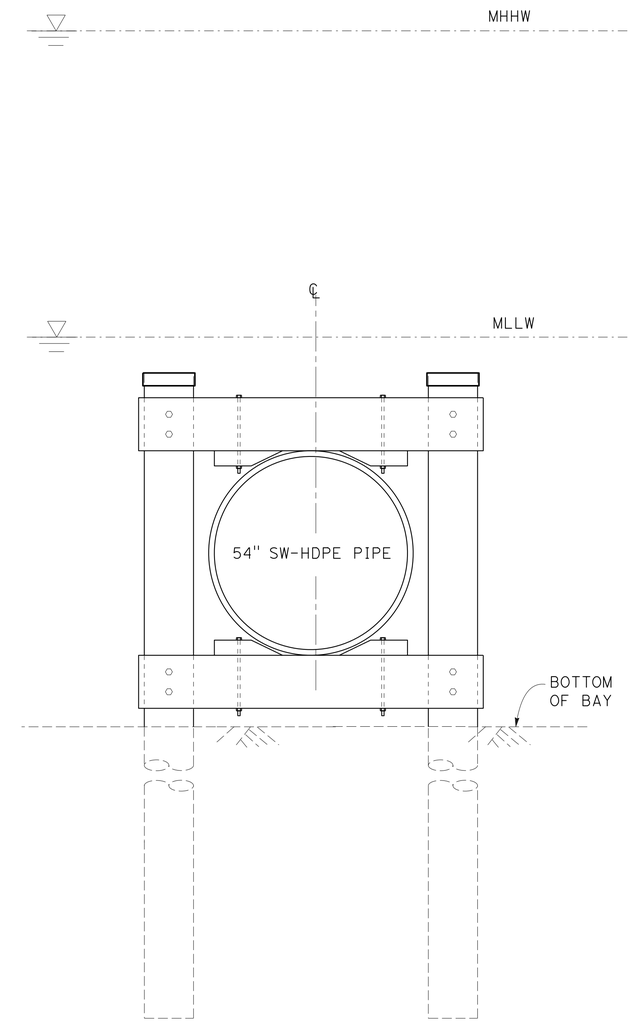

OUTFALL STAGE 3

STAGE CONSTRUCTION DETAILS

NO SCALE

SCD-1

STATE OF CALIFORNIA - DEPARTMENT OF TRANSPORTATION
Caltrans® DESIGN
FUNCTIONAL SUPERVISOR: ARLISSA PANG
CALCULATED-DESIGNED BY: PETER AGUILERA
CHECKED BY: SUSANA ONATE
REVISED BY: PA
DATE REVISED: 9/30/14

LAST REVISION 01-20-15
DATE PLOTTED => 18-FEB-2015
TIME PLOTTED => 09:08

Dist	COUNTY	ROUTE	POST MILES TOTAL PROJECT	SHEET No.	TOTAL SHEETS
04	SF	101	9.0	16	38

Peter Aguilera 10/24/14
REGISTERED CIVIL ENGINEER DATE

2-17-15
PLANS APPROVAL DATE

REGISTERED PROFESSIONAL ENGINEER
Peter Aguilera
No. 55287
Exp. 12-31-16
CIVIL
STATE OF CALIFORNIA

THE STATE OF CALIFORNIA OR ITS OFFICERS OR AGENTS SHALL NOT BE RESPONSIBLE FOR THE ACCURACY OR COMPLETENESS OF SCANNED COPIES OF THIS PLAN SHEET.

NOTE:

FOR ACCURATE RIGHT OF WAY DATA, CONTACT RIGHT OF WAY ENGINEERING AT THE DISTRICT OFFICE.

LEGEND:

- FLAGGER
- ACCESS PATH
- STAGING AREA
- PUBLIC INFORMATION SIGN (SEE NOTE 1)

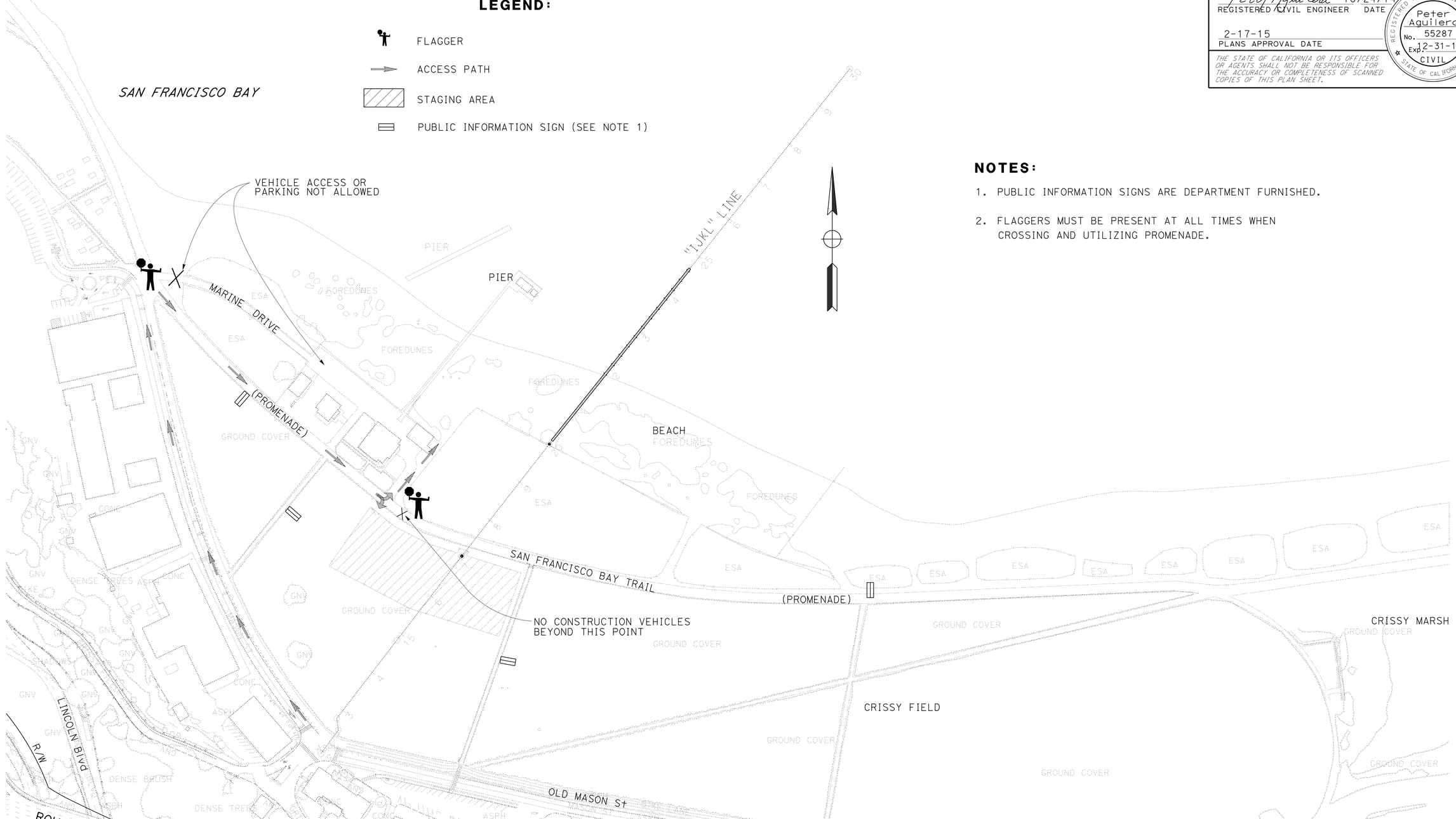

NOTES:

1. PUBLIC INFORMATION SIGNS ARE DEPARTMENT FURNISHED.
2. FLAGGERS MUST BE PRESENT AT ALL TIMES WHEN CROSSING AND UTILIZING PROMENADE.

TRAFFIC HANDLING PLAN

SCALE: 1" = 100'

APPROVED FOR TRAFFIC HANDLING WORK ONLY

TH-1

REVISED BY	DATE REVISED
PA	9/30/14

PETER AGUILERA — SUSANA ONATE — CALCULATED-DESIGNED BY — CHECKED BY

FUNCTIONAL SUPERVISOR: ARLISSA PANG

STATE OF CALIFORNIA - DEPARTMENT OF TRANSPORTATION — Caltrans — DESIGN

LAST REVISION 01-20-15 — DATE PLOTTED => 18-FEB-2015 — TIME PLOTTED => 09:08

Dist	COUNTY	ROUTE	POST MILES TOTAL PROJECT	SHEET No.	TOTAL SHEETS
04	SF	101	9.0	17	38

Peter Aguilera 10/24/14
REGISTERED CIVIL ENGINEER DATE

2-17-15
PLANS APPROVAL DATE

REGISTERED PROFESSIONAL ENGINEER Peter Aguilera No. 55287 Exp. 12-31-16 CIVIL STATE OF CALIFORNIA

THE STATE OF CALIFORNIA OR ITS OFFICERS OR AGENTS SHALL NOT BE RESPONSIBLE FOR THE ACCURACY OR COMPLETENESS OF SCANNED COPIES OF THIS PLAN SHEET.

TEMPORARY WATER POLLUTION CONTROL QUANTITIES

SHEET No.	LOCATION	TEMPORARY CONSTRUCTION ENTRANCE	TEMPORARY DRAINAGE INLET PROTECTION	INSTALL TEMPORARY TURBIDITY CONTROL CURTAIN (N)	TEMPORARY SILT FENCE	TEMPORARY TIMBER CONSTRUCTION MAT	TEMPORARY DIVERSION SYSTEM	TEMPORARY COVER
		EA		FT	LF	SQYD	EA	SQYD
WPC-1	CRISSY FIELD	1	4		1000	5222		
	BEACH	1		340		2178		
	OFFSHORE							
WPC-2							2	
WPCD-1								5000
TOTAL		2	4		1000	7400	2	5000

(N) NOT A SEPARATE PAY ITEM, FOR INFORMATION ONLY

EXISTING IRRIGATION FACILITIES

SHEET No.	ADJUST VALVE BOX FRAME AND COVER TO GRADE	REPLACE VALVE BOX COVER
	EA	
IR-1	8	8
TOTAL	8	8

TEMPORARY FENCE (TYPE ESA)

SHEET No.	LOCATION	LENGTH
		LF
L-1	CRISSY BEACH	1500
	BEACH ENTRANCE	150
EC-1	CRISSY FIELD	1150
TOTAL		2800

TEMPORARY FENCE AND GATE

SHEET No.	LOCATION	TEMPORARY FENCE (TYPE CL-6)	TEMPORARY 16' CHAIN LINK GATE (TYPE CL-6)
		LF	EA
L-1	CRISSY BEACH (WEST SIDE)	347	
	CRISSY BEACH (EAST SIDE)	237	
	CRISSY FIELD STAGING AREA	1041	1
TOTAL		1625	1

SIGN QUANTITIES

SHEET No.	LOCATION	PANEL SIZE	SINGLE FACE	BACKGROUND		LEGEND		PROTECTIVE FILM	FURNISH SINGLE ALUMINUM SIGN	INSTALL UNFRAMED SIGN PANEL
				SHEETING COLOR	RETROREFLECTIVE ASTM TYPE	SHEETING COLOR	RETROREFLECTIVE ASTM TYPE	PREMIUM	UNFRAMED 0.125"	
C-1	"IJKL" LINE, Sta 24+62	48" X 48"	X	WHITE	IV	RED/BLACK	IV	X	32 SQFT	2 EA

SUMMARY OF QUANTITIES

Q-1

STATE OF CALIFORNIA - DEPARTMENT OF TRANSPORTATION
DESIGN
FUNCTIONAL SUPERVISOR: ARLISSA PANG
CALCULATED-DESIGNED BY: PETER AGUILERA
CHECKED BY: SUSANA ONATE
REVISED BY: PA
DATE REVISED: 9/30/14

LAST REVISION 01-20-15
DATE PLOTTED => 19-FEB-2015
TIME PLOTTED => 07:49

DIST	COUNTY	ROUTE	POST MILES TOTAL PROJECT	SHEET No	TOTAL SHEETS
04	SF	101	9.0	18	38

REGISTERED ENGINEER — DATE 9/9/13

2-17-15
PLANS APPROVAL DATE

REGISTERED PROFESSIONAL ENGINEER — MIKE KAPUSKAR — NO. GE 2564 — EXP. 12-31-16 — GEOTECHNICAL — STATE OF CALIFORNIA

The State of California or its officers or agents shall not be responsible for the accuracy or completeness of electronic copies of this plan sheet.

EARTH MECHANICS, INC.
3541 INVESTMENT BLVD, SUITE 4
HAYWARD, CA 94545

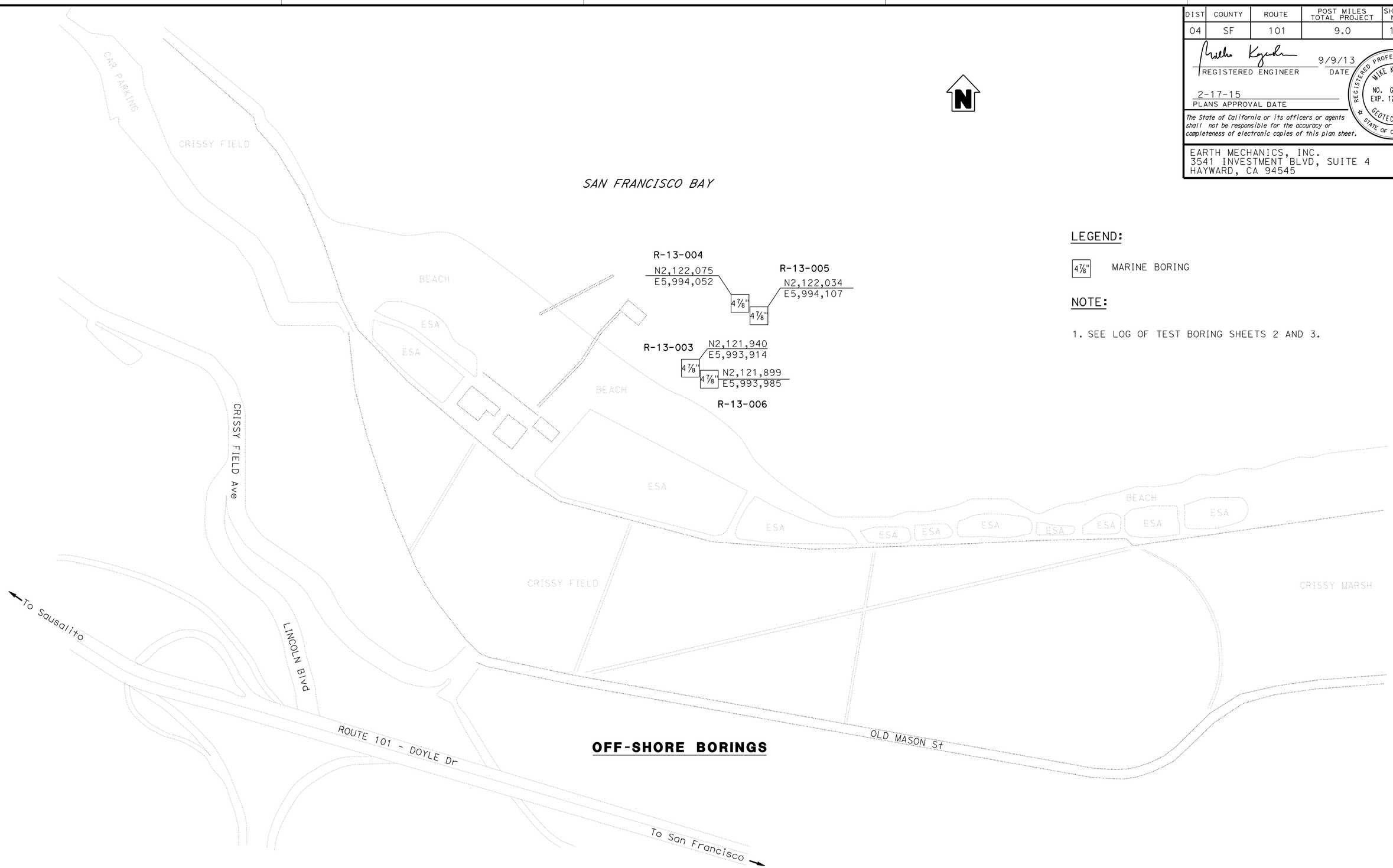

LEGEND:

4 7/8" MARINE BORING

NOTE:

1. SEE LOG OF TEST BORING SHEETS 2 AND 3.

OFF-SHORE BORINGS

DESIGN OVERSIGHT	DRAWN BY	K. THANT, J. FANG	J. CASTLE — FIELD INVESTIGATION BY:
SIGN OFF DATE	CHECKED BY	M. KAPUSKAR	DATE: AS DATED

PREPARED FOR THE STATE OF CALIFORNIA DEPARTMENT OF TRANSPORTATION

M. KAPUSKAR — PROJECT ENGINEER

BRIDGE NO. / POST MILES

DOYLE DRIVE OUTFALL IJKL STORMDRAIN, SAN FRANCISCO
LOG OF TEST BORINGS 1 OF 5

GS GEOTECHNICAL LOG OF TEST BORINGS SHEET (ENGLISH) (REV. 7/16/10)

ORIGINAL SCALE IN INCHES FOR REDUCED PLANS 0 1 2 3

UNIT:
PROJECT NUMBER & PHASE:
CONTRACT NO.: 04-1637N1

DISREGARD PRINTS BEARING EARLIER REVISION DATES

REVISION DATES — SHEET — OF

FILE => 0400020923qa001.dgn

PROJECT ID:04000209231

USERNAME => s12614 DATE PLOTTED => 18-FEB-2015 TIME PLOTTED => 09:08

DIST	COUNTY	ROUTE	POST MILES TOTAL PROJECT	SHEET No	TOTAL SHEETS
04	SF	101	9.0	19	38

REGISTERED ENGINEER — DATE 9/9/13

2-17-15
PLANS APPROVAL DATE

REGISTERED PROFESSIONAL ENGINEER — MIKE KAPUSKAR — NO. GE 2564 — EXP. 12-31-16 — GEOTECHNICAL — STATE OF CALIFORNIA

The State of California or its officers or agents shall not be responsible for the accuracy or completeness of electronic copies of this plan sheet.

EARTH MECHANICS, INC.
3541 INVESTMENT BLVD, SUITE 4
HAYWARD, CA 94545

NOTES:

(1) This LOTB sheet (Boring Record) was prepared in accordance with Caltrans Soil and Rock Logging, Classification and Presentation Manual (2010).

(2) 2.4" samples were taken using a California Modified Sampler (3.0" OD and 2.4" ID).

(3) An automatic trip hammer system consisting of a hammer weight of 140 lbs and 30" drop was used to advance the California Modified sampler.

(4) For plan view, refer to Log of Test Borings Sheet 1.

BENCHMARK:

Temporary benchmarks were calculated for each boring from vessel deck to mudline based on MLLW Datum and tide table from National Oceanic and Atmospheric Administration.

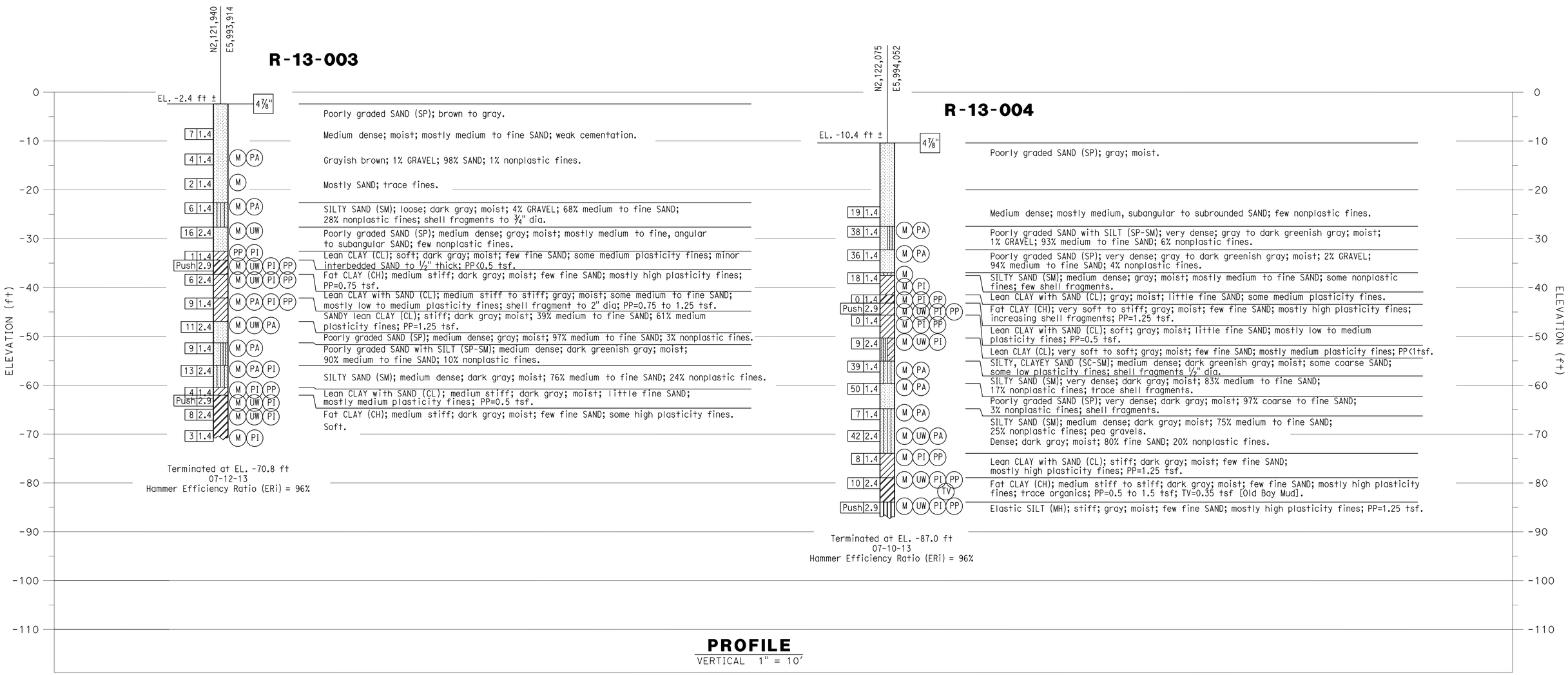

PROFILE
VERTICAL 1" = 10'

DESIGN OVERSIGHT	DRAWN BY	K. THANT, J. FANG	J. CASTLE	PREPARED FOR THE STATE OF CALIFORNIA DEPARTMENT OF TRANSPORTATION	M. KAPUSKAR PROJECT ENGINEER
SIGN OFF DATE	CHECKED BY	M. KAPUSKAR	FIELD INVESTIGATION BY: DATE: AS DATED		

BRIDGE NO.
POST MILES

DOYLE DRIVE OUTFALL IJKL STORMDRAIN, SAN FRANCISCO
LOG OF TEST BORINGS 2 OF 5

GS GEOTECHNICAL LOG OF TEST BORINGS SHEET (ENGLISH) (REV. 7/16/10)

ORIGINAL SCALE IN INCHES FOR REDUCED PLANS 0 1 2 3

UNIT:
PROJECT NUMBER & PHASE:
CONTRACT NO.: 04-1637N1

DISREGARD PRINTS BEARING EARLIER REVISION DATES

REVISION DATES | SHEET | OF

FILE => 0400020923qa002.dgn

PROJECT ID:04000209231

USERNAME => s121614 DATE PLOTTED => 18-FEB-2015 TIME PLOTTED => 09:08

DIST	COUNTY	ROUTE	POST MILES TOTAL PROJECT	SHEET No	TOTAL SHEETS
04	SF	101	9.0	20	38

REGISTERED ENGINEER — DATE 9/9/13

2-17-15
PLANS APPROVAL DATE

REGISTERED PROFESSIONAL ENGINEER — MIKE KAPUSKAR — NO. GE 2564 EXP. 12-31-16 — GEOTECHNICAL — STATE OF CALIFORNIA

The State of California or its officers or agents shall not be responsible for the accuracy or completeness of electronic copies of this plan sheet.

EARTH MECHANICS, INC.
3541 INVESTMENT BLVD, SUITE 4
HAYWARD, CA 94545

NOTES:

(1) This LOTB sheet (Boring Record) was prepared in accordance with Caltrans Soil and Rock Logging, Classification and Presentation Manual (2010).

(2) 2.4" samples were taken using a California Modified Sampler (3.0" OD and 2.4" ID).

(3) An automatic trip hammer system consisting of a hammer weight of 140 lbs and 30" drop was used to advance the California Modified sampler.

(4) For plan view, refer to Log of Test Borings Sheet 1.

BENCHMARK:

Temporary benchmarks were calculated for each boring from vessel deck to mudline based on MLLW Datum and tide table from National Oceanic and Atmospheric Administration.

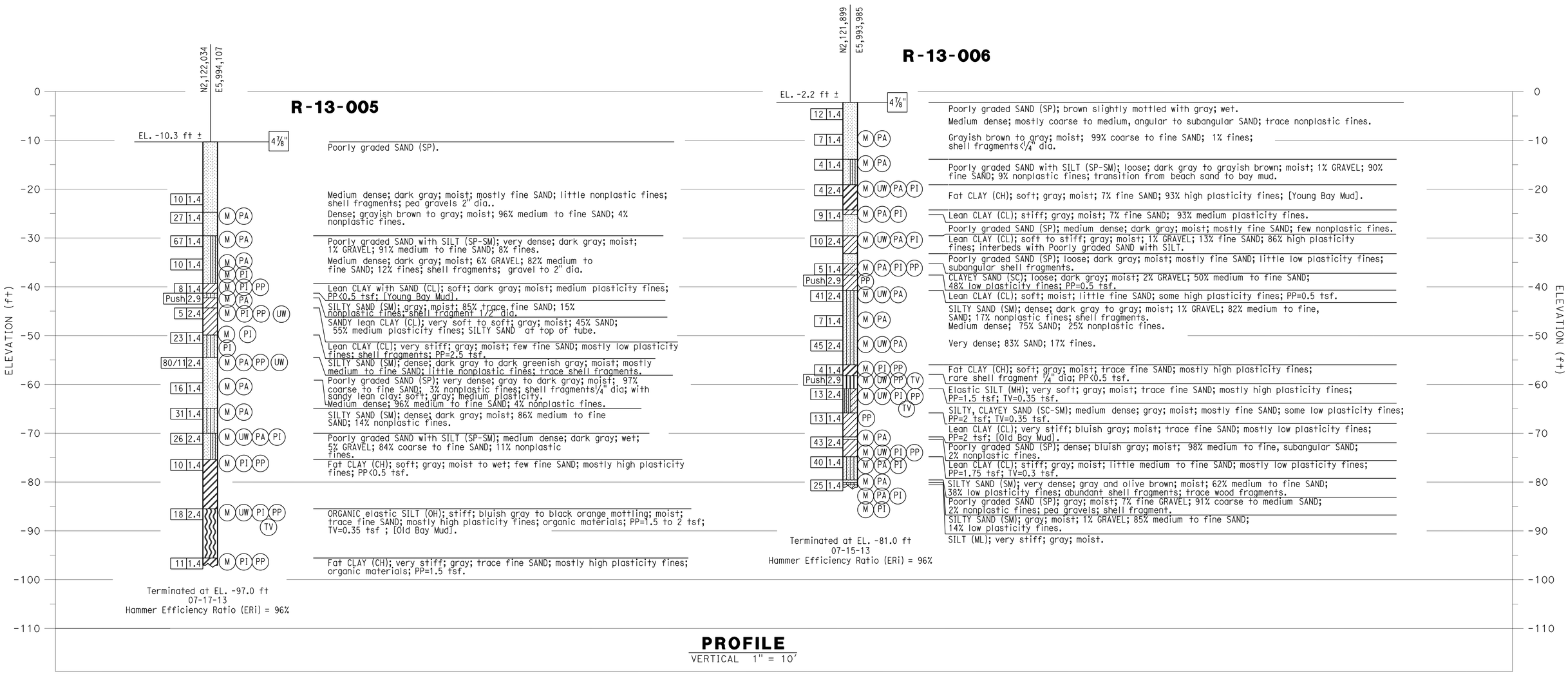

PROFILE
VERTICAL 1" = 10'

DESIGN OVERSIGHT	DRAWN BY	K. THANT, J. FANG	J. CASTLE — FIELD INVESTIGATION BY:
SIGN OFF DATE	CHECKED BY	M. KAPUSKAR	DATE: AS DATED

PREPARED FOR THE STATE OF CALIFORNIA DEPARTMENT OF TRANSPORTATION

M. KAPUSKAR — PROJECT ENGINEER

BRIDGE NO. / POST MILES

DOYLE DRIVE OUTFALL IJKL STORMDRAIN, SAN FRANCISCO
LOG OF TEST BORINGS 3 OF 5

GS GEOTECHNICAL LOG OF TEST BORINGS SHEET (ENGLISH) (REV. 7/16/10)

ORIGINAL SCALE IN INCHES FOR REDUCED PLANS 0 1 2 3

UNIT:
PROJECT NUMBER & PHASE:
CONTRACT NO.: 04-1637N1

DISREGARD PRINTS BEARING EARLIER REVISION DATES

REVISION DATES — SHEET — OF

FILE => 0400020923qa003.dgn

PROJECT ID:04000209231

USERNAME => s121614 DATE PLOTTED => 18-FEB-2015 TIME PLOTTED => 09:08

DIST	COUNTY	ROUTE	POST MILES TOTAL PROJECT	SHEET No.	TOTAL SHEETS
04	SF	101	9.0	21	38

REGISTERED CIVIL ENGINEER 7/15/14 DATE

2-17-15
PLANS APPROVAL DATE

REGISTERED PROFESSIONAL ENGINEER Caroline Chen No. C62438 Exp. 9-30-15 CIVIL STATE OF CALIFORNIA

The State of California or its officers or agents shall not be responsible for the accuracy or completeness of electronic copies of this plan sheet.

This LOTB sheet was prepared in accordance with the Caltrans Soil & Rock Logging, Classification, & Presentation Manual (2010 Edition).

See 2010 Standard Plans A10F and A10G for Soil Legend, and A10H for Rock Legend.

BENCH MARK

1" Caltrans Brass Plug SF"15"
N 2,120,923.973
E 5,995,469.423
Elev 10.09
NAVD 88

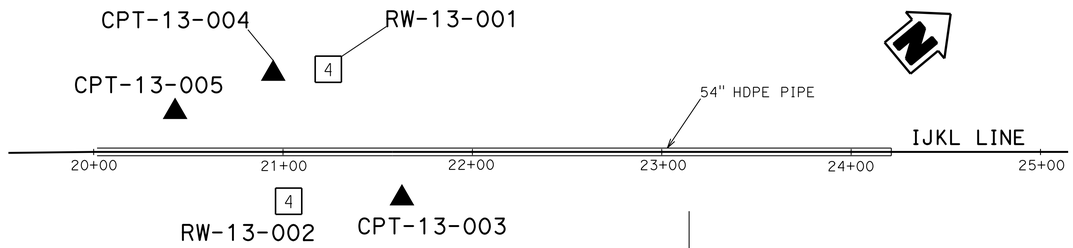

PLAN
1" = 40'

Note: Ground water not measured at the time of drilling.

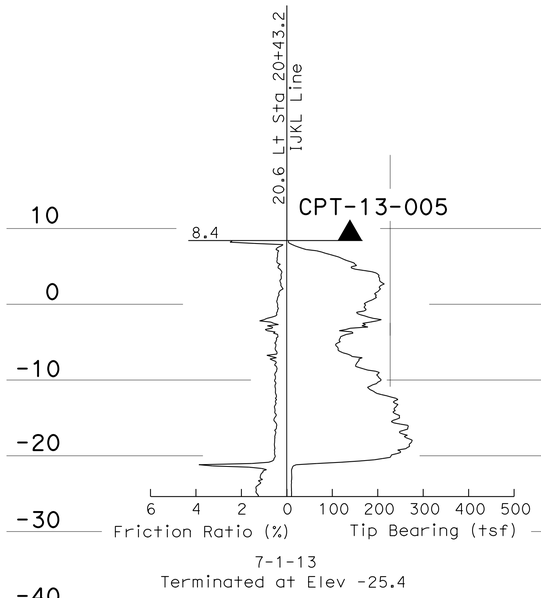

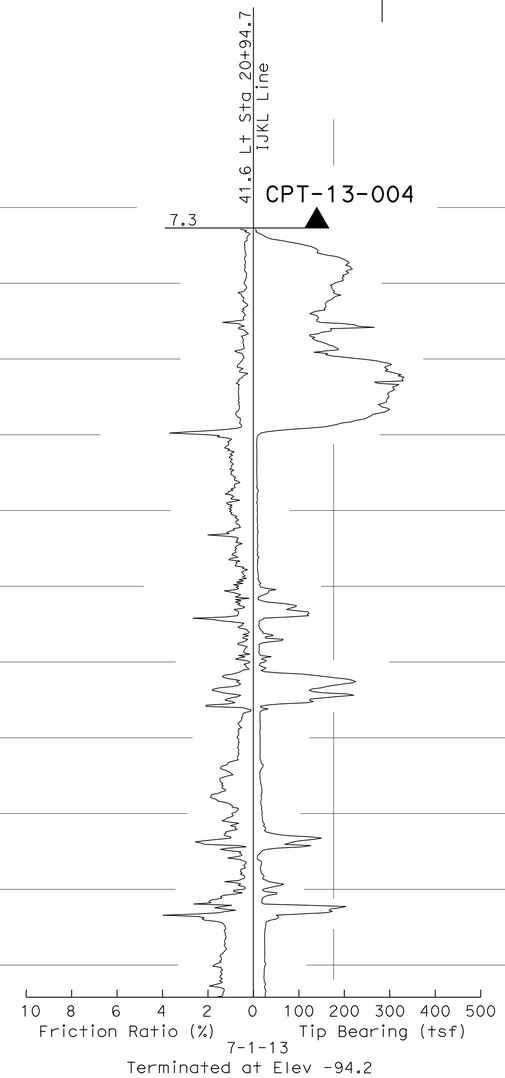

PROFILE
Horiz: 1" = 5'
Vert: 1" = 10'

TIME PLOTTED => 09:09
DATE PLOTTED => 18-FEB-2015
USERNAME => s12616t4

ENGINEERING SERVICES	MATERIALS AND GEOTECHNICAL SERVICES	STATE OF CALIFORNIA DEPARTMENT OF TRANSPORTATION	DIVISION OF ENGINEERING SERVICES STRUCTURE DESIGN DESIGN BRANCH X	BRIDGE NO. / POST MILE 9.0	DOYLE DRIVE OUTFALL IJKL STORM DRAIN LOG OF TEST BORINGS 4 OF 5
FUNCTIONAL SUPERVISOR NAME: M. Momenzadeh	DRAWN BY: W. Tang 5/14 CHECKED BY: XX	FIELD INVESTIGATION BY: M. Gaffney			

OGS CIVIL LOG OF TEST BORINGS SHEET

ORIGINAL SCALE IN INCHES FOR REDUCED PLANS 0 1 2 3

UNIT: 3643
PROJECT NUMBER & PHASE: 04000209234 CONTRACT NO.: 04-1637N4

DISREGARD PRINTS BEARING EARLIER REVISION DATES → REVISION DATES 06-29-14 07-01-14 SHEET X OF X

FILE => 0400020923qa004.dgn

DIST	COUNTY	ROUTE	POST MILES TOTAL PROJECT	SHEET No.	TOTAL SHEETS
04	SF	101	9.0	22	38

REGISTERED CIVIL ENGINEER 7/15/14 DATE

2-17-15
PLANS APPROVAL DATE

REGISTERED PROFESSIONAL ENGINEER
Caroline Chen
No. C62438
Exp. 9-30-15
CIVIL
STATE OF CALIFORNIA

The State of California or its officers or agents shall not be responsible for the accuracy or completeness of electronic copies of this plan sheet.

This LOTB sheet was prepared in accordance with the Caltrans Soil & Rock Logging, Classification, & Presentation Manual (2010 Edition).

See 2010 Standard Plans A10F and A10G for Soil Legend, and A10H for Rock Legend.

NOTE:

(1) Ground water not measured at the time of drilling.

(2) For plan view, refer to Log of Test Borings Sheet 4 of 5.

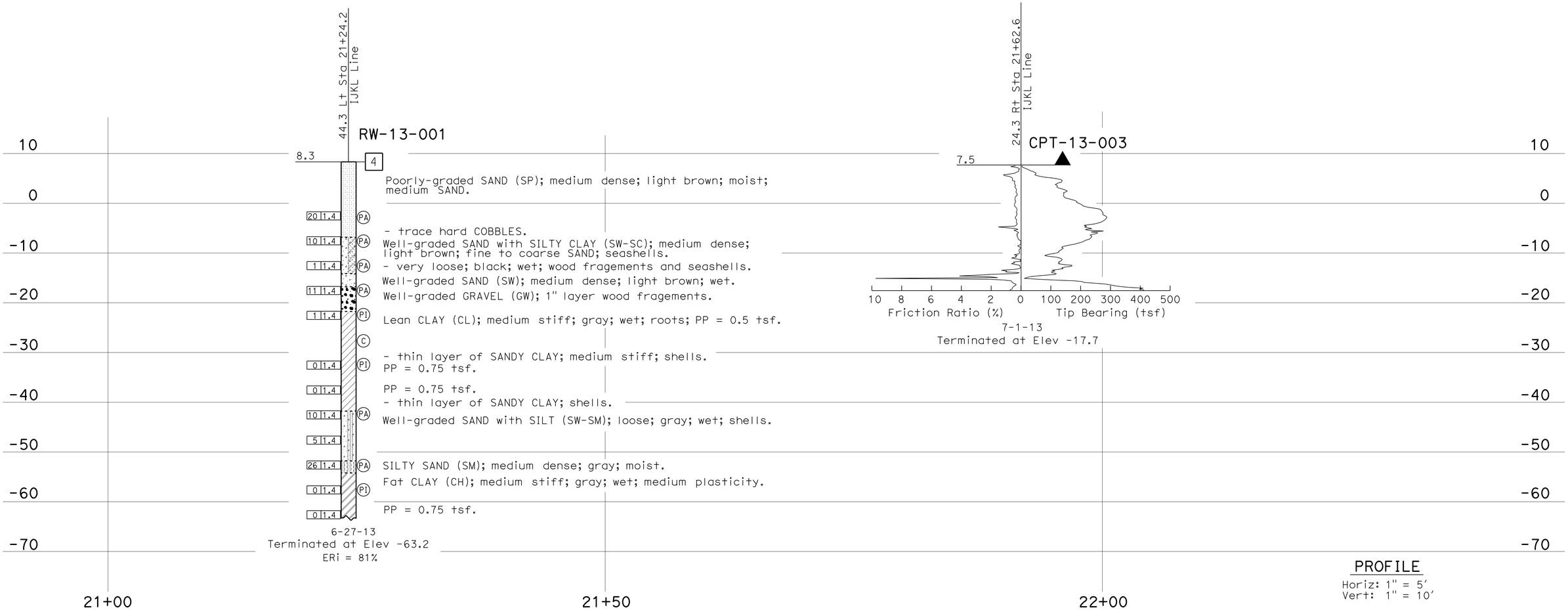

PROFILE
Horiz: 1" = 5'
Vert: 1" = 10'

ENGINEERING SERVICES	MATERIALS AND GEOTECHNICAL SERVICES	STATE OF CALIFORNIA DEPARTMENT OF TRANSPORTATION	DIVISION OF ENGINEERING SERVICES STRUCTURE DESIGN	BRIDGE NO.	DOYLE DRIVE OUTFALL IJKL STORM DRAIN
FUNCTIONAL SUPERVISOR	DRAWN BY: W. Tang 5/14	FIELD INVESTIGATION BY:	DESIGN BRANCH X	POST MILE	LOG OF TEST BORINGS 5 OF 5
NAME: M. Momenzadeh	CHECKED BY: D. Nesbitt	M. Gaffney		9.0	

OGS CIVIL LOG OF TEST BORINGS SHEET

ORIGINAL SCALE IN INCHES FOR REDUCED PLANS 0 1 2 3

UNIT: 3643
PROJECT NUMBER & PHASE: 04000209234 CONTRACT NO.: 04-1637N4

DISREGARD PRINTS BEARING EARLIER REVISION DATES

REVISION DATES: 06-30-14 07-07-14 08/11/14

SHEET 5 OF 5

FILE => 0400020923qa005.dgn

USERNAME => s121614 DATE PLOTTED => 18-FEB-2015 TIME PLOTTED => 09:09

Dist	COUNTY	ROUTE	POST MILES TOTAL PROJECT	SHEET No.	TOTAL SHEETS
04	SF	101	9.0	23	38

LICENSED LANDSCAPE ARCHITECT

2-17-15
PLANS APPROVAL DATE

LICENSED LANDSCAPE ARCHITECT
DAVID WARREN YAM No. 1929
11-30-15
Renewal Date
9-22-14
Date
STATE OF CALIFORNIA

THE STATE OF CALIFORNIA OR ITS OFFICERS OR AGENTS SHALL NOT BE RESPONSIBLE FOR THE ACCURACY OR COMPLETENESS OF SCANNED COPIES OF THIS PLAN SHEET.

NOTE:

1. FOR ACCURATE RIGHT OF WAY DATA, CONTACT RIGHT OF WAY ENGINEERING AT THE DISTRICT OFFICE.
2. REMOVE EXISTING SOD TO CONFORM TO LIMITS OF CONSTRUCTION STAGING AREA (SEE SHEET L-1)
3. EXACT LOCATION AND REMOVAL AREA TO BE DETERMINED BY THE ENGINEER.

ROADSIDE CLEARING PLAN

SCALE: 1" = 20′ **RC-1**

APPROVED FOR PLANTING WORK ONLY

REVISED BY	AK
DATE REVISED	9/22/14
CALCULATED-DESIGNED BY	ANGELA KWAN
CHECKED BY	DAVID YAM
SENIOR LANDSCAPE ARCHITECT	DAVID YAM

STATE OF CALIFORNIA - DEPARTMENT OF TRANSPORTATION
Caltrans
WATER QUALITY

LAST REVISION 09-22-14
DATE PLOTTED => 19-FEB-2015
TIME PLOTTED => 07:49

Dist	COUNTY	ROUTE	POST MILES TOTAL PROJECT	SHEET No.	TOTAL SHEETS
04	SF	101	9.0	24	38

LICENSED LANDSCAPE ARCHITECT

2-17-15
PLANS APPROVAL DATE

LICENSED LANDSCAPE ARCHITECT
DAVID WARREN YAM No. 1929
11-30-15
Renewal Date
9-22-14
Date
STATE OF CALIFORNIA

THE STATE OF CALIFORNIA OR ITS OFFICERS OR AGENTS SHALL NOT BE RESPONSIBLE FOR THE ACCURACY OR COMPLETENESS OF SCANNED COPIES OF THIS PLAN SHEET.

IRRIGATION SPRINKLER SCHEDULE

SYMBOL	ITEM DESCRIPTION	SPRINKLER TYPE	SPRAY PATTERN	OPERATING PRESSURE (psi)	PRESSURE COMPENSATING	PLUS/MINUS 5% ② DISCHARGE: GALLONS PER MINUTE (GPM)	GALLONS PER HOUR (GPH)	RADIUS (ft)	WIDTH x LENGTH (ft)	MATERIAL	INLET CONNECTION (NPT INCH)	POSITIVE-LOCKING Adj ARC STOP IMPACT	BACKSPLASH PREV. IMPACT	DIFFUSER PIN	DISTANCE CONTROL FLAP	Adj DISCHARGE	FLOW SHUTOFF DEVICE	CHECK VALVE	RISER: ASSEMBLY (TYPE)	RISER MATERIAL: PLASTIC	RISER MATERIAL: STAINLESS STEEL	RISER: SIZE (IPS INCH)	RISER: HEIGHT (INCH)	RISER: SWING JOINT (TYPE)	POP-UP: ASSEMBLY (TYPE)	POP-UP: HEIGHT (INCH)	POP-UP: SPRINKLER PROTECTOR (TYPE) ④	TREE WELL: HEIGHT (INCH)	TREE WELL: SWING JOINT (TYPE)	REMARKS
④	POP-UP SPRINKLER ASSEMBLY (GEAR DRIVEN)	GD	-	90	X	43	-	40	-	-	-	-	-	-	-	-	-	-	-	-	X	-	-	X	-	4"	-	-	-	

X IN BOX DENOTES REQUIREMENT

APPLICABLE WHEN CIRCLED BELOW:

1 - SEE SPECIAL PROVISIONS.
② - IF A PRESSURE COMPENSATING DEVICE IS SPECIFIED, THE DISCHARGE AND RADII SHOWN REFLECT ITS USE.
3 - ARC STOP MUST BE FITTED WITH A NUT AND BOLT
4 - VINYL-COATED CAST IRON HOUSING.
5 - SPRINKLER PROTECTORS REQUIRED ADJACENT TO SHOULDERS, CURBS, SIDEWALKS, AND DIKES.
6 - UNLESS OTHERWISE SHOWN ON PLANS.
7 - INSTALL ON UPHILL SIDE OF PLANT BASIN
8 - INSTALL TWO SPRINKLERS PER PLANT. LOCATE ON OPPOSITE SIDES OF ROOTBALL
9 - INSTALL AT LOWEST POINT OF PLANT BASIN
10 - BUILT-IN CHECK VALVE
11 - EXTERNAL CHECK VALVE
12 - IN-LINE EMITTER SPACING __" ON CENTER
13 - LENGTH AS NECESSARY BETWEEN SWING JOINT AND POP-UP INLET

SPRINKLER TYPE ABBREVIATIONS

DE - DRIP EMITTER
FB - FLOOD BUBBLER
GD - GEAR DRIVEN ROTOR
ID - IN -LINE DRIP EMITTER
IM - IMPACT
MS - MICRO SPRAY
SP - SPRAY

IRRIGATION SPRINKLER SCHEDULE

NO SCALE **ISS-1**

REVISED BY	AK	ANGELA KWAN	CALCULATED-DESIGNED BY
DATE REVISED	9/22/14	DAVID YAM	CHECKED BY

SENIOR LANDSCAPE ARCHITECT
DAVID YAM

STATE OF CALIFORNIA - DEPARTMENT OF TRANSPORTATION
WATER QUALITY
Caltrans

LAST REVISION 09-15-14 | DATE PLOTTED => 18-FEB-2015 | TIME PLOTTED => 09:09

Dist	COUNTY	ROUTE	POST MILES TOTAL PROJECT	SHEET No.	TOTAL SHEETS
04	SF	101	9.0	25	38

LICENSED LANDSCAPE ARCHITECT

2-17-15
PLANS APPROVAL DATE

LICENSED LANDSCAPE ARCHITECT
BART VAN DER ZEEUW No. 3296
Expiration Date 09-30-15
Renewal Date 9-22-14
Date
STATE OF CALIFORNIA

THE STATE OF CALIFORNIA OR ITS OFFICERS OR AGENTS SHALL NOT BE RESPONSIBLE FOR THE ACCURACY OR COMPLETENESS OF SCANNED COPIES OF THIS PLAN SHEET.

NOTE:

FOR ACCURATE RIGHT OF WAY DATA, CONTACT RIGHT OF WAY ENGINEERING AT THE DISTRICT OFFICE.

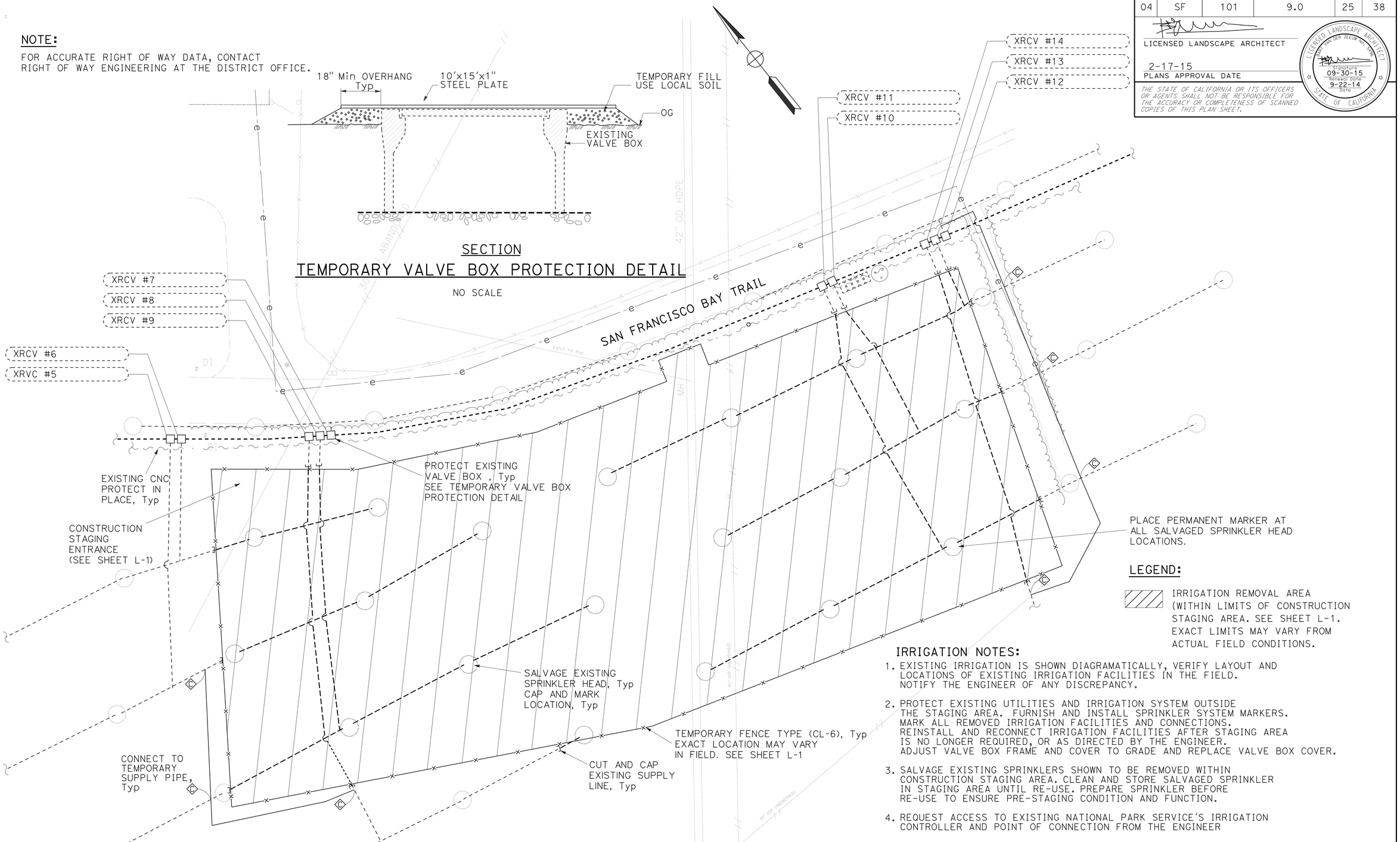

LEGEND:

IRRIGATION REMOVAL AREA (WITHIN LIMITS OF CONSTRUCTION STAGING AREA. SEE SHEET L-1. EXACT LIMITS MAY VARY FROM ACTUAL FIELD CONDITIONS.

IRRIGATION NOTES:

1. EXISTING IRRIGATION IS SHOWN DIAGRAMATICALLY, VERIFY LAYOUT AND LOCATIONS OF EXISTING IRRIGATION FACILITIES IN THE FIELD. NOTIFY THE ENGINEER OF ANY DISCREPANCY.
2. PROTECT EXISTING UTILITIES AND IRRIGATION SYSTEM OUTSIDE THE STAGING AREA. FURNISH AND INSTALL SPRINKLER SYSTEM MARKERS. MARK ALL REMOVED IRRIGATION FACILITIES AND CONNECTIONS. REINSTALL AND RECONNECT IRRIGATION FACILITIES AFTER STAGING AREA IS NO LONGER REQUIRED, OR AS DIRECTED BY THE ENGINEER. ADJUST VALVE BOX FRAME AND COVER TO GRADE AND REPLACE VALVE BOX COVER.
3. SALVAGE EXISTING SPRINKLERS SHOWN TO BE REMOVED WITHIN CONSTRUCTION STAGING AREA. CLEAN AND STORE SALVAGED SPRINKLER IN STAGING AREA UNTIL RE-USE. PREPARE SPRINKLER BEFORE RE-USE TO ENSURE PRE-STAGING CONDITION AND FUNCTION.
4. REQUEST ACCESS TO EXISTING NATIONAL PARK SERVICE'S IRRIGATION CONTROLLER AND POINT OF CONNECTION FROM THE ENGINEER

IRRIGATION REMOVAL PLAN

SCALE: 1" - 20'

IR-1

APPROVED FOR IRRIGATION WORK ONLY

REVISED BY	DATE REVISED
AK	9/22/14

BART VAN DER ZEEUW — CALCULATED-DESIGNED BY
ANGELA KWAN — CHECKED BY
DAVID YAM — SENIOR LANDSCAPE ARCHITECT

STATE OF CALIFORNIA - DEPARTMENT OF TRANSPORTATION
Caltrans®
WATER QUALITY

LAST REVISION 09-22-14
DATE PLOTTED => 18-FEB-2015
TIME PLOTTED => 09:09

Dist	COUNTY	ROUTE	POST MILES TOTAL PROJECT	SHEET No.	TOTAL SHEETS
04	SF	101	9.0	26	38

LICENSED LANDSCAPE ARCHITECT

2-17-15
PLANS APPROVAL DATE

LICENSED LANDSCAPE ARCHITECT
BART VAN DER ZEEUW No. 3296
Registered
09-30-15
Renewal Date
9-22-14
Date
STATE OF CALIFORNIA

THE STATE OF CALIFORNIA OR ITS OFFICERS OR AGENTS SHALL NOT BE RESPONSIBLE FOR THE ACCURACY OR COMPLETENESS OF SCANNED COPIES OF THIS PLAN SHEET.

NOTE:

1. FOR ACCURATE RIGHT OF WAY DATA, CONTACT RIGHT OF WAY ENGINEERING AT THE DISTRICT OFFICE.
2. IRRIGATION PLAN IS DIAGRAMMATICALLY, ADJUST COMPONENTS AND LAYOUT AS NEEDED.
3. NEW IRRIGATION SYSTEM MUST MATCH EXISTING IRRIGATION SYSTEM FUNCTION.

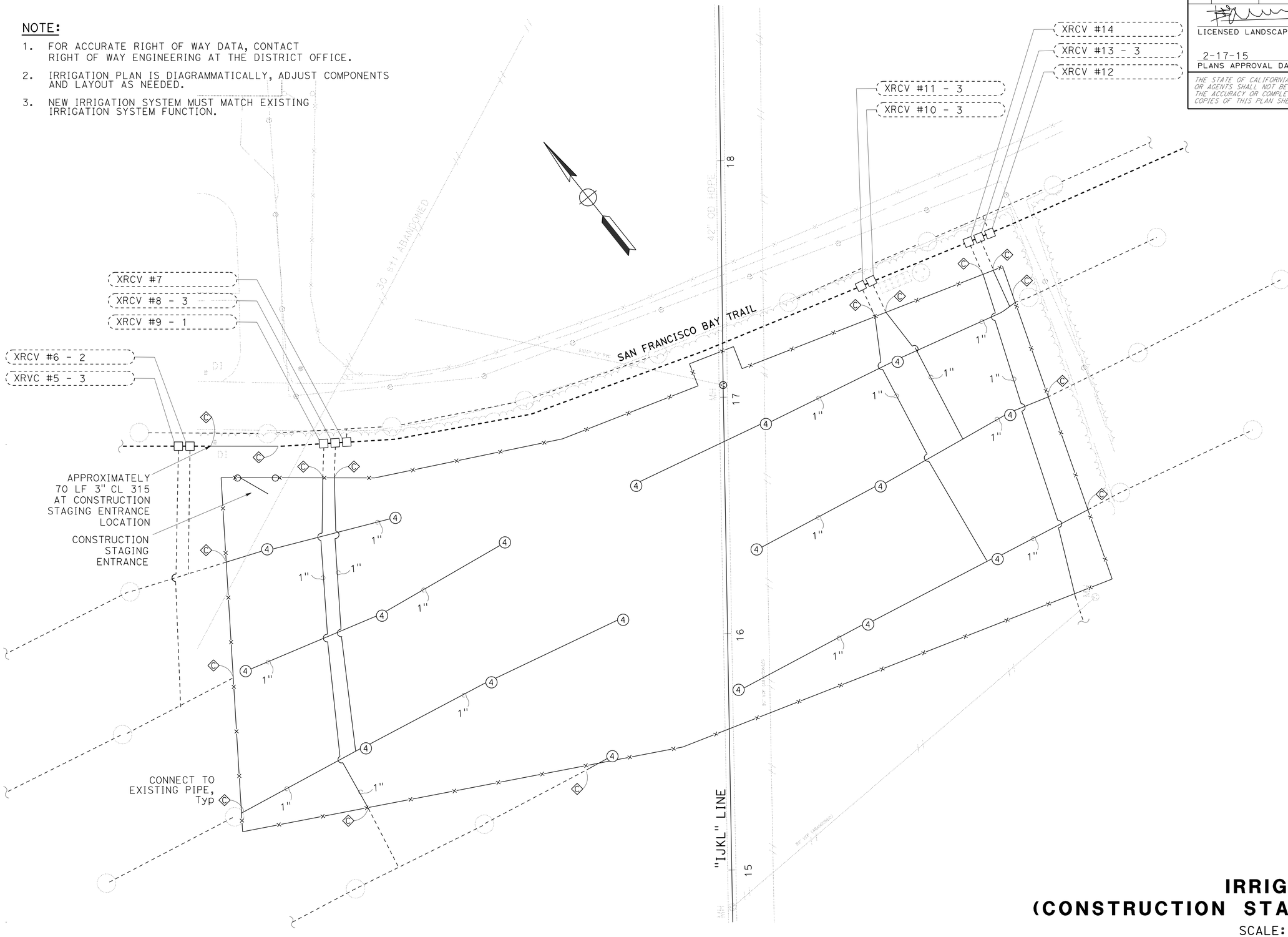

IRRIGATION PLAN (CONSTRUCTION STAGING AREA)

SCALE: 1" - 20'

IP-1

APPROVED FOR IRRIGATION WORK ONLY

STATE OF CALIFORNIA - DEPARTMENT OF TRANSPORTATION
Caltrans®
WATER QUALITY

SENIOR LANDSCAPE ARCHITECT: DAVID YAM
CALCULATED-DESIGNED BY: BART VAN DER ZEEUW
CHECKED BY: ANGELA KWAN
REVISED BY: AK
DATE REVISED: 9/22/14

LAST REVISION 09-22-14
DATE PLOTTED => 18-FEB-2015
TIME PLOTTED => 09:09

Dist	COUNTY	ROUTE	POST MILES TOTAL PROJECT	SHEET No.	TOTAL SHEETS
04	SF	101	9.0	27	38

LICENSED LANDSCAPE ARCHITECT

2-17-15
PLANS APPROVAL DATE

LICENSED LANDSCAPE ARCHITECT — DAVID WARREN YAM No. 1858 — Expiration Date 11-30-15 — Renewal Date 9-22-14 Date — STATE OF CALIFORNIA

THE STATE OF CALIFORNIA OR ITS OFFICERS OR AGENTS SHALL NOT BE RESPONSIBLE FOR THE ACCURACY OR COMPLETENESS OF SCANNED COPIES OF THIS PLAN SHEET.

IRRIGATION QUANTITIES

	CONTROLLER ID	VALVE NUMBER	SHEET NUMBER	IRRIGATION CONTROLLER STATION --	IRRIGATION CONTROLLER STATION --	IRRIGATION CONTROLLER TWO WIRE	IRRIGATION CONTROLLER CEC SINGLE (N)	IRRIGATION CONTROLLER CEC DOUBLE (N)	WM -- "	BPA -- "	BPA ENCLOSURE (N)	BPA BLANKET (N)	CCA 1½"	PRV 2"	RCV 1"	RCV 1½"	RCV 2"	DVA 1"	DVA 1½"	FS 1½"	GV 1½"	GV 2"	GV 3"	BV 1"	BV 1½"	BV 2"	WSA 1"	WSA 1½"	WSA 2"	QCV ¾"	CV 1½"	CV 2"	GSP/ BRIDGE (SUPPLY LINE) 2"	GSP/ BRIDGE (SUPPLY LINE) 3"	PLASTIC PIPE (SCHEDULE 40) (SUPPLY LINE) ¾"	PLASTIC PIPE (SCHEDULE 40) (SUPPLY LINE) 1"	PLASTIC PIPE (SCHEDULE 40) (SUPPLY LINE) 1¼"	PLASTIC PIPE (SCHEDULE 40) (SUPPLY LINE) 1½"	PLASTIC PIPE (CLASS 315) (SUPPLY LINE) 2"	PLASTIC PIPE (CLASS 315) (SUPPLY LINE) 2½"	PLASTIC PIPE (CLASS 315) (SUPPLY LINE) 3"	DIT ⅝"	RISER GEAR DRIVEN	POP-UP GEAR DRIVEN	RISER BUBBLER	RISER SPRAY	POP-UP	TREE WELL
				EA	EA	EA	EA	EA	EA	EA	EA	EA	EA	EA	EA	EA	EA	EA	EA	EA	EA	EA	EA	EA	EA	EA	EA	EA	EA	EA	EA	EA	EA	LF	LF	LF	LF	LF	LF	LF	LF	LF	LF	EA	EA	EA	EA	EA	EA
SUBTOTALS PER VALVE ON LATERAL SUPPLY SIDE OF CONTROL VALVE		1																															-	-	-	-	-	-				-	-	-	-	-	-	-	-
		2																															-	-	-	-	-	-				-	-	-	-	-	-	-	-
		3																															-	-	-	-	-	-				-	-	-	-	-	-	-	-
		4																															-	-	-	-	-	-				-	-	-	-	-	-	-	-
		5																															-	-	-	130	-	-				-	3	-	-	-	-	-	-
		6																															-	-	-	80	-	-				-	2	-	-	-	-	-	-
		7																															-	-	-	250	-	-				-	-	-	-	-	-	-	-
		8																															-	-	-	330	-	-				-	3	-	-	-	-	-	-
		9																															-	-	-	200	-	-				-	1	-	-	-	-	-	-
		10																															-	-	-	240	-	-				-	3	-	-	-	-	-	-
		11																															-	-	-	310	-	-				-	3	-	-	-	-	-	-
		12																															-	-	-	30	-	-				-	-	-	-	-	-	-	-
		13																															-	-	-	230	-	-				-	3	-	-	-	-	-	-
		14																															-	-	-	200	-	-				-	-	-	-	-	-	-	-
		15																															-	-	-	-	-	-				-	-	-	-	-	-	-	-
		16																															-	-	-	-	-	-				-	-	-	-	-	-	-	-
		1																																															
		2																																															
		3																																															
		4																																															
		5																																															
		6																																															
		7																																															
		8																																															
		9																																															
		10																																															
		11																																															
		12																																															
		13																																															
		14																																															
		15																																															
		16																																															
SUBTOTALS PER SHEET ON MAIN SUPPLY SIDE OF CONTROL VALVE			IP-1	-	-	-	-	-	-	-	-	-	-	-	-	-	-	-	-	-	-	-	-	-	-	-	-	-	-			-	-	-	-	-	-	-	-	70							
			IP-2																																														
			IP-3																																															
			IP-4																																															
			IP-5																																															
			IP-6																																															
			IP-7																																															
			IP-8																																															
			IP-9																																															
			IP-10																																															
			IP-11																																															
			IP-12																																															
TOTAL				-	-	-	-	-	-	-	-	-	-	-	-	-	-	-	-	-	-	-	-	-	-	-	-	-	-	-	-	-	-	-	-	2,000	-	-	-	-	70	-	18	-	-	-	-	-

IRRIGATION QUANTITIES

NO SCALE **IQ-1**

STATE OF CALIFORNIA - DEPARTMENT OF TRANSPORTATION
Caltrans® WATER QUALITY

SENIOR LANDSCAPE ARCHITECT: DAVID YAM
CALCULATED-DESIGNED BY: ANGELA KWAN
CHECKED BY: DAVID YAM
REVISED BY: AK
DATE REVISED: 9/22/14

LAST REVISION 09-22-14 | DATE PLOTTED => 18-FEB-2015 | TIME PLOTTED => 09:09

Dist	COUNTY	ROUTE	POST MILES TOTAL PROJECT	SHEET No.	TOTAL SHEETS
04	SF	101	9.0	28	38

LICENSED LANDSCAPE ARCHITECT

2-17-15
PLANS APPROVAL DATE

LICENSED LANDSCAPE ARCHITECT — DAVID WARREN YAM No. 1929 — LANDSCAPE ARCHITECT — 11-30-15 Renewal Date — 9-22-14 Date — STATE OF CALIFORNIA

THE STATE OF CALIFORNIA OR ITS OFFICERS OR AGENTS SHALL NOT BE RESPONSIBLE FOR THE ACCURACY OR COMPLETENESS OF SCANNED COPIES OF THIS PLAN SHEET.

PLANTING LEGEND

PLANT GROUP	PLANT No.	SYMBOL	BOTANICAL NAME	COMMON NAME	PERCENTAGE (13)	SIZE	QUANTITY EACH	HOLE SIZE (INCH) Dia	HOLE SIZE (INCH) DEPTH	BASIN TYPE	SOIL AMENDMENT (1) TYPE	SOIL AMENDMENT (1) RATE	IRON SULFATE (1) RATE	ORGANIC FERTILIZER (1) PLANTING	ORGANIC FERTILIZER (1) PLT ESTB	BASIN MULCH TYPE	BASIN MULCH CY	STAKING	PLANTING LIMITS MINIMUM DISTANCE (ft) FROM ETW	Pvmt	FENCE	WALL	PAVED DITCH	EARTH DITCH	ON CENTER (ft)	REMARKS
T	1		FESTUCA RUBRA	MOLATE FESCUE	100	—	(7)	—	—	—	—	—	—	6 LBS/ 1000 SQFT	—	—	—	—	—	—	—	—	—	—	—	SOD (12)

APPLICABLE WHEN CIRCLED:

(1) - QUANTITIES SHOWN ARE "PER PLANT" UNLESS SHOWN AS SQFT OR SQYD APPLICATION RATES
2 - BASIN MULCH IS INCLUDED WITH MULCH QUANTITIES SHOWN ON PLANTING PLAN
3 - SUFFICIENT TO RECEIVE ROOT BALL AND AMENDMENTS IF REQUIRED
4 - SEE DETAIL
5 - SEE SPECIAL PROVISIONS
6 - SEE STANDARD SPECIFICATIONS
(7) - AS SHOWN ON PLANS
8 - UNLESS OTHERWISE SHOWN ON PLANS
9 - FOLIAGE PROTECTOR REQUIRED
10 - ROOT PROTECTOR REQUIRED
11 - ROOT BARRIER REQUIRED
(12) - DEPARTMENT-FURNISHED
(13) - SEED MIX PERCENTAGE

ABBREVIATIONS:

S - SPHAGNUM PEAT MOSS
N - NITROLIZED FIR BARK
V - VERMICULITE
P - PERLITE
TB - TREE BARK
WC - WOOD CHIP
SB - SHREDDED BARK
TT - TREE TRIMMING

NOTE:

UNDERLINED PORTIONS OF BOTANICAL NAME INDICATE ABBREVIATIONS USED ON PLANTING PLANS.

PLANT LIST

PL-1

REVISED BY	DATE REVISED
AK	9/22/14

CALCULATED-DESIGNED BY: ANGELA KWAN
CHECKED BY: DAVID YAM
SENIOR LANDSCAPE ARCHITECT: DAVID YAM

STATE OF CALIFORNIA - DEPARTMENT OF TRANSPORTATION
Caltrans® WATER QUALITY

LAST REVISION 09-22-14
DATE PLOTTED => 19-FEB-2015
TIME PLOTTED => 07:49

Dist	COUNTY	ROUTE	POST MILES TOTAL PROJECT	SHEET No.	TOTAL SHEETS
04	SF	101	9.0	29	38

LICENSED LANDSCAPE ARCHITECT

2-17-15
PLANS APPROVAL DATE

LICENSED LANDSCAPE ARCHITECT
DAVID WARREN YAM No. 1929
11-30-15
Renewal Date
9-22-14
Date
STATE OF CALIFORNIA

THE STATE OF CALIFORNIA OR ITS OFFICERS OR AGENTS SHALL NOT BE RESPONSIBLE FOR THE ACCURACY OR COMPLETENESS OF SCANNED COPIES OF THIS PLAN SHEET.

NOTES:

1. FOR ACCURATE RIGHT OF WAY DATA, CONTACT RIGHT OF WAY ENGINEERING AT THE DISTRICT OFFICE.
2. AFTER TEMPORARY CHAIN LINK FENCE AND TEMPORARY SILT FENCE REMOVAL, INSTALL TEMPORARY FENCE (TYPE ESA) ACCESS WITHIN TEMPORARY FENCE (TYPE ESA) LIMITED TO PLANTING, IRRIGATION, AND EROSION CONTROL.
3. REMOVE TEMPORARY FENCE (TYPE ESA) AFTER PLANT ESTABLISHMENT PERIOD OR AS DIRECTED BY THE ENGINEER.

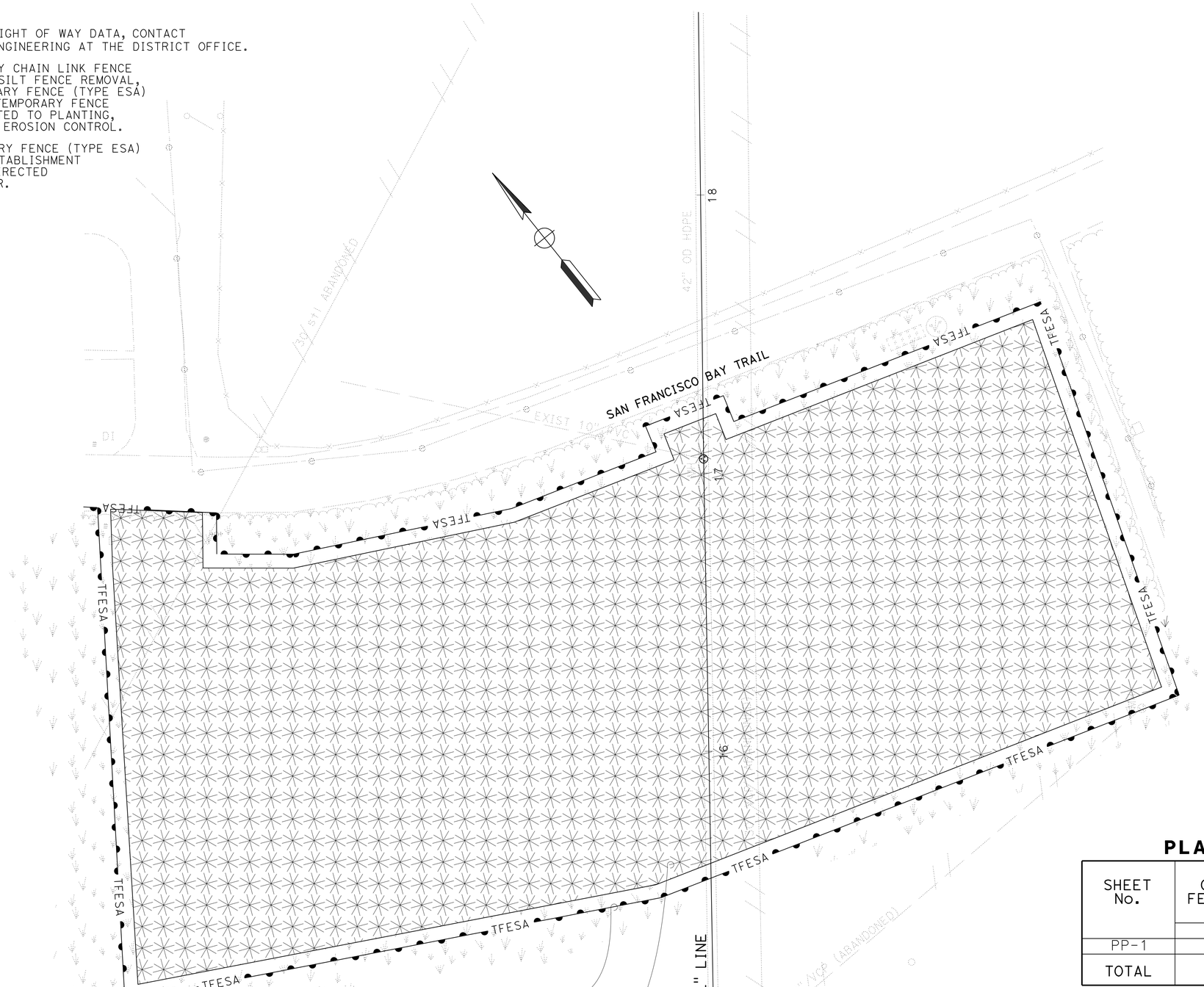

PLANTING QUANTITIES

SHEET No.	ORGANIC FERTILIZER	SOD (DEPARTMENT FURNISHED)	CULTIVATION
	LB	SQYD	
PP-1	314	5,808	5,808
TOTAL	314	5,808	5,808

APPROVED FOR PLANTING WORK ONLY

PLANTING PLAN

SCALE: 1" = 20' **PP-1**

		AK	9/22/14
		REVISED BY	DATE REVISED
ANGELA KWAN	DAVID YAM		
CALCULATED-DESIGNED BY	CHECKED BY		
SENIOR LANDSCAPE ARCHITECT	DAVID YAM		

STATE OF CALIFORNIA - DEPARTMENT OF TRANSPORTATION
Caltrans®
WATER QUALITY

LAST REVISION 09-16-14
DATE PLOTTED => 19-FEB-2015
TIME PLOTTED => 08:36

Dist	COUNTY	ROUTE	POST MILES TOTAL PROJECT	SHEET No.	TOTAL SHEETS
04	SF	101	9.0	30	38

LICENSED LANDSCAPE ARCHITECT

2-17-15
PLANS APPROVAL DATE

LICENSED LANDSCAPE ARCHITECT
DAVID WARREN YAM No. 1929
11-30-15
Renewal Date
9-22-14
Date
STATE OF CALIFORNIA

THE STATE OF CALIFORNIA OR ITS OFFICERS OR AGENTS SHALL NOT BE RESPONSIBLE FOR THE ACCURACY OR COMPLETENESS OF SCANNED COPIES OF THIS PLAN SHEET.

EROSION CONTROL (TYPE 1)

SEQUENCE	ITEM	MATERIAL		APPLICATION RATE	DEPTH
		DESCRIPTION	TYPE		
1	IMPORTED TOPSOIL	TOPSOIL	IMPORTED	420 CY/ACRE	3"
2	COMPOST	MANURE	FINE	135 CY/ACRE	1"

EROSION CONTROL QUANTITIES

SHEET No.	IMPORTED TOPSOIL	COMPOST
	CY	SQFT
EC-1	504	52,272
TOTAL	504	52,272

EROSION CONTROL LEGEND AND QUANTITIES

NO SCALE

ECL-1

STATE OF CALIFORNIA - DEPARTMENT OF TRANSPORTATION
Caltrans®
WATER QUALITY

SENIOR LANDSCAPE ARCHITECT: DAVID YAM
CALCULATED-DESIGNED BY: ANGELA KWAN
CHECKED BY: DAVID YAM
REVISED BY: AK
DATE REVISED: 9/22/14

LAST REVISION 09-22-14
DATE PLOTTED => 19-FEB-2015
TIME PLOTTED => 08:36

Dist	COUNTY	ROUTE	POST MILES TOTAL PROJECT	SHEET No.	TOTAL SHEETS
04	SF	101	9.0	31	38

LICENSED LANDSCAPE ARCHITECT

2-17-15
PLANS APPROVAL DATE

LICENSED LANDSCAPE ARCHITECT
DAVID WARREN YAM No. 1929
LICENSE
11-30-15
Renewal Date
9-22-14
Date
STATE OF CALIFORNIA

THE STATE OF CALIFORNIA OR ITS OFFICERS OR AGENTS SHALL NOT BE RESPONSIBLE FOR THE ACCURACY OR COMPLETENESS OF SCANNED COPIES OF THIS PLAN SHEET.

NOTES:

1. FOR ACCURATE RIGHT OF WAY DATA, CONTACT RIGHT OF WAY ENGINEERING AT THE DISTRICT OFFICE.
2. AFTER TEMPORARY CHAIN LINK FENCE AND TEMPORARY SILT FENCE REMOVAL, INSTALL TEMPORARY FENCE (TYPE ESA) ACCESS WITHIN TEMPORARY FENCE (TYPE ESA) LIMITED TO PLANTING, IRRIGATION, AND EROSION CONTROL.
3. REMOVE TEMPORARY FENCE (TYPE ESA) AFTER PLANT ESTABLISHMENT PERIOD OR AS DIRECTED BY THE ENGINEER.

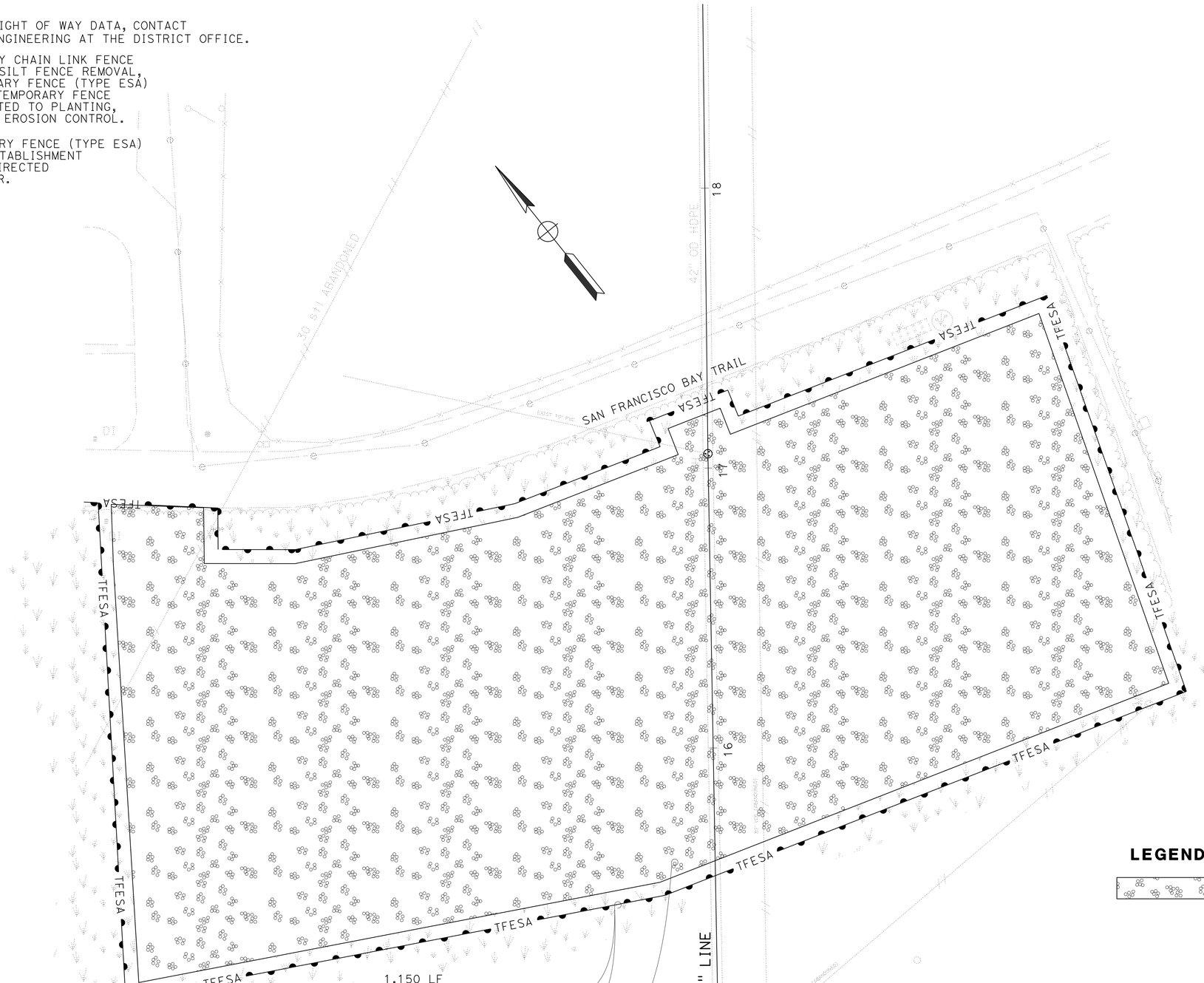

LEGEND:

EROSION CONTROL (TYPE 1)

APPROVED FOR EROSION CONTROL WORK ONLY

EROSION CONTROL PLAN

SCALE: 1" = 20' **EC-1**

REVISED BY	AK
DATE REVISED	9/22/14
ANGELA KWAN	
DAVID YAM	
CALCULATED-DESIGNED BY	
CHECKED BY	
SENIOR LANDSCAPE ARCHITECT	DAVID YAM

STATE OF CALIFORNIA - DEPARTMENT OF TRANSPORTATION
Caltrans
WATER QUALITY

LAST REVISION 09-22-14
DATE PLOTTED => 19-FEB-2015
TIME PLOTTED => 07:50

M

Maint	MAINTENANCE
Max	MAXIMUM
MB	METAL BEAM
MBB	METAL BEAM BARRIER
MBGR	METAL BEAM GUARD RAILING
Med	MEDIAN
MGS	MIDWEST GUARDRAIL SYSTEM
MH	MANHOLE
Min	MINIMUM
Misc	MISCELLANEOUS
Misc I & S	MISCELLANEOUS IRON AND STEEL
Mkr	MARKER
Mod	MODIFIED, MODIFY
Mon	MONUMENT
MP	METAL PLATE
MPGR	METAL PLATE GUARD RAILING
MR	MOVEMENT RATING
MSE	MECHANICALLY STABILIZED EMBANKMENT
Mt	MOUNTAIN, MOUNT
Mtl	MATERIAL
MVP	MAINTENANCE VEHICLE PULLOUT

N

N	NORTH
NB	NORTHBOUND
No.	NUMBER (MUST HAVE PERIOD)
Nos.	NUMBERS (MUST HAVE PERIOD)
NPS	NOMINAL PIPE SIZE
NS	NEAR SIDE
NSP	NEW STANDARD PLAN
NTS	NOT TO SCALE

O

Oblr	OBLITERATE
OC	OVERCROSSING
OD	OUTSIDE DIAMETER
OF	OUTSIDE FACE
OG	ORIGINAL GROUND
OGAC	OPEN GRADED ASPHALT CONCRETE
OGFC	OPEN GRADED FRICTION COURSE
OH	OVERHEAD
OHWM	ORDINARY HIGH WATER MARK
O-O	OUT TO OUT
Opp	OPPOSITE
OSD	OVERSIDE DRAIN

P

P	PAGE
PAP	PERFORATED ALUMINUM PIPE
PB	PULL BOX
PC	POINT OF CURVATURE, PRECAST
PCC	POINT OF COMPOUND CURVE, PORTLAND CEMENT CONCRETE
PCMS	PORTABLE CHANGEABLE MESSAGE SIGN
PCP	PERFORATED CONCRETE PIPE, PRESTRESSED CONCRETE PIPE
PCVC	POINT OF COMPOUND VERTICAL CURVE
PEC	PERMIT TO ENTER AND CONSTRUCT
Ped	PEDESTRIAN
Ped OC	PEDESTRIAN OVERCROSSING
Ped UC	PEDESTRIAN UNDERCROSSING
Perm Mtl	PERMEABLE MATERIAL

P continued

PG	PROFILE GRADE
PI	POINT OF INTERSECTION
PJP	PARTIAL JOINT PENETRATION
Pkwy	PARKWAY
₱,PL	PLATE
P/L	PROPERTY LINE
PM	POST MILE, TIME FROM NOON TO MIDNIGHT
PN	PAVING NOTCH
POC	POINT OF HORIZONTAL CURVE
POT	POINT OF TANGENT
POVC	POINT OF VERTICAL CURVE
PP	PIPE PILE, PLASTIC PIPE, POWER POLE
PPL	PREFORMED PERMEABLE LINER
PPP	PERFORATED PLASTIC PIPE
PRC	POINT OF REVERSE CURVE
PRF	PAVEMENT REINFORCING FABRIC
PRVC	POINT OF REVERSE VERTICAL CURVE
PS&E	PLANS, SPECIFICATIONS AND ESTIMATES
PS, P/S	PRESTRESSED
PSP	PERFORATED STEEL PIPE
PT	POINT OF TANGENCY
PVC	POLYVINYL CHLORIDE
Pvmt	PAVEMENT

Q

Qty	QUANTITY

R

R	RADIUS
R & D	REMOVE AND DISPOSE
R & S	REMOVE AND SALVAGE
R/C	RATE OF CHANGE
RCA	REINFORCED CONCRETE ARCH
RCB	REINFORCED CONCRETE BOX
RCP	REINFORCED CONCRETE PIPE
RCPA	REINFORCED CONCRETE PIPE ARCH
Rd	ROAD
Reinf	REINFORCED, REINFORCEMENT, REINFORCING
Rel	RELOCATE
Repl	REPLACEMENT
Ret	RETAINING
Rev	REVISED, REVISION
Rdwy	ROADWAY
RHMA	RUBBERIZED HOT MIX ASPHALT
Riv	RIVER
RM	ROAD-MIXED
RP	RADIUS POINT, REFERENCE POINT
RR	RAILROAD
RSP	ROCK SLOPE PROTECTION, REVISED STANDARD PLAN
Rt	RIGHT
Rte	ROUTE
RW	REDWOOD, RETAINING WALL
R/W	RIGHT OF WAY
Rwy	RAILWAY

S

S	SOUTH, SUPPLEMENT
SAE	STRUCTURE APPROACH EMBANKMENT
Salv	SALVAGE
SAPP	STRUCTURAL ALUMINUM PLATE PIPE
SB	SOUTHBOUND
SC	SAND CUSHION
SCSP	SLOTTED CORRUGATED STEEL PIPE
SD	STORM DRAIN
Sec	SECOND, SECTION
Sep	SEPARATION
SG	SUBGRADE
Shld	SHOULDER
Sht	SHEET
Sim	SIMILAR
₤	STATION LINE
SM	SELECTED MATERIAL
Spec	SPECIAL, SPECIFICATIONS
SPP	SLOTTED PLASTIC PIPE
SS	SLOPE STAKE
SSBM	STRAP AND SADDLE BRACKET METHOD
SSD	STRUCTURAL SECTION DRAIN
SSPA	STRUCTURAL STEEL PLATE ARCH
SSPP	STRUCTURAL STEEL PLATE PIPE
SSPPA	STRUCTURAL STEEL PLATE PIPE ARCH
SSRP	STEEL SPIRAL RIB PIPE
St	STREET
Sta	STATION
STBB	SINGLE THRIE BEAM BARRIER
Std	STANDARD
Str	STRUCTURE
Surf	SURFACING
SW	SIDEWALK, SOUND WALL
Swr	SEWER
Sym	SYMMETRICAL
S4S	SURFACE 4 SIDES

T

T	SEMI-TANGENT
Tan	TANGENT
TBB	THRIE BEAM BARRIER
Tbr	TIMBER
TC	TOP OF CURB
TCB	TRAFFIC CONTROL BOX
TCE	TEMPORARY CONSTRUCTION EASEMENT
Tel	TELEPHONE
Temp	TEMPORARY
TG	TOP OF GRADE
Tot	TOTAL
TP	TELEPHONE POLE
TPB	TREATED PERMEABLE BASE
TPM	TREATED PERMEABLE MATERIAL
Trans	TRANSITION

T continued

TS	TRANSVERSE, TRAFFIC SIGNAL, TUBULAR STEEL
Typ	TYPICAL

U

UC	UNDERCROSSING
UD	UNDERDRAIN
UG	UNDERGROUND
UON	UNLESS OTHERWISE NOTED
UP	UNDERPASS

V

V	VALVE, DESIGN SPEED
Var	VARIABLE, VARIES
VC	VERTICAL CURVE
VCP	VITRIFIED CLAY PIPE
Vert	VERTICAL
Via	VIADUCT
Vol	VOLUME

W

W	WEST, WIDTH
WB	WESTBOUND
WH	WEEP HOLE
WM	WIRE MESH
WS	WATER SURFACE
WSP	WELDED STEEL PIPE
Wt	WEIGHT
WV	WATER VALVE
WW	WINGWALL
WWLOL	WINGWALL LAYOUT LINE

X

X Sec	CROSS SECTION
Xing	CROSSING

Y

Yr	YEAR
Yrs	YEARS

Dist	COUNTY	ROUTE	POST MILES TOTAL PROJECT	SHEET No.	TOTAL SHEETS
04	SF	101	9.0	32	38

Grace M. Tsushima
REGISTERED CIVIL ENGINEER

July 19, 2013
PLANS APPROVAL DATE

REGISTERED PROFESSIONAL ENGINEER
Grace M. Tsushima
No. C49814
Exp. 9-30-14
CIVIL
STATE OF CALIFORNIA

THE STATE OF CALIFORNIA OR ITS OFFICERS OR AGENTS SHALL NOT BE RESPONSIBLE FOR THE ACCURACY OR COMPLETENESS OF SCANNED COPIES OF THIS PLAN SHEET.

TO ACCOMPANY PLANS DATED 2-17-15

UNIT OF MEASUREMENT SYMBOLS:

Some of the symbols used in the project plan quantity tables and in the Bid Item List are:

TABLE A

SYMBOL USED	DEFINITIONS
ACRE	ACRE
CF	CUBIC FOOT
CY	CUBIC YARD
EA	EACH
GAL	GALLON
LB	POUND
LF	LINEAR FOOT
SQFT	SQUARE FOOT
SQYD	SQUARE YARD
STA	100 FEET
TAB	TABLET
TON	2,000 POUNDS

Some of the symbols used in the plans other than in the project plan quantity tables are:

TABLE B

SYMBOL USED	DEFINITIONS
ksi	KIPS PER SQUARE INCH
ksf	KIPS PER SQUARE FOOT
psi	POUNDS PER SQUARE INCH
psf	POUNDS PER SQUARE FOOT
lb/ft^3, pcf	POUNDS PER CUBIC FOOT
tsf	TONS PER SQUARE FOOT
mph, MPH *	MILES PER HOUR
ø	NOMINAL DIAMETER
oz	OUNCE
lb	POUND
kip	1,000 POUNDS
cal	CALORIE
ft	FOOT OR FEET
gal	GALLON

* For use on a sign panel only

STATE OF CALIFORNIA
DEPARTMENT OF TRANSPORTATION

ABBREVIATIONS (SHEET 2 OF 2)

NO SCALE

RSP A10B DATED JULY 19, 2013 SUPERSEDES STANDARD PLAN A10B DATED MAY 20, 2011 - PAGE 2 OF THE STANDARD PLANS BOOK DATED 2010.

REVISED STANDARD PLAN RSP A10B

2010 REVISED STANDARD PLAN RSP A10B

6-7-13

Dist	COUNTY	ROUTE	POST MILES TOTAL PROJECT	SHEET No.	TOTAL SHEETS
04	SF	101	9.0	33	38

REGISTERED CIVIL ENGINEER

July 18, 2014
PLANS APPROVAL DATE

Glenn DeCou
No. C34547
Exp. 9-30-15
CIVIL
STATE OF CALIFORNIA
REGISTERED PROFESSIONAL ENGINEER

THE STATE OF CALIFORNIA OR ITS OFFICERS OR AGENTS SHALL NOT BE RESPONSIBLE FOR THE ACCURACY OR COMPLETENESS OF SCANNED COPIES OF THIS PLAN SHEET.

TO ACCOMPANY PLANS DATED 2-17-15

2010 REVISED STANDARD PLAN RSP A85

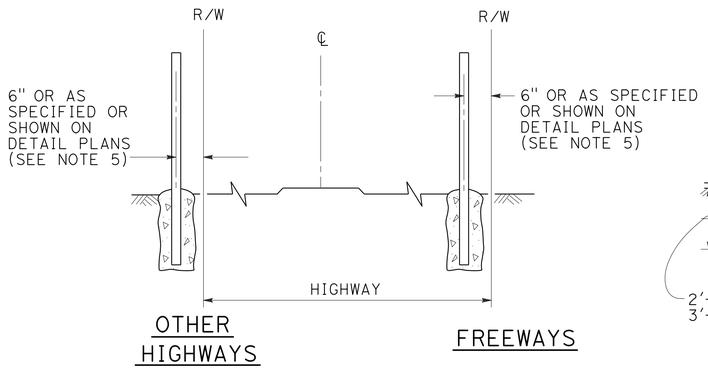

FENCE LOCATION

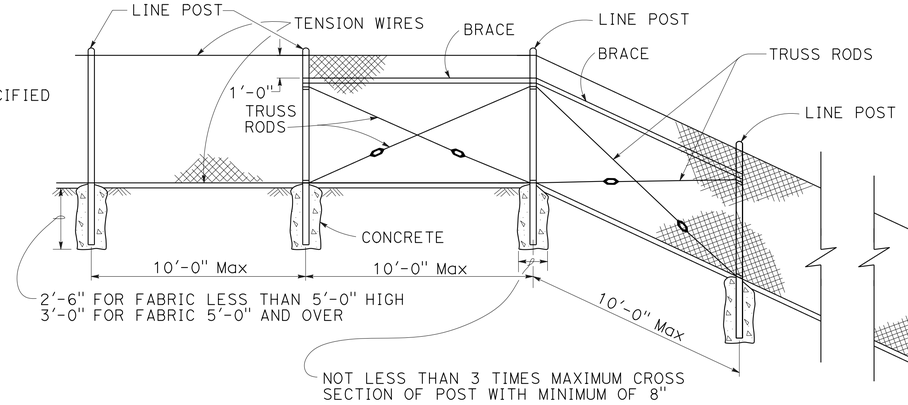

CHAIN LINK FENCE ON SHARP BREAK IN GRADE

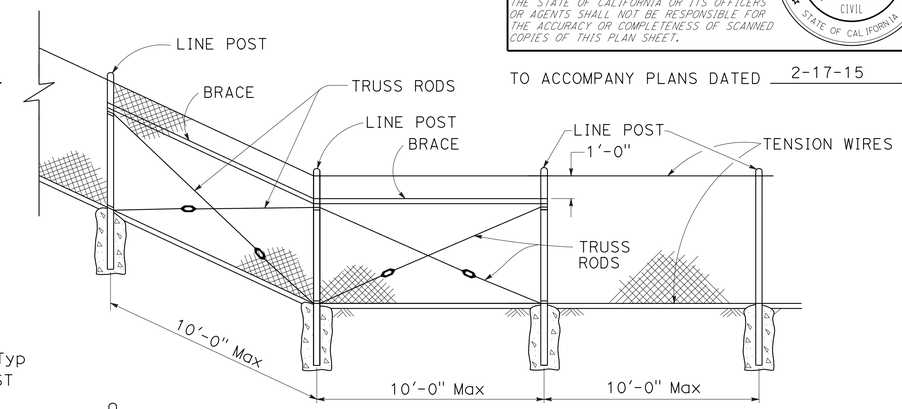

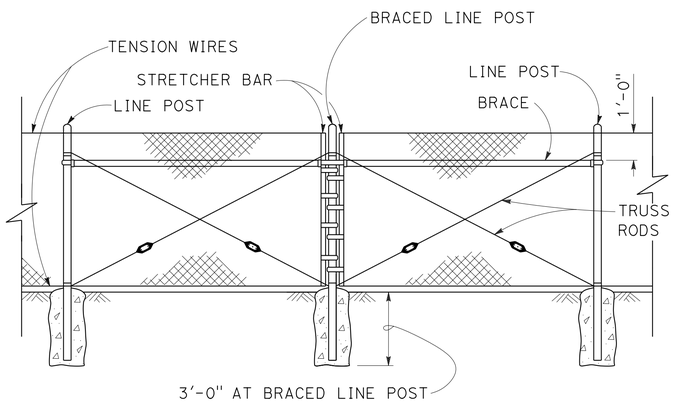

BRACED LINE POST INSTALLATION

Braced line post at intervals not exceeding 1000'

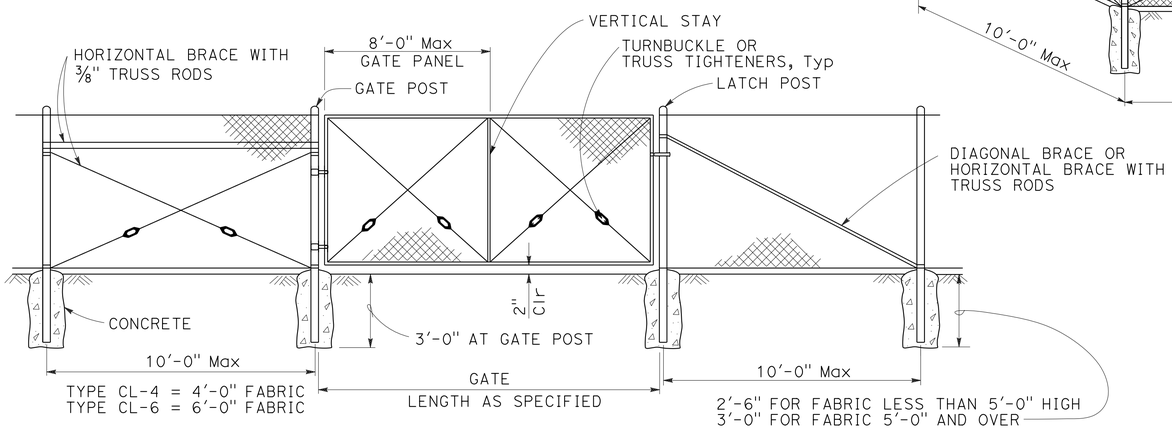

CHAIN LINK GATE INSTALLATION

GATE POST			
FENCE HEIGHT	GATE WIDTHS	ROUND OD PIPE	WEIGHT (lb/ft)
6'-0" AND LESS	UP THRU 6'-0"	2.875"	5.80
	OVER 6'-0" THRU 12'-0"	4.500"	10.80
	OVER 12'-0" THRU 18'-0"	5.563"	14.63
	OVER 18'-0" TO 24'-0" Max	6.625"	18.99
OVER 6'-0" TO 8'-0" Max	UP THRU 6'-0"	3.500"	7.58
	OVER 6'-0" THRU 12'-0"	5.563"	14.63
	OVER 12'-0" THRU 18'-0"	6.625"	18.99
	OVER 18'-0" TO 24'-0" Max	8.625"	28.58

Above post dimensions and weights are minimums. Larger sizes may be used upon approval.

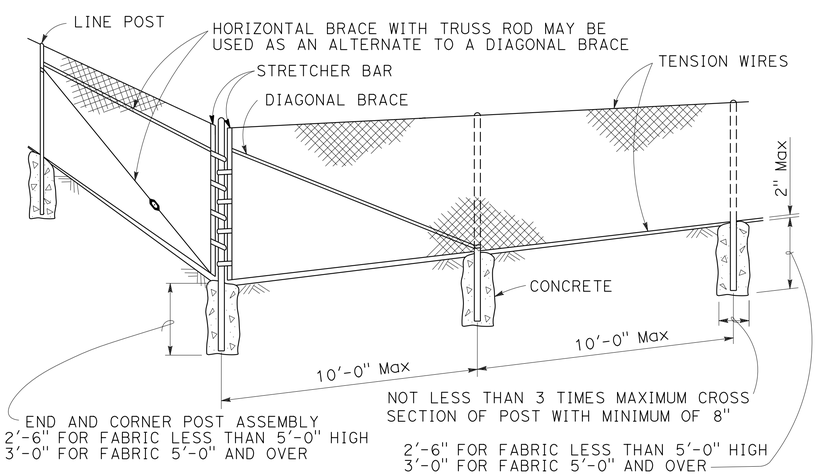

CORNER POST

NOTES:

1. The table below shows minimum sized posts and braces complying with the specifications. Larger or heavier post and brace sizes may be used upon approval.
2. Sections shown in the tables must also comply with the strength requirements and other provisions of the Specifications.
3. Other sections which comply with the strength requirements and other provisions of the Specifications may be used upon approval.
4. Options exercised shall be uniform on any one project.
5. Offset to be 2'-0" at monument locations, measured at right angles to R/W lines. Taper to achieve offset to be at least 20'-0" long.
6. See Revised Standard Plan RSP A85B for Brace, Stretcher Bar, and Truss Tightener Details.

TYPICAL MEMBER DIMENSIONS (See Notes)										
FENCE HEIGHT	LINE POSTS				END, LATCH AND CORNER POSTS		BRACES			
	ROUND OD PIPE	WEIGHT (lb/ft)	ROLL FORMED SECTION	ROLL FORMED WEIGHT (lb/ft)	ROUND OD PIPE	WEIGHT (lb/ft)	ROUND OD PIPE	WEIGHT (lb/ft)	ROLL FORMED SECTION	ROLL FORMED WEIGHT (lb/ft)
6'-0" AND LESS	1.900"	2.72	1.875" x 1.625"	1.85	2.375"	3.65	1.66"	2.27	1.625" x 1.25"	1.35
OVER 6'-0" TO 8'-0" Max	2.375"	3.65	2.25" x 1.70"	2.78	2.875"	5.80	1.66"	2.27	1.625" x 1.25"	1.35

STATE OF CALIFORNIA
DEPARTMENT OF TRANSPORTATION

CHAIN LINK FENCE

NO SCALE

RSP A85 DATED JULY 18, 2014 SUPERSEDES STANDARD PLAN A85
DATED MAY 20, 2011 - PAGE 112 OF THE STANDARD PLANS BOOK DATED 2010.

REVISED STANDARD PLAN RSP A85

7-1-14

Dist	COUNTY	ROUTE	POST MILES TOTAL PROJECT	SHEET No.	TOTAL SHEETS
04	SF	101	9.0	34	38

Glenn DeCou
REGISTERED CIVIL ENGINEER

October 19, 2012
PLANS APPROVAL DATE

REGISTERED PROFESSIONAL ENGINEER
Glenn DeCou
No. C34547
Exp. 9-30-13
CIVIL
STATE OF CALIFORNIA

THE STATE OF CALIFORNIA OR ITS OFFICERS OR AGENTS SHALL NOT BE RESPONSIBLE FOR THE ACCURACY OR COMPLETENESS OF SCANNED COPIES OF THIS PLAN SHEET.

TO ACCOMPANY PLANS DATED 2-17-15

2010 REVISED STANDARD PLAN RSP A85B

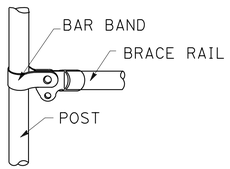

BRACE RAIL

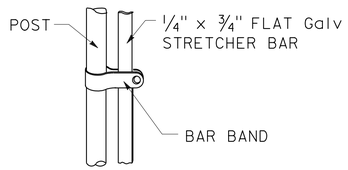

STRETCHER BAR

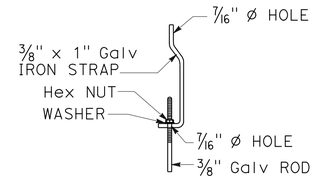

TRUSS TIGHTENER

NOTES:

1. All material for abutment connection to be galvanized.
2. The chain link fabric shall be replaced by barbed wire strands at 12" maximum centers between the double posts.
3. When the width of the culvert makes it necessary to anchor a post to the top of the culvert, a cast iron shoe or other device approved by the Engineer shall be used.
4. Fencing over stream and around headwall may also use Barbed Wire or Wire Mesh fencing with either wood post or steel post installation.
5. See Standard Plan A85 for Chain Link fence dimensions. See Standard Plan A86 for Barbed Wire and Wire Mesh fence dimensions and for wood post and steel post installation.

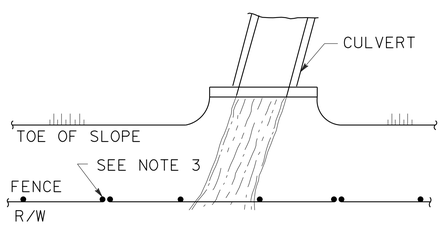

PLAN

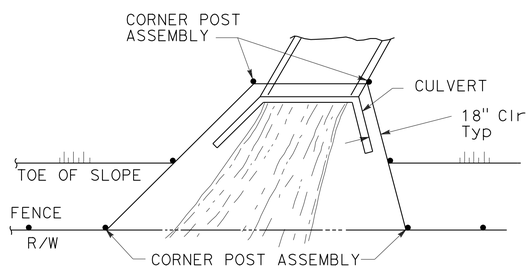

PLAN

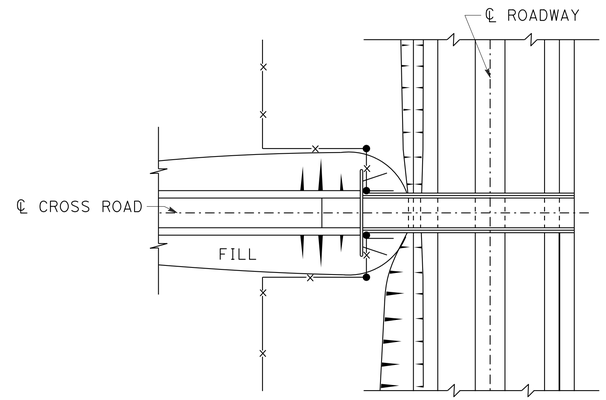

PLAN OF ROADWAY - OVERCROSSING

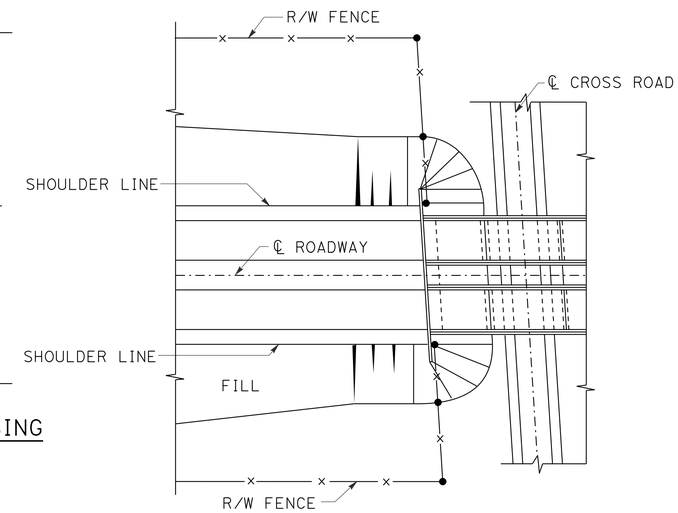

PLAN OF ROADWAY - UNDERCROSSING

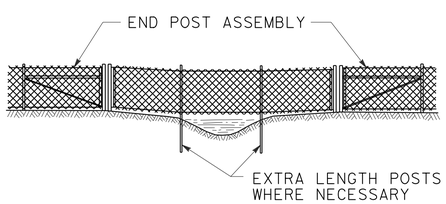

ELEVATION

INSTALLATION OVER STREAM

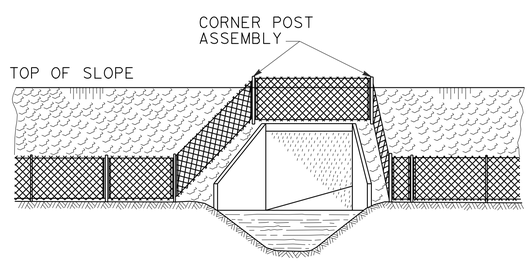

ELEVATION

INSTALLATION AROUND HEADWALL

See Note 4

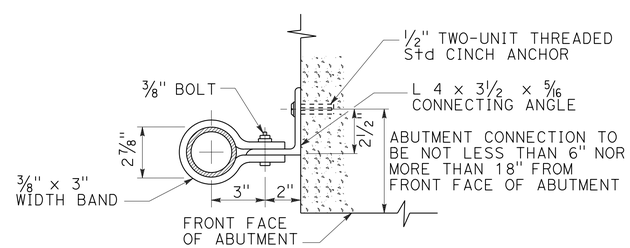

ABUTMENT CONNECTION

TYPICAL INSTALLATION AT BRIDGES

STATE OF CALIFORNIA
DEPARTMENT OF TRANSPORTATION

CHAIN LINK FENCE DETAILS

NO SCALE

RSP A85B DATED OCTOBER 19, 2012 SUPERSEDES STANDARD PLAN A85B
DATED MAY 20, 2011 - PAGE 114 OF THE STANDARD PLANS BOOK DATED 2010.

REVISED STANDARD PLAN RSP A85B

7-19-12

Dist	COUNTY	ROUTE	POST MILES TOTAL PROJECT	SHEET No.	TOTAL SHEETS
04	SF	101	9.0	35	38

Gregory A. Balzer
LICENSED LANDSCAPE ARCHITECT

July 19, 2013
PLANS APPROVAL DATE

LICENSED LANDSCAPE ARCHITECT Gregory A. Balzer 2516 Gregory A. Balzer 6-28-13 Renewal Date 2-28-15 Renewal Date 7-19-13 Date STATE OF CALIFORNIA

THE STATE OF CALIFORNIA OR ITS OFFICERS OR AGENTS SHALL NOT BE RESPONSIBLE FOR THE ACCURACY OR COMPLETENESS OF SCANNED COPIES OF THIS PLAN SHEET.

TO ACCOMPANY PLANS DATED 2-17-15

A

AB	AGGREGATE BASE
ABS	ACRYLONITRILE-BUTADIENE-STYRENE
AC	ASPHALT CONCRETE
ACC	ARMOR-CLAD CONDUCTORS
Adj	ADJACENT/ADJUSTABLE
AIC	AUXILIARY IRRIGATION CONTROLLER
Alt	ALTERNATIVE
AMEND	AMENDMENT
ARV	AIR RELEASE VALVE
AUTO	AUTOMATIC
AUX	AUXILIARY
AVB	ATMOSPHERIC VACUUM BREAKER

B

B&B	BALLED AND BURLAPPED
B/B	BRASS/BRONZE
B/B/PL	BRASS/BRONZE/PLASTIC
B/PL	BRASS/PLASTIC
BFM	BONDED FIBER MATRIX
Bit Ctd	BITUMINOUS COATED
BP	BOOSTER PUMP
BPA	BACKFLOW PREVENTER ASSEMBLY
BPE	BACKFLOW PREVENTER ENCLOSURE
BV	BALL VALVE

C

C	CONDUIT
CAP	CORRUGATED ALUMINUM PIPE
CARV	COMBINATION AIR RELEASE VALVE
CB	COUPLING BAND
CCA	CAM COUPLER ASSEMBLY
CEC	CONTROLLER ENCLOSURE CABINET
CHDPE	CORRUGATED HIGH DENSITY POLYETHYLENE
CL	CHAIN LINK
CNC	CONTROL AND NEUTRAL CONDUCTORS
Conc	CONCRETE
CP	COPPER PIPE
CS	COMPOST SOCK
CSP	CORRUGATED STEEL PIPE
CST	CENTER STRIP
CV	CHECK VALVE

D

Dia	DIAMETER
DIP	DUCTILE IRON PIPE
DIT	DRIP IRRIGATION TUBING
DG	DECOMPOSED GRANITE
DN	DIAMETER NOMINAL
DVA	DRIP VALVE ASSEMBLY

E

EC	EROSION CONTROL
ECTC	EROSION CONTROL TECHNOLOGY COUNCIL
Elect	ELECTRIC/ELECTRICAL
Elev	ELEVATION
ELL	ELBOW
ENCL	ENCLOSURE
EP	EDGE OF PAVEMENT
ES	EDGE OF SHOULDER
EST	END STRIP
ESTB	ESTABLISHMENT
ETW	EDGE OF TRAVELED WAY

F

F	FULL CIRCLE
F/P	FULL/PART CIRCLE
FCV	FLOW CONTROL VALVE
FERT	FERTILIZER
FG	FINISHED GRADE
FH	FLEXIBLE HOSE
FIPT	FEMALE IRON PIPE THREAD
FIS	FERTILIZER INJECTOR SYSTEM
FL	FLOW LINE
FR	FIBER ROLL
FS	FLOW SENSOR
FSC	FLOW SENSOR CABLE
FV	FLUSH VALVE

G

Galv	GALVANIZED
GARV	GARDEN VALVE
GARVA	GARDEN VALVE ASSEMBLY
GM	GRAVEL MULCH
GPH	GALLONS PER HOUR
GPM	GALLONS PER MINUTE
GSP	GALVANIZED STEEL PIPE
GV	GATE VALVE

H

H	HALF CIRCLE
HDPE	HIGH DENSITY POLYETHYLENE
HP	HORSEPOWER/HINGE POINT
HPL	HIGH PRESSURE LINE
Hwy	HIGHWAY

I

IC	IRRIGATION CONTROLLER
ICC	IRRIGATION CONTROLLER(S) IN CONTROLLER ENCLOSURE CABINET
ID	INSIDE DIAMETER
IFS	IRRIGATION FILTRATION SYSTEM
IPS	IRON PIPE SIZE
IPT	IRON PIPE THREAD
Irr	IRRIGATION

L

L	LENGTH

M

Max	MAXIMUM
MBGR	METAL BEAM GUARD RAILING
MCV	MANUAL CONTROL VALVE
MIC	MASTER IRRIGATION CONTROLLER
Min	MINIMUM
MIPT	MALE IRON PIPE THREAD
Misc	MISCELLANEOUS
Mtl	MATERIAL
MVP	MAINTENANCE VEHICLE PULLOUT

N

NCN	NO COMMON NAME
NL	NOZZLE LINE
No.	NUMBER
NPT	NATIONAL PIPE THREAD

O

O/C	ON CENTER
OD	OUTSIDE DIAMETER
OL	OVERLAP

P

P	PART CIRCLE
PB	PULL BOX
PCC	PORTLAND CEMENT CONCRETE
PE	POLYETHYLENE
Pkt	PACKET
PL	PLASTIC
PLS	PURE LIVE SEED
PLT	PLANT/PLANTING
PLT ESTB	PLANT ESTABLISHMENT
PM	POST MILE
PR	PRESSURE RATED
PRLV	PRESSURE RELIEF VALVE
PRV	PRESSURE REGULATING VALVE
PVC	POLYVINYL CHLORIDE
Pvmt	PAVEMENT

Q

Q	QUARTER CIRCLE
QCV	QUICK COUPLING VALVE

R

R	RADIUS
RCP	REINFORCED CONCRETE PIPE
RCV	REMOTE CONTROL VALVE
RCVM	REMOTE CONTROL VALVE (MASTER)
RCVMF	REMOTE CONTROL VALVE (MASTER) W/FLOW SENSOR
RCVP	REMOTE CONTROL VALVE W/PRESSURE REGULATOR
RCW	RECYCLED WATER
RECP	ROLLED EROSION CONTROL PRODUCT
REQ	REQUIRED
RICS	REMOTE IRRIGATION CONTROL SYSTEM
R/W	RIGHT OF WAY

S

S	SLIP
SCH	SCHEDULE
SF	STATE-FURNISHED
Shld	SHOULDER
Sq	SQUARE
SST	SIDE STRIP
Sta	STATION
Std	STANDARD
SW	SIDEWALK/SOUND WALL

T

T	THIRD CIRCLE/THREAD
TLS	TRUCK LOADING STANDPIPE
TQ	THREE QUARTER CIRCLE
TRM	TURF REINFORCEMENT MAT
TT	TWO-THIRDS CIRCLE
TWSA	TREE WELL SPRINKLER ASSEMBLY
Typ	TYPICAL

U

UG	UNDERGROUND

W

W	WIDTH
W/	WITH
WM	WATER METER
WS	WYE STRAINER
WSA	WYE STRAINER ASSEMBLY
WSP	WELDED STEEL PIPE
WWM	WELDED WIRE MESH

NOTE:

For additional abbreviations, see Standard Plans A10A and A10B.

STATE OF CALIFORNIA
DEPARTMENT OF TRANSPORTATION

LANDSCAPE AND EROSION CONTROL ABBREVIATIONS

NO SCALE

RSP H1 DATED JULY 19, 2013 SUPERSEDES STANDARD PLAN H1 DATED MAY 20, 2011 - PAGE 218 OF THE STANDARD PLANS BOOK DATED 2010.

REVISED STANDARD PLAN RSP H1

2010 REVISED STANDARD PLAN RSP H1

6-28-13

Dist	COUNTY	ROUTE	POST MILES TOTAL PROJECT	SHEET No.	TOTAL SHEETS
04	SF	101	9.0	36	38

Gregory A. Balzer
LICENSED LANDSCAPE ARCHITECT

November 15, 2013
PLANS APPROVAL DATE

LICENSED LANDSCAPE ARCHITECT Gregory A. Balzer 2516 STATE OF CALIFORNIA
Gregory A. Balzer
04-09-13
Date
2-28-15
Renewal Date
11-15-13
Date

THE STATE OF CALIFORNIA OR ITS OFFICERS OR AGENTS SHALL NOT BE RESPONSIBLE FOR THE ACCURACY OR COMPLETENESS OF SCANNED COPIES OF THIS PLAN SHEET.

TO ACCOMPANY PLANS DATED 2-17-15

2010 REVISED STANDARD PLAN RSP H2

EXISTING	NEW	ITEM DESCRIPTION
		WATER METER (WM)
		BACKFLOW PREVENTER ASSEMBLY (BPA)
		BACKFLOW PREVENTER ENCLOSURE (BPE)
		BOOSTER PUMP (BP)
		TRUCK LOADING STANDPIPE (TLS)
	FS	FLOW SENSOR (FS)
		MASTER IRRIGATION CONTROLLER (MIC)
		AUXILIARY IRRIGATION CONTROLLER (AIC)
		IRRIGATION CONTROLLER (IC) IRRIGATION CONTROLLER (IC) (BATTERY) IRRIGATION CONTROLLER (IC) (SOLAR) IRRIGATION CONTROLLER (IC) (TWO WIRE) IRRIGATION CONTROLLER(S) IN CONTROLLER ENCLOSURE CABINET (ICC)
acc	ACC	ARMOR-CLAD CONDUCTORS (ACC)
cnc	CNC	CONTROL AND NEUTRAL CONDUCTORS (CNC)
		IRRIGATION CONDUIT
		EXTEND IRRIGATION CONDUIT
dip	DIP	DUCTILE IRON PIPE (SUPPLY LINE) (MAIN) (DIP)
		GALVANIZED STEEL PIPE (SUPPLY LINE) (MAIN) (GSP)
		GALVANIZED STEEL PIPE (SUPPLY LINE) (LATERAL) (GSP)
		PLASTIC PIPE (SUPPLY LINE) (MAIN)
		PLASTIC PIPE (SUPPLY LINE) (LATERAL)
cp	CP	COPPER PIPE (SUPPLY LINE)
dit	DIT	DRIP IRRIGATION TUBING
		REMOTE CONTROL VALVE (RCV) REMOTE CONTROL VALVE (MASTER) (RCVM) REMOTE CONTROL VALVE (MASTER) W/FLOW METER (RCVMF)
P	P	REMOTE CONTROL VALVE W/PRESSURE REGULATOR (RCVP)
		EXISTING MANUAL CONTROL VALVE (MCV)
	V	DRIP VALVE ASSEMBLY (DVA)
	Y	WYE STRAINER ASSEMBLY (WSA)

EXISTING	NEW	ITEM DESCRIPTION
		GATE VALVE (GV)
		BALL VALVE (BV)
		QUICK COUPLING VALVE (QCV)
		CAM COUPLER ASSEMBLY (CCA)
		GARDEN VALVE ASSEMBLY (GARVA)
		PRESSURE REGULATING VALVE (PRV)
		PRESSURE RELIEF VALVE (PRLV)
		FLOW CONTROL VALVE (FCV)
		COMBINATION AIR RELEASE VALVE (CARV)
		CHECK VALVE (CV)
		FLUSH VALVE (FV)
		EXISTING NOZZLE LINE W/TURNING UNION
		EXISTING IRRIGATION SYSTEM
		EXISTING IRRIGATION SYSTEM TO BE REMOVED
		CHAIN LINK GATE
		QUICK COUPLING VALVE W/SPRINKLER PROTECTOR
3	3	SPRINKLER W/SPRINKLER PROTECTOR
	C	CONNECT TO EXISTING SYSTEM
		CAP
		CAP EXISTING
	\\\FR\\\	FIBER ROLL
	\\\CS\\\	COMPOST SOCK

- RCV SIZE
- IRRIGATION CONTROLLER
- CONTROLLER STATION
- VALVE IN PARALLEL (IF APPLICABLE)
- GPM
- QUANTITY OF SPRINKLERS (WHEN SHOWN)

* 2½"-A-2b-40-60

VALVE CODE

* VALVE CODES FOR EXISTING VALVES ARE SHOWN IN A DASHED ENCLOSURE.

STATE OF CALIFORNIA
DEPARTMENT OF TRANSPORTATION

LANDSCAPE AND EROSION CONTROL SYMBOLS

NO SCALE

RSP H2 DATED NOVEMBER 15, 2013 SUPERSEDES RSP H2 DATED JULY 19, 2013 AND STANDARD PLAN H2 DATED MAY 20, 2011 - PAGE 219 OF THE STANDARD PLANS BOOK DATED 2010.

REVISED STANDARD PLAN RSP H2

10-9-13

Dist	COUNTY	ROUTE	POST MILES TOTAL PROJECT	SHEET No.	TOTAL SHEETS
04	SF	101	9.0	37	38

Gregory A. Balzer
LICENSED LANDSCAPE ARCHITECT

July 19, 2013
PLANS APPROVAL DATE

LICENSED LANDSCAPE ARCHITECT
Gregory A. Balzer 2516
Expiration Date 2-28-15
Renewal Date 7-19-13
Date
STATE OF CALIFORNIA

THE STATE OF CALIFORNIA OR ITS OFFICERS OR AGENTS SHALL NOT BE RESPONSIBLE FOR THE ACCURACY OR COMPLETENESS OF SCANNED COPIES OF THIS PLAN SHEET.

TO ACCOMPANY PLANS DATED 2-17-15

2010 REVISED STANDARD PLAN RSP H6

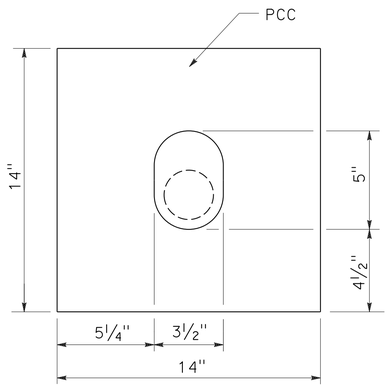

PLAN

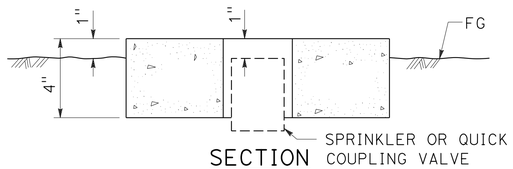

SECTION

SPRINKLER PROTECTOR TYPE I

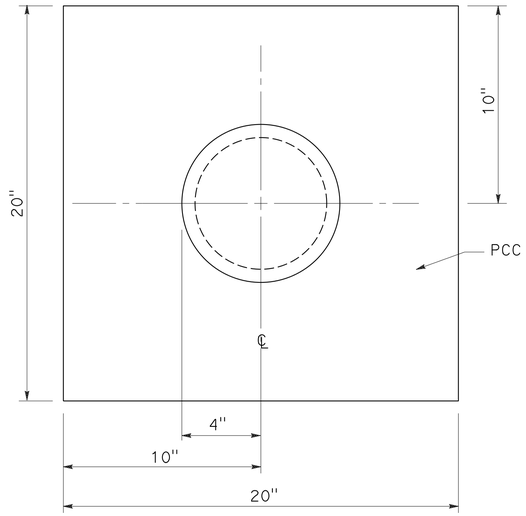

PLAN

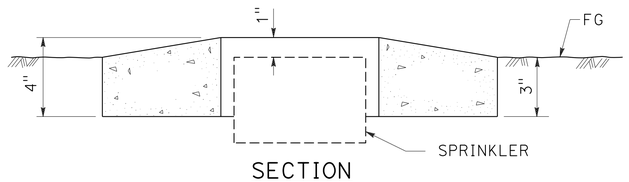

SECTION

SPRINKLER PROTECTOR TYPE II

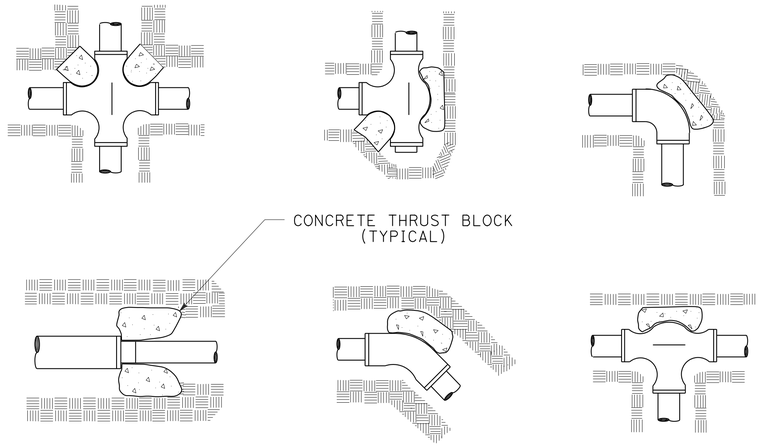

TYPICAL THRUST BLOCKS

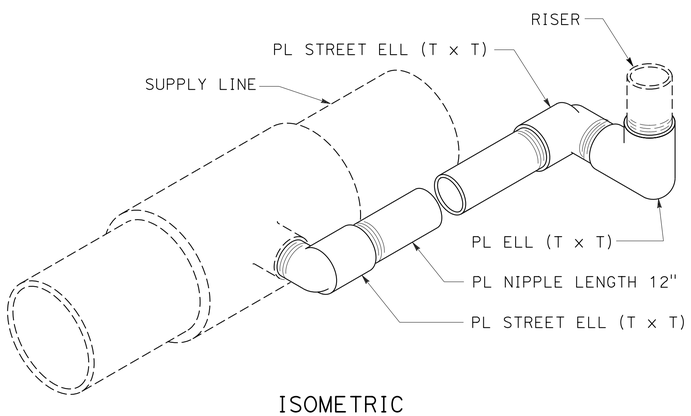

ISOMETRIC

POP-UP SPRINKLER ASSEMBLY TYPE I

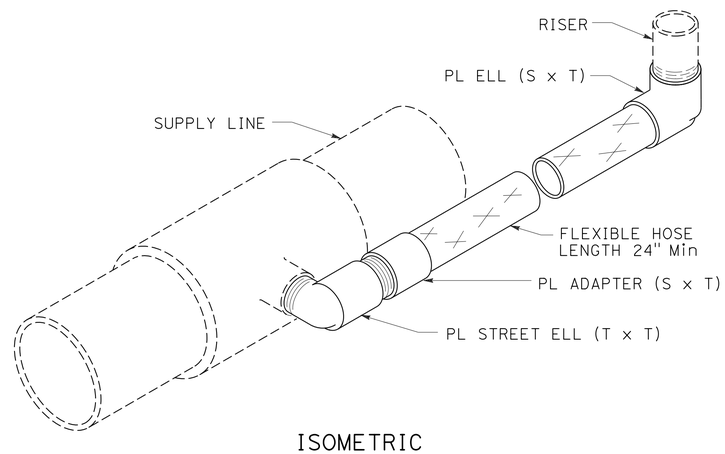

ISOMETRIC

POP-UP SPRINKLER ASSEMBLY TYPE II

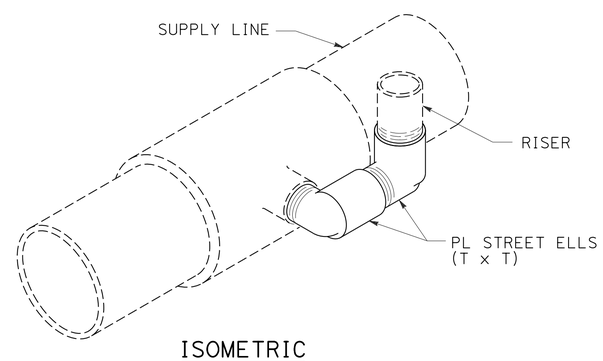

ISOMETRIC

POP-UP SPRINKLER ASSEMBLY TYPE III

STATE OF CALIFORNIA
DEPARTMENT OF TRANSPORTATION

LANDSCAPE DETAILS

NO SCALE

RSP H6 DATED JULY 19, 2013 SUPERSEDES STANDARD PLAN H6
DATED MAY 20, 2011 - PAGE 223 OF THE STANDARD PLANS BOOK DATED 2010.

REVISED STANDARD PLAN RSP H6

6-28-13

Dist	COUNTY	ROUTE	POST MILES TOTAL PROJECT	SHEET No.	TOTAL SHEETS
04	SF	101	9.0	38	38

LICENSED LANDSCAPE ARCHITECT

July 19, 2013
PLANS APPROVAL DATE

THE STATE OF CALIFORNIA OR ITS OFFICERS OR AGENTS SHALL NOT BE RESPONSIBLE FOR THE ACCURACY OR COMPLETENESS OF SCANNED COPIES OF THIS PLAN SHEET.

LICENSED LANDSCAPE ARCHITECT — Gregory A. Balzer 2516 — Expiration Date 2-28-15 — Renewal Date 7-19-13 — Date — STATE OF CALIFORNIA

TO ACCOMPANY PLANS DATED 2-17-15

2010 REVISED STANDARD PLAN RSP H7

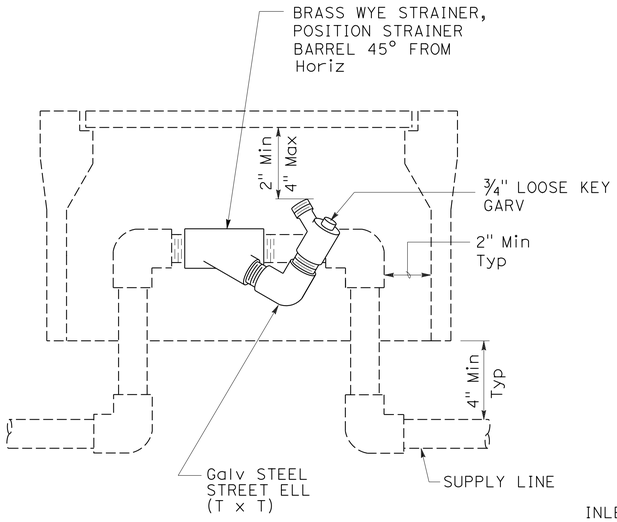

ELEVATION
WYE STRAINER ASSEMBLY

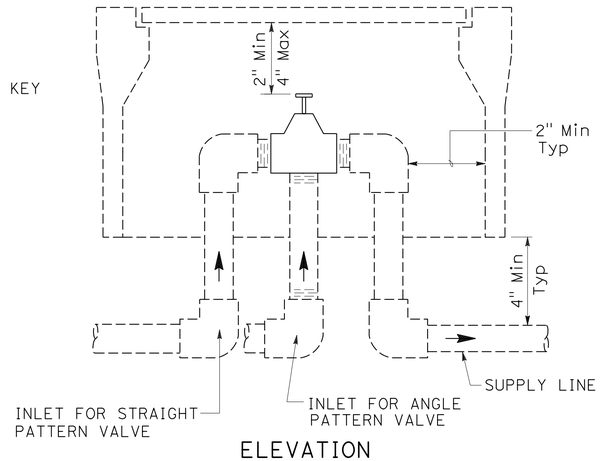

ELEVATION
VALVE

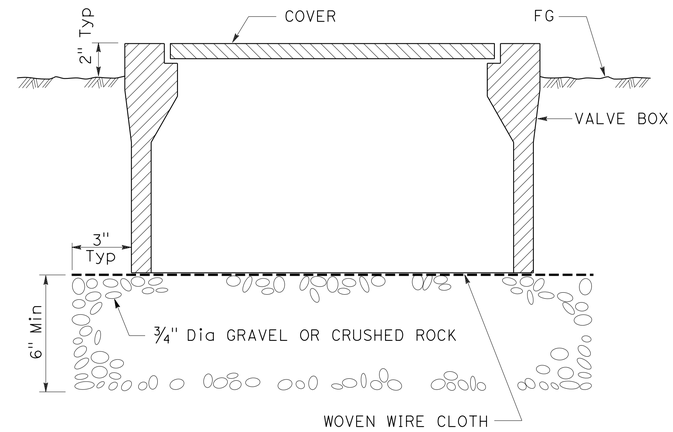

SECTION
VALVE BOX

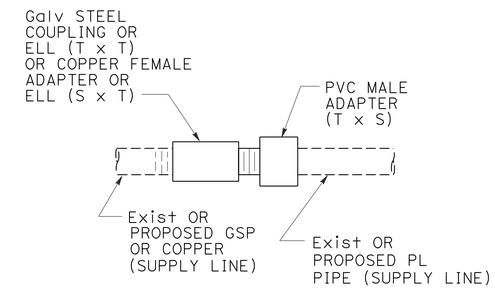

GALVANIZED OR COPPER PIPE CONNECTION TO PLASTIC PIPE

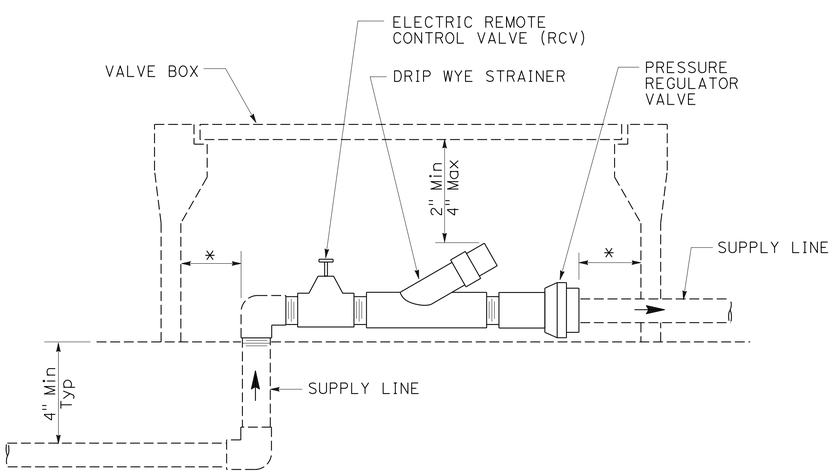

* 2" CLEARANCE ON ALL SIDES

ELEVATION
DRIP VALVE ASSEMBLY

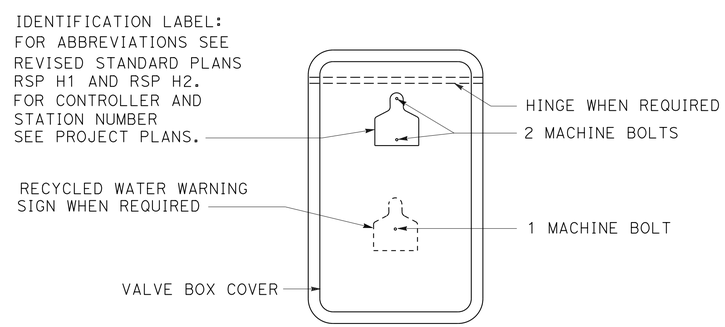

PLAN

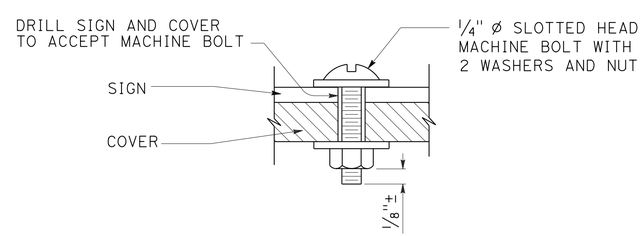

SECTION
VALVE BOX IDENTIFICATION

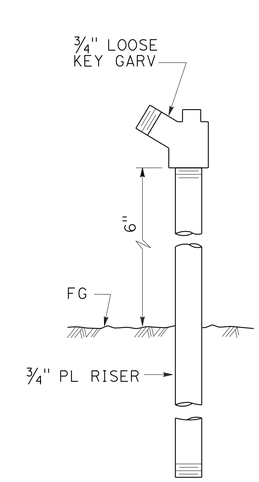

ELEVATION
GARDEN VALVE ASSEMBLY

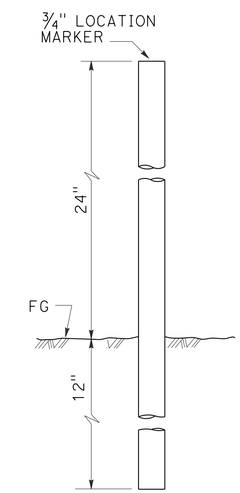

ELEVATION
LOCATION MARKER

GARDEN VALVE ASSEMBLY

STATE OF CALIFORNIA
DEPARTMENT OF TRANSPORTATION

LANDSCAPE DETAILS

NO SCALE

RSP H7 DATED JULY 19, 2013 SUPERSEDES STANDARD PLAN H7
DATED MAY 20, 2011 - PAGE 224 OF THE STANDARD PLANS BOOK DATED 2010.

REVISED STANDARD PLAN RSP H7

6-20-13