Dist	COUNTY	ROUTE	POST MILES TOTAL PROJECT	SHEET No.	TOTAL SHEETS
04	Ala	13	8.3	1	108

STATE OF CALIFORNIA

DEPARTMENT OF TRANSPORTATION

STP-P013-(033)E

PROJECT PLANS FOR CONSTRUCTION ON

STATE HIGHWAY

IN ALAMEDA COUNTY

IN OAKLAND

NEAR MORAGA AVENUE NORTHBOUND ON-RAMP

TO BE SUPPLEMENTED BY STANDARD PLANS DATED 2010

INDEX OF PLANS

SHEET No.	DESCRIPTION
1	TITLE SHEET
2	TYPICAL CROSS SECTIONS
3	LAYOUT
4 - 11	CONSTRUCTION DETAILS
12	TEMPORARY WATER POLLUTION CONTROL QUANTITIES
13 - 17	DRAINAGE PLAN, PROFILES, DETAILS AND QUANTITIES
18 - 21	CONSTRUCTION AREA SIGNS
22 - 24	STAGE CONSTRUCTION AND TRAFFIC HANDLING PLAN
25	PAVEMENT DELINEATION PLAN
26 - 27	SUMMARY OF QUANTITIES
28 - 32	IRRIGATION SPRINKLER SCHEDULE AND PLAN, IRRIGATION PLAN AND QUANTITIES
33 - 35	PLANT LIST, PLAN AND QUANTITIES
36 - 37	EROSION CONTROL LEGEND AND PLAN
38 - 41	ELECTRICAL PLAN
42 - 68	REVISED STANDARD PLANS
	STRUCTURE PLANS
69 - 84	SOLDIER PILE WALL WITH GROUND ANCHORS AND LOG OF TEST BORINGS
85 - 97	GROUND ANCHORED DIAPHRAGM WALL AND LOG OF TEST BORINGS
98 - 108	SOLDIER PILE WALL AND LOG OF TEST BORINGS

LOCATION MAP

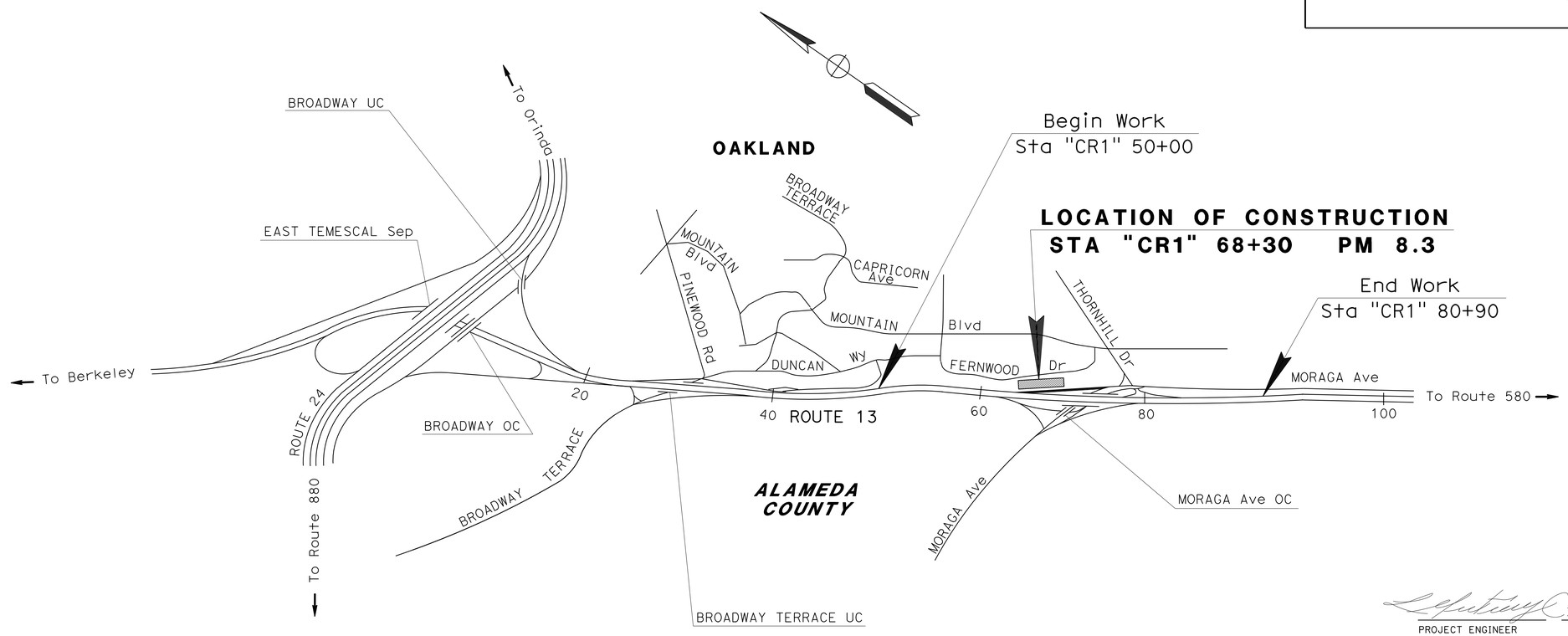

3/26/14
PROJECT ENGINEER DATE
REGISTERED CIVIL ENGINEER

REGISTERED PROFESSIONAL ENGINEER
Luis A. Gutierrez
No. 49131
Exp. 9-30-16
CIVIL
STATE OF CALIFORNIA

October 19, 2015
PLANS APPROVAL DATE

THE STATE OF CALIFORNIA OR ITS OFFICERS OR AGENTS SHALL NOT BE RESPONSIBLE FOR THE ACCURACY OR COMPLETENESS OF SCANNED COPIES OF THIS PLAN SHEET.

THE CONTRACTOR SHALL POSSESS THE CLASS (OR CLASSES) OF LICENSE AS SPECIFIED IN THE "NOTICE TO BIDDERS."

NO SCALE

CONTRACT No.	**04-1SS024**
PROJECT ID	**0400020868**

PROJECT MANAGER: JULIE CAMPERO
DESIGN MANAGER: SOTERO ANGELES

LAST REVISION 10-09-15
DATE PLOTTED => 02-NOV-2015
TIME PLOTTED => 14:11

Dist	COUNTY	ROUTE	POST MILES TOTAL PROJECT	SHEET No.	TOTAL SHEETS
04	Ala	13	8.3	2	108

REGISTERED CIVIL ENGINEER 3/26/14 DATE

10-19-15
PLANS APPROVAL DATE

REGISTERED PROFESSIONAL ENGINEER Luis A. Gutierrez No. 49131 Exp. 9-30-16 CIVIL STATE OF CALIFORNIA

THE STATE OF CALIFORNIA OR ITS OFFICERS OR AGENTS SHALL NOT BE RESPONSIBLE FOR THE ACCURACY OR COMPLETENESS OF SCANNED COPIES OF THIS PLAN SHEET.

NOTES:

1. SEE GENERAL PLAN OF STRUCTURE DRAWINGS FOR TYPICAL SECTION OF DIAPHRAGM WALL AND SOLDIER PILE SYSTEM.
2. SEE BARRIER SLAB DETAIL No. 1.

STRUCTURAL SECTION

1 — 0.1′ HMA-O, 0.45′ HMA (TYPE A), 0.50′ LCBRS, 0.95′ AS (4)

2 — 0.1′ HMA-O, 0.10′ COLD PLANE

3 — 0.10′ HMA-O

4 — 0.50′ AS (4)

ABBREVIATION:

LCBRS LEAN CONCRETE BASE RAPID SETTING

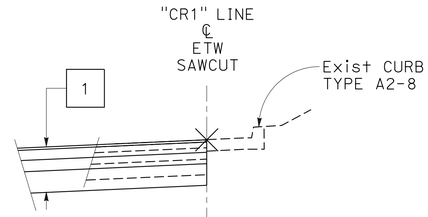

"CR1" 68+50 TO 69+82

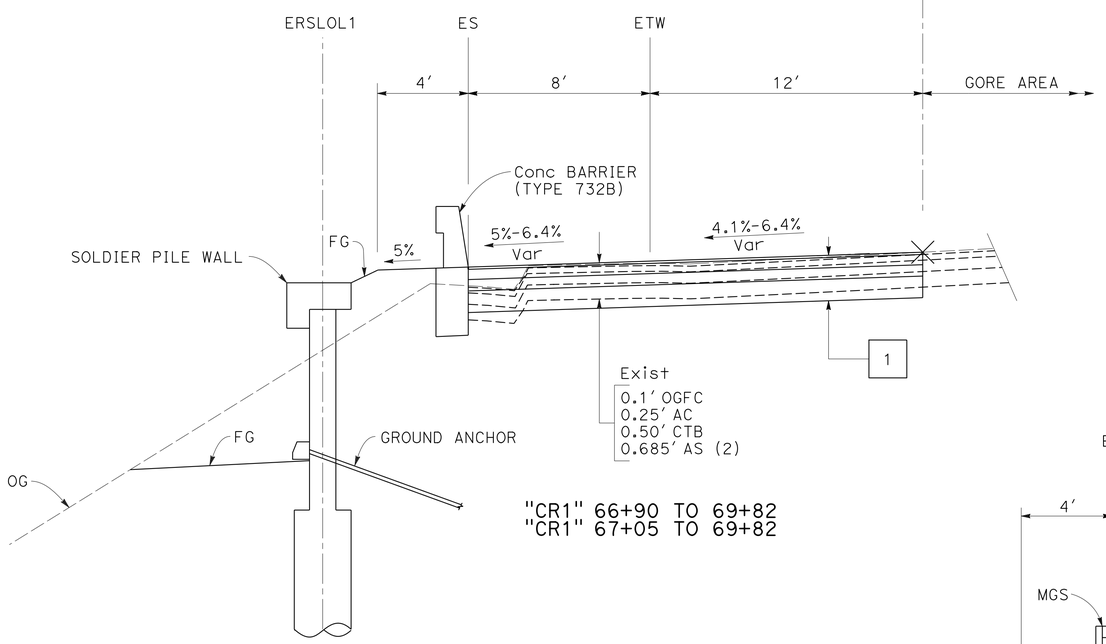

"CR1" 66+90 TO 69+82
"CR1" 67+05 TO 69+82

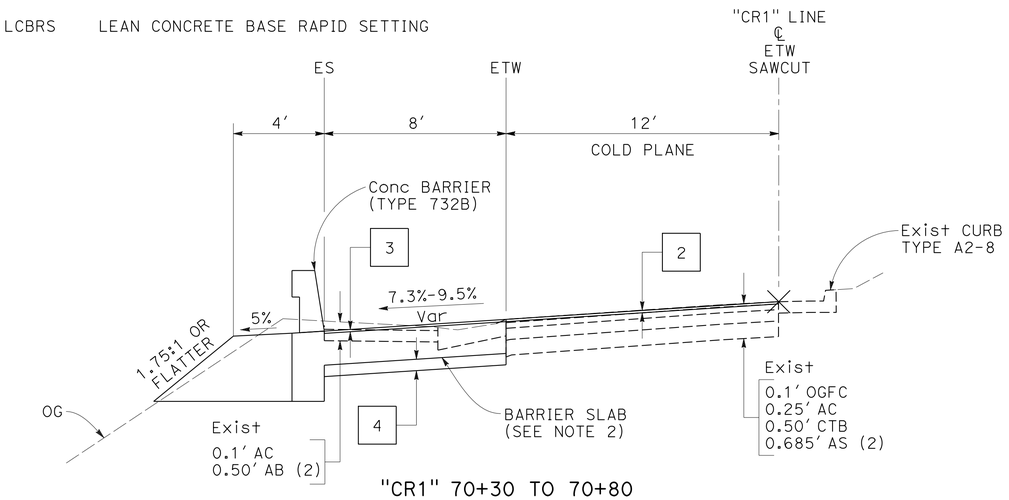

"CR1" 70+30 TO 70+80

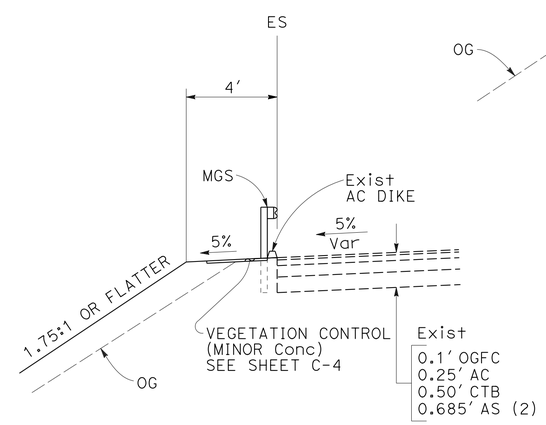

"CR1" 66+29 TO 66+67

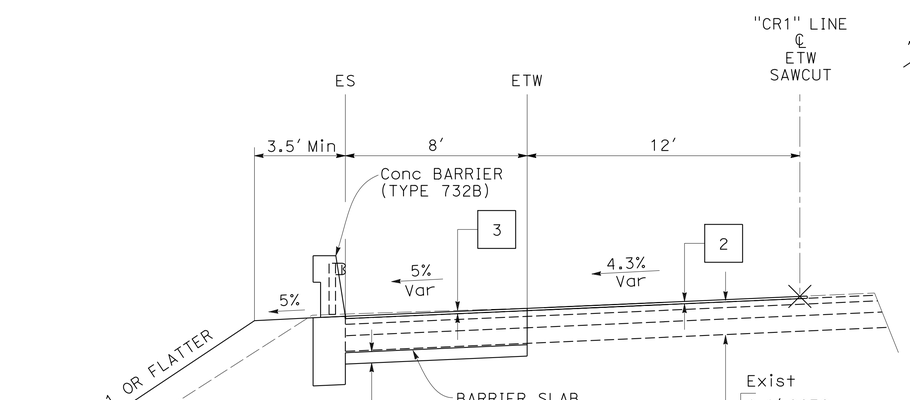

"CR1" 66+66 TO 67+05

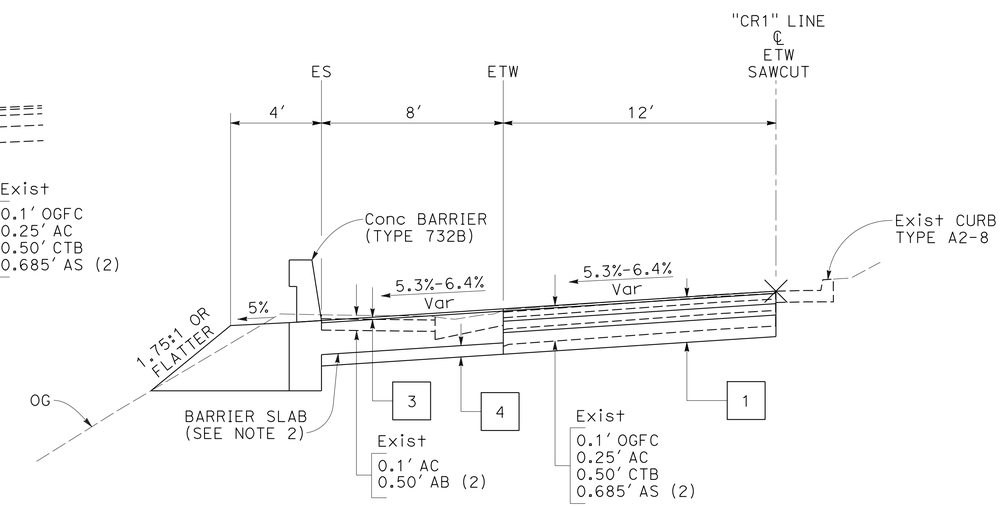

"CR1" 69+82 TO 70+30

TYPICAL CROSS SECTIONS

NO SCALE

X-1

LG	3/25/14	LUIS GUITIERREZ	AARON WANG
REVISED BY	DATE REVISED	CALCULATED-DESIGNED BY	CHECKED BY

FUNCTIONAL SUPERVISOR: SOTERO ANGELES

STATE OF CALIFORNIA - DEPARTMENT OF TRANSPORTATION

Caltrans® DESIGN

LAST REVISION 09-18-15 | DATE PLOTTED => 19-OCT-2015 | TIME PLOTTED => 15:54

Dist	COUNTY	ROUTE	POST MILES TOTAL PROJECT	SHEET No.	TOTAL SHEETS
04	Ala	13	8.3	3	108

REGISTERED CIVIL ENGINEER DATE 3/26/14

10-19-15
PLANS APPROVAL DATE

REGISTERED PROFESSIONAL ENGINEER Luis A. Gutierrez No. 49131 Exp. 9-30-16 CIVIL STATE OF CALIFORNIA

THE STATE OF CALIFORNIA OR ITS OFFICERS OR AGENTS SHALL NOT BE RESPONSIBLE FOR THE ACCURACY OR COMPLETENESS OF SCANNED COPIES OF THIS PLAN SHEET.

NOTE:

FOR ACCURATE RIGHT OF WAY DATA, CONTACT RIGHT OF WAY ENGINEERING AT THE DISTRICT OFFICE.

NOTES:

1. SEE REVISED Std PLAN B11-55 FOR CONCRETE BARRIER TRANSITION TO MGS SHAPE.
2. SEE SHEET C-4 FOR CONNECTION TO MGS/MBGR TRANSITION.

LEGEND:

- No. — STRUCTURAL SECTION NUMBER
- No. — CURVE DATA NUMBER
- 0.10' HMA-O
- 0.10' HMA-O; 0.10' COLD PLANE
- DESTROY WELL
- -TFESA- — TEMPORARY FENCE ENVIROMENTALLY SENSITIVE AREA (TFESA)
- REMOVE CONCRETE (LUMINAIRE PILE FOUNDATION)

CURVE DATA

No. ⊕	R	Δ	T	L
1	4000'	02° 15' 27"	78.81'	157.60'
2	3000'	-01° 38' 53"	43.15'	86.29'
3	300'	-17° 37' 20"	46.50'	92.27'

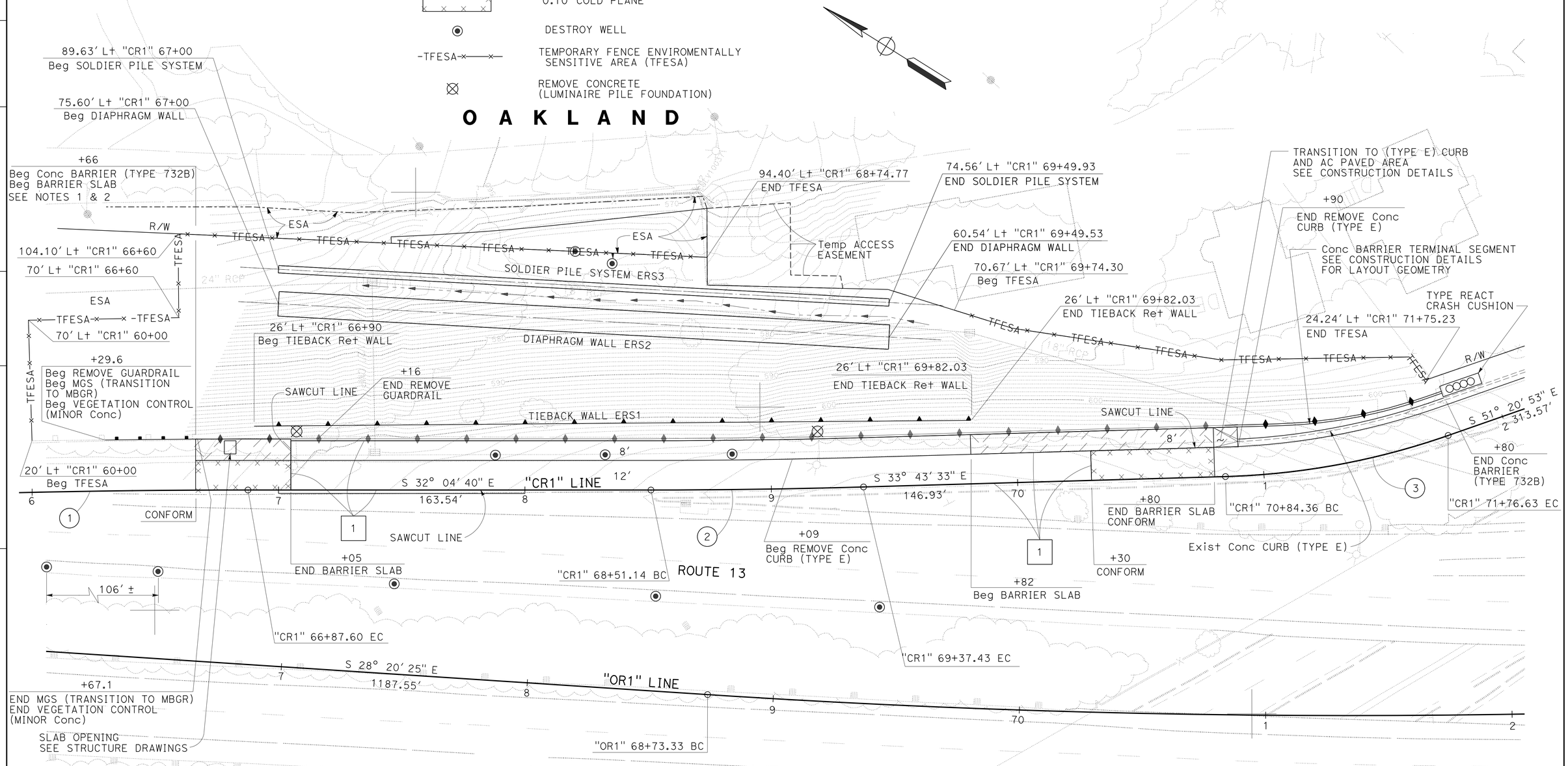

LAYOUT

SCALE: 1" = 20'

L-1

REVISED BY	DATE REVISED
LG	3/25/14

CALCULATED-DESIGNED BY: LUIS GUTIERREZ
CHECKED BY: AARON WANG
FUNCTIONAL SUPERVISOR: SOTERO ANGELES

STATE OF CALIFORNIA - DEPARTMENT OF TRANSPORTATION
Caltrans
DESIGN

LAST REVISION 10-09-15
DATE PLOTTED => 19-OCT-2015
TIME PLOTTED => 15:54

Dist	COUNTY	ROUTE	POST MILES TOTAL PROJECT	SHEET No.	TOTAL SHEETS
04	Ala	13	8.3	4	108

REGISTERED CIVIL ENGINEER 3/26/14 DATE

10-19-15
PLANS APPROVAL DATE

REGISTERED PROFESSIONAL ENGINEER Luis A. Gutierrez No. 49131 Exp. 9-30-16 CIVIL STATE OF CALIFORNIA

THE STATE OF CALIFORNIA OR ITS OFFICERS OR AGENTS SHALL NOT BE RESPONSIBLE FOR THE ACCURACY OR COMPLETENESS OF SCANNED COPIES OF THIS PLAN SHEET.

NOTE:

FOR ACCURATE RIGHT OF WAY DATA, CONTACT RIGHT OF WAY ENGINEERING AT THE DISTRICT OFFICE.

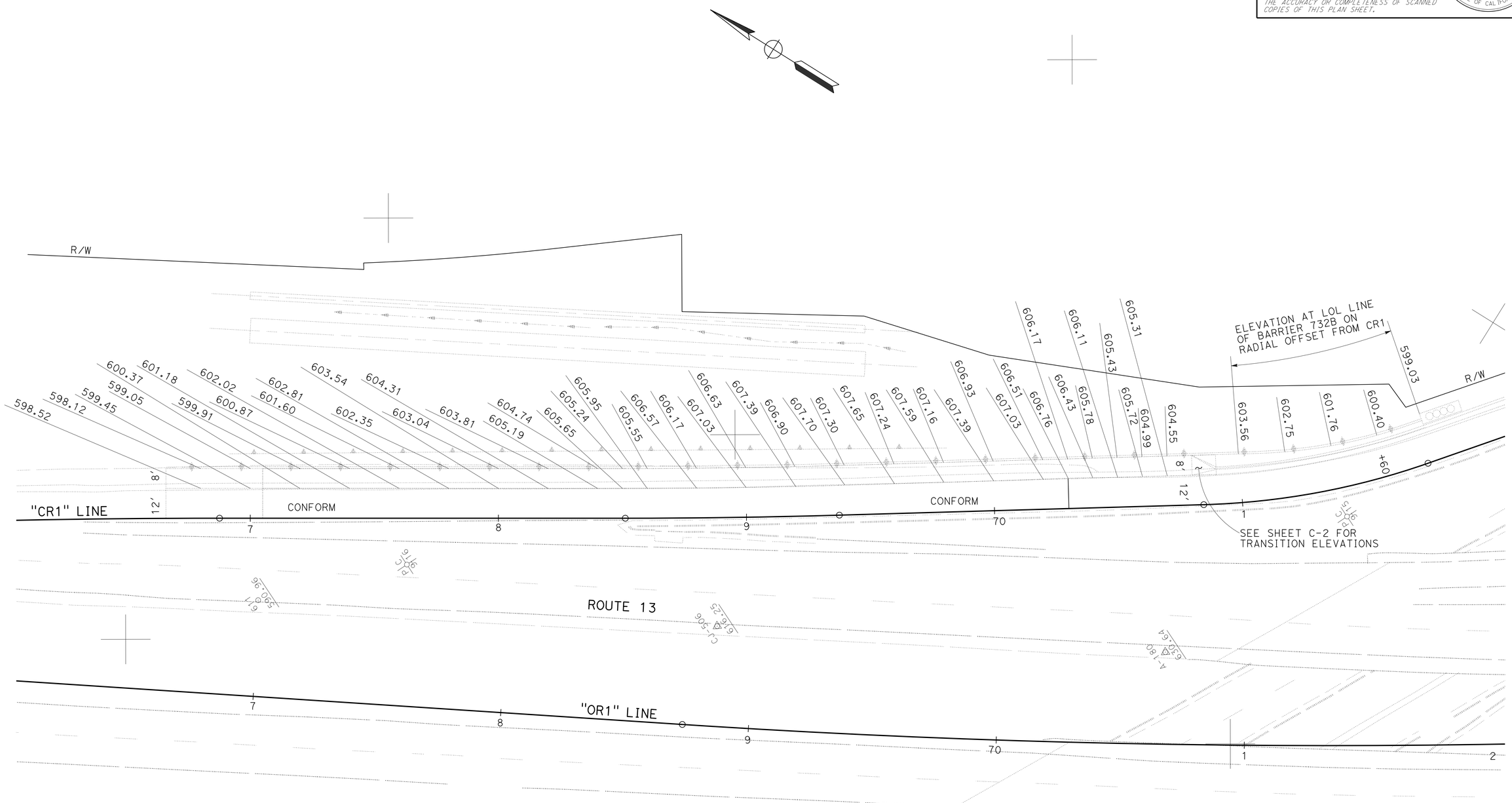

CONSTRUCTION DETAILS
PAVEMENT ELEVATION PLAN

SCALE: 1" = 20'

APPROVED FOR PAVEMENT ELEVATION WORK ONLY

C-1

STATE OF CALIFORNIA - DEPARTMENT OF TRANSPORTATION
Caltrans®
DESIGN

FUNCTIONAL SUPERVISOR: SOTERO ANGELES
CALCULATED-DESIGNED BY: LUIS GUTIERREZ
CHECKED BY: AARON WANG
REVISED BY: LG
DATE REVISED: 3/25/14

LAST REVISION 06-09-14
DATE PLOTTED => 19-OCT-2015
TIME PLOTTED => 15:54

Dist	COUNTY	ROUTE	POST MILES TOTAL PROJECT	SHEET No.	TOTAL SHEETS
04	Ala	13	8.3	5	108

REGISTERED CIVIL ENGINEER 3/26/14 DATE

10-19-15
PLANS APPROVAL DATE

REGISTERED PROFESSIONAL ENGINEER Luis A. Gutierrez No. 49131 Exp. 9-30-16 CIVIL STATE OF CALIFORNIA

THE STATE OF CALIFORNIA OR ITS OFFICERS OR AGENTS SHALL NOT BE RESPONSIBLE FOR THE ACCURACY OR COMPLETENESS OF SCANNED COPIES OF THIS PLAN SHEET.

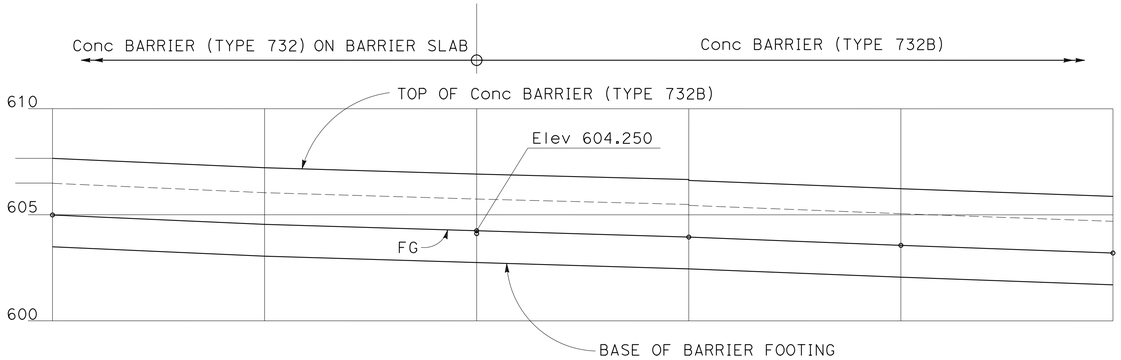

PARTIAL ELEVATION PROJECTED ON "CR1" LINE

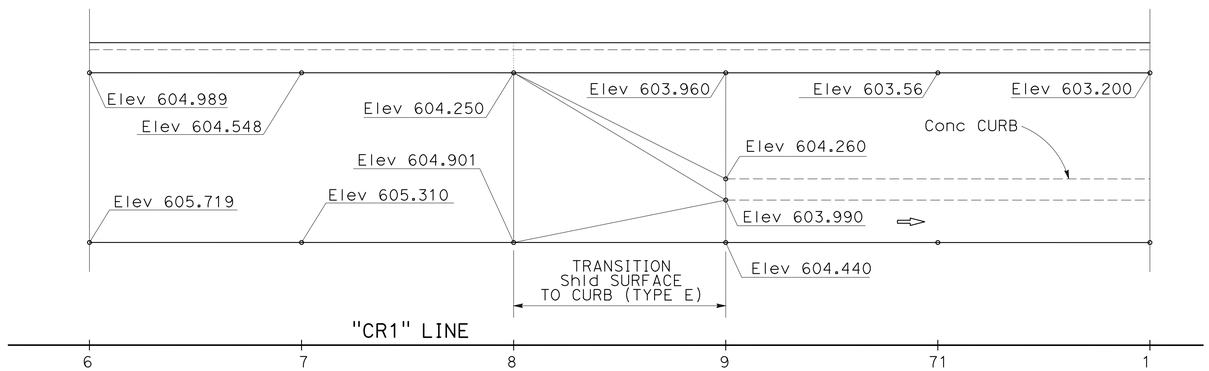

PLAN VIEW
CONCRETE BARRIER (TYPE 732)

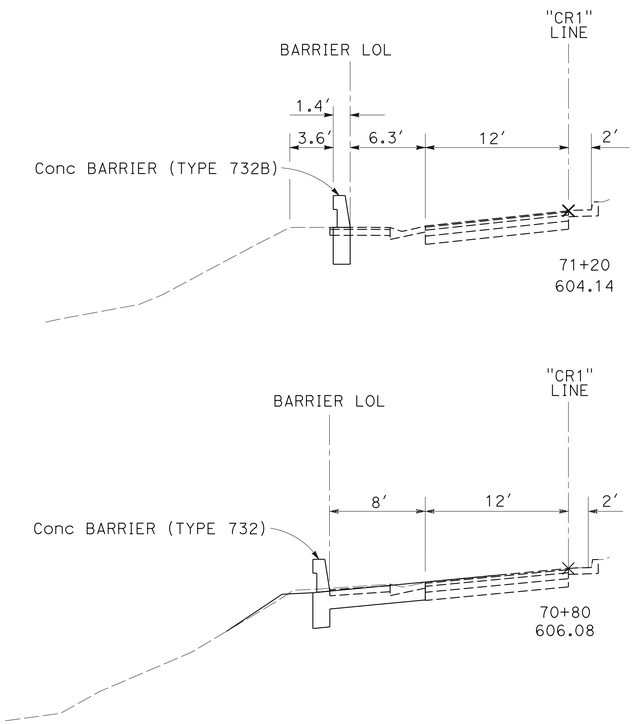

RAMP CROSS SECTIONS

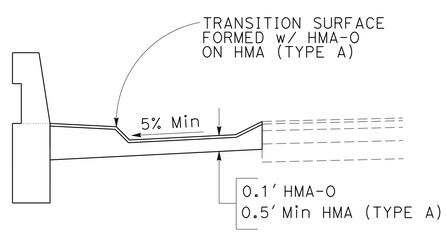

TRANSITION CROSS SECTION

CONSTRUCTION DETAILS
NO SCALE

C-2

LUIS GUTIERREZ	LG		
AARON WANG	3/25/14		
REVISED BY			
DATE REVISED			
CALCULATED-DESIGNED BY	FUNCTIONAL SUPERVISOR		
CHECKED BY	SOTERO ANGELES		

STATE OF CALIFORNIA - DEPARTMENT OF TRANSPORTATION
Caltrans
DESIGN

LAST REVISION 06-09-14 | DATE PLOTTED => 19-OCT-2015 | TIME PLOTTED => 15:54

Dist	COUNTY	ROUTE	POST MILES TOTAL PROJECT	SHEET No.	TOTAL SHEETS
04	Ala	13	8.3	6	108

REGISTERED CIVIL ENGINEER 3/26/14 DATE

10-19-15
PLANS APPROVAL DATE

REGISTERED PROFESSIONAL ENGINEER Luis A. Gutierrez No. 49131 Exp. 9-30-16 CIVIL STATE OF CALIFORNIA

THE STATE OF CALIFORNIA OR ITS OFFICERS OR AGENTS SHALL NOT BE RESPONSIBLE FOR THE ACCURACY OR COMPLETENESS OF SCANNED COPIES OF THIS PLAN SHEET.

NOTE:

FOR ACCURATE RIGHT OF WAY DATA, CONTACT
RIGHT OF WAY ENGINEERING AT THE DISTRICT OFFICE.

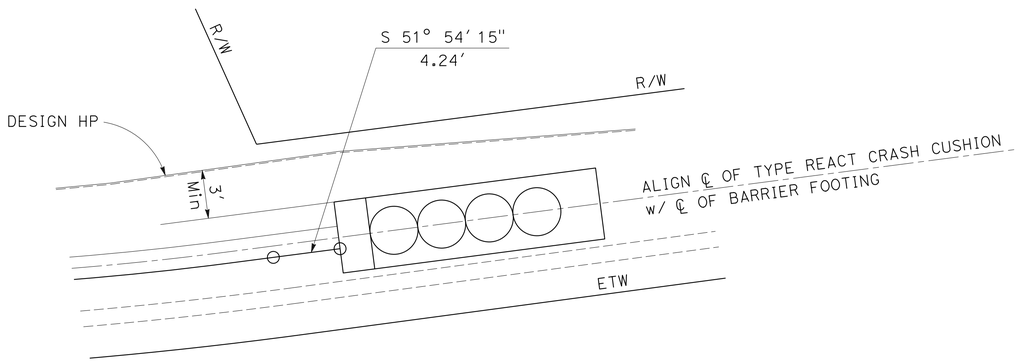

DETAIL A

CURVE DATA

No. ⊕	R	Δ	T	L
4	200	-18° 10′ 39"	31.99′	63.45′

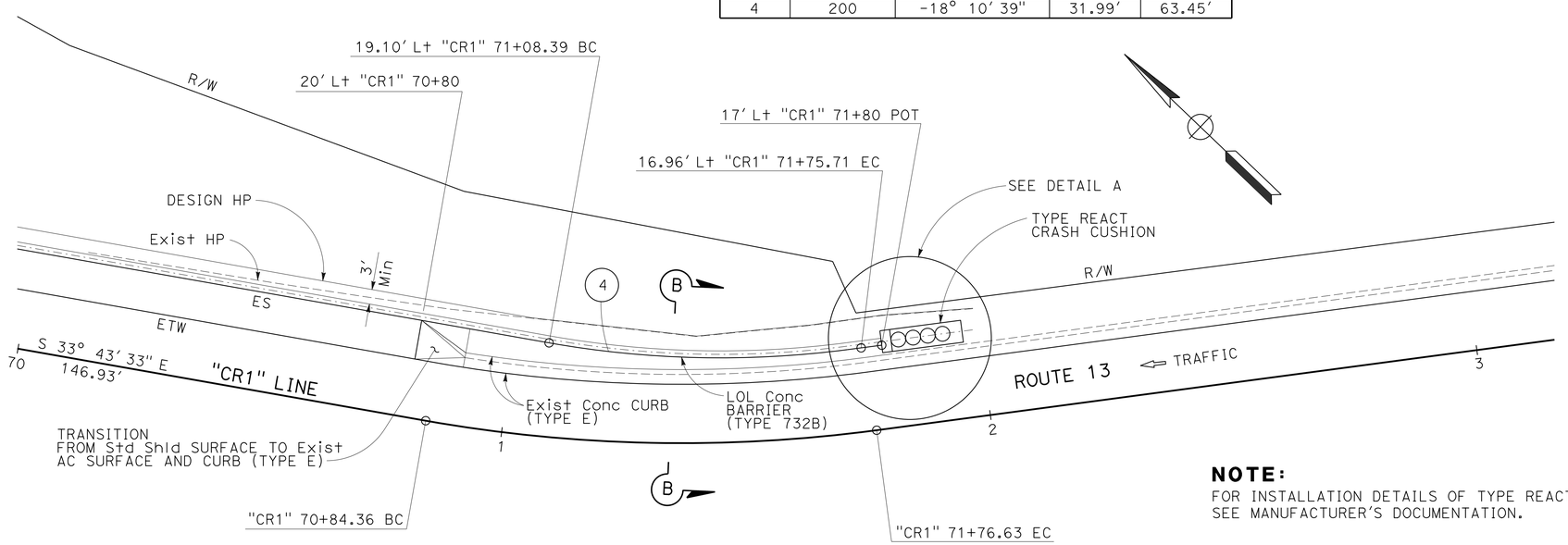

PLAN

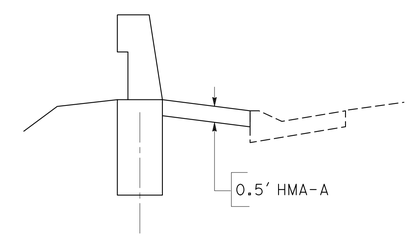

SECTION B-B

NOTE:

FOR INSTALLATION DETAILS OF TYPE REACT CRASH CUSHION,
SEE MANUFACTURER'S DOCUMENTATION.

CONSTRUCTION DETAILS

NO SCALE

C-3

STATE OF CALIFORNIA - DEPARTMENT OF TRANSPORTATION
Caltrans
DESIGN
FUNCTIONAL SUPERVISOR: SOTERO ANGELES
CALCULATED-DESIGNED BY: LUIS GUTIERREZ
CHECKED BY: AARON WANG
REVISED BY: LG
DATE REVISED: 3/25/14

LAST REVISION 10-09-15
DATE PLOTTED => 19-OCT-2015
TIME PLOTTED => 15:54

Dist	COUNTY	ROUTE	POST MILES TOTAL PROJECT	SHEET No.	TOTAL SHEETS
04	Ala	13	8.3	7	108

REGISTERED CIVIL ENGINEER 9/18/15 DATE

10-19-15
PLANS APPROVAL DATE

REGISTERED PROFESSIONAL ENGINEER Luis A. Gutierrez No. 49131 Exp. 9-30-16 CIVIL STATE OF CALIFORNIA

THE STATE OF CALIFORNIA OR ITS OFFICERS OR AGENTS SHALL NOT BE RESPONSIBLE FOR THE ACCURACY OR COMPLETENESS OF SCANNED COPIES OF THIS PLAN SHEET.

NOTES:

1. REFER TO REVISED STANDARD PLANS RSP A77L1 AND RSP A77L2 FOR COMPONENT DETAILS FOR MGS NOT SHOWN ON THIS PLAN.
2. ALL POSTS FOR ANY STANDARD BARRIER RUN SHALL BE OF THE SAME TYPE: WOOD OR STEEL.
3. INSTALL POSTS IN SOIL.

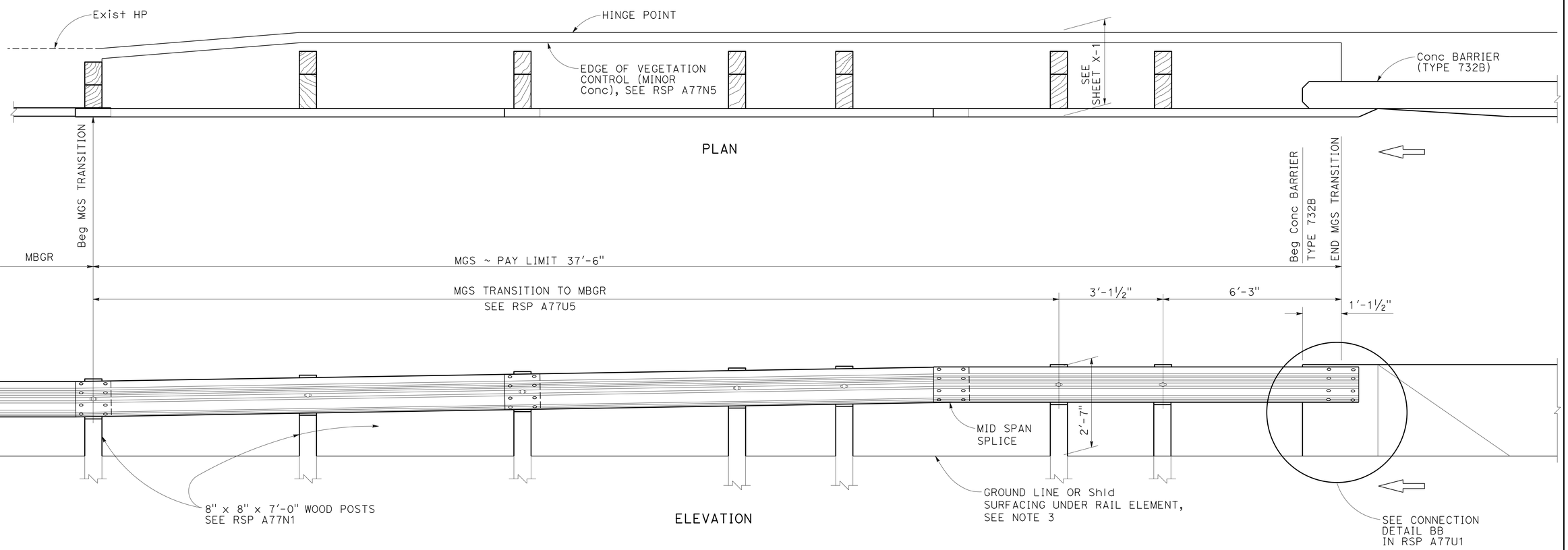

CONSTRUCTION DETAILS
MIDWEST GUARDRAIL SYSTEM TRANSITION TO METAL BEAM GUARDRAIL

NO SCALE

C-4

STATE OF CALIFORNIA - DEPARTMENT OF TRANSPORTATION
Caltrans
DESIGN

FUNCTIONAL SUPERVISOR: SOTERO ANGELES
CALCULATED-DESIGNED BY: LUIS GUTIERREZ
CHECKED BY: AARON WANG
REVISED BY: LG
DATE REVISED: 9/11/15

LAST REVISION 10-09-15 | DATE PLOTTED => 19-OCT-2015 | TIME PLOTTED => 15:54

Dist	COUNTY	ROUTE	POST MILES TOTAL PROJECT	SHEET No.	TOTAL SHEETS
04	Ala	13	8.3	8	108

REGISTERED CIVIL ENGINEER 3/26/14 DATE

10-19-15
PLANS APPROVAL DATE

REGISTERED PROFESSIONAL ENGINEER Luis A. Gutierrez No. 49131 Exp. 9-30-16 CIVIL STATE OF CALIFORNIA

THE STATE OF CALIFORNIA OR ITS OFFICERS OR AGENTS SHALL NOT BE RESPONSIBLE FOR THE ACCURACY OR COMPLETENESS OF SCANNED COPIES OF THIS PLAN SHEET.

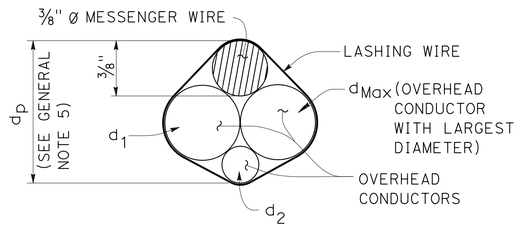

$d_p = 3/8" + d_{Max} + 0.30 * (d_1 + d_2 + \ldots d_n)$

PROJECTED DEPTH OF OVERHEAD BUNDLE, (d_p)

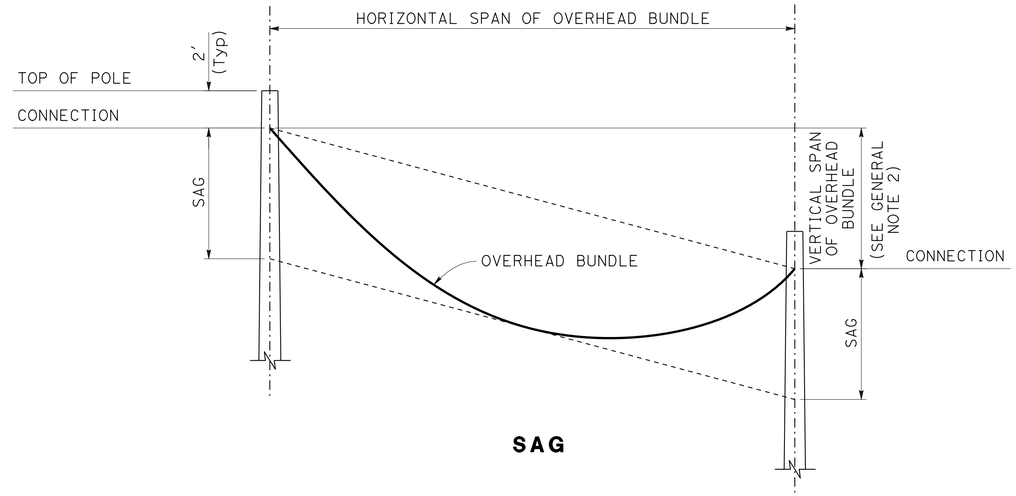

SAG

DESIGN: AASHTO STANDARD SPECIFICATIONS FOR STRUCTURAL SUPPORTS FOR HIGHWAY SIGNS, LUMINAIRES AND TRAFFIC SIGNALS, FIFTH EDITION (LTS-5).

GROUP LOAD COMBINATIONS:

I DEAD LOAD
II DEAD LOAD + WIND LOAD
III DEAD LOAD + 0.5 (WIND LOAD) + ICE LOAD
IV FATIGUE: NOT USED

LOADING:

WIND LOADING: 100 MPH (3-SECOND GUST)
WIND RECURRENCE INTERVAL: 10 YEARS
COMBINED HEIGHT, EXPOSURE, AND ELEVATED TERRAIN FACTOR = 1.05
(EXPOSURE C, STRUCTURE IS NOT LOCATED ON OR OVER THE TOP HALF OF A RIDGE, HILL, OR ESCARPMENT)

ICE LOADING: 3.0 psf ON SURFACES, 0.60 IN RADIAL THICKNESS OF ICE AT A UNIT WEIGHT OF 60 PCF ON OVERHEAD BUNDLES

BASIC DESIGN VALUES:

TIMBER POLES: FB = 1850 psi
FV = 110 psi
FCP = 230 psi
FC = 950 psi
E = 1500 x 10^3 psi

DESIGN WIRE BREAKING STRENGTHS:

ASTM A475, UTILITIES GRADE, 7 STRAND MODIFIED BY TERMINATION EFFICIENCY FACTOR OF 0.8

FOUNDATION DESIGN NOTES:

1. POLE EMBEDMENT DEPTH DESIGN IS BASED ON BROMS' APPROXIMATE PROCEDURE AS DESCRIBED IN ARTICLE 13.6 OF AASHTO LTS-5.

2. EMBEDMENT DEPTH IS CALCULATED BASED ON FOLLOWING SOIL PARAMETERS,
COHESIVE SOIL:
SHEAR STRENGTH OF SOIL C = 1500 psf.
COHESIONLESS SOIL:
Ø = 30 Deg, γ = 120 pcf.
SOIL ASSUMED TO BE UNSATURATED.

3. AN OVERLOAD FACTOR OF 2.0 AND AN UNDERCAPACITY FACTOR OF 0.7 WERE USED FOR SAFETY FACTOR OF 2.86.

4. ALLOWABLE VERTICAL BEARING PRESSURE AT THE END BEARING OF POLES IS 3000 psf AT 6' OR MORE EMBEDMENT.

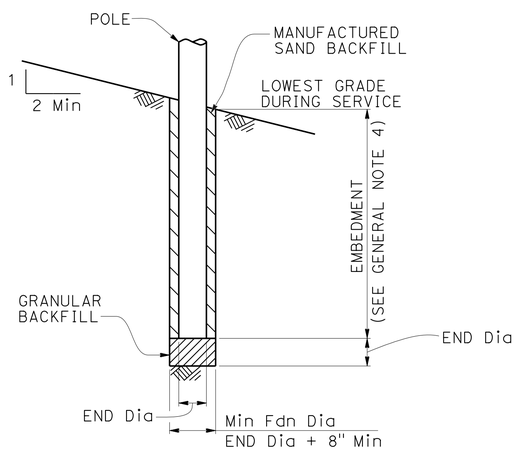

POLE FOUNDATION

GENERAL NOTES:

1. THE MESSENGER WIRE AND ANY COMBINATION OF OVERHEAD CONDUCTORS MUST NOT EXCEED EITHER A SELF WEIGHT OF 3.0 lb/ft OR THE MAXIMUM d_p.

2. THE MAXIMUM VERTICAL SPAN IS 10% OF THE HORIZONTAL SPAN.

3. FOR POLES WITH ADJACENT UNBALANCED HORIZONTAL SPANS, THE SHORTEST HORIZONTAL SPAN MUST BE AT LEAST 50% OF THE LARGEST HORIZONTAL SPAN.

4. ADD 2' FOR SLOPES ABOVE 1V:4H.

5. FOR A POLE SUPPORTING MULTIPLE SPANS, CALCULATE d_p FOR EACH SPAN AND USE THE LARGEST VALUE.

6. DO NOT EXCEED THE ATTACHMENTS SHOWN.

DIAMETERS AND SELF WEIGHT OF OVERHEAD CONDUCTORS

CONDUCTOR OR CABLE TYPE	DIAMETER d (in)	WEIGHT w (plf)
3 CONDUCTOR SIGNAL CABLE (3CSC)	0.400	0.0980
5 CONDUCTOR SIGNAL CABLE (5CSC)	0.500	0.1560
9 CONDUCTOR SIGNAL CABLE (9CSC)	0.650	0.2760
12 CONDUCTOR SIGNAL CABLE (12CSC)	0.800	0.3970
28 CONDUCTOR SIGNAL CABLE (28CSC)	0.900	0.6490
1-#14	0.166	0.0235
1-#12	0.185	0.0330
1-#10	0.210	0.0476
1-#8	0.271	0.0774
1-#6	0.310	0.1130
1-#4	0.359	0.1690
1-#3	0.388	0.2080
1-#2	0.420	0.2560
1-#1	0.498	0.3340
6-CONDUCTOR SIGNAL INTERCONNECT CABLE (SIC)	0.350	0.0860
12-CONDUCTOR SIGNAL INTERCONNECT CABLE (SIC)	0.500	0.1440
DETECTOR LEAD-IN CABLE (DLC)	0.310	0.0440
12 TO 48-STRAND FIBER OPTIC CABLE (48FOC)	0.424	0.0600
72-STRAND FIBER OPTIC CABLE (72FOC)	0.484	0.0770
96-STRAND FIBER OPTIC CABLE (96FOC)	0.535	0.1050
144-STRAND FIBER OPTIC CABLE (144FOC)	0.670	0.1890
3/8" Ø MESSENGER WIRE	0.375	0.2730

CONSTRUCTION DETAILS
TEMPORARY WOOD POLES
NO SCALE

C-5

STATE OF CALIFORNIA - DEPARTMENT OF TRANSPORTATION
Caltrans DESIGN
FUNCTIONAL SUPERVISOR SOTERO ANGELES
CALCULATED-DESIGNED BY LUIS GUTIERREZ
CHECKED BY AARON WANG
REVISED BY LG
DATE REVISED 3/25/14

LAST REVISION 03-28-14
DATE PLOTTED => 19-OCT-2015
TIME PLOTTED => 15:54

Dist	COUNTY	ROUTE	POST MILES TOTAL PROJECT	SHEET No.	TOTAL SHEETS
04	Ala	13	8.3	9	108

REGISTERED CIVIL ENGINEER 3/26/14 DATE

10-19-15
PLANS APPROVAL DATE

REGISTERED PROFESSIONAL ENGINEER Luis A. Gutierrez No. 49131 Exp. 9-30-16 CIVIL STATE OF CALIFORNIA

THE STATE OF CALIFORNIA OR ITS OFFICERS OR AGENTS SHALL NOT BE RESPONSIBLE FOR THE ACCURACY OR COMPLETENESS OF SCANNED COPIES OF THIS PLAN SHEET.

LEGEND (FOR THIS SHEET ONLY)

WOOD POLE NO ATTACHMENTS

A WOOD POLE WITH ATTACHMENTS

—OH— OVERHEAD BUNDLE

POLE SELECTION TABLE

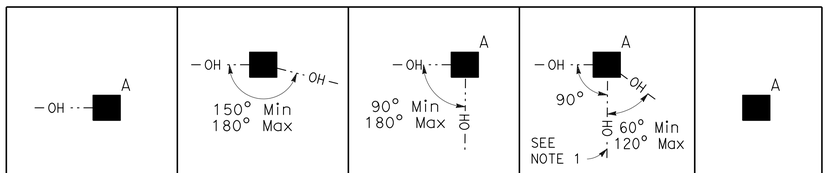

			CASE 1N				CASE 2N				CASE 3N				CASE 4N				CASE 5N
		MAXIMUM dp	1"	1.5"	2.0"	2.5"	1"	1.5"	2.0"	2.5"	1.0"	1.5"	2.0"	2.5"	1"	1.5"	2.0"	2.5"	N/A
OVERHEAD BUNDLE HORIZONTAL SPAN (Max)	50'	MINIMUM POLE CLASS	H-1	H-2	H-2	H-2	4	3	2	1	H-2	H-2	H-3	H-3	H-4	H-4	H-4	H-5	CLASS 1 E = 10'
		POLE EMBEDMENT (E)	11'				10'				11'				12'				
	100'	MINIMUM POLE CLASS	H-2	H-3	H-4	H-5	1	H-1	H-2	H-3	H-4	H-5	H-5	H-6	H-5	H-5	H-6		
		POLE EMBEDMENT (E)	12'				11'				12'				12'				
	150'	MINIMUM POLE CLASS	H-4	H-5	H-6		H-1	H-2	H-3	H-5	H-6				H-6				
		POLE EMBEDMENT (E)	12'				12'				12'				12'				
	200'	MINIMUM POLE CLASS	H-5	H-6			H-2	H-3	H-5										
		POLE EMBEDMENT (E)	12'				12'												

1. CCTV CAMERA ASSEMBLY OR VEHICLE DETECTION SYSTEM
2. OVERHEAD BUNDLE CONSISTING OF A 3/8"Ø MESSENGER WIRE AND OVERHEAD CONDUCTORS AND LASHING WIRE.
3. LUMINAIRE WITH MAST ARM
4. PEDESTRIAN PUSHBUTTON
5. SIGNAL FACE WITH 3 INDICATIONS OR SINGLE SHEET SIGN PANEL (10 SQFT Max)
6. RISER WITH WEATHER HEAD AS REQUIRED
7. PULL BOX AS REQUIRED
8. GROUNDING AS REQUIRED
9. SINGLE SECTION FLASHING BEACON OR SINGLE SHEET SIGN PANEL (4 SQFT Max)
10. SINGLE SHEET SIGN PANEL (4' x 4' Max) OR SIGNAL FACE WITH 3 INDICATIONS
11. FLASHING BEACON CONTROL ASSEMBLY
12. NEMA 3R ENCLOSURE, 26" (W) x 56" (H) x 12" (D) Max DIMENSIONS. MAXIMUM WEIGHT INCLUDING BATTERIES, 450 LBS
13. 25' SQFT Max TOTAL PHOTOVOLTAIC PANELS MOUNTED AS SHOWN AS REQUIRED
14. 2-SECTION 12" FLASHING BEACON

NOTES:

1. IN ADDITION TO OTHER RESTRICTIONS ON MAXIMUM HORIZONTAL SPAN, THIS HORIZONTAL SPAN MUST NOT EXCEED 100'.
2. CASES 1N, 3N AND 4N MAY SUBSTITUTE THE ATTACHMENTS SHOWN IN CASE 5N IF THE PHOTOVOLTAIC PANEL IS NOT INCLUDED.

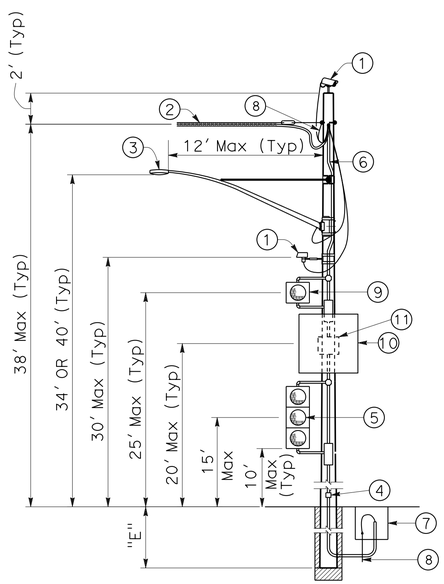

CASE 1N

POLE AT DEAD END WITH ATTACHMENTS

SEE NOTE 2

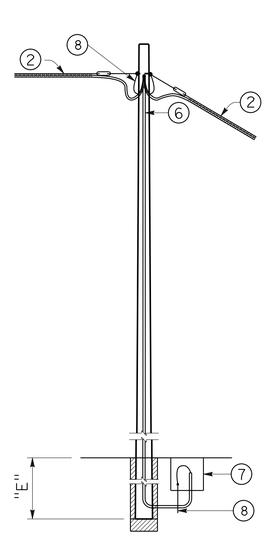

CASE 2N

POLE AT TANGENT WITHOUT ATTACHMENTS

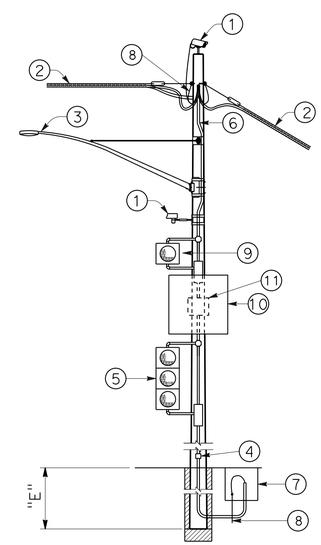

CASE 3N

POLE AT TANGENT OR CORNER WITH ATTACHMENTS

SEE NOTE 2

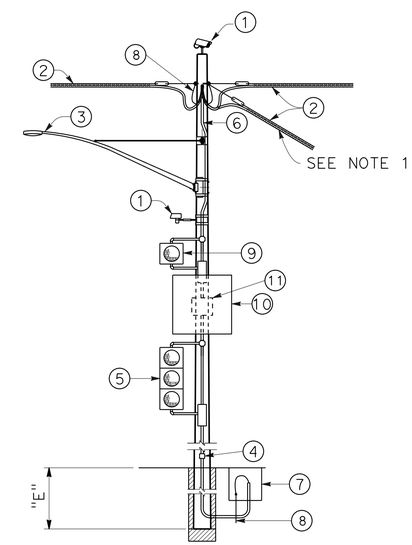

CASE 4N

POLE AT JUNCTION WITH ATTACHMENTS

SEE NOTE 2

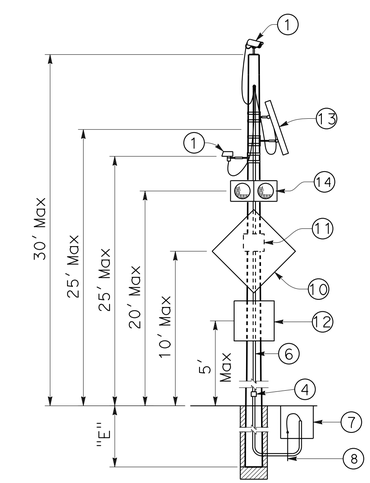

CASE 5N

POLE WITHOUT OVERHEAD BUNDLE WITH ATTACHMENTS

CONSTRUCTION DETAILS
TEMPORARY WOOD POLES
NON-GUYED - NO SIGNALS ON SPANS

NO SCALE

C-6

STATE OF CALIFORNIA - DEPARTMENT OF TRANSPORTATION
Caltrans®
DESIGN

FUNCTIONAL SUPERVISOR: SOTERO ANGELES
CALCULATED-DESIGNED BY: LUIS GUTIERREZ
CHECKED BY: AARON WANG
REVISED BY: LG
DATE REVISED: 3/25/14

LAST REVISION 05-08-14
DATE PLOTTED => 19-OCT-2015
TIME PLOTTED => 15:54

Dist	COUNTY	ROUTE	POST MILES TOTAL PROJECT	SHEET No.	TOTAL SHEETS
04	Ala	13	8.3	10	108

REGISTERED CIVIL ENGINEER 3/26/14 DATE

10-19-15
PLANS APPROVAL DATE

REGISTERED PROFESSIONAL ENGINEER Luis A. Gutierrez No. 49131 Exp. 9-30-16 CIVIL STATE OF CALIFORNIA

THE STATE OF CALIFORNIA OR ITS OFFICERS OR AGENTS SHALL NOT BE RESPONSIBLE FOR THE ACCURACY OR COMPLETENESS OF SCANNED COPIES OF THIS PLAN SHEET.

NOTES:

1. LUMINAIRE MAST ARMS MUST BE IN COMPLIANCE WITH STANDARD PLAN ES-6D WITH NOTED MODIFICATIONS.
2. VERIFY POLE DIMENSIONS AT TIE-ROD ATTACHMENT HEIGHT. FABRICATE 8" FLAT BAR WITH "L" DIMENSION TO MAINTAIN AN OPEN GAP BETWEEN FLANGES IN FINISHED INSTALLATION.
3. NOT ALL SCREW HEADS AND BOLT HEADS ARE SHOWN FOR CLARITY.
4. MAST ARM NOT SHOWN FOR CLARITY.

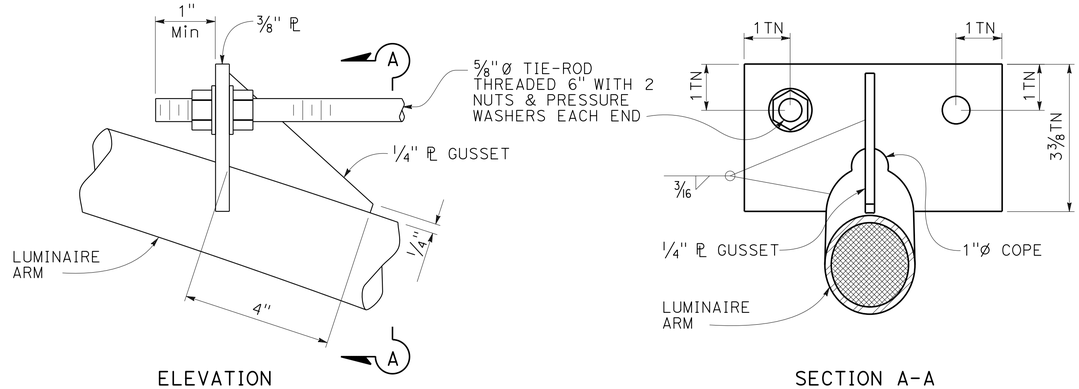

ELEVATION

SECTION A-A

DETAIL A
TIE-ROD AT LUMINAIRE ARM

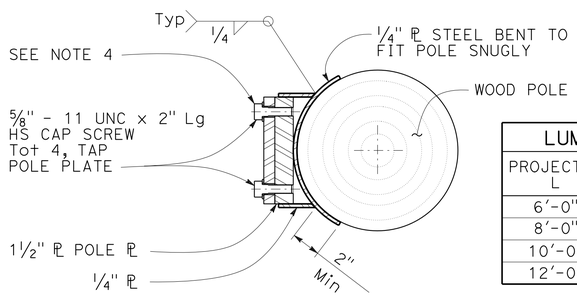

SECTION E-E

LUMINAIRE MAST ARM DATA			
PROJECTED L	N RISE	Min OD AT POLE	NOMINAL THICKNESS
6'-0"	2'-0"±	3 1/4"	0.1196"
8'-0"	2'-6"±	3 1/2"	
10'-0"	3'-3"±	3 7/8"	
12'-0"	4'-3"±		

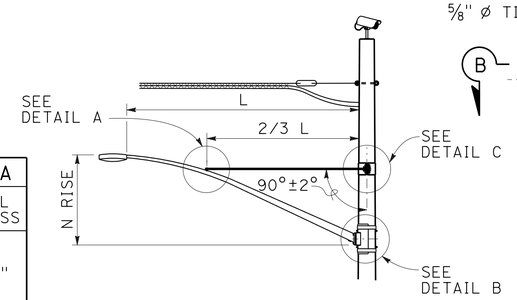

LUMINAIRE MAST ARM

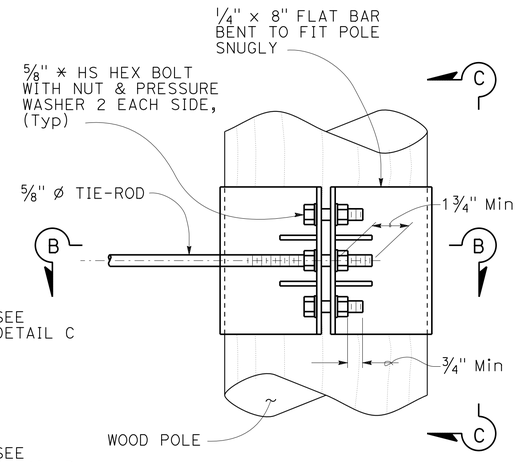

ELEVATION

NOTE:
NOT ALL SCREW AND BOLT HEADS SHOWN FOR CLARITY.

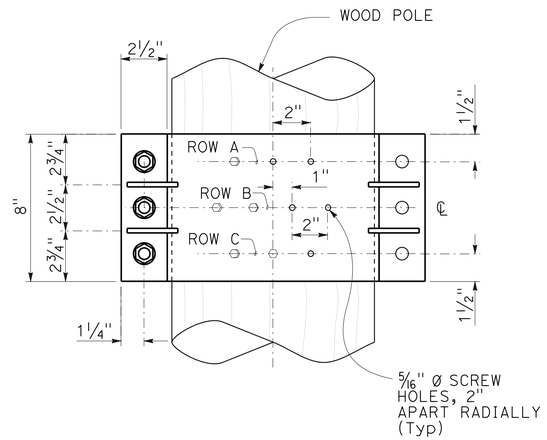

VIEW C-C

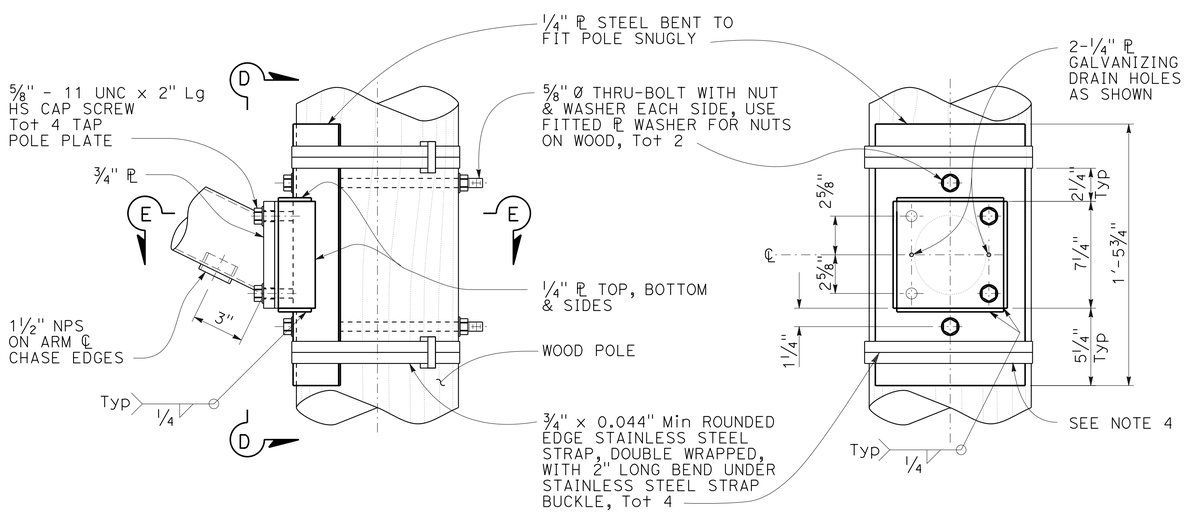

ELEVATION

VIEW D-D

DETAIL B
ARM CONNECTION DETAILS

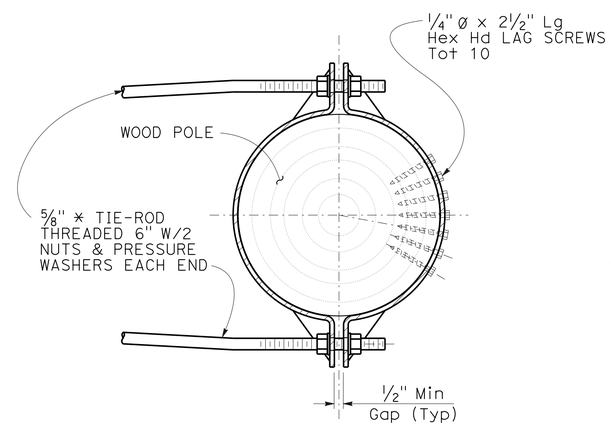

SECTION B-B

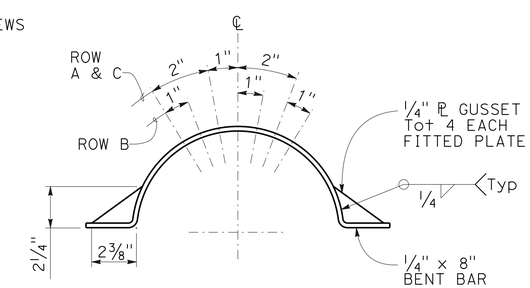

LAG SCREW AND GUSSET PLATE LAYOUT

DETAIL C
TIE-ROD AT POLE

CONSTRUCTION DETAILS
TEMPORARY WOOD POLE DETAILS
NO SCALE

C-7

REVISED BY	DATE REVISED
LG	3/25/14

LUIS GUTIERREZ — AARON WANG — CALCULATED-DESIGNED BY — CHECKED BY — FUNCTIONAL SUPERVISOR — SOTERO ANGELES

STATE OF CALIFORNIA - DEPARTMENT OF TRANSPORTATION — DESIGN

LAST REVISION 05-08-14 — DATE PLOTTED => 19-OCT-2015 — TIME PLOTTED => 15:54

Dist	COUNTY	ROUTE	POST MILES TOTAL PROJECT	SHEET No.	TOTAL SHEETS
04	Ala	13	8.3	11	108

REGISTERED CIVIL ENGINEER 3/26/14 DATE

10-19-15
PLANS APPROVAL DATE

REGISTERED PROFESSIONAL ENGINEER Luis A. Gutierrez No. 49131 Exp. 9-30-16 CIVIL STATE OF CALIFORNIA

THE STATE OF CALIFORNIA OR ITS OFFICERS OR AGENTS SHALL NOT BE RESPONSIBLE FOR THE ACCURACY OR COMPLETENESS OF SCANNED COPIES OF THIS PLAN SHEET.

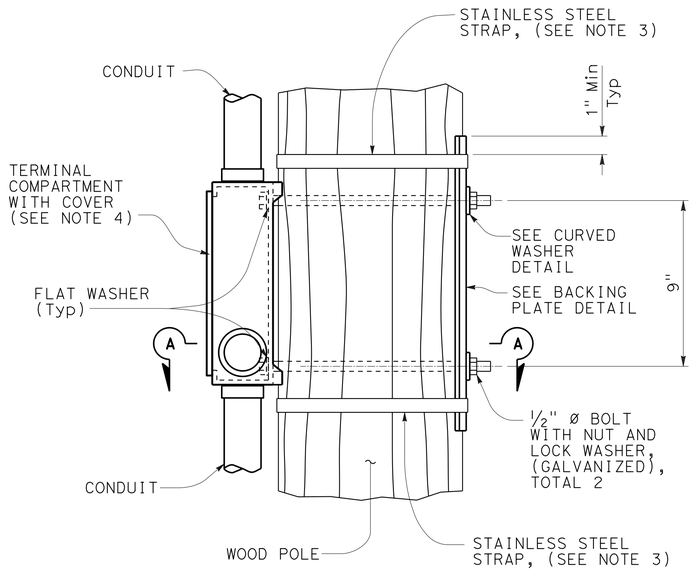

ELEVATION

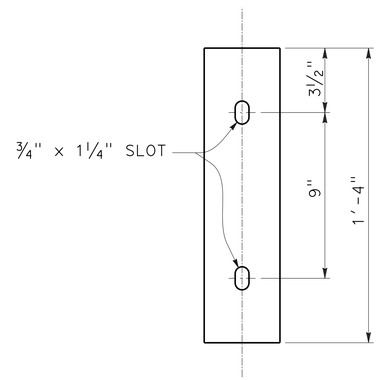

ELEVATION

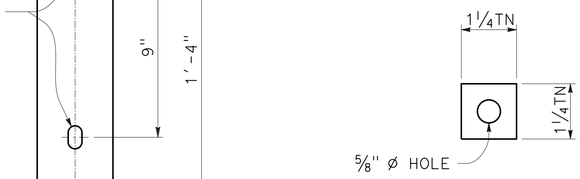

ELEVATION

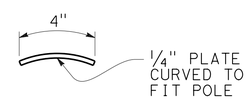

PLAN

BACKING PLATE DETAIL

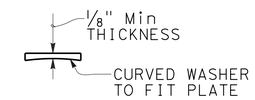

PLAN

CURVED WASHER DETAIL

NOTES:

1. VERIFY POLE DIMENSIONS AT TERMINAL COMPARTMENT FOR FABRICATION OF BACKING PLATE AND CURVED WASHER.
2. BACKING PLATE TO BE GALVANIZED AFTER FABRICATION.
3. ¾" × 0.044" Min ROUNDED EDGE STAINLESS STEEL STRAPS, DOUBLE WRAPPED WITH 2" LONG BEND UNDER STAINLESS STEEL STRAP BUCKLE.
4. FOR DETAILS NOT SHOWN, SEE STANDARD PLAN ES-4D.

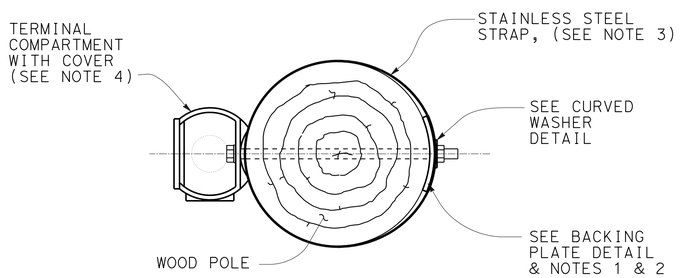

SECTION A-A

SIDE MOUNTING TERMINAL COMPARTMENT

CONSTRUCTION DETAILS
TEMPORARY WOOD POLES
NO SCALE

C-8

LUIS GUTIERREZ	REVISED BY: LG
AARON WANG	DATE REVISED: 3/25/14
CALCULATED-DESIGNED BY	
CHECKED BY	
FUNCTIONAL SUPERVISOR: SOTERO ANGELES	

STATE OF CALIFORNIA - DEPARTMENT OF TRANSPORTATION
Caltrans® DESIGN

LAST REVISION 03-28-14 | DATE PLOTTED => 19-OCT-2015 TIME PLOTTED => 15:54

Dist	COUNTY	ROUTE	POST MILES TOTAL PROJECT	SHEET No.	TOTAL SHEETS
04	Ala	13	8.3	12	108

REGISTERED CIVIL ENGINEER 9/23/15 DATE

10-19-15
PLANS APPROVAL DATE

REGISTERED PROFESSIONAL ENGINEER Jiangfan Chen No. 77248 Exp. 6-30-17 CIVIL STATE OF CALIFORNIA

THE STATE OF CALIFORNIA OR ITS OFFICERS OR AGENTS SHALL NOT BE RESPONSIBLE FOR THE ACCURACY OR COMPLETENESS OF SCANNED COPIES OF THIS PLAN SHEET.

NOTE:

FOR ACCURATE RIGHT OF WAY DATA, CONTACT RIGHT OF WAY ENGINEERING AT THE DISTRICT OFFICE.

LEGEND:

TEMPORARY HYDRAULIC MULCH (BFM)

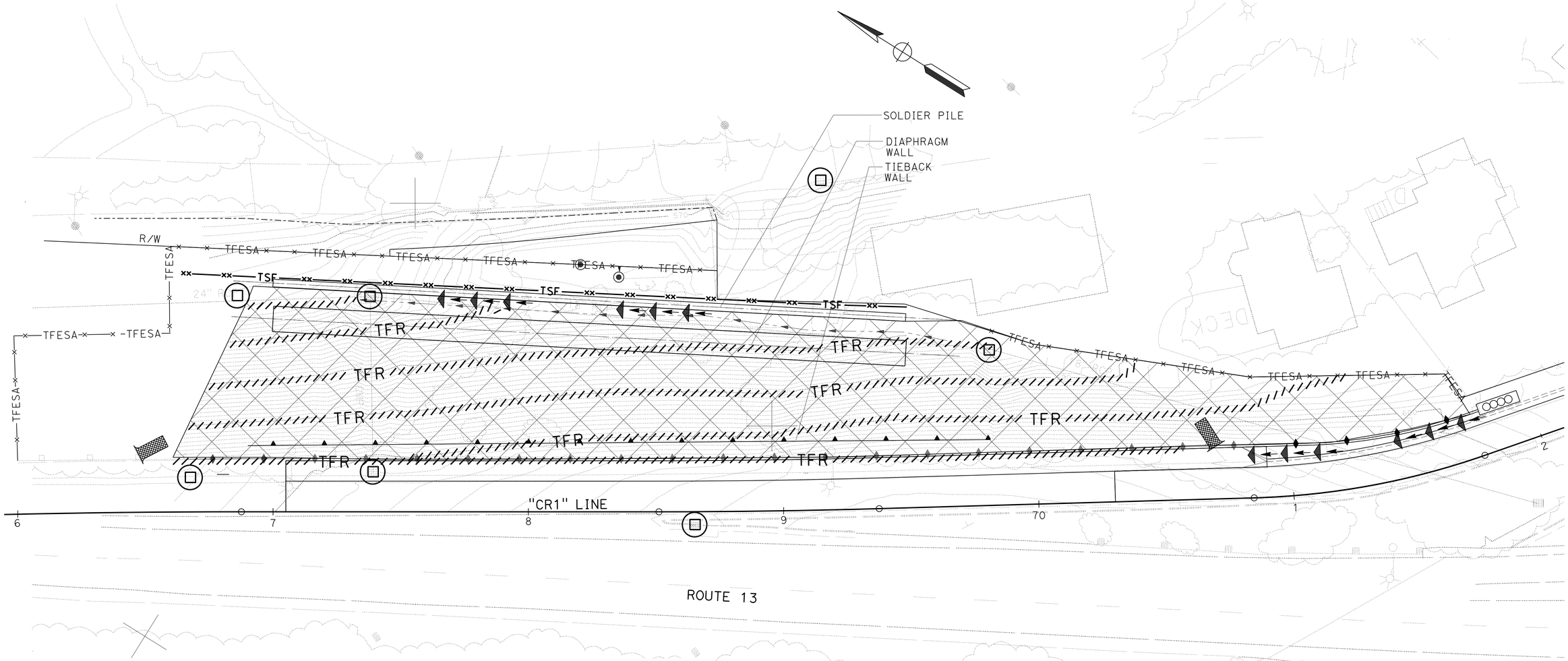

TEMPORARY WATER POLLUTION CONTROL QUANTITIES

ITEM	UNIT	STATION	QUANTITY
TEMPORARY DRAINAGE INLET PROTECTION	EA	AS SHOWN IN THE PLAN	7
TEMPORARY FIBER ROLL	LF	AS SHOWN IN THE PLAN	2500
TEMPORARY SILT FENCE	LF	AS SHOWN IN THE PLAN	700
TEMPORARY HYDRAULIC MULCH (BFM)	SQYD	AS SHOWN IN THE PLAN	3000
TEMPORARY CHECK DAM	LF	AS SHOWN IN THE PLAN	120
TEMPORARY CONCRETE WASHOUT	LS		1
TEMPORARY COVER	SQYD		800
TEMPORARY CONSTRUCTION ENTRANCE	EA	AS SHOWN IN THE PLAN	2
MOVE-IN/MOVE OUT (TEMPORARY EROSION CONTROL)	EA		1

TEMPORARY WATER POLLUTION CONTROL PLAN

SCALE: 1'' = 20'

WPC-1

APPROVED FOR WATER POLLUTION CONTROL WORK ONLY

CALCULATED-DESIGNED BY	CHECKED BY	REVISED BY	DATE REVISED
JIANGFAN CHEN	KAMRAN NAKHJIRI	JC	9/22/15

FUNCTIONAL SUPERVISOR: KAMRAN NAKHJIRI

STATE OF CALIFORNIA - DEPARTMENT OF TRANSPORTATION

Caltrans® WATER QUALITY

LAST REVISION 10-13-15 | DATE PLOTTED => 19-OCT-2015 | TIME PLOTTED => 15:54

Dist	COUNTY	ROUTE	POST MILES TOTAL PROJECT	SHEET No.	TOTAL SHEETS
04	Ala	13	8.3	13	108

REGISTERED CIVIL ENGINEER 5/6/14 DATE

10-19-15
PLANS APPROVAL DATE

REGISTERED PROFESSIONAL ENGINEER Craig M. Tomimatsu No. 43072 Exp. 3-31-16 CIVIL STATE OF CALIFORNIA

THE STATE OF CALIFORNIA OR ITS OFFICERS OR AGENTS SHALL NOT BE RESPONSIBLE FOR THE ACCURACY OR COMPLETENESS OF SCANNED COPIES OF THIS PLAN SHEET.

NOTE:

FOR ACCURATE RIGHT OF WAY DATA, CONTACT RIGHT OF WAY ENGINEERING AT THE DISTRICT OFFICE.

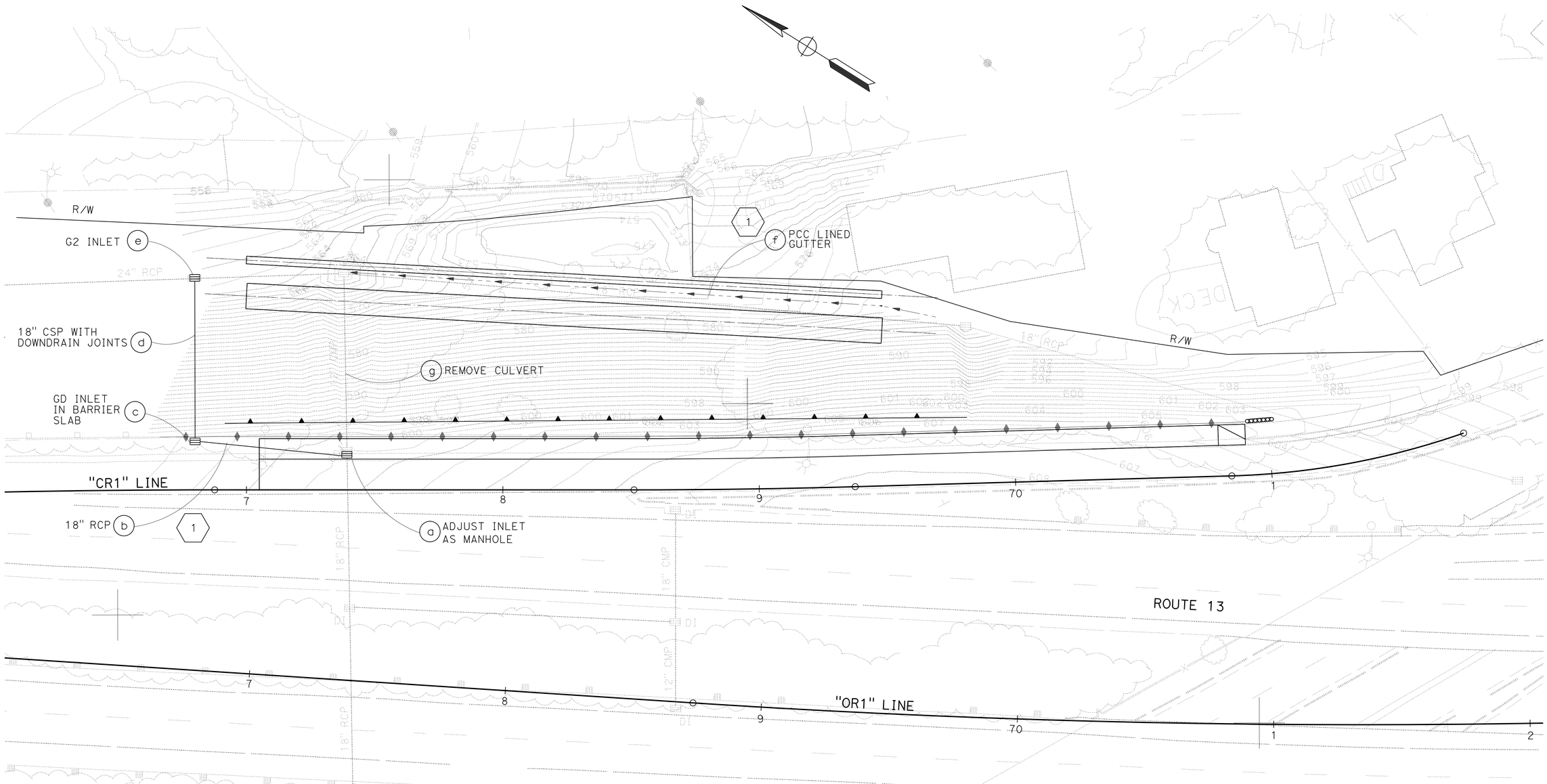

DRAINAGE PLAN

SCALE: 1" = 20'

APPROVED FOR DRAINAGE WORK ONLY

D-1

REVISED BY	DATE REVISED
CT	5/5/14

CRAIG TOMIMATSU — CALCULATED-DESIGNED BY
LUIS GUTIERREZ — CHECKED BY
JOSEPH PETERSON — FUNCTIONAL SUPERVISOR

STATE OF CALIFORNIA - DEPARTMENT OF TRANSPORTATION
Caltrans
HYDRAULICS

LAST REVISION 10-09-15
DATE PLOTTED => 19-OCT-2015
TIME PLOTTED => 15:54

Dist	COUNTY	ROUTE	POST MILES TOTAL PROJECT	SHEET No.	TOTAL SHEETS
04	Ala	13	8.3	14	108

REGISTERED CIVIL ENGINEER 5/6/14 DATE

10-19-15
PLANS APPROVAL DATE

REGISTERED PROFESSIONAL ENGINEER Craig M. Tomimatsu No. 43072 Exp. 3-31-16 CIVIL STATE OF CALIFORNIA

THE STATE OF CALIFORNIA OR ITS OFFICERS OR AGENTS SHALL NOT BE RESPONSIBLE FOR THE ACCURACY OR COMPLETENESS OF SCANNED COPIES OF THIS PLAN SHEET.

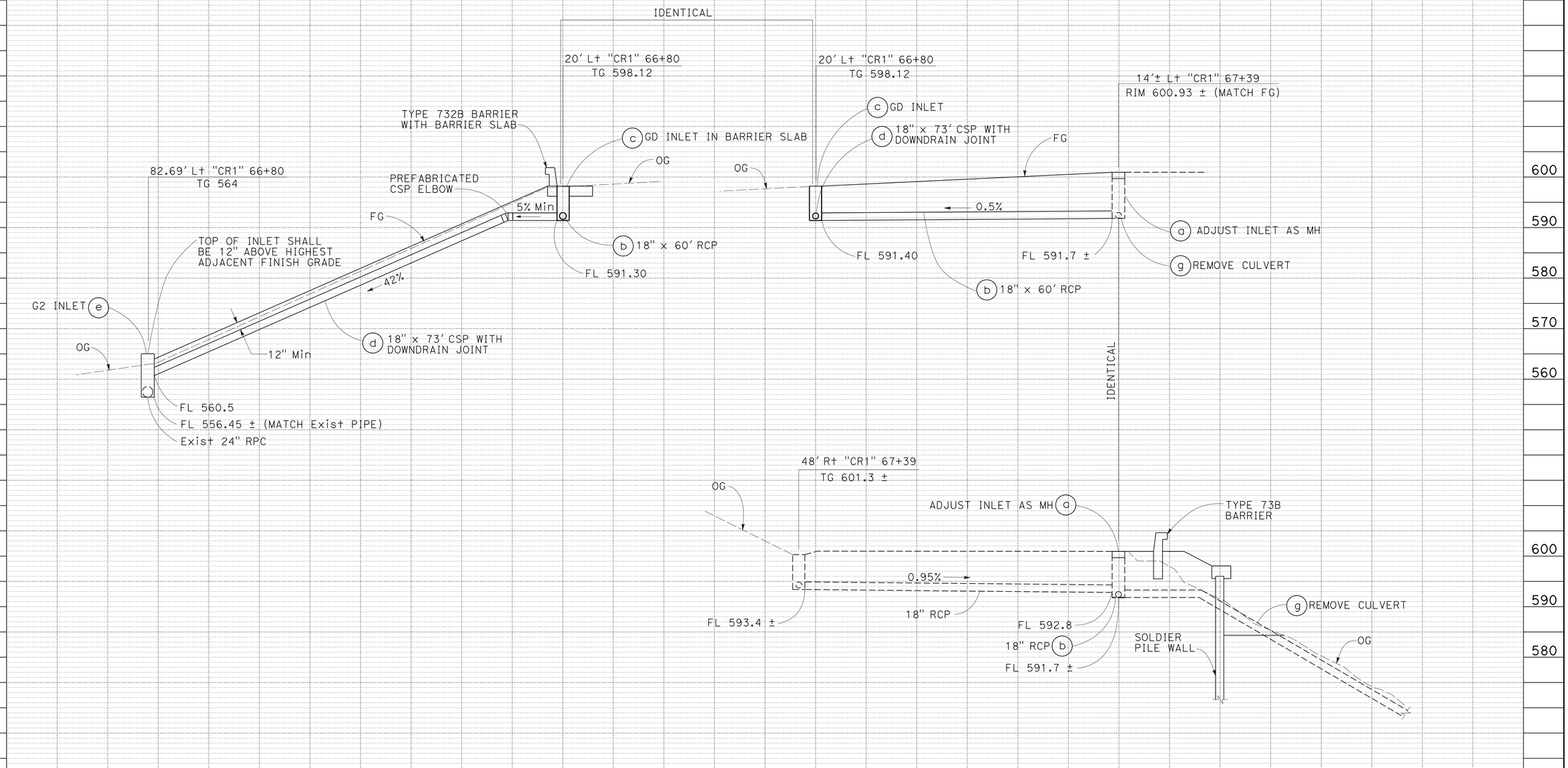

DRAINAGE SYSTEM No. 1

DRAINAGE PROFILES

SCALE: HORIZ 1" = 5'
VERT 1" = 10'

DP-1

STATE OF CALIFORNIA - DEPARTMENT OF TRANSPORTATION
Caltrans
HYDRAULICS

FUNCTIONAL SUPERVISOR: JOSEPH PETERSON
CALCULATED-DESIGNED BY: CRAIG TOMIMATSU
CHECKED BY: LUIS GUTIERREZ
REVISED BY: CT
DATE REVISED: 5/5/14

LAST REVISION 10-09-15
DATE PLOTTED => 19-OCT-2015
TIME PLOTTED => 15:54

Dist	COUNTY	ROUTE	POST MILES TOTAL PROJECT	SHEET No.	TOTAL SHEETS
04	Ala	13	8.3	15	108

REGISTERED CIVIL ENGINEER 5/6/14 DATE

10-19-15
PLANS APPROVAL DATE

REGISTERED PROFESSIONAL ENGINEER Craig M. Tomimatsu No. 43072 Exp. 3-31-16 CIVIL STATE OF CALIFORNIA

THE STATE OF CALIFORNIA OR ITS OFFICERS OR AGENTS SHALL NOT BE RESPONSIBLE FOR THE ACCURACY OR COMPLETENESS OF SCANNED COPIES OF THIS PLAN SHEET.

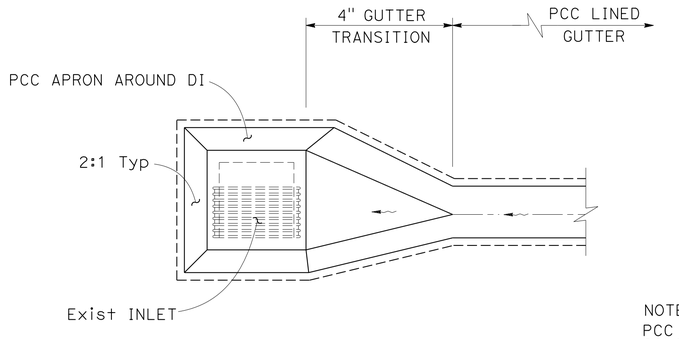

PCC APRON DI

NOTE:
PCC GUTTER LINING AND APRON SHALL BE COLORED TO MATCH DIAPHRAGM WALL.

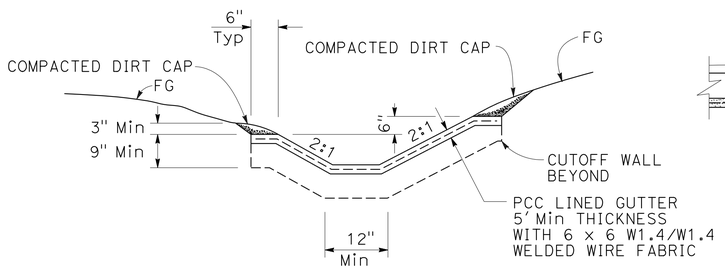

SECTIONAL VIEW

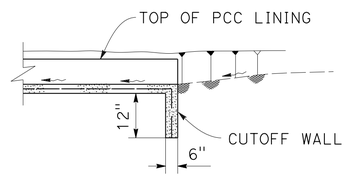

PROFILE

PCC LINED GUTTER

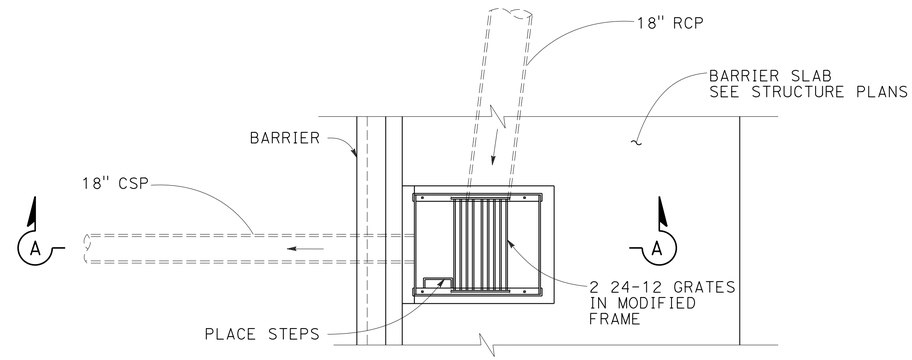

PLAN VIEW

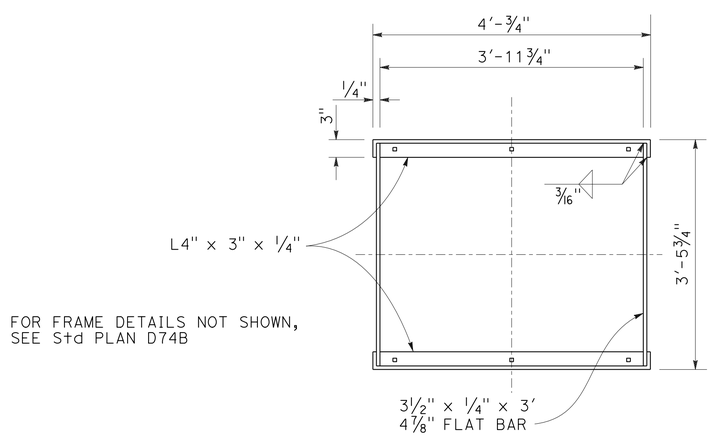

PLAN

MODIFIED FRAME

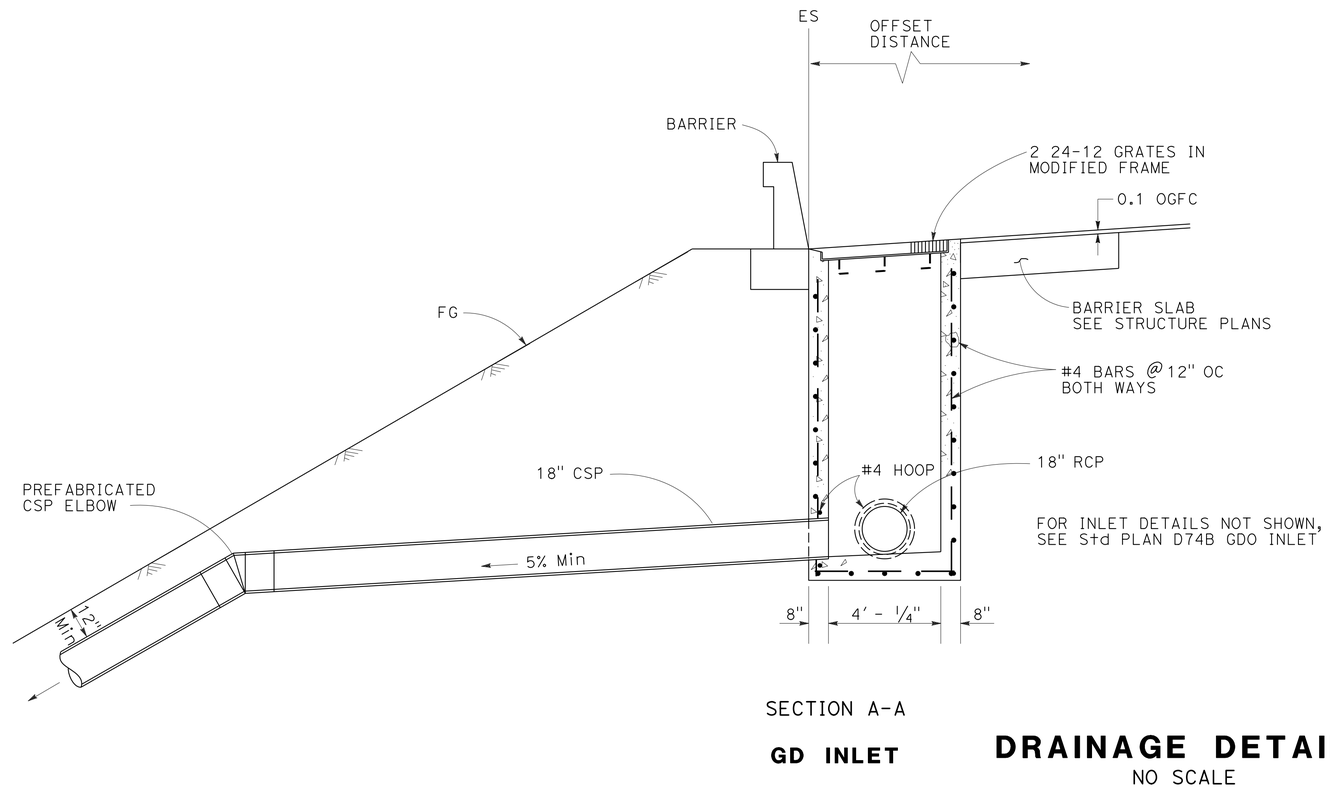

SECTION A-A

GD INLET

DRAINAGE DETAILS

NO SCALE

DD-1

REVISED BY	DATE REVISED
CT	5/5/14

CALCULATED-DESIGNED BY: CRAIG TOMIMATSU
CHECKED BY: LUIS GUTIERREZ
FUNCTIONAL SUPERVISOR: JOSEPH PETERSON

STATE OF CALIFORNIA - DEPARTMENT OF TRANSPORTATION
Caltrans
HYDRAULICS

LAST REVISION 10-09-15
DATE PLOTTED => 19-OCT-2015
TIME PLOTTED => 15:54

Dist	COUNTY	ROUTE	POST MILES TOTAL PROJECT	SHEET No.	TOTAL SHEETS
04	Ala	13	8.3	16	108

Craig M Tomimatsu 5/6/14
REGISTERED CIVIL ENGINEER DATE

10-19-15
PLANS APPROVAL DATE

REGISTERED PROFESSIONAL ENGINEER Craig M. Tomimatsu No. 43072 Exp. 3-31-16 CIVIL STATE OF CALIFORNIA

THE STATE OF CALIFORNIA OR ITS OFFICERS OR AGENTS SHALL NOT BE RESPONSIBLE FOR THE ACCURACY OR COMPLETENESS OF SCANNED COPIES OF THIS PLAN SHEET.

NOTE:

FOR DETAILS NOT SHOWN, SEE Std PLAN D73-G2 INLET.

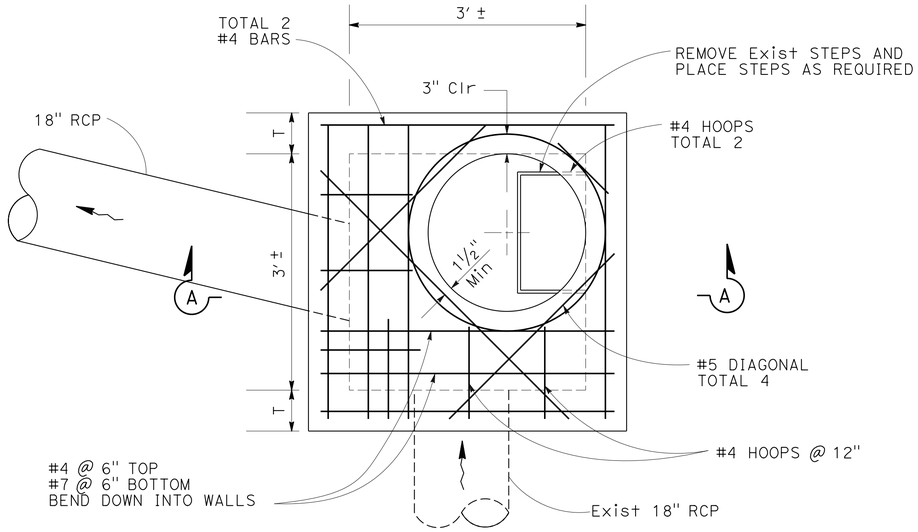

PLAN

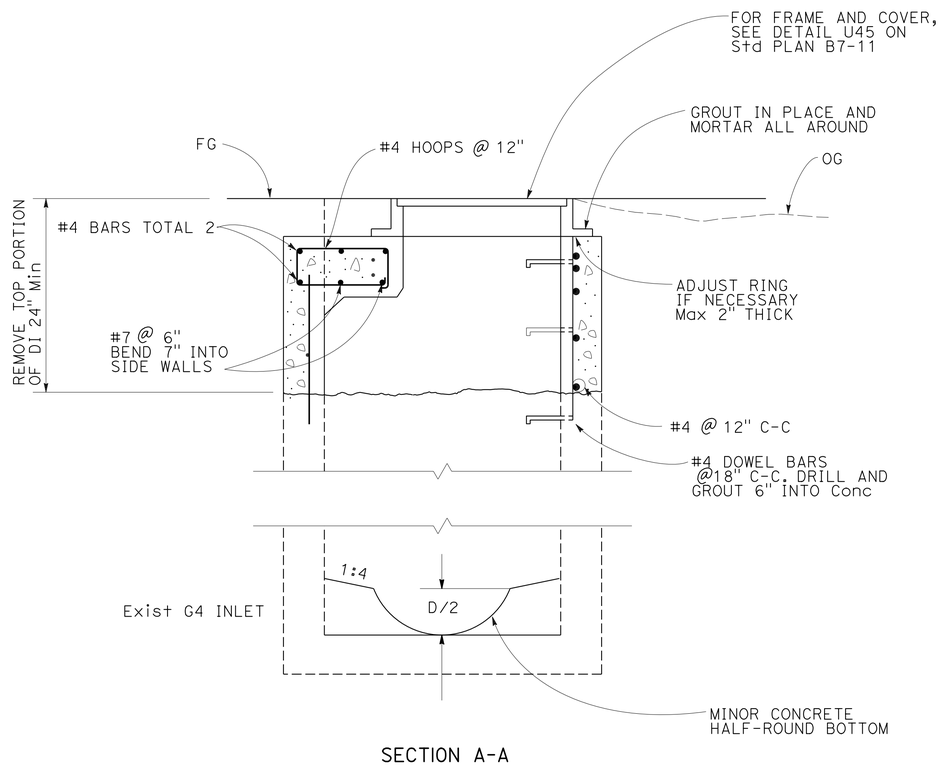

SECTION A-A

ADJUST INLET AS MANHOLE

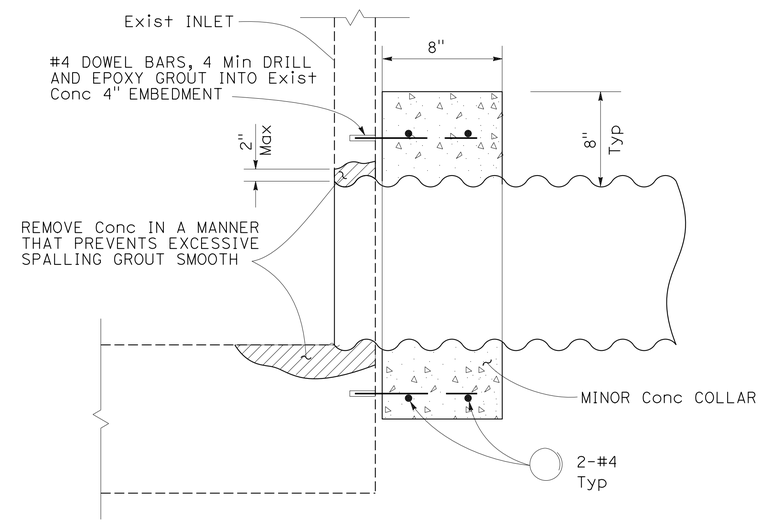

PIPE CONNECTION TO EXISTING INLET

DRAINAGE DETAILS

NO SCALE

DD-2

STATE OF CALIFORNIA - DEPARTMENT OF TRANSPORTATION
Caltrans®
HYDRAULICS

FUNCTIONAL SUPERVISOR: JOSEPH PETERSON
CALCULATED-DESIGNED BY: CRAIG TOMIMATSU
CHECKED BY: LUIS GUTIERREZ
REVISED BY: CT
DATE REVISED: 5/5/14

LAST REVISION 06-09-14
DATE PLOTTED => 19-OCT-2015
TIME PLOTTED => 15:54

Dist	COUNTY	ROUTE	POST MILES TOTAL PROJECT	SHEET No.	TOTAL SHEETS
04	Ala	13	8.3	17	108

REGISTERED CIVIL ENGINEER 5/6/14 DATE

10-19-15
PLANS APPROVAL DATE

REGISTERED PROFESSIONAL ENGINEER Craig M. Tomimatsu No. 43072 Exp. 3-31-16 CIVIL STATE OF CALIFORNIA

THE STATE OF CALIFORNIA OR ITS OFFICERS OR AGENTS SHALL NOT BE RESPONSIBLE FOR THE ACCURACY OR COMPLETENESS OF SCANNED COPIES OF THIS PLAN SHEET.

ABBREVIATIONS:

D DOWNDRAIN JOINT
P POSITIVE JOINT
W WATERTIGHT JOINT

DRAINAGE QUANTITIES

DRAINAGE SHEET No.	DRAINAGE SYSTEM No. ⬡	DRAINAGE UNIT ○	REMOVE CULVERT LF	MINOR CONCRETE (MINOR STRUCTURE) CY	18" RCP LF	18" CORRUGATED STEEL PIPE (0.079" THICK) LF	HEIGHT OF INLET (N)	ADJUST INLET EA	PIPE JOINT CLASSIFICATION	FRAMES AND GRATES (TYPE 24-12) [N] EA	MANHOLE FRAME AND COVER (TYPE U45) [N] EA	MISCELLANEOUS IRON AND STEEL LBS	MAXIMUM HEIGHT OF COVER [N] FT	CONCRETE (GUTTER LINING) CY	DESCRIPTION	STATION	DRAINAGE SYSTEM No. ⬡	DRAINAGE UNIT ○
D-1	1	a					9.2	1			1	435			ADJUST INLET AS MANHOLE	14′± Lt "CR1" 67+39	1	a
		b			60				PW				7.5		18" RCP	20′ Lt "CR1" 66+80 TO 14′ Lt 67+39		b
		c		2.53			6.72			2		634			GD INLET IN BARRIER SLAB	20′ Lt "CR1" 66+80		c
		d				73			D				5.3		18" CSP	18.92′ Lt "CR1" 66+80 TO 82.69′ Lt 66+80		d
		e		2.22			6.55			1		326			G2 INLET	82.69′ Lt "CR1" 66+80		e
		f												24	PCC LINED GUTTER	61.4′ Lt "CR1" 69+80 TO 83.45′ Lt 67+38		f
↓	↓	g	74												REMOVE 12" CSP	16.54′ Lt "CR1" 67+38	↓	g
SHEET TOTAL			74	4.75	60	73		1		3	1	1395		24	SHEET TOTAL			

CALCULATED-DESIGNED BY CRAIG TOMIMATSU
CHECKED BY LUIS GUTIERREZ
REVISED BY CT
DATE REVISED 5/5/14
FUNCTIONAL SUPERVISOR JOSEPH PETERSON

STATE OF CALIFORNIA - DEPARTMENT OF TRANSPORTATION
Caltrans
HYDRAULICS

LAST REVISION 06-09-14
DATE PLOTTED => 19-OCT-2015
TIME PLOTTED => 15:54

DRAINAGE QUANTITIES DQ-1

Dist	COUNTY	ROUTE	POST MILES TOTAL PROJECT	SHEET No.	TOTAL SHEETS
04	Ala	13	8.3	18	108

Parwin W. Sarwary 3/25/14
REGISTERED CIVIL ENGINEER DATE

10-19-15
PLANS APPROVAL DATE

REGISTERED PROFESSIONAL ENGINEER
Parwin W. Sarwary
No. 79545
Exp. 9-30-16
CIVIL
STATE OF CALIFORNIA

THE STATE OF CALIFORNIA OR ITS OFFICERS OR AGENTS SHALL NOT BE RESPONSIBLE FOR THE ACCURACY OR COMPLETENESS OF SCANNED COPIES OF THIS PLAN SHEET.

LEGEND:

CONSTRUCTION AREA SIGN DESIGNATION

NOTE:

EXACT LOCATION AND POSITION OF SIGNS TO BE DETERMINED BY THE ENGINEER.

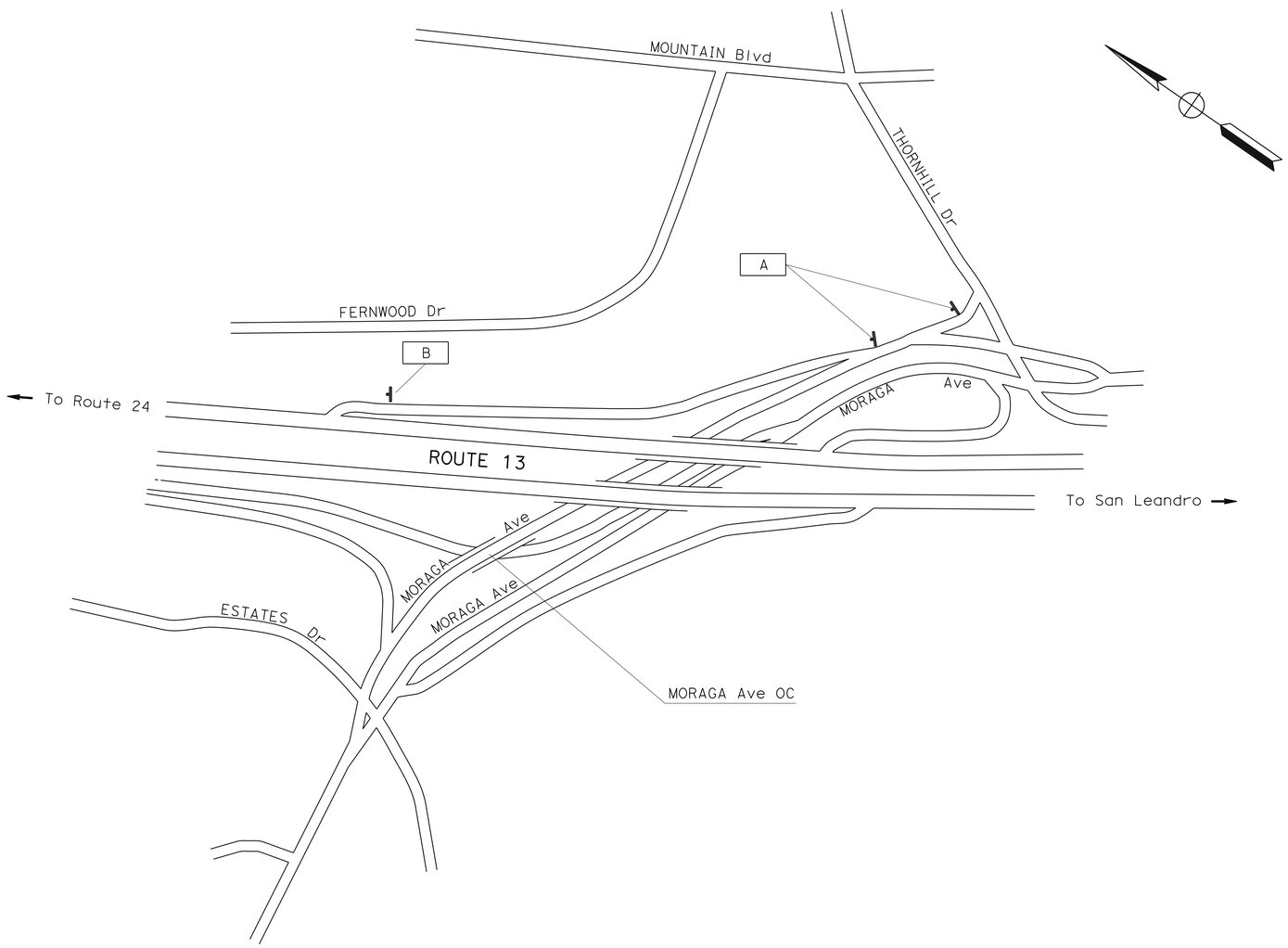

CONSTRUCTION AREA SIGNS

NO SCALE

APPROVED FOR CONSTRUCTION AREA SIGN WORK ONLY

CS-1

PARWIN SARWARY	PS
LOURDES DAVID	3/25/14
CALCULATED-DESIGNED BY	REVISED BY
CHECKED BY	DATE REVISED
FUNCTIONAL SUPERVISOR	
LOURDES DAVID	

STATE OF CALIFORNIA - DEPARTMENT OF TRANSPORTATION

Caltrans

TRAFFIC

LAST REVISION 06-09-14 | DATE PLOTTED => 19-OCT-2015 TIME PLOTTED => 15:54

Dist	COUNTY	ROUTE	POST MILES TOTAL PROJECT	SHEET No.	TOTAL SHEETS
04	Ala	13	8.3	19	108

Parwin W. Sarwary 3/25/14
REGISTERED CIVIL ENGINEER DATE

10-19-15
PLANS APPROVAL DATE

REGISTERED PROFESSIONAL ENGINEER
Parwin W. Sarwary
No. 79545
Exp. 9-30-16
CIVIL
STATE OF CALIFORNIA

THE STATE OF CALIFORNIA OR ITS OFFICERS OR AGENTS SHALL NOT BE RESPONSIBLE FOR THE ACCURACY OR COMPLETENESS OF SCANNED COPIES OF THIS PLAN SHEET.

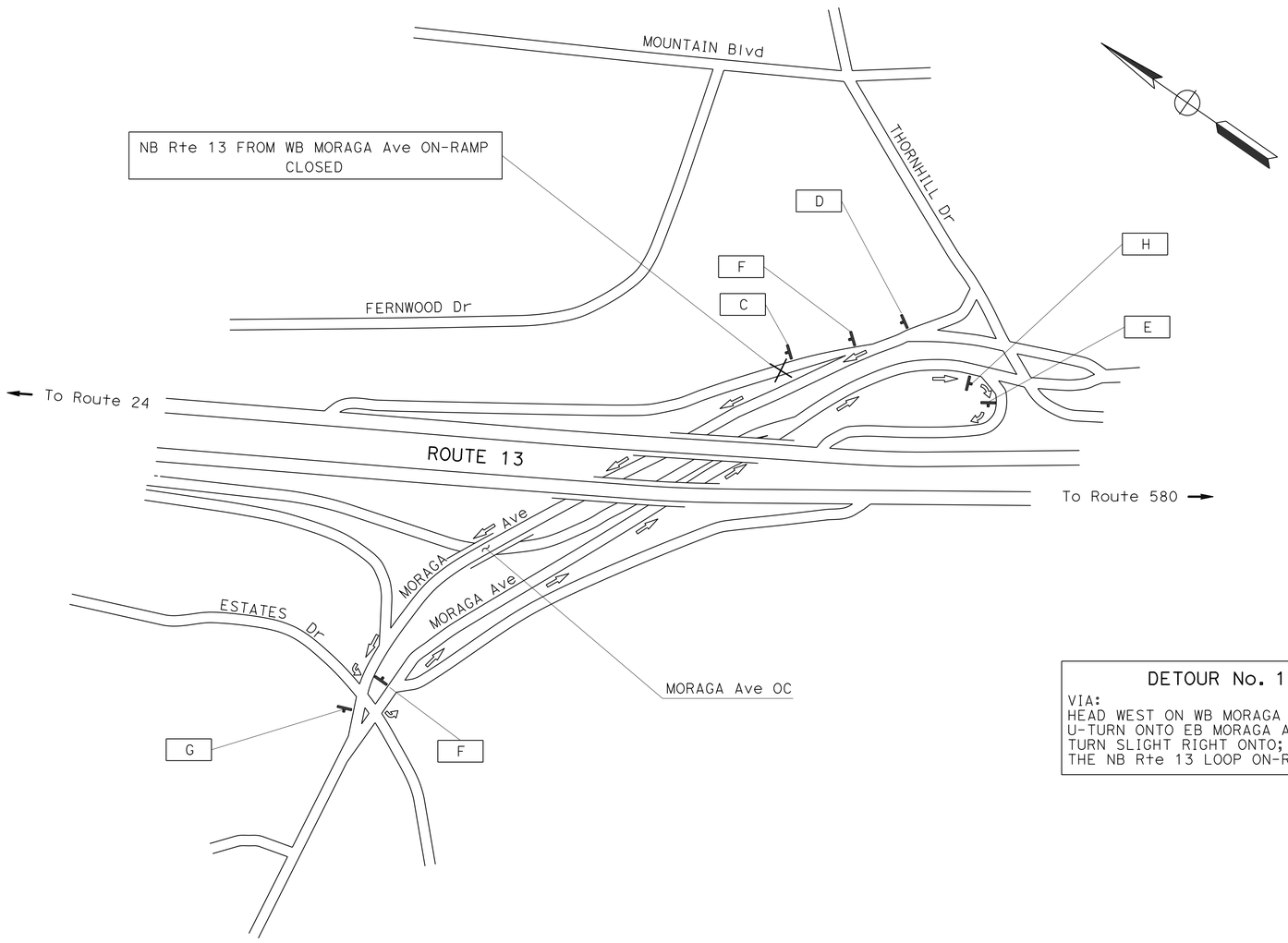

DETOUR No. 1

VIA:
HEAD WEST ON WB MORAGA Ave;
U-TURN ONTO EB MORAGA Ave;
TURN SLIGHT RIGHT ONTO;
THE NB Rte 13 LOOP ON-RAMP

CONSTRUCTION AREA SIGNS

NO SCALE

APPROVED FOR CONSTRUCTION AREA SIGN WORK ONLY

FOR NOTES, ABBREVIATIONS AND LEGEND, SEE SHEET CS-1

CS-2

PARWIN SARWARY	REVISED BY	PS
LOURDES DAVID	DATE REVISED	3/25/14
CALCULATED-DESIGNED BY		
CHECKED BY		
FUNCTIONAL SUPERVISOR		
LOURDES DAVID		

STATE OF CALIFORNIA - DEPARTMENT OF TRANSPORTATION
Caltrans
TRAFFIC

LAST REVISION 06-09-14 | DATE PLOTTED => 19-OCT-2015 | TIME PLOTTED => 15:54

Dist	COUNTY	ROUTE	POST MILES TOTAL PROJECT	SHEET No.	TOTAL SHEETS
04	Ala	13	8.3	20	108

Claudia K. Fang 5/1/14
REGISTERED CIVIL ENGINEER DATE

10-19-15
PLANS APPROVAL DATE

REGISTERED PROFESSIONAL ENGINEER
Claudia K. Fang
No. 80493
Exp. 3-31-17
CIVIL
STATE OF CALIFORNIA

THE STATE OF CALIFORNIA OR ITS OFFICERS OR AGENTS SHALL NOT BE RESPONSIBLE FOR THE ACCURACY OR COMPLETENESS OF SCANNED COPIES OF THIS PLAN SHEET.

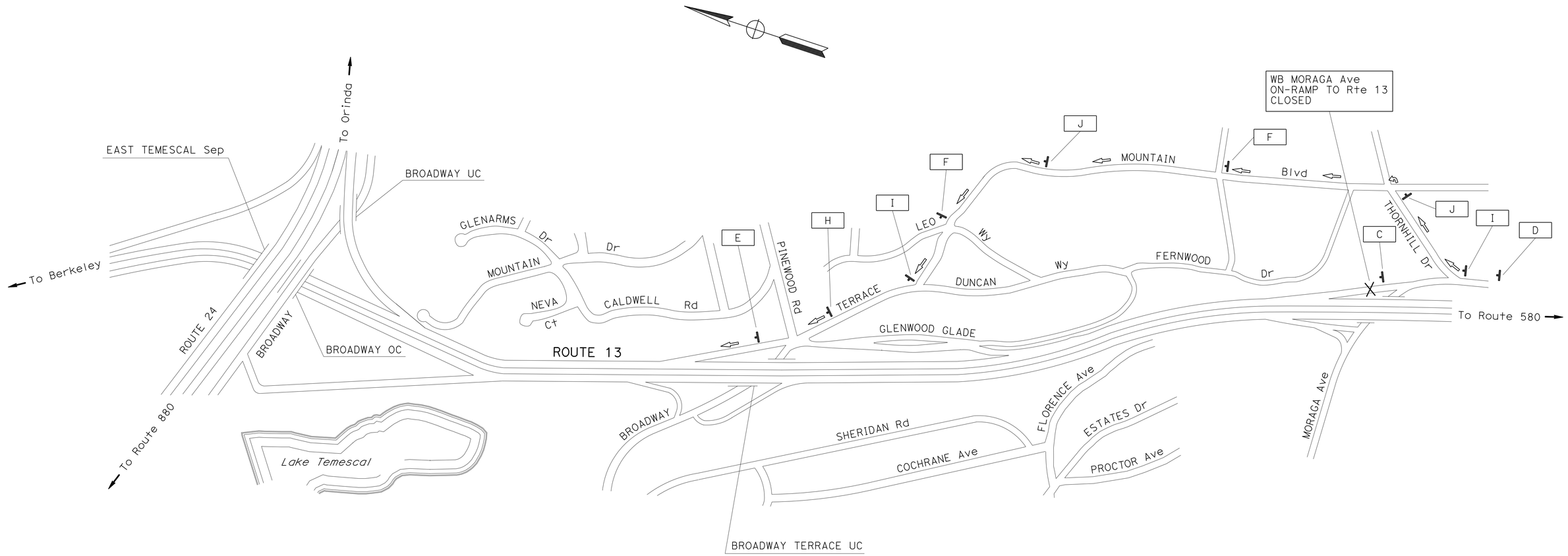

DETOUR No. 2

VIA:
EB THORNHILL Dr;
NB MOUNTAIN Blvd;
CONTINUE ONTO WB BROADWAY TERRACE;
RIGHT TURN ONTO THE RAMP

CONSTRUCTION AREA SIGNS

NO SCALE

APPROVED FOR CONSTRUCTION AREA SIGN WORK ONLY

FOR NOTES, ABBREVIATIONS AND LEGEND, SEE SHEET CS-1

CS-3

CALCULATED-DESIGNED BY	PARWIN SARWARY	REVISED BY	LG
CHECKED BY	LOURDES DAVID	DATE REVISED	4/30/14

FUNCTIONAL SUPERVISOR: LOURDES DAVID

STATE OF CALIFORNIA - DEPARTMENT OF TRANSPORTATION
Caltrans
TRAFFIC

LAST REVISION 05-01-14 | DATE PLOTTED => 19-OCT-2015 | TIME PLOTTED => 15:55

Dist	COUNTY	ROUTE	POST MILES TOTAL PROJECT	SHEET No.	TOTAL SHEETS
04	Ala	13	8.3	21	108

Parwin W. Sarwary 3/25/14
REGISTERED CIVIL ENGINEER DATE

10-19-15
PLANS APPROVAL DATE

REGISTERED PROFESSIONAL ENGINEER
Parwin W. Sarwary
No. 79545
Exp. 9-30-16
CIVIL
STATE OF CALIFORNIA

THE STATE OF CALIFORNIA OR ITS OFFICERS OR AGENTS SHALL NOT BE RESPONSIBLE FOR THE ACCURACY OR COMPLETENESS OF SCANNED COPIES OF THIS PLAN SHEET.

STATIONARY MOUNTED CONSTRUCTION AREA SIGNS

SIGN No.	SIGN CODE	PANEL SIZE	SIGN MESSAGE	NUMBER OF POSTS AND SIZE	NUMBER OF SIGNS
A	W20-1	30" x 30"	ROAD WORK AHEAD	1 - 4" x 4"	2
B	G20-2	36" x 18"	END ROAD WORK	1 - 4" x 4"	1
C	SC6-4 (CA)	48" x 60"	RAMP CLOSED	1 - 6" x 6"	2
D	W20-2	36" x 36"	DETOUR AHEAD	1 - 4" x 6"	2
E	M4-8A	24" x 18"	END DETOUR	1 - 4" x 4"	2
F	M4-8	30" x 15"	DETOUR	1 - 4" x 4"	4
	G28-2(13) (CA)	28" x 25"	ROUTE SHIELD		
	M3-1	30" x 15"	NORTH		
	M6-3	21" x 15"	STRAIGHT ARROW		
G	M4-8	30" x 15"	DETOUR	1 - 4" x 4"	1
	G28-2(13) (CA)	28" x 25"	ROUTE SHIELD		
	M3-1	30" x 15"	NORTH		
	SPECIAL	30" x 30"	U TURN		
H	M4-8	30" x 15"	DETOUR	1 - 4" x 4"	2
	G28-2(13) (CA)	28" x 25"	ROUTE SHIELD		
	M3-1	30" x 15"	NORTH		
	M6-2	21" x 15"	UP RIGHT ARROW		
I	M4-8	30" x 15"	DETOUR	1 - 4" x 4"	2
	G28-2(13) (CA)	28" x 25"	ROUTE SHIELD		
	M3-1	30" x 15"	NORTH		
	M6-1	21" x 15"	RIGHT ARROW		
J	M4-8	30" x 15"	DETOUR	1 - 4" x 4"	2
	G28-2(13) (CA)	28" x 25"	ROUTE SHIELD		
	M3-1	30" x 15"	NORTH		
	M6-1	21" x 15"	LEFT ARROW		

CONSTRUCTION AREA SIGNS

CS-4

STATE OF CALIFORNIA - DEPARTMENT OF TRANSPORTATION
Caltrans
TRAFFIC

FUNCTIONAL SUPERVISOR: LOURDES DAVID
CALCULATED-DESIGNED BY: PARWIN SARWARY
CHECKED BY: LOURDES DAVID
REVISED BY: PS
DATE REVISED: 3/25/14

LAST REVISION 05-01-14
DATE PLOTTED => 19-OCT-2015
TIME PLOTTED => 15:55

Dist	COUNTY	ROUTE	POST MILES TOTAL PROJECT	SHEET No.	TOTAL SHEETS
04	Ala	13	8.3	22	108

REGISTERED CIVIL ENGINEER 3/26/14 DATE

10-19-15
PLANS APPROVAL DATE

REGISTERED PROFESSIONAL ENGINEER Luis A. Gutierrez No. 49131 Exp. 9-30-16 CIVIL STATE OF CALIFORNIA

THE STATE OF CALIFORNIA OR ITS OFFICERS OR AGENTS SHALL NOT BE RESPONSIBLE FOR THE ACCURACY OR COMPLETENESS OF SCANNED COPIES OF THIS PLAN SHEET.

NOTE:

FOR ACCURATE RIGHT OF WAY DATA, CONTACT RIGHT OF WAY ENGINEERING AT THE DISTRICT OFFICE.

LEGEND

CONSTRUCT THIS STAGE

• • • • CHANNELIZERS (SURFACE MOUNTED)

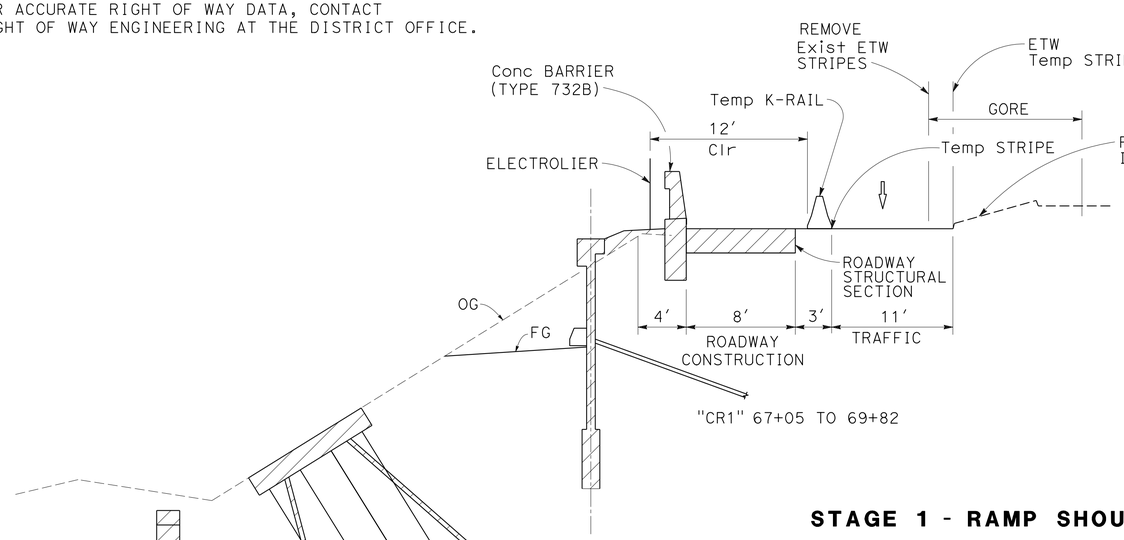

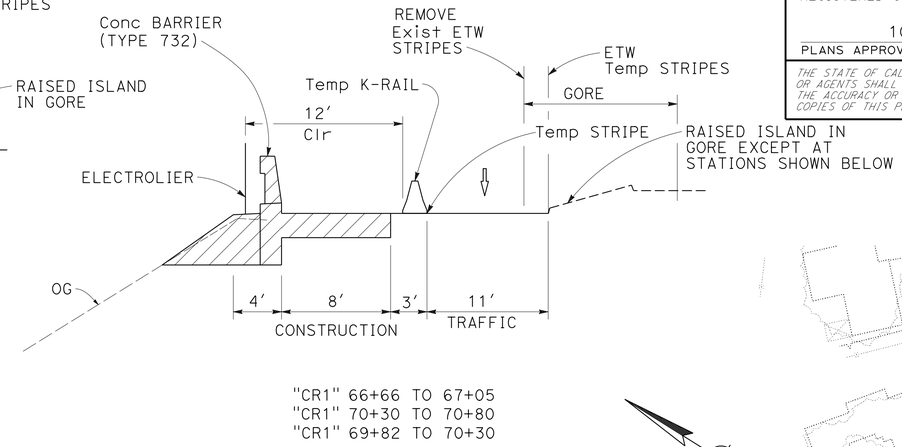

STAGE 1 - RAMP SHOULDER CLOSURE

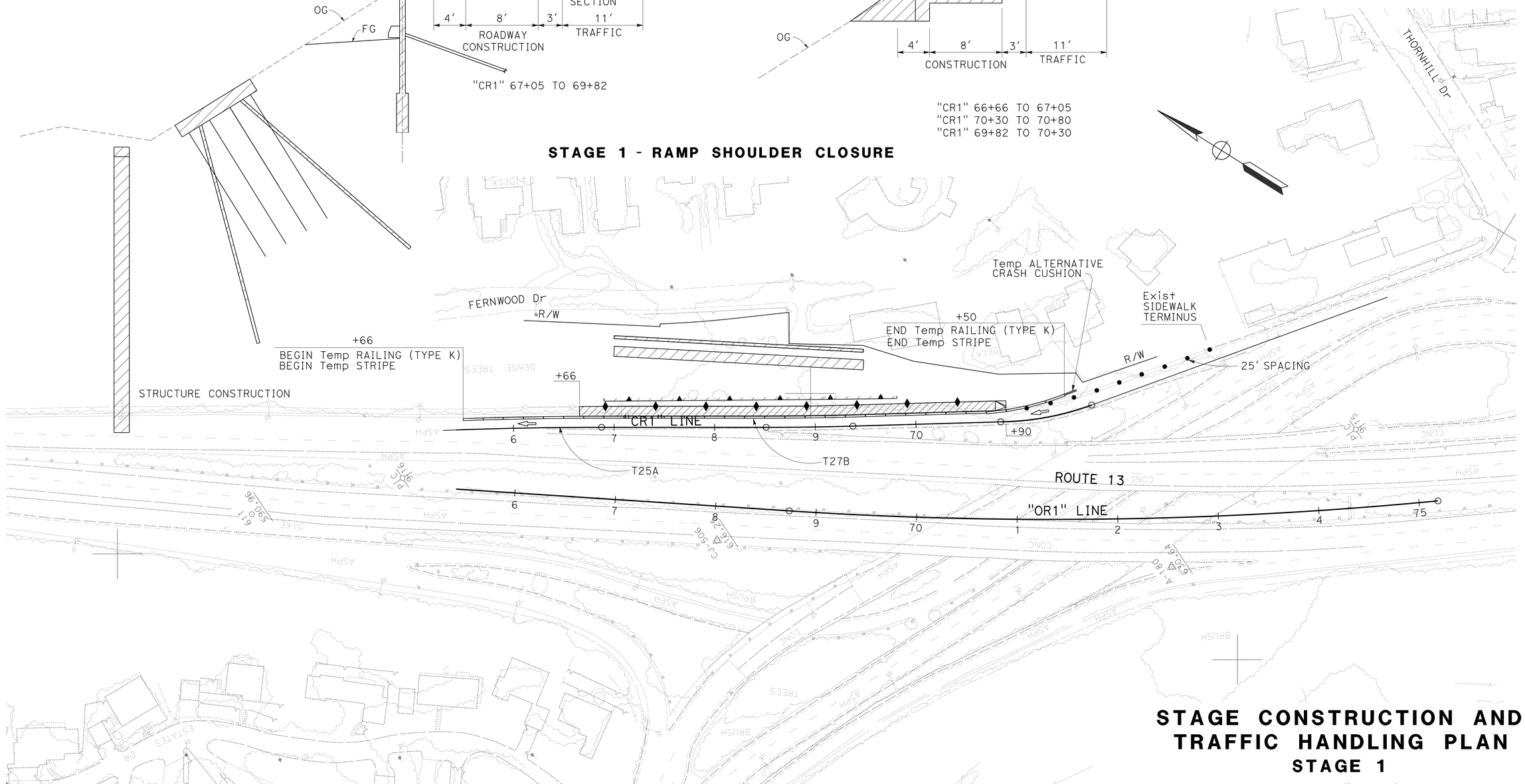

STAGE CONSTRUCTION AND TRAFFIC HANDLING PLAN

STAGE 1

SCALE: 1" = 50′

APPROVED FOR STAGE CONSTRUCTION AND TRAFFIC HANDLING WORK ONLY

SC-1

REVISED BY	LG
DATE REVISED	3/25/14
LUIS GUTIERREZ	
AARON WANG	
CALCULATED-DESIGNED BY	
CHECKED BY	
FUNCTIONAL SUPERVISOR	SOTERO ANGELES

STATE OF CALIFORNIA - DEPARTMENT OF TRANSPORTATION

Caltrans® **DESIGN**

LAST REVISION 09-22-15 | DATE PLOTTED => 19-OCT-2015 TIME PLOTTED => 15:55

Dist	COUNTY	ROUTE	POST MILES TOTAL PROJECT	SHEET No.	TOTAL SHEETS
04	Ala	13	8.3	23	108

REGISTERED CIVIL ENGINEER DATE 3/26/14

10-19-15
PLANS APPROVAL DATE

REGISTERED PROFESSIONAL ENGINEER Luis A. Gutierrez No. 49131 Exp. 9-30-16 CIVIL STATE OF CALIFORNIA

THE STATE OF CALIFORNIA OR ITS OFFICERS OR AGENTS SHALL NOT BE RESPONSIBLE FOR THE ACCURACY OR COMPLETENESS OF SCANNED COPIES OF THIS PLAN SHEET.

NOTE:

FOR ACCURATE RIGHT OF WAY DATA, CONTACT RIGHT OF WAY ENGINEERING AT THE DISTRICT OFFICE.

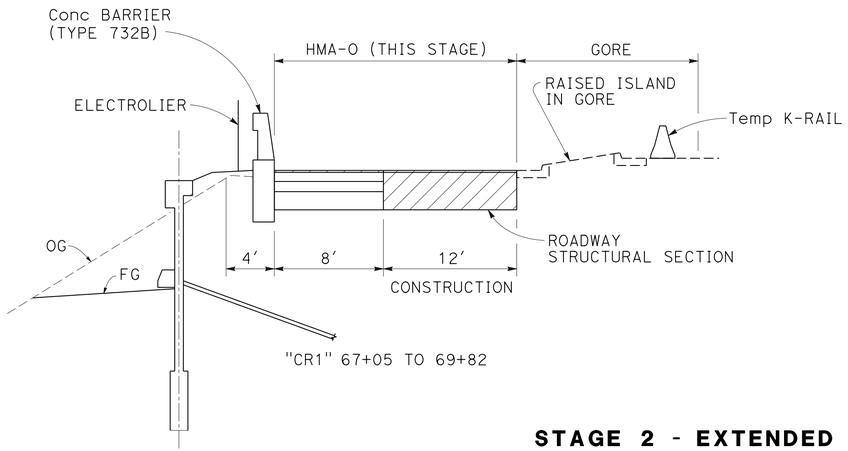

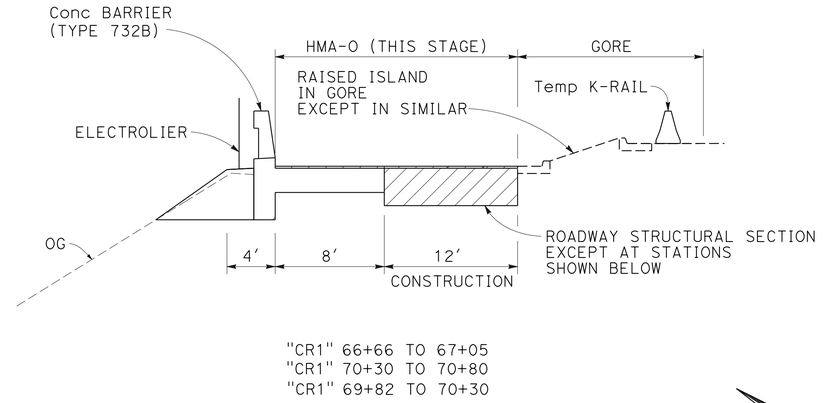

STAGE 2 - EXTENDED FULL RAMP CLOSURE

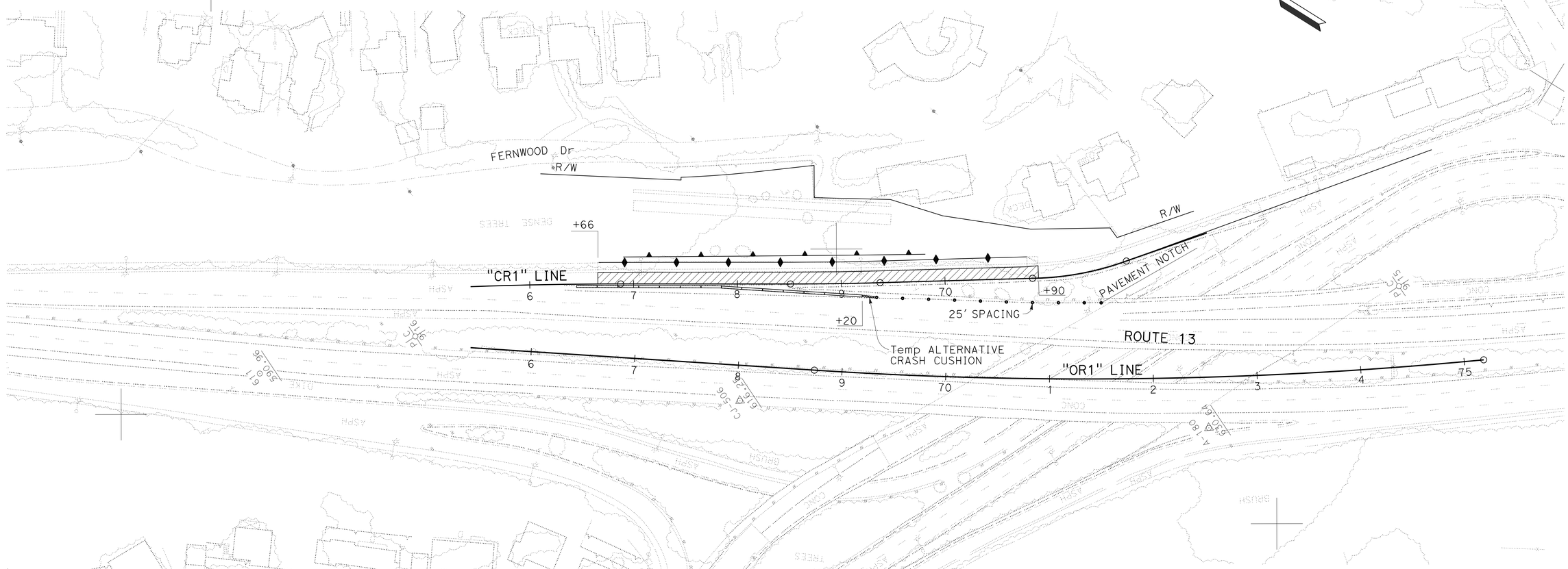

STAGE CONSTRUCTION AND TRAFFIC HANDLING PLAN

STAGE 2

SCALE: 1" = 50′

APPROVED FOR STAGE CONSTRUCTION AND TRAFFIC HANDLING WORK ONLY

FOR NOTES, ABBREVIATIONS AND LEGEND, SEE SHEET SC-1

SC-2

STATE OF CALIFORNIA - DEPARTMENT OF TRANSPORTATION
Caltrans®
DESIGN

FUNCTIONAL SUPERVISOR: SOTERO ANGELES
CALCULATED-DESIGNED BY: LUIS GUTIERREZ
CHECKED BY: AARON WANG
REVISED BY: LG
DATE REVISED: 3/25/14

LAST REVISION 09-22-15
DATE PLOTTED => 19-OCT-2015
TIME PLOTTED => 15:55

Dist	COUNTY	ROUTE	POST MILES TOTAL PROJECT	SHEET No.	TOTAL SHEETS
04	Ala	13	8.3	24	108

6/9/14
REGISTERED CIVIL ENGINEER DATE

10-19-15
PLANS APPROVAL DATE

REGISTERED PROFESSIONAL ENGINEER
Chuan-Ping Wang
No. 70080
Exp. 9-30-16
CIVIL
STATE OF CALIFORNIA

THE STATE OF CALIFORNIA OR ITS OFFICERS OR AGENTS SHALL NOT BE RESPONSIBLE FOR THE ACCURACY OR COMPLETENESS OF SCANNED COPIES OF THIS PLAN SHEET.

NOTE:

FOR ACCURATE RIGHT OF WAY DATA, CONTACT RIGHT OF WAY ENGINEERING AT THE DISTRICT OFFICE.

LEGEND: (FOR THIS SHEET ONLY)

-TFESA-×——×- TEMPORARY FENCE ENVIRONMENTALLY SENSITIVE AREA (TFESA)

⊗ REMOVE TREE, ID AND APPROXIMATE LOCATION SEE SUMMARY OF QUANTITIES

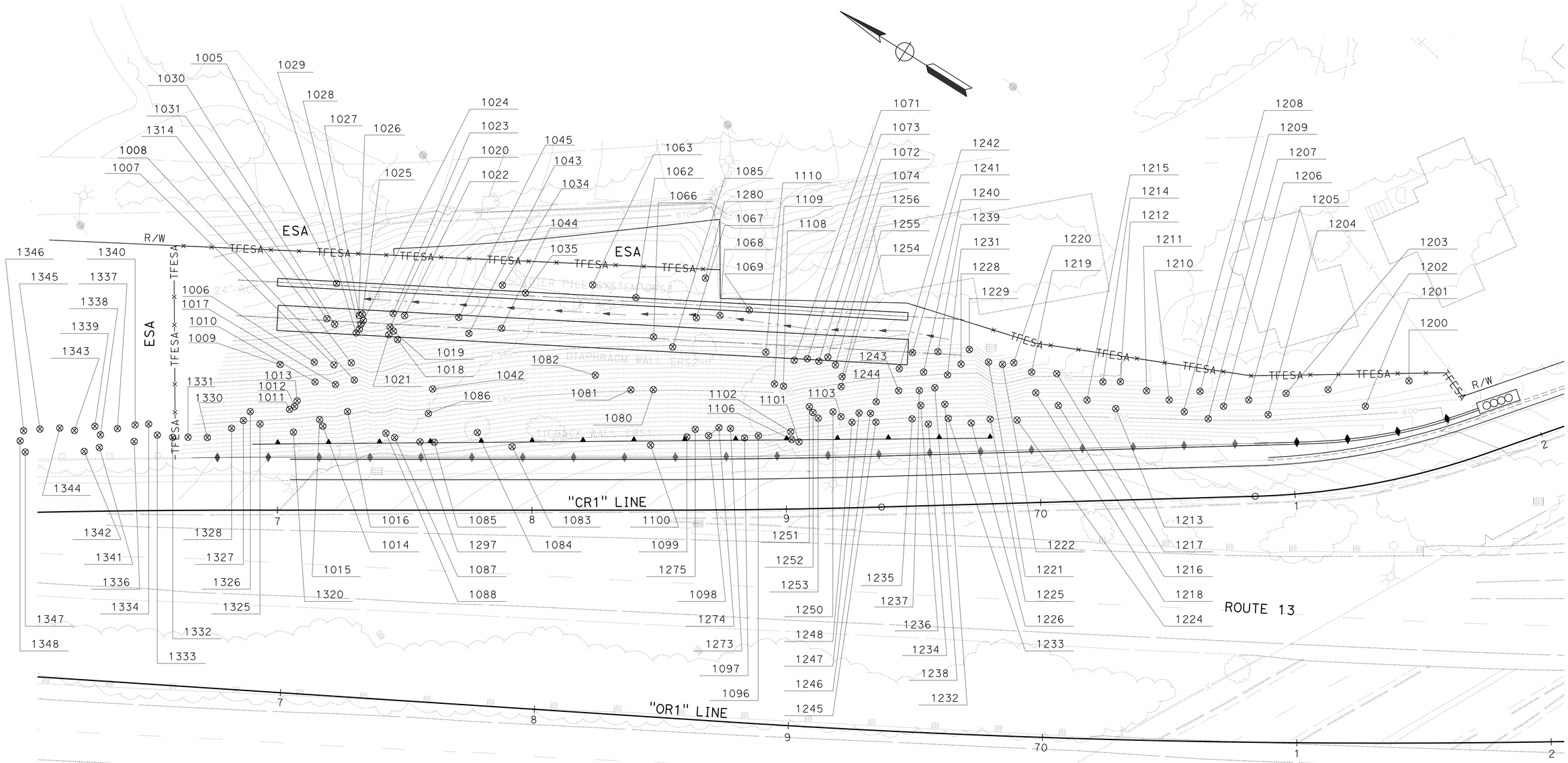

STAGE CONSTRUCTION PLAN
TREE REMOVAL - STAGE 1

SCALE: 1" = 50'

APPROVED FOR STAGE CONSTRUCTION WORK ONLY

SC-3

REVISED BY	DATE REVISED
LG	6/9/14

CALCULATED-DESIGNED BY: LUIS GUTIERREZ
CHECKED BY: AARON WANG
FUNCTIONAL SUPERVISOR: SOTERO ANGELES

STATE OF CALIFORNIA - DEPARTMENT OF TRANSPORTATION
Caltrans
DESIGN

LAST REVISION 09-22-15
DATE PLOTTED => 19-OCT-2015
TIME PLOTTED => 15:55

Dist	COUNTY	ROUTE	POST MILES TOTAL PROJECT	SHEET No.	TOTAL SHEETS
04	Ala	13	8.3	25	108

REGISTERED CIVIL ENGINEER DATE 3/26/14

10-19-15
PLANS APPROVAL DATE

REGISTERED PROFESSIONAL ENGINEER Luis A. Gutierrez No. 49131 Exp. 9-30-16 CIVIL STATE OF CALIFORNIA

THE STATE OF CALIFORNIA OR ITS OFFICERS OR AGENTS SHALL NOT BE RESPONSIBLE FOR THE ACCURACY OR COMPLETENESS OF SCANNED COPIES OF THIS PLAN SHEET.

NOTE:

FOR ACCURATE RIGHT OF WAY DATA, CONTACT RIGHT OF WAY ENGINEERING AT THE DISTRICT OFFICE.

NOTES:

1. ALL LANES ARE 12' WIDE UNLESS OTHERWISE NOTED.
2. ALL PAVEMENT LEGENDS AND MARKINGS SHALL BE THERMOPLASTIC UNLESS OTHERWISE NOTED ON THE PLANS.

LEGEND:

CHANGE OF PAVEMENT DELINEATION DETAILS
DELINEATOR TYPE G (CLASS 1)
JD-1 OBJECT MARKER

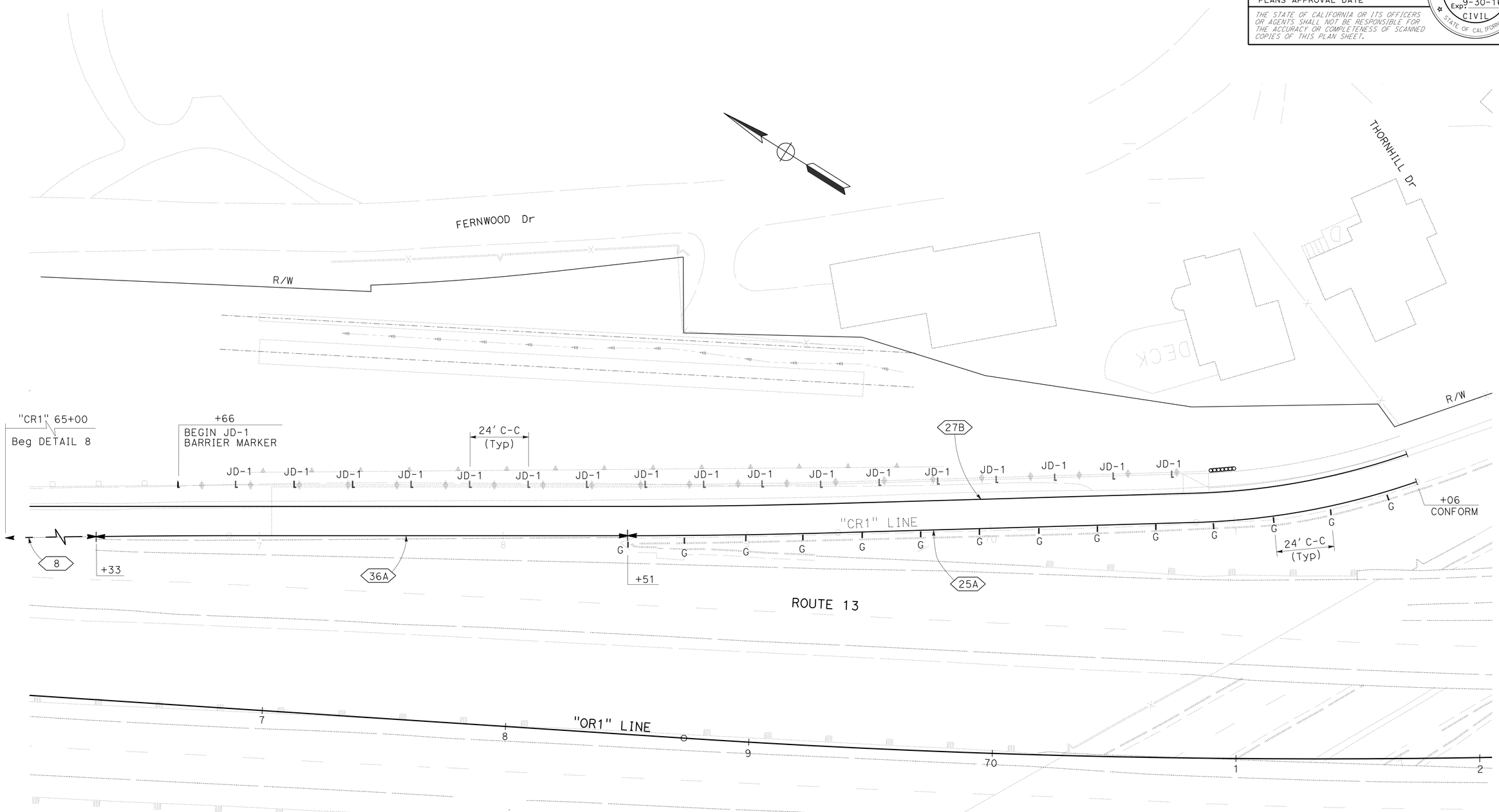

PAVEMENT DELINEATION PLAN

SCALE: 1" = 20'

APPROVED FOR PAVEMENT DELINEATION WORK ONLY

PD-1

STATE OF CALIFORNIA - DEPARTMENT OF TRANSPORTATION
Caltrans
DESIGN

FUNCTIONAL SUPERVISOR: SOTERO ANGELES
CALCULATED-DESIGNED BY: LUIS GUTIERREZ
CHECKED BY: AARON WANG
REVISED BY: LG
DATE REVISED: 3/25/14

LAST REVISION 10-13-15
DATE PLOTTED => 19-OCT-2015
TIME PLOTTED => 15:55

Dist	COUNTY	ROUTE	POST MILES TOTAL PROJECT	SHEET No.	TOTAL SHEETS
04	Ala	13	8.3	26	108

REGISTERED CIVIL ENGINEER 3/26/14 DATE

10-19-15
PLANS APPROVAL DATE

REGISTERED PROFESSIONAL ENGINEER Luis A. Gutierrez No. 49131 Exp. 9-30-16 CIVIL STATE OF CALIFORNIA

THE STATE OF CALIFORNIA OR ITS OFFICERS OR AGENTS SHALL NOT BE RESPONSIBLE FOR THE ACCURACY OR COMPLETENESS OF SCANNED COPIES OF THIS PLAN SHEET.

ROADWAY QUANTITIES

SHEET No.	STATION	DIRECTION	ROADWAY EXCAVATION	HOT MIX ASPHALT (OPEN GRADED)	HOT MIX ASPHALT (TYPE A)	LCB RAPID SETTING	AS (4)	COLD PLANE ASPHALT CONCRETE PAVEMENT	REMOVE CONCRETE (CURB AND GUTTER)	REMOVE CONCRETE (CTB)	REMOVE GUARDRAIL	MIDWEST GUARD RAIL SYSTEM (7' WOOD POST)	TYPE REACT CRASH CUSHION
			CY	TON		CY		SQYD	CY		LF		EA
L-1	"CR1" 66+66 TO 71+80	NB	500	65	240			155					1
	"CR1" 66+66 TO 70+30					115	240			121			
	"CR1" 69+09 TO 70+90								12				
	"CR1" 66+29 TO 67+16										90	40	
TOTAL			500	65	240	115	240	155	12	121	90	40	1

TEMPORARY QUANTITIES

SHEET No.	STATION	DIRECTION/ LOCATION	TEMPORARY RAILING (TYPE K)	TEMPORARY ALTERNATIVE CRASH CUSHION	CHANNELIZERS (SURFACE MOUNTED)	TEMPORARY ESA FENCE	TRAFFIC STRIPE (PAINT) 25A 4" YELLOW	TRAFFIC STRIPE (PAINT) 27B 4" WHITE	TEMPORARY PAVEMENT MARKER
			LF	EA			LF		EA
SC-1	"CR1" 65+50 TO 71+52	NB	612	1	10		602	602	26
SC-2	"CR1" 66+45 TO 68+53	NB	208	1					
L-1	20' Lt "CR1" 66+60 TO 61' Lt "CR1" 71+80					557			
TOTAL			820	2	10	557	1204		26

PAVEMENT DELINEATION QUANTITIES

SHEET No.	STATION	DIRECTION/ LOCATION	DETAIL No.	THERMOPLASTIC TRAFFIC STRIPE 4" WHITE (BROKEN 17'-7')	THERMOPLASTIC TRAFFIC STRIPE 4" WHITE	THERMOPLASTIC TRAFFIC STRIPE 4" YELLOW	THERMOPLASTIC TRAFFIC STRIPE 8" WHITE	PAVEMENT MARKER (RETROREFLECTIVE)	CLASS 1 DELINEATOR (TYPE G)	REMOVE YELLOW THERMOPLASTIC TRAFFIC STRIPE (HAZARDOUS WASTE)	REMOVE PAVEMENT MARKINGS	OBJECT MARKER	REMOVE PAVEMENT MARKER
				LF				EA		LF	SQFT	EA	
PD-1	"CR1" 65+00 TO 66+33	NB	8	133							25		
	"CR1" 65+30 TO 72+06	NB	27B		676								
	"CR1" 66+33 TO 68+51	NB	36A				218	12				8	
	"CR1" 68+51 TO 72+06	NB	25A			355		18	14	355		10	
SUBTOTAL				133	676	355	218	30	14	355	25	18	30
TOTAL				133	1031		218	30	14	355	25	18	30

SUMMARY OF QUANTITIES

Q-1

REVISED BY	DATE REVISED
LG	3/25/14

CALCULATED-DESIGNED BY: LUIS GUTIERREZ
CHECKED BY: AARON WANG
FUNCTIONAL SUPERVISOR: SOTERO ANGELES

STATE OF CALIFORNIA - DEPARTMENT OF TRANSPORTATION
Caltrans
DESIGN

LAST REVISION 10-15-15
DATE PLOTTED => 19-OCT-2015
TIME PLOTTED => 15:55

Dist	COUNTY	ROUTE	POST MILES TOTAL PROJECT	SHEET No.	TOTAL SHEETS
04	Ala	13	8.3	27	108

6/9/14
REGISTERED CIVIL ENGINEER DATE

10-19-15
PLANS APPROVAL DATE

REGISTERED PROFESSIONAL ENGINEER
Chuan-Ping Wang
No. 70080
Exp. 9-30-16
CIVIL
STATE OF CALIFORNIA

THE STATE OF CALIFORNIA OR ITS OFFICERS OR AGENTS SHALL NOT BE RESPONSIBLE FOR THE ACCURACY OR COMPLETENESS OF SCANNED COPIES OF THIS PLAN SHEET.

REMOVE TREE (N)

TREE No.	SPECIES	DBH
1005	PINE	28
1006	ACACIA	7
1007	PINE	10
1008	PINE	17
1009	FLOSS SILK TREE	7
1010	ACACIA	8
1011	FLOSS SILK TREE	7
1012	FLOSS SILK TREE	7
1013	FLOSS SILK TREE	7
1014	FLOSS SILK TREE	7
1015	FLOSS SILK TREE	12
1016	FLOSS SILK TREE	7
1017	PINE	23
1019	ACACIA	8
1020	ACACIA	9
1021	ACACIA	7
1022	ACACIA	9
1023	ACACIA	8
1024	ACACIA	7
1025	ACACIA	7
1026	ACACIA	7
1027	ACACIA	7
1028	ACACIA	7
1029	ACACIA	7
1030	REDWOOD	13
1031	PRUNUS	12
1034	ACACIA	7
1035	REDWOOD	10
1042	ACACIA	9
1043	PINE	21
1044	PINE	22
1045	REDWOOD	7
1062	REDWOOD	13
1063	REDWOOD	14
1066	REDWOOD	11
1067	CEDAR	7
1068	CEDAR	9
1069	CEDAR	11
1071	PINE	12
1072	ACACIA	7
1073	ACACIA	7
1074	ACACIA	7
1081	ACACIA	7
1083	LIVE OAK	7
1083	LIVE OAK	7
1084	LIVE OAK	8
1084	LIVE OAK	7
1085	LIVE OAK	8
1085	LIVE OAK	7
1086	LIVE OAK	7

REMOVE TREE (N)

TREE No.	SPECIES	DBH
1087	LIVE OAK	7
1088	ACACIA	10
1088	LIVE OAK	7
1096	LIVE OAK	7
1097	LIVE OAK	7
1098	LIVE OAK	7
1099	LIVE OAK	7
1100	PINE	12
1101	LIVE OAK	7
1102	LIVE OAK	7
1103	PINE	18
1106	LIVE OAK	7
1108	ACACIA	7
1109	ACACIA	9
1110	ACACIA	16
1200	ACACIA	21
1201	PINE	23
1202	PINE	20
1203	PINE	20
1204	PINE	21
1205	PINE	10
1206	PINE	15
1207	PINE	19
1208	PINE	17
1209	PINE	21
1210	PINE	11
1211	PINE	19
1212	PINE	13
1213	PINE	21
1214	PINE	22
1215	PINE	19
1216	PINE	22
1217	PINE	7
1218	PINE	12
1219	PINE	16
1220	PINE	17
1221	PINE	17
1222	PINE	19
1224	PINE	16
1225	PINE	11
1226	PINE	11
1228	PINE	22
1229	PINE	17
1231	PINE	12
1232	PINE	15
1233	PINE	15
1234	PINE	11
1235	PINE	11
1236	PINE	9
1237	PINE	12

REMOVE TREE (N)

TREE No.	SPECIES	DBH
1238	PINE	8
1239	PINE	22
1240	PINE	14
1241	PINE	14
1242	PINE	19
1243	PINE	12
1244	PINE	9
1245	PINE	13
1246	PINE	13
1247	ACACIA	7
1248	PINE	9
1250	PINE	14
1251	PINE	12
1252	PINE	9
1253	ACACIA	9
1254	ACACIA	19
1255	ACACIA	14
1256	PINE	19
1273	LIVE OAK	7
1274	LIVE OAK	7
1275	LIVE OAK	18
1280	CEDAR	11
1297	LIVE OAK	7
1314	PINE	7
1320	FLOSS SILK TREE	7
1325	PINE	16
1326	PINE	9
1327	PINE	19
1328	PINE	16
1330	PINE	18
1331	PINE	10
1332	PINE	16
1333	PINE	17
1334	ACACIA	7
1336	PINE	17
1337	PINE	9
1338	ACACIA	8
1339	PINE	14
1340	PINE	19
1341	PINE	19
1342	PINE	14
1343	ACACIA	7
1344	ACACIA	7
1345	ACACIA	10
1346	PINE	17
1347	PINE	20
1348	PINE	12

DIAMETER AT BREAST HEIGHT (DBH)

(N) NOT A SEPARATE PAY ITEM, FOR INFORMATION ONLY

REMOVE TREE (N)

TOTAL	147

SUMMARY OF QUANTITIES

Q-2

STATE OF CALIFORNIA - DEPARTMENT OF TRANSPORTATION
Caltrans® DESIGN

FUNCTIONAL SUPERVISOR: SOTERO ANGELES
CALCULATED-DESIGNED BY: LUIS GUTIERREZ
CHECKED BY: AARON WANG
REVISED BY: LG
DATE REVISED: 6/9/14

LAST REVISION 09-17-15
DATE PLOTTED => 19-OCT-2015
TIME PLOTTED => 15:55

Dist	COUNTY	ROUTE	POST MILES TOTAL PROJECT	SHEET No.	TOTAL SHEETS
04	Ala	13	8.3	28	108

LICENSED LANDSCAPE ARCHITECT

10-19-15
PLANS APPROVAL DATE

LICENSED LANDSCAPE ARCHITECT OWEN WILLIAMS No. 4788 Signature 4-30-17 Renewal Date 8-11-14 Date STATE OF CALIFORNIA

THE STATE OF CALIFORNIA OR ITS OFFICERS OR AGENTS SHALL NOT BE RESPONSIBLE FOR THE ACCURACY OR COMPLETENESS OF SCANNED COPIES OF THIS PLAN SHEET.

IRRIGATION SPRINKLER SCHEDULE

SYMBOL	DESCRIPTION	SPRAY PATTERN	OPERATING PRESSURE (psi)	② PRESSURE COMPENSATING	PLUS/MINUS 5% DISCHARGE GALLONS PER MINUTE (GPM)	PLUS/MINUS 5% DISCHARGE GALLONS PER HOUR (GPH)	PLUS/MINUS 5% RADIUS (ft)	PLUS/MINUS 5% WIDTH x LENGTH (ft)	FLOW SHUTOFF DEVICE	SPRINKLER ASSEMBLY RISER TYPE	SPRINKLER ASSEMBLY RISER MATERIAL PLASTIC	SPRINKLER ASSEMBLY RISER MATERIAL GALVANIZED	SPRINKLER ASSEMBLY RISER SIZE (IPS INCH)	SPRINKLER ASSEMBLY RISER HEIGHT (INCH)	SPRINKLER ASSEMBLY RISER SWING JOINT (TYPE)	SPRINKLER ASSEMBLY POP-UP TYPE	SPRINKLER ASSEMBLY POP-UP INLET CONNECTION (NPT INCH)	SPRINKLER ASSEMBLY POP-UP HEIGHT (INCH)	SPRINKLER ASSEMBLY POP-UP SPRINKLER PROTECTOR (TYPE) ④	SPRINKLER ASSEMBLY TREE WELL HEIGHT (INCH)	SPRINKLER ASSEMBLY TREE WELL SWING JOINT (TYPE)	REMARKS
○	RISER SPRINKLER ASSEMBLY	-	40	X	0.5	-	-	-	-	V	X	-	½"	-	-	-	-	-	-	-	-	BUBBLER ⑥
●	RISER SPRINKLER ASSEMBLY	-	40	X	1.0	-	-	-	-	V	X	-	½"	-	-	-	-	-	-	-	-	BUBBLER ⑥

X IN BOX DENOTES REQUIREMENT

APPLICABLE WHEN CIRCLED BELOW:

1 - SEE SPECIAL PROVISIONS.

② - IF A PRESSURE COMPENSATING DEVICE IS SPECIFIED, THE DISCHARGE AND RADII SHOWN REFLECT ITS USE.

3 - VINYL-COATED CAST IRON HOUSING.

4 - SPRINKLER PROTECTORS REQUIRED ADJACENT TO SHOULDERS, CURBS, SIDEWALKS, AND DIKES.

5 - UNLESS OTHERWISE SHOWN ON PLANS.

⑥ - INSTALL ON UPHILL SIDE OF PLANT BASIN.

REVISED BY: RC — DATE REVISED: 9/16/14

CALCULATED-DESIGNED BY: OWEN WILLIAMS — CHECKED BY: LYDIA MAC

SENIOR LANDSCAPE ARCHITECT: LYDIA MAC

STATE OF CALIFORNIA - DEPARTMENT OF TRANSPORTATION
Caltrans® LANDSCAPE ARCHITECTURE

IRRIGATION SPRINKLER SCHEDULE
ISS-1

LAST REVISION 09-16-14 | DATE PLOTTED => 19-OCT-2015 | TIME PLOTTED => 15:55

Dist	COUNTY	ROUTE	POST MILES TOTAL PROJECT	SHEET No.	TOTAL SHEETS
04	Ala	13	8.3	29	108

LICENSED LANDSCAPE ARCHITECT

10-19-15

PLANS APPROVAL DATE

THE STATE OF CALIFORNIA OR ITS OFFICERS OR AGENTS SHALL NOT BE RESPONSIBLE FOR THE ACCURACY OR COMPLETENESS OF SCANNED COPIES OF THIS PLAN SHEET.

LICENSED LANDSCAPE ARCHITECT
OWEN WILLIAMS No. 4788
Signature
4-30-17
Renewal Date
8-11-14
Date
STATE OF CALIFORNIA

NOTE:

FOR ACCURATE RIGHT OF WAY DATA, CONTACT RIGHT OF WAY ENGINEERING AT THE DISTRICT OFFICE.

OAKLAND

IRRIGATION NOTES:

1. PLASTIC PIPE SUPPLY LINE (LATERAL) MUST BE ¾" SCH 40 PVC, UNLESS OTHERWISE NOTED.
2. PLASTIC PIPE SUPPLY LINE (MAIN) MUST BE 2" SCH 40 PVC, UNLESS OTHERWISE NOTED.

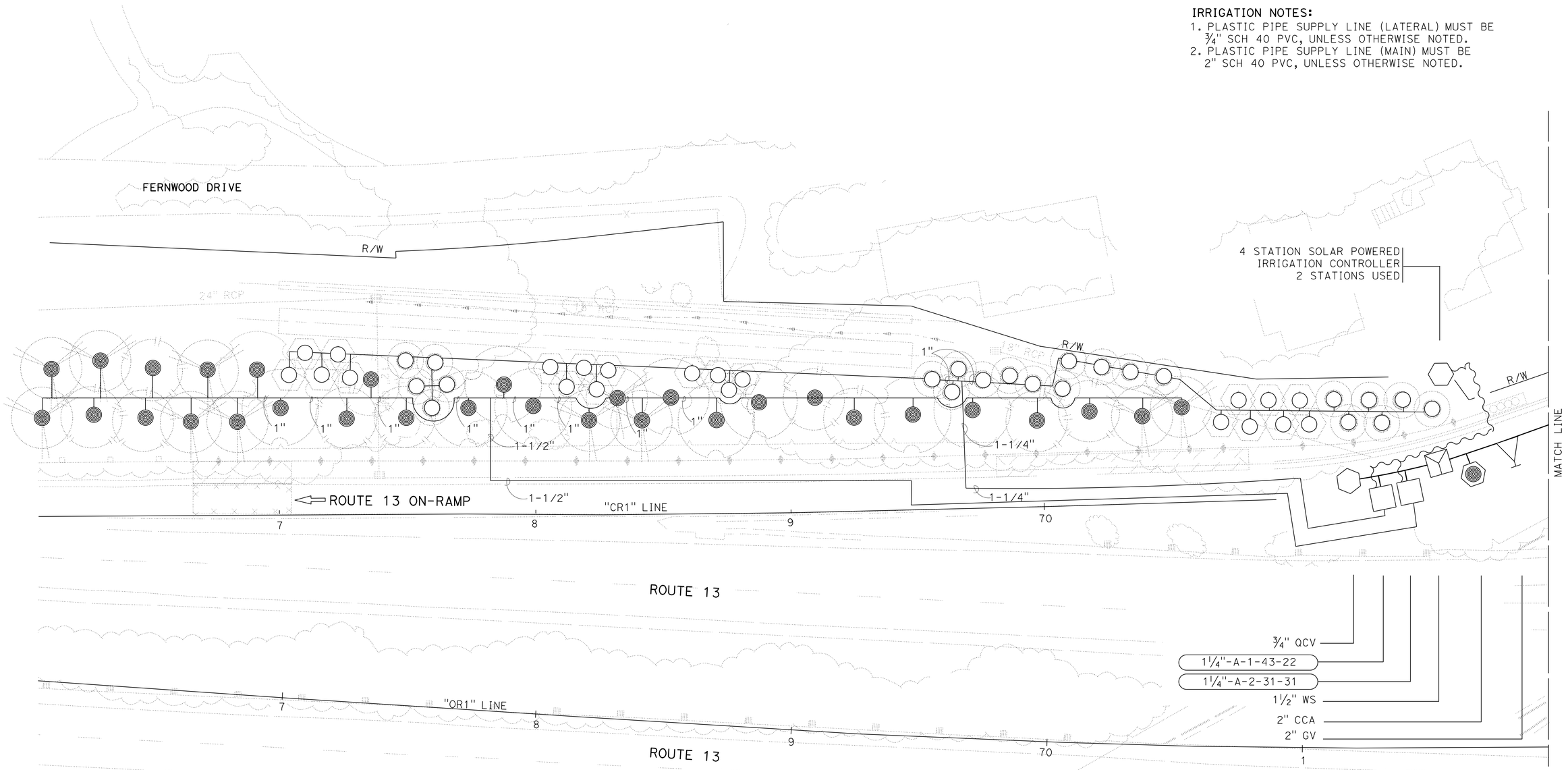

IRRIGATION PLAN

SCALE: 1" = 20'

IP-1

CALCULATED-DESIGNED BY	OWEN WILLIAMS
CHECKED BY	LYDIA MAC
REVISED BY	RC
DATE REVISED	9/28/15
SENIOR LANDSCAPE ARCHITECT	LYDIA MAC

STATE OF CALIFORNIA - DEPARTMENT OF TRANSPORTATION

Caltrans® LANDSCAPE ARCHITECTURE

LAST REVISION 09-28-15

DATE PLOTTED => 19-OCT-2015
TIME PLOTTED => 15:55

Dist	COUNTY	ROUTE	POST MILES TOTAL PROJECT	SHEET No.	TOTAL SHEETS
04	Ala	13	8.3	30	108

LICENSED LANDSCAPE ARCHITECT

10-19-15

PLANS APPROVAL DATE

THE STATE OF CALIFORNIA OR ITS OFFICERS OR AGENTS SHALL NOT BE RESPONSIBLE FOR THE ACCURACY OR COMPLETENESS OF SCANNED COPIES OF THIS PLAN SHEET.

LICENSED LANDSCAPE ARCHITECT — OWEN WILLIAMS No. 4196 — Signature — 4-30-17 Renewal Date — 8-11-14 Date — STATE OF CALIFORNIA

NOTE:

FOR ACCURATE RIGHT OF WAY DATA, CONTACT RIGHT OF WAY ENGINEERING AT THE DISTRICT OFFICE.

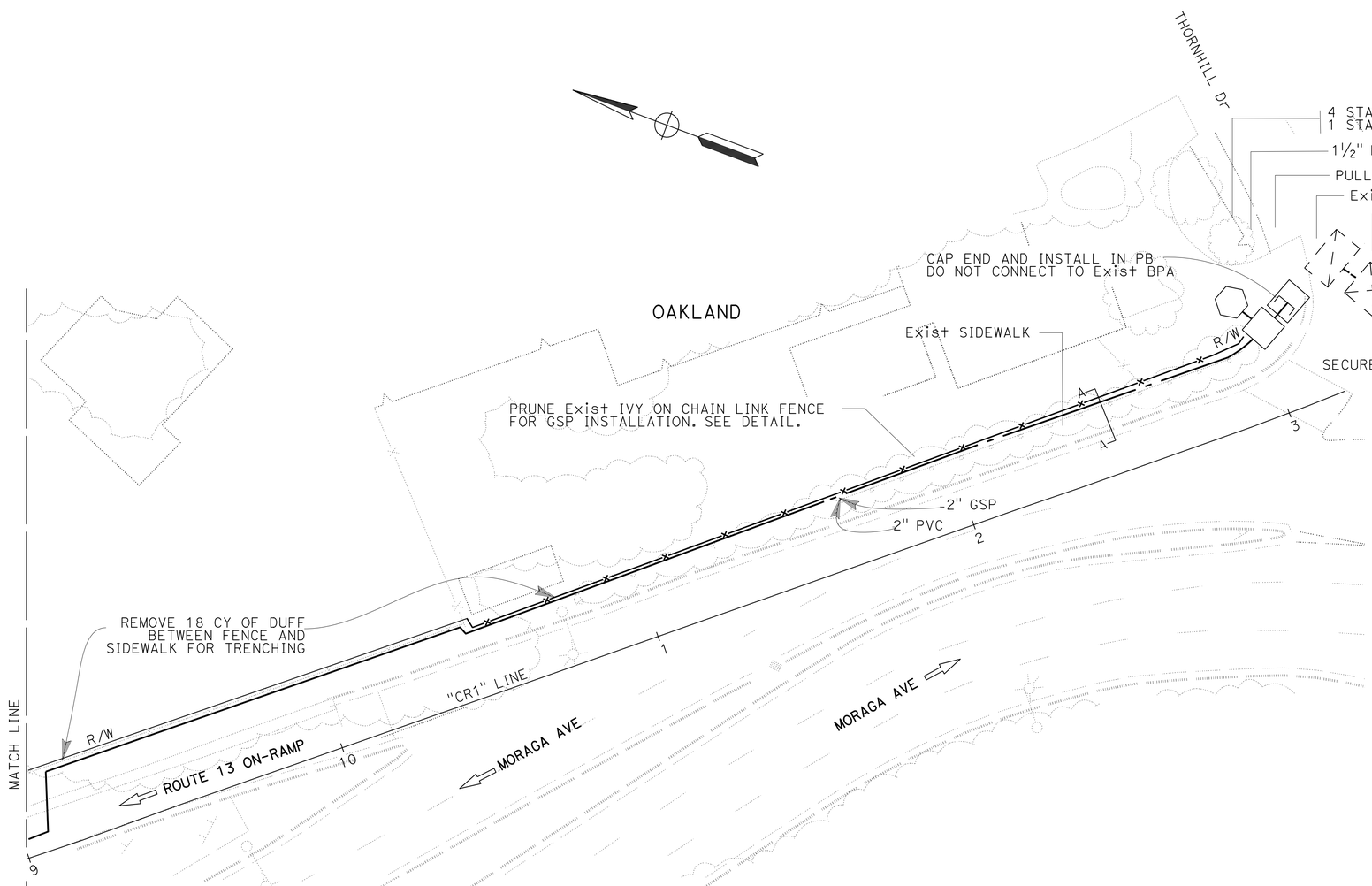

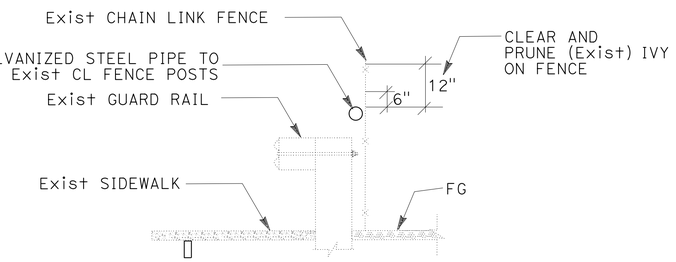

SECTION A-A

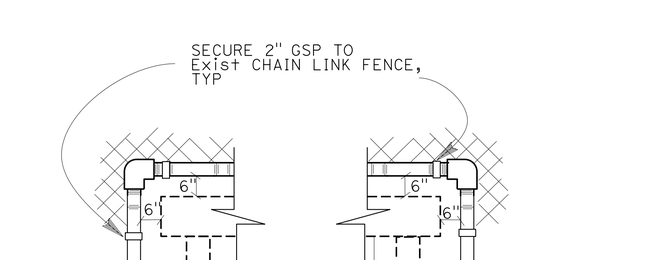

ELEVATION

STA "CR1" 10+50 TO 13+00

GALVANIZED STEEL PIPE
INSTALLATION ABOVE EXISTING
METAL BEAM GUARD RAIL

IRRIGATION PLAN

SCALE: 1" = 20'

IP-2

APPROVED FOR IRRIGATION WORK ONLY

STATE OF CALIFORNIA - DEPARTMENT OF TRANSPORTATION
Caltrans® LANDSCAPE ARCHITECTURE

SENIOR LANDSCAPE ARCHITECT: LYDIA MAC
CALCULATED-DESIGNED BY: OWEN WILLIAMS
CHECKED BY: LYDIA MAC
REVISED BY: RC
DATE REVISED: 9/27/15

LAST REVISION 09-27-15
DATE PLOTTED => 19-OCT-2015
TIME PLOTTED => 15:55

Dist	COUNTY	ROUTE	POST MILES TOTAL PROJECT	SHEET No.	TOTAL SHEETS
04	Ala	13	8.3	31	108

LICENSED LANDSCAPE ARCHITECT

10-19-15
PLANS APPROVAL DATE

LICENSED LANDSCAPE ARCHITECT
OWEN WILLIAMS No. 2788
Signature
4-30-17
Renewal Date
8-11-14
Date
STATE OF CALIFORNIA

THE STATE OF CALIFORNIA OR ITS OFFICERS OR AGENTS SHALL NOT BE RESPONSIBLE FOR THE ACCURACY OR COMPLETENESS OF SCANNED COPIES OF THIS PLAN SHEET.

SUBTOTALS PER VALVE ON LATERAL SUPPLY SIDE OF CONTROL VALVE

DESCRIPTION		UNIT	VALVE OR ASSEMBLY NUMBER A-1	A-2	SUBTOTALS	UNIT	DESCRIPTION	
PLASTIC PIPE (SUPPLY LINE) (SCHEDULE 40)	¾ INCH	LF	370	110	480	LF	¾ INCH	PLASTIC PIPE (SUPPLY LINE) (SCHEDULE 40)
	1 INCH	LF	120	210	330	LF	1 INCH	
	1¼ INCH	LF	215	--	215	LF	1¼ INCH	
	1½ INCH	LF	--	430	430	LF	1½ INCH	
GV								GV
DIP								DIP
SPRINKLER ASSEMBLY TYPE	RISER	EA	43	31	74	EA	RISER	SPRINKLER ASSEMBLY TYPE

STATE OF CALIFORNIA - DEPARTMENT OF TRANSPORTATION
Caltrans® LANDSCAPE ARCHITECTURE

SENIOR LANDSCAPE ARCHITECT: LYDIA MAC
CALCULATED-DESIGNED BY: OWEN WILLIAMS
CHECKED BY: LYDIA MAC
REVISED BY: RC
DATE REVISED: 9/16/14

IRRIGATION QUANTITIES
IQ-1

LAST REVISION 09-16-14
DATE PLOTTED => 19-OCT-2015
TIME PLOTTED => 15:55

Dist	COUNTY	ROUTE	POST MILES TOTAL PROJECT	SHEET No.	TOTAL SHEETS
04	Ala	13	8.3	32	108

LICENSED LANDSCAPE ARCHITECT

10-19-15

PLANS APPROVAL DATE

LICENSED LANDSCAPE ARCHITECT — OWEN WILLIAMS RC-3746 — Signature — 4-30-17 Renewal Date — 8-11-14 Date — STATE OF CALIFORNIA

THE STATE OF CALIFORNIA OR ITS OFFICERS OR AGENTS SHALL NOT BE RESPONSIBLE FOR THE ACCURACY OR COMPLETENESS OF SCANNED COPIES OF THIS PLAN SHEET.

SUBTOTALS PER PLAN SHEET ON MAIN SUPPLY SIDE OF CONTROL VALVE

DESCRIPTION			UNIT	SHEET NUMBER I-1	SHEET NUMBER I-2	SUBTOTALS
BPA		ENCLOSURE				
BPA		BOOSTER PUMP				
IRRIGATION CONTROLLER		4 STATION SOLAR	EA	1	1	2
IRRIGATION CONTROLLER	CEC	SINGLE				
IRRIGATION CONTROLLER	CEC	DOUBLE				
VALVES AND ASSEMBLIES	CCA	2 INCH	EA	1	-	1
VALVES AND ASSEMBLIES	RCV	1¼ INCH	EA	2	-	2
VALVES AND ASSEMBLIES	RCV	1½ INCH	EA	-	1	1
VALVES AND ASSEMBLIES	GV	1½ INCH	EA	1	-	1
VALVES AND ASSEMBLIES	QCV	¾ INCH	EA			1
VALVES AND ASSEMBLIES	FV					
VALVES AND ASSEMBLIES	WSA	1½ INCH	EA	1	-	1
CONDUIT	CSP					
CONDUIT	WSP					
PLASTIC PIPE SUPPLY LINE	SCHEDULE 40	¾ INCH	LF	-	-	-
PLASTIC PIPE SUPPLY LINE	SCHEDULE 40	1 INCH	LF	-	-	-
PLASTIC PIPE SUPPLY LINE	SCHEDULE 40	1¼ INCH	LF	-	-	-
PLASTIC PIPE SUPPLY LINE	SCHEDULE 40	1½ INCH	LF	-	-	430
PLASTIC PIPE SUPPLY LINE	SCHEDULE 40	2 INCH	LF	60	385	445
PLASTIC PIPE SUPPLY LINE	PR 315					
GSP		2 INCH	LF	-	130	130
DIP						

TOTAL QUANTITIES

TOTALS	UNIT	DESCRIPTION		
		ENCLOSURE		BPA
		BOOSTER PUMP		BPA
2	2	4 STATION		IRRIGATION CONTROLLER
		SINGLE	CEC	IRRIGATION CONTROLLER
		DOUBLE	CEC	IRRIGATION CONTROLLER
1	EA	2 INCH	CCA	VALVES AND ASSEMBLIES
2	EA	1¼ INCH	RCV	VALVES AND ASSEMBLIES
1	EA	1½ INCH	RCV	VALVES AND ASSEMBLIES
1	EA	1½ INCH	GV	VALVES AND ASSEMBLIES
1	EA	¾ INCH	QCV	VALVES AND ASSEMBLIES
			FV	VALVES AND ASSEMBLIES
1	EA	1½ INCH	WSA	VALVES AND ASSEMBLIES
			CSP	CONDUIT
			WSP	CONDUIT
480	LF	¾ INCH	SCHEDULE 40	PLASTIC PIPE SUPPLY LINE
330	LF	1 INCH	SCHEDULE 40	PLASTIC PIPE SUPPLY LINE
215	LF	1¼ INCH	SCHEDULE 40	PLASTIC PIPE SUPPLY LINE
430	LF	1½ INCH	SCHEDULE 40	PLASTIC PIPE SUPPLY LINE
445	LF	2 INCH	SCHEDULE 40	PLASTIC PIPE SUPPLY LINE
			PR 315	PLASTIC PIPE SUPPLY LINE
130	LF	2 INCH		GSP
				DIP
74	EA	RISER		SPRINKLER TYPE ASSEMBLY

IRRIGATION QUANTITIES

IQ-2

STATE OF CALIFORNIA - DEPARTMENT OF TRANSPORTATION

Caltrans® LANDSCAPE ARCHITECTURE

SENIOR LANDSCAPE ARCHITECT: LYDIA MAC

CALCULATED-DESIGNED BY: OWEN WILLIAMS — CHECKED BY: LYDIA MAC

REVISED BY: RC — DATE REVISED: 9/15/14

LAST REVISION 09-15-14 — DATE PLOTTED => 19-OCT-2015 — TIME PLOTTED => 15:55

Dist	COUNTY	ROUTE	POST MILES TOTAL PROJECT	SHEET No.	TOTAL SHEETS
04	Ala	13	8.3	33	108

LICENSED LANDSCAPE ARCHITECT

10-19-15
PLANS APPROVAL DATE

LICENSED LANDSCAPE ARCHITECT
OWEN WILLIAMS No. 2788
Signature
4-30-17
Renewal Date
8-11-14
Date
STATE OF CALIFORNIA

THE STATE OF CALIFORNIA OR ITS OFFICERS OR AGENTS SHALL NOT BE RESPONSIBLE FOR THE ACCURACY OR COMPLETENESS OF SCANNED COPIES OF THIS PLAN SHEET.

PLANTING LEGEND

PLANT GROUP	PLANT No.	SYMBOL	BOTANICAL NAME	COMMON NAME	SIZE	QUANTITY EACH	HOLE SIZE (INCH) Dia	HOLE SIZE (INCH) DEPTH	BASIN TYPE	SOIL AMENDMENT ① TYPE	SOIL AMENDMENT ① RATE	IRON SULFATE ① RATE	COMMERCIAL FERTILIZER ① PLANTING	COMMERCIAL FERTILIZER ① PLT ESTB	BASIN MULCH ① TYPE	BASIN MULCH ① RATE	STAKING	PLANTING LIMITS MINIMUM DISTANCE (ft) FROM ETW	Pvmt	FENCE	WALL	PAVED DITCH	EARTH DITCH	ON CENTER (ft)	REMARKS
A	1	▲	HETEROMELES ARBUTIFOLIA	TOYON	No. 1	21	18	24	I	C	1.5 CF	--	1 Oz	1 Oz	WC	0.06 CY	--	--	15	15	10	10	12	⑦	SHRUB ⑨
A	2	●	CEANOTHUS 'JULIA PHELPS'	WILD LILAC	No. 1	22	18	24	I	C	1.5 CF	--	1 Oz	1 Oz	WC	0.06 CY	--	--	15	10	6	10	12	⑦	SHRUB ⑨
I	3		CALOCEDRUS DECURRENS	INCENSE CEDAR	No. 5	11	24	24	I	C	1.5 CF	3 Oz	3 Oz	3 Oz	WC	0.06 CY	--	30	--	20	15	20	32	⑦	TREE ⑨
I	4		QUERCUS AGRIFOLIA	COAST LIVE OAK	No. 5	10	24	24	I	C	1.5 CF	3 Oz	3 Oz	3 Oz	WC	0.06 CY	--	30	--	20	20	15	17	⑦	TREE ⑨
I	5		SEQUOIA SEMPERVIRENS	COAST REDWOOD	No. 5	10	24	24	I	C	1.5 CF	3 Oz	3 Oz	3 Oz	WC	0.06 CY	--	30	--	20	15	20	22	⑦	TREE ⑨

APPLICABLE WHEN CIRCLED:

1 - QUANTITIES SHOWN ARE "PER PLANT" UNLESS SHOWN AS SQFT OR SQYD APPLICATION RATES
2 - BASIN MULCH IN MULCH AREAS IS INCLUDED WITH MULCH QUANTITIES SHOWN ON PLANTING PLAN
3 - SUFFICIENT TO RECEIVE ROOT BALL AND AMENDMENTS IF REQUIRED
4 - SEE DETAIL
5 - SEE SPECIAL PROVISIONS
6 - SEE STANDARD SPECIFICATIONS
7 - AS SHOWN ON PLANS
8 - UNLESS OTHERWISE SHOWN ON PLANS
9 - FOLIAGE PROTECTOR REQUIRED
10 - ROOT PROTECTOR REQUIRED
11 - 4" POT

ABBREVIATIONS

C - COMPOST
N - NITROLIZED FIR BARK
V - VERMICULITE
P - PERLITE
TB - TREE BARK
WC - WOOD CHIP
SB - SHREDDED BARK

NOTE:

UNDERLINED PORTIONS OF BOTANICAL NAME INDICATE ABBREVIATIONS USED ON PLANTING PLANS.

X- DENOTES REQUIREMENT

PLANT LIST
PL-1

STATE OF CALIFORNIA - DEPARTMENT OF TRANSPORTATION
Caltrans® LANDSCAPE ARCHITECTURE

SENIOR LANDSCAPE ARCHITECT: LYDIA MAC
CALCULATED-DESIGNED BY: OWEN WILLIAMS
CHECKED BY: LYDIA MAC
REVISED BY: RC
DATE REVISED: 9/15/14

LAST REVISION 09-15-14
DATE PLOTTED => 19-OCT-2015
TIME PLOTTED => 15:55

Dist	COUNTY	ROUTE	POST MILES TOTAL PROJECT	SHEET No.	TOTAL SHEETS
04	Ala	13	8.3	34	108

LICENSED LANDSCAPE ARCHITECT

10-19-15

PLANS APPROVAL DATE

THE STATE OF CALIFORNIA OR ITS OFFICERS OR AGENTS SHALL NOT BE RESPONSIBLE FOR THE ACCURACY OR COMPLETENESS OF SCANNED COPIES OF THIS PLAN SHEET.

LICENSED LANDSCAPE ARCHITECT — OWEN WILLIAMS No. 5126 — Signature — 4-30-17 Renewal Date — 8-11-14 Date — STATE OF CALIFORNIA

NOTE:

FOR ACCURATE RIGHT OF WAY DATA, CONTACT RIGHT OF WAY ENGINEERING AT THE DISTRICT OFFICE.

OAKLAND

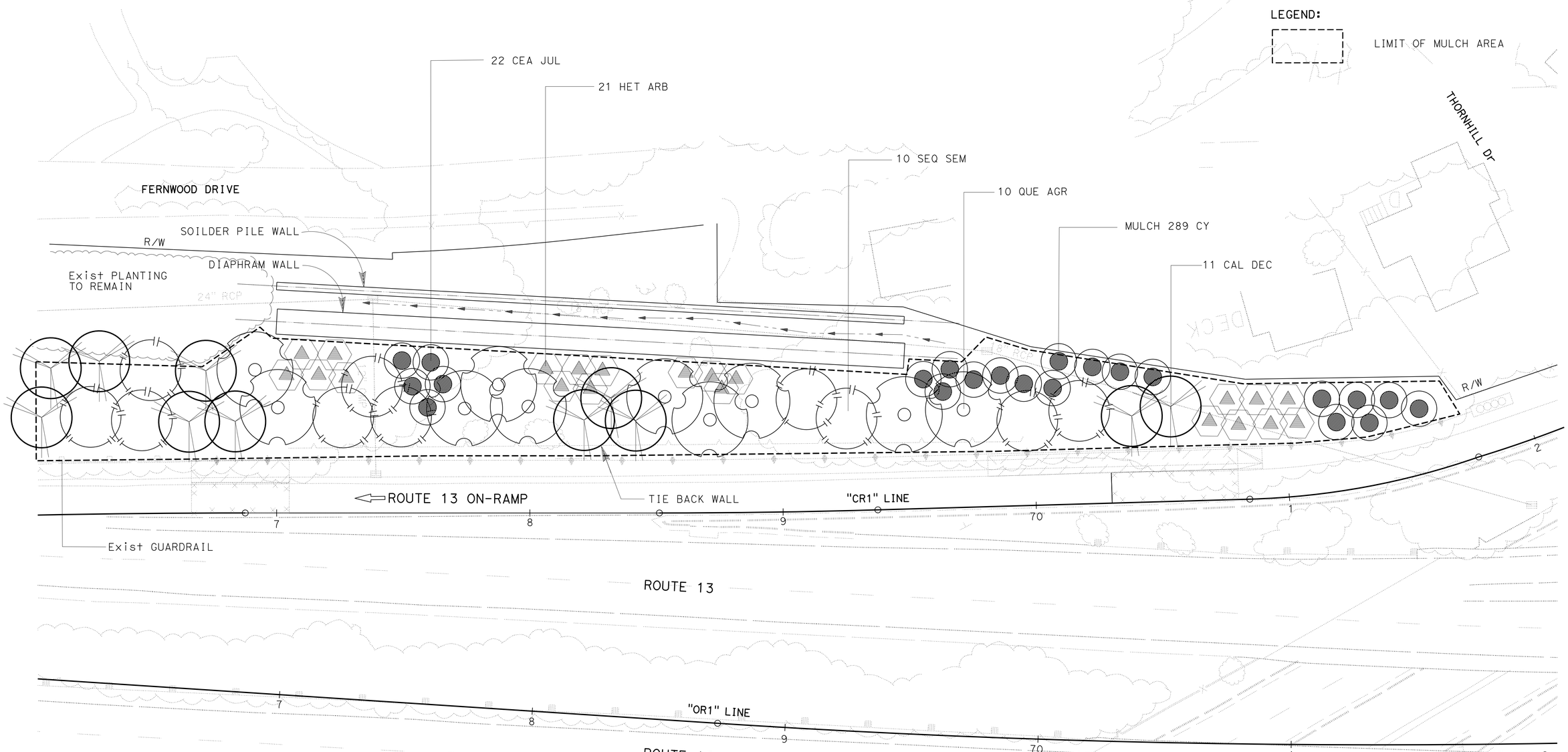

PLANTING PLAN

SCALE: 1" = 20'

PP-1

REVISED BY	DATE REVISED
RC	9/15/14

OWEN WILLIAMS — LYDIA MAC

CALCULATED-DESIGNED BY — CHECKED BY

FUNCTIONAL SUPERVISOR — LYDIA MAC

STATE OF CALIFORNIA - DEPARTMENT OF TRANSPORTATION

Caltrans® LANDSCAPE ARCHITECTURE

LAST REVISION 09-15-14 — DATE PLOTTED => 19-OCT-2015 — TIME PLOTTED => 15:55

Dist	COUNTY	ROUTE	POST MILES TOTAL PROJECT	SHEET No.	TOTAL SHEETS
04	Ala	13	8.3	35	108

LICENSED LANDSCAPE ARCHITECT

10-19-15
PLANS APPROVAL DATE

LICENSED LANDSCAPE ARCHITECT
OWEN WILLIAMS No. 4788
Signature
4-30-17
Renewal Date
8-11-14
Date
STATE OF CALIFORNIA

THE STATE OF CALIFORNIA OR ITS OFFICERS OR AGENTS SHALL NOT BE RESPONSIBLE FOR THE ACCURACY OR COMPLETENESS OF SCANNED COPIES OF THIS PLAN SHEET.

WOOD MULCH

SHEET NO.	TYPE	① BASIN (CY)	② AREA (CY)	SUBTOTAL PER SHEET (CY)
PP-1	WC	--	289	289
TOTAL				289

① QUANTITIES SHOWN ARE TOTAL "PER PLANT" OUTSIDE OF AREAS

② BASIN MULCH WITHIN MULCH AREAS IS INCLUDED WITH WOOD MULCH AREA QUANTITIES SHOWN ON PLANTING PLAN

MULCH TYPES:

C - COMPOST
N - NITROLIZED FIR BARK
SB - SHREDDED BARK
TB - TREE BARK
TT - TREE TRIMMING
WC - WOOD CHIP

PLANT QUANTITIES

TYPE	UNIT	QUANTITY	IRON SULFATE	SOIL AMENDMENT	COMMERCIAL FERTILIZER		STAKES (N)	FOLIAGE PROTECTOR	ROOT PROTECTOR
					PACKET	SLOW RELEASE			
			LB	CY	EA	LB	EA	EA	EA
PLANT (GROUP A)	EA	43	-	2.3	-	2.69	-	43	-
PLANT (GROUP I)	EA	31	5.81	1.7	-	5.81	-	31	-
TOTAL			5.81	4.0	-	8.50	-	74	-

PLANTING QUANTITIES

PQ-1

STATE OF CALIFORNIA - DEPARTMENT OF TRANSPORTATION
Caltrans® LANDSCAPE ARCHITECTURE

SENIOR LANDSCAPE ARCHITECT: LYDIA MAC
CALCULATED-DESIGNED BY: OWEN WILLIAMS
CHECKED BY: LYDIA MAC
REVISED BY: RC
DATE REVISED: 9/27/15

LAST REVISION 09-27-15
DATE PLOTTED => 19-OCT-2015
TIME PLOTTED => 15:55

Dist	COUNTY	ROUTE	POST MILES TOTAL PROJECT	SHEET No.	TOTAL SHEETS
04	Ala	13	8.3	36	108

LICENSED LANDSCAPE ARCHITECT

10-19-15
PLANS APPROVAL DATE

LICENSED LANDSCAPE ARCHITECT
SALLY BANG No. 5860
Expiration date
11-30-15
Renewal date
04-28-14
Date
STATE OF CALIFORNIA

THE STATE OF CALIFORNIA OR ITS OFFICERS OR AGENTS SHALL NOT BE RESPONSIBLE FOR THE ACCURACY OR COMPLETENESS OF SCANNED COPIES OF THIS PLAN SHEET.

NOTE:

DIMENSIONS OF THE PAVEMENT STRUCTURES (STRUCTURAL SECTIONS) ARE SUBJECT TO TOLERANCES SPECIFIED IN THE STANDARD SPECIFICATIONS.

EROSION CONTROL TYPE 1

SEQUENCE	ITEM	MATERIAL		APPLICATION RATE
		DESCRIPTION	TYPE	
1	RECP (NETTING)	NETTING	TYPE A	
2	HYDROSEED	FERTILIZER	ORGANIC	1200 LBS/ACRE
		SEED	MIX 1	44.15 LB/ACRE
		FIBER	WOOD	285 LB/ACRE
3	HYDROMULCH	FIBER	WOOD	285 LB/ACRE
		TACKIFIER	PLANT BASE	125 LB/ACRE

SEED MIX 1

BOTANICAL NAME (COMMON NAME)	PERCENT GERMINATION (MINIMUM)	POUNDS PURE LIVE SEED PER ACRE (SLOPE MEASUREMENT)
LUPINUS BICOLOR (PYGMY LEAF LUPINE)	50	4
BACCHARIS PILULARIS (COYOTE BRUSH)	25	0.15
BROMUS CARINATUS[1] (CALIFORNIA BROME)	50	11
ELYMUS GLAUCUS (BLUE WILDRYE)	50	9
ERIOGONUM FASCICULATUM (CALIFORNIA BUCKWHEAT)	10	1.5
ESCHSCHOLZIA CALIFORNICA[1] (CALIFORNIA POPPY)	50	2
HORDEUM BRACHYANTHERUM (MEADOW BARLEY)	50	11
MIMULUS AURANTIACUS (STICKY MONKEY FLOWER)	40	0.5
VULPIA MICROSTACHYS (SMALL FESCUE)	50	5
[1] SEED PRODUCED IN CALIFORNIA ONLY.	TOTAL	44.15

EROSION CONTROL QUANTITIES

SHEET	FIBER ROLLS LF	HYDROSEED SQFT	HYDROMULCH SQFT	RECP (NETTING)
EC-1	970	24,000	24,000	24,000
TOTAL	970	24,000	24,000	24,000

FIBER ROLLS

SEQUENCE	ITEM	TYPE	REMARKS
FIBER ROLLS MUST BE INSTALLED AFTER RECP (NETTING) AND BEFORE HYDROSEED.	FIBER ROLLS	TYPE B 8" TO 10" Dia	TYPE 1 FIBER ROLL INSTALLATION

ROLLED EROSION CONTROL PRODUCT

SEQUENCE	ITEM	TYPE	DESCRIPTION
INSTALL RECP (NETTING) BEFORE FIBER ROLL	NETTING	TYPE B	WOVEN COIR

EROSION CONTROL LEGEND

ECL-1

REVISED BY: SB — DATE REVISED: 9/3/15
SALLY BANG — ANGELA KWAN
CALCULATED-DESIGNED BY — CHECKED BY
SENIOR LANDSCAPE ARCHITECT: DAVID YAM
STATE OF CALIFORNIA - DEPARTMENT OF TRANSPORTATION
Caltrans® WATER QUALITY

LAST REVISION 09-03-15 — DATE PLOTTED => 19-OCT-2015 — TIME PLOTTED => 15:55

Dist	COUNTY	ROUTE	POST MILES TOTAL PROJECT	SHEET No.	TOTAL SHEETS
04	Ala	13	8.3	37	108

LICENSED LANDSCAPE ARCHITECT

10-19-15

PLANS APPROVAL DATE

LICENSED LANDSCAPE ARCHITECT — SALLY BANG No. 5980 — Signature — Expiration date 11-30-15 — Renewal date 04-28-14 — Date — STATE OF CALIFORNIA

THE STATE OF CALIFORNIA OR ITS OFFICERS OR AGENTS SHALL NOT BE RESPONSIBLE FOR THE ACCURACY OR COMPLETENESS OF SCANNED COPIES OF THIS PLAN SHEET.

NOTE:

FOR ACCURATE RIGHT OF WAY DATA, CONTACT RIGHT OF WAY ENGINEERING AT THE DISTRICT OFFICE.

LEGEND:

EROSION CONTROL TYPE 1

FIBER ROLLS — FR

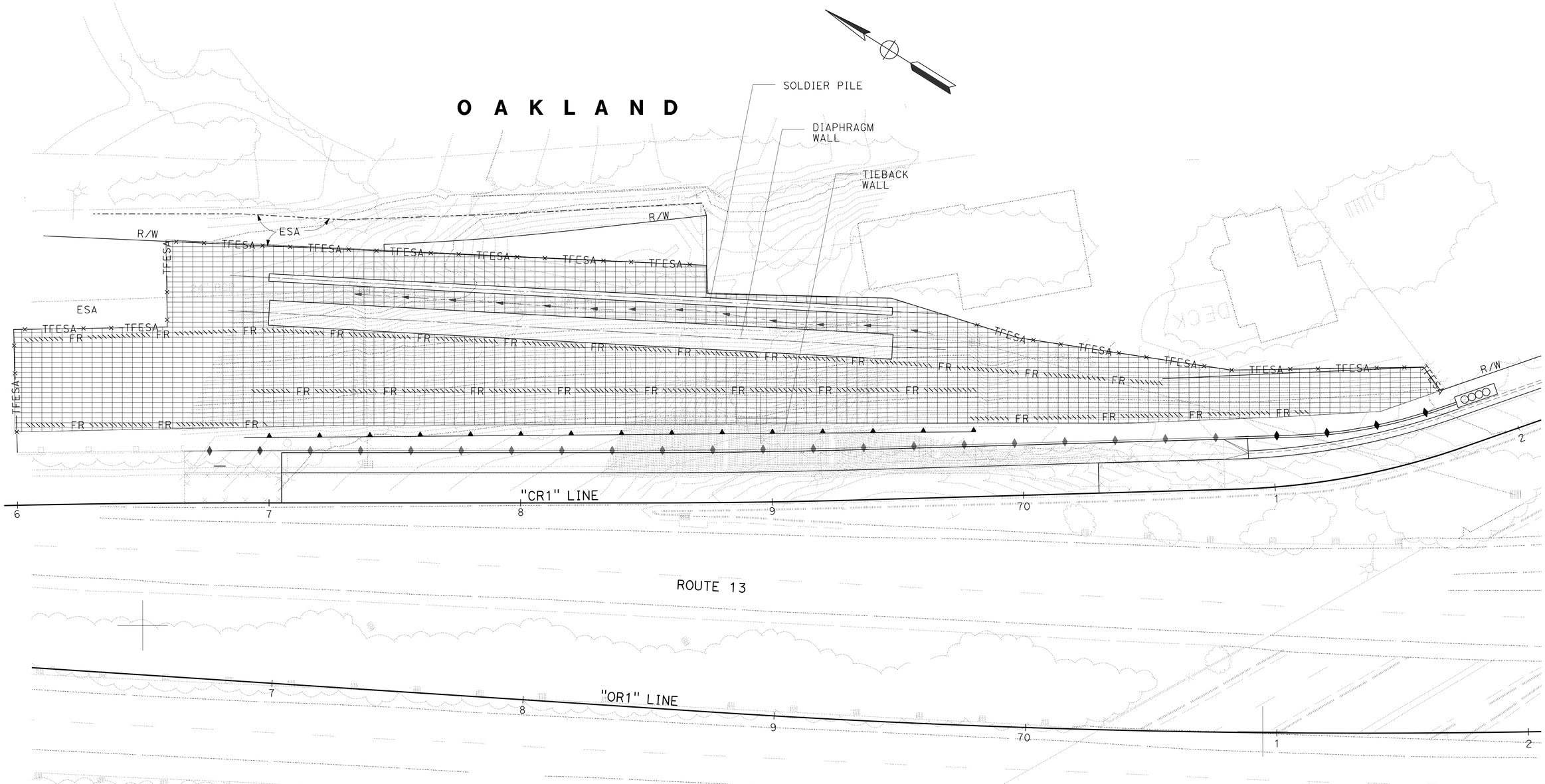

EROSION CONTROL PLAN

SCALE: 1" = 20'

EC-1

APPROVED FOR EROSION CONTROL WORK ONLY

STATE OF CALIFORNIA - DEPARTMENT OF TRANSPORTATION

Caltrans®

WATER QUALITY

SENIOR LANDSCAPE ARCHITECT: DAVID YAM

CALCULATED-DESIGNED BY: SALLY BANG

CHECKED BY: ANGELA KWAN

REVISED BY: SB

DATE REVISED: 9/3/15

LAST REVISION 09-03-15

DATE PLOTTED => 19-OCT-2015

TIME PLOTTED => 15:55

Dist	COUNTY	ROUTE	POST MILES TOTAL PROJECT	SHEET No.	TOTAL SHEETS
04	Ala	13	8.3	38	108

REGISTERED ELECTRICAL ENGINEER 4/2/14 DATE

PLANS APPROVAL DATE 10-19-15

REGISTERED PROFESSIONAL ENGINEER Mahmood Noii No. 13717 Exp. 6-30-17 ELECT STATE OF CALIFORNIA

THE STATE OF CALIFORNIA OR ITS OFFICERS OR AGENTS SHALL NOT BE RESPONSIBLE FOR THE ACCURACY OR COMPLETENESS OF SCANNED COPIES OF THIS PLAN SHEET.

NOTE:

FOR ACCURATE RIGHT OF WAY DATA, CONTACT RIGHT OF WAY ENGINEERING AT THE DISTRICT OFFICE.

ELECTRICAL INDEX

SHEET No.	DESCRIPTION
E-1	LIGHTING
E-2	LIGHTING (STAGE CONSTRUCTION) STAGE 1
E-3	ELECTRICAL DETAILS
E-4	ELECTRICAL QUANTITIES

LEGEND:

1. INSTALL PERMANENT PULL BOX OUTSIDE CONSTRUCTION AREA
2. INSTALL TEMPORARY WOOD POLE WITH 200 W HPS LUMINAIRE BEHIND K-RAIL. FOR WOOD POLE INSTALLATION, SEE SHEETS C-5 TO C-8. USE CASE 1N WITH POLE ATTACHMENTS (3), (6), (8) ON SHEET C-6.
   RC WOOD POLE AND LUMINAIRE WHEN NO LONGER NEEDED.
3. INSTALL 1½"C, 2#8 (240 V, LIGHTING)
   RC CONDUIT AT THE END OF STAGE CONSTRUCTION.
4. RC TEMPORARY EQUIPMENT AT THE END OF STAGE CONSTRUCTION.
5. INSTALL 1½"C, 2#8 (240 V, LIGHTING), 3#14 (120 V, PEU).
6. PROVIDE SERVICE EQUIPMENT ITEMS (1) THROUGH (14) PER SERVICE WIRING DIAGRAM ON SHEET E-3. INSTALL ENCLOSURE 1 FOOT FROM THE R/W FENCE WITH DOOR FACING FERNWOOD Dr.
7. AB EXISTING 1½"C 2#8. CONTACT PG&E TO DE-ENERGIZE POWER BEFORE ABANDONING CONDUIT.
8. INSTALL 2"C, 2#8.
9. EXISTING 1½"C, 2#8 (240 V, LIGHTING), 3#14 (120 V, PEU). REMOVE 3#14 (120 V, PEU).
10. EXISTING 1½"C, 2#8.
11. INSTALL PERMANENT EQUIPMENT, SEE SHEET E-1.
12. INSTALL TYPE 21 LIGHTING STANDARD WITH 165 W LED LUMINAIRES.
13. INSTALL 2"C, 2#8 (240 V, LIGHTING) IN Conc BARRIER.
14. RS THE EXISTING LIGHTING STANDARD AND HPS LUMINAIRE.

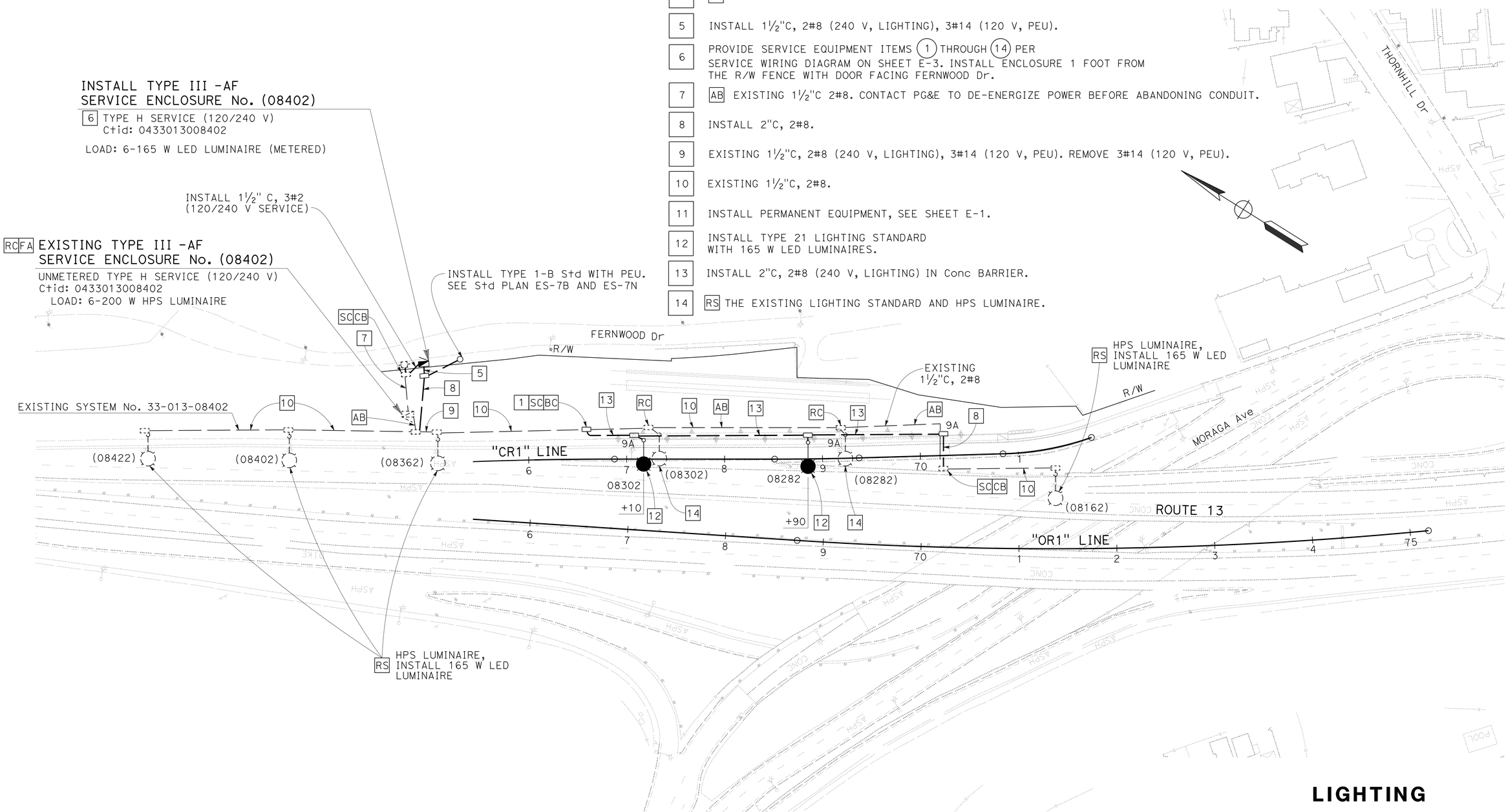

LIGHTING

SCALE: 1" = 50'

APPROVED FOR ELECTRICAL WORK ONLY

E-1

STATE OF CALIFORNIA - DEPARTMENT OF TRANSPORTATION

ELECTRICAL

FUNCTIONAL SUPERVISOR: BEHZAD GOLEMOHAMMADI

CALCULATED-DESIGNED BY: SOHEILA BANA

CHECKED BY: BARON OWYEONG

REVISED BY: SB

DATE REVISED: 3/27/14

LAST REVISION 09-23-15

DATE PLOTTED => 19-OCT-2015

TIME PLOTTED => 15:55

Dist	COUNTY	ROUTE	POST MILES TOTAL PROJECT	SHEET No.	TOTAL SHEETS
04	Ala	13	8.3	39	108

REGISTERED ELECTRICAL ENGINEER 4/2/14 DATE

PLANS APPROVAL DATE 10-19-15

REGISTERED PROFESSIONAL ENGINEER Mahmood Noii No. 13717 Exp. 6-30-17 ELECT STATE OF CALIFORNIA

THE STATE OF CALIFORNIA OR ITS OFFICERS OR AGENTS SHALL NOT BE RESPONSIBLE FOR THE ACCURACY OR COMPLETENESS OF SCANNED COPIES OF THIS PLAN SHEET.

NOTE:

FOR ACCURATE RIGHT OF WAY DATA, CONTACT RIGHT OF WAY ENGINEERING AT THE DISTRICT OFFICE.

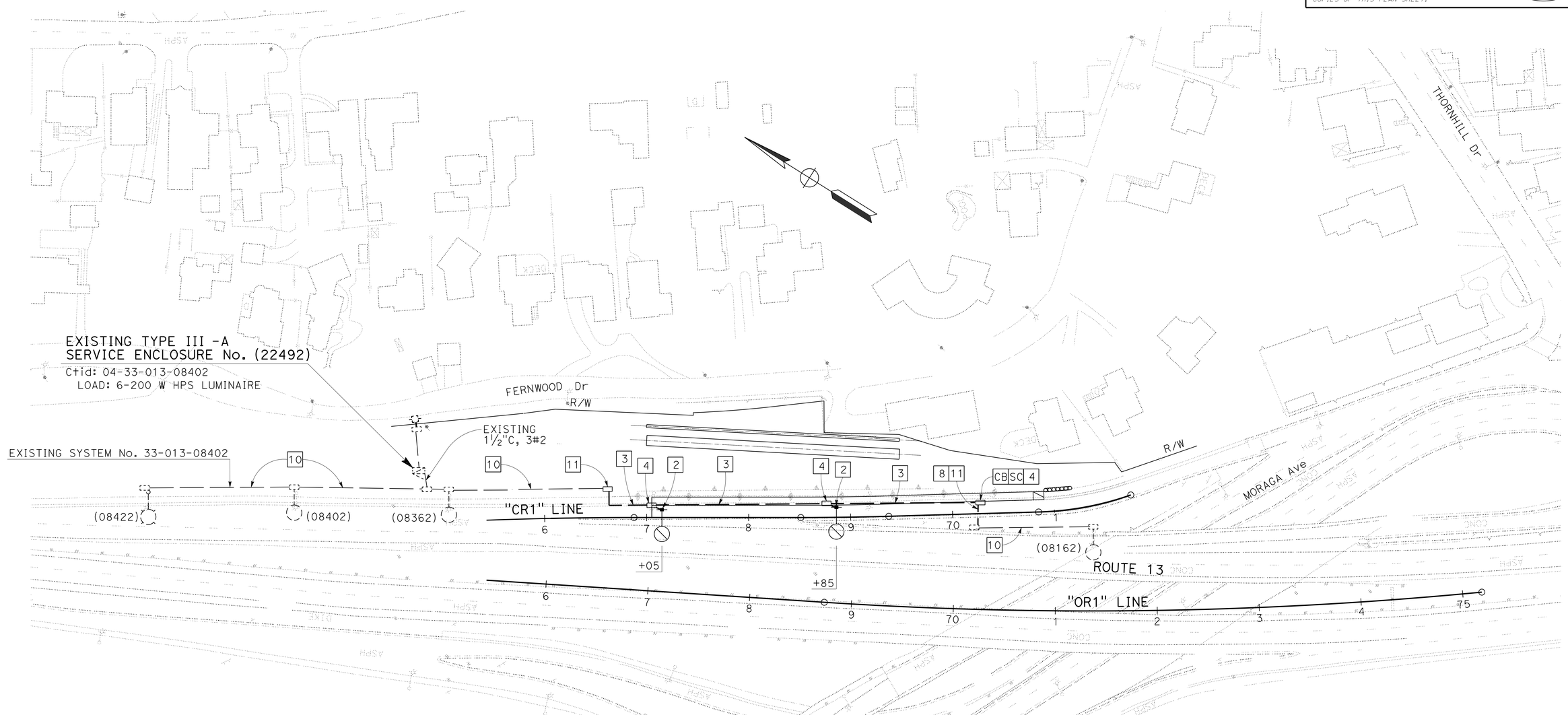

LIGHTING
(STAGE CONSTRUCTION)
STAGE 1

SCALE: 1" = 50'

APPROVED FOR ELECTRICAL WORK ONLY

FOR NOTES, ABBREVIATIONS AND LEGEND, SEE SHEET E-1

E-2

STATE OF CALIFORNIA - DEPARTMENT OF TRANSPORTATION

Caltrans

ELECTRICAL

FUNCTIONAL SUPERVISOR: BEHZAD GOLEMOHAMMADI

CALCULATED-DESIGNED BY: SOHEILA BANA

CHECKED BY: BARON OWYEONG

REVISED BY: SB

DATE REVISED: 3/27/14

LAST REVISION 06-09-14

DATE PLOTTED => 19-OCT-2015

TIME PLOTTED => 15:55

Dist	COUNTY	ROUTE	POST MILES TOTAL PROJECT	SHEET No.	TOTAL SHEETS
04	Ala	13	8.3	40	108

REGISTERED ELECTRICAL ENGINEER 4/2/14 DATE

10-19-15
PLANS APPROVAL DATE

REGISTERED PROFESSIONAL ENGINEER Mahmood Noii No. 13717 Exp. 6-30-17 ELECT STATE OF CALIFORNIA

THE STATE OF CALIFORNIA OR ITS OFFICERS OR AGENTS SHALL NOT BE RESPONSIBLE FOR THE ACCURACY OR COMPLETENESS OF SCANNED COPIES OF THIS PLAN SHEET.

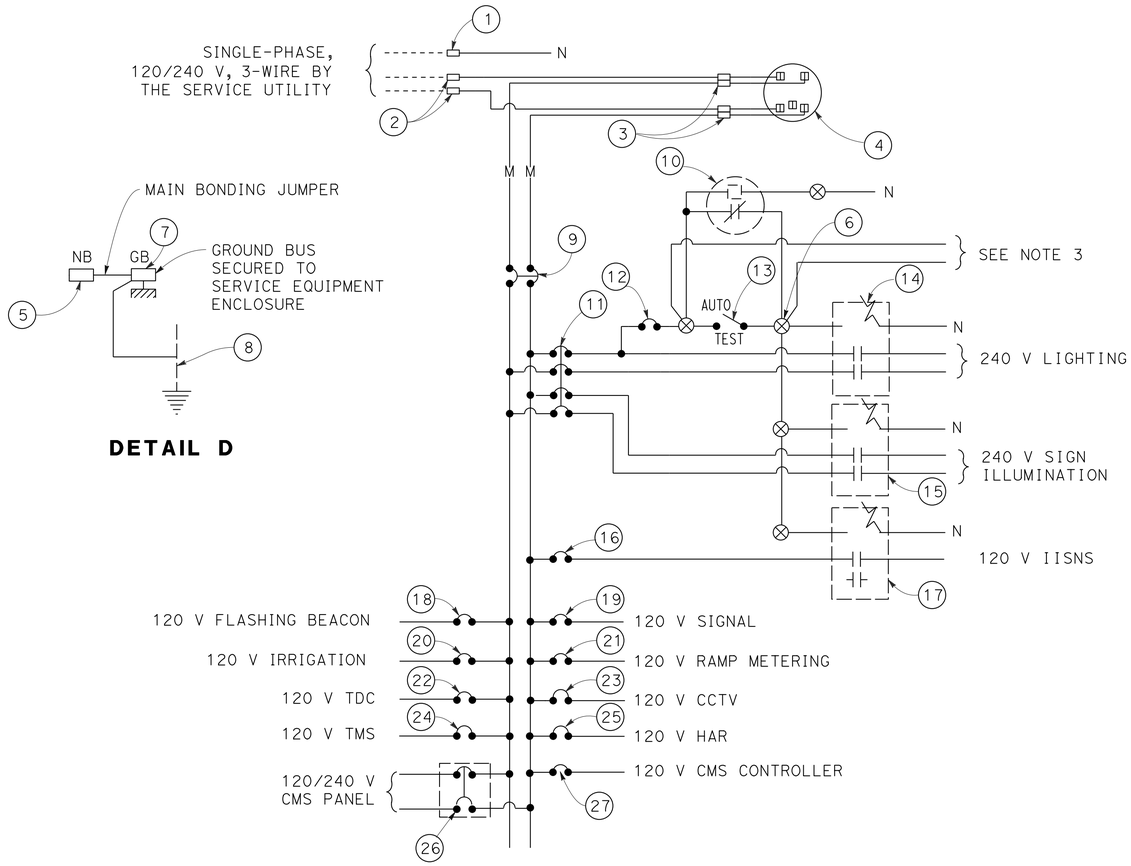

DETAIL D

120/240 V SERVICE WIRING DIAGRAM (TYPICAL)

DETAIL C

NOTES: (FOR THIS SHEET ONLY)

1. VOLTAGE RATINGS OF SERVICE EQUIPMENT SHALL CONFORM TO THE SERVICE VOLTAGES INDICATED ON THE PLANS.
2. UNLESS OTHERWISE INDICATED ON THE PLANS, SERVICE EQUIPMENT ITEMS SHALL BE PROVIDED FOR EACH SERVICE EQUIPMENT ENCLOSURE AS SHOWN.
3. CONNECT TO REMOTE TEST SWITCH MOUNTED ON SIGN POST OR STRUCTURE WHEN REQUIRED.
4. ITEM No. (1) AND (5) SHALL BE ISOLATED FROM THE CABINET.
5. METER SOCKETS SHALL MEET SERVICE UTILITY REQUIREMENTS.
6. THE LANDING LUG SHALL BE SUITABLE FOR MULTIPLE CONDUCTORS.
7. PHOTOELECTRIC CONTROL SHALL BE TYPE II.
8. SERVICE UTILITY WILL INSTALL THE TIME-OF-USE METER IF APPLICABLE.
9. UNLESS OTHERWISE NOTED, THE MAXIMUM NUMBER OF SINGLE-POLE CIRCUIT BREAKER SPACES IN THE ENCLOSURE IS FOURTEEN.
10. SEE STANDARD PLANS ES-2D FOR OTHER DETAILS.

TYPE III-A SERVICE EQUIPMENT ENCLOSURE LEGEND (120/240 V)

ITEM No.	COMPONENT	NAMEPLATE DESCRIPTION	ITEM No.	COMPONENT	NAMEPLATE DESCRIPTION
1	NEUTRAL LUG		15	30 A, 2P, NO CONTACTOR	
2	LANDING LUG		16	15 A, 120 V, 1P, CB	IISNS
3	TEST BYPASS FACILITY		17	30 A, 2P, NO CONTACTOR	
4	METER SOCKET AND SUPPORT		18	15 A, 120 V, 1P, CB	FLASHING BEACON
5	NEUTRAL BUS		19	50 A, 120 V, 1P, CB	SIGNALS
6	TERMINAL BLOCK		20	20 A, 120 V, 1P, CB	IRRIGATION
7	GROUND BUS		21	30 A, 120 V, 1P, CB	RAMP METERING
8	GROUNDING ELECTRODE		22	20 A, 120 V, 1P, CB	TELEPHONE DEMARCATION CABINET
9	100 A, 240 V, 2P, CB	MAIN BREAKER	23	30 A, 120 V, 1P, CB	CCTV
10	PHOTOELECTRIC UNIT (NOTE 7)		24	30 A, 120 V, 1P, CB	TMS
11	30 A, 240 V, 4P, CB	LIGHTING AND SIGN ILLUMINATION	25	30 A, 120 V, 1P, CB	HAR
12	15 A, 120 V, 1P, CB	LIGHTING AND SIGN ILLUMINATION CONTROL	26	30 A, 240 V, 2P, CB	CMS PANEL
13	15 A, 120 V, 1P, TEST SWITCH	TEST SWITCH	27	30 A, 120 V, 1P, CB	CMS CONTROLLER
14	60 A, 2P, NO CONTACTOR				

ELECTRICAL DETAILS
(SERVICE EQUIPMENT ENCLOSURE AND TYPICAL WIRING DIAGRAM, TYPE III-A SERIES)
NO SCALE

FOR NOTES, ABBREVIATIONS AND LEGEND, SEE SHEET E-1

E-3

STATE OF CALIFORNIA - DEPARTMENT OF TRANSPORTATION
Caltrans
ELECTRICAL

FUNCTIONAL SUPERVISOR: BEHZAD GOLEMOHAMMADI
CALCULATED-DESIGNED BY: SOHEILA BANA
CHECKED BY: BARON OEYEONG
REVISED BY: SB
DATE REVISED: 3/27/14

LAST REVISION 06-09-14
DATE PLOTTED => 19-OCT-2015
TIME PLOTTED => 15:55

Dist	COUNTY	ROUTE	POST MILES TOTAL PROJECT	SHEET No.	TOTAL SHEETS
04	Ala	13	8.3	41	108

M Noii 4/2/14
REGISTERED ELECTRICAL ENGINEER DATE

10-19-15
PLANS APPROVAL DATE

REGISTERED PROFESSIONAL ENGINEER
Mahmood Noii
No. 13717
Exp. 6-30-17
ELECT
STATE OF CALIFORNIA

THE STATE OF CALIFORNIA OR ITS OFFICERS OR AGENTS SHALL NOT BE RESPONSIBLE FOR THE ACCURACY OR COMPLETENESS OF SCANNED COPIES OF THIS PLAN SHEET.

LIGHTING

SHEET No.	LED LUMINAIRE ROADWAY 1	TYPE 21 STANDARD LIGHTING	PB 9A	PB	WOOD POLE	CONDUIT 1½"	CONDUCTOR No. 8	CONDUCTOR No. 14
	EA					FT		
E-1	4	2	3	2		550	1100	300
E-2				1	2		1060	0

ITEMS SHOWN IN THIS TABLE ARE NOT A SEPARATE PAY ITEM. FOR INFORMATION ONLY.

ELECTRICAL QUANTITIES

E-4

STATE OF CALIFORNIA - DEPARTMENT OF TRANSPORTATION
Caltrans
ELECTRICAL

FUNCTIONAL SUPERVISOR: BEHZAD GOLEMOHAMMADI
CALCULATED-DESIGNED BY: SOHEILA BANA
CHECKED BY: BARON OEYEONG
REVISED BY: SB
DATE REVISED: 3/27/14

LAST REVISION 06-09-14
DATE PLOTTED => 19-OCT-2015
TIME PLOTTED => 15:55

M

Maint	MAINTENANCE
Max	MAXIMUM
MB	METAL BEAM
MBB	METAL BEAM BARRIER
MBGR	METAL BEAM GUARD RAILING
Med	MEDIAN
MGS	MIDWEST GUARDRAIL SYSTEM
MH	MANHOLE
Min	MINIMUM
Misc	MISCELLANEOUS
Misc I & S	MISCELLANEOUS IRON AND STEEL
Mkr	MARKER
Mod	MODIFIED,
	MODIFY
Mon	MONUMENT
MP	METAL PLATE
MPGR	METAL PLATE GUARD RAILING
MR	MOVEMENT RATING
MSE	MECHANICALLY STABILIZED EMBANKMENT
Mt	MOUNTAIN, MOUNT
Mtl	MATERIAL
MVP	MAINTENANCE VEHICLE PULLOUT

N

N	NORTH
NB	NORTHBOUND
No.	NUMBER (MUST HAVE PERIOD)
Nos.	NUMBERS (MUST HAVE PERIOD)
NPS	NOMINAL PIPE SIZE
NS	NEAR SIDE
NSP	NEW STANDARD PLAN
NTS	NOT TO SCALE

O

Oblr	OBLITERATE
OC	OVERCROSSING
OD	OUTSIDE DIAMETER
OF	OUTSIDE FACE
OG	ORIGINAL GROUND
OGAC	OPEN GRADED ASPHALT CONCRETE
OGFC	OPEN GRADED FRICTION COURSE
OH	OVERHEAD
OHWM	ORDINARY HIGH WATER MARK
O-O	OUT TO OUT
Opp	OPPOSITE
OSD	OVERSIDE DRAIN

P

P	PAGE
PAP	PERFORATED ALUMINUM PIPE
PB	PULL BOX
PC	POINT OF CURVATURE,
	PRECAST
PCC	POINT OF COMPOUND CURVE,
	PORTLAND CEMENT CONCRETE
PCMS	PORTABLE CHANGEABLE MESSAGE SIGN
PCP	PERFORATED CONCRETE PIPE,
	PRESTRESSED CONCRETE PIPE
PCVC	POINT OF COMPOUND VERTICAL CURVE
PEC	PERMIT TO ENTER AND CONSTRUCT
Ped	PEDESTRIAN
Ped OC	PEDESTRIAN OVERCROSSING
Ped UC	PEDESTRIAN UNDERCROSSING
Perm Mtl	PERMEABLE MATERIAL

P continued

PG	PROFILE GRADE
PI	POINT OF INTERSECTION
PJP	PARTIAL JOINT PENETRATION
Pkwy	PARKWAY
₱,PL	PLATE
P/L	PROPERTY LINE
PM	POST MILE,
	TIME FROM NOON TO MIDNIGHT
PN	PAVING NOTCH
POC	POINT OF HORIZONTAL CURVE
POT	POINT OF TANGENT
POVC	POINT OF VERTICAL CURVE
PP	PIPE PILE,
	PLASTIC PIPE,
	POWER POLE
PPL	PREFORMED PERMEABLE LINER
PPP	PERFORATED PLASTIC PIPE
PRC	POINT OF REVERSE CURVE
PRF	PAVEMENT REINFORCING FABRIC
PRVC	POINT OF REVERSE VERTICAL CURVE
PS&E	PLANS, SPECIFICATIONS AND ESTIMATES
PS, P/S	PRESTRESSED
PSP	PERFORATED STEEL PIPE
PT	POINT OF TANGENCY
PVC	POLYVINYL CHLORIDE
Pvmt	PAVEMENT

Q

Qty	QUANTITY

R

R	RADIUS
R & D	REMOVE AND DISPOSE
R & S	REMOVE AND SALVAGE
R/C	RATE OF CHANGE
RCA	REINFORCED CONCRETE ARCH
RCB	REINFORCED CONCRETE BOX
RCP	REINFORCED CONCRETE PIPE
RCPA	REINFORCED CONCRETE PIPE ARCH
Rd	ROAD
Reinf	REINFORCED,
	REINFORCEMENT,
	REINFORCING
Rel	RELOCATE
Repl	REPLACEMENT
Ret	RETAINING
Rev	REVISED, REVISION
Rdwy	ROADWAY
RHMA	RUBBERIZED HOT MIX ASPHALT
Riv	RIVER
RM	ROAD-MIXED
RP	RADIUS POINT,
	REFERENCE POINT
RR	RAILROAD
RSP	ROCK SLOPE PROTECTION,
	REVISED STANDARD PLAN
Rt	RIGHT
Rte	ROUTE
RW	REDWOOD,
	RETAINING WALL
R/W	RIGHT OF WAY
Rwy	RAILWAY

S

S	SOUTH,
	SUPPLEMENT
SAE	STRUCTURE APPROACH EMBANKMENT
Salv	SALVAGE
SAPP	STRUCTURAL ALUMINUM PLATE PIPE
SB	SOUTHBOUND
SC	SAND CUSHION
SCSP	SLOTTED CORRUGATED STEEL PIPE
SD	STORM DRAIN
Sec	SECOND,
	SECTION
Sep	SEPARATION
SG	SUBGRADE
Shld	SHOULDER
Sht	SHEET
Sim	SIMILAR
℄	STATION LINE
SM	SELECTED MATERIAL
Spec	SPECIAL,
	SPECIFICATIONS
SPP	SLOTTED PLASTIC PIPE
SS	SLOPE STAKE
SSBM	STRAP AND SADDLE BRACKET METHOD
SSD	STRUCTURAL SECTION DRAIN
SSPA	STRUCTURAL STEEL PLATE ARCH
SSPP	STRUCTURAL STEEL PLATE PIPE
SSPPA	STRUCTURAL STEEL PLATE PIPE ARCH
SSRP	STEEL SPIRAL RIB PIPE
St	STREET
Sta	STATION
STBB	SINGLE THRIE BEAM BARRIER
Std	STANDARD
Str	STRUCTURE
Surf	SURFACING
SW	SIDEWALK,
	SOUND WALL
Swr	SEWER
Sym	SYMMETRICAL
S4S	SURFACE 4 SIDES

T

T	SEMI-TANGENT
Tan	TANGENT
TBB	THRIE BEAM BARRIER
Tbr	TIMBER
TC	TOP OF CURB
TCB	TRAFFIC CONTROL BOX
TCE	TEMPORARY CONSTRUCTION EASEMENT
Tel	TELEPHONE
Temp	TEMPORARY
TG	TOP OF GRADE
Tot	TOTAL
TP	TELEPHONE POLE
TPB	TREATED PERMEABLE BASE
TPM	TREATED PERMEABLE MATERIAL
Trans	TRANSITION

T continued

TS	TRANSVERSE,
	TRAFFIC SIGNAL,
	TUBULAR STEEL
Typ	TYPICAL

U

UC	UNDERCROSSING
UD	UNDERDRAIN
UG	UNDERGROUND
UON	UNLESS OTHERWISE NOTED
UP	UNDERPASS

V

V	VALVE,
	DESIGN SPEED
Var	VARIABLE,
	VARIES
VC	VERTICAL CURVE
VCP	VITRIFIED CLAY PIPE
Vert	VERTICAL
Via	VIADUCT
Vol	VOLUME

W

W	WEST,
	WIDTH
WB	WESTBOUND
WH	WEEP HOLE
WM	WIRE MESH
WS	WATER SURFACE
WSP	WELDED STEEL PIPE
Wt	WEIGHT
WV	WATER VALVE
WW	WINGWALL
WWLOL	WINGWALL LAYOUT LINE

X

X Sec	CROSS SECTION
Xing	CROSSING

Y

Yr	YEAR
Yrs	YEARS

Dist	COUNTY	ROUTE	POST MILES TOTAL PROJECT	SHEET No.	TOTAL SHEETS
04	Ala	13	8.3	42	101

Grace M. Tsushima
REGISTERED CIVIL ENGINEER

July 19, 2013
PLANS APPROVAL DATE

REGISTERED PROFESSIONAL ENGINEER
Grace M. Tsushima
No. C49814
Exp. 9-30-14
CIVIL
STATE OF CALIFORNIA

THE STATE OF CALIFORNIA OR ITS OFFICERS OR AGENTS SHALL NOT BE RESPONSIBLE FOR THE ACCURACY OR COMPLETENESS OF SCANNED COPIES OF THIS PLAN SHEET.

TO ACCOMPANY PLANS DATED 10-19-15

UNIT OF MEASUREMENT SYMBOLS:

Some of the symbols used in the project plan quantity tables and in the Bid Item List are:

TABLE A

SYMBOL USED	DEFINITIONS
ACRE	ACRE
CF	CUBIC FOOT
CY	CUBIC YARD
EA	EACH
GAL	GALLON
LB	POUND
LF	LINEAR FOOT
SQFT	SQUARE FOOT
SQYD	SQUARE YARD
STA	100 FEET
TAB	TABLET
TON	2,000 POUNDS

Some of the symbols used in the plans other than in the project plan quantity tables are:

TABLE B

SYMBOL USED	DEFINITIONS
ksi	KIPS PER SQUARE INCH
ksf	KIPS PER SQUARE FOOT
psi	POUNDS PER SQUARE INCH
psf	POUNDS PER SQUARE FOOT
lb/ft^3, pcf	POUNDS PER CUBIC FOOT
tsf	TONS PER SQUARE FOOT
mph, MPH *	MILES PER HOUR
ø	NOMINAL DIAMETER
oz	OUNCE
lb	POUND
kip	1,000 POUNDS
cal	CALORIE
ft	FOOT OR FEET
gal	GALLON

* For use on a sign panel only

STATE OF CALIFORNIA
DEPARTMENT OF TRANSPORTATION

ABBREVIATIONS (SHEET 2 OF 2)

NO SCALE

RSP A10B DATED JULY 19, 2013 SUPERSEDES STANDARD PLAN A10B DATED MAY 20, 2011 - PAGE 2 OF THE STANDARD PLANS BOOK DATED 2010.

REVISED STANDARD PLAN RSP A10B

2010 REVISED STANDARD PLAN RSP A10B

6-7-13

Dist	COUNTY	ROUTE	POST MILES TOTAL PROJECT	SHEET No.	TOTAL SHEETS
04	Ala	13	8.3	43	108

Randell D. Hiatt
REGISTERED CIVIL ENGINEER

July 19, 2013
PLANS APPROVAL DATE

REGISTERED PROFESSIONAL ENGINEER
Randell D. Hiatt
No. C50200
Exp. 6-30-15
CIVIL
STATE OF CALIFORNIA

THE STATE OF CALIFORNIA OR ITS OFFICERS OR AGENTS SHALL NOT BE RESPONSIBLE FOR THE ACCURACY OR COMPLETENESS OF SCANNED COPIES OF THIS PLAN SHEET.

TO ACCOMPANY PLANS DATED 10-19-15

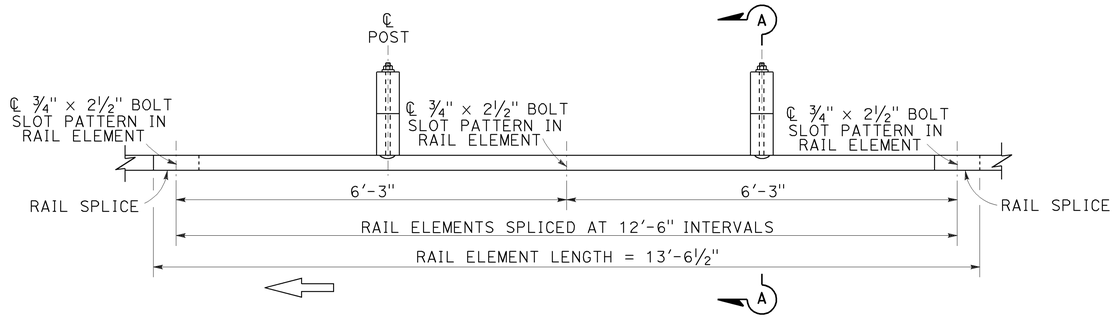

PLAN

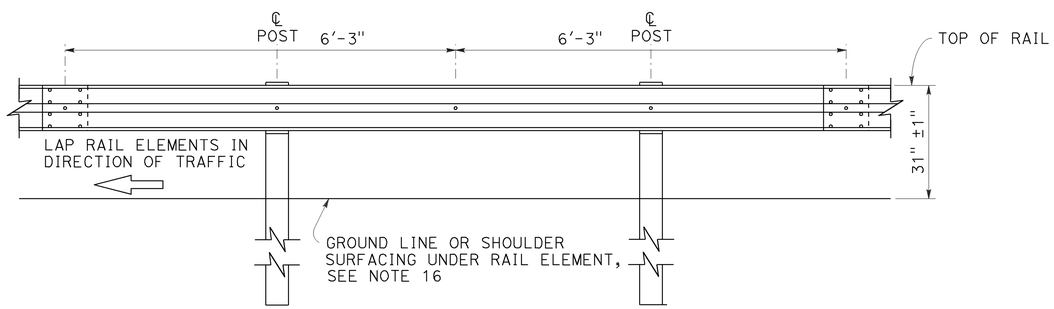

ELEVATION

MIDWEST GUARDRAIL SYSTEM WITH WOOD POST AND BLOCKS

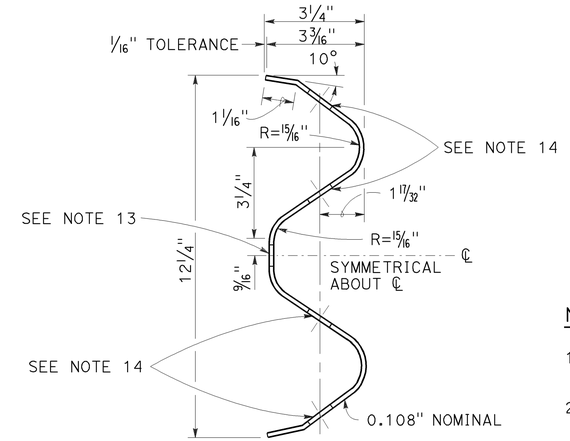

SECTION THRU RAIL ELEMENT

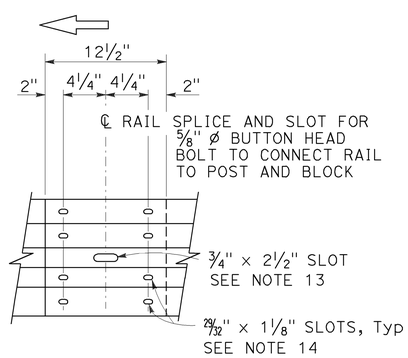

ELEVATION

RAIL ELEMENT SPLICE DETAIL

a) Connect the over lapped end of the rail elements with ⅝" ø × 1⅜" button head oval shoulder splice bolts inserted into the 29⁄32" × 1⅛" slots and bolted together with ⅝" ø recessed hex nuts. Recess of hex nut points toward rail element. A total of 8 bolts and nuts are to be used at each rail splice connection.

b) The ends of the rail elements are to be overlapped in the direction of traffic (see details).

c) Where end cap is to be attached to the end of a rail element, a total of 4 of the above described splice bolts and nuts are to be used.

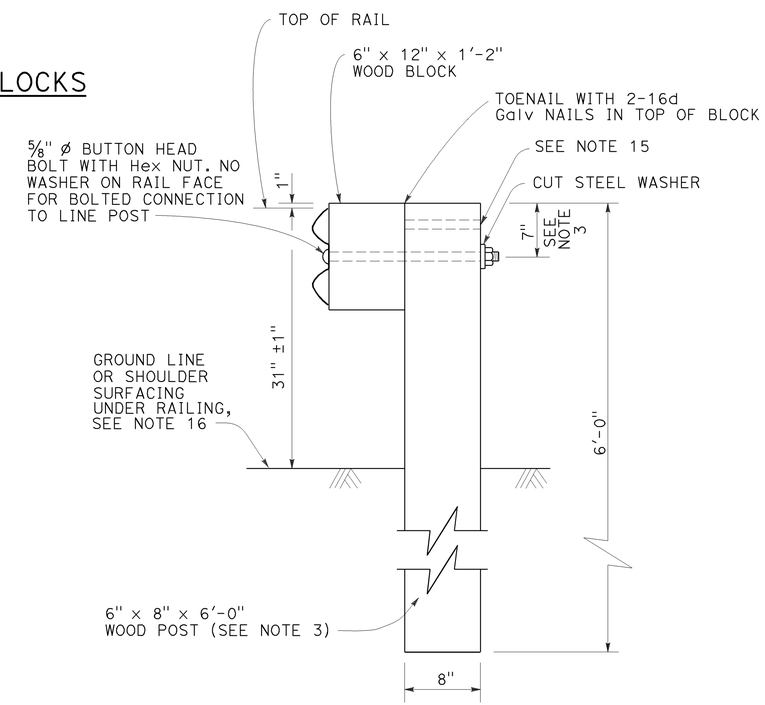

SECTION A-A

TYPICAL WOOD LINE POST INSTALLATION

See Note 4

NOTES:

1. For details of steel post installations, see Revised Standard Plan RSP A77L2.
2. For details of standard hardware used to construct MGS, see Revised Standard Plan RSP A77M1.
3. For details of wood posts and wood blocks used to construct MGS, see Revised Standard Plan RSP A77N1.
4. For additional installation details, see Revised Standard Plan RSP A77N3.
5. MGS post spacing to be 6'-3" center to center, except as otherwise noted.
6. For MGS typical layouts, see the A77P, A77Q and A77R Series of Standard Plans.
7. If railing is connected to terminal system end treatment, use 31" height terminal system end treatment.
8. For MGS end anchor details, see Revised Standard Plans RSP A77S1 and RSP A77T2.
9. For details of MGS transition to bridge railing, see Revised Standard Plan RSP A77U4.
10. For additional details of MSG connection to bridge railing, see Revised Standard Plans RSP A77U1, RSP A77U2 and RSP A77V1.
11. For MGS connection details to abutments and walls, see Revised Standard Plan RSP A77U3.
12. For typical MGS delineation and dike positioning details, see Revised Standard Plan RSP A77N4.
13. Slotted hole for bolted connection of rail element to block and post. See "Section Thru Rail Element".
14. Slotted holes for splice bolts to overlap ends of rail element. See "Section Thru Rail Element".
15. Additional hole in uppermost portion of line post is for potential future adjustments of railing height. See Revised Standard Plan RSP A77N1.
16. Install posts in soil.

STATE OF CALIFORNIA
DEPARTMENT OF TRANSPORTATION

MIDWEST GUARDRAIL SYSTEM STANDARD RAILING SECTION (WOOD POST WITH WOOD BLOCK)

NO SCALE

RSP A77L1 DATED JULY 19, 2013 SUPPLEMENTS STANDARD PLANS BOOK DATED 2010.

REVISED STANDARD PLAN RSP A77L1

2010 REVISED STANDARD PLAN RSP A77L1

Dist	COUNTY	ROUTE	POST MILES TOTAL PROJECT	SHEET No.	TOTAL SHEETS
04	Ala	13	8.3	44	108

Randell D. Hiatt
REGISTERED CIVIL ENGINEER

July 19, 2013
PLANS APPROVAL DATE

REGISTERED PROFESSIONAL ENGINEER
Randell D. Hiatt
No. C50200
Exp. 6-30-15
CIVIL
STATE OF CALIFORNIA

THE STATE OF CALIFORNIA OR ITS OFFICERS OR AGENTS SHALL NOT BE RESPONSIBLE FOR THE ACCURACY OR COMPLETENESS OF SCANNED COPIES OF THIS PLAN SHEET.

TO ACCOMPANY PLANS DATED 10-19-15

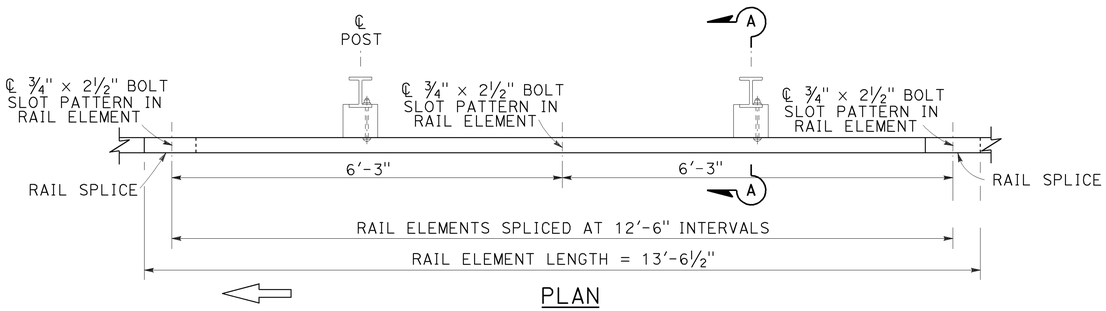

PLAN

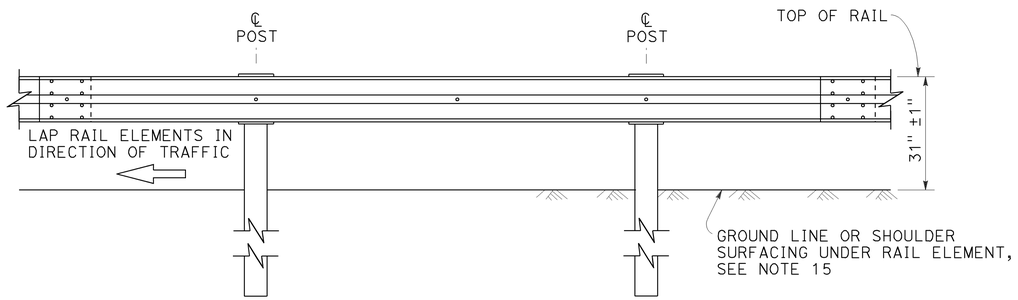

ELEVATION

MIDWEST GUARDRAIL SYSTEM WITH STEEL POSTS AND NOTCHED WOOD OR NOTCHED RECYCLED PLASTIC BLOCKS

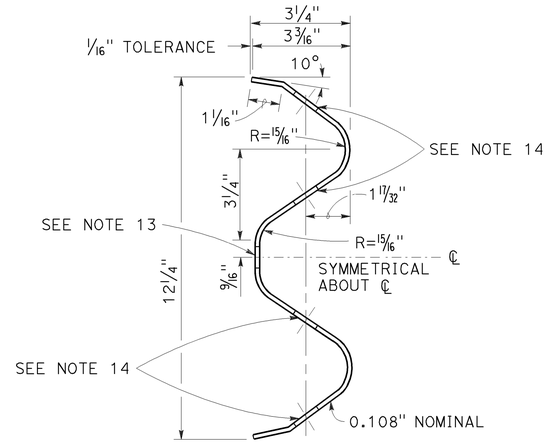

SECTION THRU RAIL ELEMENT

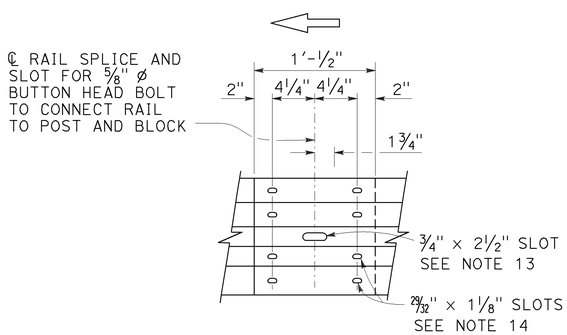

ELEVATION

RAIL ELEMENT SPLICE DETAIL

a) Connect the over lapped end of the rail elements with ⅝" ø × 1⅜" button head oval shoulder splice bolts inserted into the 29⁄32" × 1⅛" slots and bolted together with ⅝" ø recessed hex nuts. Recess of hex nut points toward rail element. A total of 8 bolts and nuts are to be used at each rail splice connection.

b) The ends of the rail elements are to be overlapped in the direction of traffic (see details).

c) Where end cap is to be attached to the end of a rail element, a total of 4 of the above described splice bolts and nuts are to be used.

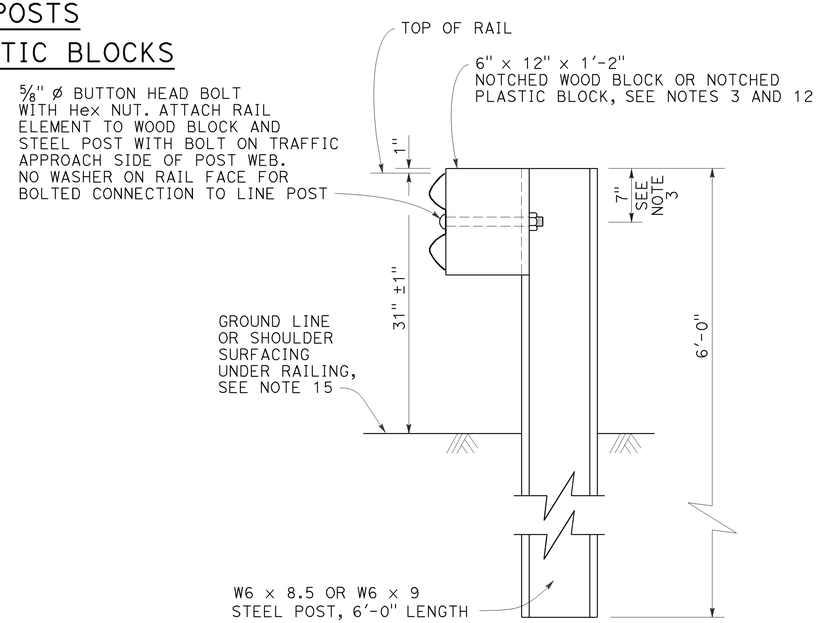

SECTION A-A

TYPICAL STEEL LINE POST INSTALLATION

See Note 4

NOTES:

1. For details of wood post installations, see Revised Standard Plan RSP A77L1.
2. For details of standard hardware used to construct MGS, see Revised Standard Plan RSP A77M1.
3. For details of steel posts and notched wood blocks used to construct MGS, see Revised Standard Plan RSP A77N2.
4. For additional installation details, see Revised Standard Plan RSP A77N3.
5. MGS post spacing to be 6'-3" center to center, except as otherwise noted.
6. For MGS typical layouts, see the A77P, A77Q and A77R Series of Standard Plans.
7. If railing is connected to terminal system end treatment, use 31" height terminal system end treatment.
8. For MGS end anchor details, see Revised Standard Plans RSP A77S1 and RSP A77T2.
9. For details of MGS transition to bridge railing, see Revised Standard Plan RSP A77U4.
10. For additional details of MGS connection to bridge railings, see Revised Standard Plans RSP A77U1, RSP A77U2 and RSP A77V1.
11. For dike positioning and MGS delineation details, see Revised Standard Plan RSP A77N4.
12. Notched face of block faces steel post.
13. Slotted hole for bolted connection of rail element to block and post. See "Section Thru Rail Element".
14. Slotted holes for splice bolts to overlap ends of rail element. See "Section Thru Rail Element".
15. Install posts in soil.

STATE OF CALIFORNIA
DEPARTMENT OF TRANSPORTATION

MIDWEST GUARDRAIL SYSTEM STANDARD RAILING SECTION (STEEL POST WITH NOTCHED WOOD OR NOTCHED RECYCLED PLASTIC BLOCK)

NO SCALE

RSP A77L2 DATED JULY 19, 2013 SUPPLEMENTS THE STANDARD PLANS BOOK DATED 2010.

REVISED STANDARD PLAN RSP A77L2

2010 REVISED STANDARD PLAN RSP A77L2

7-3-13

Dist	COUNTY	ROUTE	POST MILES TOTAL PROJECT	SHEET No.	TOTAL SHEETS
04	Ala	13	8.3	45	108

Randell D. Hiatt
REGISTERED CIVIL ENGINEER

July 19, 2013
PLANS APPROVAL DATE

REGISTERED PROFESSIONAL ENGINEER
Randell D. Hiatt
No. C50200
Exp. 6-30-15
CIVIL
STATE OF CALIFORNIA

THE STATE OF CALIFORNIA OR ITS OFFICERS OR AGENTS SHALL NOT BE RESPONSIBLE FOR THE ACCURACY OR COMPLETENESS OF SCANNED COPIES OF THIS PLAN SHEET.

TO ACCOMPANY PLANS DATED 10-19-15

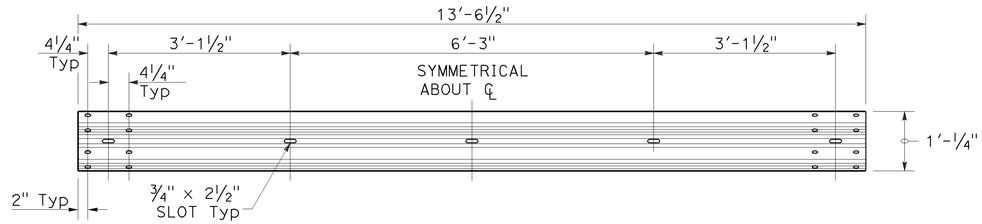

TYPICAL RAIL ELEMENT

NOTE:

1. Slotted holes for splice bolts to overlap ends of rail element.

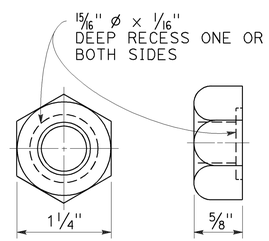

⅝" ø RECESS NUT

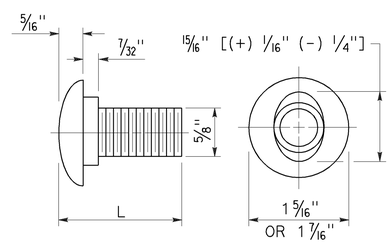

⅝" ø BUTTON HEAD BOLT

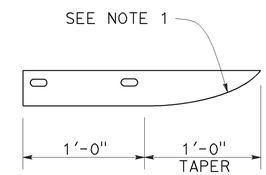

PLAN

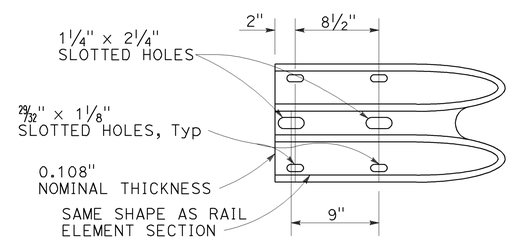

ELEVATION

END CAP
(TYPE A)

BUTTON HEAD BOLT

L	THREAD LENGTH
1⅜"	FULL THREAD LENGTH
2"	FULL THREAD LENGTH
10"	4" Min THREAD LENGTH
18"	4" Min THREAD LENGTH
20"	4" Min THREAD LENGTH
22"	4" Min THREAD LENGTH
26"	4" Min THREAD LENGTH
36"	4" Min THREAD LENGTH
** 2¾"	2" Min THREAD LENGTH
** 19"	4" Min THREAD LENGTH

** For nested rail applications.

STATE OF CALIFORNIA
DEPARTMENT OF TRANSPORTATION

MIDWEST GUARDRAIL SYSTEM STANDARD HARDWARE

NO SCALE

RSP A77M1 DATED JULY 19, 2013 SUPPLEMENTS THE STANDARD PLANS BOOK DATED 2010.

REVISED STANDARD PLAN RSP A77M1

2010 REVISED STANDARD PLAN RSP A77M1

Dist	COUNTY	ROUTE	POST MILES TOTAL PROJECT	SHEET No.	TOTAL SHEETS
04	Ala	13	8.3	46	108

Randell D. Hiatt
REGISTERED CIVIL ENGINEER

July 19, 2013
PLANS APPROVAL DATE

REGISTERED PROFESSIONAL ENGINEER
Randell D. Hiatt
No. C50200
Exp. 6-30-15
CIVIL
STATE OF CALIFORNIA

THE STATE OF CALIFORNIA OR ITS OFFICERS OR AGENTS SHALL NOT BE RESPONSIBLE FOR THE ACCURACY OR COMPLETENESS OF SCANNED COPIES OF THIS PLAN SHEET.

TO ACCOMPANY PLANS DATED 10-19-15

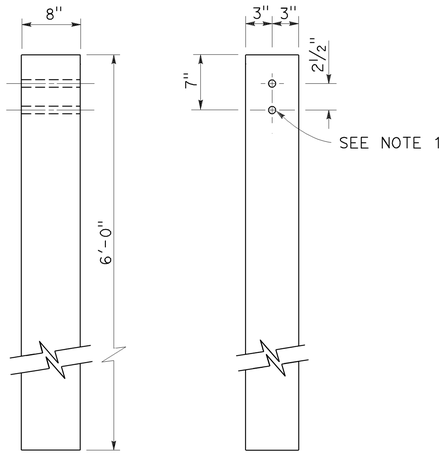

SIDE FRONT

6" x 8" WOOD POST
See Note 3

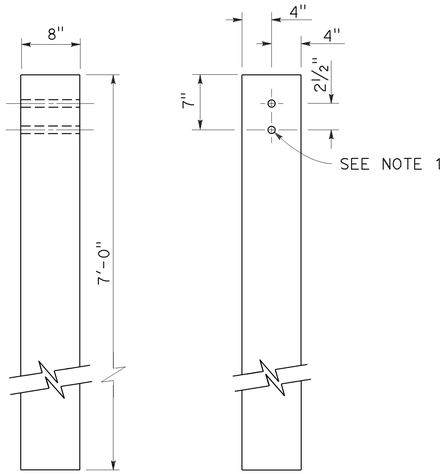

SIDE FRONT

8" x 8" WOOD POST
See Note 4

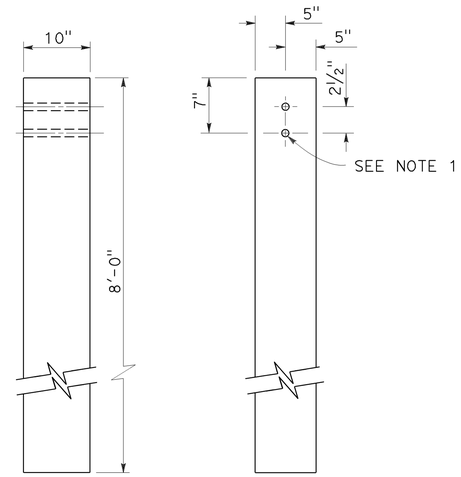

SIDE FRONT

10" x 10" WOOD POST
See Note 5

NOTES:

1. All holes in wood posts and blocks shall be 3/4" Dia ± 1/16".
2. Dimensions shown for wood post are nominal.
3. This post and block combination used for standard line post sections of MGS.
4. This post and 8" x 12" block combination used for line post sections of MGS on narrow roadways.
5. This post and 8" x 12" block combination is typically used where strengthened line post sections of MGS are warranted to shield fixed objects.
6. See Revised Standard Plan RSP A77L3 for use of 6" x 8" and 8" x 8" wood blocks.

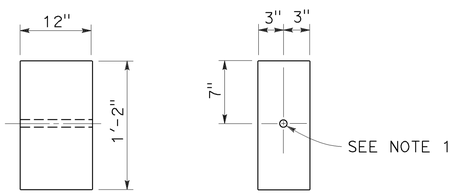

SIDE FRONT

6" x 12" WOOD BLOCK
See Note 3

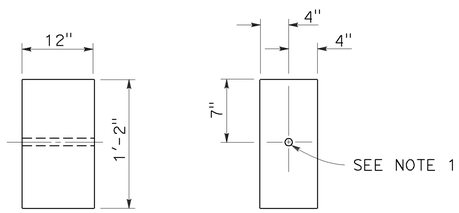

SIDE FRONT

8" x 12" WOOD BLOCK

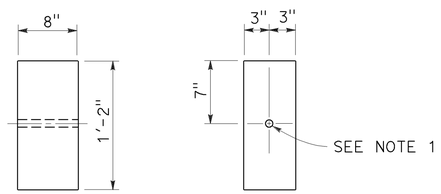

SIDE FRONT

6" x 8" WOOD BLOCK
Only for use with metal beam guard rail see Note 6

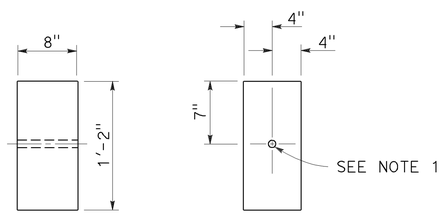

SIDE FRONT

8" x 8" WOOD BLOCK
Only for use with metal beam guard rail see Note 6

STATE OF CALIFORNIA
DEPARTMENT OF TRANSPORTATION

MIDWEST GUARDRAIL SYSTEM WOOD POST AND WOOD BLOCK DETAILS

NO SCALE

RSP A77N1 DATED JULY 19, 2013 SUPPLEMENTS THE STANDARD PLANS BOOK DATED 2010.

REVISED STANDARD PLAN RSP A77N1

2010 REVISED STANDARD PLAN RSP A77N1

7-3-13

Dist	COUNTY	ROUTE	POST MILES TOTAL PROJECT	SHEET No.	TOTAL SHEETS
04	Ala	13	8.3	47	108

Randell D. Hiatt
REGISTERED CIVIL ENGINEER

July 19, 2013
PLANS APPROVAL DATE

REGISTERED PROFESSIONAL ENGINEER
Randell D. Hiatt
No. C50200
Exp. 6-30-15
CIVIL
STATE OF CALIFORNIA

THE STATE OF CALIFORNIA OR ITS OFFICERS OR AGENTS SHALL NOT BE RESPONSIBLE FOR THE ACCURACY OR COMPLETENESS OF SCANNED COPIES OF THIS PLAN SHEET.

TO ACCOMPANY PLANS DATED 10-19-15

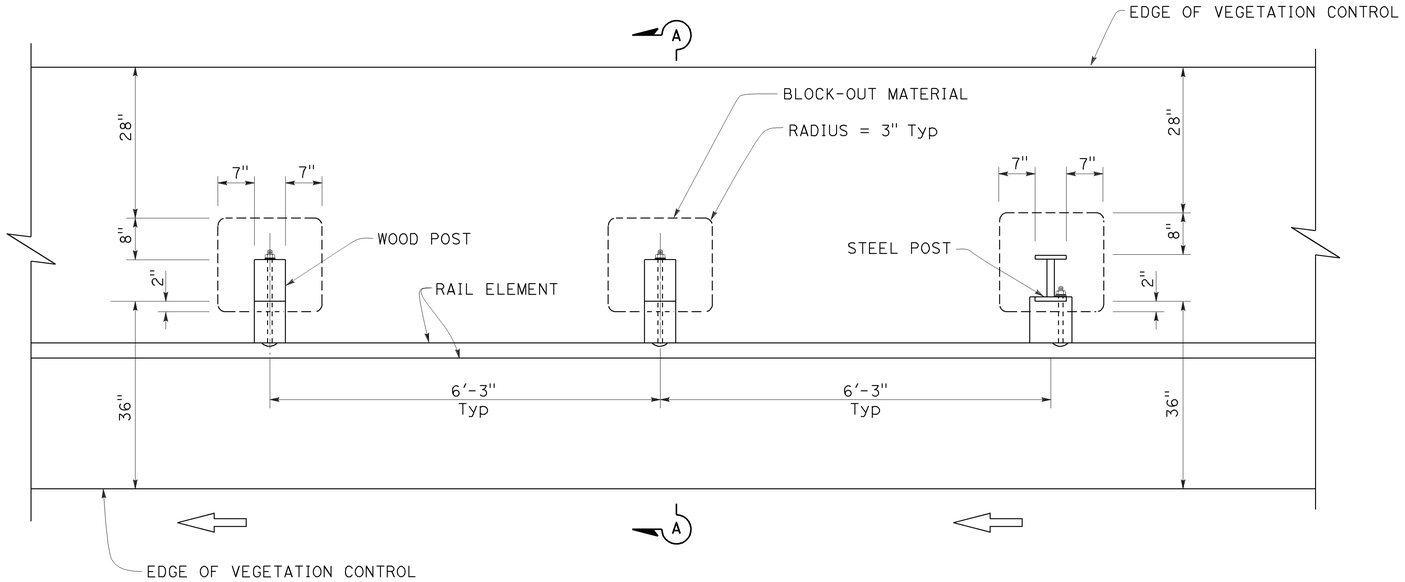

PLAN

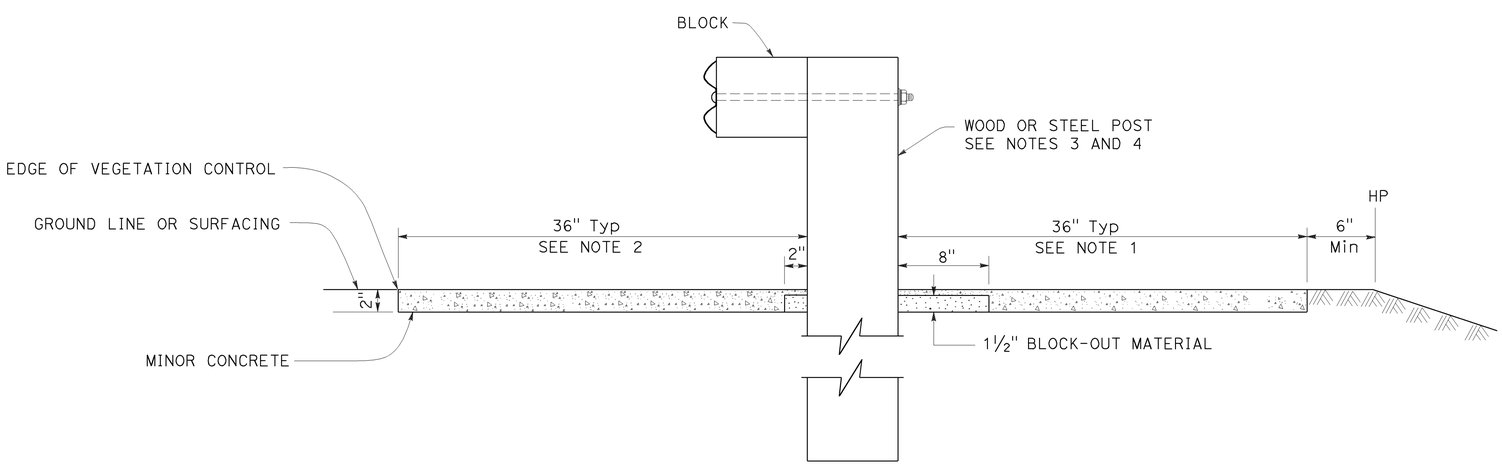

SECTION A-A

NOTES:

1. Where the distance between back of post and hinge point is less than 42", construct vegetation control to 6" from hinge point while maintaining the 8" block-out at back of post. If the 8" block-out at back of post can not be maintained, construct vegetation control flush with the back edge of post.
2. Where dike is constructed under railing, construct vegetation control to back edge of dike. Where paved shoulder is constructed within 36" in front of the post, construct vegetation control to the edge of paved shoulder.
3. For wood post sizes, see Revised Standard Plan RSP A77N1.
4. For steel post sizes, see Revised Standard Plan RSP A77N2.
5. For details not shown, see Revised Standard Plans RSP A77L1 and RSP A77L2.

STATE OF CALIFORNIA
DEPARTMENT OF TRANSPORTATION

MIDWEST GUARDRAIL SYSTEM TYPICAL VEGETATION CONTROL STANDARD RAILING SECTION

NO SCALE

RSP A77N5 DATED JULY 19, 2013 SUPPLEMENTS THE STANDARD PLANS BOOK DATED 2010.

REVISED STANDARD PLAN RSP A77N5

2010 REVISED STANDARD PLAN RSP A77N5

7-3-13

Dist	COUNTY	ROUTE	POST MILES TOTAL PROJECT	SHEET No.	TOTAL SHEETS
04	Ala	13	8.3	48	108

Randell D. Hiatt
REGISTERED CIVIL ENGINEER

July 19, 2013
PLANS APPROVAL DATE

REGISTERED PROFESSIONAL ENGINEER
Randell D. Hiatt
No. C50200
Exp. 6-30-15
CIVIL
STATE OF CALIFORNIA

THE STATE OF CALIFORNIA OR ITS OFFICERS OR AGENTS SHALL NOT BE RESPONSIBLE FOR THE ACCURACY OR COMPLETENESS OF SCANNED COPIES OF THIS PLAN SHEET.

TO ACCOMPANY PLANS DATED 10-19-15

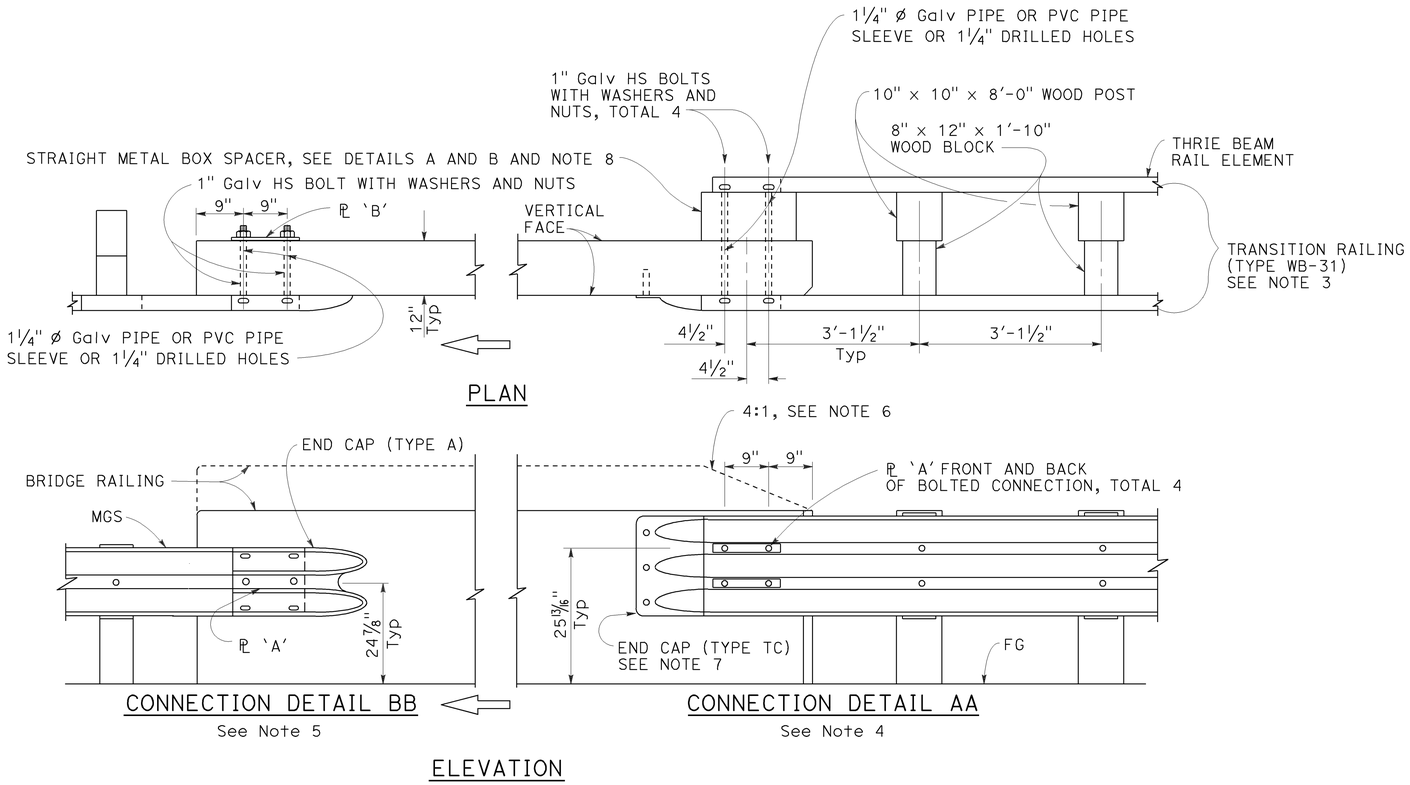

MIDWEST GUARDRAIL SYSTEM CONNECTION TO BRIDGE RAILING WITHOUT SIDEWALK

NOTES:

1. See Revised Standard Plan RSP A77U2 for additional connection details to bridges without sidewalks.
2. Additional details of posts, blocks and hardware are shown on Revised Standard Plans RSP A77M1, RSP A77N1 and RSP A77N2.
3. For additional details of Transition Railing (Type WB-31), see Revised Standard Plan RSP A77U4. Transition Railing (Type WB-31) transitions the 12 gauge MGS railing section to a heavier gage nested thrie beam railing section which is connected to the concrete bridge railing.
4. For typical use of Connection Detail AA, see Layout Types 12A and 12B on Revised Standard Plan RSP A77Q1, Layout Types 12C and 12D on Revised Standard Plan RSP A77Q2, and Layout Type 12E on Revised Standard Plan RSP A77Q3.
5. For typical use of Connection Detail BB, see Layout Type 12D (structure departure railing connection) on Revised Standard Plan RSP A77Q2 and Layout Type 12DD on Revised Standard Plan RSP A77Q5.
6. Where the height of the bridge railing exceeds the height of the thrie beam railing by more than 1" at Connection Detail AA, taper the top of the end of the bridge railing at 4:1 to match the top elevation of the thrie beam rail.
7. For details of End Cap (Type TC), see Revised Standard Plan RSP A77U4.
8. See Revised Standard Plan RSP A77U4 for additional details regarding depth dimension for straight metal box spacer.

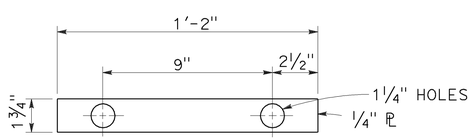

PLATE 'A'

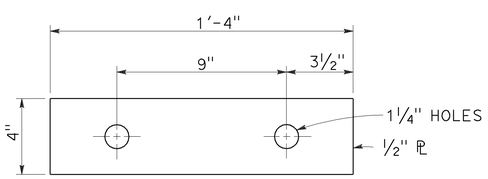

PLATE 'B'
(For backside of connection BB)

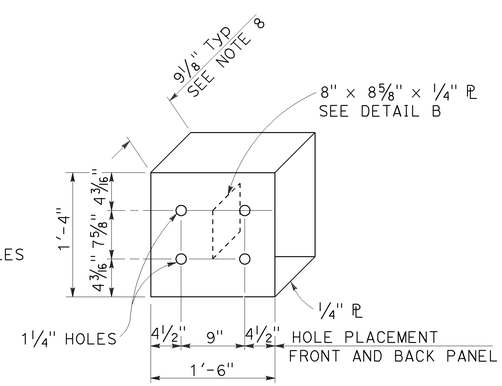

DETAIL A

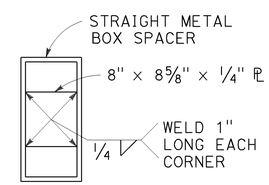

DETAIL B

STRAIGHT METAL BOX SPACER

STATE OF CALIFORNIA
DEPARTMENT OF TRANSPORTATION

MIDWEST GUARDRAIL SYSTEM CONNECTIONS TO BRIDGE RAILINGS WITHOUT SIDEWALKS DETAILS No. 1

NO SCALE

RSP A77U1 DATED JULY 19, 2013 SUPPLEMENTS THE STANDARD PLANS BOOK DATED 2010.

REVISED STANDARD PLAN RSP A77U1

2010 REVISED STANDARD PLAN RSP A77U1

7-8-13

Dist	COUNTY	ROUTE	POST MILES TOTAL PROJECT	SHEET No.	TOTAL SHEETS
04	Ala	13	8.3	49	108

Randell D. Hiatt
REGISTERED CIVIL ENGINEER

July 19, 2013
PLANS APPROVAL DATE

REGISTERED PROFESSIONAL ENGINEER
Randell D. Hiatt
No. C50200
Exp. 6-30-15
CIVIL
STATE OF CALIFORNIA

THE STATE OF CALIFORNIA OR ITS OFFICERS OR AGENTS SHALL NOT BE RESPONSIBLE FOR THE ACCURACY OR COMPLETENESS OF SCANNED COPIES OF THIS PLAN SHEET.

TO ACCOMPANY PLANS DATED 10-19-15

NOTES:

1. Refer to Revised Standard Plans RSP A77L1 and RSP A77L2 for component details for MGS not shown on this plan.
2. All posts for any standard barrier run shall be of the same type: Wood or Steel.
3. Install posts in soil.

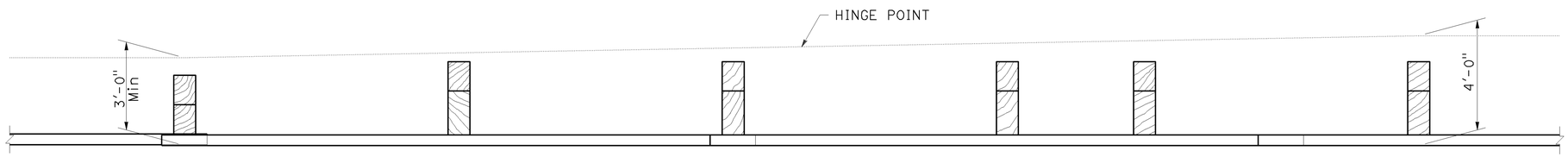

PLAN

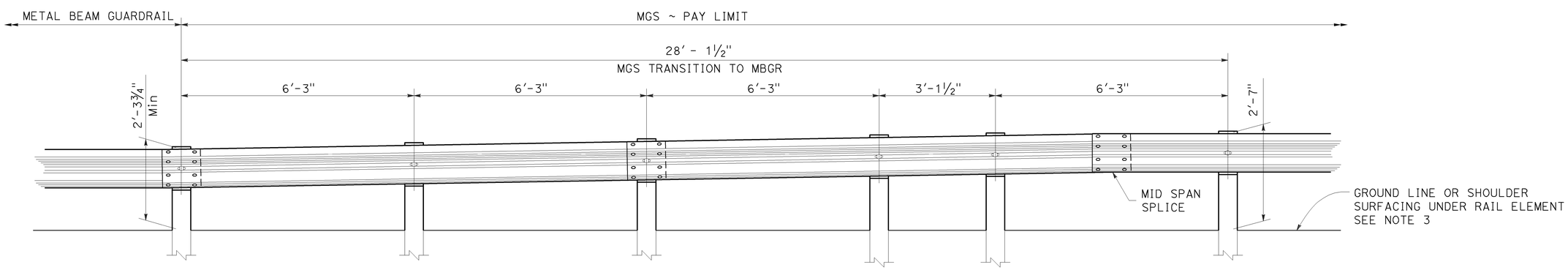

ELEVATION

STATE OF CALIFORNIA
DEPARTMENT OF TRANSPORTATION

MIDWEST GUARDRAIL SYSTEM TRANSITION TO METAL BEAM GUARDRAIL

NO SCALE

RSP A77U5 DATED JULY 19, 2013 SUPPLEMENTS THE STANDARD PLANS BOOK DATED 2010.

REVISED STANDARD PLAN RSP A77U5

2010 REVISED STANDARD PLAN RSP A77U5

Dist	COUNTY	ROUTE	POST MILES TOTAL PROJECT	SHEET No.	TOTAL SHEETS
04	Ala	13	8.3	50	108

REGISTERED CIVIL ENGINEER

July 19, 2013
PLANS APPROVAL DATE

REGISTERED PROFESSIONAL ENGINEER
Michael Janzen
No. 44788
Exp. 03-31-14
CIVIL
STATE OF CALIFORNIA

THE STATE OF CALIFORNIA OR ITS OFFICERS OR AGENTS SHALL NOT BE RESPONSIBLE FOR THE ACCURACY OR COMPLETENESS OF SCANNED COPIES OF THIS PLAN SHEET.

TO ACCOMPANY PLANS DATED 10-19-15

2010 REVISED STANDARD PLAN RSP A87A

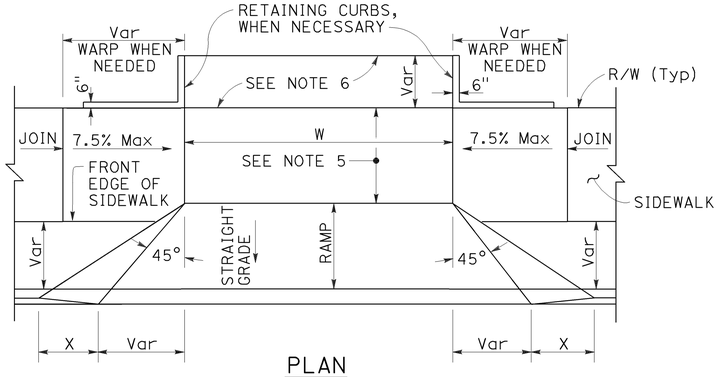

PLAN

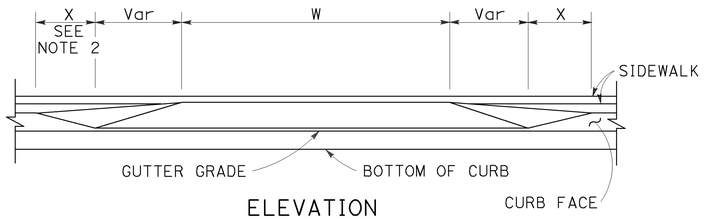

ELEVATION

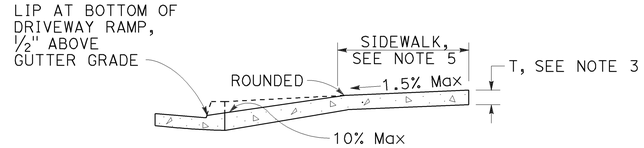

CASE A

Typical driveway, sidewalk not depressed

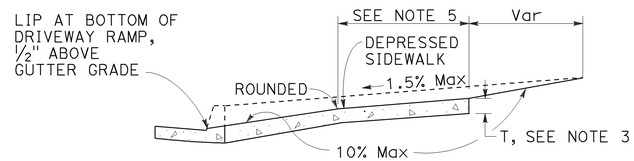

CASE B

Driveway with depressed sidewalk

SECTIONS

DRIVEWAYS

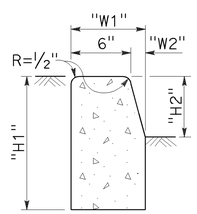

TYPE A1 CURBS

See Table A

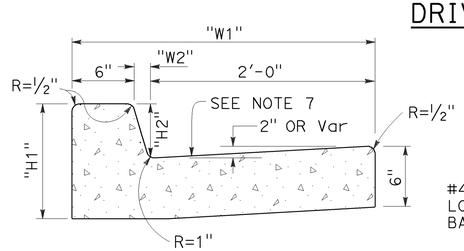

TYPE A2 CURBS

See Table A

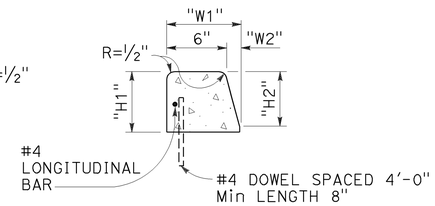

TYPE A3 CURBS

Superimposed on existing pavement
See Table A

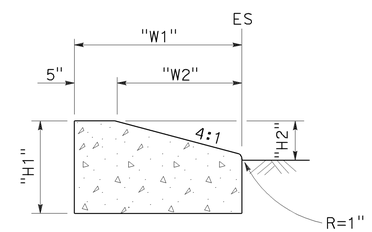

TYPE D CURBS

See Table A

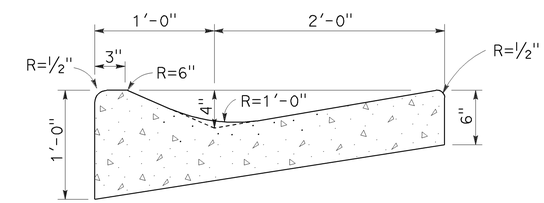

TYPE E CURB

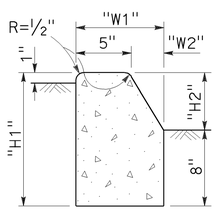

TYPE B1 CURBS

See Table A

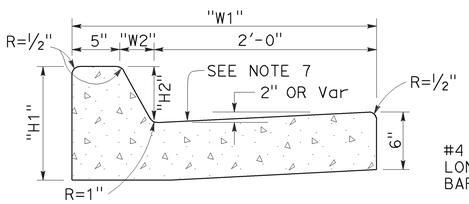

TYPE B2 CURBS

See Table A

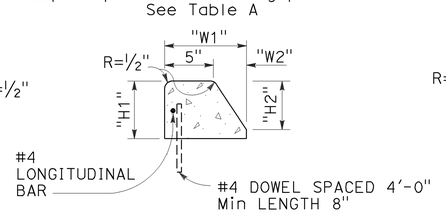

TYPE B3 CURBS

Superimposed on existing pavement
See Table A

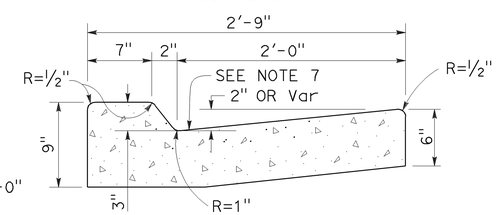

TYPE B4 CURBS

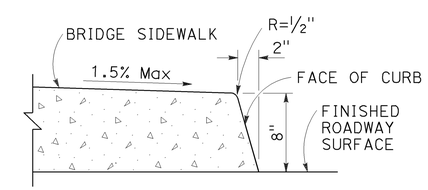

TYPE H CURB

On Bridges

CURBS

TABLE A

CURB TYPE	DIMENSIONS			
	"H1"	"H2"	"W1"	"W2"
A1-6	1'-2"	6"	7½"	1½"
A1-8	1'-4"	8"	8"	2"
A2-6	1'-0"	6"	2'-7½"	1½"
A2-8	1'-2"	8"	2'-8"	2"
A3-6	6"	5"	7¼"	1¼"
A3-8	8"	7"	7¾"	1¾"
B1-4	1'-0"	4"	7½"	2½"
B1-6	1'-2"	6"	9"	4"
B2-4	10"	4"	2'-7½"	2½"
B2-6	1'-0"	6"	2'-9"	4"
B3-4	4"	3"	7"	2"
B3-6	6"	5"	8½"	3½"
D-4	10"	4"	1'-6"	1'-1"
D-6	1'-0"	6"	2'-2"	1'-9"

CURB QUANTITIES

TYPE	CUBIC YARDS PER LINEAR FOOT
A1-6	0.02585
A1-8	0.03084
A2-6	0.05903
A2-8	0.06379
A3-6	0.01036
A3-8	0.01435
B1-4	0.02185
B1-6	0.02930
B2-4	0.05515
B2-6	0.06171
B3-4	0.00641
B3-6	0.01074
B4	0.05709
D-4	0.04083
D-6	0.06804
E	0.06661

NOTES:

1. Case A driveway section typically applies.
2. X=3'-0" except for curb heights over 10" where 4:1 slopes shall be used on curb slope.
3. Sidewalk and ramp thickness "T" at driveway shall be 4" for residental and 6" for commercial.
4. Difference in slope of the driveway ramp and the slope of a line between the gutter and a point on the roadway 5'-0" from gutter line shall not exceed 15%. Reduce driveway ramp slope, not gutter slope, where required.
5. Minimum width of clear passageway for sidewalk shall be 4'-2".
6. Retaining curbs and acquisition of construction easement may be necessary for narrow sidewalks or curb heights in excess of 6".
7. Across the pedestrian route at curb ramp locations, the gutter pan slope shall not exceed 1" of depth for each 2'-0" of width.

STATE OF CALIFORNIA
DEPARTMENT OF TRANSPORTATION

CURBS AND DRIVEWAYS

NO SCALE

RSP A87A DATED JULY 19, 2013 SUPERSEDES STANDARD PLAN A87A
DATED MAY 20, 2011 - PAGE 119 OF THE STANDARD PLANS BOOK DATED 2010.

REVISED STANDARD PLAN RSP A87A

Dist	COUNTY	ROUTE	POST MILES TOTAL PROJECT	SHEET No.	TOTAL SHEETS
04	Ala	13	8.3	51	108

REGISTERED CIVIL ENGINEER

July 19, 2013
PLANS APPROVAL DATE

REGISTERED PROFESSIONAL ENGINEER
Michael Janzen
No. 44788
Exp. 03-31-14
CIVIL
STATE OF CALIFORNIA

THE STATE OF CALIFORNIA OR ITS OFFICERS OR AGENTS SHALL NOT BE RESPONSIBLE FOR THE ACCURACY OR COMPLETENESS OF SCANNED COPIES OF THIS PLAN SHEET.

TO ACCOMPANY PLANS DATED 10-19-15

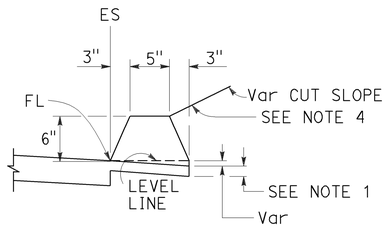

TYPE A
See Note 3

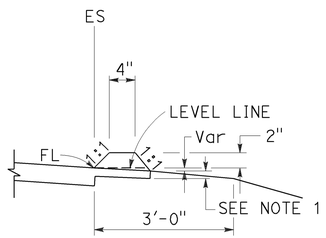

TYPE C

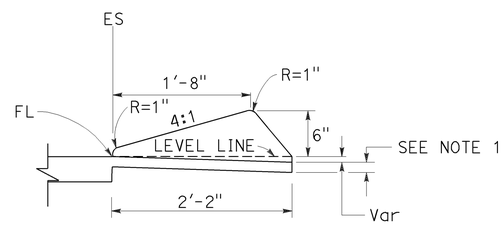

TYPE D

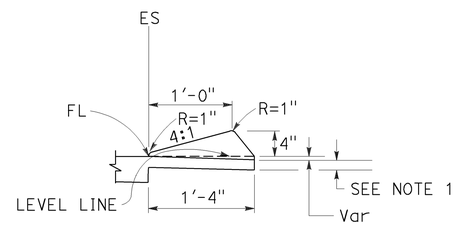

TYPE E

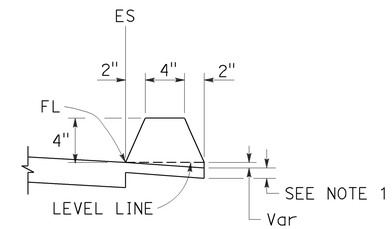

TYPE F
See Note 5

DIKES

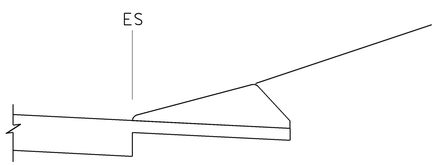

CASE C-1
Cut Slope

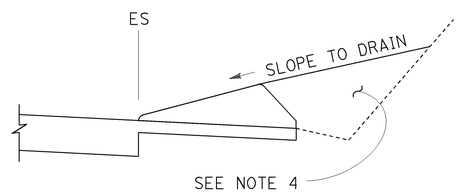

CASE C-2
Cut Slope

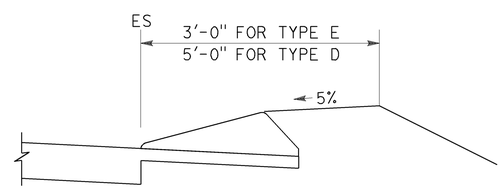

CASE F

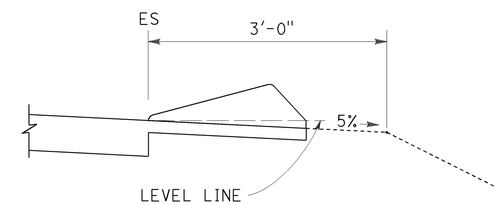

CASE R
See Note 2

TYPE D AND E BACKFILL DETAILS

NOTES:

1. For HMA shoulders only, extend top layer of HMA placed on the shoulder under dike with no joint at the ES. For projects with OGFC shoulders, do not extend OGFC under dike. See project plans for modified dike detail.
2. Case R applies to retrofit only projects where restrictive conditions do not provide enough width for Case F backfill.
3. Type A dike only to be used where restrictive slope conditions do not provide enough width to use Type D or Type E dike.
4. Fill and compact with excavated material to top of dike.
5. Use Type F dike, where dike is required with guard railing installations. See Revised Standard Plan RSP A77N4 for dike positioning details.

DIKE QUANTITIES

TYPE	CUBIC YARDS PER LINEAR FOOT
A	0.0135
C	0.0038
D	0.0293
E	0.0130
F	0.0066

Quantities based on 5% cross slope.

STATE OF CALIFORNIA
DEPARTMENT OF TRANSPORTATION

HOT MIX ASPHALT DIKES

NO SCALE

RSP A87B DATED JULY 19, 2013 SUPERSEDES STANDARD PLAN A87B DATED MAY 20, 2011 - PAGE 120 OF THE STANDARD PLANS BOOK DATED 2010.

REVISED STANDARD PLAN RSP A87B

2010 REVISED STANDARD PLAN RSP A87B

6-27-13

TO ACCOMPANY PLANS DATED 10-19-15

Dist	COUNTY	ROUTE	POST MILES TOTAL PROJECT	SHEET No.	TOTAL SHEETS
04	Ala	13	8.3	52	108

Glenn DeCou
REGISTERED CIVIL ENGINEER

October 19, 2012
PLANS APPROVAL DATE

REGISTERED PROFESSIONAL ENGINEER Glenn DeCou No. C34547 Exp. 9-30-13 CIVIL STATE OF CALIFORNIA

THE STATE OF CALIFORNIA OR ITS OFFICERS OR AGENTS SHALL NOT BE RESPONSIBLE FOR THE ACCURACY OR COMPLETENESS OF SCANNED COPIES OF THIS PLAN SHEET.

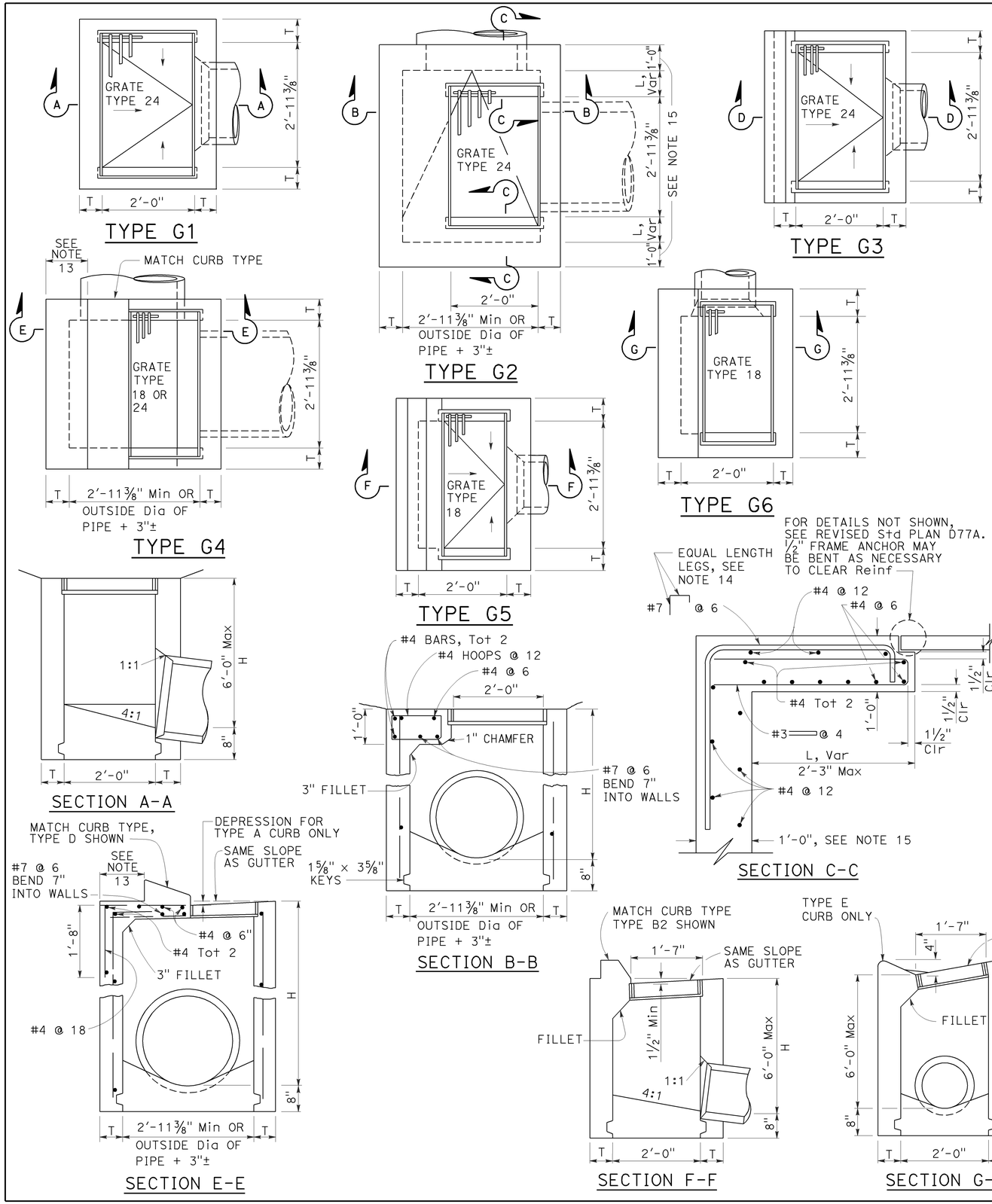

NOTES:

1. "H" is the difference in elevation between the outlet pipe flow line and the normal gutter grade line undepressed.
2. For "T" wall thickness, see Table A below.
3. Wall reinforcing not required when "H" is 8'-0" or less and the unsupported width or length is 7'-0" or less. Walls exceeding these limits shall be reinforced with #4 bars @ 1'-6" ± centers placed 1½" clear to inside of box unless otherwise shown.
4. Inlet bottom reinforcing not required. See Standard Plan D74C for alternative reinforced bottom and alternative half round bottom.
5. Steps-None required where "H" is less than 2'-6". Where "H" is 2'-6" or more, install steps with lowest rung 1'-0" above the floor and highest rung not more than 6" below top of inlet. The distance between steps shall not exceed 1'-0" and shall be uniform throughout the length of the wall. Place steps in the wall without an opening. Steps inserts may be substituted for the bar steps. Step inserts shall comply with State Industrial Safety requirements. See Standard Plan D74C for step details.
6. Details shown apply to both metal and concrete pipe.
7. Pipe(s) can be placed in any wall.
8. Curb section shall match adjacent curb.
9. Basin floors shall have wood trowel finish and a minimum slope of 12:3 from all directions toward outlet pipe.
10. Set inlet so that grate bars are parallel to direction of principal surface flow.
11. See Revised Standard Plans D77A and D77B for grate and frame details and weights of miscellaneous iron and steel.
12. See Standard Plan D78A for gutter depression details.
13. This dimenison will vary with different grates, curbs types, box width and wall thickness.
14. Bar may be rotated as necessary to clear opening. Where "L" is 6" or less, bar may be omitted.
15. Where "L" is 6" or less, wall thickness shall be as shown in Table A.
16. Cast-in-place inlets to be formed around all pipes/stubs intersecting the inlet, and concrete poured in one continuous operation. Precast inlets shall have mortared connections conforming to details for Type GCP Inlet shown on Standard Plan D75B. See Standard Specifications for mortar composition.

TABLE A

CONCRETE QUANTITIES				
TYPE	H=3'-0" TO 8'-0" (T=6")		H=8'-1" TO 20'-0" (T=8")	
	H=3'-0" (CY)	ADDITIONAL PCC PER FOOT (CY)	H=8'-1" (CY)	ADDITIONAL PCC PER FOOT (CY)
G-1	0.95	0.220	See Note A	SEE NOTE A
G-2*	1.31	0.255	3.50	0.357
G-3	1.03	0.220	See Note A	SEE NOTE A
G-4* (TYPE 24)	1.27	0.255	3.48	0.357
G-4* (TYPE 18)	1.30	0.255	3.50	0.357
G-5	1.02	0.220	SEE NOTE A	SEE NOTE A
G-6	1.04	0.220	SEE NOTE A	SEE NOTE A

TABLE BASED ON 8" FLOOR SLAB. NO DEDUCTIONS ARE TO BE MADE TO THESE QUANTITIES BECAUSE OF PIPE OPENINGS, DIFFERENT FLOOR ALTERNATIVES OR DIFFERENT CURB TYPES. * QUANTITIES FOR TYPE G-2 AND G-4 INLETS BASED ON THE MINIMUM INTERIOR DIMENSIONS.

NOTE A:

Maximum allowable height 6'-0".

STATE OF CALIFORNIA
DEPARTMENT OF TRANSPORTATION

DRAINAGE INLETS

NO SCALE

RSP D73 DATED OCTOBER 19, 2012 SUPERSEDES STANDARD PLAN D73 DATED MAY 20, 2011 - PAGE 156 OF THE STANDARD PLANS BOOK DATED 2010.

REVISED STANDARD PLAN RSP D73

2010 REVISED STANDARD PLAN RSP D73

7-19-12

Dist	COUNTY	ROUTE	POST MILES TOTAL PROJECT	SHEET No.	TOTAL SHEETS
04	Ala	13	8.3	53	108

Raymond Don Tsztoo
REGISTERED CIVIL ENGINEER

April 19, 2013
PLANS APPROVAL DATE

REGISTERED PROFESSIONAL ENGINEER
Raymond Don Tsztoo
No. C37332
Exp. 6-30-14
CIVIL
STATE OF CALIFORNIA

THE STATE OF CALIFORNIA OR ITS OFFICERS OR AGENTS SHALL NOT BE RESPONSIBLE FOR THE ACCURACY OR COMPLETENESS OF SCANNED COPIES OF THIS PLAN SHEET.

TO ACCOMPANY PLANS DATED 10-19-15

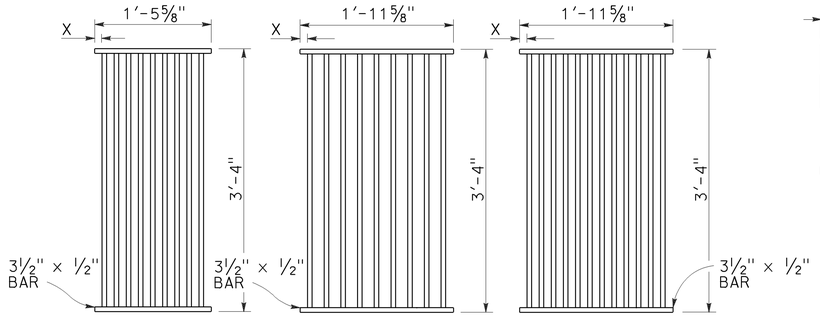

TYPE 18-9

1⅜" Clear spacing. Use within the roadbed on highways where bicycles and pedestrians are excluded.

TYPE 24-9

2" Clear spacing. Use in locations off the roadbed on all types of highways.

TYPE 24-12

1⅜" Clear spacing. Use within the roadbed on highways where bicycles and pedestrians are excluded.

RECTANGULAR GRATE DETAILS

(See table below)

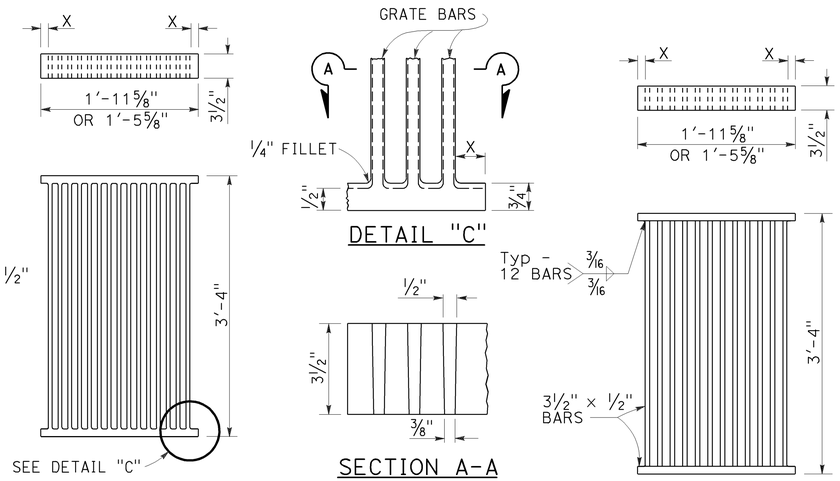

ALTERNATIVE CAST DUCTILE IRON GRATE OR CAST CARBON STEEL GRATE

ALTERNATIVE WELDED GRATE

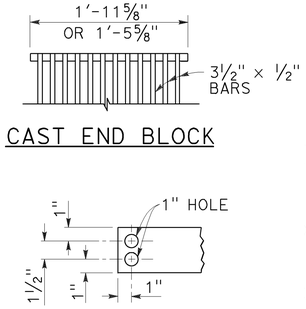

CAST END BLOCK

END OF BAR

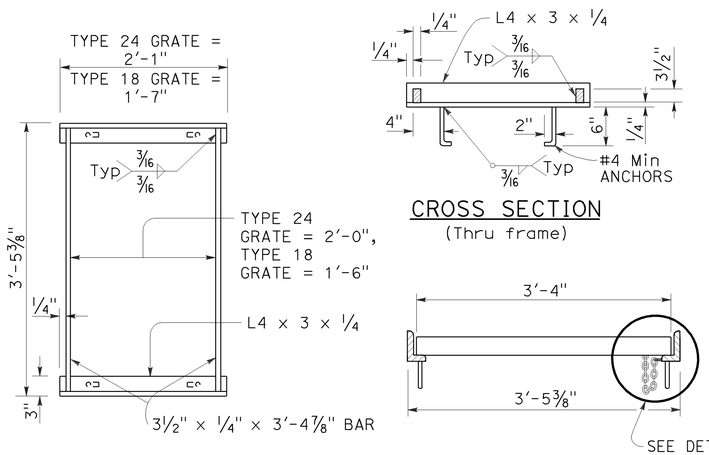

TYPICAL FRAME

CROSS SECTION
(Thru frame)

LONGITUDINAL SECTION
(Thru frame and grate)

RECTANGULAR FRAME DETAILS

(For all rectangular grates)

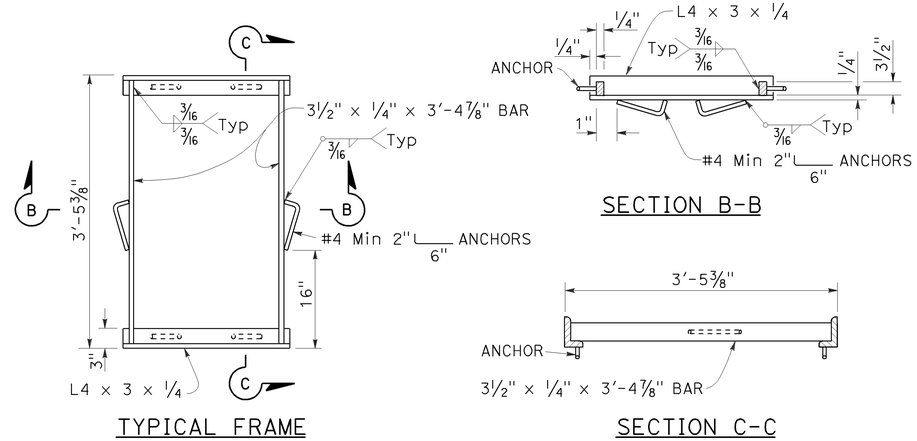

TYPICAL FRAME

SECTION B-B

SECTION C-C

ALTERNATIVE ANCHOR FOR RECTANGULAR FRAME

(For details not shown, See Rectangular Frame Details)

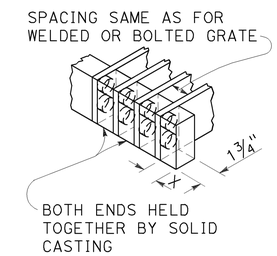

ALTERNATIVE CAST DUCTILE IRON OR CAST CARBON STEEL END BLOCK GRATE

NOTES:

1. Grate type numbers refer to approximate width of grate in inches and number of bars, respectively.
2. Contractor has the option of using cast ductile iron, cast carbon steel, welded, bolted, or cast end block grate.
3. Rounded top of bars optional on all grates.
4. Pipe inlets with a grate shall be placed so that bars parallel direction of principle surface flow.
5. Complete joint penetration butt welds may be substituted for the fillet welds on all anchors.
6. Standard square, hexagon, round or equivalent headed anchors may be substituted for the right angle hooks on the anchors shown on this plan.
7. Grate and frame weights are based on welded grates (weights of face angles, steps, protection bars, etc. are not included).
8. Connect chain to grate and frame only at locations shown on the plans. When chain is required, do not use cast ductile iron grates.

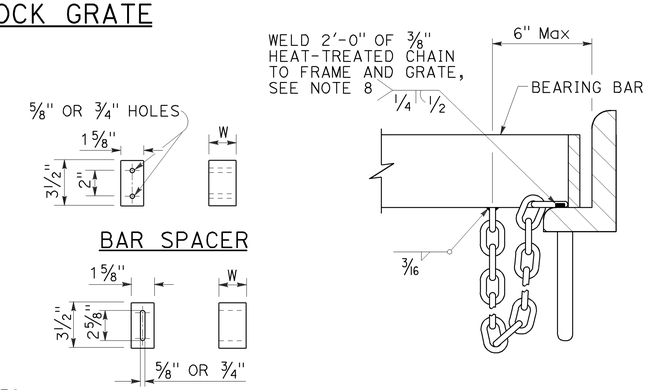

GRATE BAR SPACING TABLE

TYPE	No. OF BARS	CLEAR BAR SPACING	X
18-9	9	1⅜"	1 1/16"
24-9	9	2"	1 9/16"
24-12	12	1⅜"	1¼"

INLET TYPE	COVER TYPE	WEIGHT LB
OS	PLATE	174
OL-7	PLATE	170
OL-10	PLATE	170
OL-14	PLATE	170
OL-21	PLATE	170
OCP	PLATE	112
OCPI	PLATE	112
OCPI	REDWOOD	42
OMP	PLATE	177
OMPI	PLATE	177

INLET TYPE	GRATE TYPE	No. OF GRATES	WEIGHT LB
GDO	24-12	2	634
GOL-7	24-12	1	326
GOL-10	24-12	1	326
GO,G1,G2,G3,G4 (TYPE 24)	24-9	1	263
	24-12	1	326
G4 (TYPE 18),G5,G6	18-9	1	249
GT1	18-9	2	498
GT2	18-9	2	498
GT3	24-12	2	652
GT4	24-12	2	652
TRASH RACK			22
GRATE CHAIN			3

BASIS FOR Misc IRON & STEEL FINAL PAY WEIGHTS FOR DRAINAGE INLETS

(See Note 7)

STATE OF CALIFORNIA
DEPARTMENT OF TRANSPORTATION

GRATE DETAILS No. 1

NO SCALE

RSP D77A DATED APRIL 19, 2013 SUPERSEDES RSP D77A DATED JULY 20, 2012 AND STANDARD PLAN D77A DATED MAY 20, 2011 - PAGE 164 OF THE STANDARD PLANS BOOK DATED 2010.

REVISED STANDARD PLAN RSP D77A

2010 REVISED STANDARD PLAN RSP D77A

4-4-13

Dist	COUNTY	ROUTE	POST MILES TOTAL PROJECT	SHEET No.	TOTAL SHEETS
04	Ala	13	8.3	54	108

LICENSED LANDSCAPE ARCHITECT

July 19, 2013
PLANS APPROVAL DATE

THE STATE OF CALIFORNIA OR ITS OFFICERS OR AGENTS SHALL NOT BE RESPONSIBLE FOR THE ACCURACY OR COMPLETENESS OF SCANNED COPIES OF THIS PLAN SHEET.

LICENSED LANDSCAPE ARCHITECT — Gregory A. Balzer — 2516 — 10-19-15 Renewal Date — 2-28-15 Renewal Date — 7-19-13 Date — STATE OF CALIFORNIA

TO ACCOMPANY PLANS DATED 10-19-15

A

AB	AGGREGATE BASE
ABS	ACRYLONITRILE-BUTADIENE-STYRENE
AC	ASPHALT CONCRETE
ACC	ARMOR-CLAD CONDUCTORS
Adj	ADJACENT/ADJUSTABLE
AIC	AUXILIARY IRRIGATION CONTROLLER
Alt	ALTERNATIVE
AMEND	AMENDMENT
ARV	AIR RELEASE VALVE
AUTO	AUTOMATIC
AUX	AUXILIARY
AVB	ATMOSPHERIC VACUUM BREAKER

B

B&B	BALLED AND BURLAPPED
B/B	BRASS/BRONZE
B/B/PL	BRASS/BRONZE/PLASTIC
B/PL	BRASS/PLASTIC
BFM	BONDED FIBER MATRIX
Bit Ctd	BITUMINOUS COATED
BP	BOOSTER PUMP
BPA	BACKFLOW PREVENTER ASSEMBLY
BPE	BACKFLOW PREVENTER ENCLOSURE
BV	BALL VALVE

C

C	CONDUIT
CAP	CORRUGATED ALUMINUM PIPE
CARV	COMBINATION AIR RELEASE VALVE
CB	COUPLING BAND
CCA	CAM COUPLER ASSEMBLY
CEC	CONTROLLER ENCLOSURE CABINET
CHDPE	CORRUGATED HIGH DENSITY POLYETHYLENE
CL	CHAIN LINK
CNC	CONTROL AND NEUTRAL CONDUCTORS
Conc	CONCRETE
CP	COPPER PIPE
CS	COMPOST SOCK
CSP	CORRUGATED STEEL PIPE
CST	CENTER STRIP
CV	CHECK VALVE

D

Dia	DIAMETER
DIP	DUCTILE IRON PIPE
DIT	DRIP IRRIGATION TUBING
DG	DECOMPOSED GRANITE
DN	DIAMETER NOMINAL
DVA	DRIP VALVE ASSEMBLY

E

EC	EROSION CONTROL
ECTC	EROSION CONTROL TECHNOLOGY COUNCIL
Elect	ELECTRIC/ELECTRICAL
Elev	ELEVATION
ELL	ELBOW
ENCL	ENCLOSURE
EP	EDGE OF PAVEMENT
ES	EDGE OF SHOULDER
EST	END STRIP
ESTB	ESTABLISHMENT
ETW	EDGE OF TRAVELED WAY

F

F	FULL CIRCLE
F/P	FULL/PART CIRCLE
FCV	FLOW CONTROL VALVE
FERT	FERTILIZER
FG	FINISHED GRADE
FH	FLEXIBLE HOSE
FIPT	FEMALE IRON PIPE THREAD
FIS	FERTILIZER INJECTOR SYSTEM
FL	FLOW LINE
FR	FIBER ROLL
FS	FLOW SENSOR
FSC	FLOW SENSOR CABLE
FV	FLUSH VALVE

G

Galv	GALVANIZED
GARV	GARDEN VALVE
GARVA	GARDEN VALVE ASSEMBLY
GM	GRAVEL MULCH
GPH	GALLONS PER HOUR
GPM	GALLONS PER MINUTE
GSP	GALVANIZED STEEL PIPE
GV	GATE VALVE

H

H	HALF CIRCLE
HDPE	HIGH DENSITY POLYETHYLENE
HP	HORSEPOWER/HINGE POINT
HPL	HIGH PRESSURE LINE
Hwy	HIGHWAY

I

IC	IRRIGATION CONTROLLER
ICC	IRRIGATION CONTROLLER(S) IN CONTROLLER ENCLOSURE CABINET
ID	INSIDE DIAMETER
IFS	IRRIGATION FILTRATION SYSTEM
IPS	IRON PIPE SIZE
IPT	IRON PIPE THREAD
Irr	IRRIGATION

L

L	LENGTH

M

Max	MAXIMUM
MBGR	METAL BEAM GUARD RAILING
MCV	MANUAL CONTROL VALVE
MIC	MASTER IRRIGATION CONTROLLER
Min	MINIMUM
MIPT	MALE IRON PIPE THREAD
Misc	MISCELLANEOUS
Mtl	MATERIAL
MVP	MAINTENANCE VEHICLE PULLOUT

N

NCN	NO COMMON NAME
NL	NOZZLE LINE
No.	NUMBER
NPT	NATIONAL PIPE THREAD

O

O/C	ON CENTER
OD	OUTSIDE DIAMETER
OL	OVERLAP

P

P	PART CIRCLE
PB	PULL BOX
PCC	PORTLAND CEMENT CONCRETE
PE	POLYETHYLENE
Pkt	PACKET
PL	PLASTIC
PLS	PURE LIVE SEED
PLT	PLANT/PLANTING
PLT ESTB	PLANT ESTABLISHMENT
PM	POST MILE
PR	PRESSURE RATED
PRLV	PRESSURE RELIEF VALVE
PRV	PRESSURE REGULATING VALVE
PVC	POLYVINYL CHLORIDE
Pvmt	PAVEMENT

Q

Q	QUARTER CIRCLE
QCV	QUICK COUPLING VALVE

R

R	RADIUS
RCP	REINFORCED CONCRETE PIPE
RCV	REMOTE CONTROL VALVE
RCVM	REMOTE CONTROL VALVE (MASTER)
RCVMF	REMOTE CONTROL VALVE (MASTER) W/FLOW SENSOR
RCVP	REMOTE CONTROL VALVE W/PRESSURE REGULATOR
RCW	RECYCLED WATER
RECP	ROLLED EROSION CONTROL PRODUCT
REQ	REQUIRED
RICS	REMOTE IRRIGATION CONTROL SYSTEM
R/W	RIGHT OF WAY

S

S	SLIP
SCH	SCHEDULE
SF	STATE-FURNISHED
Shld	SHOULDER
Sq	SQUARE
SST	SIDE STRIP
Sta	STATION
Std	STANDARD
SW	SIDEWALK/SOUND WALL

T

T	THIRD CIRCLE/THREAD
TLS	TRUCK LOADING STANDPIPE
TQ	THREE QUARTER CIRCLE
TRM	TURF REINFORCEMENT MAT
TT	TWO-THIRDS CIRCLE
TWSA	TREE WELL SPRINKLER ASSEMBLY
Typ	TYPICAL

U

UG	UNDERGROUND

W

W	WIDTH
W/	WITH
WM	WATER METER
WS	WYE STRAINER
WSA	WYE STRAINER ASSEMBLY
WSP	WELDED STEEL PIPE
WWM	WELDED WIRE MESH

NOTE:
For additional abbreviations, see Standard Plans A10A and A10B.

STATE OF CALIFORNIA
DEPARTMENT OF TRANSPORTATION

LANDSCAPE AND EROSION CONTROL ABBREVIATIONS

NO SCALE

RSP H1 DATED JULY 19, 2013 SUPERSEDES STANDARD PLAN H1 DATED MAY 20, 2011 - PAGE 218 OF THE STANDARD PLANS BOOK DATED 2010.

REVISED STANDARD PLAN RSP H1

2010 REVISED STANDARD PLAN RSP H1

6-28-13

Dist	COUNTY	ROUTE	POST MILES TOTAL PROJECT	SHEET No.	TOTAL SHEETS
04	Ala	13	8.3	55	108

LICENSED LANDSCAPE ARCHITECT

November 15, 2013
PLANS APPROVAL DATE

LICENSED LANDSCAPE ARCHITECT
Gregory A. Balzer 2576
02-28-15
Renewal Date
11-15-13
Date
STATE OF CALIFORNIA

THE STATE OF CALIFORNIA OR ITS OFFICERS OR AGENTS SHALL NOT BE RESPONSIBLE FOR THE ACCURACY OR COMPLETENESS OF SCANNED COPIES OF THIS PLAN SHEET.

TO ACCOMPANY PLANS DATED 10-19-15

EXISTING	NEW	ITEM DESCRIPTION
		WATER METER (WM)
		BACKFLOW PREVENTER ASSEMBLY (BPA)
		BACKFLOW PREVENTER ENCLOSURE (BPE)
		BOOSTER PUMP (BP)
		TRUCK LOADING STANDPIPE (TLS)
	FS	FLOW SENSOR (FS)
		MASTER IRRIGATION CONTROLLER (MIC)
		AUXILIARY IRRIGATION CONTROLLER (AIC)
		IRRIGATION CONTROLLER (IC) IRRIGATION CONTROLLER (IC) (BATTERY) IRRIGATION CONTROLLER (IC) (SOLAR) IRRIGATION CONTROLLER (IC) (TWO WIRE) IRRIGATION CONTROLLER(S) IN CONTROLLER ENCLOSURE CABINET (ICC)
acc	ACC	ARMOR-CLAD CONDUCTORS (ACC)
cnc	CNC	CONTROL AND NEUTRAL CONDUCTORS (CNC)
		IRRIGATION CONDUIT
		EXTEND IRRIGATION CONDUIT
dip	DIP	DUCTILE IRON PIPE (SUPPLY LINE) (MAIN) (DIP)
		GALVANIZED STEEL PIPE (SUPPLY LINE) (MAIN) (GSP)
		GALVANIZED STEEL PIPE (SUPPLY LINE) (LATERAL) (GSP)
		PLASTIC PIPE (SUPPLY LINE) (MAIN)
		PLASTIC PIPE (SUPPLY LINE) (LATERAL)
cp	CP	COPPER PIPE (SUPPLY LINE)
dit	DIT	DRIP IRRIGATION TUBING
		REMOTE CONTROL VALVE (RCV) REMOTE CONTROL VALVE (MASTER) (RCVM) REMOTE CONTROL VALVE (MASTER) W/FLOW METER (RCVMF)
P	P	REMOTE CONTROL VALVE W/PRESSURE REGULATOR (RCVP)
		EXISTING MANUAL CONTROL VALVE (MCV)
	V	DRIP VALVE ASSEMBLY (DVA)
	Y	WYE STRAINER ASSEMBLY (WSA)

EXISTING	NEW	ITEM DESCRIPTION
		GATE VALVE (GV)
		BALL VALVE (BV)
		QUICK COUPLING VALVE (QCV)
		CAM COUPLER ASSEMBLY (CCA)
		GARDEN VALVE ASSEMBLY (GARVA)
		PRESSURE REGULATING VALVE (PRV)
		PRESSURE RELIEF VALVE (PRLV)
		FLOW CONTROL VALVE (FCV)
		COMBINATION AIR RELEASE VALVE (CARV)
		CHECK VALVE (CV)
		FLUSH VALVE (FV)
		EXISTING NOZZLE LINE W/TURNING UNION
		EXISTING IRRIGATION SYSTEM
		EXISTING IRRIGATION SYSTEM TO BE REMOVED
		CHAIN LINK GATE
		QUICK COUPLING VALVE W/SPRINKLER PROTECTOR
3	3	SPRINKLER W/SPRINKLER PROTECTOR
	C	CONNECT TO EXISTING SYSTEM
		CAP
		CAP EXISTING
	\\\FR\\\	FIBER ROLL
	\\\CS\\\	COMPOST SOCK

RCV SIZE
IRRIGATION CONTROLLER
CONTROLLER STATION
VALVE IN PARALLEL (IF APPLICABLE)
GPM
QUANTITY OF SPRINKLERS (WHEN SHOWN)

* 2½"-A-2b-40-60

VALVE CODE

* VALVE CODES FOR EXISTING VALVES ARE SHOWN IN A DASHED ENCLOSURE.

STATE OF CALIFORNIA
DEPARTMENT OF TRANSPORTATION

LANDSCAPE AND EROSION CONTROL SYMBOLS

NO SCALE

RSP H2 DATED NOVEMBER 15, 2013 SUPERSEDES RSP H2 DATED JULY 19, 2013 AND STANDARD PLAN H2 DATED MAY 20, 2011 - PAGE 219 OF THE STANDARD PLANS BOOK DATED 2010.

REVISED STANDARD PLAN RSP H2

2010 REVISED STANDARD PLAN RSP H2

10-9-13

Dist	COUNTY	ROUTE	POST MILES TOTAL PROJECT	SHEET No.	TOTAL SHEETS
04	Ala	13	8.3	56	108

LICENSED LANDSCAPE ARCHITECT

July 19, 2013
PLANS APPROVAL DATE

LICENSED LANDSCAPE ARCHITECT Gregory A. Balzer 2576 Registered Professional 2-28-15 Renewal Date 7-19-13 Date STATE OF CALIFORNIA

THE STATE OF CALIFORNIA OR ITS OFFICERS OR AGENTS SHALL NOT BE RESPONSIBLE FOR THE ACCURACY OR COMPLETENESS OF SCANNED COPIES OF THIS PLAN SHEET.

TO ACCOMPANY PLANS DATED 10-19-15

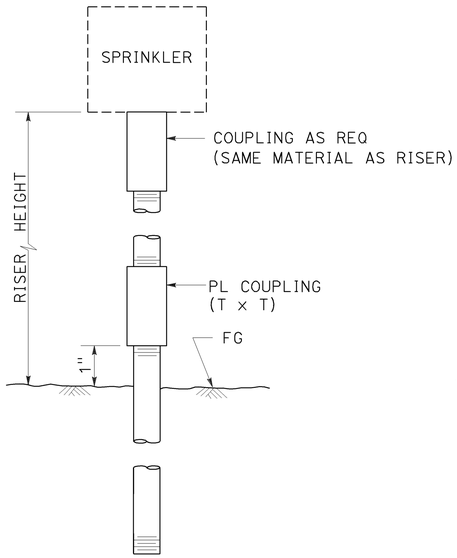

ELEVATION

RISER SPRINKLER ASSEMBLY TYPE I

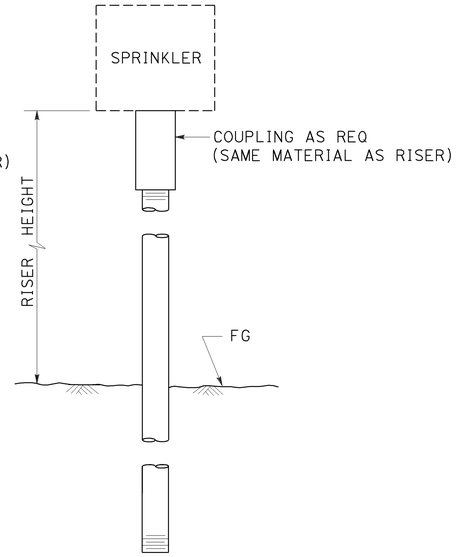

ELEVATION

RISER SPRINKLER ASSEMBLY TYPE II

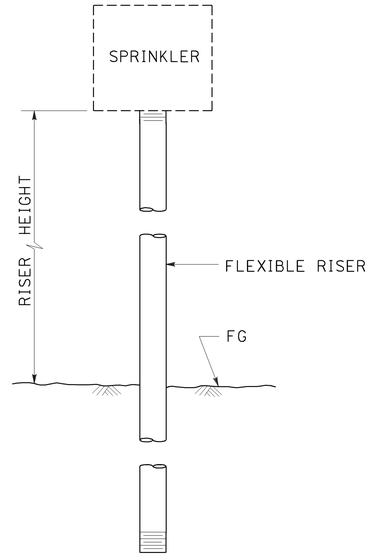

ELEVATION

RISER SPRINKLER ASSEMBLY TYPE III

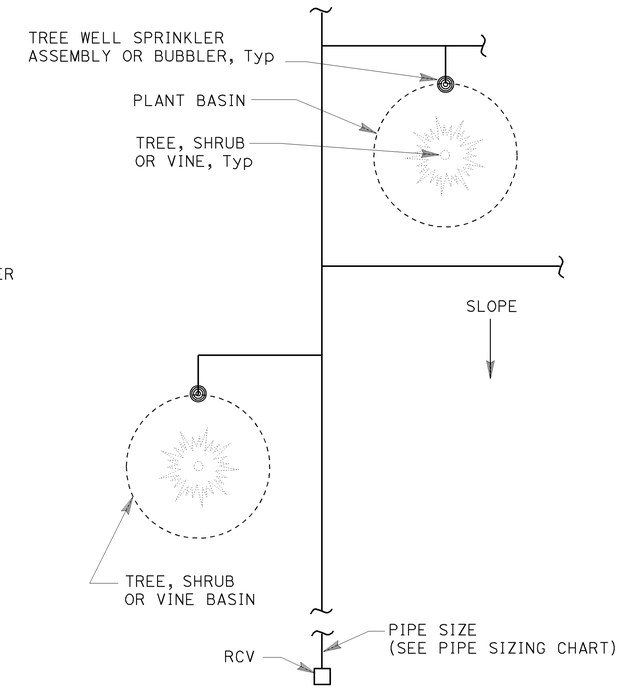

PLAN

NOTES:

1. Install tree well sprinkler assembly on up-hill side of plant when on slope.
2. Install bubbler within basin.

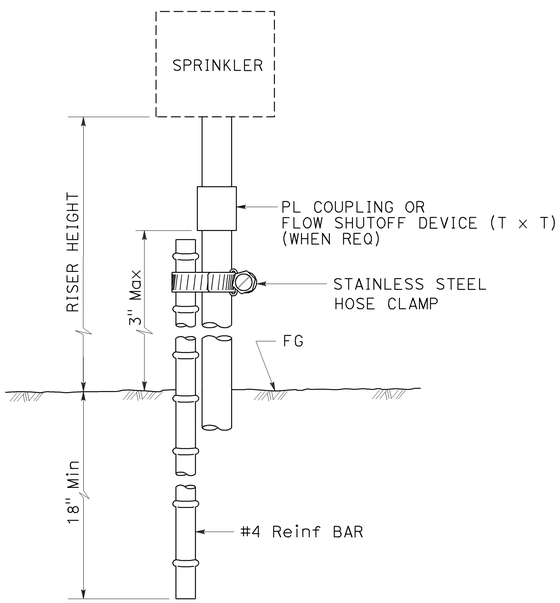

ELEVATION

RISER SPRINKLER ASSEMBLY TYPE IV

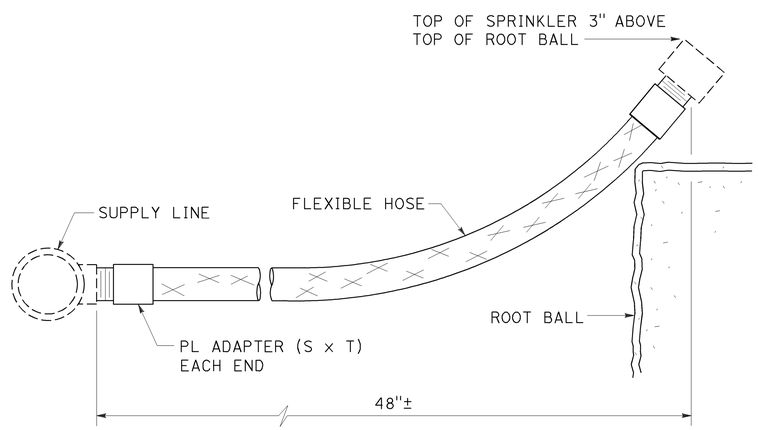

ELEVATION

RISER SPRINKLER ASSEMBLY TYPE V

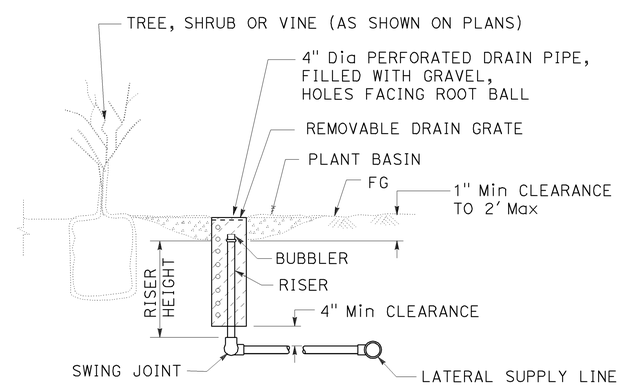

SECTION

TREE WELL SPRINKLER ASSEMBLY

STATE OF CALIFORNIA
DEPARTMENT OF TRANSPORTATION

LANDSCAPE DETAILS

NO SCALE

RSP H5 DATED JULY 19, 2013 SUPERSEDES STANDARD PLAN H5
DATED MAY 20, 2011 - PAGE 222 OF THE STANDARD PLANS BOOK DATED 2010.

REVISED STANDARD PLAN RSP H5

2010 REVISED STANDARD PLAN RSP H5

6-28-13

Dist	COUNTY	ROUTE	POST MILES TOTAL PROJECT	SHEET No.	TOTAL SHEETS
04	Ala	13	8.3	57	108

LICENSED LANDSCAPE ARCHITECT

July 19, 2013
PLANS APPROVAL DATE

LICENSED LANDSCAPE ARCHITECT Gregory A. Balzer 2576 Expiration Date 2-28-15 Renewal Date 7-19-13 Date STATE OF CALIFORNIA

THE STATE OF CALIFORNIA OR ITS OFFICERS OR AGENTS SHALL NOT BE RESPONSIBLE FOR THE ACCURACY OR COMPLETENESS OF SCANNED COPIES OF THIS PLAN SHEET.

TO ACCOMPANY PLANS DATED 10-19-15

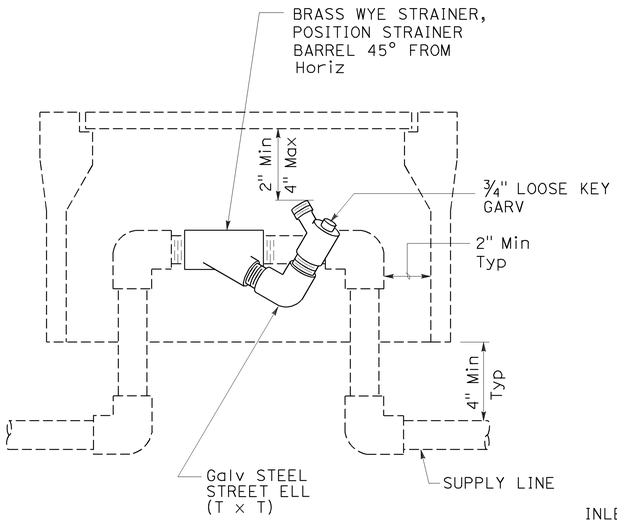

ELEVATION
WYE STRAINER ASSEMBLY

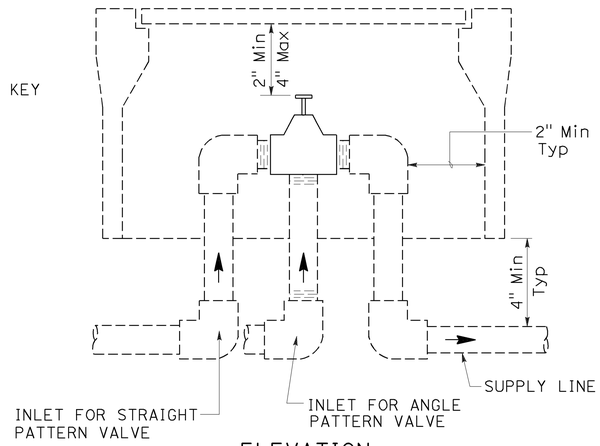

ELEVATION
VALVE

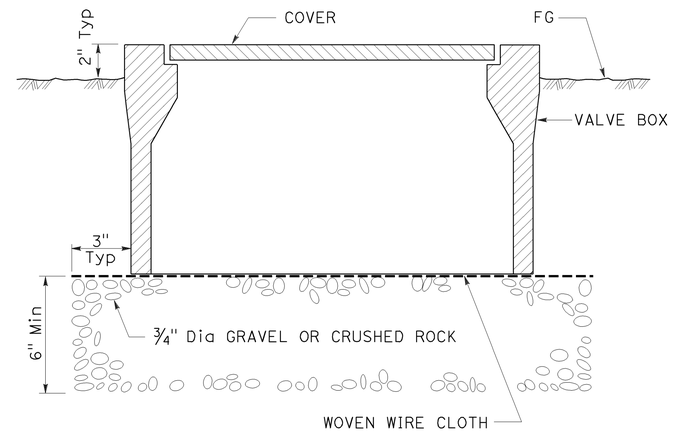

SECTION
VALVE BOX

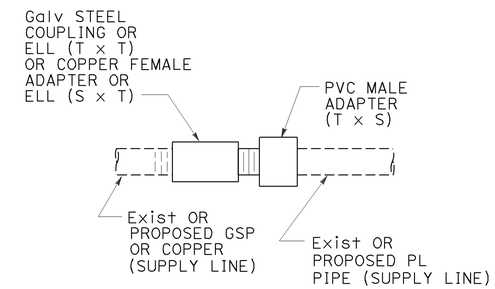

GALVANIZED OR COPPER PIPE CONNECTION TO PLASTIC PIPE

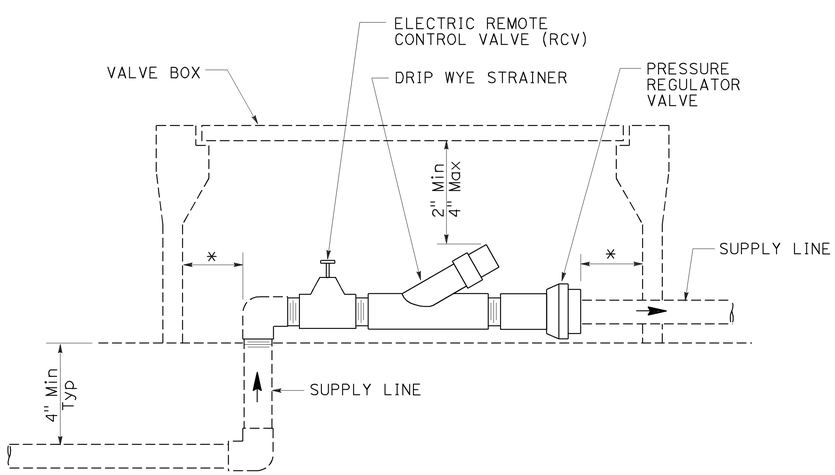

ELEVATION
DRIP VALVE ASSEMBLY

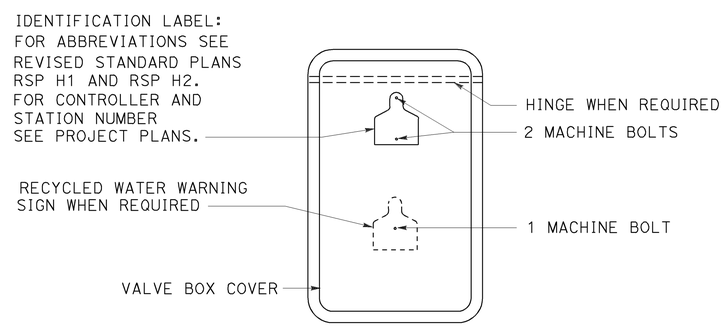

PLAN

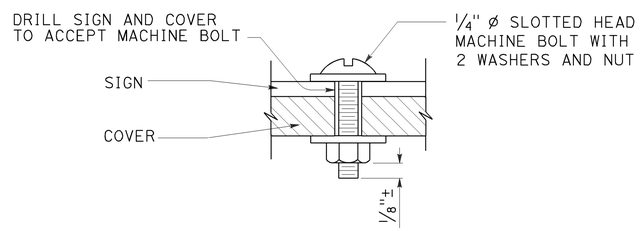

SECTION
VALVE BOX IDENTIFICATION

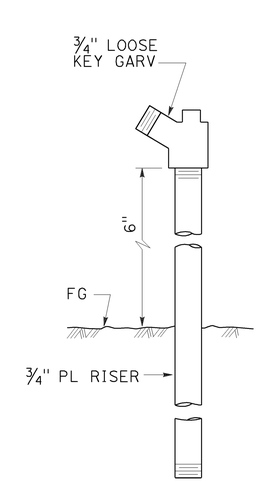

ELEVATION
GARDEN VALVE ASSEMBLY

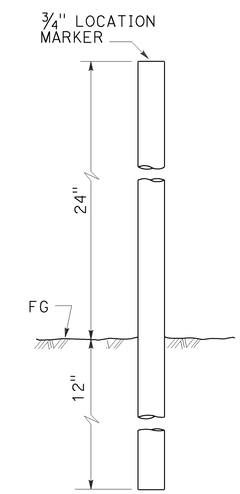

ELEVATION
LOCATION MARKER

GARDEN VALVE ASSEMBLY

STATE OF CALIFORNIA
DEPARTMENT OF TRANSPORTATION

LANDSCAPE DETAILS

NO SCALE

RSP H7 DATED JULY 19, 2013 SUPERSEDES STANDARD PLAN H7
DATED MAY 20, 2011 - PAGE 224 OF THE STANDARD PLANS BOOK DATED 2010.

REVISED STANDARD PLAN RSP H7

2010 REVISED STANDARD PLAN RSP H7

6-20-13

Dist	COUNTY	ROUTE	POST MILES TOTAL PROJECT	SHEET No.	TOTAL SHEETS
04	Ala	13	8.3	58	108

Gregory A. Balzer
LICENSED LANDSCAPE ARCHITECT

July 19, 2013
PLANS APPROVAL DATE

LICENSED LANDSCAPE ARCHITECT
Gregory A. Balzer 2576
Renewal Date 2-28-15
7-19-13
Date
STATE OF CALIFORNIA

THE STATE OF CALIFORNIA OR ITS OFFICERS OR AGENTS SHALL NOT BE RESPONSIBLE FOR THE ACCURACY OR COMPLETENESS OF SCANNED COPIES OF THIS PLAN SHEET.

TO ACCOMPANY PLANS DATED 10-19-15

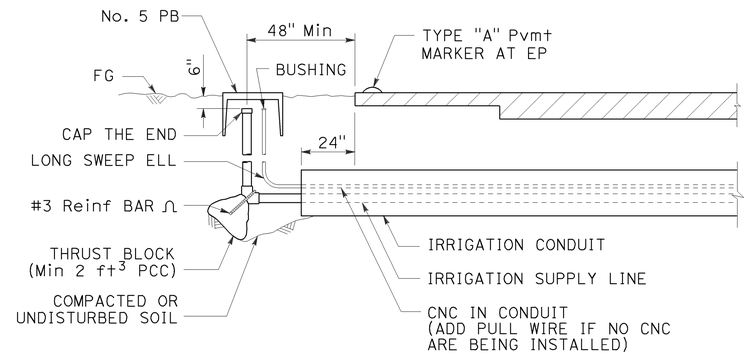

SECTION

IRRIGATION CONDUIT

UNDER TRAVELED WAY

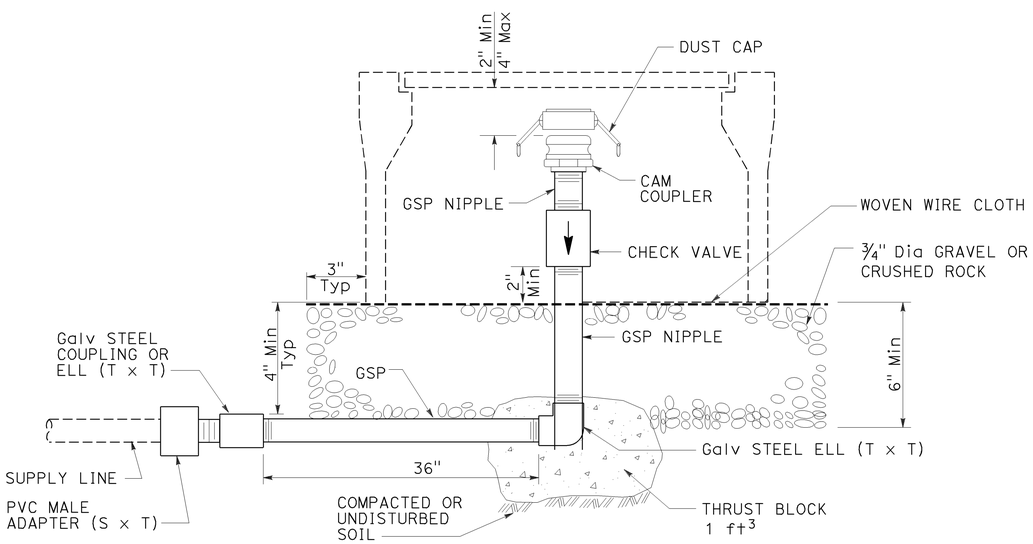

ELEVATION

CAM COUPLER ASSEMBLY

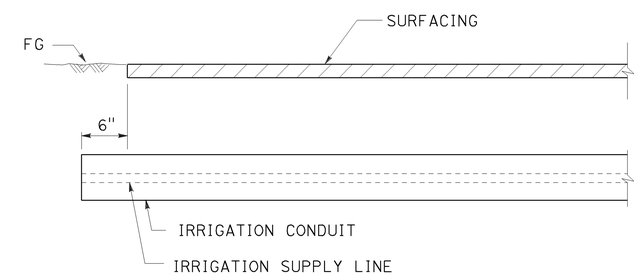

SECTION

IRRIGATION CONDUIT

UNDER SIDEWALKS, DRIVEWAYS AND PATHS

STATE OF CALIFORNIA
DEPARTMENT OF TRANSPORTATION

LANDSCAPE DETAILS

NO SCALE

RSP H9 DATED JULY 19, 2013 SUPERSEDES STANDARD PLAN H9
DATED MAY 20, 2011 - PAGE 226 OF THE STANDARD PLANS BOOK DATED 2010.

REVISED STANDARD PLAN RSP H9

2010 REVISED STANDARD PLAN RSP H9

6-28-13

Dist	COUNTY	ROUTE	POST MILES TOTAL PROJECT	SHEET No.	TOTAL SHEETS
04	Ala	13	8.3	59	108

Gregory A. Balzer
LICENSED LANDSCAPE ARCHITECT

July 19, 2013
PLANS APPROVAL DATE

LICENSED LANDSCAPE ARCHITECT
Gregory A. Balzer 2576
Expires 2-28-15
Renewal Date
7-19-13
Date
STATE OF CALIFORNIA

THE STATE OF CALIFORNIA OR ITS OFFICERS OR AGENTS SHALL NOT BE RESPONSIBLE FOR THE ACCURACY OR COMPLETENESS OF SCANNED COPIES OF THIS PLAN SHEET.

TO ACCOMPANY PLANS DATED 10-19-15

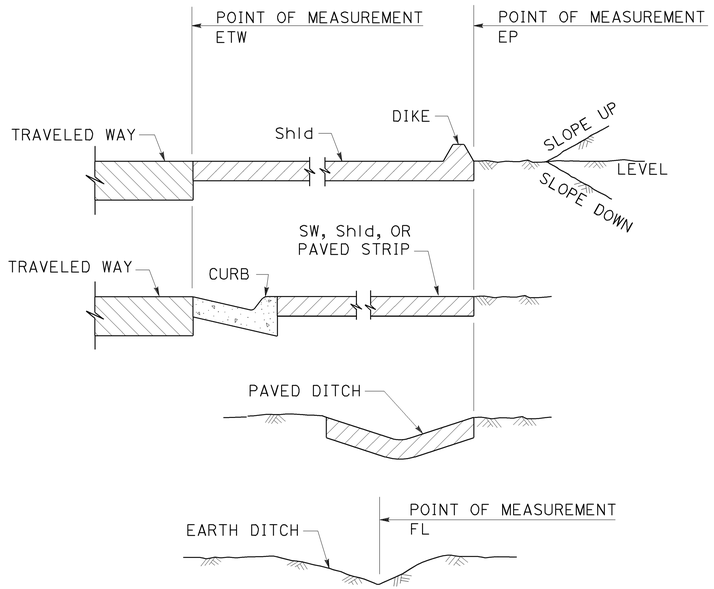

SECTION
POINTS OF MEASUREMENT

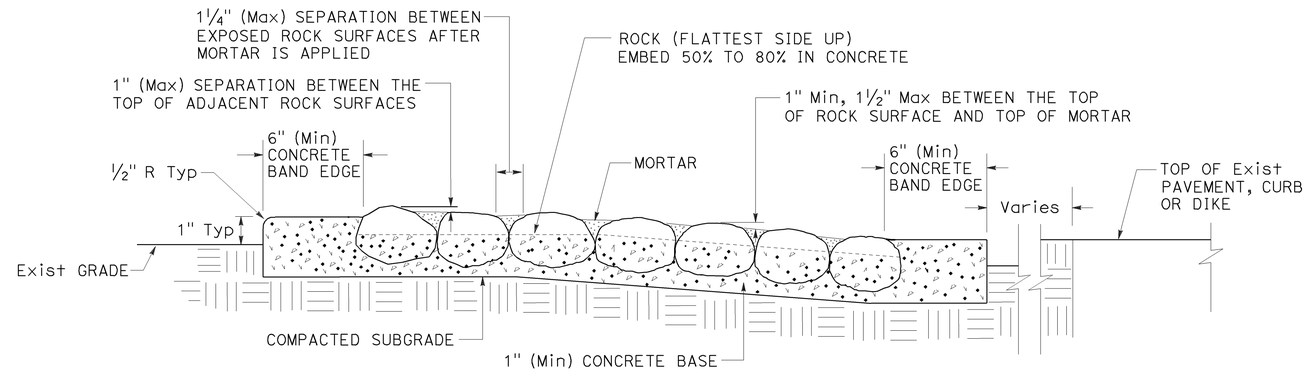

SECTION
ROCK BLANKET

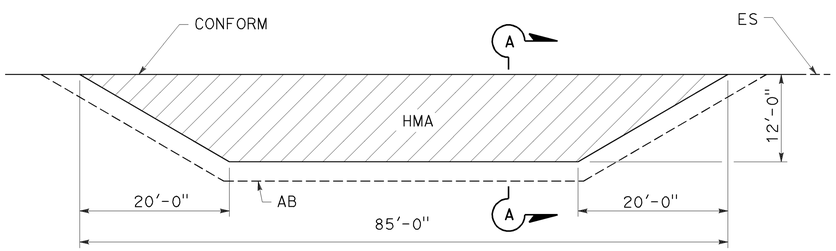

PLAN

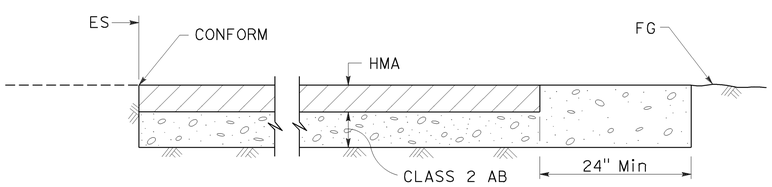

SECTION A-A
MAINTENANCE VEHICLE PULLOUT

STATE OF CALIFORNIA
DEPARTMENT OF TRANSPORTATION

LANDSCAPE DETAILS

NO SCALE

RSP H9A DATED JULY 19, 2013 SUPPLEMENTS THE STANDARD PLANS BOOK DATED 2010.

REVISED STANDARD PLAN RSP H9A

2010 REVISED STANDARD PLAN RSP H9A

6-21-13

Dist	COUNTY	ROUTE	POST MILES TOTAL PROJECT	SHEET No.	TOTAL SHEETS
04	Ala	13	8.3	60	108

REGISTERED CIVIL ENGINEER

July 19, 2013
PLANS APPROVAL DATE

REGISTERED PROFESSIONAL ENGINEER
Gurinderpal Bhullar
No. C48815
Exp. 9-30-14
CIVIL
STATE OF CALIFORNIA

THE STATE OF CALIFORNIA OR ITS OFFICERS OR AGENTS SHALL NOT BE RESPONSIBLE FOR THE ACCURACY OR COMPLETENESS OF SCANNED COPIES OF THIS PLAN SHEET.

TO ACCOMPANY PLANS DATED 10-19-15

2010 REVISED STANDARD PLAN RSP T9

TABLE 1

TAPER LENGTH CRITERIA AND CHANNELIZING DEVICE SPACING

SPEED (S)	MINIMUM TAPER LENGTH * FOR WIDTH OF OFFSET 12 FEET (W)				MAXIMUM CHANNELIZING DEVICE SPACING		
					X	Y	Z **
	TANGENT 2L	MERGING L	SHIFTING L/2	SHOULDER L/3	TAPER	TANGENT	CONFLICT
mph	ft	ft	ft	ft	ft	ft	ft
20	160	80	40	27	20	40	10
25	250	125	63	42	25	50	12
30	360	180	90	60	30	60	15
35	490	245	123	82	35	70	17
40	640	320	160	107	40	80	20
45	1080	540	270	180	45	90	22
50	1200	600	300	200	50	100	25
55	1320	660	330	220	55	110	27
60	1440	720	360	240	60	120	30
65	1560	780	390	260	65	130	32
70	1680	840	420	280	70	140	35

* - For other offsets, use the following merging taper length formula for L:
For speed of 40 mph or less, $L = WS^2/60$
For speed of 45 mph or more, $L = WS$

Where: L = Taper length in feet
W = Width of offset in feet
S = Posted speed limit, off-peak 85th-percentile speed prior to work starting, or the anticipated operating speed in mph

** - Use for taper and tangent sections where there are no pavement markings or where there is a conflict between existing pavement markings and channelizers (CA).

TABLE 2

LONGITUDINAL BUFFER SPACE AND FLAGGER STATION SPACING

SPEED *	Min D **	DOWNGRADE Min D ***		
		-3%	-6%	-9%
mph	ft	ft	ft	ft
20	115	116	120	126
25	155	158	165	173
30	200	205	215	227
35	250	257	271	287
40	305	315	333	354
45	360	378	400	427
50	425	446	474	507
55	495	520	553	593
60	570	598	638	686
65	645	682	728	785
70	730	771	825	891

* - Speed is posted speed limit, off-peak 85th-percentile speed prior to work starting, or the anticipated operating speed in mph

** - Longitudinal buffer space or flagger station spacing

*** - Use on sustained downgrade steeper than -3 percent and longer than 1 mile.

TABLE 3

ADVANCE WARNING SIGN SPACING

ROAD TYPE	DISTANCE BETWEEN SIGNS *		
	A	B	C
	ft	ft	ft
URBAN - 25 mph OR LESS	100	100	100
URBAN - MORE THAN 25 mph TO 40 mph	250	250	250
URBAN - MORE THAN 40 mph	350	350	350
RURAL	500	500	500
EXPRESSWAY / FREEWAY	1000	1500	2640

* - The distances are approximate, are intended for guidance purposes only, and should be applied with engineering judgment. These distances should be adjusted by the Engineer for field conditions, if necessary, by increasing or decreasing the recommmended distances.

STATE OF CALIFORNIA
DEPARTMENT OF TRANSPORTATION

TRAFFIC CONTROL SYSTEM TABLES FOR LANE AND RAMP CLOSURES

NO SCALE

RSP T9 DATED JULY 19, 2013 SUPERSEDES RSP T9 DATED APRIL 19, 2013 THAT SUPPLEMENTS THE STANDARD PLANS BOOK DATED 2010.

REVISED STANDARD PLAN RSP T9

Dist	COUNTY	ROUTE	POST MILES TOTAL PROJECT	SHEET No.	TOTAL SHEETS
04	Ala	13	8.3	61	108

REGISTERED CIVIL ENGINEER

October 21, 2011
PLANS APPROVAL DATE

REGISTERED PROFESSIONAL ENGINEER Tillat Satter No. C42892 Exp. 3-31-12 CIVIL STATE OF CALIFORNIA

THE STATE OF CALIFORNIA OR ITS OFFICERS OR AGENTS SHALL NOT BE RESPONSIBLE FOR THE ACCURACY OR COMPLETENESS OF SCANNED COPIES OF THIS PLAN SHEET.

TO ACCOMPANY PLANS DATED 10-19-15

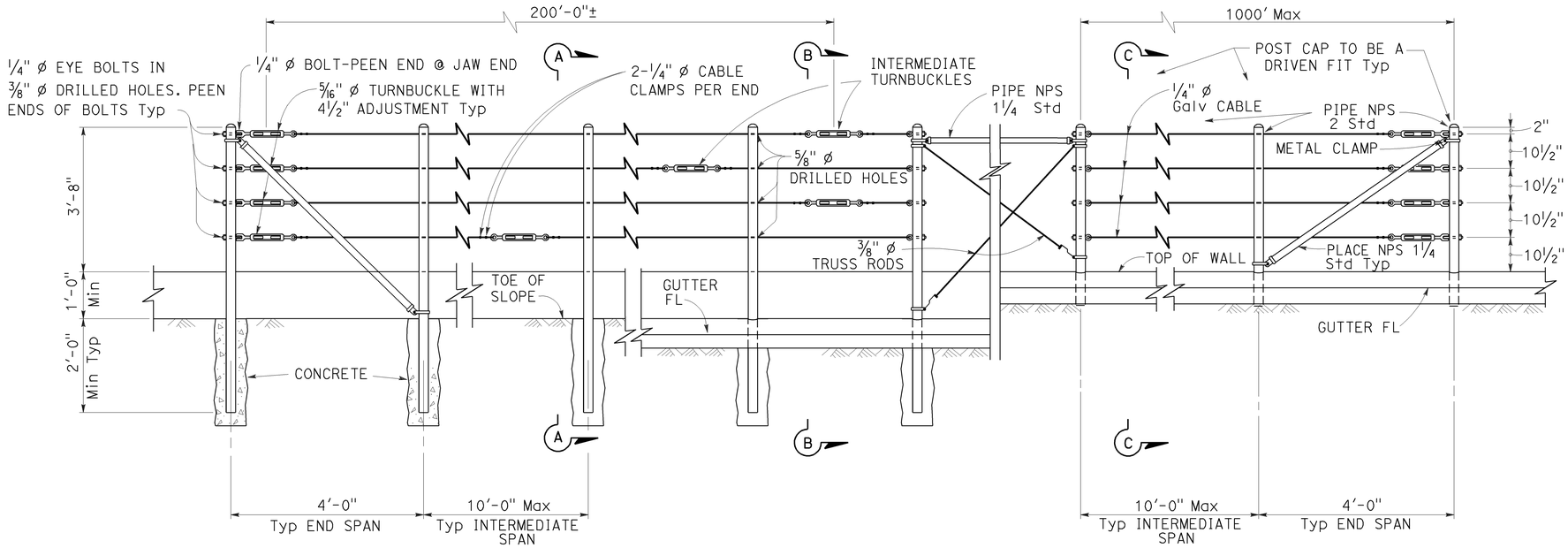

EXISTING WALL (WITHOUT GUTTER)
Existing

RETAINING WALL (WITH GUTTER)
Existing

RETAINING WALL (WITH GUTTER)
New construction

ELEVATION

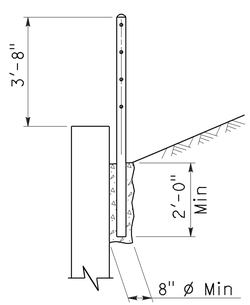

SECTION A-A
Existing

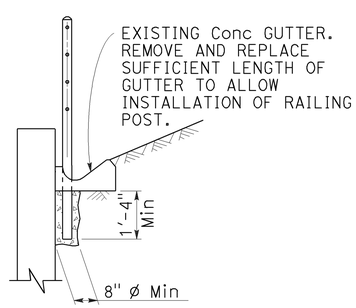

SECTION B-B
Existing

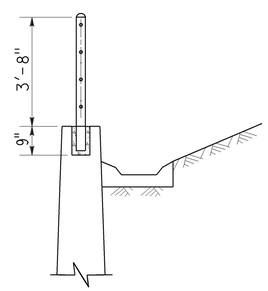

SECTION C-C
New construction

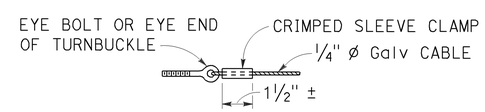

ALTERNATIVE CABLE CONNECTION

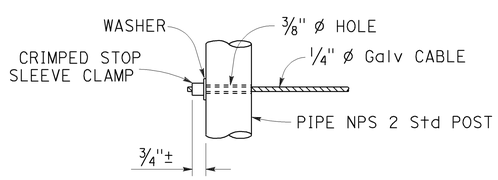

ALTERNATIVE DEAD END ANCHORAGE

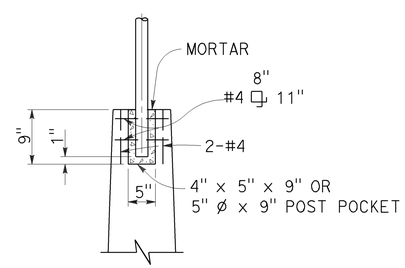

POST POCKET

NOTES:

1. Maximum distance between turnbuckles shall be 200'-0"±.
2. Intermediate turnbuckles to be placed in adjacent spans.
3. Cable shall not be spliced between intermediate turnbuckles and end posts.
4. Posts to be vertical.
5. Alignment of holes in posts may vary to conform to slope of top of retaining wall.
6. The Contractor shall verify all dependent dimensions in the field before ordering or fabricating any material.
7. Line posts shall be braced horizontally and trussed diagonally in both directions at intervals not to exceed 1000'.
8. Post pockets to be centered in top of wall.
9. Typical end spans, braced in both directions, shall be constructed at changes in line where the angle of deflection is 15° or more.
10. Provide thimbles at all cable loops.

STATE OF CALIFORNIA
DEPARTMENT OF TRANSPORTATION

CABLE RAILING

NO SCALE

RSP B11-47 DATED OCTOBER 21, 2011 SUPERSEDES STANDARD PLAN B11-47 DATED MAY 20, 2011 - PAGE 293 OF THE STANDARD PLANS BOOK DATED 2010.

REVISED STANDARD PLAN RSP B11-47

2010 REVISED STANDARD PLAN RSP B11-47

9-14-11

Dist	COUNTY	ROUTE	POST MILES TOTAL PROJECT	SHEET No.	TOTAL SHEETS
04	Ala	13	8.3	62	108

REGISTERED CIVIL ENGINEER

November 15, 2013
PLANS APPROVAL DATE

REGISTERED PROFESSIONAL ENGINEER
Tillat Satter
No. C42892
Exp. 3-31-14
CIVIL
STATE OF CALIFORNIA

THE STATE OF CALIFORNIA OR ITS OFFICERS OR AGENTS SHALL NOT BE RESPONSIBLE FOR THE ACCURACY OR COMPLETENESS OF SCANNED COPIES OF THIS PLAN SHEET.

TO ACCOMPANY PLANS DATED 10-19-15

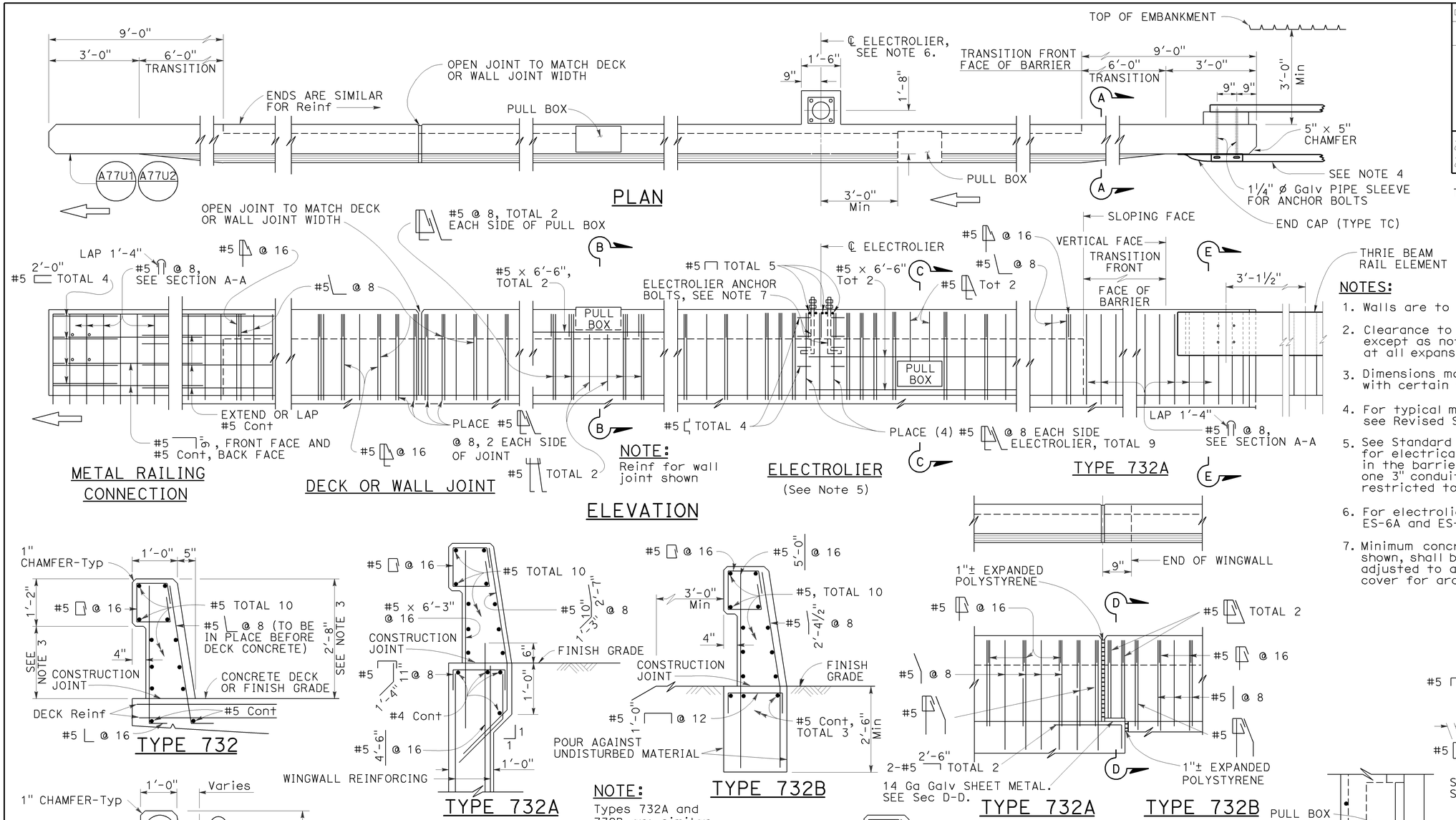

NOTES:

1. Walls are to be backfilled before barrier is placed.
2. Clearance to reinforcing steel in barrier to be 1", except as noted. Longitudinal reinforcement to stop at all expansion joints.
3. Dimensions may vary with roadway cross slope and with certain thickness of surfacing. See Project Plans.
4. For typical metal railing connection details not shown, see Revised Standard Plans RSP A77U1 and RSP A77U2.
5. See Standard Plans ES-9A, ES-9B, ES-9C, ES-9D and ES-9E for electrical details. The maximum number of conduits in the barrier is limited to two 2" conduits along with one 3" conduit. When a 3" conduit is used, it is restricted to the base of the barrier.
6. For electrolier mounting details, See Standard Plans ES-6A and ES-6B.
7. Minimum concrete edge distance, to the reinforcing shown, shall be maintained. Edge distance may be adjusted to accommodate increase in concrete cover for architectual treatment.

NOTE: Types 732A and 732B are similar to Type 732 except as noted.

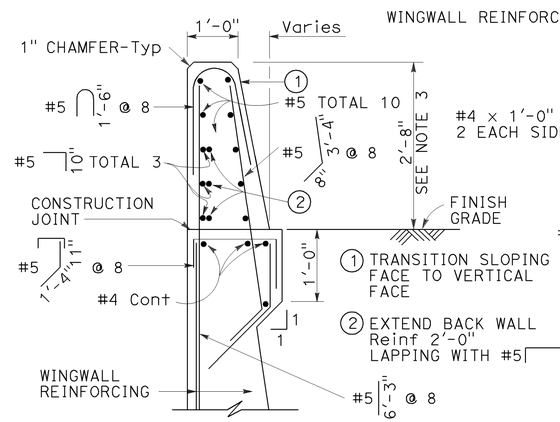

Details shown for barrier anchorage to Type 732A. Anchorage for barrier Types 732 and 732A are similar to their respective details.

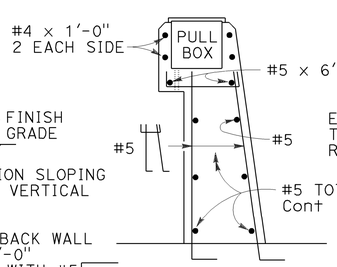

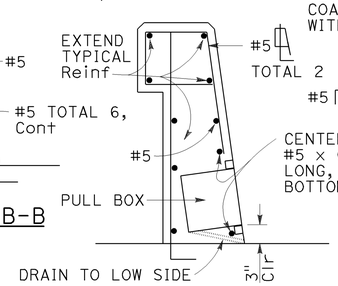

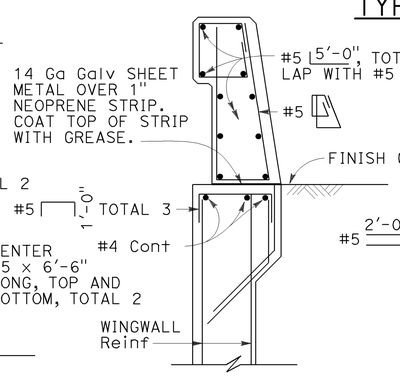

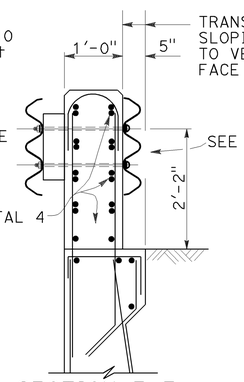

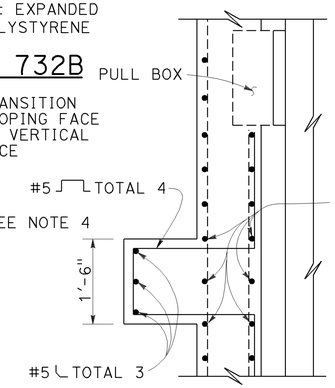

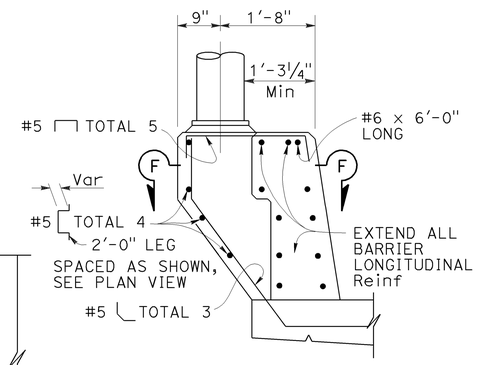

STATE OF CALIFORNIA
DEPARTMENT OF TRANSPORTATION

CONCRETE BARRIER TYPE 732

NO SCALE

RSP B11-55 DATED NOVEMBER 15, 2013 SUPERSEDES
RSP B11-55 DATED JULY 19, 2013 AND STANDARD PLAN B11-55
DATED MAY 20, 2011 - PAGE 297 OF THE STANDARD PLANS BOOK DATED 2010.

REVISED STANDARD PLAN RSP B11-55

2010 REVISED STANDARD PLAN RSP B11-55

10-4-13

Dist	COUNTY	ROUTE	POST MILES TOTAL PROJECT	SHEET No.	TOTAL SHEETS
04	Ala	13	8.3	63	108

Theresa Gabriel
REGISTERED ELECTRICAL ENGINEER

July 19, 2013
PLANS APPROVAL DATE

REGISTERED PROFESSIONAL ENGINEER Theresa Aziz Gabriel No. E15129 Exp. 6-30-14 ELECTRICAL STATE OF CALIFORNIA

THE STATE OF CALIFORNIA OR ITS OFFICERS OR AGENTS SHALL NOT BE RESPONSIBLE FOR THE ACCURACY OR COMPLETENESS OF SCANNED COPIES OF THIS PLAN SHEET.

TO ACCOMPANY PLANS DATED 10-19-15

LEGEND:

AB	ABANDON. IF APPLIED TO CONDUIT, REMOVE CONDUCTORS
BC	INSTALL PULL BOX IN EXISTING CONDUIT RUN
BP	PEDESTRIAN BARRICADE, TYPE AS INDICATED ON PLAN
CB	INSTALL CONDUIT INTO EXISTING PULL BOX
CC	CONNECT NEW AND EXISTING CONDUIT. REMOVE EXISTING CONDUCTORS AND INSTALL CONDUCTORS AS INDICATED
CF	CONDUIT TO REMAIN FOR FUTURE USE. REMOVE CONDUCTORS. INSTALL PULL TAPE
DH	DETECTOR HANDHOLE
FA	FOUNDATION TO BE ABANDONED
IS	INSTALL SIGN ON SIGNAL MAST ARM
NS	NO SLIP BASE ON STANDARD
PEC	PHOTOELECTRIC CONTROL
PEU	PHOTOELECTRIC UNIT
RC	EQUIPMENT OR MATERIAL TO BE REMOVED AND BECOME THE PROPERTY OF THE CONTRACTOR
RE	REMOVE ELECTROLIER, FUSES AND BALLAST. TAPE ENDS OF CONDUCTORS
RL	RELOCATE EQUIPMENT
RR	REMOVE AND REUSE EQUIPMENT
RS	REMOVE AND SALVAGE EQUIPMENT
SC	SPLICE NEW TO EXISTING CONDUCTORS
SD	SERVICE DISCONNECT
TSP	TELEPHONE SERVICE POINT

ABBREVIATIONS

APS	ACCESSIBLE PEDESTRIAN SIGNAL
BBS	BATTERY BACKUP SYSTEM
BC	BOLT CIRCLE
BPB	BICYCLE PUSH BUTTON
C	CONDUIT
CB	CIRCUIT BREAKER
CCTV	CLOSED CIRCUIT TELEVISION
Ckt	CIRCUIT
CMS	CHANGEABLE MESSAGE SIGN
Ctid	CALTRANS IDENTIFICATION
Comm	COMMUNICATION
DLC	LOOP DETECTOR LEAD-IN CABLE
EMS	EXTINGUISHABLE MESSAGE SIGN
EVUC	EMERGENCY VEHICLE UNIT CABLE
EVUD	EMERGENCY VEHICLE UNIT DETECTOR
FB	FLASHING BEACON
FBCA	FLASHING BEACON CONTROL ASSEMBLY
FBS	FLASHING BEACON WITH SLIP BASE
FO	FIBER OPTIC
G	EQUIPMENT GROUNDING CONDUCTOR
GB	GROUND BUS
GFCI	GROUND FAULT CIRCUIT INTERRUPTER
HAR	HIGHWAY ADVISORY RADIO
Hex	HEXAGONAL
HPS	HIGH PRESSURE SODIUM
IISNS	INTERNALLY ILLUMINATED STREET NAME SIGN
ISL	INDUCTION SIGN LIGHTING
LED	LIGHT EMITTING DIODE
LMA	LUMINAIRE MAST ARM
LPS	LOW PRESSURE SODIUM
Ltg	LIGHTING
Lum	LUMINAIRE
M	METERED
MAT	MAST ARM MOUNTING TOP ATTACHMENT
MAS	MAST ARM MOUNTING SIDE ATTACHMENT
M/M	MULTIPLE TO MULTIPLE TRANSFORMER
Mtg	MOUNTING
MV	MERCURY VAPOR LIGHTING FIXTURE
MVDS	MICROWAVE VEHICLE DETECTION SYSTEM
N	NEUTRAL (GROUNDED CONDUCTOR)
NB	NEUTRAL BUS
NC	NORMALLY CLOSE
NO	NORMALLY OPEN
P	CIRCUIT BREAKER'S POLE
PB	PULL BOX
PBA	PUSH BUTTON ASSEMBLY
PEC	PHOTOELECTRIC CONTROL
Ped	PEDESTRIAN
PEU	PHOTOELECTRIC UNIT
PT	CONDUIT WITH PULL TAPE
RE	RELOCATED EQUIPMENT
RM	RAMP METERING
RWIS	ROADSIDE WEATHER INFORMATION SYSTEM
SB	SLIP BASE
SIC	SIGNAL INTERCONNECT CABLE
Sig	SIGNAL
SMA	SIGNAL MAST ARM
SNS	STREET NAME SIGN
SP	SERVICE POINT
TDC	TELEPHONE DEMARCATION CABINET
TMS	TRAFFIC MONITORING STATION
TOS	TRAFFIC OPERATIONS SYSTEM
Veh	VEHICLE
VIVDS	VIDEO IMAGE VEHICLE DETECTION SYSTEM
WIM	WEIGH-IN-MOTION
Xfmr	TRANSFORMER

SOFFIT AND WALL MOUNTED LUMINAIRES

PENDANT, 70 W HPS UNLESS OTHERWISE SPECIFIED

FLUSH, 70 W HPS UNLESS OTHERWISE SPECIFIED

WALL SURFACE, 70 W HPS UNLESS OTHERWISE SPECIFIED

EXISTING SOFFIT OR WALL LUMINAIRE TO REMAIN UNMODIFIED

EXISTING SOFFIT OR WALL LUMINAIRE TO BE MODIFIED AS SPECIFIED

NOTE:

Arrow indicates "street side" of luminaire.

COMMONLY USED SYMBOLS FOR UNITED STATES CUSTOMARY UNITS OF MEASUREMENT:

SYMBOL USED	DEFINITIONS
Ω	OHMS
min	MINUTE
s	SECOND
bps	BITS PER SECOND
Bps	BYTES PER SECOND
A	AMPERE
V	VOLT
V(dc)	VOLT (DIRECT CURRENT)
V(ac)	VOLT (ALTERNATING CURRENT)
FC	FOOT - CANDLE
W	WATTS
VA	VOLT-AMPERE
M	MEGA
k	KILO
m	MILLI
μ	MICRO
P	PICO
Hz	HERTZ

MISCELLANEOUS ELECTROLIERS

NEW	EXISTING	
		LUMINAIRE ON WOOD POLE
		NON-STANDARD ELECTROLIER (SEE PROJECT NOTES OR PROJECT PLANS)
		CITY ELECTROLIER
		ELECTROLIER FOUNDATION (FUTURE INSTALLATION)

NOTES:

1. HPS luminaires shall be 310 W HPS when installed on Type 21, 21D, 30, 31 and 32 Standards, unless otherwise specified. HPS luminaires shall be 200 W when installed on other type standards or poles, unless otherwise specified.
2. LED luminaires shall be 235 W when installed on Type 21, 21D, 30, 31 and 32 Standards, unless otherwise specified. LED luminaires shall be 165 W when installed on other type standards or poles, unless otherwise specified.
3. Luminaires shall be the cutoff type, ANSI Type III medium cutoff lighting distribution, unless otherwise specified.

STANDARD ELECTROLIER

NEW	EXISTING	STANDARD TYPE
		15
		15D
		15 STRUCTURE
		15D STRUCTURE
		21
		21D
		21 STRUCTURE
		21D STRUCTURE
		30
		31
		32

STATE OF CALIFORNIA
DEPARTMENT OF TRANSPORTATION

ELECTRICAL SYSTEMS (LEGEND AND ABBREVIATIONS)

NO SCALE

RSP ES-1A DATED JULY 19, 2013 SUPERSEDES STANDARD PLAN ES-1A DATED MAY 20, 2011 - PAGE 425 OF THE STANDARD PLANS BOOK DATED 2010.

REVISED STANDARD PLAN RSP ES-1A

2010 REVISED STANDARD PLAN RSP ES-1A

Dist	COUNTY	ROUTE	POST MILES TOTAL PROJECT	SHEET No.	TOTAL SHEETS
04	Ala	13	8.3	64	108

Theresa Gabriel
REGISTERED ELECTRICAL ENGINEER

July 19, 2013
PLANS APPROVAL DATE

REGISTERED PROFESSIONAL ENGINEER
Theresa Aziz Gabriel
No. E15129
Exp. 6-30-14
ELECTRICAL
STATE OF CALIFORNIA

THE STATE OF CALIFORNIA OR ITS OFFICERS OR AGENTS SHALL NOT BE RESPONSIBLE FOR THE ACCURACY OR COMPLETENESS OF SCANNED COPIES OF THIS PLAN SHEET.

TO ACCOMPANY PLANS DATED 10-19-15

CONDUIT

NEW	EXISTING	
		LIGHTING CONDUIT, UNLESS OTHERWISE INDICATED OR NOTED
		TRAFFIC SIGNAL CONDUIT
C	c	COMMUNICATION CONDUIT
T	t	TELEPHONE CONDUIT
F	f	FIRE ALARM CONDUIT
FO	fo	FIBER OPTIC CONDUIT
		CONDUIT TERMINATION
R	r	CONDUIT RISER ATTACHED TO THE STRUCTURE OR SERVICE POLE

SERVICE EQUIPMENT

NEW	EXISTING	
OH	oh	OVERHEAD LINES
U	U	WOOD POLE, "U" INDICATES UTILITY OWNED
		POLE GUY WITH ANCHOR
		UTILITY TRANSFORMER - GROUND MOUNTED
III	III	SERVICE EQUIPMENT ENCLOSURE TYPE. DOOR INDICATES FRONT OF ENCLOSURE
T	t	TELEPHONE DEMARCATION CABINET

POLE-MOUNTED SERVICE DESIGNATION

TYPE H SERVICE, 28'-10" — TYPE OF INSTALLATION AND POLE HEIGHT ABOVE GRADE

FLASHING BEACON

NEW	EXISTING	
R	R	FLASHING BEACON (ONE VEHICLE SIGNAL HEAD WITH BACKPLATE AND VISOR) "R" INDICATES RED INDICATION, "Y" INDICATES YELLOW INDICATION
Y Y	Y Y	FLASHING BEACON WITH TYPE 15-FBS STANDARD AND A SIGN.
R R	R R	FLASHING BEACON WITH TYPES 9, 9A OR 9B SIGN UNLESS OTHERWISE SPECIFIED OR INDICATED

SIGNAL EQUIPMENT

NEW	EXISTING	
C	C	PEDESTRIAN SIGNAL HEAD "C" INDICATES COUNTDOWN PEDESTRIAN HEAD
		PUSH BUTTON ASSEMBLY POST
		PEDESTRIAN BARRICADE
		VEHICLE SIGNAL HEAD (WITH BACKPLATE AND 3-SECTIONS: RED, YELLOW AND GREEN)
		VEHICLE SIGNAL HEAD WITH ANGLE VISOR
PV	PV	MODIFICATIONS OF BASIC SYMBOL: "L" INDICATES ALL NON-ARROW SECTIONS LOUVERED "LG" INDICATES LOUVERED GREEN SECTION ONLY "PV" INDICATES ALL 12" SECTIONS PROGRAMMED VISIBILITY "8" INDICATES ALL 8" SECTIONS (ONLY WHEN SPECIFIED)
		VEHICLE SIGNAL HEAD CONSISTING OF RED, YELLOW AND GREEN LEFT ARROW SECTIONS
		VEHICLE SIGNAL HEAD CONSISTING OF RED AND YELLOW SECTIONS WITH AN UP GREEN ARROW SECTION
		VEHICLE SIGNAL HEAD (5 SECTION) CONSISTING OF RED, YELLOW AND GREEN SECTIONS WITH YELLOW AND GREEN RIGHT ARROW SECTIONS
		TYPE 15TS STANDARD WITH VEHICLE SIGNAL HEAD AND LUMINAIRE
		TYPE 21TS STANDARD WITH VEHICLE SIGNAL HEAD AND LUMINAIRE
		STANDARD WITH LUMINAIRE AND SIGNAL MAST ARMS AND ATTACHED VEHICLE SIGNAL HEADS
		TYPE 1 STANDARD WITH ATTACHED VEHICLE SIGNAL HEADS
		STANDARD WITH A SIGNAL MAST ARM, ATTACHED VEHICLE SIGNAL HEADS AND INTERNALLY ILLUMINATED STREET NAME SIGN
		CONTROLLER ASSEMBLY. DOOR INDICATES FRONT OF CABINET

SIGNAL EQUIPMENT Cont

NEW	EXISTING	
		GUARD POST
		TYPE 1 STANDARD WITH RAMP METERING SIGN
		OPTICAL DETECTOR FOR THE EMERGENCY VEHICLE DETECTION SYSTEM

NOTES:

1. All signal sections shall be 12" unless shown otherwise.
2. Signal heads shall be provided with backplates unless shown otherwise.

ILLUMINATED OVERHEAD SIGN

NEW	EXISTING	
		SINGLE POST, SINGLE ILLUMINATED SIGN, BALANCED BUTTERFLY
		SINGLE POST, DOUBLE ILLUMINATED SIGN, BALANCED BUTTERFLY
		SINGLE POST, SINGLE ILLUMINATED SIGN, FULL CANTILEVER
		DOUBLE POST, SINGLE ILLUMINATED SIGN
		SINGLE ILLUMINATED SIGN MOUNTED ON STRUCTURE
		DOUBLE POST, SINGLE ILLUMINATED SIGN WITH ELECTROLIER

STATE OF CALIFORNIA
DEPARTMENT OF TRANSPORTATION

ELECTRICAL SYSTEMS (LEGEND AND ABBREVIATIONS)

NO SCALE

RSP ES-1B DATED JULY 19, 2013 SUPERSEDES STANDARD PLAN ES-1B DATED MAY 20, 2011 - PAGE 426 OF THE STANDARD PLANS BOOK DATED 2010.

REVISED STANDARD PLAN RSP ES-1B

2010 REVISED STANDARD PLAN RSP ES-1B

7-15-13

Dist	COUNTY	ROUTE	POST MILES TOTAL PROJECT	SHEET No.	TOTAL SHEETS
04	Ala	13	8.3	65	108

Theresa Gabriel
REGISTERED ELECTRICAL ENGINEER

July 19, 2013
PLANS APPROVAL DATE

REGISTERED PROFESSIONAL ENGINEER
Theresa Aziz Gabriel
No. E15129
Exp. 6-30-14
ELECTRICAL
STATE OF CALIFORNIA

THE STATE OF CALIFORNIA OR ITS OFFICERS OR AGENTS SHALL NOT BE RESPONSIBLE FOR THE ACCURACY OR COMPLETENESS OF SCANNED COPIES OF THIS PLAN SHEET.

TO ACCOMPANY PLANS DATED 10-19-15

EQUIPMENT IDENTIFICATION

ILLUMINATED SIGN IDENTIFICATION NUMBER:

SIGN No. 12345
10 ISL SCI 1.0

- SIGN NUMBER - PLACE ON POST OR STRUCTURE
- TRANSFORMER RATING (kVA)
- LIGHTING CONTROL TYPE
- NUMBER AND TYPE OF FIXTURES

DO NOT PLACE ON STANDARD OR STRUCTURE

ELECTROLIER OR EQUIPMENT IDENTIFICATION NUMBER:

12345 - 15'-0"

- MAST ARM LENGTH, IF SHOWN. DO NOT PLACE ON STANDARD OR STRUCTURE
- EQUIPMENT NUMBER - PLACE ON STANDARD OR STRUCTURE. EXISTING EQUIPMENT NUMBERS ARE SHOWN IN PARENTHESIS

CONDUIT AND CONDUCTOR IDENTIFICATION:

1½"C, 2#10, 15#14, 2 DLC, 12P#18

- PAIR
- NUMBER AND SIZE OF CONDUCTORS AND CABLES
- SIZE OF CONDUIT IN INCHES

ø1, ø2, ø2P, etc.	TRAFFIC PHASE IDENTIFICATION FOR SIGNAL FACES, DETECTORS AND PHASE DIAGRAMS
1 2 3	LEGEND NUMBERS
A B C	EQUIPMENT, SIGNAL POLES, INSTALLATION OR ITEMS
1 2 3	CONDUIT RUN NUMBERS

SIGNAL AND LIGHTING STANDARD (TYPICAL DESIGNATION):

19A - 3 - 100

- WIND VELOCITY = 100 mph
- CASE 3 ARM LOADING
- STANDARD TYPE
- STANDARD PLAN SHEET NUMBER
- DETAIL, NUMBER, SECTION, TYPE OR ELEVATION

MISCELLANEOUS EQUIPMENT

NEW	EXISTING	
CMS	cms	CHANGEABLE MESSAGE SIGN
		CLOSED CIRCUIT TELEVISION CAMERA
		HIGHWAY ADVISORY RADIO POLE AND ANTENNA
EMS	ems	EXTINGUISHABLE MESSAGE SIGN
M V	m v	DETECTION DEVICE M = MICROWAVE SENSOR V = VIDEO IMAGE SENSOR

WIRING DIAGRAM LEGEND

----	EXTERNAL CONDUCTOR
	CONDUCTOR OR BUS
	TIE POINT
	CONTACTOR COIL
	CONTACTOR, NO CONTACT
	TERMINAL BLOCKS
	CONTACTOR, NC CONTACT
	ENCLOSURE BOND
	GROUNDING ELECTRODE
	CIRCUIT BREAKER
	RECEPTACLE

PULL BOXES

NEW	EXISTING	
		PULL BOX, No. 5 UNLESS OTHERWISE INDICATED OR NOTED
3	9A(21)	PULL BOX, ADDITIONAL DESIGNATIONS OR DESCRIPTIONS

3 No. 3½ PULL BOX
5 No. 5 PULL BOX
6 No. 6 PULL BOX
7 No. 7 (CEILING PULL BOX)
8 No. 8 (PENDANT SOFFIT PULL BOX)
9 No. 9 PULL BOX
9A No. 9A PULL BOX

(C) COMMUNICATIONS PULL BOX
(E) PULL BOX WITH EXTENSION
(S) SPRINKLER CONTROL PULL BOX
(21) ANCHOR BOLTS AND CONDUIT FOR FUTURE INSTALLATION OF TYPE 21 STANDARD
(T) TRAFFIC PULL BOX

VEHICLE DETECTORS

5 J 9 U

- VEHICLE DETECTOR DESIGNATION
- U = UPPER
  L = LOWER
- SLOT NUMBER IN INPUT FILE
- INPUT FILE (I OR J)
- PHASE

NEW	EXISTING	
		TYPE A DETECTOR LOOP. OUTLINE OF SAWCUT SHOWN
		TYPE B DETECTOR LOOP. OUTLINE OF SAWCUT SHOWN
		TYPE C DETECTOR LOOP. OUTLINE OF SAWCUT SHOWN
		TYPE D DETECTOR LOOP. OUTLINE OF SAWCUT SHOWN
		TYPE E DETECTOR LOOP. OUTLINE OF SAWCUT SHOWN
		TYPE Q DETECTOR LOOP. OUTLINE OF SAWCUT SHOWN
		MAGNETIC DETECTOR
DH	dh	DETECTOR HANDHOLE
		MICROWAVE OR VIDEO DETECTION ZONE

STATE OF CALIFORNIA
DEPARTMENT OF TRANSPORTATION

ELECTRICAL SYSTEMS (LEGEND AND ABBREVIATIONS)

NO SCALE

RSP ES-1C DATED JULY 19, 2013 SUPERSEDES STANDARD PLAN ES-1C DATED MAY 20, 2011 - PAGE 427 OF THE STANDARD PLANS BOOK DATED 2010.

REVISED STANDARD PLAN RSP ES-1C

2010 REVISED STANDARD PLAN RSP ES-1C

7-11-13

DIST	COUNTY	ROUTE	POST MILES TOTAL PROJECT	SHEET NO.	TOTAL SHEETS
04	Ala	13	8.3	66	108

Theresa Gabriel
REGISTERED ELECTRICAL ENGINEER

July 19, 2013
PLANS APPROVAL DATE

REGISTERED PROFESSIONAL ENGINEER Theresa Aziz Gabriel No. E15129 Exp. 6-30-14 ELECTRICAL STATE OF CALIFORNIA

THE STATE OF CALIFORNIA OR ITS OFFICERS OR AGENTS SHALL NOT BE RESPONSIBLE FOR THE ACCURACY OR COMPLETENESS OF SCANNED COPIES OF THIS PLAN SHEET.

TO ACCOMPANY PLANS DATED 10-19-15

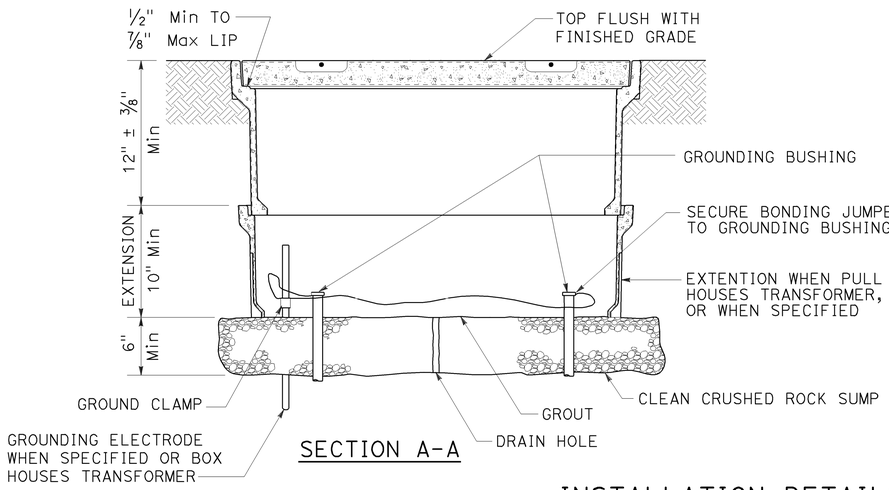

SECTION A-A

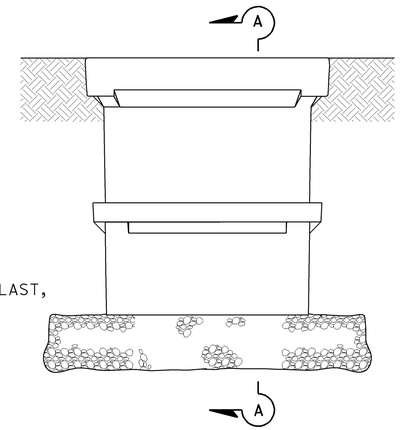

SIDE VIEW

INSTALLATION DETAILS

DETAIL A

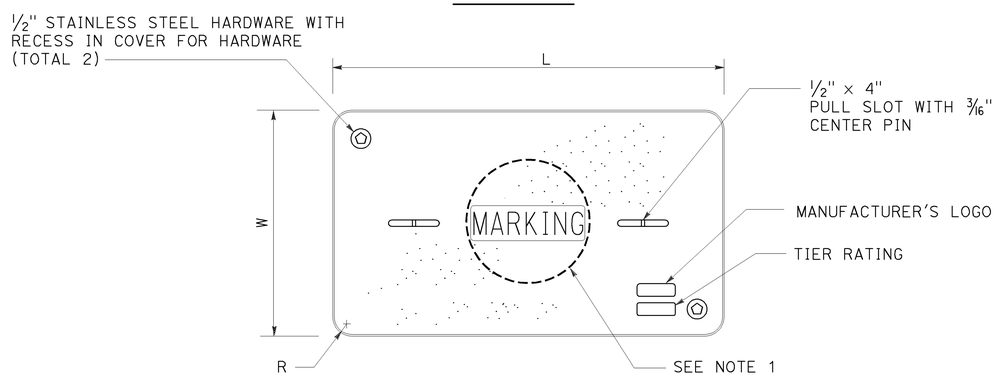

COVER TOP VIEW

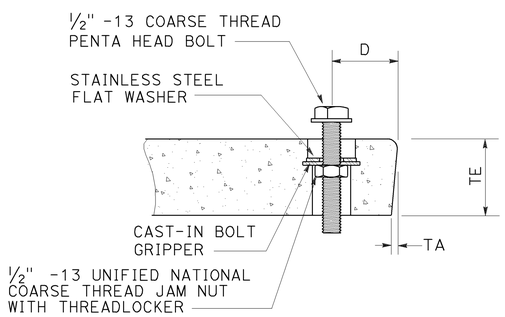

TYPICAL COVER CAPTIVE BOLT

OR SIMILAR

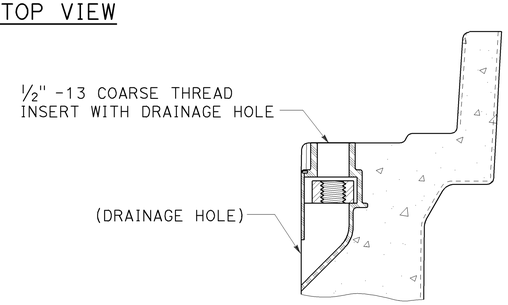

TYPICAL THREADED INSERT

OR SIMILAR

DIMENSION TABLE

PULL BOX	PULL BOX			COVER						
	MINIMUM DEPTH BOX	MINIMUM DEPTH EXTENSION	MAXIMUM WEIGHT	L	W	R	TE	TA	D	MAXIMUM WEIGHT
No. 3½	12"	N/A	40 lb	1′ - 3⅜"	10⅛"	1⅜"	2"	⅛"	1¾"	30 lb
No. 5	12"	10"	55 lb	1′ - 11¼"	1′ - 1¾"	1⅜"	2"	⅛"	1¾"	60 lb
No. 6	12"	10"	70 lb	2′ - 6½"	1′ - 5½"	1⅜"	2"	⅛"	2"	85 lb

NOTES:

1. Pull box covers shall be marked as follows: "SERVICE" Service circuits between service point and service disconnect; "SPRINKLER-CONTROL" sprinkler control circuits, 50 V or less; "CALTRANS" on all pull boxes, except pull boxes marked "SPRINKLER-CONTROL"; and "TELEPHONE" Telephone service;
   - A) No. 3½ pull box.
     - 1) "SIGNAL" - Traffic signal circuits with or without lighting or sign lighting circuits.
     - 2) "LIGHTING" - Lighting or sign lighting circuits where voltage is under 600 V.
   - B) No. 5, 6, 9 or 9A pull box.
     - 1) "TRAFFIC SIGNAL" - Traffic signal circuits with or without lighting or sign lighting circuits.
     - 2) "LIGHTING" - Lighting or sign lighting circuits where voltage is under 600 V.
     - 3) "LIGHTING-HIGH VOLTAGE" - Lighting or sign lighting circuits where voltage is above 600 V.
     - 4) "IRRIGATION" - Circuits to irrigation controller 120 V or more.
     - 5) "RAMP METER" - Ramp meter circuits.
     - 6) "COUNT STATION" - Count or speed monitor circuits.
     - 7) "COMMUNICATIONS" - Communication circuits.
     - 8) "TOS COMMUNICATIONS" - TOS communication line.
     - 9) "TOS POWER" - TOS power.
     - 10) "TDC POWER" - Telephone demarcation cabinet power.
     - 11) "CCTV" - Closed circuit television circuits.
     - 12) "TMS" - Traffic monitoring station circuits.
     - 13) "CMS" - Changeable message sign circuits.
     - 14) "HAR" - Highway advisory radio circuits.
     - 15) "BOOSTER PUMP" - Booster pump circuit.
2. The nominal dimensions of the opening in which the cover sets shall be the same as the cover dimensions except the length and width dimensions shall be ⅛" greater.
3. Covers and boxes shall be interchangeable with California standard male and female gages. When interchanged with a standard male or female gage, the top surfaces shall be flush within ⅛". Top outside radius of covers and pull boxes shall have a ⅛" radius.
4. Pull box extension may be another pull box as long as the bottom edge of the pull box can fit into the cover opening.
5. All dimensions for the cover for non-traffic pull box are nominal values.

STATE OF CALIFORNIA
DEPARTMENT OF TRANSPORTATION

ELECTRICAL SYSTEMS (NON-TRAFFIC PULL BOX)

NO SCALE

RSP ES-8A DATED JULY 19, 2013 SUPERSEDES RSP ES-8A DATED JANUARY 20, 2012 THAT SUPPLEMENTS THE STANDARD PLANS BOOK DATED 2010.

REVISED STANDARD PLAN RSP ES-8A

2010 REVISED STANDARD PLAN RSP ES-8A

7-15-13

Dist	COUNTY	ROUTE	POST MILES TOTAL PROJECT	SHEET No.	TOTAL SHEETS
04	Ala	13	8.3	67	108

Theresa Gabriel
REGISTERED ELECTRICAL ENGINEER

July 19, 2013
PLANS APPROVAL DATE

REGISTERED PROFESSIONAL ENGINEER
Theresa Aziz Gabriel
No. E15129
Exp. 6-30-14
ELECTRICAL
STATE OF CALIFORNIA

THE STATE OF CALIFORNIA OR ITS OFFICERS OR AGENTS SHALL NOT BE RESPONSIBLE FOR THE ACCURACY OR COMPLETENESS OF SCANNED COPIES OF THIS PLAN SHEET.

TO ACCOMPANY PLANS DATED 10-19-15

2010 REVISED STANDARD PLAN RSP ES-10A

ISOFOOTCANDLE CURVE - MINIMUM

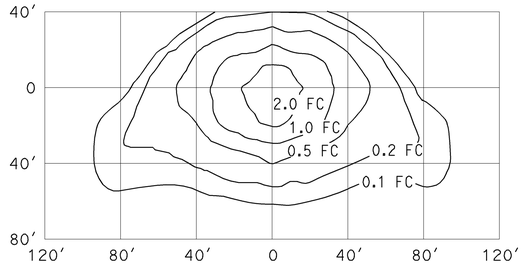

TYPE III MEDIUM CUTOFF

Cutoff Luminaire
34′ Mounting Height
Lamp operated at 22,000 lm
200-W high pressure sodium lamp
ANSI Designation S66

ISOFOOTCANDLE CURVE - MINIMUM

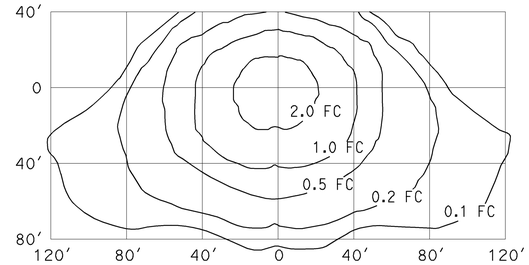

TYPE III MEDIUM CUTOFF

Cutoff Luminaire
40′ Mounting Height
Lamp operated at 37,000 lm
310-W high pressure sodium lamp
ANSI Designation S67

ISOFOOTCANDLE CURVE - MINIMUM

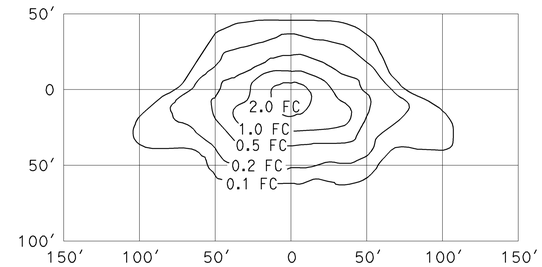

TYPE III MEDIUM CUTOFF

Cutoff Luminaire
30′ Mounting Height
Lamp operated at 16,000 lm
150-W high pressure sodium lamp
ANSI Designation S55

ISOFOOTCANDLE CURVE - MINIMUM

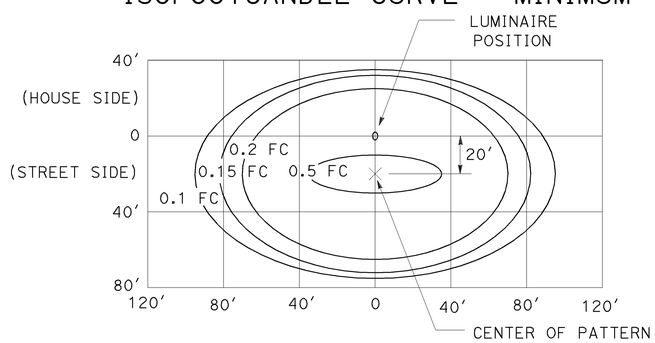

LED LUMINAIRE ROADWAY 1

165-W at 34′ Mounting Height

ISOFOOTCANDLE CURVE - MINIMUM

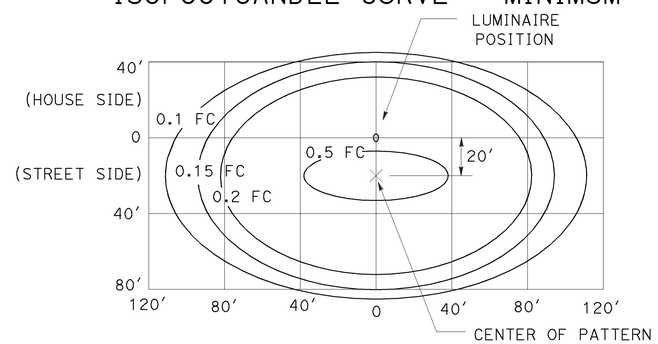

LED LUMINAIRE ROADWAY 2

235-W at 40′ Mounting Height

ISOFOOTCANDLE CURVE - MINIMUM

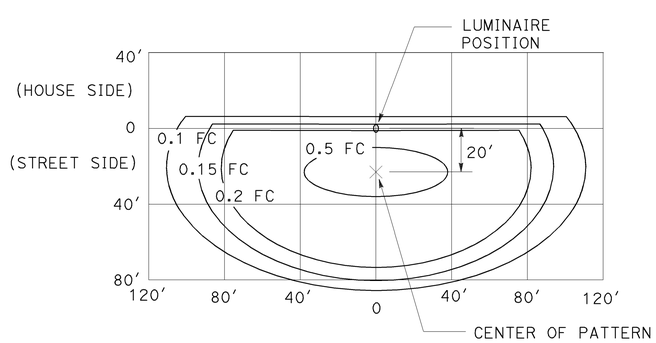

LED LUMINAIRE ROADWAY 3

235-W at 40′ Mounting Height
with back side control

ISOFOOTCANDLE CURVE - MINIMUM

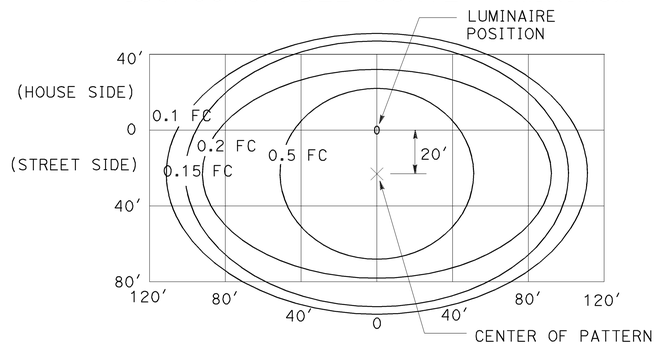

LED LUMINAIRE ROADWAY 4

300-W at 40′ Mounting Height

ISOFOOTCANDLE CURVE - MINIMUM

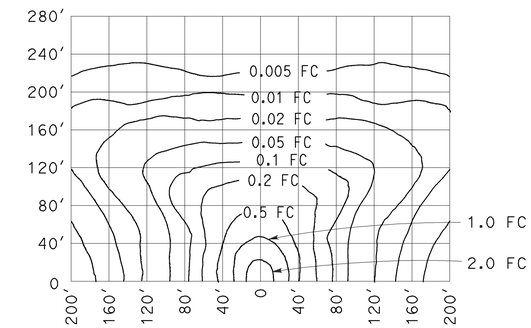

LOW PRESSURE SODIUM LUMINAIRE

40′ Mounting Height
Lamp operated at 33,000 lm
180-W low pressure sodium lamp

STATE OF CALIFORNIA
DEPARTMENT OF TRANSPORTATION

ELECTRICAL SYSTEMS (ISOFOOTCANDLE DIAGRAMS)

NO SCALE

RSP ES-10A DATED JULY 19, 2013 SUPERSEDES RSP ES-10A DATED JULY 20, 2012 THAT SUPPLEMENTS THE STANDARD PLANS BOOK DATED 2010.

REVISED STANDARD PLAN RSP ES-10A

Dist	COUNTY	ROUTE	POST MILES TOTAL PROJECT	SHEET No.	TOTAL SHEETS
04	Ala	13	8.3	68	108

REGISTERED ELECTRICAL ENGINEER

July 20, 2012
PLANS APPROVAL DATE

REGISTERED PROFESSIONAL ENGINEER
Jeffery G. McRae
No. E14512
Exp. 6-30-14
ELECTRICAL
STATE OF CALIFORNIA

THE STATE OF CALIFORNIA OR ITS OFFICERS OR AGENTS SHALL NOT BE RESPONSIBLE FOR THE ACCURACY OR COMPLETENESS OF SCANNED COPIES OF THIS PLAN SHEET.

TO ACCOMPANY PLANS DATED 10-19-15

ISOFOOTCANDLE CURVE - MINIMUM

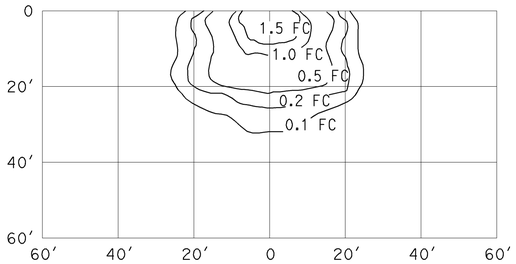

WALL LUMINAIRE
15′ Mounting Height
Lamp operated at 5,800 lm
70-W high pressure sodium lamp
ANSI Designation S62

ISOFOOTCANDLE CURVE - MINIMUM

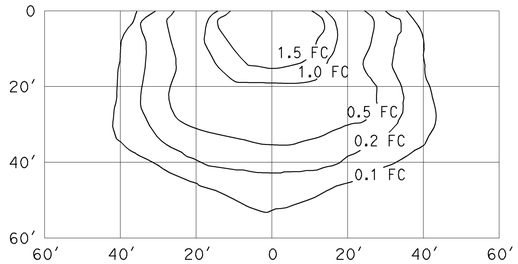

WALL LUMINAIRE
15′ Mounting Height
Lamp operated at 9,500 lm
100-W high pressure sodium lamp
ANSI Designation S54

ISOFOOTCANDLE CURVE - MINIMUM

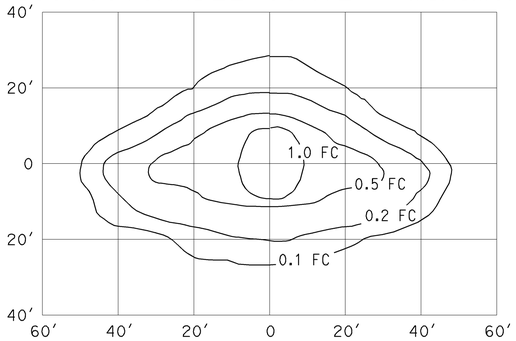

PENDANT SOFFIT LUMINAIRE
TYPE III SHORT
17′ Mounting Height
Lamp operated at 5,800 lm
70-W high pressure sodium lamp
ANSI Designation S62

ISOFOOTCANDLE CURVE - MINIMUM

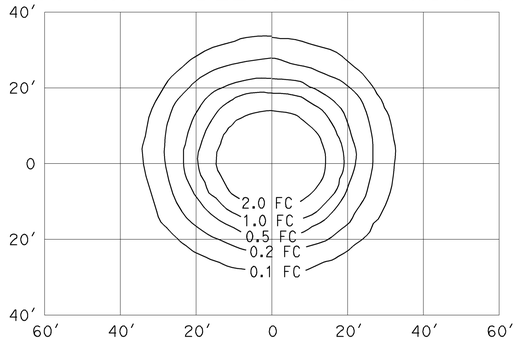

PENDANT SOFFIT LUMINAIRE
17′ Mounting Height
Lamp operated at 5,800 lm
70-W high pressure sodium lamp
ANSI Designation S62

ISOFOOTCANDLE CURVE - MINIMUM

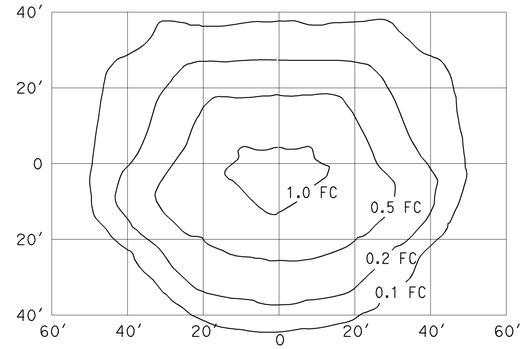

FLUSH SOFFIT LUMINAIRE
17′ Mounting Height
Lamp operated at 5,800 lm
70-W high pressure sodium lamp
ANSI Designation S62

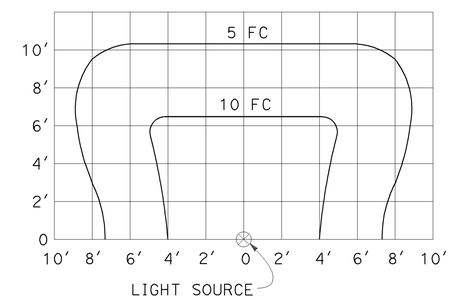

SIGN LIGHTING FIXTURE
ISOFOOTCANDLE DIAGRAM

NOTES:

1. Curves represent the minimum footcandle (FC) of initial illumination on a 10′-0" x 20′-0" panel.
2. The FC shown are with the fixture attached to the light fixture mounting channel which places the center of the source 4′-8" in front of panel and 1′-0" below the bottom edge.
3. Applicable lamp: 85-W fluorescent phosphor coated induction lamp.

STATE OF CALIFORNIA
DEPARTMENT OF TRANSPORTATION

ELECTRICAL SYSTEMS (ISOFOOTCANDLE DIAGRAMS)

NO SCALE

RSP ES-10B DATED JULY 20, 2012 SUPPLEMENTS THE STANDARD PLANS BOOK DATED 2010.

REVISED STANDARD PLAN RSP ES-10B

2010 REVISED STANDARD PLAN RSP ES-10B

DIST	COUNTY	ROUTE	POST MILES TOTAL PROJECT	SHEET No.	TOTAL SHEETS
04	Ala	13	8.3	69	108

REGISTERED CIVIL ENGINEER 7-23-15 DATE

10-19-15
PLANS APPROVAL DATE

REGISTERED PROFESSIONAL ENGINEER PAO-TSAN WANG No. 32308 Exp. 12-31-16 CIVIL STATE OF CALIFORNIA

The State of California or its officers or agents shall not be responsible for the accuracy or completeness of scanned copies of this plan sheet.

QUANTITIES

STRUCTURE EXCAVATION (SOLDIER PILE WALL)	281	CY
STRUCTURE BACKFILL (SOLDIER PILE WALL)	169	CY
CONCRETE BACKFILL (SOLDIER PILE WALL)	372	CY
LEAN CONCRETE BACKFILL	115	CY
GROUND ANCHOR (SUBHORIZONTAL)	48	EA
STEEL SOLDIER PILE (W14X90)	1,960	LF
36" DRILLED HOLE	1,862	LF
30" CAST-IN-DRILLED-HOLE CONCRETE PILING (ELECTROLIER)	14	LF
STRUCTURAL CONCRETE, BARRIER SLAB	62	CY
STRUCTURAL CONCRETE, PILE CAP (ELECTROLIER)	3	CY
STRUCTURAL CONCRETE, CAP	49	CY
STRUCTURAL CONCRETE, WALER	55	CY
BAR REINFORCING STEEL (RETAINING WALL)	33,000	LB
TIMBER LAGGING	17	MFBM
CLEAN AND PAINT STEEL SOLDIER PILING	LUMP	SUM
PREPARE AND STAIN CONCRETE	1,844	SQFT
CABLE RAILING	291	LF
CONCRETE BARRIER (TYPE 732B)	508	LF

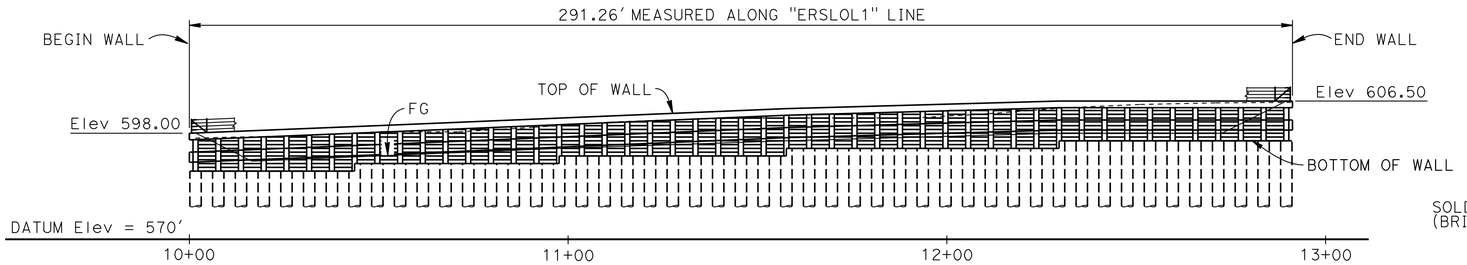

NOTE: Concrete Barrier not shown for clarity

MIRRORED ELEVATION

1" = 20'-0"

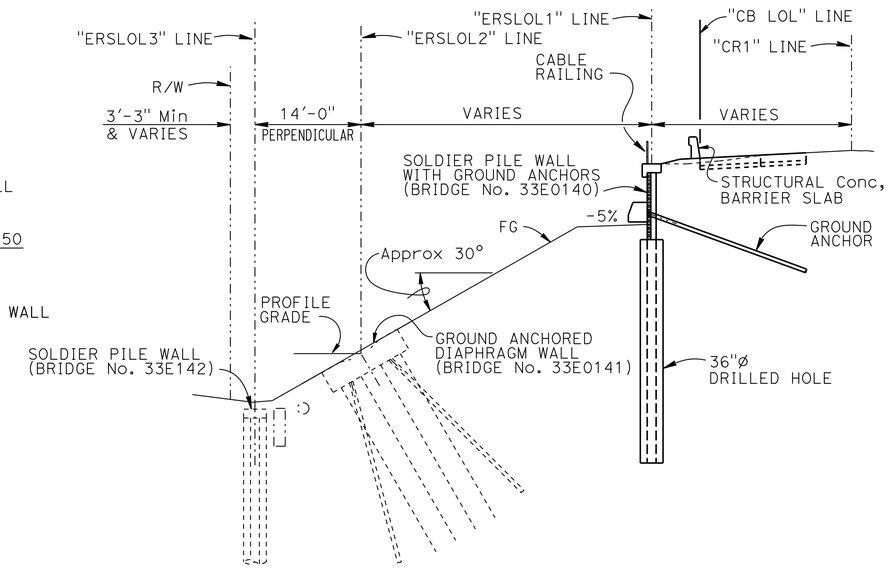

TYPICAL SECTION

1" = 10'-0"

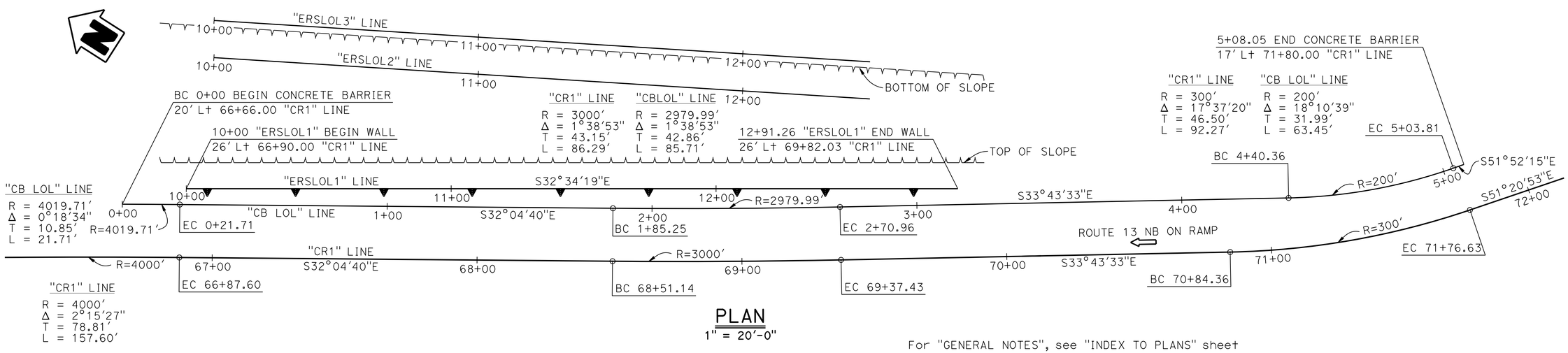

PLAN

1" = 20'-0"

For "GENERAL NOTES", see "INDEX TO PLANS" sheet

THORNHILL DRIVE STORM DAMAGE REPAIR

SOLDIER PILE WALL WITH GROUND ANCHORS

GENERAL PLAN

Muthanna S. Omran
7-23-15 MUTHANNA OMRAN
DESIGN ENGINEER

	BY	CHECKED
DESIGN	Pao-Tsan Wang	Sam Kotalawala
DETAILS	T. Cotton/F. Maagma	Sam Kotalawala
QUANTITIES	Sam Kotalawala	Pao-Tsan Wang

LOAD & RESISTANCE FACTOR DESIGN — LIVE LOADING: HL93 W/"LOW-BOY"; PERMIT DESIGN VEHICLE

LAYOUT — BY P. Wang — CHECKED S. Kotalawala

SPECIFICATIONS — BY Tina Chen — PLANS AND SPECS COMPARED Tina Chen

STATE OF CALIFORNIA
DEPARTMENT OF TRANSPORTATION

DIVISION OF ENGINEERING SERVICES
STRUCTURE DESIGN
DESIGN BRANCH 16

BRIDGE NO. 33E0140
POST MILE 8.3

ORIGINAL SCALE IN INCHES FOR REDUCED PLANS 0 1 2 3

UNIT: 3617
PROJECT NUMBER & PHASE: 04000208681
CONTRACT NO.: 04-1SS024

DISREGARD PRINTS BEARING EARLIER REVISION DATES

REVISION DATES: 1-12-14 03-06-14 7-18-15 7-20-15

SHEET 1 OF 16

USERNAME => s126849 DATE PLOTTED => 19-OCT-2015 TIME PLOTTED =>

FILE => 33e0140-a-gp01.dgn

DIST	COUNTY	ROUTE	POST MILES TOTAL PROJECT	SHEET No.	TOTAL SHEETS
04	Ala	13	8.3	70	108

REGISTERED CIVIL ENGINEER 7-23-15 DATE

10-19-15
PLANS APPROVAL DATE

REGISTERED PROFESSIONAL ENGINEER PAO-TSAN WANG No. 32308 Exp. 12-31-16 CIVIL STATE OF CALIFORNIA

The State of California or its officers or agents shall not be responsible for the accuracy or completeness of electronic copies of this plan sheet.

GENERAL NOTES

DESIGN: AASHTO LRFD Bridge design specifications, 4th edition with california amendments

SOIL PARAMETERS: (For determination of design lateral Earth Pressure)

RETAINED SOIL: $\phi = 10°$, $\gamma = 135$ pcf

Active Pressure Coefficient, Ka = 0.7

FOUNDATION SOIL: $\phi = 35°$, $\gamma = 135$ pcf

Ultimate bond stress between soil and grout = 12 psi

LIVE LOAD:

240 psf equivalent to 2 feet soil weight

SEISMIC LOADING:

Use a uniform earth pressure equal to 17 h (psf) applied 0.5h above the base
Kh = 0.25

REINFORCED CONCRETE:

f'c = 4 ksi
fy = 60 ksi

STEEL SOLDIER PILE:

ASTM designation:
STEEL PILES: Fy=50 ksi
STEEL PLATE: Fy=36 ksi

STRUCTURAL TIMBER:

Treated Douglas Fir, GRADE NO. 1 or Better
Timber to be full sawn

PRESTRESSING STEEL (GROUND ANCHORS):

STRANDS - ASTM DESIGNATION: A416 (270 Ksi Low Relaxation Steel)

FDL = Factored Design Force on ground anchor (kips)
FTL = Factored Test Load (kips)
LL = Lock-Off Load (kips)

F_{pu} = Minimum tensile strength of prestressing steel (kip per square inch)

A_s (Min) = Minimum Cross Sectional Area of prestressing steel in ground anchor (square inch)

FDL = 135 kips
FTL = 150 kips
LL = 100 kips

$$A_s \text{ (Min)} = \frac{1.0 \text{ FTL}}{0.75 \text{ } f_{pu}} \quad \text{(Strands)}$$

SOLDIER PILE WALL WITH GROUND ANCHORS:

1. The drilling and concrete placement performed for soldier pile construction in each wall shall be staggered, No open drilled holes shall be adjacent
2. The concrete waler shall have a minimum concrete strength of 4 ksi at time of stressing
3. Welding shall use E70xx Electrodes

CONSTRUCTION SEQUENCE:

1. Construct the Soldier Pile Wall with ground anchors (ERSL0L1)
2. Then construct the Soldier Pile Wall (ERSL0LI3)
3. Then construct the Ground Anchors diaphragm Wall (ERSL0LI2)

GROUND ANCHOR STRESSING SEQUENCE:

No more than ½ of the prestressing force in any tieback may be applied before an equal force is applied in all of the tiebacks in that level

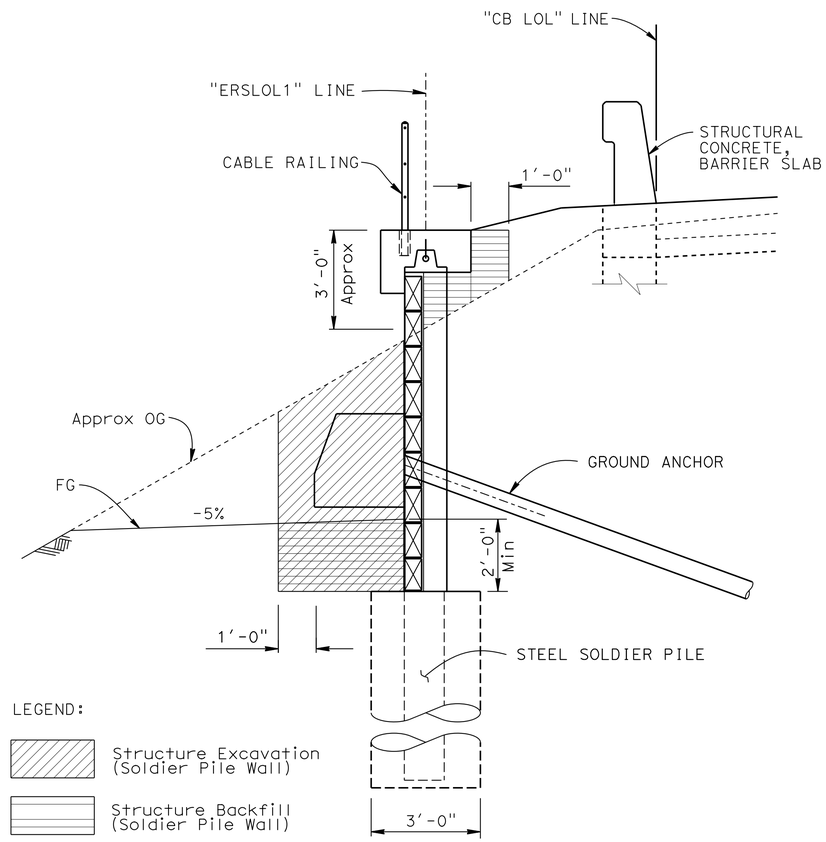

EXCAVATION AND BACKFILL

NO SCALE

INDEX TO PLANS

SHEET NO	TITLE
1	GENERAL PLAN
2	INDEX TO PLANS
3	STRUCTURE PLAN No. 1 - WALL 1
4	STRUCTURE PLAN No. 2 - WALL 1
5	FOUNDATION PLAN
6	WALL DETAILS No. 1
7	WALL DETAILS No. 2
8	WALER DETAILS
9	GROUND ANCHOR DETAILS
10	BARRIER SLAB LAYOUT
11	BARRIER SLAB DETAILS No. 1
12	BARRIER SLAB DETAILS No. 2
13	LOG OF TEST BORINGS 2004 No. 1
14	LOG OF TEST BORINGS 2004 No. 2
15	LOG OF TEST BORINGS 2012 No. 1
16	LOG OF TEST BORINGS 2012 No. 2

STANDARD PLANS DATED 2010

A10A	ABBREVIATIONS (SHEET 1 OF 2)
RSP A10B	ABBREVIATIONS (SHEET 2 OF 2)
A10C	LINES AND SYMBOLS (SHEET 1 OF 3)
A10D	LINES AND SYMBOLS (SHEET 2 OF 3)
A10E	LINES AND SYMBOLS (SHEET 3 OF 3)
RSP B11-47	CABLE RAILING
RSP B11-55	CONCRETE BARRIER TYPE 732
ES-6A	ELECTRICAL SYETEMS (LIGHTING STANDARD, TYPES 15 AND 21)
ES-6B	ELECTRICAL SYETEMS (ELECTROLIER ANCHORAGE AND GROUTING FOR TYPES 15 AND 21 BARRIER RAIL MOUNTED)

STANDARD PLAN SHEET NO.
DETAIL NO.

THORNHILL DRIVE STORM DAMAGE REPAIR
SOLDIER PILE WALL WITH GROUND ANCHORS
INDEX TO PLANS

	BY	CHECKED
DESIGN	Pao-Tsan Wang	Sam Kotalawala
DETAILS	T. Cotton/F. Maagma	Sam Kotalawala
QUANTITIES	Sam Kotalawala	Pao-Tsan Wang

STATE OF CALIFORNIA DEPARTMENT OF TRANSPORTATION

DIVISION OF ENGINEERING SERVICES STRUCTURE DESIGN DESIGN BRANCH 16

BRIDGE NO. 33E0140
POST MILE 8.3

STRUCTURES DESIGN DETAIL SHEET (ENGLISH) (REV. 09-01-10)

ORIGINAL SCALE IN INCHES FOR REDUCED PLANS 0 1 2 3

UNIT: 3617
PROJECT NUMBER & PHASE: 04000208681
CONTRACT NO.: 04-1SS024

DISREGARD PRINTS BEARING EARLIER REVISION DATES

REVISION DATES: 1-12-14 1-23-14 7-13-15 7-20-15

SHEET 2 OF 16

FILE => 33e0140-a-itp.dgn

USERNAME => s126849 DATE PLOTTED => 19-OCT-2015 TIME PLOTTED => 15:58

DIST	COUNTY	ROUTE	POST MILES TOTAL PROJECT	SHEET No.	TOTAL SHEETS
04	Ala	13	8.3	71	108

REGISTERED CIVIL ENGINEER 7-23-15 DATE

10-19-15
PLANS APPROVAL DATE

REGISTERED PROFESSIONAL ENGINEER PAO-TSAN WANG No. 32308 Exp. 12-31-16 CIVIL STATE OF CALIFORNIA

The State of California or its officers or agents shall not be responsible for the accuracy or completeness of electronic copies of this plan sheet.

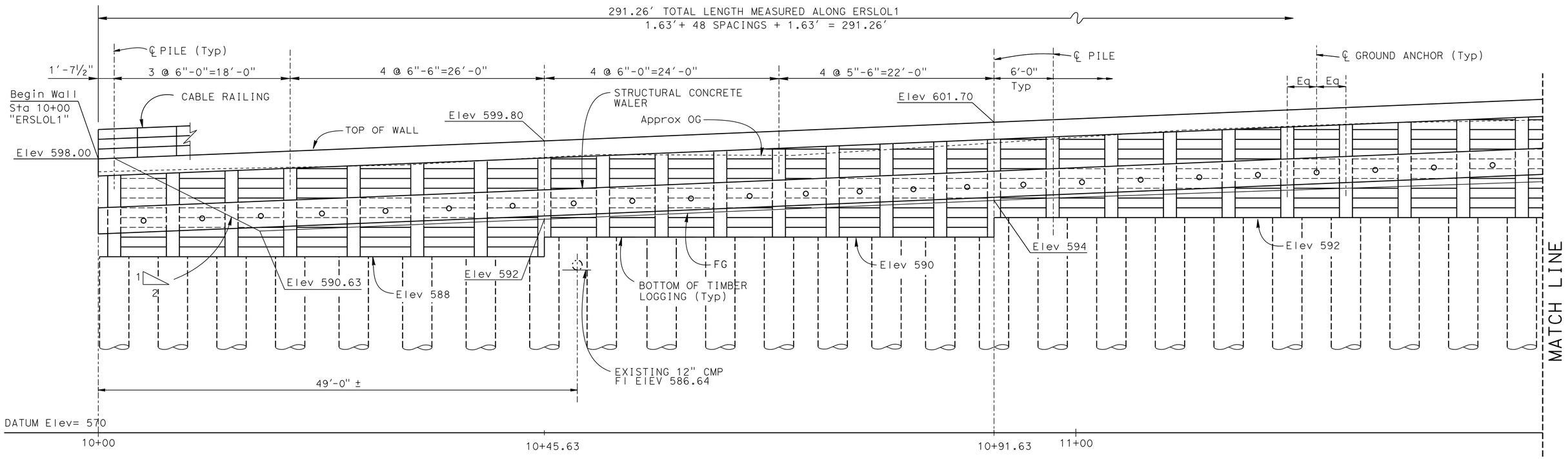

MIRRORED ELEVATION

1" = 5′-0"

NOTE: Concrete Barrier not shown for clarity

PILE NUMBER	1	2	3	4	5	6	7	8	9	10	11	12	13	14	15	16	17	18	19	20	21	22	23	24	25
PILE LENGTH (ft)	40	40	40	40	40	40	40	40	40	40	40	40	40	40	40	40	40	40	40	40	40	40	40	40	40
No. OF LAGGING MEMBERS	9	9	9	10	10	10	10	9	9	9	9	10	10	10	10	9	9	9	9	10	10	10	10	11	
ANCHOR INCLINATION	25°	25°	25°	25°	25°	25°	25°	25°	25°	15°	15°	15°	15°	15°	15°	15°	15°	15°	15°	15°	15°	15°	15°	15°	

NOTES:

1. Pile length is Measured from Top of Wall to Pile Tip
2. Place Timber Logging Horizontal

THORNHILL DRIVE STORM DAMAGE REPAIR
SOLDIER PILE WALL WITH GROUND ANCHORS
STRUCTURE PLAN No. 1 - WALL 1

	BY	CHECKED
DESIGN	P. Wang	S. Kotalawala
DETAILS	S. Daplas/T. Cotton	S. Kotalawala
QUANTITIES	S. Kotalawala	P. Wang

STATE OF CALIFORNIA
DEPARTMENT OF TRANSPORTATION

DIVISION OF ENGINEERING SERVICES
STRUCTURE DESIGN
DESIGN BRANCH 16

BRIDGE NO. 33E0140
POST MILE 8.3

STRUCTURES DESIGN DETAIL SHEET (ENGLISH) (REV. 09-01-10)

ORIGINAL SCALE IN INCHES FOR REDUCED PLANS 0 1 2 3

UNIT: 3617
PROJECT NUMBER & PHASE: 4000208681
CONTRACT NO.: 04-1SS024

DISREGARD PRINTS BEARING EARLIER REVISION DATES

REVISION DATES: 1-17-14 02-26-14 03-04-14 7-15-15

SHEET 3 OF 16

FILE => 33e0140-c-sp01.dgn

USERNAME => s126869 DATE PLOTTED => 19-OCT-2015 TIME PLOTTED => 15:58

DIST	COUNTY	ROUTE	POST MILES TOTAL PROJECT	SHEET No.	TOTAL SHEETS
04	Ala	13	8.3	72	108

REGISTERED CIVIL ENGINEER — DATE 7-23-15

PAO-TSAN WANG No. 32308 Exp. 12-31-16 CIVIL — REGISTERED PROFESSIONAL ENGINEER — STATE OF CALIFORNIA

10-19-15
PLANS APPROVAL DATE

The State of California or its officers or agents shall not be responsible for the accuracy or completeness of electronic copies of this plan sheet.

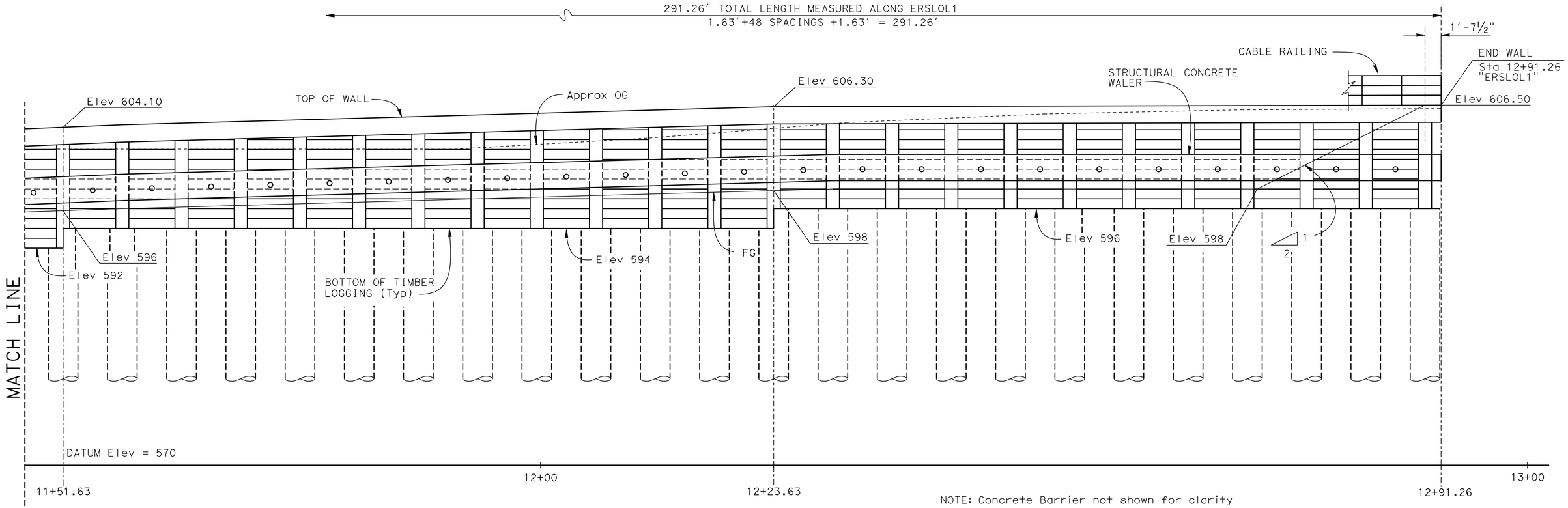

NOTE: Concrete Barrier not shown for clarity

MIRRORED ELEVATION

1" = 5′-0"

PILE NUMBER	PILE LENGTH (ft)	No. OF LAGGING MEMBERS	ANCHOR INCLINATION
26	40	11	15°
27	40	9	15°
28	40	9	15°
29	40	9	15°
30	40	10	15°
31	40	10	15°
32	40	10	15°
33	40	10	15°
34	40	10	15°
35	40	10	15°
36	40	11	15°
37	40	11	15°
38	40	11	15°
39	40	9	15°
40	40	9	15°
41	40	9	15°
42	40	9	15°
43	40	9	15°
44	40	9	15°
45	40	9	15°
46	40	9	15°
47	40	9	15°
48	40	9	15°
49	40	9	15°

NOTES:

1. Pile length is Measured from Top of Wall to Pile Tip
2. Place Timber Logging Horizontal

THORNHILL DRIVE STORM DAMAGE REPAIR
SOLDIER PILE WALL WITH GROUND ANCHORS
STRUCTURE PLAN No. 2 - WALL 1

	BY	CHECKED
DESIGN	P. Wang	S. Kotalawala
DETAILS	S. Daplas/T. Cotton	S. Kotalawala
QUANTITIES	S. Kotalawala	P. Wang

STATE OF CALIFORNIA
DEPARTMENT OF TRANSPORTATION

DIVISION OF ENGINEERING SERVICES
STRUCTURE DESIGN
DESIGN BRANCH 16

BRIDGE NO. 33E0140
POST MILE 8.3

STRUCTURES DESIGN DETAIL SHEET (ENGLISH) (REV. 09-01-10)

ORIGINAL SCALE IN INCHES FOR REDUCED PLANS 0 1 2 3

UNIT: 3617
PROJECT NUMBER & PHASE: 04000208681
CONTRACT NO.: 04-1SS024

DISREGARD PRINTS BEARING EARLIER REVISION DATES

REVISION DATES: 1-12-14 02-26-14 03-04-14 7-15-15

SHEET 4 OF 16

FILE => 33e0140-c-sp02.dgn

USERNAME => s126849 DATE PLOTTED => 19-OCT-2015 TIME PLOTTED => 15:58

DIST	COUNTY	ROUTE	POST MILES TOTAL PROJECT	SHEET No.	TOTAL SHEETS
04	Ala	13	8.3	73	108

REGISTERED CIVIL ENGINEER — DATE 7-23-15

10-19-15
PLANS APPROVAL DATE

REGISTERED PROFESSIONAL ENGINEER — PAO-TSAN WANG — No. 32308 — Exp. 12-31-16 — CIVIL — STATE OF CALIFORNIA

The State of California or its officers or agents shall not be responsible for the accuracy or completeness of electronic copies of this plan sheet.

CURVE DATA

No.	R	Δ	T	L
1	4000.00	02°15′27″	78.81	157.60
2	3000.00	01°38′53″	43.15	86.29
3	300.00	17°37′20″	46.50	92.27
4	4019.71	00°18′34″	10.85	21.71
5	2979.99	01°38′53″	42.86	85.71
6	200.00	18°10′39″	31.99	63.45

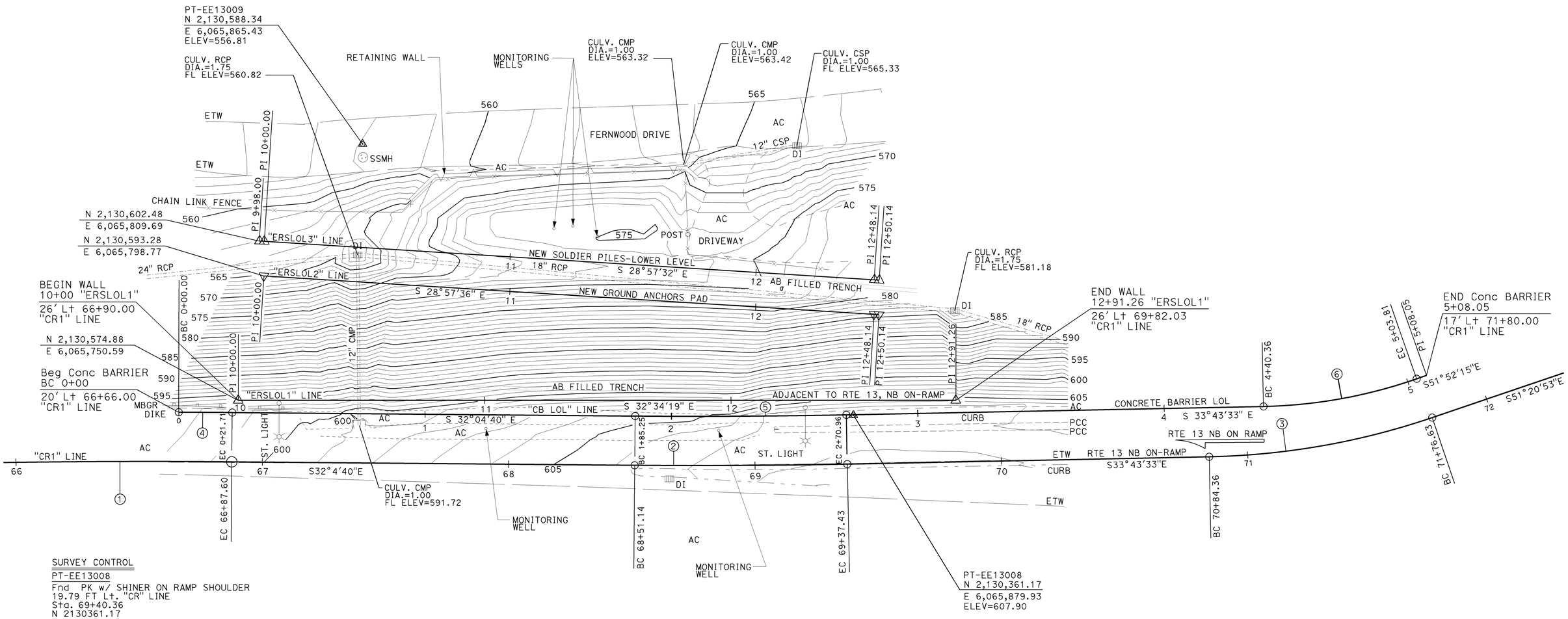

SURVEY CONTROL

PT-EE13008
Fnd PK w/ SHINER ON RAMP SHOULDER
19.79 FT Lt. "CR" LINE
Sta. 69+40.36
N 2130361.17
E 6065879.93
Elev=607.90

PT-EE13009
Fnd PIN IN MONUMENT WELL
129.46 FT Lt. "CR" LINE
Sta. 67+39.59
N 2130588.34
E 6065865.43
Elev=556.81

THORNHILL DRIVE STORM DAMAGE REPAIR
SOLDIER PILE WALL WITH GROUND ANCHORS
FOUNDATION PLAN

PRELIMINARY INVESTIGATION SECTION

SCALE	VERT.DATUM NAVD88	PHOTOGRAMMETRY AS OF: X			
1"=20′	HORZ.DATUM NAD83	SURVEYED	BY District 06/2012	CHECKED	BY Chris Fassett 02/2013
ALIGNMENT TIES Dist. Traverse Sheet		DRAFTED	BY Sharon Zheng 02/2013	CHECKED	BY Sang Sou 02/2013

DESIGN	BY Pao-Tsan Wang	CHECKED Sam Kotalawala
DETAILS	BY Franklin Maagma	CHECKED Sam Kotalawala
QUANTITIES	BY Sam Kotalawala	CHECKED Pao-Tsan Wang

STATE OF CALIFORNIA
DEPARTMENT OF TRANSPORTATION

DIVISION OF ENGINEERING SERVICES
STRUCTURE DESIGN
DESIGN BRANCH 16

BRIDGE NO. 33E0140
POST MILE 8.30

STRUCTURES FOUNDATION PLAN SHEET (ENGLISH) (REV. 09-01-10)

ORIGINAL SCALE IN INCHES FOR REDUCED PLANS 0 1 2 3

UNIT: 3646
PROJECT NUMBER & PHASE: 04000208681
CONTRACT NO.: 04-1SS024

DISREGARD PRINTS BEARING EARLIER REVISION DATES

REVISION DATES: 2/24/13 8/16/13 7/14/15 7/15/15

SHEET 5 OF 16

FILE => 33e0140-e-fp101.dgn

USERNAME => s126849 DATE PLOTTED => 19-OCT-2015 TIME PLOTTED => 16:04

DIST	COUNTY	ROUTE	POST MILES TOTAL PROJECT	SHEET No.	TOTAL SHEETS
04	Ala	13	8.3	74	108

REGISTERED CIVIL ENGINEER 7-23-15 DATE

10-19-15
PLANS APPROVAL DATE

REGISTERED PROFESSIONAL ENGINEER PAO-TSAN WANG No. 32308 Exp. 12-31-16 CIVIL STATE OF CALIFORNIA

The State of California or its officers or agents shall not be responsible for the accuracy or completeness of electronic copies of this plan sheet.

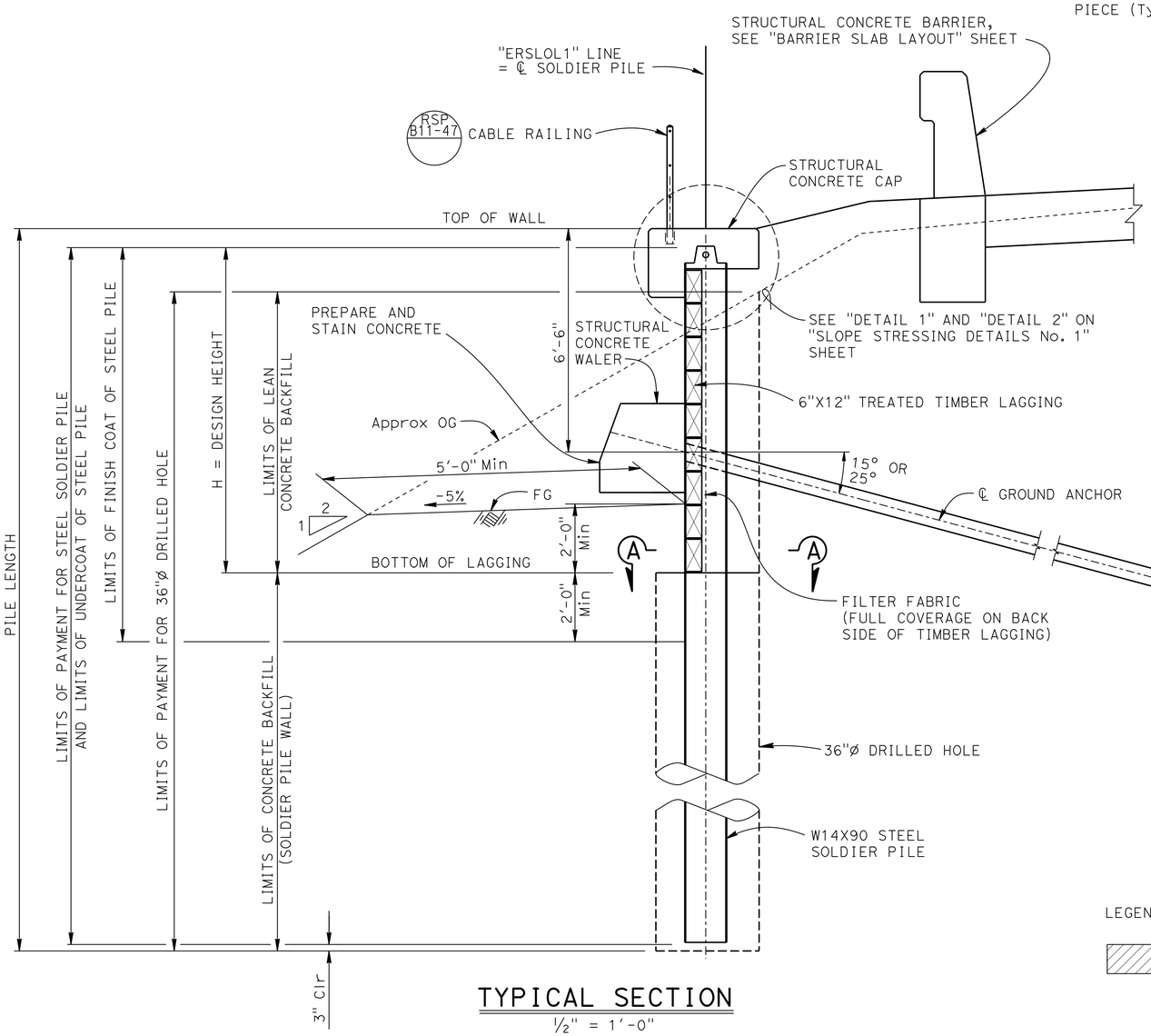

TYPICAL SECTION

½" = 1'-0"

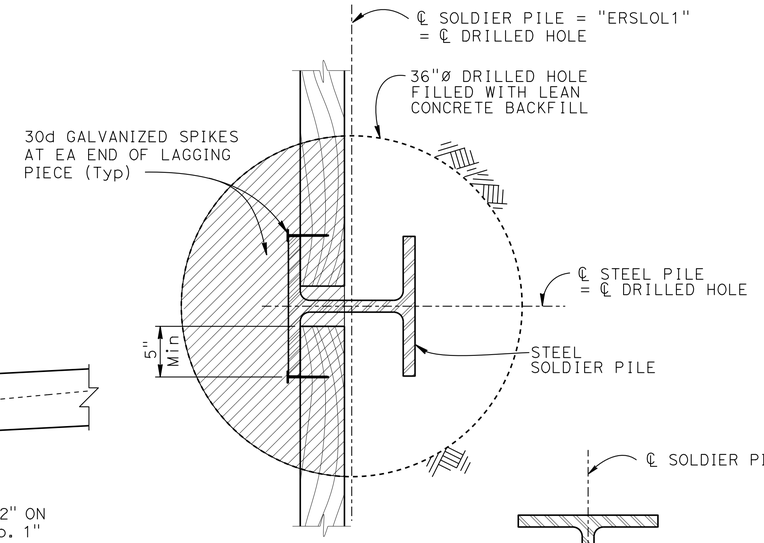

SECTION A-A

½" = 1'-0"

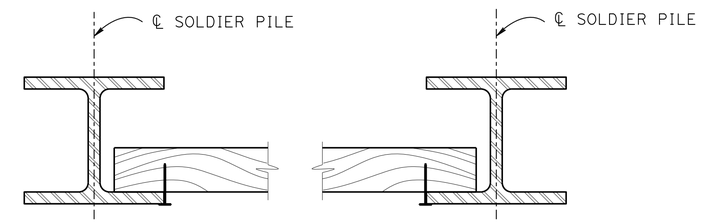

PARTIAL PLAN

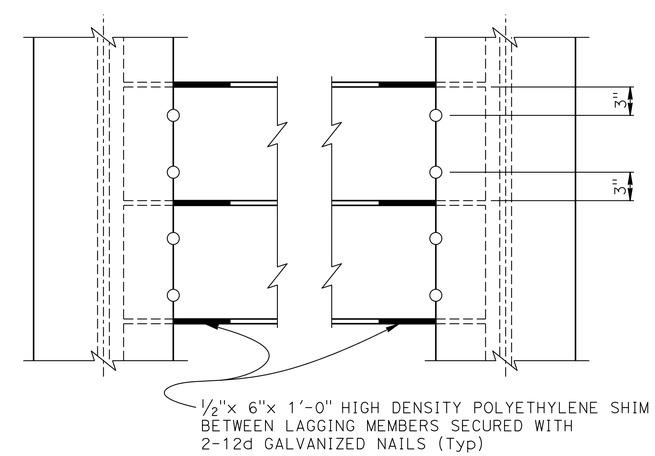

PARTIAL ELEVATION

LAGGING DETAILS

1½" = 1'-0"

LEGEND:

Limits of removal of Lean concrete backfill

THORNHILL DRIVE STORM DAMAGE REPAIR

SOLDIER PILE WALL WITH GROUND ANCHORS

WALL DETAILS No. 1

DESIGN	BY Pao-Tsan Wang	CHECKED Sam Kotalawala	
DETAILS	BY S. Daplas/F. Maagma	CHECKED Sam Kotalawala	
QUANTITIES	BY Sam Kotalawala	CHECKED Pao-Tsan Wang	

STATE OF CALIFORNIA
DEPARTMENT OF TRANSPORTATION

DIVISION OF ENGINEERING SERVICES
STRUCTURE DESIGN
DESIGN BRANCH 16

BRIDGE NO. 33E0140
POST MILE 8.3

STRUCTURES DESIGN DETAIL SHEET (ENGLISH) (REV. 09-01-10)

ORIGINAL SCALE IN INCHES FOR REDUCED PLANS 0 1 2 3

UNIT: 3617
PROJECT NUMBER & PHASE: 04000208681
CONTRACT NO.: 04-1SS024

DISREGARD PRINTS BEARING EARLIER REVISION DATES

REVISION DATES 1-24-14 7-20-15 7-18-15

SHEET 6 OF 16

FILE => 33e0140-g-rwdt01.dgn

USERNAME => s128849 DATE PLOTTED => 19-OCT-2015 TIME PLOTTED => 15:58

DIST	COUNTY	ROUTE	POST MILES TOTAL PROJECT	SHEET No.	TOTAL SHEETS
04	Ala	13	8.3	75	108

REGISTERED CIVIL ENGINEER — DATE 7-23-15

10-19-15
PLANS APPROVAL DATE

REGISTERED PROFESSIONAL ENGINEER — PAO-TSAN WANG — No. 32308 — Exp. 12-31-16 — CIVIL — STATE OF CALIFORNIA

The State of California or its officers or agents shall not be responsible for the accuracy or completeness of electronic copies of this plan sheet.

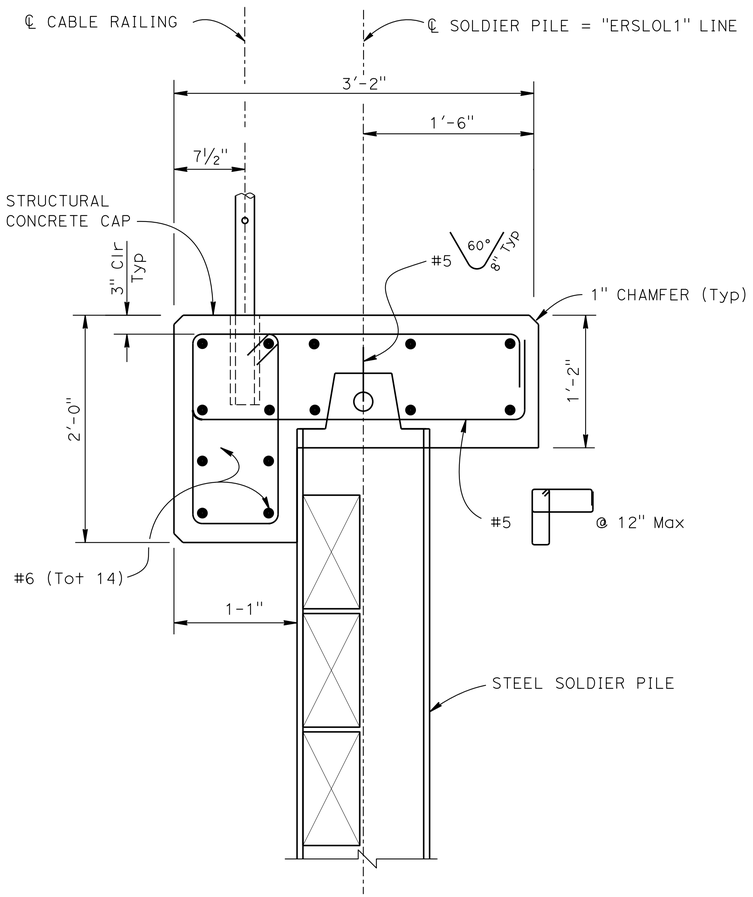

DETAIL 1
STRUCTURAL CONCRETE CAP DETAILS
1½" = 1'-0"

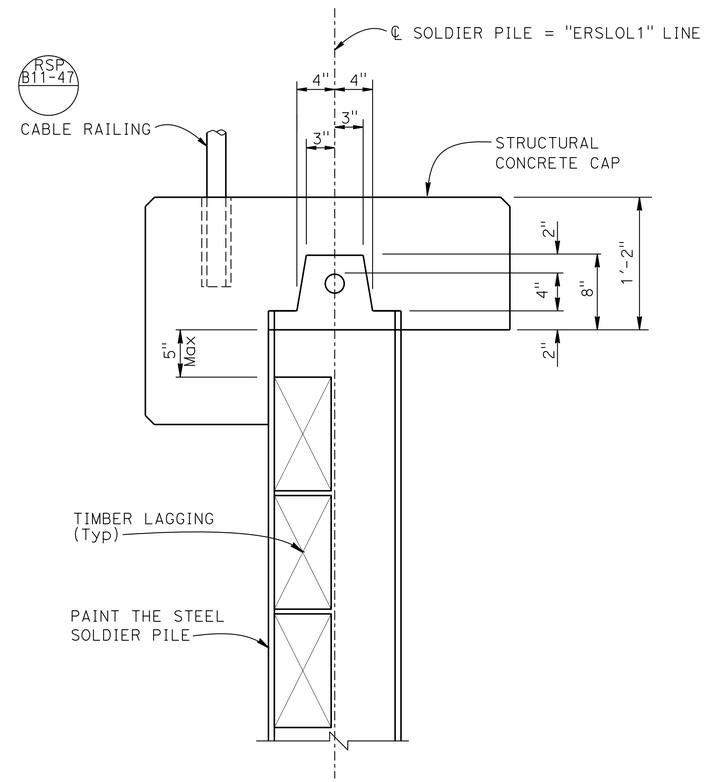

DETAIL 2
STEEL SOLDIER PILE DETAILS
1½" = 1'-0"

THORNHILL DRIVE STORM DAMAGE REPAIR
SOLDIER PILE WALL WITH GROUND ANCHORS
WALL DETAILS No. 2

	BY	CHECKED
DESIGN	Pao-Tsan Wang	Sam Kotalawala
DETAILS	T. Cotton/F. Maagma	Sam Kotalawala
QUANTITIES	Sam Kotalawala	Pao-Tsan Wang

STATE OF CALIFORNIA
DEPARTMENT OF TRANSPORTATION

DIVISION OF ENGINEERING SERVICES
STRUCTURE DESIGN
DESIGN BRANCH 16

BRIDGE NO. 33E0140
POST MILE 8.3

STRUCTURES DESIGN DETAIL SHEET (ENGLISH) (REV. 09-01-10)

ORIGINAL SCALE IN INCHES FOR REDUCED PLANS 0 1 2 3

UNIT: 3617
PROJECT NUMBER & PHASE: 04000208681
CONTRACT NO.: 04-1SS024

DISREGARD PRINTS BEARING EARLIER REVISION DATES

REVISION DATES: 1-23-14 2-05-14 02-26-14 7-15-15

SHEET 7 OF 16

FILE => 33e0140-g-rwdt02.dgn

USERNAME => s128849 DATE PLOTTED => 19-OCT-2015 TIME PLOTTED => 15:58

DIST	COUNTY	ROUTE	POST MILES TOTAL PROJECT	SHEET No.	TOTAL SHEETS
04	Ala	13	8.3	76	108

REGISTERED CIVIL ENGINEER — DATE 7-23-15

10-19-15
PLANS APPROVAL DATE

REGISTERED PROFESSIONAL ENGINEER PAO-TSAN WANG No. 32308 Exp. 12-31-16 CIVIL STATE OF CALIFORNIA

The State of California or its officers or agents shall not be responsible for the accuracy or completeness of electronic copies of this plan sheet.

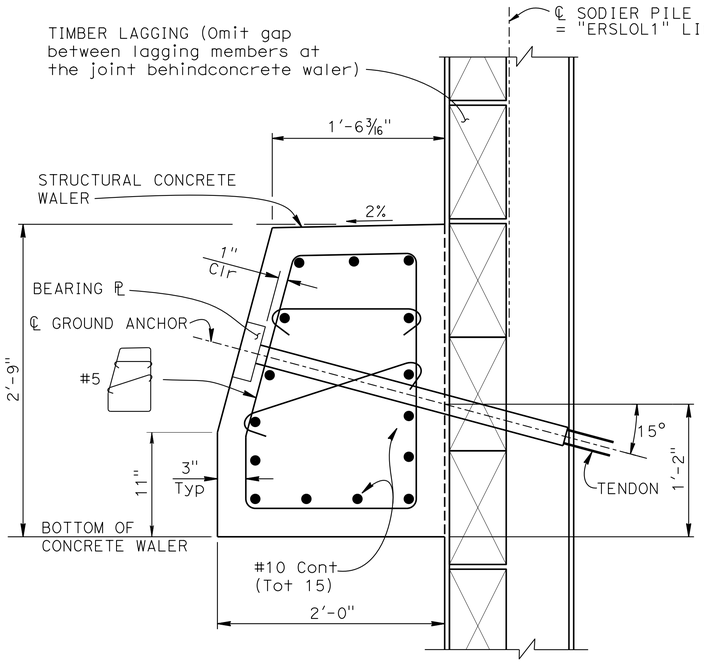

SECTION A-A
WALER SECTION AT TENDON
1½" = 1'-0"

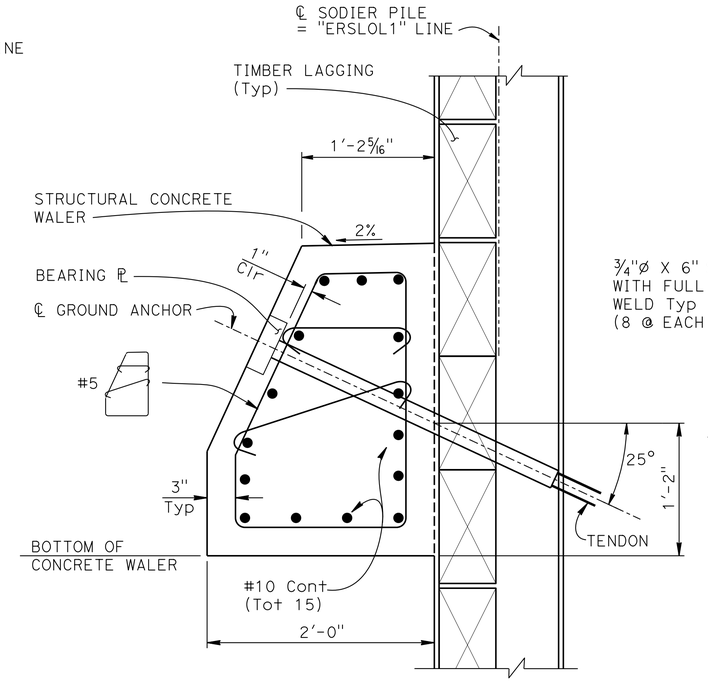

SECTION B-B
WALER SECTION AT TENDON
1½" = 1'-0"

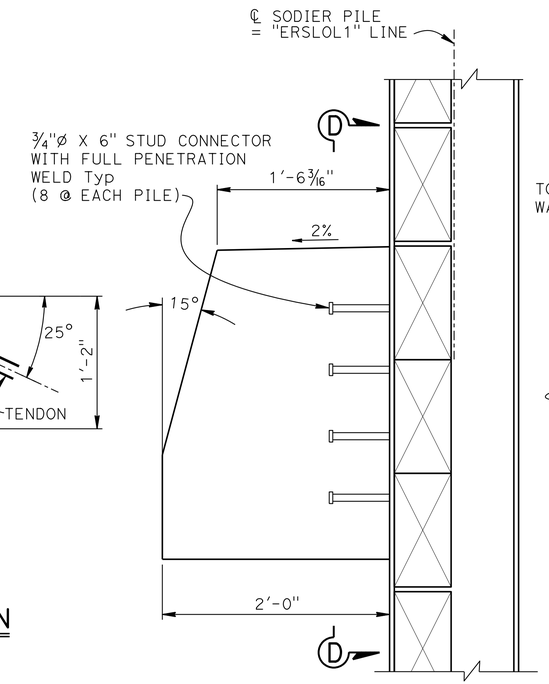

SECTION C-C
WALER SECTION AT PILE
1½" = 1'-0"

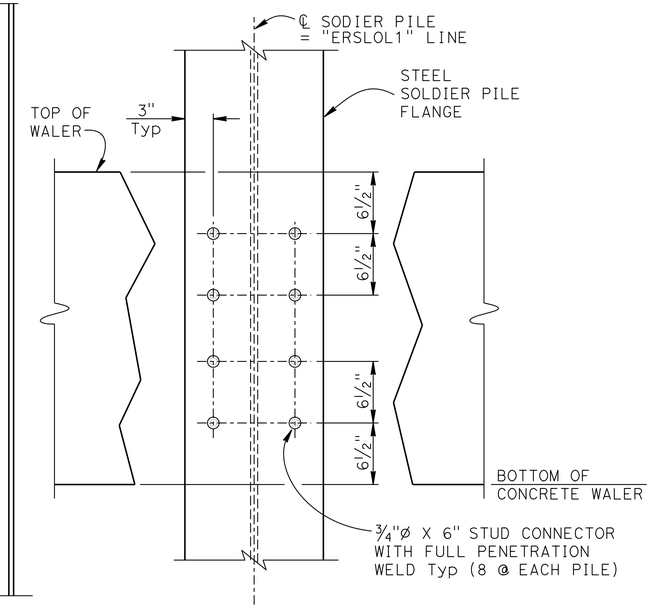

SECTION D-D
CONCRETE ANCHORAGE DETAIL
1½" = 1'-0"

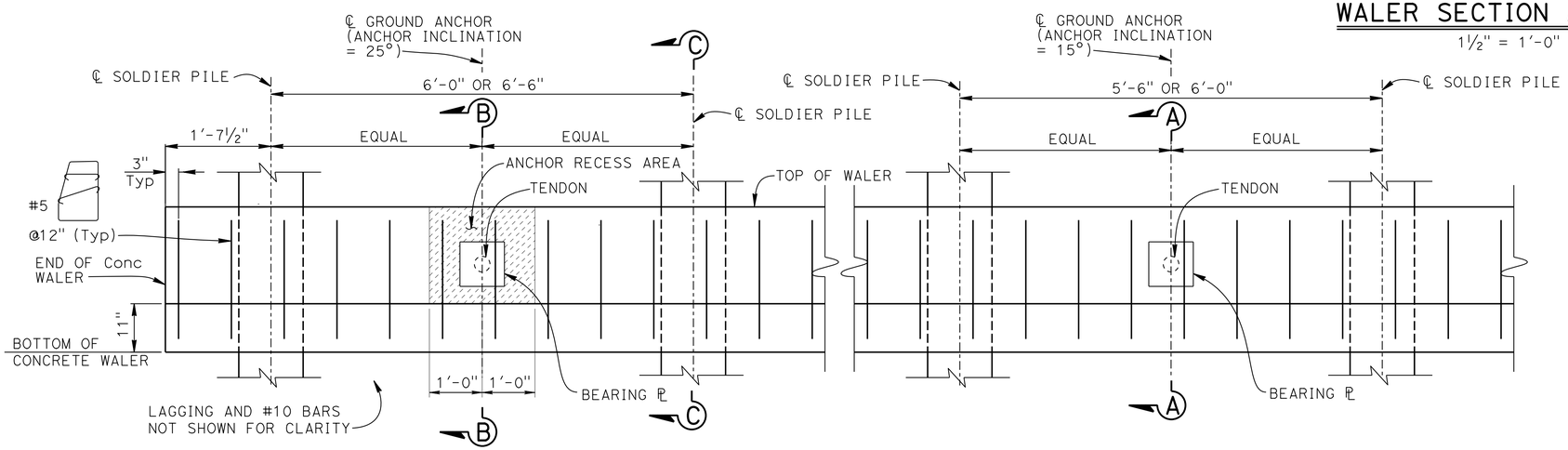

CONCRETE WALER PART ELEVATION
1" = 1'-0"

NOTES:

1. Omit gap between lagging members at joints behind concrete waler
2. Anchorage assembly and anchorage enclosure shall be galvanized

DESIGN	BY Pao-Tsan Wang	CHECKED Sam Kotalawala	
DETAILS	BY T. Cotton/F. Maagma	CHECKED Sam Kotalawala	
QUANTITIES	BY Sam Kotalawala	CHECKED Pao-Tsan Wang	

STATE OF CALIFORNIA
DEPARTMENT OF TRANSPORTATION

DIVISION OF ENGINEERING SERVICES
STRUCTURE DESIGN
DESIGN BRANCH 16

BRIDGE NO. 33E0140
POST MILE 8.3

THORNHILL DRIVE STORM DAMAGE REPAIR
SOLDIER PILE WALL WITH GROUND ANCHORS
WALER DETAILS

STRUCTURES DESIGN DETAIL SHEET (ENGLISH) (REV. 09-01-10)

ORIGINAL SCALE IN INCHES FOR REDUCED PLANS 0 1 2 3

UNIT: 3617
PROJECT NUMBER & PHASE: 04000208681
CONTRACT NO.: 04-1SS024

DISREGARD PRINTS BEARING EARLIER REVISION DATES

REVISION DATES: 1-24-14 03-04-14 03-24-14 7-15-15

SHEET 8 OF 16

FILE => 33e0140-g-rwdt03.dgn

USERNAME => s126849 DATE PLOTTED => 19-OCT-2015 TIME PLOTTED => 15:58

DIST	COUNTY	ROUTE	POST MILES TOTAL PROJECT	SHEET No.	TOTAL SHEETS
04	Ala	13	8.3	77	108

REGISTERED CIVIL ENGINEER — DATE 7-23-15

PLANS APPROVAL DATE 10-19-15

REGISTERED PROFESSIONAL ENGINEER PAO-TSAN WANG No. 32308 Exp. 12-31-16 CIVIL STATE OF CALIFORNIA

The State of California or its officers or agents shall not be responsible for the accuracy or completeness of electronic copies of this plan sheet.

GENERAL NOTES

DESIGN:

AASHTO LRFD Bridge Design Specifications, 4th Edition with California Amendments.

PRESTRESSING STEEL:

Bars - ASTM Designation: A722 Type II (150 ksi)

Strand Tendons-ASTM Designation: A416 (270 Ksi Low Relaxation steel)

FTL = Factored Test Load per anchor (Kips)

fpu = Minimum tensile strength of prestressing steel

As = Minimum cross sectional area of prestressing steel in ground anchor (square inch)

$As(Min) = \frac{1.0\ FTL}{0.75\ fpu}$ (Strands)

$As(Min) = \frac{1.0\ FTL}{0.80\ fpu}$ (Bars)

NOTES:

(A) Level of initial grouting for drilled hole 6" in diameter or smaller

(B) Level of secondary grouting

(C) Level of initial grouting inside corrugated sheathing

(D) Bonded length shall be determined by the contractor

(E) For unbonded length, see PROJECT PLANS

(F) For inclination, see PROJECT PLANS

(G) Face of Wall Excavation

NOTES:

1. Anchorage enclosure shall only be used when anchor head assembly is not enclosed in concrete.
2. Anchorage enclosure shall have provisions to allow injecting grout at low end and venting at high end. Galvanize after fabrication.
3. Silicone sealant to cover full width of flange.
4. Steel tube (Min thickness = 1/4") welded to bearing plate. Galvanize assembly after fabrication
5. Steel tube welded to bearing plate. Inside diameter of steel tube (Min thickness = 1/4") to be 1" greater than outside diameter of smooth sheathing.
6. Galvanize assembly after fabrication.
7. For other wall details, see PROJECT PLANS.

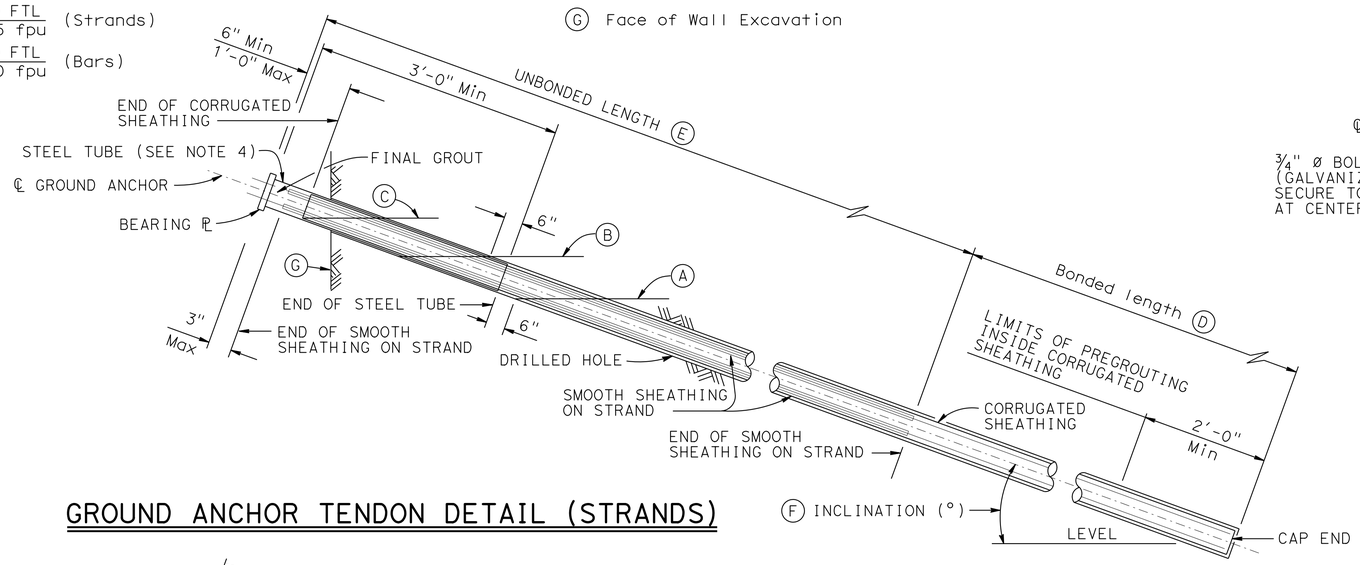

GROUND ANCHOR TENDON DETAIL (STRANDS)

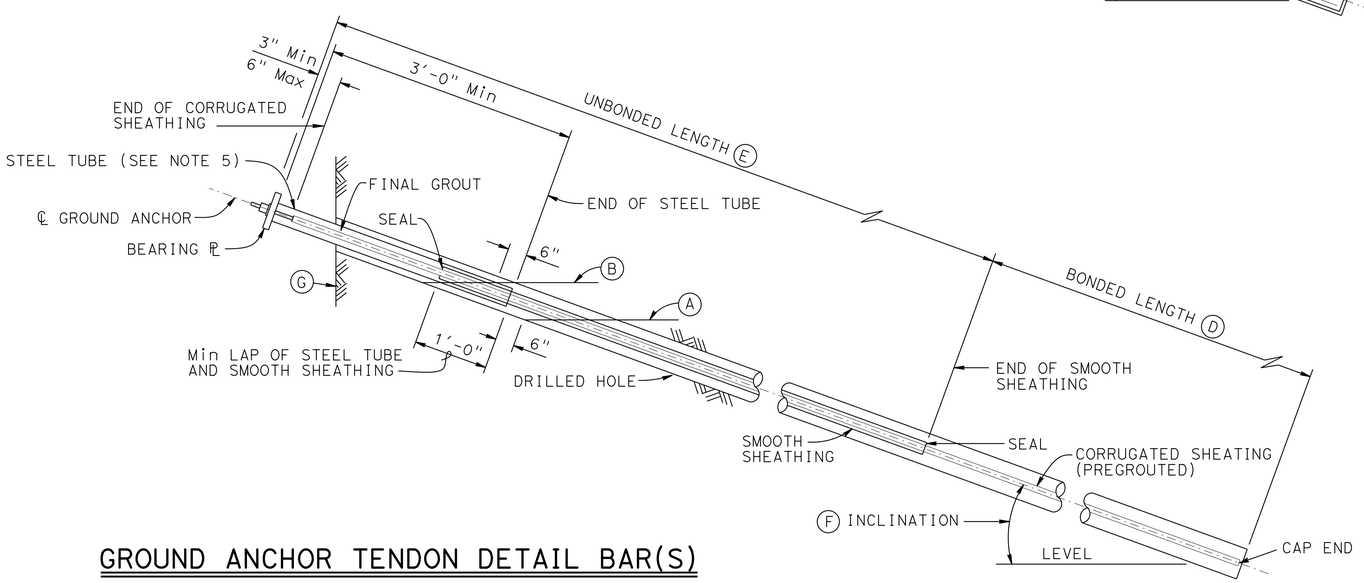

GROUND ANCHOR TENDON DETAIL BAR(S)

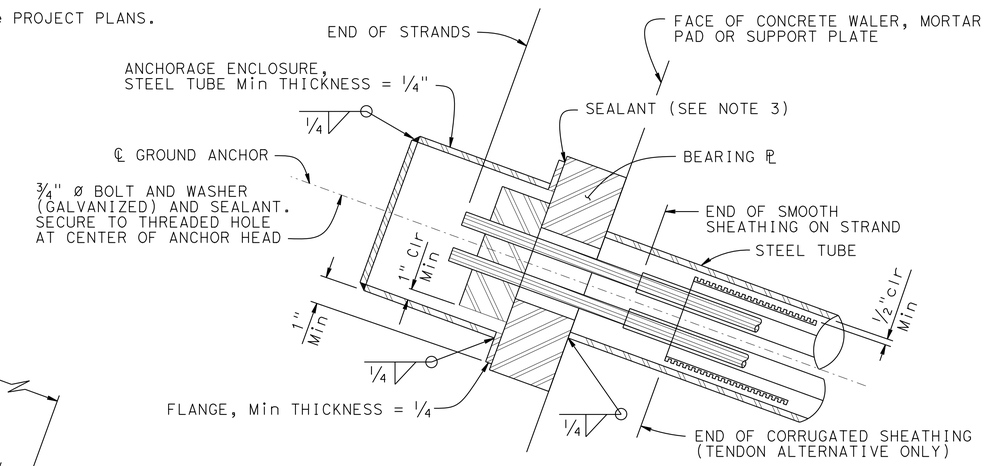

ALTERNATIVE X

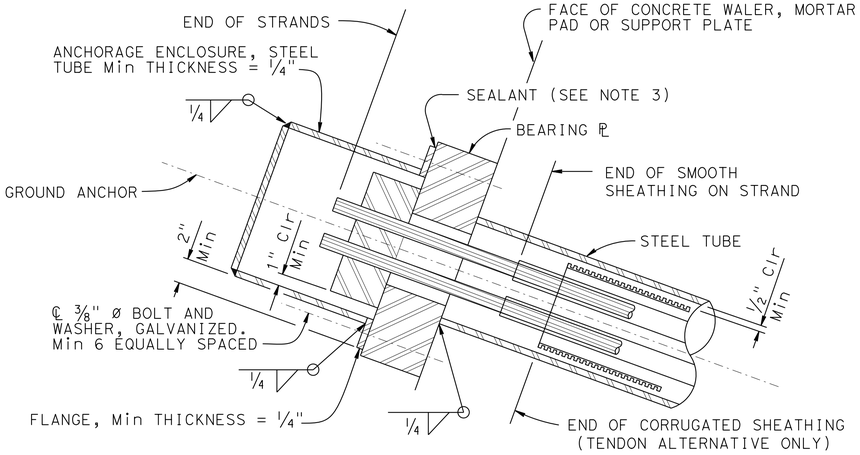

ALTERNATIVE Y

ANCHORAGE ENCLOSURE DETAILS

NO SCALE

DESIGN	BY Pao-Tsan Wang	CHECKED Sam Kotalawala	
DETAILS	BY Franklin Maagma	CHECKED Sam Kotalawala	
QUANTITIES	BY Sam Kotalawala	CHECKED Pao-Tsan Wang	

STATE OF CALIFORNIA DEPARTMENT OF TRANSPORTATION

DIVISION OF ENGINEERING SERVICES STRUCTURE DESIGN DESIGN BRANCH 16

BRIDGE NO. 33E0140

POST MILE 8.3

THORNHILL DRIVE STORM DAMAGE REPAIR
SOLDIER PILE WALL WITH GROUND ANCHORS
GROUND ANCHOR DETAILS

STRUCTURES DESIGN DETAIL SHEET (ENGLISH) (REV. 09-01-10)

ORIGINAL SCALE IN INCHES FOR REDUCED PLANS 0 1 2 3

UNIT: 3617

PROJECT NUMBER & PHASE: 04000208681

CONTRACT NO.: 04-1SS024

DISREGARD PRINTS BEARING EARLIER REVISION DATES

REVISION DATES: 2-24-14 02-26-14 7-15-15

SHEET 9 OF 16

FILE => 33e0140-g-rwdt04.dgn

USERNAME => s128849 DATE PLOTTED => 19-OCT-2015 TIME PLOTTED => 15:58

DIST	COUNTY	ROUTE	POST MILES TOTAL PROJECT	SHEET No.	TOTAL SHEETS
04	Ala	13	8.3	78	108

REGISTERED CIVIL ENGINEER — DATE 7-23-15

10-19-15
PLANS APPROVAL DATE

REGISTERED PROFESSIONAL ENGINEER PAO-TSAN WANG No. 32308 Exp. 12-31-16 CIVIL STATE OF CALIFORNIA

The State of California or its officers or agents shall not be responsible for the accuracy or completeness of electronic copies of this plan sheet.

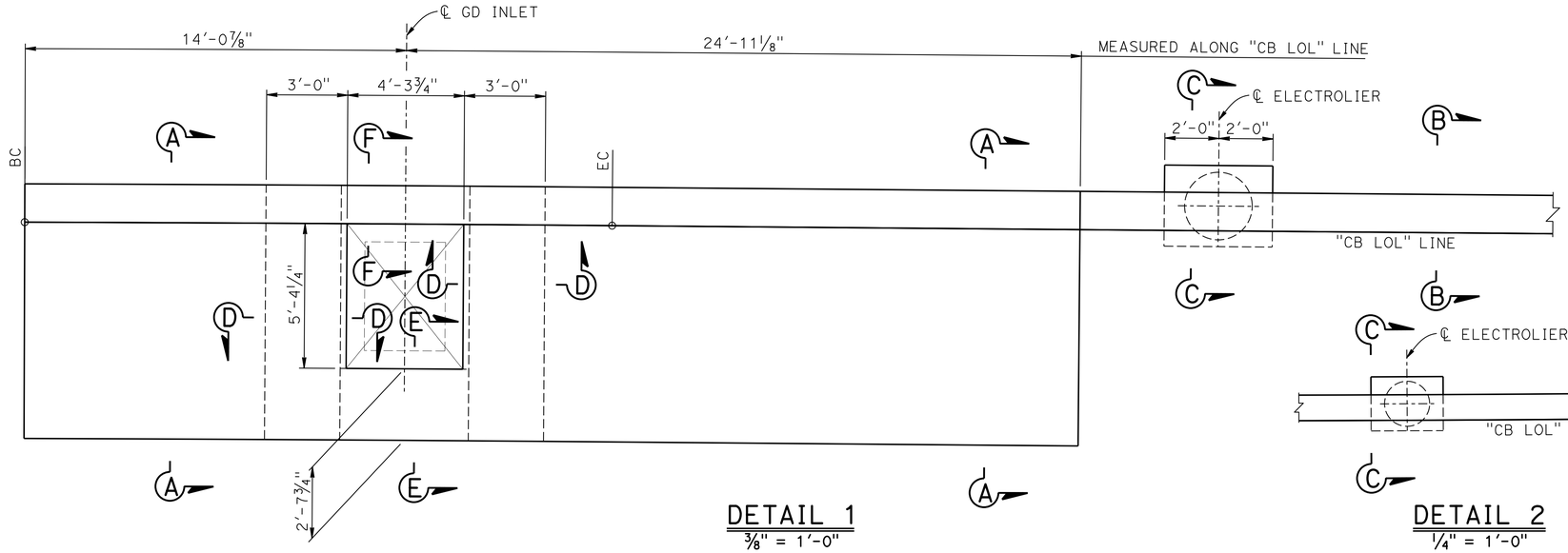

DETAIL 1
⅜" = 1'-0"

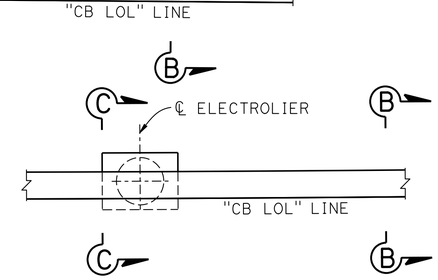

DETAIL 2
¼" = 1'-0"

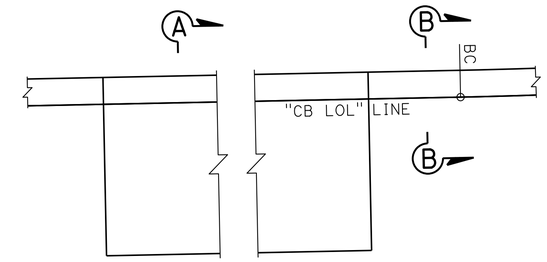

DETAIL 3
¼" = 1'-0"

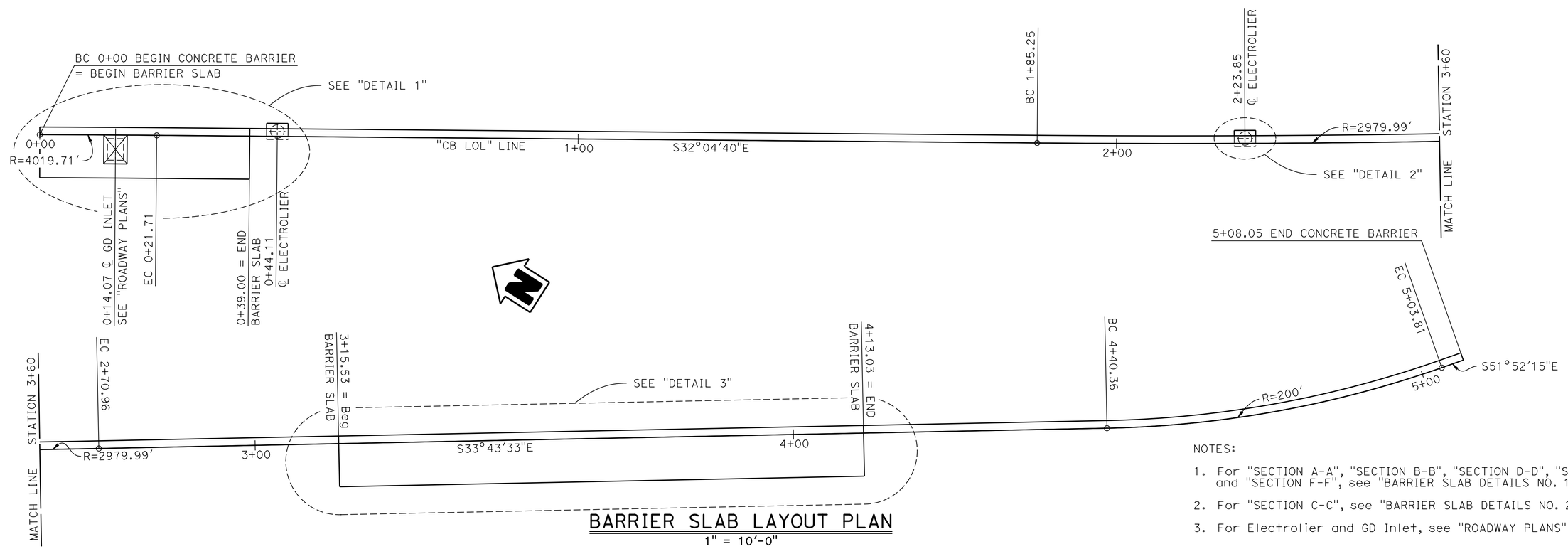

BARRIER SLAB LAYOUT PLAN
1" = 10'-0"

NOTES:

1. For "SECTION A-A", "SECTION B-B", "SECTION D-D", "SECTION E-E" and "SECTION F-F", see "BARRIER SLAB DETAILS NO. 1" sheet
2. For "SECTION C-C", see "BARRIER SLAB DETAILS NO. 2" sheet
3. For Electrolier and GD Inlet, see "ROADWAY PLANS" sheets

DESIGN	BY Pao-Tsan Wang	CHECKED Sam Kotalawala	
DETAILS	BY Franklin M aagma	CHECKED Sam Kotalawala	
QUANTITIES	BY Sam Kotalawala	CHECKED Pao-Tsan Wang	

STATE OF CALIFORNIA
DEPARTMENT OF TRANSPORTATION

DIVISION OF ENGINEERING SERVICES
STRUCTURE DESIGN
DESIGN BRANCH 16

BRIDGE NO. 33E0140
POST MILE 8.3

THORNHILL DRIVE STORM DAMAGE REPAIR
SOLDIER PILE WALL WITH GROUND ANCHORS
BARRIER SLAB LAYOUT

STRUCTURES DESIGN DETAIL SHEET (ENGLISH) (REV. 09-01-10)

ORIGINAL SCALE IN INCHES FOR REDUCED PLANS 0 1 2 3

UNIT: 3617
PROJECT NUMBER & PHASE: 04000208681
CONTRACT NO.: 04-1SS024

DISREGARD PRINTS BEARING EARLIER REVISION DATES

REVISION DATES: 7-15-15 7-17-15 7-20-15

SHEET 10 OF 16

FILE => 33e0140-t-bs_lo01.dgn

USERNAME => s126849 DATE PLOTTED => 19-OCT-2015 TIME PLOTTED => 15:58

DIST	COUNTY	ROUTE	POST MILES TOTAL PROJECT	SHEET No.	TOTAL SHEETS
04	Ala	13	8.3	79	108

REGISTERED CIVIL ENGINEER — DATE 7-23-15

10-19-15
PLANS APPROVAL DATE

REGISTERED PROFESSIONAL ENGINEER — PAO-TSAN WANG — No. 32308 — Exp. 12-31-16 — CIVIL — STATE OF CALIFORNIA

The State of California or its officers or agents shall not be responsible for the accuracy or completeness of electronic copies of this plan sheet.

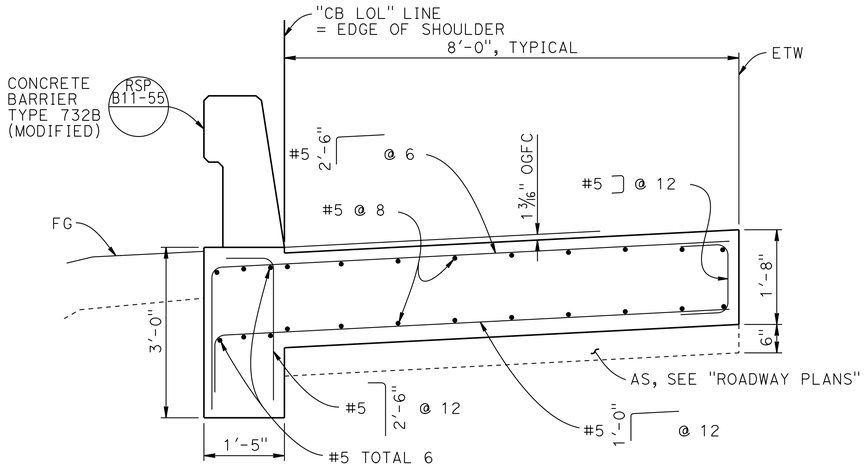

SECTION A-A
3/4" = 1'-0"

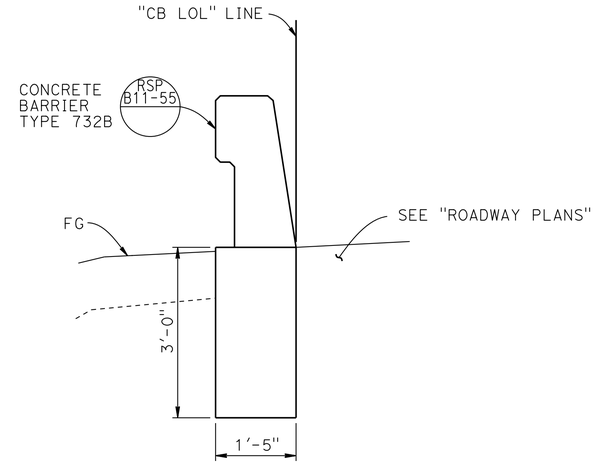

SECTION B-B
3/4" = 1'-0"

NOTE:

1. Four concrete barrier expansion joints shall be installed uniformly distributed along the length of the barrier, see RSP B11-55

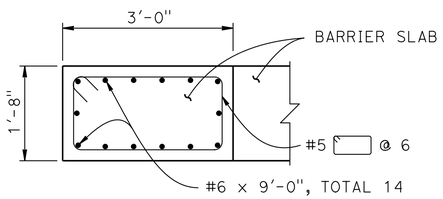

SECTION D-D
3/4" = 1'-0"

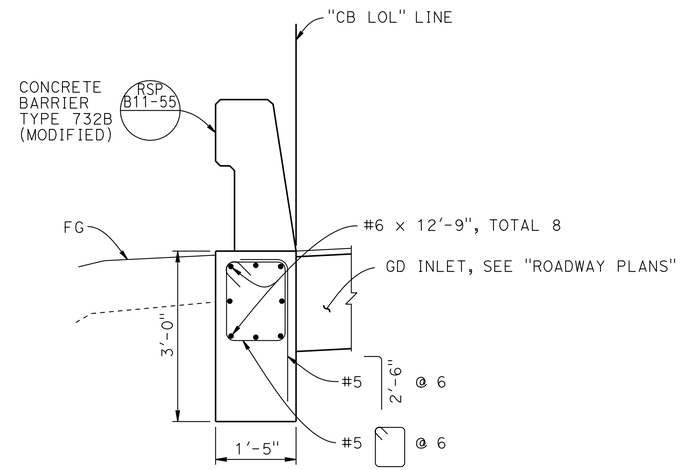

SECTION F-F
3/4" = 1'-0"

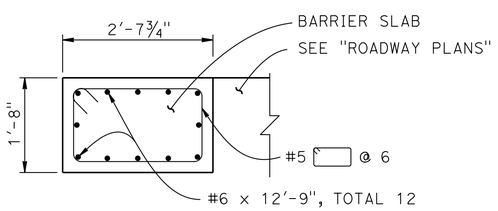

SECTION E-E
3/4" = 1'-0"

THORNHILL DRIVE STORM DAMAGE REPAIR
SOLDIER PILE WALL WITH GROUND ANCHORS
BARRIER SLAB DETAILS NO. 1

	BY	CHECKED
DESIGN	Pao-Tsan Wang	Sam Kotalawala
DETAILS	Franklin Maagma	Sam Kotalawala
QUANTITIES	Sam Kotalawala	Pao-Tsan Wang

STATE OF CALIFORNIA
DEPARTMENT OF TRANSPORTATION

DIVISION OF ENGINEERING SERVICES
STRUCTURE DESIGN
DESIGN BRANCH 16

BRIDGE NO. 33E0140
POST MILE 8.3

STRUCTURES DESIGN DETAIL SHEET (ENGLISH) (REV. 09-01-10)

ORIGINAL SCALE IN INCHES FOR REDUCED PLANS 0 1 2 3

UNIT: 3617
PROJECT NUMBER & PHASE: 04000208681
CONTRACT NO.: 04-1SS024

DISREGARD PRINTS BEARING EARLIER REVISION DATES

REVISION DATES: 7-18-15 7-18-15 7-20-15

SHEET 11 OF 16

FILE => 33e0140-t-bsdt01.dgn

USERNAME => s126849 DATE PLOTTED => 19-OCT-2015 TIME PLOTTED => 15:58

DIST	COUNTY	ROUTE	POST MILES TOTAL PROJECT	SHEET No.	TOTAL SHEETS
04	Ala	13	8.3	80	108

REGISTERED CIVIL ENGINEER 7-23-15 DATE

10-19-15
PLANS APPROVAL DATE

REGISTERED PROFESSIONAL ENGINEER PAO-TSAN WANG No. 32308 Exp. 12-31-16 CIVIL STATE OF CALIFORNIA

The State of California or its officers or agents shall not be responsible for the accuracy or completeness of electronic copies of this plan sheet.

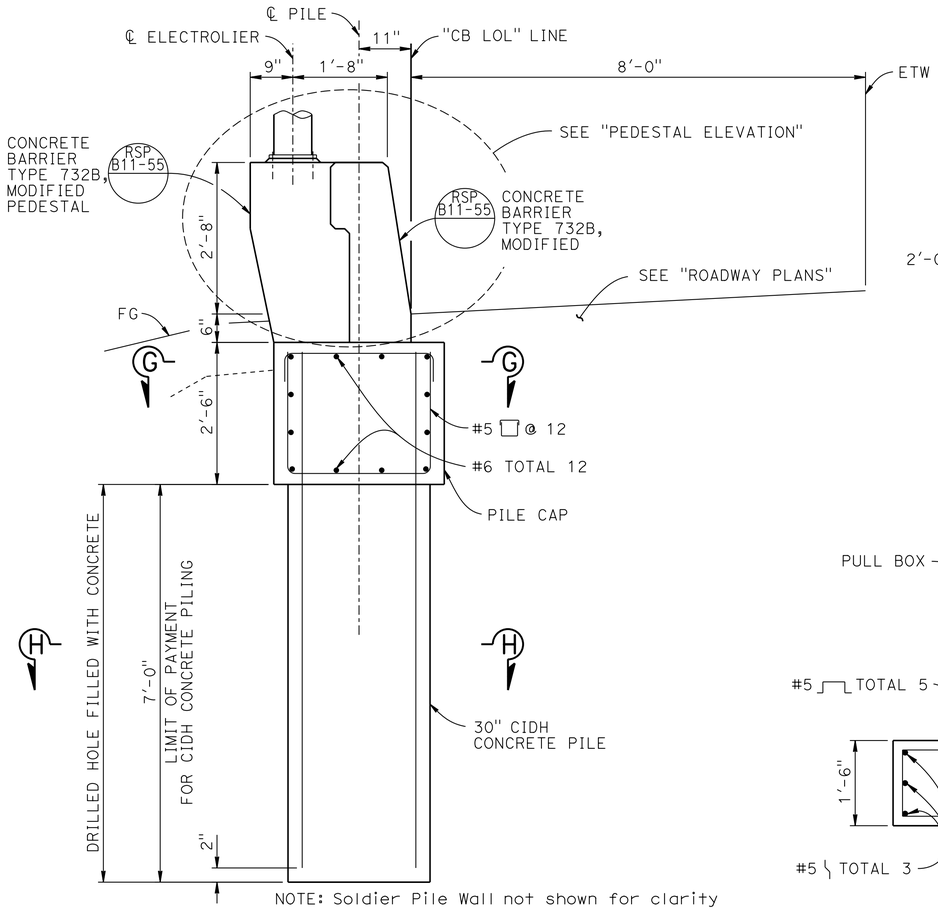

NOTE: Soldier Pile Wall not shown for clarity

SECTION C-C
3/4" = 1'-0"

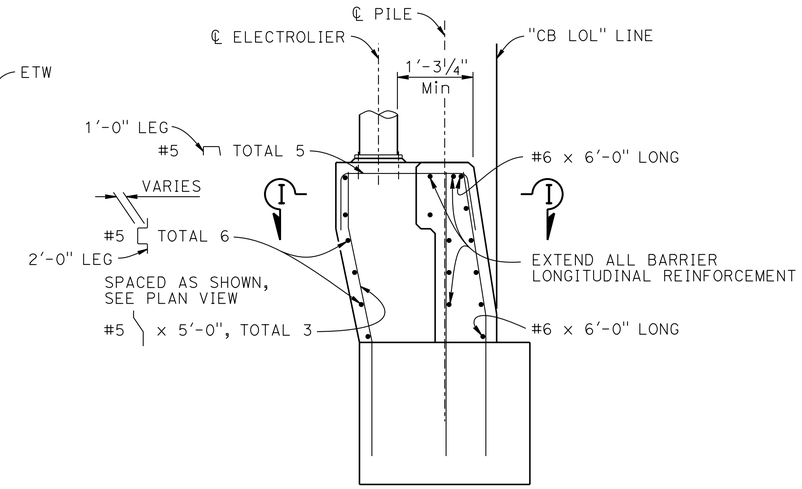

PEDESTAL ELEVATION
3/4" = 1'-0"

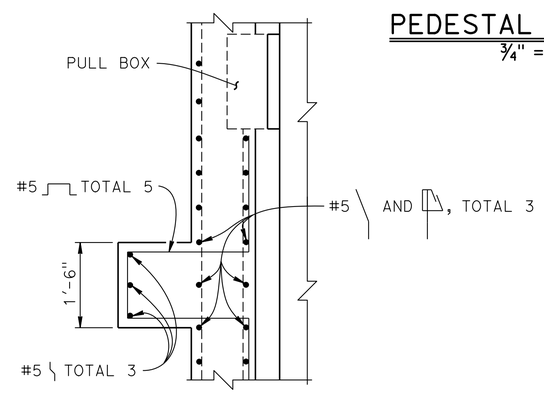

SECTION I-I
3/4" = 1'-0"

BARRIER SLAB NOTES:

REINFORCED CONCRETE

fy = 60,000 psi

f'_c = 4,000 psi

CIDH PILE AND PILE CAP

1. Reinforcement extending into footing shall be hooked as required to provide clearance to top of footing.
2. Lapped splices in spiral pile reinforcement shall be lapped at least 80 wire/bar diameters. Spiral pile reinforcement at splices and at ends shall be terminated with a 135° hook with a 6" tail hooked around a longitudinal bar.
3. Piles shall be extended only in accordance with details shown in the Project Plans.
4. For Electrolier, see "ROADWAY PLANS" sheet
5. For pedestal details not shown see RSP B11-55
6. For electrolier anchorage pedestal see ES-6A ES-6B

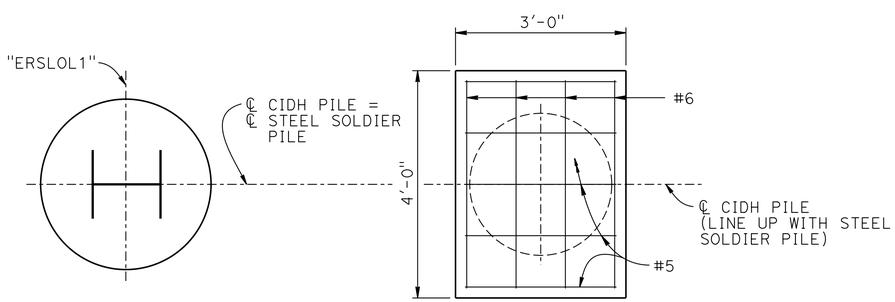

SECTION G-G
3/4" = 1'-0"

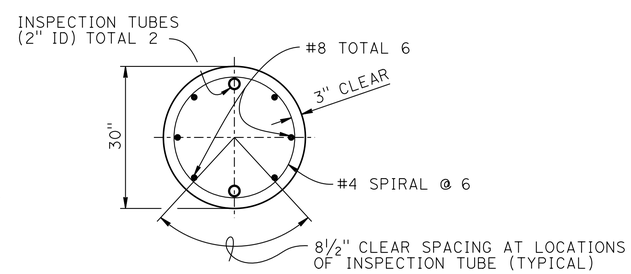

SECTION H-H
3/4" = 1'-0"
(With inspection tubes)

DESIGN	BY Pao-Tsan Wang	CHECKED Sam Kotalawala	
DETAILS	BY Franklin Maagma	CHECKED Sam Kotalawala	
QUANTITIES	BY Sam Kotalawala	CHECKED Pao-Tsan Wang	

STATE OF CALIFORNIA
DEPARTMENT OF TRANSPORTATION

DIVISION OF ENGINEERING SERVICES
STRUCTURE DESIGN
DESIGN BRANCH 16

BRIDGE NO. 33E0140
POST MILE 8.3

THORNHILL DRIVE STORM DAMAGE REPAIR
SOLDIER PILE WALL WITH GROUND ANCHORS
BARRIER SLAB DETAILS NO. 2

STRUCTURES DESIGN DETAIL SHEET (ENGLISH) (REV. 09-01-10)

ORIGINAL SCALE IN INCHES FOR REDUCED PLANS 0 1 2 3

UNIT: 3617
PROJECT NUMBER & PHASE: 04000208681
CONTRACT NO.: 04-1SS024

DISREGARD PRINTS BEARING EARLIER REVISION DATES

REVISION DATES 7-18-15 7-13-15 7-20-15

SHEET 12 OF 16

FILE => 33e0140-t-bsdt02.dgn

USERNAME => s128849 DATE PLOTTED => 19-OCT-2015 TIME PLOTTED => 15:58

DIST.	COUNTY	ROUTE	POST MILES TOTAL PROJECT	SHEET NO.	TOTAL SHEETS
04	Ala	13	8.3	81	108

REGISTERED ENGINEER - CIVIL 01-23-13

10-19-15
PLANS APPROVAL DATE

REGISTERED PROFESSIONAL ENGINEER EDUARDO ORTEGA No. 41012 Exp. 03-31-13 CIVIL STATE OF CALIFORNIA

The State of California or its officers or agents shall not be responsible for the accuracy or completeness of electronic copies of this plan sheet.

Caltrans now has a web site! To get to the web site, go to: http://www.dot.ca.gov

BENCH MARK

PRHV89 CTRL MONUMENT HORIZ. & VERT.
Offset 23.42 Lt. Sta. 68+20.79
N. 2,130,463.221 E. 6,065,818.707

NOTE: PP=unconfined compressive strength (tsf) as measured by pocket penetrometer.

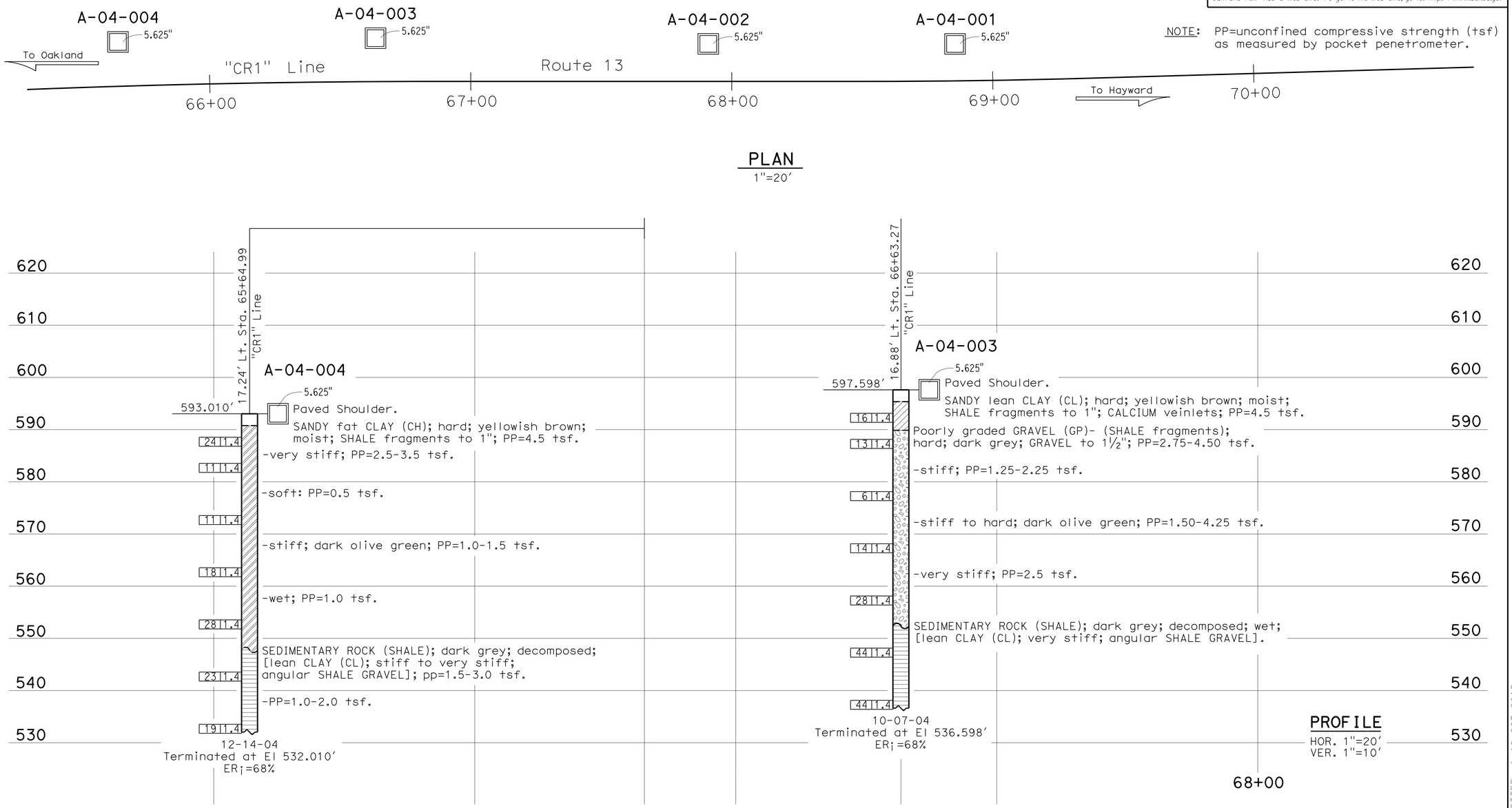

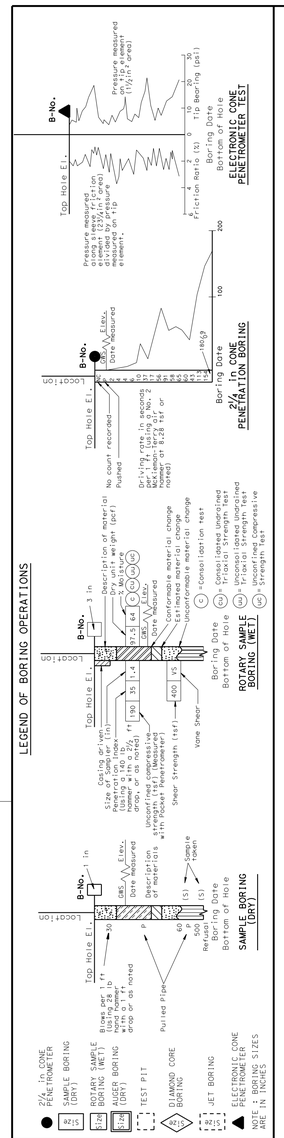

LEGEND OF EARTH MATERIALS

GRAVEL, SAND, SILT, CLAY, SANDY CLAY or CLAYEY SAND, GRAVELLY SILT or SILTY SAND, SILTY CLAY, CLAYEY SILT, PEAT and/or ORGANIC MATTER, FILL MATERIAL, IGNEOUS ROCK, SEDIMENTARY ROCK, METAMORPHIC

CONSISTENCY CLASSIFICATION FOR SOILS
According to the Standard Penetration Test

SPT N-Value (Blows/ 1 ft)	Granular	SPT N-Value (Blows/ 1 ft)	Cohesive
0-4	Very Loose	<2	Very Soft
5-10	Loose	2-4	Soft
11-30	Medium Dense	5-8	Firm
31-50	Dense	9-15	Stiff
>50	Very Dense	16-30	Very Stiff
		>31	Hard

NOTE: Classification of earth material as shown on this sheet is based upon field inspection and is not to be construed to imply mechanical analysis.

DIVISION OF ENGINEERING SERVICES	
DRAWN BY	M. REYNOLDS 08/12
CHECKED BY	R. Nashed

FIELD INVESTIGATION BY: E. Ortega

STATE OF CALIFORNIA DEPARTMENT OF TRANSPORTATION

GEOTECHNICAL SERVICES OFFICE OF GEOTECHNICAL DESIGN - WEST

UNIT: 3660
EA 04-1SS021

BRIDGE NO. 33E0140
POST MILE 8.3

THORNHILL DRIVE STORM DAMAGE REPAIR
THORNHILL/FERNWOOD RETAINING WALLS 2004 LOTB
LOG OF TEST BORINGS 1 of 2

(Orig 01/02)
(Rev 09/12)

ORIGINAL SCALE IN MILLIMETERS FOR REDUCED PLANS 0 10 20 30 40 50 60 70 80 90 100

DISREGARD PRINTS BEARING EARLIER REVISION DATES 01-30-13 01-21-14

REVISION DATES (PRELIMINARY STAGE ONLY) SHEET 13 OF 16

USERNAME => s126849
DGN FILE => 33e0140-z-ltb01.dgn

DATE PLOTTED => 19-OCT-2015
TIME PLOTTED => 15:58

DIST.	COUNTY	ROUTE	POST MILES TOTAL PROJECT	SHEET NO.	TOTAL SHEETS
04	Ala	13	8.3	82	108

Ed Ortega 01-23-13
REGISTERED ENGINEER - CIVIL

10-19-15
PLANS APPROVAL DATE

REGISTERED PROFESSIONAL ENGINEER
EDUARDO ORTEGA
No. 41012
Exp. 03-31-13
CIVIL
STATE OF CALIFORNIA

The State of California or its officers or agents shall not be responsible for the accuracy or completeness of electronic copies of this plan sheet.

Caltrans now has a web site! To get to the web site, go to: http://www.dot.ca.gov

(FOR BORING LOCATION SEE PLAN, LOTB SHEET 1 OF 2)

NOTE: PP=unconfined compressive strength (tsf) as measured by pocket penetrometer.

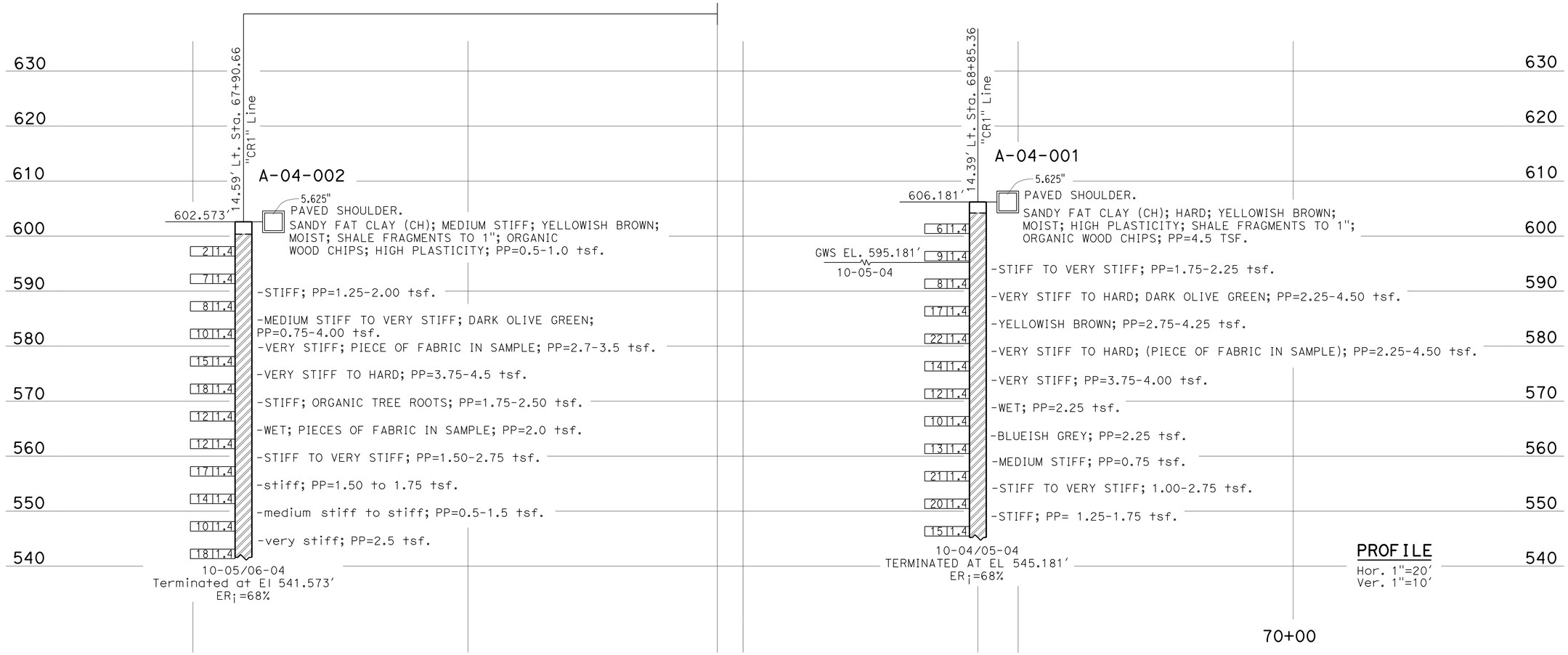

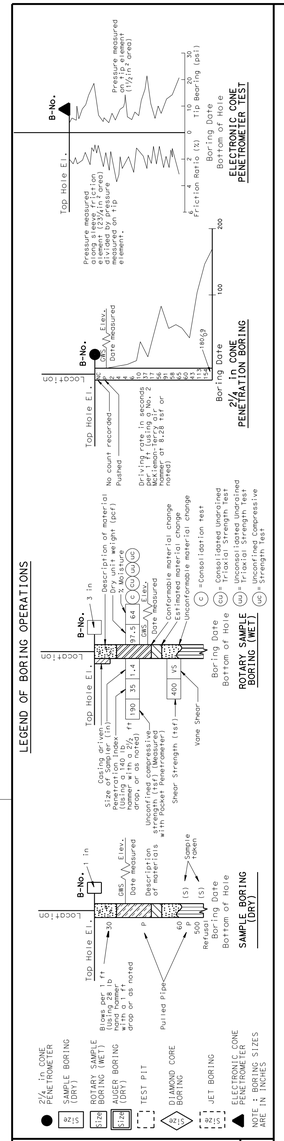

DIVISION OF ENGINEERING SERVICES	
DRAWN BY	M. REYNOLDS 08/12
CHECKED BY	R. Nashed

FIELD INVESTIGATION BY: E. Ortega

STATE OF CALIFORNIA DEPARTMENT OF TRANSPORTATION

GEOTECHNICAL SERVICES OFFICE OF GEOTECHNICAL DESIGN - WEST

BRIDGE NO. 33E0140
POST MILE 8.3

THORNHILLDRIVE STORM DAMAGE REPAIR

THORNHILL/FERNWOOD RETAINING WALLS 2004 LOTB

LOG OF TEST BORINGS 2 of 2

(Orig 01/02)
(Rev 09/12)

ORIGINAL SCALE IN MILLIMETERS FOR REDUCED PLANS 0 10 20 30 40 50 60 70 80 90 100

UNIT: 3660
EA 04-1SS021

DISREGARD PRINTS BEARING EARLIER REVISION DATES

REVISION DATES (PRELIMINARY STAGE ONLY) 01-30-13 01-08-14 01-21-14

SHEET 14 OF 16

DATE PLOTTED => 19-OCT-2015
TIME PLOTTED => 15:58

USERNAME => s126849
DGN FILE => 33e0140-z-ltb02.dgn

DIST	COUNTY	ROUTE	POST MILES TOTAL PROJECT	SHEET No	TOTAL SHEETS
04	Ala	13	8.3	83	108

REGISTERED CIVIL ENGINEER 01-23-13

10-19-15
PLANS APPROVAL DATE

REGISTERED PROFESSIONAL ENGINEER
EDUARDO ORTEGA
No. 41012
Exp. 03-31-13
CIVIL
STATE OF CALIFORNIA

The State of California or its officers or agents shall not be responsible for the accuracy or completeness of electronic copies of this plan sheet.

This LOTB sheet was prepared in accordance with the Caltrans Soil & Rock Logging, Classification, & Presentation Manual (2010 Edition).

BENCH MARK

PRHV89 CTRL MONUMENT HORIZ. & VERT.
Offset 23.42 Lt. Sta. 68+20.79
N. 2,130,463.221 E. 6,065,818.707

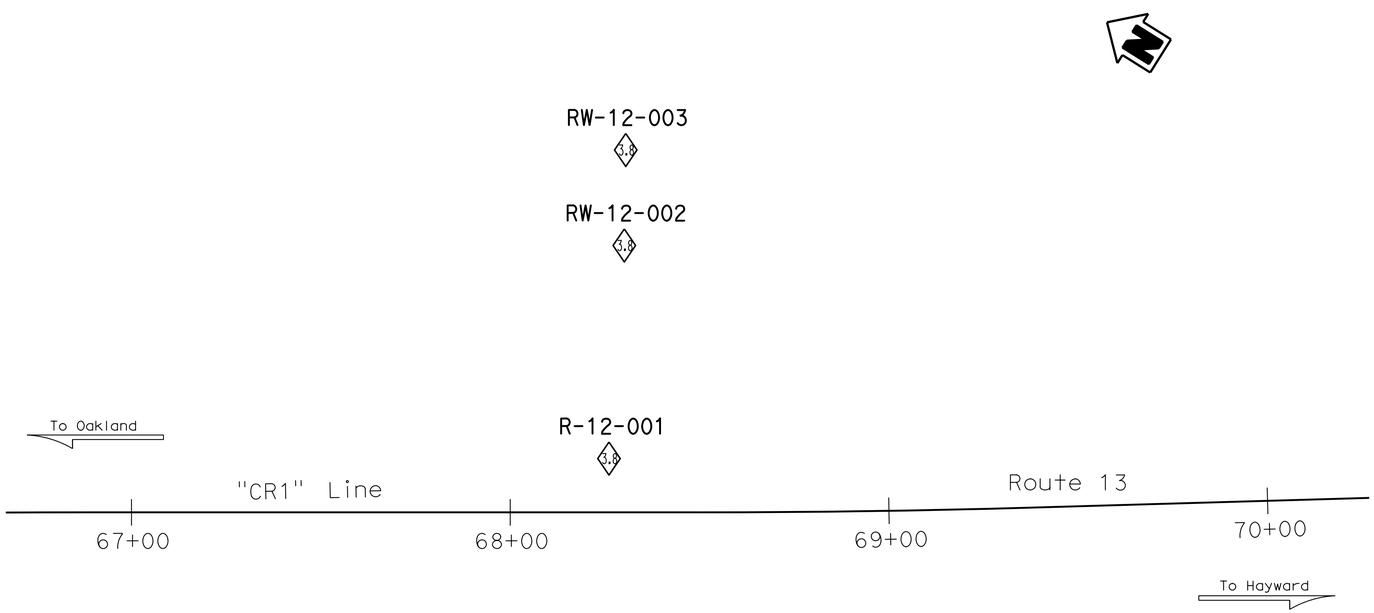

PLAN
1"=20'

NOTE: PP=unconfined compressive strength (tsf) as measured by pocket penetrometer.

PROFILE
HOR. 1"=20'
VER. 1"= 5'

THORNHILL DRIVE STORM DAMAGE REPAIR

THORNHILL/FERNWOOD RETAINING WALLS 2012 LOTB

LOG OF TEST BORINGS 1 OF 2

ENGINEERING SERVICES		GEOTECHNICAL SERVICES	STATE OF CALIFORNIA DEPARTMENT OF TRANSPORTATION	DIVISION OF ENGINEERING SERVICES OFFICE OF GEOTECHNICAL DESIGN BRANCH	BRIDGE NO. 33E0140 POST MILES 8.3
FUNCTIONAL SUPERVISOR	DRAWN BY: M. Reynolds	FIELD INVESTIGATION BY: E. Ortega			
NAME: M. Momenzadeh	CHECKED BY: R. Nashed				

OGS CIVIL LOG OF TEST BORINGS SHEET

ORIGINAL SCALE IN INCHES FOR REDUCED PLANS 0 1 2 3

UNIT: 3660
PROJECT NUMBER & PHASE: 04000208681 CONTRACT NO.: 04-1SS021

DISREGARD PRINTS BEARING EARLIER REVISION DATES

REVISION DATES: 01-30-13 01-16-14 01-21-14

SHEET 15 OF 16

FILE => 33e0140-z-1tb03.dgn

USERNAME => s126849 DATE PLOTTED => 19-OCT-2015 TIME PLOTTED => 15:58

DIST	COUNTY	ROUTE	POST MILES TOTAL PROJECT	SHEET No	TOTAL SHEETS
04	Ala	13	8.3	84	108

REGISTERED CIVIL ENGINEER 01-23-13

PLANS APPROVAL DATE 10-19-15

REGISTERED PROFESSIONAL ENGINEER EDUARDO ORTEGA No. 41012 Exp. 03-31-13 CIVIL STATE OF CALIFORNIA

The State of California or its officers or agents shall not be responsible for the accuracy or completeness of electronic copies of this plan sheet.

This LOTB sheet was prepared in accordance with the Caltrans Soil & Rock Logging, Classification, & Presentation Manual (2010 Edition).

NOTE: 1. PP=unconfined compressive strength (tsf) as measured by pocket penetrometer.

2. *NR: Not Recorded.

(For Boring Location See Plan, LOTB Sheet 1 of 2)

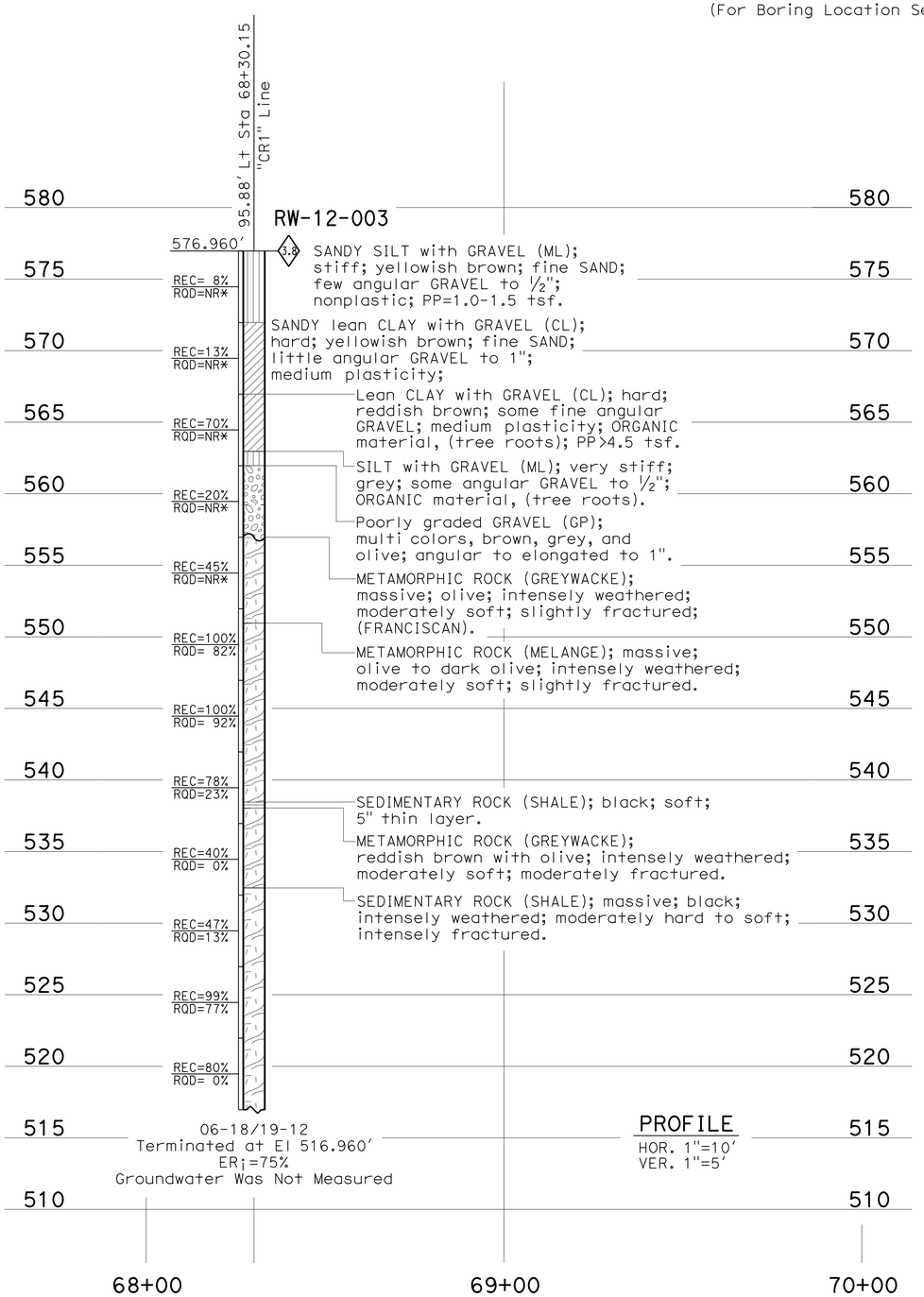

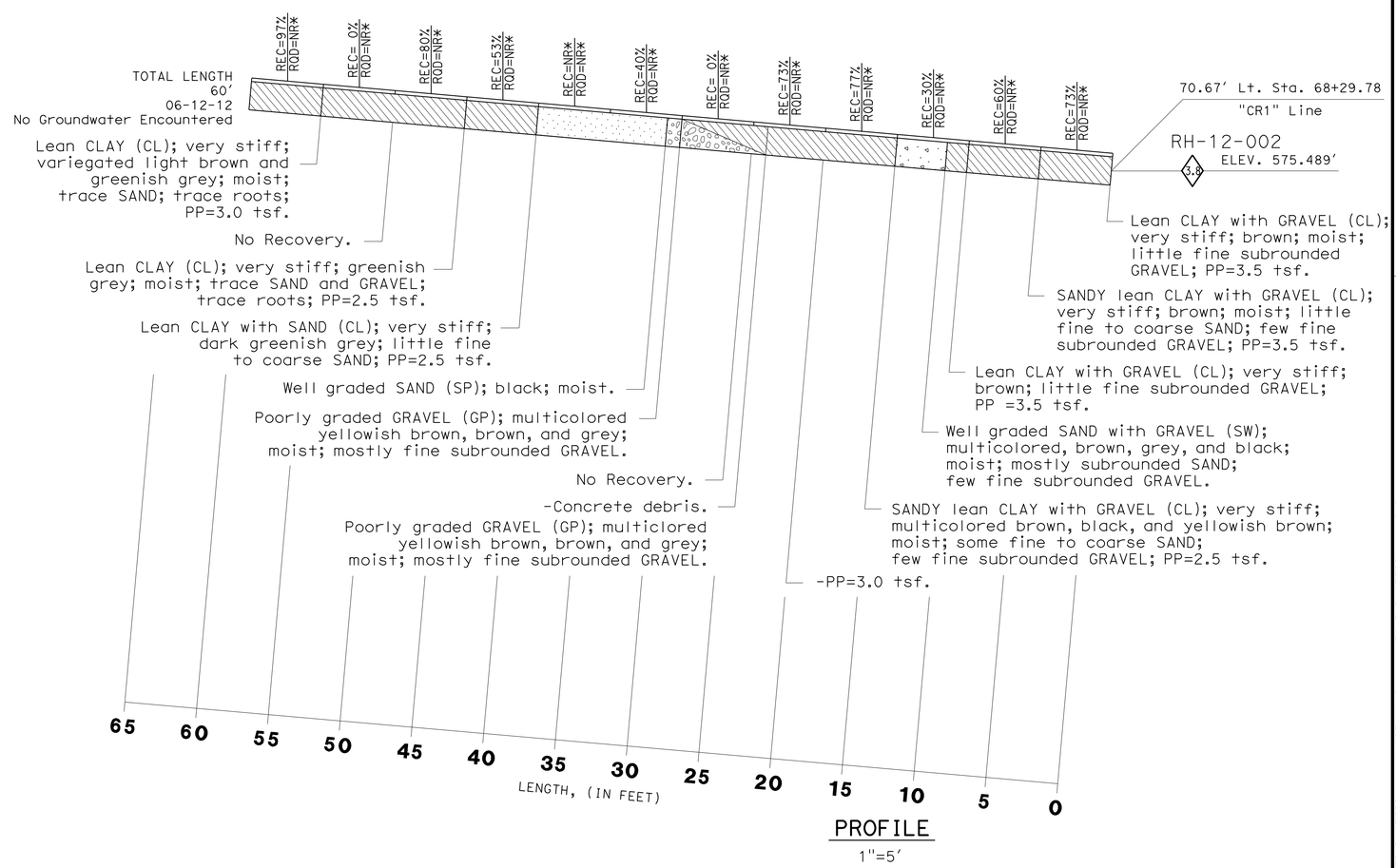

THORNHILL DRIVE STORM DAMAGE REPAIR

THORNHILL/FERNWOOD RETAINING WALLS 2012 LOTB

LOG OF TEST BORINGS 2 OF 2

ENGINEERING SERVICES		GEOTECHNICAL SERVICES	STATE OF CALIFORNIA DEPARTMENT OF TRANSPORTATION	DIVISION OF ENGINEERING SERVICES OFFICE OF GEOTECHNICAL DESIGN BRANCH	BRIDGE NO. 33E0140 POST MILES 8.3
FUNCTIONAL SUPERVISOR	DRAWN BY: M. Reynolds	FIELD INVESTIGATION BY: R. Nashed			
NAME: M. Momenzadeh	CHECKED BY: R. Nashed				

OGS CIVIL LOG OF TEST BORINGS SHEET

ORIGINAL SCALE IN INCHES FOR REDUCED PLANS 0 1 2 3

UNIT: 3660
PROJECT NUMBER & PHASE: 04000208681 CONTRACT NO.: 04-1SS021

DISREGARD PRINTS BEARING EARLIER REVISION DATES

REVISION DATES 01-30-13 01-21-14 SHEET 16 OF 16

FILE => 33e0140-z-ltb04.dgn

USERNAME => s126849 DATE PLOTTED => 19-OCT-2015 TIME PLOTTED => 15:58

DIST	COUNTY	ROUTE	POST MILES TOTAL PROJECT	SHEET No.	TOTAL SHEETS
04	Ala	13	8.3	85	108

REGISTERED CIVIL ENGINEER 7-23-15 DATE

10-19-15
PLANS APPROVAL DATE

REGISTERED PROFESSIONAL ENGINEER PAO-TSAN WANG No. 32308 Exp. 12-31-16 CIVIL STATE OF CALIFORNIA

The State of California or its officers or agents shall not be responsible for the accuracy or completeness of scanned copies of this plan sheet.

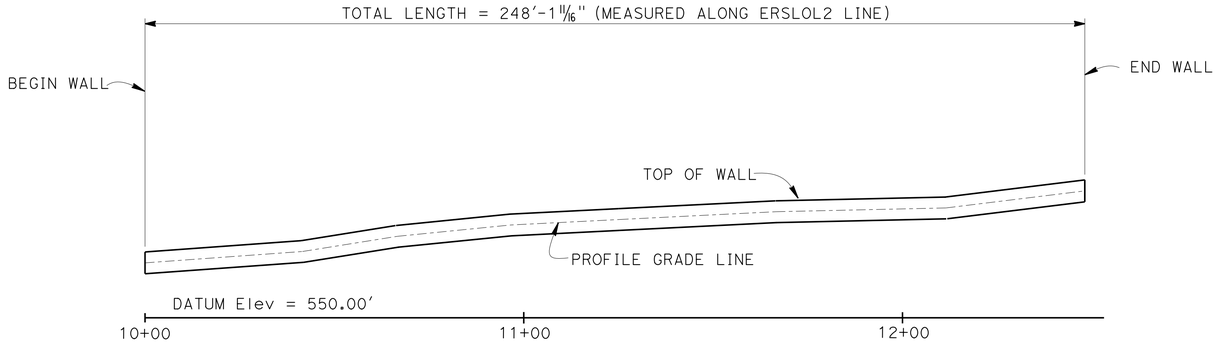

DEVELOPED MIRRORED ELEVATION

1" = 20'

FOR GROUND ANCHOR AND SOIL NAIL LOCATIONS SEE "STRUCTURE PLAN" SHEETS

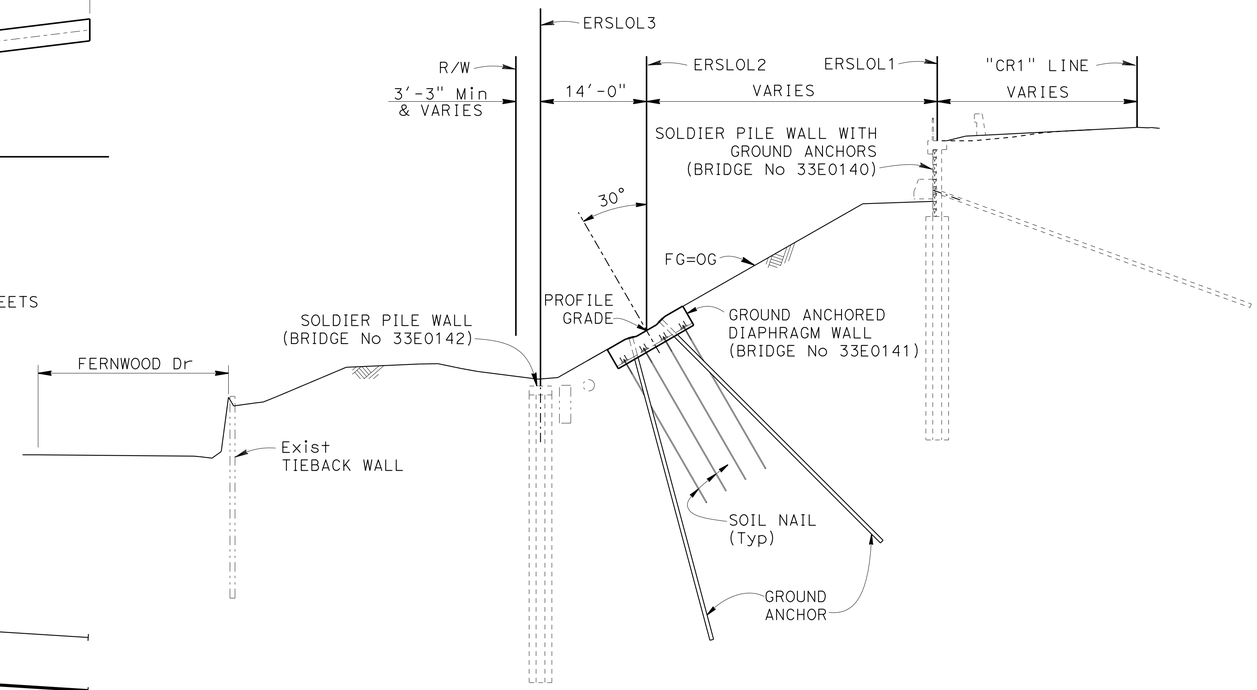

TYPICAL SECTION

1" = 10'

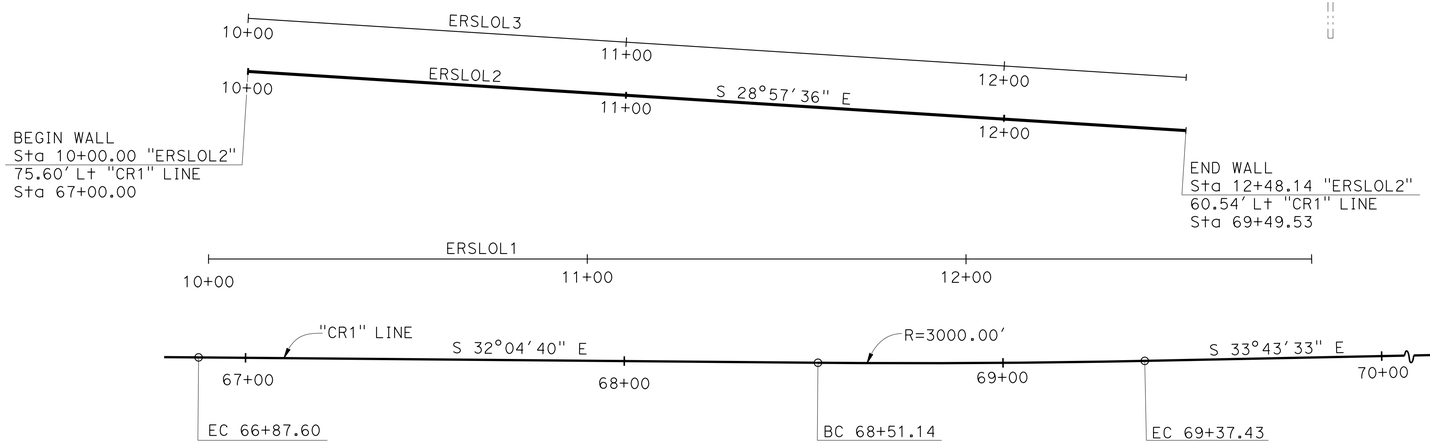

PLAN

1" = 20'

"CR1" LINE - CURVE DATA

R = 3000.00'
Δ = 1°38'53"
T = 43.15'
L = 86.29'

QUANTITIES

STRUCTURE EXCAVATION (DIAPHRAGM WALL)	362	CY
STRUCTURE BACKFILL (DIAPHRAGM WALL)	57	CY
GROUND ANCHOR (SUBHORIZONTAL)	98	EA
SOIL NAIL	5,050	LF
STRUCTURAL CONCRETE, DIAPHRAGM WALL	273	CY
BAR REINFORCING STEEL (DIAPHRAGM WALL)	93,270	LB
STRUCTURAL SHOTCRETE	18	CY
PREPARE AND STAIN CONCRETE	2,854	SQFT

THORNHILL DRIVE STORM DAMAGE REPAIR
GROUND ANCHORED DIAPHRAGM WALL
GENERAL PLAN

Muthanna S. Omran
7-23-15 MUTHANNA OMRAN
DESIGN ENGINEER

	BY	CHECKED
DESIGN	P. Wang	S. Kotalawala
DETAILS	Min Yu	S. Kotalawala
QUANTITIES	S. Kotalawala	Tin Win

LOAD & RESISTANCE FACTOR DESIGN — LIVE LOADING: HL93 W/"LOW-BOY"; PERMIT DESIGN VEHICLE

	BY	CHECKED
LAYOUT	P. Wang	S. Kotalawala
SPECIFICATIONS	Tina Chen	PLANS AND SPECS COMPARED Tina Chen

ORIGINAL SCALE IN INCHES FOR REDUCED PLANS 0 1 2 3

STATE OF CALIFORNIA
DEPARTMENT OF TRANSPORTATION

DIVISION OF ENGINEERING SERVICES
STRUCTURE DESIGN
DESIGN BRANCH 16

BRIDGE NO. 33E0141
POST MILE 8.3

UNIT: 3617
PROJECT NUMBER & PHASE: 04000208681
CONTRACT NO.: 04-1SS024

DISREGARD PRINTS BEARING EARLIER REVISION DATES

REVISION DATES: 1-21-14 07-15-15 03-24-14
SHEET 1 OF 13

USERNAME => s126849 DATE PLOTTED => 19-OCT-2015 TIME PLOTTED =>

STRUCTURES DESIGN GENERAL PLAN SHEET (ENGLISH) (REV.09-01-10)

FILE => 33e0141-a-gp01.dgn

DIST	COUNTY	ROUTE	POST MILES TOTAL PROJECT	SHEET No.	TOTAL SHEETS
04	Ala	13	8.3	86	108

Pao-tsan Wang 7-23-15
REGISTERED CIVIL ENGINEER DATE

10-19-15
PLANS APPROVAL DATE

REGISTERED PROFESSIONAL ENGINEER
PAO-TSAN WANG
No. 32308
Exp. 12-31-16
CIVIL
STATE OF CALIFORNIA

The State of California or its officers or agents shall not be responsible for the accuracy or completeness of electronic copies of this plan sheet.

INDEX TO PLANS

SHEET NO	TITLES
1	GENERAL PLAN
2	INDEX TO PLANS
3	STRUCTURE PLAN NO. 1
4	STRUCTURE PLAN NO. 2
5	FOUNDATION PLAN
6	WALL DETAILS NO. 1
7	WALL DETAILS NO. 2
8	WALL DETAILS NO. 3
9	WALL DETAILS NO. 4
10	LOG OF TEST BORINGS NO. 1
11	LOG OF TEST BORINGS NO. 2
12	LOG OF TEST BORINGS NO. 3
13	LOG OF TEST BORINGS NO. 4

STANDARD PLANS DATE 2010

	A10A	ABBREVIATIONS (SHEET 1 OF 2)
RSP	A10B	ABBREVIATIONS (SHEET 2 OF 2)
	A10C	LINES AND SYMBOLS (SHEET 1 OF 3)
	A10D	LINES AND SYMBOLS (SHEET 2 OF 3)
	A10E	LINES AND SYMBOLS (SHEET 3 OF 3)
	A10F	LEGEND - SOIL (SHEET 1 OF 2)
	A10G	LEGEND - SOIL (SHEET 2 OF 2)

STANDARD PLAN SHEET No.

DETAIL No.

GENERAL NOTES

DESIGN: AASHTO LRFD Bridge design specifications 4th edition with california amendments

SOIL PARAMETERS:

RETAINED SOIL:
Soil Weight, γ= 135 pcf
Soil Friction Angle, Φ = 10°
Active Pressure Coefficient, Ka = 0.700

FOUNDATION SOIL:
Soil Weight, γ= 135 pcf
Soil Friction Angle, Φ = 35°
Ultimate Bond Stress Between Soil and Grout = 12psi

REINFORCED CONCRETE:

f'c = 4 ksi
fy = 60 ksi

STRUCTURAL STEEL:

ASTM DESIGNATION:
STEEL PILES: fy=50 ksi
STEEL PLATE: fy=36 ksi

PRESTRESSING STEEL (GROUND ANCHORS):

STRANDS - ASTM DESIGNATION: A416 (270 ksi Low Relaxation Steel)

FDL = Factored Design Force on ground anchor (kips)
FTL = Factored Test Load (kips)
LL = Lock-Off Load (kips)

F_{pu} = Minimum tensile strength of prestressing steel (kip per square inch)

A_s (Min) = Minimum Cross Sectional Area of prestressing steel in ground anchor (square inch)

FDL = 80 KIPS

FTL = 90 KIPS

LL = 60 KIPS

$$A_s \text{ (Min)} = \frac{1.0 \text{ FTL}}{0.75 \ f_{pu}}$$

GROUND ANCHORED DIAPHRAM WALL:

During construction of diaphram wall, pot holding shall be performed to eliminate the impact to the 18" and 24" rcp

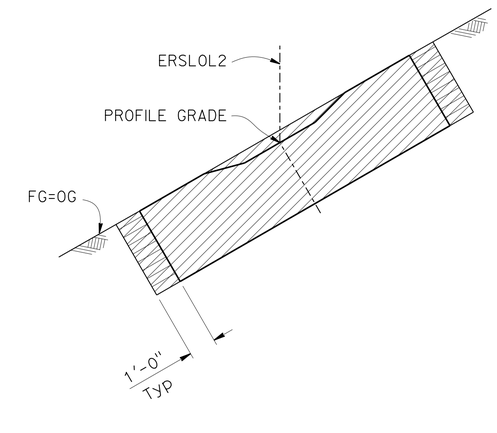

EXCAVATION AND BACKFILL

NO SCALE

LEGEND:

STRUCTURE EXCAVATION (DIAPHRAGM WALL)

STRUCTURE BACKFILL (DIAPHRAGM WALL)

DESIGN	BY P. Wang	CHECKED S. Kotalawala	
DETAILS	BY Min YU	CHECKED S. Kotalawala	
QUANTITIES	BY S. Kotalawala	CHECKED Tin Win	

STATE OF CALIFORNIA
DEPARTMENT OF TRANSPORTATION

DIVISION OF ENGINEERING SERVICES
STRUCTURE DESIGN
DESIGN BRANCH 16

BRIDGE NO. 33E0141
POST MILE 8.3

THORNHILL DRIVE STORM DAMAGE REPAIR
GROUND ANCHORED DIAPHRAGM WALL
INDEX TO PLANS

STRUCTURES DESIGN DETAIL SHEET (ENGLISH) (REV. 09-01-10)

ORIGINAL SCALE IN INCHES FOR REDUCED PLANS 0 1 2 3

UNIT: 3617
PROJECT NUMBER & PHASE: 04000208681
CONTRACT NO.: 04-1SS024

DISREGARD PRINTS BEARING EARLIER REVISION DATES

REVISION DATES 01-21-14 02-27-14 03-24-14 07-15-15

SHEET 2 OF 13

USERNAME => s126849 DATE PLOTTED => 19-OCT-2015 TIME PLOTTED => 15:58

FILE => 33e0141-a-itp.dgn

DIST	COUNTY	ROUTE	POST MILES TOTAL PROJECT	SHEET No.	TOTAL SHEETS
04	Ala	13	8.3	87	108

REGISTERED CIVIL ENGINEER 7-23-15 DATE

10-19-15
PLANS APPROVAL DATE

REGISTERED PROFESSIONAL ENGINEER PAO-TSAN WANG No. 32308 Exp. 12-31-16 CIVIL STATE OF CALIFORNIA

The State of California or its officers or agents shall not be responsible for the accuracy or completeness of electronic copies of this plan sheet.

NOTE:

Soil Nail Length LE see "WALL DETAILS NO. 4" sheet

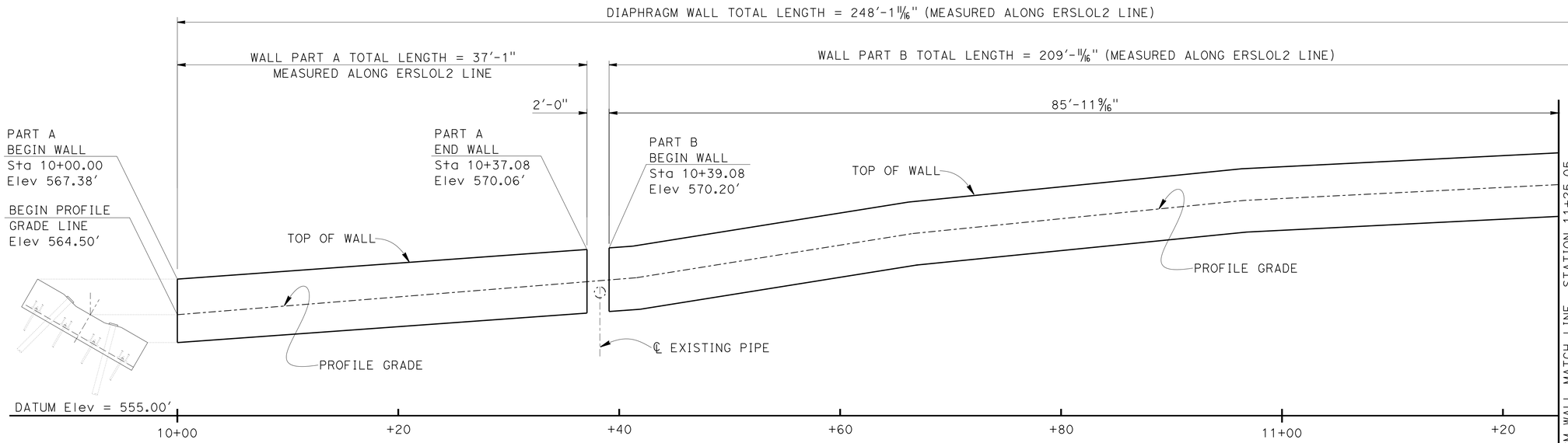

STATION	TOP WALL Elev (ft)	PG Elev (ft)
10+00	576.38	564.50
10+20	568.82	565.94
10+37.08	570.06	567.14
10+38.25	565.67	Exist PIPE
10+39.08	570.20	567.30
10+40	570.27	570.36
10+41.22	570.22	570.36
10+60	573.36	570.45
10+66.20	574.35	571.44
10+80	575.73	572.84
10+96.35	577.37	574.48
11+00	577.55	574.67
11+20	578.56	575.68
11+25.05	578.81	575.93

MIRRORED ELEVATION

13/16" = 1'-0"

(ANCHORE AND SOIL NAIL SPACES SHOWN AT "TRUE VIEW FACE OF WALL")

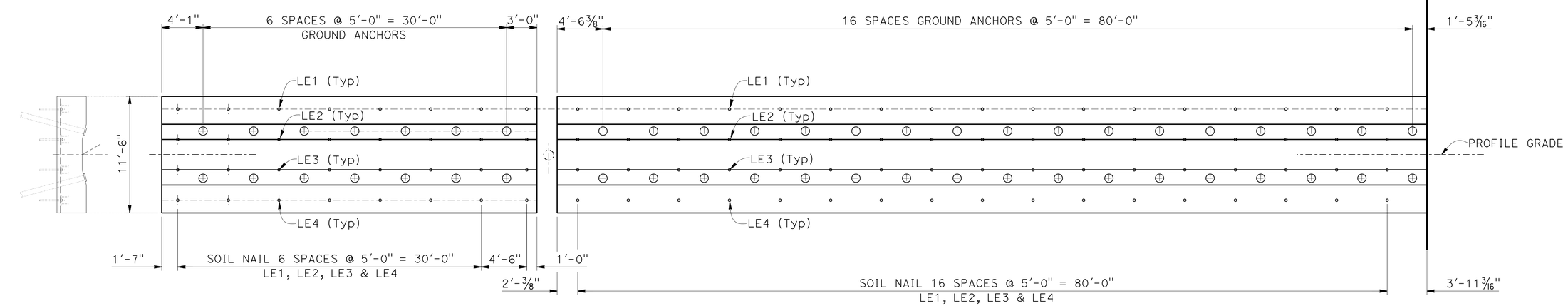

TRUE VIEW FACE OF WALL

13/16" = 1'-0"

THORNHILL DRIVE STORM DAMAGE REPAIR
GROUND ANCHORED DIAPHRAGM WALL
STRUCTURE PLAN NO. 1

	BY		CHECKED
DESIGN	P. Wang		S. Kotalawala
DETAILS	Min Yu		S. Kotalawala
QUANTITIES	S. Kotalawala		Tin Win

STATE OF CALIFORNIA
DEPARTMENT OF TRANSPORTATION

DIVISION OF ENGINEERING SERVICES
STRUCTURE DESIGN
DESIGN BRANCH 16

BRIDGE NO. 33E0141
POST MILE 8.3

STRUCTURES DESIGN DETAIL SHEET (ENGLISH) (REV. 09-01-10)

ORIGINAL SCALE IN INCHES FOR REDUCED PLANS 0 1 2 3

UNIT: 3617
PROJECT NUMBER & PHASE: 04000208681
CONTRACT NO.: 04-1SS024

DISREGARD PRINTS BEARING EARLIER REVISION DATES

REVISION DATES: 06-25-13 07-15-15 01-29-14

SHEET 3 OF 13

FILE => 33e0141-c-sp01.dgn

USERNAME => s126849 DATE PLOTTED => 19-OCT-2015 TIME PLOTTED => 15:58

DIST	COUNTY	ROUTE	POST MILES TOTAL PROJECT	SHEET No.	TOTAL SHEETS
04	Ala	13	8.3	88	108

REGISTERED CIVIL ENGINEER 7-23-15 DATE

10-19-15
PLANS APPROVAL DATE

REGISTERED PROFESSIONAL ENGINEER PAO-TSAN WANG No. 32308 Exp. 12-31-16 CIVIL STATE OF CALIFORNIA

The State of California or its officers or agents shall not be responsible for the accuracy or completeness of electronic copies of this plan sheet.

NOTE:

Soil Nail Length LE see "WALL DETAILS NO. 4" sheet

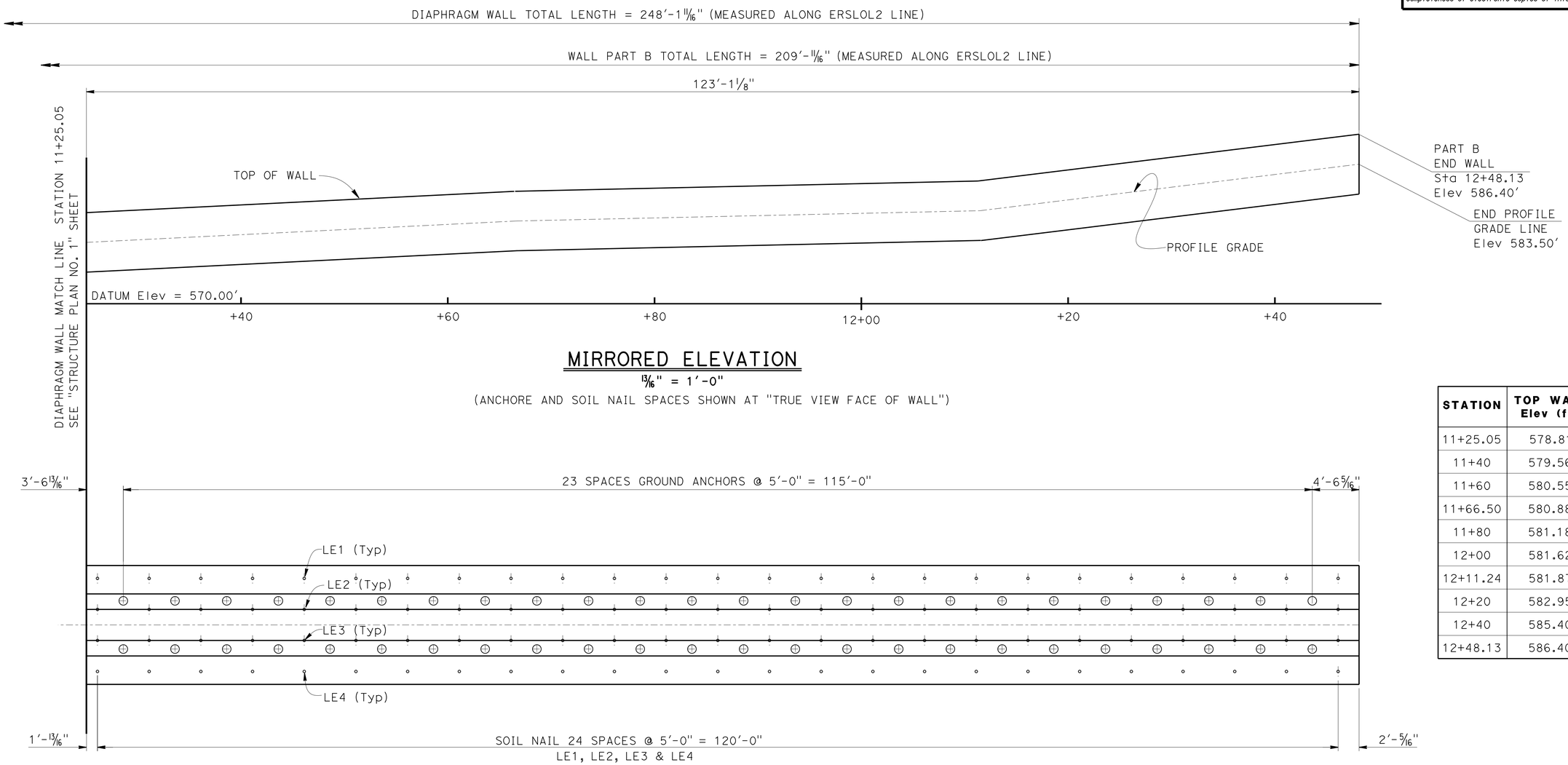

STATION	TOP WALL Elev (ft)	PG Elev (ft)
11+25.05	578.81	575.93
11+40	579.56	576.68
11+60	580.55	577.68
11+66.50	580.88	577.99
11+80	581.18	578.30
12+00	581.62	578.74
12+11.24	581.87	578.99
12+20	582.95	580.05
12+40	585.40	582.51
12+48.13	586.40	583.50

THORNHILL DRIVE STORM DAMAGE REPAIR
GROUND ANCHORED DIAPHRAGM WALL
STRUCTURE PLAN NO. 2

DESIGN	BY P. Wang	CHECKED S. Kotalawala	
DETAILS	BY Min Yu	CHECKED S. Kotalawala	
QUANTITIES	BY S. Kotalawala	CHECKED Tin Win	

STATE OF CALIFORNIA
DEPARTMENT OF TRANSPORTATION

DIVISION OF ENGINEERING SERVICES
STRUCTURE DESIGN
DESIGN BRANCH 16

BRIDGE NO. 33E0141
POST MILE 8.3

STRUCTURES DESIGN DETAIL SHEET (ENGLISH) (REV. 09-01-10)

ORIGINAL SCALE IN INCHES FOR REDUCED PLANS 0 1 2 3

UNIT: 3617
PROJECT NUMBER & PHASE: 04000208681
CONTRACT NO.: 04-1SS024

DISREGARD PRINTS BEARING EARLIER REVISION DATES

REVISION DATES: 01-16-14 01-21-14 01-29-14 07-15-15

SHEET 4 OF 13

FILE => 33e0141-c-sp02.dgn

USERNAME => s128849 DATE PLOTTED => 19-OCT-2015 TIME PLOTTED => 15:58

DIST	COUNTY	ROUTE	POST MILES TOTAL PROJECT	SHEET No.	TOTAL SHEETS
04	Ala	13	8.3	89	108

REGISTERED CIVIL ENGINEER 7-23-15 DATE

10-19-15
PLANS APPROVAL DATE

REGISTERED PROFESSIONAL ENGINEER PAO-TSAN WANG No. 32308 Exp. 12-31-16 CIVIL STATE OF CALIFORNIA

The State of California or its officers or agents shall not be responsible for the accuracy or completeness of electronic copies of this plan sheet.

CURVE DATA

No.	R	Δ	T	L
Ⓐ	4000.00	2°15′27"	78.81	157.60
Ⓑ	3000.00	1°38′53"	43.15	86.29

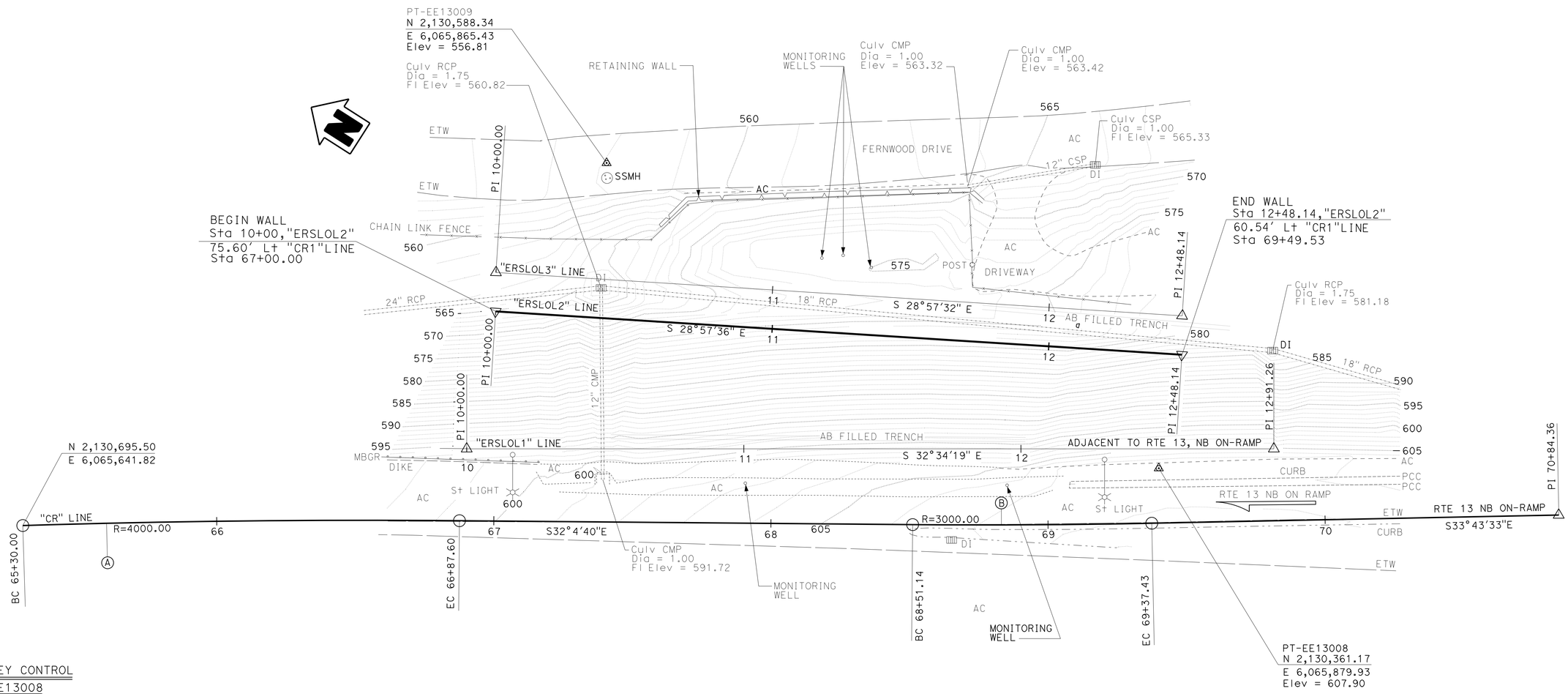

SURVEY CONTROL

PT-EE13008

Fnd PK w/ SHINER ON RAMP SHOULDER
19.79 FT Lt. "CR" LINE
Sta. 69+40.36
N 2130361.17
E 6065879.93
Elev=607.90

PT-EE13009

Fnd PIN IN MONUMENT WELL
129.46 FT Lt. "CR" LINE
Sta. 67+39.59
N 2130588.34
E 6065865.43
Elev=556.81

THORNHILL DRIVE STORM DAMAGE REPAIR
GROUND ANCHORED DIAPHRAGM WALL
FOUNDATION PLAN

PRELIMINARY INVESTIGATION SECTION

SCALE 1"=20′	VERT.DATUM NAVD88	PHOTOGRAMMETRY AS OF: X		
	HORZ.DATUM NAD83	SURVEYED	BY X	CHECKED BY Chris Fassett 02/2013
ALIGNMENT TIES Dist. Traverse Sheet		DRAFTED	BY Sharon Zheng 02/2013	CHECKED BY Sang Sou 02/2013

	BY	CHECKED
DESIGN	P.Wang	S. Kotalawala
DETAILS	Min Yu	S. Kotalawala
QUANTITIES	S. Kotalawala	Tin Win

STATE OF CALIFORNIA
DEPARTMENT OF TRANSPORTATION

DIVISION OF ENGINEERING SERVICES
STRUCTURE DESIGN
DESIGN BRANCH 16

BRIDGE NO. 33E0141
POST MILE 8.30

STRUCTURES FOUNDATION PLAN SHEET (ENGLISH) (REV. 09-01-10)

ORIGINAL SCALE IN INCHES FOR REDUCED PLANS 0 1 2 3

UNIT: 3617
PROJECT NUMBER & PHASE: 04000208681
CONTRACT NO.: 04-1SS024

DISREGARD PRINTS BEARING EARLIER REVISION DATES

REVISION DATES: 08-21-13 07-15-15 1-14-14

SHEET 5 OF 13

FILE => 33e0141-e-fp101.dgn

USERNAME => s126849 DATE PLOTTED => 19-OCT-2015 TIME PLOTTED => 15:58

DIST	COUNTY	ROUTE	POST MILES TOTAL PROJECT	SHEET No.	TOTAL SHEETS
04	Ala	13	8.3	90	108

REGISTERED CIVIL ENGINEER — DATE 7-23-15

10-19-15
PLANS APPROVAL DATE

REGISTERED PROFESSIONAL ENGINEER — PAO-TSAN WANG — No. 32308 — Exp. 12-31-16 — CIVIL — STATE OF CALIFORNIA

The State of California or its officers or agents shall not be responsible for the accuracy or completeness of electronic copies of this plan sheet.

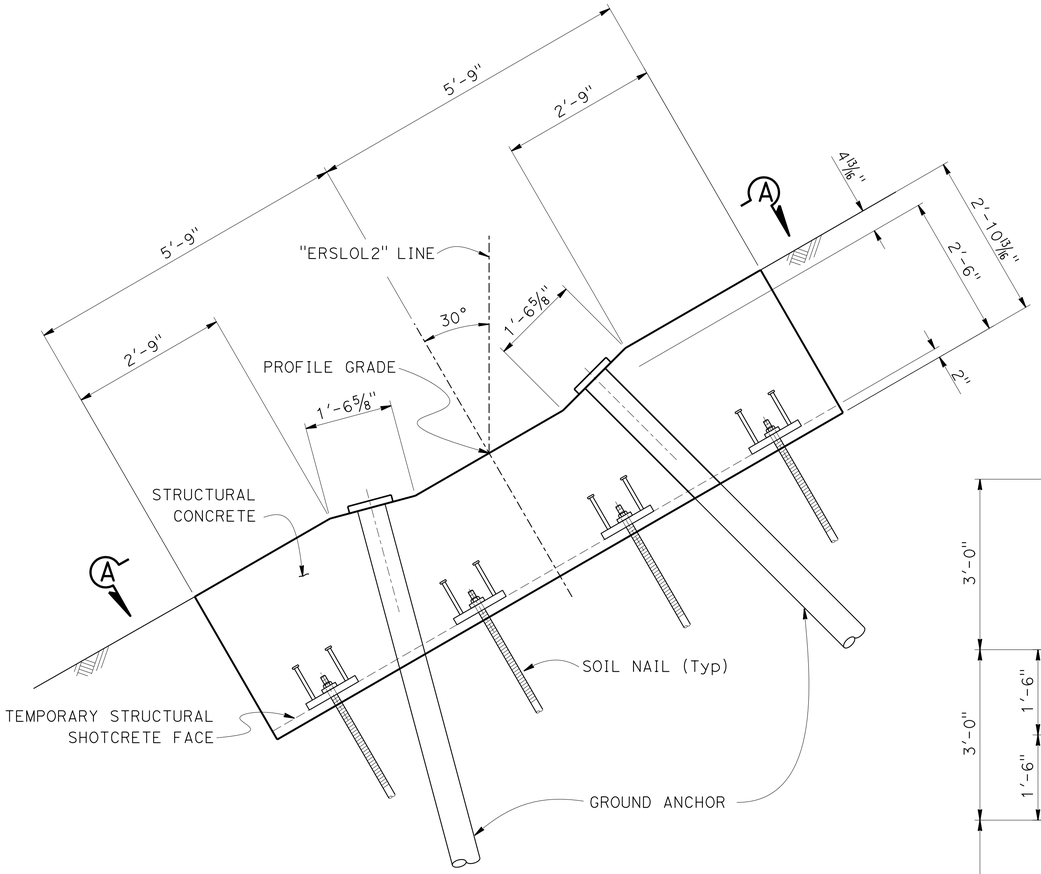

TYPICAL SECTION

3/4" = 1'-0"

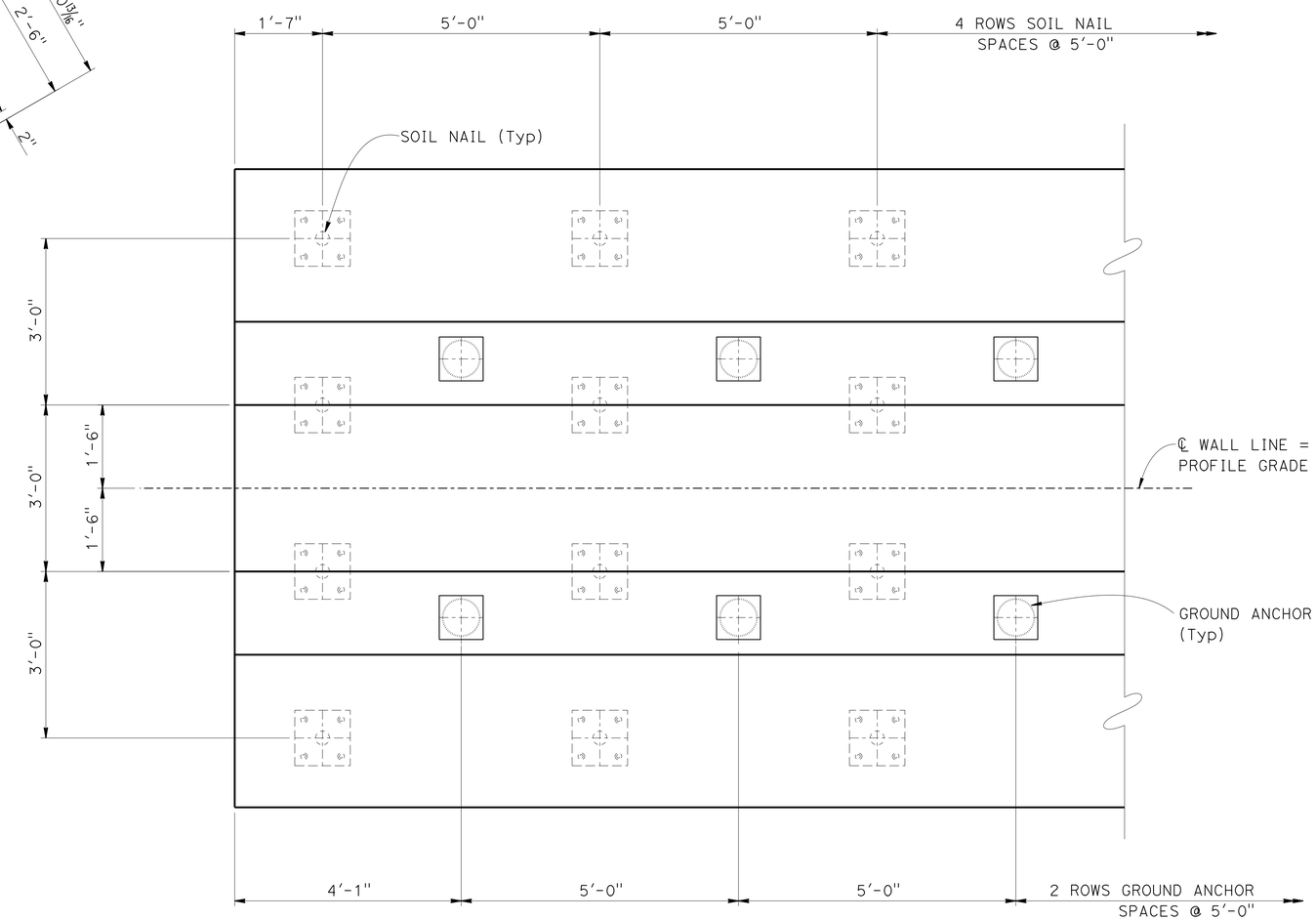

VIEW A-A (PARTIAL)

3/4" = 1'-0"

THORNHILL DRIVE STORM DAMAGE REPAIR

GROUND ANCHORED DIAPHRAGM WALL

WALL DETAILS NO. 1

DESIGN	BY P. Wang	CHECKED S. Kotalawala	
DETAILS	BY Min Yu	CHECKED S. Kotalawala	
QUANTITIES	BY S. Kotalawala	CHECKED Tin Win	

STATE OF CALIFORNIA
DEPARTMENT OF TRANSPORTATION

DIVISION OF ENGINEERING SERVICES
STRUCTURE DESIGN
DESIGN BRANCH 16

BRIDGE NO. 33E0141
POST MILE 8.3

STRUCTURES DESIGN DETAIL SHEET (ENGLISH) (REV. 09-01-10)

ORIGINAL SCALE IN INCHES FOR REDUCED PLANS 0 1 2 3

UNIT: 3617
PROJECT NUMBER & PHASE: 04000208681
CONTRACT NO.: 04-1SS024

DISREGARD PRINTS BEARING EARLIER REVISION DATES

REVISION DATES: 06-25-13 | 07-15-15 | 01-29-14

SHEET 6 OF 13

FILE => 33e0141-g-rwdt01.dgn

USERNAME => s126849 DATE PLOTTED => 19-OCT-2015 TIME PLOTTED => 15:58

DIST	COUNTY	ROUTE	POST MILES TOTAL PROJECT	SHEET No.	TOTAL SHEETS
04	Ala	13	8.3	91	108

REGISTERED CIVIL ENGINEER 7-23-15 DATE

10-19-15
PLANS APPROVAL DATE

REGISTERED PROFESSIONAL ENGINEER PAO-TSAN WANG No. 32308 Exp. 12-31-16 CIVIL STATE OF CALIFORNIA

The State of California or its officers or agents shall not be responsible for the accuracy or completeness of electronic copies of this plan sheet.

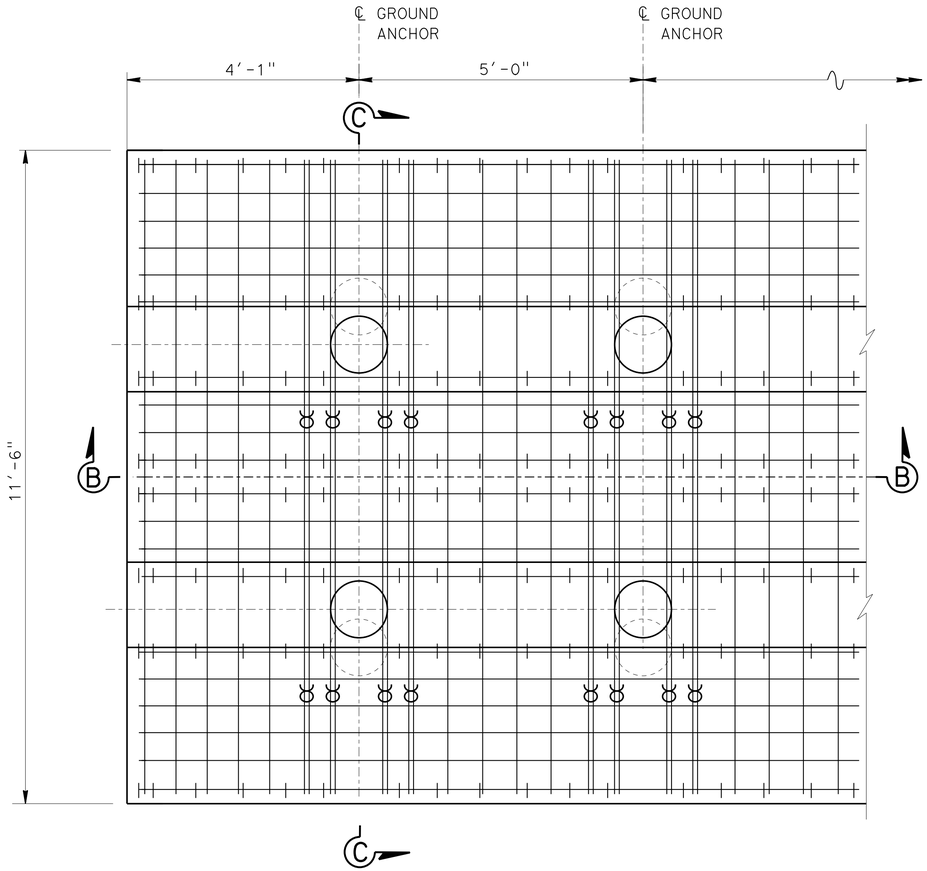

WALL REINFORCEMENT PARTIAL PLAN

¾" = 1'-0"

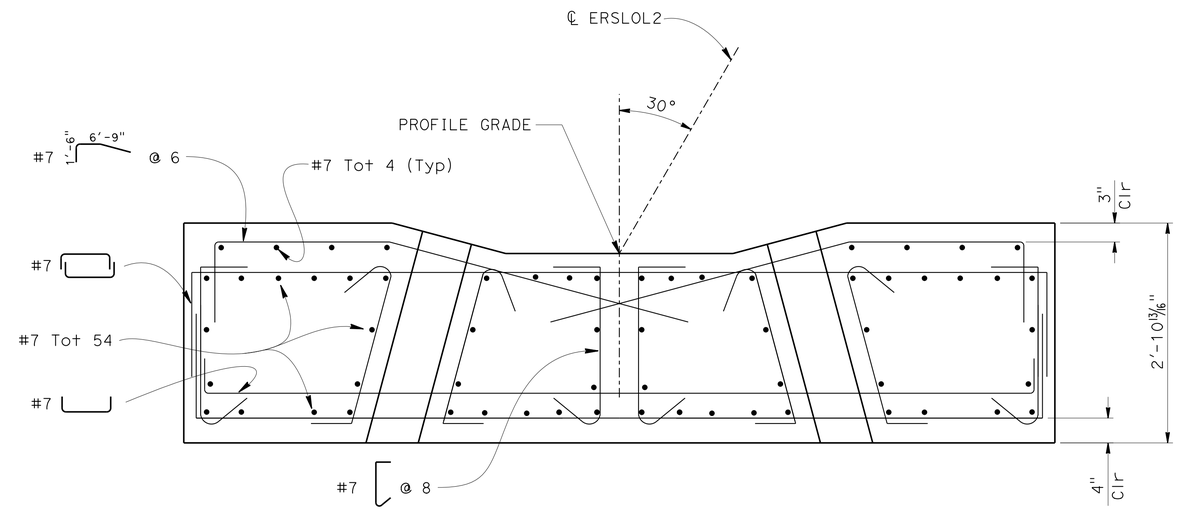

SECTION C-C

1" = 1'-0"

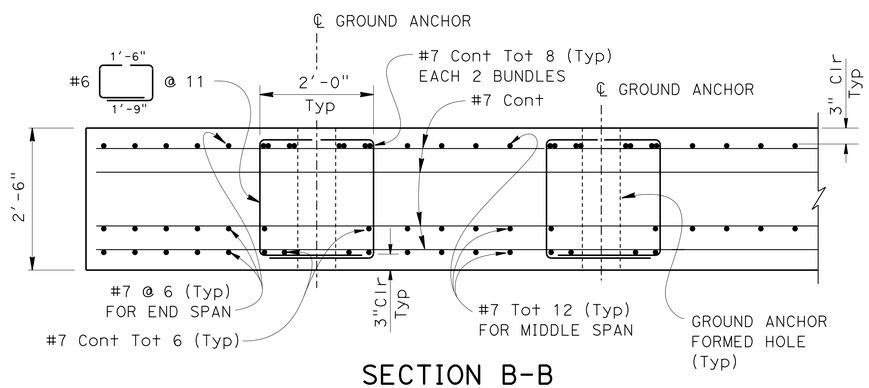

SECTION B-B

¾" = 1'-0"

NOTES:

1. For Soil Nail Bearing Plate, see "WALL DETAILS NO. 4" sheet
2. For Soil Nail details not shown, see "WALL DETAILS NO. 4" sheet
3. Temporary Structural Shotcrete face - no reinforcement

THORNHILL DRIVE STORM DAMAGE REPAIR
GROUND ANCHORED DIAPHRAGM WALL
WALL DETAILS NO. 2

DESIGN	BY P. Wang	CHECKED S. Kotalawala	
DETAILS	BY Min Yu	CHECKED S. Kotalawala	
QUANTITIES	BY S. Kotalawala	CHECKED Tin Win	

STATE OF CALIFORNIA
DEPARTMENT OF TRANSPORTATION

DIVISION OF ENGINEERING SERVICES
STRUCTURE DESIGN
DESIGN BRANCH 16

BRIDGE NO. 33E0141
POST MILE 8.3

STRUCTURES DESIGN DETAIL SHEET (ENGLISH) (REV. 09-01-10)

ORIGINAL SCALE IN INCHES FOR REDUCED PLANS 0 1 2 3

UNIT: 3617
PROJECT NUMBER & PHASE: 04000208681
CONTRACT NO.: 04-1SS024

DISREGARD PRINTS BEARING EARLIER REVISION DATES

REVISION DATES: 06-24-13 07-15-15 01-29-14

SHEET 7 OF 13

FILE => 33e0141-g-rwdt02.dgn

USERNAME => s126849 DATE PLOTTED => 19-OCT-2015 TIME PLOTTED => 15:58

DIST	COUNTY	ROUTE	POST MILES TOTAL PROJECT	SHEET No.	TOTAL SHEETS
04	Ala	13	8.3	92	108

REGISTERED CIVIL ENGINEER 7-23-15 DATE

10-19-15
PLANS APPROVAL DATE

REGISTERED PROFESSIONAL ENGINEER PAO-TSAN WANG No. 32308 Exp. 12-31-16 CIVIL STATE OF CALIFORNIA

The State of California or its officers or agents shall not be responsible for the accuracy or completeness of electronic copies of this plan sheet.

GENERAL NOTES

DESIGN:
AASHTO LRFD Bridge Design Specifications, 4th Edition with California Amendments.

PRESTRESSING STEEL:

Bars - ASTM Designation: A722 Type II (150 ksi)

Strand Tendons-ASTM Designation: A416 (270 Ksi Low Relaxation steel)

FTL = Factored Test Load per anchor (Kips)

fpu = Minimum tensile strength of prestressing steel

As = Minimum cross sectional area of prestressing steel in ground anchor (square inch)

$$As(Min) = \frac{1.0\ FTL}{0.75\ fpu} \quad \text{(Strands)}$$

$$As(Min) = \frac{1.0\ FTL}{0.80\ fpu} \quad \text{(Bars)}$$

NOTES:

(A) Level of initial grouting for drilled hole 6" in diameter or smaller

(B) Level of secondary grouting

(C) Level of initial grouting inside corrugated sheathing

(D) Bonded length shall be determined by the contractor

(E) For inclination, see PROJECT PLANS

(F) Face of Wall Excavation

NOTES:

1. Anchorage enclosure shall only be used when anchor head assembly is not enclosed in concrete.
2. Anchorage enclosure shall have provisions to allow injecting grout at low end and venting at high end. Galvanize after fabrication.
3. Silicone sealant to cover full width of flange.
4. Steel tube (Min thickness = 1/4") welded to bearing plate. Galvanize assembly after fabrication
5. Steel tube welded to bearing plate. Inside diameter of steel tube (Min thickness = 1/4") to be 1" greater than outside diameter of smooth sheathing.
6. Galvanize assembly after fabrication.
7. For other wall details, see PROJECT PLANS.

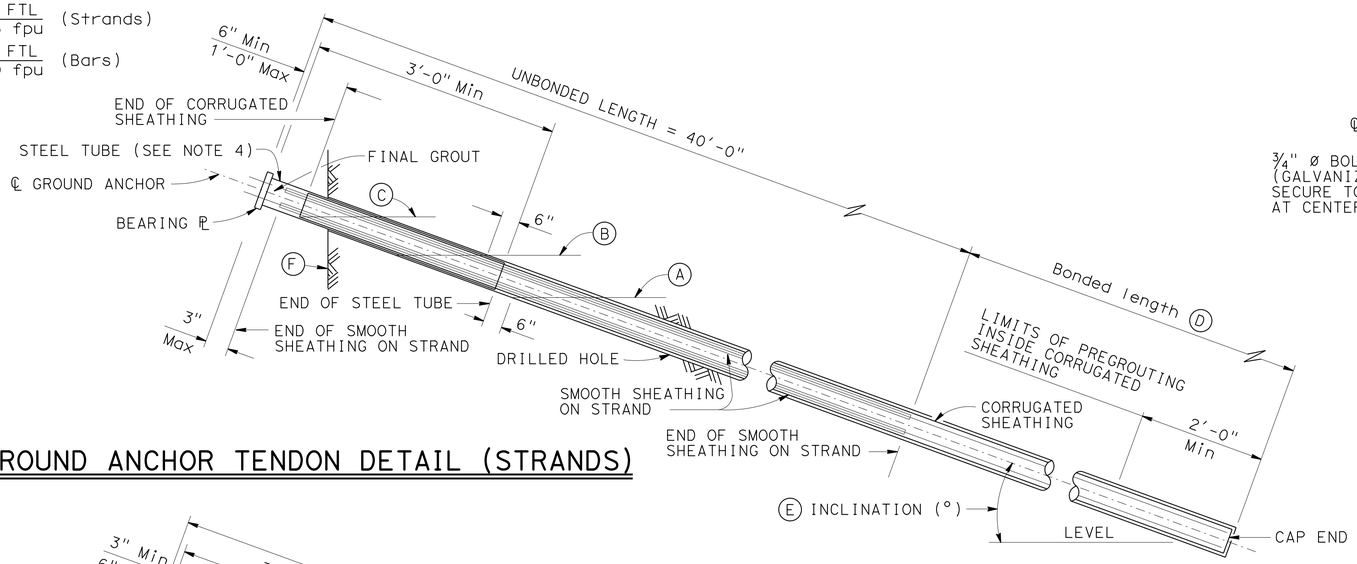

GROUND ANCHOR TENDON DETAIL (STRANDS)

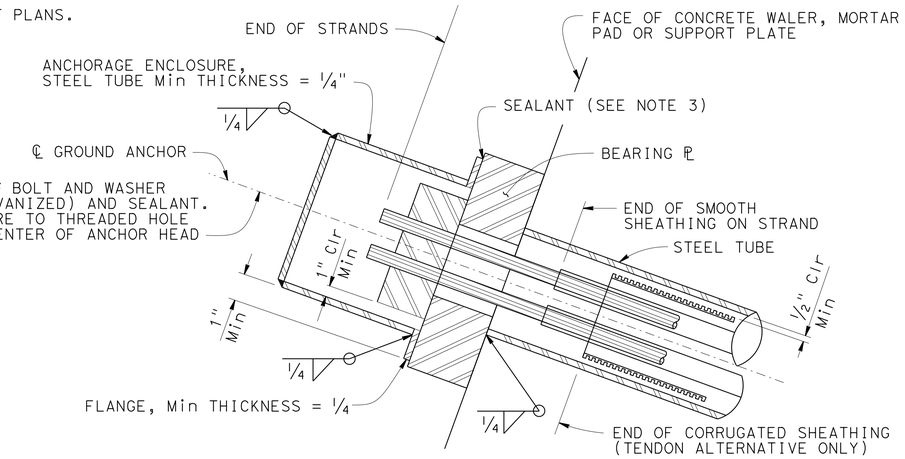

ALTERNATIVE X

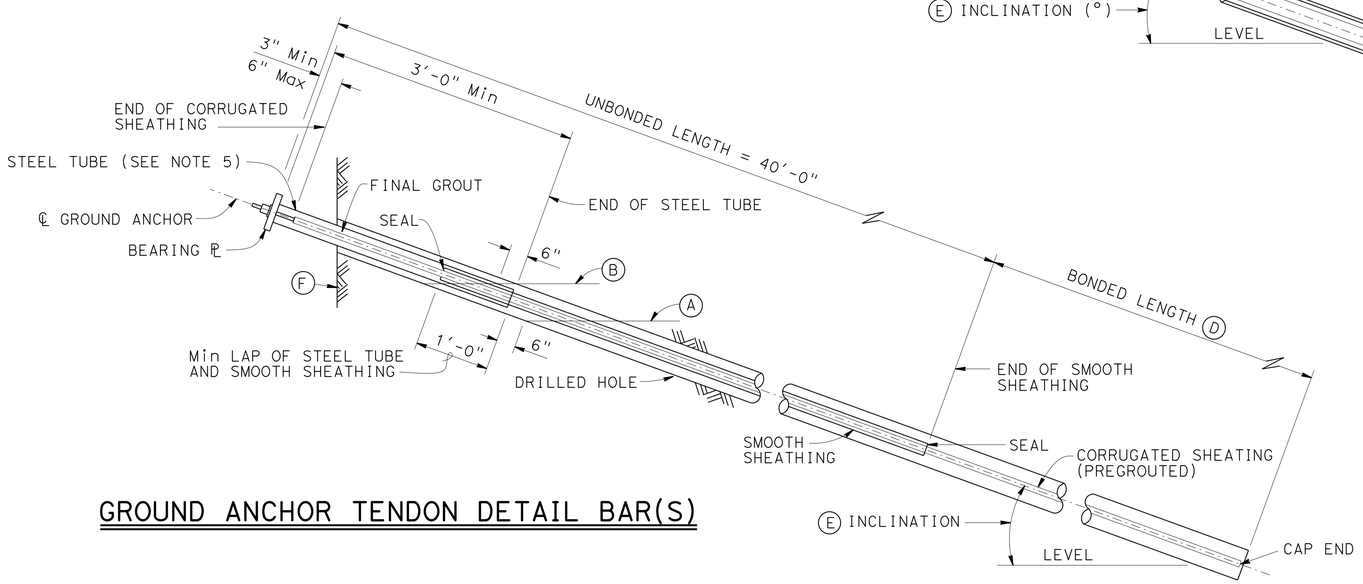

GROUND ANCHOR TENDON DETAIL BAR(S)

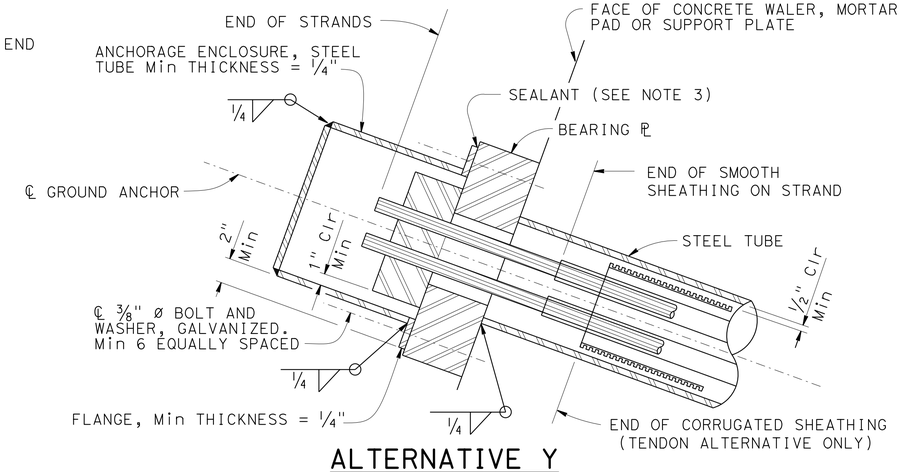

ALTERNATIVE Y

ANCHORAGE ENCLOSURE DETAILS

NO SCALE

DESIGN	BY P. Wang	CHECKED S. Kotalawala	
DETAILS	BY Min Yu	CHECKED S. Kotalawala	
QUANTITIES	BY S. Kotalawala	CHECKED Tin Win	

STATE OF CALIFORNIA
DEPARTMENT OF TRANSPORTATION

DIVISION OF ENGINEERING SERVICES
STRUCTURE DESIGN
DESIGN BRANCH 16

BRIDGE NO. 33E0141
POST MILE 8.3

THORNHILL DRIVE STORM DAMAGE REPAIR
GROUND ANCHORED DIAPHRAGM WALL
WALL DETAILS NO. 3

STRUCTURES DESIGN DETAIL SHEET (ENGLISH) (REV. 09-01-10)

ORIGINAL SCALE IN INCHES FOR REDUCED PLANS 0 1 2 3

UNIT: 3617
PROJECT NUMBER & PHASE: 04000208681
CONTRACT NO.: 04-1SS024

DISREGARD PRINTS BEARING EARLIER REVISION DATES

REVISION DATES: 04-23-13 06-24-13 01-10-14 07-15-15

SHEET 8 OF 13

FILE => 33e0141-g-rwdt03.dgn

USERNAME => s126849 DATE PLOTTED => 19-OCT-2015 TIME PLOTTED => 15:58

DIST	COUNTY	ROUTE	POST MILES TOTAL PROJECT	SHEET No.	TOTAL SHEETS
04	Ala	13	8.3	93	108

REGISTERED CIVIL ENGINEER 7-23-15 DATE

10-19-15
PLANS APPROVAL DATE

REGISTERED PROFESSIONAL ENGINEER PAO-TSAN WANG No. 32308 Exp. 12-31-16 CIVIL STATE OF CALIFORNIA

The State of California or its officers or agents shall not be responsible for the accuracy or completeness of electronic copies of this plan sheet.

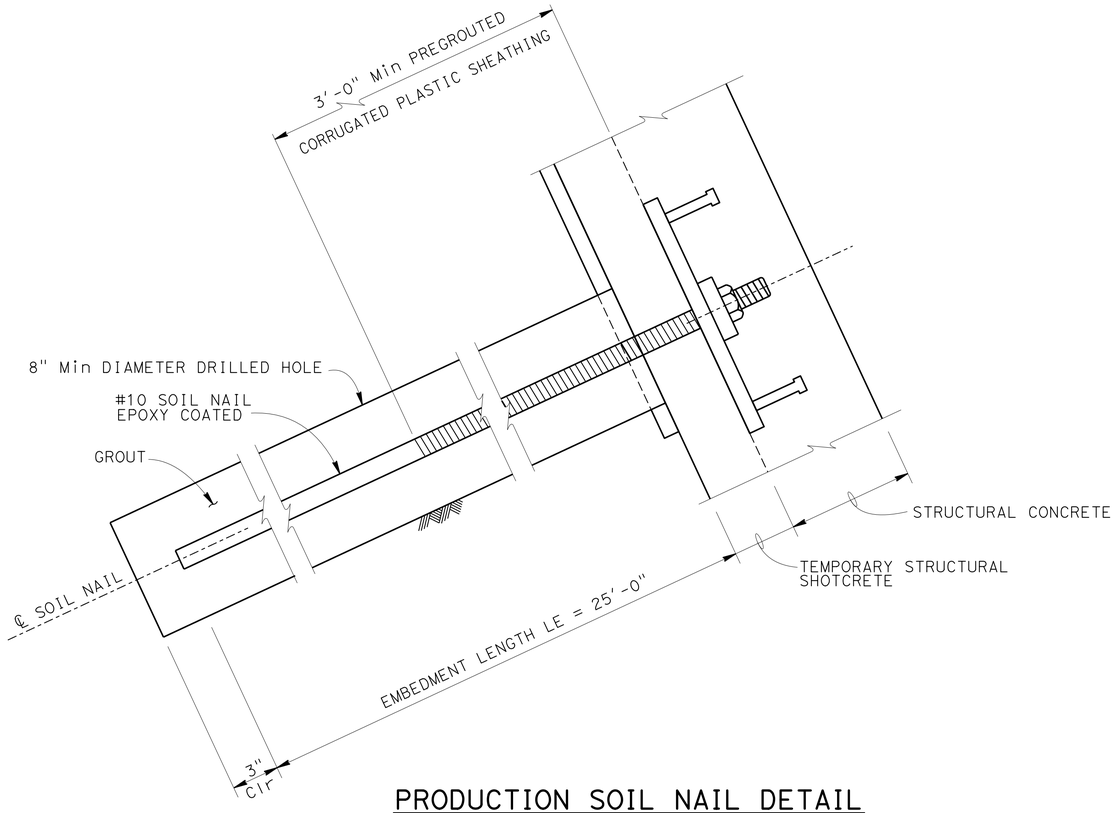

PRODUCTION SOIL NAIL DETAIL

NO SCALE

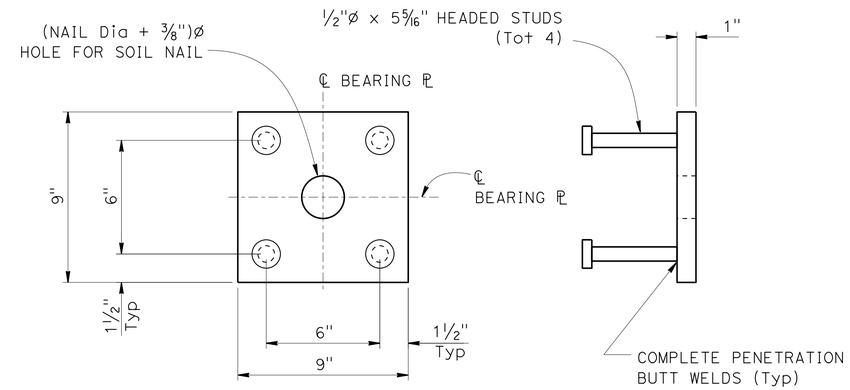

BEARING PLATE DETAIL

3" = 1'-0"

DESIGN	BY P. Wang	CHECKED S. Kotalawala	
DETAILS	BY Min Yu	CHECKED S. Kotalawala	
QUANTITIES	BY S. Kotalawala	CHECKED Tin Win	

STATE OF CALIFORNIA
DEPARTMENT OF TRANSPORTATION

DIVISION OF ENGINEERING SERVICES
STRUCTURE DESIGN
DESIGN BRANCH 16

BRIDGE NO. 33E0141
POST MILE 8.3

THORNHILL DRIVE STORM DAMAGE REPAIR
GROUND ANCHORED DIAPHRAGM WALL
WALL DETAILS NO. 4

STRUCTURES DESIGN DETAIL SHEET (ENGLISH) (REV. 09-01-10)

ORIGINAL SCALE IN INCHES FOR REDUCED PLANS 0 1 2 3

UNIT: 3617
PROJECT NUMBER & PHASE: 04000208681
CONTRACT NO.: 04-1SS024

DISREGARD PRINTS BEARING EARLIER REVISION DATES

REVISION DATES: 04-30-13 06-24-13 01-29-14 07-15-15

SHEET 9 OF 13

FILE => 33e0141-g-rwdt04.dgn

USERNAME => s126849 DATE PLOTTED => 19-OCT-2015 TIME PLOTTED => 15:58

DIST.	COUNTY	ROUTE	POST MILES TOTAL PROJECT	SHEET NO.	TOTAL SHEETS
04	Ala	13	8.3	94	108

REGISTERED ENGINEER - CIVIL 01-23-13

10-19-15
PLANS APPROVAL DATE

REGISTERED PROFESSIONAL ENGINEER EDUARDO ORTEGA No. 41012 Exp. 03-31-13 CIVIL STATE OF CALIFORNIA

The State of California or its officers or agents shall not be responsible for the accuracy or completeness of electronic copies of this plan sheet.

Caltrans now has a web site! To get to the web site, go to: http://www.dot.ca.gov

BENCH MARK

PRHV89 CTRL MONUMENT HORIZ. & VERT.
Offset 23.42 Lt. Sta. 68+20.79
N. 2,130,463.221 E. 6,065,818.707

NOTE: PP=unconfined compressive strength (tsf) as measured by pocket penetrometer.

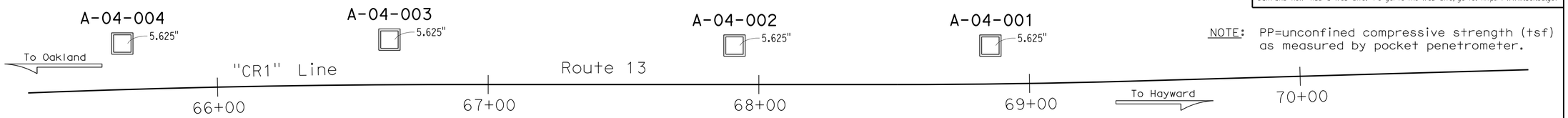

PLAN

1"=20'

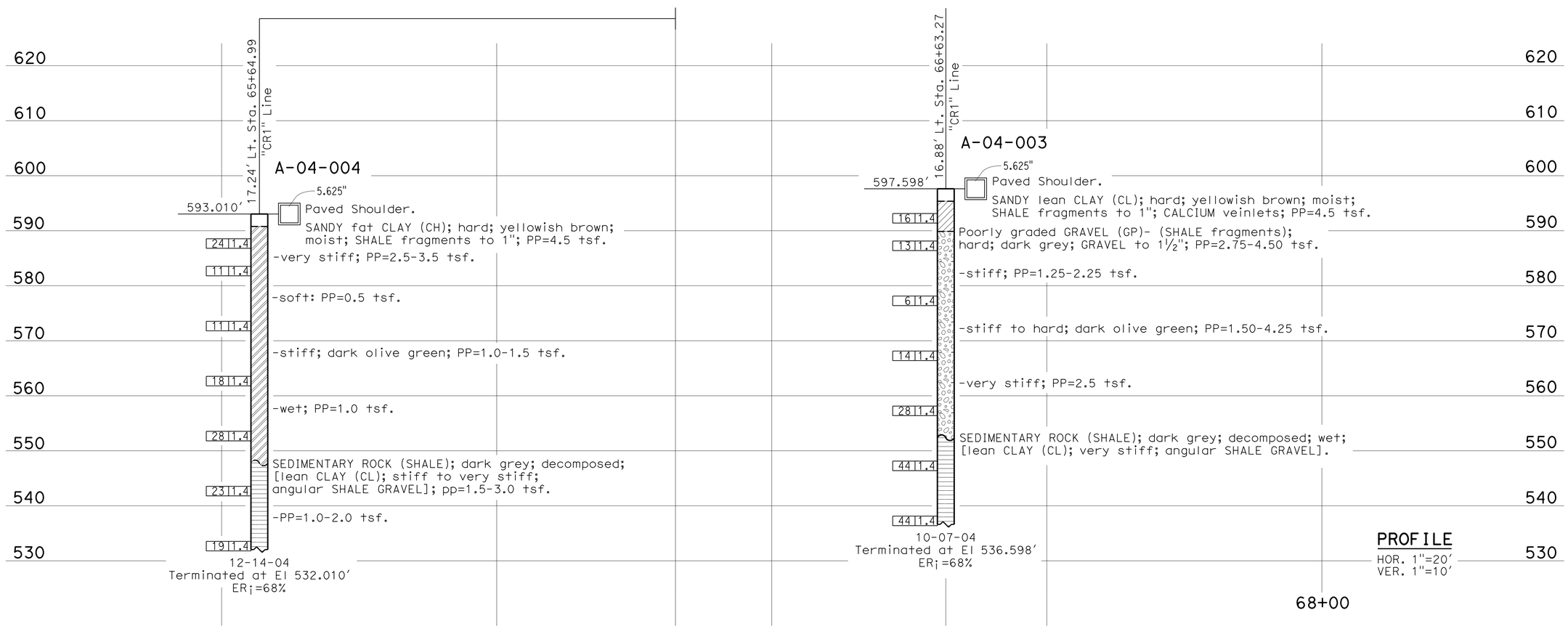

PROFILE

HOR. 1"=20'
VER. 1"=10'

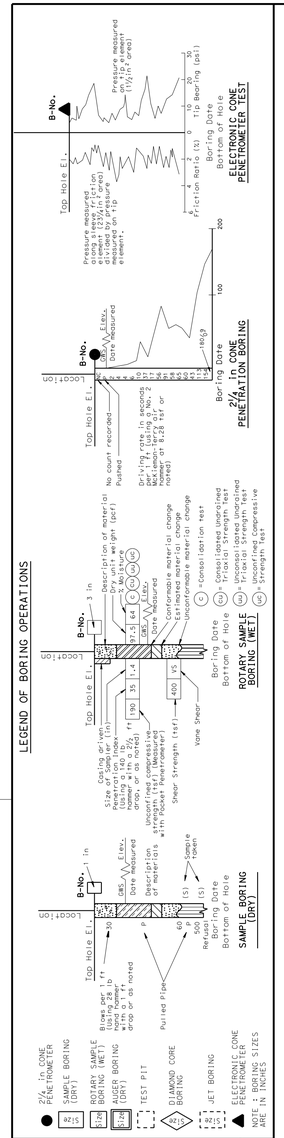

CONSISTENCY CLASSIFICATION FOR SOILS
According to the Standard Penetration Test

SPT N-Value (Blows/ 1 ft)	Granular	SPT N-Value (Blows/ 1 ft)	Cohesive
0-4	Very Loose	<2	Very Soft
5-10	Loose	2-4	Soft
11-30	Medium Dense	5-8	Firm
31-50	Dense	9-15	Stiff
>50	Very Dense	16-30	Very Stiff
		>31	Hard

NOTE: Classification of earth material as shown on this sheet is based upon field inspection and is not to be construed to imply mechanical analysis.

DIVISION OF ENGINEERING SERVICES	
DRAWN BY	M. REYNOLDS 08/12
CHECKED BY	R. Nashed

FIELD INVESTIGATION BY: E. Ortega

STATE OF CALIFORNIA DEPARTMENT OF TRANSPORTATION

GEOTECHNICAL SERVICES OFFICE OF GEOTECHNICAL DESIGN - WEST

UNIT: 3660
EA 04-1SS024

BRIDGE NO. 33E0141
POST MILE 8.3

THORNHILL DRIVE STORM DAMAGE REPAIR

LOG OF TEST BORINGS (1 OF 4)

(Orig 01/02)
(Rev 09/12)

ORIGINAL SCALE IN MILLIMETERS FOR REDUCED PLANS 0 10 20 30 40 50 60 70 80 90 100

DISREGARD PRINTS BEARING EARLIER REVISION DATES 01-30-13

REVISION DATES (PRELIMINARY STAGE ONLY) | SHEET 10 | OF 13

USERNAME => s126849
DGN FILE => 33e0141-z-ltb01.dgn

DATE PLOTTED => 19-OCT-2015
TIME PLOTTED => 15:59

DIST.	COUNTY	ROUTE	POST MILES TOTAL PROJECT	SHEET NO.	TOTAL SHEETS
04	Ala	13	8.3	95	108

REGISTERED ENGINEER - CIVIL 01-23-13

10-19-15
PLANS APPROVAL DATE

REGISTERED PROFESSIONAL ENGINEER EDUARDO ORTEGA No. 41012 Exp. 03-31-13 CIVIL STATE OF CALIFORNIA

The State of California or its officers or agents shall not be responsible for the accuracy or completeness of electronic copies of this plan sheet.

Caltrans now has a web site! To get to the web site, go to: http://www.dot.ca.gov

(FOR BORING LOCATION SEE PLAN, LOTB SHEET 1 OF 2)

NOTE: PP=unconfined compressive strength (tsf) as measured by pocket penetrometer.

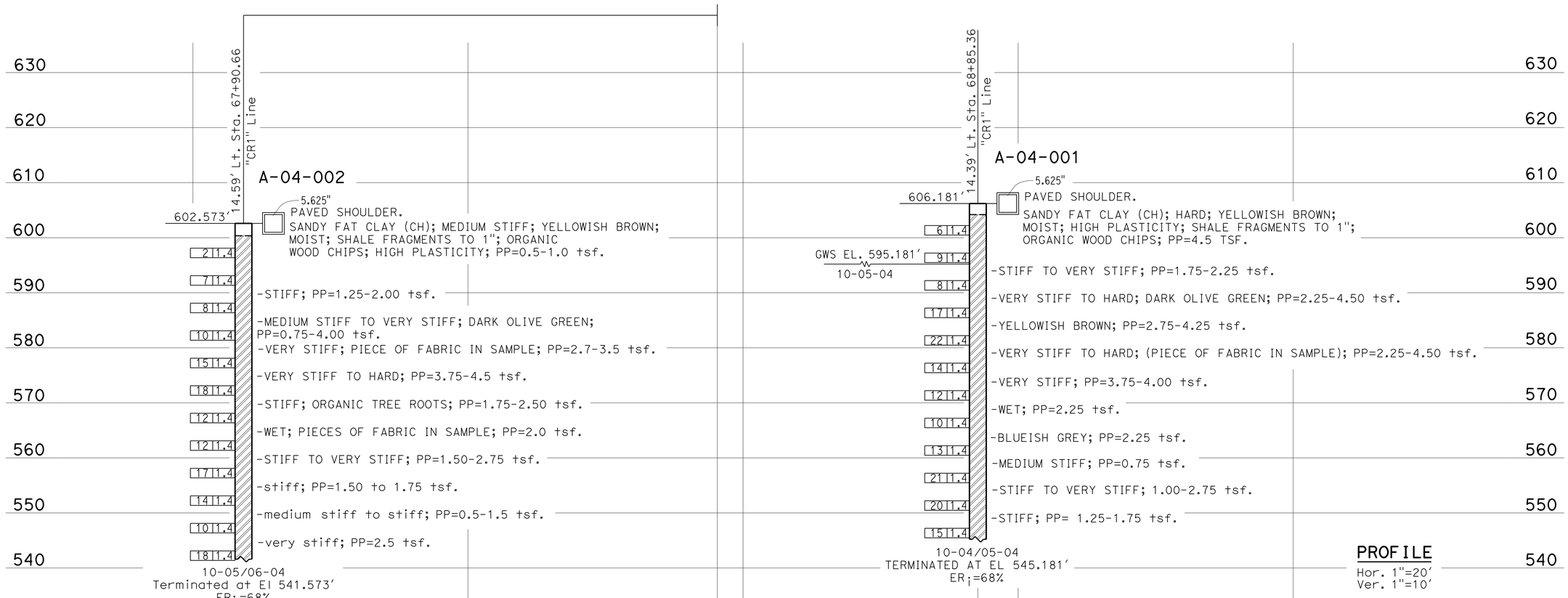

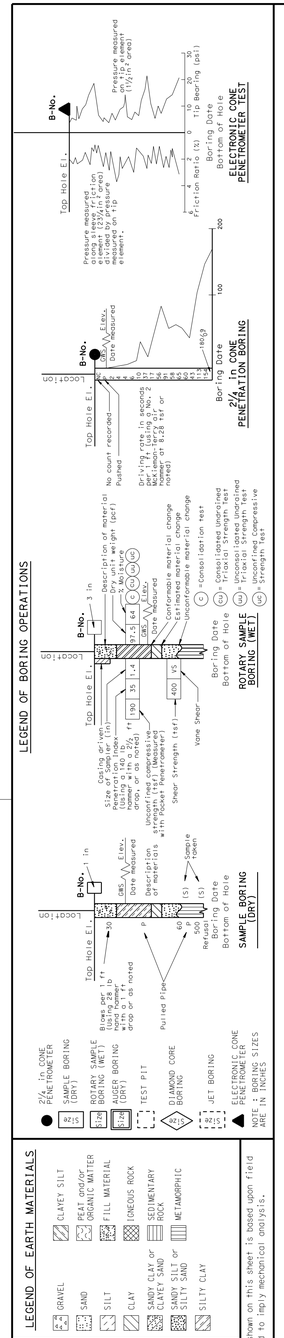

DIVISION OF ENGINEERING SERVICES	
DRAWN BY	M. REYNOLDS 08/12
CHECKED BY	R. Nashed

FIELD INVESTIGATION BY: E. Ortega

STATE OF CALIFORNIA DEPARTMENT OF TRANSPORTATION

GEOTECHNICAL SERVICES OFFICE OF GEOTECHNICAL DESIGN - WEST

BRIDGE NO. 33E0141
POST MILE 8.3

THORNHILL DRIVE STORM DAMAGE REPAIR

LOG OF TEST BORINGS (2 OF 4)

(Orig 01/02)
(Rev 09/12)

ORIGINAL SCALE IN MILLIMETERS FOR REDUCED PLANS 0 10 20 30 40 50 60 70 80 90 100

UNIT: 3660
EA 04-1SS024

DISREGARD PRINTS BEARING EARLIER REVISION DATES 01-30-13 01-10-14

REVISION DATES (PRELIMINARY STAGE ONLY)

SHEET 11 OF 13

USERNAME => s126849
DGN FILE => 33e0141-z-ltb02.dgn

DATE PLOTTED => 19-OCT-2015
TIME PLOTTED => 15:59

DIST	COUNTY	ROUTE	POST MILES TOTAL PROJECT	SHEET No	TOTAL SHEETS
04	Ala	13	8.3	96	108

REGISTERED CIVIL ENGINEER 01-23-13

10-19-15
PLANS APPROVAL DATE

REGISTERED PROFESSIONAL ENGINEER
EDUARDO ORTEGA
No. 41012
Exp. 03-31-13
CIVIL
STATE OF CALIFORNIA

The State of California or its officers or agents shall not be responsible for the accuracy or completeness of electronic copies of this plan sheet.

This LOTB sheet was prepared in accordance with the Caltrans Soil & Rock Logging, Classification, & Presentation Manual (2010 Edition).

BENCH MARK

PRHV89 CTRL MONUMENT HORIZ. & VERT.
Offset 23.42 Lt. Sta. 68+20.79
N. 2,130,463.221 E. 6,065,818.707

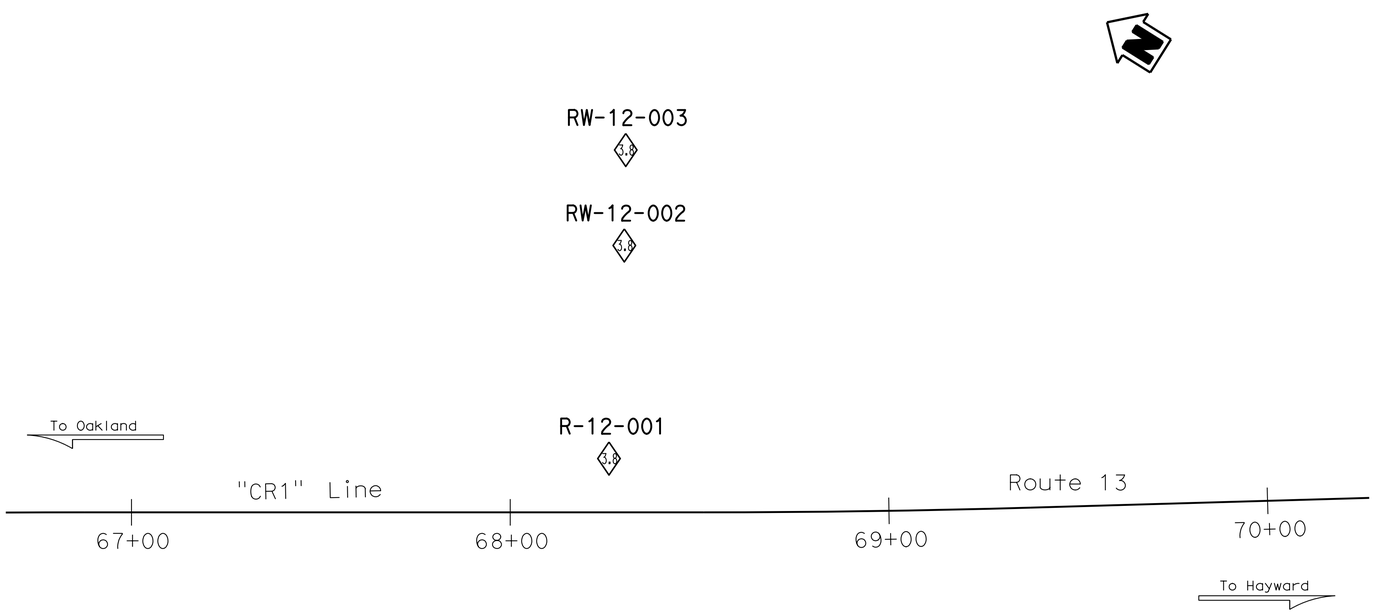

PLAN
1"=20'

NOTE: PP=unconfined compressive strength (tsf) as measured by pocket penetrometer.

PROFILE
HOR. 1"=20'
VER. 1"= 5'

ENGINEERING SERVICES		GEOTECHNICAL SERVICES	STATE OF CALIFORNIA DEPARTMENT OF TRANSPORTATION	DIVISION OF ENGINEERING SERVICES OFFICE OF GEOTECHNICAL DESIGN BRANCH	BRIDGE NO. 33E0141 POST MILES 8.3	THORNHILL DRIVE STORM DAMAGE REPAIR
FUNCTIONAL SUPERVISOR	DRAWN BY: M. Reynolds	FIELD INVESTIGATION BY:				LOG OF TEST BORINGS (3 OF 4)
NAME: M. Momenzadeh	CHECKED BY: R. Nashed	E. Ortega				

OGS CIVIL LOG OF TEST BORINGS SHEET

ORIGINAL SCALE IN INCHES FOR REDUCED PLANS 0 1 2 3

UNIT: 3660
PROJECT NUMBER & PHASE: 04000208681 CONTRACT NO.: 04-1SS024

DISREGARD PRINTS BEARING EARLIER REVISION DATES

REVISION DATES 01-30-13 01-10-14

SHEET 12 OF 13

FILE => 33e0141-z-1tb03.dgn

USERNAME => s126849 DATE PLOTTED => 19-OCT-2015 TIME PLOTTED => 15:53

DIST	COUNTY	ROUTE	POST MILES TOTAL PROJECT	SHEET No	TOTAL SHEETS
04	Ala	13	8.3	97	108

REGISTERED CIVIL ENGINEER 01-23-13

PLANS APPROVAL DATE 10-19-15

REGISTERED PROFESSIONAL ENGINEER EDUARDO ORTEGA No. 41012 Exp. 03-31-13 CIVIL STATE OF CALIFORNIA

The State of California or its officers or agents shall not be responsible for the accuracy or completeness of electronic copies of this plan sheet.

This LOTB sheet was prepared in accordance with the Caltrans Soil & Rock Logging, Classification, & Presentation Manual (2010 Edition).

NOTE: 1. PP=unconfined compressive strength (tsf) as measured by pocket penetrometer.

2. *NR: Not Recorded.

(For Boring Location See Plan, LOTB Sheet 3 of 4)

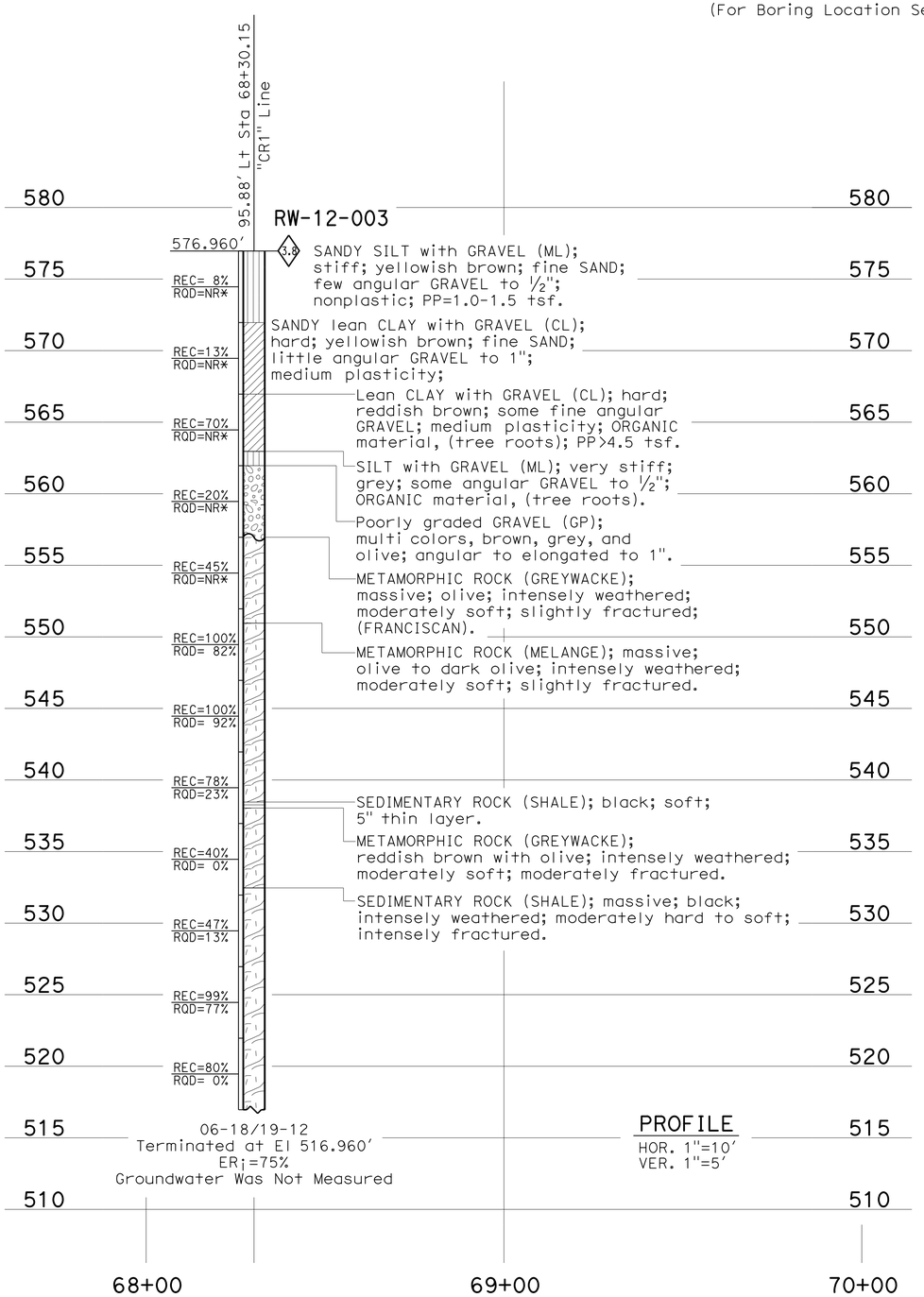

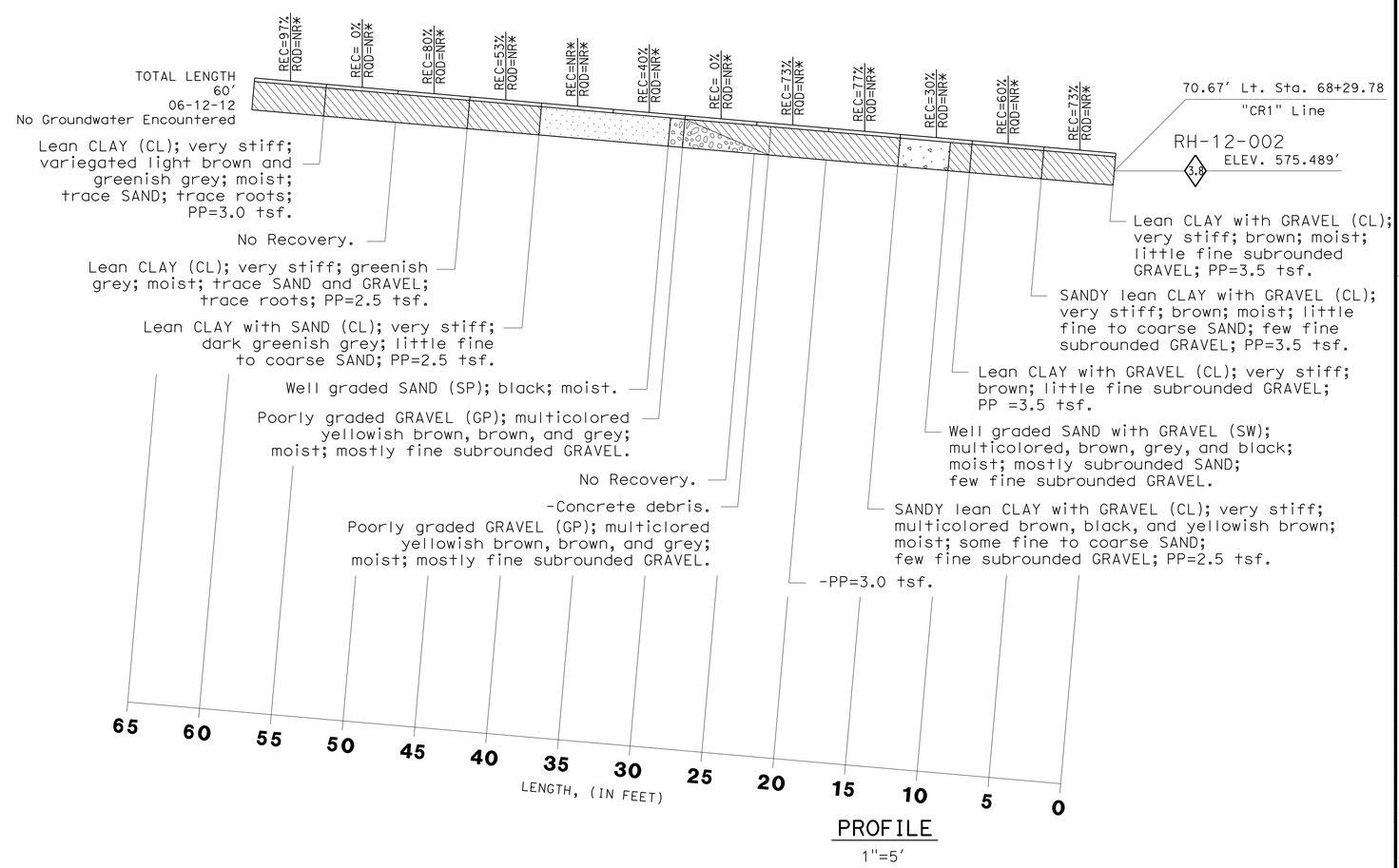

ENGINEERING SERVICES	GEOTECHNICAL SERVICES	STATE OF CALIFORNIA DEPARTMENT OF TRANSPORTATION	DIVISION OF ENGINEERING SERVICES OFFICE OF GEOTECHNICAL DESIGN BRANCH	BRIDGE NO. 33E0141 POST MILES 8.3	THORNHILL DRIVE STORM DAMAGE REPAIR LOG OF TEST BORINGS (4 OF 4)
FUNCTIONAL SUPERVISOR NAME: M. Momenzadeh	DRAWN BY: M. Reynolds CHECKED BY: R. Nashed	FIELD INVESTIGATION BY: R. Nashed			

OGS CIVIL LOG OF TEST BORINGS SHEET

ORIGINAL SCALE IN INCHES FOR REDUCED PLANS 0 1 2 3

UNIT: 3660 PROJECT NUMBER & PHASE: 04000208681 CONTRACT NO.: 04-1SS024

DISREGARD PRINTS BEARING EARLIER REVISION DATES 01-30-13

REVISION DATES | SHEET 13 OF 13

FILE => 33e0141-z-ltb04.dgn

USERNAME => s126849 DATE PLOTTED => 19-OCT-2015 TIME PLOTTED => 15:59

DIST	COUNTY	ROUTE	POST MILES TOTAL PROJECT	SHEET No.	TOTAL SHEETS
04	Ala	13	8.3	98	108

REGISTERED CIVIL ENGINEER 7-23-15 DATE

10-19-15
PLANS APPROVAL DATE

REGISTERED PROFESSIONAL ENGINEER PAO-TSAN WANG No. 32308 Exp. 12-31-16 CIVIL STATE OF CALIFORNIA

The State of California or its officers or agents shall not be responsible for the accuracy or completeness of scanned copies of this plan sheet.

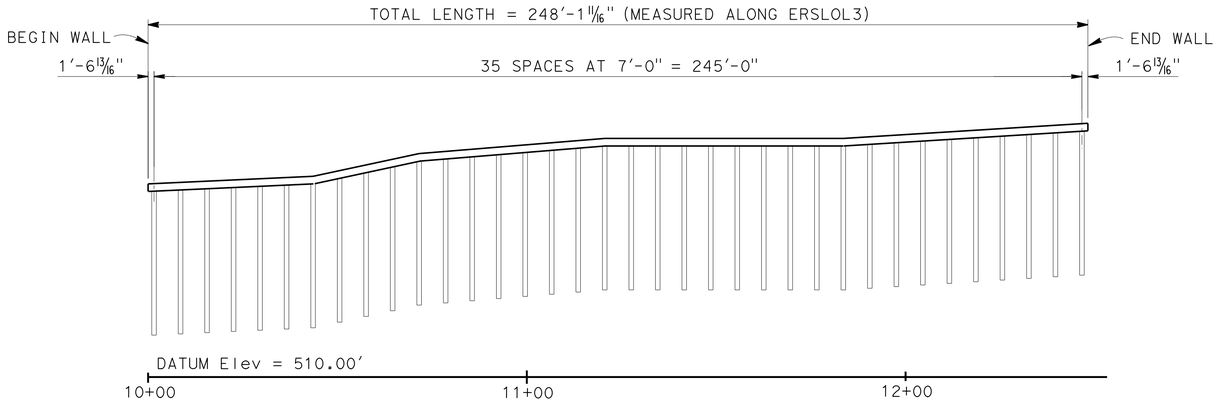

DEVELOPED MIRRORED ELEVATION

1" = 20'

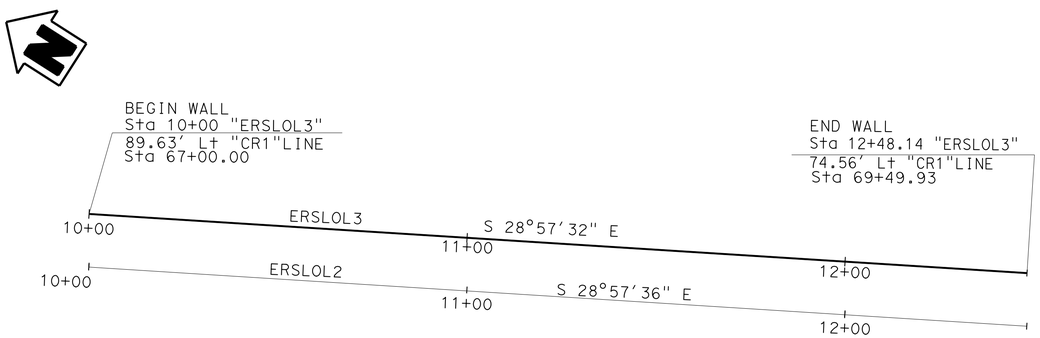

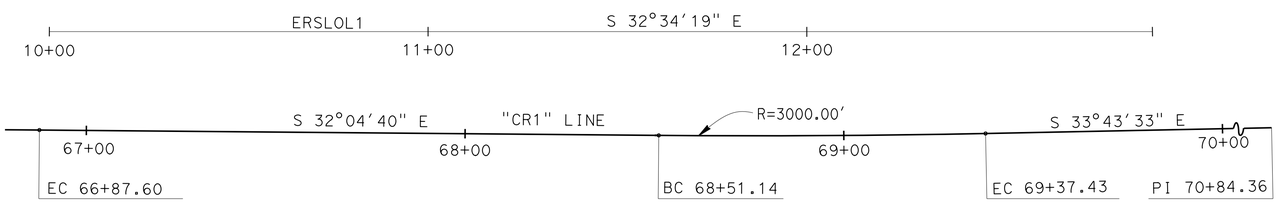

PLAN

1" = 20'

"CR1" LINE - CURVE DATA

R = 3,000'
Δ = 1°38'53"
T = 43.15'
L = 86.29'

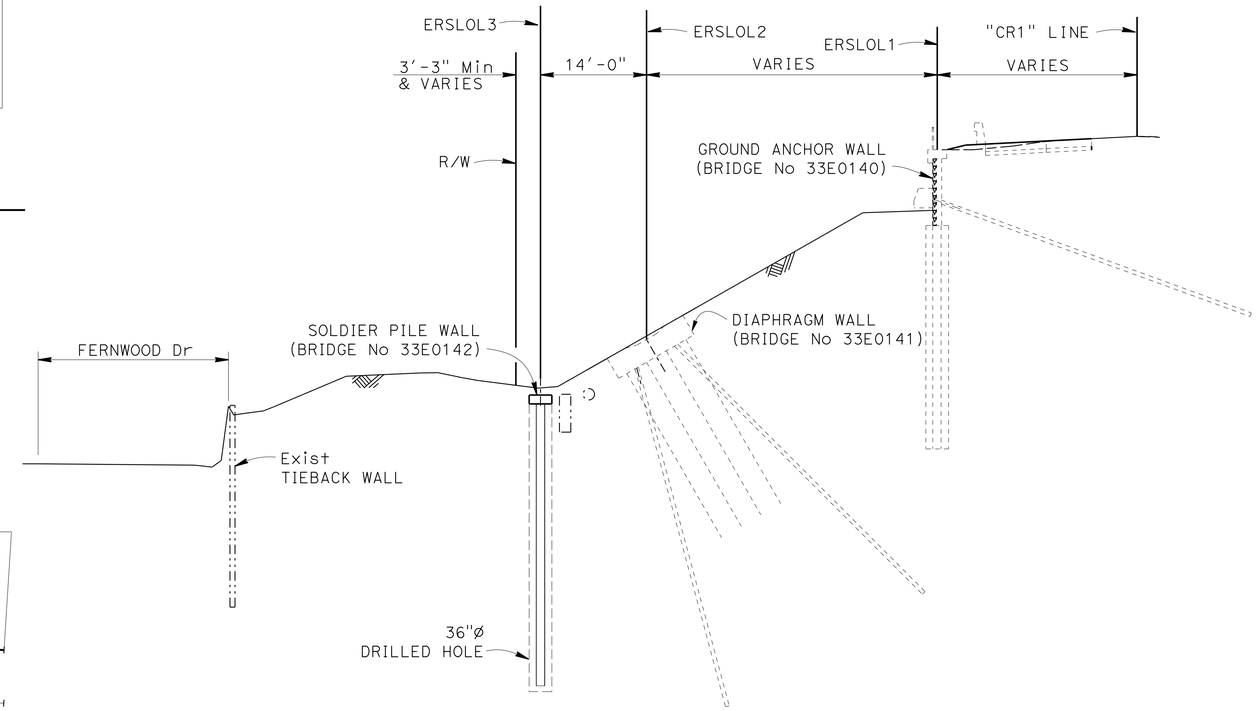

TYPICAL SECTION

1" = 10'

QUANTITIES

STRUCTURE EXCAVATION (SOLDIER PILE WALL)	100	CY
STRUCTURE BACKFILL (SOLDIER PILE WALL)	69	CY
CONCRETE BACKFILL (SOLDIER PILE WALL)	418	CY
STEEL SOLDIER PILE (W14X90)	1,620	LF
36" DRILLED HOLE	1,620	LF
STRUCTURAL CONCRETE, CAP	32	CY
BAR REINFORCING STEEL (RETAINING WALL)	5,090	LB
CLEAN AND PAINT STEEL SOLDIER PILING	LUMP	SUM

Muthanna S. Omran
7-23-15 MUTHANNA OMRAN
DESIGN ENGINEER

	BY	CHECKED
DESIGN	P. Wang	Tin Win
DETAILS	Min Yu	Tin Win
QUANTITIES	S. Kotalawala	Tin Win

LOAD & RESISTANCE FACTOR DESIGN — LIVE LOADING: HL93 W/"LOW-BOY"; PERMIT DESIGN VEHICLE

	BY	CHECKED
LAYOUT	P. Wang	S. Kotalawala
SPECIFICATIONS	Tina Chen	PLANS AND SPECS COMPARED Tina Chen

ORIGINAL SCALE IN INCHES FOR REDUCED PLANS 0 1 2 3

STATE OF CALIFORNIA
DEPARTMENT OF TRANSPORTATION

DIVISION OF ENGINEERING SERVICES
STRUCTURE DESIGN
DESIGN BRANCH 16

BRIDGE NO. 33E0142
POST MILE 8.3

THORNHILL DRIVE STORM DAMAGE REPAIR
SOLDIER PILE WALL
GENERAL PLAN

UNIT: 3617
PROJECT NUMBER & PHASE: 04000208681
CONTRACT NO.: 04-1SS024

DISREGARD PRINTS BEARING EARLIER REVISION DATES

REVISION DATES: 01-21-14 | 03-06-14 | 07-15-15

SHEET 1 OF 11

USERNAME => s126849 DATE PLOTTED => 19-OCT-2015 TIME PLOTTED =>

STRUCTURES DESIGN GENERAL PLAN SHEET (ENGLISH) (REV.09-01-10)

FILE => 33e0142-a-gp01.dgn

DIST	COUNTY	ROUTE	POST MILES TOTAL PROJECT	SHEET No.	TOTAL SHEETS
04	Ala	13	8.3	99	108

REGISTERED CIVIL ENGINEER 7-23-15 DATE

10-19-15
PLANS APPROVAL DATE

REGISTERED PROFESSIONAL ENGINEER PAO-TSAN WANG No. 32308 Exp. 12-31-16 CIVIL STATE OF CALIFORNIA

The State of California or its officers or agents shall not be responsible for the accuracy or completeness of electronic copies of this plan sheet.

INDEX TO PLANS

SHEET NO.	TITLES
1	GENERAL PLAN
2	INDEX TO PLANS
3	STRUCTURE PLAN NO. 1
4	STRUCTURE PLAN NO. 2
5	FOUNDATION PLAN
6	WALL DETAILS NO. 1
7	WALL DETAILS NO. 2
8	LOG OF TEST BORINGS NO. 1
9	LOG OF TEST BORINGS NO. 2
10	LOG OF TEST BORINGS NO. 3
11	LOG OF TEST BORINGS NO. 4

STANDARD PLANS MAY 2010

	A10A	ABBREVIATIONS
RSP	A10B	ABBREVIATIONS
	A10C	LINES AND SYMBOLS
	A10D	LINES AND SYMBOLS
	A10E	LINES AND SYMBOLS

STANDARD PLAN SHEET NO.

DETAIL NO.

GENERAL NOTES

DESIGN: AASHTO LRFD bridge design specifications, 4th edition with california amendments.

SOIL PARAMETERS: (FOR DETERMINATION OF DESIGN LATERAL EARTH PRESSURE)

RETAINED SOIL:

Soil Weight, γ = 135 pcf
Soil Friction Angle, $\emptyset$ = 10°
Active Pressure Coefficient, Ka = 0.7

FOUNDATION SOIL:

Soil Weight, γ = 135 pcf
Soil Friction Angle, $\emptyset$ = 35°
Ultimate Bond Stress Between Soil and Grout = 12 psi

SEISMIC LOADING:

Use a uniform earth pressure equal to 17 h (psf) applied 0.5h above the base.
Seismic Parameter, Kh = 0.25

REINFORCED CONCRETE:

f'c = 4 ksi
fy = 60 ksi

STEEL SOLDIER PILE:

ASTM DESIGNATION:
STEEL PILES: fy=50 ksi
STEEL PLATE: fy=36 ksi

STRUCTURAL TIMBER:

Treated Douglas Fir, Grade No. 1 or better
Timber to be full sawn

FOR SOLDIER PILE WALL

1. The drilling and concrete placement performed for soldier pile construction in each wall shall be staggered. No open drilled holes shall be adjacent
2. Welding shall use E70xx Electrodes
3. Piles may not be constructed more than 2 in from the wall LOL
4. During construction of piles, pot holing shall be performed to eliminate the impact to the 18" rcp
5. During construction of Soldier Pile Wall, pot holing shall be performed to eliminate the impact to 24" and 18" rcp

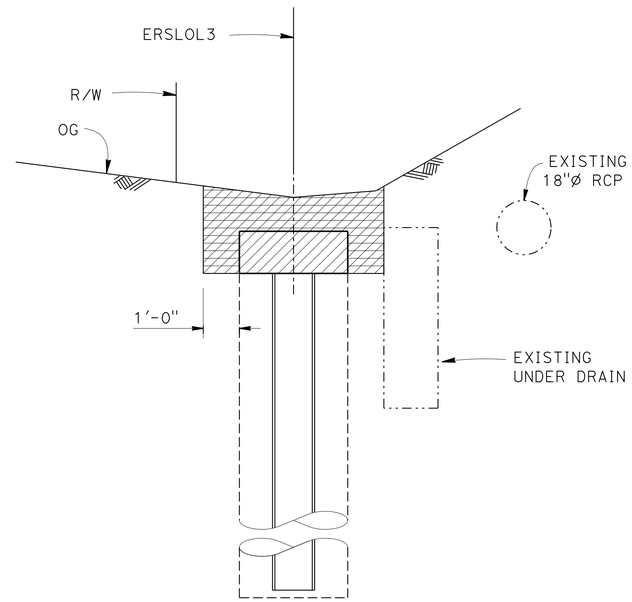

SOLDIER PILE WALL

EXCAVATION AND BACKFILL

NO SCALE

LEGEND:

STRUCTURE EXCAVATION (SOLDIER PILE WALL)

STRUCTURE BACKFILL (SOLDIER PILE WALL)

THORNHILL DRIVE STORM DAMAGE REPAIR

SOLDIER PILE WALL INDEX TO PLANS

DESIGN	BY P. Wang	CHECKED Tin Win	
DETAILS	BY Min Yu	CHECKED Tin Win	
QUANTITIES	BY S. Kotalawala	CHECKED Tin Win	

STATE OF CALIFORNIA
DEPARTMENT OF TRANSPORTATION

DIVISION OF ENGINEERING SERVICES
STRUCTURE DESIGN
DESIGN BRANCH 16

BRIDGE NO. 33E0142
POST MILE 8.3

STRUCTURES DESIGN DETAIL SHEET (ENGLISH) (REV. 09-01-10)

ORIGINAL SCALE IN INCHES FOR REDUCED PLANS 0 1 2 3

UNIT: 3617
PROJECT NUMBER & PHASE: 04000208681
CONTRACT NO.: 04-1SS024

DISREGARD PRINTS BEARING EARLIER REVISION DATES

REVISION DATES 04-30-13 01-21-14 07-15-15

SHEET 2 OF 11

FILE => 33e0142-a-itp.dgn

USERNAME => s126849 DATE PLOTTED => 19-OCT-2015 TIME PLOTTED => 15:59

DIST	COUNTY	ROUTE	POST MILES TOTAL PROJECT	SHEET No.	TOTAL SHEETS
04	Ala	13	8.3	100	108

REGISTERED CIVIL ENGINEER 7-23-15 DATE

10-19-15
PLANS APPROVAL DATE

REGISTERED PROFESSIONAL ENGINEER PAO-TSAN WANG No. 32308 Exp. 12-31-16 CIVIL STATE OF CALIFORNIA

The State of California or its officers or agents shall not be responsible for the accuracy or completeness of electronic copies of this plan sheet.

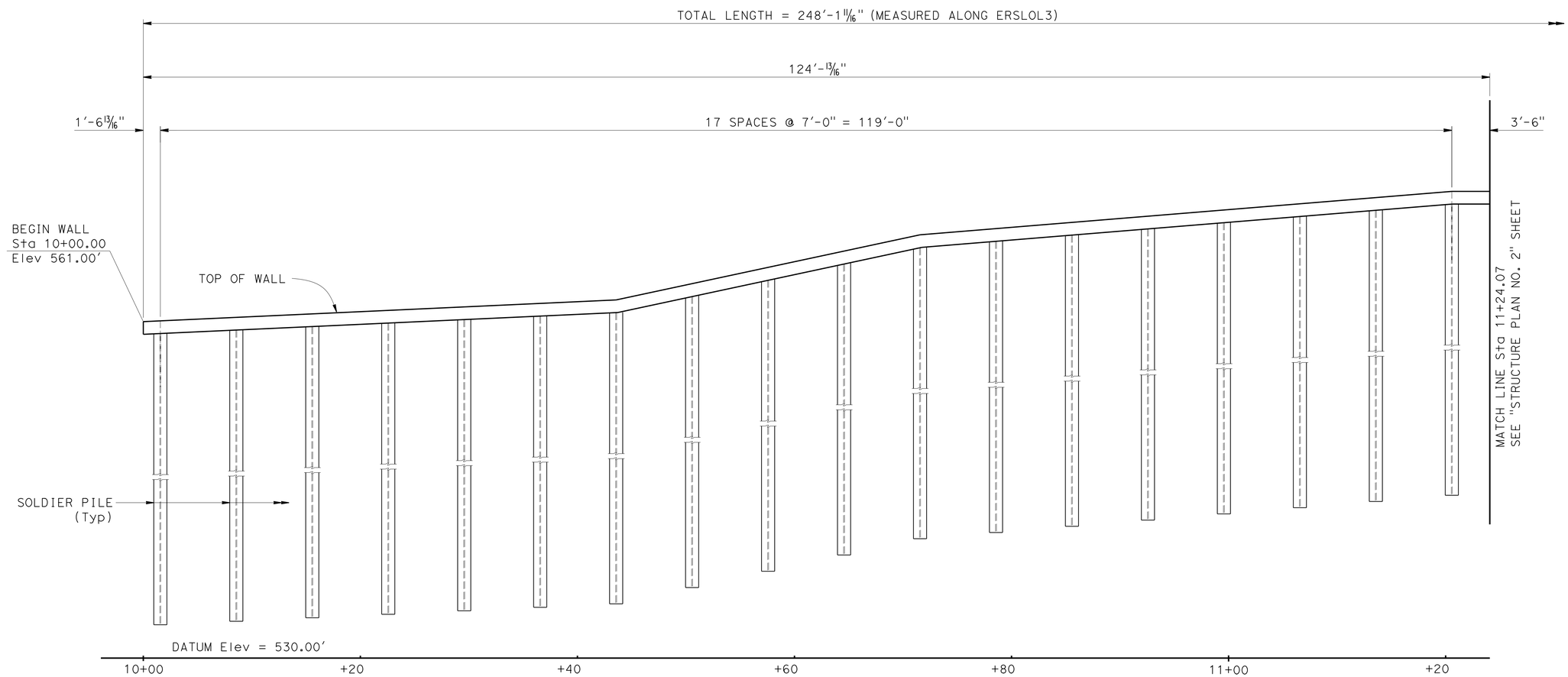

STATION	TOP WALL Elev (ft)
10+00	561.00
10+20	561.69
10+40	562.38
10+43.57	562.50
10+60	566.31
10+71.57	569.00
10+80	569.60
11+00	571.03
11+20	572.46
11+20.57	572.50
11+24.07	573.00

MIRRORED ELEVATION

3/16" = 1'-0"

PILE NUMBER	1	2	3	4	5	6	7	8	9	10	11	12	13	14	15	16	17	18
PILE LENGTH (ft)	45	45	45	45	45	45	45	45	45	45	45	45	45	45	45	45	45	45

THORNHILL DRIVE STORM DAMAGE REPAIR

SOLDIER PILE WALL

STRUCTURE PLAN NO. 1

DESIGN	BY P. Wang	CHECKED Tin Win	
DETAILS	BY Min Yu	CHECKED Tin Win	
QUANTITIES	BY S. Kotalawala	CHECKED Tin Win	

STATE OF CALIFORNIA
DEPARTMENT OF TRANSPORTATION

DIVISION OF ENGINEERING SERVICES
STRUCTURE DESIGN
DESIGN BRANCH 16

BRIDGE NO. 33E0142
POST MILE 8.3

STRUCTURES DESIGN DETAIL SHEET (ENGLISH) (REV. 09-01-10)

ORIGINAL SCALE IN INCHES FOR REDUCED PLANS 0 1 2 3

UNIT: 3617
PROJECT NUMBER & PHASE: 04000208681
CONTRACT NO.: 04-1SS024

DISREGARD PRINTS BEARING EARLIER REVISION DATES

REVISION DATES 01-21-14 01-29-14 07-15-15

SHEET 3 OF 11

FILE => 33e0142-c-sp01.dgn

USERNAME => s126849 DATE PLOTTED => 19-OCT-2015 TIME PLOTTED => 15:59