ACSTP-116(048)

Dist	COUNTY	ROUTE	POST MILES TOTAL PROJECT	SHEET No.	TOTAL SHEETS
04	Son	116	15.0	1	47

STATE OF CALIFORNIA
DEPARTMENT OF TRANSPORTATION

PROJECT PLANS FOR CONSTRUCTION ON
STATE HIGHWAY

IN SONOMA COUNTY
NEAR GUERNEVILLE
AT MAYS CANYON ROAD

TO BE SUPPLEMENTED BY STANDARD PLANS DATED 2010

INDEX OF PLANS

SHEET No.	DESCRIPTION
1	TITLE SHEET AND LOCATION MAP
2	TYPICAL CROSS SECTIONS
3	LAYOUT
4 - 6	CONSTRUCTION DETAILS
7	TEMPORARY WATER POLLUTION CONTROL PLAN
8	UTILITY PLAN
9	CONSTRUCTION AREA SIGNS
10 - 12	TRAFFIC HANDLING PLAN, DETAILS AND QUANTITIES
13	PAVEMENT DELINEATION PLAN
14	SUMMARY OF QUANTITIES
15 - 22	ELECTRICAL PLANS
23 - 29	SPECIAL ELECTRICAL STRUCTURE PLANS
30 - 38	REVISED STANDARD PLANS
	STRUCTURE PLANS
39 - 47	POCKET CANYON CREEK TANGENT WALL

THE STANDARD PLANS LIST APPLICABLE TO THIS CONTRACT IS INCLUDED IN THE NOTICE TO BIDDERS AND SPECIAL PROVISIONS BOOK.

LOCATION MAP

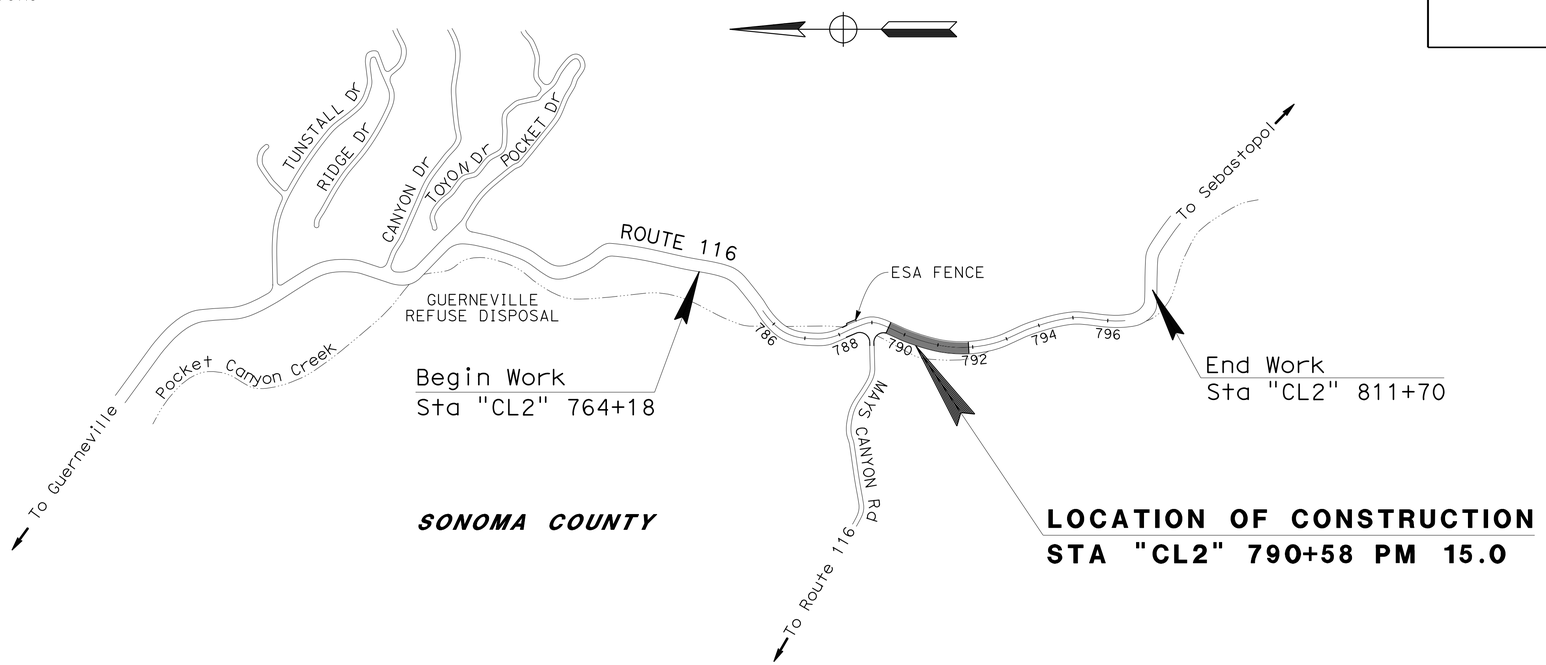

NO SCALE

THE CONTRACTOR SHALL POSSESS THE CLASS (OR CLASSES) OF LICENSE AS SPECIFIED IN THE "NOTICE TO BIDDERS."

PROJECT MANAGER: LILIAN ACORDA

DESIGN MANAGER: JONATHAN LEE

5/26/15
PROJECT ENGINEER REGISTERED CIVIL ENGINEER — DATE

June 15, 2015
PLANS APPROVAL DATE

REGISTERED PROFESSIONAL ENGINEER — Jonathan C. Lee — No. 47520 — Exp. 12-31-15 — CIVIL — STATE OF CALIFORNIA

THE STATE OF CALIFORNIA OR ITS OFFICERS OR AGENTS SHALL NOT BE RESPONSIBLE FOR THE ACCURACY OR COMPLETENESS OF SCANNED COPIES OF THIS PLAN SHEET.

CONTRACT No.	04-4S1904
PROJECT ID	0400001215

LAST REVISION 06-12-15 — DATE PLOTTED => 10-SEP-2015 TIME PLOTTED => 10:14

Dist	COUNTY	ROUTE	POST MILES TOTAL PROJECT	SHEET No.	TOTAL SHEETS
04	Son	116	15.0	2	47

REGISTERED CIVIL ENGINEER 5/26/15 DATE

6-15-15
PLANS APPROVAL DATE

REGISTERED PROFESSIONAL ENGINEER Jonathan C. Lee No. 47520 Exp. 12-31-15 CIVIL STATE OF CALIFORNIA

THE STATE OF CALIFORNIA OR ITS OFFICERS OR AGENTS SHALL NOT BE RESPONSIBLE FOR THE ACCURACY OR COMPLETENESS OF SCANNED COPIES OF THIS PLAN SHEET.

NOTES:

1. DIMENSIONS OF THE PAVEMENT STRUCTURES (STRUCTURAL SECTIONS) ARE SUBJECT TO TOLERANCES SPECIFIED IN THE STANDARD SPECIFICATIONS.
2. FOR RECONSTRUCT METAL BEAM GUARD RAILING, "METAL BEAM GUARD RAILING" IS REVISED TO "GUARDRAIL" THROUGHOUT THE PROJECT PLANS.

ABBREVIATIONS:

CB CONCRETE BARRIER SLAB
w/ WITH

DESIGN DESIGNATION:

ADT (2011) 2635 D 54.2%
ADT (2033) 3643 T 3.8%
DHV 589 V 25 mph
ESAL 126,900 TI20 7

PAVEMENT CLIMATE REGION
NORTH COAST

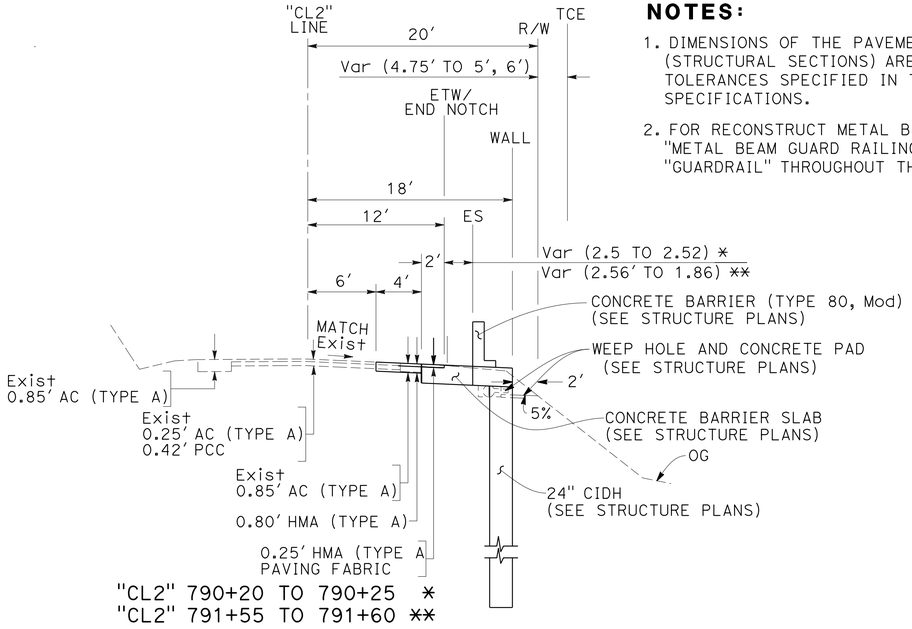

"CL2" 790+20 TO 790+25 *
"CL2" 791+55 TO 791+60 **

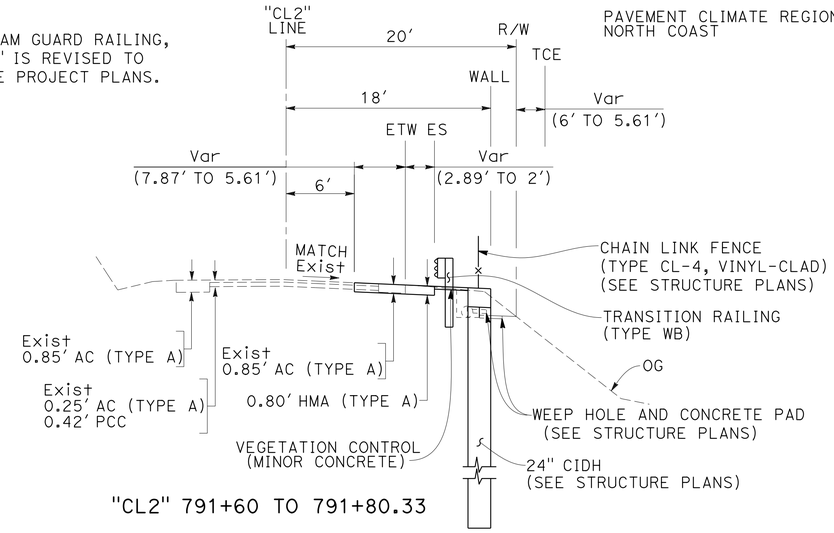

"CL2" 791+60 TO 791+80.33

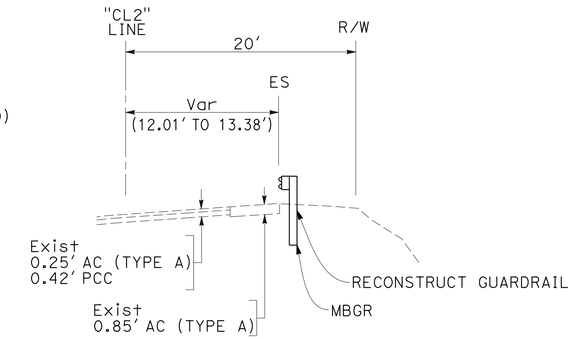

"CL2" 791+93 TO 792+11.31

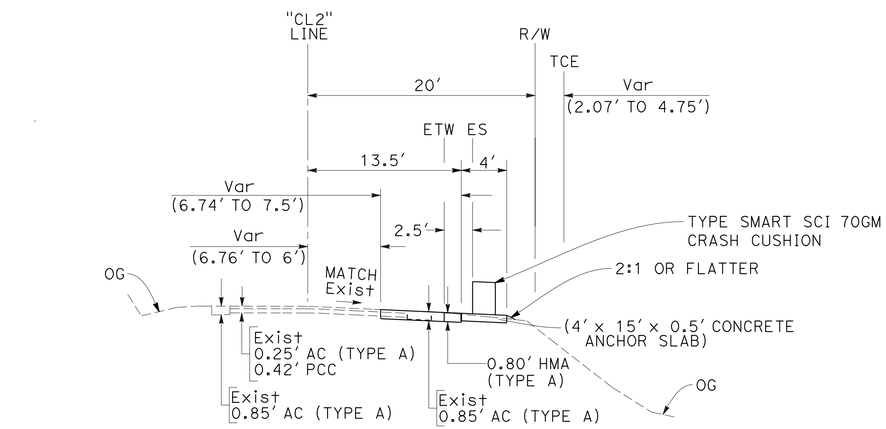

"CL2" 790+05 TO 790+20

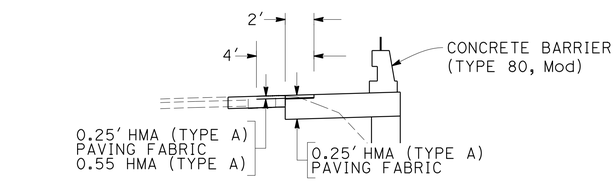

GEOSYNTHETIC PAVEMENT INTERLAYER
"CL2" 790+20 TO 791+60

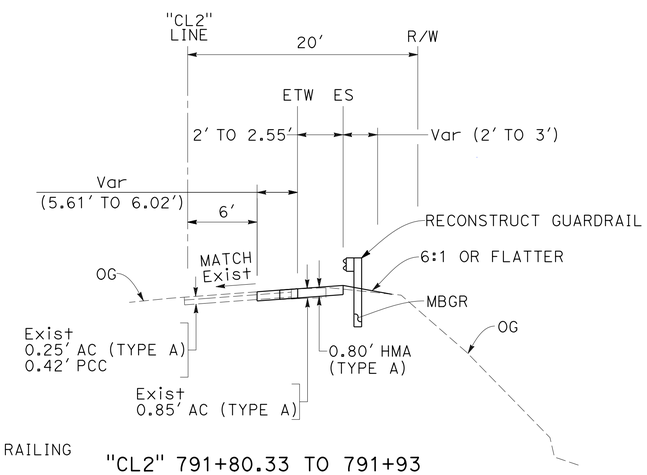

"CL2" 791+80.33 TO 791+93

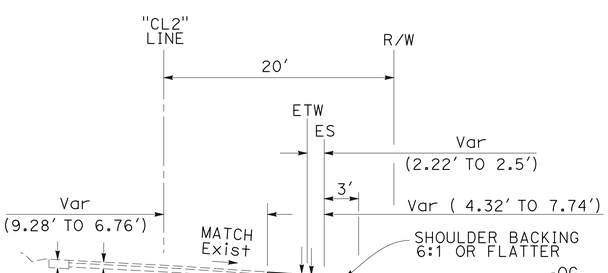

"CL2" 789+53.17 TO 790+05

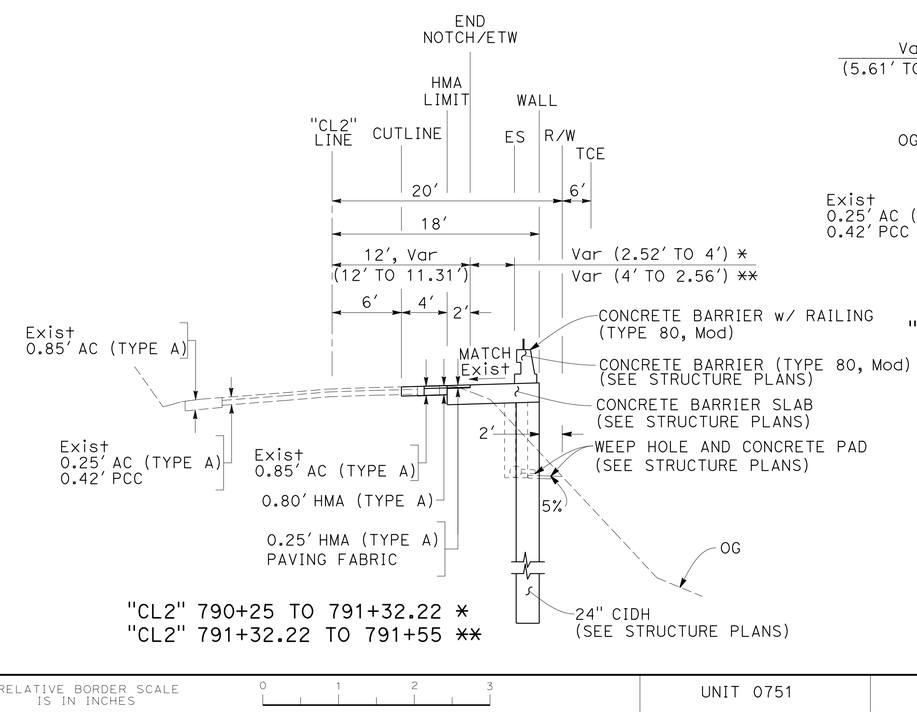

"CL2" 790+25 TO 791+32.22 *
"CL2" 791+32.22 TO 791+55 **

TYPICAL CROSS SECTIONS

NO SCALE

X-1

STATE OF CALIFORNIA - DEPARTMENT OF TRANSPORTATION
Caltrans® DESIGN

FUNCTIONAL SUPERVISOR: ZIAD ABUBEKR
CALCULATED-DESIGNED BY: JONATHAN LEE
CHECKED BY: RON GESTUVO
REVISED BY: RG
DATE REVISED: 5/12/15

LAST REVISION 05-15-15
DATE PLOTTED => 10-SEP-2015
TIME PLOTTED => 10:14

Dist	COUNTY	ROUTE	POST MILES TOTAL PROJECT	SHEET No.	TOTAL SHEETS
04	Son	116	15.0	3	47

REGISTERED CIVIL ENGINEER — DATE: 5/26/15

PLANS APPROVAL DATE: 6-15-15

REGISTERED PROFESSIONAL ENGINEER — Jonathan C. Lee No. 47520 Exp. 12-31-15 CIVIL — STATE OF CALIFORNIA

THE STATE OF CALIFORNIA OR ITS OFFICERS OR AGENTS SHALL NOT BE RESPONSIBLE FOR THE ACCURACY OR COMPLETENESS OF SCANNED COPIES OF THIS PLAN SHEET.

CURVE DATA

No. (#)	R	Δ	T	L
1	300′	44° 51′ 00″	123.80′	234.83′
2	150′	18° 14′ 00″	24.07′	47.73′
3	200′	25° 20′ 00″	44.95′	88.43′
4	168′	05° 37′ 30″	08.25′	16.49′
5	170′	07° 25′ 40″	11.03′	22.04′

LEGEND:

- TFESA — TEMPORARY FENCE (TYPE ESA)
- (No.) CURVE ALIGNMENT DATA
- AREA FOR TEMPORARY ELECTRICAL EQUIPMENT
- TRSF — TEMPORARY REINFORCED SILT FENCE

ABBREVIATIONS:

TFESA	TEMPORARY FENCE (TYPE ESA)
TRSF	TEMPORARY REINFORCED SILT FENCE
OHWM	ORDINARY HIGH WATER MARK, Elev 104.7

NOTE:

FOR ACCURATE RIGHT OF WAY DATA, CONTACT RIGHT OF WAY ENGINEERING AT THE DISTRICT OFFICE.

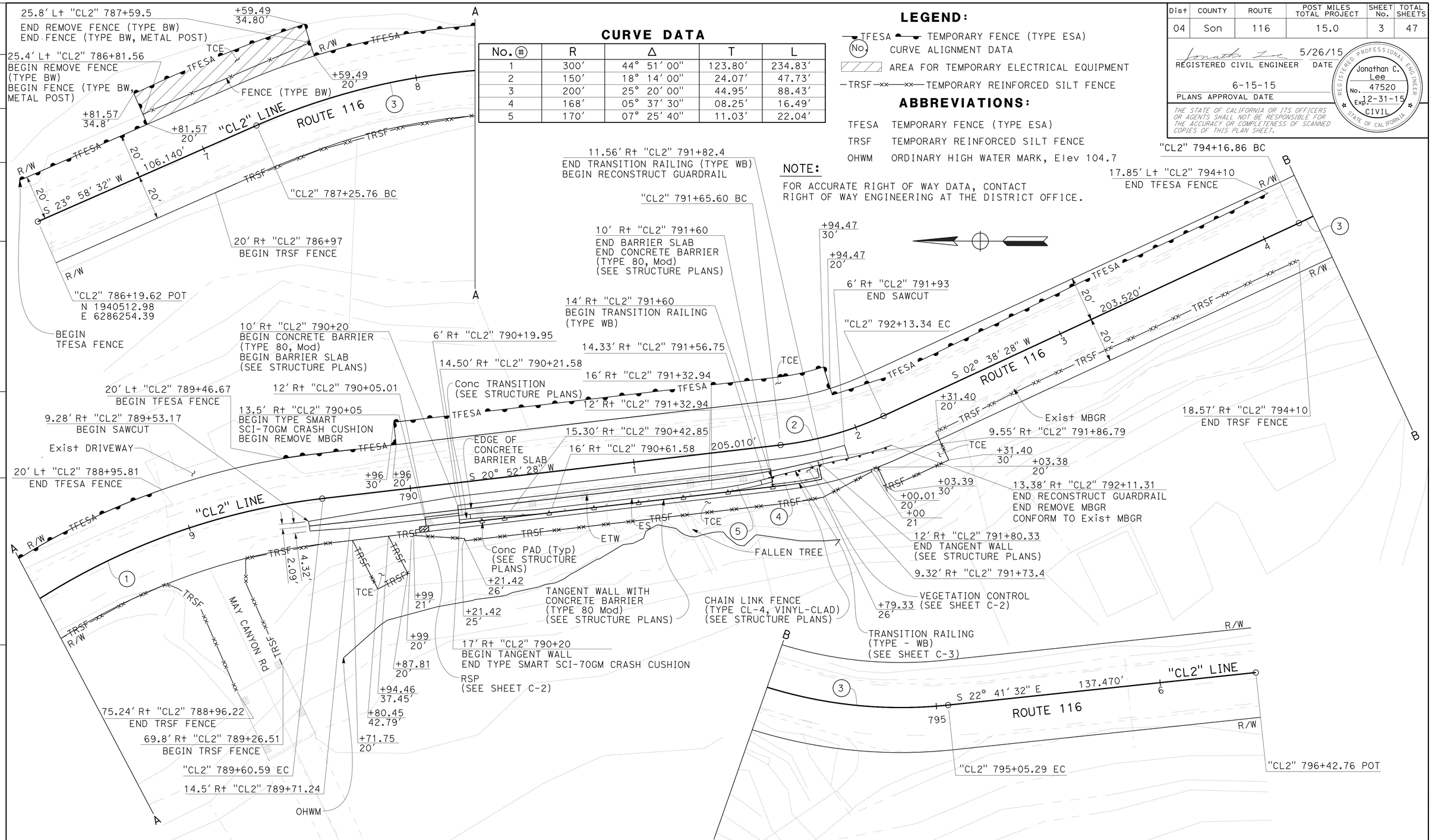

DATUM (VERTICAL) : NAVD88 (FEET),
DATUM (HORIZONTAL) : CCS83, ZONE 2

LAYOUT

SCALE: 1" = 20′

L-1

RG	5/12/15	RON GESTUVO	JONATHAN LEE
REVISED BY	DATE REVISED	CALCULATED-DESIGNED BY	CHECKED BY
FUNCTIONAL SUPERVISOR	ZIAD ABUBEKR		

STATE OF CALIFORNIA - DEPARTMENT OF TRANSPORTATION — DESIGN — Caltrans

LAST REVISION 05-15-15 — DATE PLOTTED => 10-SEP-2015 — TIME PLOTTED => 10:14

Dist	COUNTY	ROUTE	POST MILES TOTAL PROJECT	SHEET No.	TOTAL SHEETS
04	Son	116	15.0	4	47

REGISTERED CIVIL ENGINEER 5/26/15 DATE

6-15-15
PLANS APPROVAL DATE

REGISTERED PROFESSIONAL ENGINEER Jonathan C. Lee No. 47520 Exp. 12-31-15 CIVIL STATE OF CALIFORNIA

THE STATE OF CALIFORNIA OR ITS OFFICERS OR AGENTS SHALL NOT BE RESPONSIBLE FOR THE ACCURACY OR COMPLETENESS OF SCANNED COPIES OF THIS PLAN SHEET.

NOTE:

FOR ACCURATE RIGHT OF WAY DATA, CONTACT
RIGHT OF WAY ENGINEERING AT THE DISTRICT OFFICE.

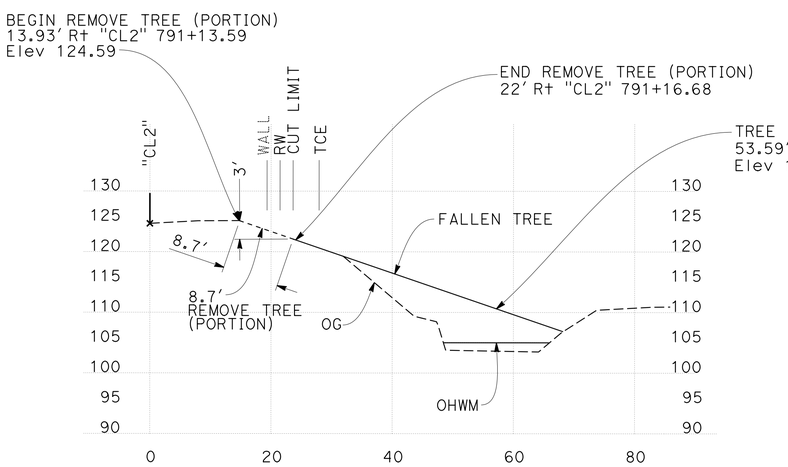

PROFILE ALONG FALLEN TREE
NO SCALE

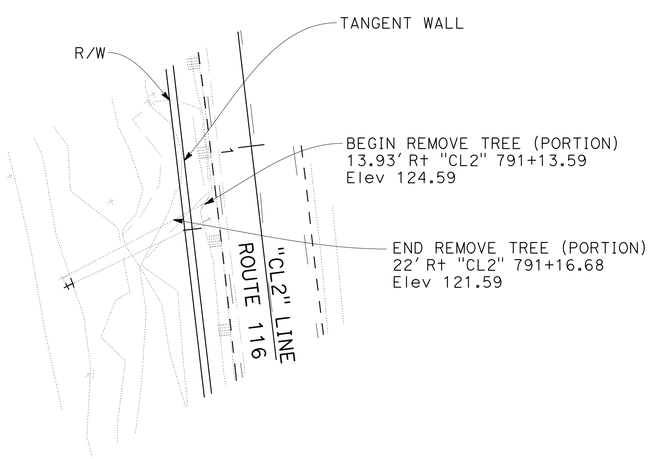

FALLEN TREE LOCATION
(PARTIAL CUT - BY OTHERS)
NO SCALE

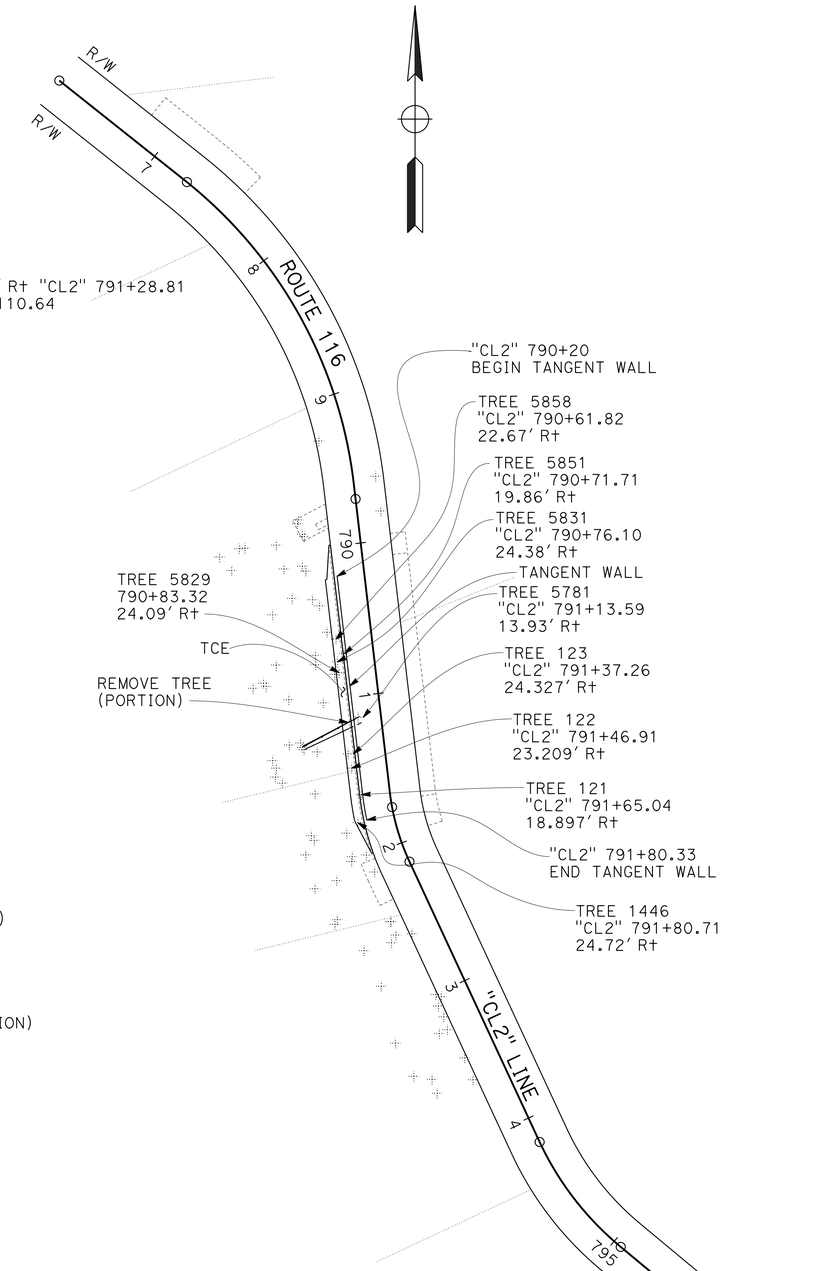

REMOVE TREE (PORTION - BY OTHERS)

STATION	(N) DESCRIPTION INFORMATION	LF
13.93' Rt "CL2" 791+13.59	FALLEN TREE	8.7
TOTAL		8.7

REMOVE TREE STUMP

STATION	(N) DESCRIPTION INFORMATION	EA
22.67' Rt "CL2" 790+61.82	BAY TREE/OTHER	1
19.86' Rt "CL2" 790+71.71		1
24.327' Rt "CL2" 791+37.26		1
24.38' Rt "CL2" 790+76.10		1
24.09' Rt "CL2" 790+83.32		1
23.209' Rt "CL2" 791+46.91		1
18.897' Rt "CL2" 791+65.04		1
24.720' Rt "CL2" 791+80.71	CLUMP OF 3/FIR	1
TOTAL		8

(N) NOT A SEPARATE PAY ITEM, FOR INFORMATION ONLY

CONSTRUCTION DETAILS
(REMOVE TREE STUMPS)
SCALE: 1" = 50'

C-1

REVISED BY	DATE REVISED
RG	5/20/15

CALCULATED-DESIGNED BY	CHECKED BY
RON GESTUVO	JONATHAN LEE

FUNCTIONAL SUPERVISOR: ZIAD ABUBEKR

STATE OF CALIFORNIA - DEPARTMENT OF TRANSPORTATION
Caltrans
DESIGN

LAST REVISION 05-25-15 | DATE PLOTTED => 10-SEP-2015 | TIME PLOTTED => 10:14

Dist	COUNTY	ROUTE	POST MILES TOTAL PROJECT	SHEET No.	TOTAL SHEETS
04	Son	116	15.0	5	47

REGISTERED CIVIL ENGINEER 5/26/15 DATE

6-15-15
PLANS APPROVAL DATE

REGISTERED PROFESSIONAL ENGINEER Jonathan C. Lee No. 47520 Exp. 12-31-15 CIVIL STATE OF CALIFORNIA

THE STATE OF CALIFORNIA OR ITS OFFICERS OR AGENTS SHALL NOT BE RESPONSIBLE FOR THE ACCURACY OR COMPLETENESS OF SCANNED COPIES OF THIS PLAN SHEET.

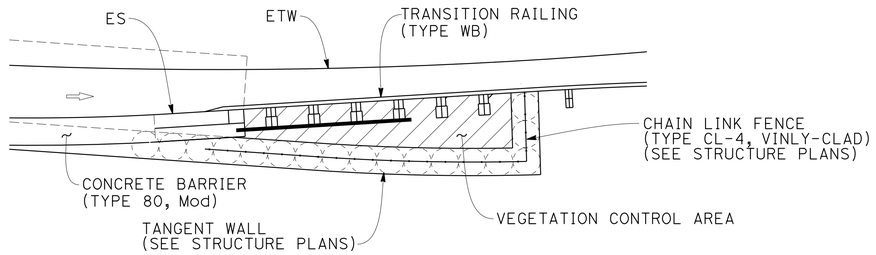

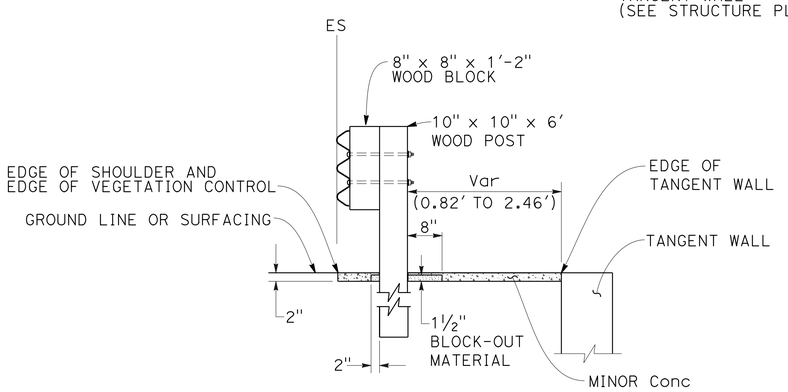

SECTION A-A

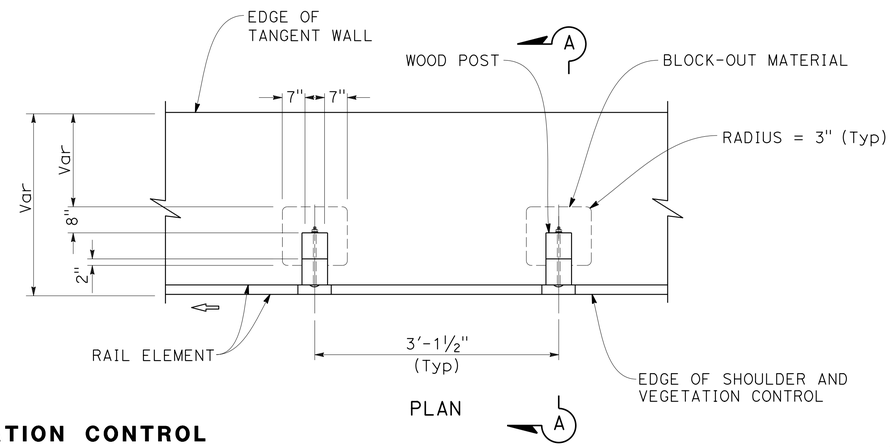

PLAN

VEGETATION CONTROL

R† "CL2" 791+60 TO 791+78.46

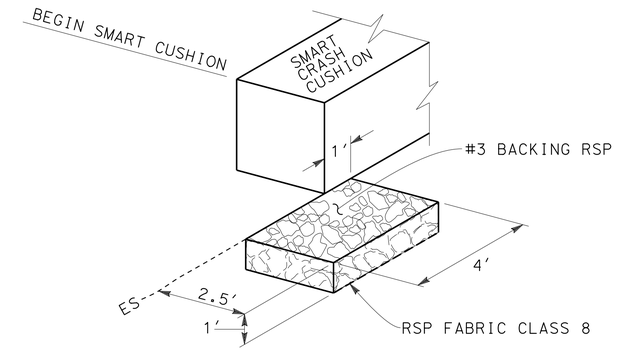

RSP AT BEGIN SMART CRASH CUSHION

17.50' R† "CL2" 790+02 TO 17.50' R† "CL2" 790+06

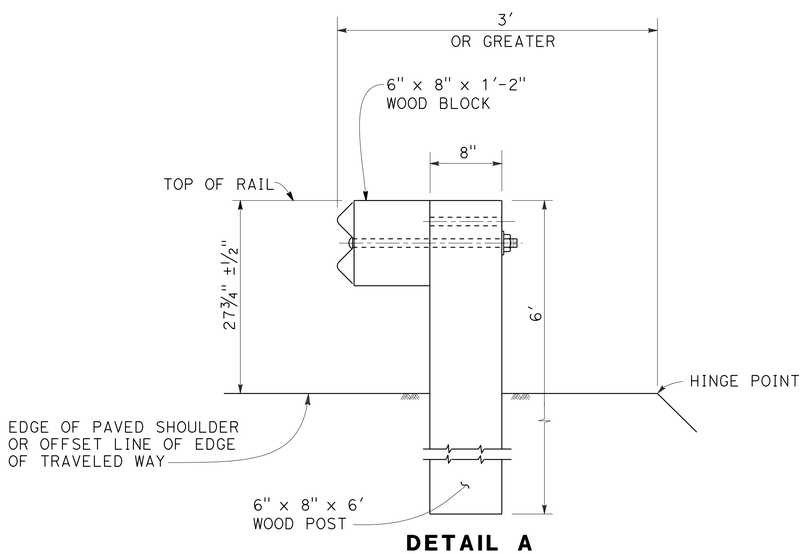

DETAIL A
TYPICAL ROADWAY INSTALLATION

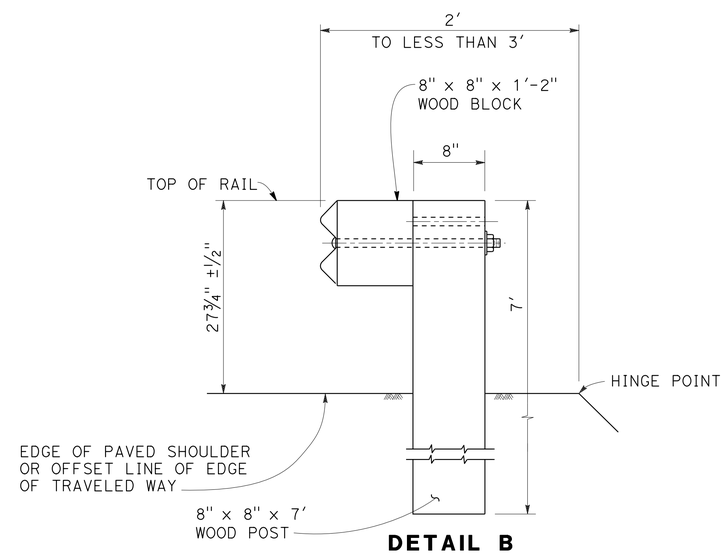

DETAIL B
NARROW ROADWAY INSTALLATION

GUARDRAIL LINE POST EMBEDMENT

CONSTRUCTION DETAILS

NO SCALE

C-2

REVISED BY	DATE REVISED	CALCULATED-DESIGNED BY	CHECKED BY	FUNCTIONAL SUPERVISOR
RG	5/20/15	RON GESTUVO	JONATHAN LEE	ZIAD ABUBEKR

STATE OF CALIFORNIA - DEPARTMENT OF TRANSPORTATION
Caltrans
DESIGN

LAST REVISION 05-25-15 | DATE PLOTTED => 10-SEP-2015 | TIME PLOTTED => 10:14

Dist	COUNTY	ROUTE	POST MILES TOTAL PROJECT	SHEET No.	TOTAL SHEETS
04	Son	116	15.0	6	47

REGISTERED CIVIL ENGINEER 5/26/15 DATE

6-15-15
PLANS APPROVAL DATE

REGISTERED PROFESSIONAL ENGINEER Jonathan C. Lee No. 47520 Exp. 12-31-15 CIVIL STATE OF CALIFORNIA

THE STATE OF CALIFORNIA OR ITS OFFICERS OR AGENTS SHALL NOT BE RESPONSIBLE FOR THE ACCURACY OR COMPLETENESS OF SCANNED COPIES OF THIS PLAN SHEET.

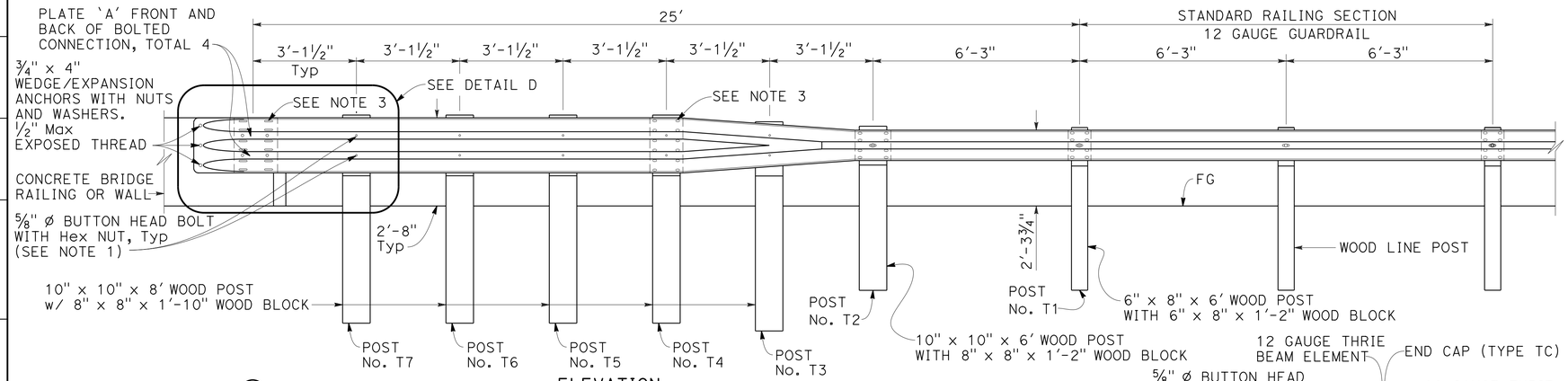

ELEVATION

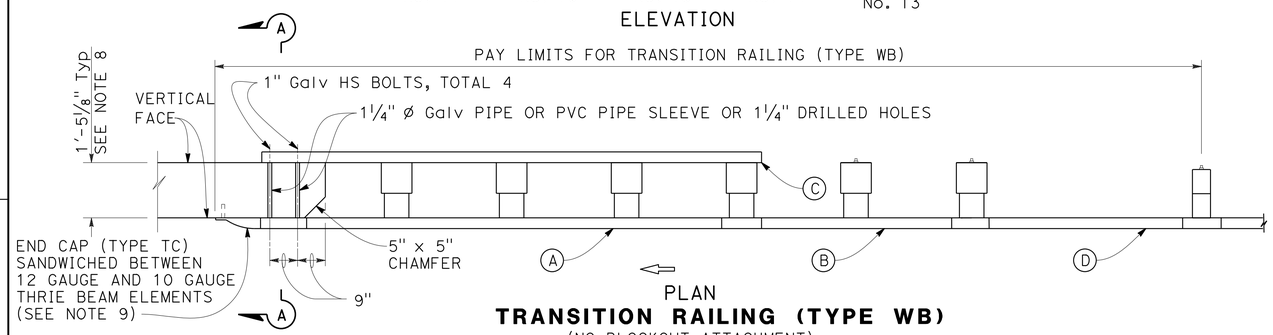

PLAN

TRANSITION RAILING (TYPE WB)

(NO BLOCKOUT ATTACHMENT)

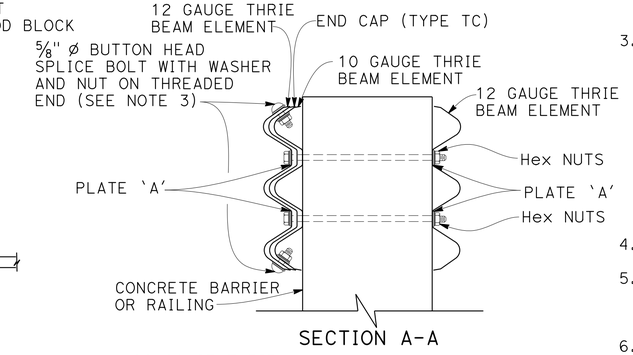

SECTION A-A

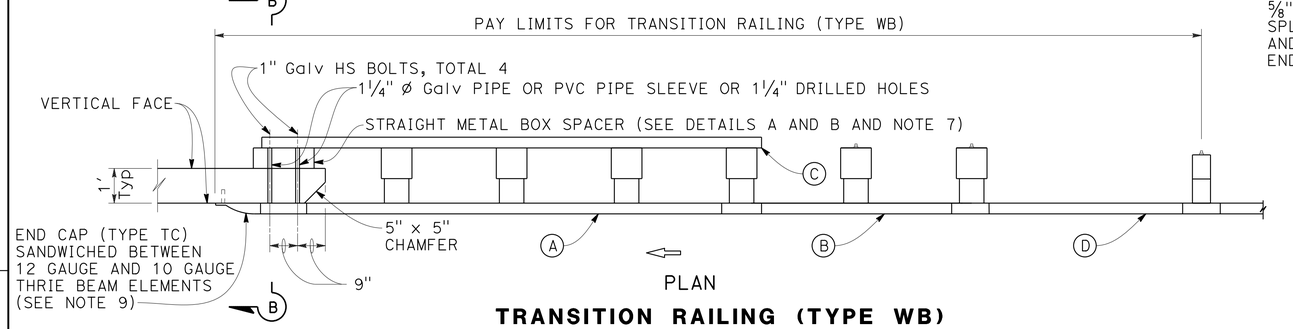

PLAN

TRANSITION RAILING (TYPE WB)

(BLOCKOUT ATTACHMENT)

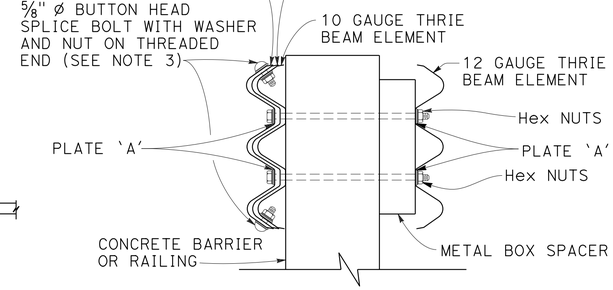

SECTION B-B

LEGEND:

- (A) NESTED THRIE BEAM ELEMENTS (ONE 12 GAUGE ELEMENT NESTED OVER ONE 10 GAUGE ELEMENT).
- (B) ONE 10 GAUGE "W" BEAM TO THRIE BEAM ELEMENT.
- (C) ONE 12 GAUGE THRIE BEAM ELEMENT.
- (D) ONE 10 GAUGE "W" BEAM RAIL ELEMENT (7'-3 1/2" LENGTH)

10 GAUGE = 0.135" THICK

12 GAUGE = 0.108" THICK

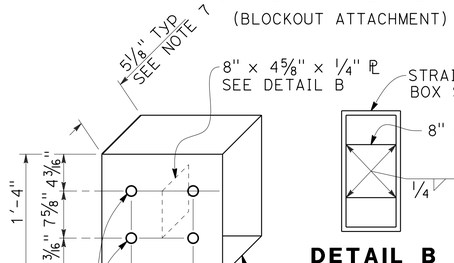

DETAIL A

STRAIGHT METAL BOX SPACER

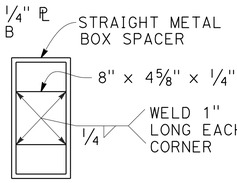

DETAIL B

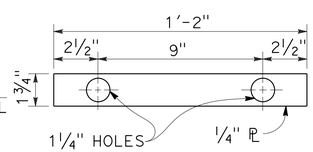

DETAIL C

PLATE A

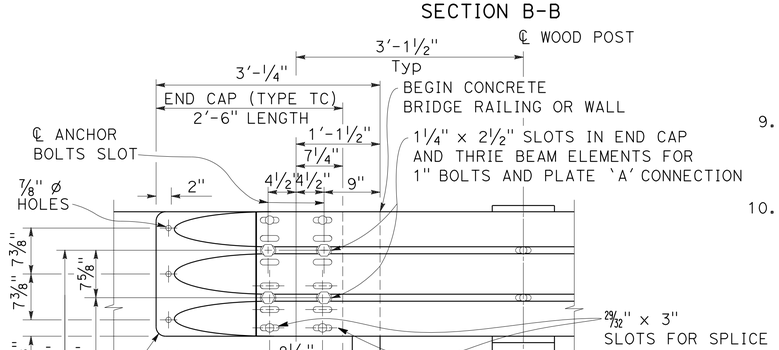

DETAIL D

NOTES:

1. USE 5/8" * BUTTON HEAD BOLTS AND Hex NUTS FOR CONNECTIONS TO POSTS. NO WASHER ON RAIL FACE FOR BOLTED CONNECTIONS TO POST.
2. THE NESTED RAIL ELEMENTS, END CAP, AND 'W' BEAM TO THRIE BEAM ELEMENT MAY BE SPLICED TOGETHER PRIOR TO BOLTING THE ELEMENTS TO THE WOOD POST AND CONCRETE BARRIER OR RAILING.
3. EXTERIOR SPLICE BOLT HOLES FOR RAIL ELEMENT SPLICES AT POST No. T4 AND THE CONNECTION TO THE CONCRETE BARRIER OR RAILING SHALL BE THE STANDARD 13/16" X 1 1/8" SLOT SIZE. INTERIOR SPLICE BOLT HOLES AT THESE LOCATIONS MAY BE INCREASED UP TO 1 1/4" *. ONLY THE TOP 2 AND THE BOTTOM 2 SPLICE BOLTS WITH WASHERS AND NUTS ARE REQUIRED FOR RAIL SPLICES AT POST No. T4 AND THE CONNECTION TO THE CONCRETE BARRIER OR RAILING.
4. DIRECTION OF ADJACENT TRAFFIC INDICATED BY ⇨ .
5. THE TOP ELEVATION OF POSTS No. T2 THROUGH No. T7 SHALL NOT PROJECT MORE THAN 1" ABOVE THE TOP ELEVATION OF THE RAIL ELEMENT.
6. TYPICALLY, THE RAILING CONNECTED TO TRANSITION RAILING (TYPE WB) WILL BE EITHER STANDARD RAILING SECTION OF GUARD RAILING WITH HEIGHT TRANSITION RATIO OF 120:1 OR AN APPROVED CALTRANS END TREATMENT ATTACHED TO POST No. T1.
7. THE DEPTH OF THE METAL BOX SPACER VARIES FROM THE 5 1/8" TO 1 1/2" AND IS DEPENDENT ON THE WIDTH OF THE CONCRETE RAILING OR WALL. THE COMBINED DIMENSION FOR THE DEPTH OF THE METAL BOX SPACER PLUS THE WIDTH OF RAILING OR WALL IS TYPICALLY 17 1/8". WHERE THE SPACE BETWEEN THE BACKSIDE OF THE CONCRETE RAILING OR WALL AND THE REAR THRIE BEAM ELEMENT IS LESS THAN 1 1/2", METAL PLATES SIMILAR TO PLATE 'A' ARE TO BE USED AS SPACERS.
8. WHERE THE WIDTH OF THE CONCRETE RAILING OR WALL IS GREATER THAN 17 1/8", WOOD BLOCKS ARE TO BE USED TO FILL THE SPACE CREATED BETWEEN THE BACKSIDE OF POSTS No. T4 THROUGH No. T7 AND THE REAR THRIE BEAM ELEMENT. THESE WOOD BLOCKS SHALL BE 8" IN WIDTH AND 1'-2" IN LENGTH. THE DIMENSION BETWEEN THE FRONT THRIE BEAM ELEMENT AND THE REAR THRIE BEAM ELEMENT IS TO MATCH THE WIDTH OF THE CONCRETE RAILING OR WALL.
9. END CAP MAY BE INSTALLED OVER 12 GAUGE AND 10 GAUGE THRIE BEAM ELEMENTS WHERE TRANSITION RAILING IS INSTALLED ON THE DEPARTURE END OF BRIDGE RAILING.
10. CONFORM STANDARD RAILING SECTION HEIGHT TO 2'-3 3/4" AT POST No. T1 USING HEIGHT TRANSITION RATIO OF 120:1.

CONSTRUCTION DETAILS

NO SCALE

C-3

REVISED BY	DATE REVISED
RG	4/27/15

CALCULATED-DESIGNED BY	CHECKED BY
RON GESTUVO	JONATHAN LEE

FUNCTIONAL SUPERVISOR: ZIAD ABUBEKR

STATE OF CALIFORNIA - DEPARTMENT OF TRANSPORTATION

Caltrans® DESIGN

LAST REVISION DATE PLOTTED => 10-SEP-2015
04-27-15 TIME PLOTTED => 10:14

Dist	COUNTY	ROUTE	POST MILES TOTAL PROJECT	SHEET No.	TOTAL SHEETS
04	Son	116	15.0	7	47

REGISTERED CIVIL ENGINEER DATE 5/30/15

6-15-15
PLANS APPROVAL DATE

REGISTERED PROFESSIONAL ENGINEER Jeng G. Tsai No. 62753 Exp. 6-30-16 CIVIL STATE OF CALIFORNIA

THE STATE OF CALIFORNIA OR ITS OFFICERS OR AGENTS SHALL NOT BE RESPONSIBLE FOR THE ACCURACY OR COMPLETENESS OF SCANNED COPIES OF THIS PLAN SHEET.

NOTE:

FOR ACCURATE RIGHT OF WAY DATA, CONTACT RIGHT OF WAY ENGINEERING AT THE DISTRICT OFFICE.

LEGEND:

STAGING AREA (TLB2)

NOTE:

1. "TEMPORARY BMP LOCATIONS ARE DESIGNED BASED ON DISTURBED AREAS AND WATER FLOW PATTERNS INFORMATION AVAILABLE AT DESIGN PHASE. CONTRACTOR IS RESPONSIBLE TO DEVELOP A SWPPP THAT STABILIZES ALL DISTURBED AREAS INCLUDING AREAS THAT WERE NOT EXPECTED TO BE DISTURBED AND COMPLIES WITH PERMITS, LICENSES, AGREEMENTS AND CERTIFICATIONS (PLACS)."

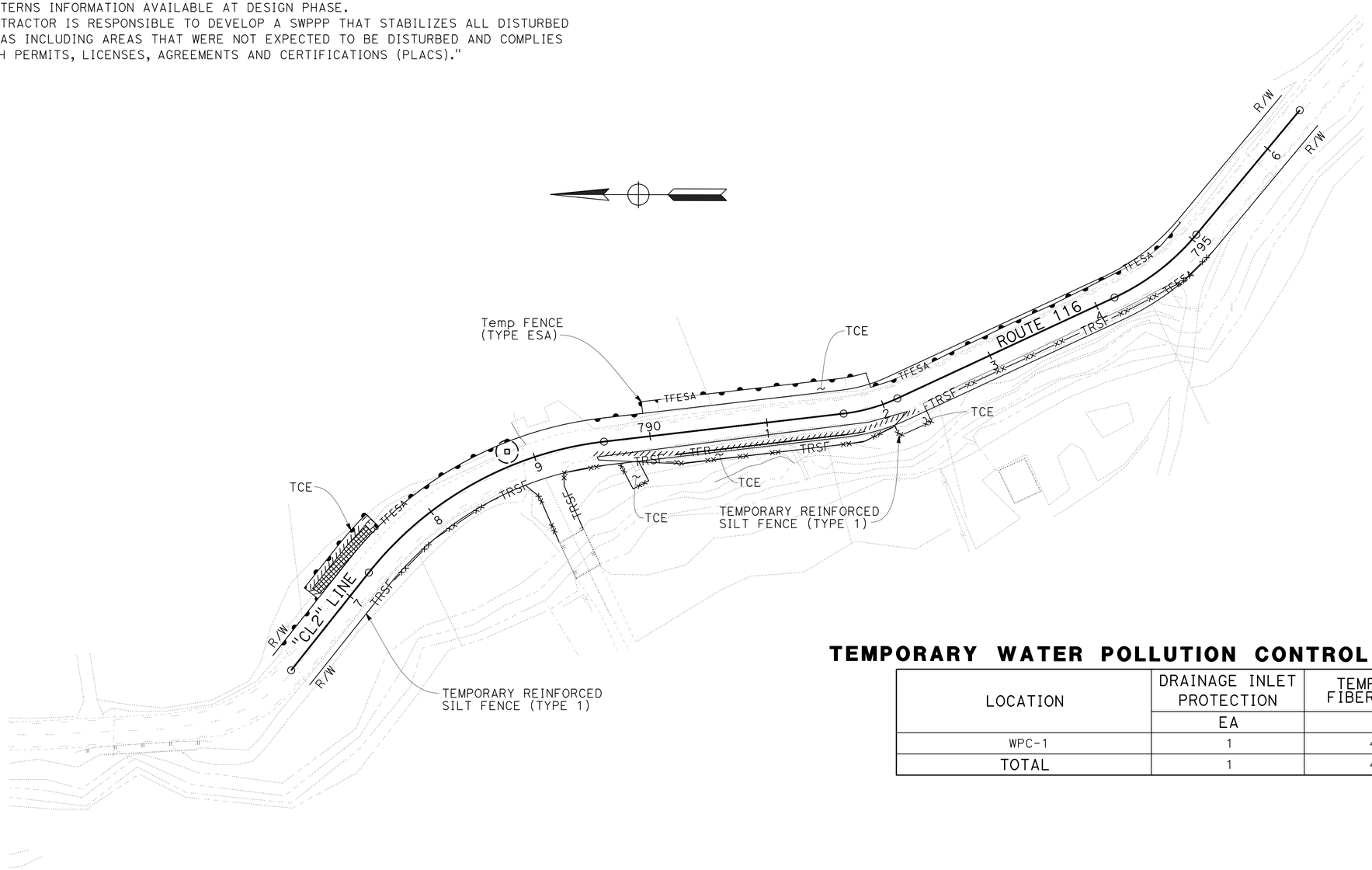

TEMPORARY WATER POLLUTION CONTROL QUANTITIES

LOCATION	DRAINAGE INLET PROTECTION	TEMPORARY FIBER ROLLS
	EA	LF
WPC-1	1	450
TOTAL	1	450

TEMPORARY WATER POLLUTION CONTROL PLAN

SCALE: 1" = 50'

APPROVED FOR TEMPORARY WATER POLLUTION CONTROL WORK ONLY

WPC-1

STATE OF CALIFORNIA - DEPARTMENT OF TRANSPORTATION
Caltrans® WATER QUALITY

FUNCTIONAL SUPERVISOR: KAMRAN NAKHJIRI
CALCULATED-DESIGNED BY: JENG TSAI
CHECKED BY: KAMRAN NAKHJIRI
REVISED BY: JT
DATE REVISED: 5/12/15

LAST REVISION 05-15-15 | DATE PLOTTED => 10-SEP-2015 | TIME PLOTTED => 10:14

Dist	COUNTY	ROUTE	POST MILES TOTAL PROJECT	SHEET No.	TOTAL SHEETS
04	Son	116	15.0	8	47

REGISTERED CIVIL ENGINEER 6/1/15 DATE

6-15-15
PLANS APPROVAL DATE

REGISTERED PROFESSIONAL ENGINEER Cheuk Hong Wong No. 60145 Exp. 6-30-16 CIVIL STATE OF CALIFORNIA

THE STATE OF CALIFORNIA OR ITS OFFICERS OR AGENTS SHALL NOT BE RESPONSIBLE FOR THE ACCURACY OR COMPLETENESS OF SCANNED COPIES OF THIS PLAN SHEET.

NOTE:

FOR ACCURATE RIGHT OF WAY DATA, CONTACT RIGHT OF WAY ENGINEERING AT THE DISTRICT OFFICE.

NOTES:

1. ELEVATIONS SHOWN REFER TO TOP OF PIPE OR CONDUIT, UNLESS OTHERWISE STATED.
2. UTILITY OWNERSHIP:
   ELECTRICAL - PACIFIC GAS AND ELECTRIC (PG&E)
   TELEPHONE - AMERICAN TELEPHONE AND TELEGRAPH (AT&T).
3. UTILITIES SHOWN ON THIS PLAN ARE APPROXIMATE AND SHALL BE VERIFIED BY THE CONTRACTOR PRIOR TO BEGINNING OF CONSTRUCTION.

LEGEND:

EXISTING UTILITIES

—— - e —— —— -(oh)- OVERHEAD ELECTRIC (AERIAL)

—— - - t —— —— - - t — UNDERGROUND TELEPHONE

TEMPORARY PROPOSED UTILITIES

—— - E —— —— -(OH)—— OVERHEAD ELECTRIC (AERIAL)

POTHOLE LOCATION INFORMATION

No.	NORTHING	EASTING	ELEVATION	METHOD
1	1940460.279	6286295.287	109.94	POTHOLING
2	1940377.654	6286327.787	111.84	POTHOLING
3	1940295.592	6286335.787	115.88	POTHOLING
4	1940108.783	6286287.935	119.00	POTHOLING

VERTICAL DATUM = NAVD 88

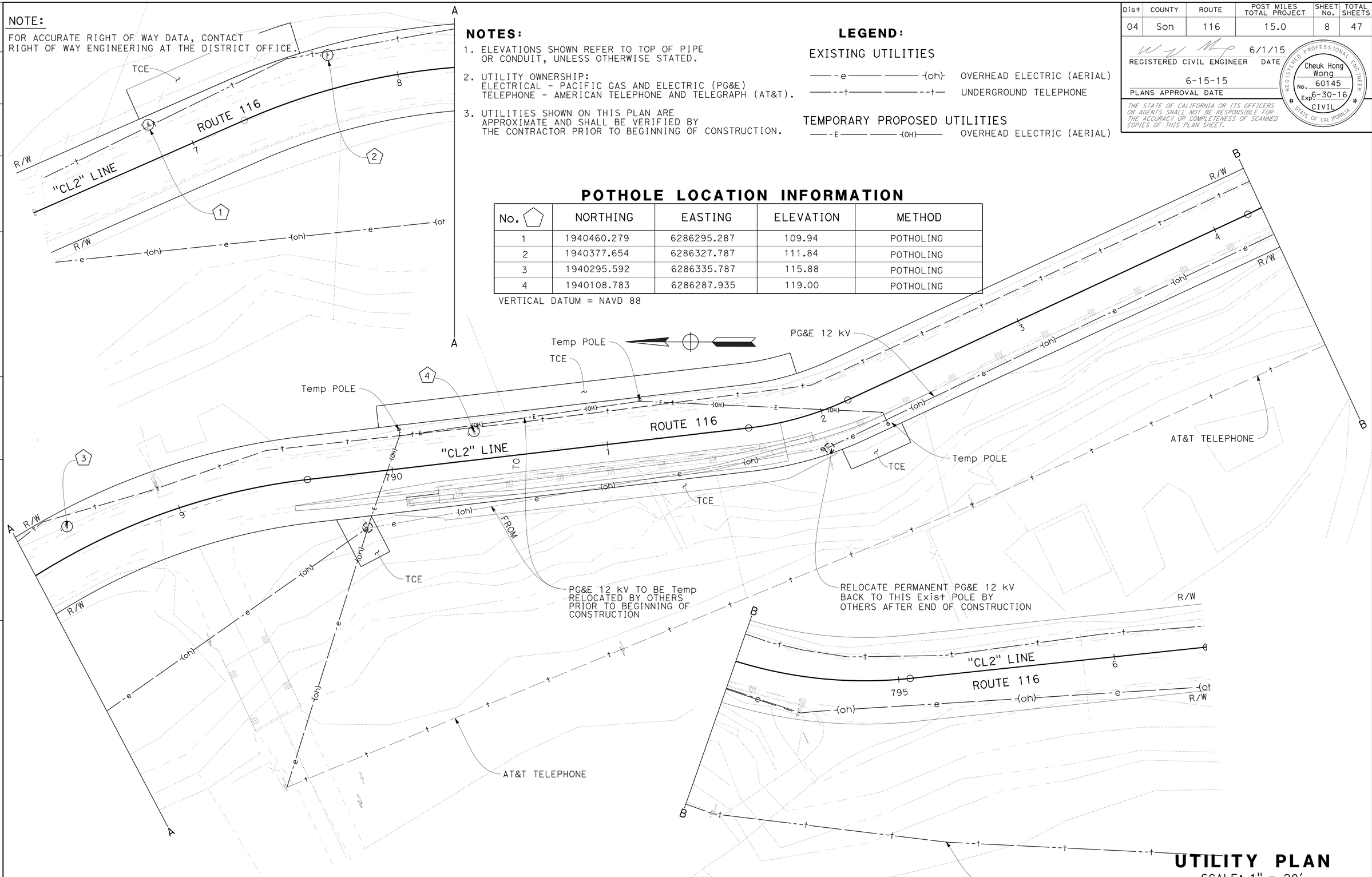

UTILITY PLAN

SCALE: 1" = 20'

APPROVED FOR UTILITY INFORMATION ONLY

U-1

CALCULATED-DESIGNED BY	ROGER DUAN	REVISED BY	RD
CHECKED BY	HONG WONG	DATE REVISED	5/1/15
FUNCTIONAL SUPERVISOR	BOB ZANDIPOUR		

STATE OF CALIFORNIA - DEPARTMENT OF TRANSPORTATION

Caltrans® DESIGN

LAST REVISION 05-05-15 | DATE PLOTTED => 10-SEP-2015 | TIME PLOTTED => 10:15

Dist	COUNTY	ROUTE	POST MILES TOTAL PROJECT	SHEET No.	TOTAL SHEETS
04	Son	116	15.0	9	47

REGISTERED CIVIL ENGINEER 5/27/15 DATE

6-15-15
PLANS APPROVAL DATE

REGISTERED PROFESSIONAL ENGINEER Jerilyn L. Struven No. 49964 Exp. 12-31-16 CIVIL STATE OF CALIFORNIA

THE STATE OF CALIFORNIA OR ITS OFFICERS OR AGENTS SHALL NOT BE RESPONSIBLE FOR THE ACCURACY OR COMPLETENESS OF SCANNED COPIES OF THIS PLAN SHEET.

NOTE:

FOR ACCURATE RIGHT OF WAY DATA, CONTACT RIGHT OF WAY ENGINEERING AT THE DISTRICT OFFICE.

LEGEND:

No. CONSTRUCTION AREA SIGN NUMBER

NOTES:

1. EXACT LOCATION AND POSITION OF CONSTRUCTION AREA SIGNS TO BE DETERMINED BY THE ENGINEER.
2. FOR ADDITIONAL CONSTRUCTION AREA SIGNS, SEE TRAFFIC HANDLING PLAN.

STATIONARY MOUNTED CONSTRUCTION AREA SIGNS

SIGN No.	MUTCD CODE	MESSAGE	PANEL SIZE	NUMBER OF POST AND SIZE	NUMBER OF SIGNS
1	W20-1	ROAD WORK AHEAD	48" x 48"	1 - 4" x 6"	3
2	G20-2	END ROAD WORK	36" x 18"	1 - 4" x 4"	3
3	C40A(CA)	TRAFFIC FINES DOUBLED IN WORK ZONE	48" x 48"	1 - 4" x 6"	2

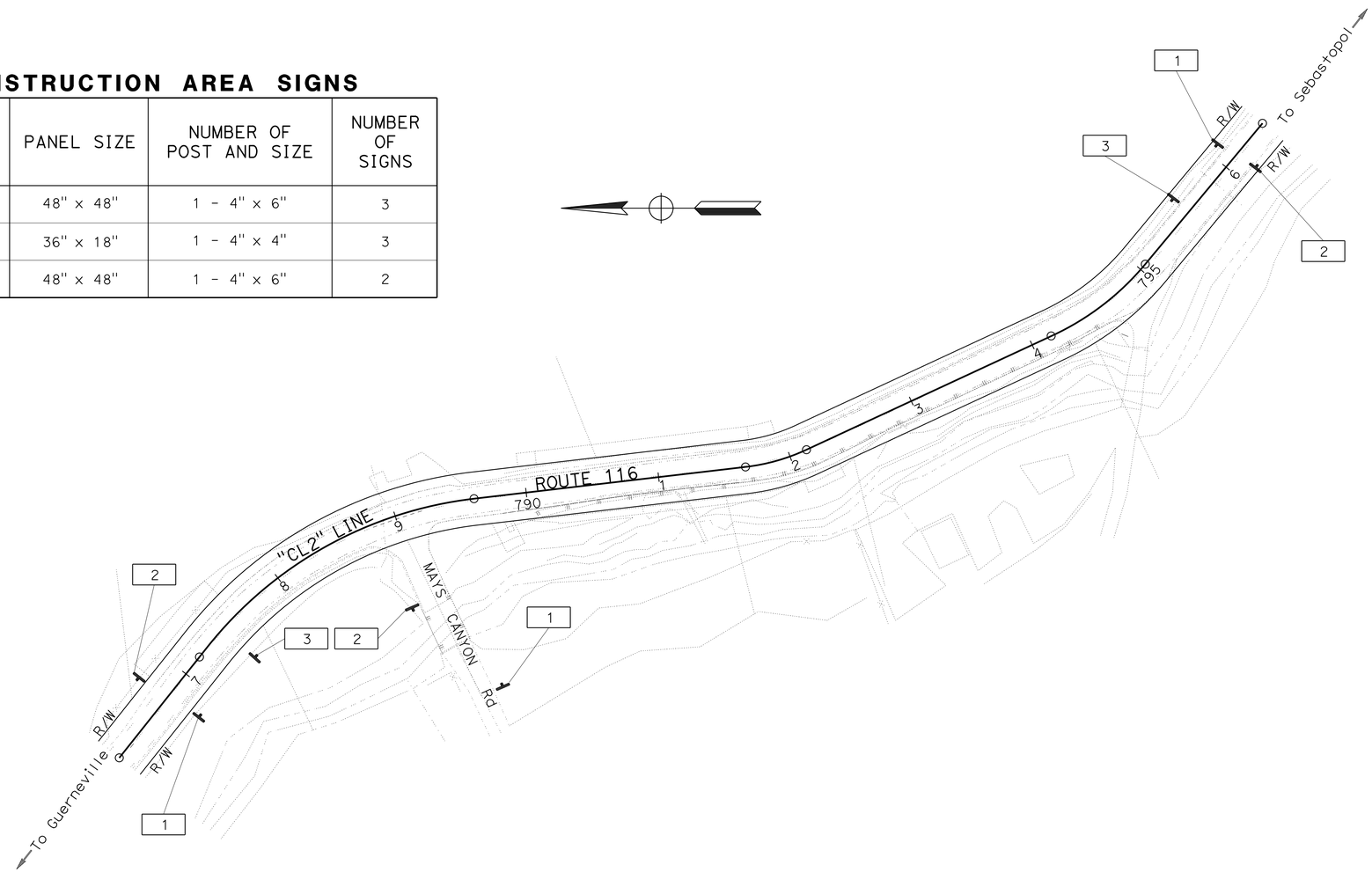

CONSTRUCTION AREA SIGNS

SCALE: 1" = 50'

APPROVED FOR CONSTRUCTION AREA SIGN WORK ONLY

CS-1

STATE OF CALIFORNIA - DEPARTMENT OF TRANSPORTATION
Caltrans
TRAFFIC

FUNCTIONAL SUPERVISOR: ROLAND AU-YEUNG
CALCULATED-DESIGNED BY: HERMINIO S. RUIDERA
CHECKED BY: JERILYN L. STRUVEN
REVISED BY: HR
DATE REVISED: 5/5/15

LAST REVISION 05-05-15 | DATE PLOTTED => 10-SEP-2015 | TIME PLOTTED => 10:15

BORDER LAST REVISED 7/2/2010 | USERNAME => s141070 | DGN FILE => 04000012151a001.dgn | RELATIVE BORDER SCALE IS IN INCHES 0 1 2 3 | UNIT 0751 | PROJECT NUMBER & PHASE 04000012151

Dist	COUNTY	ROUTE	POST MILES TOTAL PROJECT	SHEET No.	TOTAL SHEETS
04	Son	116	15.0	10	47

REGISTERED CIVIL ENGINEER 5/26/15 DATE

6-15-15
PLANS APPROVAL DATE

REGISTERED PROFESSIONAL ENGINEER Jonathan C. Lee No. 47520 Exp. 12-31-15 CIVIL STATE OF CALIFORNIA

THE STATE OF CALIFORNIA OR ITS OFFICERS OR AGENTS SHALL NOT BE RESPONSIBLE FOR THE ACCURACY OR COMPLETENESS OF SCANNED COPIES OF THIS PLAN SHEET.

NOTE:

FOR ACCURATE RIGHT OF WAY DATA, CONTACT RIGHT OF WAY ENGINEERING AT THE DISTRICT OFFICE.

LEGEND:

- CONSTRUCTION AREA SIGN
- CONSTRUCTION AREA
- TYPE I (10′) ARROW
- TEMPORARY ALTERNATIVE CRASH CUSHION
- (No.) PAVEMENT DELINEATION DETAIL NUMBER

NOTES:

1. SEE E-SHEETS FOR TEMPORARY SIGNAL SYSTEM.
2. ACCESS TO PROPERTIES TO BE MAINTAINED AT ALL TIMES.
3. LOCATION OF PORTABLE CHANGEABLE MESSAGE SIGN (2 EA), TO BE DETERMINED BY THE ENGINEER.

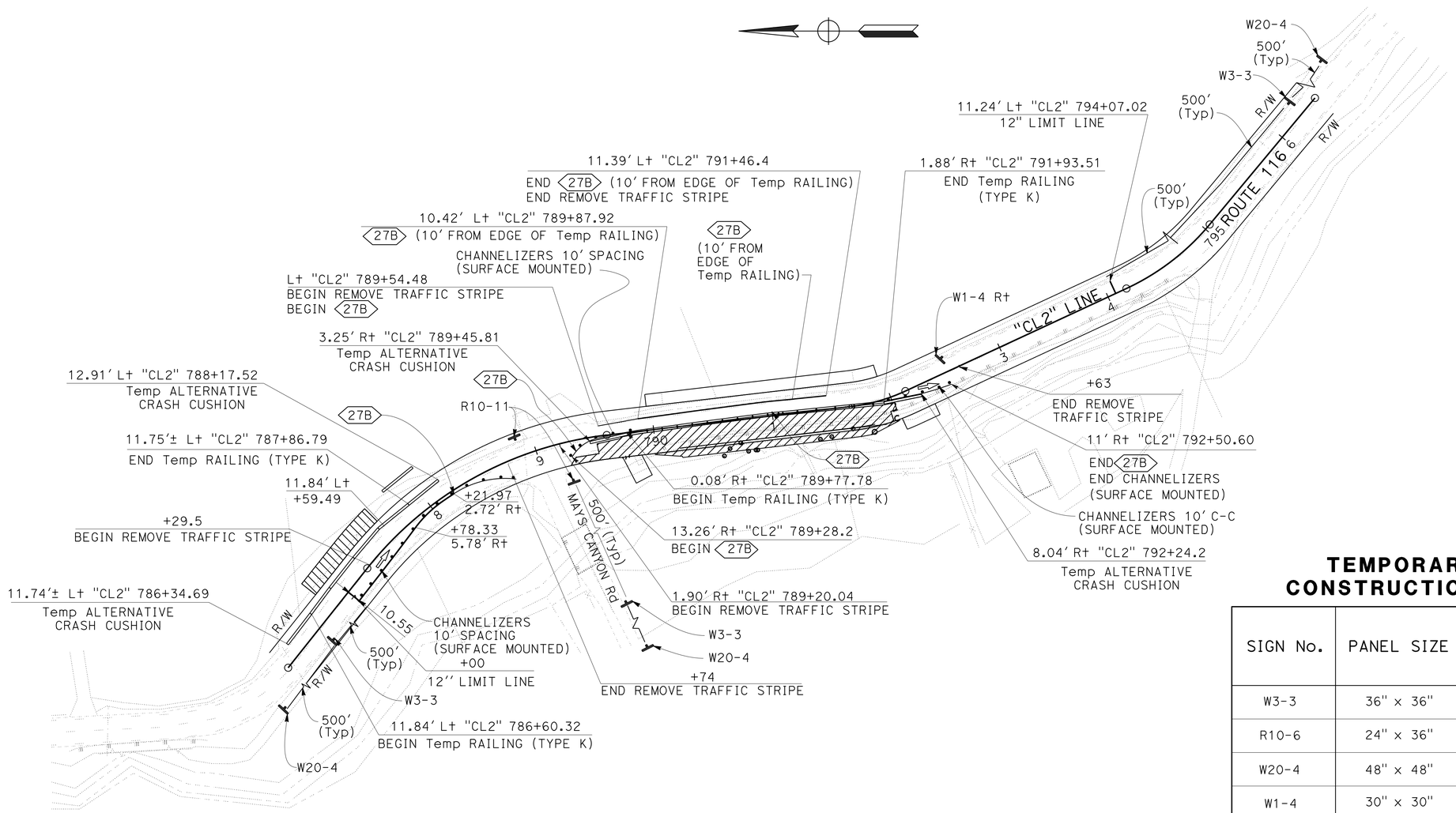

ONE-WAY REVERSING TRAFFIC CONTROL (SIGNALIZED-24/7)

TEMPORARY MOUNTED CONSTRUCTION AREA SIGNS

SIGN No.	PANEL SIZE	NUMBER OF POSTS AND SIZE	NUMBER OF SIGNS
W3-3	36" x 36"	1 - 4" x 6"	3
R10-6	24" x 36"	ON SIGNAL POLE*	4
W20-4	48" x 48"	2 - 4" x 6"	3
W1-4	30" x 30"	1 - 4" x 4"	1
R10-11	24" x 30"	ON SIGNAL POLE	2
R10-4	9" x 12"	ON PPB*	1
R10-24	9" x 15"	ON PPB*	3

*SEE E-SHEETS

TRAFFIC HANDLING PLAN

SCALE: 1" = 50′

APPROVED FOR TRAFFIC HANDLING WORK ONLY

TH-1

STATE OF CALIFORNIA - DEPARTMENT OF TRANSPORTATION
Caltrans
DESIGN

FUNCTIONAL SUPERVISOR: ZIAD ABUBEKR
CALCULATED-DESIGNED BY: JONATHAN LEE
CHECKED BY: RON GESTUVO
REVISED BY: RG
DATE REVISED: 5/1/15

LAST REVISION 05-05-15
DATE PLOTTED => 10-SEP-2015
TIME PLOTTED => 10:15

Dist	COUNTY	ROUTE	POST MILES TOTAL PROJECT	SHEET No.	TOTAL SHEETS
04	Son	116	15.0	11	47

REGISTERED CIVIL ENGINEER 5/26/15 DATE

6-15-15
PLANS APPROVAL DATE

REGISTERED PROFESSIONAL ENGINEER Jonathan C. Lee No. 47520 Exp. 12-31-15 CIVIL STATE OF CALIFORNIA

THE STATE OF CALIFORNIA OR ITS OFFICERS OR AGENTS SHALL NOT BE RESPONSIBLE FOR THE ACCURACY OR COMPLETENESS OF SCANNED COPIES OF THIS PLAN SHEET.

NOTE:

FOR ACCURATE RIGHT OF WAY DATA, CONTACT RIGHT OF WAY ENGINEERING AT THE DISTRICT OFFICE.

NOTE:

1. EP, ETW AND ES CALLOUTS ARE FROM NEAREST EDGE OF TEMPORARY RAILING (TYPE K).

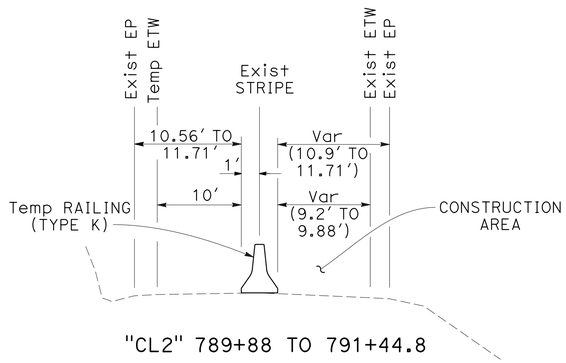

CONSTRUCTION AREA AND REVERSING LANE WIDTH

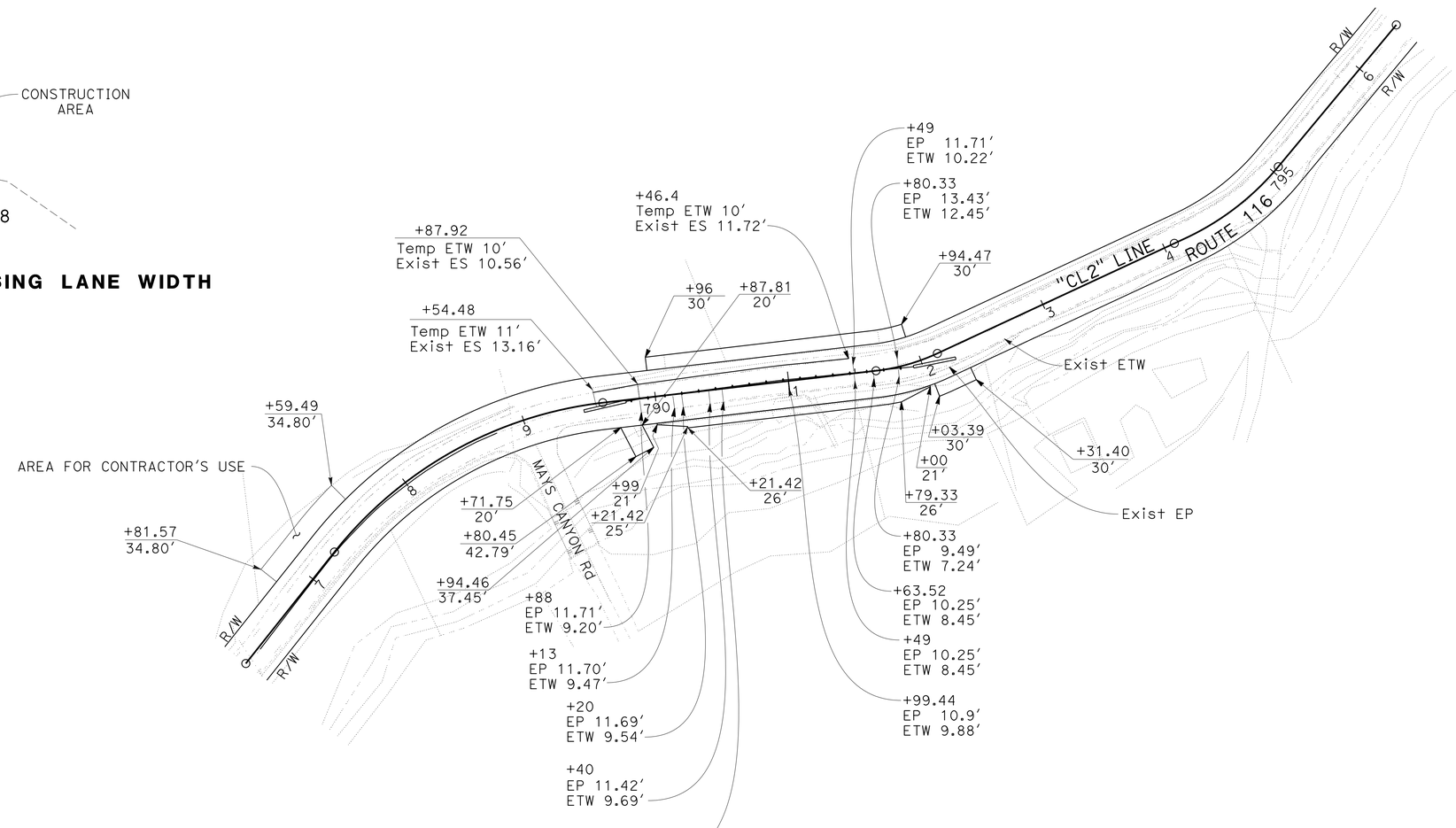

TRAFFIC HANDLING DETAILS

SCALE: 1" = 50′

APPROVED FOR TRAFFIC HANDLING WORK ONLY

THD-1

REVISED BY	DATE REVISED
RG	5/1/15

CALCULATED-DESIGNED BY: RON GESTUVO
CHECKED BY: JONATHAN LEE
FUNCTIONAL SUPERVISOR: ZIAD ABUBEKR

STATE OF CALIFORNIA - DEPARTMENT OF TRANSPORTATION
Caltrans
DESIGN

LAST REVISION 05-05-15
DATE PLOTTED => 10-SEP-2015
TIME PLOTTED => 10:15

Dist	COUNTY	ROUTE	POST MILES TOTAL PROJECT	SHEET No.	TOTAL SHEETS
04	Son	116	15.0	12	47

REGISTERED CIVIL ENGINEER 5/26/15 DATE

6-15-15
PLANS APPROVAL DATE

REGISTERED PROFESSIONAL ENGINEER Jonathan C. Lee No. 47520 Exp. 12-31-15 CIVIL STATE OF CALIFORNIA

THE STATE OF CALIFORNIA OR ITS OFFICERS OR AGENTS SHALL NOT BE RESPONSIBLE FOR THE ACCURACY OR COMPLETENESS OF SCANNED COPIES OF THIS PLAN SHEET.

TEMPORARY PAVEMENT DELINEATION QUANTITIES

STATION	DETAIL No.	TEMPORARY TRAFFIC STRIPE (PAINT)	CHANNELIZERS (SURFACE MOUNTED)	TEMPORARY PAVEMENT MARKING (PAINT)	
				TYPE 1 ARROW (10′)	12" LIMIT LINE
		LF	EA	SQFT	
R+ "CL2" 787+00 TO R+ 788+75.38	27B	169	16		
13.26′ R+ "CL2" 789+28.2 TO 11′ R+ "CL2"792+50.60	27B	327			
13.26′ R+ "CL2" 789+28.2 TO R+ "CL2" 789+77			6		
R+ "CL2" 791+97 TO 11′ R+ "CL2" 792+50.6			4		
L+ "CL2" 789+54.48 TO L+ 791+46.4	27B	193			
R+ "CL2" 787+30				14	
R+ "CL2" 792+24				14	
R+ "CL2" 787+00					22
L+ "CL2" 794+07.02					22
SUBTOTAL		689	26	28	44
TOTAL		689	26	72	

REMOVE TRAFFIC STRIPE QUANTITIES

STATION	REMOVE YELLOW THERMOPLASTIC TRAFFIC STRIPE (HAZARDOUS WASTE)	REMOVE THERMOPLASTIC STRIPE	REMOVE PAVEMENT MARKER
	4" YELLOW	4" WHITE	
	LF		EA
R+ "CL2" 787+29.5 TO 2.15′ R+ "CL2" 788+74	289		12
1.9′ R+ "CL2" 789+20.04 TO "CL2" 792+63	686		28
L+ "CL2" 789+54.48 TO L+ "CL2" 791+46.40		193	
TOTAL	975	193	40

TEMPORARY RAILING (TYPE K)

STATION	LF
11.84′ L+ "CL2" 786+60.32 TO 11.75′ L+ "CL2" 787+86.79	127
0.08′ R+ "CL2" 789+77.78 TO 1.880′ R+ "CL2" 791+93.51	216
TOTAL	343

TEMPORARY ALTERNATIVE CRASH CUSHION

STATION	EA
11.74′ L+ "CL2" 786+34.69	1
12.91′ L+ "CL2" 788+17.52	1
3.25′ R+ "CL2" 789+45.81	1
8.04′ R+ "CL2" 792+24.20	1
TOTAL	4

TRAFFIC HANDLING QUANTITIES

THQ-1

STATE OF CALIFORNIA - DEPARTMENT OF TRANSPORTATION
Caltrans DESIGN

FUNCTIONAL SUPERVISOR: ZIAD ABUBEKR
CALCULATED-DESIGNED BY: RON GESTUVO
CHECKED BY: JONATHAN LEE
REVISED BY: RG
DATE REVISED: 5/20/15

LAST REVISION 05-25-15 | DATE PLOTTED => 10-SEP-2015 | TIME PLOTTED => 10:15

Dist	COUNTY	ROUTE	POST MILES TOTAL PROJECT	SHEET No.	TOTAL SHEETS
04	Son	116	15.0	13	47

REGISTERED CIVIL ENGINEER 5/27/15 DATE

6-15-15
PLANS APPROVAL DATE

REGISTERED PROFESSIONAL ENGINEER Phillipe Van No. 53727 Exp. 6-30-17 CIVIL STATE OF CALIFORNIA

THE STATE OF CALIFORNIA OR ITS OFFICERS OR AGENTS SHALL NOT BE RESPONSIBLE FOR THE ACCURACY OR COMPLETENESS OF SCANNED COPIES OF THIS PLAN SHEET.

NOTE:

FOR ACCURATE RIGHT OF WAY DATA, CONTACT RIGHT OF WAY ENGINEERING AT THE DISTRICT OFFICE.

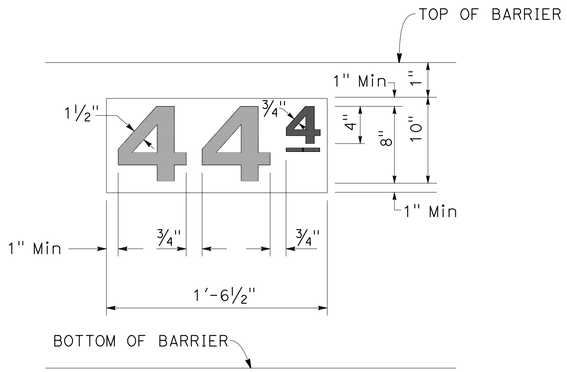

CENTER BLACK NUMBERS IN WHITE RECTANGLE

CONCRETE BARRIER POST MILE MARKING

NOTES:

1. POST MILE MARKING 15.0 SHALL BE PAINTED ON ROADSIDE OF BARRIER.
2. WHOLE NUMBERS SHALL BE PAINTED USING A STENCIL SIZE DESIGNATION OF "8D", TENTHS SHALL BE PAINTED USING A STENCIL SIZE DESIGNATION OF "4D".

LEGEND:

IF GUARDRAIL DELINEATOR (TYPE F)

(No.) CURVE ALIGNMENT DATA

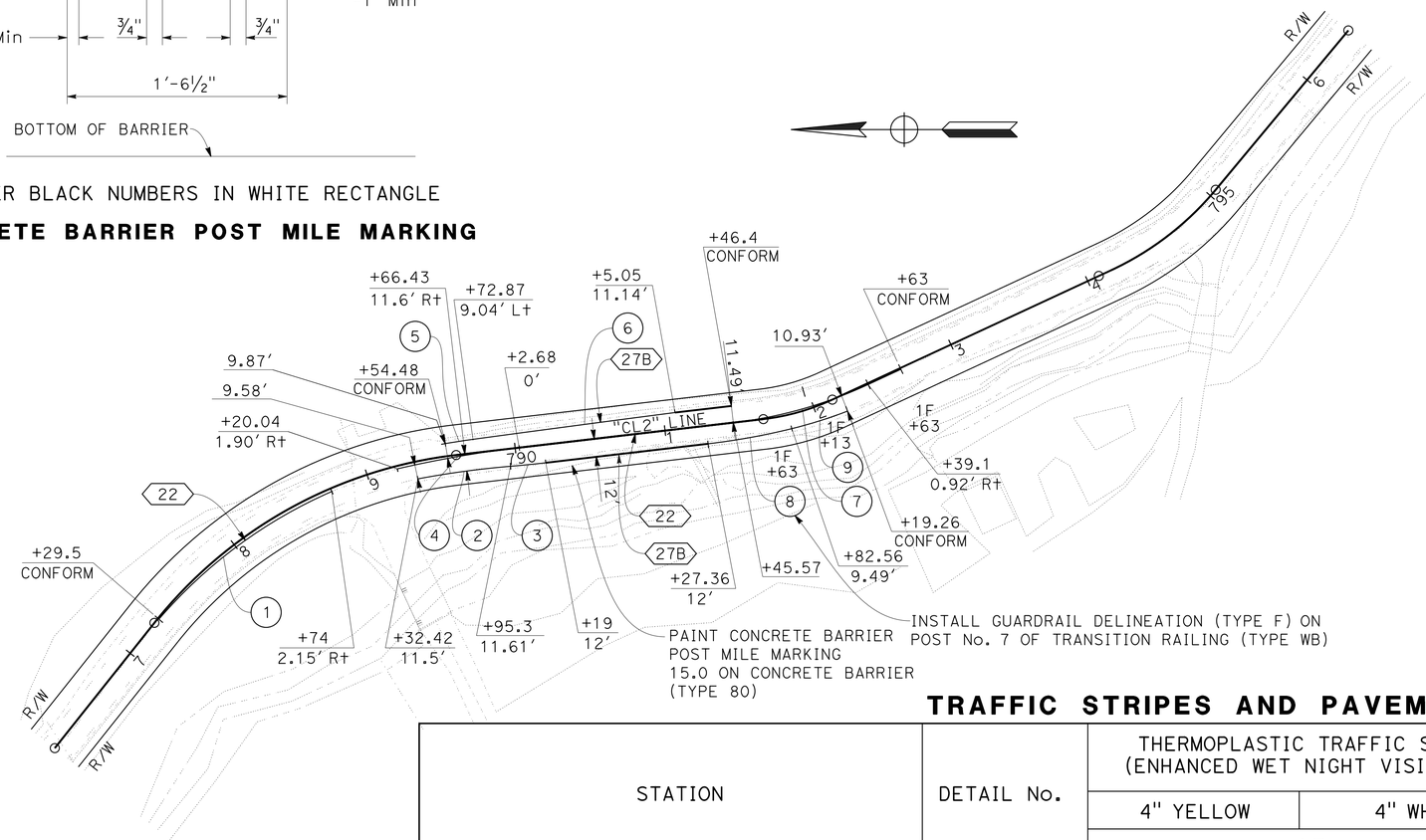

CURVE DATA

No. ⊞	R	Δ	T	L
1	320′	25° 45′ 44"	73.08′	143.69′
2	594′	05° 59′ 06"	31.05′	62.04′
3	700′	01° 55′ 15"	11.74′	23.47′
4	735′	06° 23′ 54"	41.08′	82.08′
5	494′	02° 28′ 24"	10.67′	21.33′
6	23089′	00° 20′ 07"	67.53′	135.07′
7	293′	18° 14′ 00"	47.05′	93.30′
8	450′	07° 11′ 08"	28.23′	56.38′
9	304′	07° 18′ 28"	19.42′	38.78′

TRAFFIC STRIPES AND PAVEMENT MARKERS

STATION	DETAIL No.	THERMOPLASTIC TRAFFIC STRIPE (ENHANCED WET NIGHT VISIBILITY)		PAVEMENT MARKER (RETROREFLECTIVE) TYPE D	DELINEATOR (CLASS 1) TYPE F	PAINT POST MILE MARKERS
		4" YELLOW	4" WHITE			
		LF		EA		SQFT
R+ "CL2" 787+29.50 TO 2.15′ R+ "CL2" 788+74	22	289		12		
1.9′ R+ "CL2" 789+20.04 TO "CL2" 792+63	22	686		28		
11.5′ R+ "CL2" 789+32.42 TO R+ "CL2" 792+19.26	27B		289			
L+ "CL2" 789+54.48 TO L+ "CL2" 791+46.4	27B		193			
R+ "CL2" 791+63					1	
R+ "CL2" 792+13					1	
R+ "CL2" 792+63					1	
R+ "CL2" 790+62.58						2
SUBTOTAL		975	482	40	3	2
TOTAL		1457		40	3	2

PAVEMENT DELINEATION PLAN

SCALE: 1" = 50′

PD-1

APPROVED FOR PAVEMENT DELINEATION WORK ONLY

STATE OF CALIFORNIA - DEPARTMENT OF TRANSPORTATION

Caltrans

TRAFFIC

FUNCTIONAL SUPERVISOR: ROLAND AU-YEUNG

CALCULATED-DESIGNED BY: RON GESTUVO

CHECKED BY: JONATHAN LEE

REVISED BY: RG

DATE REVISED: 5/1/15

LAST REVISION 05-05-15

DATE PLOTTED => 10-SEP-2015
TIME PLOTTED => 10:15

Dist	COUNTY	ROUTE	POST MILES TOTAL PROJECT	SHEET No.	TOTAL SHEETS
04	Son	116	15.0	14	47

REGISTERED CIVIL ENGINEER 5/26/15 DATE

6-15-15
PLANS APPROVAL DATE

REGISTERED PROFESSIONAL ENGINEER Jonathan C. Lee No. 47520 Exp. 12-31-15 CIVIL STATE OF CALIFORNIA

THE STATE OF CALIFORNIA OR ITS OFFICERS OR AGENTS SHALL NOT BE RESPONSIBLE FOR THE ACCURACY OR COMPLETENESS OF SCANNED COPIES OF THIS PLAN SHEET.

GUARDRAIL AND TRANSITION RAILING

STATION	RECONSTRUCT GUARDRAIL (WOOD POST)	REMOVE GUARDRAIL (N)	TRANSITION RAILING (TYPE WB)
	LF		EA
14' R+ "CL2" 791+60.00			1
11.56' R+ "CL2" 791+82.4 TO 13.38' R+ "CL2" 792+11.31	25	25	
TOTAL	25	25	1

(N) NOT A SEPARATE PAY ITEM, FOR INFORMATION ONLY

TEMPORARY FENCE AND GATE

SHEET No.	STATION	TEMPORARY FENCE (TYPE CL-6)	4' TEMPORARY CL GATE (TYPE CL-6)
		LF	EA
E-2 AND E-6	R+ "CL2" 789+53.17 TO R+ "CL2" 791+93	53	1
TOTAL		53	1

FENCE

STATION	REMOVE FENCE (TYPE BW)	TYPE BW 6-STRAND METAL POST
	LF	
25.4' L+ "CL2" 786+81.56 TO 25.8' L+ "CL2" 787+59.5	83	83
TOTAL	83	83

EARTHWORK QUANTITIES

STATION	ROADWAY EXCAVATION	EMBANKMENT (N)
	CY	
R+ "CL2" 789+53.17 TO R+ "CL2" 791+93	101.4	
R+ "CL2" 790+05 TO R+ "CL2" 790+20		0.2
R+ "CL2" 790+20 TO R+ "CL2" 791+80		20.4
R+ "CL2" 790+80.33 TO R+ "CL2" 791+93		0.2
TOTAL	101.4	20.8

(N) NOT A SEPARATE PAY ITEM, FOR INFORMATION ONLY

ROCK SLOPE PROTECTION

STATION	No. 3 METHOD B	RSP FABRIC CLASS 8
	CY	SQYD
17.50' R+ "CL2" 790+02 TO 17.50' R+ "CL2" 790+06	0.4	4
TOTAL	0.4	4

TEMPORARY FENCE

STATION	TEMPORARY FENCE (TYPE ESA)	TEMPORARY REINFORCED SILT FENCE (TYPE 1)
	LF	
20' L+ "CL2" 786+19.62 TO 20' L+ 788+95.81	317	
20' R+ "CL2" 786+97 TO 75.24' R+ 788+96.2		231
20' L+ "CL2" 789+46.67 TO 17.85' R+ 794+10	464	
69.8' R+ "CL2" 789+26.51 TO 18.57' R+ 794+10		614
TOTAL	781	845

ROADWAY QUANTITIES

STATION	HMA (TYPE A)	TACK COAT	SHOULDER BACKING	GEOSYNTHETIC PAVEMENT INTERLAYER (PAVING FABRIC)
	TON			SQYD
R+ "CL2" 789+53.17 TO 791+93	73	0.1		
R+ "CL2" 789+53.17 TO 790+05			2	
R+ "CL2" 790+20 TO 791+60				63
TOTAL	73	0.1	2	63

REMOVE GUARDRAIL

STATION	LF
R+ "CL2" 790+05 TO R+ 791+82.4	183
TOTAL	183

TYPE SMART SCI-70GM CRASH CUSHION

STATION	EA
13.5' R+ "CL2" 790+05	1
TOTAL	1

MINOR CONCRETE

STATION	VEGETATION CONTROL	MISCELLANEOUS CONSTRUCTION
	SQYD	CY
13.86' R+ "CL2" 791+60 TO 11.69' R+ "CL2" 791+78.46	11.6	
17' R+ "CL2" 790+40 TO 17' R+ "CL2" 791+60		0.4
TOTAL	11.6	0.4

TREATED WOOD WASTE

STATION	LBS
R+ "CL2" 790+05 TO R+ 792+11.31	3000
TOTAL	3000

SUMMARY OF QUANTITIES

Q-1

STATE OF CALIFORNIA - DEPARTMENT OF TRANSPORTATION
DESIGN
Caltrans

FUNCTIONAL SUPERVISOR: ZIAD ABUBEKR
CALCULATED-DESIGNED BY: RON GESTUVO
CHECKED BY: JONATHAN LEE
REVISED BY: RG
DATE REVISED: 5/20/15

LAST REVISION 06-15-15
DATE PLOTTED => 10-SEP-2015
TIME PLOTTED => 10:15

Dist	COUNTY	ROUTE	POST MILES TOTAL PROJECT	SHEET No.	TOTAL SHEETS
04	Son	116	15.0	15	47

Elaine Wong 5/26/15
REGISTERED ELECTRICAL ENGINEER DATE

6-15-15
PLANS APPROVAL DATE

REGISTERED PROFESSIONAL ENGINEER Elaine T. Wong No. 13753 Exp. 6-30-17 ELECTRICAL STATE OF CALIFORNIA

THE STATE OF CALIFORNIA OR ITS OFFICERS OR AGENTS SHALL NOT BE RESPONSIBLE FOR THE ACCURACY OR COMPLETENESS OF SCANNED COPIES OF THIS PLAN SHEET.

INDEX TO ELECTRICAL PLANS:

SHEET No.	TITLE
E-1	INDEX, NOTES, LEGEND, SYMBOLS AND ABBREVIATIONS
E-2 TO E-5	TEMPORARY SIGNAL SYSTEM
E-6 TO E-7	ELECTRICAL DETAILS
E-8	ELECTRICAL QUANTITIES

SYMBOLS AND ABBREVIATIONS:

(ALSO SEE RSP ES-1A, RSP ES-1B, RSP ES-1C)

PROPOSED

- WOOD POLE WITH SIGNAL HEAD, SEE DETAIL 3 ON SHEET E-6
- TEMPORARY ELECTROLIER WITH 200 W HPS LUMINAIRE (ON MAST ARM) MOUNTED ON A WOOD POLE SEE DETAIL 2 ON SHEET E-6
- Y / Y — ADVANCE FLASHING BEACON WITH A W3-3 SIGN AND SIGN LIGHTING MOUNTED ON A WOOD POLE SEE DETAIL 1 ON SHEET E-6
- G — GENERATOR WITH A BACK-UP GENERATOR
- FUEL — FUEL TANK
- TEMPORARY CHAIN LINK FENCE AND GATE
- F — FUEL LINE
- OH — OVERHEAD LINES WITH 5/8", 7 STRAND GALVANIZED MESSENGER WIRE, CONDUCTORS AS NOTED
- DB — DIRECT BURIAL CABLE
- UPS — UNINTERRUPTIBLE POWER SUPPLY

NOTES:

1. THE LOWEST SAG POINT OF THE MESSENGER WIRE MUST BE 25′ MINIMUM CLEARANCE FRON FINISHED GRADE/ROADWAY.
2. OVERHEAD CONDUCTORS MUST BE TIED ON MESSENGER WIRE AT EVERY 3′ MAXIMUM WITH SELF-CLINGING NYLON TIES.
3. OVERHEAD ENTRANCE CONDUIT FITTING SHALL BE INSTALLED IN SUCH A WAY SO THAT RAINWATER SHALL NOT SEEP INTO THE ELECTRICAL EQUIPMENT THROUGH THE ENTRANCE FITTING FROM A DRIP LOOP AT THE ENTRANCE FITTING.
4. ESTABLISH CONTINUOUS GROUND WITH THE SYSTEM GROUND TO ALL METAL PARTS IN THE SYSTEM BY BONDING JUMPERS AND CONDUITS.
5. THE SIGNS SHOWN ARE "CONSTRUCTION AREA SIGN". SEE SHEET TH-1.
6. PROVIDE GUY WIRE, GUY GUARDS AND ANCHOR AS REQUIRED.
7. A GROUNDING ELECTRODE MUST BE INSTALLED IN THE PULL BOX ADJACENT TO WOOD POLES AND BOND TO RIGID METAL CONDUIT.
8. MAXIMUM SPACING BETWEEEN WOOD POLES WITH OVERHEAD CONDUCTORS MUST NOT EXCEED 200′.

LEGEND:

1. INSTALL DEPARTMENT-FURNISHED MODEL 2070 CONTROLLER ASSEMBLY WITH MODEL 332 CABINET. SEE TEMPORARY FOUNDATION PLATFORM. DETAIL 5 ON SHEET E-6.
2. INSTALL 4′ TEMPORARY GATE (TYPE CL-6), 53′ TEMPORARY FENCE (TYPE CL-6), PART OF ROADWAY PAY ITEM. SEE DETAIL 4 ON SHEET E-6.
3. INSTALL TYPE B PBA WITH SIGN FOR BICYCLIST, SEE DETAIL 6 FOR SIGNAL WOOD POLE ON SHEET E-6.
4. INSTALL TYPE B PBA WITH SIGN FOR BICYCLIST. SEE DETAIL 9 FOR SIGNAL WOOD POLE ON SHEET E-7, EXCEPT USING SV-2-T MOUNTING FOR Ø1 AND Ø3.
5. INSTALL DETAIL 3 FOR SIGNAL WOOD POLE ON SHEET E-6.
6. INSTALL TYPE B PBA WITH SIGN FOR BICYCLIST, SEE DETAIL 6 FOR SIGNAL WOOD POLE ON SHEET E-6 EXCEPT USING SV-2-T MOUNTING FOR Ø1 AND Ø3.
7. INSTALL 2"C, 3#4, 1#8 (GROUNDING).
8. INSTALL 2"C, 2#6 (120 V, SERVICE TO CONTROLLER), 2#8 (240 V, LIGHTING), 2#8 (120 V, NB FB), 2#8 (120 V, SB FB).
9. INSTALL 2"C, 2#6 (120 V, SERVICE TO CONTROLLER), 4#10 (120 V, SIGNAL NEUTRAL) 32#12 (12-Ø1, Ø2, Ø3, Ø4, 8-PBA (Ø1, Ø2, Ø3, Ø4), 12 SPARES), 5 DLC.
10. INSTALL 2#8 (240 V, LIGHTING), 2#8 (120 V, NB FB), 3#10 (120 V SIGNAL NEUTRAL), 22#12 (9-Ø1, Ø2, Ø3, Ø4-PBA (Ø1, Ø2), 9 SPARES), 3 DLC.
11. INSTALL 2#8 (240 V, LIGHTING), 2#8 (120 V, SB FB), 4#10 (120 V SIGNAL NEUTRAL), 28#12 (12-Ø1, Ø2, Ø3, Ø4 4-PBA (Ø3, Ø4), 12 SPARES), 2 DLC.
12. INSTALL 2#8 (240 V, LIGHTING), 2#8 (120 V, SB FB), 3#10 (120 V SIGNAL NEUTRAL), 22#12 (9-Ø1, Ø3, Ø4 4-PBA (Ø3, Ø4), 9 SPARES), 2 DLC.
13. INSTALL 2#8 (240 V, LIGHTING), 2#8 (120 V, SB FB), 2#10 (120 V SIGNAL NEUTRAL), 14#12 (6-Ø1, Ø4, 2-PBA (Ø4), 6 SPARES), 2 DLC.
14. INSTALL 2#8 (240 V, LIGHTING), 2#8 (120 V, SB FB), 1#10 (120 V SIGNAL NEUTRAL), 8#12 (3-Ø4, 2-PBA (Ø4), 3 SPARES), 2 DLC.
15. INSTALL 6#14,(3-Ø4, 3 SPARES), 1#10 (120 V, SIGNAL NEUTRAL).
16. INSTALL 2#8, (120 V, SB FB), 2 DLC.
17. INSTALL 2#8, (120 V, SB FB), 1 DLC.
18. INSTALL 2#8, (120 V, SB FB).
19. INSTALL 2#8 (240 V, LIGHTING), 3#10 (120 V SIGNAL NEUTRAL), 20#12 (9-Ø1, Ø2, Ø3, 2-PBA (Ø1), 9 SPARES), 1 DLC.
20. INSTALL 2#8 (240 V, LIGHTING), 2#10 (120 V SIGNAL NEUTRAL), 14#12 (6-Ø1, Ø3, 2-PBA(Ø1), 6 SPARES), 1 DLC.
21. INSTALL 2#8, (120 V, NB FB), 2 DLC.
22. INSTALL 2#8, (120 V, NB FB), 1 DLC.
23. INSTALL 2#8, (120 V, NB FB).
24. INSTALL 5 TURNS TYPE D LOOPS.

INDEX, NOTES, LEGEND, SYMBOLS AND ABBREVIATIONS

E-1

STATE OF CALIFORNIA - DEPARTMENT OF TRANSPORTATION
Caltrans
ELECTRICAL

FUNCTIONAL SUPERVISOR: BEHZAD GOLEMOHAMMADI
CALCULATED-DESIGNED BY: WILLIAM Y. WONG
CHECKED BY: ELAINE WONG
REVISED BY: WW
DATE REVISED: 4/27/15

LAST REVISION 04-27-15 | DATE PLOTTED => 10-SEP-2015 | TIME PLOTTED => 10:15

Dist	COUNTY	ROUTE	POST MILES TOTAL PROJECT	SHEET No.	TOTAL SHEETS
04	Son	116	15.0	16	47

Elaine Wong 5/26/15
REGISTERED ELECTRICAL ENGINEER DATE

6-15-15
PLANS APPROVAL DATE

REGISTERED PROFESSIONAL ENGINEER
Elaine T. Wong
No. 13753
Exp. 6-30-17
ELECTRICAL
STATE OF CALIFORNIA

THE STATE OF CALIFORNIA OR ITS OFFICERS OR AGENTS SHALL NOT BE RESPONSIBLE FOR THE ACCURACY OR COMPLETENESS OF SCANNED COPIES OF THIS PLAN SHEET.

NOTE:

FOR ACCURATE RIGHT OF WAY DATA, CONTACT RIGHT OF WAY ENGINEERING AT THE DISTRICT OFFICE.

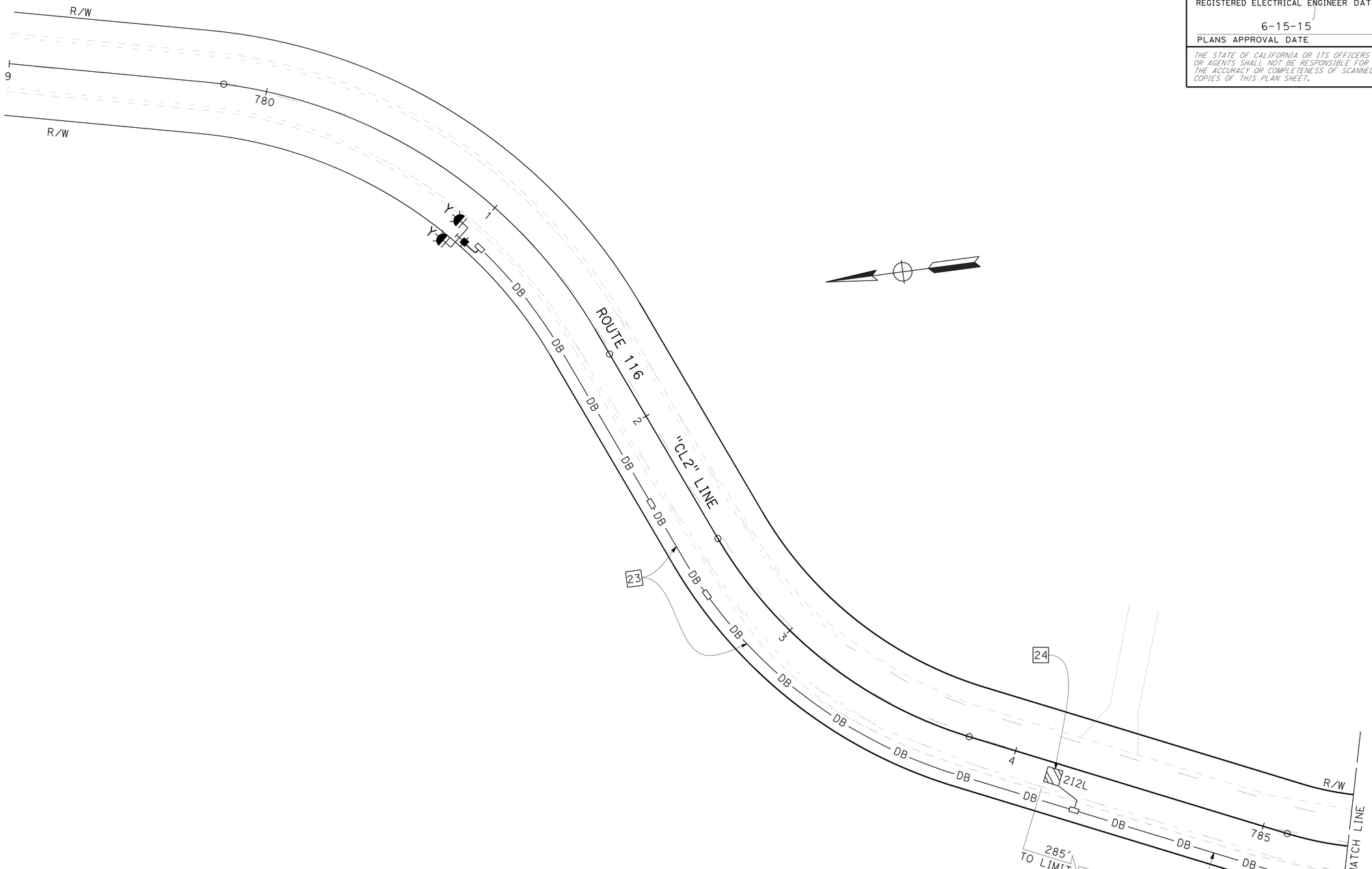

TEMPORARY SIGNAL SYSTEM

SCALE: 1" = 20'

APPROVED FOR ELECTRICAL WORK ONLY

FOR NOTES, ABBREVIATIONS AND LEGEND, SEE SHEET E-1

E-2

STATE OF CALIFORNIA - DEPARTMENT OF TRANSPORTATION
Caltrans®
ELECTRICAL

FUNCTIONAL SUPERVISOR: BEHZAD GOLEMOHAMMADI
CALCULATED-DESIGNED BY: WILLIAM Y. WONG
CHECKED BY: ELAINE WONG
REVISED BY: WW
DATE REVISED: 4/27/15

LAST REVISION 04-27-15 | DATE PLOTTED => 10-SEP-2015 | TIME PLOTTED => 10:15

Dist	COUNTY	ROUTE	POST MILES TOTAL PROJECT	SHEET No.	TOTAL SHEETS
04	Son	116	15.0	17	47

REGISTERED ELECTRICAL ENGINEER DATE 5/26/15

6-15-15
PLANS APPROVAL DATE

REGISTERED PROFESSIONAL ENGINEER Elaine T. Wong No. 13753 Exp. 6-30-17 ELECTRICAL STATE OF CALIFORNIA

THE STATE OF CALIFORNIA OR ITS OFFICERS OR AGENTS SHALL NOT BE RESPONSIBLE FOR THE ACCURACY OR COMPLETENESS OF SCANNED COPIES OF THIS PLAN SHEET.

NOTE:

FOR ACCURATE RIGHT OF WAY DATA, CONTACT RIGHT OF WAY ENGINEERING AT THE DISTRICT OFFICE.

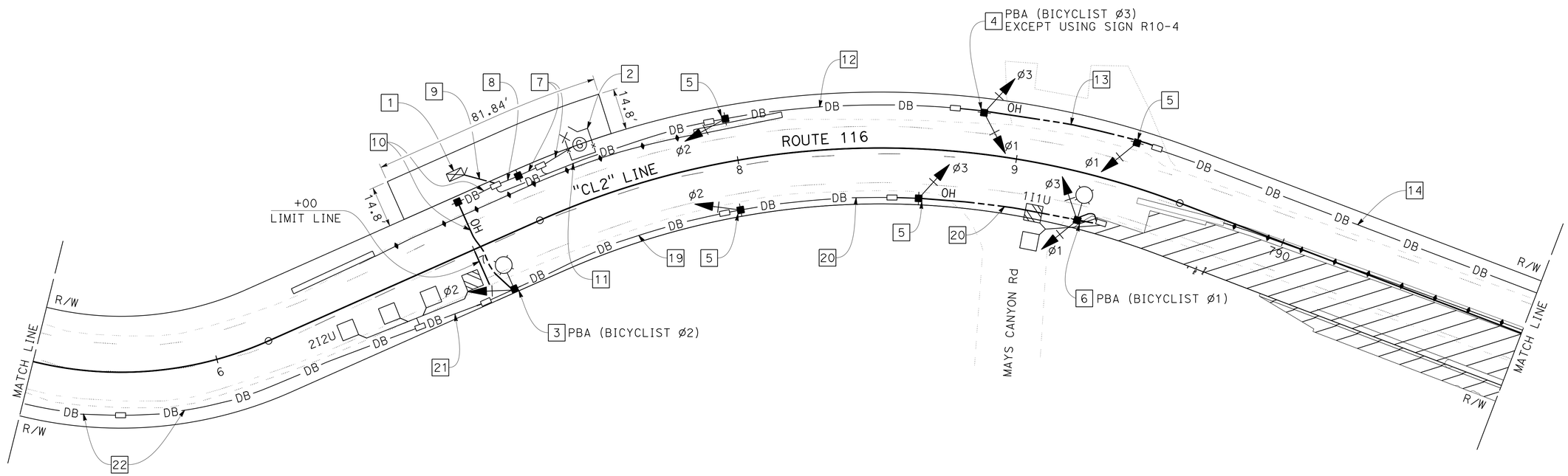

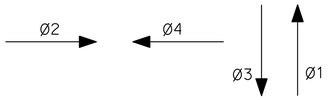

TRAFFIC PHASE DIAGRAM

STEADY DEMAND SEQUENCE

TEMPORARY SIGNAL SYSTEM

SCALE: 1" = 20'

APPROVED FOR ELECTRICAL WORK ONLY

FOR NOTES, ABBREVIATIONS AND LEGEND, SEE SHEET E-1

E-3

STATE OF CALIFORNIA - DEPARTMENT OF TRANSPORTATION

Caltrans

ELECTRICAL

FUNCTIONAL SUPERVISOR: BEHZAD GOLEMOHAMMADI

CALCULATED-DESIGNED BY: WILLIAM Y. WONG

CHECKED BY: ELAINE WONG

REVISED BY: WW

DATE REVISED: 4/27/15

LAST REVISION DATE PLOTTED => 10-SEP-2015
TIME PLOTTED => 10:15

05-05-15

BORDER LAST REVISED 7/2/2010

USERNAME => s141070
DGN FILE => 0400001215ua003.dgn

RELATIVE BORDER SCALE IS IN INCHES 0 1 2 3

UNIT 0751

PROJECT NUMBER & PHASE 04000012151

Dist	COUNTY	ROUTE	POST MILES TOTAL PROJECT	SHEET No.	TOTAL SHEETS
04	Son	116	15.0	18	47

Elaine Wong 5/26/15
REGISTERED ELECTRICAL ENGINEER DATE

6-15-15
PLANS APPROVAL DATE

REGISTERED PROFESSIONAL ENGINEER
Elaine T. Wong
No. 13753
Exp. 6-30-17
ELECTRICAL
STATE OF CALIFORNIA

THE STATE OF CALIFORNIA OR ITS OFFICERS OR AGENTS SHALL NOT BE RESPONSIBLE FOR THE ACCURACY OR COMPLETENESS OF SCANNED COPIES OF THIS PLAN SHEET.

NOTE:

FOR ACCURATE RIGHT OF WAY DATA, CONTACT
RIGHT OF WAY ENGINEERING AT THE DISTRICT OFFICE.

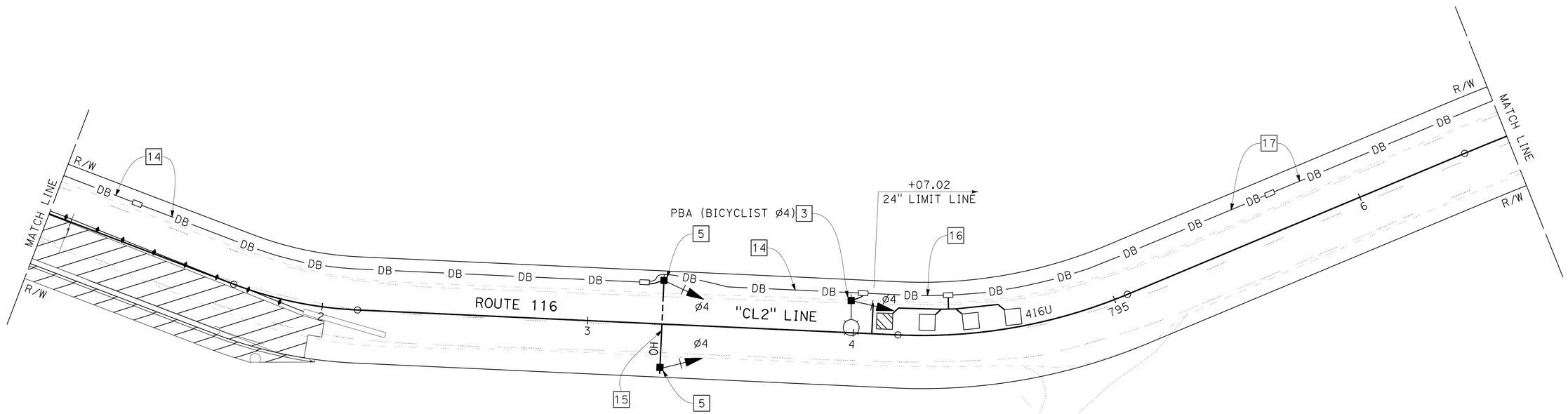

TEMPORARY SIGNAL SYSTEM

SCALE: 1" = 20'

APPROVED FOR ELECTRICAL WORK ONLY

FOR NOTES, ABBREVIATIONS AND LEGEND, SEE SHEET E-1

E-4

CALCULATED-DESIGNED BY	WILLIAM Y. WONG	REVISED BY	WW
CHECKED BY	ELAINE WONG	DATE REVISED	4/27/15
FUNCTIONAL SUPERVISOR	BEHZAD GOLEMOHAMMADI		

STATE OF CALIFORNIA - DEPARTMENT OF TRANSPORTATION
Caltrans
ELECTRICAL

LAST REVISION 04-27-15 | DATE PLOTTED => 10-SEP-2015 | TIME PLOTTED => 10:15

Dist	COUNTY	ROUTE	POST MILES TOTAL PROJECT	SHEET No.	TOTAL SHEETS
04	Son	116	15.0	19	47

Elaine Wong 5/26/15
REGISTERED ELECTRICAL ENGINEER DATE

6-15-15
PLANS APPROVAL DATE

REGISTERED PROFESSIONAL ENGINEER
Elaine T. Wong
No. 13753
Exp. 6-30-17
ELECTRICAL
STATE OF CALIFORNIA

THE STATE OF CALIFORNIA OR ITS OFFICERS OR AGENTS SHALL NOT BE RESPONSIBLE FOR THE ACCURACY OR COMPLETENESS OF SCANNED COPIES OF THIS PLAN SHEET.

NOTE:

FOR ACCURATE RIGHT OF WAY DATA, CONTACT
RIGHT OF WAY ENGINEERING AT THE DISTRICT OFFICE.

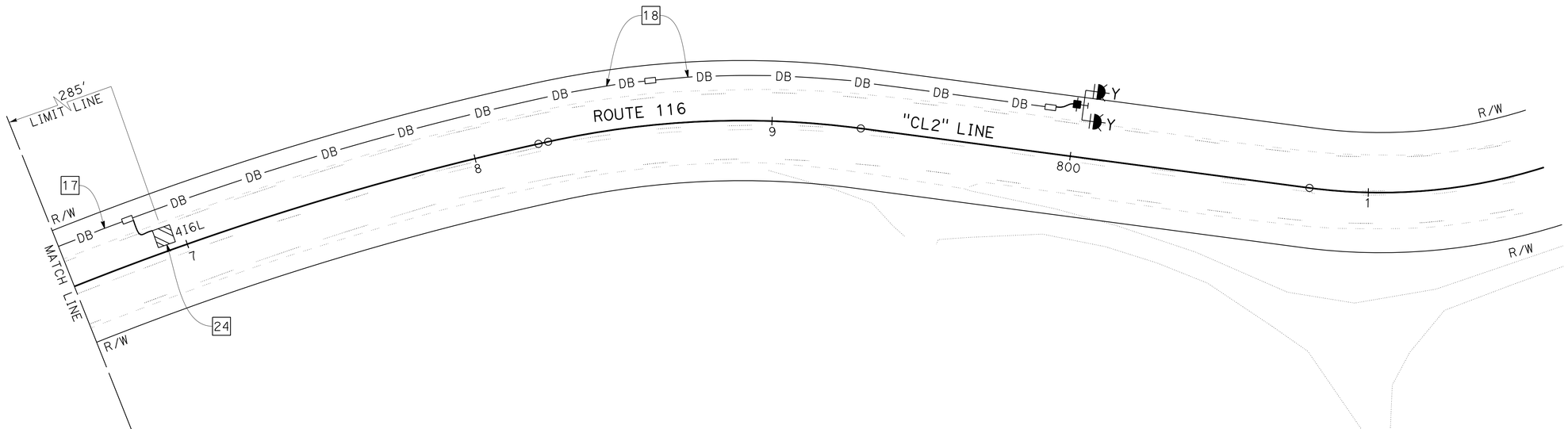

TEMPORARY SIGNAL SYSTEM

SCALE: 1" = 20'

APPROVED FOR ELECTRICAL WORK ONLY

FOR NOTES, ABBREVIATIONS AND LEGEND, SEE SHEET E-1

E-5

REVISED BY	WW
DATE REVISED	4/27/15
CALCULATED-DESIGNED BY	WILLIAM Y. WONG
CHECKED BY	ELAINE WONG
FUNCTIONAL SUPERVISOR	BEHZAD GOLEMOHAMMADI

STATE OF CALIFORNIA - DEPARTMENT OF TRANSPORTATION
Caltrans
ELECTRICAL

LAST REVISION 04-27-15
DATE PLOTTED => 10-SEP-2015
TIME PLOTTED => 10:15

Dist	COUNTY	ROUTE	POST MILES TOTAL PROJECT	SHEET No.	TOTAL SHEETS
04	Son	116	15.0	20	47

Elaine Wong 5/26/15
REGISTERED ELECTRICAL ENGINEER DATE

6-15-15
PLANS APPROVAL DATE

REGISTERED PROFESSIONAL ENGINEER Elaine T. Wong No. 13753 Exp. 6-30-17 ELECTRICAL STATE OF CALIFORNIA

THE STATE OF CALIFORNIA OR ITS OFFICERS OR AGENTS SHALL NOT BE RESPONSIBLE FOR THE ACCURACY OR COMPLETENESS OF SCANNED COPIES OF THIS PLAN SHEET.

NOTE:

1. FOR DETAILS, REFER TO STRUCTURAL SHEETS.

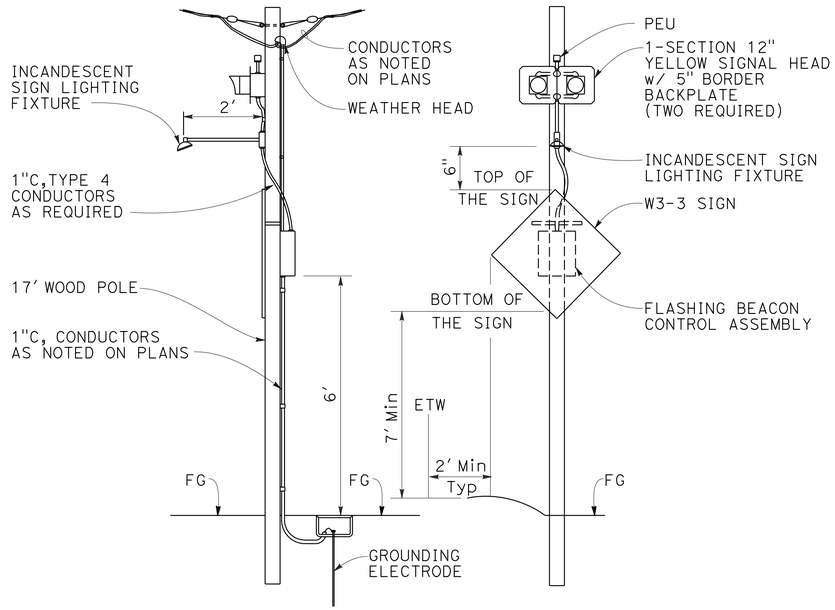

DETAIL 1
TEMPORARY FLASHING BEACON INSTALLATION

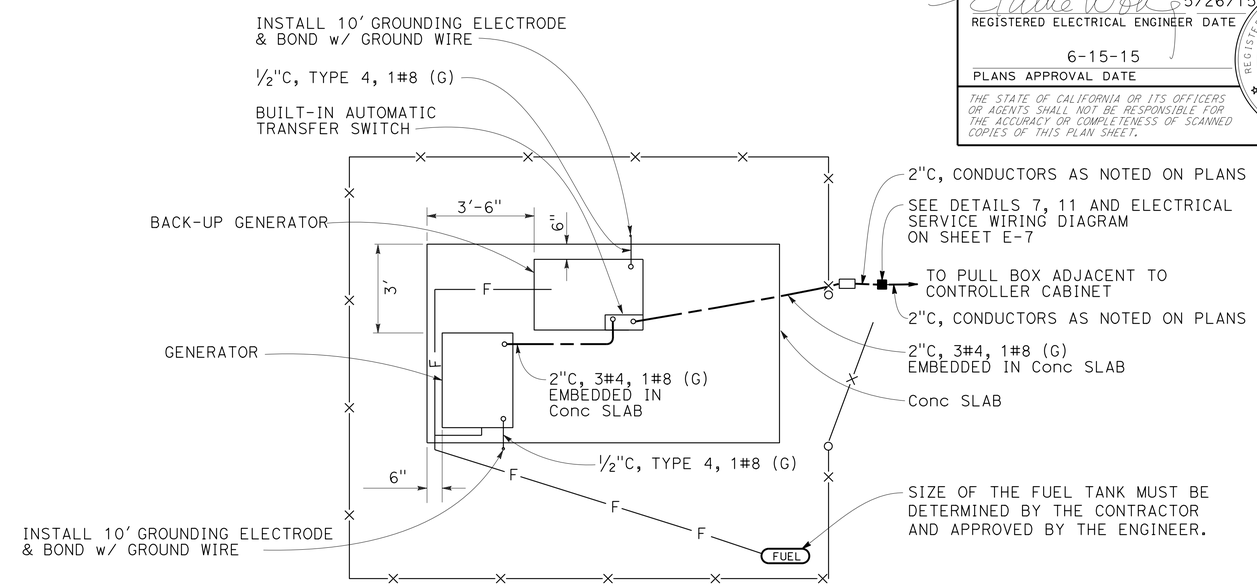

DETAIL 4
GENERATOR WITH BACK-UP GENERATOR

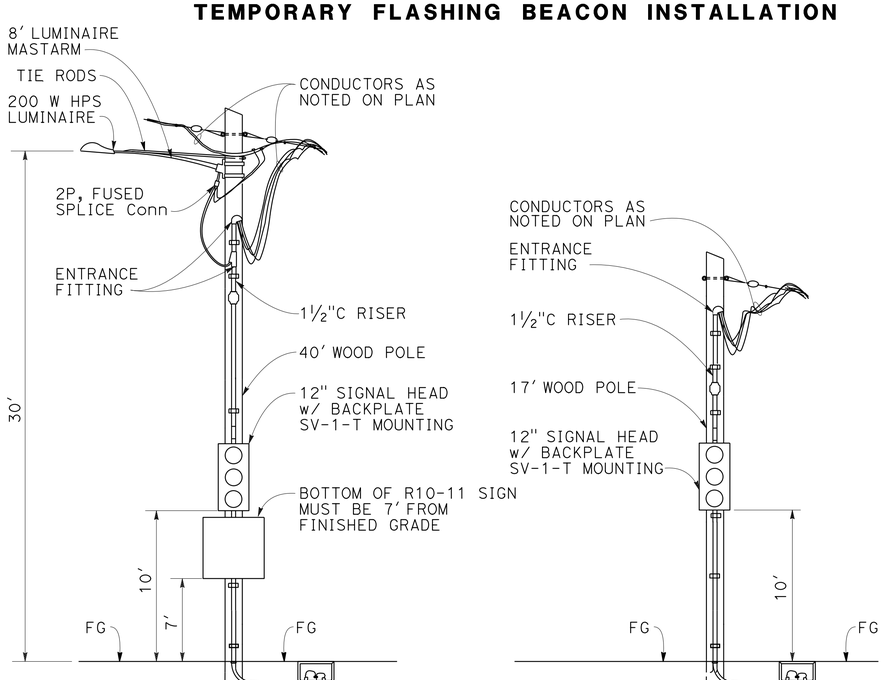

DETAIL 2
TEMPORARY SIGNAL AND LIGHTING INSTALLATION

DETAIL 3

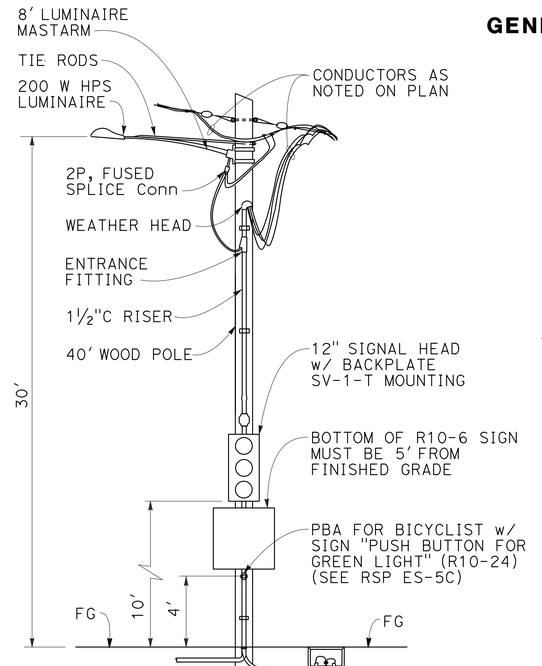

DETAIL 6
TEMPORARY SIGNAL INSTALLATION

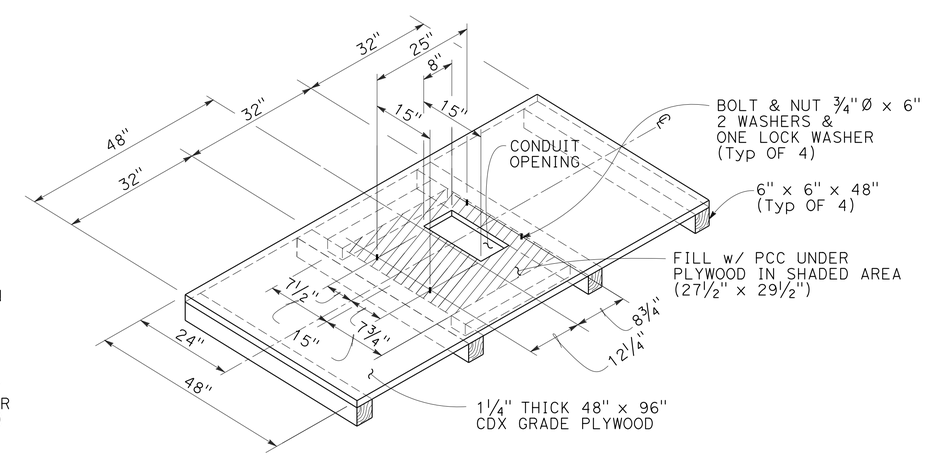

DETAIL 5
TEMPORARY MODEL 332 CABINET FOUNDATION PLATFORM

ELECTRICAL DETAILS

NO SCALE

E-6

REVISED BY	DATE REVISED
WW	4/27/15

CALCULATED-DESIGNED BY: WILLIAM Y. WONG
CHECKED BY: ELAINE WONG
FUNCTIONAL SUPERVISOR: BEHZAD GOLEMOHAMMADI

STATE OF CALIFORNIA - DEPARTMENT OF TRANSPORTATION
Caltrans
ELECTRICAL

LAST REVISION 04-27-15 | DATE PLOTTED => 10-SEP-2015 | TIME PLOTTED => 10:15

Dist	COUNTY	ROUTE	POST MILES TOTAL PROJECT	SHEET No.	TOTAL SHEETS
04	Son	116	15.0	21	47

Elaine Wong 5/26/15
REGISTERED ELECTRICAL ENGINEER DATE

6-15-15
PLANS APPROVAL DATE

REGISTERED PROFESSIONAL ENGINEER Elaine T. Wong No. 13753 Exp. 6-30-17 ELECTRICAL STATE OF CALIFORNIA

THE STATE OF CALIFORNIA OR ITS OFFICERS OR AGENTS SHALL NOT BE RESPONSIBLE FOR THE ACCURACY OR COMPLETENESS OF SCANNED COPIES OF THIS PLAN SHEET.

NOTE:

1. FOR DETAILS, REFER TO STRUCTURAL SHEETS.

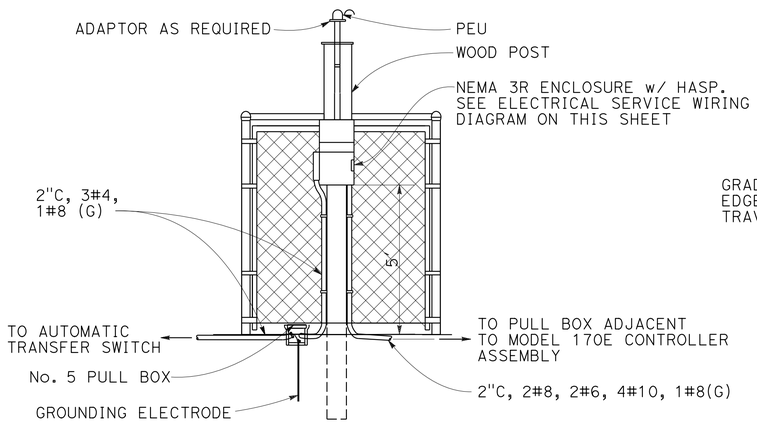

DETAIL 7
ELECTRICAL SERVICE FRONT VIEW

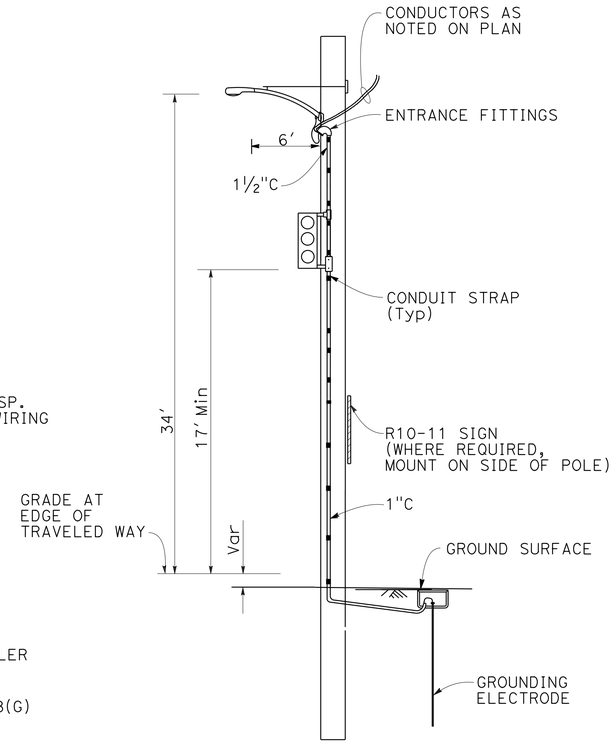

DETAIL 8
TEMPORARY SIGNAL AND LIGHTING INSTALLATION ON WOOD POLE

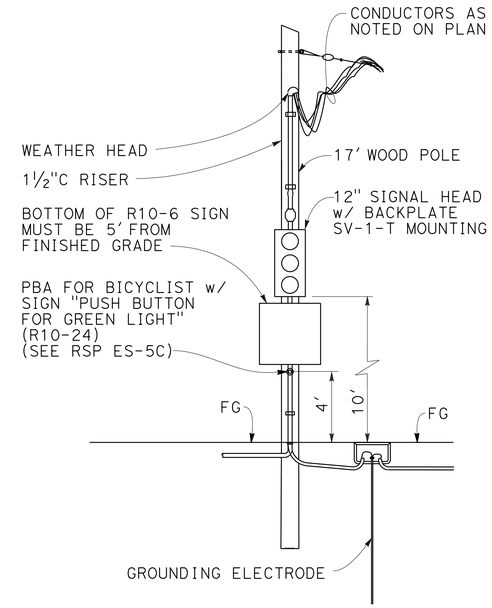

DETAIL 9
TEMPORARY SIGNAL INSTALLATION ON WOOD POLE

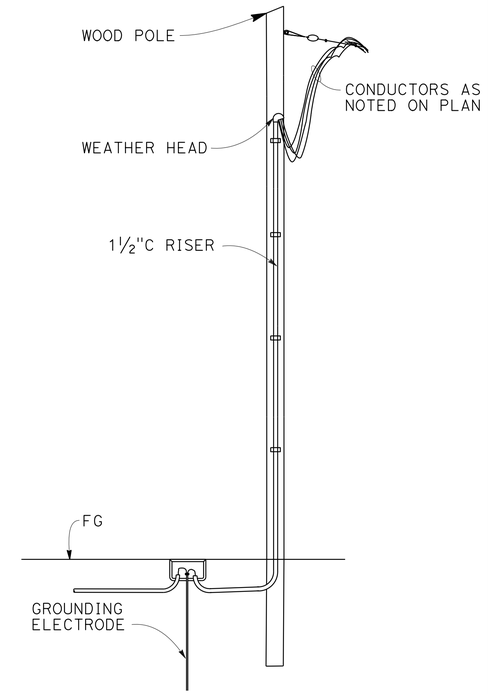

DETAIL 10
TEMPORARY WOOD POLE INSTALLATION

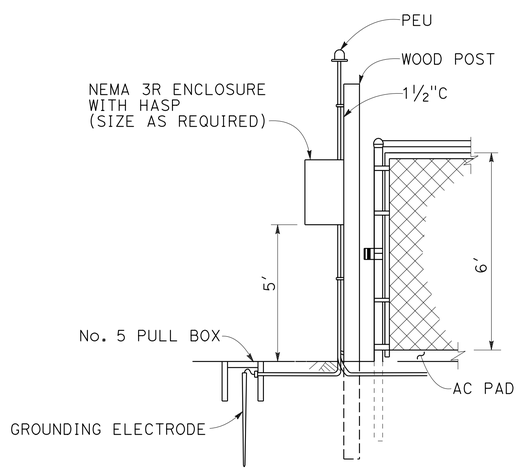

DETAIL 11
ELECTRICAL SERVICE SIDE VIEW

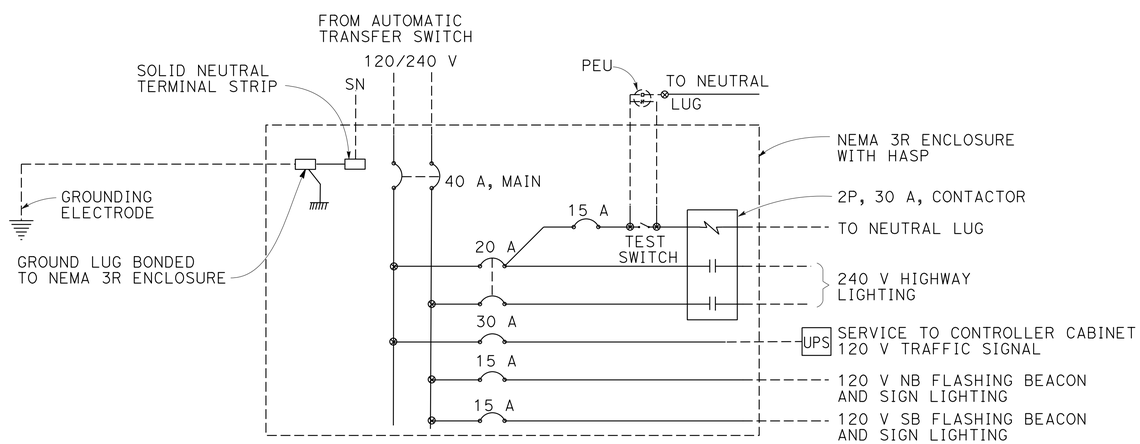

ELECTRICAL SERVICE WIRING DIAGRAM

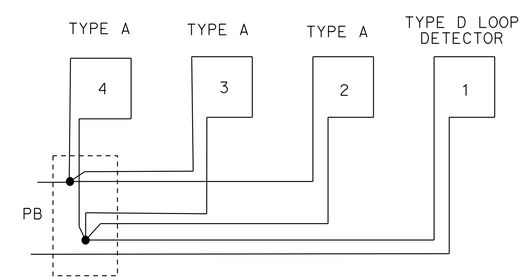

DETAIL A
1D + 3A LOOP CONNECTION

ELECTRICAL DETAILS

NO SCALE

E-7

STATE OF CALIFORNIA - DEPARTMENT OF TRANSPORTATION
Caltrans
ELECTRICAL
FUNCTIONAL SUPERVISOR: BEHZAD GOLEMOHAMMADI
CALCULATED-DESIGNED BY: WILLIAM Y. WONG
CHECKED BY: ELAINE WONG
REVISED BY: WW
DATE REVISED: 4/27/15

LAST REVISION: DATE PLOTTED => 10-SEP-2015 TIME PLOTTED => 10:15
04-27-15

Dist	COUNTY	ROUTE	POST MILES TOTAL PROJECT	SHEET No.	TOTAL SHEETS
04	Son	116	15.0	22	47

Elaine Wong 5/26/15
REGISTERED ELECTRICAL ENGINEER DATE

6-15-15
PLANS APPROVAL DATE

REGISTERED PROFESSIONAL ENGINEER Elaine T. Wong No. 13753 Exp. 6-30-17 ELECTRICAL STATE OF CALIFORNIA

THE STATE OF CALIFORNIA OR ITS OFFICERS OR AGENTS SHALL NOT BE RESPONSIBLE FOR THE ACCURACY OR COMPLETENESS OF SCANNED COPIES OF THIS PLAN SHEET.

TEMPORARY SIGNAL SYSTEM

SHEET No.	NEMA 3R ENCLOUSURE	GENERATOR WITH BACK-UP GENERATOR	YELLOW FLASHING BEACON WITH CONTROL ASSEMBLY	WOOD POLE	WOOD POLE WITH LUMINAIRE AND SIGNAL	WOOD POLE WITH SIGNAL	LOOP DETECTOR	PULL BOX	CONDUIT	CONDUCTOR				DLC
									2"	No.12	No.10	No.8	No.4	
	EA								ft					
E-2			1	1			1	3				900		120
E-3	1	1		2	2	5	6	11	80	11250	2200	3200	150	1500
E-4					1	2	4	5		3300	450	2000		950
E-5			1	1			1	3				800		30
TOTAL	1	1	2	4	3	7	12	22	80	14550	2650	6900	150	2600

(N) ITEMS SHOWN IN THIS TABLE ARE NOT A SEPARATE PAY ITEM, FOR INFORMATION ONLY

ELECTRICAL QUANTITIES

E-8

CALCULATED-DESIGNED BY	WILLIAM Y. WONG
CHECKED BY	ELAINE WONG
REVISED BY	WW
DATE REVISED	4/27/15
FUNCTIONAL SUPERVISOR	BEHZAD GOLEMOHAMMADI

STATE OF CALIFORNIA - DEPARTMENT OF TRANSPORTATION
Caltrans
ELECTRICAL

LAST REVISION 04-27-15 | DATE PLOTTED => 10-SEP-2015 | TIME PLOTTED => 10:15

DIST	COUNTY	ROUTE	POST MILES TOTAL PROJECT	SHEET No.	TOTAL SHEETS
04	Son	116	15.0	23	47

REGISTERED CIVIL ENGINEER 5/29/15 DATE

6-15-15
PLANS APPROVAL DATE

REGISTERED PROFESSIONAL ENGINEER Jonathan C. Lee No. 47520 Exp. 12-31-15 CIVIL STATE OF CALIFORNIA

The State of California or its officers or agents shall not be responsible for the accuracy or completeness of electronic copies of this plan sheet.

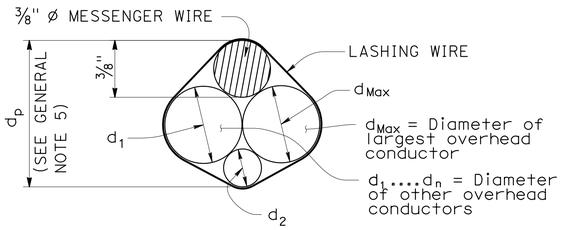

$d_p = 3/8" + d_{Max} + 0.30 * (d_1 + d_2 + \ldots d_n)$

PROJECTED DEPTH OF OVERHEAD BUNDLE, (d_p)

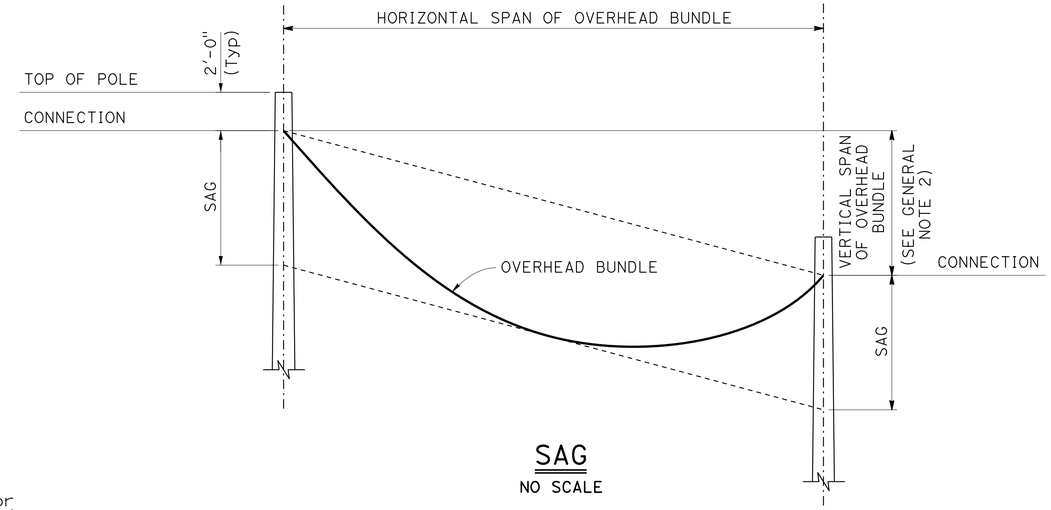

SAG

NO SCALE

Design: AASHTO Standard Specifications for Structural Supports for Highway Signs, Luminaires and Traffic Signals, Fifth Edition (LTS-5).

GROUP LOAD COMBINATIONS:

I Dead Load
II Dead Load + Wind Load
III Dead Load + 0.5 (Wind Load) + Ice Load
IV Fatigue: Not used

LOADING:

Wind Loading: 100 mph (3-second gust)
Wind Recurrence Interval: 10 years
Combined height, exposure, and elevated terrain factor = 1.05
(Exposure C, structure is not located on or over the top half of a ridge, hill, or escarpment)

Ice Loading: 3.0 psf on surfaces, 0.60 in radial thickness of ice at a unit weight of 60 pcf on overhead bundles

BASIC DESIGN VALUES:

Timber Poles: Fb = 1850 psi
Fv = 110 psi
Fcp = 230 psi
Fc = 950 psi
E = 1500 x 10^3 psi

DESIGN WIRE BREAKING STRENGTHS:

ASTM A475, Utilities Grade, 7 strand modified by termination efficiency factor of 0.8

FOUNDATION DESIGN NOTES:

1. Pole embedment depth design is based on Broms' approximate procedure as described in Article 13.6 of AASHTO LTS-5.

2. Embedment depth is calculated based on following soil parameters,
Cohesive Soil:
Shear strength of soil c = 1500 psf.
Cohesionless Soil:
ø = 30 deg, γ = 120 pcf.
Soil assumed to be unsaturated.

3. An overload factor of 2.0 and an undercapacity factor of 0.7 were used for safety factor of 2.86.

4. Allowable vertical bearing pressure at the end bearing of poles is 3000 psf at 6 feet or more embedment.

5. Guy wire anchor minimum allowable tension capacity, "Qa" = 8,900 lbs.

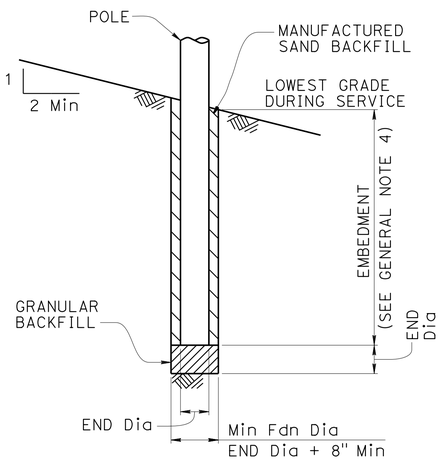

POLE FOUNDATION

GENERAL NOTES:

1. The messenger wire and any combination of overhead conductors must not exceed either a self weight of 3.0 lb/ft or the maximum d in the pole selection tables.

2. The maximum vertical span is 10% of the horizontal span.

3. For poles with adjacent unbalanced horizontal spans, the shortest horizontal span must be at least 50% of the largest horizontal span.

4. Add 2'-0" for slopes above 1V:4H.

5. For a pole supporting multiple spans, calculate d_p for each span and use the largest value.

6. Do not exceed the attachments shown.

DIAMETERS AND SELF WEIGHT OF OVERHEAD CONDUCTORS

CONDUCTOR OR CABLE TYPE	DIAMETER d (in)	WEIGHT w (plf)
3 CONDUCTOR SIGNAL CABLE (3CSC)	0.400	0.0980
5 CONDUCTOR SIGNAL CABLE (5CSC)	0.500	0.1560
9 CONDUCTOR SIGNAL CABLE (9CSC)	0.650	0.2760
12 CONDUCTOR SIGNAL CABLE (12CSC)	0.800	0.3970
28 CONDUCTOR SIGNAL CABLE (28CSC)	0.900	0.6490
1-#14	0.166	0.0235
1-#12	0.185	0.0330
1-#10	0.210	0.0476
1-#8	0.271	0.0774
1-#6	0.310	0.1130
1-#4	0.359	0.1690
1-#3	0.388	0.2080
1-#2	0.420	0.2560
1-#1	0.498	0.3340
6-CONDUCTOR SIGNAL INTERCONNECT CABLE (SIC)	0.350	0.0860
12-CONDUCTOR SIGNAL INTERCONNECT CABLE (SIC)	0.500	0.1440
DETECTOR LEAD-IN CABLE (DLC)	0.310	0.0440
12 to 48-STRAND FIBER OPTIC CABLE (48FOC)	0.424	0.0600
72-STRAND FIBER OPTIC CABLE (72FOC)	0.484	0.0770
96-STRAND FIBER OPTIC CABLE (96FOC)	0.535	0.1050
144-STRAND FIBER OPTIC CABLE (144FOC)	0.670	0.1890
3/8" ø MESSENGER WIRE	0.375	0.2730

NO SCALE

STANDARD DRAWING
FILE NO. xs18-010
APPROVAL DATE July 2014

STATE OF CALIFORNIA DEPARTMENT OF TRANSPORTATION
DIVISION OF ENGINEERING SERVICES
BRIDGE NO. X
POST MILE 15.0

TEMPORARY WOOD POLES GENERAL NOTES

SES-1

DS OSD 2147A (ENGLISH STANDARD DRAWING "XS" BORDER REV. (02-02-11)

ORIGINAL SCALE IN INCHES FOR REDUCED PLANS 0 1 2 3

UNIT: 0751
PROJECT NUMBER & PHASE: 04000012151
CONTRACT NO.: 4S1904

DISREGARD PRINTS BEARING EARLIER REVISION DATES
REVISION DATES 6-19-14

SHEET 1 OF 7

FILE => 0400001215uh001.dgn

USERNAME => s141070 DATE PLOTTED => 10-SEP-2015 TIME PLOTTED => 10:15

DIST	COUNTY	ROUTE	POST MILES TOTAL PROJECT	SHEET No.	TOTAL SHEETS
04	Son	116	15.0	24	47

REGISTERED CIVIL ENGINEER 5/29/15 DATE

6-15-15
PLANS APPROVAL DATE

REGISTERED PROFESSIONAL ENGINEER Jonathan C. Lee No. 47520 Exp. 12-31-15 CIVIL STATE OF CALIFORNIA

The State of California or its officers or agents shall not be responsible for the accuracy or completeness of electronic copies of this plan sheet.

LEGEND

- Wood Pole No Attachments
- A Wood Pole with Attachments
- —OH— Overhead Bundle

POLE SELECTION TABLE

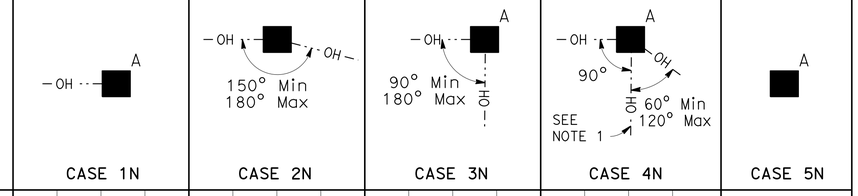

			CASE 1N				CASE 2N				CASE 3N				CASE 4N				CASE 5N
		MAXIMUM d_p	1"	1.5"	2.0"	2.5"	1"	1.5"	2.0"	2.5"	1.0"	1.5"	2.0"	2.5"	1"	1.5"	2.0"	2.5"	N/A
OVERHEAD BUNDLE HORIZONTAL SPAN (Max)	50'	MINIMUM POLE CLASS	H-1	H-2	H-2	H-2	4	3	2	1	H-2	H-2	H-3	H-3	H-4	H-4	H-4	H-5	CLASS 1 E = 10'
		POLE EMBEDMENT (E)	11'				10'				11'				12'				
	100'	MINIMUM POLE CLASS	H-2	H-3	H-4	H-5	1	H-1	H-2	H-3	H-4	H-5	H-5	H-6	H-5	H-5	H-6		
		POLE EMBEDMENT (E)	12'				11'				12'				12'				
	150'	MINIMUM POLE CLASS	H-4	H-5	H-6		H-1	H-2	H-3	H-5	H-6				H-6				
		POLE EMBEDMENT (E)	12'				12'				12'				12'				
	200'	MINIMUM POLE CLASS	H-5	H-6			H-2	H-3	H-5										
		POLE EMBEDMENT (E)	12'				12'												

1. CCTV camera assembly or vehicle detection system
2. Overhead bundle consisting of a 3/8" ø messenger wire, overhead conductors, and lashing wire
3. Luminaire with mast arm
4. Pedestrian push button assembly or accessible push button assembly
5. Signal face with 3 indications or single sheet sign panel (10 SQFT Max)
6. Riser with weather head as required
7. Pull box as required
8. Grounding as required
9. Single flashing beacon or single sheet sign panel (4 SQFT Max)
10. Single sheet sign panel (4' x 4' Max) or signal face with 3 indications
11. Flashing beacon control assembly
12. NEMA 3R enclosure, 26"(W) x 56"(H) x 12"(D) Max dimensions. Max weight including batteries, 450 lbs
13. 25' SQFT Max total photovoltaic panels mounted as shown as required
14. 2-12" flashing beacons

NOTES:

1. In addition to other restrictions on maximum horizontal span, this horizontal span must not exceed 100'.
2. Cases 1N, 3N and 4N may substitute the attachments shown in Case 5N if the photovoltaic panel is not included.
3. For Case 1N without an overhead bundle (item 2) use minimum pole class H-1 with E=11'.

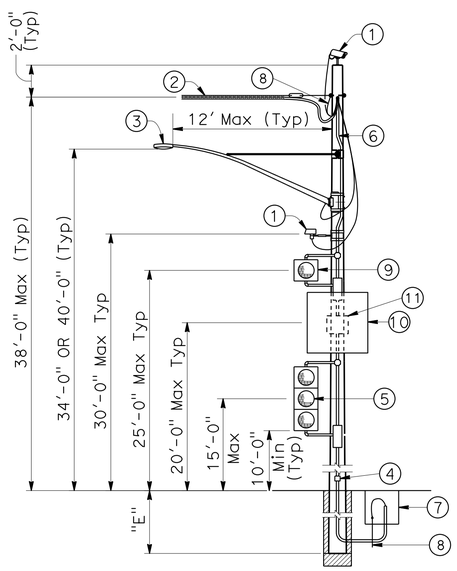

CASE 1N
POLE AT DEAD END WITH ATTACHMENTS
SEE NOTE 2

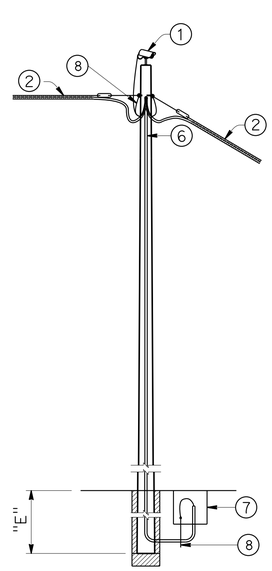

CASE 2N
POLE AT TANGENT WITHOUT ATTACHMENTS

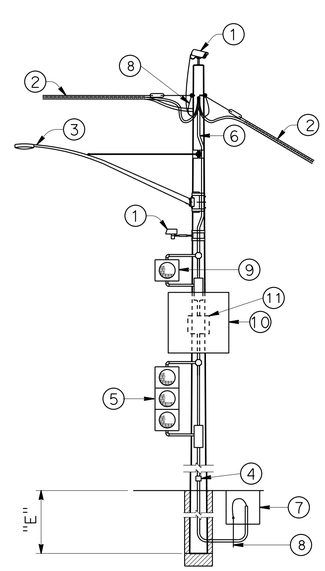

CASE 3N
POLE AT TANGENT OR CORNER WITH ATTACHMENTS
SEE NOTE 2

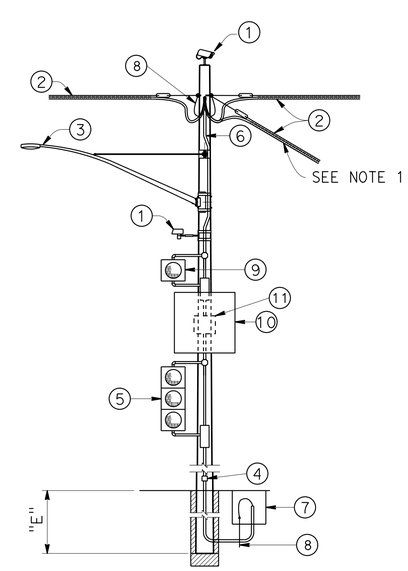

CASE 4N
POLE AT JUNCTION WITH ATTACHMENTS
SEE NOTE 2

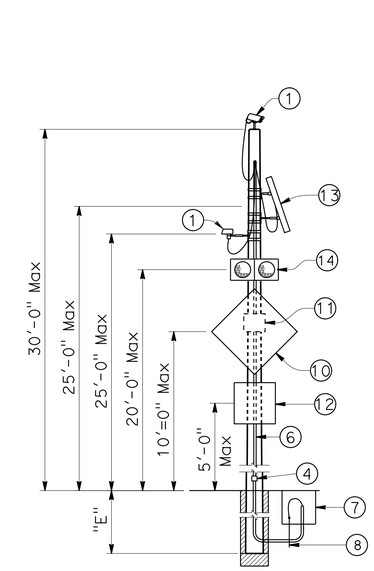

CASE 5N
POLE WITHOUT OVERHEAD BUNDLE WITH ATTACHMENTS

NO SCALE

STANDARD DRAWING
FILE NO. xs18-020
APPROVAL DATE July 2014

STATE OF CALIFORNIA DEPARTMENT OF TRANSPORTATION

DIVISION OF ENGINEERING SERVICES

BRIDGE NO. X
POST MILE 15.0

TEMPORARY WOOD POLES
NON-GUYED - NO SIGNALS ON SPANS

SES-2

DS OSD 2147A (ENGLISH STANDARD DRAWING "XS" BORDER REV. (02-02-11)

ORIGINAL SCALE IN INCHES FOR REDUCED PLANS 0 1 2 3

UNIT: 0751
PROJECT NUMBER & PHASE: 04000012151
CONTRACT NO.: 4S1904

DISREGARD PRINTS BEARING EARLIER REVISION DATES

REVISION DATES 6-19-14

SHEET 2 OF 7

FILE => 0400001215uh002.dgn

USERNAME => s141070 DATE PLOTTED => 10-SEP-2015 TIME PLOTTED => 10:15

DIST	COUNTY	ROUTE	POST MILES TOTAL PROJECT	SHEET No.	TOTAL SHEETS
04	Son	116	15.0	25	47

REGISTERED CIVIL ENGINEER 5/29/15 DATE

6-15-15
PLANS APPROVAL DATE

REGISTERED PROFESSIONAL ENGINEER Jonathan C. Lee No. 47520 Exp. 12-31-15 CIVIL STATE OF CALIFORNIA

The State of California or its officers or agents shall not be responsible for the accuracy or completeness of electronic copies of this plan sheet.

LEGEND

A — Wood Pole with Attachments

—OH··— Overhead Bundle

——→ Guy Anchor

POLE SELECTION TABLE

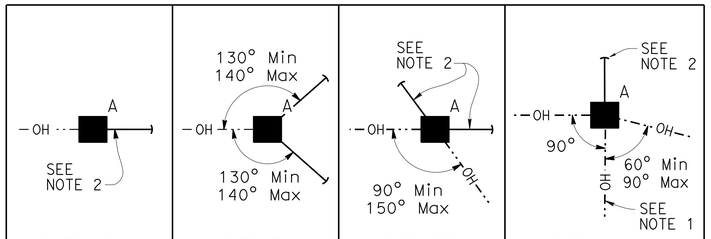

OVERHEAD BUNDLE HORIZONTAL SPAN (Max)		MAXIMUM d_p	1"	1.5"	2.0"	2.5"	1"	1.5"	2.0"	2.5"	1"	1.5"	2.0"	2.5"	1"	1.5"	2.0"	2.5"
	50′	MINIMUM POLE CLASS	H-1	H-1	H-2	H-2	1	1	1	1	1	1	1	H-1	H-2	H-2	H-3	H-3
		POLE EMBEDMENT (E)	10′				9′				9′				11′			
	100′	MINIMUM POLE CLASS	H-2	H-2	H-3	H-4	1	H-1	H-1	H-1	1	H-1	H-2	H-2	H-3	H-3	H-4	H-4
		POLE EMBEDMENT (E)	11′				9′				9′				12′			
	150′	MINIMUM POLE CLASS	H-3	H-3	H-4	H-5	H-1	H-1	H-2	H-2	H-2	H-3	H-3	H-3	H-4	H-5	H-5	H-6
		POLE EMBEDMENT (E)	11′				9′				9′				12′			
	200′	MINIMUM POLE CLASS	H-4	H-4	H-5	H-6	H-1	H-2	H-3	H-3	H-3	H-3	H-4	H-4	H-5	H-6		
		POLE EMBEDMENT (E)	11′				9′				9′				12′			

1. CCTV camera assembly or vehicle detection system
2. Overhead bundle consisting of a ⅜" ø messenger wire, overhead conductors, and lashing wire
3. Luminaire with mast arm
4. Pedestrian push button assembly or accessible push button assembly
5. Signal face with 3 indications or single sheet sign panel (10 SQFT Max)
6. Riser with weather head as required
7. Pull box as required
8. Grounding as required
9. Single flashing beacon or single sheet sign panel (4 SQFT Max)
10. Single sheet sign panel (4′ x 4′ Max) or signal face with 3 indications
11. Flashing beacon control assembly
12. ½" ø guy wire with white guy marker and strain insulator (for anchorage see "TEMPORARY WOOD POLES-DETAILS No. 2" sheet)

NOTES:

1. In addition to other restrictions on maximum horizontal span, this horizontal span must not exceed 100′.
2. Guy wire in line with opposing span ± 5°.

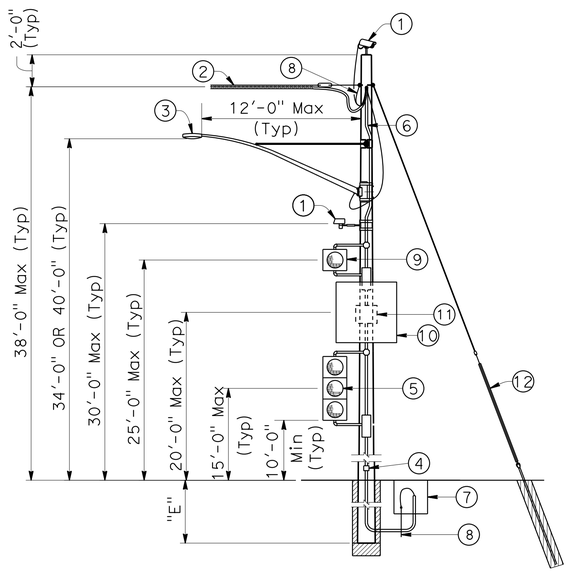

CASE 1G
POLE AT DEAD END
WITH ATTACHMENTS

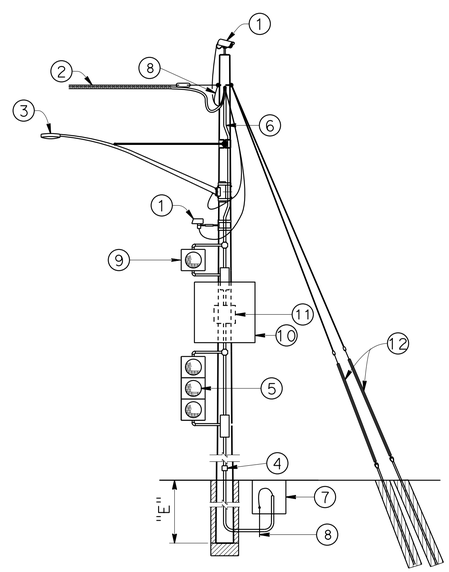

CASE 2G
POLE AT DEAD END
WITH ATTACHMENTS

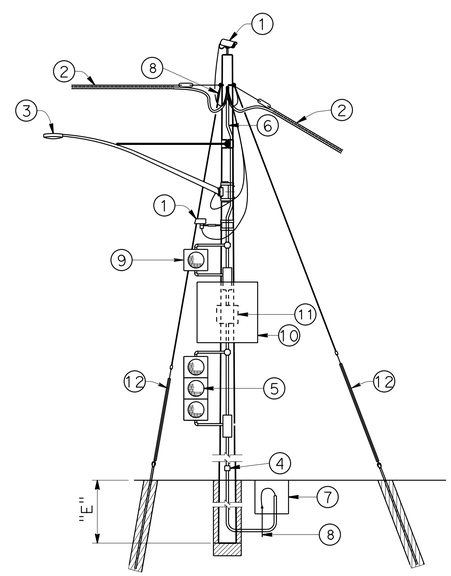

CASE 3G
POLE AT CORNER
WITH ATTACHMENTS

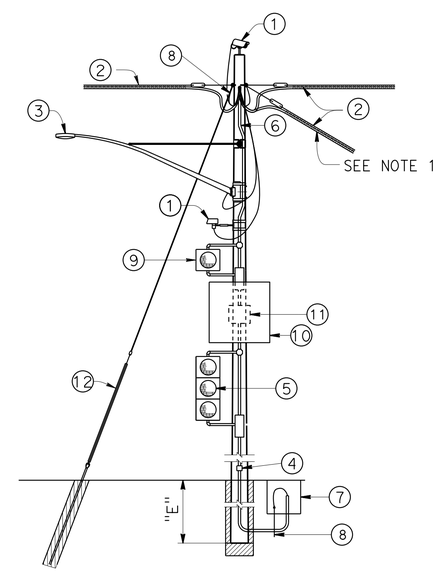

CASE 4G
POLE AT JUNCTION
WITH ATTACHMENTS

NO SCALE

STANDARD DRAWING

FILE NO. xs18-030

APPROVAL DATE July 2014

STATE OF CALIFORNIA
DEPARTMENT OF TRANSPORTATION

DIVISION OF ENGINEERING SERVICES

BRIDGE NO. X

POST MILE 15.0

TEMPORARY WOOD POLES
GUYED - NO SIGNALS ON SPANS

SES-3

DS OSD 2147A (ENGLISH STANDARD DRAWING "XS" BORDER REV. (02-02-11)

ORIGINAL SCALE IN INCHES FOR REDUCED PLANS 0 1 2 3

UNIT: 0751
PROJECT NUMBER & PHASE: 04000012151
CONTRACT NO.: 4S1904

DISREGARD PRINTS BEARING EARLIER REVISION DATES

REVISION DATES 6-27-14

SHEET 3 OF 7

FILE => 0400001215uh003.dgn

USERNAME => s141070 DATE PLOTTED => 10-SEP-2015 TIME PLOTTED => 10:15

DIST	COUNTY	ROUTE	POST MILES TOTAL PROJECT	SHEET No.	TOTAL SHEETS
04	Son	116	15.0	26	47

REGISTERED CIVIL ENGINEER 5/29/15 DATE

6-15-15
PLANS APPROVAL DATE

REGISTERED PROFESSIONAL ENGINEER Jonathan C. Lee No. 47520 Exp. 12-31-15 CIVIL STATE OF CALIFORNIA

The State of California or its officers or agents shall not be responsible for the accuracy or completeness of electronic copies of this plan sheet.

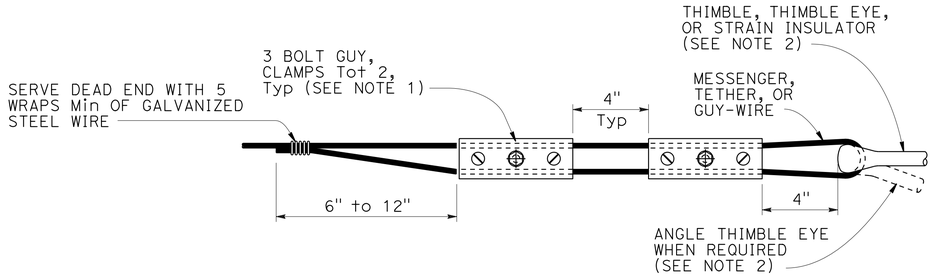

ALTERNATIVE TERMINATION OF MESSENGER WIRES USING GUY CLAMPS

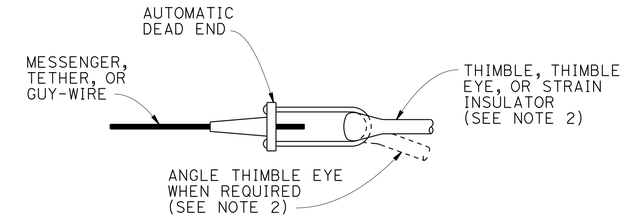

TERMINATION OF WIRES USING AUTOMATIC DEAD END

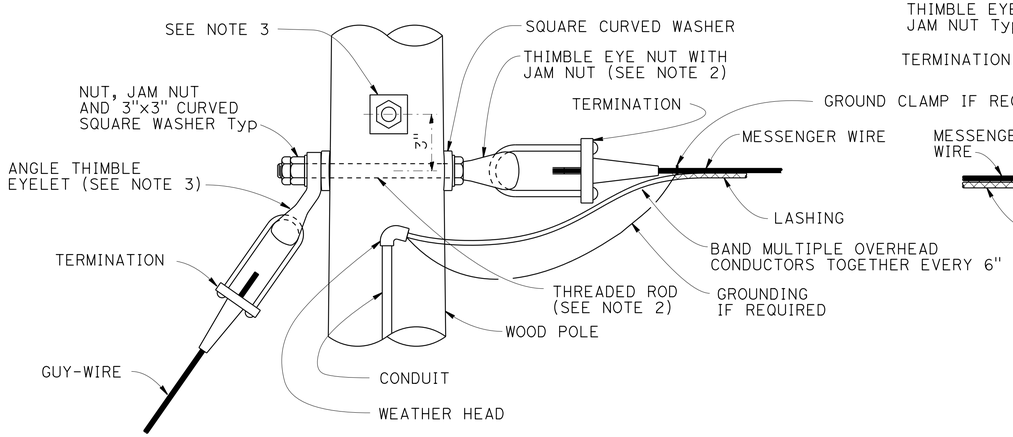

POLE AT DEAD END WITH GUY-WIRE CONNECTION

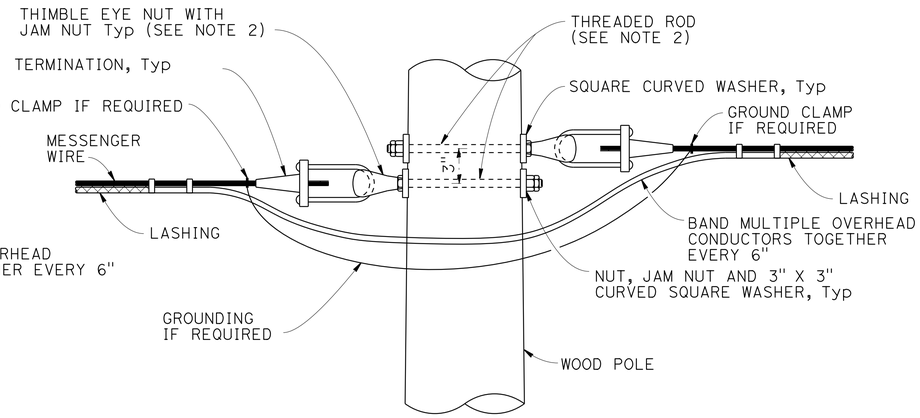

POLE AT TANGENT OR CORNER CONNECTION

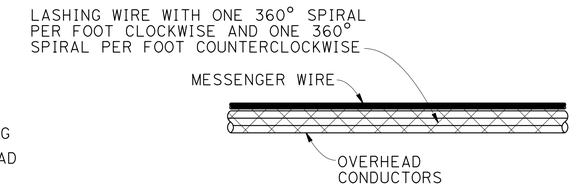

DOUBLE LASHING DETAIL

USE IF d_p IS GREATER THAN 1½"

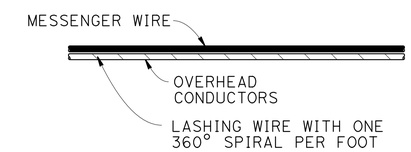

TYPICAL LASHING DETAIL

USE IF d_p IS 1½" OR LESS

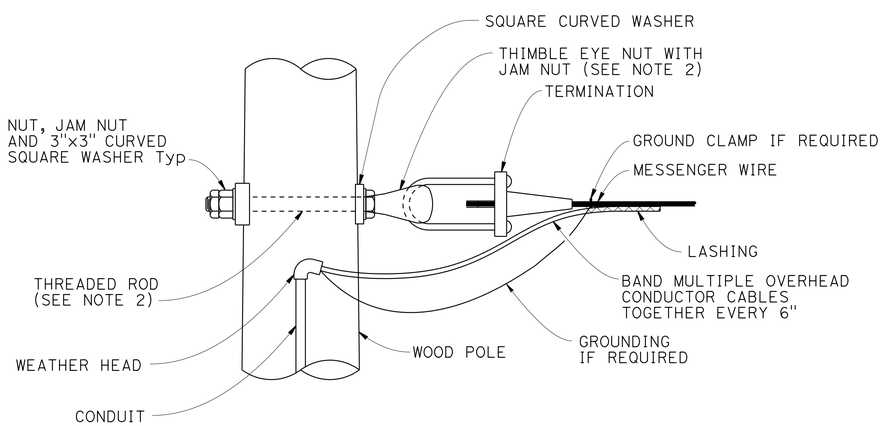

POLE AT DEAD END CONNECTION

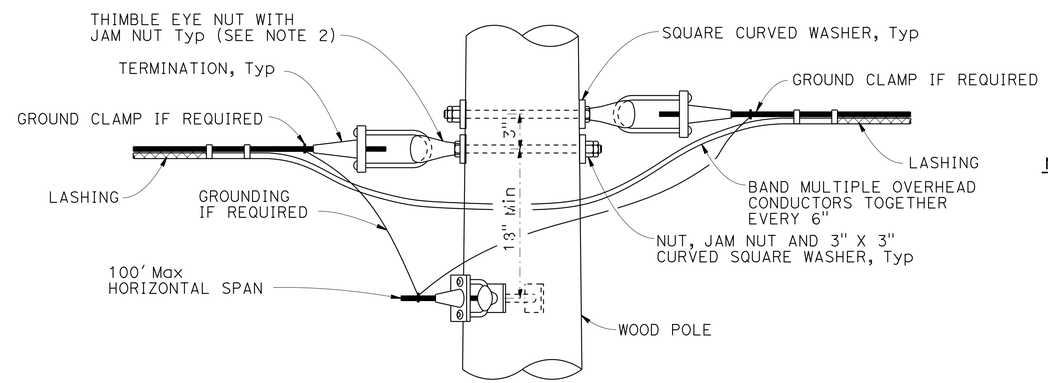

POLE AT JUNCTION CONNECTION

NOTES:

1. For guy wires use 3 clamps.
2. Use ⅝" ø except ¾" ø at guyed wires
3. Install additional angle thimble eyelet at poles with two guy wires.

NO SCALE

STANDARD DRAWING		STATE OF CALIFORNIA DEPARTMENT OF TRANSPORTATION	DIVISION OF ENGINEERING SERVICES	BRIDGE NO. X / POST MILE 15.0	TEMPORARY WOOD POLES DETAILS No. 1	SES-4
FILE NO. xs18-080-1	APPROVAL DATE July 2014					

DS OSD 2147A (ENGLISH STANDARD DRAWING "XS" BORDER REV. (02-02-11)

ORIGINAL SCALE IN INCHES FOR REDUCED PLANS 0 1 2 3

UNIT: 0751
PROJECT NUMBER & PHASE: 04000012151 CONTRACT NO.: 4S1904

DISREGARD PRINTS BEARING EARLIER REVISION DATES 6-27-14 REVISION DATES SHEET 4 OF 7

FILE => 0400001215uh004.dgn

USERNAME => s141070 DATE PLOTTED => 10-SEP-2015 TIME PLOTTED => 10:15

DIST	COUNTY	ROUTE	POST MILES TOTAL PROJECT	SHEET No.	TOTAL SHEETS
04	Son	116	15.0	27	47

REGISTERED CIVIL ENGINEER 5/29/15 DATE

6-15-15
PLANS APPROVAL DATE

REGISTERED PROFESSIONAL ENGINEER Jonathan C. Lee No. 47520 Exp. 12-31-15 CIVIL STATE OF CALIFORNIA

The State of California or its officers or agents shall not be responsible for the accuracy or completeness of electronic copies of this plan sheet.

NOTE:

1. For minimum allowable tension capacity of anchors see "Temporary Wood Poles - General Notes" sheet.

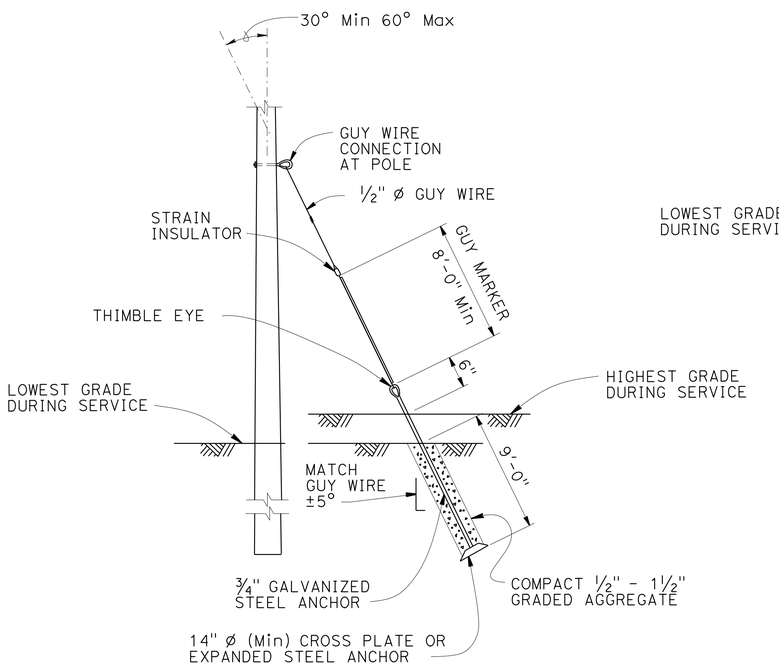

NOTE:

Helical anchor detail may be used in place of expanded steel anchors.

EXPANDED STEEL ANCHOR DETAIL

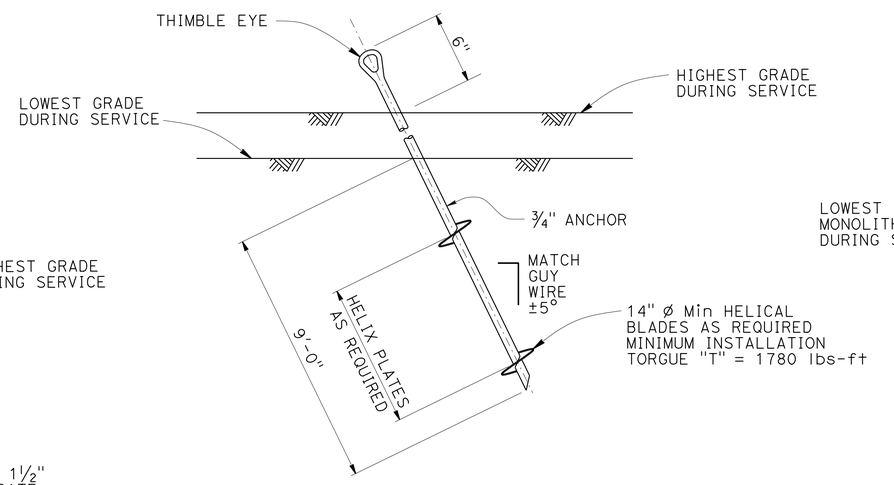

HELICAL ANCHOR DETAIL

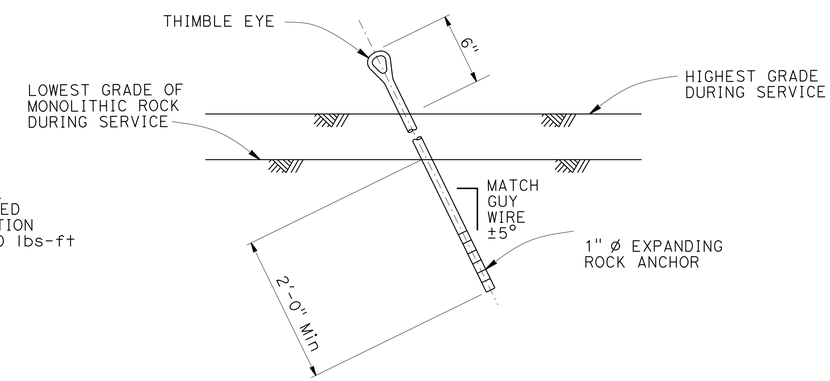

EXPANDING ROCK ANCHOR DETAIL

NO SCALE

STANDARD DRAWING		STATE OF CALIFORNIA DEPARTMENT OF TRANSPORTATION	DIVISION OF ENGINEERING SERVICES	BRIDGE NO. X / POST MILE 15.0	TEMPORARY WOOD POLES DETAILS No. 2	SES-5
FILE NO. xs18-080-2	APPROVAL DATE July 2014					

DS OSD 2147A (ENGLISH STANDARD DRAWING "XS" BORDER REV. (02-02-11)

ORIGINAL SCALE IN INCHES FOR REDUCED PLANS 0 1 2 3

UNIT: 0751
PROJECT NUMBER & PHASE: 04000012151 CONTRACT NO.: 4S1904

DISREGARD PRINTS BEARING EARLIER REVISION DATES → REVISION DATES 6-27-14 SHEET 5 OF 7

FILE => 0400001215uh005.dgn

USERNAME => s141070 DATE PLOTTED => 10-SEP-2015 TIME PLOTTED => 10:15

DIST	COUNTY	ROUTE	POST MILES TOTAL PROJECT	SHEET No.	TOTAL SHEETS
04	Son	116	15.0	28	47

REGISTERED CIVIL ENGINEER — DATE 5/29/15

6-15-15
PLANS APPROVAL DATE

REGISTERED PROFESSIONAL ENGINEER — Jonathan C. Lee — No. 47520 — Exp. 12-31-15 — CIVIL — STATE OF CALIFORNIA

The State of California or its officers or agents shall not be responsible for the accuracy or completeness of electronic copies of this plan sheet.

NOTES:

1. Luminaire mast arms must be in compliance with Standard Plan ES-6D with noted modifications.
2. Verify pole dimensions at tie-rod attachment height. Fabricate 8" flat bar with "L" Dimension to maintain an open gap between flanges in finished installation.
3. Not all screw heads and bolt heads are shown for clarity.
4. Mast arm not shown for clarity.

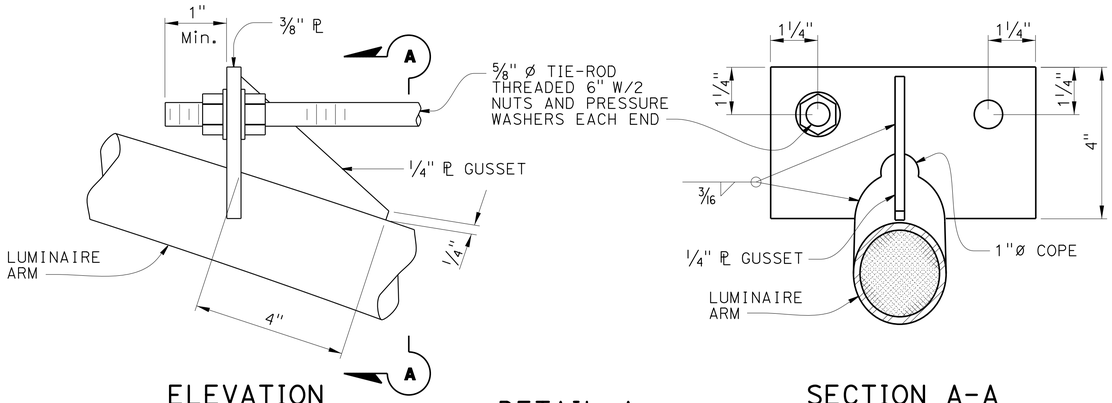

ELEVATION

SECTION A-A

DETAIL A
TIE-ROD AT LUMINAIRE ARM
NO SCALE

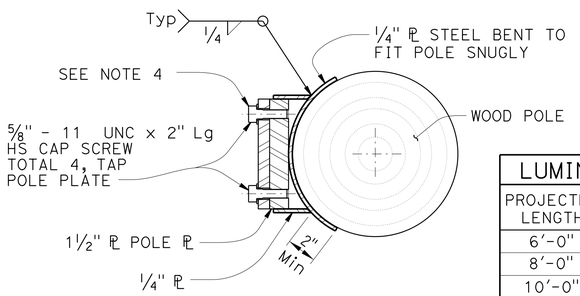

SECTION E-E

LUMINAIRE MAST ARM DATA			
PROJECTED LENGTH	N RISE	Min OD AT POLE	NOMINAL THICKNESS
6'-0"	2'-0"±	3 1/4"	0.1196"
8'-0"	2'-6"±	3 1/2"	
10'-0"	3'-3"±	3 7/8"	
12'-0"	4'-3"±		

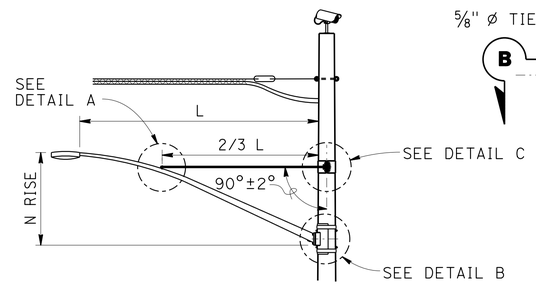

LUMINAIRE MAST ARM

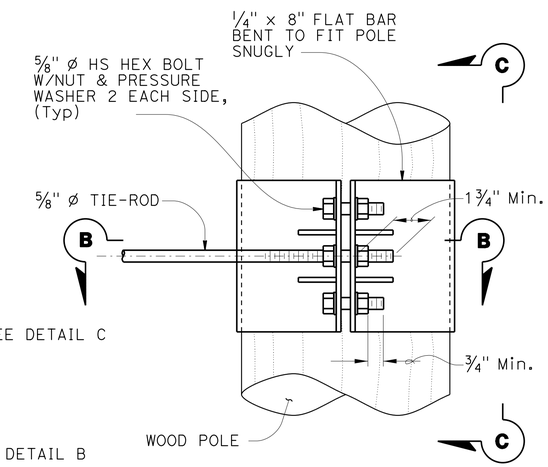

ELEVATION

NOTE:
Not all screw and bolt heads shown for clarity.

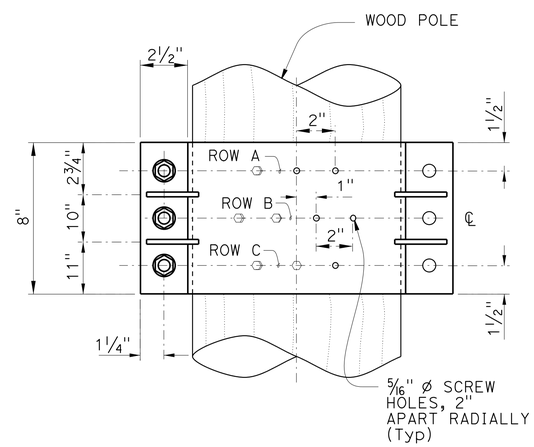

VIEW C-C

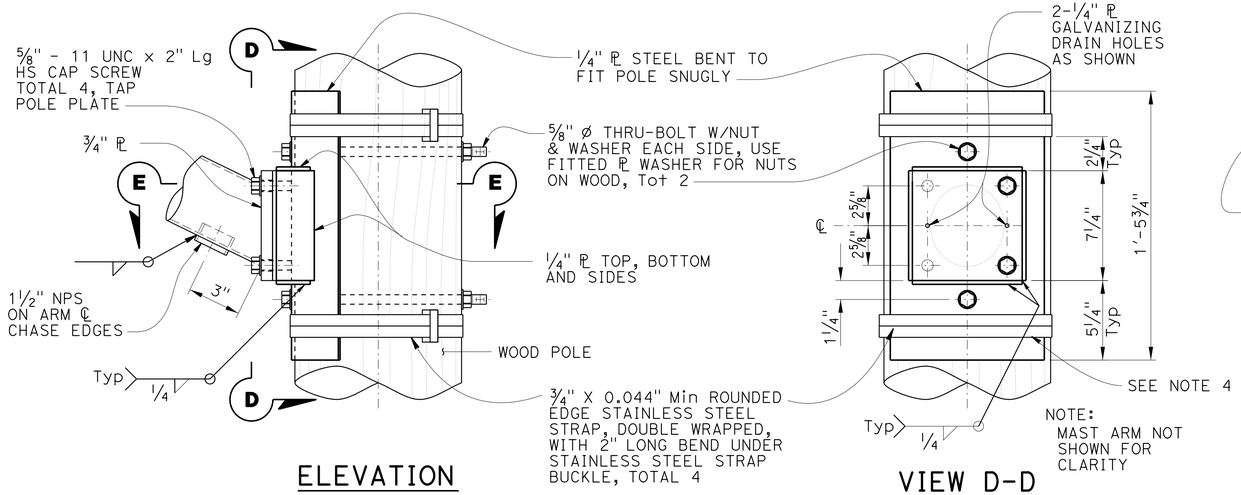

ELEVATION

VIEW D-D

DETAIL B
ARM CONNECTION DETAILS
NO SCALE

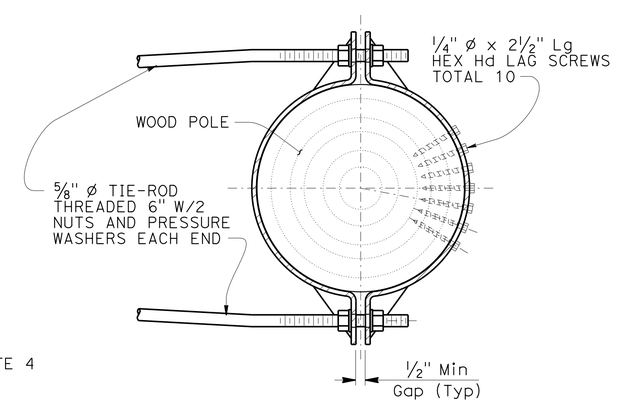

SECTION B-B

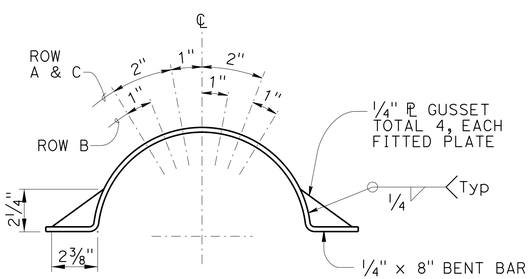

LAG SCREW AND
GUSSET PLATE LAYOUT

DETAIL C
TIE-ROD AT POLE
NO SCALE

STANDARD DRAWING					
FILE NO. xs18-080-3	APPROVAL DATE July 2014	STATE OF CALIFORNIA DEPARTMENT OF TRANSPORTATION	DIVISION OF ENGINEERING SERVICES	BRIDGE NO. X / POST MILE 15.0	TEMPORARY WOOD POLES DETAILS No. 3 — SES-6

DS OSD 2147A (ENGLISH STANDARD DRAWING "XS" BORDER REV. (02-02-11))

ORIGINAL SCALE IN INCHES FOR REDUCED PLANS 0 1 2 3

UNIT: 0751
PROJECT NUMBER & PHASE: 04000012151
CONTRACT NO.: 4S1904

DISREGARD PRINTS BEARING EARLIER REVISION DATES 6-27-14

SHEET 6 OF 7

FILE => 0400001215uh006.dgn

USERNAME => s141070 DATE PLOTTED => 10-SEP-2015 TIME PLOTTED => 10:11:15

DIST	COUNTY	ROUTE	POST MILES TOTAL PROJECT	SHEET No.	TOTAL SHEETS
04	Son	116	15.0	29	47

REGISTERED CIVIL ENGINEER 5/29/15 DATE

6-15-15
PLANS APPROVAL DATE

REGISTERED PROFESSIONAL ENGINEER Jonathan C. Lee No. 47520 Exp. 12-31-15 CIVIL STATE OF CALIFORNIA

The State of California or its officers or agents shall not be responsible for the accuracy or completeness of electronic copies of this plan sheet.

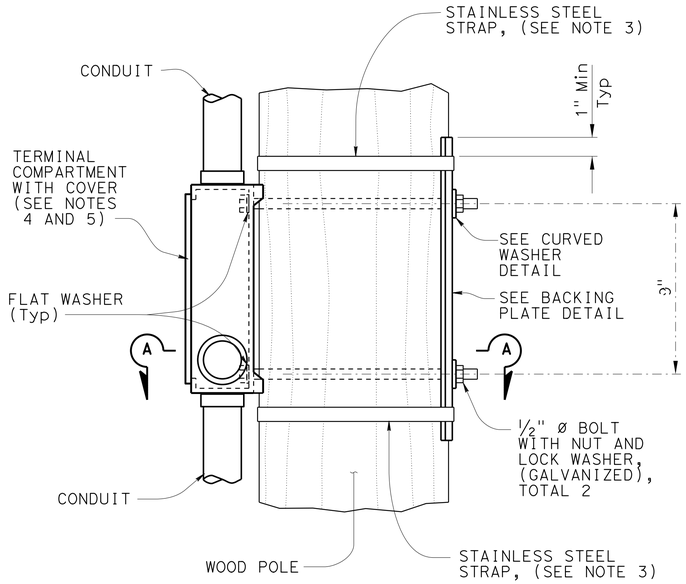

ELEVATION

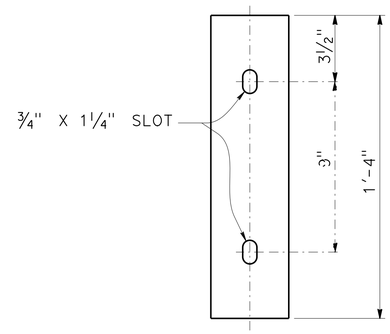

ELEVATION

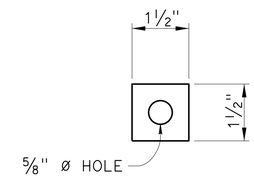

ELEVATION

PLAN

BACKING PLATE DETAIL

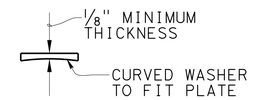

PLAN

CURVED WASHER DETAIL

NOTES:

1. Verify pole dimensions at terminal compartment for fabrication of backing plate and curved washer.
2. Backing plate to be galvanized after fabrication.
3. ¾" x 0.044" minimum, rounded edge stainless steel straps, double wrapped with 2" long bend under stainless steel strap buckle.
4. For miscellaneous details for signal mounting not shown see Standard Plan ES-4D.
5. If the terminal compartment has a cable entry guide on the rear face, remove the cable entry guide to a level that will not interfere with the wood post. Close any unused cable entry locations with raintight cap.

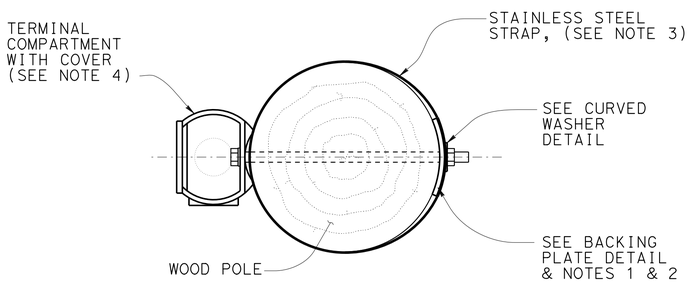

SECTION A-A

SIDE MOUNTING TERMINAL COMPARTMENT

NO SCALE

STANDARD DRAWING

FILE NO. xs18-080-4

APPROVAL DATE July 2014

STATE OF CALIFORNIA DEPARTMENT OF TRANSPORTATION

DIVISION OF ENGINEERING SERVICES

BRIDGE NO. X

POST MILE 15.0

TEMPORARY WOOD POLES DETAILS No. 4

SES-7

DS OSD 2147A (ENGLISH STANDARD DRAWING "XS" BORDER REV. (02-02-11)

ORIGINAL SCALE IN INCHES FOR REDUCED PLANS 0 1 2 3

UNIT: 0751
PROJECT NUMBER & PHASE: 04000012151
CONTRACT NO.: 4S1904

DISREGARD PRINTS BEARING EARLIER REVISION DATES

REVISION DATES 6-27-14

SHEET 7 OF 7

FILE => 0400001215uh007.dgn

USERNAME => s141070 DATE PLOTTED => 10-SEP-2015 TIME PLOTTED => 10:15

M

Maint	MAINTENANCE
Max	MAXIMUM
MB	METAL BEAM
MBB	METAL BEAM BARRIER
MBGR	METAL BEAM GUARD RAILING
Med	MEDIAN
MGS	MIDWEST GUARDRAIL SYSTEM
MH	MANHOLE
Min	MINIMUM
Misc	MISCELLANEOUS
Misc I & S	MISCELLANEOUS IRON AND STEEL
Mkr	MARKER
Mod	MODIFIED,
	MODIFY
Mon	MONUMENT
MP	METAL PLATE
MPGR	METAL PLATE GUARD RAILING
MR	MOVEMENT RATING
MSE	MECHANICALLY STABILIZED EMBANKMENT
Mt	MOUNTAIN, MOUNT
Mtl	MATERIAL
MVP	MAINTENANCE VEHICLE PULLOUT

N

N	NORTH
NB	NORTHBOUND
No.	NUMBER (MUST HAVE PERIOD)
Nos.	NUMBERS (MUST HAVE PERIOD)
NPS	NOMINAL PIPE SIZE
NS	NEAR SIDE
NSP	NEW STANDARD PLAN
NTS	NOT TO SCALE

O

Oblr	OBLITERATE
OC	OVERCROSSING
OD	OUTSIDE DIAMETER
OF	OUTSIDE FACE
OG	ORIGINAL GROUND
OGAC	OPEN GRADED ASPHALT CONCRETE
OGFC	OPEN GRADED FRICTION COURSE
OH	OVERHEAD
OHWM	ORDINARY HIGH WATER MARK
O-O	OUT TO OUT
Opp	OPPOSITE
OSD	OVERSIDE DRAIN

P

p	PAGE
PAP	PERFORATED ALUMINUM PIPE
PB	PULL BOX
PC	POINT OF CURVATURE,
	PRECAST
PCC	POINT OF COMPOUND CURVE,
	PORTLAND CEMENT CONCRETE
PCMS	PORTABLE CHANGEABLE MESSAGE SIGN
PCP	PERFORATED CONCRETE PIPE,
	PRESTRESSED CONCRETE PIPE
PCVC	POINT OF COMPOUND VERTICAL CURVE
PEC	PERMIT TO ENTER AND CONSTRUCT
Ped	PEDESTRIAN
Ped OC	PEDESTRIAN OVERCROSSING
Ped UC	PEDESTRIAN UNDERCROSSING
Perm Mtl	PERMEABLE MATERIAL

P continued

PG	PROFILE GRADE
PI	POINT OF INTERSECTION
PJP	PARTIAL JOINT PENETRATION
Pkwy	PARKWAY
ℙ,PL	PLATE
P/L	PROPERTY LINE
PM	POST MILE,
	TIME FROM NOON TO MIDNIGHT
PN	PAVING NOTCH
POC	POINT OF HORIZONTAL CURVE
POT	POINT OF TANGENT
POVC	POINT OF VERTICAL CURVE
PP	PIPE PILE,
	PLASTIC PIPE,
	POWER POLE
PPL	PREFORMED PERMEABLE LINER
PPP	PERFORATED PLASTIC PIPE
PRC	POINT OF REVERSE CURVE
PRF	PAVEMENT REINFORCING FABRIC
PRVC	POINT OF REVERSE VERTICAL CURVE
PS&E	PLANS, SPECIFICATIONS AND ESTIMATES
PS, P/S	PRESTRESSED
PSP	PERFORATED STEEL PIPE
PT	POINT OF TANGENCY
PVC	POLYVINYL CHLORIDE
Pvmt	PAVEMENT

Q

Qty	QUANTITY

R

R	RADIUS
R & D	REMOVE AND DISPOSE
R & S	REMOVE AND SALVAGE
R/C	RATE OF CHANGE
RCA	REINFORCED CONCRETE ARCH
RCB	REINFORCED CONCRETE BOX
RCP	REINFORCED CONCRETE PIPE
RCPA	REINFORCED CONCRETE PIPE ARCH
Rd	ROAD
Reinf	REINFORCED,
	REINFORCEMENT,
	REINFORCING
Rel	RELOCATE
Repl	REPLACEMENT
Ret	RETAINING
Rev	REVISED, REVISION
Rdwy	ROADWAY
RHMA	RUBBERIZED HOT MIX ASPHALT
Riv	RIVER
RM	ROAD-MIXED
RP	RADIUS POINT,
	REFERENCE POINT
RR	RAILROAD
RSP	ROCK SLOPE PROTECTION,
	REVISED STANDARD PLAN
Rt	RIGHT
Rte	ROUTE
RW	REDWOOD,
	RETAINING WALL
R/W	RIGHT OF WAY
Rwy	RAILWAY

S

S	SOUTH,
	SUPPLEMENT
SAE	STRUCTURE APPROACH EMBANKMENT
Salv	SALVAGE
SAPP	STRUCTURAL ALUMINUM PLATE PIPE
SB	SOUTHBOUND
SC	SAND CUSHION
SCSP	SLOTTED CORRUGATED STEEL PIPE
SD	STORM DRAIN
Sec	SECOND,
	SECTION
Sep	SEPARATION
SG	SUBGRADE
Shld	SHOULDER
Sht	SHEET
Sim	SIMILAR
℄	STATION LINE
SM	SELECTED MATERIAL
Spec	SPECIAL,
	SPECIFICATIONS
SPP	SLOTTED PLASTIC PIPE
SS	SLOPE STAKE
SSBM	STRAP AND SADDLE BRACKET METHOD
SSD	STRUCTURAL SECTION DRAIN
SSPA	STRUCTURAL STEEL PLATE ARCH
SSPP	STRUCTURAL STEEL PLATE PIPE
SSPPA	STRUCTURAL STEEL PLATE PIPE ARCH
SSRP	STEEL SPIRAL RIB PIPE
St	STREET
Sta	STATION
STBB	SINGLE THRIE BEAM BARRIER
Std	STANDARD
Str	STRUCTURE
Surf	SURFACING
SW	SIDEWALK,
	SOUND WALL
Swr	SEWER
Sym	SYMMETRICAL
S4S	SURFACE 4 SIDES

T

T	SEMI-TANGENT
Tan	TANGENT
TBB	THRIE BEAM BARRIER
Tbr	TIMBER
TC	TOP OF CURB
TCB	TRAFFIC CONTROL BOX
TCE	TEMPORARY CONSTRUCTION EASEMENT
Tel	TELEPHONE
Temp	TEMPORARY
TG	TOP OF GRADE
Tot	TOTAL
TP	TELEPHONE POLE
TPB	TREATED PERMEABLE BASE
TPM	TREATED PERMEABLE MATERIAL
Trans	TRANSITION

T continued

TS	TRANSVERSE,
	TRAFFIC SIGNAL,
	TUBULAR STEEL
Typ	TYPICAL

U

UC	UNDERCROSSING
UD	UNDERDRAIN
UG	UNDERGROUND
UON	UNLESS OTHERWISE NOTED
UP	UNDERPASS

V

V	VALVE,
	DESIGN SPEED
Var	VARIABLE,
	VARIES
VC	VERTICAL CURVE
VCP	VITRIFIED CLAY PIPE
Vert	VERTICAL
Via	VIADUCT
Vol	VOLUME

W

W	WEST,
	WIDTH
WB	WESTBOUND
WH	WEEP HOLE
WM	WIRE MESH
WS	WATER SURFACE
WSP	WELDED STEEL PIPE
Wt	WEIGHT
WV	WATER VALVE
WW	WINGWALL
WWLOL	WINGWALL LAYOUT LINE

X

X Sec	CROSS SECTION
Xing	CROSSING

Y

Yr	YEAR
Yrs	YEARS

Dist	COUNTY	ROUTE	POST MILES TOTAL PROJECT	SHEET No.	TOTAL SHEETS
04	Son	116	15.0	30	47

Grace M. Tsushima
REGISTERED CIVIL ENGINEER

July 19, 2013
PLANS APPROVAL DATE

REGISTERED PROFESSIONAL ENGINEER Grace M. Tsushima No. C49814 Exp. 9-30-14 CIVIL STATE OF CALIFORNIA

THE STATE OF CALIFORNIA OR ITS OFFICERS OR AGENTS SHALL NOT BE RESPONSIBLE FOR THE ACCURACY OR COMPLETENESS OF SCANNED COPIES OF THIS PLAN SHEET.

TO ACCOMPANY PLANS DATED 6-15-15

UNIT OF MEASUREMENT SYMBOLS:

Some of the symbols used in the project plan quantity tables and in the Bid Item List are:

TABLE A

SYMBOL USED	DEFINITIONS
ACRE	ACRE
CF	CUBIC FOOT
CY	CUBIC YARD
EA	EACH
GAL	GALLON
LB	POUND
LF	LINEAR FOOT
SQFT	SQUARE FOOT
SQYD	SQUARE YARD
STA	100 FEET
TAB	TABLET
TON	2,000 POUNDS

Some of the symbols used in the plans other than in the project plan quantity tables are:

TABLE B

SYMBOL USED	DEFINITIONS
ksi	KIPS PER SQUARE INCH
ksf	KIPS PER SQUARE FOOT
psi	POUNDS PER SQUARE INCH
psf	POUNDS PER SQUARE FOOT
lb/ft^3, pcf	POUNDS PER CUBIC FOOT
tsf	TONS PER SQUARE FOOT
mph, MPH *	MILES PER HOUR
ø	NOMINAL DIAMETER
oz	OUNCE
lb	POUND
kip	1,000 POUNDS
cal	CALORIE
ft	FOOT OR FEET
gal	GALLON

* For use on a sign panel only

STATE OF CALIFORNIA
DEPARTMENT OF TRANSPORTATION

ABBREVIATIONS (SHEET 2 OF 2)

NO SCALE

RSP A10B DATED JULY 19, 2013 SUPERSEDES STANDARD PLAN A10B DATED MAY 20, 2011 - PAGE 2 OF THE STANDARD PLANS BOOK DATED 2010.

REVISED STANDARD PLAN RSP A10B

2010 REVISED STANDARD PLAN RSP A10B

6-7-13

Dist	COUNTY	ROUTE	POST MILES TOTAL PROJECT	SHEET No.	TOTAL SHEETS
04	Son	116	15.0	31	47

REGISTERED CIVIL ENGINEER

April 20, 2012
PLANS APPROVAL DATE

Roberta L. McLaughlin
No. C40375
Exp. 3-31-13
CIVIL
REGISTERED PROFESSIONAL ENGINEER
STATE OF CALIFORNIA

THE STATE OF CALIFORNIA OR ITS OFFICERS OR AGENTS SHALL NOT BE RESPONSIBLE FOR THE ACCURACY OR COMPLETENESS OF SCANNED COPIES OF THIS PLAN SHEET.

TO ACCOMPANY PLANS DATED 6-15-15

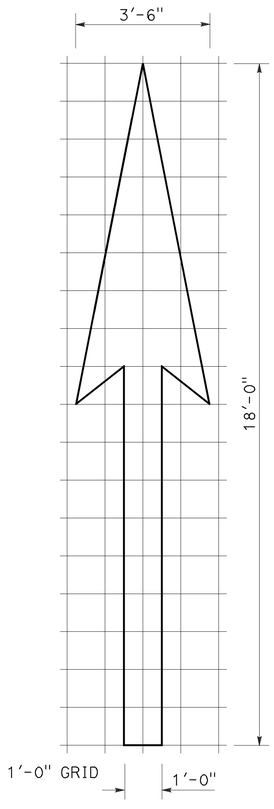

A=25 ft^2

TYPE I 18'-0" ARROW

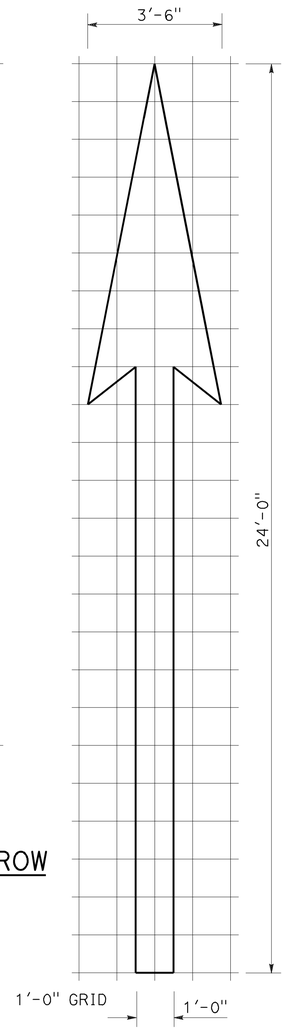

A=31 ft^2

TYPE I 24'-0" ARROW

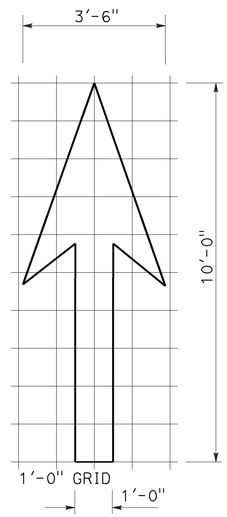

A=14 ft^2

TYPE I 10'-0" ARROW

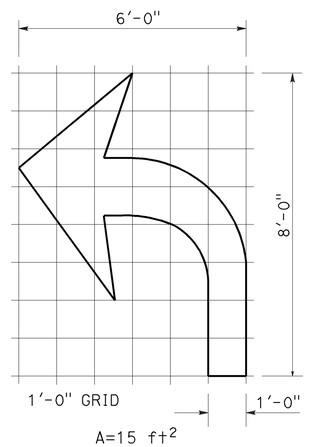

A=15 ft^2

TYPE IV (L) ARROW

(For Type IV (R) arrow, use mirror image)

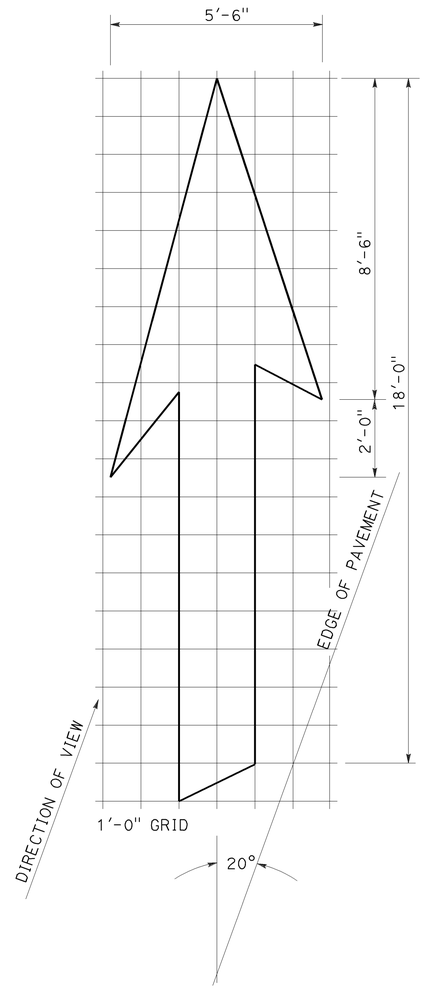

A=42 ft^2

TYPE VI ARROW

Right lane drop arrow
(For left lane, use mirror image)

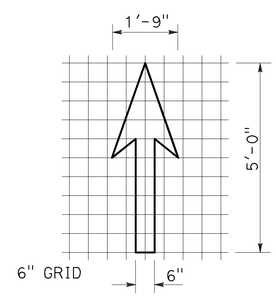

A=3.5 ft^2

BIKE LANE ARROW

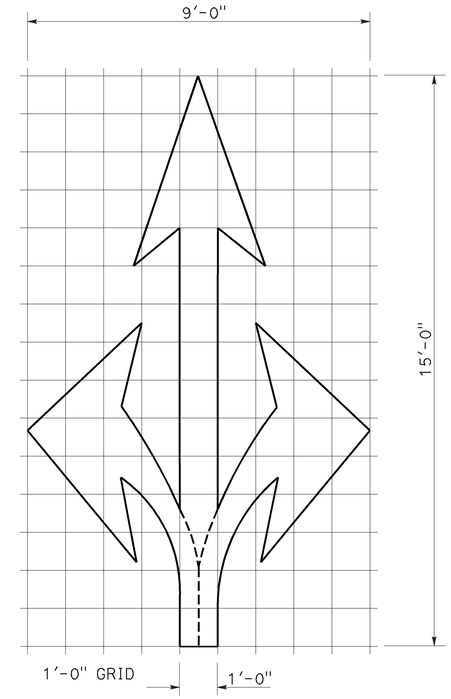

A=36 ft^2

TYPE VIII ARROW

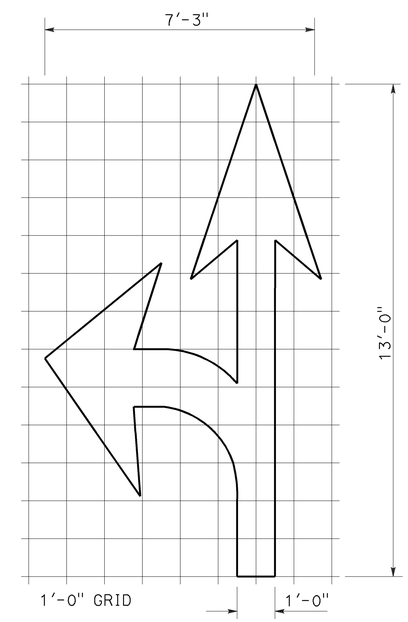

A=27 ft^2

TYPE VII (L) ARROW

(For Type VII (R) arrow, use mirror image)

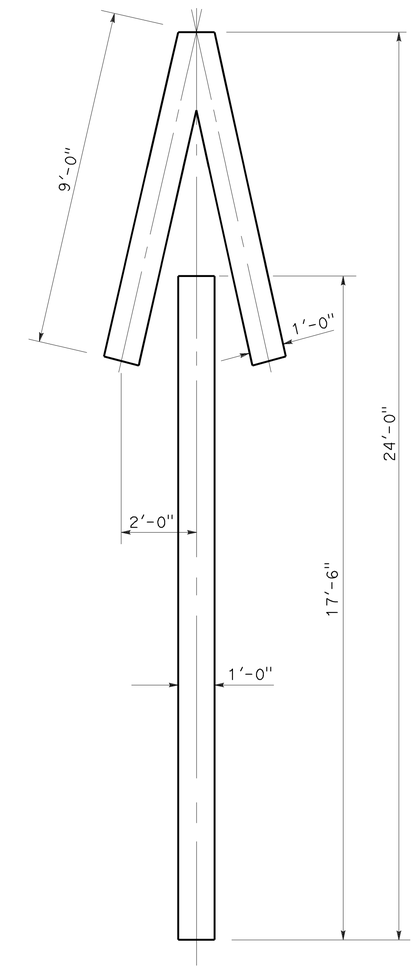

A=33 ft^2

TYPE V ARROW

NOTE:
Minor variations in dimensions may be accepted by the Engineer.

STATE OF CALIFORNIA
DEPARTMENT OF TRANSPORTATION

PAVEMENT MARKINGS ARROWS

NO SCALE

RSP A24A DATED APRIL 20, 2012 SUPERSEDES STANDARD PLAN A24A DATED MAY 20, 2011 - PAGE 13 OF THE STANDARD PLANS BOOK DATED 2010.

REVISED STANDARD PLAN RSP A24A

2010 REVISED STANDARD PLAN RSP A24A

3-14-12

Dist	COUNTY	ROUTE	POST MILES TOTAL PROJECT	SHEET No.	TOTAL SHEETS
04	Son	116	15.0	32	47

Randell D. Hiatt
REGISTERED CIVIL ENGINEER

July 19, 2013
PLANS APPROVAL DATE

REGISTERED PROFESSIONAL ENGINEER
Randell D. Hiatt
No. C50200
Exp. 6-30-15
CIVIL
STATE OF CALIFORNIA

THE STATE OF CALIFORNIA OR ITS OFFICERS OR AGENTS SHALL NOT BE RESPONSIBLE FOR THE ACCURACY OR COMPLETENESS OF SCANNED COPIES OF THIS PLAN SHEET.

TO ACCOMPANY PLANS DATED 6-15-15

2010 REVISED STANDARD PLAN RSP A77N4

NOTES:

1. When necessary to place dike more than 7" in front of face of MGS, only Type C dike may be used. For dike details, see Revised Standard Plan RSP A87B.
2. For standard railing post embedment, see Revised Standard Plan RSP A77N3.
3. MGS delineation to be used where shown on the Project Plans.
4. When dike or curb is placed under MGS, the maximum height of the dike or curb shall be 6". Mountable dike should not be used. For dike and curb details, see Revised Standard Plans RSP A87A and RSP A87B.
5. For details of typical distance between the face of rail and hinge point, see Revised Standard Plan RSP A77N3.
6. For steel line posts, use 1/4 - 20 self-tapping screws in 0.22" diameter holes or 1/4" bolts in 9/32" diameter holes.

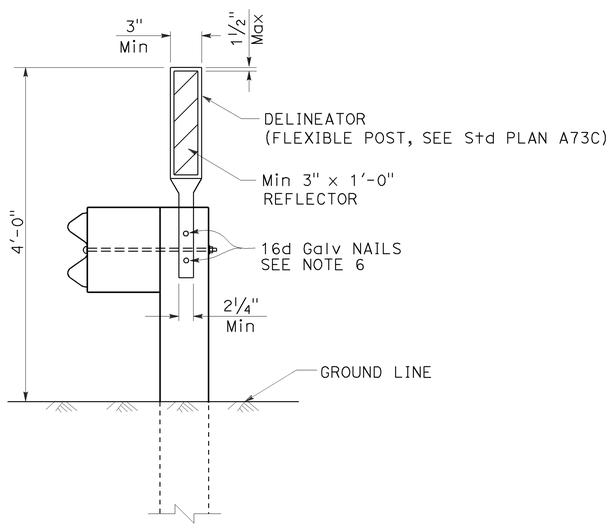

MGS DELINEATION

See Note 3

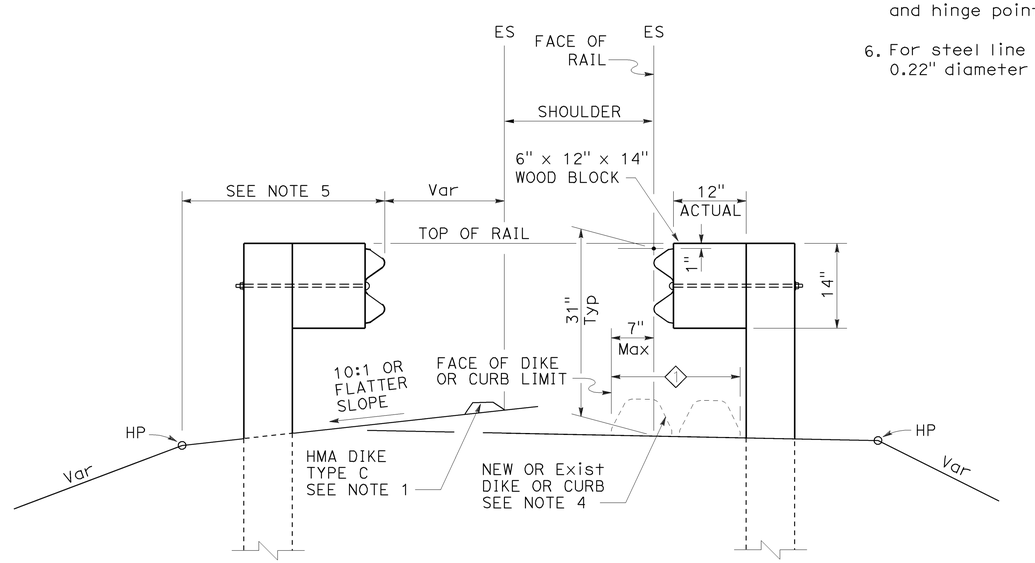

DIKE POSITIONING

See Note 1

1 PERMISSIBLE DIKE OR CURB PLACEMENT AREA

STATE OF CALIFORNIA
DEPARTMENT OF TRANSPORTATION

MIDWEST GUARDRAIL SYSTEM TYPICAL RAILING DELINEATION AND DIKE POSITIONING DETAILS

NO SCALE

RSP A77N4 DATED JULY 19, 2013 SUPPLEMENTS THE STANDARD PLANS BOOK DATED 2010.

REVISED STANDARD PLAN RSP A77N4

Dist	COUNTY	ROUTE	POST MILES TOTAL PROJECT	SHEET No.	TOTAL SHEETS
04	Son	116	15.0	33	47

REGISTERED CIVIL ENGINEER

July 18, 2014
PLANS APPROVAL DATE

REGISTERED PROFESSIONAL ENGINEER Glenn DeCou No. C34547 Exp. 9-30-15 CIVIL STATE OF CALIFORNIA

THE STATE OF CALIFORNIA OR ITS OFFICERS OR AGENTS SHALL NOT BE RESPONSIBLE FOR THE ACCURACY OR COMPLETENESS OF SCANNED COPIES OF THIS PLAN SHEET.

TO ACCOMPANY PLANS DATED 6-15-15

2010 REVISED STANDARD PLAN RSP A85

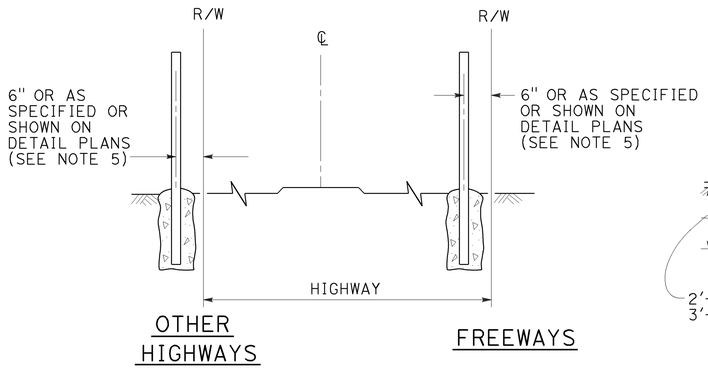

FENCE LOCATION

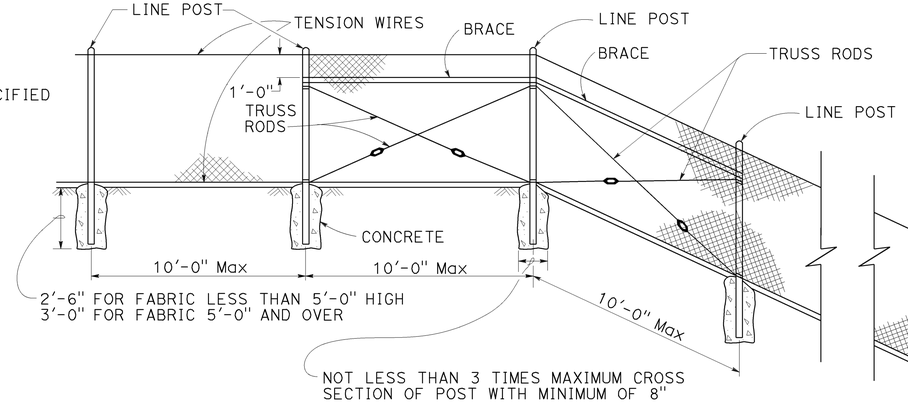

CHAIN LINK FENCE ON SHARP BREAK IN GRADE

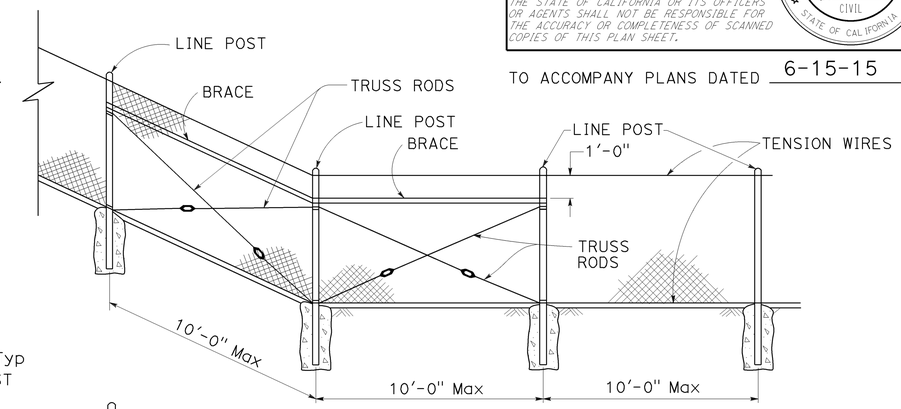

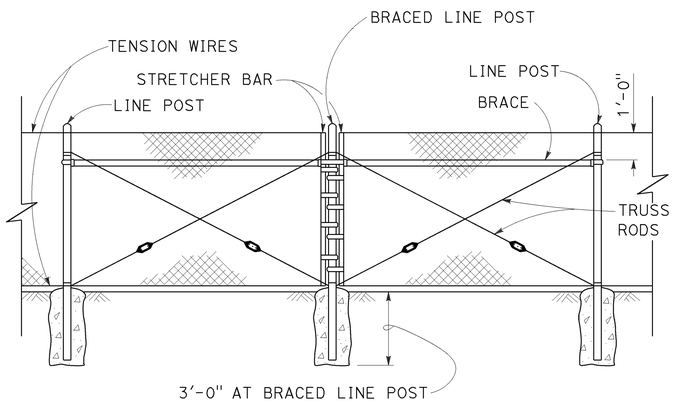

BRACED LINE POST INSTALLATION

Braced line post at intervals not exceeding 1000'

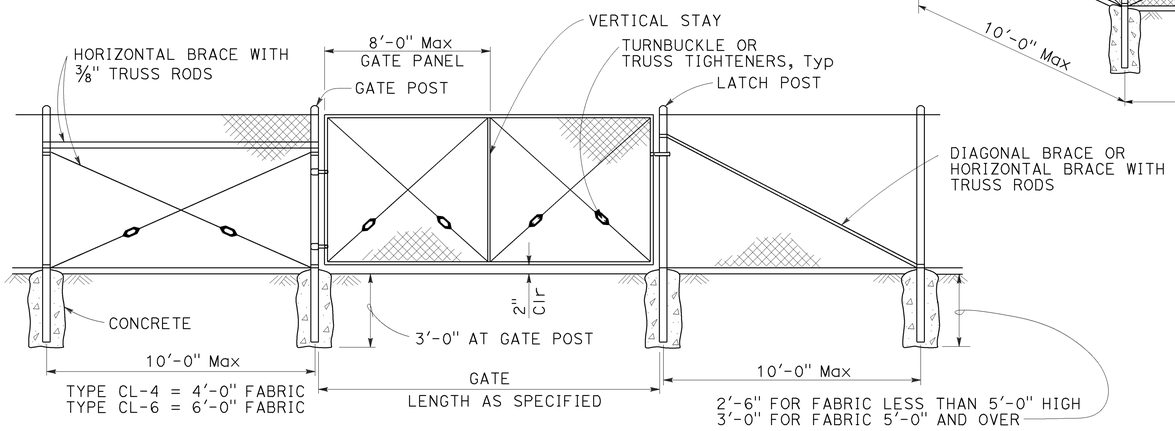

CHAIN LINK GATE INSTALLATION

GATE POST			
FENCE HEIGHT	GATE WIDTHS	ROUND OD PIPE	WEIGHT (lb/ft)
6'-0" AND LESS	UP THRU 6'-0"	2.875"	5.80
	OVER 6'-0" THRU 12'-0"	4.500"	10.80
	OVER 12'-0" THRU 18'-0"	5.563"	14.63
	OVER 18'-0" TO 24'-0" Max	6.625"	18.99
OVER 6'-0" TO 8'-0" Max	UP THRU 6'-0"	3.500"	7.58
	OVER 6'-0" THRU 12'-0"	5.563"	14.63
	OVER 12'-0" THRU 18'-0"	6.625"	18.99
	OVER 18'-0" TO 24'-0" Max	8.625"	28.58

Above post dimensions and weights are minimums. Larger sizes may be used upon approval.

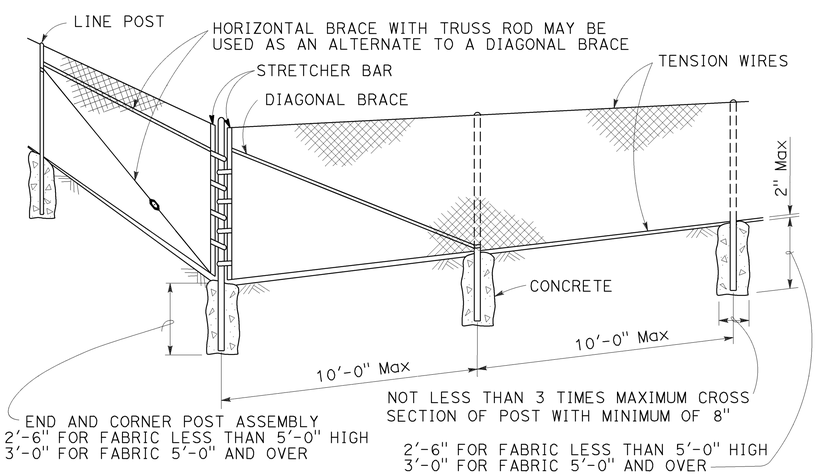

CORNER POST

NOTES:

1. The table below shows minimum sized posts and braces complying with the specifications. Larger or heavier post and brace sizes may be used upon approval.
2. Sections shown in the tables must also comply with the strength requirements and other provisions of the Specifications.
3. Other sections which comply with the strength requirements and other provisions of the Specifications may be used upon approval.
4. Options exercised shall be uniform on any one project.
5. Offset to be 2'-0" at monument locations, measured at right angles to R/W lines. Taper to achieve offset to be at least 20'-0" long.
6. See Revised Standard Plan RSP A85B for Brace, Stretcher Bar, and Truss Tightener Details.

TYPICAL MEMBER DIMENSIONS (See Notes)										
FENCE HEIGHT	LINE POSTS				END, LATCH AND CORNER POSTS		BRACES			
	ROUND OD PIPE	WEIGHT (lb/ft)	ROLL FORMED		ROUND OD PIPE	WEIGHT (lb/ft)	ROUND OD PIPE	WEIGHT (lb/ft)	ROLL FORMED	
			SECTION	WEIGHT (lb/ft)					SECTION	WEIGHT (lb/ft)
6'-0" AND LESS	1.900"	2.72	1.875" x 1.625"	1.85	2.375"	3.65	1.66"	2.27	1.625" x 1.25"	1.35
OVER 6'-0" TO 8'-0" Max	2.375"	3.65	2.25" x 1.70"	2.78	2.875"	5.80	1.66"	2.27	1.625" x 1.25"	1.35

STATE OF CALIFORNIA
DEPARTMENT OF TRANSPORTATION

CHAIN LINK FENCE

NO SCALE

RSP A85 DATED JULY 18, 2014 SUPERSEDES STANDARD PLAN A85 DATED MAY 20, 2011 - PAGE 112 OF THE STANDARD PLANS BOOK DATED 2010.

REVISED STANDARD PLAN RSP A85

7-1-14

Dist	COUNTY	ROUTE	POST MILES TOTAL PROJECT	SHEET No.	TOTAL SHEETS
04	Son	116	15.0	34	47

REGISTERED CIVIL ENGINEER

July 19, 2013
PLANS APPROVAL DATE

REGISTERED PROFESSIONAL ENGINEER Gurinderpal Bhullar No. C48815 Exp. 9-30-14 CIVIL STATE OF CALIFORNIA

THE STATE OF CALIFORNIA OR ITS OFFICERS OR AGENTS SHALL NOT BE RESPONSIBLE FOR THE ACCURACY OR COMPLETENESS OF SCANNED COPIES OF THIS PLAN SHEET.

TO ACCOMPANY PLANS DATED 6-15-15

2010 REVISED STANDARD PLAN RSP T9

TABLE 1

TAPER LENGTH CRITERIA AND CHANNELIZING DEVICE SPACING

SPEED (S)	MINIMUM TAPER LENGTH * FOR WIDTH OF OFFSET 12 FEET (W)				MAXIMUM CHANNELIZING DEVICE SPACING		
					X	Y	Z **
	TANGENT 2L	MERGING L	SHIFTING L/2	SHOULDER L/3	TAPER	TANGENT	CONFLICT
mph	ft	ft	ft	ft	ft	ft	ft
20	160	80	40	27	20	40	10
25	250	125	63	42	25	50	12
30	360	180	90	60	30	60	15
35	490	245	123	82	35	70	17
40	640	320	160	107	40	80	20
45	1080	540	270	180	45	90	22
50	1200	600	300	200	50	100	25
55	1320	660	330	220	55	110	27
60	1440	720	360	240	60	120	30
65	1560	780	390	260	65	130	32
70	1680	840	420	280	70	140	35

* - For other offsets, use the following merging taper length formula for L:
For speed of 40 mph or less, $L = WS^2/60$
For speed of 45 mph or more, $L = WS$

Where: L = Taper length in feet
W = Width of offset in feet
S = Posted speed limit, off-peak 85th-percentile speed prior to work starting, or the anticipated operating speed in mph

** - Use for taper and tangent sections where there are no pavement markings or where there is a conflict between existing pavement markings and channelizers (CA).

TABLE 2

LONGITUDINAL BUFFER SPACE AND FLAGGER STATION SPACING

SPEED *	Min D **	DOWNGRADE Min D ***		
		-3%	-6%	-9%
mph	ft	ft	ft	ft
20	115	116	120	126
25	155	158	165	173
30	200	205	215	227
35	250	257	271	287
40	305	315	333	354
45	360	378	400	427
50	425	446	474	507
55	495	520	553	593
60	570	598	638	686
65	645	682	728	785
70	730	771	825	891

* - Speed is posted speed limit, off-peak 85th-percentile speed prior to work starting, or the anticipated operating speed in mph

** - Longitudinal buffer space or flagger station spacing

*** - Use on sustained downgrade steeper than -3 percent and longer than 1 mile.

TABLE 3

ADVANCE WARNING SIGN SPACING

ROAD TYPE	DISTANCE BETWEEN SIGNS *		
	A	B	C
	ft	ft	ft
URBAN - 25 mph OR LESS	100	100	100
URBAN - MORE THAN 25 mph TO 40 mph	250	250	250
URBAN - MORE THAN 40 mph	350	350	350
RURAL	500	500	500
EXPRESSWAY / FREEWAY	1000	1500	2640

* - The distances are approximate, are intended for guidance purposes only, and should be applied with engineering judgment. These distances should be adjusted by the Engineer for field conditions, if necessary, by increasing or decreasing the recommmended distances.

STATE OF CALIFORNIA
DEPARTMENT OF TRANSPORTATION

TRAFFIC CONTROL SYSTEM TABLES FOR LANE AND RAMP CLOSURES

NO SCALE

RSP T9 DATED JULY 19, 2013 SUPERSEDES RSP T9 DATED APRIL 19, 2013 THAT SUPPLEMENTS THE STANDARD PLANS BOOK DATED 2010.

REVISED STANDARD PLAN RSP T9

4-30-13

Dist	COUNTY	ROUTE	POST MILES TOTAL PROJECT	SHEET No.	TOTAL SHEETS
04	Son	116	15.0	35	47

Devinder Singh
REGISTERED CIVIL ENGINEER

October 17, 2014
PLANS APPROVAL DATE

REGISTERED PROFESSIONAL ENGINEER
Devinder Singh
No. C50470
Exp. 6-30-15
CIVIL
STATE OF CALIFORNIA

THE STATE OF CALIFORNIA OR ITS OFFICERS OR AGENTS SHALL NOT BE RESPONSIBLE FOR THE ACCURACY OR COMPLETENESS OF SCANNED COPIES OF THIS PLAN SHEET.

TO ACCOMPANY PLANS DATED 6-15-15

2010 REVISED STANDARD PLAN RSP T13

NOTES:

See Revised Standard Plan RSP T9 for tables.

Use cone spacing X for taper segment, Y for tangent segment or Z for conflict situations, as approriate, per Table 1, unless X, Y, or Z cone spacing is shown on this sheet.

Unless otherwise specified in the special provisions, all temporary warning signs shall have black legend on fluorescent orange background.

California codes are designated by (CA). Otherwise, Federal (MUTCD) codes are shown.

TYPICAL LANE CLOSURE WITH REVERSIBLE CONTROL

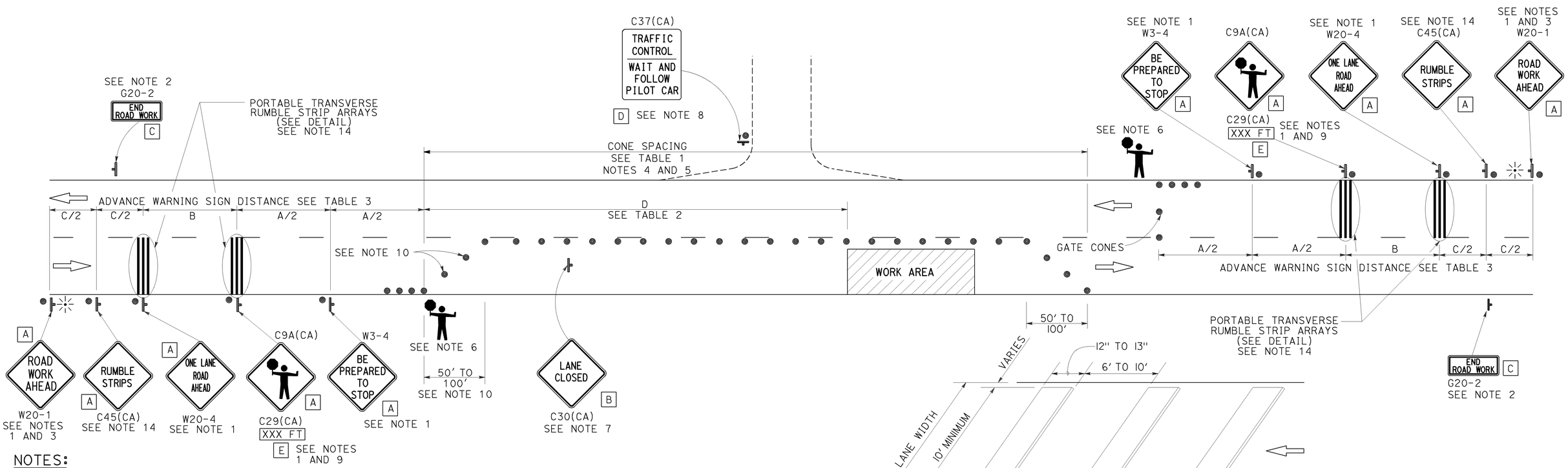

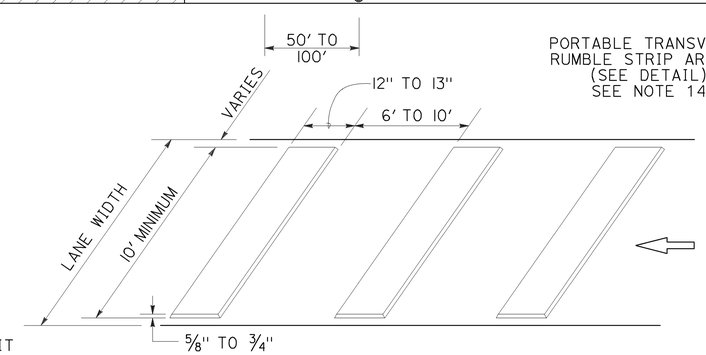

PORTABLE TRANSVERSE RUMBLE STRIP ARRAY DETAIL

NOTES:

1. Each advance warning sign in each direction of travel shall be equipped with at least two flags for daytime closure. Each flag shall be at least 16" x 16" in size and shall be orange or fluorescent red-orange in color. Flashing beacons shall be placed at the locations indicated for lane closure during hours of darkness.
2. A G20-2 "END ROAD WORK" sign, as appropriate, shall be placed at the end of the lane control unless the end of work area is obvious, or ends within a larger project's limits.
3. If the W20-1 sign would follow within 2000' of a stationary W20-1 or G20-1 "ROAD WORK NEXT _____ MILES", use a W20-4 sign for the first advance warning sign.
4. All cones used for lane closures during the hours of darkness shall be fitted with retroreflective bands (or sleeves) as specified in the specifications.
5. Portable delineators, placed at one-half the spacing indicated for traffic cones, may be used instead of cones for daytime closures only.
6. Additional advance flaggers may be required. Flagger should stand in a conspicuous place, be visible to approaching traffic as well as approaching vehicles after the first vehicle has stopped. During the hours of darkness, the flagging-station and flagger shall be illuminated and clearly visible to approaching traffic. The illumination footprint of the lighting on the ground shall be at least 20' in diameter. Place a minimum of four cones at 50' intervals in advance of flagger station as shown.
7. Place C30(CA) "LANE CLOSED" sign at 500' to 1000' intervals throughout extended work areas. They are optional if the work area is visible from the flagger station.
8. When a pilot car is used, place a C37(CA) "TRAFFIC CONTROL-WAIT AND FOLLOW PILOT CAR" sign with black legend on white background at all intersections, driveways and alleys without a flagger within traffic control area. Signs shall be clean and visible at all times. Where traffic can not be effectively self-regulated, at least one flagger shall be used at each intersection within traffic control area.
9. An optional C29(CA) sign may be placed below the C9A(CA) sign.
10. Either traffic cones or barricades shall be placed on the taper. Barricades shall be Type I, II, or III.
11. The color of the portable transverse rumble strips shall be black or orange. Use 2 arrays, each array shall consist of 3 rumble strips.
12. Portable transverse rumble strips shall not be placed on sharp horizontal or vertical curves nor shall they be placed through pedestrian crossings.
13. If the portable transverse rumble strips become out of alignment (skewed) by more than 6 inches, measured from one end to the other, they shall be readjusted to bring the placement back to the original location.
14. Portable transverse rumble strips are not required if any one of the following conditions is satisfied:
    A. Work duration occupies a location for four hours or less
    B. Posted speed limit is below 45 MPH
    C. Work is of emergency nature
    D. Work zone is in snow or icy weather conditions

LEGEND

- TRAFFIC CONE
- TEMPORARY TRAFFIC CONTROL SIGN
- PORTABLE FLASHING BEACON
- FLAGGER

SIGN PANEL SIZE (Min)

A	48" x 48"
B	30" x 30"
C	36" x 18"
D	36" x 42"
E	20" x 7"

STATE OF CALIFORNIA
DEPARTMENT OF TRANSPORTATION

TRAFFIC CONTROL SYSTEM FOR LANE CLOSURE ON TWO LANE CONVENTIONAL HIGHWAYS

NO SCALE

RSP T13 DATED OCTOBER 17, 2014 SUPERSEDES RSP T13 DATED JULY 18, 2014 AND RSP T13 DATED APRIL 19, 2013 AND STANDARD PLAN T13 DATED MAY 20, 2011 - PAGE 241 OF THE STANDARD PLANS BOOK DATED 2010.

REVISED STANDARD PLAN RSP T13

9-26-14

Dist	COUNTY	ROUTE	POST MILES TOTAL PROJECT	SHEET No.	TOTAL SHEETS
04	Son	116	15.0	36	47

REGISTERED CIVIL ENGINEER

October 21, 2011
PLANS APPROVAL DATE

REGISTERED PROFESSIONAL ENGINEER Tillat Satter No. C42892 Exp. 3-31-12 CIVIL STATE OF CALIFORNIA

THE STATE OF CALIFORNIA OR ITS OFFICERS OR AGENTS SHALL NOT BE RESPONSIBLE FOR THE ACCURACY OR COMPLETENESS OF SCANNED COPIES OF THIS PLAN SHEET.

TO ACCOMPANY PLANS DATED 6-15-15

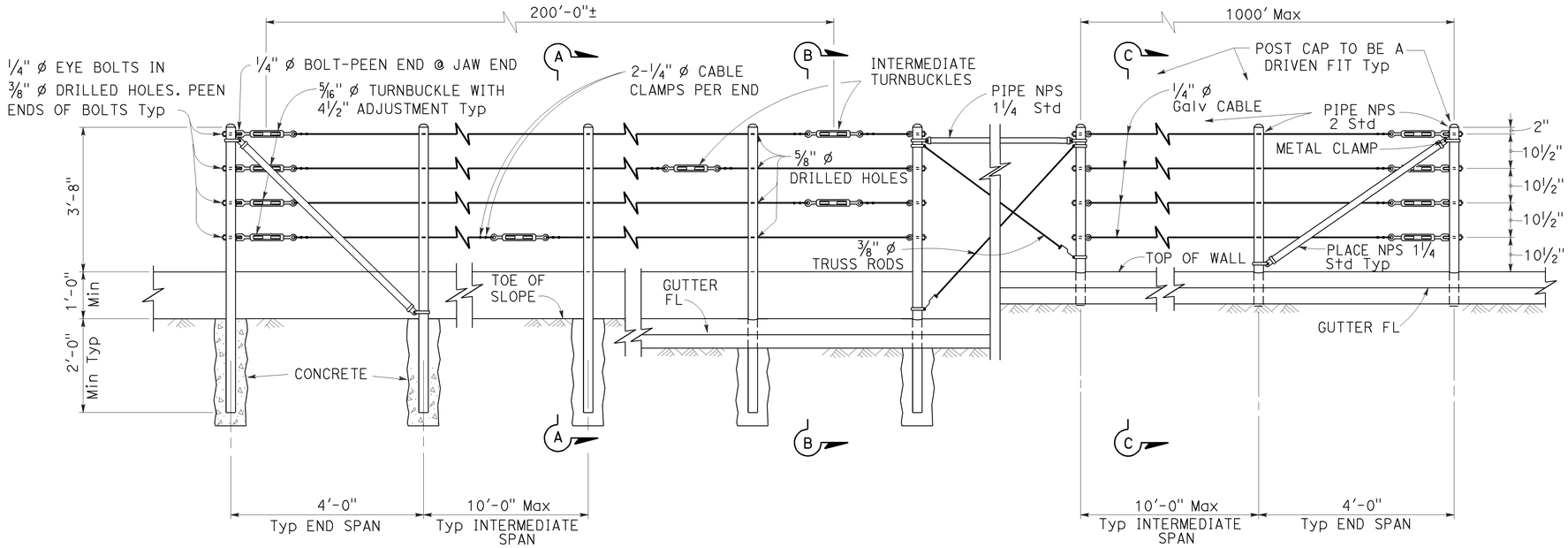

EXISTING WALL (WITHOUT GUTTER)
Existing

RETAINING WALL (WITH GUTTER)
Existing

RETAINING WALL (WITH GUTTER)
New construction

ELEVATION

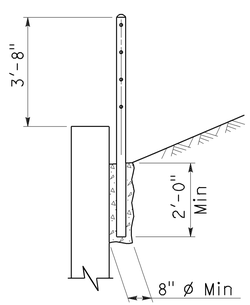

SECTION A-A
Existing

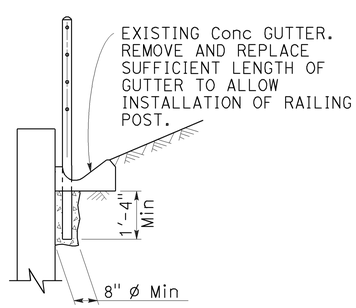

SECTION B-B
Existing

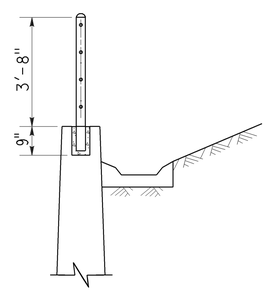

SECTION C-C
New construction

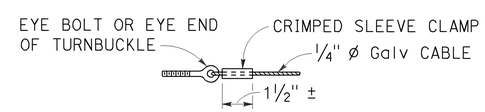

ALTERNATIVE CABLE CONNECTION

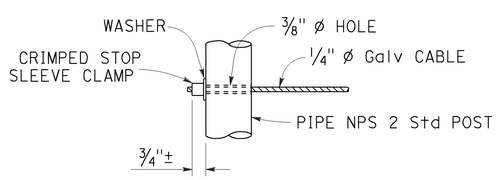

ALTERNATIVE DEAD END ANCHORAGE

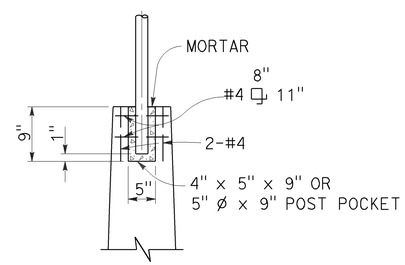

POST POCKET

NOTES:

1. Maximum distance between turnbuckles shall be 200'-0"±.
2. Intermediate turnbuckles to be placed in adjacent spans.
3. Cable shall not be spliced between intermediate turnbuckles and end posts.
4. Posts to be vertical.
5. Alignment of holes in posts may vary to conform to slope of top of retaining wall.
6. The Contractor shall verify all dependent dimensions in the field before ordering or fabricating any material.
7. Line posts shall be braced horizontally and trussed diagonally in both directions at intervals not to exceed 1000'.
8. Post pockets to be centered in top of wall.
9. Typical end spans, braced in both directions, shall be constructed at changes in line where the angle of deflection is 15° or more.
10. Provide thimbles at all cable loops.

STATE OF CALIFORNIA
DEPARTMENT OF TRANSPORTATION

CABLE RAILING

NO SCALE

RSP B11-47 DATED OCTOBER 21, 2011 SUPERSEDES STANDARD PLAN B11-47 DATED MAY 20, 2011 - PAGE 293 OF THE STANDARD PLANS BOOK DATED 2010.

REVISED STANDARD PLAN RSP B11-47

2010 REVISED STANDARD PLAN RSP B11-47

9-14-11

Dist	COUNTY	ROUTE	POST MILES TOTAL PROJECT	SHEET No.	TOTAL SHEETS
04	Son	116	15.0	37	47

REGISTERED CIVIL ENGINEER

July 19, 2013
PLANS APPROVAL DATE

REGISTERED PROFESSIONAL ENGINEER
Tillat Satter
No. C42892
Exp. 3-31-14
CIVIL
STATE OF CALIFORNIA

THE STATE OF CALIFORNIA OR ITS OFFICERS OR AGENTS SHALL NOT BE RESPONSIBLE FOR THE ACCURACY OR COMPLETENESS OF SCANNED COPIES OF THIS PLAN SHEET.

TO ACCOMPANY PLANS DATED 6-15-15

2010 REVISED STANDARD PLAN RSP B11-60

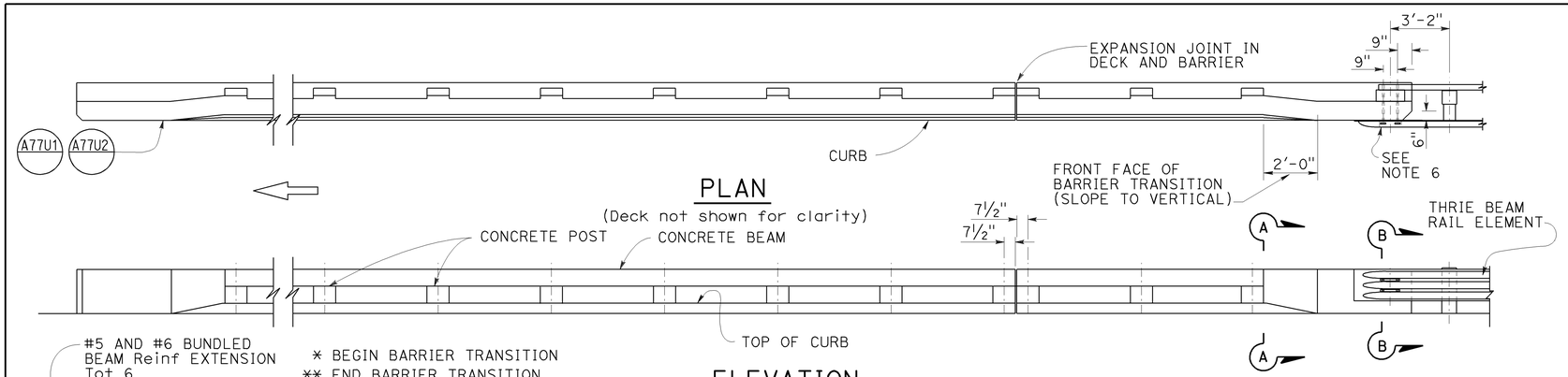

PLAN

(Deck not shown for clarity)

ELEVATION

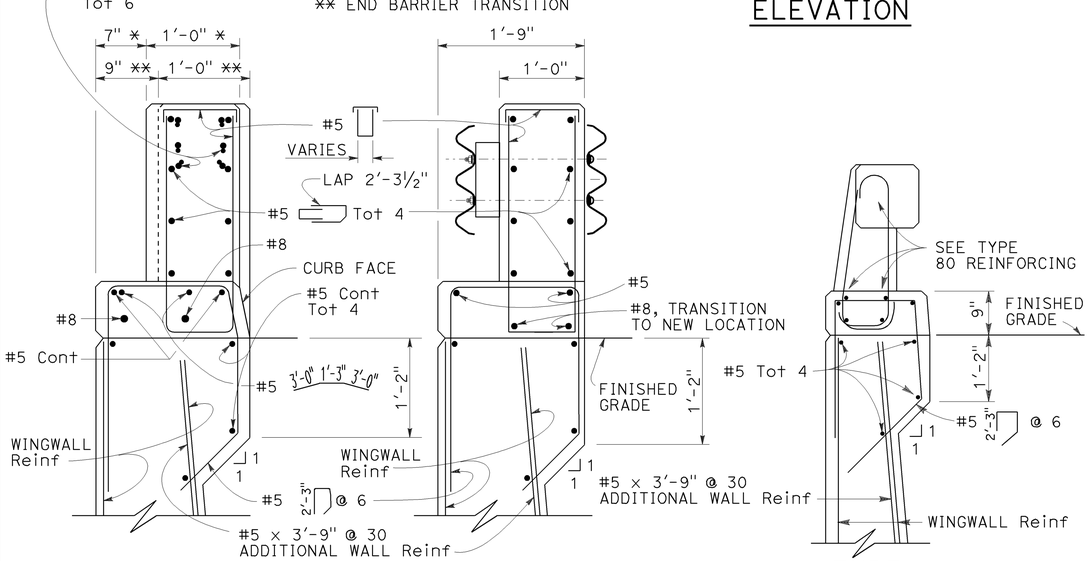

SECTION A-A

SECTION B-B

TYPE 80A

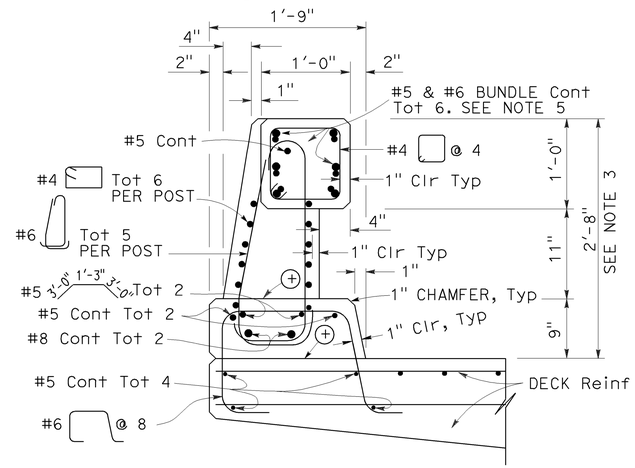

TYPE 80

⊕ Construction joint

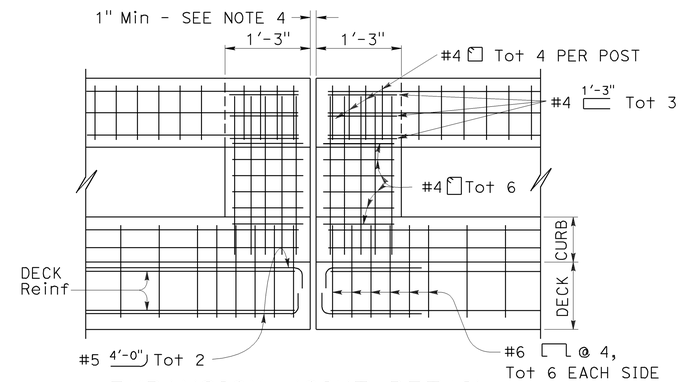

EXPANSION JOINT DETAIL

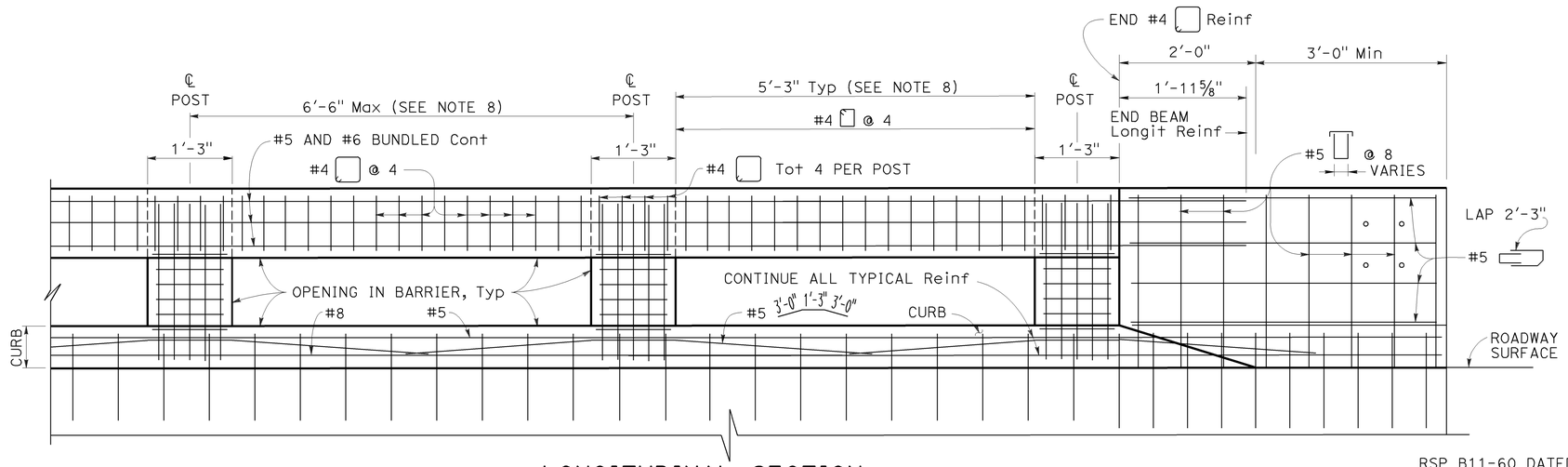

LONGITUDINAL SECTION

(Deck or wingwall reinforcing not shown)

NOTES:

1. Walls are to be backfilled before the barrier is placed.
2. Longitudinal reinforcing steel to stop at all expansion joints.
3. The front face dimensions are to be constant above the finish roadway profile, but the overall height will vary with certain thicknesses of surfacing and roadway slopes.
4. Expansion joint to match deck joint.
5. No lap splicing allowed on the longitudinal rail reinforcing. Splicing shall be staggered.
6. For typical metal railing connection details not shown, see Revised Standard Plans RSP A77U1 and RSP A77U2.
7. Chain link railing is not allowed on Type 80 Barriers.
8. Post to be spaced equally, typically 6'-6" spacing. Post spacing may be reduced where location of hinges or expansion joints or the length of wingwalls will not accommodate the 6'-6" spacing. Maximum see-through availability is to be strived for, where 6'-6" post spacing can not be achieved.

STATE OF CALIFORNIA
DEPARTMENT OF TRANSPORTATION

CONCRETE BARRIER TYPE 80 (SHEET 1 OF 2)

NO SCALE

RSP B11-60 DATED JULY 19, 2013 SUPERSEDES RSP B11-60 DATED APRIL 20, 2012 AND STANDARD PLAN B11-60 DATED MAY 20, 2011 - PAGE 300 OF THE STANDARD PLANS BOOK DATED 2010.

REVISED STANDARD PLAN RSP B11-60

6-27-13

Dist	COUNTY	ROUTE	POST MILES TOTAL PROJECT	SHEET No.	TOTAL SHEETS
04	Son	116	15.0	38	47

Theresa Gabriel
REGISTERED ELECTRICAL ENGINEER

July 19, 2013
PLANS APPROVAL DATE

REGISTERED PROFESSIONAL ENGINEER
Theresa Aziz Gabriel
No. E15129
Exp. 6-30-14
ELECTRICAL
STATE OF CALIFORNIA

THE STATE OF CALIFORNIA OR ITS OFFICERS OR AGENTS SHALL NOT BE RESPONSIBLE FOR THE ACCURACY OR COMPLETENESS OF SCANNED COPIES OF THIS PLAN SHEET.

TO ACCOMPANY PLANS DATED 6-15-15

2010 REVISED STANDARD PLAN RSP ES-5C

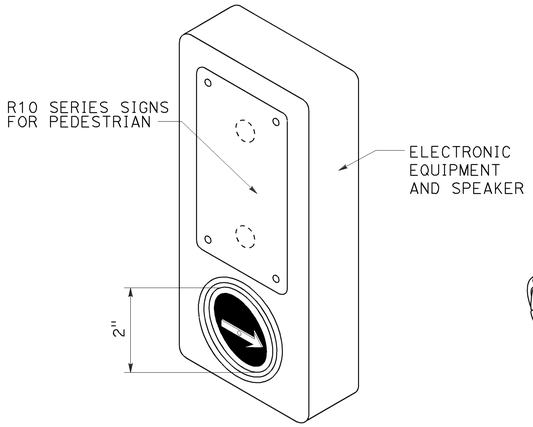

ACCESSIBLE PEDESTRIAN SIGNAL

DETAIL A
(See note 1 to 4)

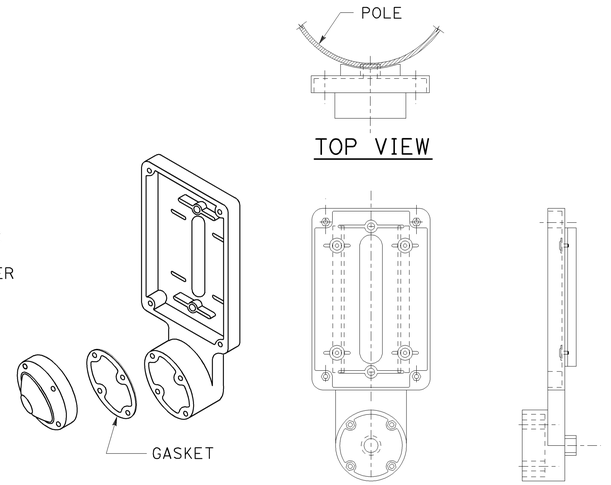

TYPE B PUSH BUTTON ASSEMBLY

DETAIL B
(See note 1 to 4)

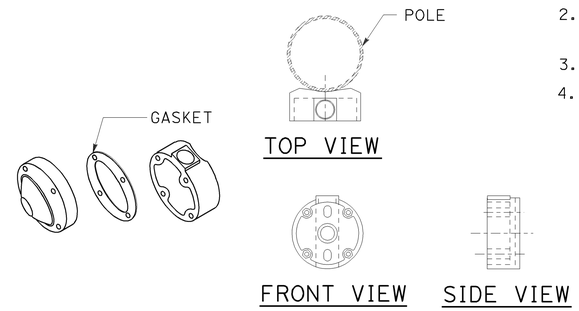

TYPE C PUSH BUTTON ASSEMBLY

DETAIL C
(See note 1 to 4)

NOTES:

1. Back casting shape to fit curvature of pole.
2. Provide cover fitting for top of post, when PBA is mounted on push button assembly post.
3. Install push button on crosswalk side of standard.
4. Use R10 series regulatory signs and plaques for pedestrian and bicycle facilities.

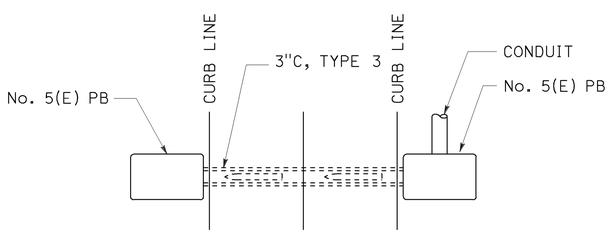

PLAN

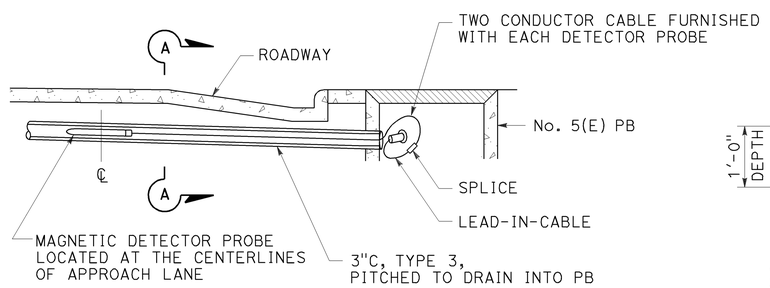

ELEVATION

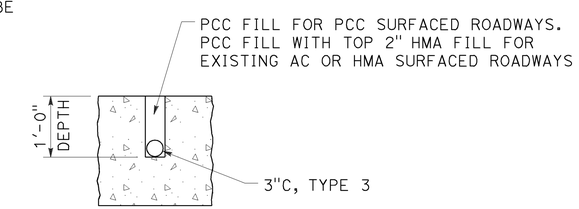

SECTION A-A

MAGNETIC VEHICLE DETECTOR
INSTALLATION DETAILS
DETAIL D

STATE OF CALIFORNIA
DEPARTMENT OF TRANSPORTATION

ELECTRICAL SYSTEMS (ACCESSIBLE PEDESTRIAN SIGNAL, PUSH BUTTON ASSEMBLIES AND MAGNETIC VEHICLE DETECTOR)

NO SCALE

RSP ES-5C DATED JULY 19, 2013 SUPERSEDES STANDARD PLAN ES-5C
DATED MAY 20, 2011 - PAGE 450 OF THE STANDARD PLANS BOOK DATED 2010.

REVISED STANDARD PLAN RSP ES-5C

7-9-13

DIST	COUNTY	ROUTE	POST MILES TOTAL PROJECT	SHEET No.	TOTAL SHEETS
04	Son	116	15.0	39	47

Nassar Tachta 4-29-15
REGISTERED CIVIL ENGINEER DATE

6-15-15
PLANS APPROVAL DATE

REGISTERED PROFESSIONAL ENGINEER ABDEL-NASSER TACHTA No. C83141 Exp. 3-31-2017 CIVIL STATE OF CALIFORNIA

The State of California or its officers or agents shall not be responsible for the accuracy or completeness of scanned copies of this plan sheet.

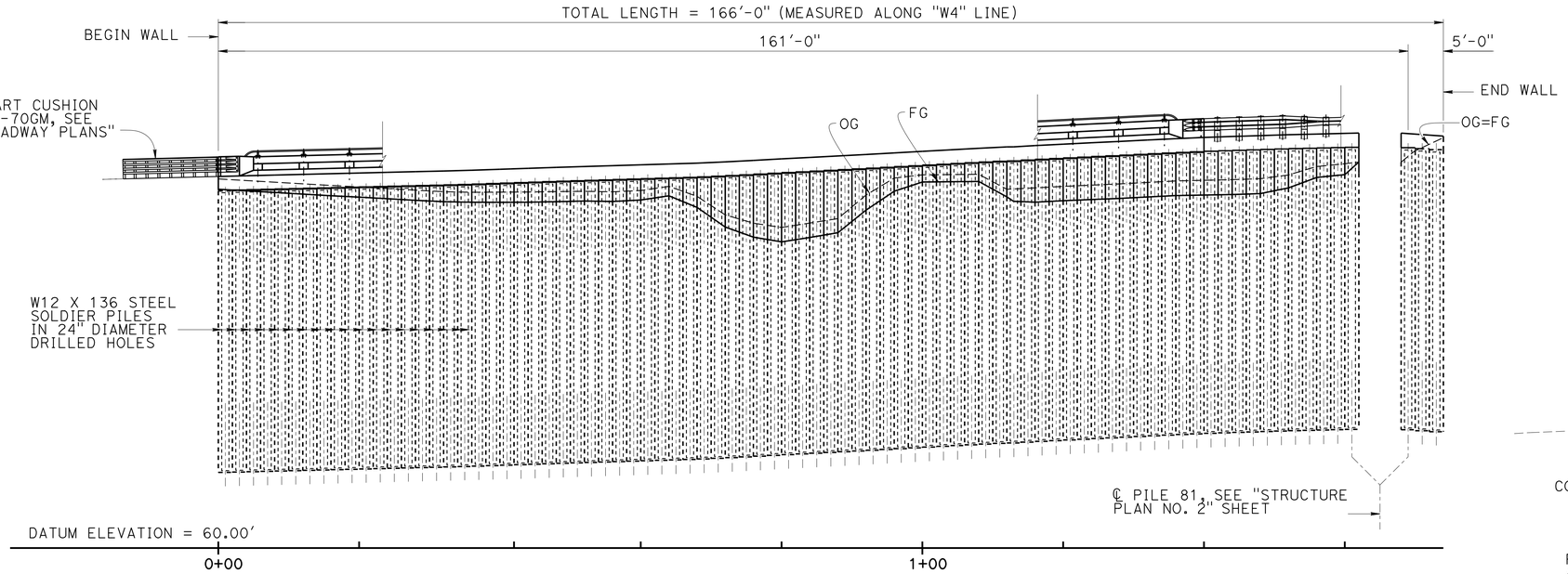

DEVELOPED MIRRORED ELEVATION

1" = 10'

NOTE: CHAIN LINK FENCE NOT SHOWN

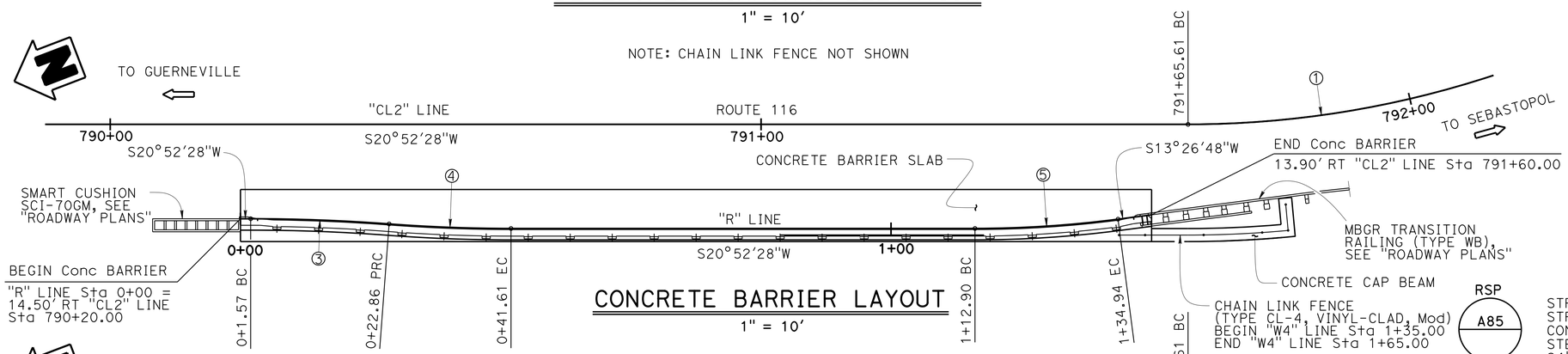

CONCRETE BARRIER LAYOUT

1" = 10'

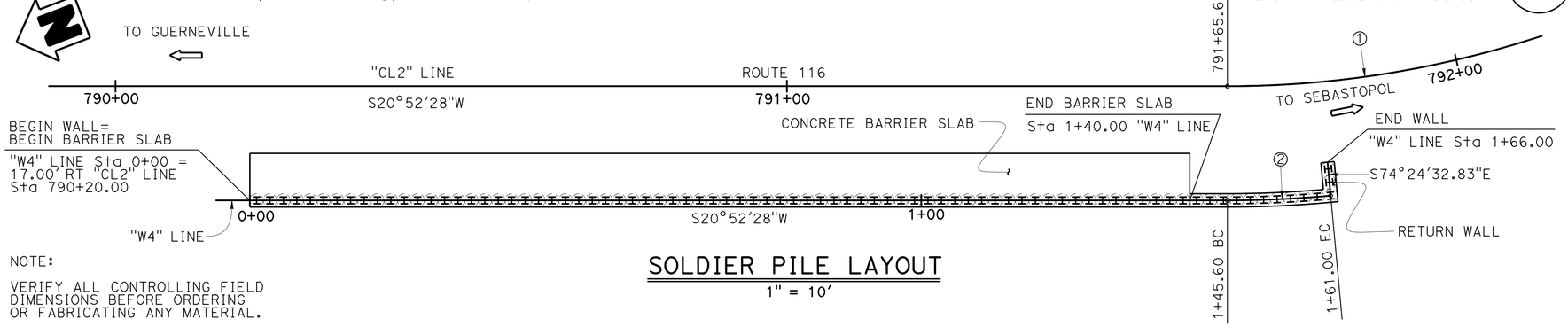

NOTE:

VERIFY ALL CONTROLLING FIELD DIMENSIONS BEFORE ORDERING OR FABRICATING ANY MATERIAL.

SOLDIER PILE LAYOUT

1" = 10'

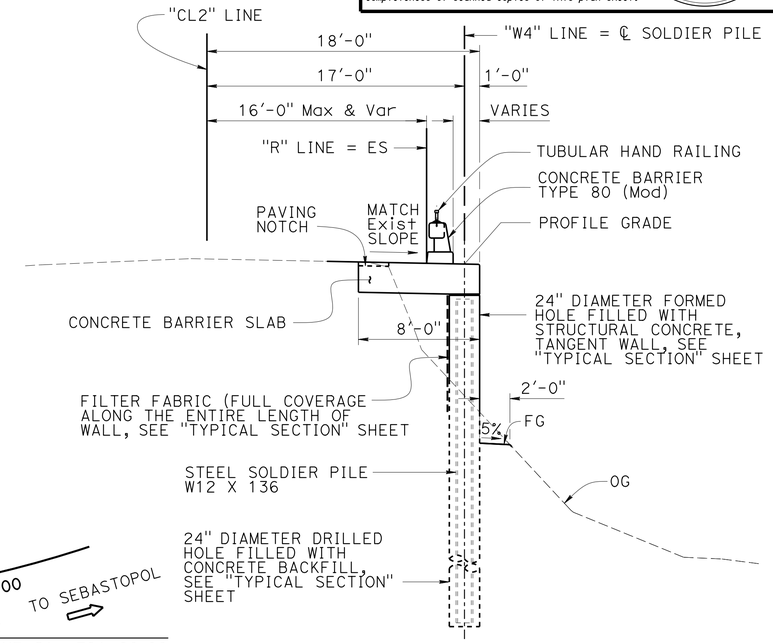

TYPICAL SECTION AT BARRIER SLAB

1" = 5'

NOTE: FOR WALL DRAINAGE, SEE "TYPICAL SECTION" SHEET

QUANTITIES

STRUCTURE EXCAVATION (SOLDIER PILE WALL)	25	CY
STRUCTURE BACKFILL (SOLDIER PILE WALL)	23	CY
CONCRETE BACKFILL (SOLDIER PILE WALL)	362	CY
STEEL SOLDIER PILING (W12X136)	3,280	LF
24" DRILLED HOLE	3,125	LF
STRUCTURAL CONCRETE, BARRIER SLAB	83	CY
STRUCTURAL CONCRETE, TANGENT WALL	25	CY
STRUCTURAL CONCRETE, CAP BEAM	4	CY
BAR REINFORCING STEEL, CAP BEAM	280	LB
PREPARE AND STAIN CONCRETE	3,090	SQFT
CHAIN LINK FENCE (TYPE CL-4,VINYL CLAD) (MODIFIED)	30	LF
TUBULAR HANDRAILING	140	LF
CONCRETE BARRIER (TYPE 80,MODIFIED)	140	LF

CURVE DATA

No.	R	Δ	T	L
①	150.00'	18° 14' 00"	24.07'	47.73'
②	167.00'	05° 17' 01"	7.71'	15.40'
③	284.09'	04° 17' 43"	10.65'	21.30'
④	250.00'	04° 17' 43"	9.37'	18.74'
⑤	170.00'	07° 25' 40"	11.03'	22.04'

ROSA CANDIOTTI (ACTING)
DESIGN ENGINEER

	BY	CHECKED
DESIGN	MOHEY EL-MOUSLY	N. TACHTA
DETAILS	M. EL-MOUSLY/D. ELLIOT	N. TACHTA
QUANTITIES	MOHEY EL-MOUSLY	N. TACHTA

LOAD & RESISTANCE FACTOR DESIGN — LIVE LOADING: HL93 W/"LOW-BOY"; PERMIT DESIGN VEHICLE

	BY	CHECKED
LAYOUT	MOHEY EL-MOUSLY	N. TACHTA / RON GESTUVO
SPECIFICATIONS	S. NELAPATLA	PLANS AND SPECS COMPARED X

ORIGINAL SCALE IN INCHES FOR REDUCED PLANS 0 1 2 3

STATE OF CALIFORNIA
DEPARTMENT OF TRANSPORTATION

DIVISION OF ENGINEERING SERVICES
STRUCTURE DESIGN
DESIGN BRANCH 9

BRIDGE NO. 20E0083
POST MILE 15.00

POCKET CANYON CK TANGENT WALL
GENERAL PLAN

UNIT: 3594
PROJECT NUMBER & PHASE: 0400001215-1
CONTRACT NO.: 04-4S1904

DISREGARD PRINTS BEARING EARLIER REVISION DATES

REVISION DATES 4-24-15 4-28-15 4-29-15 4-30-15

SHEET 1 OF 9

USERNAME => s141070 DATE PLOTTED => 10-SEP-2015 TIME PLOTTED => 10:15

STRUCTURES DESIGN GENERAL PLAN SHEET (ENGLISH) (REV.09-01-10)

FILE => 20e0083-a-gp-sheet.dgn

DIST	COUNTY	ROUTE	POST MILES TOTAL PROJECT	SHEET No.	TOTAL SHEETS
04	Son	116	15.0	40	47

Nassar Tachta 4-29-15
REGISTERED CIVIL ENGINEER DATE

6-15-15
PLANS APPROVAL DATE

REGISTERED PROFESSIONAL ENGINEER ABDEL-NASSER TACHTA No. C83141 Exp. 3-31-2017 CIVIL STATE OF CALIFORNIA

The State of California or its officers or agents shall not be responsible for the accuracy or completeness of scanned copies of this plan sheet.

STANDARD PLANS DATED MAY 2010

A10A ABBREVIATIONS (SHEET 1 OF 2)
RSP - A10B ABBREVIATIONS (SHEET 2 OF 2)
A10C LINES AND SYMBOLS (SHEET 1 OF 3)
A10D LINES AND SYMBOLS (SHEET 2 OF 3)
A10E LINES AND SYMBOLS (SHEET 3 OF 3)
A10F LEGEND - SOIL (SHEET 1 OF 2)
A10G LEGEND - SOIL (SHEET 2 OF 2)
A10H LEGEND - ROCK
RSP - A85 CHAIN LINK FENCE
RSP - B11-47 CABLE RAILING
RSP - B11-60 CONCRETE BARRIER TYPE 80 (SHEET 1 OF 2)
B11-61 CONCRETE BARRIER TYPE 80 (SHEET 2 OF 2)
B11-64 CONCRETE BARRIER TYPE 80SW (SHEET 3 OF 3)

STANDARD PLAN SHEET No.
DETAIL No.

LEGEND:

- DENOTES STRUCTURE EXCAVATION (SOLDIER PILE WALL)
- DENOTES STRUCTURE BACKFILL (SOLDIER PILE WALL)
- DENOTES ROADWAY EXCAVATION (SEE "ROADWAY PLANS")
- DENOTES ROADWAY EMBANKMENT (SEE "ROADWAY PLANS")
- DENOTES PERVIOUS BACKFILL MATERIAL

INDEX TO PLANS

1. GENERAL PLAN
2. INDEX TO PLANS
3. STRUCTURE PLAN No. 1
4. STRUCTURE PLAN No. 2
5. FOUNDATION PLAN
6. TYPICAL SECTION
7. CONCRETE BARRIER SLAB DETAILS
8. CONCRETE BARRIER TYPE 80 (Mod) DETAILS
9. LOG OF TEST BORINGS

GENERAL NOTES

DESIGN:
AASHTO LRFD Bridge Design Specifications, 4th edition with California Amendments

LIVE LOADING:
240 psf equivalent to 2 feet soil weight
Transverse vehicle impact force, Ft = 27 KIPS (TL-2)

SOIL PARAMETERS (for determination of design lateral earth pressures):
Backfill soil weight = 125 lb/ft^3
Friction angle = 33°
Active pressure coefficent, Ka = 0.295
Bedrock unit weight = 125 lb/ft^3

PASSIVE PRESSURE:
γ= 125 lb/ft^3, Φ = 36°
c = 1000 lb/ft^2

SEISMIC LOADING:
kh = 0.17, kv = 0.0

STEEL SOLDIER PILES:
GRADE 50

REINFORCED CONCRETE (BARRIER SLAB AND CAP BEAM)
f'c = 3.6 ksi
fy = 60 ksi
n = 8

STRUCTURAL CONCRETE (TANGENT WALL)
f'c = 3.6 ksi

NOTES:

1. The 2' bench extends 2' beyond Sta 1+60.00 parallel to the "CL2" line, see "STRUCTURE PLAN NO. 2" sheet.
2. For additional details of pervious backfilll, see "SECTION Y-Y" on "TYPICAL SECTION" sheet.

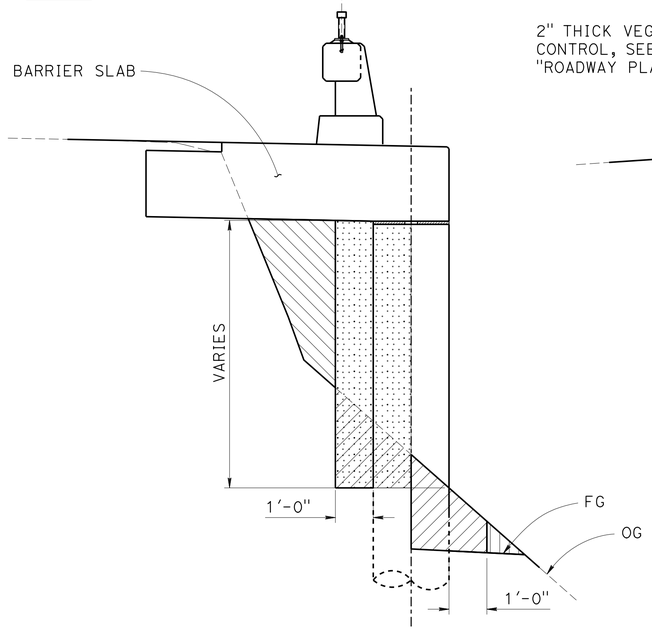

TYPICAL SECTION AT BARRIER SLAB
(FROM Sta 0+0.00 TO Sta 1+40.00)

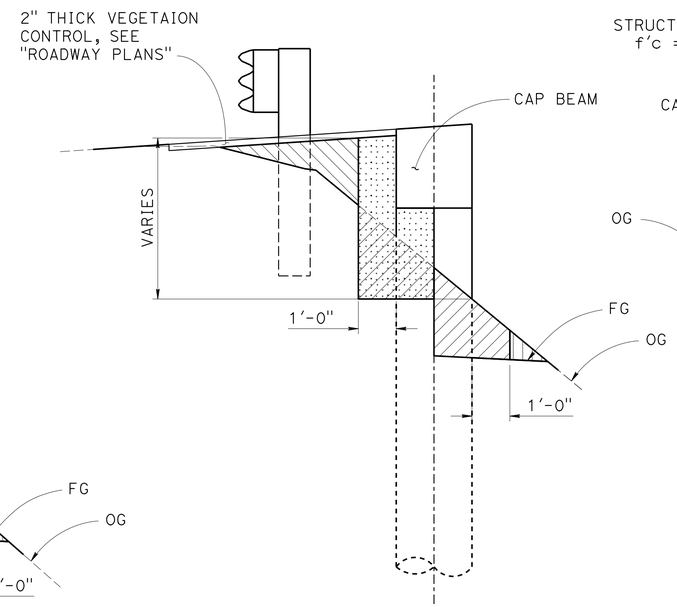

TYPICAL SECTION AT CAP BEAM
(FROM Sta 1+40.00 TO Sta 1+60.00)

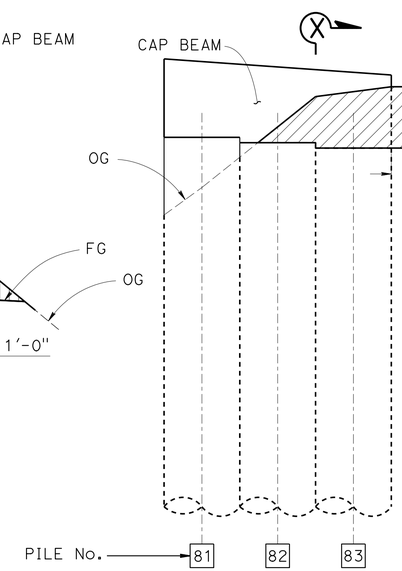

ELEVATION

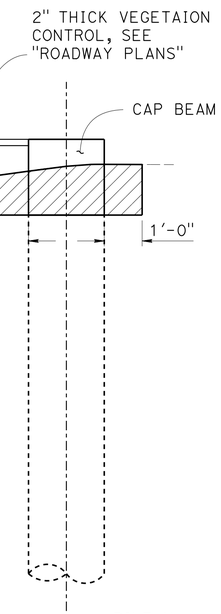

SECTION X-X

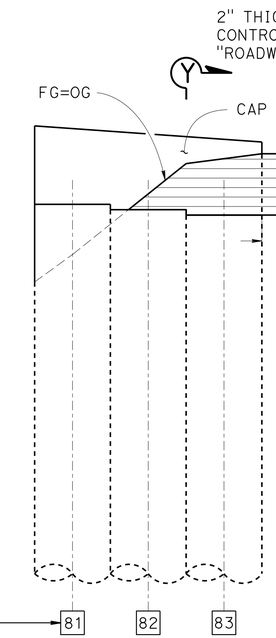

ELEVATION

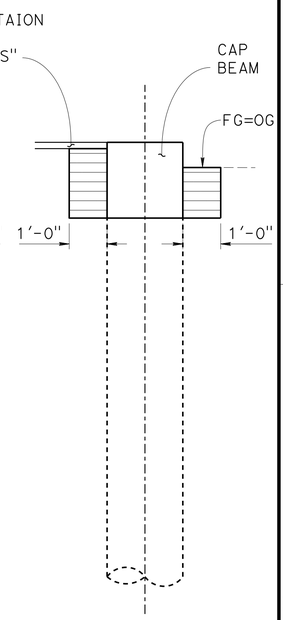

SECTION Y-Y

EXCAVATION AT RETURN WALL

BACKFILL AT RETURN WALL

NOTE:

VERIFY ALL CONTROLLING FIELD DIMENSIONS BEFORE ORDERING OR FABRICATING ANY MATERIAL.

LIMITS OF EXCAVATION AND BACKFILL

½" = 1'

NOTE: CHAIN LINK FENCE NOT SHOWN

	BY	CHECKED
DESIGN	MOHEY EL-MOUSLY	N. TACHTA
DETAILS	M. EL-MOUSLY/D. ELLIOT	N. TACHTA
QUANTITIES	MOHEY EL-MOUSLY	N. TACHTA

STATE OF CALIFORNIA
DEPARTMENT OF TRANSPORTATION

DIVISION OF ENGINEERING SERVICES
STRUCTURE DESIGN
DESIGN BRANCH 9

BRIDGE NO. 20E0083
POST MILE 15.00

POCKET CANYON CK TANGENT WALL
INDEX TO PLANS

STRUCTURES DESIGN DETAIL SHEET (ENGLISH) (REV. 09-01-10)

ORIGINAL SCALE IN INCHES FOR REDUCED PLANS 0 1 2 3

UNIT: 3594
PROJECT NUMBER & PHASE: 0400001215-1
CONTRACT NO.: 04-4S1904

DISREGARD PRINTS BEARING EARLIER REVISION DATES

REVISION DATES 10-2-14 4-15-15 4-16-15 4-29-15

SHEET 2 OF 9

FILE => 20e0083-a-itp-sheet.dgn

USERNAME => s141070 DATE PLOTTED => 10-SEP-2015 TIME PLOTTED => 10:15

DIST	COUNTY	ROUTE	POST MILES TOTAL PROJECT	SHEET No.	TOTAL SHEETS
04	Son	116	15.0	41	47

Nassar Tachta 4-29-15
REGISTERED CIVIL ENGINEER DATE

6-15-15
PLANS APPROVAL DATE

REGISTERED PROFESSIONAL ENGINEER
ABDEL-NASSER TACHTA
No. C83141
Exp. 3-31-2017
CIVIL
STATE OF CALIFORNIA

The State of California or its officers or agents shall not be responsible for the accuracy or completeness of scanned copies of this plan sheet.

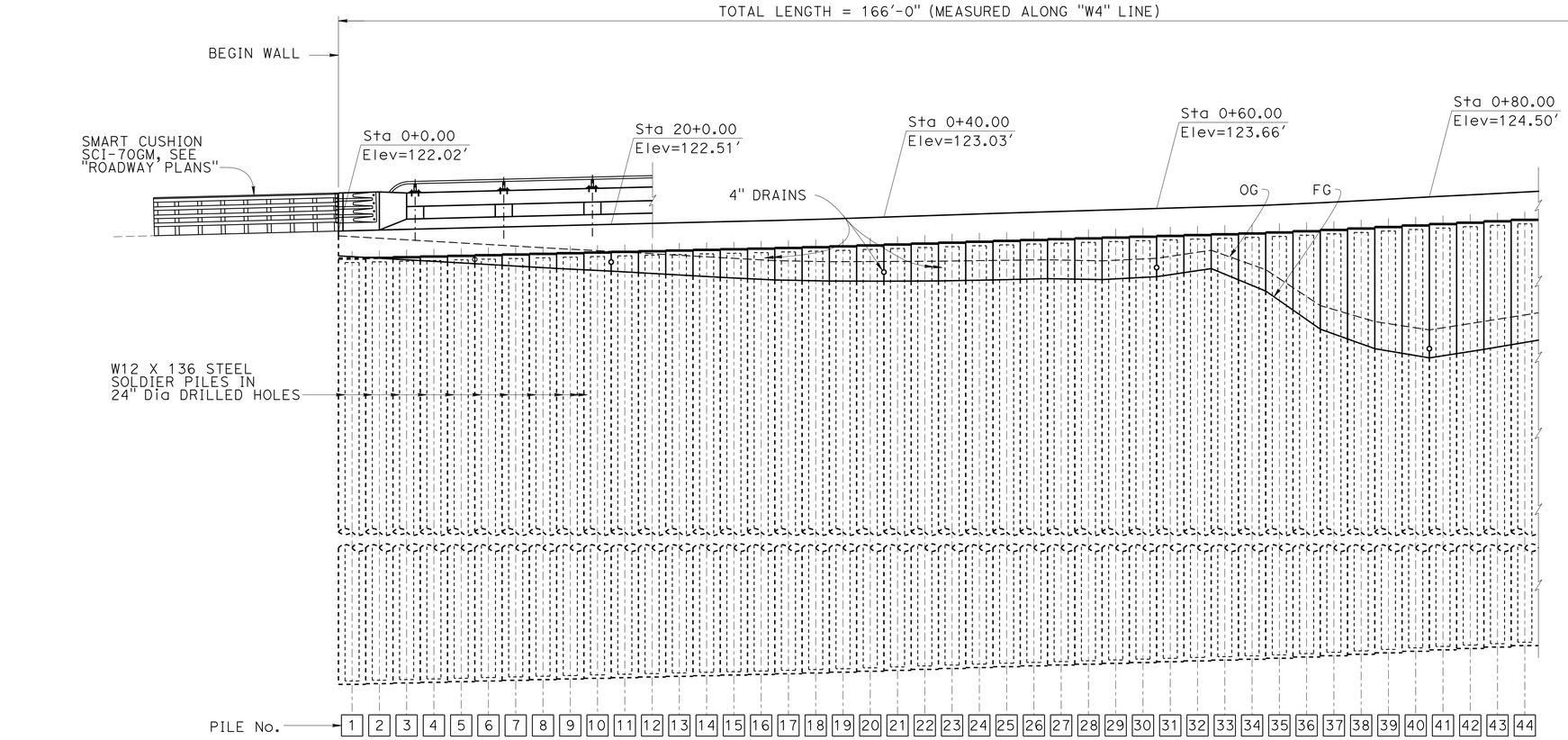

PART DEVLOPED MIRRORED ELEVATION

1" = 5'

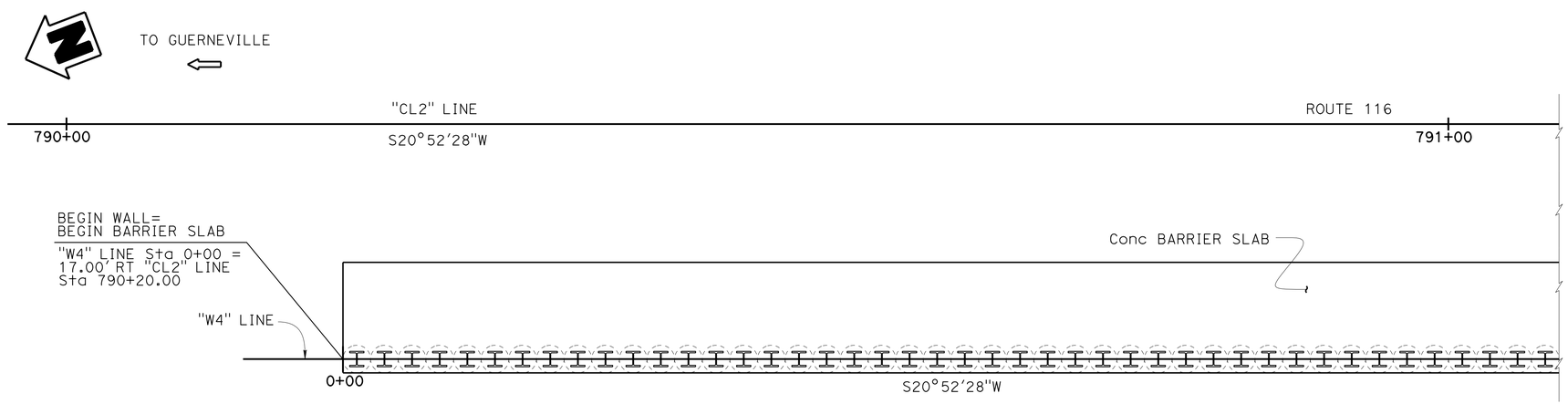

PART PLAN

1" = 5'

NOTE:

VERIFY ALL CONTROLLING FIELD DIMENSIONS BEFORE ORDERING OR FABRICATING ANY MATERIAL.

	BY	CHECKED
DESIGN	MOHEY EL-MOUSLY	N. TACHTA
DETAILS	M. EL-MOUSLY/D. ELLIOT	N. TACHTA
QUANTITIES	MOHEY EL-MOUSLY	N. TACHTA

STATE OF CALIFORNIA
DEPARTMENT OF TRANSPORTATION

DIVISION OF ENGINEERING SERVICES
STRUCTURE DESIGN
DESIGN BRANCH 9

BRIDGE NO. 20E0083
POST MILE 15.00

POCKET CANYON CK TANGENT WALL
STRUCTURE PLAN No. 1

STRUCTURES DESIGN DETAIL SHEET (ENGLISH) (REV. 09-01-10)

ORIGINAL SCALE IN INCHES FOR REDUCED PLANS 0 1 2 3

UNIT: 3594
PROJECT NUMBER & PHASE: 0400001215-1
CONTRACT NO.: 04-4S1904

DISREGARD PRINTS BEARING EARLIER REVISION DATES

REVISION DATES: 10-2-14 2-18-15

SHEET 3 OF 9

FILE => 20e0083-c-sp1--sheet.dgn

USERNAME => s141070 DATE PLOTTED => 10-SEP-2015 TIME PLOTTED => 10:16

DIST	COUNTY	ROUTE	POST MILES TOTAL PROJECT	SHEET No.	TOTAL SHEETS
04	Son	116	15.0	42	47

Nassar Tachta 4-29-15
REGISTERED CIVIL ENGINEER DATE

6-15-15
PLANS APPROVAL DATE

REGISTERED PROFESSIONAL ENGINEER ABDEL-NASSER TACHTA No. C83141 Exp. 3-31-2017 CIVIL STATE OF CALIFORNIA

The State of California or its officers or agents shall not be responsible for the accuracy or completeness of scanned copies of this plan sheet.

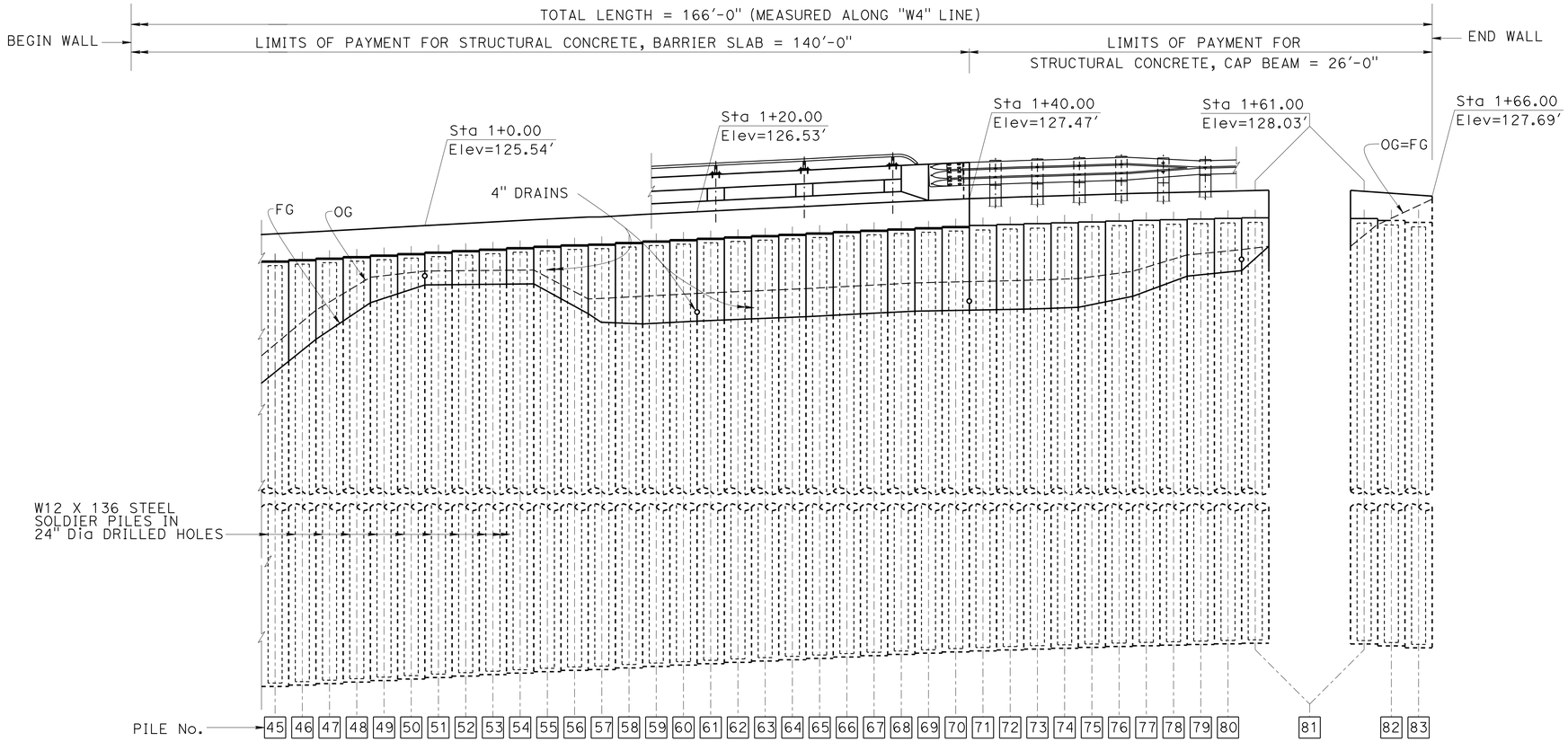

PART DEVLOPED MIRRORED ELEVATION

1" = 5'

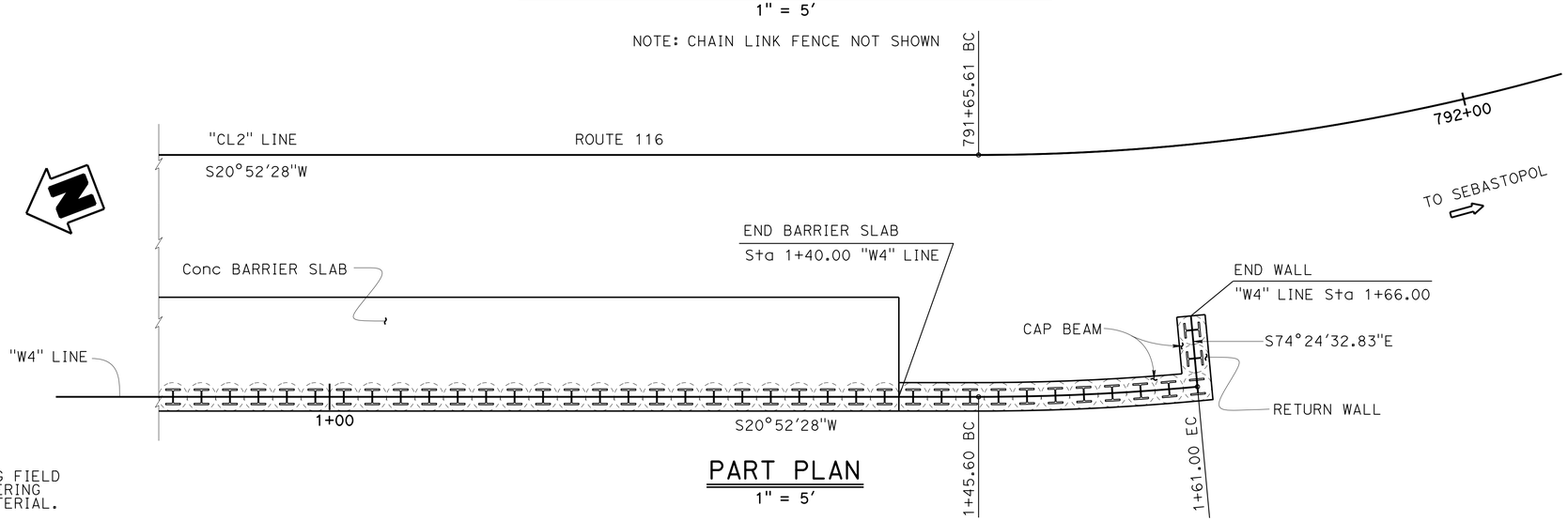

PART PLAN

1" = 5'

NOTE:

VERIFY ALL CONTROLLING FIELD DIMENSIONS BEFORE ORDERING OR FABRICATING ANY MATERIAL.

DESIGN	BY MOHEY EL-MOUSLY	CHECKED N. TACHTA	
DETAILS	BY M. EL-MOUSLY/D. ELLIOT	CHECKED N. TACHTA	
QUANTITIES	BY MOHEY EL-MOUSLY	CHECKED N. TACHTA	

STATE OF CALIFORNIA
DEPARTMENT OF TRANSPORTATION

DIVISION OF ENGINEERING SERVICES
STRUCTURE DESIGN
DESIGN BRANCH 9

BRIDGE NO. 20E0083
POST MILE 15.00

POCKET CANYON CK TANGENT WALL
STRUCTURE PLAN No. 2

STRUCTURES DESIGN DETAIL SHEET (ENGLISH) (REV. 09-01-10)

ORIGINAL SCALE IN INCHES FOR REDUCED PLANS 0 1 2 3

UNIT: 3594
PROJECT NUMBER & PHASE: 0400001215-1
CONTRACT NO.: 04-4S1904

DISREGARD PRINTS BEARING EARLIER REVISION DATES
REVISION DATES 10-27-14
SHEET 4 OF 9

FILE => 20e0083-c-sp2-sheet.dgn

USERNAME => s141070 DATE PLOTTED => 10-SEP-2015 TIME PLOTTED => 10:16

DIST	COUNTY	ROUTE	POST MILES TOTAL PROJECT	SHEET No.	TOTAL SHEETS
04	Son	116	15.0	43	47

REGISTERED CIVIL ENGINEER — DATE 4-29-15

6-15-15
PLANS APPROVAL DATE

REGISTERED PROFESSIONAL ENGINEER — ABDEL-NASSER TACHTA — No. C83141 — Exp. 3-31-2017 — CIVIL — STATE OF CALIFORNIA

The State of California or its officers or agents shall not be responsible for the accuracy or completeness of electronic copies of this plan sheet.

CURVE DATA

No.	R	Δ	T	L
2	150.00	18°14′00″	24.07	47.73
3	300.00	44°51′00″	123.80	234.83
W1	167.00	05°17′01″	7.71	15.40

SURVEY CONTROL

SUHV 104
Fnd 100 D SPIKE
12.50 Ft Rt ROUTE 116
Sta 790+83.70
N 1,940,076.63
E 6,286,248.16
Elev. = 123.73

SUHV 105 (NOT SHOWN ON PLAN)
Fnd PK NAIL
112.15 Ft Rt ROUTE 116
Sta 789+12.99
N 1,940,255.74
E 6,286,207.29
Elev. = 113.14

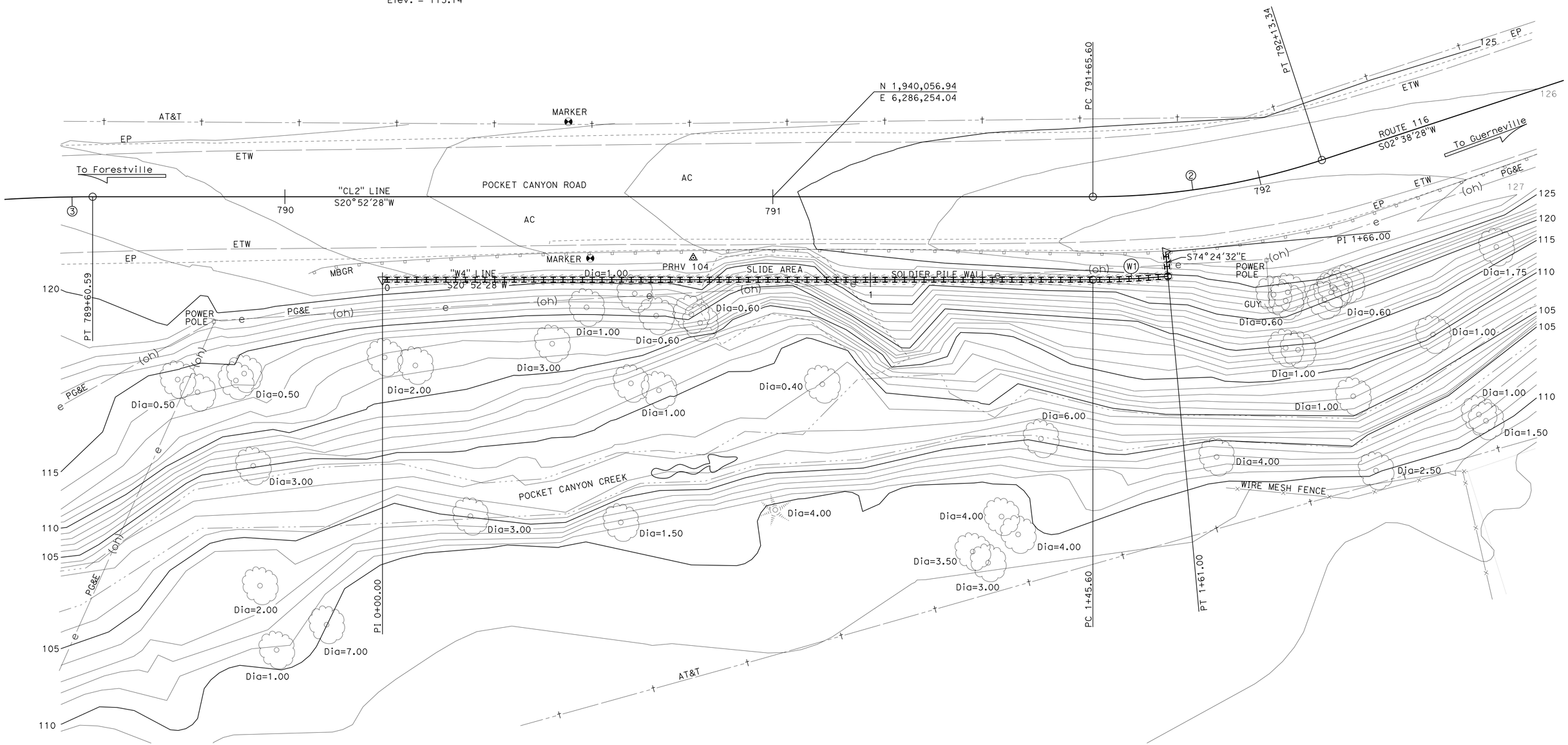

PRELIMINARY INVESTIGATION SECTION					
SCALE 1"=10′	VERT.DATUM NAVD88	PHOTOGRAMMETRY AS OF: X			
	HORZ.DATUM NAD83	SURVEYED	BY DISTRICT	CHECKED	BY J. BORDEN 07/2014
	ALIGNMENT TIES Dist TRAVERSE SHEET	DRAFTED	BY T. ZOLNIKOV 07/2014	CHECKED	BY L. LEW 07/2014

DESIGN	BY MOHEY EL-MOUSLY	CHECKED N. TACHTA
DETAILS	BY MOHEY EL-MOUSLY	CHECKED N. TACHTA
QUANTITIES	BY MOHEY EL-MOUSLY	CHECKED N. TACHTA

STATE OF CALIFORNIA
DEPARTMENT OF TRANSPORTATION

DIVISION OF ENGINEERING SERVICES
STRUCTURE DESIGN
DESIGN BRANCH 9

BRIDGE NO. 20E0083
POST MILE 15.00

POCKET CANYON ROAD SPW
FOUNDATION PLAN

STRUCTURES FOUNDATION PLAN SHEET (ENGLISH) (REV. 09-01-10)

ORIGINAL SCALE IN INCHES FOR REDUCED PLANS 0 1 2 3

UNIT: 3646
PROJECT NUMBER & PHASE: 0400001215 1
CONTRACT NO.: 04-4S1901

DISREGARD PRINTS BEARING EARLIER REVISION DATES

REVISION DATES: 07/30/14 10/08/14 2-18-15 4-29-15

SHEET 5 OF 9

FILE => 20e0083-e-fp.dgn

USERNAME => s141070 DATE PLOTTED => 10-SEP-2015 TIME PLOTTED => 10:16

DIST	COUNTY	ROUTE	POST MILES TOTAL PROJECT	SHEET No.	TOTAL SHEETS
04	Son	116	15.0	44	47

Nassar Tachta 4-29-15
REGISTERED CIVIL ENGINEER DATE

6-15-15
PLANS APPROVAL DATE

REGISTERED PROFESSIONAL ENGINEER ABDEL-NASSER TACHTA No. C83141 Exp. 3-31-2017 CIVIL STATE OF CALIFORNIA

The State of California or its officers or agents shall not be responsible for the accuracy or completeness of scanned copies of this plan sheet.

NOTE:

VERIFY ALL CONTROLLING FIELD DIMENSIONS BEFORE ORDERING OR FABRICATING ANY MATERIAL.

LEGEND:

** Indicates limits of prepare and stain concrete for all exposed surfaces of barrier slab, cap beam, and tangent wall

NOTES:

1. No splices allowed for steel soldier piles
2. Place ℄ W12 X 136 piles perpendicular to the "W4" LINE
3. All surfaces of the concrete barrier type 80 (Mod) to be prepared and stained
4. Limits of payment for concrete backfill (soldier pile wall) and 24" diameter drilled hole is from the OG or bottom of barrier slab elevation, whichever is lower, to the tip of the pile.

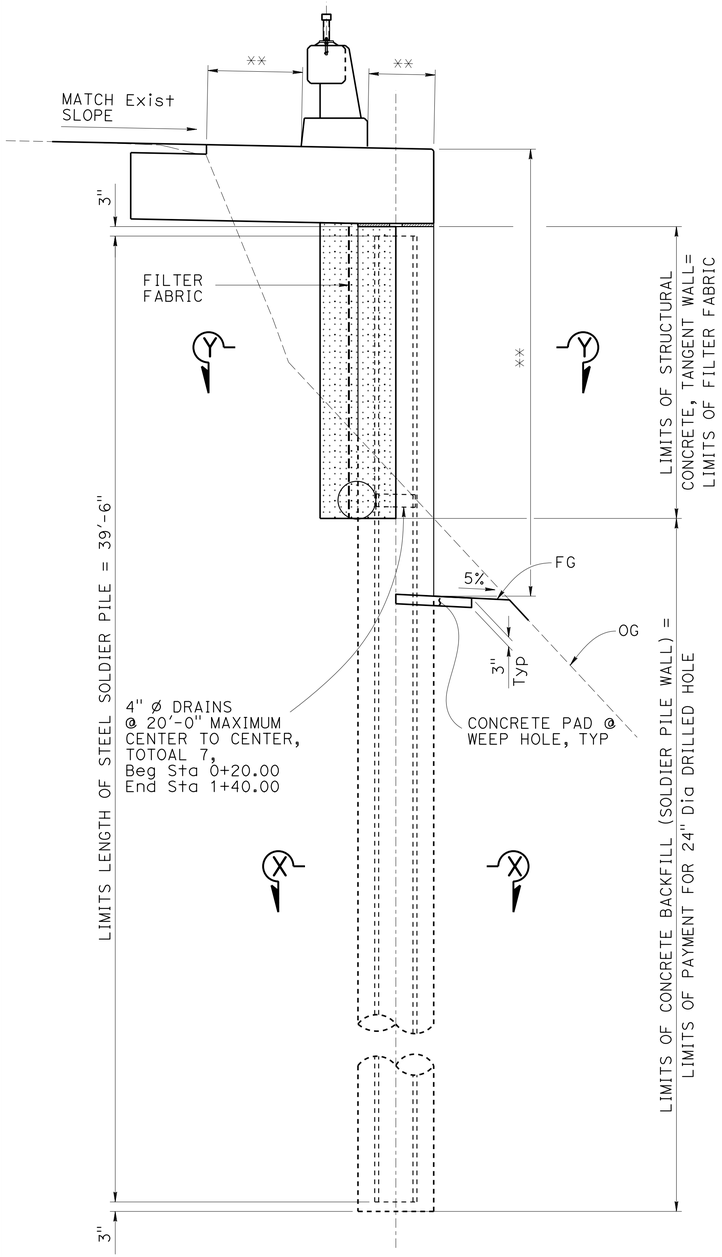

TYPICAL SECTION AT BARRIER SLAB

½" = 1'

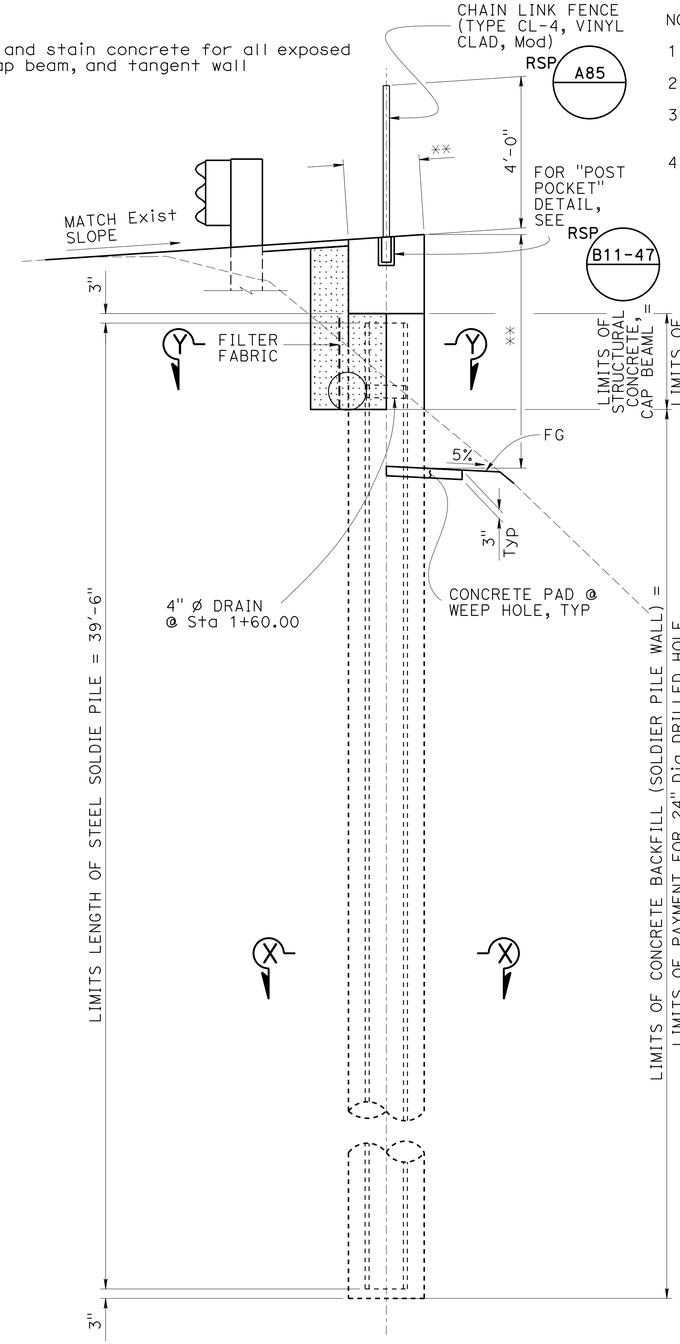

TYPICAL SECTION AT CAP BEAM

½" = 1'

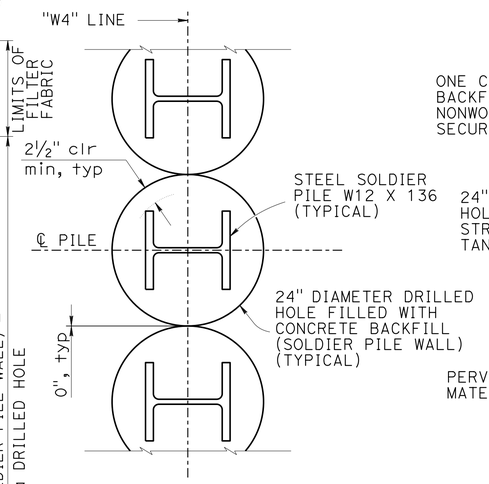

SECTION X-X

1" = 1'

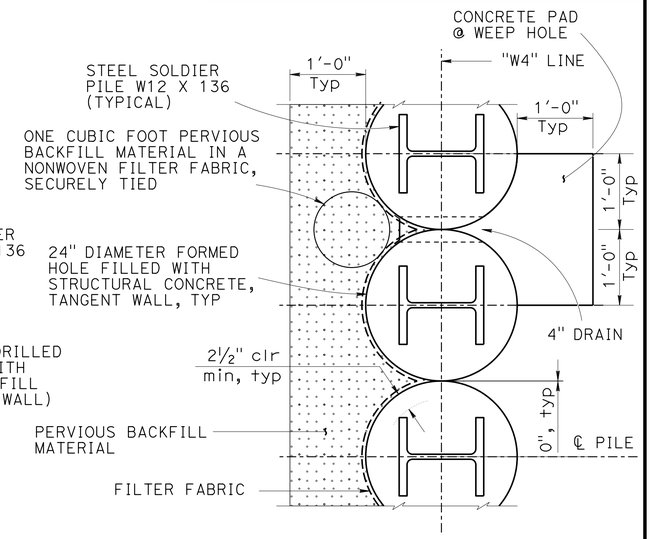

SECTION Y-Y

1" = 1'

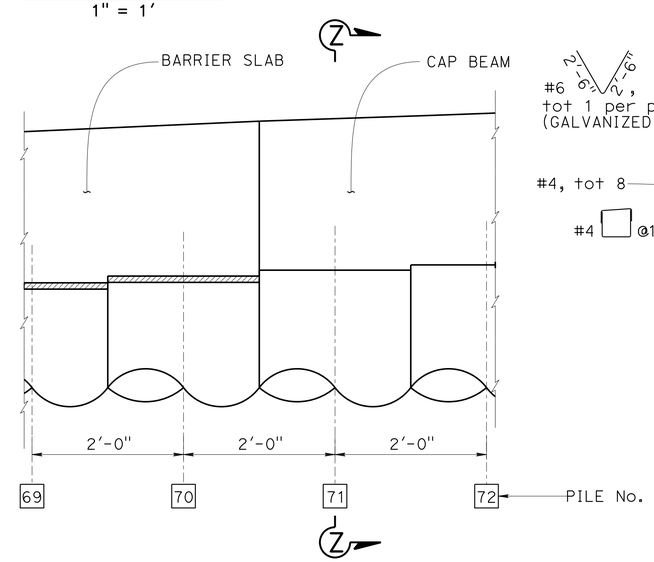

PART ELEVATION

1" = 1'

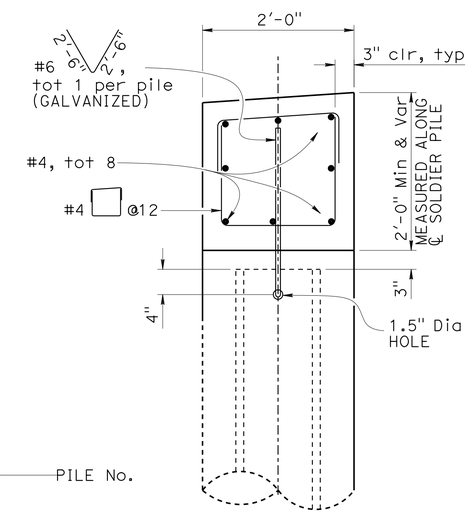

SECTION Z-Z

1" = 1'

NOTE: CHAIN LINK FENCE NOT SHOWN

	BY	CHECKED
DESIGN	MOHEY EL-MOUSLY	N. TACHTA
DETAILS	M. EL-MOUSLY/D. ELLIOT	N. TACHTA
QUANTITIES	MOHEY EL-MOUSLY	N. TACHTA

STATE OF CALIFORNIA
DEPARTMENT OF TRANSPORTATION

DIVISION OF ENGINEERING SERVICES
STRUCTURE DESIGN
DESIGN BRANCH 9

BRIDGE NO. 20E0083
POST MILE 15.00

POCKET CANYON CK TANGENT WALL
TYPICAL SECTION

STRUCTURES DESIGN DETAIL SHEET (ENGLISH) (REV. 09-01-10)

ORIGINAL SCALE IN INCHES FOR REDUCED PLANS 0 1 2 3

UNIT: 3594
PROJECT NUMBER & PHASE: 0400001215-1
CONTRACT NO.: 04-4S1904

DISREGARD PRINTS BEARING EARLIER REVISION DATES

REVISION DATES 10-23-14 4-15-15 4-15-15 4-29-15

SHEET 6 OF 9

FILE => 20e0083-k-ts-sheet.dgn

USERNAME => s141070 DATE PLOTTED => 10-SEP-2015 TIME PLOTTED => 10:16

DIST	COUNTY	ROUTE	POST MILES TOTAL PROJECT	SHEET No.	TOTAL SHEETS
04	Son	116	15.0	45	47

Nassar Tachta 4-29-15
REGISTERED CIVIL ENGINEER DATE

6-15-15
PLANS APPROVAL DATE

REGISTERED PROFESSIONAL ENGINEER
ABDEL-NASSER TACHTA
No. C83141
Exp. 3-31-2017
CIVIL
STATE OF CALIFORNIA

The State of California or its officers or agents shall not be responsible for the accuracy or completeness of scanned copies of this plan sheet.

NOTES:

1. Clearance to reinforcing steel in concrete barrier to be 1".
2. Not all barrier reinforcement shown.
3. No expansion joints in concrete barrier or barrier slab within wall limits.

LEGEND:

ᴄ Indicates bundled bars

** Measured along ℄ pile

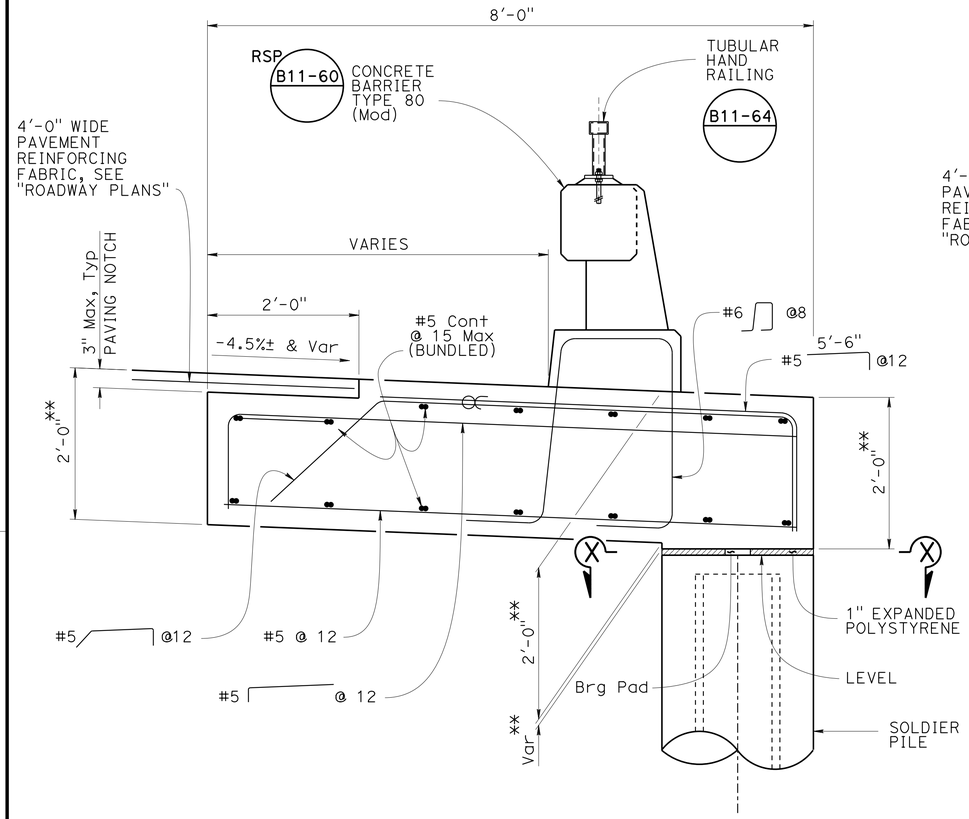

TYPICAL SECTION AT NEGATIVE SUPERELEVATION

1" = 1'

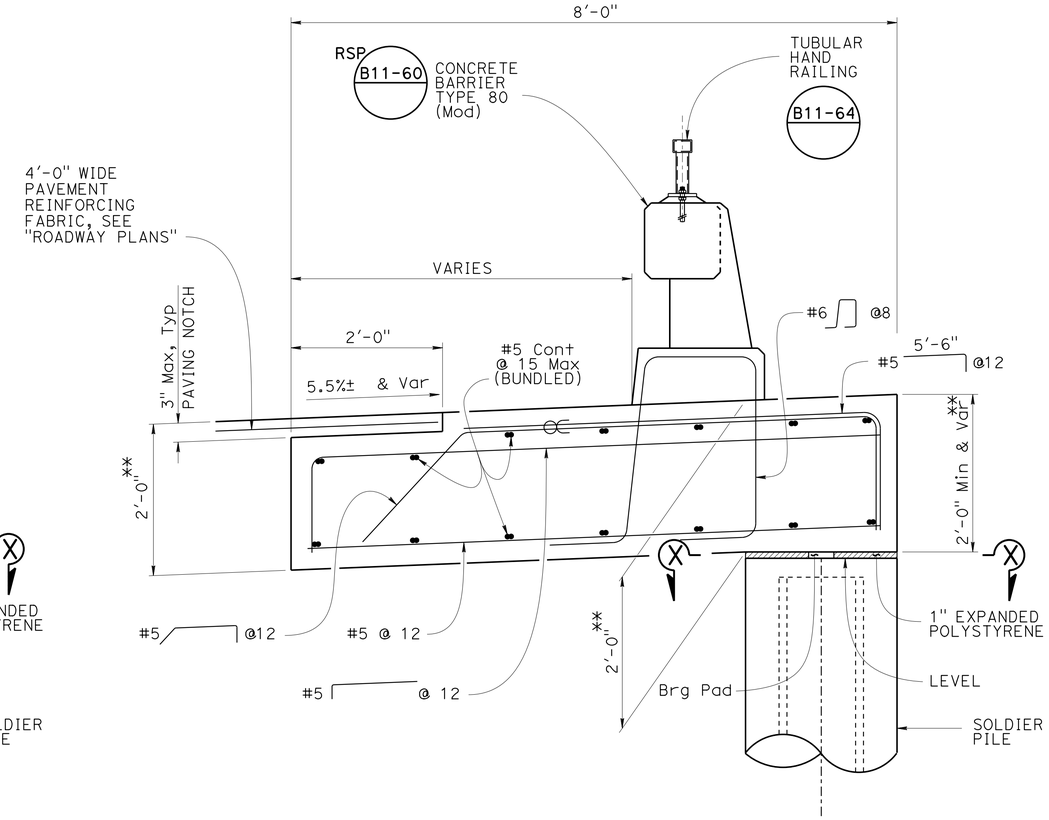

TYPICAL SECTION AT POSITIVE SUPERELEVATION

1" = 1'

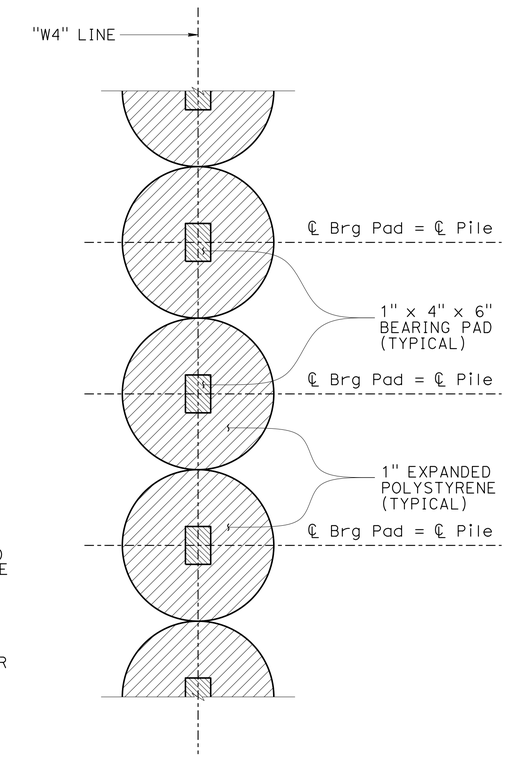

SECTION X-X

½" = 1'

NOTE:

VERIFY ALL CONTROLLING FIELD DIMENSIONS BEFORE ORDERING OR FABRICATING ANY MATERIAL.

	BY	CHECKED
DESIGN	MOHEY EL-MOUSLY	N. TACHTA
DETAILS	M. EL-MOUSLY/D. ELLIOT	N. TACHTA
QUANTITIES	MOHEY EL-MOUSLY	N. TACHTA

STATE OF CALIFORNIA
DEPARTMENT OF TRANSPORTATION

DIVISION OF ENGINEERING SERVICES
STRUCTURE DESIGN
DESIGN BRANCH 9

BRIDGE NO. 20E0083
POST MILE 15.00

POCKET CANYON CK TANGENT WALL
CONCRETE BARRIER SLAB DETAILS

STRUCTURES DESIGN DETAIL SHEET (ENGLISH) (REV. 09-01-10)

ORIGINAL SCALE IN INCHES FOR REDUCED PLANS 0 1 2 3

UNIT: 3594
PROJECT NUMBER & PHASE: 0400001215-1
CONTRACT NO.: 04-4S1904

DISREGARD PRINTS BEARING EARLIER REVISION DATES

REVISION DATES: 10-27-14

SHEET 7 OF 9

FILE => 20e0083-t-cbsdet-sheet.dgn

USERNAME => s141070 DATE PLOTTED => 10-SEP-2015 TIME PLOTTED => 10:16

DIST	COUNTY	ROUTE	POST MILES TOTAL PROJECT	SHEET No.	TOTAL SHEETS
04	Son	116	15.0	46	47

Nassar Tachta 4-29-15
REGISTERED CIVIL ENGINEER DATE

6-15-15
PLANS APPROVAL DATE

REGISTERED PROFESSIONAL ENGINEER ABDEL-NASSER TACHTA No. C83141 Exp. 3-31-2017 CIVIL STATE OF CALIFORNIA

The State of California or its officers or agents shall not be responsible for the accuracy or completeness of scanned copies of this plan sheet.

NOTE:

VERIFY ALL CONTROLLING FIELD DIMENSIONS BEFORE ORDERING OR FABRICATING ANY MATERIAL.

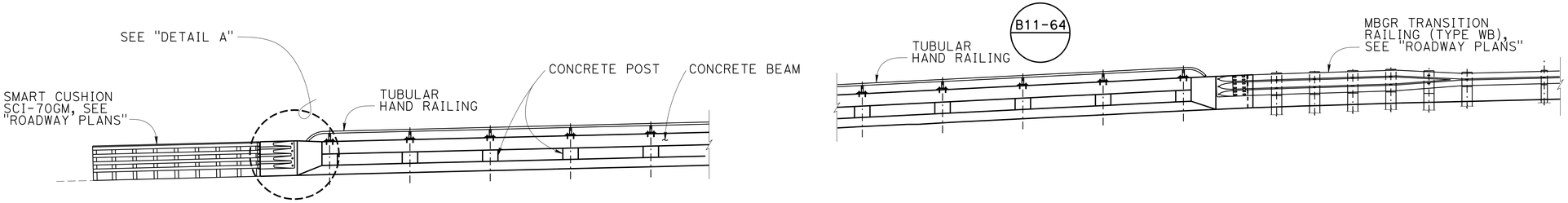

PART DEVELOPED MIRRORED ELEVATION

1" = 5'

NOTE: CHAIN LINK FENCE NOT SHOWN

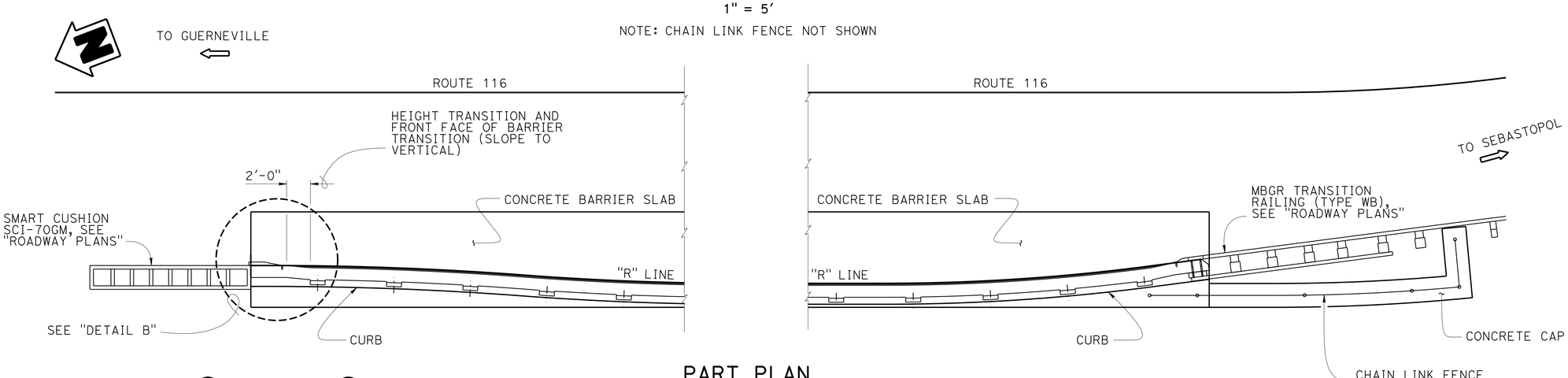

PART PLAN

1" = 5'

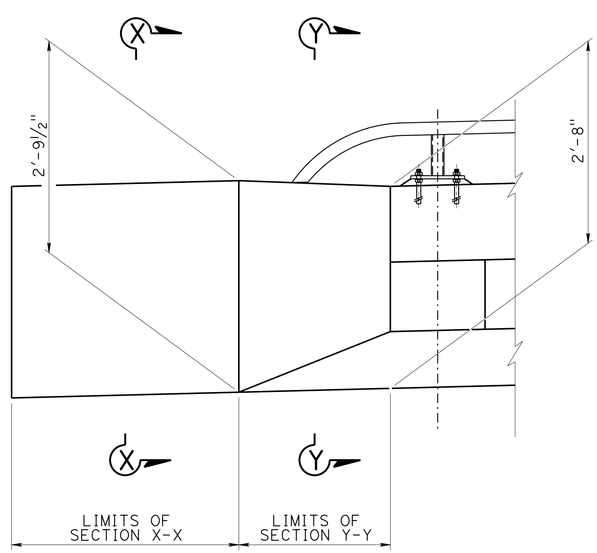

DETAIL A

1" = 1'

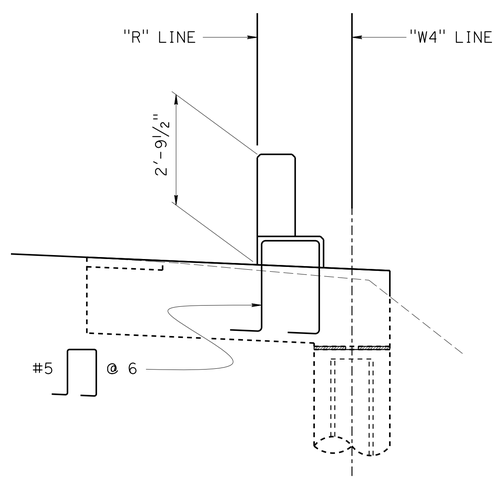

SECTION X-X

½" = 1'

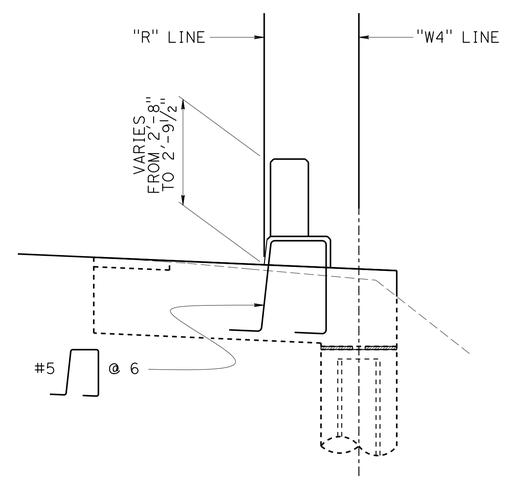

SECTION Y-Y

½" = 1'

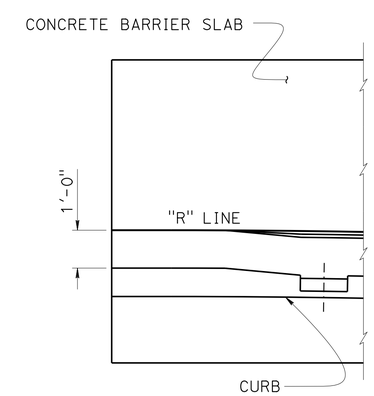

DETAIL B

½" = 1'

	BY	CHECKED
DESIGN	MOHEY EL-MOUSLY	N. TACHTA
DETAILS	M. EL-MOUSLY/D. ELLIOT	N. TACHTA
QUANTITIES	MOHEY EL-MOUSLY	N. TACHTA

STATE OF CALIFORNIA
DEPARTMENT OF TRANSPORTATION

DIVISION OF ENGINEERING SERVICES
STRUCTURE DESIGN
DESIGN BRANCH 9

BRIDGE NO. 20E0083
POST MILE 15.00

POCKET CANYON CK TANGENT WALL
CONCRETE BARRIER TYPE 80 (Mod) DETAILS

STRUCTURES DESIGN DETAIL SHEET (ENGLISH) (REV. 09-01-10)

ORIGINAL SCALE IN INCHES FOR REDUCED PLANS 0 1 2 3

UNIT: 3594
PROJECT NUMBER & PHASE: 0400001215-1
CONTRACT NO.: 04-4S1904

DISREGARD PRINTS BEARING EARLIER REVISION DATES

REVISION DATES 10-7-14 2-18-15

SHEET 8 OF 9

FILE => 20e0083-t-cbtype80-sheet.dgn

USERNAME => s141070 DATE PLOTTED => 10-SEP-2015 TIME PLOTTED => 10:16

DIST	COUNTY	ROUTE	POST MILES TOTAL PROJECT	SHEET No	TOTAL SHEETS
04	Son	116	15.0	47	47

Ali Kaddoura 05-05-14
REGISTERED CIVIL ENGINEER

6-15-15
PLANS APPROVAL DATE

REGISTERED PROFESSIONAL ENGINEER Ali K. Kaddoura No. 55710 Exp. 12-31-16 CIVIL STATE OF CALIFORNIA

The State of California or its officers or agents shall not be responsible for the accuracy or completeness of electronic copies of this plan sheet.

This LOTB sheet was prepared in accordance with the Caltrans Soil & Rock Logging, Classification, & Presentation Manual (2010 Edition).

BENCH MARK

POINT NAME: 1 130]
NORTHING: 4797.008, EASTING: 5000.000
ELEV.: 103.457
DESCRIPTION: 8" SPIKE

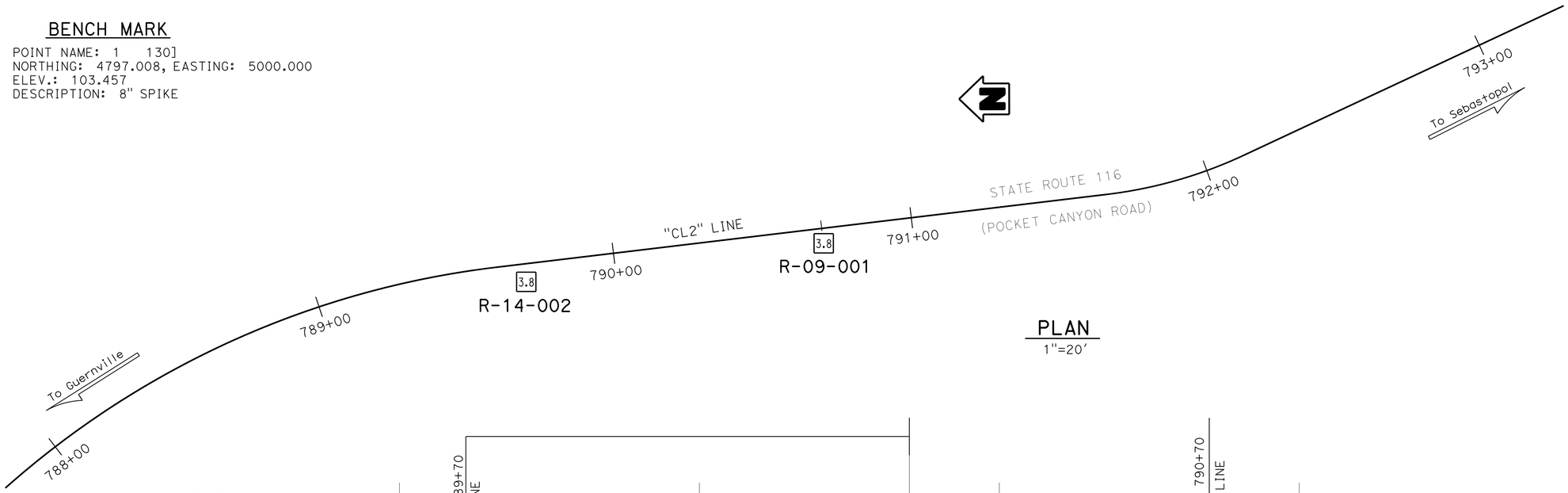

PLAN
1"=20'

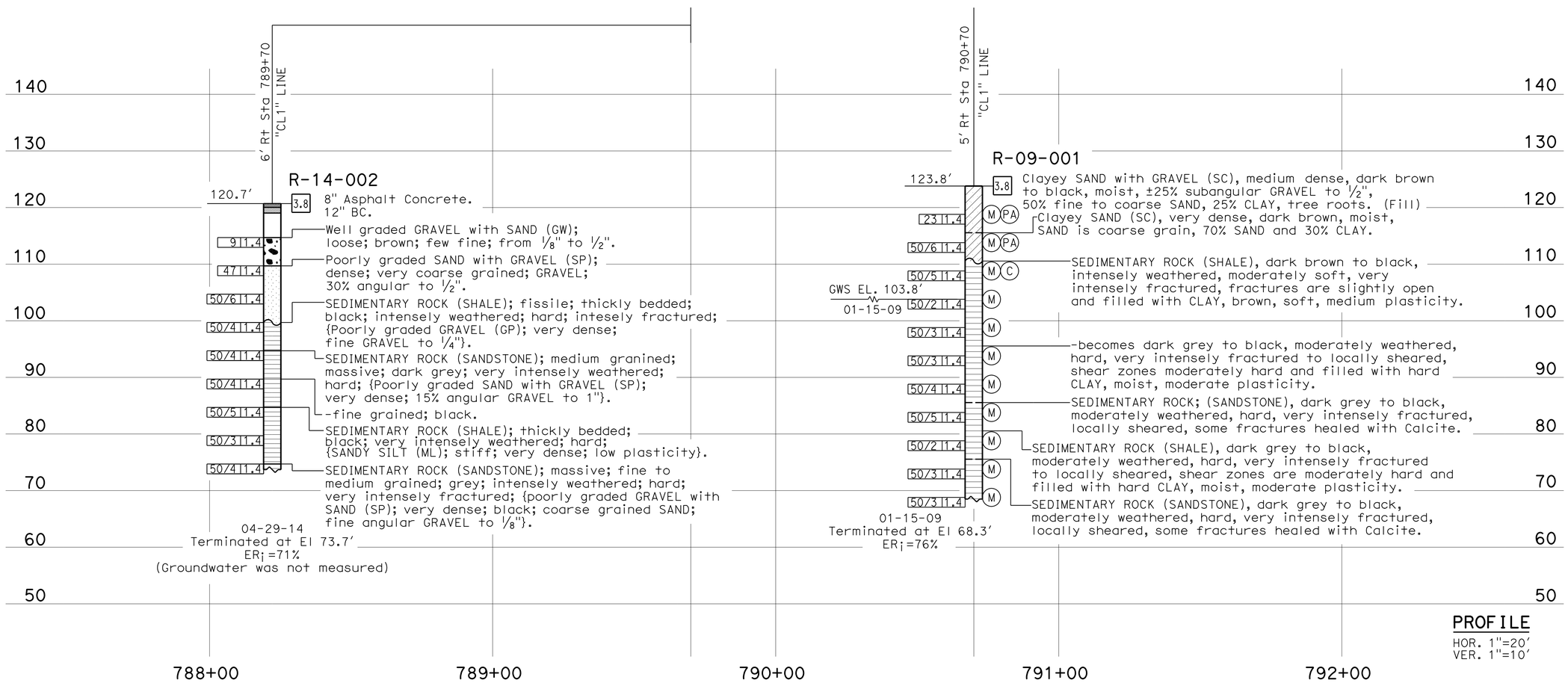

PROFILE
HOR. 1"=20'
VER. 1"=10'

ENGINEERING SERVICES		GEOTECHNICAL SERVICES	STATE OF CALIFORNIA DEPARTMENT OF TRANSPORTATION	DIVISION OF ENGINEERING SERVICES OFFICE OF GEOTECHNICAL DESIGN BRANCH	BRIDGE NO. 20E0083	POCKET CANYON CK TANGENT WALL
FUNCTIONAL SUPERVISOR	DRAWN BY: M. Reynolds 01/09	FIELD INVESTIGATION BY: S. Awad A. Kaddoura			POST MILES 15.00	LOG OF TEST BORINGS
NAME: H. Nikoui	CHECKED BY: C. Risden/ R. Nashed					

OGS CIVIL LOG OF TEST BORINGS SHEET

ORIGINAL SCALE IN INCHES FOR REDUCED PLANS 0 1 2 3

UNIT: 3660
PROJECT NUMBER & PHASE: 0400001215-1 CONTRACT NO.: 04-4S1904

DISREGARD PRINTS BEARING EARLIER REVISION DATES

REVISION DATES				SHEET	OF
09-24-13	02-20-14	05-05-14	04-16-15	9	9

FILE => 20e0083-z-lltb.dgn

USERNAME => s141070 DATE PLOTTED => 10-SEP-2015 TIME PLOTTED => 10:16