INFORMATION HANDOUT

WATER QUALITY

1. RWQCB 401 Certifications

PERMITS/AGREEMENTS

2. California Dept of Fish and Game Notification
3. US Army Corps of Engineers Permit and Modification of Permit
4. US Department of the Interior Fish and Wildlife Service (Biological Opinion Document # P43727 (1-8-03-F-59) dated December 12, 2005)
5. California Department of Fish and Game Incidental Take Permit (ITP No. 2081-2007-020-04)

MATERIALS INFORMATION

6. Portions of Asbestos and Lead Containing Paint Survey Report
7. Foundation Report for Estrella River Bridge, Bridge Number 49-0255 dated April 2, 2012
8. Revised Structures Final Hydraulic Report for Estrella River Bridge, Bridge Number 49-0255 dated November 2, 2011
9. Underground Classification Number: C011-079-13T for Estrella River Bridge, Bridge Number 49-0255 dated July 12, 2012
10. Alternative Flared Terminal Systems

FOR CONTRACT NO.: 05-330754

INFORMATION HANDOUT

WATER QUALITY

1. RWQCB 401 Certifications

ROUTE: 05-SLO-46-PM40.0

October 31, 2012

Chuck Cesena
Senior Environmental Planner
California Department of Transportation, District 5
50 Higuera Street
San Luis Obispo, CA 93401
Email: chuck.cesena@dot.ca.gov

VIA ELECTRONIC MAIL

Dear Mr. Cesena:

FIFTH AMENDED WATER QUALITY CERTIFICATION NUMBER 34007WQ04 FOR ROUTE 46 CORRIDOR IMPROVEMENT PROJECT- WHITLEY GARDENS PHASE 2, SAN LUIS OBISPO COUNTY

Thank you for the opportunity to review your July 17, 2012 amended water quality certification application for Whitley Gardens Phase 2 of the Route 46 Corridor Improvement Project. The California Department of Transportation (Caltrans) has requested a change to the Route 46 Corridor Improvement Project Water Quality Certification No. 34007WQQ4 (Certification), which previously was amended on December 1, 2009, February 25, 2011, October 28, 2011, and February 15, 2012. In response to this request, we are adding Attachment 1 as an addendum to the Certification. These changes allow Caltrans to commence with project activities associated with deconstruction and replacement of the original Estrella River Bridge. The bridge allows local traffic to cross over the Estrella River on the frontage road.

All other aspects of the project are to remain as originally proposed, including conditions identified in previous Attachments to the Certification. This amendment should not result in additional impacts to water quality, provided that Caltrans implements the required best management practices and mitigation and complies with all conditions as described in the Certification, amendments, and related application documents. This letter serves as authorization for the revised project; a new Certification is not required.

If you have any questions or would like to meet to discuss these comments, please contact **Julia Dyer** at (805) 542-4624 or at jdyer@waterboards.ca.gov, or Phil Hammer at (805) 549-3882. Please mention the Certification number in all future correspondence pertaining to this project.

Sincerely,

for
Kenneth A. Harris
Interim Acting Executive Officer

Attachments:

1. Addendum to Route 46 Corridor Improvement Project Certification No. 34007WQ04 - Original Estrella River Bridge Replacement Project Requirements

CC: (electronic)

Marissa Nishikawa, California Department of Transportation
marissa_nishikawa@dot.ca.gov

Jennifer Moonjian, California Department of Transportation
jennifer_moonjian@dot.ca.gov

Cameron Johnson, U.S. Army Corps of Engineers
cameron.l.johnson@usace.army.mil

Laura Peterson-Diaz, California Department of Fish and Game
LPDIAZ@dfg.ca.gov

401 Program Manager
State Water Resources Control Board
Stateboard401@waterboards.ca.gov

R9-WTR8-Mailbox@epa.gov

S:\Section 401 Certification\Certifications\San Luis Obispo\2009\34007WQ04_Route46\Certifications\005_10-31-12_BridgeReplacement\R3_FifthAmendedHwy46_34007WQ04_final.docx

Attachment 1
Addendum to Route 46 Corridor Improvement Project Certification No. 34007WQ04
Original Estrella River Bridge Replacement Project Requirements

General Project Description

This phase of the Estrella River Bridge Replacement Project (Project) will replace the oringinal Estrella River Bridge on the old alignment. The Project is scheduled to start on May 15. After the Project is complete Caltrans[1] will relinquish the old alignment to the County of San Luis Obispo for use as a frontage road to the new highway alignment.

Caltrans will remove the existing four span 290 foot by 39 foot wide bridge and replace it with a new two span 307 foot by 40 foot bridge. The new bridge will have two 12 foot wide lanes with 4 foot wide shoulders and a 5 foot wide sidewalk on the northerly side. The footprint of the existing bridge includes 219 ft^2 piers in the channel. The piers associated with the new bridge will have 50 ft^2 footprints above the Ordinary High Water Mark, with no piers in the channel.

Project Requirements

Caltrans may not conduct work in the channel at any time when there is standing or flowing water in the channel. Between October 15 and May 15, construction related equipment is prohibited in the channel. The only material allowed in the channel between October 15 and May 15 are the piles for the new bridge, temporary falsework piles, and falsework. During this time Caltrans shall conduct all work from above the channel.

At all times, Caltrans shall conduct fueling and maintenance of vehicles and construction equipment, with the exception of cranes, at least 100 feet away from the river channel. Caltrans shall stage and park vehicles, construction equipment, and mobile equipment, with the exception of cranes, at least 100 feet outside of the river channel. Fueling of cranes in the riverbed shall only take place with the use of drip plans and spill kit.

Rain Event Triggers

At any time during the Project the National Weather Service predicts a 50% or more chance of precipitation in the forecast within 24 hours, Caltrans shall:

- Suspend any and all concrete work, painting, or any other activity that has the potential to deposit material in the channel below.
- Relocate any and all stockpiled materials at least 100 feet from the channel.
- Remove cranes, non-mobile equipment, and any other construction material from the channel.

Caltrans may resume construction activities after the rain event has passed and site conditions are dry enough to continue work without additional risk of discharging to waters of the State.

[1] Caltrans means all Caltrans employees, contractors, and anyone working on behalf of Caltrans in the conduct of any Project activities including mitigation and monitoring.

Dewatering and Diversion Activities

Diversion and dewatering activities are not authorized at any time for this Project. If the Project requires diversion or dewatering, Caltrans must submit detailed diversion and dewatering plans to Central Coast Water Board staff at least 15-days prior to any dewatering activity. Diversion and dewatering activities may not proceed without a detailed Central Coast Water Board staff approved diversion and dewatering plan.

Vegetation and Fill Material

Caltrans will cut vegetation to ground level with roots left intact for most of the area. Clearing will include root grubbing in areas of new fill for the new bridge piers. After removal of the vegetation, Caltrans will place clean fill within the Project area to create a level work area. Caltrans shall obtain clean fill from a local native source with grain size characteristics consistent with the grain size characteristics of the portion of the Estrella River bed to be filled. The source of the clean native fill shall come from a location in the Salinas or Estrella River Watershed. Caltrans shall attempt to obtain the fill from either the area behind the temporary rock crossing on the Estrella River just upstream of the Project or another local source. If Caltrans is unable to obtain clean fill material extracted from the Salinas or Estrella River Watershed with grain size characteristics as required above, Caltrans must submit detailed plans to Central Coast Water Board staff at least 15-days prior to obtaining fill extracted from an alternate watershed. Caltrans may not place fill material imported from outside the Salinas River Watershed without Central Coast Water Board staff approval of the alternate source. Upon project completion the fill shall be removed down to the original grade level.

Deconstruction and Construction

Caltrans will deconstruct the existing bridge from the bridge deck using an excavator with hoe-ram attachment to break the concrete free from the steel. During all deconstruction and construction activities Caltrans shall remove debris that falls in the channel below either by hand, loaders, bobcats, cranes, and/or dump trucks. Once Caltrans removes all the concrete, Caltrans will then remove steel girders. Caltrans shall ensure that 100% of the bridge will be removed from the stream channel and properly dispose the material at an offsite location prior to October 15. Upon completion of the bridge demolition, all debris material shall be removed from the riverbed and banks. Prior to October 15th, Caltrans shall conduct a site inspection to remove any remaining debris prior to the rainy season. Upon completion of the new bridge construction, Caltrans shall remove the temporary fill along with any remaining debris.

Other Permit Requirements

In addition to compliance with this Water Quality Certification, Caltrans shall enroll the Project under the Storm Water General Construction Permit (Storm Water Permit). In accordance with Storm Water Permit requirements, Caltrans shall prepare and implement a Storm Water Pollution Prevention Plan detailing specific Best Management Practices for the Project.

Mitigation

Temporary impacts to streambed and riparian areas shall not exceed 0.23 acres and 0.17 acres respectively. Permanent impacts to riparian areas shall not exceed 50 square feet. Caltrans shall mitigate temporary impacts at a 1:1 ratio by area with the species currently onsite. Individual tree species shall be mitigated at 3:1 ratio for cottonwoods and willows and 10:1 for

the lone valley oak. Caltrans shall conduct planting in the late summer/fall as part of the Whitley 1 landscape contract.

Caltrans shall monitor the success of the plantings throughout the monitoring period. After five years, plantings must meet a minimum of 70% survivorship. Monitoring results shall demonstrate that the mitigation sites are progressing towards the required vegetation density. If at the end of five years the survivorship does not meet the 70% success criteria, Caltrans shall repeat mitigation and monitoring activities until the success criteria is met for at least one year.

FOR CONTRACT NO.: 05-330754

INFORMATION HANDOUT

PERMITS/AGREEMENTS

2. California Dept of Fish and Game Notification

ROUTE: 05-SLO-46-PM40.0

California Natural Resources Agency
DEPARTMENT OF FISH AND GAME
Central Region
1234 East Shaw Avenue
Fresno, California 93710
(559) 243-4593
www.dfg.ca.gov

EDMUND G. BROWN, Jr., Governor
Charlton H. Bonham, Director

October 17, 2012

Chuck Cesena
California Department of Transportation
50 Higuera Street
San Luis Obispo, California 93401

Subject: Final Lake or Streambed Alteration Agreement
Notification No. 1600-2012-0137-R4
Estrella River – San Luis Obispo County

Dear Mr. Cesena:

Enclosed is the final Stream Alteration Agreement (Agreement) for the Highway 46 Corridor Improvement Project, Replace Estrella River Bridge Project (Project). Before the Department of Fish and Game (Department) may issue an Agreement, it must comply with the California Environmental Quality Act (CEQA). In this case, the Department, acting as a Responsible Agency, filed a Notice of Determination (NOD) on the same date it signed the Agreement. The NOD was based on information contained in the Environmental Impact Report the Lead Agency prepared for the Project.

Pursuant to CEQA Guidelines sections 15075(g) and 15094(g), filing of a NOD starts a 30-day statute of limitations during which a party may challenge the filing agency's approval of the Project. You may begin your Project before the 30-day period expires if you have obtained all necessary local, State, and Federal permits or other authorizations; however, if you elect to do so it will be at your own risk.

If you have any questions regarding this matter, please contact Laura Peterson-Diaz, Environmental Scientist, at (559) 243-4014, extension 225 or lpdiaz@dfg.ca.gov.

Sincerely,

Jeffrey R. Single, Ph.D.
Regional Manager

cc: Laura Peterson-Diaz, Environmental Scientist

NOTICE OF DETERMINATION

TO: Office of Planning and Research
Post Office Box 3044
Sacramento, California 95814

FROM: California Department of Fish and Game
Central Region
1234 East Shaw Avenue
Fresno, California 93710

SUBJECT: Filing of Notice of Determination in compliance with Section 21108 or 21152 of the Public Resources Code

PROJECT TITLE: State Route 46 Corridor Improvement (Estrella Bridge Replacement) Project – Agreement 2012-0137-R4

STATE CLEARINGHOUSE NUMBER: 20000011033

LEAD AGENCY: California Department of Transportation
CONTACT: Chuck Cesena (805) 549-3111

RESPONSIBLE AGENCY: California Department of Fish and Game
CONTACT: Laura Peterson-Diaz (559) 243-4017, extension 225

PROJECT LOCATION: The Project is located where State Route (SR) 46 crosses the Estrella River at Post Mile 40.0 in Section 19 Township 26 South, Range 14 East in San Luis Obispo County.

PROJECT DESCRIPTION: The California Department of Fish and Game is executing a Lake and Streambed Alteration Agreement pursuant to Section 1602 of the Fish and Game Code to the Project applicant. Caltrans proposes the following activities: Replacement of the existing bridge on SR 46 where it crosses the Estrella River which is currently a 39 foot wide, 290 foot long four span bridge will be replaced with a new 40 foot 6 inch wide, 307 foot long two span bridge. The existing bridge would be removed first. Working from the bridge deck, an excavator with hoe-ram attachment would break the concrete free from the steel and then the steel girders would then be removed. The east abutment will be removed and re-compacted before beginning construction of the new bridge. The new bridge would be constructed using cast-in-drilled-hole (CIDH) piles. Some construction equipment will need to enter the channel, but work will not be done in the wetted portion of the channel. The Project will require cutting, 11 Fremont's Cottonwood, 7 red willows, and 1 valley oak. Vegetation would be cut to ground level with roots left intact for most of the area. After removal of the vegetation, clean fill would be placed to create a level work area. Upon project completion the fill would be removed down to the original grade level. Rock slope protection would be placed at each abutment (2,045 cubic yards at the western abutment and 6,005 cubic yards at the eastern abutment), but would not extend below the Ordinary High Water Mark.

This is to advise that the California Department of Fish and Game as a Responsible Agency approved the project described above and has made the following determinations regarding the above described project.

1. The project will not have a significant effect on the environment.
2. A Environmental Impact Report was prepared for this project pursuant to the provisions of CEQA.
3. Mitigation measures were made a condition of the approval of the project.
4. A Statement of Overriding Considerations was not adopted for this project.
5. Findings were made pursuant to the provisions of CEQA.

This is to certify that a copy of the Environmental Impact Report prepared for this Project is available to the general public and may be reviewed at: Caltrans- District 5 Environmental Planning, 50 Higuera Street, San Luis Obispo, California 93401. Please contact the person specified above.

Date: 10/19/12

Jeffrey R. Single, Ph.D., Regional Manager
Central Region
California Department of Fish and Game

Date received for filing at OPR: _____

CALIFORNIA DEPARTMENT OF FISH AND GAME
REGION 4 - CENTRAL REGION
1234 East Shaw Avenue
Fresno, California 93710

STREAMBED ALTERATION AGREEMENT
NOTIFICATION NO. 1600-2012-0137-R4
Estrella River, San Luis Obispo County

CALIFORNIA DEPARTMENT OF TRANSPORTATION
CALTRANS DISTRICT 6
Chuck Cesena
50 Higuera Street
San Luis Obispo, California 93401

SR 46 ESTRELLA BRIDGE REPLACEMENT PROJECT
05-SLO-46 PM 40.0 EA 05-330772

This Streambed Alteration Agreement (Agreement) is entered into between the California Department of Fish and Game (DFG) and California Department of Transportation Caltrans District 5 (Permittee) as represented by Chuck Cesena acting on behalf of Permittee.

RECITALS

WHEREAS, pursuant to Fish and Game Code (FGC) Section 1602, Permittee notified DFG on July 16, 2012 that Permittee intends to complete the Project described herein.

WHEREAS, pursuant to FGC Section 1603, DFG has determined that the Project could substantially adversely affect existing fish or wildlife resources and has included measures in the Agreement necessary to protect those resources.

WHEREAS, Permittee has reviewed the Agreement and accepts its terms and conditions, including the measures to protect fish and wildlife resources.

NOW THEREFORE, Permittee agrees to complete the Project in accordance with the Agreement.

PROJECT LOCATION

The Project is located on State Route (SR) 46 where it crosses the Estrella River at Post Mile (PM) 40.0, in San Luis Obispo County, State of California; Section 19 Township 26 South, Range 14 East, United States Geological Survey (USGS) map Cantil, Mount Diablo meridian. Latitude: 35deg39'30Min.493Sec Longitude: -120deg30'40min.087sec.

PROJECT DESCRIPTION

The Project is limited to:

- Replacement of the existing bridge on SR 46 where it crosses the Estrella River. The 39-foot-wide, 290-foot-long four span bridge will be replaced with a new 40.5-foot-wide, 307-foot-long two span bridge. The new width will allow for two 12-foot-wide lanes, two 4-foot-wide shoulders, one 5-foot-wide sidewalk on the northerly side of the bridge, and 1.75-foot side wall barriers.

- The existing bridge will be removed first. The existing bridge is concrete with steel girders. Working from the bridge deck, an excavator with hoe-ram attachment will break the concrete free from the steel. Loaders and dump truck will remove the concrete rubble from the channel below the bridge and the steel girders will then be removed. The easterly abutment fill is currently unstable; it will be removed and re-compacted before beginning construction of the new bridge.

- The new bridge will be constructed using cast-in-drilled-hole (CIDH) piles. As soil is augured from the holes it will be replaced with slurry to prevent the hole from collapsing. The steel rebar cages will then be inserted into the holes and the slurry will be displaced with concrete. The slurry will be pumped to a water truck for reuse in dust control or else disposed of at an appropriate location.

- Equipment to be used includes but is not limited to a backhoe, bulldozer, crane, concrete pumper, drill rig, dump truck, excavator, loader, pile driver, ready-mix truck, and water truck. Some construction equipment will need to enter the channel, but will not be stored there when not in use.

- Temporary driven steel "H" piles will be used to support the falsework during construction. The new piers and the temporary falsework will be in place by October 15 so that all work through the winter can be performed from the abutment fills and on top of the falsework. No work will be done within the channel between October 15 and May 14. There will be no need to divert winter flows and no flows are expected during the summer.

- Dewatering of ponded water may be necessary prior to construction in the riverbed. In addition, dewatering may be required if groundwater is encountered during CIDH pile drilling. Dewatering will only take place between May 15 and October 14.

- The Project will require cutting 11 Fremont's cottonwoods (*Populus fremontii*) ranging in size from four (4) to 11 inches in diameter at breast height (DBH), 7 red willows (*Salix laevigata*) ranging in size from four (4) to 20 inches DBH, and 1 valley oak (*Quercus lobata*) of 24 inches DBH. Vegetation will be cut to ground level with roots left intact for most of the area. After removal of the vegetation, clean fill will be placed to create a level work area. Upon Project completion the fill will be removed down to the original grade level.

- Rock slope protection will be placed at each abutment (2,045 cubic yards at the western abutment and 6,005 cubic yards at the eastern abutment), but will not extend below the Ordinary High Water Mark.

PROJECT IMPACTS

Plant and Animal Special Status Species: This Agreement is intended to avoid, minimize, and mitigate adverse impacts to the fish and wildlife resources that occupy the Project area, and the immediate adjacent riparian habitat. Absent implementation of the protective measures required by this Agreement, the species presented in Table A and their habitat types could potentially be impacted within the area covered by this Agreement, as well other as birds, mammals, fish, reptiles, amphibians, invertebrates, and plants that comprise the local riparian ecosystem.

TABLE A

Name	Scientific Name	Listing		
		Federal	State	Other
Birds				
Swainson's hawk	*Buteo swainsoni*	---	T	---
burrowing owl	*Athene cunicularia*	---	SOC	---
Mammals				
San Joaquin kit fox	*Vulpes macrotis mutica*	E	T	---
San Joaquin antelope squirrel	*Ammospermophilus nelsoni*	---	T	---
American badger	*Taxidea taxus*	---	SOC	---
Yuma myotis	*Myotis yumanensis*	---	SOC	---
Reptiles				
western pond turtle	*Actinemys marmorata*	---	SOC	---

T = Threatened, E = Endangered, R = Rare, PT = Potentially Threatened, D = De-Listed, SOC = Species of Special Concern, CNPS = California Native Plant Society, SFP = State Fully Protected Species.

MEASURES TO PROTECT FISH AND WILDLIFE RESOURCES

1. Administrative Measures

Permittee shall meet each administrative requirement described below.

1.1 Documentation at Project Site. Permittee shall make the Agreement, any extensions and amendments to the Agreement, and all related notification materials and California Environmental Quality Act (CEQA) documents, readily available at the Project site at all times and shall be presented to DFG personnel or personnel from another State, Federal, or local agency upon request.

1.2 Providing Agreement to Persons at Project Site. Permittee shall provide copies of the Agreement and any extensions and amendments to the Agreement to all persons who will be working on the Project at the Project site on behalf of Permittee, including but not limited to contractors, subcontractors, inspectors, and monitors.

1.3 Notification of Conflicting Measures. Permittee shall notify DFG if Permittee determines or learns that a Measure in the Agreement might conflict with a Measure imposed on the Project by another local, State, or Federal agency. In that event, DFG shall contact Permittee to resolve any conflict.

1.4 Project Site Entry. Permittee agrees that DFG personnel may enter the Project site at any time to verify compliance with the Agreement.

1.5 Legal Obligations. This Agreement does not exempt the Permittee from complying with all other applicable local, State, and Federal law, or other legal obligations.

1.6 Unauthorized "Take". This Agreement does not authorize the "take" (defined in FGC Section 86 as to hunt, pursue, catch, capture, or kill; or attempt to hunt, pursue, catch, capture, or kill) of State- or federally listed threatened or endangered species. Any such "take" shall require separate permitting as may be required.

1.7 Water Diversion. To the extent that the Measures of this Agreement provide for the diversion of water, they are agreed to with the understanding that the Permittee possesses the legal right to so divert such water.

1.8 Trespass. To the extent that the Measures of this Agreement provide for activities that require the Permittee to trespass on another owner's property, they are agreed to with the understanding that the Permittee possesses the legal right to so trespass.

1.9 Construction/Work Schedule. The Permittee shall submit a **construction/work schedule** to DFG (mail, or fax to (559) 243-4020, with reference to Agreement 2012-0137-R4) prior to beginning any activities covered by this Agreement. The Permittee shall also notify DFG upon the completion of the activities covered by this Agreement.

1.10 Permittee shall submit to DFG in writing the **biologist(s) qualifications** (including names, business address(es), and contact information) of all biologists (Approved Biologist(s)) proposed to conduct the necessary biological surveys and monitoring included as Avoidance and Minimization Measures in this Agreement. Permittee shall obtain written DFG approval of the Approved Biologist(s) at least 14 days prior to conducting the necessary corresponding survey and monitoring work.

1.11 Training. Prior to starting any activity within the stream, all employees, contractors, and visitors who will be present during Project activities shall receive training from a qualified individual on the contents of this Agreement, the resources at stake, and the legal consequences of non-compliance. A **training sign-in sheet** for the employees and contractors shall be provided to DFG and shall include the date of the training and who gave the training.

2. Avoidance and Minimization Measures

To avoid or minimize adverse impacts to fish and wildlife resources identified above, Permittee shall implement each measure listed below.

2.1 Construction/Work Hours. All non-emergency work activities during the construction phase shall be confined to daylight hours. For purposes of this Agreement, "daylight hours" are defined as that daytime period between sunrise and sunset.

2.2 Flagging/Fencing. Prior to any activity within the stream, the Permittee shall identify the limits of the required access routes and encroachment into the stream. These "work area" limits shall be identified with brightly-colored flagging/fencing. Work completed under this Agreement shall be limited to this defined area only. Flagging/fencing shall be maintained in good repair for the duration of the Project. All areas beyond the identified work area limits shall be considered Environmentally Sensitive Areas (ESA) and shall not be disturbed.

2.3 Listed Species.

(a) This Agreement does not allow for the "take," or "incidental take," of any State- or federally listed threatened or endangered species. Liability for any "take," or "incidental take," of such listed species remains the separate responsibility of the Permittee for the duration of the Project.

(b) The Permittee affirms that no "take" of listed species will occur as a result of this Project and will take prudent measures to ensure that all "take" is avoided. The Permittee acknowledges that they fully understand that they do not have State "incidental take" authority. If any State- or federally listed threatened or endangered species occur within the proposed work area or could be impacted by the work proposed, and thus "taken" as a result of Project activities, the Permittee is responsible for obtaining and complying with required State and federally threatened and endangered species permits or other written authorization before proceeding with this Project.

(c) **Pre-activity Surveys** for potential rare, threatened, or endangered species (with emphasis but not limited to the species listed above in Table A) shall be conducted by an Approved Biologist within 30 days prior to commencement of Project activities or as specified within current survey protocols. Surveys must be conducted on the Project Impact Area (PIA) and all access routes to avoid and minimize "incidental take," confirm previous observations, identify any areas occupied by listed or sensitive species, and clearly mark all resources to be avoided by Project activities. All surveys for State threatened, endangered, or fully-protected species shall be done in accordance with the appropriate protocol, and during the appropriate flowering period for plant species, unless appropriate preconstruction surveys determine the lack of habitat for these species or all potential habitats are flagged and avoided. If any State- or Federally-listed threatened or endangered animal species are found within the

PIA or could be impacted by the work proposed the Permittee shall notify DFG of the discovery prior to commencement of construction. A new Agreement and/or a 2081(b) State Incidental Take Permit (ITP) may be necessary and a new CEQA analysis may need to be conducted, before work can begin. All fully protected species shall be completely avoided.

(d) Swainson's Hawk: Swainson's hawk have previously been documented nesting near the Project area. No Project-related activities shall be completed from March 1 through August 31 unless an Approved Biologist conducts **Swainson's Hawk Surveys** for nesting activity within a 0.5-mile radius of the Project site. Surveys shall be conducted at appropriate nesting times. If any active Swainson's hawk nests are observed, these nests shall be designated an ESA, protected, and monitored by an Approved Biologist. A minimum 0.5-mile avoidance buffer shall be established and maintained around each nest or nest tree unless DFG determines that a smaller buffer distance is warranted and authorizes a smaller buffer in writing. Avoidance buffers shall be maintained for the duration of the Project, unless an Approved Biologist has determined and DFG has confirmed in writing that the young have fledged or are no longer dependent upon parental care. If DFG does not approve a reduced buffer around a Swainson's hawk nest, Permittee shall acquire an ITP in order to implement Project activities within the required buffer.

(e) Burrowing Owl: Prior to commencing Project-related activities, an Approved Biologist shall conduct **Burrowing Owl Surveys** according to the Burrowing Owl Survey Protocol and Mitigation Guidelines developed by The California Burrowing Owl Consortium (2011). Surveys shall include the Project site and a 500-foot buffer. If any active burrowing owl burrows are observed, these burrows shall be designated an ESA, protected, and monitored by an Approved Biologist during Project-related activities. A minimum 250-foot avoidance buffer shall be established and maintained around each owl burrow during the nesting season (February 1 through August 31). If active burrowing owl burrows are observed outside of the nesting season, a minimum 150-foot no-disturbance buffer shall be established around each burrow. Permittee shall submit a **Burrowing Owl Eviction Plan** to DFG for approval if passive relocation with one-way doors is proposed for this Project. DFG will not approve eviction of burrowing owls until confirming that no dependent young are present.

(f) San Joaquin Kit Fox: This Project is covered by ITP 2081-2007-020-04. The Permittee shall follow all of the measures included as Conditions of Approval in the ITP for San Joaquin kit fox including but not limited to **San Joaquin kit fox Surveys** to be conducted by the Approved Biologist, referred to as the "Designated" Biologist in the ITP.

(g) American Badger: Any American badger detected within the Project area during Project activities shall be allowed to move out of the work area of its own volition. If American badger is denning on or immediately adjacent to the Project site, Permittee shall consult with DFG to determine whether the

animal(s) may be evicted from the den. Eviction of badgers shall not be approved by DFG unless it is confirmed that no dependent young are present.

(h) Bats: Bats shall not be disturbed without specific notice to and consultation with DFG. Focused **Bat Surveys** shall be conducted by an Approved Biologist to determine if bat species are roosting either within the existing bridge or near the work area. Survey methodology may include visual surveys of bats (observation of presence of bats during foraging period), inspection of for suitable habitat or bat sign (guano), or use of ultrasonic detectors (Anabat, etc.). A survey report shall be completed that includes, but is not limited to, the survey methodology and, if present, the species, colony size, roost location, and characteristics. If bats are observed roosting in the Project vicinity, Permittee shall submit a **Bat Exclusion Plan** for DFG approval. If exclusion measures are unsuccessful and bat species are still present, the Permittee shall contact DFG and mitigation shall be developed in consultation with DFG.

2.4 Fish and Wildlife.

(a) If any fish or wildlife is encountered during the course of construction, said fish and wildlife shall be allowed to leave the construction area unharmed, unless otherwise indicated in Section 2.3 above.

(b) Pursuant to FGC sections 3503 and 3503.5, it is unlawful to "take," possess, or needlessly destroy the nest or eggs of any bird or bird-of-prey. To protect nesting birds, no construction shall be completed from February 15 through August 31 unless the following **Avian Surveys** are completed by an Approved Biologist within 30 days prior to commencing Project activities.

Due to their special status designations, separate avian surveys and avoidance requirements are listed above for Swainson's hawk and burrowing owl (see Avoidance and Minimization Measures 2.3 (d, e)).

Non-listed Raptors: Survey for nesting activity of raptors within a 500-foot radius of the construction site. Surveys shall be conducted at appropriate nesting times and concentrate on trees, shrubs, and rock outcrops with the potential to support raptor nests. If any active nests are observed, these nests and nest trees shall be designated an ESA and protected with a minimum 500-foot buffer until young have fledged and are no longer reliant on the nest site or parental care.

Other Avian Species: Survey riparian areas for nesting activity within a 250-foot radius of the defined work area two (2) to three (3) weeks before construction begins. If any nesting activity is found, these nests and nest trees shall be designated an ESA and protected with a minimum 250-foot buffer until young have fledged and are no longer reliant on the nest site or parental care.

Specified avian buffer size may be reduced on a case-by-case basis if DFG concurs, based on compelling biological or ecological reasoning provided by an Approved Biologist, that implementation of a specified smaller buffer distance will still avoid Project-related "take" of adults, juveniles, chicks, or eggs associated with a particular nest. Any variance of the standard buffers must be approved in advance by DFG in writing. Avoidance buffers shall be maintained for the duration of the Project during the entire nesting season unless the qualified biologist has determined that the young have fledged or are no longer dependent upon parental care.

(c) Swallows: If swallows are actively nesting, then Project activities shall not commence before September 1. Alternatively, prior to February 15, residual (previous year) nests shall be removed and the underside of the bridge shall be covered with ½- to ¾-inch mesh net or poultry wire. The netting shall remain in place until September 1 or until construction activities at Project Area are complete. The netting shall be anchored such that swallows cannot attach their nests to the bridge structure through gaps in the net. If a swallow successfully completes a nest (within the netted area) during Project activities, Permittee shall contact the United States Fish and Wildlife Service (USFWS) and obtain the appropriate permit(s) for nest removal before work resumes during the nesting season.

(d) Removal of Trees/Shrubs during Fall/Winter Months: To avoid potential impacts to nesting birds, any trees and shrubs designated for removal shall be cut down between September 1 and February 15. Trees/shrubs may be removed between February 16 and August 31 only if the Permittee has received prior written approval from DFG. An Approved Biologist shall survey the proposed work area to verify the presence or absence of nesting birds and shall submit a detailed survey report, including mapping of any nests found, to DFG for review and potential approval.

2.5 Vegetation.

(a) The disturbance or removal of vegetation shall not exceed the minimum necessary to complete operations and shall only occur within the defined work area. Precautions shall be taken to avoid other damage to vegetation by people or equipment. Disturbed portions of the stream bed, banks, or channel shall be restored to as near their original condition as possible (see Restoration/Revegetation below).

(b) The Permittee shall document the number and species of all native riparian woody-stemmed plants in excess of four (4) inches DBH that are removed, cut, or are damaged during construction. Riparian trees and shrubs with a DBH of four (4) inches or greater that are damaged, cut, or removed shall be replaced by replanting like species at a 3:1 ratio (replaced to lost). Mitigation for heritage trees of 24-inches or greater DBH shall require replanting of like

species at a 10:1 ratio. This documentation shall be used as the basis for replacement mitigation (see Restoration/Revegetation below).

(c) Vegetation or material removed from the Project site shall be disposed of at an appropriate and legal off-site location where the material cannot enter the stream channel. No such material shall be stockpiled in the streambed, banks, or channel without measures to ensure its stability and prevent accidental discharge into the stream.

2.6 Vehicles.

(a) Vehicles shall not be operated in areas where surface water is present. Vehicles shall only operate in the channel during naturally dry conditions or while the affected section of stream is dewatered.

(b) Construction vehicle access to the stream's banks and bed shall be limited to predetermined ingress and egress corridors on existing roads. All other areas adjacent to the work site shall be considered an ESA and shall remain off-limits to construction equipment. Vehicle corridors and the ESA shall be identified by the Permittee's resident engineer in consultation with the DFG representative.

(c) Vehicles shall not be driven where wetland vegetation, riparian vegetation, or aquatic organisms may be destroyed, except as otherwise provided for in the Agreement, and as necessary to complete the authorized work.

(d) Any equipment or vehicles driven and/or operated within or adjacent to the stream shall be checked and maintained daily to prevent leaks of materials that, if introduced to water, could be deleterious to aquatic and terrestrial life.

(e) Staging and storage areas for equipment, materials, fuels, lubricants, and solvents shall be located outside of the stream channel and banks. Stationary equipment such as motors, pumps, generators, compressors, and welders, located within or adjacent to the stream, shall be positioned over drip-pans. Vehicles shall be moved away from the stream prior to refueling and lubrication.

2.7 Structures.

(a) The Permittee shall confirm that all structures are designed (i.e., size and alignment), constructed, and maintained such that they shall not cause long-term changes in water flows that adversely modify the existing stream bed/bank contours or increase sediment deposition or cause significant new erosion.

(b) Structures and associated materials not designed to withstand high seasonal flows shall be removed to areas above the high-water mark before such flows occur.

2.8 Dewatering. If it is necessary to dewater the work site, either by pump or by gravity flow, the suction end of the intake pipe shall be fitted with fish screens meeting Department and National Marine Fisheries Service (NMFS) criteria to prevent entrainment or impingement of small fish. Any turbid water pumped from the work site itself to maintain it in a dewatered state shall be disposed of in an upland location where it will not drain directly into any stream channel.

2.9 Fill/Spoil.

(a) Spoil storage sites shall not be located within the stream, where spoil could be washed into the stream, or where it will cover aquatic or riparian vegetation. Rock, gravel, and/or other materials shall not be imported into or moved within the bed or banks of the stream, except as otherwise addressed in this Agreement.

(b) Fill shall be limited to the minimal amount necessary to accomplish the agreed activities. Excess fill material shall be moved off-site at Project completion.

(c) Fill material shall be free of any pollutants or deleterious debris.

2.10 Erosion.

(a) No work shall occur within the banks of the stream during or immediately following large rainfall events. All disturbed soils within the Project site shall be stabilized to reduce erosion potential, both during and following construction. Temporary erosion control devices, including but not limited to straw bales, silt fencing, wattles, and sand bags, may be used as appropriate to prevent siltation of the stream.

(b) Permittee shall prohibit the use of erosion control materials that are potentially harmful to animals, such as erosion control matting with mono-filament netting, in areas where there is habitat for species that could be vulnerable.

(c) Any installation of non-erodible materials not described in the original Project description shall be coordinated with DFG. Coordination may include the negotiation of additional Agreement Measures for this activity.

(d) Silty water shall not be discharged into the stream, or created within the stream. The Permittee's ability to minimize siltation shall be the subject of preconstruction planning and feature implementation. Precautions to minimize siltation may require that the work site be isolated so that silt or other deleterious materials are not allowed to pass to downstream reaches. The placement of any structure or materials in the stream for this purpose not included in the original Project description shall be coordinated with DFG. If it is determined that silt levels resulting from Project-related activities constitute a threat to aquatic life, activities associated with the siltation shall be halted until

effective DFG-approved control devices are installed, or abatement procedures are initiated.

2.11 Pollution.

(a) The Permittee and all contractors shall be subject to the water pollution regulations found in the Department of FGC sections 5650 and 12015.

(b) All equipment operators shall be trained in the procedures to be taken should an accident occur. Prior to the commencement of work, the Permittee shall provide DFG with an **Emergency Response Plan** that shall be kept on-site during all phases of construction. The Plan shall identify the actions that shall be taken in the event of a spill of petroleum products, contaminated soil, or other material harmful to fish, plants, or aquatic life. Emergency response materials shall be kept at the site and be readily available to allow rapid containment and cleanup of any spilled material. In the event that a spill occurs, all Project activities shall immediately cease until cleanup of the spilled materials is completed.

(c) The cleanup of all spilled materials shall begin immediately. DFG shall be notified immediately by the Permittee of any spills.

(d) Raw cement, concrete or washings thereof, asphalt, drilling fluids or lubricants, paint or other coating material, oil or other petroleum products, or any other Project-generated debris, building materials, and rubbish that could harm fish or wildlife shall be immediately removed from any area where such materials could be washed into the "Waters of the State".

2.12 Trash, Excess Material and Debris.

(a) Permittee shall ensure that trash and food items are contained in animal-proof containers and removed at least once a week to avoid attracting opportunistic predators such as ravens, coyotes, and feral dogs.

(b) All excess material and debris shall be removed from the Project site at the completion of construction.

(c) Any lead paint, creosote, petroleum products, or other hazardous materials shall be removed and disposed of at a facility legally licensed to accept such materials. Under no circumstance shall any hazardous materials be disposed of in a manner inconsistent or out of compliance with applicable State or Federal law.

3. Compensatory Measures

To compensate for adverse impacts to fish and wildlife resources identified above that cannot be avoided or minimized, Permittee shall implement each measure listed below.

3.1 Restoration/Revegetation.

(a) The Permittee shall remove and recontour any Project-constructed access corridors in the stream channel, bed, or banks to restore the original configuration and channel width to the extent possible.

(b) All disturbed soils and new fill, including recontoured slopes and all other cleared areas, shall be revegetated with riparian vegetation or other plants. Any exposed slopes or exposed areas created on the river or tributary banks shall be seeded with a blend of a minimum of three (3) locally native grass species and covered with weed-free straw or mulch as appropriate. One (1) or two (2) sterile non-native perennial grass species may be added to the seed mix provided that amount does not exceed 25 percent of the total seed mix by count. Local native wildflower and/or shrub seeds may also be included in the seed mix. The seeding shall be completed as soon as possible, but no later than November 15 of the year construction ends. A **Seed Mixture** shall be submitted to DFG for approval prior to application. At the discretion of DFG, all exposed areas where seeding is considered unsuccessful after 90 days shall receive appropriate soil preparation and a second application of seeding and straw or mulch as soon as is practical on a date mutually agreed upon.

(c) Where suitable vegetation cannot be reasonably expected to become established, non-erodible materials shall be used for such stabilization. Any installation of non-erodible materials not described in the original Project description shall be coordinated with DFG. Coordination may include the negotiation of additional Agreement Measures for this activity.

(d) Permittee shall develop a **Revegetation Plan** for the site and submit it to DFG for approval prior to commencement of the proposed work. The Plan shall specifically address plantings of native trees, shrubs, herbs, and grasses removed, as indicated in Avoidance and Minimization Measure 2.5(b) above, and include monitoring and maintenance to ensure a minimum of 70 percent survival for the plantings after five (5) years.

4. Reporting Measures

Permittee shall meet each reporting requirement described below.

4.1 Obligations of the Permittee.

(a) The Permittee shall have primary responsibility for monitoring compliance with all protective measures included as "Measures" in this Agreement. Protective measures must be implemented within the time periods indicated in the Agreement and the program described below.

(b) The Permittee (or the Permittee's designee) shall ensure the implementation of the Measures of the Agreement, and shall monitor the effectiveness of these Measures.

(c) A **Final Project Report** to be submitted within 30 days after the Project is completed. The final report shall summarize the Project-construction, including any problems relating to the protective measures of this Agreement. "Before and after" photo documentation of the Project site shall be required.

4.2 Reports and Information. The Permittee shall submit the following Reports and Information to DFG by the timelines indicated:

- Construction/work schedule (Administrative Measure 1.9) at least five (5) days prior to start of activities.
- Biologist(s) qualifications at least 14 days prior to the scheduled start of surveys or monitoring (Administrative Measure 1.10).
- Employee and contractor training sign-in sheet (Administrative Measure 1.11) within five (5) days of the training date.
- Results of Pre-activity Surveys (Avoidance and Minimization Measure 2.3(c)).
- Results of the Swainson's Hawk Survey if construction is scheduled between February 15 and August 31 (Avoidance and Minimization Measure 2.3(d)).
- Results of the Burrowing Owl Survey (Avoidance and Minimization Measure 2.3(e)).
- Burrowing Owl Eviction Plan, if eviction of burrowing owls is proposed (Avoidance and Minimization Measure 2.3(e)).
- Results of San Joaquin kit fox Survey (Avoidance and Minimization Measure 2.3 (f)).
- Results of the Bat Survey and, if necessary, a Bat Exclusion Plan (Avoidance and Minimization Measure 2.3(h)).
- Results of Avian Surveys for nesting birds if construction activities, including tree and shrub removal, are scheduled between February 15 and August 31 (Avoidance and Minimization Measure 2.4(b) and (d)).
- An Emergency Response Plan (Avoidance and Minimization Measure 2.10(b)).
- A Seed Mixture to be used to control erosion, prior to application (Compensatory Measure 3.1(b)).

- Revegetation Plan, prior to implementation (Compensatory Measure 3.1(d)).
- A Final Project Report within 30 days of Project completion (Reporting Measure 4.1(c)).

Results of the above listed surveys shall be submitted to DFG no less than five (5) days prior to start of activities.

CONTACT INFORMATION

Any communication that Permittee or DFG submits to the other shall be in writing and any communication or documentation shall be delivered to the address below by U.S. mail, fax, or email, or to such other address as Permittee or DFG specifies by written notice to the other.

To Permittee:

California Department of Transportation (Caltrans)
District 6
Chuck Cesena
50 Higuera Street
San Luis Obispo, California 93401
Phone: (805) 549-3622
Fax: (805) 549-3233
Chuck_Cesena@dot.ca.gov

To DFG:

Department of Fish and Game
Region 4 - Central Region
1234 East Shaw Avenue
Fresno, California 93710
Attn: Lake and Streambed Alteration Program – Laura Peterson-Diaz
Notification No. 1600-2012-0137-R4
Phone: (559) 243-4017, extension 225
Fax: (559) 243-4020
lpdiaz@dfg.ca.gov

LIABILITY

Permittee shall be solely liable for any violations of the Agreement, whether committed by Permittee or any person acting on behalf of Permittee, including its officers, employees, representatives, agents, or contractors and subcontractors, to complete the Project or any activity related to it that the Agreement authorizes.

This Agreement does not constitute DFG's endorsement of, or require Permittee to proceed with the Project. The decision to proceed with the Project is Permittee's alone.

SUSPENSION AND REVOCATION

DFG may suspend or revoke in its entirety the Agreement if it determines that Permittee or any person acting on behalf of Permittee, including its officers, employees, representatives, agents, or contractors and subcontractors, is not in compliance with the Agreement.

Before DFG suspends or revokes the Agreement, it shall provide Permittee written notice by certified or registered mail that it intends to suspend or revoke. The notice shall state the reason(s) for the proposed suspension or revocation, provide Permittee an opportunity to correct any deficiency before DFG suspends or revokes the Agreement, and include instructions to Permittee, if necessary, including but not limited to a directive to immediately cease the specific activity or activities that caused DFG to issue the notice.

ENFORCEMENT

Nothing in the Agreement precludes DFG from pursuing an enforcement action against Permittee instead of, or in addition to, suspending or revoking the Agreement.

Nothing in the Agreement limits or otherwise affects DFG's enforcement authority or that of its enforcement personnel.

OTHER LEGAL OBLIGATIONS

This Agreement does not relieve Permittee or any person acting on behalf of Permittee, including its officers, employees, representatives, agents, or contractors and subcontractors, from obtaining any other permits or authorizations that might be required under other Federal, State, or local laws or regulations before beginning the Project or an activity related to it.

This Agreement does not relieve Permittee or any person acting on behalf of Permittee, including its officers, employees, representatives, agents, or contractors and subcontractors, from complying with other applicable statutes in the FGC including, but not limited to, FGC sections 2050 *et seq.* (threatened and endangered species), 3503 (bird nests and eggs), 3503.5 (birds of prey), 5650 (water pollution), 5652 (refuse disposal into water), 5901 (fish passage), 5937 (sufficient water for fish), and 5948 (obstruction of stream).

Nothing in the Agreement authorizes Permittee or any person acting on behalf of Permittee, including its officers, employees, representatives, agents, or contractors and subcontractors, to trespass.

AMENDMENT

DFG may amend the Agreement at any time during its term if DFG determines the amendment is necessary to protect an existing fish or wildlife resource.

Permittee may amend the Agreement at any time during its term, provided the amendment is mutually agreed to in writing by DFG and Permittee. To request an amendment, Permittee shall submit to DFG a completed DFG "Request to Amend Lake or Streambed Alteration" form and include with the completed form payment of the corresponding amendment fee identified in DFG's current fee schedule (see Cal. Code Reg., Title 14, § 699.5).

TRANSFER AND ASSIGNMENT

This Agreement may not be transferred or assigned to another entity, and any purported transfer or assignment of the Agreement to another entity shall not be valid or effective, unless the transfer or assignment is requested by Permittee in writing, as specified below, and thereafter DFG approves the transfer or assignment in writing.

The transfer or assignment of the Agreement to another entity shall constitute a minor amendment, and therefore to request a transfer or assignment, Permittee shall submit to DFG a completed DFG "Request to Amend Lake or Streambed Alteration" form and include with the completed form payment of the minor amendment fee identified in DFG's current fee schedule (see Cal. Code Reg., Title 14, § 699.5).

EXTENSIONS

In accordance with FGC section 1605(b), Permittee may request one (1) extension of the Agreement, provided the request is made prior to the expiration of the Agreement's term. To request an extension, Permittee shall submit to DFG a completed DFG "Request to Extend Lake or Streambed Alteration" form and include with the completed form payment of the extension fee identified in DFG's current fee schedule (see Cal. Code Reg., Title 14, § 699.5). DFG shall process the extension request in accordance with FGC section 1605(b) through (e).

If Permittee fails to submit a request to extend the Agreement prior to its expiration, Permittee must submit a new notification and notification fee before beginning or continuing the Project the Agreement covers (FGC § 1605, subd. (f)).

EFFECTIVE DATE

The Agreement becomes effective on the date of DFG's signature, which shall be: 1) after Permittee's signature; 2) after DFG complies with all applicable requirements under the California Environmental Quality Act (CEQA); and 3) after payment of the applicable FGC section 711.4 filing fee listed at http://www.dfg.ca.gov/habcon/ceqa/ceqa_changes.html.

TERM

This Agreement shall remain in effect for five (5) years beginning on the date signed by DFG, unless it is terminated or extended before then. All Measures in the Agreement shall remain in force throughout its term. Permittee shall remain responsible for

implementing any Measures specified herein to protect fish and wildlife resources after the Agreement expires or is terminated, as FGC section 1605(a)(2) requires.

CALIFORNIA ENVIRONMENTAL QUALITY ACT (CEQA) COMPLIANCE

In approving this Agreement, DFG is independently required to assess the applicability of CEQA. The features of this Agreement shall be considered as part of the overall Project description.

The Permittee's concurrence signature on this Agreement serves as confirmation to DFG that the activities that shall be conducted under the terms of this Agreement are consistent with the Project described in the CEQA Environmental Impact Report (State Clearinghouse No. 2000011033) prepared for the SR 46 Corridor Improvement Project by Caltrans as the Lead Agency. A copy of this document was provided with the Section 1602 Notification.

DFG, as a CEQA Responsible Agency, shall make findings and submit a Notice of Determination to the State Clearinghouse upon signing this Agreement.

EXHIBITS

The documents listed below are included as exhibits to the Agreement and incorporated herein by reference.

Exhibit 1: Figure 1. Project Location USGS Quad Map.

AUTHORITY

If the person signing the Agreement (signatory) is doing so as a representative of Permittee, the signatory hereby acknowledges that he or she is doing so on Permittee's behalf and represents and warrants that he or she has the authority to legally bind Permittee to the Measures herein.

AUTHORIZATION

This Agreement authorizes only the Project described herein. If Permittee begins or completes a Project different from the Project the Agreement authorizes, Permittee may be subject to civil or criminal prosecution for failing to notify DFG in accordance with FGC section 1602.

CONCURRENCE

The undersigned accepts and agrees to comply with all provisions contained herein.

FOR CALIFORNIA DEPARTMENT OF TRANSPORTATION

Chuck Cesena — 10/4/12

Chuck Cesena
Senior Environmental Planner

Date

FOR DEPARTMENT OF FISH AND GAME

10/19/12

Jeffrey R. Single, Ph.D.
Regional Manager

Date

Prepared by: Laura Peterson-Diaz
Environmental Scientist

Figure 1

Exhibit A

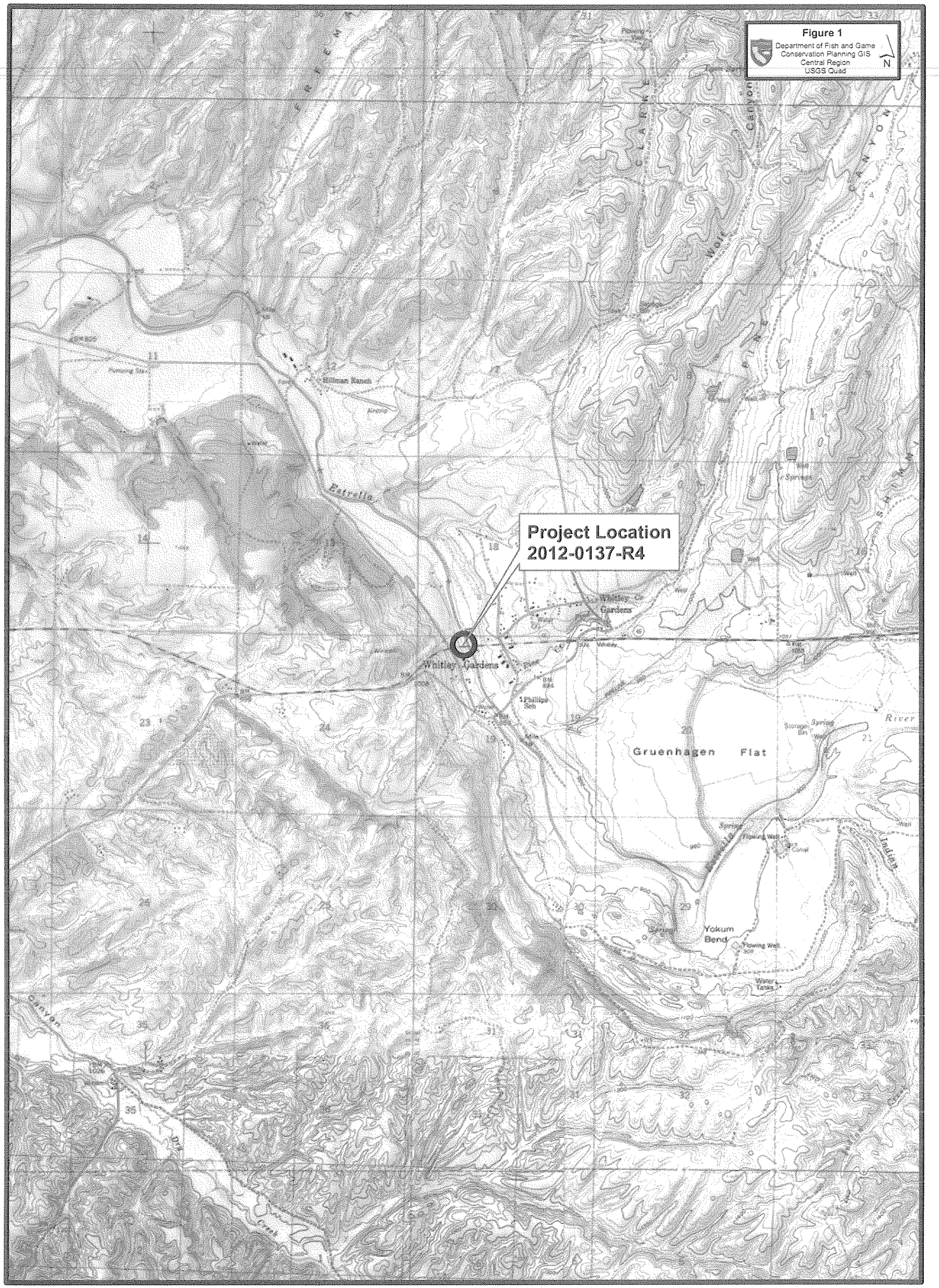
Figure 1
Department of Fish and Game
Conservation Planning GIS
Central Region
USGS Quad
N
Project Location
2012-0137-R4
Hillman Ranch
Estrella
Whitley Gardens
Whitley Gardens
Phillips Well
Gruenhagen Flat
Yokum Bend
Flowing Well
Water Tanks
Canyon
Dry
Creek
River
Indian
Wolf
Canyon
Clarke
Canyon
Springs
Well
Canal
Storage Bin

FOR CONTRACT NO.: 05-330754

INFORMATION HANDOUT

PERMITS/AGREEMENTS

3. US Army Corps of Engineers Permit and Modification of Permit

ROUTE: 05-SLO-46-PM40.0

DEPARTMENT OF THE ARMY
SAN FRANCISCO DISTRICT, U.S. ARMY CORPS OF ENGINEERS
1455 MARKET STREET
SAN FRANCISCO, CALIFORNIA 94103-1398

Regulatory Branch

SUBJECT: File Number 245730S

Mr. John Luchetta
California Department of Transportation
Office of Environmental Planning
50 Higuera Street
San Luis Obispo, California 93401-5415

Dear Mr. Luchetta:

Enclosed is your signed copy of a Department of the Army permit (Enclosure 1) to conduct work and place fill in waters of the United States, including wetlands, associated with the Highway 46 Corridor Improvement Project. The project is located in San Luis Obispo County on Highway 46, beginning at Airport Road, just east of Paso Robles, post mile (PM) 32.2) to the eastern most junction of State Routes 46 and 41, PM 56.3. The new roadway will be a four-lane, access controlled, divided expressway. It will be constructed mostly on the existing alignment with a few sections of the new expressway on new alignments to avoid environmental impacts. This permit initially authorizes construction of the Estrella Section (PMs 32.2-37.2) of the project, and the permit may be subsequently modified to authorize future construction phases.

Please complete the appropriate parts of "Project Status" form (Enclosure 2), and return it to this office as your work progresses. You are responsible for ensuring that the contractor or workers executing the activity authorized herein are knowledgeable of the terms and conditions of this authorization.

Should you have any questions regarding this matter, please call Tyson S. Eckerle of our Regulatory Branch at 415-503-6791 or Tyson.S.Eckerle@usace.army.mil. Please address all correspondence to the Regulatory Branch and refer to the File Number at the head of this letter. If you would like to provide comments on our permit review process, please complete the Customer Survey Form available through the Forms and Contacts Block on our website: www.spn.usace.army.mil/regulatory.

Sincerely,

Jane M. Hicks

for Craig W. Kiley
Lieutenant Colonel, U.S. Army
Commanding

Enclosures

Copy Furnished (w/encl 1 only):

US EPA, San Francisco, CA
US FWS, Ventura, CA
CA DFG, Monterey, CA
CA RWQCB, San Luis Obispo, CA

DEPARTMENT OF THE ARMY PERMIT

PERMITTEE: John Luchetta, California Department of Transportation

PERMIT NO. 245730S

ISSUING OFFICE: San Francisco District, U.S. Army Corps of Engineers

NOTE: The term "you" and its derivatives, as used in this permit, means the permittee or any future transferee. The term "this office" refers to the appropriate District or Division office of the Corps of Engineers having jurisdiction over the permitted activity or the appropriate official of that office acting under the authority of the commanding officer.

You are authorized to perform work in accordance with the terms and conditions specified below:

PROJECT DESCRIPTION: The California Department of Transportation (CalTrans) has applied for a Department of the Army permit to conduct work and place approximately 194,154 cubic yards of fill into 6.9 acres of waters of the United States, including wetlands, associated with the Highway 46 Corridor Improvement Project (this fill estimate accounts for all fill expected to be placed on top of jurisdictional water features, not just fill placed below Corps jurisdiction). This project is located in San Luis Obispo County on Highway 46, beginning at Airport Road, just east of Paso Robles (kilo post (KP) 51.8, post mile (PM) 32.2) to the eastern most junction of State Routes 46 and 41 (KP 90.6, PM 56.3), commonly known as the "Wye," a distance of approximately 38.8 kilometers (24.1 miles). The new roadway will be a four-lane, access controlled, divided expressway. It will be constructed mostly on the existing alignment with a few sections of the new expressway on new alignments to avoid environmental impacts.

For permitting and construction purposes, this project has been divided into four sections:

- Estrella Section, post mile 32.2 to 37.2, Construction Phase 1
- Shandon Section, post mile 37.2 to 50.2, Construction Phase 2
- Cholame Section, post mile 50.2 to 54.8, Construction Phase 3
- Wye Section, post mile 54.8 to 56.3, Construction Phase 4

As denoted above, the project will be carried out in phases over the course of approximately 20 years. This permit initially authorizes only the construction of the Estrella Section, Construction Phase 1, and its associated impacts to and permanent loss of 0.267 acre of jurisdictional wetlands. **Prior to constructing Phases 2 through 4 of the overall project, CalTrans is required to obtain from the Corps written approval and a permit modification specifically authorizing such work and related impacts to waters of the United States.**

The Estrella Section will be carried out as shown in the enclosed drawing set titled "Project Plans For Construction on State Highway In San Luis Obispo County In And Near Paso Robles From Airport Road to Geneseo Road," dated January 2006, which designates the prescribed Erosion Control Plan, the Proposed Planting Plan, and Environmentally Sensitive Areas that must be avoided. Authorized impacts to jurisdictional features are outlined in the enclosed "SLO-46 Highway Corridor Improvement Project: Union Phase, 05-SLO-46-PM 32.1/37.2," and shown in the corresponding enclosed October 2006 "SLO-46-Corridor Improvements" Aerial Photo Maps, Sheets 1 through 7. These impacts will be mitigated for as described in the "Wetland Mitigation and Monitoring Plan, Route 46 Corridor Improvement, Construction Phase 1, From Huer Huero Creek Bridge to Geneseo Road, San Luis Obispo County, SLO-46-kp51.74/63.27 (pm 32.15-37.16)" dated October 18, 2006 (enclosed).

Phases 2 and 3 (the Shandon and Cholame sections) shall be implemented using the Least Environmentally Damaging Practicable Alternative (LEDPA), as described in the September 14, 2005 "Route 46 Corridor Improvement Project Section 404(b)(1) Analysis for Determination of the Least Environmentally Damaging Practicable Alternative." At the time of

issuance of this authorization, CalTrans and the Environmental Protection Agency (EPA) had not agreed on a LEDPA for the Wye Section (Phase 4). As such, CalTrans must come to an agreement with the Corps and EPA, and gain final Corps approval, prior to construction of Phase 4.

PROJECT LOCATION: Templeton, San Luis Obispo County, California

GENERAL CONDITIONS:

1. The time limit for completing the work authorized ends on **December 30, 2027**. If you find that you need more time to complete the authorized activity, submit your request for a time extension to this office for consideration at least one month before the above date is reached.

2. You must maintain the activity authorized by this permit in good condition and in conformance with the terms and conditions of this permit. You are not relieved of this requirement if you abandon the permitted activity, although you may make a good faith transfer to a third party in compliance with General Condition 4 below. Should you wish to cease to maintain the authorized activity or should you desire to abandon it without a good faith transfer, you must obtain a modification of this permit from this office, which may require restoration of the area.

3. If you discover any previously unknown historic or archeological remains while accomplishing the activity authorized by this permit, you must immediately notify this office of what you have found. We will initiate the Federal and State coordination required to determine if the remains warrant a recovery effort or if the site is eligible for listing in the National Register of Historic Places.

4. If you sell the property associated with this permit, you must obtain the signature of the new owner in the space provided and forward a copy of the permit to this office to validate the transfer of this authorization.

5. If a conditioned water quality certification has been issued for your project, you must comply with the conditions specified in the certification as special conditions to this permit. For your convenience, a copy of the certification is attached if it contains such conditions.

6. You must allow representatives from this office to inspect the authorized activity at any time deemed necessary to ensure that it is being or has been accomplished in accordance with the terms and conditions of your permit.

7. You understand and agree that, if future operations by the United States require the removal, relocation or other alteration of the structure or work authorized herein, or if, in the opinion of the Secretary of the Army or his authorized representative, said structure or work shall cause unreasonable obstruction to the free navigation of the navigable waters, you will be required, upon due notice from the Corps of Engineers, to remove, relocate, or alter the structural work or obstructions caused thereby, without expense to the United States. No claim shall be made against the United States on account of any such removal or alteration.

SPECIAL CONDITIONS:

1. This Corps permit does not authorize you to take an endangered species. In order to legally take a listed species, you must have a separate authorization under the Endangered Species Act (ESA) (e.g., an ESA Section 10 permit or a Biological Opinion (BO) under ESA Section 7 with "incidental take" provisions with which you must comply). The enclosed U.S. Fish and Wildlife Service (FWS) BO dated **December 12, 2005** contains mandatory terms and conditions to implement the reasonable and prudent measures that are associated with "incidental take" that is also specified in the BO. Your authorization under this Corps permit is conditional upon your compliance with all of the mandatory terms and conditions associated with incidental take authorized by the attached BO, whose terms and conditions are incorporated by reference in this permit. Failure to comply with the terms and conditions associated with incidental take of the BO, where a take of the listed species occurs, would constitute an unauthorized take and it would also constitute non-compliance with

this Corps permit. The FWS is the appropriate authority to determine compliance with the terms and conditions of its BO and with the ESA.

2. To compensate for the loss of 0.267 acre of wetlands attributed to construction of the Estella Section, Construction Phase 1, a minimum of 0.730 acre of wetlands shall be created, maintained, and monitored in the manner specified in the aforementioned Wetland Mitigation and Monitoring Plan, dated October 18, 2006. Mitigation Monitoring Reports shall be submitted by December 31st of each year and should not exceed 10 pages in length, including photos. As stated in the Mitigation and Monitoring Plan, if success criteria are not met, additional mitigation shall be implemented during the Construction Phase 2.

3. All avoidance, minimization, best management practices (BMPs) and mitigation measures outlined in Chapter 6 of the "Route 46 Corridor Improvement Project Environmental Assessment with Finding of No Significant Impact/Final Environmental Impact Report," (EA/FONSI/FEIR) dated May 2006, shall be implemented. Mitigation for each project phase shall be completed prior to the finish of construction of that phase. No phase will be authorized for construction prior to the completion of mitigation for the previous phase.

4. All temporary water diversion structures must be completely removed from Corps jurisdiction upon project completion.

5. Prior to the implementation of Phases 2, 3, and 4 of the project, CalTrans must confirm in writing to the Corps that any newly listed threatened or endangered species and designated critical habitat found in the project area are not impacted by project construction. If CalTrans determines that future phases of the project would impact such species and critical habitat, the Corps presumes the Federal Highway Administration will continue to serve as the federal lead agency for the purpose of initiating and concluding Section 7 consultation under the Endangered Species Act of 1973, as amended (16 U.S.C. § 1531 *et seq.*).

6. Prior to any permit authorization of Phases 2, 3 and 4, the Corps must receive the following information at least 6 months prior to the desired implementation date of each remaining project phase:

- Titled and dated Project Description and Plans that clearly outline impacts to jurisdictional features
- Mitigation and Monitoring Plan,
- Updated and verified wetland delineation, *if necessary**

The above material will be reviewed by the Corps. Prior to construction, CalTrans must obtain a letter from the Corps verifying that the subject phase can be implemented under the terms and conditions of this permit or a modification to this permit.

The current delineation map will expire* ***October 6, 2009**.

7. Prior to any permit authorization of Phase 4, CalTrans must attain a written concurrence from EPA and the Corps on the LEDPA for the Wye Section of the overall project.

FURTHER INFORMATION:

1. Congressional Authorities: You have been authorized to undertake the activity described above pursuant to:

(X) Section 404 of the Clean Water Act (33 U.S.C. Section 1344).

2. Limits of this authorization:

a. This permit does not obviate the need to obtain other Federal, State, or local authorizations required by law.

b. This permit does not grant any property rights or exclusive privileges.

c. This permit does not authorize any injury to the property or rights of others.

d. This permit does not authorize interference with any existing or proposed Federal project.

3. Limits of Federal Liability: In issuing this permit, the Federal Government does not assume any liability for the following:

a. Damages to the permitted project or uses thereof as a result of other permitted or unpermitted activities or from natural causes.

b. Damages to the permitted project or uses thereof as a result of current or future activities undertaken by or on behalf of the United States in the public interest.

c. Damages to persons, property, or to other permitted or unpermitted activities or structures caused by the activity authorized by this permit.

d. Design or construction deficiencies associated with the permitted work.

e. Damage claims associated with any future modification, suspension, or revocation of this permit.

4. Reliance on Applicant's Data: The determination of this office that issuance of this permit is not contrary to the public interest was made in reliance on the information you provided.

5. Reevaluation of Permit Decision: This office may reevaluate its decision on this permit at any time the circumstances warrant. Circumstances that could require a reevaluation include, but are not limited to, the following:

a. You fail to comply with the terms and conditions of this permit.

b. The information provided by you in support of your permit application proves to have been false, incomplete, or inaccurate. (See Item 4 above.)

c. Significant new information surfaces which this office did not consider in reaching the original public interest decision.

Such a reevaluation may result in a determination that it is appropriate to use the suspension, modification, and revocation procedures contained in 33 C.F.R. Section 325.7 or enforcement procedures such as those contained in 33 C.F.R. Sections 326.4 and 326.5. The referenced enforcement procedures provide for the issuance of an administrative order requiring you to comply with the terms and conditions of your permit and for the initiation of legal action where appropriate. You will be required to pay for any corrective measures ordered by this office, and if you fail to comply with such directive, this office may in certain situations (such as those specified in 33 C.F.R. Section 209.170) accomplish the corrective measures by contract or otherwise and bill you for the cost.

6. Extensions: General Condition 1 establishes a time limit for the completion of the activity authorized by this permit. Unless there are circumstances requiring either a prompt completion of the authorized activity or a reevaluation of the public interest decision, the Corps will normally give favorable consideration to a request for an extension of this time limit.

Your signature below, as permittee, indicates that you accept and agree to comply with the terms and conditions of this permit.

(PERMITTEE) 5-7-07 (DATE)

This permit becomes effective when the Federal official, designated to act for the Secretary of the Army, has signed below.

Jane M. Hicks 5/10/07

Craig W. Kiley
Lieutenant Colonel, U.S. Army
Commanding

(DATE)

When the structures or work authorized by this permit are still in existence at the time the property is transferred, the terms and conditions of this permit will continue to be binding on the new owner(s) of the property. To validate the transfer of this permit and the associated liabilities associated with compliance with its terms and conditions, have the transferee sign and date below.

(TRANSFEREE) (DATE)

FOR CONTRACT NO.: 05-330754

INFORMATION HANDOUT

PERMITS/AGREEMENTS

4. US Department of the Interior Fish and Wildlife Service (Biological Opinion Document # P43727 (1-8-03-F-59) dated December 12, 2005)

ROUTE: 05-SLO-46-PM40.0

United States Department of the Interior

FISH AND WILDLIFE SERVICE
Ventura Fish and Wildlife Office
2493 Portola Road, Suite B
Ventura, California 93003

IN REPLY REFER TO:
PAS 681.731.927

December 12, 2005

Gene K. Fong, Division Administrator
Federal Highway Administration, California Division
650 Capitol Mall, Suite 4-100
Sacramento, California 95814

Subject: Biological Opinion for the State Route 46 Corridor Improvement Project, Post Mile 32.2 – 56.3, San Luis Obispo County, California (Document # P43727) (1-8-03-F-59)

Dear Mr. Fong:

This document transmits the U.S. Fish and Wildlife Service's (Service) biological and conference opinion on the effects of the California Department of Transportation's (Caltrans) proposed State Route (SR) 46 Improvement Project on the federally endangered San Joaquin kit fox (*Vulpes macrotis mutica*), and the federally threatened California tiger salamander (*Ambystoma californiense*), and California red legged frog (*Rana aurora draytonii*), in accordance with section 7 of the Endangered Species Act of 1973, as amended (Act) (16 U. S. C. 1531 *et seq*.).

The subject project would be funded by the Federal Highways Administration (FHWA) and would widen SR 46 from a two-lane conventional highway to a four-lane expressway. Your June 25, 2003, request for formal consultation was received on June 27, 2003.

CONSULTATION HISTORY

Your request for consultation included a determination that the proposed project would not affect on the California red-legged frog. You also determined the proposed project may affect the California tiger salamander and requested technical assistance regarding this species. Following discussions between biologists from Caltrans and our Office, we received your October 24, 2005, letter requesting formal consultation on the California red-legged frog and California tiger salamander.

On August 23, 2005, we designated critical habitat for the California tiger salamander, Central population, in four regions: Central Valley, Southern San Joaquin Valley, East Bay, and Central Coast (70 Federal Register [FR] 49380). However, the action described in this biological opinion is outside the boundary of critical habitat. Consequently, the proposed action would have no effect on critical habitat for this species.

The federally threatened vernal pool fairy shrimp (*Branchinecta lynchi*) also occurs in the vicinity of the proposed project. Critical habitat was designated on August 3, 2003 (68 FR 46684). FHWA has determined there would be no effect to vernal pool fairy shrimp because Caltrans has designed the new alignment of the highway to avoid both direct and indirect effects to this species and its critical habitat (Caltrans 2003a). Therefore, this biological opinion does not address the vernal pool fairy shrimp or its critical habitat.

This biological opinion is based on information that accompanied the request for consultation, subsequent discussions between our staffs, the scientific literature, a site visit on May 17, 2005, and information in our files. A complete administrative record of this consultation is on file at the Ventura Fish and Wildlife Office.

In addition to the action proposed in this biological opinion, Caltrans and FHWA plan to widen SR 46 to the east of the proposed project site. On March 10, 2005, we issued a biological opinion for the Highway 46 Improvement Project, Post Mile (PM) 55.1 to 60.9 (Service 2005), in which we concluded that project is not likely to jeopardize the continued existence of the San Joaquin kit fox or the California red-legged frog. On September 22, 2003, the Service's Sacramento Fish and Wildlife Office issued a biological opinion concluding the section of the SR 46 Improvement Project from PM 0.0 to PM 33.5, east of Interstate 5, is not likely to jeopardize the continued existence of the San Joaquin kit fox (Service 2003).

BIOLOGICAL OPINION

DESCRIPTION OF PROPOSED ACTION

State Route 46, also known as the "Paso Robles Highway," is predominantly an east-west highway that spans from State Route 1 near Cambria in San Luis Obispo County eastward to State Route 99 near Famoso in Kern County. Truck traffic currently comprises nearly 20 percent of the average daily traffic volume between Highway 101 and Interstate 5. State Route 46 is heavily used on weekends as a corridor for vehicles traveling between the San Joaquin Valley and communities on the California central coast.

Caltrans proposes to convert a 24 mile section of SR 46, from two to four lanes, between Paso Robles and the interchange of SR 41 and SR 46 near Cholame. The interchange is known locally as the "Y". The eastern end of the proposed project would adjoin SR 46 at the Antelope Grade, which was included in our previous biological opinion (Service 2005).

The width of the median separating east and westbound traffic would vary between 61 feet and 46.3 feet. All public road intersections would be improved with left turn channels (lanes). The existing roadbed would be improved to meet current design standards for a four-lane expressway. Horizontal and vertical curves would be upgraded to meet the design speed of 80 miles per hour with the exception one 65 mile per hour horizontal curve just west of the Cholame Creek Bridge, in the Shandon section.

Caltrans and FHWA analyzed the proposed project in four sections and selected the least environmentally damaging practicable alternative (LEDPA), for each section, as their proposed action. In each section, the existing highway would be widened from two to four lanes. The following four sections make up the proposed action:

1. Estrella – Alternative 8N;
2. Shandon – Alternative 1;
3. Cholame – Alternative 1; and
4. Y – Alternative 8b (overflow variation).

The following is a summary of the proposed action. A complete description of the alternatives, including the LEDPA, can be found in Caltrans 2003b.

Estrella – Alternative 8N (PM 32.2 to 41.2)

The Estrella section would start at the western end of the SR 46 where it intersects with Airport Road. Caltrans would construct two new eastbound lanes south of the existing highway. The existing highway would be converted into two westbound lanes. This section of the project would include a 46.3-foot wide, vegetated median between PM 32.2 and 34.4. The vegetated median would minimize impacts to blue oak (*Quercus douglasii*) woodlands. A 1,148-foot segment of the existing roadbed, west of Estrella Road, would be restored with native vegetation. A new 778-foot bridge would be constructed across the Estrella River. The new bridge would be 62.3 feet higher and 516 feet longer than the existing bridge. Estrella Road would be re-routed under the new bridge. The new bridge would span the entire Estrella River Valley, including an extensive Freemont cottonwood (*Populus fremontii*) woodland, which occurs along the Estrella River.

Shandon – Alternative 1 (PM 41.2 to 50.2)

Two new lanes would be built in the Shandon section to improve the flow of traffic. The location of the new lanes, relative to the existing highway, would vary between the north and south sides of the existing highway. Between PM 46.0 and 46.8, the highway alignment would be shifted to the north to reduce impacts to Cholame creek. This section would include a 61.0-foot wide median along its entire 9 mile length.

Minor modifications to the access and circulation at the Shandon Safety Roadside Rest would be implemented. Additions to the rest area would include new right-turn and left-turn lanes and a paved median crossover. Several utilities including electric, gas, telephone, jet fuel, and oil would be relocated outside of the Caltrans right-of-way.

Cholame – Alternative 1 (PM 50.2 to 54.8)

This section would include the largest highway realignment of the proposed project, from PM 50.2 to 52.2. In this area Caltrans would construct four new traffic lanes and re-route SR 46 to the North, around the existing Tosco Oil pumping plant. The new alignment would rejoin the existing route at PM 52.2. Between this point and the end of the Cholame section, two new lanes would be constructed to make SR 46 a four lane expressway. From PM 52.2, the location of the two new lanes, relative to the existing highway, would vary between the north and south sides of the existing highway. Two new bridges would be built across Cholame Creek approximately 0.16 mile north of the existing Cholame Creek Bridge. The existing bridge would be removed. Several utilities including electrical, gas, jet fuel, and oil would be relocated outside of the Caltrans right-of-way.

Y – Alternative 8b (overflow variation - PM 54.8 to 56.3)

This section is located in the Cholame Valley, at the east end of the project, and includes the interchange of SR 46 and SR 41. The new design would realign the interchange to the north and west of its existing location. The new highway would then veer back to the south, across the Cholame Creek floodplain to meet up with the existing State Route 46 alignment near PM 56.3.

SR 41 would be relocated south of its alignment near PM 45.4, to connect with State Route 46 near PM 55.6. The existing State Route 41 roadway, between PM 43.9 and 44, would be removed and the land restored with native vegetation. The new eastbound and westbound lanes would be separated with a 61-foot median.

The existing Cholame Creek Bridge would be removed and replaced. The new Cholame Creek Bridge would be 394 feet long and between 13 and 20 feet above the floodplain at their lowest point and highest points, respectively. It would have two support piers approximately 120 feet apart.

A second bridge, the Cholame Creek Overflow/secondary wildlife crossing, would be built beginning at PM 55.6. The Cholame Creek Overflow/secondary wildlife crossing would be a single-span bridge, 131 feet long, nearly 15 feet above the ground, and would partially span the wetland complex on the Cholame Valley floor. These new bridges would be elevated above the Cholame Valley floor, and are designed to provide San Joaquin kit fox with a clear line of sight under the highway.

Construction of the SR 46 Improvement Project is scheduled to begin in 2007, with the Estrella section at the west end of the highway. The remaining sections would be completed from west to east and are scheduled for completion by 2013. Working hours for the proposed project have not been established. Caltrans anticipates typical road-building equipment would be used for this project including, but not limited to: bulldozers, pile drivers, steam rollers, concrete trucks, concrete pumps, hand compactors, gas compressors, pavers, pavement

rollers, rippers, backhoes, chainsaws, and graders. Caltrans would put the project out for bid to the private sector for construction.

Minimization Measures

Caltrans has proposed the following measures to minimize adverse effects to the Joaquin kit fox:

1. The Service's recommendations for protection of San Joaquin kit fox prior to or during ground disturbance (Service 1997) have been incorporated into the project description.

2. A full time, qualified biologist will implement the Service's recommendations and other project related biological monitoring requirements.

3. Dry culverts, a minimum of 36" high, will cross all four lanes of traffic and will be located along the entire length of the proposed project every 0.3 mile based on recommendations in the literature (Cypher 2000). Culverts will not be placed at 0.3 mile intervals where drainage culverts or bridges greater than 36" high are already proposed.

4. Wire mesh drift fencing (<2 inch squares) will be used to funnel San Joaquin kit fox toward culvert openings. Drift fencing will extend out approximately 150 feet on either side of culvert openings.

5. Box culverts, 12 feet tall and 12 feet across, will be placed on both SR 46 and SR 41 east of the Y interchange to facilitate cattle drives. Additional 12-foot box culverts will be installed at known deer crossing points (PM 32.9, PM 34.1 (Dry Creek) and PM 37.7). San Joaquin kit fox may also use these additional undercrossings.

Caltrans proposes to purchase conservation easements to compensate for permanent impacts to San Joaquin kit fox habitat using the following ratios based on the CDFG San Joaquin kit fox habitat assessment form: 4:1 between PM 37.6 through the Cholame Valley; 3:1 between Airport Road and Jardine Road; and 2:1 between Jardine Road and PM 37.6. Up to 352 acres would be permanently impacted. Caltrans proposes to compensate for temporary impacts at a 1/3:1 ratio. Up to 283 acres of San Joaquin kit fox habitat would be temporarily impacted. Caltrans would purchase a total of approximately 1200 acres of off-site San Joaquin kit fox habitat at a CDFG-approved conservation bank within the corridor connecting the southern Salinas Valley to the Carrizo Plain. Two conservation banks are currently being developed by CDFG. Caltrans will evaluate both banks and will purchase credits at the bank which best suits the proposed project (D, Hacker pers. comm. 2005).

Caltrans will remove several acres of abandoned roadbed in each of the four sections, and restore these areas with native California grassland species, suitable for San Joaquin kit fox.

For every acre restored, Caltrans proposes to reduce the amount of their off-site compensation by one acre.

Caltrans will also construct artificial dens in the off-site conservation area or other areas approved by the Service and CDFG. The number of artificial dens will be based on the existing number of dens and the condition of the conservation site.

Caltrans has provided the following specific measures to minimize adverse effects to the California red-legged frog:

1. All earthwork within 270 feet of California red-legged frog aquatic habitat will be completed between May 1 and October 31.

2. A qualified biologist will conduct pre-construction surveys for California red-legged frogs within the project area within two days of initiation of project construction.

3. Any California red-legged frogs encountered will be reported to the Service immediately or as soon as practicable (i.e. the following business day if encountered at night). California red-legged frogs found in harm's way will be captured and relocated to appropriate habitat as determined after discussions with Service staff.

4. All new sightings of California red-legged frogs within project areas will be reported to the Service and the CNDDB.

5. Pre-construction meetings with the construction contractor and crew will be conducted to brief them on the potential presence of California red-legged frogs in the project area, and educate onsite workers in the identification and habitat requirements of California red-legged frogs, as well as the ramifications of take of listed species. The minimization measures outlined will also be discussed.

6. To the maximum extent practicable, contractors will avoid all project-related activities including road construction within 300 feet of all wetlands/water courses that provide suitable breeding and foraging habitat for the California red-legged frog.

7. Pesticide application will be avoided within 500 feet of all wetlands/water courses.

8. Bank slope protection placed on creek channel banks will be designed for erosion control by means of riparian function enhancement. Designs using native topsoil and native riparian local stock are preferred (biotechnology, logs, willow wattles, potted willows, "soft-tech" or low-tech dirt terracing, etc.).

9. Prior to the commencement of construction activities, Caltrans will coordinate with the CDFG to prepare a riparian vegetation replacement program for the project. Riparian vegetation removed as a result of the project will be replaced at a 3:1 ratio.

10. California native species (local stock preferred) will be utilized in re-vegetation and habitat enhancement efforts associated with the project.

11. Erosion control devices will be installed adjacent to work areas to control sedimentation and turbidity. Measures will be taken to control post-construction runoff and pollutant discharge.

12. Within 300 feet of potential California red-legged frog breeding habitat, only water will be used for dust abatement.

Caltrans has proposed the following measures to minimize adverse effects to the California tiger salamander:

1. All areas greater than 15 feet beyond the proposed cut/fill limits would be off limits to construction equipment.

2. Equipment and materials storage would be within the proposed median to the maximum extent practicable. If a median location is unavailable, then equipment and material storage areas would be selected in areas with no small mammal burrows or areas greater than 2200 feet from potential breeding pools.

STATUS OF THE SPECIES

San Joaquin Kit Fox

The San Joaquin kit fox was federally listed as endangered on March 11, 1967 (32 FR 4001), and state listed as threatened on June 27, 1971. Critical habitat has not been designated for this species. A recovery plan was published in 1983 (Service 1983). The San Joaquin kit fox recovery strategy was subsequently incorporated into an ecosystem-wide recovery plan for upland species of the San Joaquin valley (Service 1998).

Historically, San Joaquin kit foxes may have existed in a metapopulation structure of core and satellite populations, some of which may have periodically experienced local extinctions and recolonization (Service 1998). In the San Joaquin Valley before 1930, the San Joaquin kit fox was distributed within an 8,700-square mile range in central California from the vicinity of Tracy in the upper San Joaquin Valley south to the general vicinity of Bakersfield. Although the current range of San Joaquin kit fox now appears to be reduced by half of its historical range, the species still extends from Contra Costa County to the southern end of the Cuyama River watershed in Ventura, Santa Barbara, and southeastern San Luis Obispo counties, and east to the surrounding foothills of the Sierra Nevada.

Historically, the San Joaquin kit fox was associated with shrub, grassland, alkalai, and vernal pool plant communities native to the San Joaquin Valley (Service 1998). San Joaquin kit foxes also exhibit a capacity to utilize some habitats that have been altered by man, such as oil

fields, grazed pasture land, and wind farms (Cypher 2000), the margins and fallow lands near irrigated row crops, orchards, and vineyards, and may forage occasionally in these agricultural areas (Service 1998). The San Joaquin kit fox seems to prefer more gentle terrain and decreases in abundance as terrain ruggedness increases (Grinnell et al. 1937; Morrell 1972).

Throughout their range, San Joaquin kit foxes are currently limited to remaining grassland, saltbush, open woodland, alkali sink valley floor habitats, and other similar habitats located along bordering foothills and adjacent valleys and plains. The largest extant populations of San Joaquin kit foxes are in the Elk Hills and the Buena Vista Naval Petroleum Reserve in Kern County, and the Carrizo Plain Natural Area in San Luis Obispo County (Service 1998).

No current population estimate exists for San Joaquin kit foxes. Prior to 1930, range-wide estimates between 8,667 and 12,134 were suggested (Service 1983). In 1975, 6,961 San Joaquin kit foxes were estimated from 14 counties (Service 1983). However, these estimates are unreliable as they were not based on direct counts of individuals, but instead were based on den counts or assumed San Joaquin kit fox densities combined with estimates of available habitat. Also, because natural popoulation fluctuations are observed among San Joaquin kit foxes, point estimates of population size may not be good indications of the overall status of the population. Subsequently, these estimates likely over estimated true abundance of San Joaquin kit fox (Cypher 2000).

The San Joaquin kit fox is a small canid, with an average body length of 20 inches and weighing about 5 pounds. They are lightly built, with long legs and large ears. Diet of San Joaquin kit foxes varies geographically, seasonally, and annually, based on variation in abundance of prey. San Joaquin kit foxes feed primarily on kangaroo rats (*Dipodomys*), California ground squirrels (*Spermophilus beechyi*), desert cottontails (*Sylvilagus audubonii*), black-tailed jackrabbits (*Lepus californicus*), and various rodents, insects, birds, and vegetation.

Kit foxes can breed at one year old, but may not breed their first year of adulthood (Morrell 1972). During September and October, adult females begin to clean and enlarge natal or pupping dens (Morrell 1972). Mating and conception take place between late December and March (Egoscue 1956, Morrell 1972, Zoellick et al. 1987*a*). Litters of from two to six pups are born sometime between February and late March (Egoscue 1962, Morrell 1972, Zoellick et al. 1987*a*).

Reproductive success of kit foxes is correlated with abundance of their prey (Egoscue 1975). Periods of prey scarcity, owing to drought or excessive precipitation, could contribute to episodes of low reproduction and population crashes. Conversely, when densities of prey increase in response to favorable precipitation levels, foxes may reproduce at their biotic potential and contribute to population explosions (White and Garrott 1999).

Female San Joaquin kit foxes are rarely seen hunting during the time they are lactating. During this period males provide most of the food for females and pups. The pups emerge

above ground at slightly more than 1 month of age. After 4 to 5 months, usually in August or September, the young begin dispersing.

San Joaquin kit foxes maintain core home range areas that are exclusive to mated pairs and their offspring (White and Ralls 1993, Spiegel 1996). Home ranges of approximately 1 to 12 square miles have been reported (Morrell 1972, Knapp 1978, Zoellick et al. 1987*b*, Spiegel and Bradbury 1992, White and Ralls 1993). Individuals often move independently within their home range, traveling an average of 5.8 to 9.1 miles per night (Cypher 2000).

The territorial spacing behavior exhibited by San Joaquin kit fox eventually limits the number of individuals that can inhabit an area owing to shortages of available space and/or per capita prey (White and Garrott 1999). Hence, as habitat is fragmented or destroyed, the carrying capacity of a particular area is reduced and a larger proportion of the juvenile population is likely forced to disperse. Increased dispersal can lead to lower juvenile survival rates and possibly decreased abundance.

Approximately 65 percent of dispersing juvenile San Joaquin kit foxes on the Naval Petroleum Reserves, California, died within 10 days of leaving their natal range (Koopman et al. 2000). Juvenile San Joaquin kit foxes would likely be less familiar with the location of escape dens and, as a result, may be more susceptible to predation by coyotes. At higher San Joaquin kit fox densities, the number of juveniles that encounter coyotes probably increases. Also, a larger proportion of juveniles probably disperse as San Joaquin kit fox density increases because there is a shortage of available territories. Dispersing juveniles may be highly susceptible to predation by coyotes because they have little or no knowledge of the location of potential escape dens when traversing unfamiliar areas (White and Garrott 1999). Dispersal likely occurs most often at night.

An anual mortality rate of approximately 50 percent has been reported for adult San Joaquin kit foxes (Morrell 1972, Egoscue 1975, Berry et al. 1987*a*, Ralls and White 1995, Standley et al. 1992). The annual mortality rate for juvenile San Joaquin kit foxes may be closer to 70 percent (Berry et al. 1987*a*). Predation by larger carnivores, such as coyotes, accounts for the majority of San Joaquin kit fox mortality. The effects of disease, parasites and accidental death are largely unknown, but were thought to account for only a small portion of mortality (Berry et al. 1987*a*).

San Joaquin kit foxes use dens for temperature regulation, shelter from adverse environmental conditions, reproduction, and escape from predators. San Joaquin kit foxes may build their own dens or modify and use dens constructed by other animals, such as ground squirrels, badgers (*Taxidea taxus*), and coyotes (Jensen 1972, Morrell 1972, Hall 1983, Berry et al. 1987*b*), and human-made structures such as culverts, abandoned pipelines, and banks in sumps or roadbeds. However, there is no evidence to suggest San Joaquin kit foxes give birth in human structures (Spiegel et al. 1996). San Joaquin kit foxes often change dens and numerous dens may be used throughout the year. San Joaquin kit foxes change dens four or

five times during the summer months, and change natal dens one or two times per month (Morrell 1972).

San Joaquin Kit foxes prefer loose-textured soils (Grinnell et al. 1937, Hall 1946, Egoscue 1962, Morrell 1972), but are found on virtually every soil type. Throughout their range, San Joaquin kit foxes are currently limited to remaining grassland, saltbush, open woodland, alkali sink valley floor, and other similar habitats located along bordering foothills and adjacent valleys and plains.

Dens appear to be scarce in areas with shallow soils because of the proximity to bedrock (OFarrell and Gilbertson 1979, OFarrell et al. 1980), high water tables (McCue et al. 1981), or impenetrable hardpan layers (Morrell 1972). In general, plant communities such as Northern Hardpan Vernal Pool, Northern Claypan Vernal Pool, Alkali Meadow, and Alkali Playa do not provide good denning habitat for San Joaquin kit foxes because all have moist or waterlogged clay or clay-like soils.

Although there are many causes of San Joaquin kit fox mortality (Service 1998) the principal factors that have contributed to the population decline are loss, degradation, and fragmentation of habitat associated with agricultural, industrial, and urban developments in the San Joaquin Valley (Laughrin 1970, Jensen 1972, Morrell 1975, Knapp 1978). By 1979, only about 6.7 percent of the San Joaquin Valley floor's original wildlands south of Stanislaus County remained untilled and undeveloped. Loss and degradation of habitat by agricultural and industrial developments and urbanization continue, decreasing carrying capacity of remaining habitat and threatening San Joaquin kit foxes through displacement, increased predation, direct mortalities such as vehicle strikes, and reduction of prey populations. Livestock grazing is not thought to be detrimental to San Joaquin kit foxes (Morrell 1975, Orloff et al. 1986), but may alter the numbers of different prey species, depending on the intensity of the grazing. Other developments within the range of the San Joaquin kit fox include cities and towns, aqueducts, irrigation canals, surface mining, road networks, non-petroleum industrial projects, power lines, and wind farms. Although these types of developments may negatively impact its habitat and indirectly lead to injury or mortality of individuals, the San Joaquin kit fox may survive within or adjacent to them given adequate prey base and den sites.

The coyote and the introduced red fox (*Vulpes vulpes*) compete for food resources with the smaller San Joaquin kit fox and are known to prey upon San Joaquin kit foxes as well. Predation, competition, poisoning, illegal shooting and trapping, prey reduction from rodent control programs, and vehicle strikes contribute substantially to the vulnerability of this species (Service 1998).

A primary strategy in the recovery plan is to establish and maintain a viable complex of San Joaquin kit fox populations (*i.e.*, a viable metapopulation) on private and public lands throughout its geographic range. The recovery plan (Service 1998) recommends protecting the Carrizo Plain Natural Area, western Kern County, and the Ciervo-Panoche Natural Area

as core populations, maintaining multiple satellite populations, and enhancing natural connections between populations to help reduce the harmful effects of habitat loss and fragmentation. Recent observations suggest that the size of the Ciervo-Panoche Natural Area population may be more modest than previously thought, and this site may not support a core population of San Joaquin kit fox (B. Cypher, pers. comm 2005a).

In the northern most part of the range, west of the town of Tracy, the topography and structures (interstates, canals, aqueducts, etc.) form a triangle on maps. This area has been dubbed the "Tracy Triangle". The northern extent of this area includes the protected lands around Bethany Reservoir and the southern boundary is the county line shared by Stanislaus and San Joaquin Counties. The existing structures and natural topography in the area create a pinch point in the linkage area around the San Joaquin Valley edge (Service 1998). This area is under pressure by increasing development. Communities within Alameda, Contra Costa, and San Joaquin counties have expanded, in part, to low housing prices and to the growth in the Silicon Valley (Kit Fox Planning and Conservation Team 2001). In February 2001, the Service, San Joaquin County, and several cities signed the San Joaquin County Multi-species Habitat Conservation and Open Space Plan. A draft HCP/Natural Communities Conservation Plan (NCCP) for East Contra Costa County has been prepared and a notice of availability was published in the federal register on September 2, 2005 (70 FR 52434). This HCP/NCCP proposes to mitigate the effects of proposed urban development activities, rural infrastructure projects, and preserve management activities on San Joaquin kit foxes and other species, using a system of new preserves linked to existing protected areas.

The Santa Nella area, in Western Merced County, California, is another crucial area to the San Joaquin kit fox. In the past, this area has provided a narrow corridor connecting the northern and southern populations. This area is also considered a pinch point as surrounding development limits movement of San Joaquin kit fox and increases fragmentation of habitat. Further development may eliminate usable habitat in the Santa Nella area and further isolate the northern kit fox populations. Recently a notice of availability was published in the Federal Register regarding a HCP for the Santa Nella area (70 FR 6452). Habitat preservation associated with the HCP is intended to achieve the goal of protecting and maintaining habitat to facilitate population interchange between the core population to the south and northern kit fox populations.

Information regarding movement patterns in northeast San Luis Obispo County and southeast Monterey County is limited. Three occurrences of San Joaquin kit fox movement have been documented between Salinas-Pajaro Region and the Carrizo Plain Natural Area and the area east of Paso Robles. In 1989, a San Joaquin kit fox tagged at Camp Roberts military installation, along the Monterey/San Luis Obispo County line, was captured in the town of California Valley at the northern end of the Carrizo Plain (Standley 1989). In 2000, two San Joaquin kit foxes moved from Camp Roberts to areas south of SR 46, in the San Juan Valley, San Luis Obispo County (R. Root pers. comm. 2005a).

In June 2001, a San Joaquin kit fox was observed on the west side of Cholame Road, approximately 3 miles north of SR 46 (R. Stafford 2001). Recently, a 10 month old female San Joaquin kit fox was found dead on highway 58 near San Juan Creek, several miles northwest of the Carrizo Plain (B. Cypher pers. comm. 2005b).

Larger than average numbers of San Joaquin kit fox observed on the Carrizo Plain in 2005 (R. Stafford, pers. comm. 2005) may result in increased competition for food and space, leading to increased dispersal to places like the San Juan Creek drainage and areas south of Shandon and Cholame (where two kit foxes that dispersed from Camp Roberts were trapped and collared in 2000), as well as along the Estrella River corridor north to San Miguel, Camp Roberts, King City, and the rest of the Salinas Valley. The role that natural connections between the Salinas Valley and the Carrizo Plain Natural Area may play in maintaining the vigor and ensuring the survival of the metapopulation is complex and yet to be characterized.

Although the extent of movement of San Joaquin kit foxes between the Salinas Valley and the Carrizo Plain Natural Area is unknown, land development along the natural movement corridors between these areas may have contributed to reduced immigration of San Joaquin kit foxes into the Salinas Valley. The number of San Joaquin kit foxes captured at Camp Roberts during annual live-trapping decreased from 103 to 20 from 1988 to 1991. This trend continued through 1997 when only 3 San Joaquin kit foxes were captured. Scent station visits and observations of San Joaquin kit foxes during spotlighting sessions also decreased. Low numbers of previously unmarked young-of-the-year or immigrant San Joaquin kit foxes suggests that recruitment into the Camp Roberts population was low (White et al. 2000).

The cause of the population decline at Camp Roberts has been attributed to a combination of factors including predation by coyotes; displacement by red foxes, rabies and low recruitment (White et. al 2000). Prey abundance did not appear to be a primary factor in the decreased population. Mammalian prey species never appeared to be sufficiently scarce to drastically reduce reproductive or neonatal survival rates (White and Garrott 1997). There is also little evidence that military activities contributed substantially to the decrease in abundance of San Joaquin kit foxes (White et al. 2000). Currently, few San Joaquin kit fox are believed to occur at Camp Roberts. In the northern Salinas Valley, CDFG is working through their Resource Assessment Program to begin evaluating the status of San Joaquin kit fox in San Benito and Monterey Counties (R. Root, pers.comm. 2005b).

In contrast to the Camp Roberts population, the San Joaquin kit fox population at the Carrizo Plain Natural Area reached a record high by the mid-1990s. Even though numbers decreased slightly again in 1997 and 1998, the population is within normal bounds and is considered to be stable. The abundance of San Joaquin kit foxes at the Carrizo Plain Natural Area appears tied closely to the abundance of their prey species, kangaroo rats and lagomorphs (R. Stafford, pers. comm. 2005). During the summer of 2005, a new record number of San Joaquin kit foxes were sighted on the Carrizo Plain. CDFG observed 119 foxes on two combined spotlighting routes, surpassing the previous high of 85 in 1996. CDFB estimated the typical

number of San Joaquin kit foxes observed at the Carrizo Plain during the summer is around 60 (R. Stafford, pers. comm. 2005).

A recent survey effort conducted during the spring of 2005 revealed 29 sightings of San Joaquin kit fox in western Kern County and eastern San Luis Obispo County near the Palo Prieto area. Two individuals were also seen along South Bitterwater Valley Road (J. Moonjian, pers. comm).

Population trends in each of the core areas are not clear. Based on CDFG surveys and recent observations in the Lokern area (western Kern County), San Joaquin kit fox numbers appear relatively high. Numbers on the Carrizo and in western Kern County fluctuate with environmental conditions, but these two populations tend to remain fairly robust. In large part, this is attributable to the fact that habitat quality for San Joaquin kit foxes in these two areas is the highest of anywhere in the range (B. Cypher, pers. comm. 2005b).

California Red-legged Frog

On May 23, 1996, the Service published a final rule to list the California red-legged frog as threatened (61 FR 25813). The Service has published a recovery plan for the species (Service 2002). Critical habitat for the California red-legged frog was designated on March 13, 2001 (66 FR 14625). On November 6, 2002, the United States District Court for the District of Columbia set aside the designation and ordered the Service to publish a new final rule with respect to the designation of critical habitat for the California red-legged frog *(Home Builders Association of Northern California et al. versus Gale A Norton, Secretary of the Department of Interior et al.* Civil Action No. 01-1291 (RJL) U.S. District Court, District of Columbia.). We proposed a revised critical habitat designation April 13, 2004 (69 *FR* 19620). On November 3, 2005, we re-proposed critical habitat based on more refined mapping (70 FR 66906). Detailed information on the biology of California red-legged frogs can be found in Storer (1925), Stebbins (1985), and Jennings et al. (1992).

The California red-legged frog is one of two subspecies of the red-legged frog (*Rana aurora*) found on the Pacific coast. The historical range of the California red-legged frog extended from the vicinity of Point Reyes National Seashore, Marin County, California, coastally and from the vicinity of Redding, Shasta County, California, inland southward to northwestern Baja California, Mexico.

The California red-legged frog has been extirpated or nearly extirpated from 70 percent of its former range. At present, California red-legged frogs are known to occur in approximately 243 streams or drainages from 22 counties, primarily in central coastal California. Habitat loss and alteration, combined with over-exploitation and introduction of exotic predators, were important factors in the decline of the California red-legged frog in the early to mid 1900s. Ongoing threats include fragmentation, degradation, loss of habitat and establishment of non-native vegetation and predators as a result of urbanization and agricultural activities.

The California red-legged frog occupies habitat that combines both specific aquatic and riparian components. The adults are typically found in dense, shrubby or emergent riparian vegetation closely associated with deep (more than two feet in depth) still or slowly moving water. They breed and migrate from November through March and into spring depending on rainfall, although earlier breeding has been recorded in the southern part of their range. Female California red-legged frogs deposit egg masses on emergent vegetation, floating on the surface of the water. Egg masses contain about 2,000 to 5,000 moderate-sized (0.08 to 0.11 inch in diameter), dark reddish-brown eggs. Eggs hatch in 6 to 14 days. Tadpoles undergo metamorphosis 3.5 to 7 months after hatching. California red-legged frogs normally reach sexual maturity at 3 to 4 years of age. Individuals may live 8 to 10 years.

Juvenile and adult California red-legged frogs have been observed in areas of riparian vegetation where they may use small mammal burrows, moist litter, and debris such as old boards for cover. Radio telemetry studies showed that individual California red-legged frogs move within the riparian zone from vegetated areas to pools. During wet periods (particularly winter and spring), California red-legged frogs may move long distances between aquatic habitats, often traveling through habitats considered to be unsuitable. California red-legged frogs have been found more than one mile from breeding habitat and may reach isolated aquatic habitats up to a mile away from the nearest known California red-legged frog populations.

The diet of California red-legged frogs is highly variable. Tadpoles probably eat algae. Invertebrates are the most common food item for adults. Vertebrates, such as Pacific chorus frogs (*Pseudacris regilla*) and California mice (*Peromyscus californicus*), represented over half of the prey mass eaten by larger individuals. Juveniles are active diurnally and nocturnally, whereas adults are largely nocturnal. Feeding activity probably occurs along the shoreline and on the surface of the water.

Habitat loss and alteration, combined with over-exploitation and introduction of exotic predators, were important factors in the decline of the California red-legged frog in the early to mid-1900s. Habitat loss and degradation continue to threaten California red-legged frogs where agriculture and urbanization are found within their range. Road maintenance projects, off-road vehicle use, and livestock grazing contribute to erosion of stream banks and siltation of streams where California red-legged frog eggs can be smothered. Siltation that occurs during the breeding season can lead to asphyxiation of eggs resulting in small California red-legged frog larvae. Exotic predators like the bullfrog (*Rana catesbeiana*), catfish (*Ictalurus* spp.), bass (*Micropterus* spp.), mosquito fish (*Gambusia affinis*), red swamp crayfish (*Procambarus clarkii*), and signal crayfish (*Pacifastacus leniusculus*) were introduced in the 1800s to 1900s, and prey on at least one life stage of the California red-legged frog. Raccoons (*Procyon lotor*) are known to depress California red-legged frog populations and are often associated with rural developments. The most important mortality factor in the pre-hatching stage is water salinity. On the central California coast, drought may also play a role in decreased reproduction where California red-legged frogs occur in coastal lagoons. High salinity in lagoons can be attributed to drought in many instances.

California Tiger Salamander

On August 4, 2004, we listed the California tiger salamander, Central population, as threatened (69 FR 47212). The California tiger salamander is recognized as a species of special concern by the CDFG. The species persists in disjunct remnant vernal pool and isolated ponds scattered mainly along narrow strips of rangeland on each side of the Central Valley from southern Colusa County south to northern Kern County, and in sag ponds and human-maintained stock ponds in the coast ranges from Suisun Bay south to the Temblor Range. Populations of California tiger salamanders located in Sonoma and Santa Barbara counties are federally listed as endangered.

The California tiger salamander has been eliminated from an estimated 55 to 58 percent of its historic breeding sites and has lost an estimated 75 percent of its upland and dispersal habitat. Although there are approximately 150 known local populations of California tiger salamanders, only the populations at Jepson Prairie Natural Preserve and Hickson Preserve occur in a permanently protected conservation area.

The California tiger salamander is a large, stocky, terrestrial salamander with a broad, rounded snout. Adults may reach a total length of 8.2 inches, with males generally averaging about 8 inches and females averaging 6.8 inches. For both sexes, the average snout–vent length is approximately 3.6 inches. The small eyes have black irises and protrude from the head. Coloration consists of white or pale yellow spots or bars on a black background on the back and sides and a yellow belly. Males can be distinguished from females, especially during the breeding season, by their swollen cloacae (a common chamber into which the intestinal, urinary, and reproductive canals discharge), more developed tail fins, and larger overall size (Stebbins 1962; Loredo and Van Vuren 1996).

The California tiger salamander inhabits low elevation vernal pools and seasonal ponds and associated grassland, oak savannah, and coastal scrub plant communities. Although California tiger salamanders are adapted to natural vernal pools and ponds, they now frequently use manmade or modified ephemeral and permanent ponds, including stock ponds. California tiger salamanders prefer open grassland to areas of continuous woody vegetation.

California tiger salamanders spend the majority of their lives in upland habitats. The upland component typically consists of grassland savannah, but also can consist of grasslands with scattered oak trees, and scrub and chaparral habitats. Juvenile and adult California tiger salamanders spend the dry summer and fall months in the burrows of California ground squirrels and Botta's pocket gopher (*Thomomys bottae*). California tiger salamanders cannot dig their own burrows, and as a result their presence is associated with active burrows of small mammals such as ground squirrels and pocket gophers.

The California tiger salamander was first described as a distinct species, *Ambystoma californiense*, by Gray in 1853 from specimens collected in Monterey (Grinnell and Camp 1917). Storer (1925) and Bishop (1943) likewise considered the California tiger salamander

to be a distinct species. However, Gehlbach (1967) and Frost (1985) classified the California tiger salamander as a subspecies (*Ambystoma tigrinum californiense*) within the *A. tigrinum* complex. Based on recent morphological and genetic work, evidence of geographic isolation, and ecological differences among the members of the *A. tigrinum* complex, the California tiger salamander is currently considered to be a distinct species (Shaffer and Stanley 1991; Jones 1993; Shaffer and McKnight 1996; Irschick and Shaffer 1997) and was recognized as such in an Annual Notice of Review published by the Service on November 21, 1991 (56 FR 58804).

The most comprehensive analysis of the California tiger salamander's taxonomic status currently available is based on an examination of mitochondrial DNA (mtDNA) sampled from the entire tiger salamander complex, including all 14 currently recognized species and five additional subspecies from across the U.S. and Mexico (Shaffer and McKnight 1996). This study recognized the California tiger salamander as a distinct species and found that it was the sister-species to the remaining 13 species in the tiger salamander complex. Other published and ongoing studies of allozymes (Shaffer et al. 1993), nuclear gene sequences (Shaffer et al. 2004) and morphology (Krauss 1988) concur that *A. californiense* is a well-differentiated taxon that is most appropriately recognized as a full species. The recent literature has uniformly accepted this position (Petranka 1998).

Although California tiger salamanders spend most of their lives in upland habitats, their reproduction is tied to aquatic habitats. Historically, they bred primarily in natural vernal pools, but they have been able to breed successfully in human-made stock ponds created for ranching and agricultural purposes. Migrations to and from breeding ponds occur during the rainy season (November to May), with the greatest activity from December to February (Storer 1925; Loredo and Van Vuren 1996; Trenham et al. 2000). Breeding migrations are strongly associated with rainfall events (Loredo and Van Vuren 1996; Trenham et al. 2000). Breeding may occur in one major bout or during a prolonged period of several months, depending on the rainfall pattern (Loredo and Van Vuren 1996; Trenham et al. 2000).

Female California tiger salamanders mate and lay their eggs singly or in small groups (Twitty 1941; Shaffer et al. 1993). The number of eggs laid by a single female ranges from approximately 400 to 1,300 per breeding season (Trenham et al. 2000). The eggs are typically attached to vegetation near the edge of the breeding pond (Storer 1925; Twitty 1941), but in ponds with limited or no vegetation, they may be attached to objects (rocks, boards, etc.) on the bottom of the pond (Jennings and Hayes 1994). After breeding, adults leave the pond and return to small mammal burrows (Loredo et al. 1996; Trenham 2001), although they may continue to come out nightly for approximately the next two weeks to feed (Shaffer et al. 1993).

Lifetime reproductive success for other tiger salamanders is typically low, with fewer than 30 metamorphic juveniles per breeding female. Trenham et al. (2000) found even lower numbers for California tiger salamanders, with roughly 12 lifetime metamorphic offspring per breeding female. In part, this low reproductive success is due to the extended time it takes for

California tiger salamanders to reach sexual maturity: most do not breed until 4 or 5 years of age. While individuals may survive for more than 10 years, fewer than 50 percent breed more than once (Trenham et al. 2000). Combined with low survivorship of metamorphosed individuals (in some populations, less than 5 percent of marked juveniles survive to become breeding adults (Trenham et al. 2000), reproductive output in most years is not sufficient to maintain populations. This trend suggests that the species requires occasional "boom" breeding events to prevent extirpation (temporary or permanent loss of the species from a particular habitat) or extinction (Trenham et al. 2000). With such low recruitment, isolated subpopulations can decline greatly as a result of unusual, randomly occurring natural events and human-caused factors that reduce breeding success and individual survival.

Movements made by California tiger salamanders can be grouped into two main categories: (1) breeding migration; and (2) interpond dispersal. Breeding migration is the movement of salamanders to and from a pond from the surrounding upland habitat. After metamorphosis, juveniles move away from breeding ponds into the surrounding uplands, where they live continuously for several years (on average, 4 years). Upon reaching sexual maturity, most individuals return to their natal/birth pond to breed, while 20 percent disperse to other ponds (Trenham et al. 2001). Following breeding, adult California tiger salamanders return to upland habitats, where they may live for one or more years before breeding again (Trenham et al. 2000).

California tiger salamanders are known to travel large distances from breeding ponds into upland habitats. Maximum distances moved are generally difficult to establish for any species, but California tiger salamanders have been recorded to disperse 1.3 mile from breeding ponds (S. Sweet in litt. 1998). California tiger salamanders are known to travel between breeding ponds; one study found that 20 to 25 percent of the individuals captured at one pond were recaptured later at ponds approximately 1,900 and 2,200 feet away (Trenham et al. 2001).

Although the observations above show that California tiger salamanders can travel far, typically they stay closer to breeding ponds. Evidence suggests that juvenile California tiger salamanders disperse further into upland habitats than adults. A trapping study conducted in Solano County during winter 2002–03 found that juveniles used upland habitats further from breeding ponds than adults (Trenham and Shaffer 2005). More juvenile salamanders were captured at distances of 328, 656, and 1,312 feet from a breeding pond than at 164 feet. Large numbers (approximately 20 percent of total captures) were found 1,312 feet from a breeding pond.

Results from a 2003–04 trapping efforts detected juvenile California tiger salamanders at even further distances, with a large proportion of the total salamanders caught at 2,297 feet from the breeding pond. Surprisingly, most juveniles captured, even those at 2,297 feet were still moving away from ponds (B. Fitzpatrick pers. comm. 2004). These data show that many California tiger salamanders travel far while still in the juvenile stage. Post-breeding movements away from breeding ponds by adults appear to be much smaller. During post-

breeding emigration, radio-equipped adult California tiger salamanders were tracked to burrows between 62 and 813 feet from their breeding ponds (Trenham 2001). These reduced movements may be due to adult California tiger salamanders having depleted physical reserves post breeding, or also due to the drier weather conditions that can occur during the period when adults leave the ponds.

The spatial distribution of California tiger salamanders in the uplands surrounding breeding ponds is a key issue for conservation planning. Although it might be supposed that California tiger salamanders will move only short distances if abundant burrows are found near their ponds, this is not the case. In the aforementioned study in Solano County, while abundant burrows are available near the pond, a nearly equal number of California tiger salamanders were captured at 328, 656, and 1,312 feet from the breeding pond (Trenham and Shaffer 2005). Similarly, Trenham (2001) tracked salamanders to burrows up to 813 feet from a breeding pond, although burrows were abundant at distances nearer to the pond. In addition, rather than staying in a single burrow, most individuals used several successive burrows at increasing distances from the pond.

Generally, the rate of natural California tiger salamander movement both within a subpopulation (i.e., between breeding and upland sites) and among subpopulations (i.e., between individual pools or pool complexes) depends on the distance between these habitats and the conditions within intervening areas (e.g., topography, vegetation, distribution of small mammal burrows, etc.). Dispersal distance is also closely tied to precipitation, as California tiger salamanders are known to travel farther in years with more rainfall.

The primary cause of the decline of the California tiger salamanders is the loss, degradation, and fragmentation of habitat from human activities. Several other factors, including competition from introduced species and predation, may have negative effects on California tiger salamanders and their aquatic and upland habitats. Non-native or introduced predators of California tiger salamanders include bullfrogs (*Rana catesbeiana*), mosquitofish (*Gambusia affinis*), Louisiana red swamp crayfish (*Procambarus clarki*), catfish (*Ictalurus* sp.), bluegill (*Lepomis macrochirus*), largemouth bass (*Micropterus salmoides*), fathead minnow (*Pimephales promelas*) and other introduced fish (Shaffer et al. 1993, Graf 1993; Gamradt and Kats 1996, Anderson 1968, Morey and Guinn 1992).

Various nonnative subspecies of the tiger salamander within the *Ambystoma tigrinum* complex have been imported into California for use as fish bait. The introduced salamanders may out-compete the California tiger salamanders. A deformity-causing infection, possibly caused by a parasite in the presence of other factors, has affected pond-breeding amphibians at known California tiger salamander breeding sites. This same infection has become widespread among amphibian populations in Minnesota and poses the threat of becoming widespread in California.

Reduction of ground squirrel populations to low levels through widespread rodent control programs may reduce availability of burrows and adversely affect the California tiger

salamander. Poison typically used on ground squirrels is likely to have a disproportionately adverse effect on California tiger salamanders, which are smaller than the target species and have permeable skins. Use of pesticides, such as methoprene, in mosquito abatement may have an indirect adverse effect on the California tiger salamander by reducing the availability of prey. Automobiles and off-road vehicles can kill a significant number of migrating California tiger salamanders, and contaminated runoff from roads, highways and agriculture may adversely affect them.

ENVIRONMENTAL BASELINE

The implementing regulations for section 7(a)(2) of the Act define the "action area" as all areas to be affected directly or indirectly by the Federal action and not merely the immediate area involved in the action (50 *Code of Federal Regulations* 402.02). For the purposes of this biological opinion, we consider the action area to be the 24 mile length of the widening project and extending outward perpendicular to the road to varying widths. The extent of the boundary of the affected area varies based on topography, wind and water movement, habitat suitability, and the biology of the species evaluated (Forman 2003). We are not able to determine the precise area that would be affected, based on the information Caltrans has provided us for this project. For example, in the absence of site-specific surveys for San Joaquin kit fox it is impossible to know what project-related effects would affect San Joaquin kit fox at specific locations and how far reaching those effects would occur. After review of the scientific literature (Trombulak and Frissell 2000, Forman and Alexander 1998, Forman 2003, Bulger et al. 2003, Sweet in litt. 1998)) and the information provided by FHWA and Caltrans, we assume that an area extending out 1.5 mile on each side of the proposed project likely encompasses the direct and indirect effects of the action on the San Joaquin kit fox, California red-legged frog and California tiger salamander. The discussion in the Effects of the Action section of this biological opinion will explain how these effects radiate out from the project area.

San Joaquin Kit Fox

The San Joaquin kit fox is known to have historically occupied grassland and blue oak woodlands along the entire length SR 46 (Caltrans 2003a). San Joaquin kit foxes have been documented within the action area, although not in high numbers. In 1999, one adult was recorded in the action area, near the east end of the proposed project, about 0.2 mile southeast of the SR 41/46 interchange (Smallwood 1999). Near the west end of the proposed project, one San Joaquin kit fox was documented in the vicinity of Barney Schwartz Park in Paso Robles in 1991 (Caltrans 2003a.). A lack of focused surveys for San Joaquin kit fox may explain why there are few documented occurrences within the action area.

Within the last decade much of the suitable habitat between Paso Robles and Shandon (about two-thirds of the entire project length) has been converted to vineyards or other development. However, San Joaquin kit fox can still move through the action area, dispersing from nearby populations. The proposed project is located within two important movement corridors.

Lands along SR 46, between Blackwell's Corner and Paso Robles, provide connectivity between the Salinas River Valley and Antelope Plain-Blackwell's Corner satellite populations. Lands in the San Juan Creek Valley, between the northern Carrizo Plain and Shandon, provide connectivity between the Carrizo Plain population and the Salinas River Valley and Antelope Plain-Blackwell's Corner satellite populations (Cypher 2000). A recent effort to model potential movement corridors using land use, parcel size, known San Joaquin kit fox occurrences, habitat suitability, and development pressure, consistently assumed a likely movement corridor that broadly intersects SR 46 between Shandon and the Cholame Valley (McElwee 2005). Most of the Cholame Valley is non-tilled rangeland that includes the best and most un-fragmented habitat in the action area. This area contains extensive undeveloped grasslands containing a variety of badger dens and other dens that could be used by San Joaquin kit fox, as well as a variety of prey species for San Joaquin kit fox (Caltrans 2003).

Although movement of San Joaquin kit foxes across SR 46 has been documented (Standley 1989, R. Root, pers. comm. 2005a) it has not been examined extensively. Only limited studies of marked individuals have been conducted on the populations to the north and south of SR 46 (i.e. Camp Roberts and Carrizo Plain). Consequently, the significance of this area to the structure and success of the metapopulation remains unknown.

California Red-legged Frog

A creek that crosses SR 41 at PM 45.5, within the Y section, is intermittent, but contains six permanent pools along a 1,476-foot stream reach. Surveys were not conducted because the property is on private land. These pools are suitable breeding habitat for California red-legged frogs and are approximately 1 mile downstream of a permanent water source where Caltrans found one California red-legged frog during surveys for the Antelope Grade section of SR 46 (Caltrans 2003c). Two additional permanent ponds also considered in our previous biological opinion (Service 2005) are located several hundred feet south of the SR 46 and approximately 1.2 miles east of the proposed interchange of SR 41 and SR 46. Caltrans biologists documented approximately 100 hundred adult and 100 juvenile frogs in these ponds and identified the ponds as breeding sites (Caltrans 2003c). These ponds have the potential to produce thousands of metamorph and juvenile California red-legged frogs.

Two other annual streams cross under SR 46 at PM 56.3 and 57.4. These streams flow from the south side of SR 46 northward under SR 46 via a box culvert where they eventually empty into a flood basin at the SR 41/46 interchange. No California red-legged frogs were found in these streams during the course of surveys.

California tiger salamander

Although surveys for California tiger salamanders have not been conducted in the action area, Caltrans and the Service believe it is reasonable to assume California tiger salamanders are present due to the presence of suitable upland and breeding habitat. Five ponds (Cholame

Ponds) occur at varying distances, between 0.5 mile and 1.7 miles, from the proposed project site (Caltrans 2003a). The nearest known California tiger salamander breeding ponds are Kerr Lake, 3.45 miles north of the project site, and O' Brien Lake, 3.3 miles south of the project site. Additional un-surveyed ponds occur between the known breeding sites and the Cholame Ponds nearest the project site (Caltrans 2003a).

Although the distances between the known and un-surveyed ponds are beyond the maximum known dispersal distance of 1.3 miles, there are apparently no barriers that would preclude dispersal between the known breeding sites, the un-surveyed ponds, and the Cholame Ponds. California tiger salamanders occur in sag ponds and vernal pools created by the San Andeas fault, from the temblor range in San Luis Obispo County, north to Santa Cruz County (Caltrans 2003). We surmise that additional ponds or wetland complexes may have occurred within the San Andreas rift zone at some point in the past, possibly contributing to California tiger salamander dispersal.

Because the Cholame Ponds appear to be suitable breeding habitat (Caltrans 2003), occupied ponds and additional un-surveyed ponds occur to the north and south of the Cholame Ponds, and there are no known dispersal barriers, Caltrans and the Service assume California tiger salamanders are present in the action area.

EFFECTS OF THE ACTION

San Joaquin Kit Fox

The proposed project would result in the permanent loss of approximately 352 acres, and temporary impacts to 283 acres of San Joaquin kit fox habitat, along the 24 mile length of the project site. Caltrans determined all undeveloped land in the study area of the proposed project is potential foraging and or denning habitat for the San Joaquin kit fox (Caltrans 2003). San Joaquin kit fox foraging or denning within the construction footprint of the proposed project will be permanently displaced during and following construction.

Resident San Joaquin kit foxes or individuals moving through the action area may use existing dens and project components (i.e. pipes) for shelter. San Joaquin kit foxes that are dispersing through the action area are likely to be moving through at night and would likely be sheltering in dens during the day (Koopman et al. 2000). San Joaquin kit foxes that are present in the action area during the proposed project may be injured or killed by construction activities. Injury or mortality of San Joaquin kit foxes may occur if they are trapped or crushed in dens by heavy equipment, or inadvertently trapped in open trenches, uncapped pipes, or culverts.

Caltrans has included measures in their project description in order to minimize the potential for San Joaquin kit foxes to be trapped or crushed during construction. These minimization measures include but are not limited to:

a. Covering trenches at the close of each working day;

b. Providing escape ramps in trenches and excavations;

c. Placing caps on pipes with diameters of 4 inches or greater;

d. Conducting pre-construction surveys and construction monitoring, using Service-approved biologists, to reduce the chance that an occupied San Joaquin kit fox den would be subject to excavation, grading, or construction activity;

e. All construction pipe, culverts, or similar structures with a diameter of three inches or greater that are stored at a construction site for one or more nights will be thoroughly inspected for San Joaquin kit foxes before the pipe is subsequently moved, buried, or capped. If during inspection a San Joaquin kit fox is found inside a pipe, Caltrans will not move that section of pipe until the animal escapes or they will move the section of pipe once, out of the immediate construction area.

Construction related traffic could result in vehicles striking San Joaquin kit foxes. Because San Joaquin kit foxes are likely to be active at night, and may be moving around or through the action area, there is a greater chance they could be struck by construction traffic if construction also occurs at night. Death of adult San Joaquin kit foxes during the breeding season (November-January) could result in reduced reproductive success, and death of females during gestation or prior to pup weaning could result in loss of an entire litter of young, and therefore, reduced recruitment into the population (Cypher 2000). Caltrans proposes to provide project employees with training and written guidance governing vehicle use when traveling within the project area, and to strongly encourage a speed limit of 20 miles per hour on unpaved roads within San Joaquin kit fox habitat.

Protective actions may disrupt normal movement patterns and displace San Joaquin kit fox making them more susceptible to predation. For instance, Caltrans proposes to excavate and destroy potential and known dens if they can not be avoided during construction. A San Joaquin kit fox may be more susceptible to predation or subject to temperature extremes, after being removed from an excavated den.

San Joaquin kit foxes may be injured or killed if exposed to hazardous materials, such as spilled or leaking fuels, antifreeze, and herbicides and rodenticides used for the control of weeds and rodents. Caltrans has proposed to restrict the use of rodenticides and herbicides to Service and CDFG approved plans, we anticipate a low potential for injury or mortality associated with the hazardous materials described in this biological opinion.

Project-related garbage may attract San Joaquin kit foxes and predators such as coyotes, red fox, and pet or feral dogs and cats to the project area. To minimize the potential for San Joaquin kit foxes and predators to be attracted to the project site, Caltrans proposes to keep all food-related trash items in closed containers and to remove food-related trash at least once per

week. Caltrans will also ban pets from the construction area, and provide a worker awareness training program.

Because the proposed project would be completed in four sections, over approximately 10 years, construction would not occur along the entire length of the project at the same time. Consequently, San Joaquin kit fox would not be exposed to direct adverse effects, such as construction vehicle strikes, entombment, crushing, etc., along the entire 24-mile length of the project at the same time, but would be subject to these stressors during each separate phase of the project. Two sections (Estrella, Shandon) are each approximately 10 miles long while the other two sections (Cholame, Y) are each approximately two miles long.

The proposed widening of SR 46 from two to four lanes, as well as an increase in the speed limit from 55 to 70 miles per hour, may result in increased injury or mortality of San Joaquin kit fox due to the potential for more frequent vehicle strikes. The number of strikes likely increases with road size, traffic volume, and average speed (Clevenger and Waltho 1999).

The proposed project will likely contribute to a reduction in landscape connectivity and increased habitat fragmentation. Landscape connectivity may be important for animals foraging within their home range, for dispersal to establish a new home range, and for migration between locations. When landscape connectivity is high, animals are able to re-populate areas that have suffered local population declines and extirpations, and minimize the effects of inbreeding (Forman 2003, Cypher 2000). Movement and dispersal corridors are important for alleviating over-crowding and intraspecific competition during years when San Joaquin kit fox abundance is high. Roads may reduce the suitability of habitat for San Joaquin kit foxes by fragmenting it into areas to small for effective use. As habitat areas decrease in size the number of San Joaquin kit foxes the area can support also decrease (Cypher 2000).

The likelihood of a road acting as barrier increases with a larger road size, higher traffic volume, and the presence of fences or median barriers. Knapp (1978) monitored movements of radio-collared San Joaquin kit foxes in the vicinity of Interstate 5 in Kern County. Many of the San Joaquin kit foxes used areas within 3 kilometers of the highway, and most exhibited movement and home range patterns that parallel the highway, but did not cross it. Only on 2 occasions were animals located on the opposite side of the highway from their primary area of use. Interstate 5 has altered kit fox space use patterns, and effectively restricted movements by San Joaquin kit foxes (Cypher 2000).

The fragmentation of habitat associated with the proposed SR 46 widening could also eventually lead to reduced genetic variation in populations of San Joaquin kit foxes. Genetically isolated populations are at greater risk of deleterious genetic effects such as inbreeding, genetic drift, and founder effects (Cypher 2000). An increase in inbreeding and the loss of genetic variation could increase the extinction risk for small, isolated populations of kit foxes by interacting with demography to reduce fecundity, juvenile survival, and lifespan (Lande 1988, Frankham and Ralls 1998, Saccheri et al. 1998).

The effects from roads may extend some distance beyond the footprint of the road. Foreman and Deblinger (1998) described this affected area as the "road-effect" zone, where a variety of statistically significant adverse effects (e.g. mortality, habitat degradation, fragmentation, disturbance, environmental contaminants, etc.) can occur. The lateral extent of the road-effect zone is asymmetrical and is determined by variables such as topography, vegetation, traffic volume, animal locomotion, wind, or groundwater movement. Effects that extend farther from the road surface normally define the margin of the road-effect zone (e.g. human-access disturbances, spread of exotic species, blocking of wildlife movement routes). Road-effects typically transmit farther into grassland ecosystems than forests (Foreman 2003). The presence of a road-effect zone in the action area is already likely adversely affecting San Joaquin kit fox as a result of the existing highway. As the footprint of the highway is increased, the road-effect zone, and associated adverse effects, would also increase.

Determining exactly how, and when, a road will affect a wildlife population is difficult to determine. Variables such as loss of habitat, decreased landscape connectivity, disease, predation, and vehicle strikes may all contribute to variations in wildlife populations over time. For example, the effect of a road as a barrier to dispersal would likely take several generations to be observed and would also depend on the time interval between local extinctions in a species' regional population (Forman 2003). Consequently, at this time we are unable to determine the extent to which the proposed project may affect San Joaquin kit fox dispersal. However, we assume that an increase in traffic volume and average vehicle speed associated with a four lane expressway would make it increasingly more difficult for San Joaquin kit fox to disperse across SR 46.

Additionally, potential increased residential and commercial, and industrial development that is likely to occur along the highway over time would likely exacerbate the barrier effect of the road corridor. A reduction in dispersal is likely to negatively affect San Joaquin kit fox population in a variety of ways as described above. Development associated with road construction is particularly common where roads intersect, such as the intersection of Interstate 5 and Highway 99 (Cypher 2000). Habitat loss, fragmentation, and the reduction or elimination of movement corridors are likely the most severe effects to San Joaquin kit foxes (Cypher 2000). If San Joaquin kit fox populations in the Southern Salinas Valley, or other areas near the action area increase, or more information regarding the structure of the metapopulation becomes available, effects of the project may be greater than as analyzed in this biological opinion.

Caltrans and FHWA have included multiple measures intended to minimize the adverse effects of the proposed project on San Joaquin kit fox, and to facilitate movement of San Joaquin kit fox across the highway. Caltrans has proposed to construct large (61-foot wide) medians, to eliminate the need for solid median barriers as a traffic safety feature. Wide grassy medians between north and southbound traffic lanes may provide a safe opportunity for animals to rest while trying to cross traffic lanes. The elimination of solid median barriers should also increase the potential for San Joaquin kit fox to successfully cross SR 46 within

the action area as these structures can be formidable obstacles to movement for most wildlife (Foreman 2003).

Caltrans has also incorporated the installation of dry culverts into their project description, for the specific purpose of facilitating movement of San Joaquin kit fox across under the highway. Caltrans recruited expert advice (Cypher 2000) regarding the frequency and size of culverts that would likely maximize use by San Joaquin kit fox.
Caltrans also funded a field study, initiated in 2005, to evaluate the use of existing highway crossing structures by San Joaquin kit foxes and desert kit foxes on 4 lane highways in natural land environments. Caltrans will incorporate the results of the study into the proposed project design.

In addition to wildlife culverts, Caltrans has also proposed to increase the size and number of bridges in the Y section, to facilitate movement of San Joaquin kit fox and other wildlife across the highway. These new bridges would be 394 feet long and 130 feet long, and elevated to a heights ranging from 13 and 19 feet above the valley floor, providing San Joaquin kit foxes with a clear line of sight under the highway and improving the crossing potential for San Joaquin kit foxes in this area.

Caltrans proposes to provide approximately 1200 acres of conservation lands off-site at a CDFG-approved conservation bank within the corridor connecting the southern Salinas Valley to the Carrizo Plain San Joaquin kit fox core population. With this minimization measure, Caltrans would attempt to enhance movement corridors, link natural lands, and protect habitat for San Joaquin kit foxes.

California Red-legged Frog

Construction would not affect any of the known California red-legged frog breeding sites in the action area. However, surface water quality of aquatic habitat, adjacent to the highway, may be temporarily degraded as a result of project construction. Aquatic habitat may also be adversely affected by highway runoff during winter rains. However, the new highway alignment would be buffered from perennial aquatic habitat by distances ranging from 131 to 164 feet, minimizing the potential for highway runoff to reach the aquatic habitat. Project-related releases of sediments from areas cleared of vegetation during construction or of contaminants, such as fuels and oils, from construction equipment into the riparian area or water may negatively affect the quality of habitat for California red-legged frogs by killing native plants used for resting or foraging and by decreasing availability of prey. Released contaminants may also adversely affect or kill California red-legged frogs. Such effects would be reduced or eliminated by the use of erosion control devices, and measures taken to control post-construction runoff and pollutant discharge.

If Caltrans limits construction to the dry season, it does not anticipate direct adverse effects to California red-legged frogs during construction because they do not expect individuals to move away from permanent water sources during the dry season (May 1 through October 31).

However, because Caltrans does not expect to complete the Y section for approximately 8-10 years, and they have not finalized the work schedule to limit the proposed construction to the dry season, construction may occur during winter rainy seasons when California red-legged frogs are likely to be migrating or dispersing through the action area.

Bulger et al. (2003) found that less than 25 percent of an adult California red-legged frog population in Santa Cruz County, California, migrated away from breeding sites during the winter. These authors also noted that migration is spread out over time and does not occur as a synchronous en mass event, and that the density of California red-legged frogs migrating through uplands is usually very low (Bulger et al. 2003).

The dispersal of metamorph and juvenile California red-legged frogs has not been well documented. However, California red-legged frogs are believed to disperse widely the first 6 to 8 months after metamorphosis and through the winter. Once they reach the juvenile stage (approximately 1 year old) they will remain in aquatic habitat (either breeding or summer) until breeding age (approximately 2 to 3 years old). If they did not disperse to suitable breeding habitat as metamorphs, California red-legged frogs will migrate to suitable breeding habitat when they reach breeding age. Some adults may return to summer habitat after breeding (N. Scott pers. comm. 2005).

Although there are large numbers of California red-legged frogs in the action area, the highest known densities are found in ponds approximately 1.2 mile southeast of the proposed SR 41/46 interchange. We anticipate few adult California red-legged frogs will migrate this far from permanent water sources in the arid climate of northeast San Luis Obispo County. Given the number of California red-legged frogs present in the action area, and the distances of the aquatic habitat from the construction area, we anticipate that fewer than 25 adults may migrate from the breeding ponds during the winter rainy months. However, hundreds of metamorphs may disperse through the action area. Migrating or dispersing California red-legged frogs may be struck and killed by vehicle traffic and construction traffic.

California red-legged frogs could be injured or killed if they are improperly handled or contained during capture and relocation efforts if they are found in construction areas. Caltrans would reduce the chances of incidental injury by using only Service-approved biologists to capture and move California red-legged frogs.

Chytrid fungus (*Batrachochytrium dendrobatidis*) could be spread if infected California red-legged frogs are relocated and introduced into areas with healthy California red-legged frogs or vice-versa. Chytrid fungus is a water-borne fungus that can be spread through direct contact between aquatic animals and by a spore that can move short distances through the water. The fungus only attacks the parts of a frog's skin that have keratin (thickened skin), such as the mouthparts of tadpoles and the tougher parts of adults' skin, such as the toes. The fungus can decimate amphibian populations, causing fungal dermatitis, which usually results in death in 1 to 2 weeks. Infected animals may spread the fungal spores to other ponds and streams before they die. Once a pond has become infected with chytrid fungus, the fungus

stays in the water for an undetermined amount of time. It is possible that during the relocation of California red-legged frogs proposed by the applicant that infected individuals or equipment could introduce Chytrid fungus into areas where it did not previously occur. If this occurs, many California red-legged frogs could be affected.

California red-legged frogs have strong homing tendencies (Rathbun and Schneider 2001). As a result, relocated individuals may be at risk of injury or death through predation or dehydration during an attempt to return to a work area from which they had been moved. This risk may increase with the distance of the relocation site from the work area. However, if individuals are moved far enough they are more likely to remain at the relocation site. (Rathbun and Schneider 2001).

California red-legged frogs may be killed or injured from inadvertent trampling by workers from foot traffic and operation of construction equipment during the construction of the highway improvement project. Such effects to California red-legged frogs would be reduced by Caltrans' proposed measures to hold pre-construction meetings with the contractor and crew to brief them on the potential presence of California red-legged frogs in the project area, educate onsite workers in the identification and habitat requirements of California red-legged frogs and ramifications of take of listed species, and discuss minimization measures.

Predation of California red-legged frogs may increase in the project vicinity with the attraction of predators, such as raccoons (*Procyon lotor*), pet and feral dogs (*Canis familiaris*) and cats (*Felis domesticus*), to the work area by food-related trash. Such effects would be reduced by Caltrans' protective measures to manage trash properly and ban pets from the construction area. Additionally, increased exposure to predation and desiccation could occur with the disruption of normal foraging and sheltering behavior by construction noise and activity. Such effects would be minimized by the following measures: pre-construction surveys using Service approved biologists within two days prior to initiation of project construction, properly containing and removing trash; conducting awareness training sessions for workers; and relocating California red-legged frogs, if any are found in harm's way, prior to the start of construction activities.

California tiger salamander

California tiger salamanders dispersing from ponds within the action area are subject to mortality or injury from vehicle strikes and construction activities associated with the proposed project, particularly if work is conducted during the wet season (November to May). Adult migrations to and from breeding ponds occur during the wet season, with the greatest activity from December to February. Because we lack any population data from the ponds within the action area, we are unable to quantify the amount of California tiger salamanders that may disperse into the construction area or attempt to cross the highway following construction. However, based on Trenham's (2001) method for calculating dispersal probabilities, Caltrans (2005) estimated that of the four ponds within the action area, 3.23 percent of one potential breeding population, and less than one percent of each three

additional potential breeding populations are likely to disperse far enough to be adversely affected by construction.

California tiger salamanders may also be crushed if they are present in small mammal burrows within the construction footprint of the proposed project. All small mammal burrows, in the construction footprint of the new traffic lanes, would be destroyed during grading and ground compaction that is part of the road building process. California tiger salamanders may also become trapped in construction trenches where they are subject to predation and desiccation.

The new bridges proposed by Caltrans would be built directly between the two nearest known breeding populations as well as between the two nearest potential breeding pools. The bridges would span a 394-foot wide corridor in the area that is most likely to be used by California tiger salamanders. An additional 131-foot long bridge may also facilitate movement of California tiger salamanders under the highway. The creation of these large under-crossings would enhance a likely movement corridor and may facilitate movement of California tiger salamanders under the highway, and result in fewer vehicle strikes.

California tiger salamanders could be injured or killed if they are improperly handled or contained during capture and relocation efforts if they are found in construction areas. Caltrans would reduce the chances of incidental injury by using only Service-approved biologists to capture and move California tiger salamanders. Handling California tiger salamanders or introducing equipment into their breeding ponds can also result in the spread of chytrid fungus, a pathogen linked to declines in amphibians. The first case of chytrid fungus in California tiger salamanders was reported in 2005 (Padgett-Flohr and Longcore 2005).

CUMULATIVE EFFECTS

Cumulative effects include the effects of future State, tribal, local or private actions that are reasonably certain to occur in the action area considered in this biological opinion. Future Federal actions that are unrelated to the proposed action are not considered in this section because they require separate consultation pursuant to section 7 of the Act.

Caltrans has recognized the completion of the SR 46 Improvement Project may result in future increased road mortality of San Joaquin kit fox. Consequently, Caltrans has proposed to work cooperatively with the Service to attempt to remedy any increased future mortality of San Joaquin kit foxes on SR 46 following completion of the proposed project (Luchetta, pers. comm. 2005).

In April 2004, the San Luis Obispo County Board of Supervisors voted to update the Community Plan for Shandon (Community Plan). Shandon is a small, primarily agricultural community, located approximately 20 miles east of Paso Robles and adjacent to SR 46. It has a population of approximately 1000 residents within a 380-acre Urban Reserve line.

The Community Plan will include but not be limited to future population, housing development, land use, traffic, infrastructure, and economic development alternatives (County 2005). The study area will include the area within the Urban Reserve line and approximately 1620 additional acres surrounding the community. Expansion of Shandon beyond the existing Urban Reserve line will likely encroach into San Joaquin kit fox habitat, and may adversely affect the population through increased loss of habitat and a reduction or loss of movement corridors. The area between Shandon and the Cholame Valley has been identified as some of the best remaining San Joaquin kit fox habitat in the action area and a likely movement corridor (McElwee 2005). Open space areas, incorporated into the Community Plan Update, which provide connectivity to the north and south of SR 46, would likely benefit the San Joaquin kit fox.

CONCLUSION

After reviewing the current status of the San Joaquin kit fox, California red-legged frog, and California tiger salamander, the environmental baseline for the action area, the effects of the proposed action, and the cumulative effects, it is our biological opinion that the State Route 46 Improvement Project for PM 32.2 to PM 56.3, is not likely to jeopardize the continued existence of these species for the following reasons:

San Joaquin kit fox

1. Caltrans and FHWA have proposed to install numerous wildlife under-crossings along the entire 24 mile length of the project, to facilitate movement of San Joaquin kit foxes across SR 46.

2. Within the Cholame Valley, Caltrans has proposed to use large bridges to facilitate connectivity and potentially improve crossing opportunities for San Joaquin kit foxes in an important movement corridor.

3. Caltrans has proposed to use the best and most updated science available, to design and implement wildlife under-crossings for San Joaquin kit fox.

4. Caltrans will conserve approximately 1200 acres of San Joaquin kit fox habitat determined by the Service, CDFG, and species experts to be important to dispersal.

5. Caltrans has proposed to work with the Service to attempt to remedy any increased future road mortality that occurs following completion of the proposed project.

6. Because the proposed project would be completed in four phases, and the final phase (the Y section) will not be completed until approximately 2013, we will have an opportunity to monitor the effectiveness of the proposed minimization measures, and to determine if additional protective measures are necessary.

7. In addition to wildlife under-crossings, FHWA and Caltrans will implement numerous other measures to minimize adverse effects to San Joaquin kit fox during construction.

California red-legged frog

8. Known breeding locations in the action area would not be affected by the proposed project.

9. Caltrans would minimize adverse effects to aquatic habitat for the California red-legged frog through implementation of erosion control methods and other best management practices.

10. Elevating the highway in the Y section will likely reduce any existing road mortality in this area, and may result in an improved crossing situation when compared to the existing two lane highway.

California tiger salamander

11. No California tiger salamander breeding habitat would be affected by the project.

12. Elevating the highway in the Y section will likely reduce any existing road mortality in this area and may increase the potential for dispersal north and south of SR 46.

13. Only a small amount of upland habitat would be adversely affected.

INCIDENTAL TAKE STATEMENT

Section 9 of the Act and Federal regulation pursuant to section 4(d) of the Act prohibit the take of endangered and threatened species, respectively, without special exemption. Take is defined as to harass, harm, pursue, hunt, shoot, wound, kill, trap, capture or collect, or to attempt to engage in any such conduct. Harm is further defined by the Service to include significant habitat modification or degradation that results in death or injury to listed species by significantly impairing essential behavioral patterns, including breeding, feeding, or sheltering. Harass is defined by the Service as intentional or negligent actions that create the likelihood of injury to listed species by annoying it to such an extent as to significantly disrupt normal behavior patterns which include, but are not limited to, breeding, feeding or sheltering. Incidental take is defined as take that is incidental to, and not the purpose of, the carrying out of an otherwise lawful activity. Under the terms of section 7(b)(4) and section 7(o)(2), taking that is incidental to and not intended as part of the agency action is not considered to be prohibited taking under the Act provided that such taking is in compliance with the terms and conditions of this incidental take statement.

The measures described below are non-discretionary and FHWA must make them binding conditions of any grant or permit issued to Caltrans, as appropriate, for the exemption in

section 7(o)(2) to apply. FHWA has a continuing duty to regulate the activity covered by this incidental take statement. If FHWA fails to require Caltrans to adhere to the terms and conditions of the incidental take statement through enforceable terms that are added to the permit or grant document, the protective coverage of section 7(o)(2) may lapse. To monitor the impact of incidental take, FHWA must report the progress of the action and its impact on the California red-legged frog, California tiger salamander, and the San Joaquin kit fox to the Service as specified in the incidental take statement [50 CFR §402.14(i)(3)].

The amount of incidental take of San Joaquin kit foxes that may occur during construction is difficult to quantify because there is a lack of information on occurrences of and movement patterns of San Joaquin kit foxes in the action area. Estimating the number of individuals that are subject to harassment is not possible, given the unknown number of San Joaquin kit foxes that may occur in the action area at any given time. However, based on the information in the Status of the Species and Environmental Baseline sections of this biological opinion, we expect few San Joaquin kit fox to be subject to harassment as a result of direct project related effects.

It will be difficult to find injured or dead California red-legged frogs and California tiger salmanders due to their small size and because the large earth moving equipment that would be used during the project would likely destroy any evidence of dead or injured individuals. For these reasons and because there are a large number of California red-legged frogs, in the action area, we are unable to determine the exact number of California red-legged frogs that will be incidentally taken in the form of injury or mortality. However, based upon the information described in this biological opinion, we anticipate that less than 25 percent of the adult California red-legged frogs in the action area would be subject to injury or mortality. An unknown number of metamorph and juvenile California red-legged frogs could be killed or injured by project activities. Although we cannot predict how many individuals may be in the construction footprint at a given time, we anticipate that all California red-legged frogs found in harm's way will be incidentally taken in the form of harassment during capture and relocation efforts.

We are also unable to determine the number of California tiger salamanders that may be incidentally taken because we have no occurrence data from the action area. Caltrans and the Service assume California tiger salamanders are present in the action area based on the presence of suitable breeding habitat and existing land use practices. However, based on Trenham's (2001) method for calculating dispersal probabilities, we estimate that 3.23 percent of one potential breeding population, and less than one percent of each three additional potential breeding populations, in the action area, are likely to disperse far enough to be adversely affected by project activities. Consequently, these calculations suggest that the number of California tiger salamanders that may be incidentally taken are extremely low.

This biological opinion does not exempt any activity from the prohibitions against take contained in section 9 of the Act that is not incidental to the action as described in this biological opinion. Take that occurs outside of demarcated work areas or from any activity

not described in this biological opinion is not exempted from the prohibitions against take described in section 9 of the Act.

REASONABLE AND PRUDENT MEASURES

The Service believes the following reasonable and prudent measures are necessary and appropriate to minimize take of California red-legged frogs, California tiger salamanders and San Joaquin kit foxes:

1. Caltrans and FHWA must reduce the potential for injury or mortality of San Joaquin kit foxes, California red-legged frogs, and California tiger salamanders as a result of construction activities and vehicle traffic.

2. Only personnel authorized under this biological opinion may implement those avoidance and minimization measures, included in this biological opinion, which require biological expertise and experience with San Joaquin kit fox, California red-legged frogs, and California tiger salamanders.

3. Biologists who handle California red-legged frogs and California tiger salamanders must ensure that their activities do not transmit diseases

The Service's evaluation of the effects of the proposed action includes consideration of the minimization measures proposed by Caltrans and included in the description of the proposed action section of this biological opinion. Any subsequent changes to these measures may constitute a modification of the proposed action and may warrant re-initiation of formal consultation, as specified at 50 CFR 402.16. These reasonable and prudent measures are intended to supplement the protective measures that were proposed by Caltrans as part of the proposed action.

TERMS AND CONDITIONS

To be exempt from the prohibitions of section 9 of the Act, FHWA must ensure that Caltrans complies with the following terms and conditions, which implement the reasonable and prudent measures described above and outlined in the reporting and monitoring requirements. These terms and conditions are non-discretionary.

1. The following terms and conditions implement reasonable and prudent measure 1:

    a. If a San Joaquin kit fox is found injured or killed as a result of the activities described in this biological opinion, FHWA or Caltrans must contact our office immediately so we can review the project activities to determine if additional protective measures are needed. Project activities may continue during this review period, provided that all protective measures proposed by Caltrans and the

terms and conditions of this biological opinion have been and continue to be implemented.

b. Prior to the completion of the first phase of the project, Caltrans must provide our office with a draft plan to monitor the wildlife undercrossings associated with the proposed project. Following our review, a final monitoring plan must be completed within one year.

c. Caltrans must implement the final monitoring plan during the project, to determine if their protective measures are effective in reducing San Joaquin kit fox mortality.

d. If more than 10 adult California red-legged frogs or 25 metamorphs are found injured or killed due to project activities in any calendar year, Caltrans must contact our office immediately so we can review the project activities to determine if additional protective measures are needed. Project activities may continue during this review period, provided that all protective measures proposed by FHWA and Caltrans and the terms and conditions of this biological opinion have been and continue to be implemented.

e. FHWA or Caltrans must immediately report any sighting of live California tiger salamanders within the action area to the VFWO.

f. Any live California tiger salamanders found within the construction footprint of the proposed project must be relocated out of harm's way.

g. If a California tiger salamander is found injured or killed, Caltrans must contact our office immediately (or the following day if found at night) so we can review the project activities to determine if additional protective measures are needed. Project activities may continue during this review period, provided that all protective measures proposed by FHWA and Caltrans and the terms and conditions of this biological opinion have been and continue to be implemented.

h. Caltrans must enforce a maximum speed limit of 20 miles per hour on unpaved roads within the action area of this project.

i. Caltrans must ensure that project related vehicles do not leak anti-freeze or other hazardous materials.

j. Caltrans must not place fences that act as barriers to movement of California red-legged frogs, within or along the boundary of the project site.

k. A qualified biologist, approved by the service, must be on-site: 1) when construction occurs on rainy nights; 2) when project activities would occur within

100 feet of aquatic California red-legged frog habitat; and 3) for 72 hours following the sighting of a San Joaquin kit fox in the action area. The biologist must be given the authority to stop any work that may result in the take of San Joaquin kit foxes, California red-legged frogs, or California tiger salamanders. If the biologist(s) exercises this authority, the Service must be notified by telephone and electronic mail within one (1) working day.

2. The following terms and conditions implement reasonable and prudent measure 2:

   a. At least 30 days prior to the onset of project activities, the project proponent must submit the name(s) and credentials of the biologist(s) who would conduct activities for the San Joaquin kit fox, California red-legged frog, and California tiger salamander, as specified in this biological opinion. Project activities must not begin until Caltrans has received our written approval of the biologist(s) they intend to use.

   b. Before initiating project activities, the Service-approved biologist must identify appropriate areas to relocate California red-legged frogs and California tiger salamanders found in the construction area. These areas must be near the potential capture site or another site approved by the Service, must support suitable vegetation (as appropriate for the species) and be free of exotic predatory species (e.g., bullfrogs).

   c. If captured, California red-legged frogs and California tiger salamanders must be placed in moist cloth bags or plastic buckets and kept shaded and moist until they are released at the new site. The relocation process must be implemented as quickly as possible.

3. The following term and condition implements reasonable and prudent measure 3:

   To avoid transferring disease or pathogens between aquatic habitats during the course of surveys and handling of California red-legged frogs and California tiger salamanders, the Service-approved biologist shall follow the Declining Amphibian Population Task Force's Code of Practice. A copy of this Code of Practice is enclosed. A bleach solution (0.5 to 1.0 cup of bleach to 1.0 gallon of water) may be substituted for the ethanol solution. Care must be taken so that all traces of the disinfectant are removed before entering the next aquatic habitat.

REPORTING REQUIREMENTS

FHWA or Caltrans must provide an annual written report to the Service by January 31, each year of the project. The report must discuss activities for the previous calendar year and include a table summarizing California red-legged frog, California tiger salamander, and San Joaquin kit fox sightings and any take that occurs. The report must document the number of

California red-legged frogs and California tiger salamanders, if any, relocated from the project area, the date and time of capture, specific location of capture, approximate size and age of individuals, and a description of relocation sites. The report must also include the number of California red-legged frogs and California tiger salamanders killed or injured, if any, and the date(s) such incidental take occurred. The report must document any observations of San Joaquin kit fox in the action area, the number of any San Joaquin kit foxes harassed, injured or killed, and the date(s) such incidental take occurred. The report must contain a discussion of the activities conducted, results of the wildlife undercrossing monitoring, any problems encountered in implementing terms and conditions, and any recommendations for improving the protective measures. This document will assist the Service and FHWA in evaluating future measures for the conservation of the California red-legged frog, California tiger salamander, and the San Joaquin kit fox.

DISPOSITION OF INJURED OR DEAD SPECIMENS

Upon locating a dead or injured California red-legged frog, California tiger salamander, or San Joaquin kit fox, you must notify the Service's Division of Law Enforcement in writing (370 Amapola Avenue, Suite 114, Torrance California 90501) and the Ventura Fish and Wildlife Office by telephone (805/644-1766) and in writing (2493 Portola Road, Suite B, Ventura, California 93003). The report must include the date, time, and location of the carcass, a photograph, cause of death, if known, and any other pertinent information.

Care must be taken in handling dead specimens to preserve biological material in the best possible state for later analysis. Should any injured California red-legged frog, California tiger salamander, or San Joaquin kit fox survive, the Service must be contacted regarding their final disposition. The remains of California red-legged frogs and California tiger salamanders must be placed with the California Academy of Sciences Herpetology Department (contact: Jens Vindum, Collections Manager, California Academy of Sciences Herpetology Department, Golden Gate Park, San Francisco, California 94118, telephone 415/750-7037); or Santa Barbara Natural History Museum (contact: Paul Collins, Santa Barbara Natural History Museum, Vertebrate Zoology Department, 2559 Puesta Del Sol, Santa Barbara, California 93105, telephone 805/682-4711 ext. 321).

Any San Joaquin kit fox found dead shall be provided to CDFG unless agreements have been made with CDFG to the contrary. Notification must be made to Bob Stafford, wildlife biologist, at (805) 528-8670.

CONSERVATION RECOMMENDATIONS

Section 7(a)(1) of the Act directs Federal agencies to use their authorities to further the purposes of the Act by carrying out conservation programs for the benefit of endangered and threatened species. Conservation recommendations are discretionary agency activities to minimize or avoid adverse effects of a proposed action on listed species or critical habitat, to help implement recovery plans, or to develop information. We recommend the following:

1. FHWA and Caltrans should fund and participate in a study of San Joaquin kit movements between the Salinas River Valley, Carrizo plain, and Antelope Plain-Blackwell's Corner.

2. The FHWA and Caltrans should involve the Service in long-range planning so its projects are designed and implemented in a manner that meets the conservation needs of the California red-legged frog, California tiger salamander, and San Joaquin kit fox.

3. The FHWA and Caltrans should ensure that material hauled to project sites for fill is free of weedy exotic species.

4. Caltrans should conduct surveys for California tiger salamanders in the action area of this biological opinion.

The Service requests notification of the implementation of any conservation recommendations so we may be kept informed of actions minimizing or avoiding adverse effects or benefiting listed species or their habitats.

REINITIATION NOTICE

This concludes formal consultation on the proposed construction of the State Route 46 Improvement Project, PM 32.2 to 56.3. As provided in 50 CFR §402.16, reinitiation of formal consultation is required where discretionary Federal agency involvement or control over the action has been retained (or is authorized by law) and if: (1) the amount or extent of incidental take is exceeded; (2) new information reveals effects of the agency action that may affect listed species or critical habitat in a manner or to an extent not considered in this opinion; (3) the agency action is subsequently modified in a manner that causes an effect to the listed species or critical habitat not considered in this opinion; or (4) a new species is listed or critical habitat designated that may be affected by the action. In instances where the amount or extent of incidental take is exceeded, any operations causing such take must cease pending reinitiation.

If you have any questions regarding this matter, please contact Steve Kirkland of my staff at (805) 644-1766, extension 267.

Sincerely,

Steve Henry
Assistant Field Supervisor
San Luis Obispo/Northern Santa Barbara

Enclosure

REFERENCES CITED

Anderson, P. R. 1968. The reproductive and developmental history of the California tiger salamander. Masters thesis, Department of Biology, Fresno State College, Fresno, California. 82pp.

Berry, W.H., J.H. Scrivner, T.P. O'Farrell, C.E. Harris, T.T. Kato, and P.M. McCue. 1987*a*. Sources and rates of mortality of the San Joaquin kit fox, Naval Petroleum Reserve #1, Kern County, CA, 1980-1986. Rep. No. EGG 10282-2154, EG&G Energy Measurements, Goleta, CA, 34 pp.

Berry, W.H., T.P. O'Farrell, T.T. Kato, and P.M. McCue. 1987*b*. Characteristics of dens used by radiocollared San Joaquin kit fox, *Vulpes macrotis mutica*, Naval Petroleum Reserve #1, Kern County, California. U.S. Dept. Energy Topical Rep. No. EGG 10282-2177, EG&G Energy Measurements, Goleta, CA, 32 pp.

Bishop, S. C. 1943. Handbook of salamanders. Comstock Publishing Co., Inc. Ithaca, New York. pp. 119-123.

Bulger, J., N.J. Scott, and R.B. Seymour. 2003. Terrestrial activity and conservation of adult California red-legged frogs (*Rana aurora draytonii*) in coastal forests and grasslands. Biological Conservation 110: 85-95.

California Department of Transportation. 2003a. Highway 46 Corridor Improvement Project Natural Environment Study in Northern San Luis Obispo County, East of Paso Robles, from Airport Road through the Cholame Valley 05-SLO-46-41.8/90.6 (Post Miles 32.2/56.3. San Luis Obispo, California.

_____. 2003b. Route 46 Corridor Improvement Project Section 404(b)(10 Analysis for determination of the Least Environmentally Damaging Practicable Alternative. San Luis Obispo, California.

_____. 2003c. Biological assessment for San Luis Obispo County Route 46 Kilopost 88.6 to 98.0 (Post miles 55.1 to 60.9). Fresno, California.

_____. 2005. Addendum to the Highway 46 Corridor Improvement Project Natural Environment Study in Northern San Luis Obispo County, East of Paso Robles, from Airport Road through the Cholame Valley 05-SLO-46-41.8/90.6 (Post Miles 32.2/56.3. San Luis Obispo, California.

Clevenger, A.P. and N. Waltho. 1999. Dry culvert use and design considerations for small- and medium-sized mammal movement across a major transportation corridor. Pages 263-178 *in* G. L. Evink, P. Garrett, and D. Zeigler (eds.). Proceedings of the third international conference on wildlife ecology and transportation. FL-ER-73-99, Florida Department of Transportation. Tallahassee, Florida.

County of San Luis Obispo, Department of Planning and Building. 2005. Request for Proposal PS# 883. Constraints Analysis and Market Study for the Shandon Community Plan Update. San Luis Obispo, California.

Cypher, B. L. 2000. Effects of roads on San Joaquin kit foxes: a review and synthesis of existing data. Endangered Species Recovery Program, California State University, Fresno, California.

Egoscue, H.J. 1956. Preliminary studies of the kit fox in Utah. J. Mammal. 37:351-357.

_____. 1962. Ecology and life history of the kit fox in Tooele County, Utah. Ecology 43:481-497.

_____. 1975. Population dynamics of the kit fox in western Utah. Bull. Southern California Acad. Sci. 74:122-127.

Forman, R. T. and L.E. Alexander. 1998. Roads and their major ecological effects. Annual review of Ecology and Systematics 29:207-231.

Forman, R.T. and R.D. Deblinger. 1998. The ecological road-effect zone for transportation planning, and a Massachusetts highway example. In *Proceedings of the International Conference on Wildlife ecology and transportation.* Florida Department of Transportation publication FL-ER-69-98. Talahassee, Florida.

Forman, R. T. 2003. Road Ecology. Island Press. Washington D.C.

Frankham, R., and K. Ralls. 1998. Inbreeding leads to extinction. Nature 241:441-442.

Frost, D. R., editor. 1985. Amphibian species of the world: a taxonomic and geographical reference. Allen Press, Inc. and Association of Systematics Collection, Lawrence, Kansas. pp. 553-558.

Gamradt, S. C., and L. B. Kats. 1996. Effect of introduced crayfish and mosquitofish on California newts. Conservation Biology 10(4): 1155-1162.

Gehlbach, F. R. 1967. *Ambystoma tigrinum*. Catalogue of American Amphibians and Reptiles 1:52.1-52.4.

Graf, M. 1993. Evaluation of mosquito abatement district's use of mosquitofish as biological mosquito control: case study - Sindicich Lagoon in Briones Regional Park. Unpublished manuscript. 22 pp.

Grinnell, J., and C. L. Camp. 1917. A distributional list of the amphibians and reptiles of California. University of California Publications in Zoology 17(10): 131, 138.

Grinnell, J., J.S. Dixon, and J.M. Linsdale. 1937. Fur-bearing mammals of California. Vol. 2. Univ. California Press, Berkeley.

Hall, E.R. 1946. Mammals of Nevada. Univ. California Press, Berkeley, 710 pp.

Hall, F.A. 1983. Status of the San Joaquin kit fox, *Vulpes macrotis mutica*, at the Bethany wind turbine generating site, Alameda County, California. Unpubl. Rep., California Dept. Fish and Game, Sacramento, 34 pp.

Irschick, D. J., and H. B. Shaffer. 1997. The polytypic species revisited: morphological differentiation among tiger salamanders (*Ambystoma tigrinum*) (Amphibia: Caudata). Herpetologica 53(1): 30-49.

Jennings, M.R., M.P. Hayes, and D.C. Holland. 1992. A petition to the U.S. Fish and Wildlife Service to place the California red-legged frog (Rana aurora draytonii) and the western pond turtle (Clemmys marmorata) on the list of endangered and threatened wildlife and plants.

Jennings, M. R., and M. P. Hayes. 1994. Amphibian and reptile species of special concern in California. Final report to California Dept. of Fish and Game. Pp. 12-16.

Jensen, C.C. 1972. San Joaquin kit fox distribution. U.S. Fish and Wildlife Service, Sacramento, CA, Unpubl. Rep., 18 pp.

Jones, T. R. 1993. Intraspecific genetic variation and cladogenesis in California tiger salamanders *Ambystoma tigrinum californiense* Gray). Unpublished manuscript. 49 pp.

Kit fox planning and action team. 2001. Draft conservation strategy for the San Joaquin kit fox in the Tracey triangle area, a companion document to the recovery plan for upland species of the San Joaquin Valley, California. Unpublished report.

Koopman, M.E., B.L. Cypher, and J.H. Scrivner. 2000. Dispersal patterns of San Joaquin kit foxes (Vulpes macrotis mutica). Journal of Mammalogy 81(1):213-222.

Knapp, D.K. 1978. Effects of agricultural development in Kern County, California, on the San Joaquin kit fox in 1977. California Department of Fish and Game. Non-Game Wildlife Investigations Final Report Project E-1-1, Nov V-1.21.

Kraus, F. 1988. An empirical evaluation of the use of the ontogeny polarization in phylogenetic inference. Systematic Zoology 37:106-141.

Lande, R. 1988. Genetics and Demography in Biological Conservation. Science 241:1455-1460.

Laughrin, L. 1970. San Joaquin kit fox: its distribution and abundance. California Dept. Fish and Game, Sacramento, Wildl. Manage. Branch, Admin. Rep. No. 70-2, 20 pp.

Loredo, I. And D. VanVuren. 1996. Reproductive ecology of a population of the California tiger salamander. Copeia 1996: 895-901.

Loredo, I., D. Van Vuren and M. L. Morrison. 1996. Habitat use and migration behavior of the California tiger salamander. Journal of Herpetology 30(2): 282-285.

McCue, P.M., T. Kato, M.L. Sauls, and T.P. O'Farrell. 1981. Inventory of San Joaquin kit fox on land proposed as phase II, Kesterson Reservoir, Merced County, California. Rep. No. EGG 1183-2426, EG&G Energy Measurements, Goleta, CA, 16 pp.

McElwee, L.R. 2005. A modeling approach to wildlife corridor creation: an assessment using ARCGIS and the San Joaquin kit fox in San Luis Obispo County, California. Master thesis, California Polytechnic State University. San Luis Obispo, California.

Morey, S. R. and D. A. Guinn. 1992. Activity patterns, food habits, and changing abundance in a community of vernal pool amphibians. pp. 149-157 in: Endangered and Sensitive Species of the San Joaquin Valley, California. D.F. Williams, S. Byrne, T.A. Rado (Editors). California Energy Commission, Sacramento, CA. 1992.

Morrell, S.H. 1972. Life History of the San Joaquin kit fox. California Fish and Game 58:162-17.

_____. 1975. San Joaquin kit fox distribution and abundance in 1975. California Dept. Fish and Game, Sacramento, Wildl. Manage. Branch, Admin. Rep. No. 75-3, 28 pp.

O'Farrell, T.P., and L. Gilbertson. 1979. Ecology of the desert kit fox, *Vulpes macrotis arsipus*, in the Mojave Desert of Southern California. Bull. South. California Acad. Sci. 85:1-15.

O'Farrell, T.P., T.T. Kato, P.M. McCue, and M.L. Sauls. 1980. Inventory of San Joaquin kit fox on USBLM lands in southern and southwestern San Joaquin Valley--final report. Rep. No. EGG 1183-2400, EG&G Energy Measurements, Goleta, CA, 74 pp. + Appendices.

Orloff, S.G., F. Hall, and L. Spiegel. 1986. Distribution and habitat requirements of the San Joaquin kit fox in the northern extreme of their range. Trans. West. Sect. Wildl. Soc. 22:60-70.

Padgett-Flohr, G.E. and J.E. Longcore. Amybystoma Californiense (California tiger salamander) Fungal Infection. Natural History Notes. Herpetological Review 36(1).

Petranka, J. W. 1998. Salamanders of the United States and Canada. Smithsonian Institution Press.

Ralls, K., and P.J. White. 1995. Predation on endangered San Joaquin kit foxes by larger canids. J. Mammal. 276:723-729.

Rathbun, G.B., and J. Schneider. 2001. Translocation of California red-legged frogs (*Rana aurora draytonii*). Wildlife Society Bulletin 29(4):1300-1403.

Saccheri, I., M. Kuussaari, M. Kankare, P. Vikman, W. Fortelius, and I. Hanski. 1998. Inbreeding and extinction in a butterfly population. Nature 392:491-494.

Shaffer, H. B. and S. E. Stanley. 1991. Final report to California Department of Fish and Game; California tiger salamander surveys, 1991. Unpublished report. 11 pp. plus figure, tables and appendix.

Shaffer, H. B., R. N. Fisher, and S. E. Stanley. 1993. Status report: the California tiger salamander (*Ambystoma californiense*). Final report for the California Department of Fish and Game. 36 pp. plus figures and tables.

Shaffer, H. B. and M. L. McKnight. 1996. The polytypic species revisited: genetic differentiation and molecular phylogenetics of the tiger salamander *Ambystoma tigrinum* (Amphibia: Caudata) complex. Evolution, 50(1): 417-433.

Shaffer, H.B.,G. B. Pauly, J. C. Oliver, and P.C. Trenham. 2004. The molecular phylogenetics of endangerment: cryptic variation and historical phylogeography of the California tiger salamander, Ambystoma californiense. Molecular Ecology, 13: 3033-3049.

Smallwood, S. 1999. Field Survey Form for Vulpes macrotis mutica. Occurrence No. 194. California Natural Diversity Database.

Spiegel, L.K., and M. Bradbury. 1992. Home range characteristics of the San Joaquin kit fox in western Kern County, California. Trans. West. Sect. Wildl. Soc. 28:83-92.

_____. 1996. Studies of the San Joaquin kit fox in undeveloped and oil-developed areas. California Energy Commission Pub. No. P700-96-003. California Energy Commission Publication Unit, Sacramento, California.

Stafford, R. 2001. Field Survey Form for Vulpes macrotis mutica. Occurrence No. 53. California Natural Diversity Database.

Standley, W.G. 1989. Kit fox researcher. Letter to Tom O'Farrell, kit fox researcher, regarding documentation of San Joaquin kit fox movement from Camp Roberts to the Carrizo Plain.

Standley, W.G., W.H. Berry, T.P. O'Farrell, and T.T. Kato. 1992. Mortality of San Joaquin kit fox (Vulpes velox macrotis) at Camp Roberts Army National Guard training site, California. United States Department of Energy Topical Report Number EGG 10617-2157, EG and G/EM Santa Barbara Operations, National Technical Information Service, Springfield Virginia.

Stebbins, R.C. 1985. A field guide to western reptiles and amphibians. Houghton Mifflin Company, Boston, Massachusetts.

Stebbins, R. C. 1962. Amphibians of the western United States. Ambystomids. Pp. 29-49 and plates.

Storer, T.I. 1925. A synopsis of the amphibian of California. University of California publications in zoology 27:1-342.

Trenham P. C., H. B. Shaffer, W. D. Koening and M. R. Stromberg, 2000. Life history and demorgraphic variation in the California tiger salamander. Copeia 2000(2):365-377.

Trenham, P.C., W.D. Koenig, and H.B. Shaffer. 2001. Spatially autocorrelated demography and interpond dispersal in the California tiger salamander, *Ambystoma californiense. Ecology,* 82: 3519-3530.

Trenham, P.C. 2001. Terrestrial Habitat Use by Adult California tiger salamanders. Journal of Herpetology 35: 343-346.

Trenham, P.C., and H.B. Shaffer. 2005. Amphibian upland habitat use and its consequences for population viability. Ecological Applications 15:1158–1168.

Trombulak, S.C., and C.A. Frissell. 2000. The ecological effects of roads on terrestrial and aquatic communities: a review. Conservation Biology 14:18-30.

Twitty, V. C. 1941. Data on the life history of *Ambystoma tigrinum californiense* Gray. Copeia 1941(1): 1-4.

U.S. Fish and Wildlife Service. 1983. San Joaquin kit fox recovery plan. U.S. Fish and Wildlife Service, Portland, OR, 84 pp.

_____. 1997. Standard recommendations for protection of the San Joaquin kit fox prior to or during ground disturbance. Sacramento, California.

_____. 1998. Final Recovery Plan for upland species of the San Joaquin Valley, California. Portland, Oregon.

_____. 2002. Recovery Plan for the California red-legged frog (Rana aurora draytonii). Portland, Oregon. viii + 173 pp.

_____. 2003. Biological opinion for the proposed State Route 46 4-lane widening project from the San Luis Obispo County/Kern County line to post mile 37.5 in Kern County, California. Sacramento, California.

_____. 2005. Biological opinion for the Highway 46 improvement project, postmile 55.1-60.9, San Luis Obispo County, California (document # P43727) (1-8-03-F-17).

White, P.J., and K. Ralls. 1993. Reproduction and spacing patterns of kit foxes relative to changing prey availability. Journal of Wildlife Management 57:861-867.

White, P.J., and R.A. Garrott. 1997. Factors regulating kit fox populations. Canadian Journal of Zoology 75:1982-1988.

White, P.J., and R.A. Garrott. 1999. Population dynamics of kit foxes. Can. J. Zool. 77:486-493.

White, P.J., W.H. Berry, J.J. Eliason, and M.T. Hanson. 2000. Catastrophic decrease in an isolated population of kit foxes. The Southwest Naturalist 45(2):204-211.

Zoellick, B.W., T.P. O'Farrell, P.M. McCue, C.E. Harris, and T.T. Kato. 1987*a*. Reproduction of the San Joaquin kit fox on Naval Petroleum Reserve #1, Elk Hills, California, 1980-1985. Rep. No. EGG 10282-2144, EG&G Energy Measurements, Goleta, CA, 42 pp.

Zoellick, B.W., T.P. O'Farrell, and T.T. Kato. 1987*b*. Movements and home range of San Joaquin kit foxes on the Naval Petroleum Reserves, Kern County, California. Rep. No. EGG 10282-2184, EG&G Energy Measurements, Goleta, CA, 38 pp.

IN LITT. REFERENCE

Sweet, S. 1998. Maximum known dispersal distance of a California tiger salamander. Professor of Vertebrate systematics and evolutionary morphology; herpetology. University of California, Santa Barbara.

PERSONAL COMMUNICATIONS

Fitzpatrick, B. 2004. Electronic Mail. Tiger Salamander Habitat Use. Dated January 8. Population Biology Graduate Group. University of California, Davis, California.

Cypher, B. 2005a. Electronic mail. San Joaquin kit fox core populations. Dated August 15, 2005. Research ecologist. Endangered Species Recovery Program, University of California, Stanisláus.

Cypher, B. 2005b. Electronic mail. Age and sex of a road-killed San Joaquin kit fox. Dated February 11, 2005. Research ecologist. Endangered Species Recovery Program, University of California, Stanislaus.

Hacker, D. 2005. Electronic mail. Response to questions regarding the Natural Environment Study for the SR 46 Improvement Project (Caltrans 2003). Dated July 27, 2005. Associate Environmental Planner: Natural Resources, Caltrans District 5. San Luis Obispo, California.

Luchetta, J. 2005. State Route 46 project meeting at the Ventura Fish and Wildlife Office on July 27, 2005. Senior Environmental Planner, Caltrans District 5. San Luis Obispo, California.

Moonjian, J. 2005. Electronic mail. Results of 2005 San Joaquin kit fox surveys. April 26, 2005. Graduate Student. California Polytechnic State University, San Luis Obispo, California.

Scott, N.J. 2005. Electronic mail. California red-legged frog researcher. Information regarding the dispersal of California red-legged frogs.

Stafford, R. 2005. Electronic mail. Information regarding San Joaquin kit fox on the Carrizo Plain, San Luis Obispo County, California. Dated February 10, 2005. California Department of Fish and Game biologist. Los Osos, California.

Root, R. 2005a. Conversation with Steve Kirkland regarding documented movements of San Joaquin kit foxes between Camp Roberts, the San Juan Valley, and Carrizo Plain, California. August 2005. U.S. Fish and Wildlife Service biologist, Ventura, California.

_____. 2005b. Electronic mail. Status of the San Joaquin kit fox population in San Benito and Monterey Counties, California. Dated August 17, 2005. U.S. Fish and Wildlife Service biologist, Ventura, California.

FOR CONTRACT NO.: 05-330754

INFORMATION HANDOUT

PERMITS/AGREEMENTS

5. California Department of Fish and Game Incidental Take Permit (ITP No. 2081-2007-020-04)

ROUTE: 05-SLO-46-PM40.0

California Department of Fish and Game
Central Region
1234 East Shaw Avenue
Fresno, California 93710

California Endangered Species Act
Incidental Take Permit No. 2081-2007-020-04

CALIFORNIA DEPARTMENT OF TRANSPORTATION
ROUTE 46 CORRIDOR IMPROVEMENT PROJECT
SAN LUIS OBISPO COUNTY

Authority: This California Endangered Species Act (CESA) Incidental Take Permit (ITP) is issued by the Department of Fish and Game (DFG) pursuant to Fish and Game Code sections 2081(b) and 2081(c), and California Code of Regulations, title 14, subdivision 3, chapter 6, article 1, commencing with section 783. CESA prohibits the take[1] of any species of wildlife designated as an endangered, threatened, or candidate species[2] by the Fish and Game Commission. DFG, however, may authorize the take of such species by permit if the conditions set forth in Fish and Game Code sections 2081(b) and 2081(c) are met. (See also Cal. Code Regs., tit. 14, § 783.4.)

Permittee:	**California Department of Transportation (Caltrans), District 5**
Name and title of principal officer:	**Mr. Chuck Cesena, Branch Chief, Central Coast Environmental Management**
Contact person:	**Ms. Cecilia Boudreau, Environmental Planner, (805) 549-3376 Central Coast Environmental Branch**
Mailing address:	**50 Higuera Street San Luis Obispo, California 93401**

Effective Date and Expiration Date of the ITP:
This ITP shall be executed in duplicate original form and shall become effective once a duplicate original is acknowledged by signature of the Permittee on the last page of the ITP and returned to DFG's Habitat Conservation Branch at the address listed in the Notices section of this ITP. Unless renewed by DFG, this ITP's authorization to take the Covered Species shall expire on **December 31, 2020.**

---

[1]Pursuant to Fish and Game Code section 86, "'Take' means hunt, pursue, catch, capture, or kill, or attempt to hunt, pursue, catch, capture or kill."

[2]"Candidate species" are species of wildlife that have not yet been placed on the list of endangered species or the list of threatened species, but which are under formal consideration for listing pursuant to Fish and Game Code section 2074.2.

Project Location:
The project site is located along State Route (SR) 46 beginning on the east side of Huer Huero Creek Bridge within the City of Paso Robles and ending on the east side of Cholame Valley in the County of San Luis Obispo. (See Figure 1.)

Project Description:
The proposed project (Project) will widen SR 46 between Airport Road and the Cholame Valley from two lanes to four lanes by constructing two new eastbound lanes to the south of the current SR 46, which will become the two westbound lanes. There will be a 61-foot wide median, except between post mile (PM) 32.2 and PM 34.4 where it will be 46.3 feet wide to minimize environmental impacts. The shoulders will be widened and left-turn lanes added at all public road intersections, which will be constructed to Caltrans' full expressway standards. No median barriers will be constructed, and the existing k-rail west of Jack Ranch will be removed. The Project will be constructed in five phases. (See Table 1 below.) The Project will result in the permanent loss of 333.5 acres and temporary impacts to 280.1 acres of San Joaquin kit fox (*Vulpes macrotis mutica*) habitat. These activities and impacts are likely to result in the incidental take of individual kit fox, a species designated as threatened under CESA. (Cal. Code Regs., tit. 14, § 670.5, subd. (b)(6)(E).).

Table 1:

Phase	Approximate Location	Schedule
1 - Union	Airport Road (PM 32.2) to Geneseo Road (PM 37.2)	April 2008
2 - Whitley	Geneseo Road through Whitley Gardens (PM 41.2)	July 2010
3 - Shandon	East of Whitley Gardens through Shandon Rest Area (PM 50.2)	2013 (no funding yet)
4 - Cholame	East of Shandon Rest Area to Jack Ranch Café (PM 54.8)	2016 (no funding yet)
5 - Wye	Jack Ranch Café through Cholame Valley (PM 56.3)	2018 (no funding yet)

Covered Species Subject to the Take Authorization Provided by this ITP:

This ITP covers the following species:

Name	**CESA Status**[3]
San Joaquin kit fox (*Vulpes macrotis mutica*)	Threatened

This species, and only this species, is hereinafter referred to as the "Covered Species."

---

[3]Under CESA, a species may be on the list of endangered species, the list of threatened species, or the list of candidate species. All other species are "unlisted."

Figure 1. Project Location

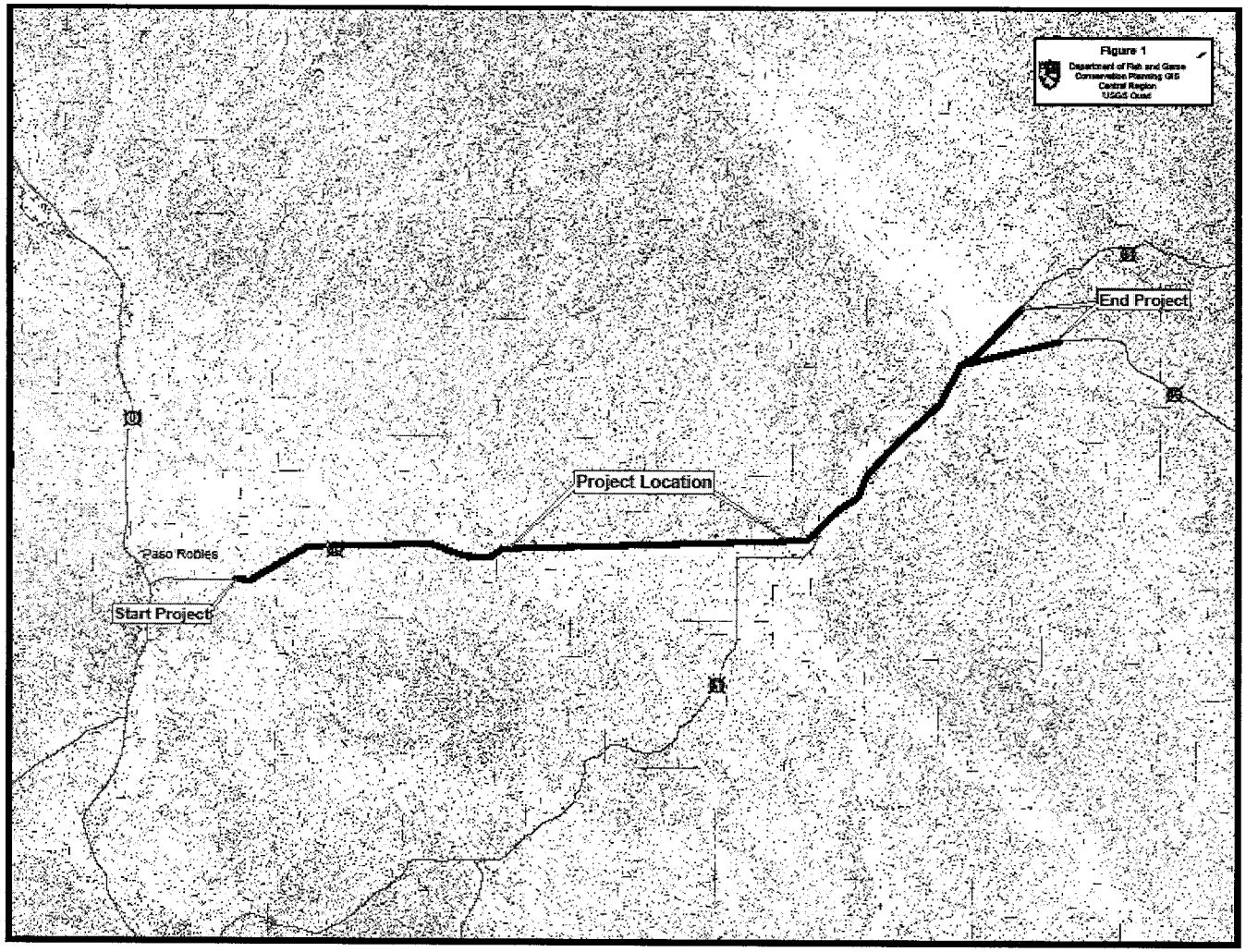

Impacts to Covered Species:
The Project will result in permanent impacts to 333.5 acres and temporary impacts to 280.1 acres of Covered Species habitat. (See Table 2) Incidental take of individuals of the Covered Species may occur as a result of mortality due to development activities, Project-related traffic on and off the Project site, and direct loss of habitat caused by the Project. Impacts of the taking on the Covered Species also includes increased incidence of vehicle strikes after construction, temporal losses of habitat, increased habitat fragmentation and edge effects, and the Project's incremental contribution to cumulative impacts on the Covered Species (indirect impacts). Impacts of the taking also include temporary impacts to the Covered Species associated with Project-related temporary ground disturbance within the construction boundary, including storage and staging areas and temporary roads, which may also cause additional incidental take of Covered Species.

Table 2:

San Joaquin kit fox habitat	Permanent Impacts			Temporary Impacts			Total
	# of acres Impacted	Mitigation Ratio	Compensation (acres)	# of acres Impacted	Mitigation Ratio	Compensation (acres)	Compensation (acres)
Airport Road to Jardin Road	23.03	3:1	69.09	25.48	1/3:1	8.49	77.58
Jardin Road to Post Mile 37.6	33.66	2:1	67.32	30.26	1/3:1	10.09	77.41
Total for Phase 1	56.69		136.41	55.74		18.58	154.99
Phase 2 starting at PM 37.6	50.36	4:1	201.44	36.50	1/3:1	12.17	213.61
Phase 3	91.46	4:1	365.84	108.20	1/3:1	36.07	401.91
Phase 4	68.59	4:1	274.36	35.04	1/3:1	11.68	286.04
Phase 5	66.40	4:1	265.60	44.62	1/3:1	14.87	280.47
Total for all Phases	**333.50**		**1,243.65**	**280.10**		**93.37**	**1,337.02**

Other Species Not Subject to the Take Authorization Provided by this ITP:

Fully Protected Species:
This ITP does not authorize the take of any fully protected species. (See Fish & G. Code, §§ 3511, 4700, 5050, 5515.) DFG believes Caltrans can implement the Project as described in this ITP in a manner consistent with the Fish and Game Code provisions governing fully protected species. DFG's determination regarding Project consistency with Fish and Game Code provisions governing fully protected species is based, in part, on the Permittee's commitment independent of this ITP to implement and adhere to the following general avoidance and minimization measures during Project implementation related to blunt-nosed

leopard lizard (*Crotaphytus wislizenii silus*), a fully protected and CESA designated endangered species (*id.*, § 5050, subd. (b)(1); Cal. Code Regs., tit. 14, § 670.5, subd. (a)(4)(B)):

- Permittee commits to perform a protocol-level survey within the construction boundary for each phase of the Project as designated above in Table 2. DFG's Approved Survey Methodology for blunt-nosed leopard lizard is included with this ITP as Attachment 1.

- If the results of any protocol-level survey detect the presence of blunt-nosed leopard lizard within the construction boundary of any phase of the Project, Permittee commits to notify and consult with DFG prior to any activity that could result in the take of blunt-nosed leopard lizard in order to develop and implement measures acceptable to DFG that will avoid take of individuals of the species.

Giant Kangaroo Rat:
This ITP does not authorize take of giant kangaroo rat (*Dipodomys ingens*), a species designated as endangered under CESA. (Cal. Code Regs., tit. 14, § 670.5, subd. (a)(6)(C).) Phase 4 of the Project (between PM 50.2 and PM 54.8) is the only area of the Project site that contains potential habitat for giant kangaroo rats. No giant kangaroo rats were found within the Project area during prior biological surveys. Implementation of the Project is not expected to result in the take of giant kangaroo rat as a result.

DFG and the Permittee acknowledge that, due to the extended time line for the Project, with construction occurring in multiple separate phases, there is a possibility giant kangaroo rat could establish new populations in the Project area during and prior to completion of Project construction. Because of this possibility, the Permittee has committed to take the following actions to avoid unauthorized incidental take of giant kangaroo rat during Phase 4 of the Project:

- Permittee commits to conduct a survey for giant kangaroo rat a maximum of 30 days prior to initiating ground- or vegetation-disturbing activities in the Cholame Valley between PM 50.2 and PM 54.8. These surveys shall be conducted by a biologist, approved by DFG, with knowledge of and experience in the biology and natural history of the giant kangaroo rat. The biologist approved by DFG to conduct the survey shall hold or acquire prior to the survey a scientific collecting permit from DFG for giant kangaroo rat.

- Permittee commits to immediately notify DFG if the survey conducted by the approved biologist prior to any ground- or vegetation- disturbing activities associated with Phase 4 of the Project identifies any potential signs of giant kangaroo rat, including burrows, scat, or tail drag marks.

Incidental Take Authorization of Covered Species:
This ITP authorizes incidental take of the Covered Species and only the Covered Species. With respect to incidental take of the Covered Species, DFG authorizes the Permittee, its employees, contractors, and agents to take the Covered Species incidentally in carrying out the Project, subject to the limitations described in this section and the Conditions of Approval identified below. This ITP does not authorize: take of Covered Species from activities outside the scope of the Project as described above, take of Covered Species resulting from violation of this ITP, or intentional take of Covered Species except for capture and relocation of Covered Species as authorized by this ITP. In addition, as set forth above, this ITP does not authorize take of any species designated as fully protected under the Fish and Game Code or giant kangaroo rat.

Conditions of Approval:
Unless specified otherwise, the following measures shall pertain to all ground- or vegetation-disturbing activities within the Project construction boundaries, including areas used for ingress and egress routes during construction. DFG's issuance of this ITP and Permittee's authorization to take the Covered Species are subject to Permittee's compliance with and implementation of the following conditions of approval:

1. Permittee shall comply with all applicable State, federal, and local laws in existence on the effective date of this ITP or adopted thereafter.

2. Permittee shall implement and adhere to the mitigation measures related to the Covered Species in the Biological Resources section of the Environmental Assessment/Final Environmental Impact Report (SCH Number: 2000011033) adopted by the Permittee as lead agency for the Project under the California Environmental Quality Act (CEQA) on May 10, 2006. Permittee shall also implement and adhere to all conservation measures, terms and conditions related to the Covered Species in the December 2005 Biological Opinion, Biological Opinion for State Route 46 Corridor Improvement Project"" (Number 1-8-03-F59) issued to the Permittee for the Project by the United States Fish and Wildlife Service (USFWS).

3. Permittee shall fully implement and adhere to the conditions of this ITP within the time frames set forth below and as set forth in the Mitigation Monitoring and Reporting Program (MMRP), which is included as Attachment 2 to this ITP.

4. **General Provisions:**

   4.1 Before initiating ground- or vegetation-disturbing activities, Permittee shall designate a representative (Designated Representative) responsible for communications with DFG and for overseeing compliance with this ITP. The Permittee shall notify DFG in writing prior to commencement of ground- or vegetation-disturbing activities of the

Designated Representative's name, business address and contact information, and shall notify DFG in writing if a substitute Designated Representative is selected or identified at any time during the term of this ITP.

4.2 At least 30 days before initiating ground- or vegetation-disturbing activities, Permittee shall submit to DFG in writing the name, qualifications, business address, and contact information for a biological monitor (Designated Biologist). The Designated Biologist shall be knowledgeable and experienced in the biology and natural history of the Covered Species. The Designated Biologist will be responsible for monitoring construction and/or ground- or vegetation-disturbing activities in areas of Covered Species' habitat to help minimize or avoid the incidental take of individual Covered Species and to minimize disturbance of Covered Species' habitat. Permittee shall obtain DFG approval of the Designated Biologist prior to the commencement of Project-related activities that may result in the incidental take of the Covered Species.

4.3 To ensure compliance with the Conditions of Approval of this ITP, the Designated Biologist shall have authority to immediately stop any activity that is not in compliance with this ITP and/or to order any reasonable measure to avoid the take of an individual of the Covered Species or any fully protected species. Neither the Authorized Biologist(s) nor DFG shall be liable for any costs incurred in complying with the management measures, including cease-work orders.

4.4 Permittee shall conduct an education program for all persons employed or otherwise working on the Project site prior to performing any work on-site. Instruction shall consist of a presentation by the Designated Biologist that includes a discussion of the biology and general behavior of the Covered Species, information about the distribution and habitat needs of the Covered Species, sensitivity of the Covered Species to human activities, its status under CESA including legal protection, recovery efforts, penalties for violations, and Project-specific protective management measures provided in this ITP. Interpretation shall be provided for non-English speaking workers, and the same instruction shall be provided for any new workers prior to on-site Project activity. Copies of this ITP shall be maintained at the worksite. Permittee shall prepare and distribute wallet-sized cards or a fact sheet handout containing this information for workers to carry on-site. Upon completion of the program, employees shall sign an affidavit stating they attended the program and understand all protection measures. These forms shall be filed at the worksite offices and be available to DFG upon request.

4.5 Permittee shall initiate a trash abatement program during pre-construction phases of the Project and continue the program throughout the duration of the Project. Trash and food items shall be contained in closed (raven-proof) containers and removed regularly (at least once a week) to avoid attracting opportunistic predators such as ravens, coyotes, and feral dogs.

4.6 Permittee shall implement dust control measures during Project activities to facilitate visibility for monitoring of the Covered Species by the Designated Biologist.

4.7 Permittee shall prohibit firearms and domestic dogs from the Project site and site access routes during construction and development of the Project, except those in the possession of authorized security personnel or local, State, or Federal law enforcement officials.

4.8 Permittee shall clearly delineate property boundaries of the Project site with fencing, stakes, or flags and shall similarly delineate the limits of construction areas.

4.9 Permittee shall clearly delineate habitat of the Covered Species on the Project site with posted signs, posting stakes, flags, and/or rope or cord, and place Environmentally Sensitive Area (ESA) fencing as necessary to minimize disturbance of Covered Species' habitat.

4.10 Project-related personnel shall access the Project site during construction and development activities using existing routes and shall not cross Covered Species' habitat outside of and in route to the Project site. Project-related vehicle traffic shall be restricted to established roads, staging and parking areas. Vehicle speeds shall not exceed 20 miles per hour, except when traveling on existing highway, in order to avoid Covered Species on or traversing the roads. If the Permittee determines construction of off-site routes for travel are necessary, Permittee shall contact DFG prior to carrying out any such an activity. DFG may require an amendment to this ITP if additional take of Covered Species may result from Project modification.

4.11 Permittee shall confine all Project-related parking, storage areas, laydown sites, equipment storage, and any other surface-disturbing activities to the Project site using, to the extent possible, previously disturbed areas. Additionally, Permittee shall not use or cross Covered Species' habitat outside of the marked Project boundaries unless specifically provided for in this ITP.

4.12 Permittee shall immediately stop/repair any fuel or hazardous waste leaks or spills on the Project site during construction and development activities and immediately clean up such spills at the time of occurrence. Permittee shall exclude the storage and handling of hazardous materials from the construction zone and shall properly contain and dispose of any unused or leftover hazardous products off-site.

4.13 Permittee shall provide DFG staff with reasonable access to the Project site and mitigation lands under Permittee control, and shall otherwise fully cooperate with DFG efforts to verify compliance with or effectiveness of mitigation measures set forth in the ITP. Neither the Designated Biologist nor DFG shall be liable for any costs incurred in complying with the Conditions of Approval, including cease-work orders issued by DFG.

4.14 Upon completion of Project construction, Permittee shall remove from the Project site and properly dispose of all construction refuse, including, but not limited to, broken equipment parts, wrapping material, cords, cables, wire, rope, strapping, twine, buckets, metal or plastic containers, and boxes.

4.15 Notwithstanding any expiration date on the take authorization provided by this ITP, Permittee's obligations under this ITP do not end until DFG accepts as complete the Permittee's Final Mitigation Report required by Condition 5.9 of this ITP.

5. Notification, Reporting and Monitoring:

5.1 Permittee shall provide DFG with written detailed construction plans, including engineering drawings, a minimum of 30 days prior to ground- or vegetation-disturbing activities authorized by this ITP. These plans as provided to DFG by the Permittee shall include the protection and restoration features and techniques made part of the Permittee's construction contract for the Project, including the features and techniques and any other modifications to the Project made since the Permittee submitted its application to DFG for this ITP.

5.2 Permittee shall notify DFG 14 calendar days before initiating ground- or vegetation-disturbing activities for each phase of the Project and document compliance with all pre-Project Conditions of Approval before initiating ground- or vegetation-disturbing activities.

5.3 Permittee shall immediately notify DFG in writing if it determines that it is not in compliance with any Conditions of Approval of this ITP, including but not limited to any actual or anticipated failure to implement mitigation measures within the time periods indicated in this ITP and MMRP. Permittee shall report any non-compliance with the ITP during the construction phase of the Project to DFG within 24 hours.

5.4 Monthly Report: The Designated Biologist shall be on-site daily while construction and/or surface-disturbing activities are taking place to minimize take of the Covered Species; to ensure compliance with all mitigation and avoidance measures; to check all exclusion zones; and to ensure that signs, stakes, and fencing are intact, and that human activities are restricted to outside of these protective zones. Weekly compliance inspections shall be conducted after clearing, grubbing, and grading are completed. These inspections shall be compiled into Monthly Compliance Reports along with a copy of the MMRP table with notes showing the current implementation status of each mitigation measure. Monthly Compliance Reports shall be submitted to DFG's Regional Office at the address listed in the Notices section of this ITP or via e-mail to DFG's Regional Representative. At the time of this ITP's approval, the DFG Regional Representative is Laura Peterson-Diaz (e-mail address lpdiaz@dfg.ca.gov). DFG may

at any time increase the timing and number of compliance inspections and reports required under this provision depending upon the results of previous compliance inspections (see Condition 5.5).

5.5 All observations of Covered Species and their sign, oversight activities, verifications, compliance inspections, surveys, monitoring, and records required by this ITP shall be reported in writing to DFG by the Designated Representative or Designated Biologist. Permittee shall submit reports of these activities to DFG in the next Monthly Compliance Report.

5.6 All Covered Species sightings confirmed by the Designated Biologist shall include the following documented information: the date, time, and location of each occurrence using GPS technology, the name of the party that actually identified the animal, circumstances of the incident, the general condition and health of each individual, any diagnostic markings, sex, age (juvenile or adult), and actions undertaken and habitat description. The Permittee shall submit this information to the California Natural Diversity Database (CNDDB).

5.7 Annual Report: Permittee shall provide DFG with an Annual Status Report (ASR) no later than January 31 of every year beginning with the issuance of the ITP and continuing until DFG accepts the Final Mitigation Report identified below. Each ASR shall include, at a minimum: 1) a general description of the status of the Project site and construction activities, including actual or projected completion dates, if known; 2) a copy of the table in the MMRP with notes showing the current implementation status of each mitigation measure; 3) a copy of the Monthly Compliance Reports from the previous year; and 4) a description of any site-specific avoidance and minimization measures that were employed and an assessment of the effectiveness of each completed or partially completed mitigation measure in minimizing and compensating for Project impacts.

5.8 Restoration of Project lands where temporary impacts occur shall be monitored and the status of the restoration included in the Annual Reports beginning after completion of Phase I of the Project. Restoration of all areas subject to temporary ground- or vegetation disturbance shall be recontoured, as necessary, covered with stockpiled top-soil, and seeded with native species. Monitoring for 2 years post-construction of each Phase shall insure that noxious weeds do not become dominant in the restored area and that native species found in the vicinity are successfully reintroduced. If the temporary impact lands have not returned to pre-Project conditions two years after completion of each Phase, additional mitigation and an amendment to this ITP might be required.

5.9 Final Mitigation Report: No later than 60 days after completion of the Project, including completion of all mitigation measures, Permittee shall provide DFG with a Final

Mitigation Report. The Final Mitigation Report shall be prepared by the Designated Biologist and shall include, at a minimum: 1) a copy of the table in the MMRP with notes showing when each of the mitigation measures was implemented; 2) all available information about Project-related incidental take of the Covered Species; 3) information about other Project impacts on the Covered Species; 4) construction dates; 5) an assessment of the effectiveness of the ITP's Conditions of Approval in minimizing and compensating for Project impacts; 6) recommendations on how mitigation measures might be changed to more effectively minimize and mitigate the impacts of future projects on the Covered Species; and 7) any other pertinent information, including the level of take of the Covered Species associated with the Project.

5.10 If a Covered Species is killed by a Project-related activity during construction of the Project or if a Covered Species is otherwise found dead, the Designated Biologist shall be immediately notified and initial notification shall be made to the Sacramento Office of the USFWS at (916) 414-6620, and DFG by calling the DFG Regional Office at (559) 243-4017. The initial notification to the USFWS and DFG shall include information regarding the location, species, number of animals injured or killed, and the DFG ITP Number. Following initial notification, Permittee shall send DFG a written report within 2 calendar days. The report shall include the date and time of the finding or incident, location of the carcass, and if possible provide a photograph, explanation as to cause of death, and any other pertinent information. The Designated Biologist shall collect the carcass, place it in plastic, and keep it on ice or in a freezer until a DFG representative can either collect the specimen or issue alternative instructions.

6. Take Minimization Measures:

Take avoidance of Covered Species is the first priority of this ITP. Relocation of Covered Species discovered within the work area prior to ground- or vegetation-disturbing activities, as well as during Project construction, is the second priority of this ITP. Permittee shall implement and adhere to the following conditions to avoid or minimize take of Covered Species.

6.1 Workers shall inspect for Covered Species under vehicles and equipment before vehicles and equipment are moved. If a Covered Species is present, the worker shall wait for the Covered Species to move on its own to a safe location.

6.2 If a Covered Species is injured as a result of Project-related activities, it shall be immediately taken to a DFG-approved wildlife rehabilitation or veterinary facility. The Permittee shall identify the facility prior to the start of ground- or vegetation-disturbing activities. Permittee shall bear any costs associated with the care or treatment of such injured Covered Species. Permittee shall notify the USFWS and DFG immediately unless the incident occurs outside of normal business hours. In that event the USFWS and DFG shall be notified no later than noon on the next business day. Notification to DFG shall be via telephone or e-mail, followed by a written incident report. Notification

shall include the date, time, location, and circumstances of the incident and the name of the facility where the animal was taken.

6.3 The Designated Biologist shall perform a pre-construction survey for Covered Species no more then 30 days prior to ground- or vegetation-disturbing activities for each Phase of the Project. Surveys shall cover the proposed construction right-of-way (ROW) with a 200-foot buffer for all areas along the Project length with habitat to support Covered Species. A report documenting the results of the pre-construction surveys shall be submitted to DFG within 30 days after performing any such survey.

6.4 If a potential Covered Species den (one that shows evidence of current use or was used in the past) is discovered or a Covered Species is found in an "atypical" den (e.g., a pipe or culvert), a 50-foot buffer shall be established using flagging. If a known Covered Species den is discovered, a buffer of at least 100 feet shall be established using fencing. If a natal den (den in which Covered Species young are reared) is discovered, a buffer of at least 200 feet shall be established using fencing. Buffer zones shall have restricted entry. Permittee shall notify the USFWS and DFG's Regional Representative immediately via telephone or email if any Covered Species dens, natal dens or atypical dens are discovered.

6.5 For dens found within the portion of the Project area to be disturbed, natal dens shall not be excavated until the pups and adults have vacated and then only after consultation with the USFWS and DFG. If, after 4 consecutive days of monitoring with tracking medium or infrared camera the Designated Biologist has determined that a Covered Species is not currently present, known dens may be destroyed. Potential dens (any hole 3 inches or larger) may be excavated without monitoring if a take permit has been obtained from the USFWS, but if the process reveals evidence of use inside then destruction shall cease and the USFWS and DFG shall be notified immediately.

6.6 Destruction of Covered Species dens shall be accomplished by careful excavation until it is certain no Covered Species are inside. The den should be fully excavated, filled with dirt and compacted to ensure that Covered Species cannot reenter or use the den during the construction period. If at any point during excavation a Covered Species is discovered inside the den, excavation shall cease immediately and monitoring of the den as described above shall be resumed. Destruction of the den shall only be completed when, in the judgment of the Designated Biologist, the animal has escaped from or otherwise vacated the partially destroyed den.

6.7 Any Covered Species' den that must be destroyed shall be replaced with an artificial den. This will compensate for the loss of important shelter used by Covered Species for protection, reproduction, and escape from predators. Den design and placement should be determined on a site-specific basis in consultation with the USFWS and DFG.

6.8 All open holes and trenches within the Project construction boundary shall be inspected at the beginning of the day, middle of the day, and end of the day for trapped animals. To prevent inadvertent entrapment of Covered Species or any other animals during the construction phase of the Project, all excavated, steep-walled holes or trenches more than 2 feet deep shall be covered at the close of each working day by plywood or similar materials or provided with one or more escape ramps constructed of earth fill or wooden planks. Before such holes or trenches are filled, they shall be thoroughly inspected for trapped animals. If at any time a trapped or injured Covered Species is discovered, the USFWS and DFG will be notified within one (1) working day of the incident.

6.9 All construction pipe, culverts, or similar structures with a diameter of 7.6 centimeters (3 inches) or greater that are stored at the construction site for one or more overnight periods will be thoroughly inspected for Covered Species before the pipe is subsequently moved, buried, or capped. If a Covered Species is discovered inside a pipe during inspection, that section of pipe shall not be moved until the animal has escaped on its own.

7. Mitigation Measures/Compensation for Take:

DFG has determined that permanent protection of compensatory habitat is necessary and required under CESA to fully mitigate the impacts of the taking on the Covered Species that will result with implementation of the Project.

7.1 Permittee shall acquire and permanently preserve 1,337.02 acres as total compensation for the loss of Covered Species' habitat for the entire Project. The required acreage is based on factors including an assessment of the quality of the habitat at the Project site and DFG's estimate of the acreage required to provide for adequate biological carrying capacity at a replacement location.

7.2 Permittee has identified five Phases of the Project. (See Table 1.) Permittee shall complete all compensatory mitigation requirements separately and in their entirety for each Phase of the Project in sequential order prior to commencing ground- or vegetation-disturbing activities for the next Project Phase. As described in Table 2 of this ITP, the required compensation for each Phase of the Project is as follows: Phase 1 is 154.99 acres, Phase 2 is 213.61 acres, Phase 3 is 401.91 acres, Phase 4 is 286.04 acres, and Phase 5 is 280.47 acres; for a total of 1,337.02 acres.

7.3 For Project Phases 1 through 3, Permittee intends to mitigate at the Palo Prieto Conservation Bank, which approved DFG on February 26, 2008, as authorized to sell habitat mitigation credits for the Covered Species. Permittee is not authorized to commence ground- or vegetation-disturbing activities associated with the Project until this ITP is effective and the Permittee has complied with ITP Condition of Approval 5.2,

including providing written documentation to DFG that Permittee has purchased the required habitat mitigation credits.

7.4 For Project Phases 4 and 5, the Permittee shall purchase credits at the Palo Prieto Conservation Bank or another conservation bank approved by DFG in San Luis Obispo County that is authorized to sell habitat mitigation credits for the Covered Species. Permittee shall not commence ground- or vegetation-disturbing activities associated with Project Phases 4 and 5 until the Permittee has complied with ITP Condition of Approval 5.2, including providing written documentation to DFG that Permittee has purchased the required habitat mitigation credits.

Amendment:
This ITP may be amended without the concurrence of the Permittee if DFG determines that continued implementation of the Project under existing ITP conditions would jeopardize the continued existence of the Covered Species or that Project changes or changed biological conditions necessitate an ITP amendment to ensure that impacts to the Covered Species are minimized and fully mitigated. DFG may also amend the ITP at any time without the concurrence of the Permittee as required by law.

Stop-Work Order:
DFG may issue Permittee a written stop-work order to suspend any activity covered by this ITP for an initial period of up to 25 days to prevent or remedy a violation of ITP conditions (including but not limited to failure to comply with reporting, monitoring, or habitat acquisition obligations) or to prevent the illegal take of an endangered, threatened, or candidate species. Permittee shall comply with the stop-work order immediately upon receipt thereof. DFG may extend a stop-work order under this provision for a period not to exceed 25 additional days, upon written notice to the Permittee. DFG shall commence the formal suspension process, pursuant to California Code of Regulations, Title 14, section 783.7, within five working days of issuing a stop-work order.

Compliance with Other Laws:
This ITP contains DFG's requirements for the Project pursuant to CESA. This ITP does not necessarily create an entitlement to proceed with the Project. Permittee is responsible for complying with all other applicable State, federal, and local laws.

Notices:
The Permittee shall deliver the fully executed duplicate original ITP by first class mail or overnight delivery to the following address:

Habitat Conservation Planning Branch
Attention: CESA Permitting Program
1416 Ninth Street, Suite 1260
Sacramento, California 95814

Written notices, reports, and other communications relating to this ITP shall be delivered to DFG by first-class mail at the following addresses or at addresses DFG may subsequently provide the Permittee. Notices, reports, and other communications shall reference the Project name, Permittee, and ITP Number (2081-2007-020-04) in a cover letter and on any other associated documents.

Original cover with attachment(s) to:

Jeffrey R. Single, Ph.D., Regional Manager
1234 East Shaw Avenue
Fresno, California 93710
Phone (559) 243-4005, Fax (559) 243-4026

Copy of cover without attachment(s) to:

Office of the General Counsel
California Department of Fish and Game
1416 Ninth Street, 12th Floor
Sacramento, California 95814

And:

Habitat Conservation Planning Branch
California Department of Fish and Game
1416 Ninth Street, Suite 1260
Sacramento, California 95814

Unless Permittee is notified otherwise, DFG's Regional Representative for purposes of addressing issues that arise during implementation of the ITP is:

Ms. Laura Peterson-Diaz
1234 East Shaw Avenue
Fresno, California 93710
Phone (559) 243-4017, extension 225, Fax (559) 243-4020

Compliance with the California Environmental Quality Act (CEQA):
DFG's issuance of the ITP is subject to CEQA. DFG is a responsible agency under CEQA with respect to the ITP because of prior environmental review of the Project by the Permittee as lead agency. (See generally Pub. Resources Code, §§ 21067, 21069.) The Permittee's prior legal agency review of the Project is set forth in the State Route 46 Corridor Improvement Environmental Assessment with Finding of No Significant Impact/Final Environmental Impact Report (EIR) (SCH No. 2000011033), as approved on May 10, 2006. At the time that Permittee certified the EIR as lead agency and approved the Project, it also

adopted all mitigation measures described in the EIR as conditions of Project approval. In fulfilling its obligations as a responsible agency, DFG's obligations under CEQA are more limited than the lead agency. (CEQA Guidelines, § 15096, subds. (a), (f).)[5] DFG, in particular, is responsible for considering only the effects of those activities involved in the Project which it is required by law to carry out or approve and mitigating or avoiding only the direct or indirect environmental effects of those parts of the Project which it decides to carry out, finance, or approve. (Pub. Resources Code, § 21002.1, subd. (d); CEQA Guidelines, §§ 15041, subd. (b), 15096, subds. (f), (g).) Accordingly, because DFG's exercise of discretion is limited to issuance of the ITP, DFG is responsible for considering only the environmental effects that fall within its permitting authority under CESA.

This ITP, along with DFG's CEQA findings for the ITP and Project, which are available as a separate document, provides evidence of DFG's consideration of the lead agency's EIR for the Project and the environmental effects related to issuance of the ITP. (CEQA Guidelines, § 15096, subd. (f).) DFG finds that issuance of the ITP will not result in any previously undisclosed potentially significant effects on the environment or a substantial increase in the severity of any potentially significant environmental effects previously disclosed by the lead agency. Furthermore, to the extent the potential for such effects exists, DFG finds adherence to and implementation of the lead agency's conditions of approval as well as adherence to and implementation of the Conditions of Approval of the ITP will avoid or reduce to below a level of significance any such potential effects. DFG consequently finds that issuance of the ITP will not result in any significant, adverse impacts on the environment.

Findings Under CESA:
These findings are intended to document DFG's compliance with the specific findings requirements set forth in CESA and related regulations. (Fish & G. Code, 2081, subs. (b)-(c); Cal. Code Regs., tit. 14, §§ 783.4, subds. (a)-(b), 783.5, subd. (c)(2).)

DFG finds that the issuance of this ITP complies and is consistent with the criteria governing the issuance of ITPs under CESA:

(1) Take of Covered Species, as defined in the ITP, will be incidental to the otherwise lawful activities covered under the ITP;

(2) Impacts of the taking of the Covered Species will be minimized and fully mitigated through the implementation of measures required by this ITP, as described in the MMRP. Measures include: 1) permanent habitat protection; 2) measures to avoid take of the Covered Species during Project activities; 3) worker education; and 4) Monthly Compliance Reports. DFG evaluated the quality of the habitat on the

[5]The "CEQA Guidelines" are found in Title 14 of the California Code of Regulations, commencing with section 15000.

Project site, the scope and extent of direct impacts, the scope and extent of indirect impacts, and other relevant information available to DFG or provided by the Permittee. Based on this evaluation, DFG determined that the protection and management in perpetuity of 1,337.02 acres of compensatory habitat that is contiguous with other protected Covered Species habitat and/or is of higher quality than the habitat being destroyed by the Project, along with the minimization, monitoring, reporting, and funding requirements of this ITP, meet the CESA issuance criteria.

(3) The take avoidance and mitigation measures required pursuant to the conditions of this ITP and its attachments are roughly proportional to the impacts of the taking authorized by this ITP;

(4) The measures required by this ITP maintain Permittee's objectives to the greatest extent possible;

(5) All required measures are capable of successful implementation;

(6) The ITP is consistent with any regulations adopted, pursuant to Fish and Game Code sections 2112 and 2114;

(7) Permittee has ensured adequate funding to implement the measures required by the ITP as well as for monitoring compliance with and the effectiveness of those measures for the Project; and

(8) Issuance of the ITP will not jeopardize the continued existence of the Covered Species based on the best scientific and other information reasonably available, and this finding includes consideration of the species' capability to survive and reproduce, and any adverse impacts of the taking on those abilities in light of (a) known population trends; (b) known threats to the species; and (c) reasonably foreseeable impacts on the species from other related projects and activities. Moreover, DFG's finding is based, in part, on DFG's express authority to amend the terms and conditions of the ITP without concurrence of the Permittee as necessary to avoid jeopardy and as required by law.

Attachments:

ATTACHMENT 1	Approved Survey Methods for Blunt-Nosed Leopard Lizard
ATTACHMENT 2	Mitigation Monitoring and Reporting Program

ISSUED BY THE CALIFORNIA DEPARTMENT OF FISH AND GAME

on 1-27-09.

JEFFREY R. SINGLE, PH.D.,
Regional Manager
CENTRAL REGION

APPROVED AS TO FORM:

John H. Mattox
Senior Staff Counsel
Lead Counsel for CESA Permitting

ACKNOWLEDGMENT

The undersigned: 1) warrants that he or she is acting as a duly authorized representative of the Permittee, 2) acknowledges receipt of this ITP, and 3) agrees on behalf of the Permittee to comply with all terms and conditions of the ITP.

By: Chuck Cesena Date: 3/24/09

Printed Name: Chuck Cesena Title: Senior Environmental Planner

Attachment 1

July 2008

Dear Blunt-nosed Leopard Lizard Surveyor,

Attached is the revised survey methodology for the blunt-nosed leopard lizard (*Gambelia sila*). The protocol was developed by the Central Region of the California Department of Fish and Game (DFG) with input from the United States Fish and Wildlife Service (USFWS), the Bureau of Land Management (BLM), and various species experts. This protocol supersedes previous versions of DFG survey protocols for the blunt-nosed leopard lizard. The range-wide decline of population numbers in the past decade has provided the impetus for development of a more rigorous methodology to detect species presence. Additionally, since DFG is not able to issue an incidental take permit for the blunt-nosed leopard lizard due to its status as a fully-protected reptile under the California Fish and Game Code **§5050**, detection of species presence on a project site is crucial.

This standard methodology has been developed to provide consultants, local, state and federal agencies with minimum acceptable standards for surveys conducted to determine the status of this state and federally endangered species. The survey methods described within this protocol were designed to optimize the likelihood of detecting the presence of blunt-nosed leopard lizards should they occur on a project site.

When the presence of blunt-nosed leopard lizards is detected, we request that you notify DFG's local Permitting and Project Review staff for further instructions of what additional information will be needed to assess the project's potential impact on the species. This will assist in expediting the review of the project and help control the project sponsor's biological survey costs. Additionally, the USFWS should be contacted for further advice since this is also a federally-listed species. Use of this protocol and notification of DFG does not exempt you from consultation with the USFWS.

DFG is willing to cooperate with surveyors who have circumstances or needs not addressed by this protocol and who may wish to propose alternative methods to comply with State law prohibiting take of blunt-nosed leopard lizards. If you have any questions or comments regarding this methodology or if you want to propose the use of a different methodology, please contact the Central Region's Habitat Conservation Planning staff at (559) 243-4014 (Fresno, Merced, Madera, Kings, Tulare, and Kern Counties) or (805) 528-8670 (San Benito and San Luis Obispo Counties).

CALIFORNIA DEPARTMENT OF FISH AND GAME

APPROVED SURVEY METHODOLOGY FOR THE
BLUNT-NOSED LEOPARD LIZARD
JULY 2008

Blunt-nosed leopard lizard, *Gambelia sila* = (*Gambelia silus*)
STATUS: SE, FE, DFG fully protected

This protocol has been developed to provide a minimum level of protection for blunt-nosed leopard lizards (BNLL) when projects or maintenance activities are scheduled to occur within potential BNLL habitat. Disturbing activities should not proceed until appropriate surveys are conducted to determine if the species is present on the site. Surveys conducted according to the following protocol by qualified researchers provide a reasonable, although not conclusive, indication of BNLL presence at a particular site and yield critical information needed to prevent mortality and minimize impacts to the species. Researchers conducting the surveys are expected to understand the basic biological requirements of the species and have the ability to recognize potential BNLL habitat. This protocol satisfies the Department of Fish and Game requirements when it is determined that formal BNLL surveys are needed. [Note: This protocol is appropriate for pre-project BNLL surveys, however, population monitoring over time on a site is best conducted using a permanent survey grid, such as described in Tollestrup (1976).]

METHODS:
A minimum of two researchers, walking in parallel on adjacent transects, should conduct a BNLL survey. Optimum BNLL activity periods occur when air temperature is between 25C-35C (77F-95F) (Tollestrup 1976; USFWS 1985, 1998). Surveys must be conducted when the air temperature falls within the optimal range. Surveys may begin after sunrise as soon as the minimum air temperature criterion is met, and must end by 1400 hours or when the maximum temperature is reached, whichever occurs first (Tollestrup 1976). Time of day and air temperature should be recorded at the start and end of each survey. Air temperature should be periodically checked to ensure that the maximum has not been exceeded. Air temperature should be measured at 1-2 cm above the ground over a surface most representative of the area being surveyed. The researcher must shade the thermometer from direct sunlight while taking the reading. Other factors that affect BNLL activity such as soil temperature (measured at 1cm below soil surface with a shaded thermometer) and weather conditions must be recorded at the start and end of each survey. Surveys should not be conducted on overcast days (cloud cover > 90%) or when sustained wind velocity exceeds 10 mph (force > 3 on Beaufort wind scale) (Montanucci 1965; Tollestrup 1976; J. Vance, pers. comm.).

Surveys must be conducted on foot, and researchers must survey all areas with potential BNLL habitat. BNLL are often difficult to detect, particularly in areas where shrubs are fairly numerous (>30% cover) and/or the herbaceous vegetation is tall (>30 cm). In such conditions, 10 meter wide transects should be walked at a slow pace. In areas with few shrubs and shorter herbaceous vegetation (<15 cm), transects as wide as 30 meters are acceptable. When feasible, transects should be walked in a north-south orientation to minimize glare from the sun. The surveyor should stop periodically and scan the transect for BNLL using close-focusing binoculars (minimum 7X35 magnification). In addition to recording the location of all BNLL observed (must provide UTM coordinates), the presence of habitat features important for BNLL (washes, playas, relative abundance of small mammal burrows) should also be recorded for each transect. Streambeds, washes, roads, etc., should be walked in addition to transect lines since BNLL are often seen in these areas.

TIMING AND LENGTH OF SURVEY:
Survey intensity should be commensurate with the anticipated level of disturbance to the BNLL habitat. The primary concern for BNLL when disturbance occurs during maintenance activities is direct mortality from equipment or personnel. Removal of intact BNLL habitat has a much greater potential for "take" due to direct impact on animals aboveground as well as any hibernating animals or eggs underground. A longer survey effort including both spring adult surveys and fall hatchling surveys is therefore required for activities that cause impacts to undisturbed BNLL habitat. The more intensive survey effort increases the chances of observing the species, even if the population is small. Once a BNLL has been observed, surveys may cease and consultation with the Department must begin regarding avoidance measures. If BNLL are observed incidentally while conducting surveys for other species, specific surveys for BNLL are not required. Surveys will be accepted for one year from the date of completion.

Disturbances for Maintenance Activities
Examples of maintenance activities include grading existing roads, grass mowing on roadsides, and maintaining existing structures. BNLL are active and above ground from April through September, but optimum activity periods for adults occur between April 15 and July 15 (Montanucci 1965; Tollestrup 1979; USFWS 1985, 1998). BNLL surveys should be conducted for a total of 8 days over the course of the 90-day time span. A minimum of 3 survey days should be conducted consecutively, with a maximum of 6 days completed within any 30-day time period. Fall hatchling surveys are not required for activities in this category.

Disturbances Leading to Habitat Removal
Examples of disturbances that impact intact habitat include establishment of new roads or structures, housing subdivisions, and changes in historic land use. BNLL surveys should be conducted for 12 days over the course of the 90-day adult optimal survey period (April 15 to July 15), with a maximum of 4 survey

days per week and 8 days within any 30-day time period. At least one survey session should be conducted for 4 consecutive days, weather permitting. BNLL hatchlings and subadults are most commonly observed from August 1 to September 15, along with a few adults that are still active above ground (Montanucci 1965; Tollestrup 1979; USFWS 1985, 1998). In addition to the 12 days of adult BNLL surveys required for activities in this category, 5 more survey days are required during the hatchling optimal survey period for a total of 17 survey days overall.

QUALIFICATIONS OF RESEARCHERS:
An acceptable BNLL survey crew should consist of no more than 3 Level I researchers for every Level II researcher. This restriction should reduce the number of incorrect/missed identifications. The names and affiliations of all researchers must be recorded for each survey day.

Level I: Researcher has demonstrated the ability to distinguish BNLL from other common lizard species that may inhabit the area;

Level II: Researcher has demonstrated the ability to distinguish BNLL from other common lizard species that may inhabit the area and has participated in at least 50 survey days for BNLL (or 25 survey days and a BNLL identification course recognized by/acceptable to the Department of Fish and Game). Researcher has made at least one confirmed* field sighting of a BNLL.

REPORTING
All BNLL observations should be reported to the California Natural Diversity Database within 30 days. A sample form is attached. Additional forms can be obtained at http://www.dfg.ca.gov/whdab/html/animals.html .

SPECIAL REQUIREMENT FOR SURVEYS IN San Luis Obispo County
Lands with potential BNLL habitat in San Luis Obispo County have different conditions compared to other counties within the range of BNLL. The sites with habitat in San Luis Obispo County tend to be at higher elevations, where nighttime temperatures can remain low even though daytime temperatures meet minimum survey criteria. In such conditions, BNLL activity is likely to be low and surveys conducted at this time could result in non-detection of the species even though they are present. As such, an additional requirement of a visit to a known voucher site to check for BNLL activity applies to surveys conducted in this County. Once the species has been observed at the voucher site, formal surveys can begin. The Elkhorn Plain ER has been selected as the voucher site for San Luis Obispo County.

LITERATURE CITED

Montanucci, R.R., 1965. Observations of the San Joaquin leopard lizard, *Crotaphytus wislizenii silus* Stejneger. Herpetologica 21(4): 270-283.

Tollestrup, K. 1976. A standardized method of obtaining an index of densities of blunt-nosed leopard lizards, *Crotaphytus silus.* Unpub. Rpt. U. S. Fish and Wildlife Service, Sacramento, CA. 11pp + Appendices.

Tollestrup, K. 1979. The ecology, social structure, and foraging behavior of two closely-related leopard lizards, *Gambelia silus* and *Gambelia wislizenii.* PhD Dissertation, University of California Berkeley.

United States Fish and Wildlife Service. 1985. Revised blunt-nosed leopard lizard recovery plan. United States Fish and Wildlife Service. Region 1, Portland, OR. 85 pp.

United States Fish and Wildlife Service. 1998. Recovery plan for upland species of the San Joaquin Valley, California. United States Fish and Wildlife Service. Region 1, Portland, OR. 319 pp.

PERSONAL COMMUNICATIONS

Julie Vance, California Department of Water Resources, San Joaquin District, 3374 E. Shields Ave, Fresno, California, 93726.

*A minimum of one confirmed field sighting must be documented for each Level II researcher and be available to the Department upon request. As with all BNLL sightings, it should also be submitted to the California Natural Diversity Database. Information to be included in documentation of BNLL sighting: Name of researcher, date of survey, location of survey, names of accompanying researchers who can confirm the sighting, and details of sighting (distance, BNLL activity, etc).

CONTACT INFORMATION

California Department of Fish and Game
Central Region
Habitat Conservation Planning
1234 Shaw Ave
Fresno, CA 93710
559/243-4005

The Department is willing to cooperate with researchers who have circumstances or needs not addressed by this protocol and who may wish to propose alternative methods to comply with State law prohibiting take of BNLL.

Attachment 2

CALIFORNIA DEPARTMENT OF FISH AND GAME
MITIGATION MONITORING AND REPORTING PROGRAM (MMRP)
CALIFORNIA ENDANGERED SPECIES ACT

INCIDENTAL TAKE PERMIT NO. 2081-2007-020-04

Permittee: **California Department of Transportation (Caltrans)**

Project: **Route 46 Corridor Improvement Project**

PURPOSE OF THE MMRP

The purpose of the MMRP is to ensure that the minimization and mitigation measures required by the California Department of Fish and Game (DFG) for the above-referenced Project are properly implemented and thereby to ensure compliance with Section 2081(b) of the Fish and Game Code and Section 21081.6 of the Public Resources Code. A table summarizing the mitigation measures required by DFG is attached. This table is a tool for use in monitoring and reporting on implementation of mitigation measures, but the descriptions in the table do not supersede the mitigation measures set forth in the California Incidental Take Permit (ITP) and in omission of a permit requirement from the attached table does not relieve the Permittee of the obligation to ensure that the requirement is performed.

OBLIGATIONS OF THE PERMITTEE

Mitigation measures must be implemented within the time periods indicated in the table that appears below. The Permittee has the primary responsibility for monitoring compliance with all mitigation measures and for reporting to DFG on the progress in implementing those measures. These monitoring and reporting requirements are set forth in the ITP itself and are summarized at the front of the attached table.

The ITP requires that the Permittee identify and fund at least one full-time biologist to oversee and implement the mitigation activities that are required conditions of approval. The Permittee, through the "Designated Biologist", the "Designated Representative", or some other specific Permittee's designee shall insure the implementation of all Avoidance and Mitigation Measures listed in the ITP and shall monitor the effectiveness of these measures.

VERIFICATION OF COMPLIANCE, EFFECTIVENESS

DFG may, at its own discretion, verify compliance with any mitigation measure or independently assess the effectiveness of any mitigation measure.

TABLE OF MITIGATION MEASURES

The following items are identified for each mitigation measure: Mitigation Measure, Source, Implementation Schedule, Responsible Party, and Status/Date/Initials. The Mitigation Measure column summarizes the mitigation requirements of the ITP. The Source column identifies the ITP document that sets forth the mitigation measure. The Implementation Schedule column shows the date or phase when each mitigation measure shall be implemented. The Responsible Party column identifies the agency that is primarily responsible for implementing the mitigation measure. The Status/Date/Initials column shall be completed by the Permittee during preparation of each Status Report and the Final Mitigation Report, and must identify the implementation status of each mitigation measure, the date that status was determined, and the initials of the person determining the status.

	Mitigation Measure	Source	Implementation Schedule	Responsible Party	Status / Date / Initials
PRE-CONSTRUCTION					
1	Before initiating ground- or vegetation-disturbing activities, Permittee shall designate a representative (Designated Representative) responsible for communications with DFG and for overseeing compliance with the ITP. The Permittee shall notify DFG in writing prior to commencement of ground- or vegetation-disturbing activities of the Designated Representative's name, business address and contact information, and shall notify DFG in writing if a substitute Designated Representative is selected or identified at any time during the term of the ITP.	ITP Condition #4.1	Before commencing ground or vegetation disturbing activities Entire Project	Permittee	
2	At least 30 days before initiating ground- or vegetation-disturbing activities, Permittee shall submit to DFG in writing the name, qualifications, business address, and contact information for a biological monitor (Designated Biologist). The Designated Biologist shall be knowledgeable and experienced in the biology and natural history of the Covered Species. The Designated Biologist will be responsible for monitoring construction and/or ground- or vegetation-disturbing activities in areas of Covered Species' habitat to help minimize or avoid the incidental take of individual Covered Species and to minimize disturbance of Covered Species' habitat. Permittee shall obtain DFG approval of the Designated Biologist prior to the commencement of Project-related activities that may result in the incidental take of the Covered Species.	ITP Condition #4.2	Before commencing ground or vegetation disturbing activities Entire Project	Permittee	
3	The Designated Biologist shall have authority to immediately stop any activity that is not in compliance with this ITP and/or to order any reasonable measure to avoid the take of an individual of the Covered Species or any fully protected species. Neither the Authorized Biologist(s) nor DFG shall be liable for any costs incurred in complying with the management measures, including cease-work orders.	ITP Condition #4.3	Before commencing ground or vegetation disturbing activities Entire Project	Permittee	
4	Permittee shall conduct an education program for all persons employed or otherwise working on the Project site prior to performing any work on-site. Instruction shall consist of a presentation by the Designated Biologist that includes a discussion of the biology and general behavior of the Covered Species, information about the distribution and habitat needs of the Covered Species, sensitivity of the Covered Species to human activities, its status under CESA including legal protection, recovery efforts, penalties for violations, and Project-specific protective management measures provided in the ITP. Interpretation shall be provided for non-English speaking workers, and the same instruction shall be provided for any new workers prior to on-site Project activity. Copies of the ITP shall be maintained at the worksite. Permittee shall prepare and distribute wallet-sized cards or a fact sheet handout containing this information for workers to carry on-site. Upon completion of the program, employees shall sign an affidavit stating they attended the program and understand all protection measures. These forms shall be filed at the worksite offices and be available to DFG upon request.	ITP Condition #4.4	Before commencing ground or vegetation disturbing activities Entire Project	Permittee	
5	Permittee shall initiate a trash abatement program during pre-construction phases of the Project and continue the program throughout the duration of the Project. Trash and food items shall be contained in closed (raven-proof) containers and removed regularly (at least once a week) to avoid attracting opportunistic predators such as ravens, coyotes, and feral dogs.	ITP Condition #4.5	Before commencing ground or vegetation disturbing activities Entire Project	Permittee	

	Mitigation Measure	Source	Implementation Schedule	Responsible Party	Status / Date / Initials
6	Permittee shall provide DFG with written detailed construction plans, including engineering drawings, a minimum of 30 days prior to ground- or vegetation-disturbing activities authorized by this ITP. These plans as provided to DFG by the Permittee shall include the protection and restoration features and techniques made part of the Permittee's construction contract for the Project, including the features and techniques and any other modifications to the Project made since the Permittee submitted its application to DFG for this ITP.	ITP Condition #5.1	Before commencing ground or vegetation disturbing activities of each phase	Permittee	
7	Permittee shall notify DFG 14 calendar days before initiating ground- or vegetation-disturbing activities for each phase of the Project and document compliance with all pre-Project Conditions of Approval before initiating ground- or vegetation-disturbing activities.	ITP Condition #5.2	Before commencing ground or vegetation disturbing activities of each phase	Permittee	
8	If a Covered Species is injured as a result of Project-related activities, it shall be immediately taken to a DFG-approved wildlife rehabilitation or veterinary facility. The Permittee shall identify the facility prior to the start of ground- or vegetation-disturbing activities. Permittee shall bear any costs associated with the care or treatment of such injured Covered Species. Permittee shall notify the USFWS and DFG immediately unless the incident occurs outside of normal business hours. In that event the USFWS and DFG shall be notified no later than noon on the next business day. Notification to DFG shall be via telephone or e-mail, followed by a written incident report. Notification shall include the date, time, location, and circumstances of the incident and the name of the facility where the animal was taken.	ITP Condition #6.2	Before commencing ground or vegetation disturbing activities Entire Project	Permittee	
9	The Designated Biologist shall perform a pre-construction survey for Covered Species no more then 30 days prior to ground- or vegetation-disturbing activities for each Phase of the Project. Surveys shall cover the proposed construction right-of-way (ROW) with a 200-foot buffer for all areas along the Project length with habitat to support Covered Species. A report documenting the results of the pre-construction surveys shall be submitted to DFG within 30 days after performing any such survey.	ITP Condition #6.3	Before commencing ground or vegetation disturbing activities of each phase	Permittee	
10	If a potential Covered Species den (one that shows evidence of current use or was used in the past) is discovered or a Covered Species is found in an "atypical" den (e.g., a pipe or culvert), a 50-foot buffer shall be established using flagging. If a known Covered Species den is discovered, a buffer of at least 100 feet shall be established using fencing. If a natal den (den in which Covered Species young are reared) is discovered, a buffer of at least 200 feet shall be established using fencing. Buffer zones shall have restricted entry. Permittee shall notify the USFWS and DFG's Regional Representative immediately via telephone or email if any Covered Species dens, natal dens or atypical dens are discovered.	ITP Condition #6.4	Before commencing ground or vegetation disturbing activities Entire Project	Permittee	
11	For dens found within the portion of the Project area to be disturbed, natal dens shall not be excavated until the pups and adults have vacated and then only after consultation with the USFWS and DFG. If, after 4 consecutive days of monitoring with tracking medium or infrared camera the Designated Biologist has determined that a Covered Species is not currently present, known dens may be destroyed. Potential dens (any hole 3 inches or larger) may be excavated without monitoring if a take permit has been obtained from the USFWS, but if the process reveals evidence of use inside then destruction shall cease and the USFWS and DFG shall be notified immediately.	ITP Condition #6.5	Before commencing ground or vegetation disturbing activities of each phase	Permittee	

	Mitigation Measure	Source	Implementation Schedule	Responsible Party	Status / Date / Initials
12	Destruction of Covered Species dens shall be accomplished by careful excavation until it is certain no Covered Species are inside. The den should be fully excavated, filled with dirt and compacted to ensure that Covered Species cannot reenter or use the den during the construction period. If at any point during excavation a Covered Species is discovered inside the den, excavation shall cease immediately and monitoring of the den as described above shall be resumed. Destruction of the den shall only be completed when, in the judgment of the Designated Biologist, the animal has escaped from or otherwise vacated the partially destroyed den.	ITP Condition #6.6	Before commencing ground or vegetation disturbing activities of each phase	Permittee	
13	Any Covered Species' den that must be destroyed shall be replaced with an artificial den. This will compensate for the loss of important shelter used by Covered Species for protection, reproduction, and escape from predators. Den design and placement should be determined on a site-specific basis in consultation with the USFWS and DFG.	ITP condition #6.7	Before commencing ground or vegetation disturbing activities of each phase	Permittee	
14	Permittee shall acquire and permanently preserve 1,337.02 acres as total compensation for the loss of Covered Species' habitat for the entire Project. The required acreage is based on factors including an assessment of the quality of the habitat at the Project site and DFG's estimate of the acreage required to provide for adequate biological carrying capacity at a replacement location. Permittee has identified five Phases of the Project. (See Table 1.) Permittee shall complete all compensatory mitigation requirements separately and in their entirety for each Phase of the Project in sequential order prior to commencing ground- or vegetation-disturbing activities for the next Project Phase. As described in Table 2 of this ITP, the required compensation for each Phase of the Project is as follows: Phase 1 is 154.99 acres, Phase 2 is 213.61 acres, Phase 3 is 401.91 acres, Phase 4 is 286.04 acres, and Phase 5 is 280.47 acres; for a total of 1,337.02 acres.	ITP Conditions #7.1, 7.2	Before commencing ground or vegetation disturbing activities of each phase	Permittee	
15	For Project Phases 1 through 3, Permittee intends to mitigate at the Palo Prieto Conservation Bank, which approved DFG on February 26, 2008, as authorized to sell habitat mitigation credits for the Covered Species. Permittee is not authorized to commence ground- or vegetation-disturbing activities associated with the Project until this ITP is effective and the Permittee has complied with ITP Condition of Approval 5.2, including providing written documentation to DFG that Permittee has purchased the required habitat mitigation credits.	ITP Condition #7.3	Before commencing ground or vegetation disturbing activities of each phase	Permittee	
16	For Project Phases 4 and 5, the Permittee shall purchase credits at the Palo Prieto Conservation Bank or another conservation bank approved by DFG in San Luis Obispo County that is authorized to sell habitat mitigation credits for the Covered Species. Permittee shall not commence ground- or vegetation-disturbing activities associated with Project Phases 4 and 5 until the Permittee has complied with ITP Condition of Approval 5.2, including providing written documentation to DFG that Permittee has purchased the required habitat mitigation credits.	ITP Condition #7.4	Before commencing ground or vegetation disturbing activities of each phase	Permittee	

	Mitigation Measure	Source	Implementation Schedule	Responsible Party	Status / Date / Initials
DURING CONSTRUCTION					
17	Permittee shall implement dust control measures during Project activities to facilitate visibility for monitoring of the Covered Species by the Designated Biologist.	ITP Condition #4.6	Entire Project	Permittee	
18	Workers shall inspect for Covered Species under vehicles and equipment before vehicles and equipment are moved. If a Covered Species is present, the worker shall wait for the Covered Species to move on its own to a safe location.	ITP Condition #6.1	Entire Project	Permittee	
19	Permittee shall prohibit firearms and domestic dogs from the Project site and site access routes during construction and development of the Project, except those in the possession of authorized security personnel or local, State, or Federal law enforcement officials.	ITP Condition #4.7	Entire Project	Permittee	
20	Permittee shall clearly delineate property boundaries of the Project site with fencing, stakes, or flags and shall similarly delineate the limits of construction areas.	ITP Condition #4.8	Entire Project	Permittee	
21	Permittee shall clearly delineate habitat of the Covered Species on the Project site with posted signs, posting stakes, flags, and/or rope or cord, and place Environmentally Sensitive Area (ESA) fencing as necessary to minimize disturbance of Covered Species' habitat.	ITP Condition #4.9	Entire Project	Permittee	
22	Project-related personnel shall access the Project site during construction and development activities using existing routes and shall not cross Covered Species' habitat outside of and in route to the Project site. Project-related vehicle traffic shall be restricted to established roads, staging and parking areas. Vehicle speeds shall not exceed 20 miles per hour, except when traveling on existing highway, in order to avoid Covered Species on or traversing the roads. If the Permittee determines construction of off-site routes for travel are necessary, Permittee shall contact DFG prior to carrying out any such an activity. DFG may require an amendment to this ITP if additional take of Covered Species may result from Project modification.	ITP Condition #4.10	Entire Project	Permittee	
23	Permittee shall confine all Project-related parking, storage areas, laydown sites, equipment storage, and any other surface-disturbing activities to the Project site using, to the extent possible, previously disturbed areas. Additionally, Permittee shall not use or cross Covered Species' habitat outside of the marked Project boundaries unless specifically provided for in this ITP.	ITP Condition #4.11	Entire Project	Permittee	
24	Permittee shall immediately stop/repair any fuel or hazardous waste leaks or spills on the Project site during construction and development activities and immediately clean up such spills at the time of occurrence. Permittee shall exclude the storage and handling of hazardous materials from the construction zone and shall properly contain and dispose of any unused or leftover hazardous products off-site.	ITP Condition #4.12	Entire Project	Permittee	
25	Permittee shall immediately notify DFG in writing if it determines that it is not in compliance with any Conditions of Approval of this ITP, including but not limited to any actual or anticipated failure to implement mitigation measures within the time periods indicated in this ITP and MMRP. Permittee shall report any non-compliance with the ITP during the construction phase of the Project to DFG within 24 hours.	ITP Condition #5.3	Entire Project	Permittee	

	Mitigation Measure	Source	Implementation Schedule	Responsible Party	Status / Date / Initials
26	**Monthly Report**: The Designated Biologist shall be on-site daily while construction and/or surface-disturbing activities are taking place to minimize take of the Covered Species; to ensure compliance with all mitigation and avoidance measures; to check all exclusion zones; and to ensure that signs, stakes, and fencing are intact, and that human activities are restricted to outside of these protective zones. Weekly compliance inspections shall be conducted after clearing, grubbing, and grading are completed. These inspections shall be compiled into Monthly Compliance Reports along with a copy of the MMRP table with notes showing the current implementation status of each mitigation measure. Monthly Compliance Reports shall be submitted to DFG's Regional Office at the address listed in the Notices section of this ITP or via e-mail to DFG's Regional Representative. At the time of this ITP's approval, the DFG Regional Representative is Laura Peterson-Diaz (e-mail address lpdiaz@dfg.ca.gov). DFG may at any time increase the timing and number of compliance inspections and reports required under this provision depending upon the results of previous compliance inspections (see Condition 5.5).	ITP Condition #5.4	Entire Project	Permittee	
27	All observations of Covered Species and their sign, oversight activities, verifications, compliance inspections, surveys, monitoring, and records required by this ITP shall be reported in writing to DFG by the Designated Representative or Designated Biologist. Permittee shall submit reports of these activities to DFG in the next Monthly Compliance Report.	ITP Conditions #5.5	Entire Project	Permittee	
28	All Covered Species sightings confirmed by the Designated Biologist shall include the following documented information: the date, time, and location of each occurrence using GPS technology, the name of the party that actually identified the animal, circumstances of the incident, the general condition and health of each individual, any diagnostic markings, sex, age (juvenile or adult), and actions undertaken and habitat description. The Permittee shall submit this information to the California Natural Diversity Database (CNDDB).	ITP Conditions #5.6	Entire Project	Permittee	
29	**Annual Report**: Permittee shall provide DFG with an Annual Status Report (ASR) no later than January 31 of every year beginning with the issuance of the ITP and continuing until DFG accepts the Final Mitigation Report identified below. Each ASR shall include, at a minimum: 1) a general description of the status of the Project site and construction activities, including actual or projected completion dates, if known; 2) a copy of the table in the MMRP with notes showing the current implementation status of each mitigation measure; 3) a copy of the Monthly Compliance Reports from the previous year; and 4) a description of any site-specific avoidance and minimization measures that were employed and an assessment of the effectiveness of each completed or partially completed mitigation measure in minimizing and compensating for Project impacts.	ITP Condition #5.7	Entire Project	Permittee	
30	Restoration of Project lands where temporary impacts occur shall be monitored and the status of the restoration included in the Annual Reports beginning after completion of Phase I of the Project. Restoration of all areas subject to temporary ground- or vegetation disturbance shall be recontoured, as necessary, covered with stockpiled top-soil, and seeded with native species. Monitoring for 2 years post-construction of each Phase shall insure that noxious weeds do not become dominant in the restored area and that native species found in the vicinity are successfully reintroduced. If the temporary impact lands have not returned to pre-Project conditions two years after completion of each Phase, additional mitigation and an amendment to this ITP might be required.	ITP Condition #5.8	After completion of phase 1 until 2 years post-construction of phase 5	Permittee	

	Mitigation Measure	Source	Implementation Schedule	Responsible Party	Status / Date / Initials
31	If a Covered Species is killed by a Project-related activity during construction of the Project or if a Covered Species is otherwise found dead, the Designated Biologist shall be immediately notified and initial notification shall be made to the Sacramento Office of the USFWS at (916) 414-6620, and DFG by calling the DFG Regional Office at (559) 243-4017. The initial notification to the USFWS and DFG shall include information regarding the location, species, number of animals injured or killed, and the DFG ITP Number. Following initial notification, Permittee shall send DFG a written report within 2 calendar days. The report shall include the date and time of the finding or incident, location of the carcass, and if possible provide a photograph, explanation as to cause of death, and any other pertinent information. The Designated Biologist shall collect the carcass, place it in plastic, and keep it on ice or in a freezer until a DFG representative can either collect the specimen or issue alternative instructions.	ITP Condition #5.10	Entire Project	Permittee	
32	If a Covered Species is injured as a result of Project-related activities, it shall be immediately taken to a DFG-approved wildlife rehabilitation or veterinary facility. The Permittee shall identify the facility prior to the start of ground- or vegetation-disturbing activities. Permittee shall bear any costs associated with the care or treatment of such injured Covered Species. Permittee shall notify the USFWS and DFG immediately unless the incident occurs outside of normal business hours. In that event the USFWS and DFG shall be notified no later than noon on the next business day. Notification to DFG shall be via telephone or e-mail, followed by a written incident report. Notification shall include the date, time, location, and circumstances of the incident and the name of the facility where the animal was taken.	ITP Condition #6.2	Entire Project	Permittee	
33	All open holes and trenches within the Project construction boundary shall be inspected at the beginning of the day, middle of the day, and end of the day for trapped animals. To prevent inadvertent entrapment of Covered Species or any other animals during the construction phase of the Project, all excavated, steep-walled holes or trenches more than 2 feet deep shall be covered at the close of each working day by plywood or similar materials or provided with one or more escape ramps constructed of earth fill or wooden planks. Before such holes or trenches are filled, they shall be thoroughly inspected for trapped animals. If at any time a trapped or injured Covered Species is discovered, the USFWS and DFG will be notified within one (1) working day of the incident.	ITP Condition #6.8	Entire Project	Permittee	
34	All construction pipe, culverts, or similar structures with a diameter of 7.6 centimeters (3 inches) or greater that are stored at the construction site for one or more overnight periods will be thoroughly inspected for Covered Species before the pipe is subsequently moved, buried, or capped. If a Covered Species is discovered inside a pipe during inspection, that section of pipe shall not be moved until the animal has escaped on its own.	ITP Condition #6.9	Entire Project	Permittee	
35	DFG may issue Permittee a written stop-work order to suspend any activity covered by this ITP for an initial period of up to 25 days to prevent or remedy a violation of ITP conditions (including but not limited to failure to comply with reporting, monitoring, or habitat acquisition obligations) or to prevent the illegal take of an endangered, threatened, or candidate species. Permittee shall comply with the stop-work order immediately upon receipt thereof. DFG may extend a stop-work order under this provision for a period not to exceed 25 additional days, upon written notice to the Permittee. DFG shall commence the formal suspension process, pursuant to California Code of Regulations, Title 14, section 783.7, within five working days of issuing a stop-work order.	ITP	Entire Project	DFG	

	Mitigation Measure	Source	Implementation Schedule	Responsible Party	Status / Date / Initials
POST-CONSTRUCTION					
36	Upon completion of Project construction, Permittee shall remove from the Project site and properly dispose of all construction refuse, including, but not limited to, broken equipment parts, wrapping material, cords, cables, wire, rope, strapping, twine, buckets, metal or plastic containers, and boxes.	ITP Condition #4.14	Post-construction	Permittee	
37	**Final Mitigation Report**: No later than 60 days after completion of the Project, including completion of all mitigation measures, Permittee shall provide DFG with a Final Mitigation Report. The Final Mitigation Report shall be prepared by the Designated Biologist and shall include, at a minimum: 1) a copy of the table in the MMRP with notes showing when each of the mitigation measures was implemented; 2) all available information about Project-related incidental take of the Covered Species; 3) information about other Project impacts on the Covered Species; 4) construction dates; 5) an assessment of the effectiveness of the ITP's Conditions of Approval in minimizing and compensating for Project impacts; 6) recommendations on how mitigation measures might be changed to more effectively minimize and mitigate the impacts of future projects on the Covered Species; and 7) any other pertinent information, including the level of take of the Covered Species associated with the Project.	ITP Condition #5.9	Post-construction	Permittee	
38	DFG accepts the Final Mitigation Report as complete.	ITP Condition #4.15	Post-construction	DFG	

FOR CONTRACT NO.: 05-330754

INFORMATION HANDOUT

MATERIALS INFORMATION

6. Portions of Asbestos and Lead Containing Paint Survey Report

ROUTE: 05-SLO-46-PM40.0

STATE OF CALIFORNIA
DEPARTMENT OF TRANSPORTATION

INFORMATIONAL HANDOUT

05-SLO-46-40.0
ESTRELLA RIVER BRIDGE
05-330751

June 5, 2012

INDEX

Portions of Asbestos and Lead Containing Paint Survey Report
Geocon Consultants Inc.
June 2001

Department of Transportation
Construction Department
1150 Laurel Lane
San Luis Obispo, CA 93403

GEOCON

CONSULTANTS, INC

ENVIRONMENTAL
GEOTECHNICAL
MATERIALS

SITE INVESTIGATION REPORT

ASBESTOS AND LEAD-CONTAINING PAINT SURVEY

ROUTE 46 BRIDGES
SAN LUIS OBISPO COUNTY, CALIFORNIA

PREPARED FOR

CALIFORNIA DEPARTMENT OF TRANSPORTATION
DISTRICT 6
FRESNO, CALIFORNIA

CALTRANS TASK ORDER NO.
05-3307U0-2P
GEOCON PROJECT NO. E8000-06-68

JUNE 2001

TABLE OF CONTENTS

Page

PROJECT LOCATION AND PROPOSED IMPROVEMENTS 1

PURPOSE 1

BACKGROUND 2

FIELD ACTIVITIES 2

Asbestos Survey 2

Lead-Containing Paint Survey 3

ANALYTICAL RESULTS 4

Asbestos 4

Lead-Containing Paint 4

CONCLUSIONS AND RECOMMENDATIONS 4

Asbestos 4

Lead-Containing Paint 5

LIMITATIONS 5

FIGURES

1. Vicinity Map
2a. Site Plan - Bridge 49-0036
2b. Site Plan - Bridge 49-0029
2c. Site Plan - Bridge 49-0095
2d. Site Plan - Simmons Creek Bridge
2e. Site Plan - Bridge 49-0033

TABLES

1. Summary of Analytical Laboratory Test Results – Asbestos
2. Summary of Analytical Laboratory Test Results – LCP

APPENDICES

A. Site Photos 1 through 20
B. Laboratory Analytical Reports and Chain-of-Custody Documentation

Project No. E8000-06-68
June 28, 2001

Mr. Shawn Ogletree
California Department of Transportation
3402 North Blackstone Avenue, Suite 201
Fresno, California 93726

Subject: ASBESTOS AND LEAD-CONTAINING PAINT SURVEYS
ROUTE 46 BRIDGES
SAN LUIS OBISPO COUNTY, CALIFORNIA
CONTRACT NO. 43A0012
TASK ORDER NO. 05-3307U0-2P

Dear Mr. Ogletree:

In accordance with California Department of Transportation (Caltrans) Contract No. 43A0012 and Task Order (TO) No. 05-3307U0-2P, Geocon Consultants, Inc. has performed asbestos and lead-containing paint surveys at five bridges on Route 46 in San Luis Obispo County, California (the Site). The scope of services provided by Geocon included surveying the bridges for asbestos and lead-containing paint, collecting bulk samples, and submitting the samples to laboratories for analyses.

PROJECT LOCATION AND PROPOSED IMPROVEMENTS

The Site consists of the following five bridges between Post Miles (PM) 39.95 and 54.77 on Route 46 in San Luis Obispo County, California:

- Bridge 49-0036 (Cholame Creek);
- Bridge 49-0029 (Cholame Creek);
- Bridge 49-0095 (Cholame Creek);
- Simmons Creek Bridge; and
- Bridge 49-0033 (Estrella River).

The proposed project involves improvements to Route 46 that will require bridge retrofit activities. The approximate location of the Site is depicted on the attached Vicinity Map, Figure 1. Individual bridges and sample locations are presented in Figures 2a through 2e. Photographs of bridges and suspect materials are presented as Site Photos 1 through 20.

PURPOSE

The purpose of the scope of work was to determine the presence and quantity of asbestos and lead-containing paint on the bridges in advance of the construction contract. The information obtained from this investigation will be used by Caltrans to estimate removal and disposal costs and coordinate asbestos and/or lead-containing paint abatement, if necessary, within the proposed project work areas.

BACKGROUND

A review of as-built plans provided by Caltrans did not indicate the presence of asbestos in the bridges.

FIELD ACTIVITIES

The following field activities were performed in accordance with TO No. 05-3307U0-2P.

Asbestos Survey

The *Code of Federal Regulations (CFR),* 40 CFR 61, Subpart M, National Emissions Standards for Hazardous Air Pollutants (NESHAP) and Federal Occupational Safety and Health Administration (FED OSHA) classify asbestos-containing materials (ACM) as any material or product which contains more than 1% asbestos. Nonfriable ACM are classified by NESHAP as either Category I or Category II material defined as follows:

- **Category I** – asbestos-containing packings, gaskets, resilient floor coverings, and asphalt roofing products.
- **Category II** – all remaining types of non-friable asbestos-containing material not included in Category I that when dry, cannot be crumbled, pulverized, or reduced to powder by hand pressure.

Regulated asbestos-containing material (RACM) is classified as any material that contains greater asbestos by dry weight and is:

1. Friable;
2. Category I material that has become friable;
3. Category I material that has been subjected to sanding grinding, cutting or abrading; or
4. Category I non-friable material that has a high probability of becoming crumbled, pulverized, or reduced to a powder during demolition or renovation activities.

With respect to potential worker exposure, the California Code of Regulations (CCR), 8 CCR 341.6, defines asbestos-containing construction materials (ACCM) as construction material that contains more than 0.1% asbestos.

Mr. David Watts, a California Certified Asbestos Consultant (CAC), certification No. 98-2404, performed the asbestos surveys of the subject bridges on May 1, 2001.

Suspect ACM were grouped into homogeneous areas with representative samples collected from each. In addition, each potential ACM was evaluated for condition (evidence of deterioration, physical damage, and water damage) friability, and accessibility.

Fifty-four bulk asbestos samples, including mastics, concrete, resilient joint sheeting, joint expansion material, concrete sealant, and asphalt materials were collected from the subject bridges. No other suspected ACM was observed. The approximate sample locations are presented in Figures 2a through 2e.

Geocon's procedures for inspection and sampling are discussed below:

- Collected bulk asbestos samples after first wetting the material with a light mist of water. The samples were then cut from the substrate and transferred to a labeled container. Note that when multiple samples were collected, the sampling locations were distributed throughout the homogeneous area (spaces where the material was observed).
- Relinquished bulk asbestos samples to Advanced Technology Laboratories (ATL) who subcontracted the analyses to Scientific Laboratories of California (SCILAB), a California-licensed and Caltrans approved subcontractor, for asbestos analysis in accordance with EPA Test Method 600/M4-82-020 using polarized light microscopy (PLM) under standard chain-of-custody procedures. SCILAB is a laboratory accredited by the National Institute of Standards and Technology National Voluntary Laboratory Accreditation Program (NIST-NVLAP) for bulk asbestos fiber analysis.

Lead-Containing Paint Survey

Lead-based paint is defined by Title 17, CCR, Division 1, Chapter 8, §35033 as any surface coating that contains an amount of lead equal to, or in excess of one milligram per square centimeter (1.0 mg/cm^2) or more than half of one percent (0.5%) by weight. However, construction activities (including demolition) that disturb materials containing any amount of lead are subject to certain requirements of the California Division of Occupational Safety and Health (Cal/OSHA) lead standard contained in Title 8, CCR, Section 1532.1. Deteriorated lead-based paint is defined by Title 17, CCR, Division 1, Chapter 8, §35022 as a lead-based surface coating that is cracking, chalking, flaking, chipping, peeling, non-intact, failed, or otherwise separating from a component. Demolition of a deteriorated lead-containing paint (LCP) component would require waste characterization and appropriate disposal. Intact lead-containing paint on a component is currently accepted by most landfill facilities, however, contractor(s) should characterize painted waste materials prior to disposal.

Potential hazards exist to workers who remove or cut through lead-containing paint coatings during demolition. Dust containing hazardous concentrations of lead may be generated during scraping or cutting materials coated with lead-containing paint. Torching of these materials may produce lead oxide fumes. Therefore, air monitoring and/or respiratory protection may be required during the demolition of materials coated with lead-containing paint. Guidelines regarding regulatory provisions for construction work where workers may be exposed to lead are presented in the Title 8, CCR, Section 1532.1.

Mr. David Watts, a Certified Lead-Based Paint Inspector/Assessor and Project Monitor with the California Department of Health Services (DHS), certification nos. I-1734 and M-1734, performed the LCP survey of the five bridges on May 1, 2001. Four LCP samples were collected at the Site (two from white-painted guardrails on Bridge 49-0095 and two from silver-painted superstructure on Bridge 49-0033). Suspect LCP was not observed on the remaining three bridges.

In addition, each painted area was evaluated for evidence of deterioration such as flaking or cracking. The approximate sample locations are presented in Figures 2c and 2e.

Geocon's procedures for inspection and sampling are discussed below:

- Collected representative bulk samples of suspect LCP from Bridges 49-0095 and 49-0033 using techniques presented in the United States Department of Housing and Urban Development (HUD) guidelines.

- Relinquished LCP samples to Advanced Technology Laboratories (ATL), a California-licensed and Caltrans approved subcontractor, for chemical analysis for total lead following EPA Test Method 6010B under standard chain-of-custody procedures.

ANALYTICAL RESULTS

Asbestos

Chrysotile asbestos was detected in three samples of resilient joint sheeting collected from Bridge 49-0036 at concentrations ranging from 35% to 45%. The resilient joint sheeting is non-friable and was observed to be in good condition during the survey.

A trace level of chrysotile asbestos was reported in one sample of concrete (1920s era) used in Bridge 49-0029. However, a more detailed analysis of the same sample using EPA Point Count Methods (400 points) did not indicate the presence of asbestos. Such inconsistencies are not uncommon due to laboratory quantification limits, the occurrence of false positives, and the ubiquitous nature of asbestos in the environment.

No asbestos was detected in other suspect materials at the Site.

The laboratory asbestos results are summarized in Table 1. Copies of the laboratory report and chain-of-custody documentation are included herein as an attachment.

Lead-Containing Paint

Total lead was detected in two samples of white paint collected from guardrails on Bridge 49-0095 at concentrations of 830 and 1,300 milligrams per kilogram (mg/kg). Total lead was also detected in two samples of silver paint collected from Bridge 49-0033 superstructure at concentrations of 84,000 and 130,000 mg/kg. Soluble lead levels ranged from 0.27 to 670 mg/l. White-paint applied to guardrails on Bridge 49-0095 were observed to be in poor condition at the time of the survey. Painted areas on Bridge 49-0033 were observed to be in good condition at the time of the survey

The laboratory LCP results are summarized in Table 2. Copies of the laboratory report and chain-of-custody documentation are included herein as an attachment.

CONCLUSIONS AND RECOMMENDATIONS

Asbestos

Based on the analytical test results, Geocon recommends that resilient joint sheeting used on Bridge 49-0036 be treated as Category II, non-friable ACM. The resilient joint sheeting was observed to be in good condition.

Geocon recommends that resilient joint sheeting be separated from concrete bridge members and disposed of by a licensed and certified asbestos abatement contractor prior to concrete recycling or other activities that would disturb or render the ACM friable. The estimated quantity of resilient joint sheeting on Bridge 49-0036 is 5 square meters. For budgetary planning purposes, the approximate abatement cost for this material is $3,000.

Lead-Containing Paint

Geocon recommends that peeling/flaking LCP on Bridge 49-0095 be removed and disposed of by a licensed and certified abatement contractor in conjunction with the planned demolition work. The abatement contractor should be required to use personnel who have lead-related construction certification as supervisors or workers, as appropriate, from the California DHS for LCP removal work. Loose and peeling/flaking LCP require removal prior to demolition for waste segregation purposes: to separate potentially hazardous (Category III concentrated lead) waste from non-hazardous demolition debris (Category II intact lead-painted architectural components). For budgetary planning purposes, the approximate abatement cost for this material is $5,000.

Geocon also recommends that painted surfaces on Bridge 49-0033 be treated as lead-containing for purposes of determining the applicability of the Cal/OSHA lead standard during any maintenance, renovation, or demolition activities. This recommendation is based on LCP sample results, the age of the bridge, and the fact that lead was a common ingredient of paints manufactured before 1978 and is still an ingredient of some industrial paints.

Typically, only paints that are peeling, flaking, or have otherwise become separated from their substrates are of concern from a hazardous waste standpoint. The California Department of Toxic Substances Control (DTSC) "does not generally expect intact painted building materials to exhibit a characteristic of hazardous waste when disposed of." However, construction activities (including demolition) that disturb materials containing any amount of lead are subject to certain requirements of the Cal/OSHA lead standard contained in Title 8, CCR, Section 1532.1. Intact lead-painted building materials that are removed/demolished should not require disposal as hazardous waste; however, contractor(s) should characterize painted waste materials prior to disposal.

LIMITATIONS

The asbestos and lead-containing paint surveys were conducted in conformance with generally accepted standards of practice for identifying and evaluating asbestos and lead-containing paint in structures. However, asbestos and/or lead-containing paint may exist in areas of the structure not sampled in conjunction with this TO.

The contents of this report reflect the views of the author who is responsible for the facts and accuracy of the data presented herein. The contents do not necessarily reflect the official views or policies of the State of California or the Federal Highway Administration. This report does not constitute a standard, specification, or regulation.

If you have any questions concerning the contents of this report, or if we may be of further service, please contact the undersigned at your convenience.

Sincerely,

GEOCON CONSULTANTS INC.

David A. Watts, CAC
Project Scientist

Richard W. Day, CEG, CHG
Regional Manager

DAW:RWD:daw

(5) Addressee

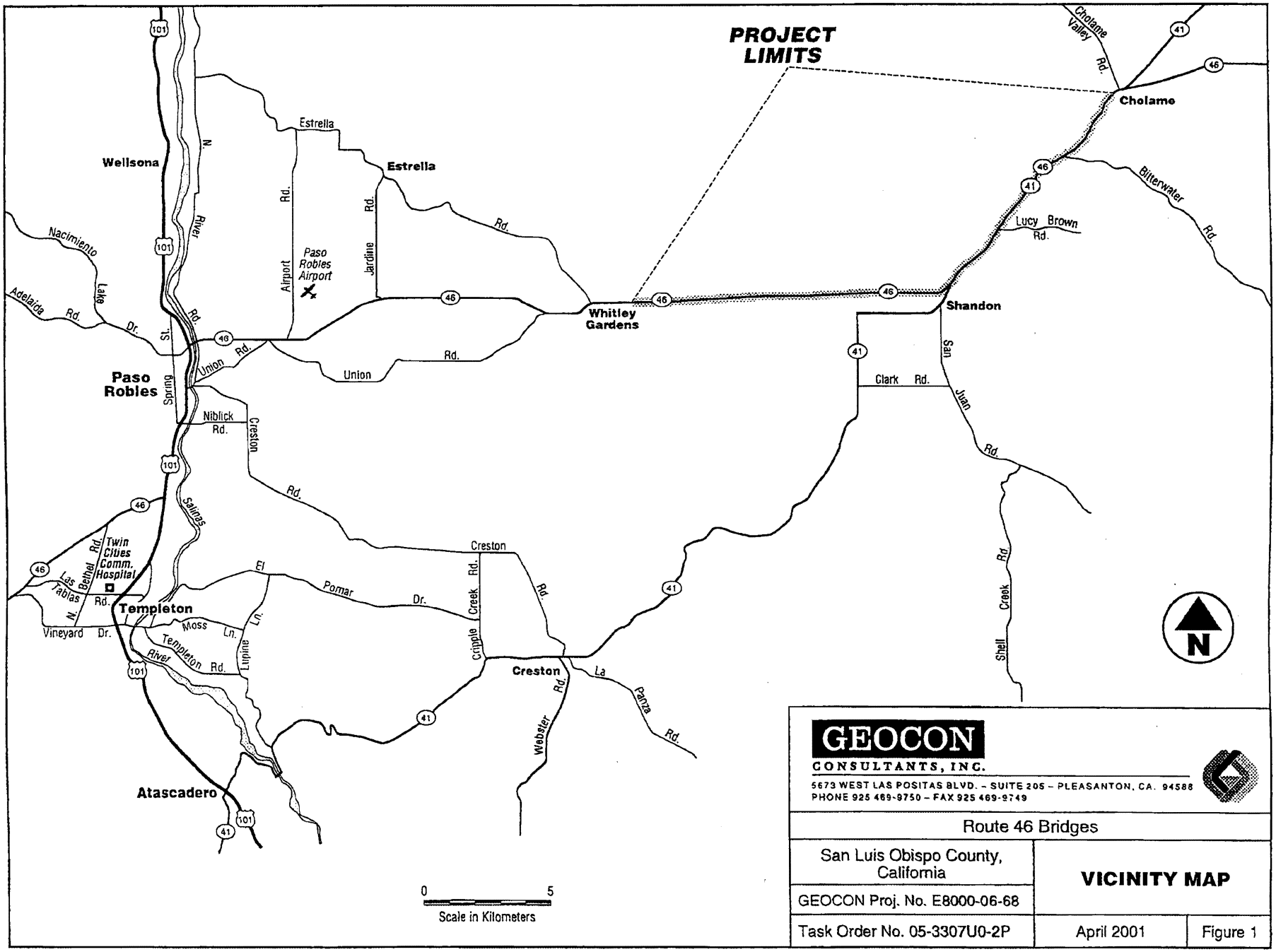

GEOCON
CONSULTANTS, INC.
5673 WEST LAS POSITAS BLVD. – SUITE 205 – PLEASANTON, CA. 94588
PHONE 925 469-9750 – FAX 925 469-9749

Route 46 Bridges

San Luis Obispo County, California

GEOCON Proj. No. E8000-06-68

Task Order No. 05-3307U0-2P

VICINITY MAP

April 2001

Figure 1

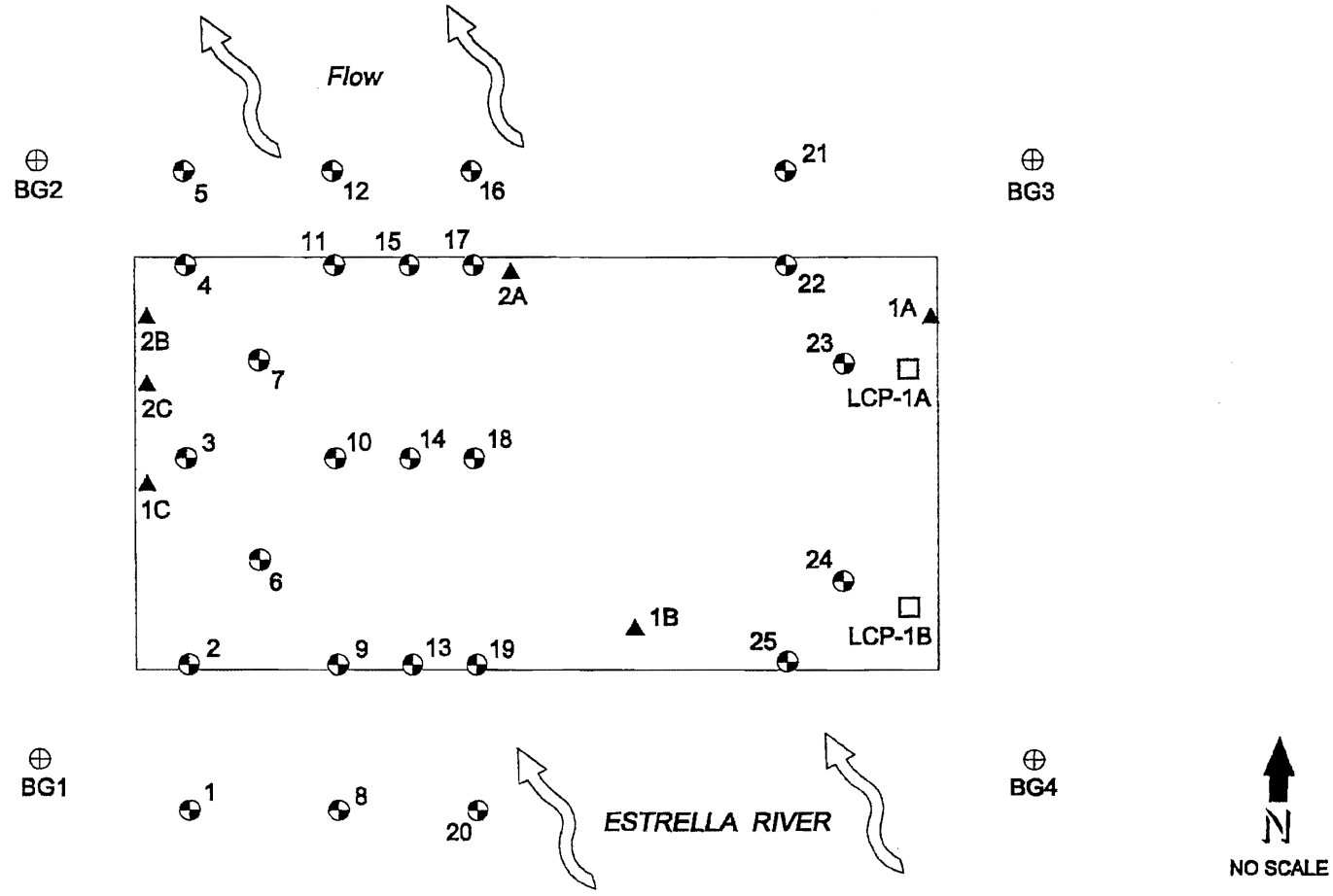

LEGEND:

- Approximate Soil Sample Location
- Approximate Background Soil Sample Location
- Approximate Asbestos Sample Location
- Approximate Paint Sample Location

GEOCON
CONSULTANTS INC.
2356 RESEARCH DRIVE, LIVERMORE, CALIFORNIA, 94550
PHONE 925 371-5900 - FAX 925 371-5915

Route 46 PM 39.95 to 54.77

San Luis Obispo County, California

SITE PLAN
Bridge 49-0033

GEOCON Proj. No. E8000-06-68

Task Order No. 05-3307U0-2P | June 2001 | Figure 2e

ASBESTOS

TABLE 1
SUMMARY OF ANALYTICAL LABORATORY TEST RESULTS - ASBESTOS
ROUTE 46 BRIDGES
SAN LUIS OBISPO COUNTY, CALIFORNIA

SAMPLE I.D.	BRIDGE	FRIABILITY	MATERIAL DESCRIPTION/CONDITION	APPROXIMATE QUANTITY (SQUARE METER OR LINEAR METER)	ASBESTOS EPA 600/M4-82-020 (TYPE AND % BY WEIGHT)
95-1A	BRIDGE 49-0095	NONFRIABLE	CONCRETE/GOOD	NQ	ND
95-1B					ND
95-1C					ND
SIMM-1A	SIMMONS CREEK BRIDGE	FRIABLE	CONCRETE SEALANT/POOR	NQ	ND
SIMM-1B					ND
SIMM-1C					ND
SIMM-2A		NONFRIABLE	CONCRETE/POOR	NQ	ND
SIMM-2B					ND
SIMM-2C					ND
SIMM-3A		NONFRIABLE	ASPHALT FILL MATERIAL/POOR	NQ	ND
SIMM-3B					ND
SIMM-3C					ND
SIMM-4A		NONFRIABLE	ASPHALT ROAD SURFACE/POOR	NQ	ND
SIMM-4B					ND
SIMM-4C					ND
SIMM-5A		NONFRIABLE	ASPHALT AND FIBER FILL MATERIAL/POOR	NQ	ND
SIMM-5B					ND
SIMM-5C					ND
33-1A	BRIDGE 49-0033	NONFRIABLE	CONCRETE/GOOD	NQ	ND
33-1B					ND
33-1C					ND
33-2A		NONFRIABLE	JOINT EXPANSION MATERIAL/GOOD	NQ	ND
33-2B					ND
33-2C					ND

Notes: ND = Not detected
NQ = Not quantified
* = Sample analyzed using EPA Point Counting Methods

TABLE 2
SUMMARY OF ANALYTICAL LABORATORY TEST RESULTS - LCP
ROUTE 46 BRIDGES
SAN LUIS OBISPO COUNTY, CALIFORNIA

SAMPLE I.D.	PAINT COLOR	BRIDGE	APPROXIMATE QUANTITY (SQUARE METERS)	CONDITION	TOTAL LEAD (mg/kg)	SOLUBLE LEAD (STLC - mg/L)	SOLUBLE LEAD (TCLP - mg/L)
95-LCP-1A	WHITE	49-0095 (GUARDRAILS)	30	50% PEELING	830	670	Not analyzed
95-LCP-1B					1,300	Not analyzed	0.27
33-LCP-1A	SILVER	49-0033 (SUPERSTRUCTURE)	2,000	GOOD (INTACT)	84,000	Not analyzed	12
33-LCP-1B					130,000	Not analyzed	17

Notes: mg/kg = Milligrams per kilogram following EPA Test Method 6010B
STLC - mg/L = Soluble Threshold Lead Concentration - milligrams per liter following EPA Test Method 7420
TCLP = Toxicity Characteristic Leaching Procedure

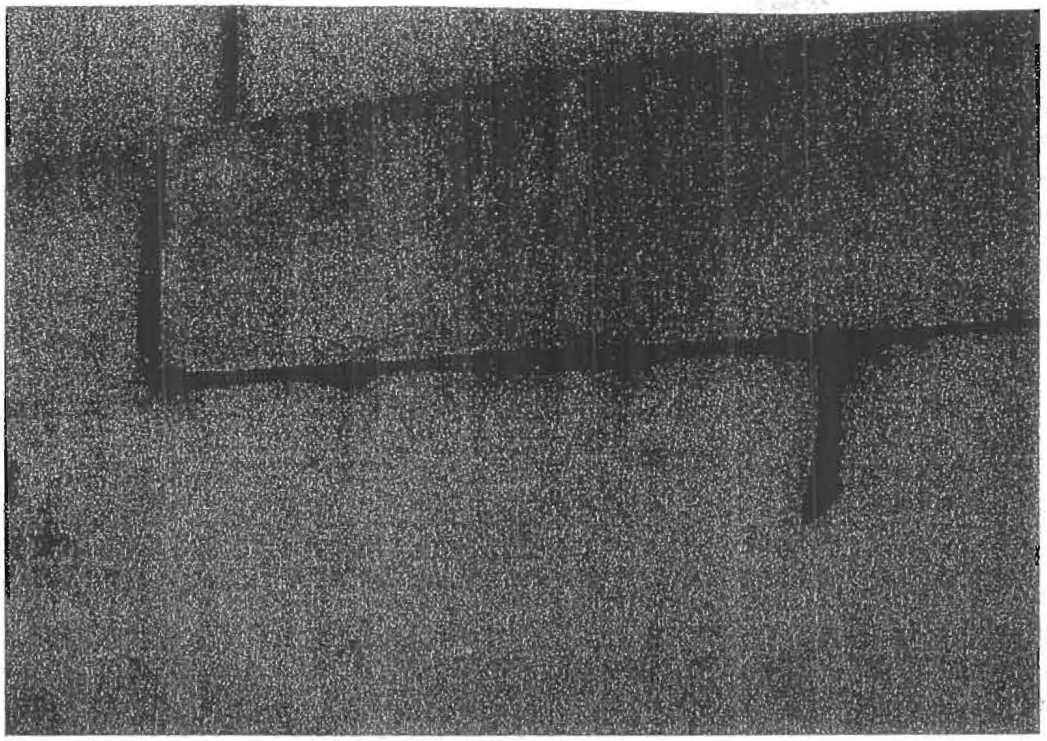

Photo No. 19 Bridge 49-0033 Concrete & Joint Expansion Material

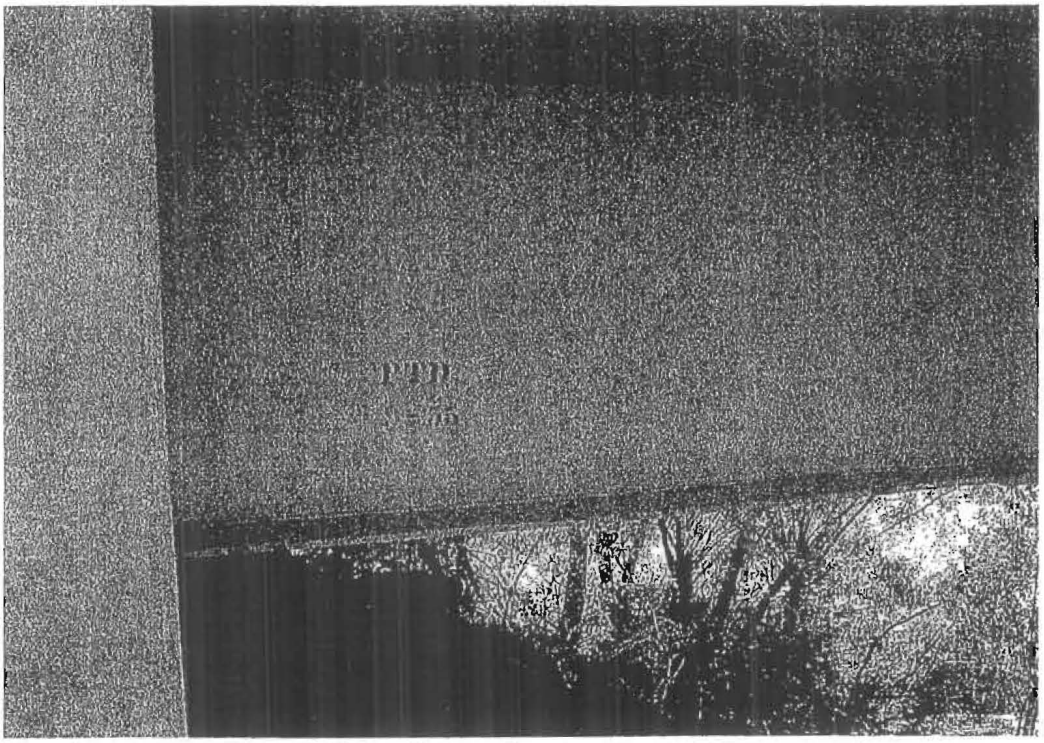

Photo No. 20 Bridge 49-0033 Silver-Painted Structural Steel

SITE PHOTOS NO. 19 & 20

GEOCON
CONSULTANTS, INC.
5672 WEST LAS POSITAS BLVD. – SUITE 205 – PLEASANTON, CA. 94588
PHONE 925 469-9750 – FAX 925 469-9749

Route 46 Bridges		
GEOCON Proj. No. E8000-06-68	San Luis Obispo County, California	
Task Order No. 05-3307U0-2P	June 2001	

FOR CONTRACT NO.: 05-330754

INFORMATION HANDOUT

MATERIALS INFORMATION

7. Foundation Report for Estrella River Bridge, Bridge Number 49-0255 dated April 2, 2012

ROUTE: 05-SLO-46-PM40.0

FOR CONTRACT NO. 05-330754

STATE OF CALIFORNIA
DEPARTMENT OF TRANSPORTATION

INFORMATION HANDOUT

MATERIALS INFORMATION

INDEX

FOUNDATION REPORT FOR ESTRELLA RIVER BRIDGE
BRIDGE NUMBER 49-0255
April 2, 2012

ROUTE: 05-SLO-46-40.0

State of California Business, Transportation and Housing Agency

Department of Transportation

M e m o r a n d u m

Flex your power!

To: FRITZ HOFFMAN
Branch Chief
Division of Engineering Services, Structure Design
Office of Bridge Design – Central, Branch 6

Attn: Don Nguyen-Tan
Project Engineer

Date: April 2, 2012

File: 05-SLO-46-39.9/40.1
Project ID: 0500020217
EA 05-330751
Estrella River Bridge (Replace)
Bridge No. 49-0255

From: **DEPARTMENT OF TRANSPORTATION**
DIVISION OF ENGINEERING SERVICES
GEOTECHNICAL SERVICES

Subject: Foundation Report

A Foundation Report (FR) is provided for the above referenced project per your request, dated April 25, 2011. The recommendations presented herein are based on reviews of published data, site reconnaissance, subsurface investigations, and laboratory testing. The purpose of this report is to document subsurface geotechnical conditions, provide analyses of anticipated site conditions as they pertain to the project described herein, and to recommend design and construction criteria for the structure portions of the project. This report also establishes a geotechnical baseline to be used in assessing the existence and scope of differing site conditions.

Existing Facilities and Proposed Improvements

Route 46 in the project area is a two-lane conventional highway with 12-foot travel lanes and 8-foot shoulders. It is one of the few east-west routes connecting Interstate 5 and U.S. Highway 101, and is a vital link between the Central Coast and Central Valley areas of California. The route primarily serves interregional and interstate traffic, although it is used daily by residents of the communities of Paso Robles, Cholame, Shandon, and Whitley Gardens. It is the only east-west route between Route 166 to the south and Route 156/152 to the north that can facilitate the movement of goods by truck.

Route 46 in the project area is currently under construction to convert the highway to a four-lane divided expressway. The widening is being accomplished principally by adding two new lanes for eastbound traffic to the south of the existing highway. The existing lanes will be rehabilitated, and will ultimately serve as the travel lanes for westbound traffic. The completed roadway will have 5-foot inside shoulders, two 12-foot lanes, and 10-foot outside shoulders for each direction of travel. Median widths will vary between 61 and 82 feet, and turn channelization will be provided to access

the rural roads that intersect the highway. Existing access to State Route 46 from private driveways will be channeled onto public roads that provide highway access.

Route 46 will cross the Estrella River on a new alignment, south of the existing highway. The existing roadway will be relinquished to the County of San Luis Obispo and will serve as a frontage road for local traffic. The existing Estrella River Bridge, Bridge No. 49-0033 is deteriorating due to alkali-silica reaction (ASR) between the cement and aggregate of its concrete. The bridge is being replaced prior to being relinquished to the County.

The existing 4-span Estrella River Bridge consists of a reinforced concrete deck on steel plate girders supported by reinforced concrete pier walls and reinforced concrete open seat abutments. The new bridge will have two spans and will consist of cast-in-place post-tensioned concrete box girders supported by seat type abutments and a two-column bent.

The following datum was used to reference horizontal and vertical positions of the proposed structure:

- Horizontal: North American Datum of 1983 (NAD83(92))
- Vertical: National Geodetic Vertical Datum of 1929 (NGVD29)

Pertinent Reports and Investigations

The following publications were used to assist in the assessment of site conditions:

1. *Caltrans ARS Online*.

2. *Geologic Map of the San Luis Obispo County, California*, Compiled by Lew Rosenberg.

3. *Geotechnical Impact of Proposed Project: US Route 46 Widening, San Luis Obispo County, 05-SLO-46-32.2/36.4*, PSC Associates, Inc., 1992.

4. *Geotechnical Services Design Manual, Version 1.0*, Division of Engineering Services, August 2009.

5. *Structures Final Hydraulic Report, Estrella River*, Caltrans Structure Hydraulics and Hydrology, John Pham, June 15, 2011.

Field Investigation and Testing Program

Three geotechnical borings were performed to support foundation design recommendations for the proposed bridge. The maximum depth of investigation was approximately 152 feet. The borings were advanced using a self-cased wireline drilling apparatus that provided continuous soil samples. Soils were visually classified in accordance with the Caltrans Soil and Rock Logging, Classification, and Presentation Manual (June 2010). Standard penetration tests (SPT), ASTM test

method 1586, were performed at approximately 5-foot depth intervals to estimate in-place density of the native soil. Empirical correlations of soil strength parameters with SPT blow counts were used to estimate strength parameters of in-situ cohesionless soils. Pocket penetrometer measurements of unconfined compressive strength were used to estimate the undrained shear strength of clay samples.

Table 1: 2011 Drilling Summary

Boring No.	Completion Date	Drill Rig Type	Hammer Type	Hammer Efficiency (%)	Location		Ground Surface Elevation (ft)	Boring Depth (ft)
					Station ("FR-2" Line)	Offset		
RC-11-001	6/7//2011	CME-85	Automatic	68	25+28	30' Rt.	865.1	123.5
RC-11-002	6/8/2011	CME-85	Automatic	68	28+92	10' Lt	859.3	123.5
RC-11-003	7/28/2011	CS-2000	Automatic	97	26+77	21' Rt.	833.9	151.8

Laboratory Testing Program

Soil samples obtained during the subsurface investigation were submitted to the Headquarters Geotechnical Laboratory for mechanical analyses, corrosion potential testing, and determination of Atterburg limits.

Site Conditions

Topography and Geology

The project is located near the southern end of the Salinas Valley in the Coast Ranges geomorphic province. The terrain consists of dissected plains surrounded by low to moderately steep hills. The north - northwesterly flowing Estrella River is the main drainage feature in the project area. It crosses Route 46 at approximately mile post 40.0. The Estrella River is a tributary to the Salinas River, which drains to Monterey Bay northwest of the project area.

Roadway elevations along the existing highway alignment within the project limits range between 880 feet and 862 feet above mean sea level.

The region is divided into three geologic blocks separated by the San Andreas Fault and the Sur-Naciemento Fault Zone. The Diablo Range is in the block located northeast of the San Andreas Fault. The Gabilan Range and the Salinas Valley are located in the central block. The Santa Lucia Range is located in the western block. "Basement" rocks in the western and eastern blocks consist of Franciscan Assemblage rocks and a complex of metamorphic units. Granitic intrusions form the bedrock in the central block, beneath the project area.

Pre-Cretaceous age rocks of the Sur Series are the oldest rocks in the area. These have been intruded by Cretaceous-age granite or granodiorite. This metamorphic-granitic complex is confined to the central fault block, beneath the Salinas Valley and Gabilan Range. Sedimentary rock formations and some volcanic units were deposited on top of the basement rocks during the Cretaceous and Tertiary Periods. Subsequently, during the Quaternary Period, clastic sediments were deposited primarily in marine/transgression environments, which alternated with periods of uplift/regression during which erosion and subareal deposition occurred. The latest uplift (and/or drop in sea level) occurred in Late Pliocene to Mid-Pleistocene time, leaving the sediments at nearly their present-day elevations. Some of these formations have been folded and faulted by the same compressive forces that produced the San Andreas Fault system. Present-day topographic surface features and drainage patterns were established by Mid-Pleistocene time.

Dibblee (1971) mapped the bedrock beneath the project area as granitic rock ("gr"≅quartz granodiorite), which intruded and crystallized during Cretaceous time, 60 to 80 million years ago. Paso Robles Formation ("Q_{Tp}"), deposited in Late Pliocene and early Pleistocene time (2 to 3 million years ago), overlies the granitic bedrock. The Paso Robles Formation consists of easily eroded sands and gravels with lesser amounts of silts and clay, deposited by running water. The formation varies in thickness, from a few feet thick on top of the granitic ridges west of Paso Robles, up to several hundred feet thick along the existing Route 46 alignment in the eastern portion of the project area. Bedding within the Paso Robles Formation is not usually apparent. However, the few available exposures suggest that bedding dips generally toward the north at low angles (1 to 2 degrees): Dibblee mapped the axis of a gentle anticline southwest of the project area.

Old river terrace deposits ("Q_a" and "Q_{oa}"), composed of granitic gravel, sand, silt, and clay, line the sides of the Estrella River stream valley where it crosses the proposed highway alignment. Modern stream channel deposits ("Q_{rs}") composed of gravel, sand, silt, and clay are present in the Estrella River channel.

Climate

The project is located in the Paso Robles Hills and Valleys sub-region of the Central California Coast Ranges ecological section. The climate in the project area is semi-arid, with hot summers and cool winters. The mean annual precipitation is 12 to 18 inches and the mean annual air temperature is about 59° F. Winters are generally mild with occasional single digit lows and average highs in the 60's. The average high temperature in the summer is 91° F, with high temperatures often in the 100's. Nearly all precipitation accumulates during Pacific storms between October and May, with the majority falling during winter months. Vegetation in the project area primarily consists of grasslands and oak trees, with willow trees growing near sources of water.

Soil Conditions

Boring RC-11-001 encountered approximately 20 feet of very stiff clay and sandy clay overlying hard clay and dense to very dense poorly graded sand and clayey sand. Boring RC-11-002 encountered almost 60 feet of very loose to medium dense sand and clayey sand overlying hard clay and dense to very dense sand and silt. Boring RC-11-003 encountered approximately 20 feet of loose sand and silt overlying hard clay and very dense sand. The observed stratigraphy is consistent with geologic maps of the area, which show Pleistocene aged alluvial soils of the Paso Robles formation overlain by more recent alluvial deposits from the drainages. Stratigraphy comprised of layers of variable thickness and lateral extents are indicative of the alluvial environment in which they were deposited. Particle size distribution, layer thickness, and lateral extent of deposition change as the velocity of water depositing the materials varies.

Groundwater

Boring R-11-003 was instrumented as an open-standpipe monitoring well by installing 1-1/2" slotted PVC pipe in the hole and backfilling the annulus with washed #8 sand. The well intercepted artesian groundwater at approximately elevation 731 feet. The static head was measured at 0.4' above the ground surface the day the well was installed, July 28, 2011. That level equates to a groundwater elevation of 834.3 feet. A subsequent reading on September 16, 2011 indicated that the static head dropped to 3.9 feet below the ground surface, corresponding to an elevation of 830.0 feet.

The groundwater study conducted for the new Route 46 bridges over the Estrella River in 2008 and 2009 indicated that groundwater elevations in the river channel ranged between 828 feet and 835 feet when water was not actually flowing in the river.

Scour Evaluation

The following scour data was provided by Structures Hydraulics and Hydrology:

Table 1: Scour Summary

Scour Type	Scour Depth (feet)
Degradation	3.75
Contraction Scour	2.73
Local Scour	12.60
Total Potential Scour in 75 years	19.08

The following table provides scour elevations corresponding to different load combinations:

Table 2: Scour Elevations

Load Combination	Scour Type	Scour Elevation (feet)
Service Limit State	100% Degradation + 100% Contraction Scour	822.42
Strength Limit State	100% Degradation + 100% Contraction Scour + 50% Local Scour	816.12
Extreme Event I Limit State	100% Degradation	825.15
Extreme Event II Limit State	100% Degradation + 100% Contraction Scour + 100% Local Scour	809.82

The Estrella River Bridge abutments will be protected against scour with rock slope protection, so scour was not considered in calculating pile tip elevations at those supports.

Corrosion Evaluation

Representative soil samples taken during the foundation investigation were tested for corrosion potential. The Department considers a site corrosive to foundation elements if one or more of the following conditions exist for the representative soil and/or water samples taken at the site:

- Chloride concentration is greater than or equal to 500 ppm
- Sulfate concentration is greater than or equal to 2000 ppm
- The pH is 5.5 or less

Since resistivity serves as an indicator parameter for the possible presence of soluble salts, tests for sulfate and chloride are usually not performed unless the resistivity of the soil is 1,000 ohm-cm or less.

Table 3: Corrosion Test Summary

Boring	Depth	SIC Number	Minimum Resistivity (Ohm-Cm)	pH	Chloride Content (ppm)	Sulfate Content (ppm)
RC-11-001	13'-15'	C494601	1241	7.97	N/A	N/A
	27'-30'	C494602	1011	7.24	N/A	N/A
	34.5'-35.5''	C494603	3995	8.44	N/A	N/A
	38.5'-40'	C494604	1304	8.65	N/A	N/A
	58'-60.5'	C494605	1774	8.65	N/A	N/A
	109.5'-111'	C494606	1123	7.99	N/A	N/A
RC-11-002	37'-38.5'	C494607	649	7.90	14	49
RC-11-003	57.5'-59'	C494609	1815	8.87	N/A	N/A
	67.5'-68.5'	C494611	1099	7.52	4	35
	70.3'-71.8'	C494612	2546	8.32	N/A	N/A
	80.3'-81.8'	C494613	4131	8.60	N/A	N/A
Corrosive if:			**≤ 1000**	**≤ 5.5**	**≥ 500**	**≥ 2000**

Based on corrosion test results, and because the project area is not within 1000 feet of salt or brackish water, the site is considered non-corrosive.

Seismic Recommendations

The project is located within a seismically active region of California. There are several earthquake faults in close proximity to the project area. Table 1 lists the active and potentially active faults in the project vicinity as described in Caltran's *2007 Fault Database*. Corresponding Moment Magnitudes and distances to the bridge site are also given. A fault map is included in the attachments to this report.

Table 4: Active and Potentially Active Faults

Fault	***Moment Magnitude of Maximum Credible Earthquake*** [1]	***Type of Fault*** [2]	***Distance to Fault from Project Area (kilometers)***
Rinconada Fault Zone (San Marcos section)	7.5	RLSS	17.1
San Andreas Fault Zone (Parkfield section)	7.9	RLSS	21.2
Oceanic Fault Zone	7.4	R	35.2
West Huasna Fault Zone	7.0	RLSS	39.6
Cambria Fault	7.0	N	37.9
Los Osos Fault Zone (Irish Hills section)	7.0	R	46.3
Los Osos Fault Zone (Lopez Reservoir section)	7.0	R	50.7
San Simeon-Hosgri Fault Zone (San Simeon Fault)	7.5	RLSS	56.3
Southern San Luis Range Fault Zone	7.2	R	56.9
San Simeon-Hosgri Fault Zone (Hosgri Fault)	7.5	RLSS	61.1

A design response spectrum for the project area was estimated using the *2009 Caltrans Seismic Design Procedure.* The procedure was developed to calculate the minimum seismic design requirements for bridges on State highways. The method calculates design response spectra over a range of periods. The design response spectrum is based on the envelope of a deterministic and a probabilistic spectrum. The deterministic spectrum is calculated as the arithmetic average of median response spectra computed using the Chiou & Youngs and Campbell & Bozorgnia ground motion prediction equations (CY-CB GMPE). These equations are applied to all faults in or near California considered to be active in the last 700,000 years (late Quaternary age) and capable of producing a moment magnitude earthquake of 6.0 or greater.

The probabilistic spectrum is obtained from the 2008 USGS Seismic Hazard Map for the 5% in 50 years probability of exceedance (or 975 year return period). The spectral values are adjusted with a soil amplification factor based on an average of the Boore-Atkinson (2008), Campbell Bozorgnia (2008), and Chiou-Youngs (2008) ground motion prediction models. For sites underlain by soils having an average shear wave velocity for the upper 30 meters of soil (V_{S30}) of less than 300 meters per second, the 2009 USGS Probabilistic Seismic Hazard Analysis Interactive Deaggregation Tool is used to develop the probabilistic spectrum.

[1] According to Caltrans *2007 Fault Database*
[2] LLSS=left-lateral strike-slip fault; RLSS=right-lateral strike-slip fault; R=reverse fault; N=normal fault

The design response spectrum was governed by the probabilistic spectrum with a soil amplification factor for a V_{S30} of 260 meters per second. The V_{S30} value was determined from a P-S log of boring RC-11-003. The final design response spectrum is provided in the attachments to this report.

No known active or potentially active faults project towards or cross the highway alignment within the project limits. Therefore, there is low potential for surface fault rupture to occur and no mitigation efforts are necessary.

Liquefaction is a near-total loss of soil strength due to an increase in pore water pressure during cyclic loading, such as occurs during an earthquake. Loose sands and gravels with 35 percent fines or less that have the potential of being saturated are susceptible to liquefaction. Generally, the younger and looser the sediment, and the shallower the water table, the more susceptible the soil is to liquefaction. Sediments most susceptible to liquefaction include historical and late Holocene age river channel and flood plain deposits, and poorly compacted fills. Bedrock and dense soils, including well-compacted fills have a low susceptibility to liquefaction. Liquefaction is most prevalent in areas where groundwater lies within 30 feet of the ground surface; liquefaction rarely occurs in areas with groundwater deeper than 50 feet.

The potential for liquefaction in the area of the Estrella River Bridge is moderate to high. There is a high potential for strong ground shaking, groundwater is shallow, and layers of loose granular soils are present in the upper 30 feet of the Estrella River channel.

Slope Stability

The existing bridge approach embankments were evaluated for global stability by modeling the slopes in SLOPE/W, a slope stability computer program. Factors of safety were calculated using circular failure analyses and block failure analyses. A design factor of safety of 1.5, the minimum factor of safety for a Caltrans critical facility, was specified for a static analysis. A factor of safety of 1.1 was specified for a dynamic analysis of slope stability with an applied horizontal seismic load of 0.2 g. Caltrans Guidelines for Foundation Investigations and Reports dated June 2002 recommends using one-third of the horizontal (PGA) with an upper limit of 0.2 g for the seismic assessment of slopes and retaining systems with a minimum factor of safety of 1.1.

Embankment and foundation soil strength parameters were estimated from SPT blow counts in cohesionless soils, and pocket penetrometer measurements of unconfined compressive strength in cohesive soils. A phreatic water surface was modeled in the slope stability analysis based on ground water levels observed during the subsurface investigation. Traffic loading was modeled in the analysis by applying a 240-psf surcharge over the paved portion of the embankment, as specified in Caltrans Standard Plans.

The approach embankment at Abutment 3 consists of loose clayey sand founded on approximately 25 feet of very loose to medium dense poorly graded sand, clayey sand, and well graded sand; and

very stiff fat clay overlying hard lean clay and dense to very dense well graded sand, silty sand, silt with sand, and poorly graded sand with silt. Slope stability analyses indicate that the embankment in its existing condition does not meet the minimum factor of safety requirements.

Foundation Recommendations

It is recommended that the approach embankment at Abutment 3 be reconstructed to elevation 832 feet. The horizontal limits of the removal area should encompass the full width of the embankment footprint from the toe of the end slope to 150 feet east of the abutment. Native material, moisture conditioned and compacted to 95% relative compaction, can be used to reconstruct the embankment. The material shall be placed in accordance with Section 19-6, "Embankment Construction," of the Standard Specifications and the construction details shown in the roadway plans.

Approach embankment heights of approximately 26 feet at Abutment 1 and 27 feet at Abutment 3 are shown on the General Plan. Negligible settlement is anticipated at Abutment 1 because the proposed embankment height is not significantly higher than the existing height. Minimal settlement is anticipated at Abutment 3 because the reconstructed approach embankment will be denser than the existing embankment. A 30-day fill delay period is recommended at the approach embankment to Abutment 3 prior to driving piles to allow for consolidation. The fill delay period will minimize down-drag on the pile foundations by ensuring that most of the consolidation of the foundation soils will occur before installation of the piles. It is recommended that the magnitude and rate of settlement of the fill be monitored by periodically reading the elevation of surface monuments during the fill delay period.

Caltrans Standard Plan driven open-ended pipe piles are the recommended foundation type at the abutments. Class 140, Alternative W piles are proposed (Caltrans Standard Plans dated May 2010). 16" CIDH piles are recommended at the abutment wingwalls. 96" CIDH piles are the recommended foundation type at the bridge bents.

Prior to driving piles at both abutments, holes should be predrilled through the approach embankments in accordance with Section 49-1.06, "Predrilled Holes", of the Caltrans Standard Specifications. The holes at Abutment 1 should extend to elevation 835 feet. The holes at Abutment 3 should extend to elevation 832 feet.

The calculation of axial geotechnical capacity of the 16" CIDH piles at the abutment wingwalls assumed that the shafts would derive their resistance solely from skin friction. Because the foundation soils have high clay content, an upper exclusion zone of one pile diameter was used in the calculation of pile length to account for side resistance lost due to desiccation cracking. A lower exclusion zone of one pile diameter was used to account for side resistance lost due to horizontal stress loss under loading. Calculations of lateral resistance were performed by Office of Bridge

Design – Central, Branch 6 using LPILE. They provided the pile tip elevations reported in the Pile Data Table.

The calculation of geotechnical capacity at Bent 2 assumed that an optional construction joint would be allowed below the embedded column rebar cage, and that the permanent casing needed to construct the joint would provide no geotechnical resistance. The casing was assumed to extend 3 column diameters (16.5 feet) below the pile cut-off elevation. The following table summarizes the zones where the drilled shafts are assumed to develop skin friction. Liquefiable soils are present to approximately elevation 814 feet. The bottom of casing for the optional construction joint is below the liquefiable zone, so the top of the skin friction zone corresponds with the elevation at the bottom of the casing.

Scour, Casing, and Skin Friction Zones

Support		Limit State Scour Elevations			Casing		Skin Friction Zone	
		Extreme (feet)	Strength (feet)	Service (feet)	Top Elevation (feet)	Bottom Elevation (feet)	Top Elevation (feet)	Bottom Elevation (feet)
Bent 2	Left	825	816	822	828.5	812	812	741.5
	Right	825	816	822	828.5	812	812	741.5

A resistance factor of 0.7 was used in calculating the required nominal resistance for the bent foundations at the strength limit state. That high a resistance factor is justified because we have data from a pile load test on a drilled shaft at the realigned Estrella River Bridge, and the subsurface stratigraphy at the current project site is very similar to the site of the test pile. The 0.7 resistance factor accounts for variability in soil strength between the project sites and potential differences in construction and inspection practice between the projects.

Pile tip elevations for lateral loads at the bents were provided by Office of Bridge Design – Central, Branch 6 based on LPILE analyses.

Abutment Foundation Design Recommendations

Support	Pile Type	LRFD Service-I Limit State Load Per Support (kips)		LRFD Service-I Limit State Total Load per Pile (Compression) (kips)	Nominal Resistance (kips)	Cut-off Elevation (ft)	Design Tip Elevations (ft)	Specified Tip Elevation (ft)	Nominal Driving Resistance Required (kips)
		Total	Permanent						
Abut. 1	Class 140 Alt. W	2141	1802	141	280	848.0	801.0 (a) 840.0 (c)	801.0	280
Abut. 3	Class 140 Alt. W	2141	1802	141	280	840.5	791.5 (a) 814.5 (c)	791.5	280

Notes:

1) *Design tip elevations are controlled by: (a) Compression and (c) Settlement, respectively.*
2) *The specified tip elevation shall not be raised if controlled by settlement.*

Abutment Wingwall Design Recommendations						
Support	Pile Type	Working Stress Design Load Per Pile (Compression) (kips)	Nominal Resistance (kips)	Cut-off Elevation (ft)	Design Tip Elevations (ft)	Specified Tip Elevation (ft)
Abut 1 Left WW	16" CIDH	31	60	861.9	835.9 (a) 834.9 (d)	834.9
Abut 1 Right WW	16" CIDH	31	60	861.4	835.4 (a) 834.4 (d)	834.4
Abut 3 Left WW	16" CIDH	31	60	854.1	839.1 (a) 835.1 (d)	835.1
Abut 3 Right WW	16" CIDH	31	60	854.2	839.2 (a) 835.2 (d)	835.2

Notes:

1) *Design tip elevations are controlled by: (a) Compression and (d) Lateral Load, respectively.*
2) *The specified tip elevation shall not be raised.*

Bent Foundation Design Recommendations										
Support	Pile Type	Service-I Limit State Load Per Support (kips)	Total Permissible Support Settlement (inches)	Required Factored Nominal Resistance (kips)				Cut-off Elevation (ft)	Design Tip Elevations (ft)	Specified Tip Elevation (ft)
				Strength Limit		Extreme Limit				
				Comp. (φ=0.7)	Tension (φ=0.7)	Comp. (φ=1)	Tension (φ=1)			
Bent 2 Left	96" CIDH	2020	2	3226	0	2482	0	828.5	741.5 (a-I) 778.5 (a-II) 775.5 (c) 742.5 (d)	741.5
Bent 2 Right	96" CIDH	2020	2	3226	0	2482	0	828.5	741.5 (a-I) 778.5 (a-II) 775.5 (c) 742.5 (d)	741.5

Notes:

1) *Design tip elevations are controlled by: (a-I) Compression (Strength Limit), (b-I) Tension (Strength Limit), (a-II) Compression (Extreme Event), (b-II) Tension (Extreme Event), (c) Settlement, and (d) Lateral Load, respectively.*
2) *The specified tip elevation shall not be raised.*

Pile Data Table

Location	Pile Type	Nominal Resistance (kips)		Cut-off Elevation (ft)	Design Tip Elevation (ft)	Specified Tip Elevation (ft)	Nominal Driving Resistance (kips)
		Compression	Tension				
Abut. 1	Class 140 Alt. W	280	N/A	848.0	801.0 (a) 840.0 (c)	801.0	280
Abut 1 Left WW	16” CIDH	60	0	861.9	835.9 (a) 834.9 (d)	834.9	N/A
Abut 1 Right WW	16” CIDH	60	0	861.4	835.4 (a) 834.4 (d)	834.4	N/A
Bent 2 Left	96” CIDH	4610	0	828.5	741.5 (a) 775.5 (c) 742.5 (d)	741.5	N/A
Bent 2 Right	96” CIDH	4610	0	828.5	741.5 (a) 775.5(c) 742.5 (d)	741.5	N/A
Abut. 3	Class 140 Alt. W	280	N/A	840.5	791.5 (a) 814.5 (c)	791.5	280
Abut 3 Left WW	16” CIDH	60	0	854.1	839.1 (a) 835.1 (d)	835.1	N/A
Abut 3 Right WW	16” CIDH	60	0	854.2	839.2 (a) 835.2 (d)	835.2	N/A

Notes:

1) *Design tip elevations for Abutments are controlled by: (a) Compression, (c) Settlement.*
2) *Design tip elevations for Bents are controlled by: (a) Compression, (b) Tension, (c) Settlement, and (d) Lateral Load.*
3) *The specified tip elevation shall not be raised.*

Construction Considerations

Abutment Locations

For piles that are driven to the specified tip elevation and do not indicate the nominal resistance per the method prescribed in Section 49-1.08 of the Standard Specifications, the pile shall be re-struck with the same impact hammer not less than 48 hours after completion of the initial installation.

Prior to the monitored restrike, the pile hammer should be warmed-up by impacting another pile or object a minimum of 10 combustion cycles.

The Office of Geotechnical Design North is to be contacted if the constructed pile tip elevation is above the specified tip elevation.

Abutment Wingwalls

Depending on the time of year of construction and the moisture content of the soil, caving is possible while drilling the holes for the CIDH piles at the abutment wingwalls. The contractor may need to employ temporary casing or other construction measures to control caving.

Bent Locations

Groundwater was encountered during the subsurface investigation and it is anticipated that the contractor will encounter groundwater during CIDH pile construction. Refer to the groundwater section of this report and the LOTB for details regarding groundwater elevations. Groundwater elevations conveyed by this report and on the LOTB reflect groundwater levels at the time of the subsurface investigation. Groundwater elevations are subject to seasonal fluctuations, and may occur higher or lower depending on the time of construction.

Artesian groundwater conditions were observed at approximately elevation 731 feet in geotechnical boring RC-11-003. The drilled shafts at Bent 2 will tip within 9 feet of that elevation. The geotechnical boring was not conducted at the exact location of the shafts, so it is possible that artesian groundwater may be encountered during drilling of the shafts. The static head of the artesian groundwater will likely be above ground surface elevation at the location of the shafts.

The artesian groundwater encountered during the subsurface investigation for the new Route 46 bridges over the Estrella River had sufficient pressure to carry sands to the surface while drilling some of the exploratory borings. The contractor should anticipate having to use slurry displacement methods to construct the CIDH piles in order to prevent sands from heaving into the drilled holes. Due to concerns relating to filter cake buildup, the use of bentonite slurry shall not be allowed.

The computation of geotechnical capacity of the drilled shafts included a contribution of resistance from end bearing. Care shall be taken to ensure proper construction and cleanout of the drilled excavation bases. Bases of completed foundation excavations shall be level and free of loose material to provide a firm bearing foundation for the CIDH piles. The Engineer will use the Department's Shaft Inspection Device (SID) to inspect the bases of drilled holes if CIDH piles are constructed under slurry. The SID will be used to inspect the bottom of the hole after completion of the drilling and clean out. The SID will also be used to inspect the bottom of the hole after placement of the reinforcement cage. If drill cuttings settle out of the slurry after placing reinforcement and before placing concrete in the drilled hole, the bottom of the drilled hole shall be cleaned. All drilled holes shall be approved by the Engineer prior to placing concrete.

The Contractor shall verify that the bottoms of all drilled holes are clean. A minimum of 50 percent of the base of each shaft shall have less than 1/4 inch of sediment, and the maximum depth of sediment or any debris at any place on the base of the shaft shall not exceed one inch. The Engineer will verify that the preceding criteria are met prior to allowing the placement of concrete.

The CIDH piles will derive most of their geotechnical capacity from skin friction. Skin friction relies on a good bond between the walls of the drilled holes and the concrete of the shafts. It is imperative that the borehole walls not be contaminated with remolded soil, drill cuttings, or loose materials. Furthermore, there is cause for concern that some sidewall softening will occur in borings through clay soils. Sidewall overreaming shall be performed when the time for shaft excavation exceeds 36 hours (measured from the beginning of excavation below the casing when casing is used) before the start of concrete placement. Sidewall overreaming shall also be performed when the sidewall of the hole is determined by the Engineer to have softened due to the excavation methods, swelled due to delays in the start of concrete placement, or degraded because of slurry cake buildup. Overreaming thickness shall be a minimum of 1/2-inch and a maximum of 3 inches. Overreaming may be accomplished with a grooving tool, overreaming bucket, or other equipment approved by the Engineer. If overreaming is required as a result of the excavation time exceeding the time limit specified herein, or as a result of excavation methods not in compliance with the approved Drilled Shaft Installation Plan, the Contractor shall bear the costs associated with both sidewall overreaming and additional drilled shaft concrete related to overreaming.

Caving conditions are anticipated in the upper layers of earth materials in the Estrella River channel. Furthermore, during the subsurface investigation loss of drilling fluid was noted while drilling through the loose surficial soils in the river channel. Temporary casing may be necessary during construction of the CIDH piles to maintain a head of water in the drilled holes and to prevent soils from caving into the holes. The casing may need to extend deeper than would otherwise be necessary for the construction of the optional joint between the drilled shaft rebar cage and the column rebar cage.

Project Information

Standard Special Provision S5-280, "Project Information", discloses to bidders and contractors a list of pertinent information available for their inspection prior to bid opening. The Department makes the following supplemental project information available:

Supplemental Project Information

Means	Description
Included in the Information Handout	Foundation Report for the Estrella River Bridge dated April 2, 2012
Available for inspection at the District Office	None
Available for inspection at the Transportation Laboratory	None
Available for inspection at _____; telephone (___) - ___	None
Available as specified in the Standard Specifications	
Available at: http://www.dot.ca.gov/hq/esc/oe/weekly_ads/index.php	

Items listed to be included in the Information Handout will be provided in Acrobat (.pdf) format to the Addressee of this report via electronic mail.

Closure

The recommendations contained in this report are based on specific project information regarding structure type, location, and design loads that have been provided by Office of Bridge Design – Central, Branch 6. If any conceptual changes are made during final project design, the Office of Geotechnical Design – North, Branch D should review those changes to determine if the foundation recommendations contained in this report are still applicable. Any questions regarding the recommendations contained herein should be directed to the attention of Dan Appelbaum, (805) 549-3745, or Mike Finegan, (805) 549-3194, at the Office of Geotechnical Design – North, Branch D.

Supervised by,

REGISTERED PROFESSIONAL ENGINEER
D.L. Appelbaum
No. C 50001
Exp. 6-30-13
CIVIL
STATE OF CALIFORNIA

DANIEL L. APPELBAUM, PE
Transportation Engineer
Geotechnical Design – North
Branch D

MICHAEL S. FINEGAN, PE, Chief
Geotechnical Design - North
Branch D

c: Roy Bibbens / GDN Records (E-copy)
Jack Walker – Design Engineer (E-Copy)
GeoDOG - Digital Archive of Geotechnical Data (E-copy)
John Luchetta – Project Manager (E-copy)
Structure Construction R.E. Pending File (email RE_pending_file@dot.ca.gov)
Doug Lambert – District Materials Engineer (E-copy)
Craig Whitten – DES Office Engineer, Office of PS&E (E-copy)
Job File / Branch D Records

LIST OF ATTACHMENTS

ATTACHMENT 1 **VICINITY MAP**

ATTACHMENT 2 **GEOLOGIC MAP**

ATTACHMENT 3 **EARTHQUAKE FAULTS**

ATTACHMENT 4 **FINAL DESIGN RESPONSE SPECTRUM**

ATTACHMENT 5 **MATERIAL PROPERTIES SUMMARY**

ATTACHMENT 6 **LOG OF TEST BORINGS**

ATTACHMENT 7 **GENERAL PLAN**

ATTACHMENT 8 **LOAD TEST PILE LOCATION**

INDEX OF PLANS

STATE OF CALIFORNIA

DEPARTMENT OF TRANSPORTATION

PROJECT PLANS FOR CONSTRUCTION ON

STATE HIGHWAY

IN SAN LUIS OBISPO COUNTY
NEAR PASO ROBLES
AT ESTRELLA RIVER CROSSING

TO BE SUPPLEMENTED BY STANDARD PLANS DATED MAY 2006

Dist	COUNTY	ROUTE	POST MILES TOTAL PROJECT	SHEET No.	TOTAL SHEETS
05	SLO	46	39.9/40.1		

LOCATION MAP

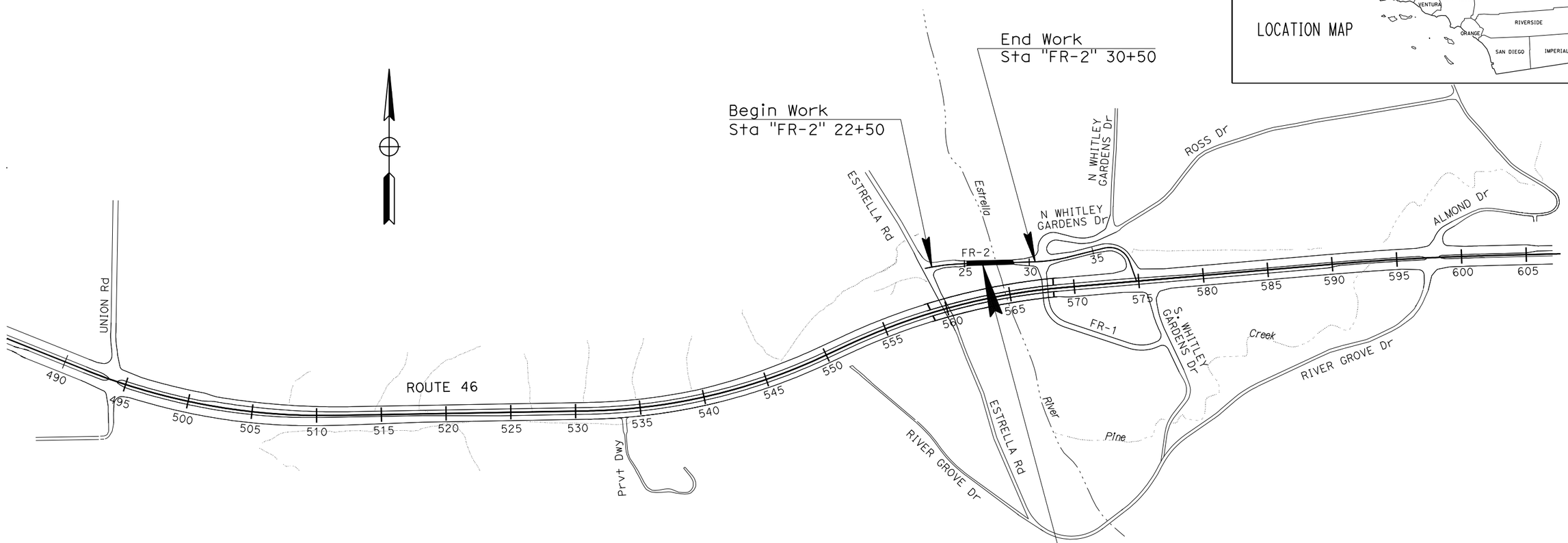

LOCATION OF CONSTRUCTION
ESTRELLA RIVER BRIDGE
Br No. 49-0033 (Exist)
RTE 46 PM 40.0

VICINITY MAP

ATTACHMENT 1

THE CONTRACTOR SHALL POSSESS THE CLASS (OR CLASSES) OF LICENSE AS SPECIFIED IN THE "NOTICE TO BIDDERS."

PROJECT MANAGER

DESIGN ENGINEER

LAST REVISION | DATE PLOTTED | 22 OCT 2014

Geologic Map

SLO - 46 Corridor Improvements
Estrella River Bridge (Replace)

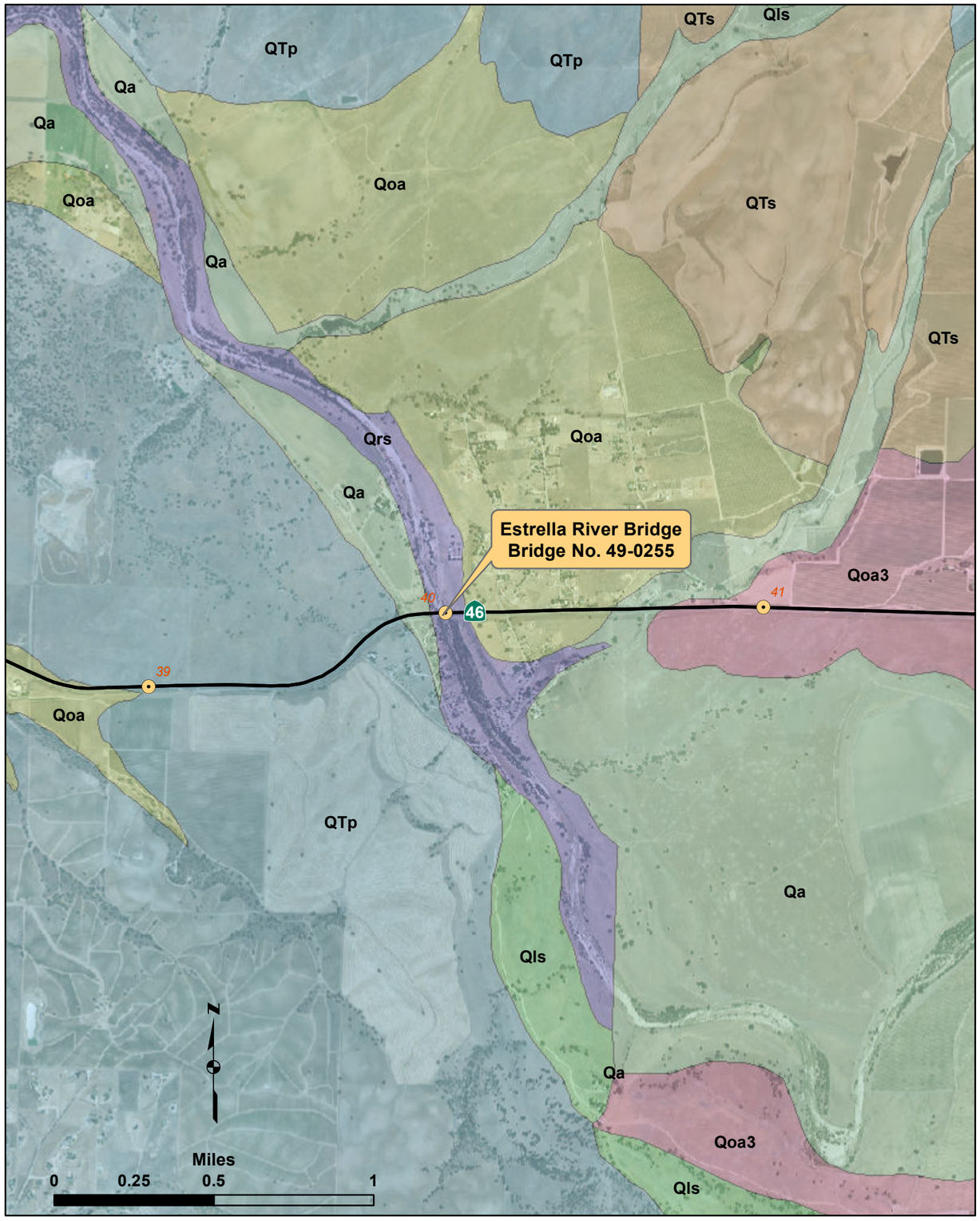

Geologic Mapping Compiled by Lew Rosenberg

Postmiles

Geologic Units

UNIT

- Qrs: Modern Stream Channel Deposits
- Qls: Landslide Deposits
- Qa: Holocene Alluvium
- Qoa: Early to Late Pleistocene Alluvial Deposits
- Qoa3: Older Allumium (Pleistocene)
- QTp: Paso Robles Formation, undivided
- QTs: Paso Robles Formation, Sand and Clay

ATTACHMENT 2

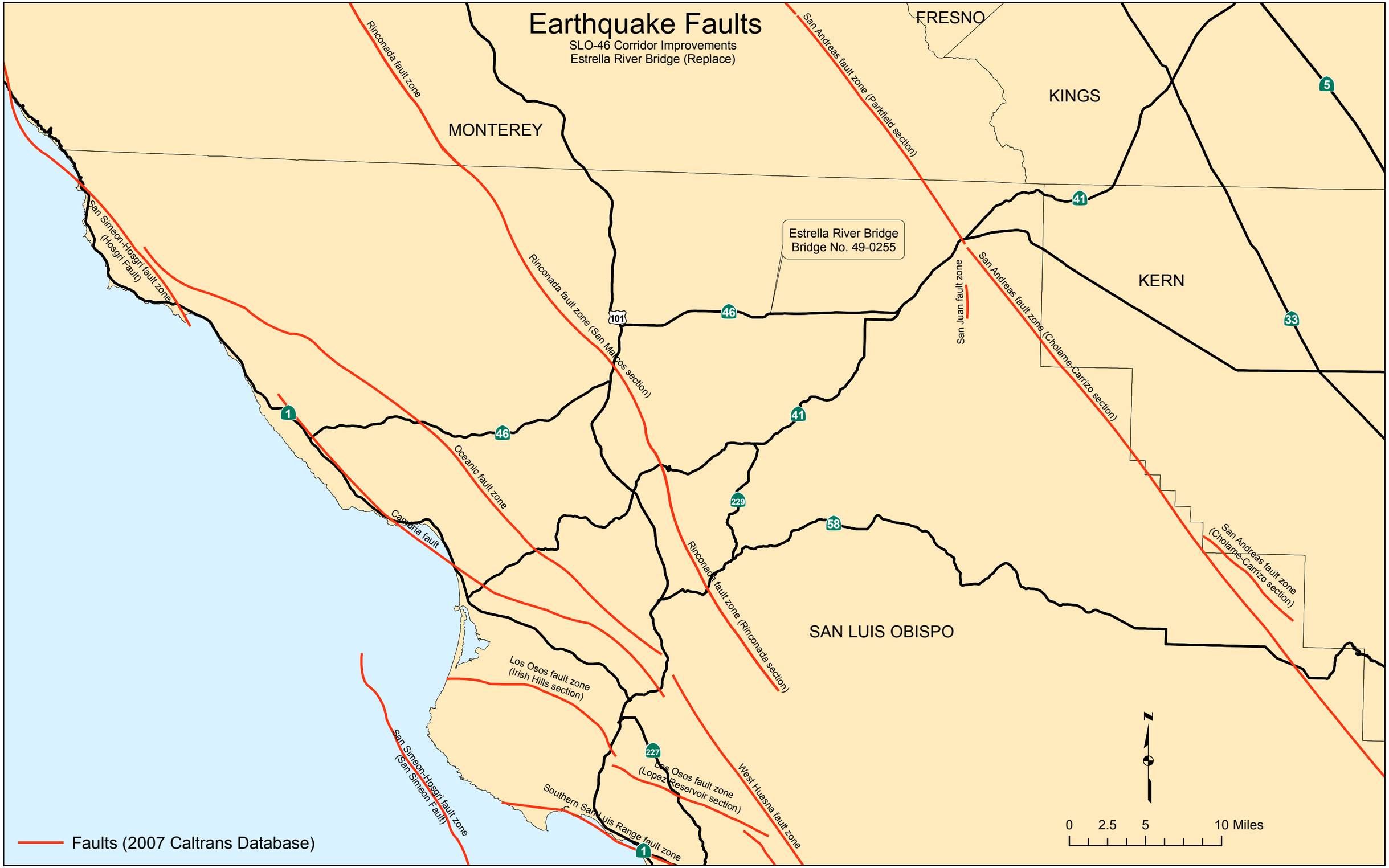

ATTACHMENT 3

Estrella River Bridge (Replace)

Bridge No. **49-0255** **SDC Controlling Procedure :** **USGS Deaggregation Tool**

Period (s)	SDC
0.010	0.551
0.020	0.593
0.030	0.636
0.050	0.720
0.075	0.827
0.100	0.933
0.120	0.972
0.150	1.032
0.200	1.131
0.250	1.119
0.300	1.108
0.400	1.026
0.500	0.943
0.750	0.876
1.000	0.780
1.500	0.620
2.000	0.459
3.000	0.310
4.000	0.227
5.000	0.183

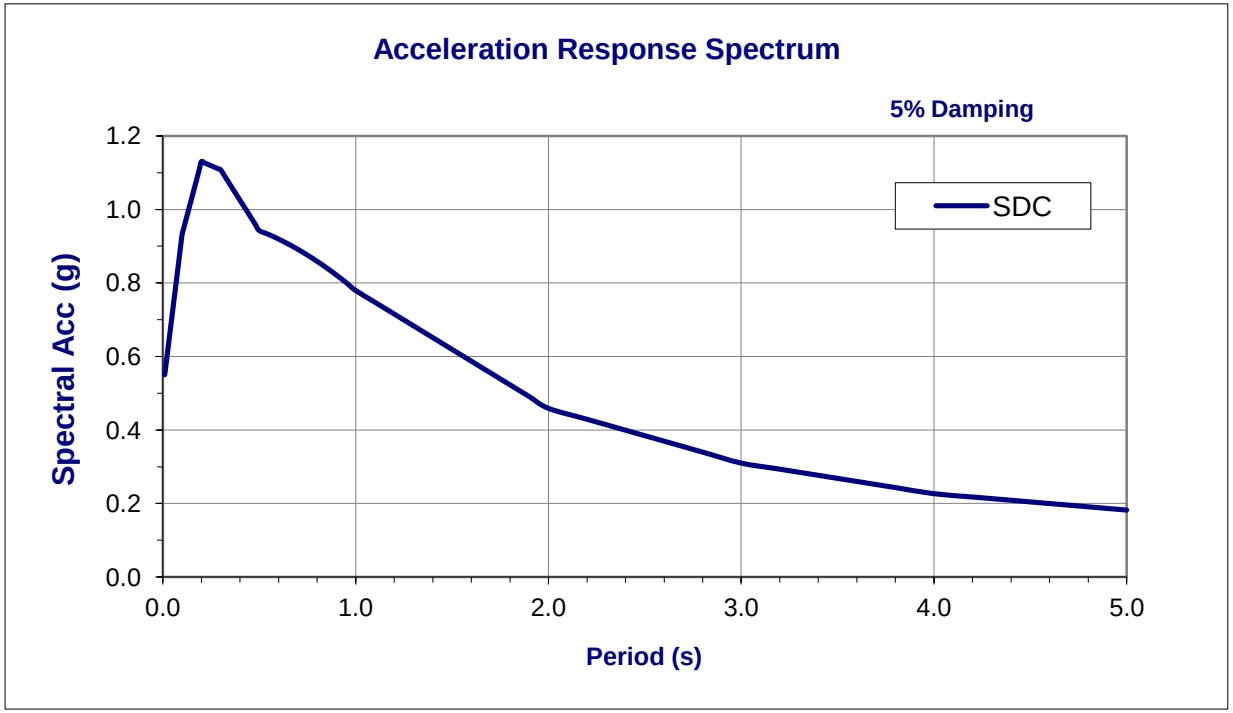

Deterministic Procedure Data

Fault	San Andreas (Parkfield Seg.)/Rinconada (San Marcos Seg.)		R_{rup}	21.2/17.1	km
Fault ID	312/400		R_{jb}	21.2/17.1	km
Style	RLSS/RLSS		R_x	21.2/17.1	km
Mmax	7.9/7.5		V_{S30}	260/260	m/s
Dip	90/90	deg	$Z_{1.0}$	N/A	m
Z_{TOR}	0/0	km	$Z_{2.5}$	N/A	km

Notes

ARS curve was modified for Near Fault Directivity Effect (SDC Section 6.1.2.1)

Final
Design Response Spectrum
ATTACHMENT 4

MATERIAL PROPERTIES SUMMARY

Estrella River Bridge (Replace)

Bridge No. 49-0255

DESCRIPTION	BORING	RC-11-001						RC-11-002	RC-11-003
	STATION	25+28						28+92	26+77
	LINE	FR-2 Line (Frontage Road CL)						FR-2	FR-2
	DISTANCE FROM LINE (Rt. or Lt.)	30' Rt.						10' Lt.	21' Rt.
	DATE SAMPLED	6/7/2011	6/7/2011	6/7/2011	6/7/2011	6/7/2011	6/7/2011	6/8/2011	7/26/2011
	SAMPLE ID	C494601	C494602	C494603	C494604	C494605	C494606	C494607	C494608
	DEPTH OR ELEVATION (FEET)	13'-15'	27'-30'	34.5'-35.5'	38.5'-40'	58'-60.5'	109.5'-111'	37'-38.5'	35.3'-36.8'
	USCS CLASSIFICATION	CL	CL	SP-SC	CL	SC	CH	CH	CH
PARTICLE SIZE ANALYSIS	50 mm (2")								
	38 mm (1 1/2")								
	25 mm (1")	100							
	19 mm (3/4")	99							100
	12 mm (1/2")	97							99
	9.5 mm (3/8")	95							98
	4.75 mm (No. 4)	90		100					97
	2.36 mm (No. 8)	84	100	98					96
	1.18 mm (No. 16)	79	99	91					95
	600 μm (No. 30)	75	99	64		100			94
	300 μm (N0. 50)	71	99	27	100	95			93
	150 μm (No. 100)	65	95	11	98	67	100		92
	75 μm (N0. 200)	59	80	6	83	44	98		91
	5 μm	36	34	6	26	24	53		49
	1μm	25	7	3	13	11	5		19
PI	LIQUID LIMIT	46	42		42	36	56		69
	PLASTICITY INDEX	27	18		20	15	28		36
CORROSION	RESISTIVITY (ohm-cm)	1241	1011	3995	1304	1774	1123	649	
	pH	7.97	7.24	8.44	8.65	8.65	7.99	7.90	
	CHLORIDES (ppm)	N/A	N/A	N/A	N/A	N/A	N/A	14	
	SULFATES (ppm)	N/A	N/A	N/A	N/A	N/A	N/A	49	

MATERIAL PROPERTIES SUMMARY

Estrella River Bridge (Replace)

Bridge No. 49-0255

DESCRIPTION	BORING	RC-11-003								
	STATION	26+77								
	LINE	FR-2 Line (Frontage Road CL)								
	DISTANCE FROM LINE (Rt. or Lt.)	21' Rt.								
	DATE SAMPLED	7/26/2011	7/26/2011	7/26/2011	7/26/2011	7/26/2011	7/26/2011			
	SAMPLE ID	C494609	C494610	C494611	C494612	C494613	C494614			
	DEPTH OR ELEVATION (FEET)	57.5'-59'	65.3'-66.8'	67'-68.5'	70.3'-71.8'	80.3'-81.8'	91'-91.8'			
	USCS CLASSIFICATION	CL	CH	CH	CL	SC	CL			
PARTICLE SIZE ANALYSIS	50 mm (2")									
	38 mm (1 1/2")									
	25 mm (1")									
	19 mm (3/4")									
	12 mm (1/2")									
	9.5 mm (3/8")					100				
	4.75 mm (No. 4)	100	100		100	99	100			
	2.36 mm (No. 8)	98	96		99	96	96			
	1.18 mm (No. 16)	95	94	100	99	87	94			
	600 μm (No. 30)	91	93	99	96	74	91			
	300 μm (N0. 50)	82	90	98	83	54	88			
	150 μm (No. 100)	68	82	94	63	37	86			
	75 μm (N0. 200)	59	73	85	57	30	82			
	5 μm	31	18	52	37	18	25			
	1μm	15	1	14	16	8	11			
PI	LIQUID LIMIT	46	58	66	41	24	37			
	PLASTICITY INDEX	26	28	40	23	10	14			
CORROSION	RESISTIVITY (ohm-cm)	1815		1099	2546	4131				
	pH	8.87		7.52	8.32	8.60				
	CHLORIDES (ppm)	N/A		4	N/A	N/A				
	SULFATES (ppm)	N/A		35	N/A	N/A				

LOG OF TEST BORINGS

05-SLO-46- 39.9/40.1

05-330751

ATTACHMENT 6

DIST	COUNTY	ROUTE	POST MILES TOTAL PROJECT	SHEET No	TOTAL SHEETS
05	SLO	46			

REGISTERED CIVIL ENGINEER

PLANS APPROVAL DATE

REGISTERED PROFESSIONAL ENGINEER Dan Appelbaum No. C50001 Exp. 6-30-13 CIVIL STATE OF CALIFORNIA

The State of California or its officers or agents shall not be responsible for the accuracy or completeness of electronic copies of this plan sheet.

This LOTB sheet was prepared in accordance with the Caltrans Soil & Rock Logging, Classification, & Presentation Manual (2010 Edition).

BENCH MARK

SL046 100-57
Fnd ¾" I.P. w/Plug & Nail
22.40 Rt. "FR2" Line, Frontage Road
Stg. 24+85.13
N 2,435,272.65
E 5,815,471.33
EL.=866.98 (NGVD29)

SL046 PM40.01
Fnd 1" I.P. w/Caltrans Control PP
22.87 Rt. "FR2" Line, Frontage Road
Stg. 29+65.90
N 2,435,285.27
E 5,815,951.93
EL.=860.51 (NGVD29)

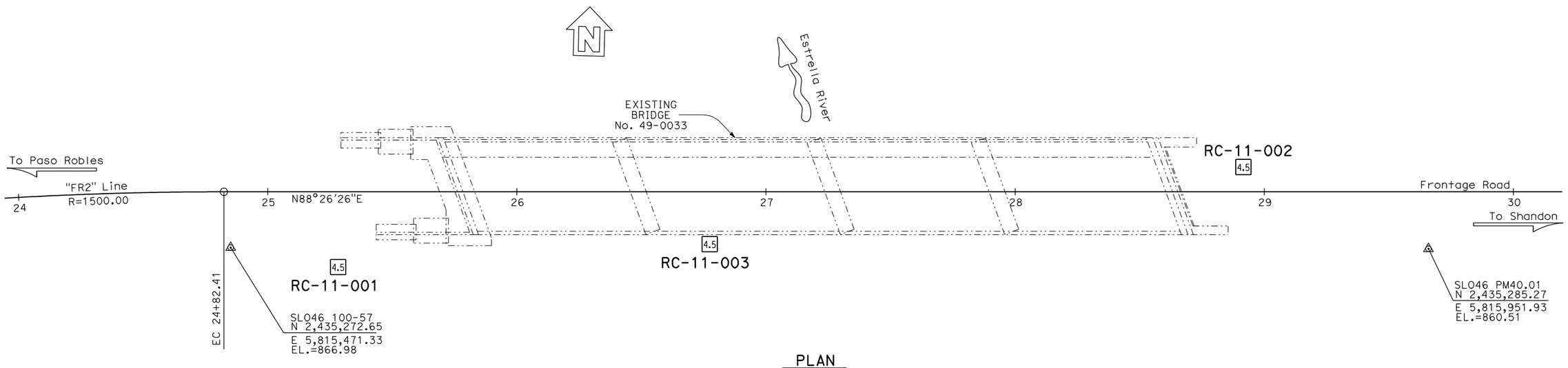

PLAN
1" = 20'

ENGINEERING SERVICES	GEOTECHNICAL SERVICES	STATE OF CALIFORNIA DEPARTMENT OF TRANSPORTATION	DIVISION OF ENGINEERING SERVICES STRUCTURE DESIGN DESIGN BRANCH X	BRIDGE NO. 49-0255 POST MILE 39.9/40.1	ESTRELLA RIVER BRIDGE (REPLACE) LOG OF TEST BORINGS 1 OF 6
FUNCTIONAL SUPERVISOR NAME: M. Finegan	DRAWN BY: D. Appelbaum CHECKED BY: R. Turner	FIELD INVESTIGATION BY: D. Appelbaum			

OGS CIVIL LOG OF TEST BORINGS SHEET

ORIGINAL SCALE IN INCHES FOR REDUCED PLANS 0 1 2 3

UNIT: 3657
PROJECT NUMBER & PHASE: 0500020217 1 CONTRACT NO.: 05-330754

DISREGARD PRINTS BEARING EARLIER REVISION DATES → REVISION DATES 08-26-11 10-07-11 10-17-11 SHEET X OF X

FILE => Estrella1of6.dgn

USERNAME => s108940 DATE PLOTTED => 04-APR-2012 TIME PLOTTED => 10:21

DIST	COUNTY	ROUTE	POST MILES TOTAL PROJECT	SHEET NO	TOTAL SHEETS
05	SLO	46			

REGISTERED CIVIL ENGINEER

PLANS APPROVAL DATE

REGISTERED PROFESSIONAL ENGINEER Dan Appelbaum No. C50001 Exp. 6-30-13 CIVIL STATE OF CALIFORNIA

The State of California or its officers or agents shall not be responsible for the accuracy or completeness of electronic copies of this plan sheet.

This LOTB sheet was prepared in accordance with the Caltrans Soil & Rock Logging, Classification, & Presentation Manual (2010 Edition).

FOR PLAN VIEW, SEE
"LOG OF TEST BORINGS 1 OF 6"

30' Rt Sta 25+28
℄ FR-2

RC-11-001

865.1'

4.5 Poorly graded SAND (SP); very loose; light yellowish brown; dry; medium and fine SAND.
Lean CLAY (CL); very stiff; light olive brown; moist; calcite veins; PP=3.0 tsf.
SANDY lean CLAY (CL); strong brown; moist; from coarse to fine SAND; few coarse and fine subangular GRAVEL.

3 | 1.4

2 | 1.4 PA PI CR

6 | 1.4

-scattered layers of lean CLAY (CL): very stiff; dark olive brown; moist; PP=3.5 tsf.

25 | 1.4 Well-graded SAND (SW); dense; light olive brown; wet; subangular SAND.
Lean CLAY with SAND (CL); hard; olive brown; moist; medium and fine SAND; PP=4.5 tsf.

27 | 1.4 PA PI CR Lean CLAY (CL); hard; olive brown; moist; PP=4.5 tsf.
Lean CLAY with SAND (CL); hard; olive brown; moist; fine SAND; PP=4.5 tsf.

41 | 1.4 PA PI CR Poorly graded SAND with CLAY (SP-SC); dense; olive brown; wet; medium and fine SAND.

35 | 1.4 PA PI CR Lean CLAY with SAND (CL); hard; olive brown; moist; fine SAND; PP>4.5 tsf.

CLAYEY SAND (SC); dense; olive brown; moist; medium and fine SAND; little fines.

33 | 1.4 Poorly graded SAND (SP); dense; olive brown; wet; fine SAND.
Lean CLAY with SAND (CL); hard; very dark greenish gray; moist; fine SAND; calcite veins; PP>4.5 tsf.

32 | 1.4

Poorly graded SAND (SP); dense; olive brown; moist; medium and fine SAND.

36 | 1.4 Lean CLAY (CL); hard; very dark greenish gray; moist; calcite veins; PP>4.5 tsf.
CLAYEY SAND (SC); dense; olive brown; moist; medium and fine SAND; little fines.

29 | 1.4 PA PI CR Lean CLAY with SAND (CL); hard; very dark greenish gray; moist; fine SAND; calcite veins; PP>4.5 tsf.
CLAYEY SAND (SC); dense; very dark greenish gray; moist; fine SAND; some fines.

25 | 1.4 Poorly graded SAND (SP); dense; very dark greenish gray; wet; medium and fine SAND; trace fine subangular GRAVEL.
Lean CLAY (CL); hard; very dark greenish gray; moist; few fine SAND; PP>4.5 tsf.

56 | 1.4 Poorly graded SAND (SP); very dense; very dark greenish gray; wet; medium and fine SAND; trace fine subangular and subrounded GRAVEL.

32 | 1.4 Lean CLAY (CL); hard; very dark greenish gray; moist; few fine SAND; calcite veins; PP>4.5 tsf.

86/10 | 1.4 CLAYEY SAND (SC); very dense; dark greenish gray; moist; from coarse to fine subangular SAND; little fines; trace fine subrounded GRAVEL.

50/5 | 1.4 Poorly graded SAND with GRAVEL (SP); very dense; olive brown; wet; medium and fine subangular SAND; little coarse and fine subrounded GRAVEL, 1-1/2" maximum.

72 | 1.4

20 | 1.4 Lean CLAY (CL); hard; olive brown; moist; few fine SAND; PP=4.5 tsf.

37 | 1.4 CLAYEY SAND (SC); dense; dark greenish gray; moist; from coarse to fine subrounded SAND; little fines; trace fine subrounded GRAVEL.
SILTY CLAY (CL-ML); hard; dark greenish gray; moist; PP=4.0-4.5 tsf.

44 | 1.4 -moderately cemented with calcite.
Fat CLAY (CH); hard; greenish gray; moist; trace fine SAND; PP>4.5 tsf.

74 | 1.4 -olive brown.
-calcite nodules.

28 | 1.4 PA PI CR -light olive brown.

64 | 1.4 Poorly graded SAND (SP); very dense; yellowish brown; moist; medium and fine SAND; trace fines; trace fine subrounded GRAVEL.

55 | 1.4 Poorly graded SAND with GRAVEL (SP); very dense; yellowish brown; moist; medium and fine SAND; little fine subrounded GRAVEL; trace fines.
CLAYEY SAND (SC); very dense; yellowish brown; moist; fine SAND; little fines.

6-7-11
Terminated at Elev 741.6'
ER_i = 68%
Ground water encountered but not measured.

860 850 840 830 820 810 800 790 780 770 760 750 740 730

25+00 26+00 27+00

PROFILE
Horiz: 1" = 10'
Vert: 1" = 10'

ENGINEERING SERVICES	GEOTECHNICAL SERVICES	STATE OF CALIFORNIA DEPARTMENT OF TRANSPORTATION	DIVISION OF ENGINEERING SERVICES STRUCTURE DESIGN DESIGN BRANCH X	BRIDGE NO. 49-0255 POST MILE 39.9/40.1	ESTRELLA RIVER BRIDGE (REPLACE) LOG OF TEST BORINGS 2 OF 6
FUNCTIONAL SUPERVISOR NAME: M. Finegan	DRAWN BY: D. Appelbaum CHECKED BY: R. Turner	FIELD INVESTIGATION BY: D. Appelbaum			

OGS CIVIL LOG OF TEST BORINGS SHEET

ORIGINAL SCALE IN INCHES FOR REDUCED PLANS 0 1 2 3

UNIT: 3657
PROJECT NUMBER & PHASE: 0500020217 1 CONTRACT NO.: 05-330754

DISREGARD PRINTS BEARING EARLIER REVISION DATES → REVISION DATES 08-26-11 10-07-11 10-17-11 SHEET X OF X

FILE => Estrella2of6.dgn

USERNAME => s108940 DATE PLOTTED => 04-APR-2012 TIME PLOTTED => 10:22

DIST	COUNTY	ROUTE	POST MILES TOTAL PROJECT	SHEET NO	TOTAL SHEETS
05	SLO	46			

REGISTERED CIVIL ENGINEER

PLANS APPROVAL DATE

The State of California or its officers or agents shall not be responsible for the accuracy or completeness of electronic copies of this plan sheet.

REGISTERED PROFESSIONAL ENGINEER — Dan Appelbaum — No. C50001 — Exp. 6-30-13 — CIVIL — STATE OF CALIFORNIA

This LOTB sheet was prepared in accordance with the Caltrans Soil & Rock Logging, Classification, & Presentation Manual (2010 Edition).

FOR PLAN VIEW, SEE
"LOG OF TEST BORINGS 1 OF 6"

21' Rt Sta 26+77
℄ FR-2

GWS Elev 834.3'
7-28-11

833.9'

RC-11-003

Elev	Description
830	Poorly graded SAND (SP); loose; light yellowish brown; dry; fine SAND.
	SILT (ML); loose; brown; moist.
	Poorly graded SAND (SP); loose; brown; moist; medium and fine SAND.
820	-medium dense; dark gray.
	-trace fine subrounded GRAVEL.
810	-dense.
	Fat CLAY (CH); medium stiff; dark gray; moist; PP=1.0 tsf.
	Poorly graded SAND (SP); medium dense; dark gray; moist; medium and fine SAND.
	Well-graded SAND (SW); dense; dark gray; moist; from coarse to fine subangular SAND; trace fine angular GRAVEL.
800	Fat CLAY (CH); soft; dark gray; moist; trace organics.
	Well-graded SAND with CLAY (SW-SC); dark gray; moist; subangular SAND.
	-strongly cemented with calcite.
	Fat CLAY (CH); hard; dark gray; moist; trace SAND, from coarse to fine; trace fine GRAVEL; PP=4.0-4.5 tsf.
790	Poorly graded SAND with CLAY (SP-SC); very dense; dark greenish gray; moist; medium and fine SAND.
	Well-graded SAND (SW); very dense; dark greenish gray; moist; subangular SAND; few coarse and fine subrounded GRAVEL, maximum 2".
	-olive brown.
780	Well-graded SAND with GRAVEL (SW); very dense; olive brown; moist; angular SAND; little coarse and fine subangular and subrounded GRAVEL, maximum 1-1/4"; trace fines.
770	SANDY lean CLAY (CL); hard; gray; moist; medium and fine SAND; PP=4.5 tsf.
	Fat CLAY with SAND (CH); hard; light olive brown; moist; fine SAND; PP>4.5 tsf.
	-olive brown.
760	SANDY lean CLAY (CL); hard; light olive brown; moist; fine SAND; PP>4.5 tsf.
	Lean CLAY (CL); hard; olive brown; moist; PP>4.5 tsf.
	-light olive brown; specks of calcite.
750	CLAYEY SAND (SC); very dense; olive brown; moist; medium and fine SAND; some fines; trace coarse and fine subangular and subrounded GRAVEL, maximum 1-1/2".
740	Lean CLAY with SAND (CL); hard; light olive brown; moist; from coarse to fine SAND; PP>4.5 tsf.
	-olive brown; specks of calcite.
	-strongly cemented with calcite in sporatic 0.2' layers.
730	Poorly graded SAND (SP); very dense; light olive brown; wet; medium and fine SAND; encountered artesian ground water.
720	Well-graded SAND (SW); very dense; wet; angular and subangular SAND; few coarse and fine subangluar and subrounded GRAVEL, maximum 2".
710	-trace fines.
	Lean CLAY (CL); hard; light olive brown; moist; calcite nodules; PP>4.5 tsf.
700	-grayish brown.
	-light olive brown.
690	Lean CLAY with SAND (CL); hard; light olive brown; moist; fine SAND; PP>4.5 tsf.
	Well-graded SAND with GRAVEL (SW); very dense; olive brown; moist; subangular SAND; little fine subangular and subrounded GRAVEL.
680	SILTY CLAY (CL-ML); hard; yellowish brown; moist; PP>4.5 tsf.

Blows per 0.5' (Elev): 4 (830.4), 9 (830.4), 11 (830.4), 24 (830.4), 19 (830.4), 0 (830.4), 21 (830.4), 57 (830.4), 54 (830.4), 54 (830.4), 88 (830.4), 50/6 (830.4), 35 (830.4), 41 (830.4), 21 (830.4), 39 (830.4), 97/10 (830.4), 47 (830.4), 31 (830.4), 48 (830.4), 105 (830.4), 63 (830.4), 86 (830.4), 81 (830.4), 29 (830.4), 42 (830.4)

7-28-11
Terminated at Elev 682.1'
ER_i = 97%
Installed Piezometer 7-28-11

26+50 27+50 28+50

PROFILE
Horiz: 1" = 10'
Vert: 1" = 10'

ENGINEERING SERVICES	GEOTECHNICAL SERVICES	STATE OF CALIFORNIA DEPARTMENT OF TRANSPORTATION	DIVISION OF ENGINEERING SERVICES STRUCTURE DESIGN DESIGN BRANCH X	BRIDGE NO. 49-0255 POST MILE 39.9/40.1	ESTRELLA RIVER BRIDGE (REPLACE) LOG OF TEST BORINGS 3 OF 6
FUNCTIONAL SUPERVISOR NAME: M. Finegan	DRAWN BY: D. Appelbaum CHECKED BY: R. Turner	FIELD INVESTIGATION BY: D. Appelbaum			

OGS CIVIL LOG OF TEST BORINGS SHEET

ORIGINAL SCALE IN INCHES FOR REDUCED PLANS 0 1 2 3

UNIT: 3657
PROJECT NUMBER & PHASE: 0500020217 1 CONTRACT NO.: 05-330754

DISREGARD PRINTS BEARING EARLIER REVISION DATES → REVISION DATES 08-26-11 10-07-11 10-11-11 10-19-11 SHEET X OF X

FILE => Estrella3of6.dgn

USERNAME => s108940 DATE PLOTTED => 04-APR-2012 TIME PLOTTED => 10:17

DIST	COUNTY	ROUTE	POST MILES TOTAL PROJECT	SHEET No	TOTAL SHEETS
05	SLO	46			

REGISTERED CIVIL ENGINEER

PLANS APPROVAL DATE

REGISTERED PROFESSIONAL ENGINEER Dan Appelbaum No. C50001 Exp. 6-30-13 CIVIL STATE OF CALIFORNIA

The State of California or its officers or agents shall not be responsible for the accuracy or completeness of electronic copies of this plan sheet.

This LOTB sheet was prepared in accordance with the Caltrans Soil & Rock Logging, Classification, & Presentation Manual (2010 Edition).

FOR PLAN VIEW, SEE
"LOG OF TEST BORINGS 1 OF 6"

10' Lt Sta 28+92
℄ FR-2

RC-11-002

859.3'

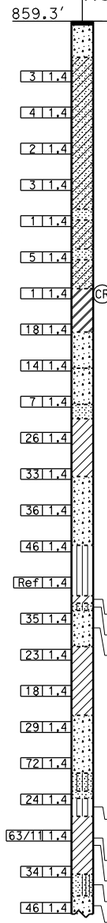

4.5 ASPHALT CONCRETE.
Well-graded SAND (SW); very loose; yellowish brown; moist; subangular SAND; few fine subrounded GRAVEL.
CLAYEY SAND (SC); very loose; yellowish brown; moist; fine SAND; some fines.

-mottled very dark grayish brown and yellowish brown; trace organics.

Poorly graded SAND (SP); very loose; dark grayish brown; moist; medium SAND; trace organics.
CLAYEY SAND (SC); very loose; very dark grayish brown; moist; fine SAND; some fines.
Poorly graded SAND with GRAVEL (SP); loose; very dark gray; moist; medium SAND; little coarse and fine rounded GRAVEL.
CLAYEY SAND (SC); very loose; dark grayish brown; moist; medium and fine SAND; some fines; trace fine subrounded GRAVEL; trace organics.
SANDY fat CLAY (CH); very stiff; grayish brown; moist; fine SAND; trace organics; PP=2.0-2.25 tsf.

Well-graded SAND with GRAVEL (SW); medium dense; yellowish brown; moist; angular SAND; some coarse and fine rounded GRAVEL; trace organics.

Well-graded SAND (SW); medium dense; grayish brown; moist; subangular and subrounded SAND.

Poorly graded SAND (SP); loose; grayish brown; moist; medium and coarse angular SAND.
SANDY lean CLAY (CL); hard; grayish brown; moist.

Well-graded SAND with GRAVEL (SW); dense; yellowish brown; moist; subangular SAND; some coarse and fine subrounded GRAVEL.

SILT with SAND (ML); very dense; mottled yellowish brown and gray; moist; fine SAND.

-gray; moderately cemented with calcite.

Lean CLAY (CL); hard; gray; moist; few fine SAND.
SILTY SAND (SM); dense; dark yellowish brown; moist; fine SAND; some fines.
Well-graded SAND (SW); dense; yellowish brown; moist; subangular SAND; trace fine subangular GRAVEL.
Lean CLAY (CL); hard; yellowish brown; moist.

Well-graded SAND (SW); dense; yellowish brown; moist; subangular SAND; scattered layers of SILTY SAND with GRAVEL.

SILTY SAND (SM); very dense; yellowish brown; moist; fine SAND; little fines.
Poorly graded SAND (SP); medium dense; yellowish brown; moist; medium and fine SAND.
SILT with SAND (ML); medium dense; yellowish brown; moist; fine SAND.
Lean CLAY (CL); hard; dark yellowish brown; moist; PP>4.5 tsf.
-mottled yellowish brown and grayish brown; moderately cemented with calcite.
-dark yellowish brown; non cemented.
Poorly graded SAND with SILT (SP-SM); dense; yellowish brown; moist; medium and fine angular SAND.
Well-graded SAND (SW); very dense; yellowish brown; moist; angular SAND; few fine angular GRAVEL.

6-8-11
Terminated at Elev 735.8'
ER_i = 68%
Ground water encountered but not measured.

850 840 830 820 810 800 790 780 770 760 750 740 730 720

29+00 30+00 31+00

PROFILE
Horiz: 1" = 10'
Vert: 1" = 10'

ENGINEERING SERVICES		GEOTECHNICAL SERVICES	STATE OF CALIFORNIA DEPARTMENT OF TRANSPORTATION	DIVISION OF ENGINEERING SERVICES STRUCTURE DESIGN DESIGN BRANCH X	BRIDGE NO. 49-0255 POST MILE 39.9/40.1	ESTRELLA RIVER BRIDGE (REPLACE) LOG OF TEST BORINGS 4 OF 6
FUNCTIONAL SUPERVISOR NAME: M. Finegan	DRAWN BY: D. Appelbaum CHECKED BY: R. Turner	FIELD INVESTIGATION BY: M. Jurasius				

OGS CIVIL LOG OF TEST BORINGS SHEET

ORIGINAL SCALE IN INCHES FOR REDUCED PLANS 0 1 2 3

UNIT: 3657
PROJECT NUMBER & PHASE: 0500020217 1 CONTRACT NO.: 05-330754

DISREGARD PRINTS BEARING EARLIER REVISION DATES

REVISION DATES: 08-26-11 10-07-11 10-17-11

SHEET X OF X

FILE => Estrella4of6.dgn

USERNAME => s108940 DATE PLOTTED => 04-APR-2012 TIME PLOTTED => 10:23

DIST	COUNTY	ROUTE	POST MILES TOTAL PROJECT	SHEET No	TOTAL SHEETS
05	SLO	46			

REGISTERED CIVIL ENGINEER

PLANS APPROVAL DATE

REGISTERED PROFESSIONAL ENGINEER Dan Appelbaum No. C50001 Exp. 6-30-13 CIVIL STATE OF CALIFORNIA

The State of California or its officers or agents shall not be responsible for the accuracy or completeness of electronic copies of this plan sheet.

REFERENCE: CALTRANS SOIL & ROCK LOGGING, CLASSIFICATION, AND PRESENTATION MANUAL (2010)

CEMENTATION

Description	Criteria
Weak	Crumbles or breaks with handling or little finger pressure.
Moderate	Crumbles or breaks with considerable finger pressure.
Strong	Will not crumble or break with finger pressure.

BOREHOLE IDENTIFICATION

Symbol	Hole Type	Description
Size	A	Auger Boring (hollow or solid stem bucket)
Size	R	Rotary drilled boring (conventional)
	RW	Rotary drilled with self-casing wire-line
	RC	Rotary core with continuously-sampled, self-casing wire-line
	P	Rotary percussion boring (air)
Size	R	Rotary drilled diamond core
Size	HD	Hand driven (1-inch soil tube)
	HA	Hand Auger
●	D	Dynamic Cone Penetration Boring
▲	CPT	Cone Penetration Test (ASTM D 5778)
⬚	O	Other (note on LOTB)

Note: Size in inches.

CONSISTENCY OF COHESIVE SOILS

Description	Shear Strength (tsf)	Pocket Penetrometer Measurement, PP, (tsf)	Torvane Measurement, TV, (tsf)	Vane Shear Measurement, VS, (tsf)
Very Soft	Less than 0.12	Less than 0.25	Less than 0.12	Less than 0.12
Soft	0.12 - 0.25	0.25 - 0.5	0.12 - 0.25	0.12 - 0.25
Medium Stiff	0.25 - 0.5	0.5 - 1	0.25 - 0.5	0.25 - 0.5
Stiff	0.5 - 1	1 - 2	0.5 - 1	0.5 - 1
Very Stiff	1 - 2	2 - 4	1 - 2	1 - 2
Hard	Greater than 2	Greater than 4	Greater than 2	Greater than 2

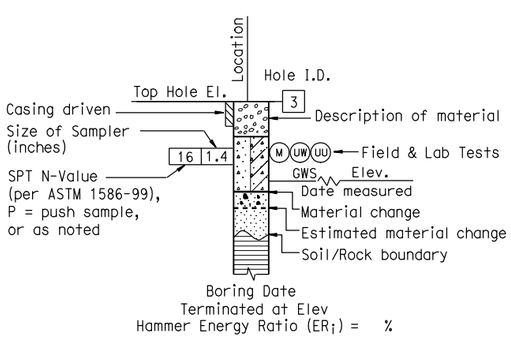

ROTARY BORING

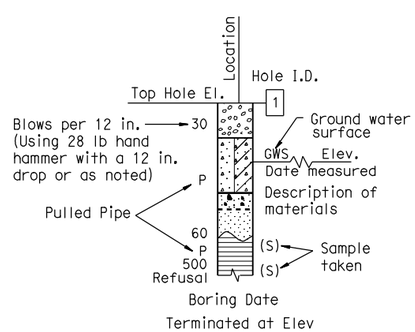

HAND BORING

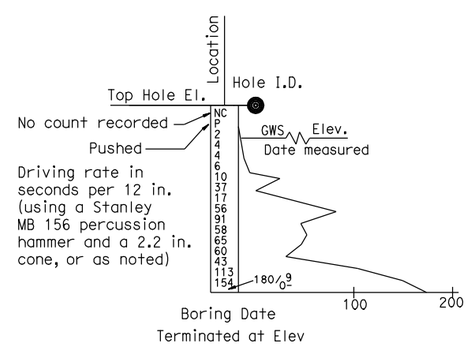

DYNAMIC CONE PENETRATION BORING

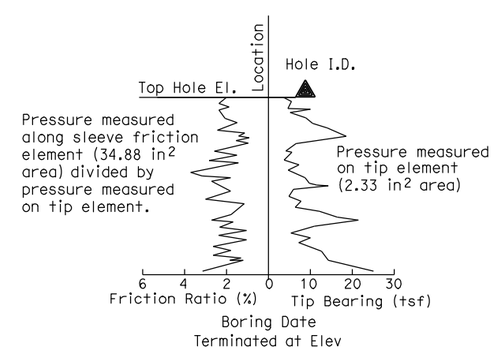

CONE PENETRATION TEST (CPT) BORING

ENGINEERING SERVICES	GEOTECHNICAL SERVICES	STATE OF CALIFORNIA DEPARTMENT OF TRANSPORTATION	DIVISION OF ENGINEERING SERVICES STRUCTURE DESIGN DESIGN BRANCH X	BRIDGE NO. 49-0255 POST MILE 39.9/40.1	ESTRELLA RIVER BRIDGE (REPLACE) LOG OF TEST BORINGS 5 OF 6
	PREPARED BY: D. Appelbaum				

GS LOTB SOIL LEGEND

ORIGINAL SCALE IN INCHES FOR REDUCED PLANS 0 1 2 3

UNIT: 3657
PROJECT NUMBER & PHASE: 0500020217 1
CONTRACT NO.: 05-330754

DISREGARD PRINTS BEARING EARLIER REVISION DATES

REVISION DATES | SHEET X | OF X

FILE => Estrella5of6.dgn

USERNAME => s108940 DATE PLOTTED => 04-APR-2012 TIME PLOTTED => 10:25

REFERENCE: CALTRANS SOIL & ROCK LOGGING, CLASSIFICATION, AND PRESENTATION MANUAL (2010)

GROUP SYMBOLS AND NAMES

Graphic/Symbol	Group Names
GW	Well-graded GRAVEL Well-graded GRAVEL with SAND
GP	Poorly-graded GRAVEL Poorly-graded GRAVEL with SAND
GW-GM	Well-graded GRAVEL with SILT Well-graded GRAVEL with SILT and SAND
GW-GC	Well-graded GRAVEL with CLAY (or SILTY CLAY) Well-graded GRAVEL with CLAY and SAND (or SILTY CLAY and SAND)
GP-GM	Poorly-graded GRAVEL with SILT Poorly-graded GRAVEL with SILT and SAND
GP-GC	Poorly-graded GRAVEL with CLAY (or SILTY CLAY) Poorly-graded GRAVEL with CLAY and SAND (or SILTY CLAY and SAND)
GM	SILTY GRAVEL SILTY GRAVEL with SAND
GC	CLAYEY GRAVEL CLAYEY GRAVEL with SAND
GC-GM	SILTY, CLAYEY GRAVEL SILTY, CLAYEY GRAVEL with SAND
SW	Well-graded SAND Well-graded SAND with GRAVEL
SP	Poorly-graded SAND Poorly-graded SAND with GRAVEL
SW-SM	Well-graded SAND with SILT Well-graded SAND with SILT and GRAVEL
SW-SC	Well-graded SAND with CLAY (or SILTY CLAY) Well-graded SAND with CLAY and GRAVEL (or SILTY CLAY and GRAVEL)
SP-SM	Poorly-graded SAND with SILT Poorly-graded SAND with SILT and GRAVEL
SP-SC	Poorly-graded SAND with CLAY (or SILTY CLAY) Poorly-graded SAND with CLAY and GRAVEL (or SILTY CLAY and GRAVEL)
SM	SILTY SAND SILTY SAND with GRAVEL
SC	CLAYEY SAND CLAYEY SAND with GRAVEL
SC-SM	SILTY, CLAYEY SAND SILTY, CLAYEY SAND with GRAVEL
PT	PEAT
	COBBLES COBBLES and BOULDERS BOULDERS

Graphic/Symbol	Group Names
CL	Lean CLAY Lean CLAY with SAND Lean CLAY with GRAVEL SANDY lean CLAY SANDY lean CLAY with GRAVEL GRAVELLY lean CLAY GRAVELLY lean CLAY with SAND
CL-ML	SILTY CLAY SILTY CLAY with SAND SILTY CLAY with GRAVEL SANDY SILTY CLAY SANDY SILTY CLAY with GRAVEL GRAVELLY SILTY CLAY GRAVELLY SILTY CLAY with SAND
ML	SILT SILT with SAND SILT with GRAVEL SANDY SILT SANDY SILT with GRAVEL GRAVELLY SILT GRAVELLY SILT with SAND
OL	ORGANIC lean CLAY ORGANIC lean CLAY with SAND ORGANIC lean CLAY with GRAVEL SANDY ORGANIC lean CLAY SANDY ORGANIC lean CLAY with GRAVEL GRAVELLY ORGANIC lean CLAY GRAVELLY ORGANIC lean CLAY with SAND
OL	ORGANIC SILT ORGANIC SILT with SAND ORGANIC SILT with GRAVEL SANDY ORGANIC SILT SANDY ORGANIC SILT with GRAVEL GRAVELLY ORGANIC SILT GRAVELLY ORGANIC SILT with SAND
CH	Fat CLAY Fat CLAY with SAND Fat CLAY with GRAVEL SANDY fat CLAY SANDY fat CLAY with GRAVEL GRAVELLY fat CLAY GRAVELLY fat CLAY with SAND
MH	Elastic SILT Elastic SILT with SAND Elastic SILT with GRAVEL SANDY elastic SILT SANDY elastic SILT with GRAVEL GRAVELLY elastic SILT GRAVELLY elastic SILT with SAND
OH	ORGANIC fat CLAY ORGANIC fat CLAY with SAND ORGANIC fat CLAY with GRAVEL SANDY ORGANIC fat CLAY SANDY ORGANIC fat CLAY with GRAVEL GRAVELLY ORGANIC fat CLAY GRAVELLY ORGANIC fat CLAY with SAND
OH	ORGANIC elastic SILT ORGANIC elastic SILT with SAND ORGANIC elastic SILT with GRAVEL SANDY ORGANIC elastic SILT SANDY ORGANIC elastic SILT with GRAVEL GRAVELLY ORGANIC elastic SILT GRAVELLY ORGANIC elastic SILT with SAND
OL/OH	ORGANIC SOIL ORGANIC SOIL with SAND ORGANIC SOIL with GRAVEL SANDY ORGANIC SOIL SANDY ORGANIC SOIL with GRAVEL GRAVELLY ORGANIC SOIL GRAVELLY ORGANIC SOIL with SAND

FIELD AND LABORATORY TESTING

- (C) Consolidation (ASTM D 2435)
- (CL) Collapse Potential (ASTM D 5333)
- (CP) Compaction Curve (CTM 216)
- (CR) Corrosivity Testing (CTM 643, CTM 422, CTM 417)
- (CU) Consolidated Undrained Triaxial (ASTM D 4767)
- (DS) Direct Shear (ASTM D 3080)
- (EI) Expansion Index (ASTM D 4829)
- (M) Moisture Content (ASTM D 2216)
- (OC) Organic Content-% (ASTM D 2974)
- (P) Permeability (CTM 220)
- (PA) Particle Size Analysis (ASTM D 422)
- (PI) Plasticity Index (AASHTO T 90) Liquid Limit (AASHTO T 89)
- (PL) Point Load Index (ASTM D 5731)
- (PM) Pressure Meter
- (R) R-Value (CTM 301)
- (SE) Sand Equivalent (CTM 217)
- (SG) Specific Gravity (AASHTO T 100)
- (SL) Shrinkage Limit (ASTM D 427)
- (SW) Swell Potential (ASTM D 4546)
- (UC) Unconfined Compression-Soil (ASTM D 2166) Unconfined Compression-Rock (ASTM D 2938)
- (UU) Unconsolidated Undrained Triaxial (ASTM D 2850)
- (UW) Unit Weight (ASTM D 4767)

DIST	COUNTY	ROUTE	POST MILES TOTAL PROJECT	SHEET NO	TOTAL SHEETS
05	SLO	46			

REGISTERED CIVIL ENGINEER

PLANS APPROVAL DATE

REGISTERED PROFESSIONAL ENGINEER Dan Appelbaum No. C50001 Exp. 6-30-13 CIVIL STATE OF CALIFORNIA

The State of California or its officers or agents shall not be responsible for the accuracy or completeness of electronic copies of this plan sheet.

APPARENT DENSITY OF COHESIONLESS SOILS

Description	SPT N_{60} (Blows / 12 in.)
Very Loose	0 - 5
Loose	5 - 10
Medium Dense	10 - 30
Dense	30 - 50
Very Dense	Greater than 50

MOISTURE

Description	Criteria
Dry	No discernable moisture
Moist	Moisture present, but no free water
Wet	Visible free water

PERCENT OR PROPORTION OF SOILS

Description	Criteria
Trace	Particles are present but estimated to be less than 5%
Few	5% - 10%
Little	15% - 25%
Some	30% - 45%
Mostly	50% - 100%

PARTICLE SIZE

Description		Size (in.)
Boulder		Greater than 12
Cobble		3 - 12
Gravel	Coarse	3/4 - 3
	Fine	1/5 - 3/4
Sand	Coarse	1/16 - 1/5
	Medium	1/64 - 1/16
	Fine	1/300 - 1/64
Silt and Clay		Less than 1/300

ENGINEERING SERVICES

GEOTECHNICAL SERVICES

PREPARED BY: D. Appelbaum

STATE OF CALIFORNIA DEPARTMENT OF TRANSPORTATION

DIVISION OF ENGINEERING SERVICES STRUCTURE DESIGN DESIGN BRANCH X

BRIDGE NO. 49-0255

POST MILE 39.9/40.1

ESTRELLA RIVER BRIDGE (REPLACE)

LOG OF TEST BORINGS 6 OF 6

GS LOTB SOIL LEGEND

ORIGINAL SCALE IN INCHES FOR REDUCED PLANS 0 1 2 3

UNIT: 3657
PROJECT NUMBER & PHASE: 0500020217 1
CONTRACT NO.: 05-330754

DISREGARD PRINTS BEARING EARLIER REVISION DATES

REVISION DATES

SHEET X OF X

FILE => Estrella6of6.dgn

USERNAME => s108940 DATE PLOTTED => 04-APR-2012 TIME PLOTTED => 10:26

DIST	COUNTY	ROUTE	POST MILES TOTAL PROJECT	SHEET No.	TOTAL SHEETS
05	SLO	46			

REGISTERED CIVIL ENGINEER X DATE

PLANS APPROVAL DATE

REGISTERED PROFESSIONAL ENGINEER Don Nguyen-Tan No. C57510 Exp. 12-31-2013 CIVIL STATE OF CALIFORNIA

The State of California or its officers or agents shall not be responsible for the accuracy or completeness of electronic copies of this plan sheet.

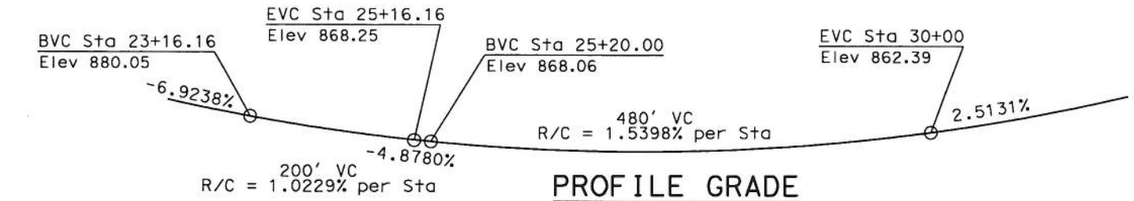

PROFILE GRADE

NO SCALE

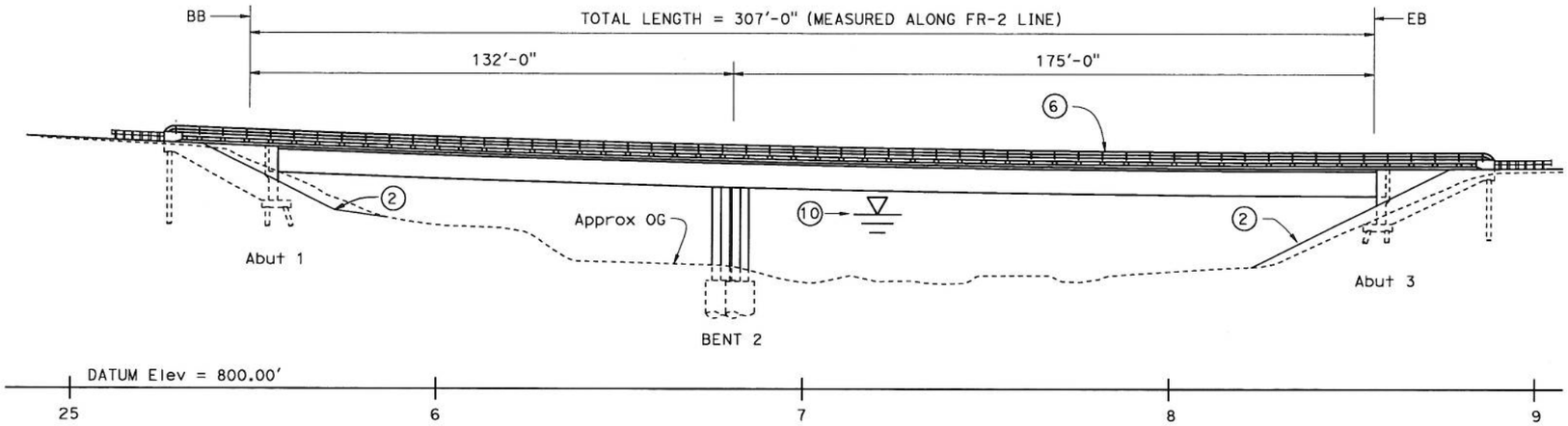

ELEVATION

1" = 20'

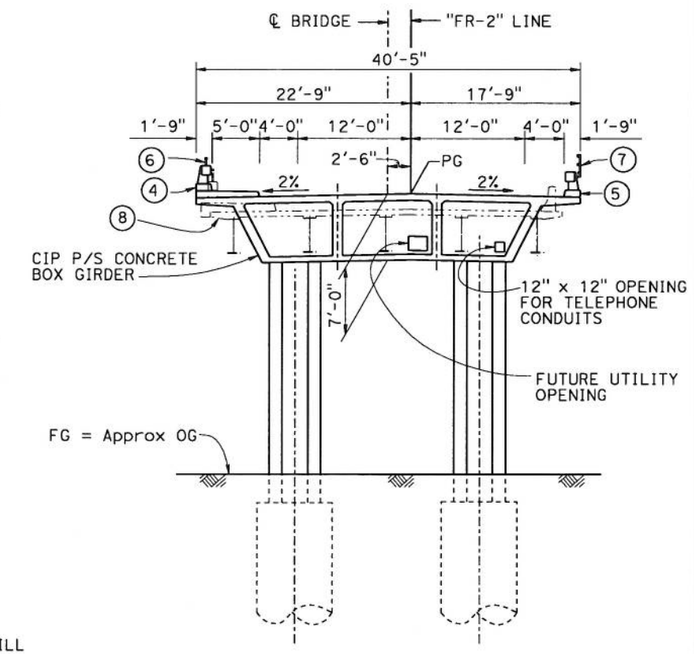

TYPICAL SECTION

1/8" = 1'-0"

CURVE DATA

R	Δ	T	L
1500.00'	11°07'26"	146.07'	291.22'

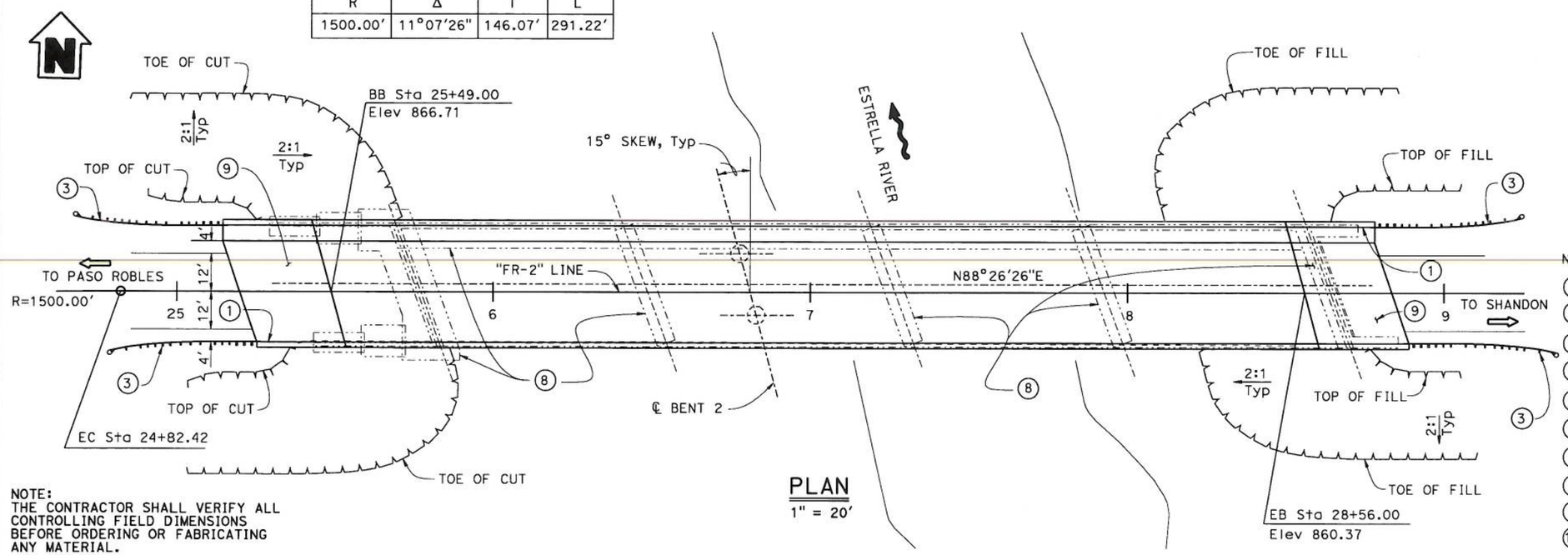

PLAN

1" = 20'

NOTES:

1. Paint "Estrella River Bridge" and "Bridge No. 49-0255"
2. RSP, see "ROAD PLANS"
3. MBGR, see "ROAD PLANS"
4. Concrete Barrier Type 80SW (Mod)
5. Concrete Barrier Type 80 (Mod)
6. Tubular Hand Railing
7. Tubular Bicycle Railing
8. Remove existing bridge (Br No. 49-0033)
9. Structure Approach Type N(30S)
10. See "HYDROLOGIC SUMMARY" on "INDEX TO PLANS" sheet

NOTE:
THE CONTRACTOR SHALL VERIFY ALL CONTROLLING FIELD DIMENSIONS BEFORE ORDERING OR FABRICATING ANY MATERIAL.

ATTACHMENT 7

Fritz Hoffman, DESIGN ENGINEER	DESIGN	BY G. Wheeler	CHECKED G. Reyes-Gutierrez	LOAD & RESISTANCE FACTOR DESIGN — LIVE LOADING: HL93 W/"LOW-BOY"; PERMIT DESIGN VEHICLE
	DETAILS	BY D. Elliott	CHECKED D. Nguyen-Tan	LAYOUT — BY D. Elliott — CHECKED D. Nguyen-Tan
	QUANTITIES	BY X	CHECKED X	SPECIFICATIONS — BY X — PLANS AND SPECS COMPARED X

ORIGINAL SCALE IN INCHES FOR REDUCED PLANS 0 1 2 3

STATE OF CALIFORNIA
DEPARTMENT OF TRANSPORTATION

DIVISION OF ENGINEERING SERVICES
STRUCTURE DESIGN
DESIGN BRANCH 6

BRIDGE NO. 49-0255
POST MILE 39.9/40.1

ESTRELLA RIVER BRIDGE (REPLACE)
GENERAL PLAN

UNIT: 3594
PROJECT NUMBER & PHASE: 05000202171
CONTRACT NO.: 05-330751

DISREGARD PRINTS BEARING EARLIER REVISION DATES

REVISION DATES: 12-15-11 3-1-12 3-13-12

SHEET 1 OF 24

FILE => 49-0255-g-gp-new.dgn

STRUCTURES DESIGN GENERAL PLAN SHEET (ENGLISH) (REV 09-01-10)

USERNAME => s12930a2 DATE PLOTTED => 20-MAR-2012 TIME PLOTTED => 11:04

Dist	COUNTY	ROUTE	POST MILES TOTAL PROJECT	SHEET No.	TOTAL SHEETS
05	SLO	46	39.9/40.1		

REGISTERED CIVIL ENGINEER DATE

PLANS APPROVAL DATE

REGISTERED PROFESSIONAL ENGINEER No. Exp. CIVIL STATE OF CALIFORNIA

THE STATE OF CALIFORNIA OR ITS OFFICERS OR AGENTS SHALL NOT BE RESPONSIBLE FOR THE ACCURACY OR COMPLETENESS OF SCANNED COPIES OF THIS PLAN SHEET.

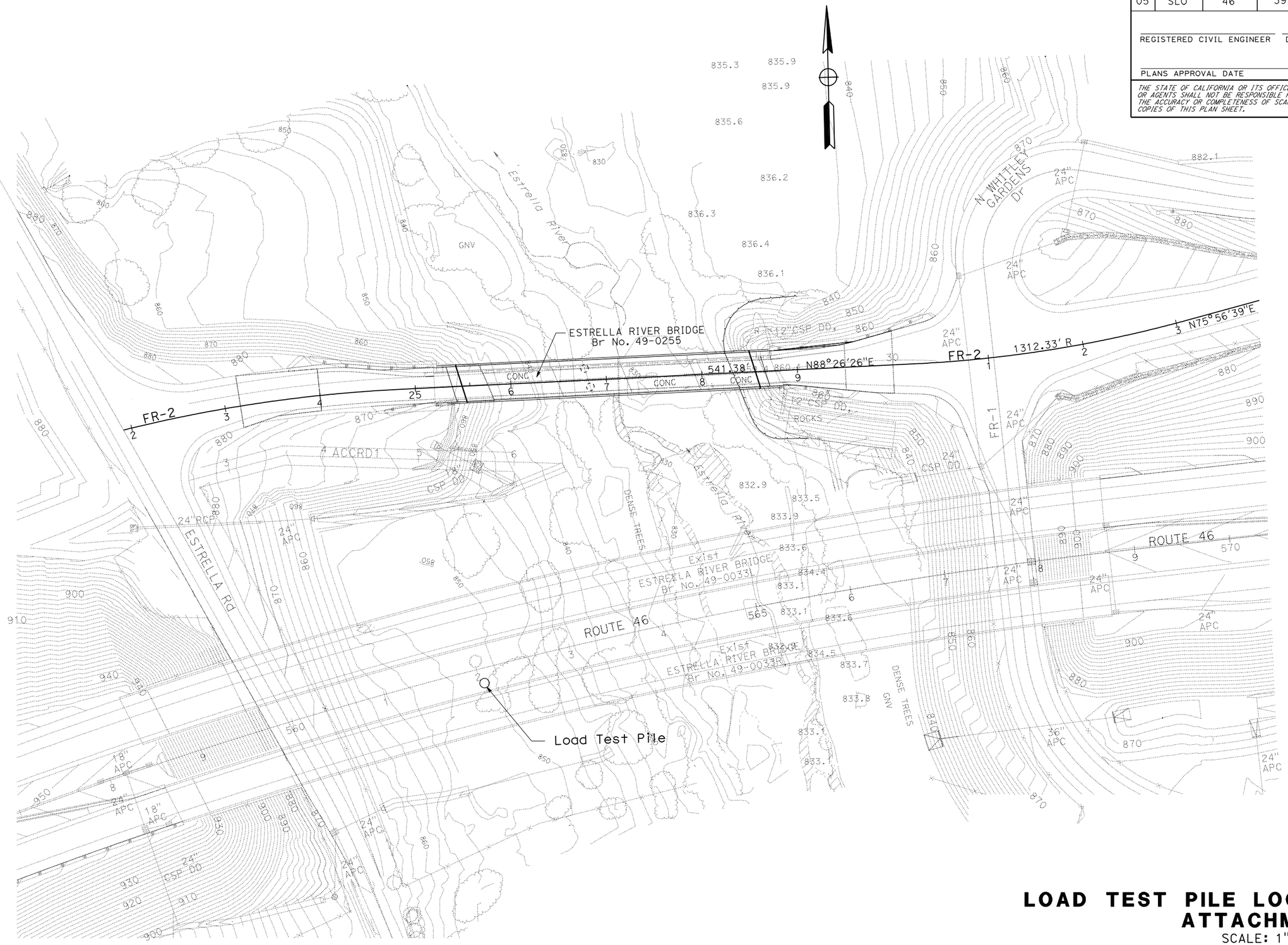

LOAD TEST PILE LOCATION
ATTACHMENT 8

SCALE: 1" = 50'

STATE OF CALIFORNIA - DEPARTMENT OF TRANSPORTATION

Caltrans® GEOTECHNICAL DESIGN

FUNCTIONAL SUPERVISOR: MIKE FINEGAN

CALCULATED-DESIGNED BY: Dan Appelbaum

CHECKED BY

REVISED BY

DATE REVISED

LAST REVISION | DATE PLOTTED

FOR CONTRACT NO.: 05-330754

INFORMATION HANDOUT

MATERIALS INFORMATION

8. Revised Structures Final Hydraulic Report for Estrella River Bridge, Bridge Number 49-0255 dated November 2, 2011

ROUTE: 05-SLO-46-PM40.0

FOR CONTRACT NO. 05-330754

STATE OF CALIFORNIA
DEPARTMENT OF TRANSPORTATION

INFORMATION HANDOUT

MATERIALS INFORMATION

INDEX

REVISED STRUCTURES FINAL HYDRAULIC REPORT
BRIDGE NUMBER 49-0255
November 2, 2011

ROUTE: 05-SLO-46-40.0

State of California
Department of Transportation

Structure Hydraulics

REVISED STRUCTURES FINAL HYDRAULIC REPORT

ESTRELLA RIVER

Located on Route 46 in San Luis Obispo County

LOCATION: 05-SLO - 46 - P.M.39.9/40.1

JOB: Estrella River Bridge Replacement (Br. No. 49-0255)

This report has been prepared under my direction as the professional engineer in responsible charge of the work, in accordance with the provisions of the Professional Engineers Act of the State of California.

REGISTERED PROFESSIONAL ENGINEER
JOHN PHAM
No. 51102
Exp. 9/30/13
CIVIL
STATE OF CALIFORNIA

REGISTERED CIVIL ENGINEER

REGISTRATION NUMBER C 51102

DATE: November 02, 2011

Revised Hydrology & Hydraulics Report

General

This is the Revised Final Hydraulic Report for the proposed Estrella River Bridge (Br. No. 49-0033) replacement. The new bridge number is 49-0255; located on State Route 46 near Whitley Garden, approximately 9 miles east of Paso Robles in San Luis Obispo County.

All reference data and calculations of this hydraulic report are obtained from the following sources:

- FEMA Flood Insurance Study (FIS) and Flood Insurance Rate Map (FIRM) for San Luis Obispo County, California, dated August 28, 2008.
- USGS Paso Robles, Shandon (CA) Topography Maps.
- USGS Gage No. 11147500 (CA).
- Preliminary Hydraulic Report prepared by Structures Hydraulics Office dated February 6, 2001.
- Caltrans Bridge Maintenance Records (BIR'S) of the existing Estrella River Bridge (Br. No. 49-0033)
- HEC-RAS Ver. 4.2, a hydraulic modeling computer program.
- General Plans provided by Office of Bridge Design Central, Branch 6, dated March 17, 2011.
- Caice survey data provided by District 5 Survey Office, dated January 16, 2008.
- Foundation Plans provided by Preliminary Investigations North dated March 07, 2011.

Note:

All calculated elevations in this report are based upon the General Plan for the Estrella River Bridge Replacement dated 03/17/2011, and the NGVD29 reference datum. Please verify datum references to the Final Design Plans and make elevation adjustments as required.

Existing Structure

Existing Estrella River Bridge (Br. No. 49-0033) was constructed in 1955. It is a simple, four-span, welded steel plate girder (5) on open seat abutments and wall piers all founded on RC piles. It has a length of 290.6 ft and a total width of 37 ft. The NBIS Item 113 code is 5, "Bridge foundations determined to be stable for assessed or calculated scour condition. Scour is determined to be within the limits of footing or piles".

Proposed Structure

It is proposed to replace the existing Estrella River Bridge (Br. No. 49-0033) with a new structure and the new bridge number is 49-0255. The proposed structure is a 2-span CIP P/S box girder on two 5'-6" octagonal column bents founded on a 8 ft diameter CIDH pile shaft and seat type Abutments founded on Class 140 Standard Plan piles. It has a length of 307.0 ft and 40.5 ft in width.

Basin

Estrella River begins at the confluence of the Cholame Creek from the northeast and the San Juan Creek from south of the town of Shandon. From the confluence, the Estrella River continues westbound to join with the Salinas River and ultimately discharges into the Pacific Ocean. During the summer, the river is normally dry with some small ponding in the channel. Water from various tributary streams begins to fill the river in the winter or wet season. The watershed is difficult to determine because its large area resulting from many tributaries. It runs through many rugged mountains with scattered small towns around narrow valleys in steep mountain canyons to hillside pastures. Many small streams from Cholame Hills at the north and La Panza Range at the south are the main tributaries of the Estrella River. From a large watershed, the discharge in this river is high during the wet seasons and slowly vanishes in the dry months. Most of the tributary streams run from steep terrain down to the Estrella River, but at the beginning of the Estrella River, just north of the town of Shandon and ended of Cholame Creek, the channel geography is flat and the channel slope does not exceed 1%. The nearest major town is Paso Robles, and the elevations in the vicinity range from 800 feet to over 3000 feet. The area is characterized by dry warm summers and cool wet winters, and the average temperature in January is 45° F and 73° F in the month of July. The basin is in the Central Coast flood region, and the mean annual rainfall ranges from 18 to 20 inches.

Discharge

USGS gage #1114750, which is located approximately 10 miles west from the proposed bridges, was used to estimate the discharge. USGS historical data recorded from 1940 to 2006 from this gage were used in determining the flow rates. The estimated 100-year discharge by using the Gage Method is 40,000 cfs, which is reasonable when compared with the 2004 FEMA flood insurances study, where the discharge at Paso Robles is 43,000 cfs. In order to be conservative, the design discharges are based on the 2008 FEMA report. The lowest soffit elevation is at 853.36 ft and used to calculate the freeboards for the 100-year and 50- year storm; the results are 5.35 feet and 7.66 feet respectively. The discharges can be found in TABLE 1.

TABLE 1

Br. No.	Bridge Name	100-year storm cfs	50-year storm cfs
49-0255	Estrella River Bridge	43,000	33,000

Stage

HEC-RAS Version 4.2 - streambed analysis computer program was used for the water modeling and bridge scour calculations. The Manning's roughness coefficient (0.035) was taken from 2007 field inspection reports. The General Plan provided from Office of Bridge Design Central, Branch 6, dated March 17, 2011 and Foundation Plans provided by Preliminary Investigations North dated March 07, 2011 were used for the bridge modeling. The future channel condition is based on a 75-year projection with no channel migration and minor channel degradation at the rate at 0.05 ft per year. Moderate debris accumulation was assumed for the analysis. The estimated high water elevations at the upstream face of the structures are shown in TABLE 2.

TABLE 2

	Bridge Name	100-year storm WS Elev. (ft)	50-year storm WS Elev. (ft)
Existing	Estrella River Bridge	848.20	845.83
Proposed	Estrella River Bridge	848.01	845.70

The water is conveyed in the channel and there will not be any significant increase the base floodwater surface elevation in the area of the proposed project, as compared with the existing condition.

Streambed

The channel bed material consists of mostly sedimentary deposits and volcanic concentrations. The soils consist of porous sandy soils and various clay loams in different depths. For more information on the channel bed composition and its depths, please refer to the Log of Test Borings provided by the Foundation Investigation Branch, Division of Geotechnical Services of this project.

Velocity

Under the present channel condition, the average velocities for the discharge are shown in TABLE 3

TABLE 3

Br. No.	Bridge Name	100-year storm Velocity (ft/s)	50-year storm Velocity (ft/s)
49-0255	Estrella River Bridge	12.00	11.41

Waterway

The required waterway area was estimated when the water passing through the structures and determined that all the alternatives will be sufficient to pass the 50-year discharge plus 2 feet freeboard. The minimum waterway is 3584 square feet.

Drift

The bridge maintenance record is available for the existing Estrella River Bridge (Br. No. 49-0033), and was used to predict the future channel behavior. Currently no significant drift has been recorded in bridge inspections. As a precaution, a moderate amount of debris accumulation at the bents will be added in the bent scour calculations.

Minimum Soffit Elevation

The minimum soffit elevation at the upstream side of the proposed structure is based on the 100-year WSE since that is greater than the 50-year WSE plus 2 feet freeboard elevations. The minimum Soffit Elevation is 848.01 feet.

Bridge Skew and Hydraulics Skew

The proposed bridge has a 15 degree skew. Minor hydraulic skew is presented when the channel is flowing full and was not considered in the bridge model.

Scour and Channel Degradation

Records of existing Estrella River Bridge (Br. No. 49-0033) will be used to predict for the channel behavior. The channel has been considered laterally and vertically stable with RSP protecting both abutment slopes. Channel degradation was considered in the analysis since the bed material is loose sand and easy to degrade under high flows. Channel degradation was detected from 1954 to 1993 from field inspection cross-sections. In 1993, the thalweg was 2.3 ft lower than the 1954 recorded thalweg elevations. The degradation rate is about 0.05 ft per year in a 39-year period. A 75-year projection of 3.75 ft was used for estimating the scour depth in this hydraulic report. The upstream cross section thalweg was obtained from the report provided from Preliminary Investigations North dated March 07, 2011. The potential total bent scour depth (total Local bent Scour plus assumed future degradation) for a 5.5 ft column diameter is approximately 19.08 ft. The anticipated scour depths are shown on TABLE 4 below. The final supported elevation for all bents and abutments foundation should be consulted with the Geotechnical Branch.

TABLE 4

5'-6" Diameter Column

Channel Contraction Scour (ft)	2.73
Local Bent Scour (ft)	12.60
Total local Bent Scour (ft)	15.33
Bent Scour Elevation (ft)	817.39
Future Degradation (ft)	3.75
Project Bent Scour Elevation (ft)	**813.64**

Bank Protection

According to the Bridge Inspection Reports, high water velocity in the channel has caused damage to the abutment embankments and washed out RSP from the existing Estrella River Bridge in the years of 1969 and 1971. Structure Hydraulics strongly recommends placing RSP at the abutments of the new structure, and the rock size is provided in TABLE 5. It is recommended that the District to determine whether bank protection is required at the roadway approaches.

TABLE 5

Recommendation for RSP rock size	*Ton*	*Thickness*
Outside layer	¼ Ton	3.3 Ft
Inner layers RSP -Class	None	
Backing Class No.	1 or 2	1.25 Ft or 1.80 Ft
RSP Fabric	A	
Method of Placement	B	
Total minimum thickness	4.55 Ft	

Flood Plain Encroachment

The proposed project is within the flood hazard areas inundated by the 100-year flood. The zoning is "ZONE A"; no base flood elevation determined as shown on San Luis Obispo County, California Flood Insurance Rate Map (FIRM), Community-Panel Number 06079C-0425F, dated August 28, 2008

Summary Information for the Bridge Designer

Notes:

1. All calculated vertical elevations (NGVD 29) in this report are based on the General Plans for the Estrella River replacements from Design Branch 6, dated 03/2011
2. Design Flood is based on the data of 2008 FEMA and USGS Gage # 1114750

Estrella River Bridge (Br. No. 49-0255)
5'-6" Octagonal Column

Based on Q-100-year

Minimum Soffit Elevation	848.01 ft
Potential Total Scour Depth + Degradation at Bents	19.08 ft
Potential Scour Elevation at Bents	813.64 ft
Required Waterway	3584.00 ft^2
Average Velocity	12.00 ft/s

HYDROLOGIC SUMMARY			
Drainage Area: N/A			
	Design Flood	**Base Flood**	**Overtopping / Flood Record**
Frequency	50-yr	100-yr	Overtopping
Discharge	33,000 ft^3/s	43,000 ft^3/s	1,350,000 ft^3/s
Water Surface Elevation at Bridge	845.70 ft	848.01 ft	862.36 ft
Flood plain data are based upon information available when the plans were prepared and are shown to meet federal requirements. The accuracy of said information is not warranted by the State and interested or affected parties should make their own investigation.			

Attachments: Bridge Scour Chart

ESTRELLA RIVER BRIDGE (Br. No. 49-0255)

Double 5'-6" diameter Octagonal Colum

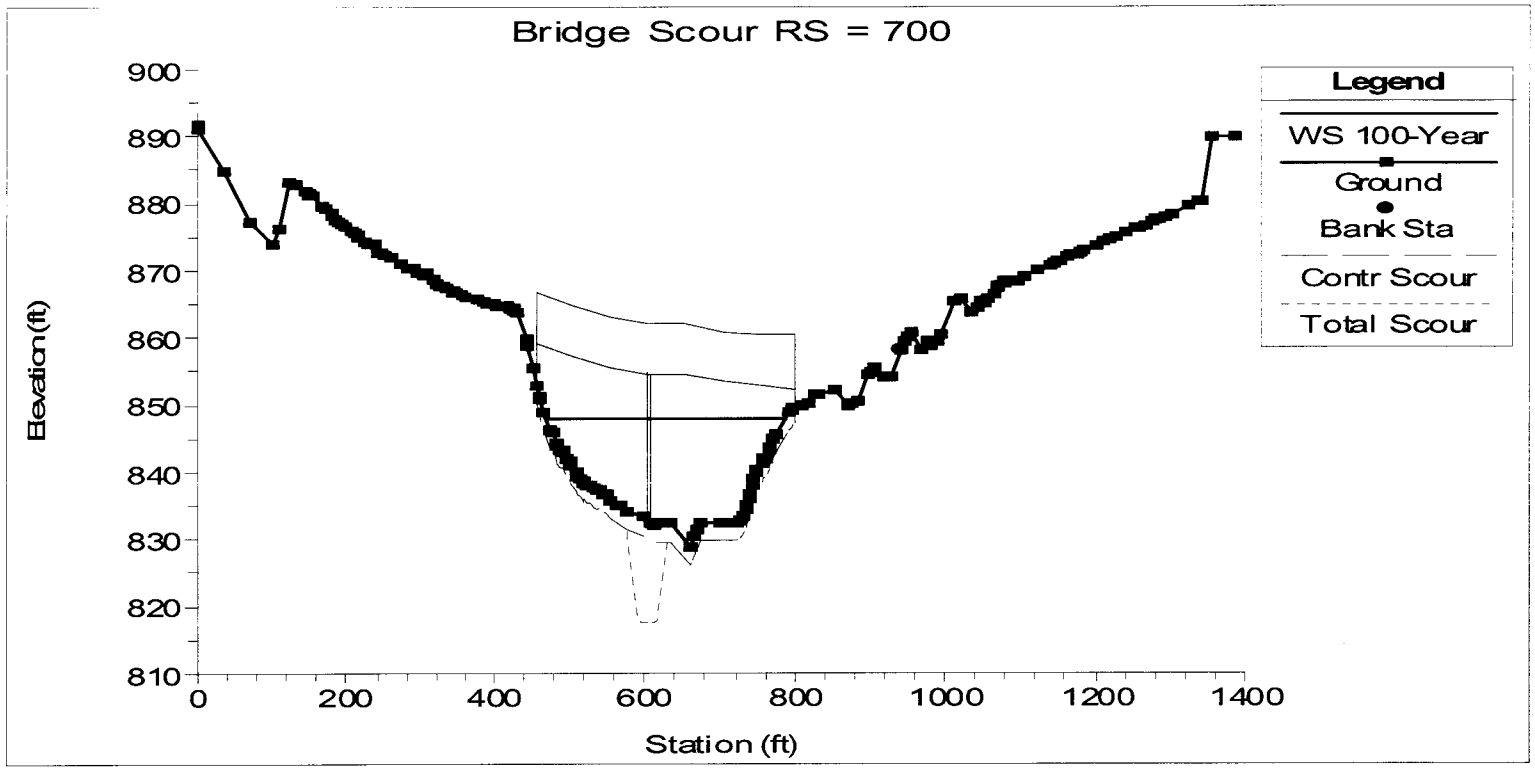

Q100-Yr = 43,000 cfs ***Water Surface Elevation= 848.01 ft*** ***Freeboard 100 yr = 5.35 ft***

Q50-Yr=33,000 cfs ***Water Surface Elevation= 845.70 ft*** ***Freeboard 50 yr = 7.66 ft***

Soffit (lowest) = 853.36 ft	*Local Bent Scour = 12.60 ft*
Exist thalweg elevation = 828.90 ft	*Channel Contraction Scour + Local Bent Scour = 15.33 ft*
Degradation projection for 75yr = 3.75 ft	***Total local scour + Future Degradation = 19.08 ft***
Channel Contraction Scour = 2.73 ft	***Total local scour + Future Degradation Elev. = 813.64 ft***

FOR CONTRACT NO.: 05-330754

INFORMATION HANDOUT

MATERIALS INFORMATION

9. Underground Classification Number: C011-079-13T for Estrella River Bridge, Bridge Number 49-0255 dated July 12, 2012

ROUTE: 05-SLO-46-PM40.0

FOR CONTRACT NO. 05-330754

STATE OF CALIFORNIA
DEPARTMENT OF TRANSPORTATION

INFORMATION HANDOUT

MATERIALS INFORMATION

INDEX

UNDERGROUND CLASSIFICATION NUMBER: C011-079-13T
ESTRELLA RIVER BRIDGE
BRIDGE NUMBER 49-0255
July 12, 2012

ROUTE: 05-SLO-46-40.0

STATE OF CALIFORNIA
EDMUND G. BROWN, JR., *Governor*

DEPARTMENT OF INDUSTRIAL RELATIONS
DIVISION OF OCCUPATIONAL SAFETY AND HEALTH ADMINISTRATION
MINING AND TUNNELING UNIT
6150 VAN NUYS BOULEVARD, SUITE 310
VAN NUYS, CA 91401-3333
(818) 901-5420 FAX (818) 901-5579

July 12, 2012

California Department of Transportation
Office of Bridge Design Central
1801 30th Street, MS 9-4/81
Sacramento, CA 95816

Attention: Don L. Nguyen-Tan

Subject: Underground Classification Number: C011-079-13T
Estrella River Bridge Project - SR 46 / PM 40.0

Dear Mr. Nguyen-Tan,

The information provided to this office regarding the referenced project has been reviewed. On the basis of this analysis, an Underground Classification of "Non Gassy" has been assigned to the tunnel excavation identified in your submittal. Please provide a copy of the Classification to the Drilling/Excavation/Construction Contractor and insure that a copy of the Classification is posted at the job site.

Please remind the Sub-Contractor to notify this office to schedule the mandated Pre-Job Safety Conference with the Division prior to commencing any activity associated with the project.

Also, be advised that, whenever an employee enters any bore or shaft being constructed under 30-inches in diameter, the Mining and Tunneling Unit then has immediate jurisdiction over that job. Please contact us prior to entering such spaces.

If you have any questions, please contact this office.

Sincerely,

James Wittry
District Manager

c: file

State of California

Department of Industrial Relations

DIVISION OF OCCUPATIONAL SAFETY AND HEALTH
MINING AND TUNNELING UNIT

C011-079-13T

Van Nuys Office R5D2

Underground Classification

8 ft Diameter Shafts @ Estrella River Bridge Project
California Department of Transportation
(NAME OF TUNNEL OR MINE AND COMPANY NAME)

of **California Department of Transportation - Office of Bridge Design Central**
1801 30th Street, MS 9-4/81 Sacramento, CA 95816
(MAILING ADDRESS)

at **Estrella River Bridge on State Route 46 at Mile Post 40.0, San Luis Obispo County, California**
(LOCATION)

has been classified as *****NON GASSY*****
(CLASSIFICATION)

as required by the California Labor Code Section 7955.

The Division shall be notified if sufficient quantities of flammable gas or vapors have been encountered underground. Classifications are based on the California Labor Code Part 9, Tunnel Safety Orders and Mine Safety Orders.

Two 8 ft Diameter Shafts to be installed at the Estrella River Bridge on State Route 46, San Luis Obispo County.

Date July 12, 2012

Reference: 1) Submital from Caltrans Bridge Design dated 7/5/12
2) TSO Recommendation Report by Caltrans - Geotechnical Services dated 5/15/12

FOR CONTRACT NO.: 05-330754

INFORMATION HANDOUT

MATERIALS INFORMATION

10. Alternative Flared Terminal Systems

ROUTE: 05-SLO-46-PM40.0

FOR CONTRACT NO. 05-330754

STATE OF CALIFORNIA
DEPARTMENT OF TRANSPORTATION

INFORMATION HANDOUT

MATERIALS INFORMATION

INDEX

ALTERNATIVE FLARED TERMINAL SYSTEM

TYPE FLEAT TERMINAL SYSTEM
TYPE SRT TERMINAL SYSTEM

ROUTE: 05-SLO-46-40.0

DIST	COUNTY	ROUTE	POST MILES TOTAL PROJECT	SHEET NO.	TOTAL SHEETS

Randell D. Hiatt
REGISTERED CIVIL ENGINEER

May 1, 2006
PLANS APPROVAL DATE

REGISTERED PROFESSIONAL ENGINEER Randell D. Hiatt No. C50200 Exp. 6-30-07 CIVIL STATE OF CALIFORNIA

The State of California or its officers or agents shall not be responsible for the accuracy or completeness of electronic copies of this plan sheet.

To get to the Caltrans web site, go to: http://www.dot.ca.gov

2006 STANDARD PLAN A77L1

TABLE A

POST OFFSET DIMENSIONS		
Post No.	3'-0" System End Offset	3'-6" System End Offset
1	36"	42"
2	22¼"	27¾"
3	11¾"	16¼"
4	6¾"	10⅝"
5	3"	6"
6	¾"	2¾"
7	0"	¾"
8	0"	0"

See Note 12

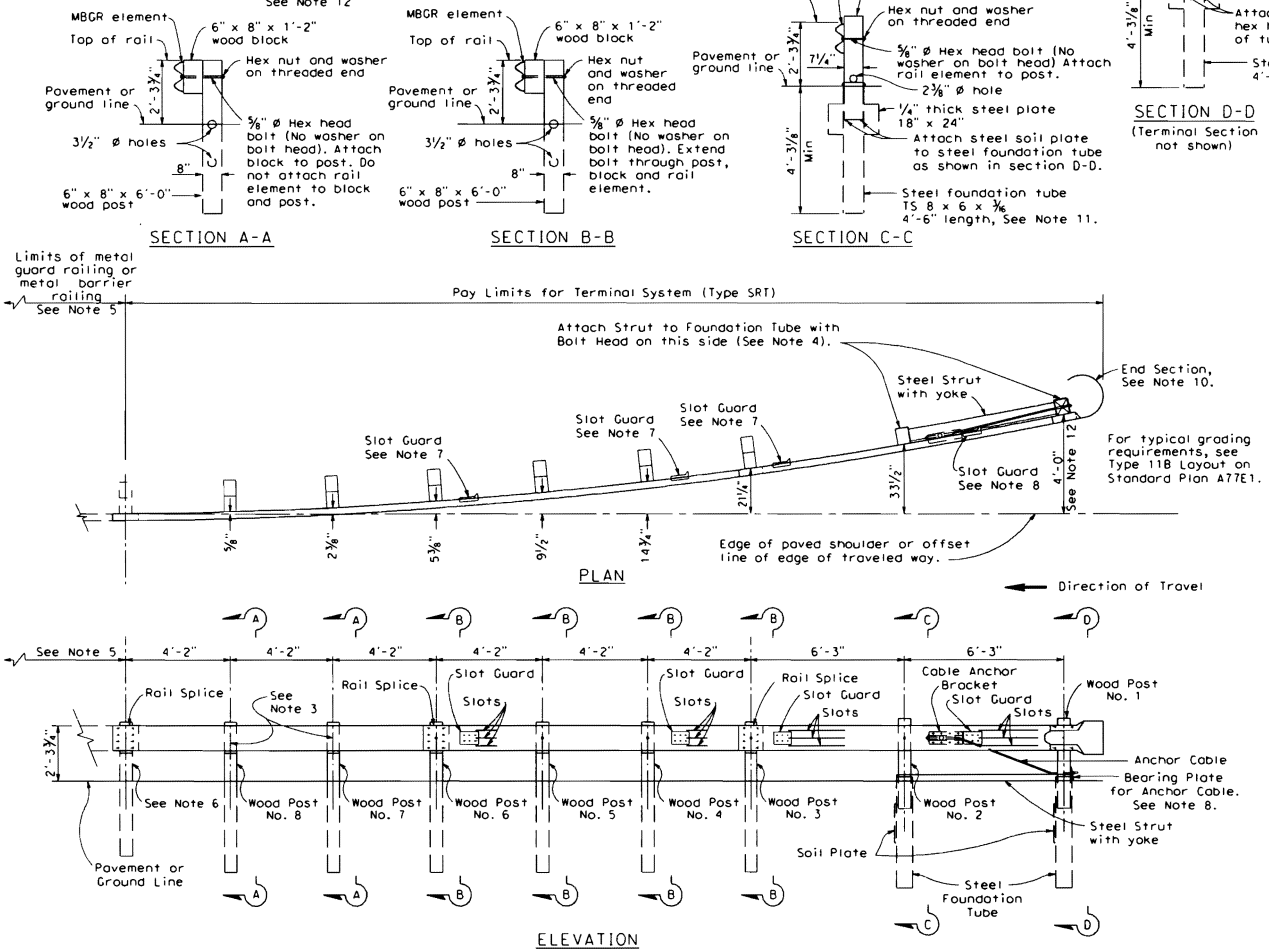

TERMINAL SYSTEM (TYPE SRT)
(8 Post System)
See Note 9

NOTES:

1. For additional details of Terminal System (Type SRT), refer to the manufacturer's installation instructions.
2. The post offset dimensions are given to the center of the traffic face of the block, except at the first two posts, where the dimension is to the center of the traffic face of the post. Offset points are to be located by chord measurements at the back of the rail equal to the nominal post spacings shown. Posts are to be set approximately radial to the railing at each post locations.
3. Do not attach rail elements to posts 7 and 8.
4. Attach strut to Post Nos. 1 and 2 foundation tubes with ⅝" ø hex head bolts, washers and hex nuts. Bolts extend through the strut, steel foundation tube, and wood posts.
5. For the length and type of metal beam guard railing or metal barrier railing the terminal system is attached to, see the Project Plans.
6. Attach rail element to this post and block. Payment for this post, block and hardware is included in payment for the type of railing or barrier the terminal system is attached to, not part of payment for Terminal System (Type SRT).
7. The deflector angle of the slot guard is to be positioned immediatley downstream of the slots.
8. For bearing plate orientation, refer to the manufacturer's installation instructions.
9. For typical use of this terminal system with guard railing, see the A77E, A77F and A77G Series of Standard Plans. See Standard Plan A78E for typical use of this terminal system with single thrie beam barrier.
10. A complete wrap around end section may continued to be used in existing installations. New installations shall be constructed with the 3/4 wrap end section shown.
11. A 6'-0" length steel foundation tube, TS 8 x 6 x 3/16 without a soil plate, may be furnished and installed in place of the 4'-6" length steel foundation tube and soil plate shown. Minimum embedment of the 6'-0" length tube shall be 5'-9". A ⅝" ø hex head bolt and nut shall be installed in the hole in 6'-0" length tube to keep the wood post from dropping into the tube.
12. Where site conditions will not accommodate use of the standard 4'-0" system end offset, 3'-6" or 3'-0" system end offsets, as applicable, may be used. See Table A for post offset dimensions for 3'-6" and 3'-0" system end offsets.

STATE OF CALIFORNIA
DEPARTMENT OF TRANSPORTATION

METAL BEAM RAILING TERMINAL SYSTEM (TYPE SRT)

NO SCALE

A77L1

1-17-06

DIST	COUNTY	ROUTE	POST MILES TOTAL PROJECT	SHEET NO.	TOTAL SHEETS

Randell D. Hiatt
REGISTERED CIVIL ENGINEER

May 1, 2006
PLANS APPROVAL DATE

REGISTERED PROFESSIONAL ENGINEER
Randell D. Hiatt
No. C50200
Exp. 6-30-07
CIVIL
STATE OF CALIFORNIA

The State of California or its officers or agents shall not be responsible for the accuracy or completeness of electronic copies of this plan sheet.

To get to the Caltrans web site, go to: http://www.dot.ca.gov

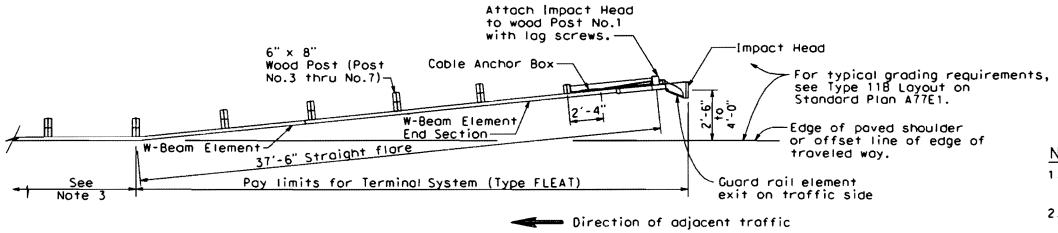

PLAN

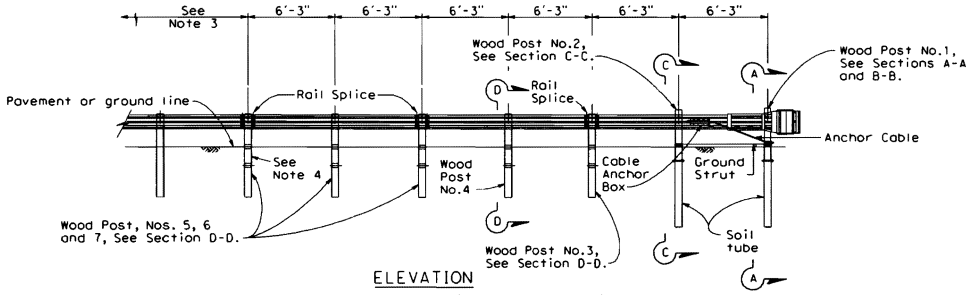

ELEVATION

TERMINAL SYSTEM (TYPE FLEAT)

NOTES:

1. For additional details of Terminal System (Type FLEAT), refer to the manufacturer's installation instructions.
2. Terminal System (Type FLEAT) not to be used where extrusion of the rail on the front side of the installation would be in the path of pedestrian traffic.
3. For the length and type of metal beam guard railing or metal barrier railing the terminal system is attached to, see Project Plans. For typical use of this terminal system with guard railing, see the A77E, A77F and A77G Series of the Standard Plans.
4. Attach rail element to this post and block. Payment for this post, block and attaching hardware is included in payment for Terminal System (Type FLEAT).

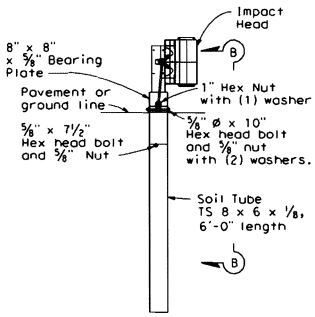

SECTION A-A
Post No.1

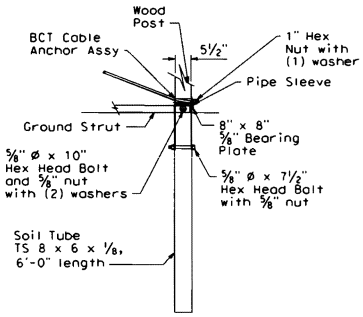

SECTION B-B
Partial view Post No.1

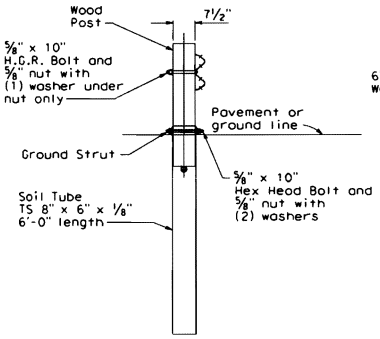

SECTION C-C
at Post No.2

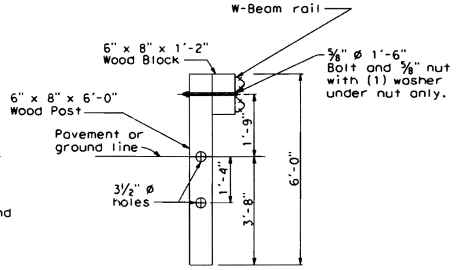

SECTION D-D
Post No.3 through No.7.

STATE OF CALIFORNIA
DEPARTMENT OF TRANSPORTATION

METAL BEAM RAILING TERMINAL SYSTEM (TYPE FLEAT)

NO SCALE

A77L5

1-17-06

2006 STANDARD PLAN A77L5