Dist	COUNTY	ROUTE	POST MILES TOTAL PROJECT	SHEET No.	TOTAL SHEETS
05	SLO	46	46.0/50.2	501	551

REGISTERED CIVIL ENGINEER

July 18, 2014
PLANS APPROVAL DATE

REGISTERED PROFESSIONAL ENGINEER Carl M. Duan No. C59976 Exp. 6-30-16 CIVIL STATE OF CALIFORNIA

THE STATE OF CALIFORNIA OR ITS OFFICERS OR AGENTS SHALL NOT BE RESPONSIBLE FOR THE ACCURACY OR COMPLETENESS OF SCANNED COPIES OF THIS PLAN SHEET.

TO ACCOMPANY PLANS DATED 6-1-15

2010 REVISED STANDARD PLAN RSP D82

DESIGN NOTES:

Design Specifications:
AASHTO LRFD Bridge Design Specifications, 4th Edition with California Amendments.

Loading:
Live load: (AASHTO LRFD 3.6.1.2)
HL-93 consists of design truck or design tandem and design lane load.

Impact Factor: (Apply to roof slab only)
$IM = 33(1.0-0.125D_E) \geq 0\%$ (AASHTO LRFD 3.6.2.2)
D_E = minimum depth of earth cover

Earth load:
Earth pressure for two conditions:
140 pcf vertical, 42 pcf horizontal
140 pcf vertical, 140 pcf horizontal

Load Factors:
AASHTO LRFD Table 3.4.1.1 & Table 3.4.1.2

Unit stresses:
f'_c = 3600 psi
f_y = 60,000 psi

Distribution "d" bars:
Up to and including 10'-0" cover
Express as a percentage of main positive reinforcement required: $\frac{100}{\sqrt{S}}$, Max 50%,

Over 10'-0" cover,
4 @ 12 maximum

Shear:
$V_c = \{2.14\sqrt{f'_c}+4600\frac{A_s}{bd_e}\frac{V_u d_e}{M_u}\}b.d_e \leq 4.0\sqrt{f'_c}b.d_e$ (Pounds)
V_c shall not be less than $3.00\sqrt{f'_c}b.d_e$ for frame members and $2.5\sqrt{f'_c}b.d_e$ for simply supported members.

Exclusion:
Compressive reinforcement and negative moment reduction (for continuity) do not apply.
Axial loading on members has not been considered.

CONSTRUCTION NOTES:

Construction loads:
Strutting required as shown on Standard Plan D88.
Strutting may be required on culvert extensions when existing parapet is removed.

Expansion joints:
Invert:
No expansion joints shall be permitted.

Roof and Walls:
When cover is less than span length-
Place ½" premolded expansion joint filler at 30'-0" ± centers outside the paved roadway lanes and place Bridge Detail 3-2, Standard Plan B0-3, at 30'-0" centers under paved roadway lanes.
When cover is more than span length-
Place ½" premolded expansion joint filler at 30'-0" ± centers and additional ½" premolded expansion joints at locations of change in foundation character, as directed by the Engineer.

Construction joints:
Temporary joints may be permitted if normal (or radial) to ℄ of RCB. Otherwise, the contractor is to submit a proposal for consideration.

Cutoff walls:
4'-0" cutoff walls are to be provided at inlet and/or outlet unless adjacent channel is lined and unless otherwise shown. These walls are to be extended if scour conditions warrant.

Earthwork:
See Standard Plan A62E.

Backfill:
See Standard Specifications, except that the difference in level of backfill (against outside walls) shall not exceed 2'-0".

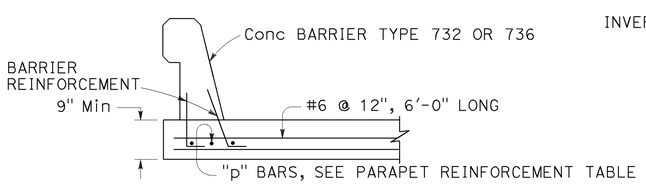

BARRIER SECTION (30'-0" MINIMUM)

GENERAL NOTES:

Designation:
Standard single or multiple box culverts are shown on plans as span times height with maximum cover over roof thus: 8' x 5' RCB with 10' or double 10' x 5' RCB with 20', followed by alternatives.

Alternatives:
Single cell: Invert will be sloped unless "trapezoidal invert", "flat invert" or "V invert" is included in designation.
Multiple cell: Invert will be vee unless "flat invert" is specified. Ends of culvert will be rounded unless "square ends" are designated. Parapets will be as shown unless designated in plans. Such designations may be different for inlet and outlet ends.

Quantities:
Quantities do not include the following:
- Concrete for parapet, paving notches and cut-off wall.
- Reinforcement for 2% splices, parapets, paving notches, cut-off wall and additional required bars for exposed top slab (D-80, Note 9).

Reinforcement placement:
Main reinforcement is to be placed transversely or, for curved culverts, radially. When radial, reinforcing spacing of the "a", "f" and "g" bars is measured along the centerline. Stagger splices not shown. Hooks may be rotated or tilted, as necessary, for clearance.

Special reinforcement coverage:
Box standard plans are not to be used for culverts in a corrosive environment or where there is a severe abrasive flow condition or in freeze-thaw locations.

Special design:
Required for culverts with conditions, loads, design bearing pressures or sizes greater than those given on this plan or Standard Plans D80 & D81. Also required for multiple cell culverts with unequal spans. For culverts with railroad loading, see the current AREMA design specification.

3 or more cells:
For culverts with more than two cells, use dimensions and reinforcement for the standard "double box culvert" and adjust quantities accordingly.

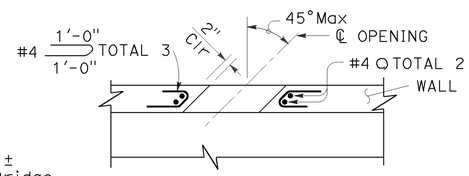

PART PLAN-SECTION

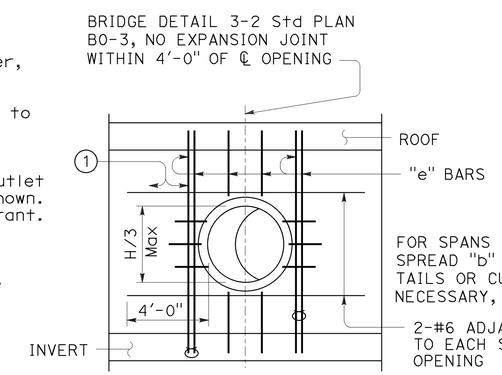

LONGITUDINAL SECTION

UTILITY OPENING-WALL

H=Height of box

(1) Adjacent to each side of the opening, place additional bars equivalent to half the interrupted main reinforcement.

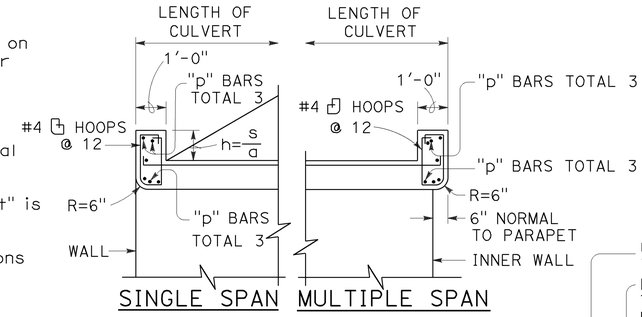

PARAPET DETAIL

s = Clear span (ft)
a = 12 cosine skew angle
h = Height, 1'-0" Min

PARAPET "p" BARS			
SPAN \ SKEW ANGLE	0° TO 15°	16° TO 30°	31° TO 45°
4'	#4	#4	#4
6'	#4	#4	#5
8'	#4	#5	#6
10'	#5	#6	#7
12'	#6	#7	#8
14'	#7	#8	#9

PARAPET REINFORCEMENT

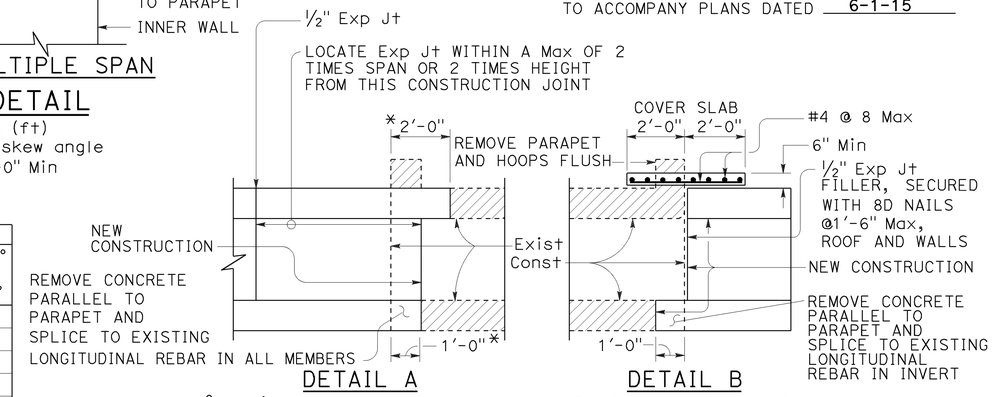

DETAIL A

20° maximum skew as shown. If existing longitudinal and transverse reinforcing bars in top slab are lap spliced with new longitudinal and transverse reinforcing bars, the 20° skew may be exceeded. Lap splicing may require removal of top slab in excess of 2'-0" shown.

DETAIL B

Single cell only, no skew allowed, 1'-0" minimum cover.

* Measured perpendicular to parapet

CULVERT EXTENSION

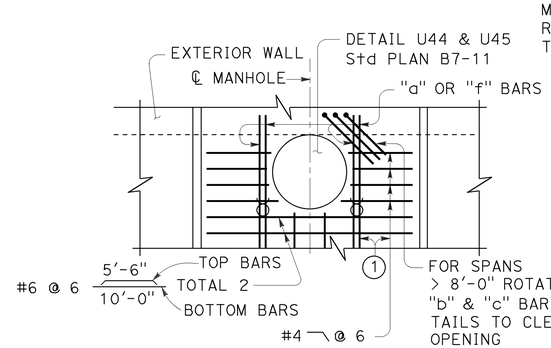

PART PLAN

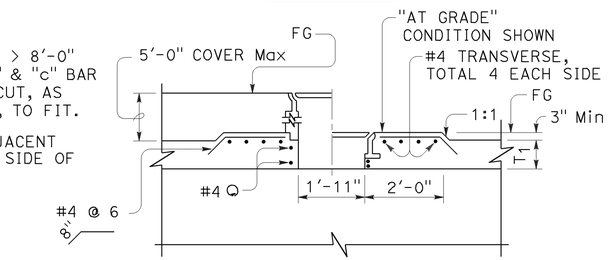

PART LONGITUDINAL SECTION

MANHOLE

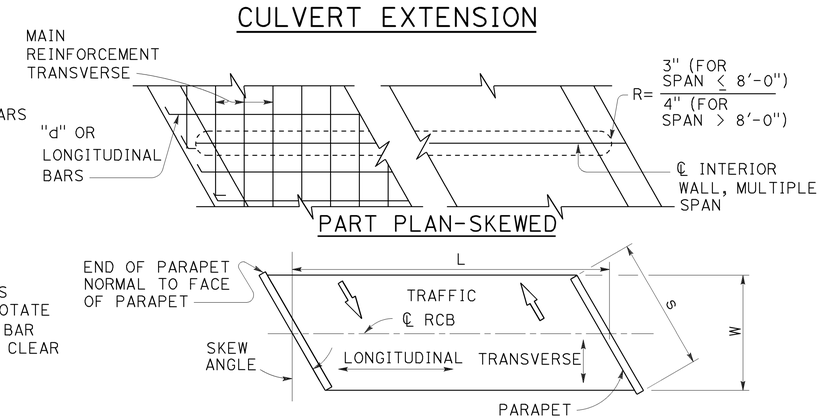

PART PLAN-SKEWED

RCB TERMINOLOGY

STATE OF CALIFORNIA
DEPARTMENT OF TRANSPORTATION

CAST-IN-PLACE REINFORCED CONCRETE BOX CULVERT MISCELLANEOUS DETAILS

NO SCALE

RSP D82 DATED JULY 18, 2014 SUPERSEDES STANDARD PLAN D82 DATED MAY 20, 2011 - PAGE 174 OF THE STANDARD PLANS BOOK DATED 2010.

REVISED STANDARD PLAN RSP D82

4-3-14

Dist	COUNTY	ROUTE	POST MILES TOTAL PROJECT	SHEET No.	TOTAL SHEETS
05	SLO	46	46.0/50.2	502	551

Gregory A. Balzer
LICENSED LANDSCAPE ARCHITECT

July 19, 2013
PLANS APPROVAL DATE

THE STATE OF CALIFORNIA OR ITS OFFICERS OR AGENTS SHALL NOT BE RESPONSIBLE FOR THE ACCURACY OR COMPLETENESS OF SCANNED COPIES OF THIS PLAN SHEET.

LICENSED LANDSCAPE ARCHITECT — Gregory A. Balzer 2576 — 02-28-15 Renewal Date — 7-19-13 Date — STATE OF CALIFORNIA

TO ACCOMPANY PLANS DATED 6-1-15

A

AB	AGGREGATE BASE
ABS	ACRYLONITRILE-BUTADIENE-STYRENE
AC	ASPHALT CONCRETE
ACC	ARMOR-CLAD CONDUCTORS
Adj	ADJACENT/ADJUSTABLE
AIC	AUXILIARY IRRIGATION CONTROLLER
Alt	ALTERNATIVE
AMEND	AMENDMENT
ARV	AIR RELEASE VALVE
AUTO	AUTOMATIC
AUX	AUXILIARY
AVB	ATMOSPHERIC VACUUM BREAKER

B

B&B	BALLED AND BURLAPPED
B/B	BRASS/BRONZE
B/B/PL	BRASS/BRONZE/PLASTIC
B/PL	BRASS/PLASTIC
BFM	BONDED FIBER MATRIX
Bit Ctd	BITUMINOUS COATED
BP	BOOSTER PUMP
BPA	BACKFLOW PREVENTER ASSEMBLY
BPE	BACKFLOW PREVENTER ENCLOSURE
BV	BALL VALVE

C

C	CONDUIT
CAP	CORRUGATED ALUMINUM PIPE
CARV	COMBINATION AIR RELEASE VALVE
CB	COUPLING BAND
CCA	CAM COUPLER ASSEMBLY
CEC	CONTROLLER ENCLOSURE CABINET
CHDPE	CORRUGATED HIGH DENSITY POLYETHYLENE
CL	CHAIN LINK
CNC	CONTROL AND NEUTRAL CONDUCTORS
Conc	CONCRETE
CP	COPPER PIPE
CS	COMPOST SOCK
CSP	CORRUGATED STEEL PIPE
CST	CENTER STRIP
CV	CHECK VALVE

D

Dia	DIAMETER
DIP	DUCTILE IRON PIPE
DIT	DRIP IRRIGATION TUBING
DG	DECOMPOSED GRANITE
DN	DIAMETER NOMINAL
DVA	DRIP VALVE ASSEMBLY

E

EC	EROSION CONTROL
ECTC	EROSION CONTROL TECHNOLOGY COUNCIL
Elect	ELECTRIC/ELECTRICAL
Elev	ELEVATION
ELL	ELBOW
ENCL	ENCLOSURE
EP	EDGE OF PAVEMENT
ES	EDGE OF SHOULDER
EST	END STRIP
ESTB	ESTABLISHMENT
ETW	EDGE OF TRAVELED WAY

F

F	FULL CIRCLE
F/P	FULL/PART CIRCLE
FCV	FLOW CONTROL VALVE
FERT	FERTILIZER
FG	FINISHED GRADE
FH	FLEXIBLE HOSE
FIPT	FEMALE IRON PIPE THREAD
FIS	FERTILIZER INJECTOR SYSTEM
FL	FLOW LINE
FR	FIBER ROLL
FS	FLOW SENSOR
FSC	FLOW SENSOR CABLE
FV	FLUSH VALVE

G

Galv	GALVANIZED
GARV	GARDEN VALVE
GARVA	GARDEN VALVE ASSEMBLY
GM	GRAVEL MULCH
GPH	GALLONS PER HOUR
GPM	GALLONS PER MINUTE
GSP	GALVANIZED STEEL PIPE
GV	GATE VALVE

H

H	HALF CIRCLE
HDPE	HIGH DENSITY POLYETHYLENE
HP	HORSEPOWER/HINGE POINT
HPL	HIGH PRESSURE LINE
Hwy	HIGHWAY

I

IC	IRRIGATION CONTROLLER
ICC	IRRIGATION CONTROLLER(S) IN CONTROLLER ENCLOSURE CABINET
ID	INSIDE DIAMETER
IFS	IRRIGATION FILTRATION SYSTEM
IPS	IRON PIPE SIZE
IPT	IRON PIPE THREAD
Irr	IRRIGATION

L

L	LENGTH

M

Max	MAXIMUM
MBGR	METAL BEAM GUARD RAILING
MCV	MANUAL CONTROL VALVE
MIC	MASTER IRRIGATION CONTROLLER
Min	MINIMUM
MIPT	MALE IRON PIPE THREAD
Misc	MISCELLANEOUS
Mtl	MATERIAL
MVP	MAINTENANCE VEHICLE PULLOUT

N

NCN	NO COMMON NAME
NL	NOZZLE LINE
No.	NUMBER
NPT	NATIONAL PIPE THREAD

O

O/C	ON CENTER
OD	OUTSIDE DIAMETER
OL	OVERLAP

P

P	PART CIRCLE
PB	PULL BOX
PCC	PORTLAND CEMENT CONCRETE
PE	POLYETHYLENE
Pkt	PACKET
PL	PLASTIC
PLS	PURE LIVE SEED
PLT	PLANT/PLANTING
PLT ESTB	PLANT ESTABLISHMENT
PM	POST MILE
PR	PRESSURE RATED
PRLV	PRESSURE RELIEF VALVE
PRV	PRESSURE REGULATING VALVE
PVC	POLYVINYL CHLORIDE
Pvmt	PAVEMENT

Q

Q	QUARTER CIRCLE
QCV	QUICK COUPLING VALVE

R

R	RADIUS
RCP	REINFORCED CONCRETE PIPE
RCV	REMOTE CONTROL VALVE
RCVM	REMOTE CONTROL VALVE (MASTER)
RCVMF	REMOTE CONTROL VALVE (MASTER) W/FLOW SENSOR
RCVP	REMOTE CONTROL VALVE W/PRESSURE REGULATOR
RCW	RECYCLED WATER
RECP	ROLLED EROSION CONTROL PRODUCT
REQ	REQUIRED
RICS	REMOTE IRRIGATION CONTROL SYSTEM
R/W	RIGHT OF WAY

S

S	SLIP
SCH	SCHEDULE
SF	STATE-FURNISHED
Shld	SHOULDER
Sq	SQUARE
SST	SIDE STRIP
Sta	STATION
Std	STANDARD
SW	SIDEWALK/SOUND WALL

T

T	THIRD CIRCLE/THREAD
TLS	TRUCK LOADING STANDPIPE
TQ	THREE QUARTER CIRCLE
TRM	TURF REINFORCEMENT MAT
TT	TWO-THIRDS CIRCLE
TWSA	TREE WELL SPRINKLER ASSEMBLY
Typ	TYPICAL

U

UG	UNDERGROUND

W

W	WIDTH
W/	WITH
WM	WATER METER
WS	WYE STRAINER
WSA	WYE STRAINER ASSEMBLY
WSP	WELDED STEEL PIPE
WWM	WELDED WIRE MESH

NOTE:

For additional abbreviations, see Standard Plans A10A and A10B.

STATE OF CALIFORNIA
DEPARTMENT OF TRANSPORTATION

LANDSCAPE AND EROSION CONTROL ABBREVIATIONS

NO SCALE

RSP H1 DATED JULY 19, 2013 SUPERSEDES STANDARD PLAN H1 DATED MAY 20, 2011 - PAGE 218 OF THE STANDARD PLANS BOOK DATED 2010.

REVISED STANDARD PLAN RSP H1

2010 REVISED STANDARD PLAN RSP H1

6-28-13

Dist	COUNTY	ROUTE	POST MILES TOTAL PROJECT	SHEET No.	TOTAL SHEETS
05	SLO	46	46.0/50.2	503	551

Gregory A. Balzer
LICENSED LANDSCAPE ARCHITECT

November 15, 2013
PLANS APPROVAL DATE

LICENSED LANDSCAPE ARCHITECT
Gregory A. Balzer 2516
Gregory A. Balzer
Expiration Date
2-28-15
Renewal Date
11-15-13
Date
STATE OF CALIFORNIA

THE STATE OF CALIFORNIA OR ITS OFFICERS OR AGENTS SHALL NOT BE RESPONSIBLE FOR THE ACCURACY OR COMPLETENESS OF SCANNED COPIES OF THIS PLAN SHEET.

TO ACCOMPANY PLANS DATED 6-1-15

2010 REVISED STANDARD PLAN RSP H2

EXISTING	NEW	ITEM DESCRIPTION
		WATER METER (WM)
		BACKFLOW PREVENTER ASSEMBLY (BPA)
		BACKFLOW PREVENTER ENCLOSURE (BPE)
		BOOSTER PUMP (BP)
		TRUCK LOADING STANDPIPE (TLS)
	FS	FLOW SENSOR (FS)
		MASTER IRRIGATION CONTROLLER (MIC)
		AUXILIARY IRRIGATION CONTROLLER (AIC)
		IRRIGATION CONTROLLER (IC) IRRIGATION CONTROLLER (IC) (BATTERY) IRRIGATION CONTROLLER (IC) (SOLAR) IRRIGATION CONTROLLER (IC) (TWO WIRE) IRRIGATION CONTROLLER(S) IN CONTROLLER ENCLOSURE CABINET (ICC)
acc	ACC	ARMOR-CLAD CONDUCTORS (ACC)
cnc	CNC	CONTROL AND NEUTRAL CONDUCTORS (CNC)
		IRRIGATION CONDUIT
		EXTEND IRRIGATION CONDUIT
dip	DIP	DUCTILE IRON PIPE (SUPPLY LINE) (MAIN) (DIP)
		GALVANIZED STEEL PIPE (SUPPLY LINE) (MAIN) (GSP)
		GALVANIZED STEEL PIPE (SUPPLY LINE) (LATERAL) (GSP)
		PLASTIC PIPE (SUPPLY LINE) (MAIN)
		PLASTIC PIPE (SUPPLY LINE) (LATERAL)
cp	CP	COPPER PIPE (SUPPLY LINE)
dit	DIT	DRIP IRRIGATION TUBING
		REMOTE CONTROL VALVE (RCV) REMOTE CONTROL VALVE (MASTER) (RCVM) REMOTE CONTROL VALVE (MASTER) W/FLOW METER (RCVMF)
P	P	REMOTE CONTROL VALVE W/PRESSURE REGULATOR (RCVP)
		EXISTING MANUAL CONTROL VALVE (MCV)
	V	DRIP VALVE ASSEMBLY (DVA)
	Y	WYE STRAINER ASSEMBLY (WSA)

EXISTING	NEW	ITEM DESCRIPTION
		GATE VALVE (GV)
		BALL VALVE (BV)
		QUICK COUPLING VALVE (QCV)
		CAM COUPLER ASSEMBLY (CCA)
		GARDEN VALVE ASSEMBLY (GARVA)
		PRESSURE REGULATING VALVE (PRV)
		PRESSURE RELIEF VALVE (PRLV)
		FLOW CONTROL VALVE (FCV)
		COMBINATION AIR RELEASE VALVE (CARV)
		CHECK VALVE (CV)
		FLUSH VALVE (FV)
		EXISTING NOZZLE LINE W/TURNING UNION
		EXISTING IRRIGATION SYSTEM
		EXISTING IRRIGATION SYSTEM TO BE REMOVED
		CHAIN LINK GATE
		QUICK COUPLING VALVE W/SPRINKLER PROTECTOR
3	3	SPRINKLER W/SPRINKLER PROTECTOR
	C	CONNECT TO EXISTING SYSTEM
		CAP
		CAP EXISTING
	FR	FIBER ROLL
	CS	COMPOST SOCK

- RCV SIZE
- IRRIGATION CONTROLLER
- CONTROLLER STATION
- VALVE IN PARALLEL (IF APPLICABLE)
- GPM
- QUANTITY OF SPRINKLERS (WHEN SHOWN)

* 2½"-A-2b-40-60

VALVE CODE

* VALVE CODES FOR EXISTING VALVES ARE SHOWN IN A DASHED ENCLOSURE.

STATE OF CALIFORNIA
DEPARTMENT OF TRANSPORTATION

LANDSCAPE AND EROSION CONTROL SYMBOLS

NO SCALE

RSP H2 DATED NOVEMBER 15, 2013 SUPERSEDES RSP H2 DATED JULY 19, 2013 AND STANDARD PLAN H2 DATED MAY 20, 2011 - PAGE 219 OF THE STANDARD PLANS BOOK DATED 2010.

REVISED STANDARD PLAN RSP H2

10-9-13

Dist	COUNTY	ROUTE	POST MILES TOTAL PROJECT	SHEET No.	TOTAL SHEETS
05	SLO	46	46.0/50.2	504	551

Gregory A. Bolzer
LICENSED LANDSCAPE ARCHITECT

July 19, 2013
PLANS APPROVAL DATE

LICENSED LANDSCAPE ARCHITECT
Gregory A. Bolzer 2516
Expiration Date
2-28-15
Renewal Date
7-19-13
Date
STATE OF CALIFORNIA

THE STATE OF CALIFORNIA OR ITS OFFICERS OR AGENTS SHALL NOT BE RESPONSIBLE FOR THE ACCURACY OR COMPLETENESS OF SCANNED COPIES OF THIS PLAN SHEET.

TO ACCOMPANY PLANS DATED 6-1-15

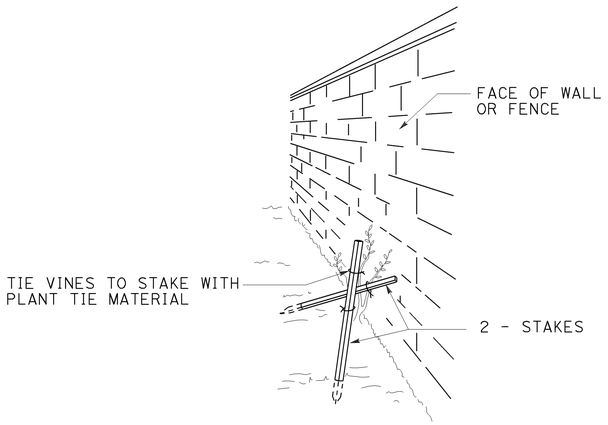

PERSPECTIVE
VINE STAKING

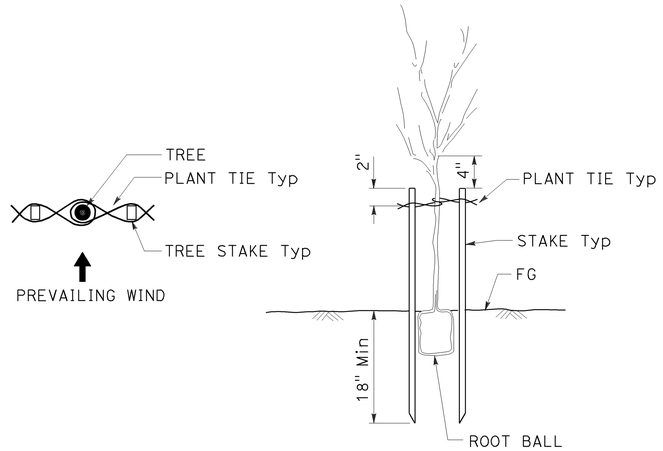

TREE STAKING

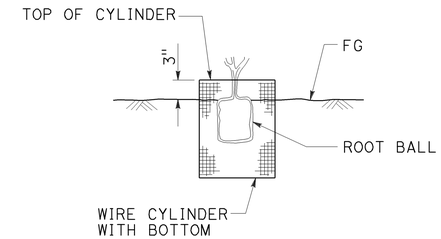

SECTION
ROOT PROTECTOR

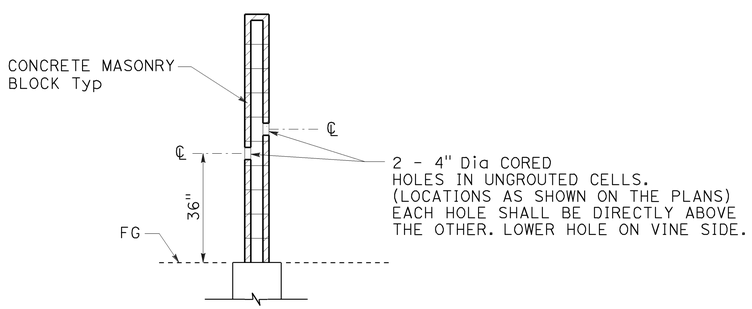

SECTION
CORE HOLE (VINE)

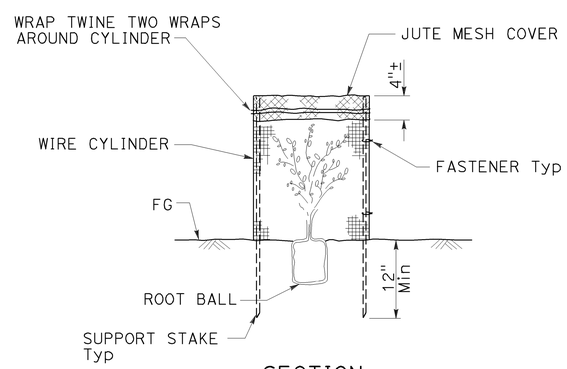

SECTION
FOLIAGE PROTECTOR

STATE OF CALIFORNIA
DEPARTMENT OF TRANSPORTATION

LANDSCAPE DETAILS

NO SCALE

RSP H4 DATED JULY 19, 2013 SUPERSEDES STANDARD PLAN H4
DATED MAY 20, 2011 - PAGE 221 OF THE STANDARD PLANS BOOK DATED 2010.

REVISED STANDARD PLAN RSP H4

2010 REVISED STANDARD PLAN RSP H4

6-28-13

Dist	COUNTY	ROUTE	POST MILES TOTAL PROJECT	SHEET No.	TOTAL SHEETS
05	SLO	46	46.0/50.2	505	551

LICENSED LANDSCAPE ARCHITECT

July 19, 2013
PLANS APPROVAL DATE

THE STATE OF CALIFORNIA OR ITS OFFICERS OR AGENTS SHALL NOT BE RESPONSIBLE FOR THE ACCURACY OR COMPLETENESS OF SCANNED COPIES OF THIS PLAN SHEET.

Gregory A. Balzer 2576 — Registered Professional Engineer — 2-28-15 — Renewal Date — 7-19-13 — Date — LICENSED LANDSCAPE ARCHITECT — STATE OF CALIFORNIA

TO ACCOMPANY PLANS DATED 6-1-15

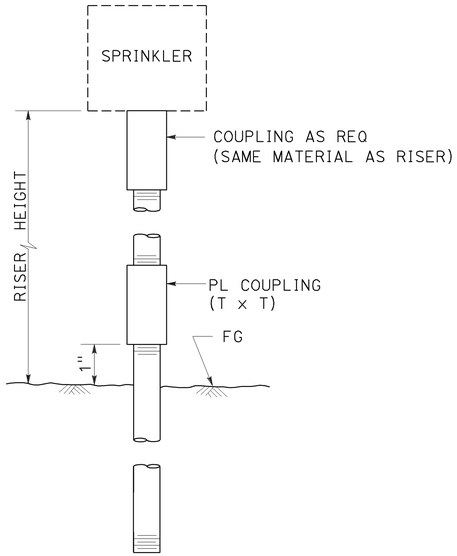

ELEVATION

RISER SPRINKLER ASSEMBLY TYPE I

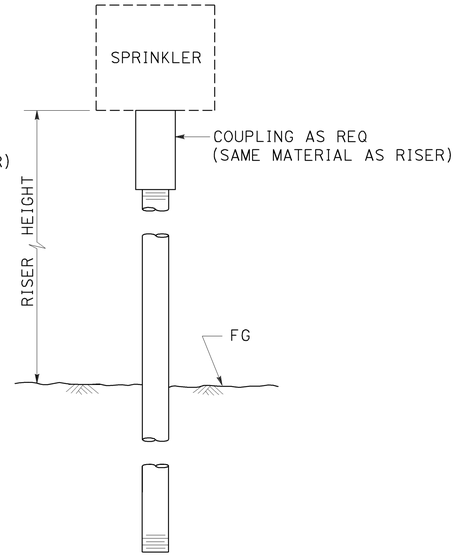

ELEVATION

RISER SPRINKLER ASSEMBLY TYPE II

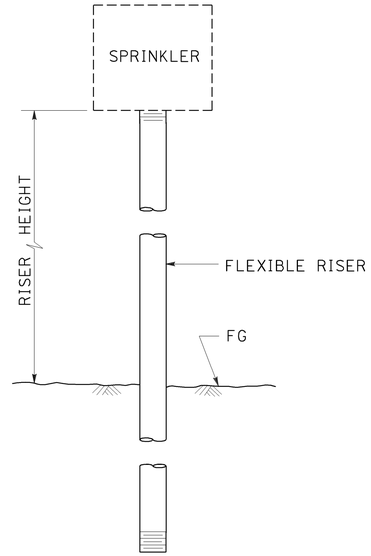

ELEVATION

RISER SPRINKLER ASSEMBLY TYPE III

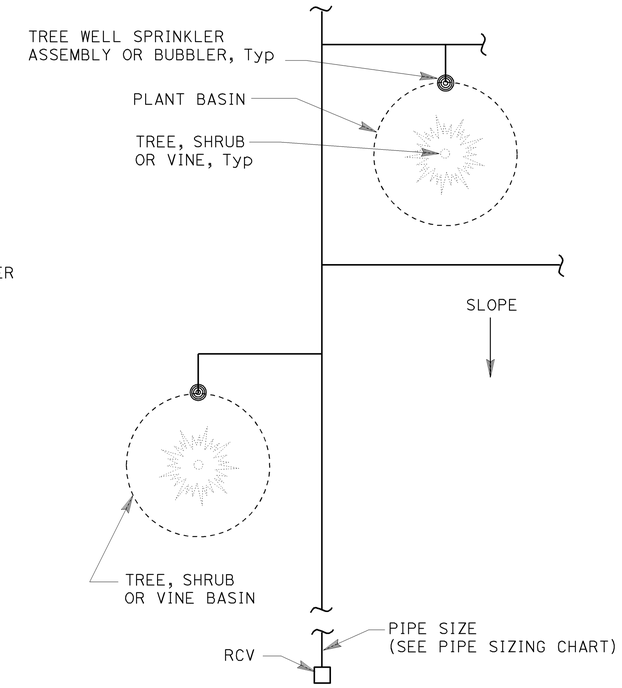

PLAN

NOTES:

1. Install tree well sprinkler assembly on up-hill side of plant when on slope.
2. Install bubbler within basin.

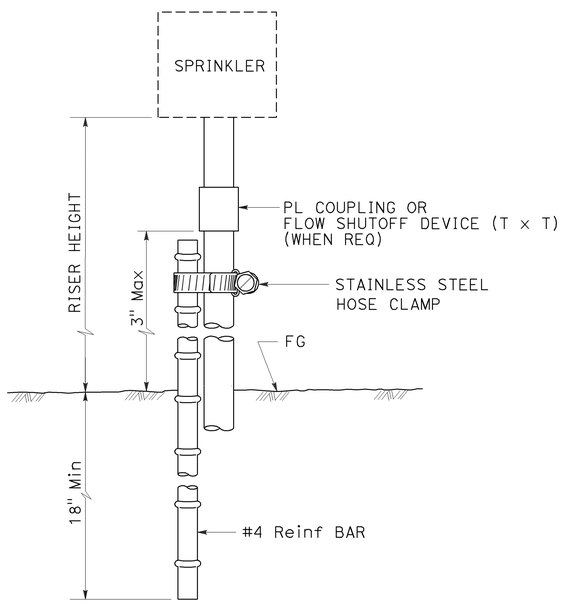

ELEVATION

RISER SPRINKLER ASSEMBLY TYPE IV

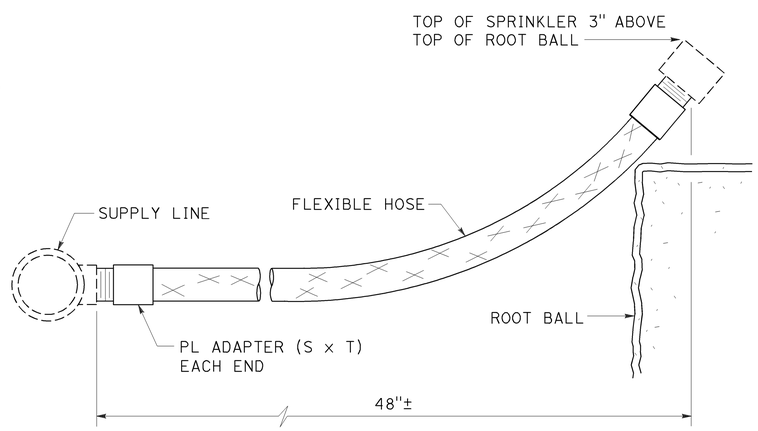

ELEVATION

RISER SPRINKLER ASSEMBLY TYPE V

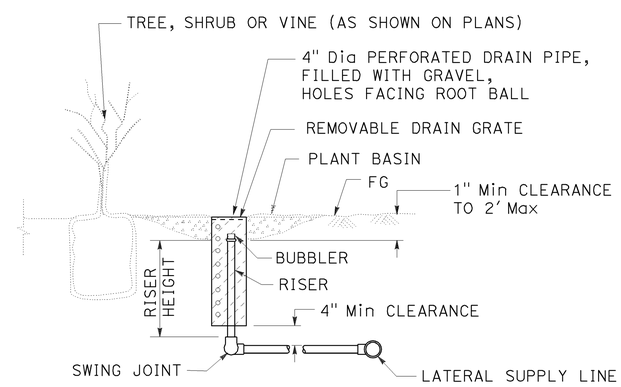

SECTION

TREE WELL SPRINKLER ASSEMBLY

STATE OF CALIFORNIA
DEPARTMENT OF TRANSPORTATION

LANDSCAPE DETAILS

NO SCALE

RSP H5 DATED JULY 19, 2013 SUPERSEDES STANDARD PLAN H5
DATED MAY 20, 2011 - PAGE 222 OF THE STANDARD PLANS BOOK DATED 2010.

REVISED STANDARD PLAN RSP H5

2010 REVISED STANDARD PLAN RSP H5

6-28-13

Dist	COUNTY	ROUTE	POST MILES TOTAL PROJECT	SHEET No.	TOTAL SHEETS
05	SLO	46	46.0/50.2	506	551

Gregory A. Balzer
LICENSED LANDSCAPE ARCHITECT

July 19, 2013
PLANS APPROVAL DATE

LICENSED LANDSCAPE ARCHITECT Gregory A. Balzer 2576 STATE OF CALIFORNIA
Expiration Date 2-28-15
Renewal Date 7-19-13
Date

THE STATE OF CALIFORNIA OR ITS OFFICERS OR AGENTS SHALL NOT BE RESPONSIBLE FOR THE ACCURACY OR COMPLETENESS OF SCANNED COPIES OF THIS PLAN SHEET.

TO ACCOMPANY PLANS DATED 6-1-15

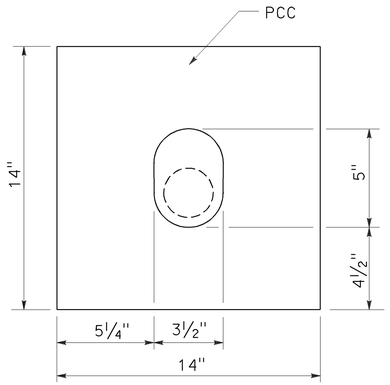

PLAN

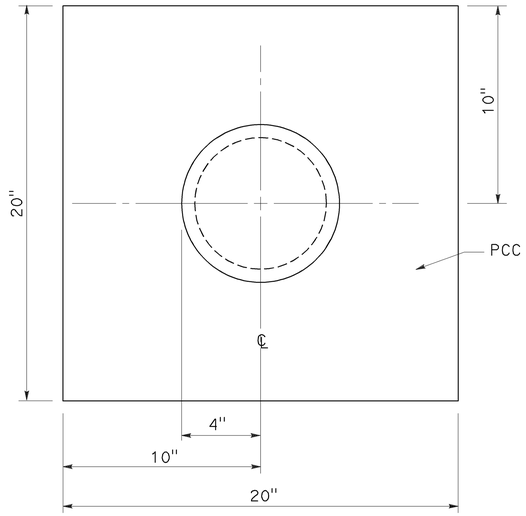

PLAN

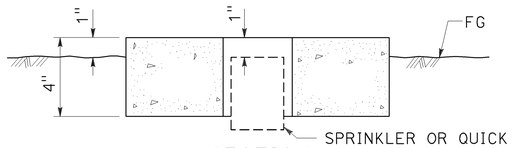

SECTION

SPRINKLER PROTECTOR TYPE I

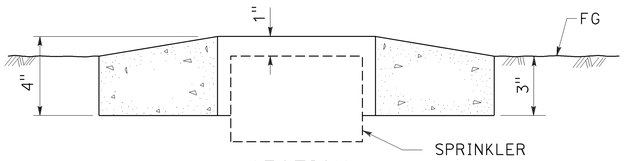

SECTION

SPRINKLER PROTECTOR TYPE II

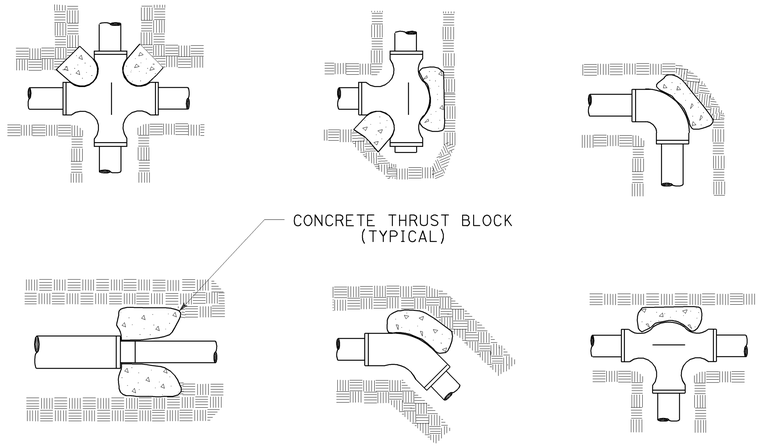

TYPICAL THRUST BLOCKS

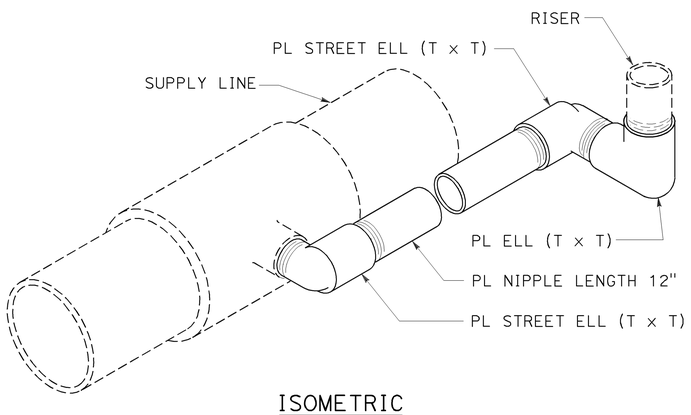

ISOMETRIC

POP-UP SPRINKLER ASSEMBLY TYPE I

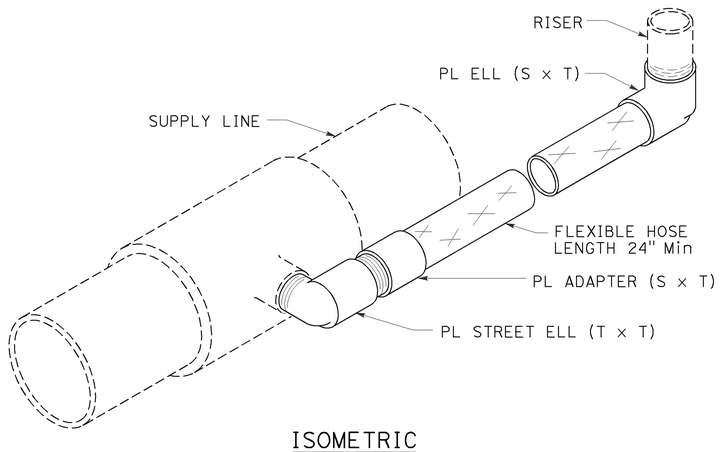

ISOMETRIC

POP-UP SPRINKLER ASSEMBLY TYPE II

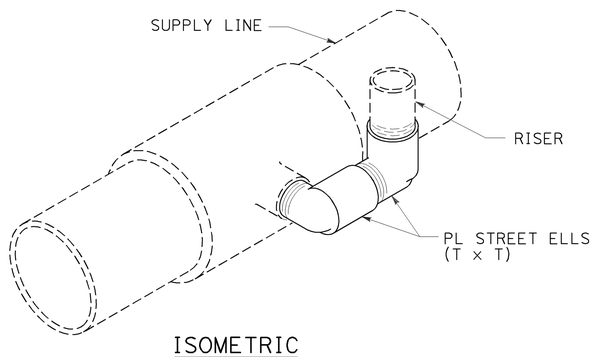

ISOMETRIC

POP-UP SPRINKLER ASSEMBLY TYPE III

STATE OF CALIFORNIA
DEPARTMENT OF TRANSPORTATION

LANDSCAPE DETAILS

NO SCALE

RSP H6 DATED JULY 19, 2013 SUPERSEDES STANDARD PLAN H6
DATED MAY 20, 2011 - PAGE 223 OF THE STANDARD PLANS BOOK DATED 2010.

REVISED STANDARD PLAN RSP H6

2010 REVISED STANDARD PLAN RSP H6

6-28-13

Dist	COUNTY	ROUTE	POST MILES TOTAL PROJECT	SHEET No.	TOTAL SHEETS
05	SLO	46	46.0/50.2	507	551

LICENSED LANDSCAPE ARCHITECT

July 19, 2013
PLANS APPROVAL DATE

LICENSED LANDSCAPE ARCHITECT
Gregory A. Balzer 2576
Expiration Date
2-28-15
Renewal Date
7-19-13
Date
STATE OF CALIFORNIA

THE STATE OF CALIFORNIA OR ITS OFFICERS OR AGENTS SHALL NOT BE RESPONSIBLE FOR THE ACCURACY OR COMPLETENESS OF SCANNED COPIES OF THIS PLAN SHEET.

TO ACCOMPANY PLANS DATED 6-1-15

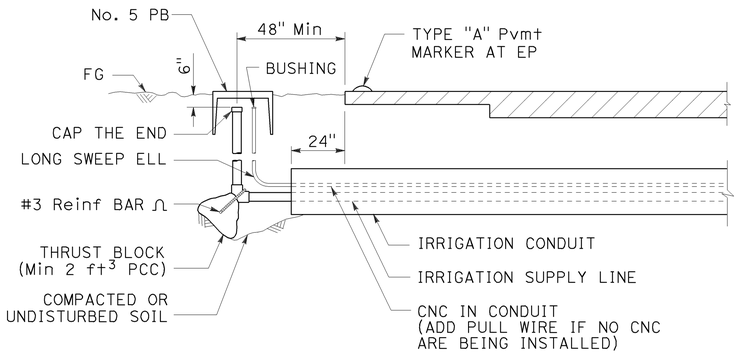

SECTION

IRRIGATION CONDUIT

UNDER TRAVELED WAY

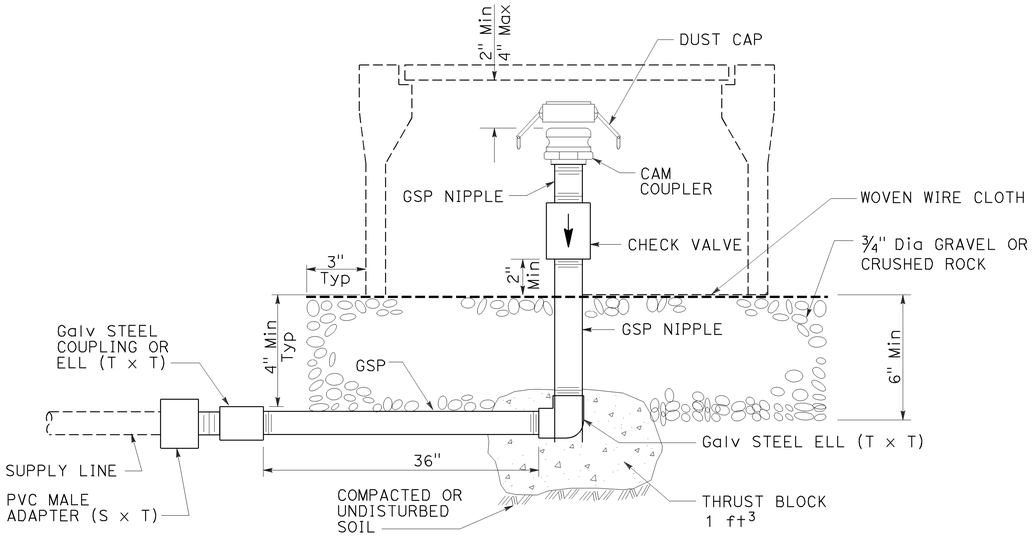

ELEVATION

CAM COUPLER ASSEMBLY

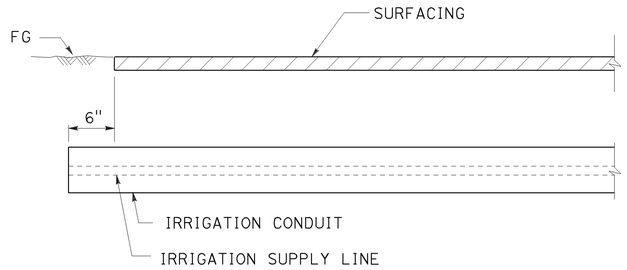

SECTION

IRRIGATION CONDUIT

UNDER SIDEWALKS, DRIVEWAYS AND PATHS

STATE OF CALIFORNIA
DEPARTMENT OF TRANSPORTATION

LANDSCAPE DETAILS

NO SCALE

RSP H9 DATED JULY 19, 2013 SUPERSEDES STANDARD PLAN H9
DATED MAY 20, 2011 - PAGE 226 OF THE STANDARD PLANS BOOK DATED 2010.

REVISED STANDARD PLAN RSP H9

2010 REVISED STANDARD PLAN RSP H9

6-28-13

Dist	COUNTY	ROUTE	POST MILES TOTAL PROJECT	SHEET No.	TOTAL SHEETS
05	SLO	46	46.0/50.2	508	551

Gregory A. Balzer
LICENSED LANDSCAPE ARCHITECT

July 19, 2013
PLANS APPROVAL DATE

LICENSED LANDSCAPE ARCHITECT
Gregory A. Balzer 2576
Gregory A. Balzer
6-19-13
2-28-15
Renewal Date
7-19-13
Date
STATE OF CALIFORNIA

THE STATE OF CALIFORNIA OR ITS OFFICERS OR AGENTS SHALL NOT BE RESPONSIBLE FOR THE ACCURACY OR COMPLETENESS OF SCANNED COPIES OF THIS PLAN SHEET.

TO ACCOMPANY PLANS DATED 6-1-15

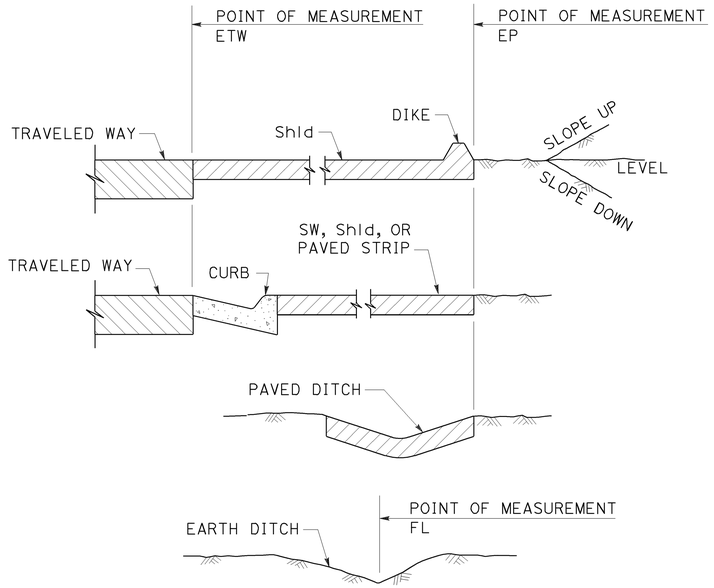

SECTION
POINTS OF MEASUREMENT

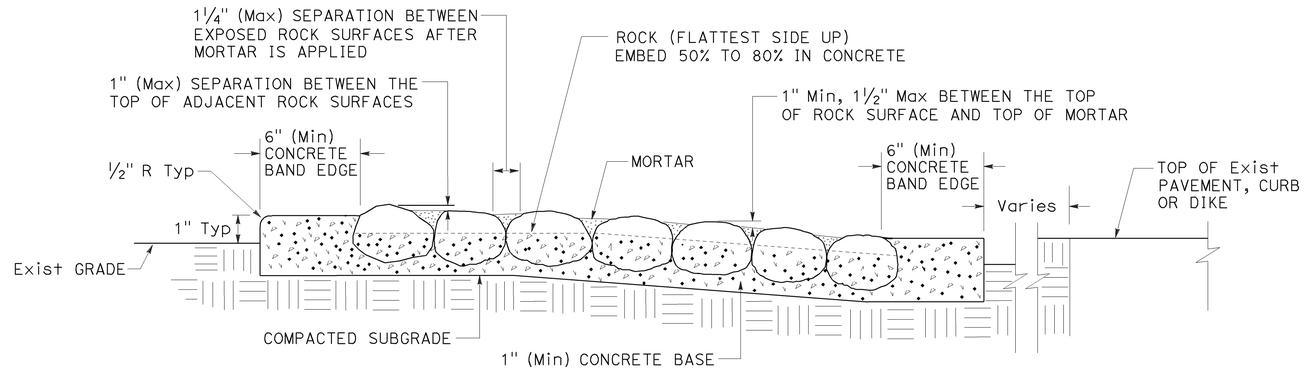

SECTION
ROCK BLANKET

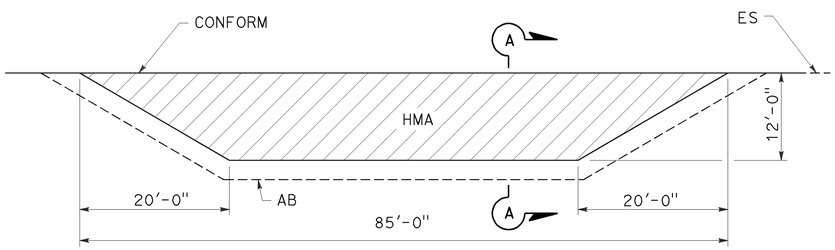

PLAN

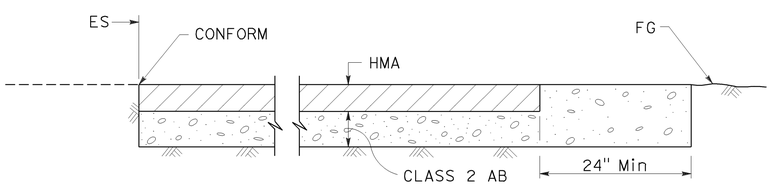

SECTION A-A
MAINTENANCE VEHICLE PULLOUT

STATE OF CALIFORNIA
DEPARTMENT OF TRANSPORTATION

LANDSCAPE DETAILS

NO SCALE

RSP H9A DATED JULY 19, 2013 SUPPLEMENTS THE STANDARD PLANS BOOK DATED 2010.

REVISED STANDARD PLAN RSP H9A

2010 REVISED STANDARD PLAN RSP H9A

6-21-13

Dist	COUNTY	ROUTE	POST MILES TOTAL PROJECT	SHEET No.	TOTAL SHEETS
05	SLO	46	46.0/50.2	509	551

REGISTERED CIVIL ENGINEER

July 19, 2013
PLANS APPROVAL DATE

REGISTERED PROFESSIONAL ENGINEER
Gurinderpal Bhullar
No. C48815
Exp. 9-30-14
CIVIL
STATE OF CALIFORNIA

THE STATE OF CALIFORNIA OR ITS OFFICERS OR AGENTS SHALL NOT BE RESPONSIBLE FOR THE ACCURACY OR COMPLETENESS OF SCANNED COPIES OF THIS PLAN SHEET.

TO ACCOMPANY PLANS DATED 6-1-15

2010 REVISED STANDARD PLAN RSP T9

TABLE 1

TAPER LENGTH CRITERIA AND CHANNELIZING DEVICE SPACING

SPEED (S)	MINIMUM TAPER LENGTH * FOR WIDTH OF OFFSET 12 FEET (W)				MAXIMUM CHANNELIZING DEVICE SPACING		
					X	Y	Z **
	TANGENT 2L	MERGING L	SHIFTING L/2	SHOULDER L/3	TAPER	TANGENT	CONFLICT
mph	ft	ft	ft	ft	ft	ft	ft
20	160	80	40	27	20	40	10
25	250	125	63	42	25	50	12
30	360	180	90	60	30	60	15
35	490	245	123	82	35	70	17
40	640	320	160	107	40	80	20
45	1080	540	270	180	45	90	22
50	1200	600	300	200	50	100	25
55	1320	660	330	220	55	110	27
60	1440	720	360	240	60	120	30
65	1560	780	390	260	65	130	32
70	1680	840	420	280	70	140	35

* - For other offsets, use the following merging taper length formula for L:
For speed of 40 mph or less, $L = WS^2/60$
For speed of 45 mph or more, $L = WS$

Where: L = Taper length in feet
W = Width of offset in feet
S = Posted speed limit, off-peak 85th-percentile speed prior to work starting, or the anticipated operating speed in mph

** - Use for taper and tangent sections where there are no pavement markings or where there is a conflict between existing pavement markings and channelizers (CA).

TABLE 2

LONGITUDINAL BUFFER SPACE AND FLAGGER STATION SPACING

SPEED *	Min D **	DOWNGRADE Min D ***		
		-3%	-6%	-9%
mph	ft	ft	ft	ft
20	115	116	120	126
25	155	158	165	173
30	200	205	215	227
35	250	257	271	287
40	305	315	333	354
45	360	378	400	427
50	425	446	474	507
55	495	520	553	593
60	570	598	638	686
65	645	682	728	785
70	730	771	825	891

* - Speed is posted speed limit, off-peak 85th-percentile speed prior to work starting, or the anticipated operating speed in mph

** - Longitudinal buffer space or flagger station spacing

*** - Use on sustained downgrade steeper than -3 percent and longer than 1 mile.

TABLE 3

ADVANCE WARNING SIGN SPACING

ROAD TYPE	DISTANCE BETWEEN SIGNS *		
	A	B	C
	ft	ft	ft
URBAN - 25 mph OR LESS	100	100	100
URBAN - MORE THAN 25 mph TO 40 mph	250	250	250
URBAN - MORE THAN 40 mph	350	350	350
RURAL	500	500	500
EXPRESSWAY / FREEWAY	1000	1500	2640

* - The distances are approximate, are intended for guidance purposes only, and should be applied with engineering judgment. These distances should be adjusted by the Engineer for field conditions, if necessary, by increasing or decreasing the recommmended distances.

STATE OF CALIFORNIA
DEPARTMENT OF TRANSPORTATION

TRAFFIC CONTROL SYSTEM TABLES FOR LANE AND RAMP CLOSURES

NO SCALE

RSP T9 DATED JULY 19, 2013 SUPERSEDES RSP T9 DATED APRIL 19, 2013 THAT SUPPLEMENTS THE STANDARD PLANS BOOK DATED 2010.

REVISED STANDARD PLAN RSP T9

4-30-13

Dist	COUNTY	ROUTE	POST MILES TOTAL PROJECT	SHEET No.	TOTAL SHEETS
05	SLO	46	46.0/50.2	510	551

REGISTERED CIVIL ENGINEER

April 19, 2013
PLANS APPROVAL DATE

REGISTERED PROFESSIONAL ENGINEER Gurinderpal Bhullar No. C48815 Exp. 9-30-14 CIVIL STATE OF CALIFORNIA

THE STATE OF CALIFORNIA OR ITS OFFICERS OR AGENTS SHALL NOT BE RESPONSIBLE FOR THE ACCURACY OR COMPLETENESS OF SCANNED COPIES OF THIS PLAN SHEET.

TO ACCOMPANY PLANS DATED 6-1-15

NOTES:

See Revised Standard Plan RSP T9 for tables.

Use cone spacing X for taper segment, Y for tangent segment or Z for conflict situations, as approriate, per Table 1, unless X, Y, or Z cone spacing is shown on this sheet.

Unless otherwise specified in the special provisions, all temporary warning signs shall have black legend on fluorescent orange background.

California codes are designated by (CA). Otherwise, Federal (MUTCD) codes are shown.

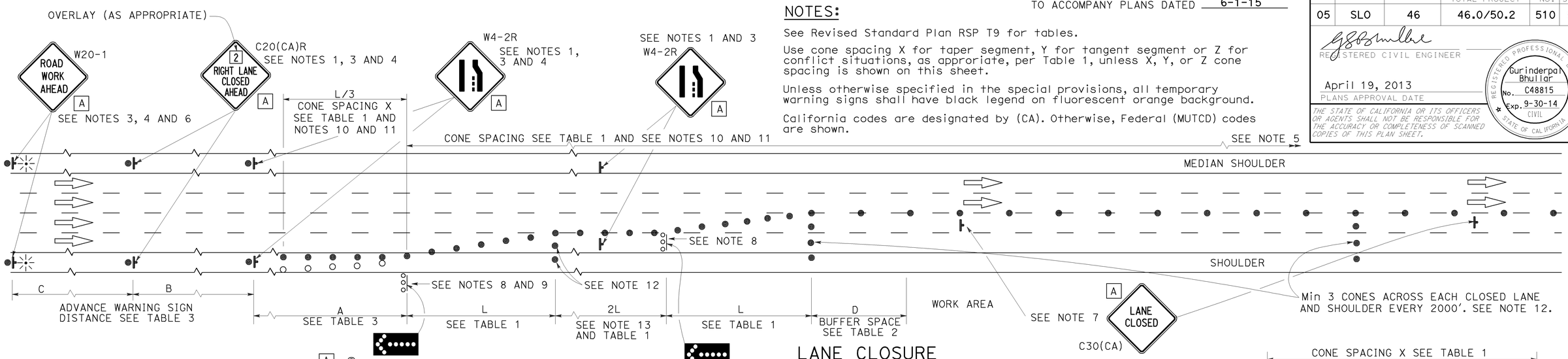

LANE CLOSURE

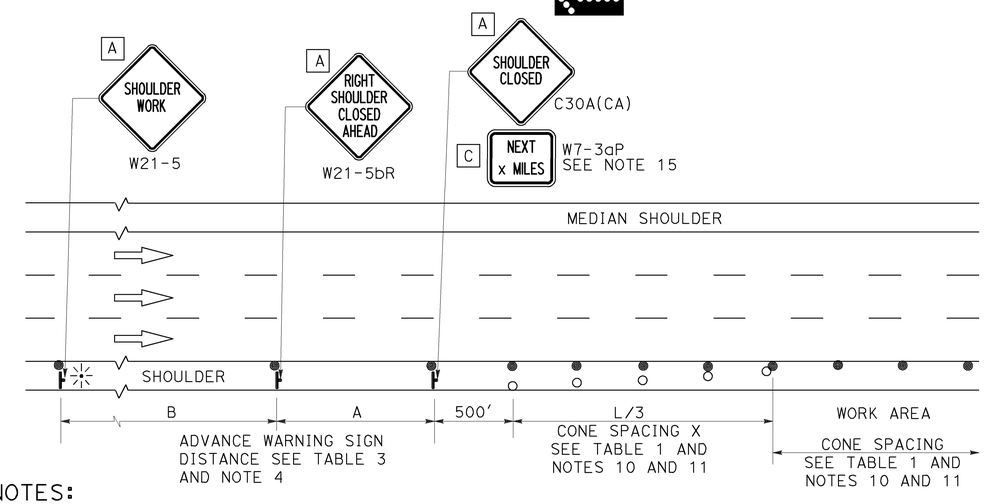

SHOULDER CLOSURE

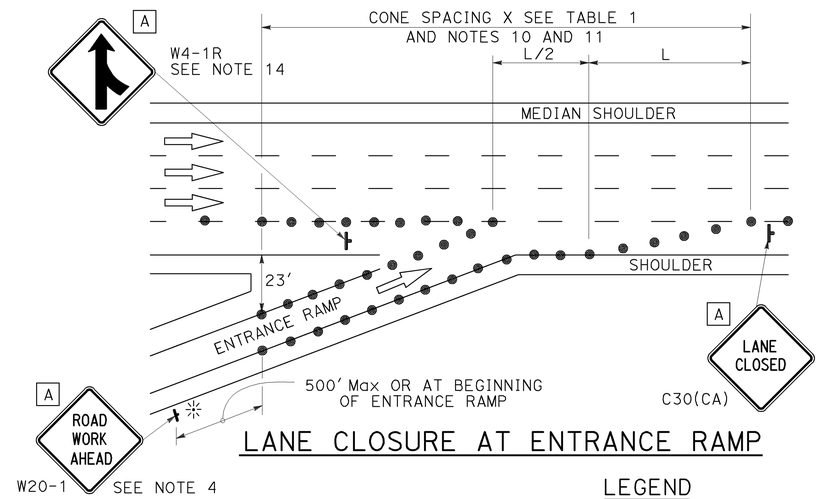

LANE CLOSURE AT ENTRANCE RAMP

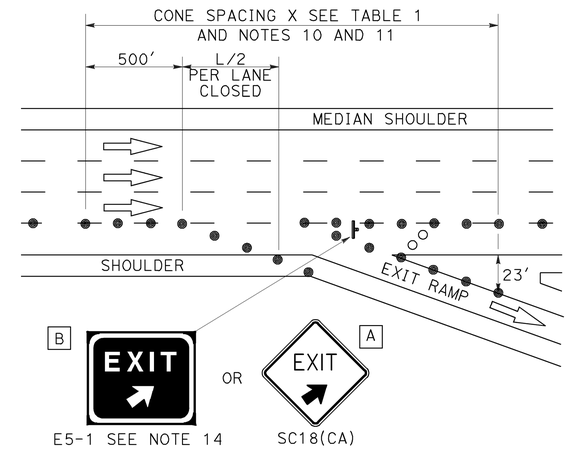

LANE CLOSURE AT EXIT RAMP

NOTES:

1. Median lane closures shall conform to the details as shown except that C20(CA)L and W4-2L signs shall be used.
2. At least one person shall be assigned to provide full time maintenance of traffic control devices for lane closures.
3. Duplicate sign installations are not required:
   a) On opposite shoulder if at least one-half of the available lanes remain open to traffic.
   b) In the median if the width of the median shoulder is less than 8' and the outside lanes are to be closed.
4. Each advance warning sign on each side of the roadway shall be equipped with at least two flags for daytime closure. Each flag shall be at least 16" x 16" in size and shall be orange or fluorescent red-orange in color. Flashing beacons shall be placed at the locations indicated for lane closure during hours of darkness.
5. A G20-2 "END ROAD WORK" sign, with minimum size of 48" x 24" as appropriate, shall be placed at the end of the lane closure unless the end of work area is obvious or ends within a larger project's limits.
6. If the W20-1 sign would follow within 2000' of a stationary W20-1 or G20-1 "ROAD WORK NEXT _____ MILES", use a C20(CA) sign for the first advance warning sign.
7. Place a C30(CA) sign every 2000' throughout length of lane closure.
8. One flashing arrow sign for each lane closed. The flashing arrow signs shall be Type I.
9. A minimum 1500' of sight distance shall be provided where possible for vehicles approaching the first flashing arrow sign. Lane closures shall not begin at top of crest vertical curve or on a horizontal curve.
10. All cones used for lane closures during the hours of darkness shall be fitted with retroreflective bands (or sleeves) as specified in the specifications.
11. Portable delineators, placed at one-half the spacing indicated for traffic cones may be used instead of cones for daytime closures only.
12. Unless otherwise specified in the special provisions, a minimum of 3 cones shall be placed transversely across each closed lane and shoulder at each location where a taper across a traffic lane ends and every 2000' as shown on the "Lane Closure" detail. Two Type II barricades may be used instead of the 3 cones. The transverse alignment of the cones or barricades on the closed shoulder may be shifted from the transverse alignment to provide access to the work.
13. Unless otherwise specified in the special provisions, the 2L tangent shown along lane lines shall be used between the L tapers required for each closed traffic lane.
14. Unless otherwise specified in the special provisions, the E5-1 or SC18(CA) and W4-1 signs shall be used as shown.
15. A W7-3aP "NEXT____ MILES" plaque must be used if theshoulder closure extends beyond the distance that can be perceived by road users.

LEGEND

- TRAFFIC CONE
- TRAFFIC CONE (OPTIONAL TAPER)
- TEMPORARY TRAFFIC CONTROL SIGN
- FLASHING ARROW SIGN (FAS)
- FAS SUPPORT OR TRAILER
- PORTABLE FLASHING BEACON

SIGN PANEL SIZE (Min)

A	48" x 48"
B	72" x 60"
C	36" x 30"

STATE OF CALIFORNIA
DEPARTMENT OF TRANSPORTATION

TRAFFIC CONTROL SYSTEM FOR LANE CLOSURE ON FREEWAYS AND EXPRESSWAYS

NO SCALE

RSP T10 DATED APRIL 19, 2013 SUPERSEDES STANDARD PLAN T10 DATED MAY 20, 2011 - PAGE 237 OF THE STANDARD PLANS BOOK DATED 2010.

REVISED STANDARD PLAN RSP T10

2010 REVISED STANDARD PLAN RSP T10

12-18-12

Dist	COUNTY	ROUTE	POST MILES TOTAL PROJECT	SHEET No.	TOTAL SHEETS
05	SLO	46	46.0/50.2	511	551

Devinder Singh
REGISTERED CIVIL ENGINEER

October 17, 2014
PLANS APPROVAL DATE

REGISTERED PROFESSIONAL ENGINEER
Devinder Singh
No. C50470
Exp. 6-30-15
CIVIL
STATE OF CALIFORNIA

THE STATE OF CALIFORNIA OR ITS OFFICERS OR AGENTS SHALL NOT BE RESPONSIBLE FOR THE ACCURACY OR COMPLETENESS OF SCANNED COPIES OF THIS PLAN SHEET.

TO ACCOMPANY PLANS DATED 6-1-15

2010 REVISED STANDARD PLAN RSP T13

NOTES:

See Revised Standard Plan RSP T9 for tables.

Use cone spacing X for taper segment, Y for tangent segment or Z for conflict situations, as approriate, per Table 1, unless X, Y, or Z cone spacing is shown on this sheet.

Unless otherwise specified in the special provisions, all temporary warning signs shall have black legend on fluorescent orange background.

California codes are designated by (CA). Otherwise, Federal (MUTCD) codes are shown.

TYPICAL LANE CLOSURE WITH REVERSIBLE CONTROL

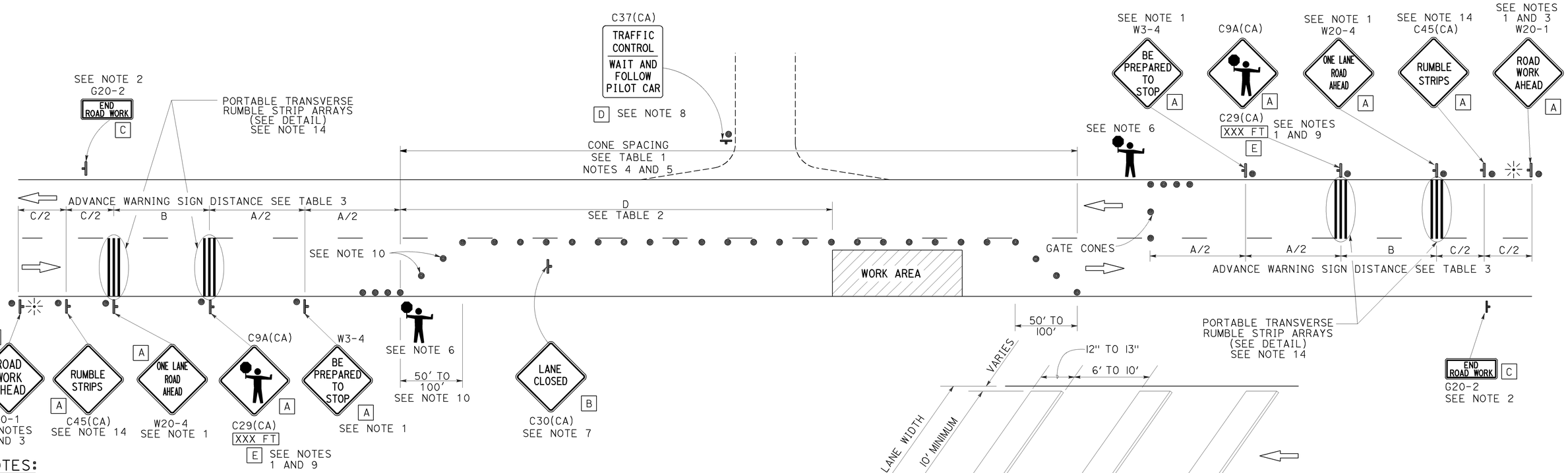

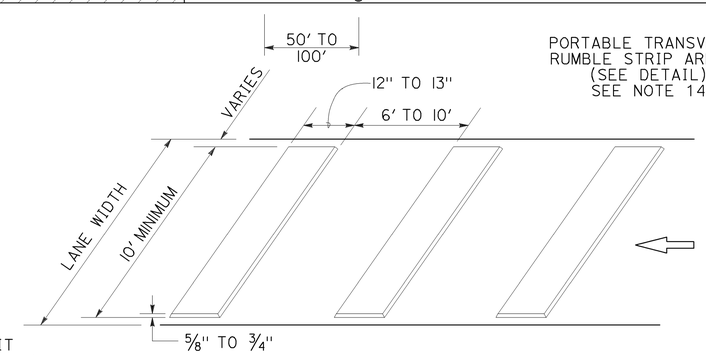

PORTABLE TRANSVERSE RUMBLE STRIP ARRAY DETAIL

NOTES:

1. Each advance warning sign in each direction of travel shall be equipped with at least two flags for daytime closure. Each flag shall be at least 16" x 16" in size and shall be orange or fluorescent red-orange in color. Flashing beacons shall be placed at the locations indicated for lane closure during hours of darkness.
2. A G20-2 "END ROAD WORK" sign, as appropriate, shall be placed at the end of the lane control unless the end of work area is obvious, or ends within a larger project's limits.
3. If the W20-1 sign would follow within 2000' of a stationary W20-1 or G20-1 "ROAD WORK NEXT _____ MILES", use a W20-4 sign for the first advance warning sign.
4. All cones used for lane closures during the hours of darkness shall be fitted with retroreflective bands (or sleeves) as specified in the specifications.
5. Portable delineators, placed at one-half the spacing indicated for traffic cones, may be used instead of cones for daytime closures only.
6. Additional advance flaggers may be required. Flagger should stand in a conspicuous place, be visible to approaching traffic as well as approaching vehicles after the first vehicle has stopped. During the hours of darkness, the flagging-station and flagger shall be illuminated and clearly visible to approaching traffic. The illumination footprint of the lighting on the ground shall be at least 20' in diameter. Place a minimum of four cones at 50' intervals in advance of flagger station as shown.
7. Place C30(CA) "LANE CLOSED" sign at 500' to 1000' intervals throughout extended work areas. They are optional if the work area is visible from the flagger station.
8. When a pilot car is used, place a C37(CA) "TRAFFIC CONTROL-WAIT AND FOLLOW PILOT CAR" sign with black legend on white background at all intersections, driveways and alleys without a flagger within traffic control area. Signs shall be clean and visible at all times. Where traffic can not be effectively self-regulated, at least one flagger shall be used at each intersection within traffic control area.
9. An optional C29(CA) sign may be placed below the C9A(CA) sign.
10. Either traffic cones or barricades shall be placed on the taper. Barricades shall be Type I, II, or III.
11. The color of the portable transverse rumble strips shall be black or orange. Use 2 arrays, each array shall consist of 3 rumble strips.
12. Portable transverse rumble strips shall not be placed on sharp horizontal or vertical curves nor shall they be placed through pedestrian crossings.
13. If the portable transverse rumble strips become out of alignment (skewed) by more than 6 inches, measured from one end to the other, they shall be readjusted to bring the placement back to the original location.
14. Portable transverse rumble strips are not required if any one of the following conditions is satisfied:
    A. Work duration occupies a location for four hours or less
    B. Posted speed limit is below 45 MPH
    C. Work is of emergency nature
    D. Work zone is in snow or icy weather conditions

LEGEND

- TRAFFIC CONE
- TEMPORARY TRAFFIC CONTROL SIGN
- PORTABLE FLASHING BEACON
- FLAGGER

SIGN PANEL SIZE (Min)

A	48" x 48"
B	30" x 30"
C	36" x 18"
D	36" x 42"
E	20" x 7"

STATE OF CALIFORNIA
DEPARTMENT OF TRANSPORTATION

TRAFFIC CONTROL SYSTEM FOR LANE CLOSURE ON TWO LANE CONVENTIONAL HIGHWAYS

NO SCALE

RSP T13 DATED OCTOBER 17, 2014 SUPERSEDES RSP T13 DATED JULY 18, 2014 AND RSP T13 DATED APRIL 19, 2013 AND STANDARD PLAN T13 DATED MAY 20, 2011 - PAGE 241 OF THE STANDARD PLANS BOOK DATED 2010.

REVISED STANDARD PLAN RSP T13

9-26-14

Dist	COUNTY	ROUTE	POST MILES TOTAL PROJECT	SHEET No.	TOTAL SHEETS
05	SLO	46	46.0/50.2	512	551

REGISTERED CIVIL ENGINEER

April 19, 2013
PLANS APPROVAL DATE

REGISTERED PROFESSIONAL ENGINEER Gurinderpal Bhullar No. C48815 Exp. 9-30-14 CIVIL STATE OF CALIFORNIA

THE STATE OF CALIFORNIA OR ITS OFFICERS OR AGENTS SHALL NOT BE RESPONSIBLE FOR THE ACCURACY OR COMPLETENESS OF SCANNED COPIES OF THIS PLAN SHEET.

TO ACCOMPANY PLANS DATED 6-1-15

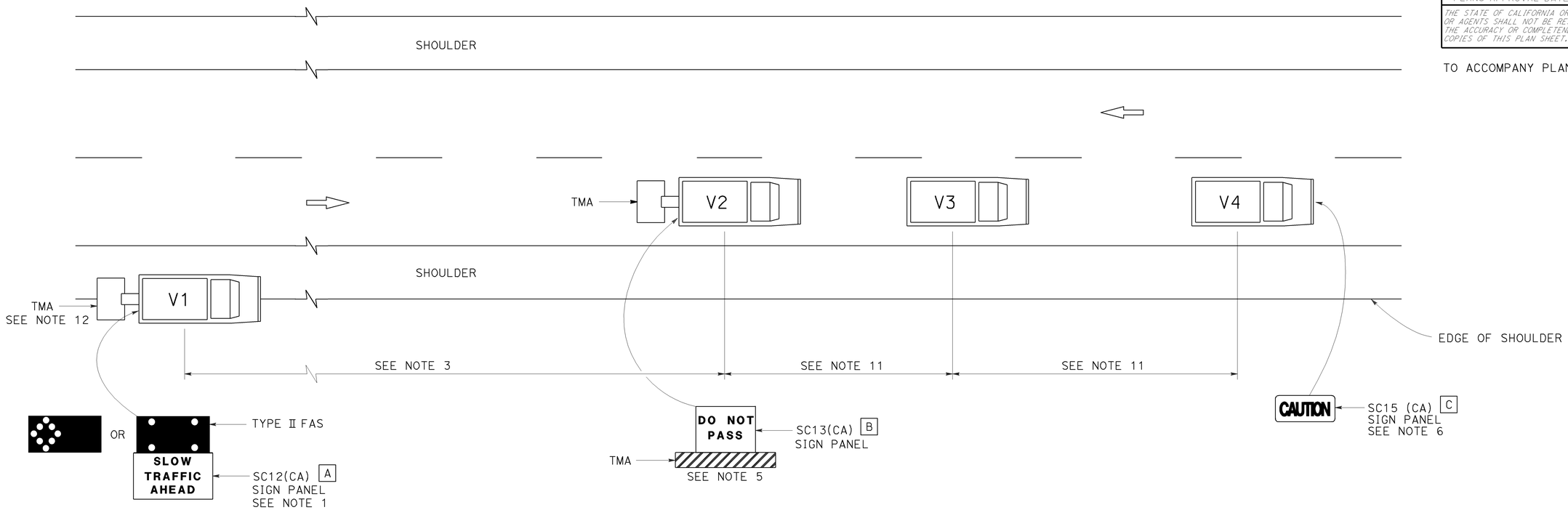

LEGEND

V1	SIGN VEHICLE
V2	SHADOW VEHICLE
V3	WORK/APPLICATION VEHICLE
V4	SIGN VEHICLE
TMA	TRUCK-MOUNTED ATTENUATOR
	FLASHING ARROW SIGN (FAS) IN FLASHING CAUTION MODE
	FLASHING ARROW SIGN (FAS) IN ALTERNATING DIAMOND CAUTION

SIGN PANEL SIZE (Min)

A	72" x 42"
B	54" x 42"
C	54" x 24"

NOTES:

1. Either a changeable message sign or a SC12(CA) "SLOW TRAFFIC AHEAD" sign shall be mounted on the rear of sign vehicle V1. The changeable message sign shall be sequenced to show the "CAUTION" message first, follow by the "SLOW TRAFFIC AHEAD" message. A Type II flashing arrow sign may be used with the SC12(CA) sign panel.
2. Sign vehicle V1 should be positioned where highly visible when shoulders are not available.
3. If traffic queues develop, sign vehicle V1 should be positioned upstream from the end of queue.
4. Vehicle-mounted sign panels shall have Type III or above retroreflective sheeting, black on white, or black on fluorescent orange, with 6" minimum series D letters per Caltrans sign specifications.
5. Shadow vehicle shall be equipped with a truck-mounted attenuator. The sign panel shown shall be mounted on the rear of shadow vehicle V2. The message "LANE CLOSED" may be used in place of the "DO NOT PASS" message.
6. The sign panel shown shall be mounted on the front of sign vehicle V4, facing opposing traffic.
7. All vehicles shall be equipped with flashing or rotating amber lights.
8. Sign vehicle V4 will not be required when the work and vehicles V2 and V3 are 2′ or more from the centerline of the highway during the work or application operations.
9. All vehicles used for lane closures shall be equipped with two-way radios and the vehicle operators shall maintain communication during the work or application operation.
10. This plan shall not be used where workers would be on foot in the work area. Use a stationary type lane closure (Revised Standard Plan T13) for this condition.
11. Minimize spacing between vehicles V2 and V3 and vehicles V3 and V4 to deter road users from driving in between them.
12. If sign vehicle V1 encroaches into the traffic lane due to insufficient shoulder width, sign vehicle V1 shall be equipped with a truck-mounted attenuator. Sign vehicle V1 shall stay as close to the edge of shoulder as practicable.

STATE OF CALIFORNIA
DEPARTMENT OF TRANSPORTATION

TRAFFIC CONTROL SYSTEM FOR MOVING LANE CLOSURE ON TWO LANE HIGHWAYS

NO SCALE

RSP T17 DATED APRIL 19, 2013 SUPERSEDES STANDARD PLAN T17
DATED MAY 20, 2011 - PAGE 245 OF THE STANDARD PLANS BOOK DATED 2010.

REVISED STANDARD PLAN RSP T17

2010 REVISED STANDARD PLAN RSP T17

12-18-12

Dist	COUNTY	ROUTE	POST MILES TOTAL PROJECT	SHEET No.	TOTAL SHEETS
05	SLO	46	46.0/50.2	513	551

REGISTERED CIVIL ENGINEER

July 19, 2013
PLANS APPROVAL DATE

REGISTERED PROFESSIONAL ENGINEER Marc Friedheim No. C57968 Exp. 6-30-14 CIVIL STATE OF CALIFORNIA

THE STATE OF CALIFORNIA OR ITS OFFICERS OR AGENTS SHALL NOT BE RESPONSIBLE FOR THE ACCURACY OR COMPLETENESS OF SCANNED COPIES OF THIS PLAN SHEET.

TO ACCOMPANY PLANS DATED 6-1-15

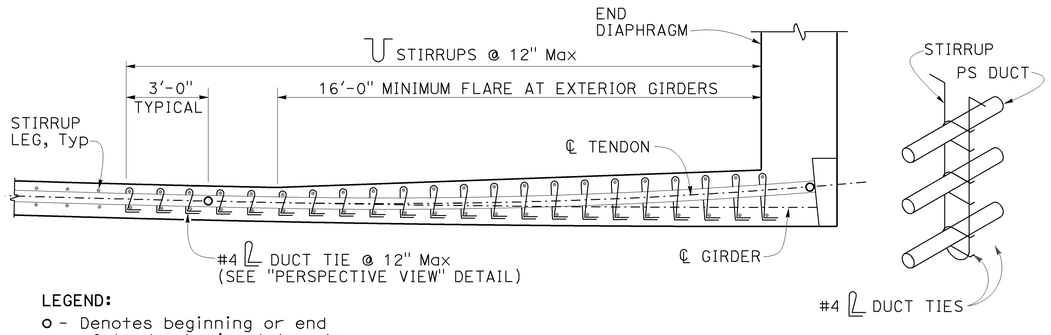

LEGEND:

o - Denotes beginning or end of tendon horizontal angle change (BC, EC or PCC)

PLAN

PERSPECTIVE VIEW

DUCT TIES AT TENDON HORIZONTAL ANGLE CHANGES
DETAIL 5-1

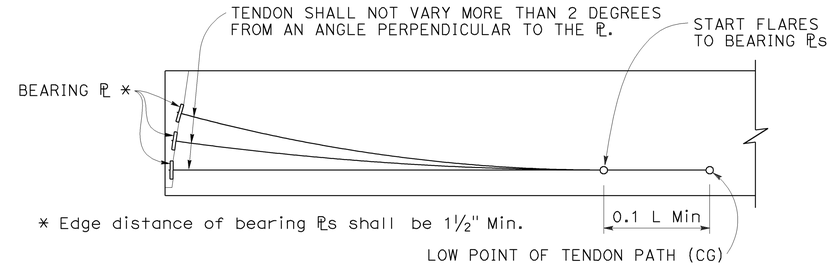

ELEVATION - BEARING PLATE AND PRESTRESSING PATH
DETAIL 5-2

NOTES FOR DETAIL 5-1

1. Tendon horizontal angle change at end diaphragm shown. Duct tie placement similar for other locations where tendon horizontal angle changes occur. For curved girders place duct ties at tendon angle changes where ℄ tendon radius is smaller than ℄ girder radius.
2. Adjacent duct ties may be staggered to facilitate placement if stirrup spacing is less than 12 inches.
3. Place closed end of duct ties toward inside of tendon curve.
4. Wrap duct ties around both stirrup legs.
5. Individual duct ties may only be used to anchor one duct.

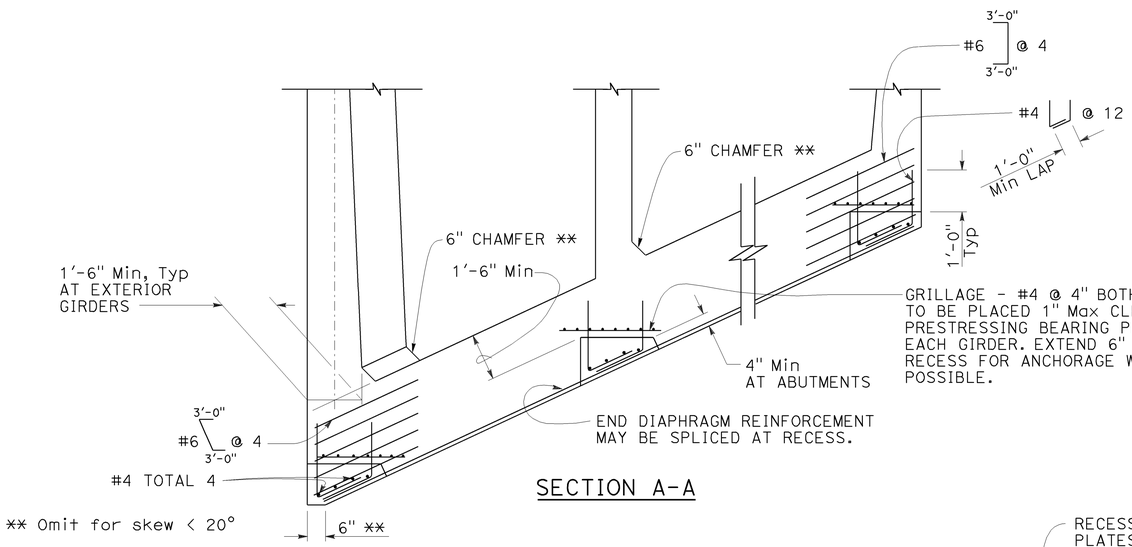

SECTION A-A

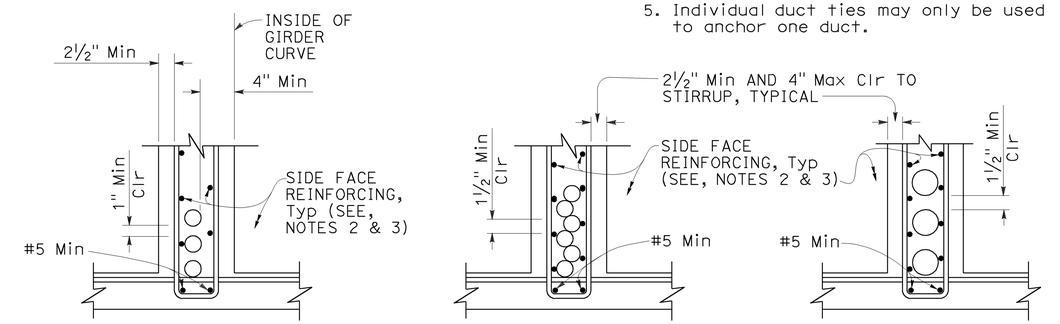

DUCTS 4½" OD AND LESS FOR HORIZONTAL CURVE RADIUS ≤ 2000'

DUCTS 4½" OD AND LESS

DUCTS OVER 4½" OD

CLEARANCE REQUIREMENTS FOR DUCTS
DETAIL 5-4

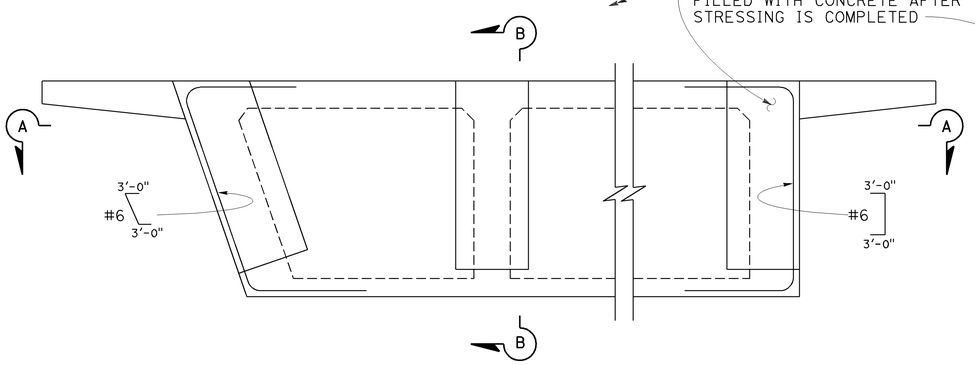

PRESTRESS ANCHORAGE DETAILS AT END DIAPHRAGMS
DETAIL 5-3

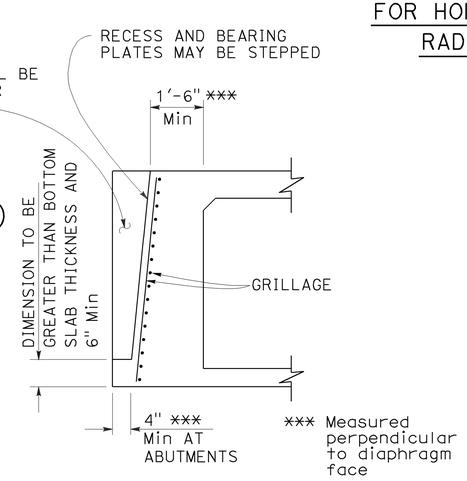

SECTION B-B

NOTES FOR DETAIL 5-4:

1. ⊔ Stirrups may also be used.
2. For additional details, see Standard Plan B7-1, and Project Plans.
3. Bar reinforcing which interferes with prestressing ducts may be adjusted as approved by the Engineer.

STATE OF CALIFORNIA
DEPARTMENT OF TRANSPORTATION

CAST-IN-PLACE POST-TENSIONED GIRDER DETAILS

NO SCALE

RSP B8-5 DATED JULY 19, 2013 SUPERSEDES STANDARD PLAN B8-5 DATED MAY 20, 2011 - PAGE 291 OF THE STANDARD PLANS BOOK DATED 2010.

REVISED STANDARD PLAN RSP B8-5

2010 REVISED STANDARD PLAN RSP B8-5

4-17-13

Dist	COUNTY	ROUTE	POST MILES TOTAL PROJECT	SHEET No.	TOTAL SHEETS
05	SLO	46	46.0/50.2	514	551

REGISTERED CIVIL ENGINEER

October 21, 2011
PLANS APPROVAL DATE

REGISTERED PROFESSIONAL ENGINEER Tillat Satter No. C42892 Exp. 3-31-12 CIVIL STATE OF CALIFORNIA

THE STATE OF CALIFORNIA OR ITS OFFICERS OR AGENTS SHALL NOT BE RESPONSIBLE FOR THE ACCURACY OR COMPLETENESS OF SCANNED COPIES OF THIS PLAN SHEET.

TO ACCOMPANY PLANS DATED 6-1-15

2010 REVISED STANDARD PLAN RSP B11-47

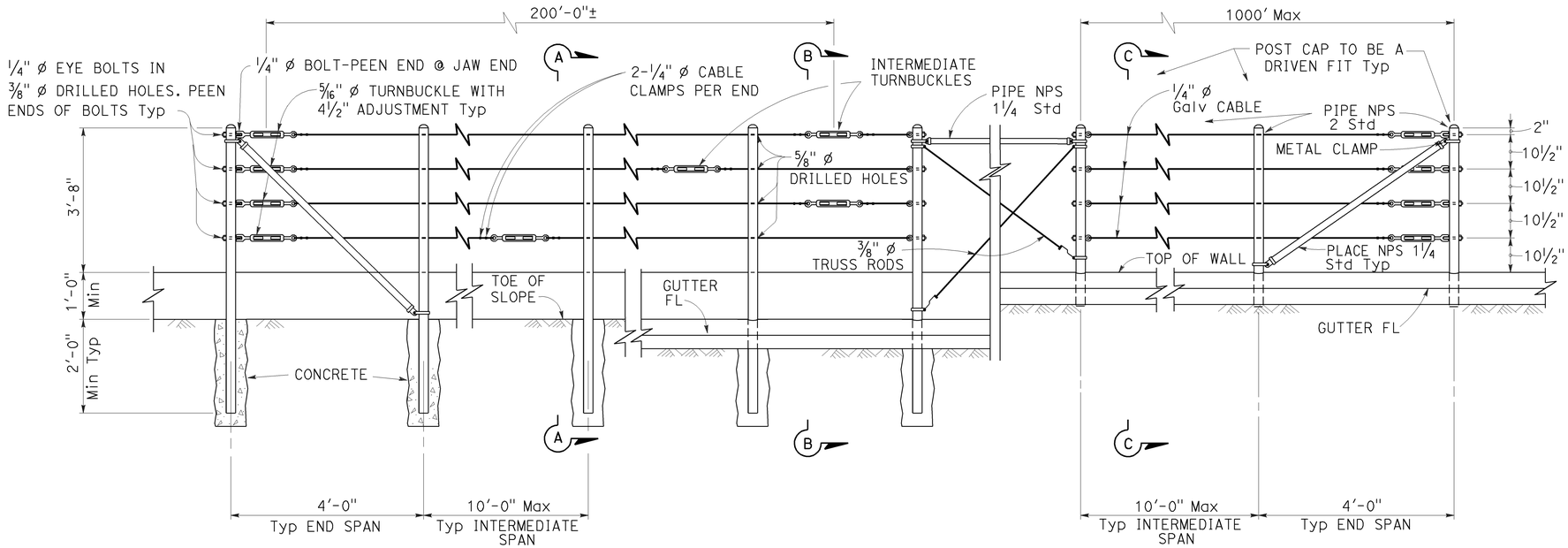

EXISTING WALL (WITHOUT GUTTER)
Existing

RETAINING WALL (WITH GUTTER)
Existing

RETAINING WALL (WITH GUTTER)
New construction

ELEVATION

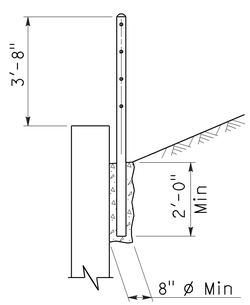

SECTION A-A
Existing

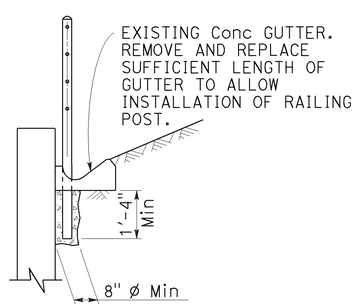

SECTION B-B
Existing

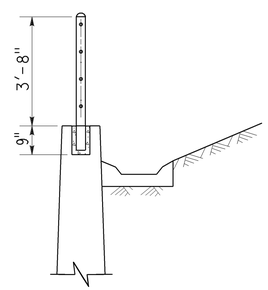

SECTION C-C
New construction

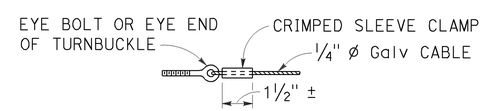

ALTERNATIVE CABLE CONNECTION

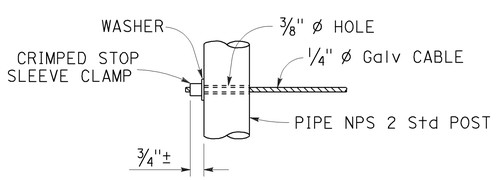

ALTERNATIVE DEAD END ANCHORAGE

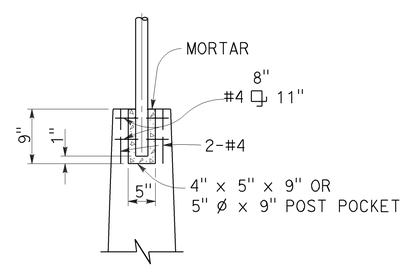

POST POCKET

NOTES:

1. Maximum distance between turnbuckles shall be 200'-0"±.
2. Intermediate turnbuckles to be placed in adjacent spans.
3. Cable shall not be spliced between intermediate turnbuckles and end posts.
4. Posts to be vertical.
5. Alignment of holes in posts may vary to conform to slope of top of retaining wall.
6. The Contractor shall verify all dependent dimensions in the field before ordering or fabricating any material.
7. Line posts shall be braced horizontally and trussed diagonally in both directions at intervals not to exceed 1000'.
8. Post pockets to be centered in top of wall.
9. Typical end spans, braced in both directions, shall be constructed at changes in line where the angle of deflection is 15° or more.
10. Provide thimbles at all cable loops.

STATE OF CALIFORNIA
DEPARTMENT OF TRANSPORTATION

CABLE RAILING

NO SCALE

RSP B11-47 DATED OCTOBER 21, 2011 SUPERSEDES STANDARD PLAN B11-47 DATED MAY 20, 2011 - PAGE 293 OF THE STANDARD PLANS BOOK DATED 2010.

REVISED STANDARD PLAN RSP B11-47

9-14-11

Dist	COUNTY	ROUTE	POST MILES TOTAL PROJECT	SHEET No.	TOTAL SHEETS
05	SLO	46	46.0/50.2	515	551

Theresa Gabriel
REGISTERED ELECTRICAL ENGINEER

July 19, 2013
PLANS APPROVAL DATE

REGISTERED PROFESSIONAL ENGINEER
Theresa Aziz Gabriel
No. E15129
Exp. 6-30-14
ELECTRICAL
STATE OF CALIFORNIA

THE STATE OF CALIFORNIA OR ITS OFFICERS OR AGENTS SHALL NOT BE RESPONSIBLE FOR THE ACCURACY OR COMPLETENESS OF SCANNED COPIES OF THIS PLAN SHEET.

TO ACCOMPANY PLANS DATED 6-1-15

LEGEND:

AB	ABANDON. IF APPLIED TO CONDUIT, REMOVE CONDUCTORS
BC	INSTALL PULL BOX IN EXISTING CONDUIT RUN
BP	PEDESTRIAN BARRICADE, TYPE AS INDICATED ON PLAN
CB	INSTALL CONDUIT INTO EXISTING PULL BOX
CC	CONNECT NEW AND EXISTING CONDUIT. REMOVE EXISTING CONDUCTORS AND INSTALL CONDUCTORS AS INDICATED
CF	CONDUIT TO REMAIN FOR FUTURE USE. REMOVE CONDUCTORS. INSTALL PULL TAPE
DH	DETECTOR HANDHOLE
FA	FOUNDATION TO BE ABANDONED
IS	INSTALL SIGN ON SIGNAL MAST ARM
NS	NO SLIP BASE ON STANDARD
PEC	PHOTOELECTRIC CONTROL
PEU	PHOTOELECTRIC UNIT
RC	EQUIPMENT OR MATERIAL TO BE REMOVED AND BECOME THE PROPERTY OF THE CONTRACTOR
RE	REMOVE ELECTROLIER, FUSES AND BALLAST. TAPE ENDS OF CONDUCTORS
RL	RELOCATE EQUIPMENT
RR	REMOVE AND REUSE EQUIPMENT
RS	REMOVE AND SALVAGE EQUIPMENT
SC	SPLICE NEW TO EXISTING CONDUCTORS
SD	SERVICE DISCONNECT
TSP	TELEPHONE SERVICE POINT

ABBREVIATIONS

APS	ACCESSIBLE PEDESTRIAN SIGNAL
BBS	BATTERY BACKUP SYSTEM
BC	BOLT CIRCLE
BPB	BICYCLE PUSH BUTTON
C	CONDUIT
CB	CIRCUIT BREAKER
CCTV	CLOSED CIRCUIT TELEVISION
Ckt	CIRCUIT
CMS	CHANGEABLE MESSAGE SIGN
Ctid	CALTRANS IDENTIFICATION
Comm	COMMUNICATION
DLC	LOOP DETECTOR LEAD-IN CABLE
EMS	EXTINGUISHABLE MESSAGE SIGN
EVUC	EMERGENCY VEHICLE UNIT CABLE
EVUD	EMERGENCY VEHICLE UNIT DETECTOR
FB	FLASHING BEACON
FBCA	FLASHING BEACON CONTROL ASSEMBLY
FBS	FLASHING BEACON WITH SLIP BASE
FO	FIBER OPTIC
G	EQUIPMENT GROUNDING CONDUCTOR
GB	GROUND BUS
GFCI	GROUND FAULT CIRCUIT INTERRUPTER
HAR	HIGHWAY ADVISORY RADIO
Hex	HEXAGONAL
HPS	HIGH PRESSURE SODIUM
IISNS	INTERNALLY ILLUMINATED STREET NAME SIGN
ISL	INDUCTION SIGN LIGHTING
LED	LIGHT EMITTING DIODE
LMA	LUMINAIRE MAST ARM
LPS	LOW PRESSURE SODIUM
Ltg	LIGHTING
Lum	LUMINAIRE
M	METERED
MAT	MAST ARM MOUNTING TOP ATTACHMENT
MAS	MAST ARM MOUNTING SIDE ATTACHMENT
M/M	MULTIPLE TO MULTIPLE TRANSFORMER
Mtg	MOUNTING
MV	MERCURY VAPOR LIGHTING FIXTURE
MVDS	MICROWAVE VEHICLE DETECTION SYSTEM
N	NEUTRAL (GROUNDED CONDUCTOR)
NB	NEUTRAL BUS
NC	NORMALLY CLOSE
NO	NORMALLY OPEN
P	CIRCUIT BREAKER'S POLE
PB	PULL BOX
PBA	PUSH BUTTON ASSEMBLY
PEC	PHOTOELECTRIC CONTROL
Ped	PEDESTRIAN
PEU	PHOTOELECTRIC UNIT
PT	CONDUIT WITH PULL TAPE
RE	RELOCATED EQUIPMENT
RM	RAMP METERING
RWIS	ROADSIDE WEATHER INFORMATION SYSTEM
SB	SLIP BASE
SIC	SIGNAL INTERCONNECT CABLE
Sig	SIGNAL
SMA	SIGNAL MAST ARM
SNS	STREET NAME SIGN
SP	SERVICE POINT
TDC	TELEPHONE DEMARCATION CABINET
TMS	TRAFFIC MONITORING STATION
TOS	TRAFFIC OPERATIONS SYSTEM
Veh	VEHICLE
VIVDS	VIDEO IMAGE VEHICLE DETECTION SYSTEM
WIM	WEIGH-IN-MOTION
Xfmr	TRANSFORMER

SOFFIT AND WALL MOUNTED LUMINAIRES

PENDANT, 70 W HPS UNLESS OTHERWISE SPECIFIED

FLUSH, 70 W HPS UNLESS OTHERWISE SPECIFIED

WALL SURFACE, 70 W HPS UNLESS OTHERWISE SPECIFIED

EXISTING SOFFIT OR WALL LUMINAIRE TO REMAIN UNMODIFIED

EXISTING SOFFIT OR WALL LUMINAIRE TO BE MODIFIED AS SPECIFIED

NOTE:

Arrow indicates "street side" of luminaire.

MISCELLANEOUS ELECTROLIERS

NEW	EXISTING	
		LUMINAIRE ON WOOD POLE
		NON-STANDARD ELECTROLIER (SEE PROJECT NOTES OR PROJECT PLANS)
		CITY ELECTROLIER
		ELECTROLIER FOUNDATION (FUTURE INSTALLATION)

NOTES:

1. HPS luminaires shall be 310 W HPS when installed on Type 21, 21D, 30, 31 and 32 Standards, unless otherwise specified. HPS luminaires shall be 200 W when installed on other type standards or poles, unless otherwise specified.
2. LED luminaires shall be 235 W when installed on Type 21, 21D, 30, 31 and 32 Standards, unless otherwise specified. LED luminaires shall be 165 W when installed on other type standards or poles, unless otherwise specified.
3. Luminaires shall be the cutoff type, ANSI Type III medium cutoff lighting distribution, unless otherwise specified.

STANDARD ELECTROLIER

NEW	EXISTING	STANDARD TYPE
		15
		15D
		15 STRUCTURE
		15D STRUCTURE
		21
		21D
		21 STRUCTURE
		21D STRUCTURE
		30
		31
		32

COMMONLY USED SYMBOLS FOR UNITED STATES CUSTOMARY UNITS OF MEASUREMENT:

SYMBOL USED	DEFINITIONS
Ω	OHMS
min	MINUTE
s	SECOND
bps	BITS PER SECOND
Bps	BYTES PER SECOND
A	AMPERE
V	VOLT
V(dc)	VOLT (DIRECT CURRENT)
V(ac)	VOLT (ALTERNATING CURRENT)
FC	FOOT - CANDLE
W	WATTS
VA	VOLT-AMPERE
M	MEGA
k	KILO
m	MILLI
μ	MICRO
P	PICO
Hz	HERTZ

STATE OF CALIFORNIA
DEPARTMENT OF TRANSPORTATION

ELECTRICAL SYSTEMS (LEGEND AND ABBREVIATIONS)

NO SCALE

RSP ES-1A DATED JULY 19, 2013 SUPERSEDES STANDARD PLAN ES-1A DATED MAY 20, 2011 - PAGE 425 OF THE STANDARD PLANS BOOK DATED 2010.

REVISED STANDARD PLAN RSP ES-1A

2010 REVISED STANDARD PLAN RSP ES-1A

Dist	COUNTY	ROUTE	POST MILES TOTAL PROJECT	SHEET No.	TOTAL SHEETS
05	SLO	46	46.0/50.2	516	551

Theresa Gabriel
REGISTERED ELECTRICAL ENGINEER

July 19, 2013
PLANS APPROVAL DATE

REGISTERED PROFESSIONAL ENGINEER Theresa Aziz Gabriel No. E15129 Exp. 6-30-14 ELECTRICAL STATE OF CALIFORNIA

THE STATE OF CALIFORNIA OR ITS OFFICERS OR AGENTS SHALL NOT BE RESPONSIBLE FOR THE ACCURACY OR COMPLETENESS OF SCANNED COPIES OF THIS PLAN SHEET.

TO ACCOMPANY PLANS DATED 6-1-15

CONDUIT

NEW	EXISTING	
		LIGHTING CONDUIT, UNLESS OTHERWISE INDICATED OR NOTED
		TRAFFIC SIGNAL CONDUIT
C	c	COMMUNICATION CONDUIT
T	t	TELEPHONE CONDUIT
F	f	FIRE ALARM CONDUIT
FO	fo	FIBER OPTIC CONDUIT
		CONDUIT TERMINATION
R	r	CONDUIT RISER ATTACHED TO THE STRUCTURE OR SERVICE POLE

SERVICE EQUIPMENT

NEW	EXISTING	
OH	oh	OVERHEAD LINES
U	U	WOOD POLE, "U" INDICATES UTILITY OWNED
		POLE GUY WITH ANCHOR
		UTILITY TRANSFORMER - GROUND MOUNTED
III	III	SERVICE EQUIPMENT ENCLOSURE TYPE. DOOR INDICATES FRONT OF ENCLOSURE
T	t	TELEPHONE DEMARCATION CABINET

POLE-MOUNTED SERVICE DESIGNATION

TYPE H SERVICE, 28'-10" — TYPE OF INSTALLATION AND POLE HEIGHT ABOVE GRADE

FLASHING BEACON

NEW	EXISTING	
R	R	FLASHING BEACON (ONE VEHICLE SIGNAL HEAD WITH BACKPLATE AND VISOR) "R" INDICATES RED INDICATION, "Y" INDICATES YELLOW INDICATION
Y Y	Y Y	FLASHING BEACON WITH TYPE 15-FBS STANDARD AND A SIGN.
R R	R R	FLASHING BEACON WITH TYPES 9, 9A OR 9B SIGN UNLESS OTHERWISE SPECIFIED OR INDICATED

SIGNAL EQUIPMENT

NEW	EXISTING	
C	C	PEDESTRIAN SIGNAL HEAD "C" INDICATES COUNTDOWN PEDESTRIAN HEAD
		PUSH BUTTON ASSEMBLY POST
		PEDESTRIAN BARRICADE
		VEHICLE SIGNAL HEAD (WITH BACKPLATE AND 3-SECTIONS: RED, YELLOW AND GREEN)
		VEHICLE SIGNAL HEAD WITH ANGLE VISOR
PV	PV	MODIFICATIONS OF BASIC SYMBOL: "L" INDICATES ALL NON-ARROW SECTIONS LOUVERED "LG" INDICATES LOUVERED GREEN SECTION ONLY "PV" INDICATES ALL 12" SECTIONS PROGRAMMED VISIBILITY "8" INDICATES ALL 8" SECTIONS (ONLY WHEN SPECIFIED)
		VEHICLE SIGNAL HEAD CONSISTING OF RED, YELLOW AND GREEN LEFT ARROW SECTIONS
		VEHICLE SIGNAL HEAD CONSISTING OF RED AND YELLOW SECTIONS WITH AN UP GREEN ARROW SECTION
		VEHICLE SIGNAL HEAD (5 SECTION) CONSISTING OF RED, YELLOW AND GREEN SECTIONS WITH YELLOW AND GREEN RIGHT ARROW SECTIONS
		TYPE 15TS STANDARD WITH VEHICLE SIGNAL HEAD AND LUMINAIRE
		TYPE 21TS STANDARD WITH VEHICLE SIGNAL HEAD AND LUMINAIRE
		STANDARD WITH LUMINAIRE AND SIGNAL MAST ARMS AND ATTACHED VEHICLE SIGNAL HEADS
		TYPE 1 STANDARD WITH ATTACHED VEHICLE SIGNAL HEADS
		STANDARD WITH A SIGNAL MAST ARM, ATTACHED VEHICLE SIGNAL HEADS AND INTERNALLY ILLUMINATED STREET NAME SIGN
		CONTROLLER ASSEMBLY. DOOR INDICATES FRONT OF CABINET

SIGNAL EQUIPMENT Cont

NEW	EXISTING	
		GUARD POST
		TYPE 1 STANDARD WITH RAMP METERING SIGN
		OPTICAL DETECTOR FOR THE EMERGENCY VEHICLE DETECTION SYSTEM

NOTES:

1. All signal sections shall be 12" unless shown otherwise.
2. Signal heads shall be provided with backplates unless shown otherwise.

ILLUMINATED OVERHEAD SIGN

NEW	EXISTING	
		SINGLE POST, SINGLE ILLUMINATED SIGN, BALANCED BUTTERFLY
		SINGLE POST, DOUBLE ILLUMINATED SIGN, BALANCED BUTTERFLY
		SINGLE POST, SINGLE ILLUMINATED SIGN, FULL CANTILEVER
		DOUBLE POST, SINGLE ILLUMINATED SIGN
		SINGLE ILLUMINATED SIGN MOUNTED ON STRUCTURE
		DOUBLE POST, SINGLE ILLUMINATED SIGN WITH ELECTROLIER

STATE OF CALIFORNIA
DEPARTMENT OF TRANSPORTATION

ELECTRICAL SYSTEMS (LEGEND AND ABBREVIATIONS)

NO SCALE

RSP ES-1B DATED JULY 19, 2013 SUPERSEDES STANDARD PLAN ES-1B DATED MAY 20, 2011 - PAGE 426 OF THE STANDARD PLANS BOOK DATED 2010.

REVISED STANDARD PLAN RSP ES-1B

2010 REVISED STANDARD PLAN RSP ES-1B

7-15-13

Dist	COUNTY	ROUTE	POST MILES TOTAL PROJECT	SHEET No.	TOTAL SHEETS
05	SLO	46	46.0/50.2	517	551

Theresa Gabriel
REGISTERED ELECTRICAL ENGINEER

July 19, 2013
PLANS APPROVAL DATE

REGISTERED PROFESSIONAL ENGINEER
Theresa Aziz Gabriel
No. E15129
Exp. 6-30-14
ELECTRICAL
STATE OF CALIFORNIA

THE STATE OF CALIFORNIA OR ITS OFFICERS OR AGENTS SHALL NOT BE RESPONSIBLE FOR THE ACCURACY OR COMPLETENESS OF SCANNED COPIES OF THIS PLAN SHEET.

TO ACCOMPANY PLANS DATED 6-1-15

EQUIPMENT IDENTIFICATION

ILLUMINATED SIGN IDENTIFICATION NUMBER:

SIGN No. 12345

10 ISL SCI 1.0

- SIGN NUMBER - PLACE ON POST OR STRUCTURE
- TRANSFORMER RATING (kVA)
- LIGHTING CONTROL TYPE
- NUMBER AND TYPE OF FIXTURES

DO NOT PLACE ON STANDARD OR STRUCTURE

ELECTROLIER OR EQUIPMENT IDENTIFICATION NUMBER:

12345 - 15'-0"

- MAST ARM LENGTH, IF SHOWN. DO NOT PLACE ON STANDARD OR STRUCTURE
- EQUIPMENT NUMBER - PLACE ON STANDARD OR STRUCTURE. EXISTING EQUIPMENT NUMBERS ARE SHOWN IN PARENTHESIS

CONDUIT AND CONDUCTOR IDENTIFICATION:

1½"C, 2#10, 15#14, 2 DLC, 12P#18

- PAIR
- NUMBER AND SIZE OF CONDUCTORS AND CABLES
- SIZE OF CONDUIT IN INCHES

ø1, ø2, ø2P, etc.	TRAFFIC PHASE IDENTIFICATION FOR SIGNAL FACES, DETECTORS AND PHASE DIAGRAMS
1 2 3	LEGEND NUMBERS
A B C	EQUIPMENT, SIGNAL POLES, INSTALLATION OR ITEMS
1 2 3	CONDUIT RUN NUMBERS

SIGNAL AND LIGHTING STANDARD (TYPICAL DESIGNATION):

19A - 3 - 100

- WIND VELOCITY = 100 mph
- CASE 3 ARM LOADING
- STANDARD TYPE
- STANDARD PLAN SHEET NUMBER
- DETAIL, NUMBER, SECTION, TYPE OR ELEVATION

MISCELLANEOUS EQUIPMENT

NEW	EXISTING	
CMS	cms	CHANGEABLE MESSAGE SIGN
		CLOSED CIRCUIT TELEVISION CAMERA
		HIGHWAY ADVISORY RADIO POLE AND ANTENNA
EMS	ems	EXTINGUISHABLE MESSAGE SIGN
M V	m v	DETECTION DEVICE M = MICROWAVE SENSOR V = VIDEO IMAGE SENSOR

WIRING DIAGRAM LEGEND

- EXTERNAL CONDUCTOR
- CONDUCTOR OR BUS
- TIE POINT
- CONTACTOR COIL
- CONTACTOR, NO CONTACT
- TERMINAL BLOCKS
- CONTACTOR, NC CONTACT
- ENCLOSURE BOND
- GROUNDING ELECTRODE
- CIRCUIT BREAKER
- RECEPTACLE

PULL BOXES

NEW	EXISTING	
		PULL BOX, No. 5 UNLESS OTHERWISE INDICATED OR NOTED
3	9A(21)	PULL BOX, ADDITIONAL DESIGNATIONS OR DESCRIPTIONS

3 No. 3½ PULL BOX
5 No. 5 PULL BOX
6 No. 6 PULL BOX
7 No. 7 (CEILING PULL BOX)
8 No. 8 (PENDANT SOFFIT PULL BOX)
9 No. 9 PULL BOX
9A No. 9A PULL BOX

(C) COMMUNICATIONS PULL BOX
(E) PULL BOX WITH EXTENSION
(S) SPRINKLER CONTROL PULL BOX
(21) ANCHOR BOLTS AND CONDUIT FOR FUTURE INSTALLATION OF TYPE 21 STANDARD
(T) TRAFFIC PULL BOX

VEHICLE DETECTORS

5 J 9 U

- VEHICLE DETECTOR DESIGNATION
- U = UPPER
  L = LOWER
- SLOT NUMBER IN INPUT FILE
- INPUT FILE (I OR J)
- PHASE

NEW	EXISTING	
		TYPE A DETECTOR LOOP. OUTLINE OF SAWCUT SHOWN
		TYPE B DETECTOR LOOP. OUTLINE OF SAWCUT SHOWN
		TYPE C DETECTOR LOOP. OUTLINE OF SAWCUT SHOWN
		TYPE D DETECTOR LOOP. OUTLINE OF SAWCUT SHOWN
		TYPE E DETECTOR LOOP. OUTLINE OF SAWCUT SHOWN
		TYPE Q DETECTOR LOOP. OUTLINE OF SAWCUT SHOWN
		MAGNETIC DETECTOR
DH	dh	DETECTOR HANDHOLE
		MICROWAVE OR VIDEO DETECTION ZONE

STATE OF CALIFORNIA
DEPARTMENT OF TRANSPORTATION

ELECTRICAL SYSTEMS (LEGEND AND ABBREVIATIONS)

NO SCALE

RSP ES-1C DATED JULY 19, 2013 SUPERSEDES STANDARD PLAN ES-1C DATED MAY 20, 2011 - PAGE 427 OF THE STANDARD PLANS BOOK DATED 2010.

REVISED STANDARD PLAN RSP ES-1C

2010 REVISED STANDARD PLAN RSP ES-1C

7-11-13

Dist	COUNTY	ROUTE	POST MILES TOTAL PROJECT	SHEET No.	TOTAL SHEETS
05	SLO	46	46.0/50.2	518	551

Theresa Gabriel
REGISTERED ELECTRICAL ENGINEER

July 19, 2013
PLANS APPROVAL DATE

REGISTERED PROFESSIONAL ENGINEER
Theresa Aziz Gabriel
No. E15129
Exp. 6-30-14
ELECTRICAL
STATE OF CALIFORNIA

THE STATE OF CALIFORNIA OR ITS OFFICERS OR AGENTS SHALL NOT BE RESPONSIBLE FOR THE ACCURACY OR COMPLETENESS OF SCANNED COPIES OF THIS PLAN SHEET.

TO ACCOMPANY PLANS DATED 6-1-15

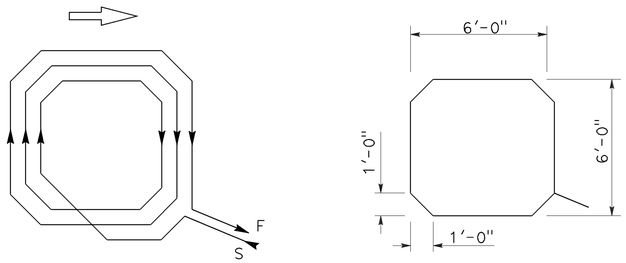

WINDING DETAIL SAWCUT DETAIL

TYPE A LOOP DETECTOR CONFIGURATION

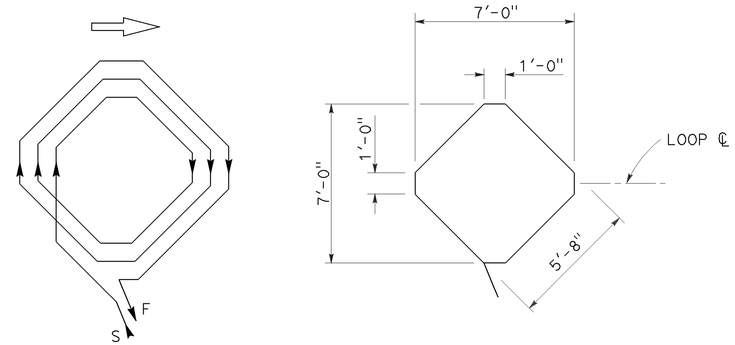

WINDING DETAIL SAWCUT DETAIL

TYPE B LOOP DETECTOR CONFIGURATION

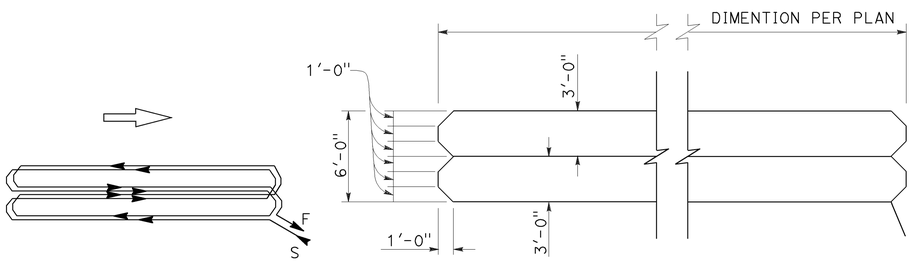

WINDING DETAIL SAWCUT DETAIL

TYPE C LOOP DETECTOR CONFIGURATION

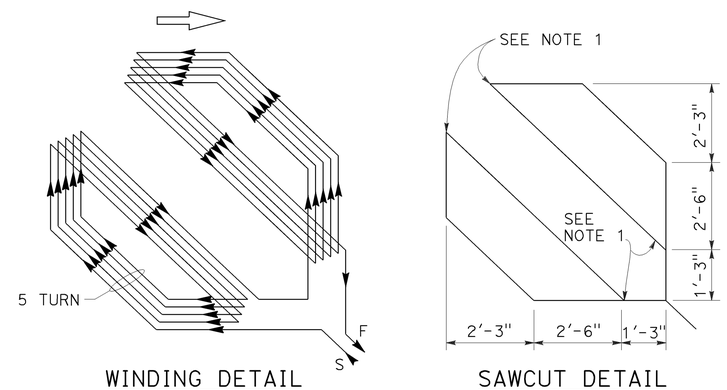

WINDING DETAIL SAWCUT DETAIL

TYPE D LOOP DETECTOR CONFIGURATION

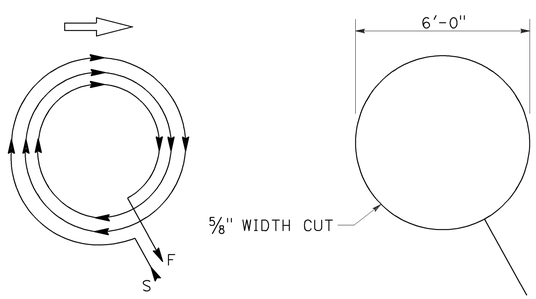

WINDING DETAIL SAWCUT DETAIL

TYPE E LOOP DETECTOR CONFIGURATION

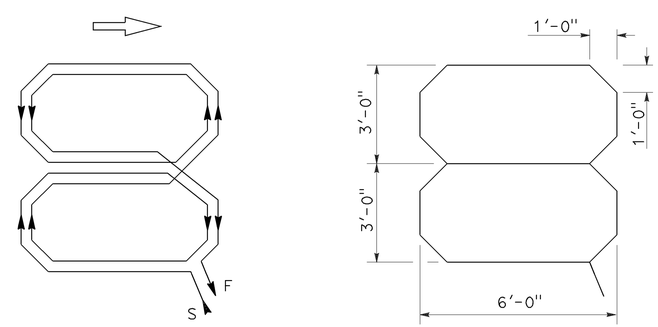

WINDING DETAIL SAWCUT DETAIL

TYPE Q LOOP DETECTOR CONFIGURATION

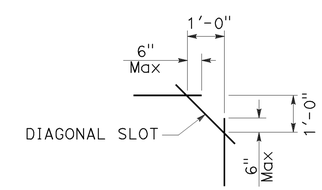

PLAN VIEW OF DIAGONAL SLOT AT CORNERS

NOTES:

1. Round corners of acute angle sawcuts to prevent damage to conductors.
2. Typical distance separating loops from edge to edge is 10' for Type A, B, D and E installation in single lane.

STATE OF CALIFORNIA
DEPARTMENT OF TRANSPORTATION

ELECTRICAL SYSTEMS (DETECTORS)

NO SCALE

RSP ES-5B DATED JULY 19, 2013 SUPERSEDES STANDARD PLAN ES-5B DATED MAY 20, 2011 - PAGE 449 OF THE STANDARD PLANS BOOK DATED 2010.

REVISED STANDARD PLAN RSP ES-5B

2010 REVISED STANDARD PLAN RSP ES-5B

7-9-13

Dist	COUNTY	ROUTE	POST MILES TOTAL PROJECT	SHEET No.	TOTAL SHEETS
05	SLO	46	46.0/50.2	519	551

Theresa Gabriel
REGISTERED ELECTRICAL ENGINEER

July 19, 2013
PLANS APPROVAL DATE

REGISTERED PROFESSIONAL ENGINEER Theresa Aziz Gabriel No. E15129 Exp. 6-30-14 ELECTRICAL STATE OF CALIFORNIA

THE STATE OF CALIFORNIA OR ITS OFFICERS OR AGENTS SHALL NOT BE RESPONSIBLE FOR THE ACCURACY OR COMPLETENESS OF SCANNED COPIES OF THIS PLAN SHEET.

TO ACCOMPANY PLANS DATED 6-1-15

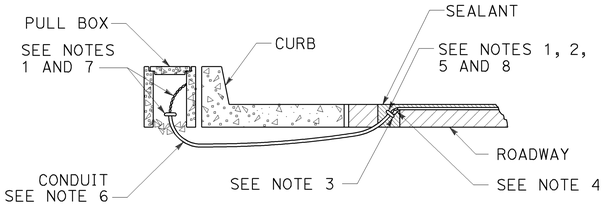

TYPE A
CURB TERMINATION DETAIL

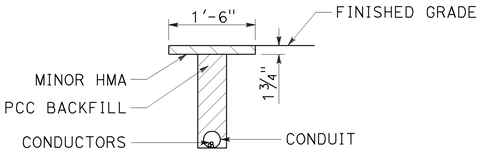

"T" TRENCH
DETAIL T

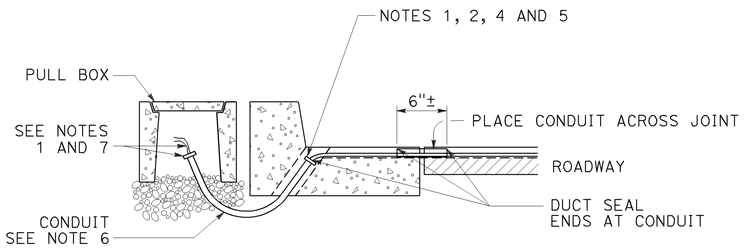

CROSS SECTION

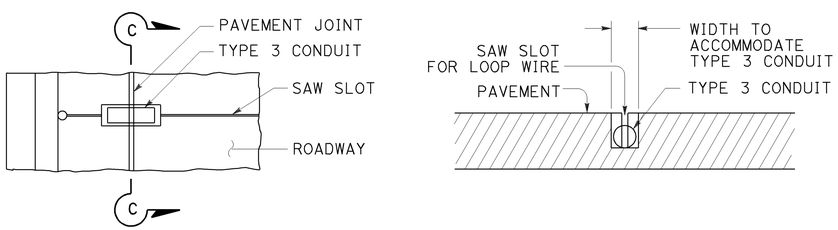

PLAN VIEW

SECTION C-C

TYPE B
CURB TERMINATION DETAIL

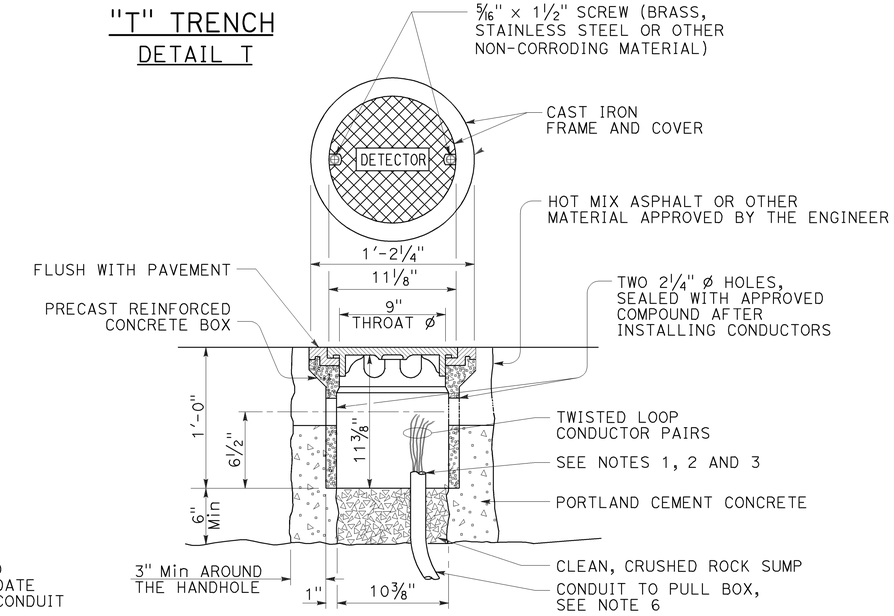

DETECTOR HANDHOLE DETAIL

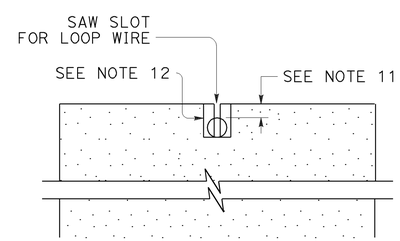

SECTION A-A

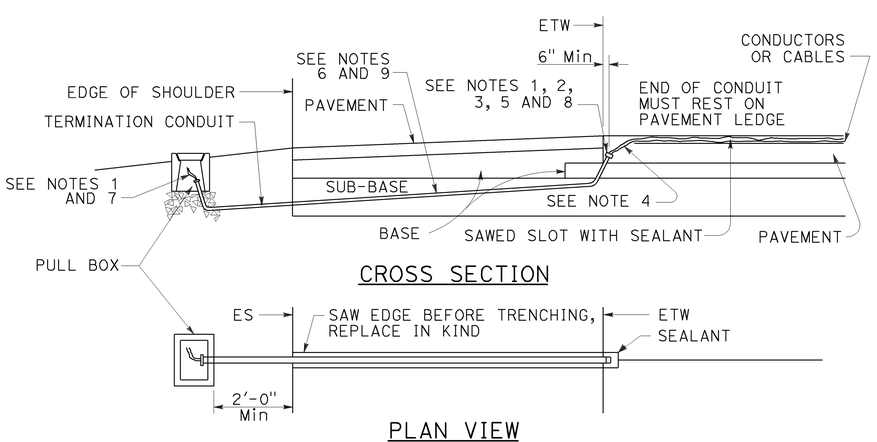

CROSS SECTION

PLAN VIEW

SHOULDER TERMINATION DETAILS

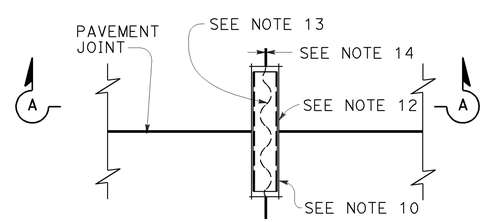

PLAN VIEW

TYPICAL LOOP LEAD-IN DETAIL
AT PAVEMENT JOINT

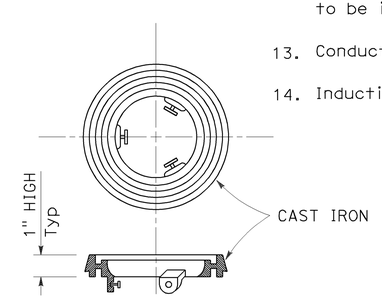

LOCKING GRADE RING

NOTES:

1. Bushing shall be used at end of conduit.
2. Tape detector conductors or cables 3" each side of bushings.
3. Install duct seal compound to each end of termination conduit before installing sealant.
4. Round all sharp edges where detector conductors or cables have to pass.
5. End of conduit shall be 3⅛" below roadway surface.
6.

Conduit size	Loop conductors
1"C minimum	1 to 2 pairs
1½"C minimum	3 to 4 pairs
2"C minimum	5 or more pairs

7. Splice detector conductors or cables to detector lead-in-cable.
8. Location of detector handhole when shown on plans.
9. When the shoulder and traveled way are paved with the same material and there is no joint between them, the conduit shall extend only 2'-0" into the shoulder pavement.
10. ¾"C, Type 3 conduit 6" long minimum, plug both ends with duct compound to keep out sealant.
11. ½" Minimum between top of conduit and pavement surface.
12. Sawcut shall not exceed 1" in width and ⅛" longer than conduit to be installed.
13. Conductors with ½" minimum slack inside conduit.
14. Inductive loop detector saw slot.

STATE OF CALIFORNIA
DEPARTMENT OF TRANSPORTATION

ELECTRICAL SYSTEMS (CURB TERMINATION AND HANDHOLE)

NO SCALE

RSP ES-5D DATED JULY 19, 2013 SUPERSEDES STANDARD PLAN ES-5D
DATED MAY 20, 2011 - PAGE 451 OF THE STANDARD PLANS BOOK DATED 2010.

REVISED STANDARD PLAN RSP ES-5D

2010 REVISED STANDARD PLAN RSP ES-5D

7-9-13

DIST	COUNTY	ROUTE	POST MILES TOTAL PROJECT	SHEET NO.	TOTAL SHEETS
05	SLO	46	46.0/50.2	520	551

Theresa Gabriel
REGISTERED ELECTRICAL ENGINEER

July 19, 2013
PLANS APPROVAL DATE

REGISTERED PROFESSIONAL ENGINEER Theresa Aziz Gabriel No. E15129 Exp. 6-30-14 ELECTRICAL STATE OF CALIFORNIA

THE STATE OF CALIFORNIA OR ITS OFFICERS OR AGENTS SHALL NOT BE RESPONSIBLE FOR THE ACCURACY OR COMPLETENESS OF SCANNED COPIES OF THIS PLAN SHEET.

TO ACCOMPANY PLANS DATED 6-1-15

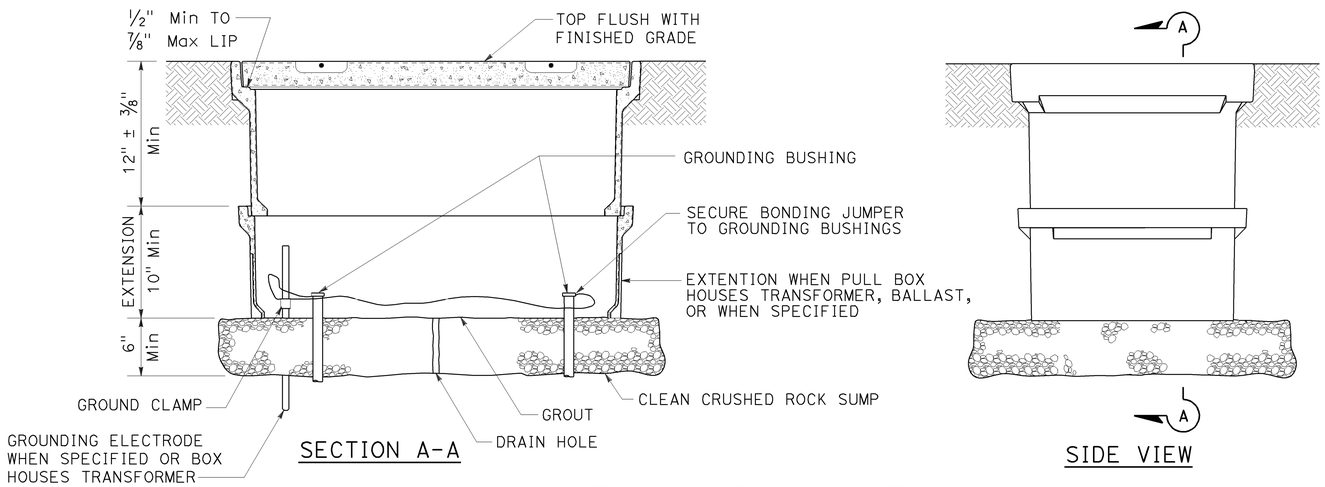

SECTION A-A

SIDE VIEW

INSTALLATION DETAILS

DETAIL A

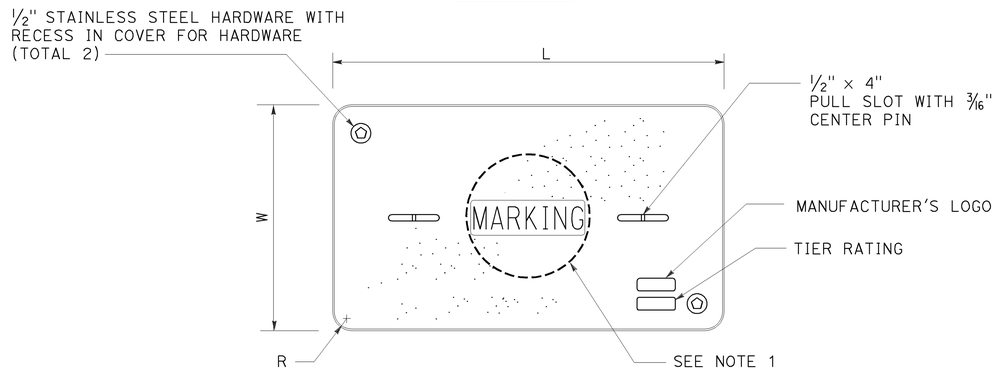

COVER TOP VIEW

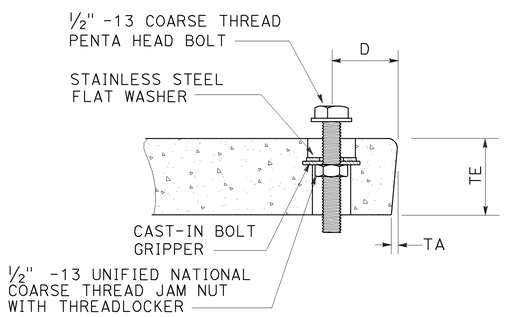

TYPICAL COVER CAPTIVE BOLT

OR SIMILAR

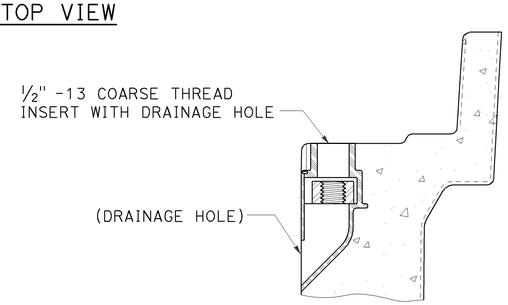

TYPICAL THREADED INSERT

OR SIMILAR

DIMENSION TABLE										
PULL BOX	PULL BOX			COVER						
	MINIMUM DEPTH BOX	MINIMUM DEPTH EXTENSION	MAXIMUM WEIGHT	L	W	R	TE	TA	D	MAXIMUM WEIGHT
No. 3½	12"	N/A	40 lb	1′ - 3⅜"	10⅛"	1⅜"	2"	⅛"	1¾"	30 lb
No. 5	12"	10"	55 lb	1′ - 11¼"	1′ - 1¾"	1⅜"	2"	⅛"	1¾"	60 lb
No. 6	12"	10"	70 lb	2′ - 6½"	1′ - 5½"	1⅜"	2"	⅛"	2"	85 lb

NOTES:

1. Pull box covers shall be marked as follows: "SERVICE" Service circuits between service point and service disconnect; "SPRINKLER-CONTROL" sprinkler control circuits, 50 V or less; "CALTRANS" on all pull boxes, except pull boxes marked "SPRINKLER-CONTROL"; and "TELEPHONE" Telephone service;
   - A) No. 3½ pull box.
     - 1) "SIGNAL" - Traffic signal circuits with or without lighting or sign lighting circuits.
     - 2) "LIGHTING" - Lighting or sign lighting circuits where voltage is under 600 V.
   - B) No. 5, 6, 9 or 9A pull box.
     - 1) "TRAFFIC SIGNAL" - Traffic signal circuits with or without lighting or sign lighting circuits.
     - 2) "LIGHTING" - Lighting or sign lighting circuits where voltage is under 600 V.
     - 3) "LIGHTING-HIGH VOLTAGE" - Lighting or sign lighting circuits where voltage is above 600 V.
     - 4) "IRRIGATION" - Circuits to irrigation controller 120 V or more.
     - 5) "RAMP METER" - Ramp meter circuits.
     - 6) "COUNT STATION" - Count or speed monitor circuits.
     - 7) "COMMUNICATIONS" - Communication circuits.
     - 8) "TOS COMMUNICATIONS" - TOS communication line.
     - 9) "TOS POWER" - TOS power.
     - 10) "TDC POWER" - Telephone demarcation cabinet power.
     - 11) "CCTV" - Closed circuit television circuits.
     - 12) "TMS" - Traffic monitoring station circuits.
     - 13) "CMS" - Changeable message sign circuits.
     - 14) "HAR" - Highway advisory radio circuits.
     - 15) "BOOSTER PUMP" - Booster pump circuit.
2. The nominal dimensions of the opening in which the cover sets shall be the same as the cover dimensions except the length and width dimensions shall be ⅛" greater.
3. Covers and boxes shall be interchangeable with California standard male and female gages. When interchanged with a standard male or female gage, the top surfaces shall be flush within ⅛". Top outside radius of covers and pull boxes shall have a ⅛" radius.
4. Pull box extension may be another pull box as long as the bottom edge of the pull box can fit into the cover opening.
5. All dimensions for the cover for non-traffic pull box are nominal values.

STATE OF CALIFORNIA
DEPARTMENT OF TRANSPORTATION

ELECTRICAL SYSTEMS (NON-TRAFFIC PULL BOX)

NO SCALE

RSP ES-8A DATED JULY 19, 2013 SUPERSEDES RSP ES-8A DATED JANUARY 20, 2012 THAT SUPPLEMENTS THE STANDARD PLANS BOOK DATED 2010.

REVISED STANDARD PLAN RSP ES-8A

2010 REVISED STANDARD PLAN RSP ES-8A

7-15-13

DIST	COUNTY	ROUTE	POST MILES TOTAL PROJECT	SHEET NO.	TOTAL SHEETS
05	SLO	46	46.0/50.2	521	551

Theresa Gabriel
REGISTERED ELECTRICAL ENGINEER

July 19, 2013
PLANS APPROVAL DATE

REGISTERED PROFESSIONAL ENGINEER
Theresa Aziz Gabriel
No. E15129
Exp. 6-30-14
ELECTRICAL
STATE OF CALIFORNIA

THE STATE OF CALIFORNIA OR ITS OFFICERS OR AGENTS SHALL NOT BE RESPONSIBLE FOR THE ACCURACY OR COMPLETENESS OF SCANNED COPIES OF THIS PLAN SHEET.

TO ACCOMPANY PLANS DATED 6-1-15

2010 REVISED STANDARD PLAN RSP ES-8B

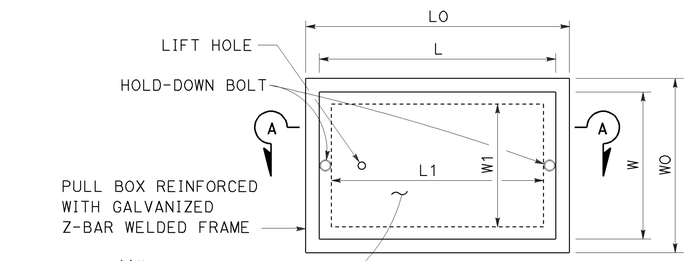

TOP VIEW

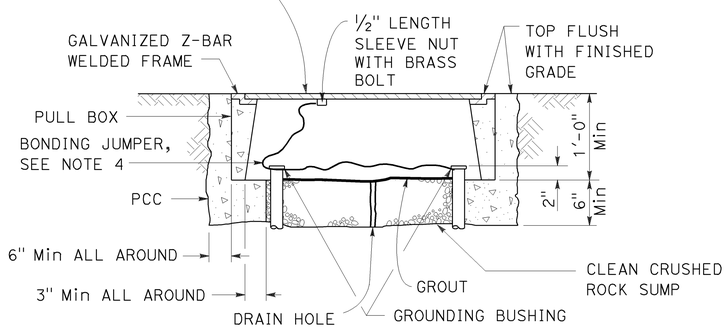

SECTION A-A

No. 3½(T), No. 5(T) AND No. 6(T) TRAFFIC PULL BOX

NOTES:

1. Traffic pull box shall be provided with steel cover and special concrete footing. Steel cover shall have embossed non-skid pattern.
2. Steel reinforcing shall be as regularly used in the standard products of the respective manufacturer.
3. Pull box covers shall be marked as follows: "SERVICE" Service circuits between service point and service disconnect; "SPRINKLER-CONTROL" Sprinkler control circuits, 50 V or less; "CALTRANS" On all pull boxes, except pull boxes marked "SPRINKLER-CONTROL"; and "TELEPHONE" Telephone service.
   - A) No. 3½(T) pull box.
     - 1) "SIGNAL" - Traffic signal circuits with or without lighting or sign lighting circuits.
     - 2) "LIGHTING" - Lighting or sign lighting circuits where voltage is under 600 V.
   - B) No. 5(T) or 6(T) pull box.
     - 1) "TRAFFIC SIGNAL" - Traffic signal circuits with or without lighting or sign lighting circuits.
     - 2) "LIGHTING" - Lighting or sign lighting circuits where voltage is under 600 V.
     - 3) "LIGHTING-HIGH VOLTAGE" - Lighting or sign lighting circuits where voltage is above 600 V.
     - 4) "IRRIGATION" - Circuits to irrigation controller 120 V or more.
     - 5) "RAMP METER" - Ramp meter circuits.
     - 6) "COUNT STATION" - Count or speed monitor circuits.
     - 7) "COMMUNICATION" - Communication circuits.
     - 8) "TOS COMMUNICATIONS" - TOS communications line.
     - 9) "TOS POWER" - TOS power.
     - 10) "TDC POWER" - Telephone demarcation cabinet power.
     - 11) "CCTV" - Closed circuit television circuits.
     - 12) "TMS" - Traffic monitoring station circuits.
     - 13) "CMS" - Changeable message sign circuits.
     - 14) "HAR" - Highway advisory radio circuits.
     - 15) "BOOSTER PUMP" - Booster pump circuit.
4. Bonding jumper for metal covers shall be 3' long, minimum.
5. The nominal dimensions of the opening in which the cover sets shall be the same as the cover dimensions except the length and width dimensions shall be ⅛" greater.
6. Covers and boxes shall be interchangeable with California standard male and female gages. When interchanged with a standard male or female gage, the top surfaces shall be flush within ⅛".

DIMENSION TABLE

PULL BOX	PULL BOX						COVER				
	MINIMUM * THICKNESS	MINIMUM DEPTH BOX AND EXTENSION	WO	LO	L1	W1	L **	W **	R	EDGE THICKNESS	EDGE TAPER
No. 3½(T)	1½"	1'-0"	1'-5"± 1"	1'-8⅞"±	1'-2½"±	10⅝"± 1"	1'-8"±	1'-1¾"±	0"	½"	NONE
No. 5(T)	1¾"	1'-0"	1'-11½"± 1"	2'-5½"±	1'-7"±	1'-1"± 1"	2'-3"±	1'-4"±	0"	½"	NONE
No. 6(T)	2"	1'-0"	2'-6"± 1"	2'-11½"±	1'-11½"±	1'-5"± 1"	2'-9"±	1'-8"±	0"	½"	NONE

* EXCLUDING CONDUIT WEB ** TOP DIMENSION

STATE OF CALIFORNIA
DEPARTMENT OF TRANSPORTATION

ELECTRICAL SYSTEMS (TRAFFIC PULL BOX)

NO SCALE

RSP ES-8B DATED JULY 19, 2013 SUPERSEDES RSP ES-8B DATED JANUARY 20, 2012 THAT SUPPLEMENTS THE STANDARD PLANS BOOK DATED 2010.

REVISED STANDARD PLAN RSP ES-8B

7-15-13

Dist	COUNTY	ROUTE	POST MILES TOTAL PROJECT	SHEET No.	TOTAL SHEETS
05	SLO	46	46.0/50.2	522	551

Theresa Gabriel
REGISTERED ELECTRICAL ENGINEER

July 19, 2013
PLANS APPROVAL DATE

REGISTERED PROFESSIONAL ENGINEER
Theresa Aziz Gabriel
No. E15129
Exp. 6-30-14
ELECTRICAL
STATE OF CALIFORNIA

THE STATE OF CALIFORNIA OR ITS OFFICERS OR AGENTS SHALL NOT BE RESPONSIBLE FOR THE ACCURACY OR COMPLETENESS OF SCANNED COPIES OF THIS PLAN SHEET.

TO ACCOMPANY PLANS DATED 6-1-15

ISOFOOTCANDLE CURVE - MINIMUM

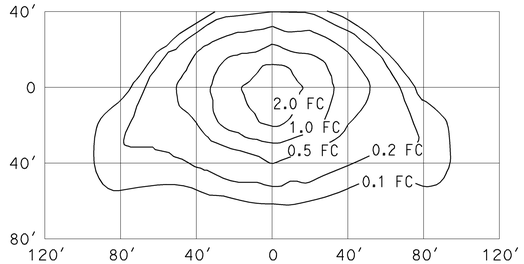

TYPE III MEDIUM CUTOFF

Cutoff Luminaire
34′ Mounting Height
Lamp operated at 22,000 lm
200-W high pressure sodium lamp
ANSI Designation S66

ISOFOOTCANDLE CURVE - MINIMUM

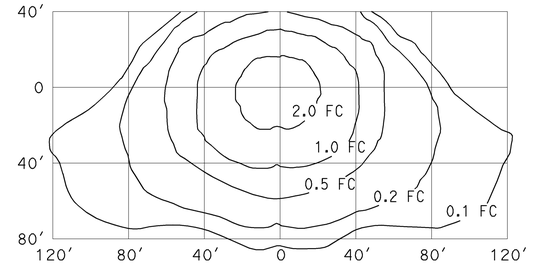

TYPE III MEDIUM CUTOFF

Cutoff Luminaire
40′ Mounting Height
Lamp operated at 37,000 lm
310-W high pressure sodium lamp
ANSI Designation S67

ISOFOOTCANDLE CURVE - MINIMUM

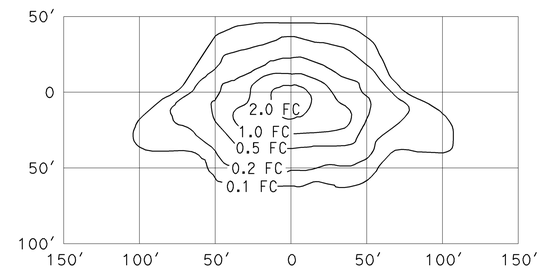

TYPE III MEDIUM CUTOFF

Cutoff Luminaire
30′ Mounting Height
Lamp operated at 16,000 lm
150-W high pressure sodium lamp
ANSI Designation S55

ISOFOOTCANDLE CURVE - MINIMUM

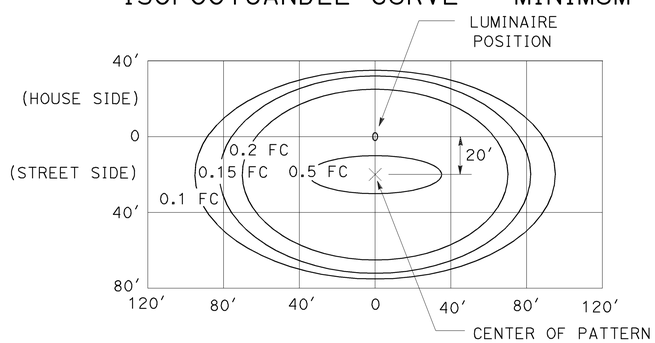

LED LUMINAIRE ROADWAY 1

165-W at 34′ Mounting Height

ISOFOOTCANDLE CURVE - MINIMUM

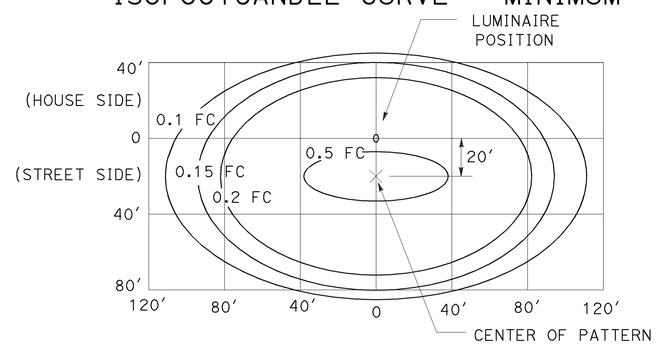

LED LUMINAIRE ROADWAY 2

235-W at 40′ Mounting Height

ISOFOOTCANDLE CURVE - MINIMUM

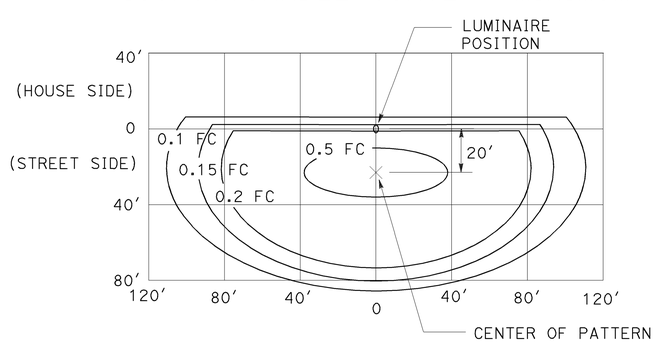

LED LUMINAIRE ROADWAY 3

235-W at 40′ Mounting Height
with back side control

ISOFOOTCANDLE CURVE - MINIMUM

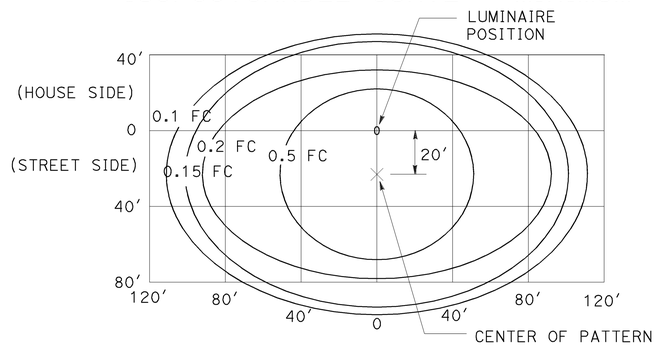

LED LUMINAIRE ROADWAY 4

300-W at 40′ Mounting Height

ISOFOOTCANDLE CURVE - MINIMUM

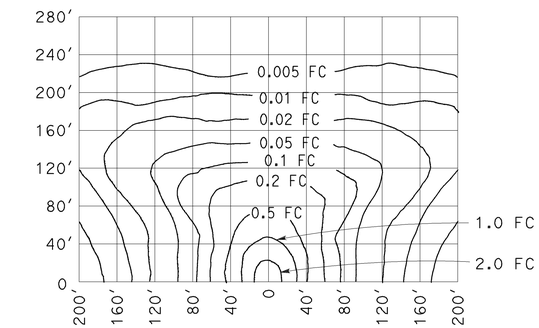

LOW PRESSURE SODIUM LUMINAIRE

40′ Mounting Height
Lamp operated at 33,000 lm
180-W low pressure sodium lamp

STATE OF CALIFORNIA
DEPARTMENT OF TRANSPORTATION

ELECTRICAL SYSTEMS (ISOFOOTCANDLE DIAGRAMS)

NO SCALE

RSP ES-10A DATED JULY 19, 2013 SUPERSEDES RSP ES-10A DATED JULY 20, 2012 THAT SUPPLEMENTS THE STANDARD PLANS BOOK DATED 2010.

REVISED STANDARD PLAN RSP ES-10A

2010 REVISED STANDARD PLAN RSP ES-10A

Dist	COUNTY	ROUTE	POST MILES TOTAL PROJECT	SHEET No.	TOTAL SHEETS
05	SLO	46	46.0/50.2	523	551

REGISTERED CIVIL ENGINEER

July 19, 2013
PLANS APPROVAL DATE

REGISTERED PROFESSIONAL ENGINEER
Stanley P. Johnson
No. C57793
Exp. 3-31-14
CIVIL
STATE OF CALIFORNIA

THE STATE OF CALIFORNIA OR ITS OFFICERS OR AGENTS SHALL NOT BE RESPONSIBLE FOR THE ACCURACY OR COMPLETENESS OF SCANNED COPIES OF THIS PLAN SHEET.

TO ACCOMPANY PLANS DATED 6-1-15

STANDARD TYPE	SETBACK (DIMENSION A)
32	30'-0" (Min)
31	20'-0" (Min)
15, 15D, 15-SB, 21, 21D, 30	ARM LENGTH (Min)

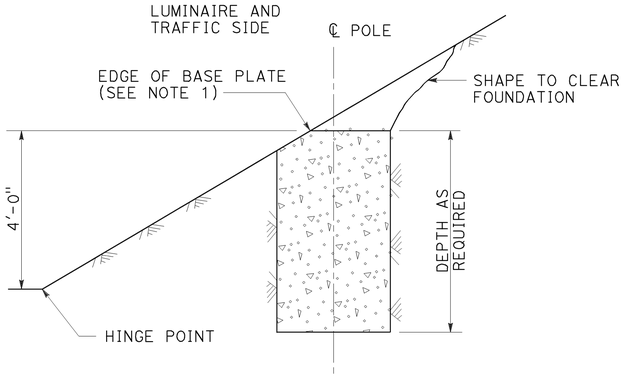

CUT SLOPES
STEEPER THAN 4:1,
LESS THAN 2:1
DETAIL A-1
See Note 2 and 3

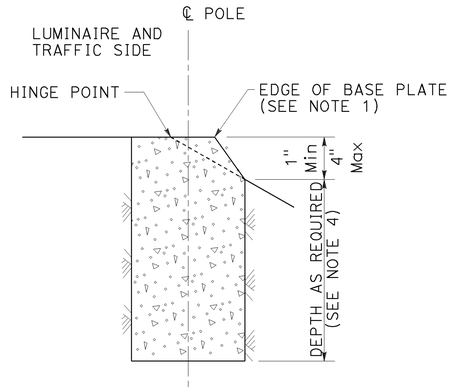

FILL SLOPES
STEEPER THAN 4:1,
LESS THAN 2:1
DETAIL A-2
See Note 2 and 3

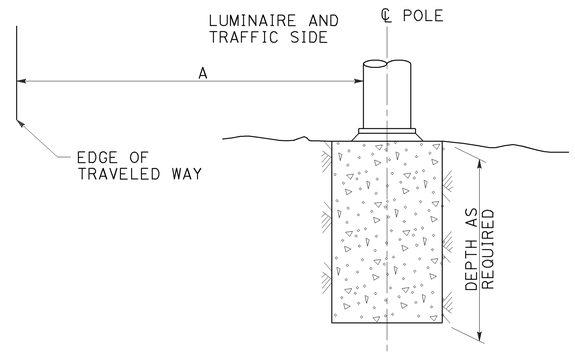

FLAT SECTIONS, CUT OR FILL SLOPES
4:1 OR FLATTER
DETAIL A-3
See Note 2

FOUNDATIONS ADJACENT TO ALL ROADWAYS EXCEPT
IN SIDEWALK, MEDIAN AND ISLAND AREAS
DETAIL A

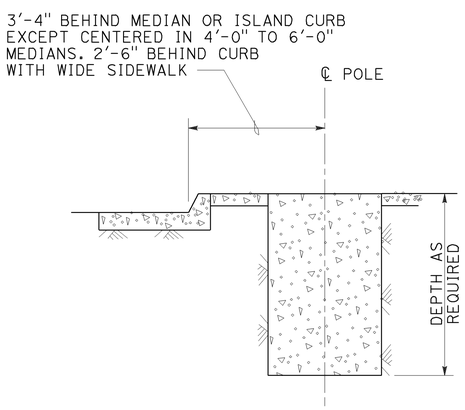

MEDIAN, ISLAND
OR WIDE SIDEWALK
DETAIL B-1
7' Wide and wider

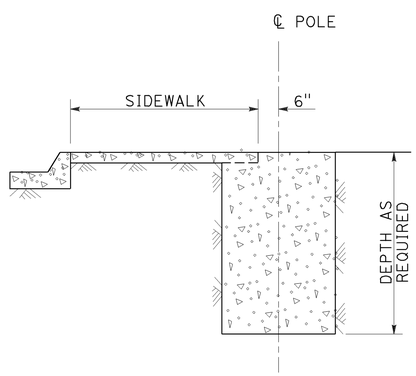

NARROW SIDEWALK
DETAIL B-2
Less than 7' wide

FOUNDATIONS IN SIDEWALK, MEDIAN AND ISLAND AREAS
DETAIL B

NOTES:

1. Where a portion of the foundation is above grade, the top edges shall have a 1" chamfer.
2. Slopes shall be horizontal to vertical ratio (Horizontal : Vertical).
3. Horizontal setbacks on cut and fill slopes steeper than 4:1 shall not exceed the distance shown for flat sections.
4. CIDH embedment depth shall be increased beyond standard depths by the diameter of the CIDH.

STATE OF CALIFORNIA
DEPARTMENT OF TRANSPORTATION

ELECTRICAL SYSTEMS (FOUNDATION INSTALLATIONS)

NO SCALE

RSP ES-11 DATED JULY 19, 2013 SUPERSEDES STANDARD PLAN ES-11
DATED MAY 20, 2011 - PAGE 488 OF THE STANDARD PLANS BOOK DATED 2010.

REVISED STANDARD PLAN RSP ES-11

2010 REVISED STANDARD PLAN RSP ES-11

7-9-13

DIST	COUNTY	ROUTE	POST MILES TOTAL PROJECT	SHEET No.	TOTAL SHEETS
05	SLO	46	46.0/50.2	524	551

R. Vaikunthan 12-08-14
REGISTERED STRUCTURAL ENGINEER DATE

6-1-15
PLANS APPROVAL DATE

REGISTERED PROFESSIONAL ENGINEER VAIKUNTHAN RENGANATHAN No. S 5686 Exp. 6-30-2016 STRUCTURAL STATE OF CALIFORNIA

The State of California or its officers or agents must not be responsible for the accuracy or completeness of electronic copies of this plan sheet.

NOTES:

1. For traffic & construction stages, see Roadway Plans.
2. For deck drain locations, see "GIRDER LAYOUT No. 1" and "GIRDER LAYOUT No. 2" sheets.
3. For removal of existing RSP, see Roadway Plans.

NOTE:
THE CONTRACTOR MUST VERIFY ALL CONTROLLING FIELD DIMENSIONS BEFORE ORDERING OR FABRICATING ANY MATERIAL.

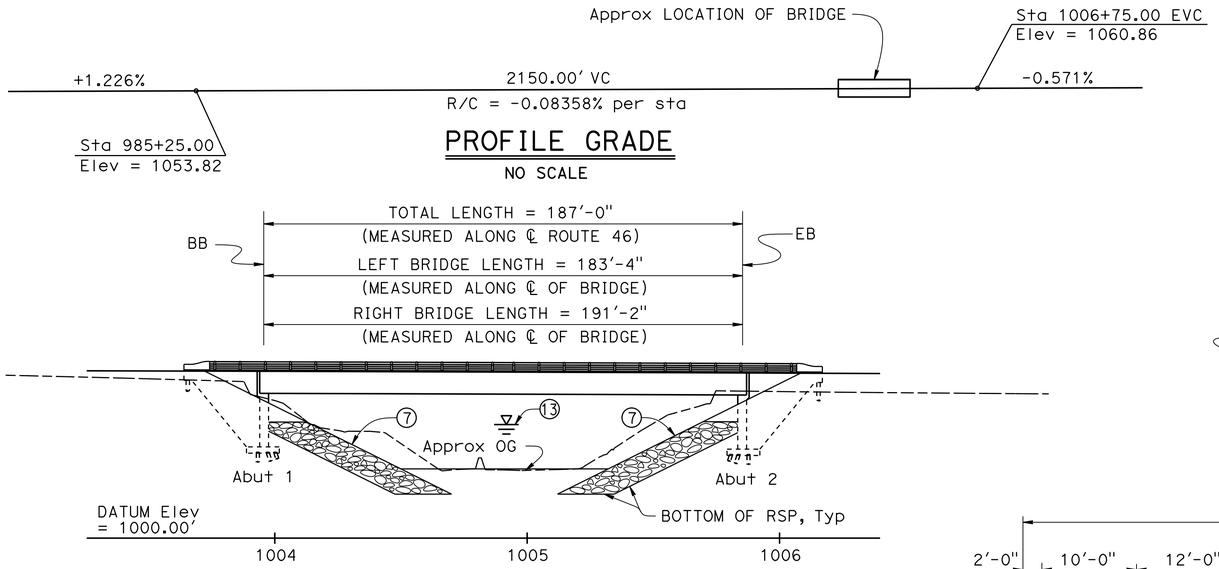

PROFILE GRADE
NO SCALE

ELEVATION
1" = 30'

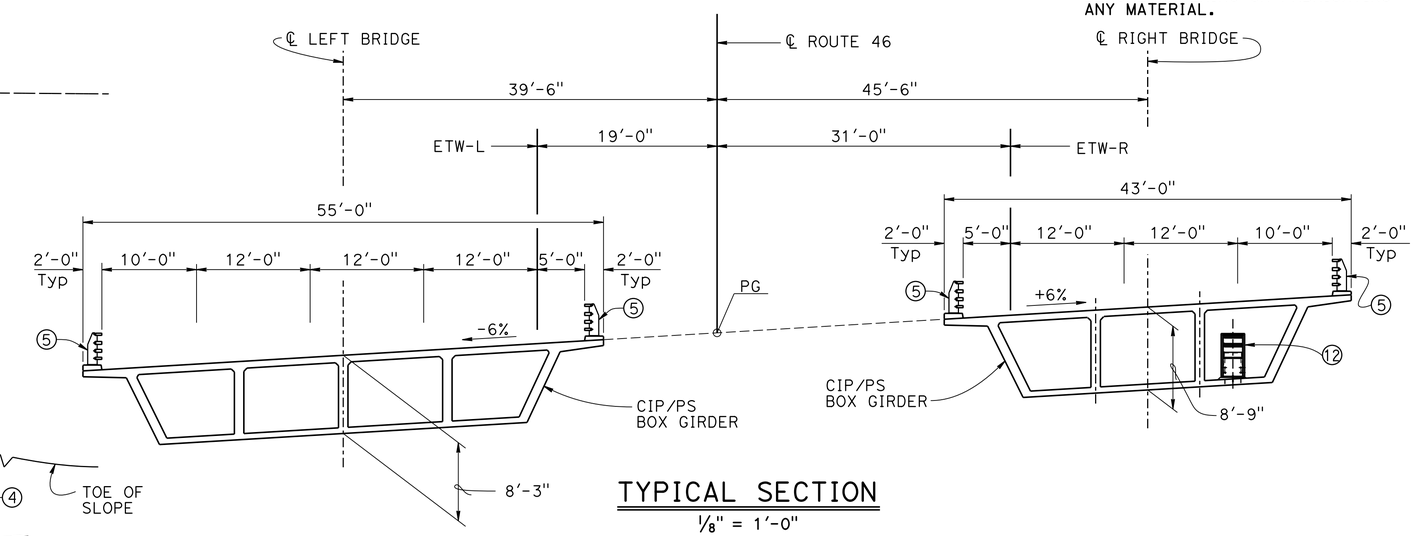

TYPICAL SECTION
1/8" = 1'-0"

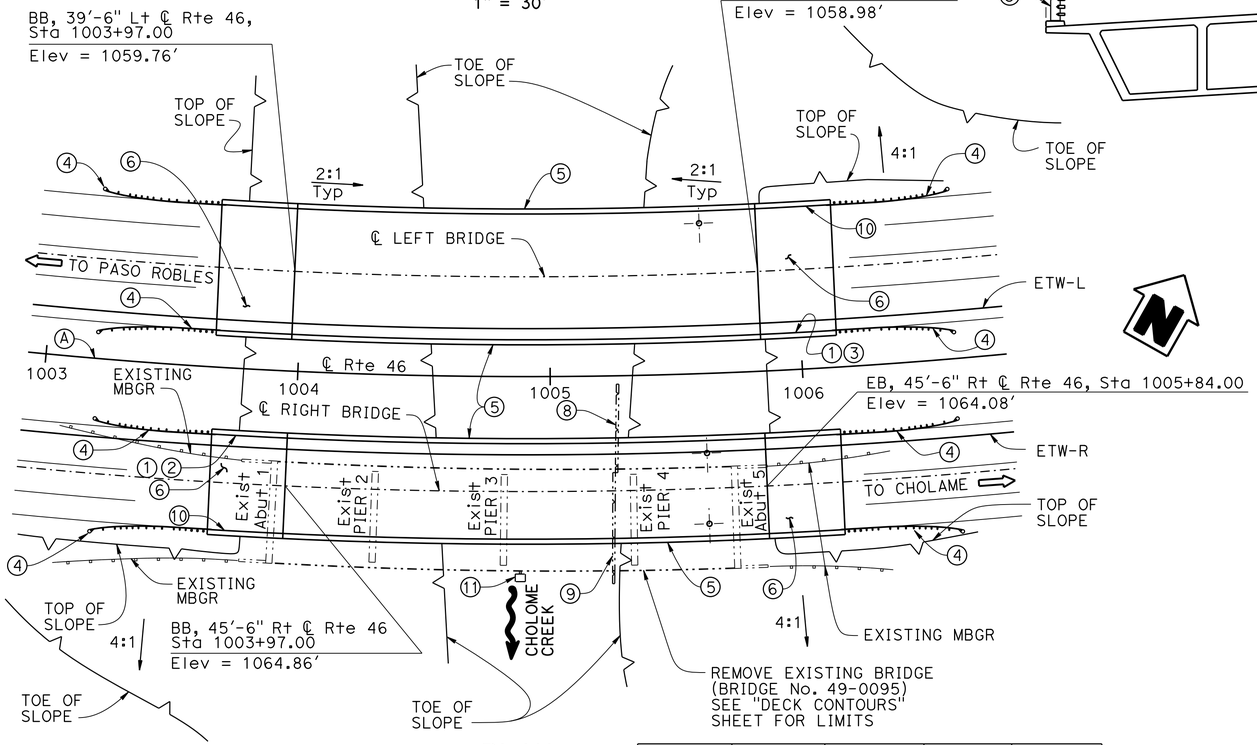

PLAN
1" = 30'

LOCATION	R	Δ	T	L
Ⓐ	2017.71'	55°15'36"	1056.18'	1946.02'

NOTES:

① Paint "Cholame Creek Bridge"
② Paint "Bridge No. 49-0262R"
③ Paint "Bridge No. 49-0262L"
④ Midwest Guardrail System, see ROADWAY PLANS
⑤ California ST-70 Bridge Rail (Modified)
⑥ Structure Approach Type N (30S), Modified
⑦ Rock Slope Protection, See ROADWAY PLANS
⑧ Remove existing 1'± X 8'± X 35'± concrete toe wall
⑨ Remove existing 1'± X 8'± X 44'± concrete toe wall
⑩ Beveled date, see "CALIFORNIA ST-70 BRIDGE RAIL (MODIFIED) DETAIL No. 2" sheet
⑪ Salvage Scour monitoring instrument by others
⑫ Bat habitat, for locations see "GIRDER REINFORCEMENT" sheet
⑬ For Hydrologic Summary, see "INDEX TO PLANS" sheet
Deck access opeing, see "GIRDER LAYOUT No.1" and "GIRDER LAYOUT No.2" sheets

QUANTITIES

BRIDGE REMOVAL	LUMP	SUM
STRUCTURE EXCAVATION (BRIDGE)	1,933	CY
STRUCTURE BACKFILL (BRIDGE)	1,730	CY
FURNISH STEEL PILING (HP 10 X 57)	5,486	LF
DRIVE STEEL PILE (HP 10 X 57)	186	EA
PRESTRESSING CAST-IN-PLACE CONCRETE	LUMP	SUM
STRUCTURAL CONCRETE, BRIDGE FOOTING	245	CY
STRUCTURAL CONCRETE, BRIDGE	2,158	CY
STRUCTURAL CONCRETE, APPROACH SLAB (TYPE N MODIFIED)	218	CY
JOINT SEAL (MR 1½")	200	LF
BAR REINFORCING STEEL (BRIDGE)	511,053	LB
BAT HABITAT	4	EA
MISCELLANEOUS METAL (BRIDGE)	1,457	LB
BRIDGE DECK DRAINAGE SYSTEM	1,847	LB
CALIFORNIA ST-70 BRIDGE RAIL (MODIFIED)	976	LF

GARY BLAKESLEY
DESIGN ENGINEER

	BY	CHECKED
DESIGN	VAIKUNTHAN RENGANATHAN	SEIJI MORIMOTO
DETAILS	DAVID ELLIOTT / SUSAN NG	SEIJI MORIMOTO
QUANTITIES	RACHEL WASHINGTON	GLORIA REYES-GUTIERREZ

LOAD & RESISTANCE FACTOR DESIGN — LIVE LOADING: HL93 W/"LOW-BOY"; PERMIT DESIGN VEHICLE
LAYOUT — BY D. ELLIOTT — CHECKED VAIKUNTHAN RENGANATHAN
SPECIFICATIONS — BY TINA CHEN — PLANS AND SPECS COMPARED TINA CHEN

ORIGINAL SCALE IN INCHES FOR REDUCED PLANS 0 1 2 3

STATE OF CALIFORNIA
DEPARTMENT OF TRANSPORTATION

DIVISION OF ENGINEERING SERVICES
STRUCTURE DESIGN
DESIGN BRANCH 6

BRIDGE NO. 49-0262R/L
POST MILE 46.0/50.2

CHOLAME CREEK BRIDGE
GENERAL PLAN

UNIT: 3591
PROJECT NUMBER & PHASE: 05 1200 0076 1 CONTRACT NO.: 05-330784

DISREGARD PRINTS BEARING EARLIER REVISION DATES
REVISION DATES: 3-14-13 2-05-15 7-13-15
SHEET 1 OF 28

USERNAME => s115755 DATE PLOTTED => 26-OCT-2015 TIME PLOTTED => 10:26

STRUCTURES DESIGN GENERAL PLAN SHEET (ENGLISH) (REV.09-01-10)

FILE => 49-0262rl-a-gp.dgn

DIST	COUNTY	ROUTE	POST MILES TOTAL PROJECT	SHEET No.	TOTAL SHEETS
05	SLO	46	46.0/50.2	525	551

R. Vaikunthan 12-08-14
REGISTERED STRUCTURAL ENGINEER DATE

6-1-15
PLANS APPROVAL DATE

REGISTERED PROFESSIONAL ENGINEER VAIKUNTHAN RENGANATHAN No. S 5686 EXP. 6-30-2016 STRUCTURAL STATE OF CALIFORNIA

The State of California or its officers or agents must not be responsible for the accuracy or completeness of electronic copies of this plan sheet.

LEFT BRIDGE PILE DATA TABLE

Location	Pile Type	Nominal Resistance		Cut-Off Elevation (ft)	Design Tip Elevation (ft)	Specified Tip Elevation (ft)	Nominal Driving Resistance (Kips)
		Compression (Kips)	Tension (Kips)				
Abut 1	HP 10X57	250	N/A	1029.53	1009 (a) 1011 (c)	1009	250
Abut 1 LEFT WW	HP 10X57	90	N/A	1052.23	1036 (a) 1051 (c) 1032 (d)	1032	90
Abut 1 RIGHT WW	HP 10X57	90	N/A	1055.29	1036 (a) 1054 (c) 1035 (d)	1035	90
Abut 2	HP 10X57	250	N/A	1028.01	994 (a) 1005 (c)	994	250
Abut 2 LEFT WW	HP 10X57	90	N/A	1051.23	1034 (a) 1050 (c) 1031 (d)	1031	90
Abut 2 RIGHT WW	HP 10X57	90	N/A	1054.29	1034 (a) 1053 (c) 1034 (d)	1034	90

NOTES:

1) Design tip elevations for Abutments are controlled by: (a) Compression and (c) Settlement respectively.

2) Design tip elevations for Abutment Wingwalls are controlled by: (a) Compression, (c) Settlement and (d) Lateral Load respectively.

3) The specified tip elevation shall not be raised.

RIGHT BRIDGE PILE DATA TABLE

Location	Pile Type	Nominal Resistance		Cut-Off Elevation (ft)	Design Tip Elevation (ft)	Specified Tip Elevation (ft)	Nominal Driving Resistance (Kips)
		Compression (Kips)	Tension (Kips)				
Abut 1	HP 10X57	240	N/A	1034.08	1008 (a) 1024 (c)	1008	240
Abut 1 LEFT WW	HP 10X57	90	N/A	1057.69	1038 (a) 1056 (c) 1038 (d)	1038	90
Abut 1 RIGHT WW	HP 10X57	90	N/A	1060.03	1038 (a) 1059 (c) 1040 (d)	1038	90
Abut 2	HP 10X57	240	N/A	1033.17	999 (a) 1007 (c)	999	240
Abut 2 LEFT WW	HP 10X57	90	N/A	1056.69	1022 (a) 1055 (c) 1037 (d)	1022	90
Abut 2 RIGHT WW	HP 10X57	90	N/A	1059.03	1023 (a) 1058 (c) 1039 (d)	1023	90

NOTES:

1) Design tip elevations for Abutments are controlled by: (a) Compression and (c) Settlement respectively.

2) Design tip elevations for Abutment Wingwalls are controlled by: (a) Compression, (c) Settlement and (d) Lateral Load respectively.

3) The specified tip elevation shall not be raised.

GENERAL NOTES
LOAD AND RESISTANCE FACTOR DESIGN

DESIGN:
AASHTO LRFD Bridge Design Specifications, 4th edition with the California Amendments, dated November 2011.

SEISMIC DESIGN:
Caltrans Seismic Design Criteria (SDC), Version 1.6 dated NOVEMBER 2010

DEAD LOAD:
Includes 35 psf for future wearing surface.

LIVE LOADING:
HL93 and permit design load.

SEISMIC LOADING:
SEE "SITE SPECIFIC ACCELERATION RESPONSE SPECTRA CURVE"

REINFORCED CONCRETE:
fy = 60 ksi
f'c = 3.6 ksi (except as shown on "CONCRETE STRENGTH AND TYPE LIMITS" diagram)
n = 8

PRESTRESSED CONCRETE:
See Prestressing Notes.

STRUCTURE BACKFILL & EXCAVATION:
For limits of payment for excavation and backfill bridge, bottom of Rock Slope Protection = FS

A62C

HYDROLOGIC SUMMARY

Drainage Area: 236 mi^2		
	Design Flood	Base Flood
Frequency	50 - yr	100 - yr
Discharge	13,267 ft^3/s	19,000 ft^3/s
Water Surface Elevation at Bridge (Left Bridge)	——	1044.9 ft
Water Surface Elevation at Bridge (Right Bridge)	——	1044.4 ft

Flood plain data are based upon information available when the plans were prepared and are shown to meet federal requirements. The accuracy of said information is not warranted by the State, and interested or affected parties should make their own investigation.,

STANDARD PLANS DATED 2010

	A10A	ABBREVIATIONS (SHEET 1 OF 2)
RSP	A10B	ABBREVIATIONS (SHEET 2 OF 2)
	A10C	LINES AND SYMBOLS (SHEET 1 OF 3)
	A10D	LINES AND SYMBOLS (SHEET 2 OF 3)
	A10E	LINES AND SYMBOLS (SHEET 3 OF 3)
	A10F	LEGEND - SOIL (SHEET 1 OF 2)
	A10G	LEGEND - SOIL (SHEET 2 OF 2)
	A10H	LEGEND - ROCK
	A62C	LIMITS OF PAYMENT FOR EXCAVATION AND BACKFILL - BRIDGE
	B0-1	BRIDGE DETAILS
	B0-3	BRIDGE DETAILS
	B0-5	BRIDGE DETAILS
	B0-13	BRIDGE DETAILS
	B6-21	JOINT SEALS (MAXIMUM MOVEMENT RATING = 2")
	B7-1	BOX GIRDER DETAILS
	B7-6	DECK DRAINS - TYPE D-1 AND D-2
	B7-8	DECK DRAINAGE DETAILS
	B7-10	UTILITY OPENING - BOX GIRDER
	B7-11	UTILITY DETAILS
RSP	B8-5	CAST-IN-PLACE POST-TENSIONED GIRDER DETAILS

STANDARD PLAN SHEET No.
RSP
DETAIL No.
REVISED STANDARD PLAN

INDEX TO PLANS

1 GENERAL PLAN
2 INDEX TO PLANS
3 DECK CONTOURS
4 FOUNDATION PLAN
5 ABUTMENT RIGHT LAYOUT
6 ABUTMENT LEFT LAYOUT
7 ABUTMENT FOOTING PILE LAYOUT
8 ABUTMENT DETAILS No. 1
9 ABUTMENT DETAILS No. 2
10 TYPICAL SECTION No. 1
11 TYPICAL SECTION No. 2
12 GIRDER LAYOUT No. 1
13 GIRDER LAYOUT No. 2
14 GIRDER REINFORCEMENT
15 BAT HABITAT DETAILS No. 1
16 BAT HABITAT DETAILS No. 2
17 STRUCTURE APPROACH TYPE N (30S) MODIFIED
18 STRUCTURE APPROACH DRAINAGE DETAILS
19 CALIFORNIA ST-70 BRIDGE RAIL (MODIFIED) DETAILS No. 1
20 CALIFORNIA ST-70 BRIDGE RAIL (MODIFIED) DETAILS No. 2
21 CALIFORNIA ST-70 BRIDGE RAIL (MODIFIED) DETAILS No. 3
22 CALIFORNIA ST-70 BRIDGE RAIL (MODIFIED) DETAILS No. 4
23 LOG OF TEST BORINGS 1 OF 6
24 LOG OF TEST BORINGS 2 OF 6
25 LOG OF TEST BORINGS 3 OF 6
26 LOG OF TEST BORINGS 4 OF 6
27 LOG OF TEST BORINGS 5 OF 6
28 LOG OF TEST BORINGS 6 OF 6

DIST	COUNTY	ROUTE	POST MILES TOTAL PROJECT	SHEET No.	TOTAL SHEETS
05	SLO	46	46.0/50.2	526	551

R. Vaikunthan 12-08-14
REGISTERED STRUCTURAL ENGINEER DATE

6-1-15
PLANS APPROVAL DATE

REGISTERED PROFESSIONAL ENGINEER VAIKUNTHAN RENGANATHAN No. S 5686 EXP. 6-30-2016 STRUCTURAL STATE OF CALIFORNIA

The State of California or its officers or agents must not be responsible for the accuracy or completeness of electronic copies of this plan sheet.

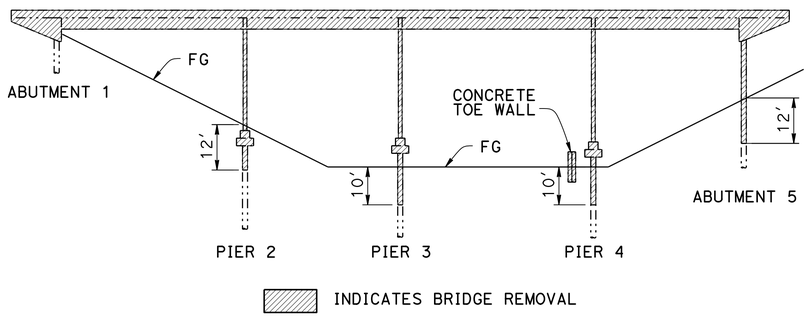

LIMITS OF EXISTING BRIDGE REMOVAL

NO SCALE

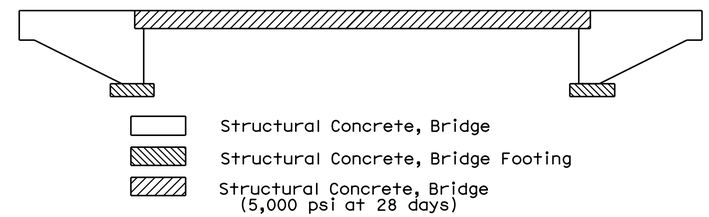

CONCRETE STRENGTH AND TYPE LIMITS

No Scale

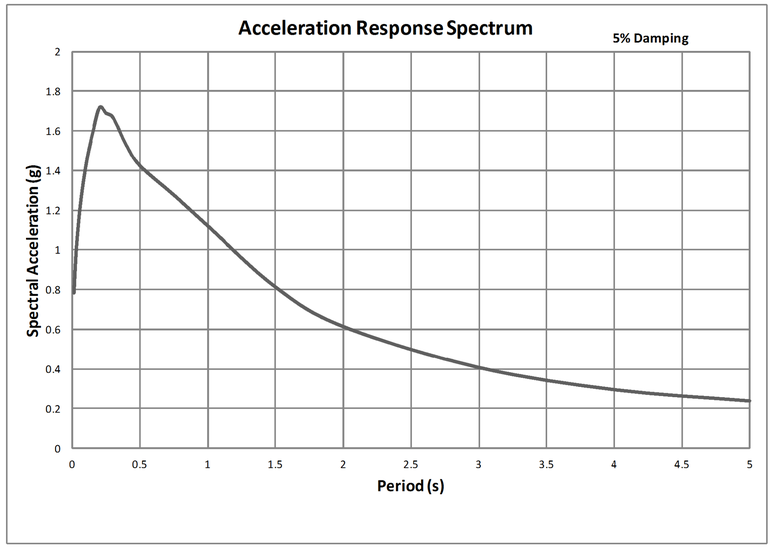

SITE SPECIFIC ACCELERATION RESPONSE SPECTRA CURVE

No Scale

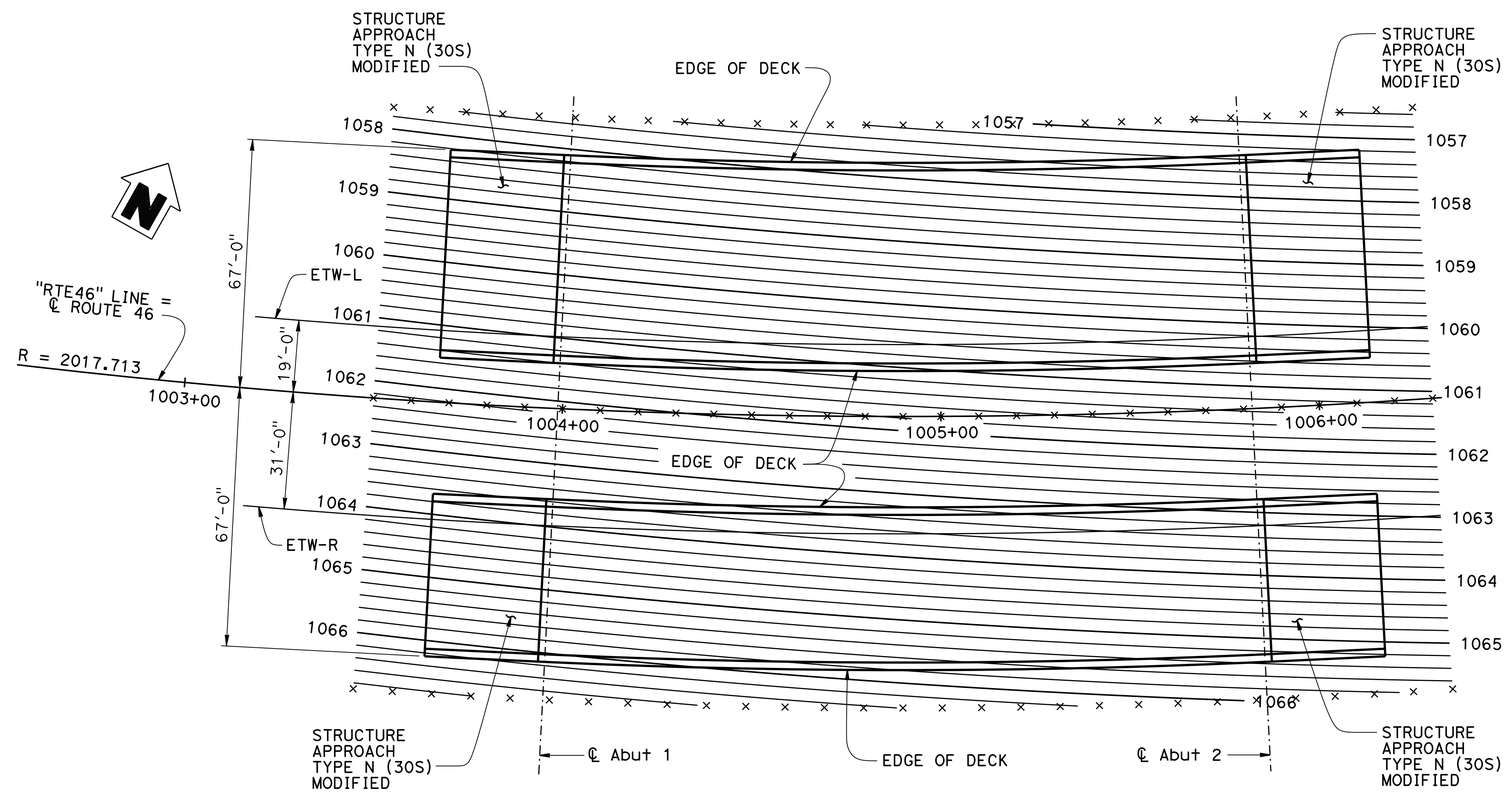

DECK CONTOURS

1" = 20'-0"

NOTES:

1. X = 10' STATION INTERVALS
2. 0.2' CONTOUR INTERVAL
3. CONTOURS DO NOT INCLDE CAMBER

	BY	CHECKED
DESIGN	V. RENGANATHAN	S. MORIMOTO
DETAILS	S. NG	S. MORIMOTO
QUANTITIES	R. WASHINGTON	V. RENGANATHAN

STATE OF CALIFORNIA
DEPARTMENT OF TRANSPORTATION

DIVISION OF ENGINEERING SERVICES
STRUCTURE DESIGN
DESIGN BRANCH 6

BRIDGE NO. 49-0262R/L
POST MILE 46.0/50.2

CHOLAME CREEK BRIDGE
DECK CONTOURS

STRUCTURES DESIGN DETAIL SHEET (ENGLISH) (REV. 09-01-10)

ORIGINAL SCALE IN INCHES FOR REDUCED PLANS 0 1 2 3

UNIT: 3591
PROJECT NUMBER & PHASE: 05 1200 0076 1 CONTRACT NO.: 05-330784

DISREGARD PRINTS BEARING EARLIER REVISION DATES

REVISION DATES: 07-18-14 11-24-14 7-13-15

SHEET 3 OF 28

FILE => 49-0262rl-c-deck-con.dgn

USERNAME => s115755 DATE PLOTTED => 26-OCT-2015 TIME PLOTTED => 10:26

DIST	COUNTY	ROUTE	POST MILES TOTAL PROJECT	SHEET No.	TOTAL SHEETS
05	SLO	46	46.0/50.2	527	551

R. Vaikunthan 12-08-14
REGISTERED STRUCTURAL ENGINEER DATE

6-1-15
PLANS APPROVAL DATE

REGISTERED PROFESSIONAL ENGINEER VAIKUNTHAN RENGANATHAN No. S 5686 Exp. 6-30-2016 STRUCTURAL STATE OF CALIFORNIA

The State of California or its officers or agents must not be responsible for the accuracy or completeness of electronic copies of this plan sheet.

CURVE DATA

No.	R	Δ	T	L
Ⓐ	2017.71	55°15'36"	1056.18	1946.02

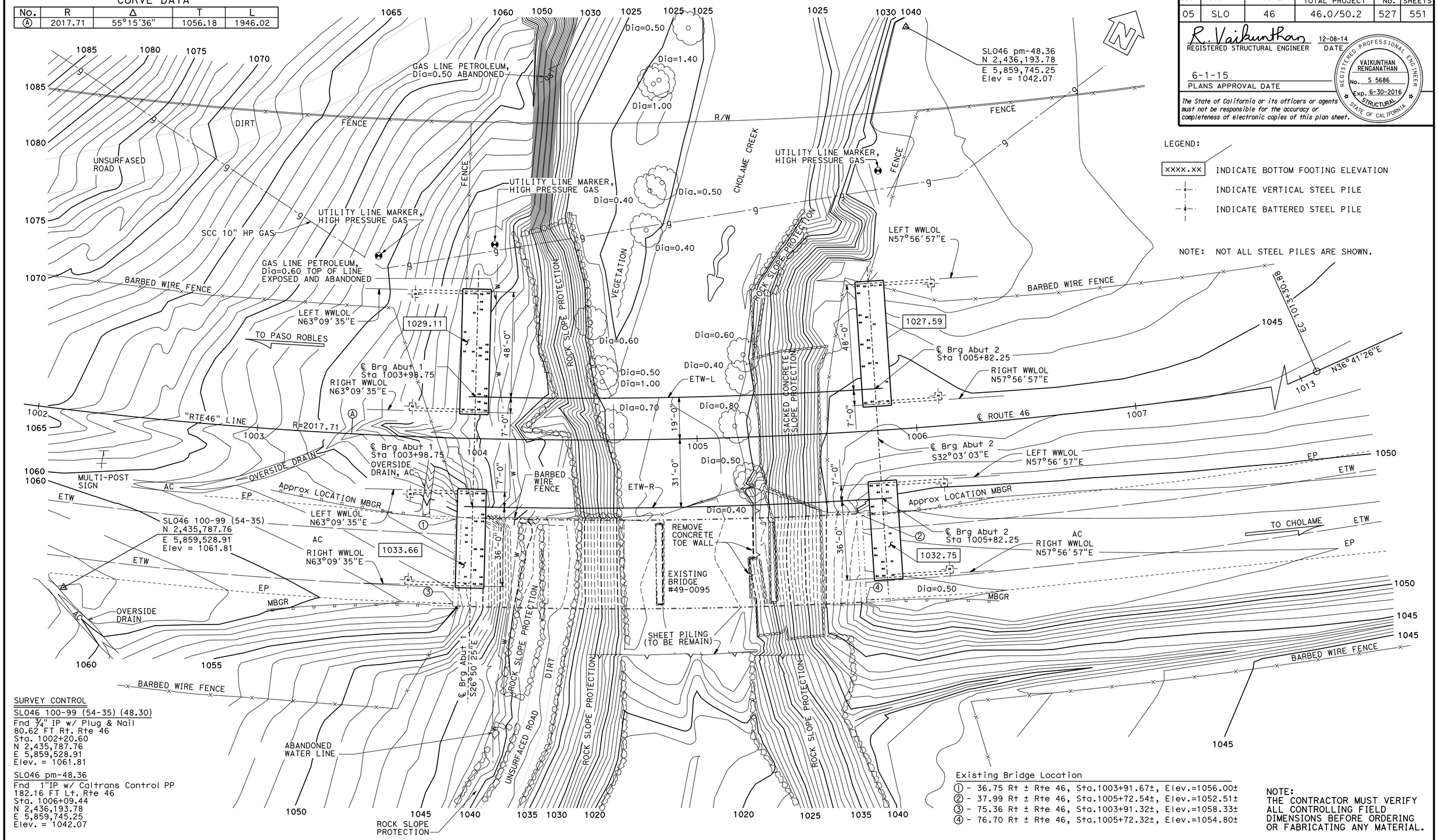

SURVEY CONTROL

SL046 100-99 (54-35) (48.30)
Fnd ¾" IP w/ Plug & Nail
80.62 FT Rt. Rte 46
Sta. 1002+20.60
N 2,435,787.76
E 5,859,528.91
Elev. = 1061.81

SL046 pm-48.36
Fnd 1"IP w/ Caltrans Control PP
182.16 FT Lt. Rte 46
Sta. 1006+09.44
N 2,436,193.78
E 5,859,745.25
Elev. = 1042.07

Existing Bridge Location
① - 36.75 Rt ± Rte 46, Sta.1003+91.67±, Elev.=1056.00±
② - 37.99 Rt ± Rte 46, Sta.1005+72.54±, Elev.=1052.51±
③ - 75.36 Rt ± Rte 46, Sta.1003+91.32±, Elev.=1058.33±
④ - 76.70 Rt ± Rte 46, Sta.1005+72.32±, Elev.=1054.80±

NOTE:
THE CONTRACTOR MUST VERIFY ALL CONTROLLING FIELD DIMENSIONS BEFORE ORDERING OR FABRICATING ANY MATERIAL.

PRELIMINARY INVESTIGATION SECTION

SCALE	VERT.DATUM NGVD29	PHOTOGRAMMETRY AS OF: X			
1"=20'	HORZ.DATUM NAD83 (1991.35)	SURVEYED	BY DISTRICT/FASSETT	CHECKED	BY C.FASSETT 07/24/12
ALIGNMENT TIES Dist. Traverse Sheet		DRAFTED	BY T.ZOLNIKOV 07/2012	CHECKED	BY T.SCHMALZ 07/24/12

	BY	CHECKED
DESIGN	V. RENGANATHAN	S. MORIMOTO
DETAILS	D. ELLIOTT / S. NG	S. MORIMOTO
QUANTITIES	R. WASHINGTON	V.R. / G.R.G.

STATE OF CALIFORNIA
DEPARTMENT OF TRANSPORTATION

DIVISION OF ENGINEERING SERVICES
STRUCTURE DESIGN
DESIGN BRANCH 6

BRIDGE NO. 49-0262R/L
POST MILE 48.32

CHOLAME CREEK BRIDGE (REPLACE)
FOUNDATION PLAN

STRUCTURES FOUNDATION PLAN SHEET (ENGLISH) (REV. 09-01-10)

ORIGINAL SCALE IN INCHES FOR REDUCED PLANS 0 1 2 3

UNIT: 3646
PROJECT NUMBER & PHASE: 05 1200 0076 1 CONTRACT NO.: 05-330784

DISREGARD PRINTS BEARING EARLIER REVISION DATES

REVISION DATES: 07/26/12 10-24-14 10-10-14

SHEET 4 OF 28

FILE => 49-0262r1-e-fpl01.dgn

DIST	COUNTY	ROUTE	POST MILES TOTAL PROJECT	SHEET No.	TOTAL SHEETS
05	SLO	46	46.0/50.2	528	551

R. Vaikunthan 12-08-14
REGISTERED STRUCTURAL ENGINEER DATE

6-1-15
PLANS APPROVAL DATE

REGISTERED PROFESSIONAL ENGINEER VAIKUNTHAN RENGANATHAN No. S 5686 EXP. 6-30-2016 STRUCTURAL STATE OF CALIFORNIA

The State of California or its officers or agents must not be responsible for the accuracy or completeness of electronic copies of this plan sheet.

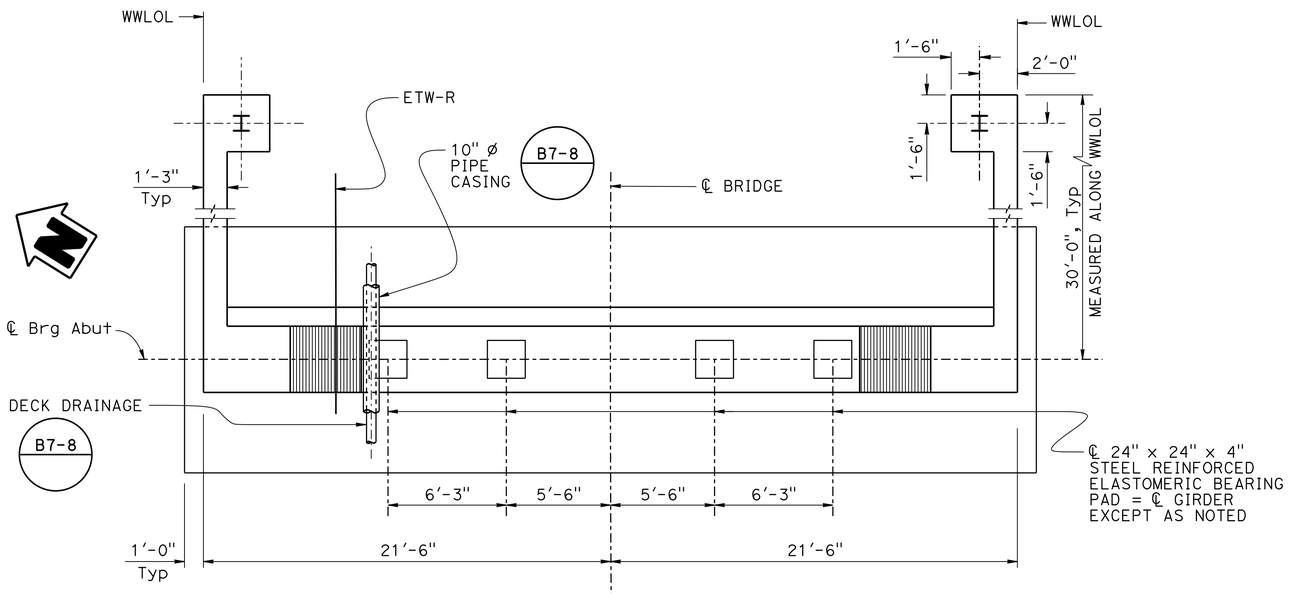

PLAN
1/4" = 1'-0"

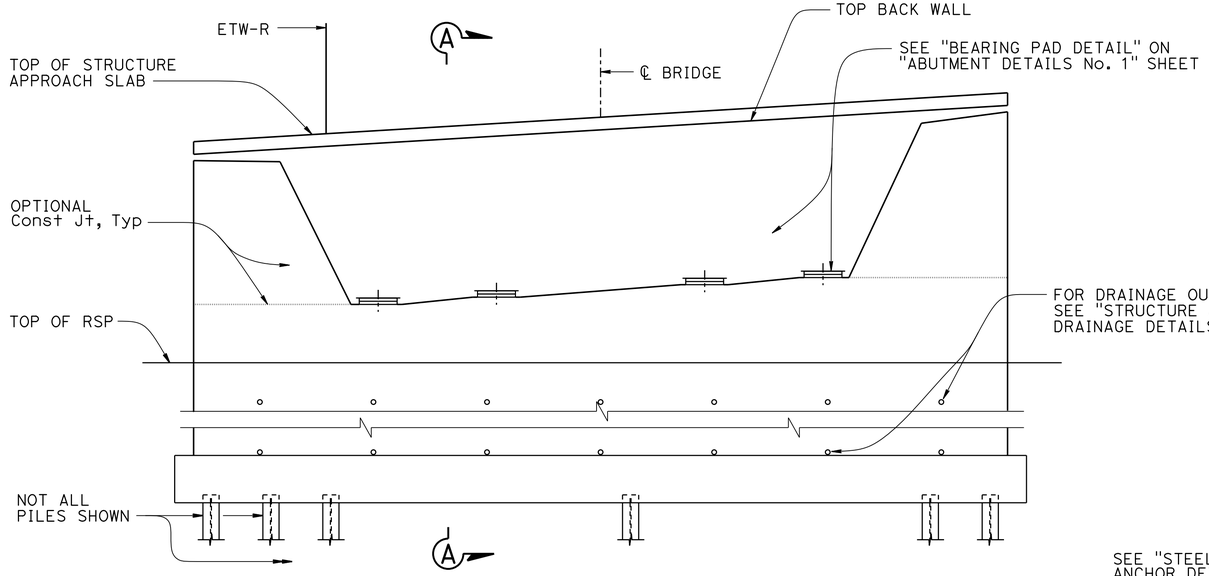

ELEVATION
1/4" = 1'-0"

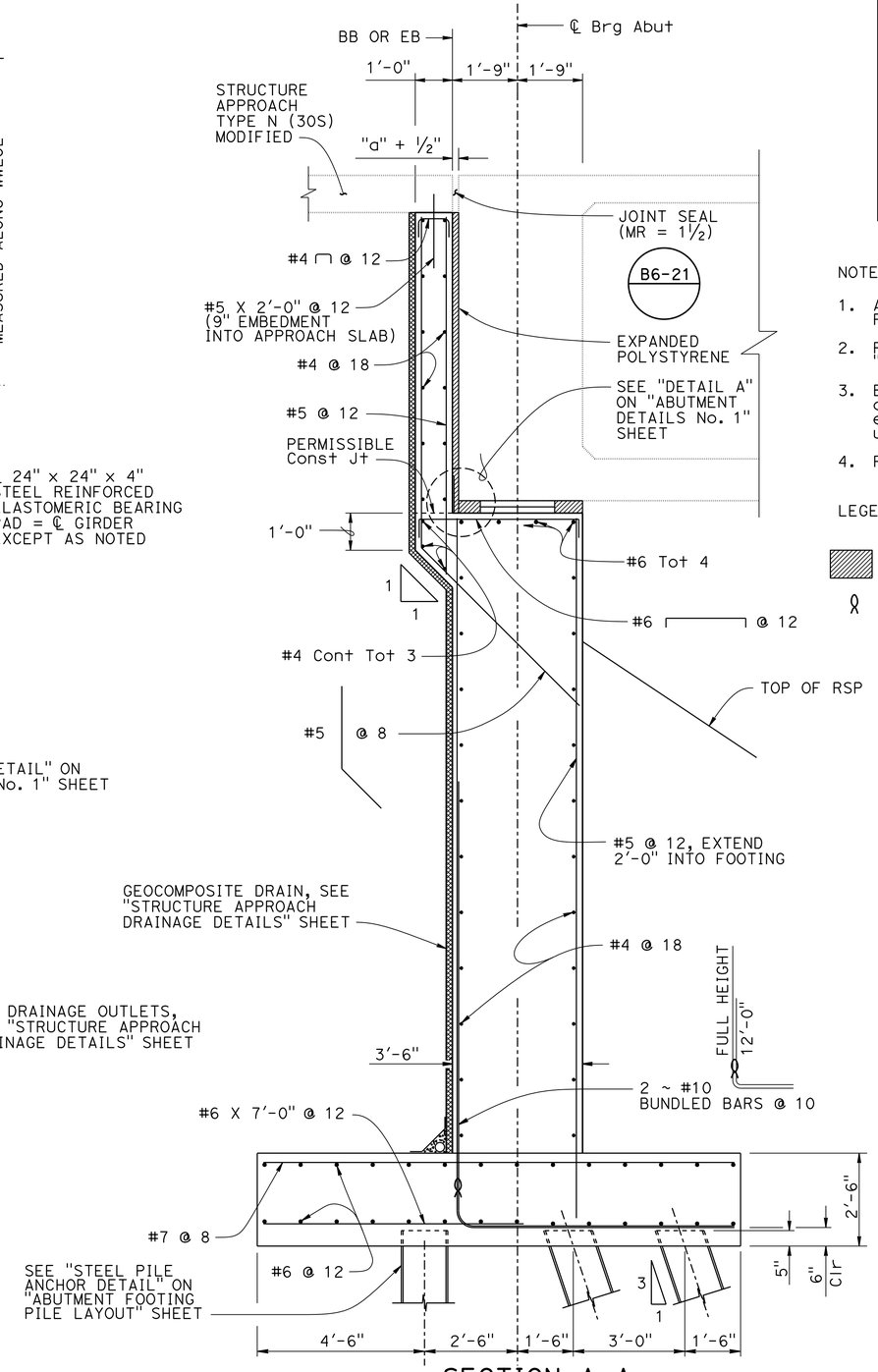

SECTION A-A
1/4" = 1'-0"

NOTES:

1. Abutment 2 Right shown, Abutment 1 Right is similar except as noted.
2. For pile layout, see "ABUTMENT FOOTING PILE LAYOUT" sheet.
3. Batter piles locations may be adjusted to avoid conflict with existing piles (For Abut 2 Right) upon approval from the Engineer.
4. Provide pipe casing for Abutment 2 only.

LEGEND:

DENOTES EXPANDED POLYSTYRENE

INDICATES BUNDLE BARS

DESIGN	BY V. RENGANATHAN	CHECKED S. MORIMOTO	
DETAILS	BY D. ELLIOTT / S. NG	CHECKED S. MORIMOTO	
QUANTITIES	BY R. WASHINGTON	CHECKED G. REYES-GUTIERREZ	

STATE OF CALIFORNIA
DEPARTMENT OF TRANSPORTATION

DIVISION OF ENGINEERING SERVICES
STRUCTURE DESIGN
DESIGN BRANCH 6

BRIDGE NO. 49-0262R/L
POST MILE 46.0/50.2

CHOLAME CREEK BRIDGE
ABUTMENT RIGHT LAYOUT

STRUCTURES DESIGN DETAIL SHEET (ENGLISH) (REV. 09-01-10)

ORIGINAL SCALE IN INCHES FOR REDUCED PLANS 0 1 2 3

UNIT: 3591
PROJECT NUMBER & PHASE: 05 1200 0076 1 CONTRACT NO.: 05-330784

DISREGARD PRINTS BEARING EARLIER REVISION DATES

REVISION DATES: 3-14-13 7-13-15 10-01-14

SHEET 5 OF 28

FILE => 49-0262rl-f-abut_lo-1_right.dgn

USERNAME => s115755 DATE PLOTTED => 26-OCT-2015 TIME PLOTTED => 10:26

DIST	COUNTY	ROUTE	POST MILES TOTAL PROJECT	SHEET No.	TOTAL SHEETS
05	SLO	46	46.0/50.2	529	551

R. Vaikunthan 12-08-14
REGISTERED STRUCTURAL ENGINEER DATE

6-1-15
PLANS APPROVAL DATE

REGISTERED PROFESSIONAL ENGINEER VAIKUNTHAN RENGANATHAN No. S 5686 EXP. 6-30-2016 STRUCTURAL STATE OF CALIFORNIA

The State of California or its officers or agents must not be responsible for the accuracy or completeness of electronic copies of this plan sheet.

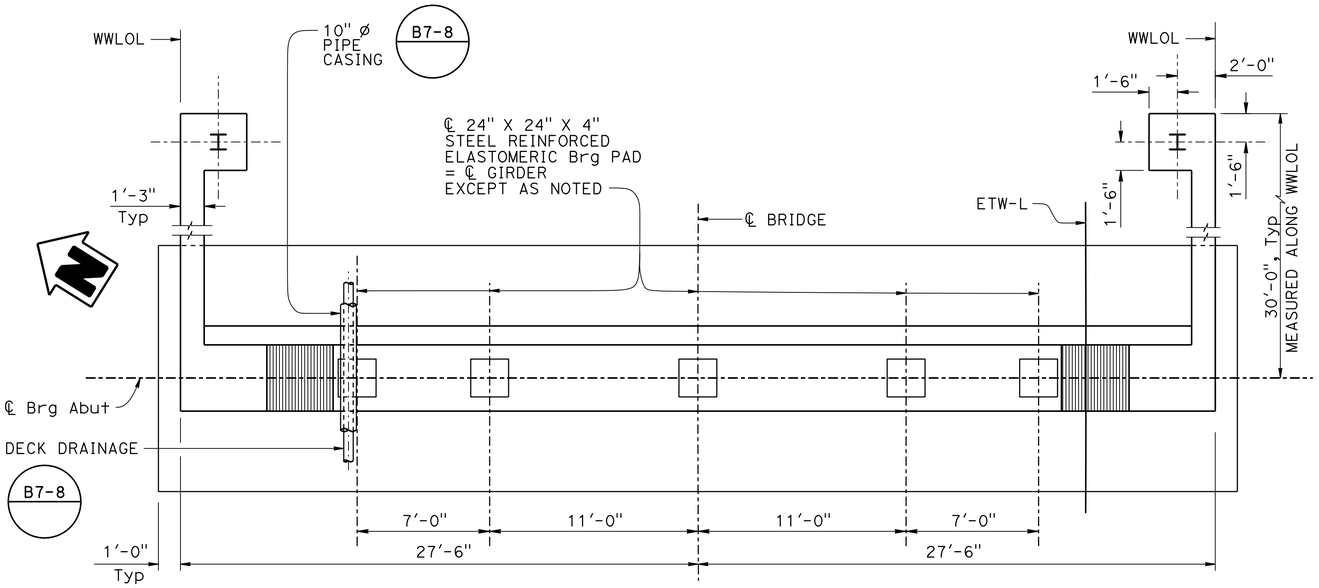

PLAN
1/4" = 1'-0"

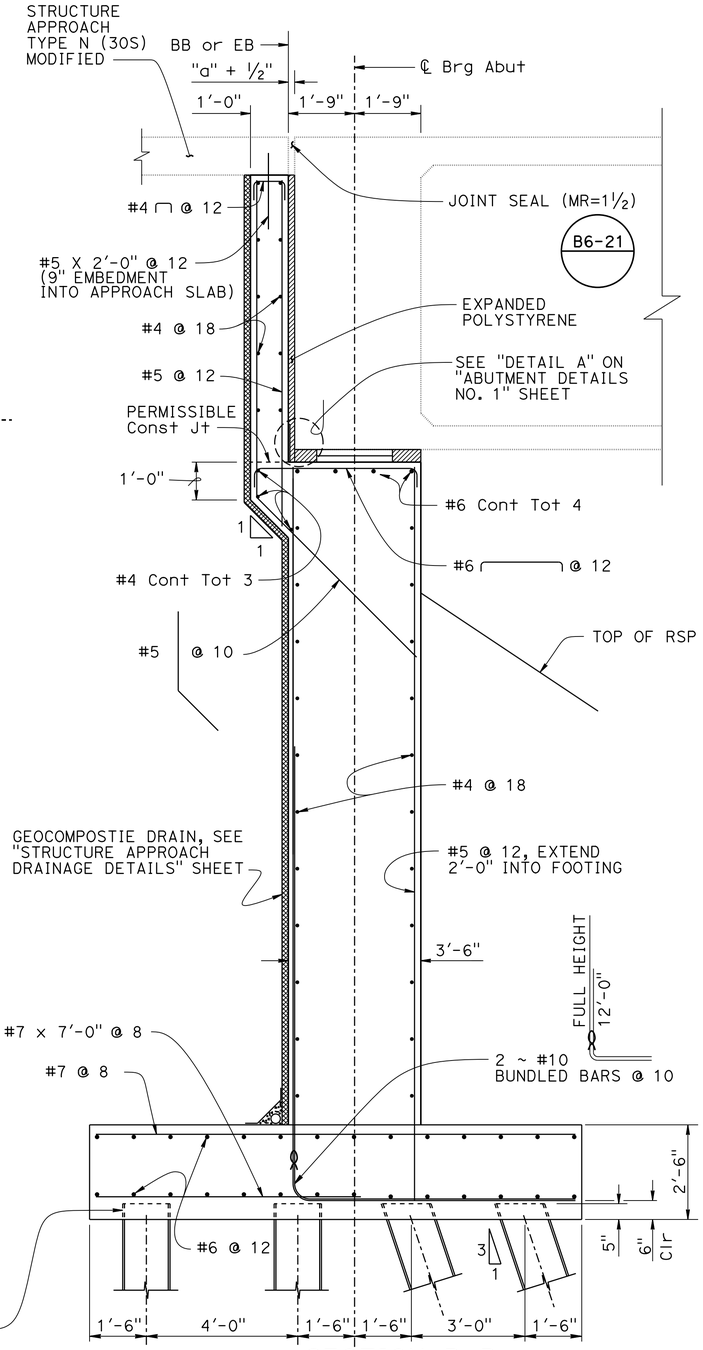

SECTION B-B
1/2" = 1'-0"

NOTES:

1. Abutment 2 Left shown, Abutment 1 Left is similar except as noted.
2. For pile layout see "ABUTMENT FOOTING PILE LAYOUT" sheet.
3. Provide casing for Abutment 2 only.

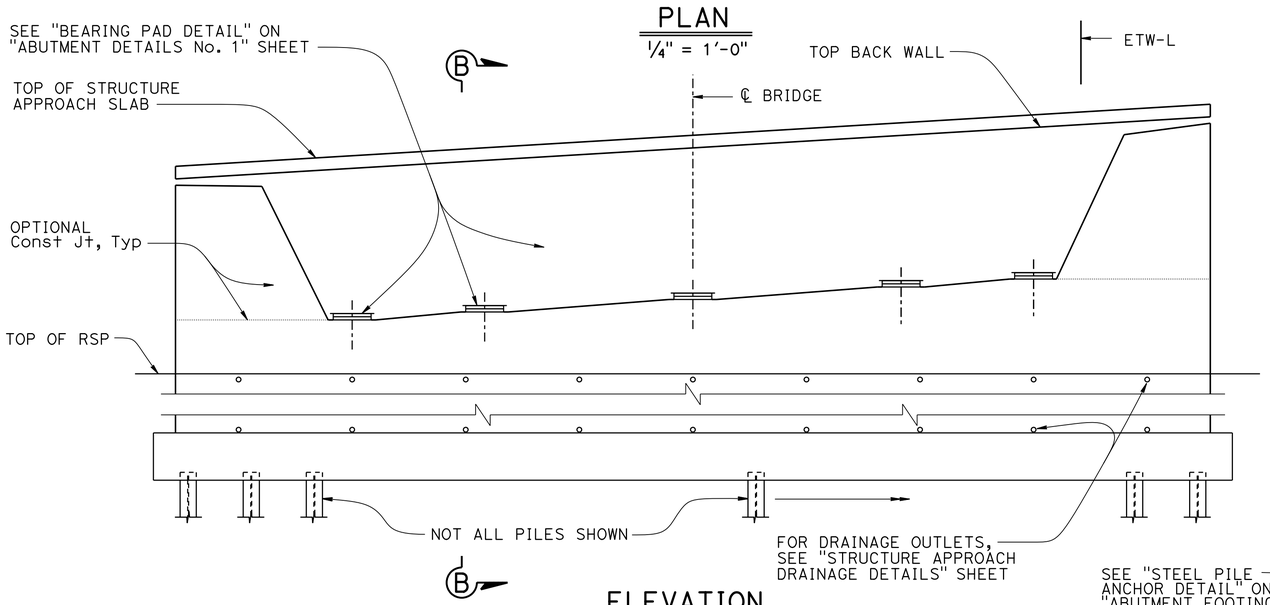

ELEVATION
1/4" = 1'-0"

LEGEND:

DENOTES EXPANDED POLYSTYRENE

INDICATES BUNDLE BARS

DESIGN	BY V. RENGANATHAN	CHECKED S. MORIMOTO	
DETAILS	BY D. ELLIOTT / S. NG	CHECKED S. MORIMOTO	
QUANTITIES	BY R. WASHINGTON	CHECKED G. REYES-GUTIERREZ	

STATE OF CALIFORNIA
DEPARTMENT OF TRANSPORTATION

DIVISION OF ENGINEERING SERVICES
STRUCTURE DESIGN
DESIGN BRANCH 6

BRIDGE NO. 49-0262R/L
POST MILE 46.0/50.2

CHOLAME CREEK BRIDGE
ABUTMENT LEFT LAYOUT

STRUCTURES DESIGN DETAIL SHEET (ENGLISH) (REV. 09-01-10)

ORIGINAL SCALE IN INCHES FOR REDUCED PLANS 0 1 2 3

UNIT: 3591
PROJECT NUMBER & PHASE: 05 1200 0076 1 CONTRACT NO.: 05-330784

DISREGARD PRINTS BEARING EARLIER REVISION DATES

REVISION DATES: 3-14-13 10-01-14 7-13-15

SHEET 6 OF 28

FILE => 49-0262rl-f-abut_lo-2_left.dgn

USERNAME => s115755 DATE PLOTTED => 26-OCT-2015 TIME PLOTTED => 10:26

DIST	COUNTY	ROUTE	POST MILES TOTAL PROJECT	SHEET No.	TOTAL SHEETS
05	SLO	46	46.0/50.2	530	551

R. Vaikunthan 12-08-14
REGISTERED STRUCTURAL ENGINEER DATE

6-1-15
PLANS APPROVAL DATE

REGISTERED PROFESSIONAL ENGINEER VAIKUNTHAN RENGANATHAN No. S 5686 Exp. 6-30-2016 STRUCTURAL STATE OF CALIFORNIA

The State of California or its officers or agents must not be responsible for the accuracy or completeness of electronic copies of this plan sheet.

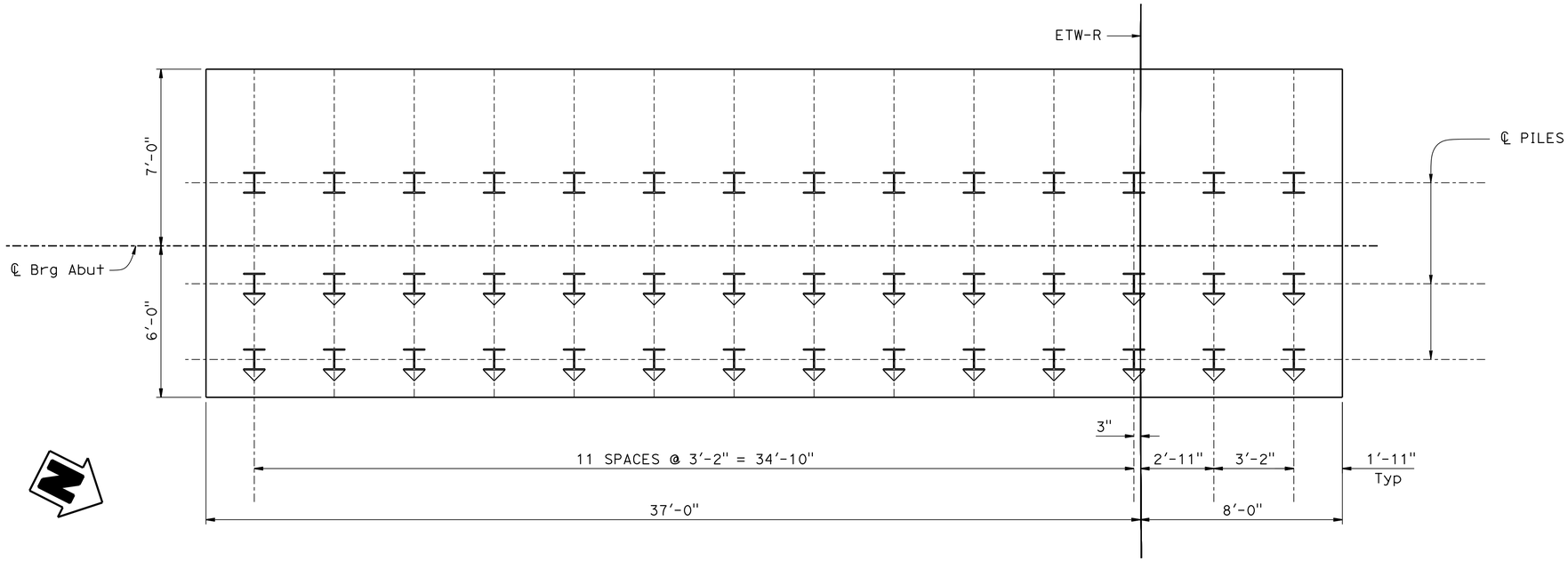

LEGEND:

INDICATES VERTICAL STEEL PILE

INDICATES 3:1 BATTER STEEL PILE

FOOTING PILE LAYOUT - ABUTMENT 1 RIGHT

3/8" = 1'-0"

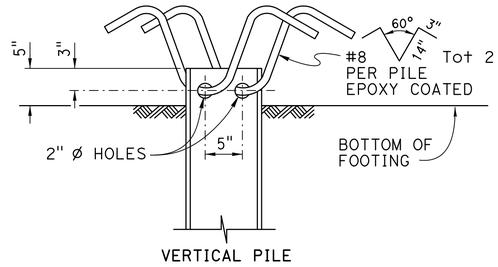

ELEVATION

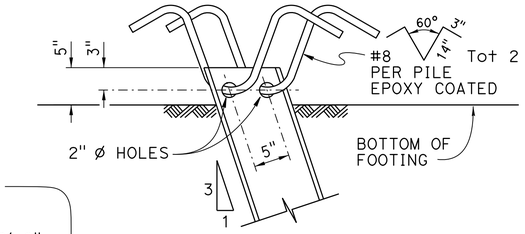

ELEVATION

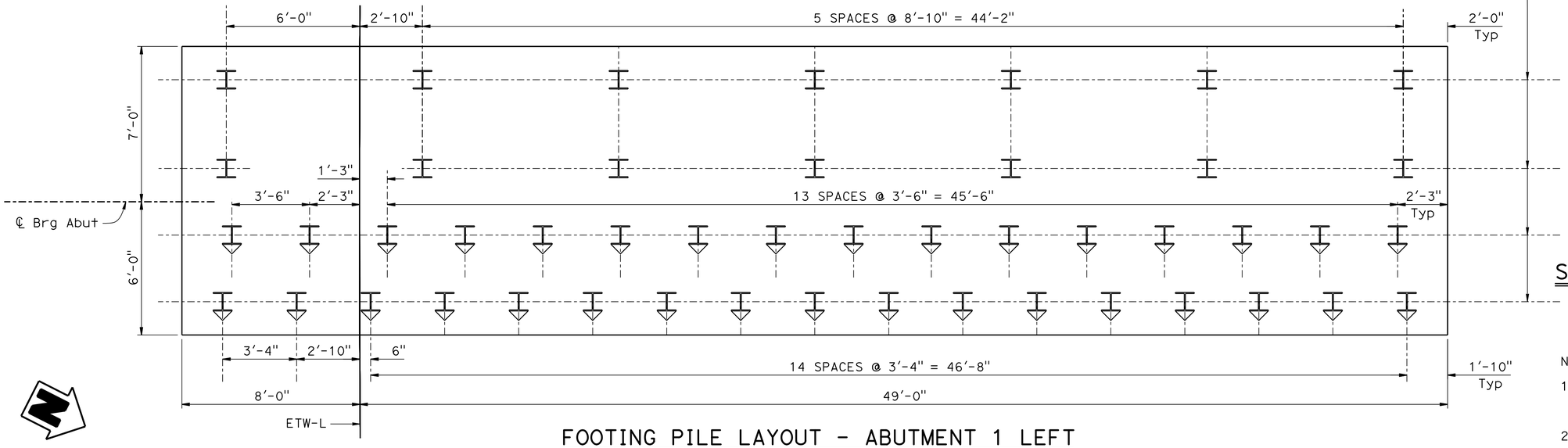

FOOTING PILE LAYOUT - ABUTMENT 1 LEFT

3/8" = 1'-0"

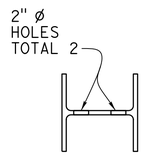

PLAN

STEEL PILE ANCHOR

NO SCALE

NOTES:

1. Abutment 1 Right & Left shown, Abutment 2 Right & Left similar except as noted.
2. Batter piles at Abutment 2 Right may have conflict with existing piles.

	BY	CHECKED
DESIGN	V. RENGANATHAN	S. MORIMOTO
DETAILS	SUSAN NG	S. MORIMOTO
QUANTITIES	R. WASHINGTON	G. R. G. / V. R.

STATE OF CALIFORNIA
DEPARTMENT OF TRANSPORTATION

DIVISION OF ENGINEERING SERVICES
STRUCTURE DESIGN
DESIGN BRANCH 6

BRIDGE NO. 49-0262R/L
POST MILE 46.0/50.2

CHOLAME CREEK BRIDGE
ABUTMENT FOOTING PILE LAYOUT

STRUCTURES DESIGN DETAIL SHEET (ENGLISH) (REV. 09-01-10)

ORIGINAL SCALE IN INCHES FOR REDUCED PLANS 0 1 2 3

UNIT: 3591
PROJECT NUMBER & PHASE: 05 1200 0076 1 CONTRACT NO.: 05-330784

DISREGARD PRINTS BEARING EARLIER REVISION DATES

REVISION DATES: 06-25-14 07-14-14 11-24-14 12-05-14

SHEET 7 OF 28

FILE => 49-0262rl-f-abut-pile-lay.dgn

USERNAME => s115755 DATE PLOTTED => 26-OCT-2015 TIME PLOTTED => 10:26

DIST	COUNTY	ROUTE	POST MILES TOTAL PROJECT	SHEET No.	TOTAL SHEETS
05	SLO	46	46.0/50.2	531	551

R. Vaikunthan 12-08-14
REGISTERED STRUCTURAL ENGINEER DATE

6-1-15
PLANS APPROVAL DATE

The State of California or its officers or agents must not be responsible for the accuracy or completeness of scanned copies of this plan sheet.

REGISTERED PROFESSIONAL ENGINEER VAIKUNTHAN RENGANATHAN No. S 5686 EXP. 6-30-2016 STRUCTURAL STATE OF CALIFORNIA

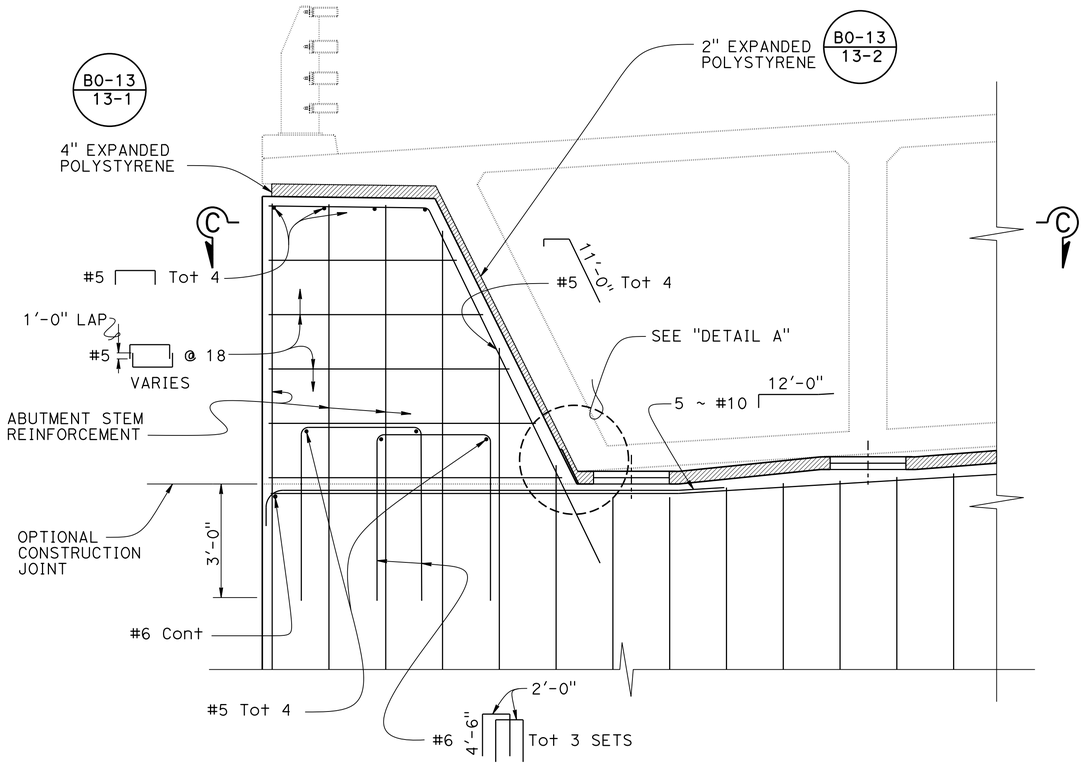

NOTE: Right bridge, abutment 2 left shown. Details typical at all sheer keys.

TYPICAL SHEAR KEY DETAILS

½" = 1'-0"

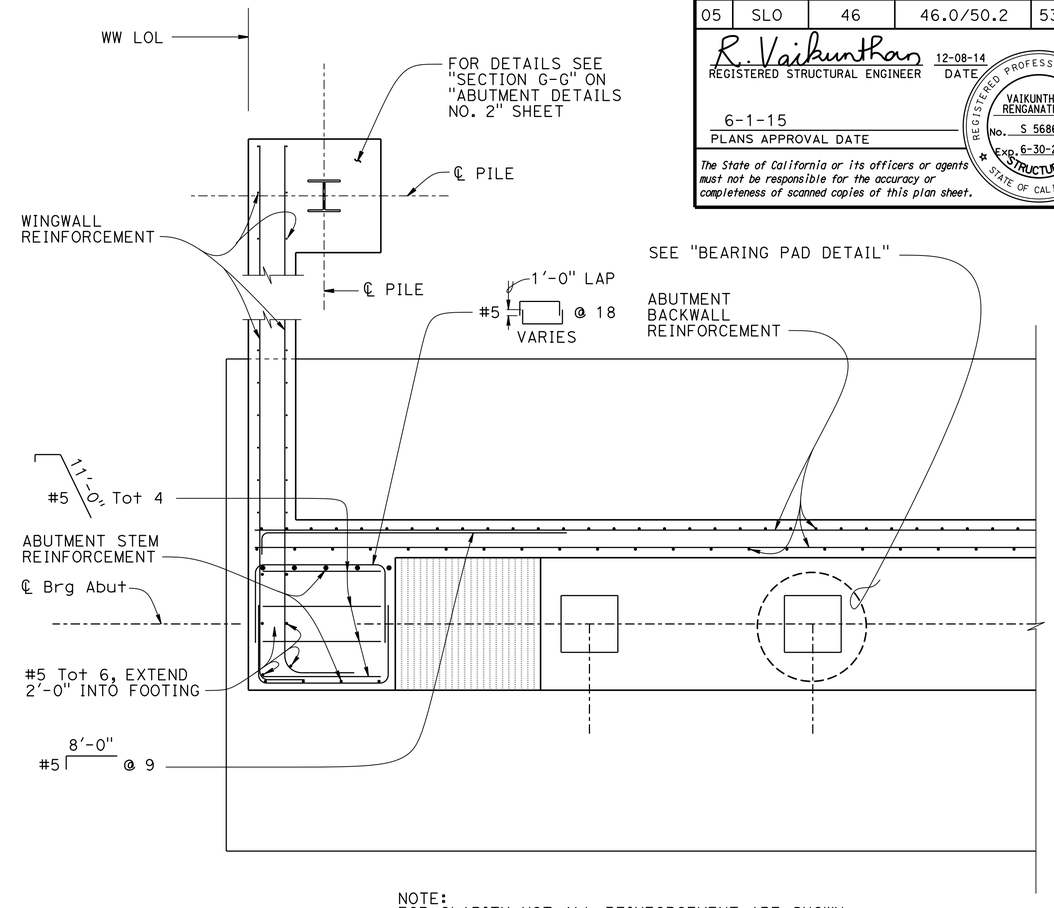

NOTE:
FOR CLARITY NOT ALL REINFORCEMENT ARE SHOWN
SEE "SECTION H-H" ON "ABUTMENT DETAILS No. 2" SHEET.

SECTION C-C

½" = 1'-0"

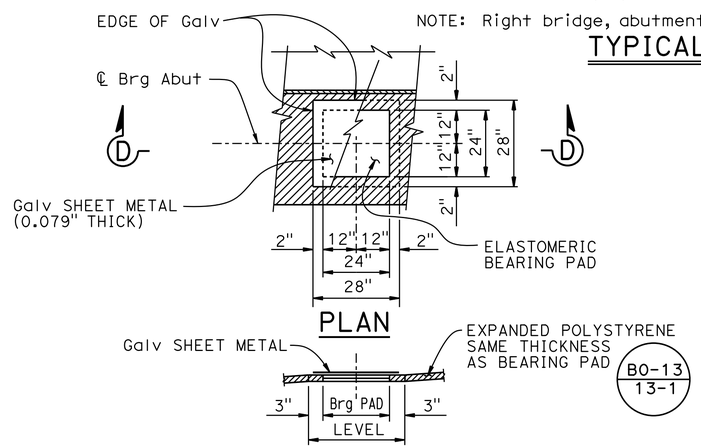

Note: Coat top of Bearing Pad with grease prior to placing sheet metal.

SECTION D-D
BEARING PAD DETAIL

NO SCALE

DETAILS TYPICAL AT ALL BEARING PADS

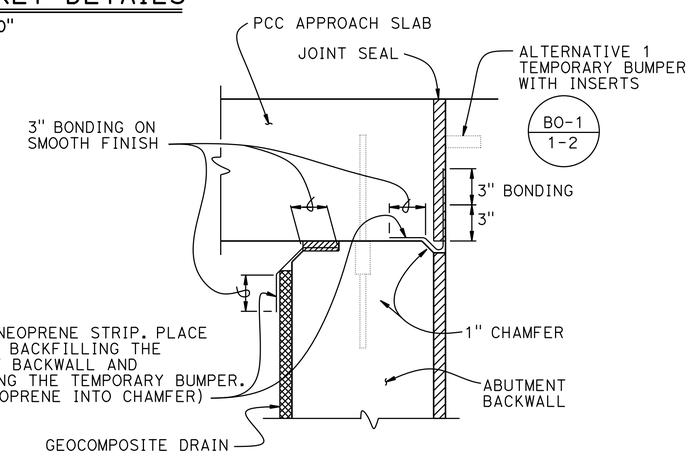

JOINT PROTECTION DETAIL

NO SCALE

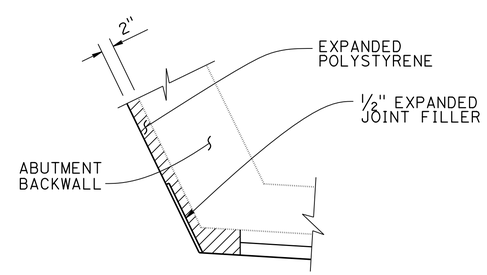

LEGEND:
- Denotes Expanded Polystyrene
- Denotes Geocomposite Drain

DETAIL A

NO SCALE

	BY	CHECKED
DESIGN	V. RENGANATHAN	S. MORIMOTO
DETAILS	D. ELLIOTT / S. NG	S. MORIMOTO
QUANTITIES	R. WASHINGTON	G. REYES-GUTIERREZ

STATE OF CALIFORNIA
DEPARTMENT OF TRANSPORTATION

DIVISION OF ENGINEERING SERVICES
STRUCTURE DESIGN
DESIGN BRANCH 6

BRIDGE NO. 49-0262R/L
POST MILE 46.0/50.2

CHOLAME CREEK BRIDGE
ABUTMENT DETAILS No. 1

STRUCTURES DESIGN DETAIL SHEET (ENGLISH) (REV. 09-01-10)

ORIGINAL SCALE IN INCHES FOR REDUCED PLANS 0 1 2 3

UNIT: 3591
PROJECT NUMBER & PHASE: 05 1200 0076 1 CONTRACT NO.: 05-330784

DISREGARD PRINTS BEARING EARLIER REVISION DATES

REVISION DATES: 3-1-13 10-01-14 08-26-14

SHEET 8 OF 28

FILE => 49-0262rl-f-details-1-abut.dgn

USERNAME => s115755 DATE PLOTTED => 26-OCT-2015 TIME PLOTTED => 10:26

DIST	COUNTY	ROUTE	POST MILES TOTAL PROJECT	SHEET No.	TOTAL SHEETS
05	SLO	46	46.0/50.2	532	551

R. Vaikunthan 12-08-14
REGISTERED STRUCTURAL ENGINEER DATE

6-1-15
PLANS APPROVAL DATE

REGISTERED PROFESSIONAL ENGINEER VAIKUNTHAN RENGANATHAN No. S 5686 Exp. 6-30-2016 STRUCTURAL STATE OF CALIFORNIA

The State of California or its officers or agents must not be responsible for the accuracy or completeness of scanned copies of this plan sheet.

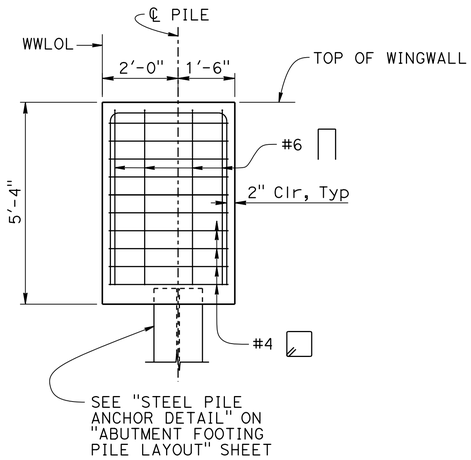

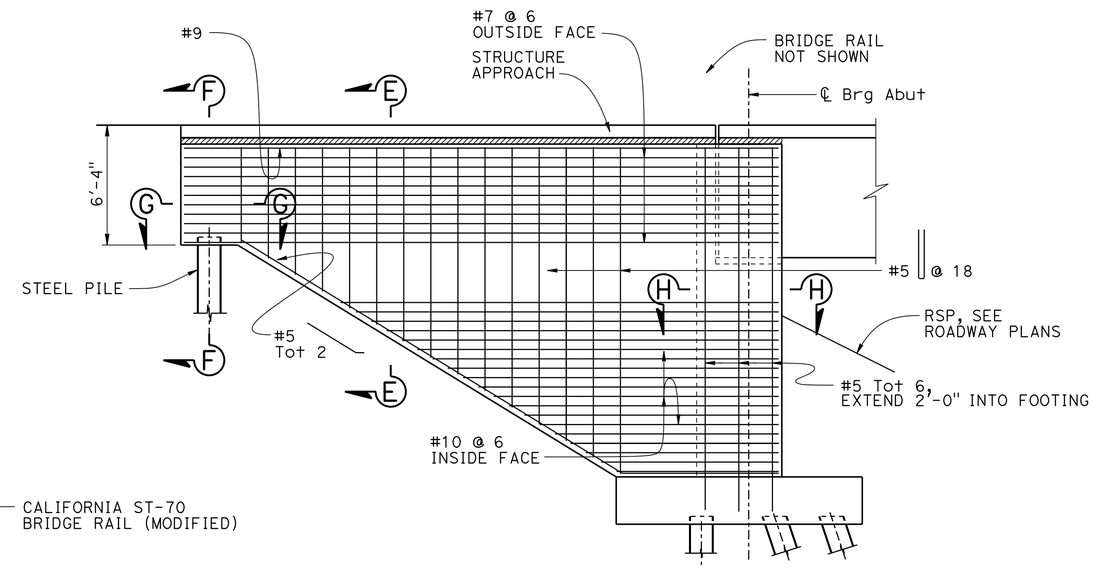

NOTE: FOR CLARITY, ABUTMENT AND FOOTING REINFORCEMENT NOT SHOWN.

TYPICAL WINGWALL REINFORCEMENT

1/4" = 1'-0"

SECTION F-F

1/2" = 1'-0"

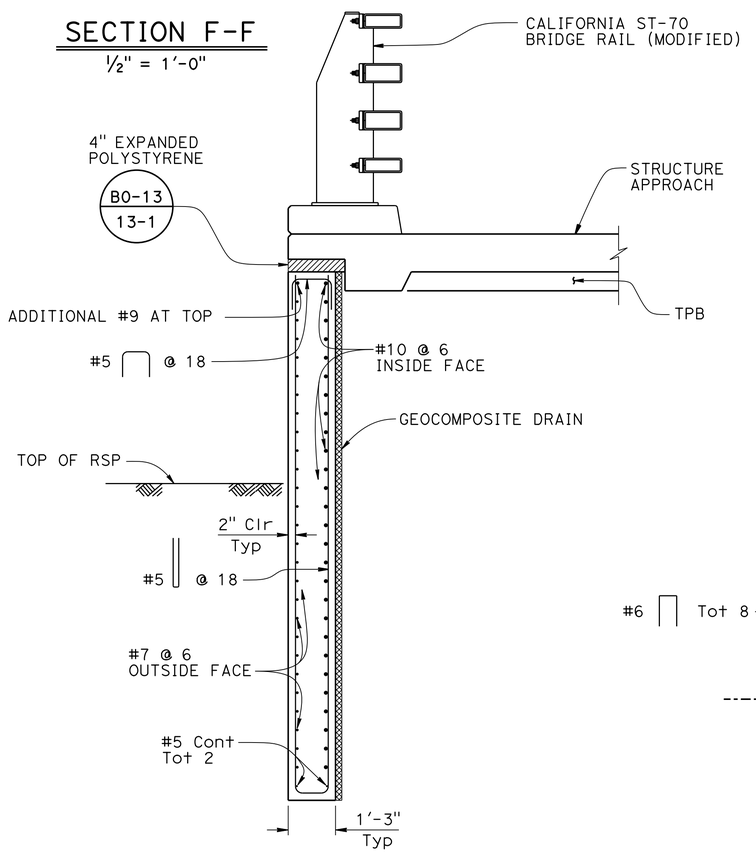

SECTION E-E

1/2" = 1'-0"

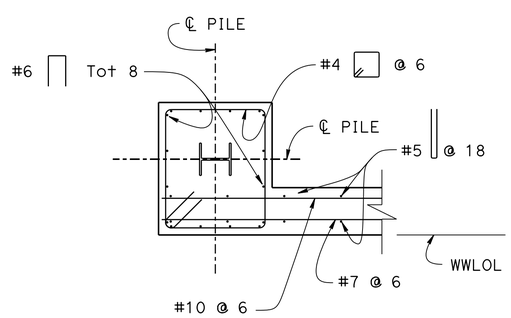

SECTION G-G

1/2" = 1'-0"

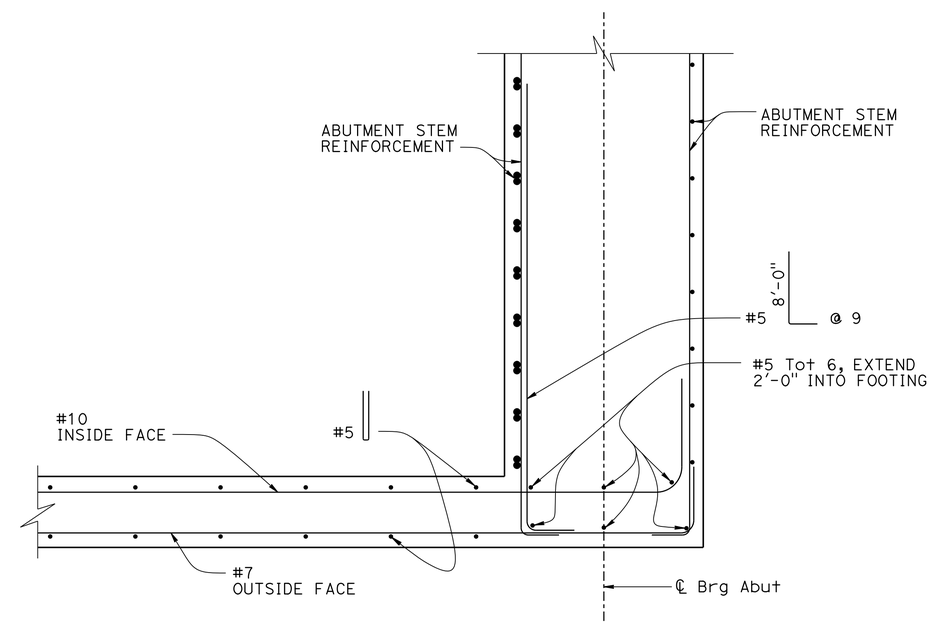

SECTION H-H

3/4" = 1'-0"

DESIGN	BY V. RENGANATHAN	CHECKED S. MORIMOTO	
DETAILS	BY SUSAN NG	CHECKED S. MORIMOTO	
QUANTITIES	BY R. WASHINGTON	CHECKED G. REYES-GUTIERREZ	

STATE OF CALIFORNIA
DEPARTMENT OF TRANSPORTATION

DIVISION OF ENGINEERING SERVICES
STRUCTURE DESIGN
DESIGN BRANCH 6

BRIDGE NO. 49-0262R/L
POST MILE 46.0/50.2

CHOLAME CREEK BRIDGE
ABUTMENT DETAILS No. 2

STRUCTURES DESIGN DETAIL SHEET (ENGLISH) (REV. 09-01-10)

ORIGINAL SCALE IN INCHES FOR REDUCED PLANS 0 1 2 3

UNIT: 3591
PROJECT NUMBER & PHASE: 05 1200 0076 1 CONTRACT NO.: 05-330784

DISREGARD PRINTS BEARING EARLIER REVISION DATES

REVISION DATES: 06-03-14 11-07-14 10-10-14

SHEET 9 OF 28

FILE => 49-0262rl-f-details-2-abut.dgn

USERNAME => s115755 DATE PLOTTED => 26-OCT-2015 TIME PLOTTED => 10:26

DIST	COUNTY	ROUTE	POST MILES TOTAL PROJECT	SHEET No.	TOTAL SHEETS
05	SLO	46	46.0/50.2	533	551

R. Vaikunthan 12-08-14
REGISTERED STRUCTURAL ENGINEER DATE

6-1-15
PLANS APPROVAL DATE

REGISTERED PROFESSIONAL ENGINEER Vaikunthan Renganathan No. S 5686 EXP. 6-30-2016 STRUCTURAL STATE OF CALIFORNIA

The State of California or its officers or agents must not be responsible for the accuracy or completeness of electronic copies of this plan sheet.

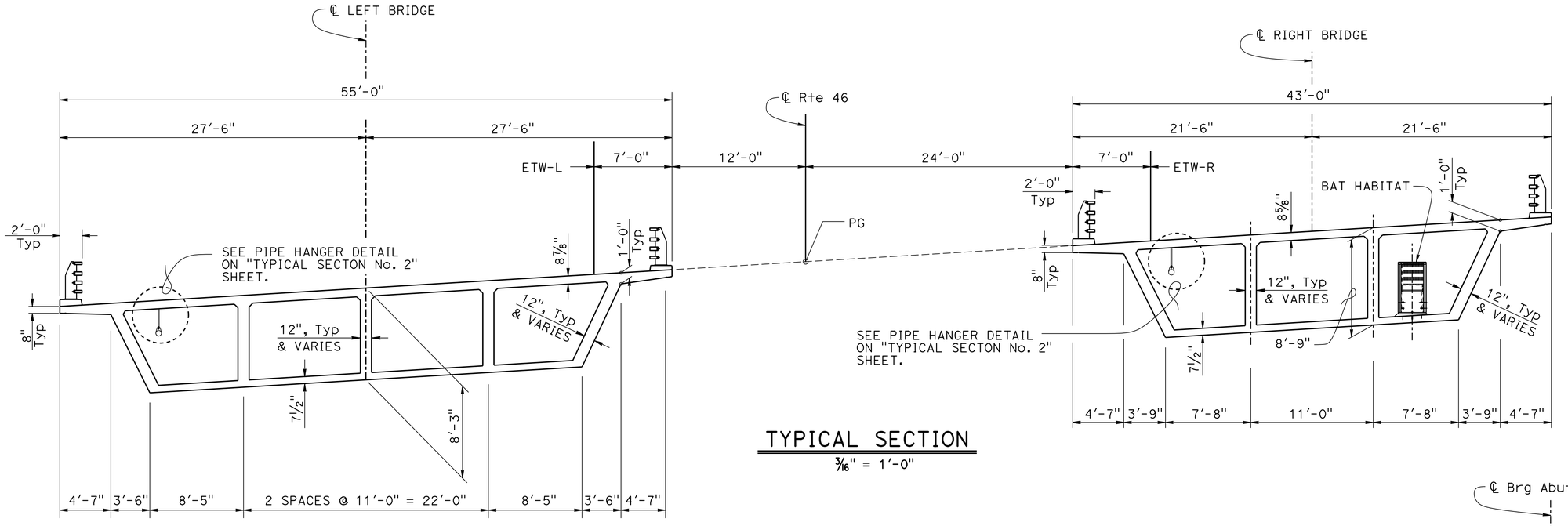

TYPICAL SECTION

3/16" = 1'-0"

NOTES:

1. The additional reinforcement must be placed in the overhang for a distance of 5 ft on the side of an expansion joint of BB and EB. The bar shall be bundled with each alternating top transverse bar in the overhang.
2. For girder thickness, see "GIRDER LAYOUT" sheets.
3. For deck drainage layout, see "GIRDER LAYOUT" sheets.
4. Provide deck drainage openings at end diaphragms at Abutment 2 (B7-10 / U-3)
5. For bat habitat locations see "GIRDER REINFORCEMENT" sheet

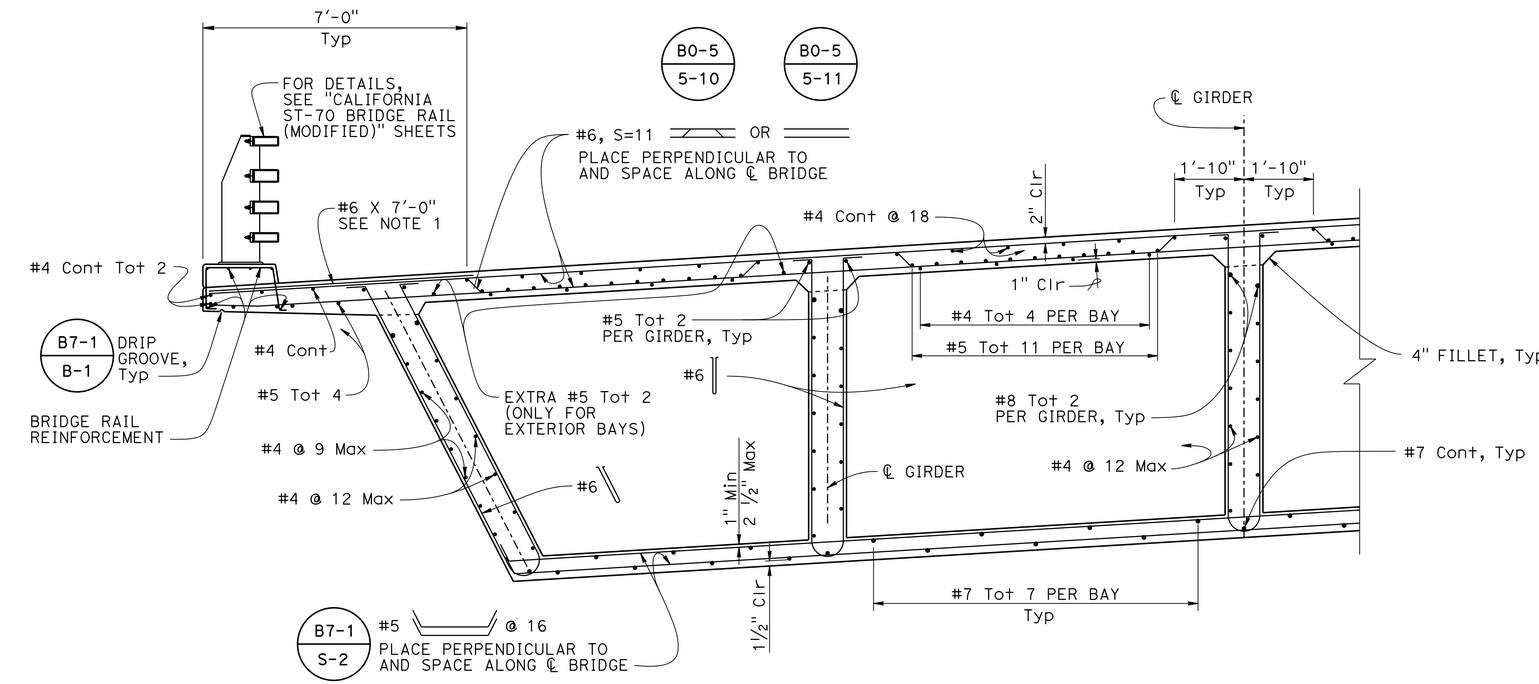

PART TYPICAL SECTION - LEFT BRIDGE

½" = 1'-0"

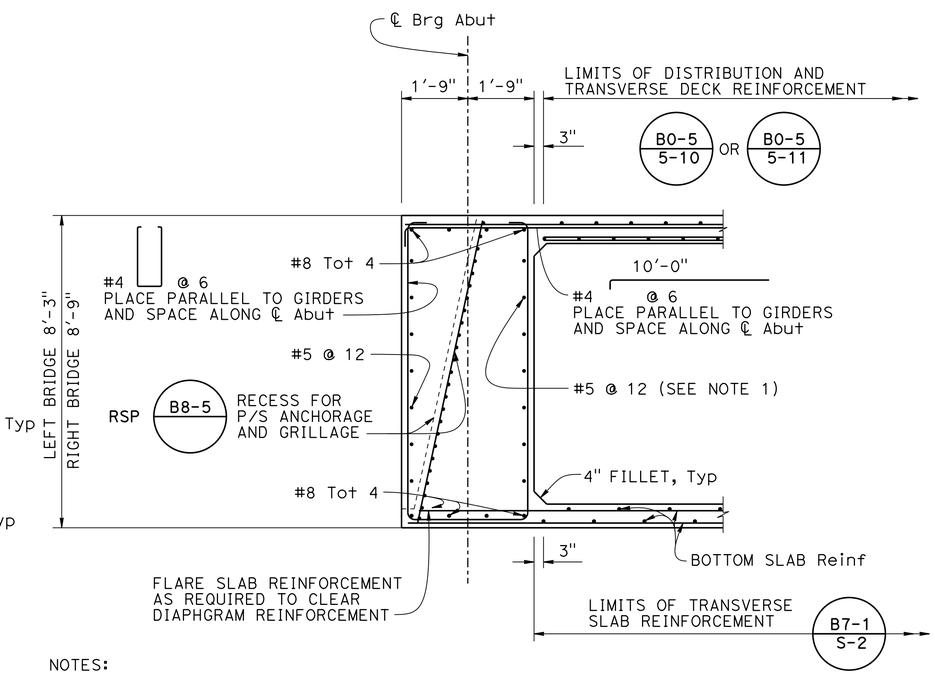

NOTES:

1. May be adjusted to clear P/S anchorage as approved by the Engineer.
2. Left bridge end diaphragms are shown. Right bridge end diaphragms are similar except depth of end diaphragm.

END DIAPHRAGM

½" = 1'-0"

	BY	CHECKED
DESIGN	V. RENGANATHAN	S. MORIMOTO
DETAILS	D. ELLIOTT / S. NG	S. MORIMOTO
QUANTITIES	R. WASHINGTON	G. REYES-GUTIERREZ

STATE OF CALIFORNIA
DEPARTMENT OF TRANSPORTATION

DIVISION OF ENGINEERING SERVICES
STRUCTURE DESIGN
DESIGN BRANCH 6

BRIDGE NO. 49-0262R/L
POST MILE 46.0/50.2

CHOLAME CREEK BRIDGE
TYPICAL SECTION No. 1

STRUCTURES DESIGN DETAIL SHEET (ENGLISH) (REV. 09-01-10)

ORIGINAL SCALE IN INCHES FOR REDUCED PLANS 0 1 2 3

UNIT: 3591
PROJECT NUMBER & PHASE: 05 1200 0076 1 CONTRACT NO.: 05-330784

DISREGARD PRINTS BEARING EARLIER REVISION DATES

REVISION DATES: 12-7-12 2-05-15 11-07-14

SHEET 10 OF 28

FILE => 49-0262rl-k-ts01.dgn

USERNAME => s115755 DATE PLOTTED => 26-OCT-2015 TIME PLOTTED => 10:26

DIST	COUNTY	ROUTE	POST MILES TOTAL PROJECT	SHEET No.	TOTAL SHEETS
05	SLO	46	46.0/50.2	534	551

R. Vaikunthan 12-08-14
REGISTERED STRUCTURAL ENGINEER DATE

6-1-15
PLANS APPROVAL DATE

REGISTERED PROFESSIONAL ENGINEER
VAIKUNTHAN RENGANATHAN
No. S 5686
EXP. 6-30-2016
STRUCTURAL
STATE OF CALIFORNIA

The State of California or its officers or agents must not be responsible for the accuracy or completeness of electronic copies of this plan sheet.

NOTES:

1. The additional reinforcement shall be placed in the overhang for a distance of 5 ft on the side of an expansion joint of BB and EB. The bar shall be bundled with each alternating top transverse bar in the overhang.
2. See "TYPICAL SECTION No. 1" sheet for END DIAPHRAGM detail.

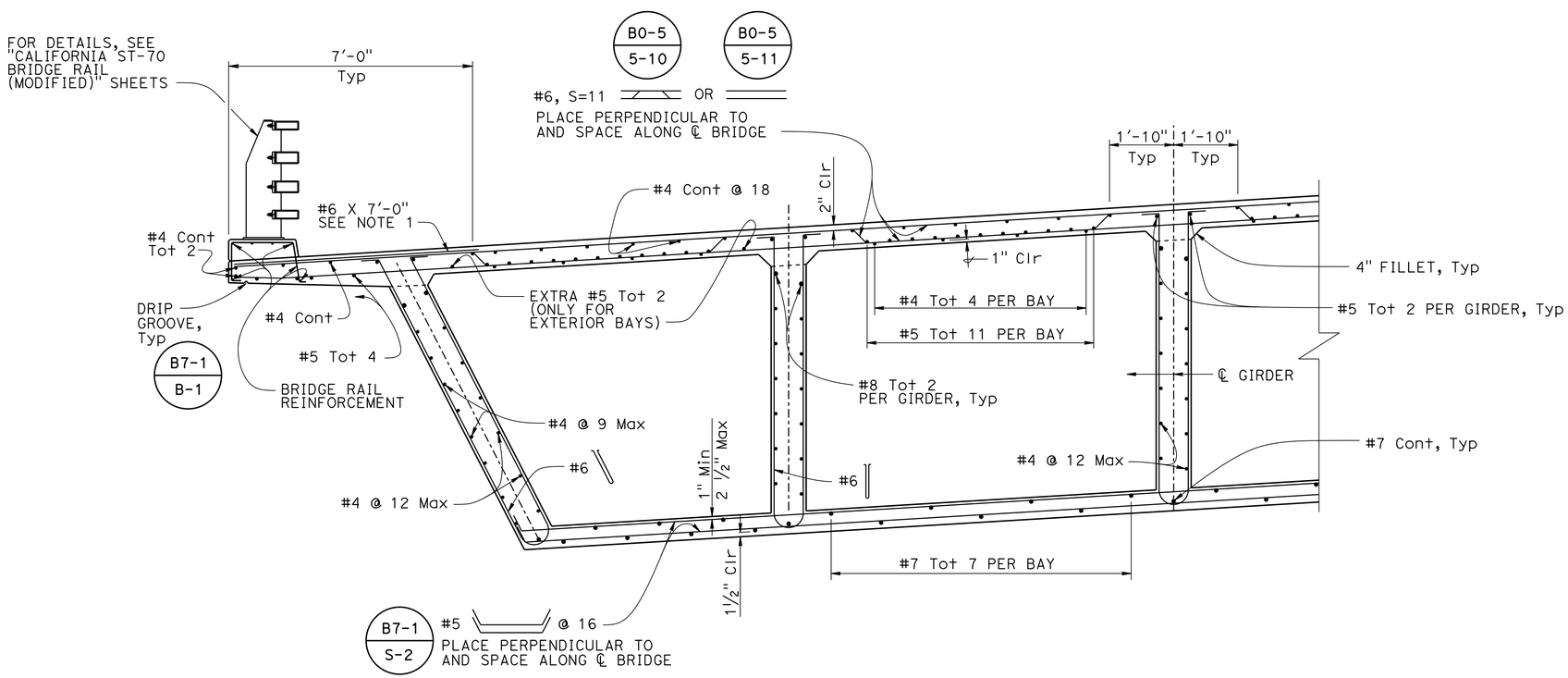

PART TYPICAL SECTION - RIGHT

1/2" = 1'-0"

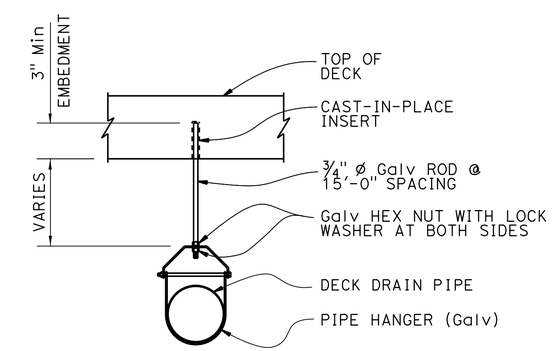

PIPE HANGER DETAILS

NO SCALE

DESIGN	BY V. RENGANATHAN	CHECKED S. MORIMOTO	
DETAILS	BY D. ELLIOTT / S. NG	CHECKED S. MORIMOTO	
QUANTITIES	BY R. WASHINGTON	CHECKED G. REYES-GUTIERREZ	

STATE OF CALIFORNIA
DEPARTMENT OF TRANSPORTATION

DIVISION OF ENGINEERING SERVICES
STRUCTURE DESIGN
DESIGN BRANCH 6

BRIDGE NO. 49-0262R/L
POST MILE 46.0/50.2

CHOLAME CREEK BRIDGE
TYPICAL SECTION No. 2

STRUCTURES DESIGN DETAIL SHEET (ENGLISH) (REV. 09-01-10)

ORIGINAL SCALE IN INCHES FOR REDUCED PLANS 0 1 2 3

UNIT: 3591
PROJECT NUMBER & PHASE: 05 1200 0076 1 CONTRACT NO.: 05-330784

DISREGARD PRINTS BEARING EARLIER REVISION DATES

REVISION DATES: 6-7-13 | 2-05-15 | 08-28-14

SHEET 11 OF 28

FILE => 49-0262rl-k-ts02.dgn

USERNAME => s115755 DATE PLOTTED => 26-OCT-2015 TIME PLOTTED => 10:26

DIST	COUNTY	ROUTE	POST MILES TOTAL PROJECT	SHEET No.	TOTAL SHEETS
05	SLO	46	46.0/50.2	535	551

R. Vaikunthan 12-08-14
REGISTERED STRUCTURAL ENGINEER DATE

6-1-15
PLANS APPROVAL DATE

REGISTERED PROFESSIONAL ENGINEER VAIKUNTHAN RENGANATHAN No. S 5686 EXP. 6-30-2016 STRUCTURAL STATE OF CALIFORNIA

The State of California or its officers or agents must not be responsible for the accuracy or completeness of electronic copies of this plan sheet.

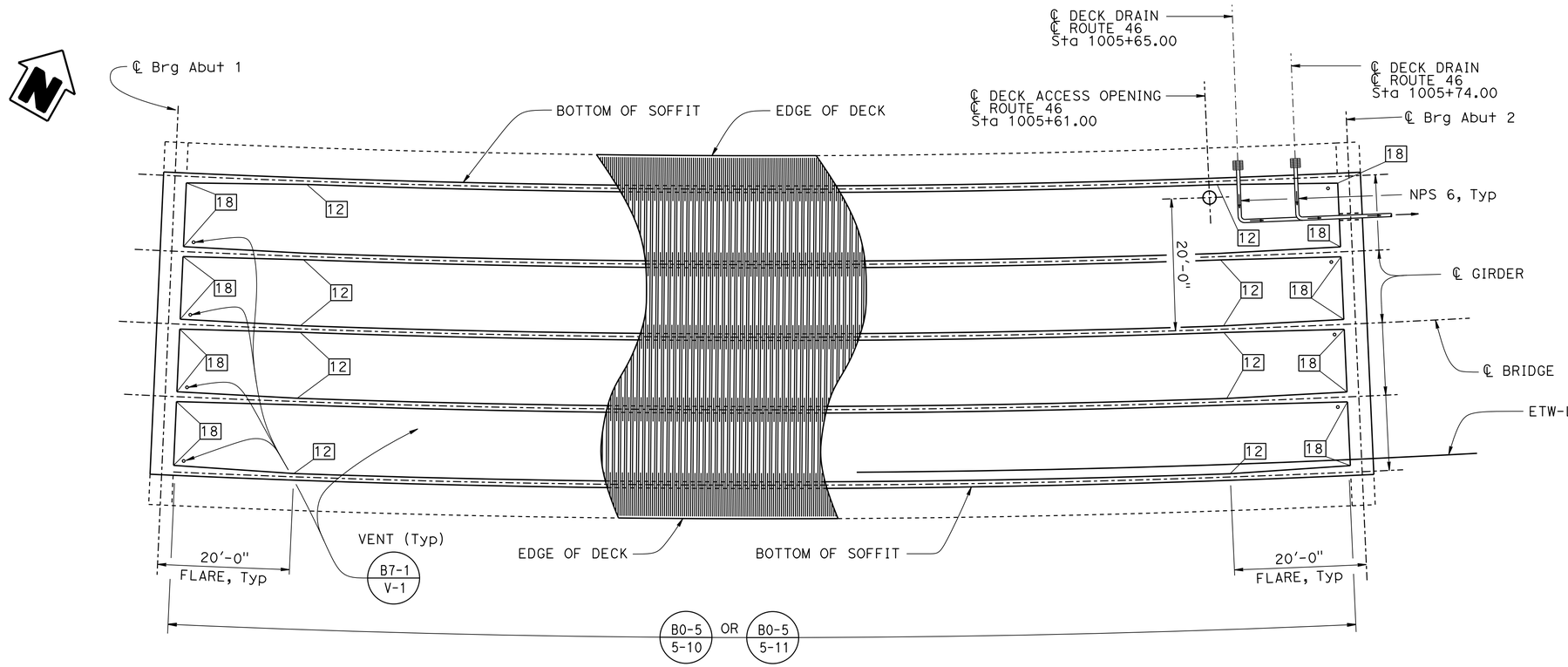

GIRDER LAYOUT - LEFT

1" = 10'

LEGEND:

- INDICATES MINIMUM GIRDER STEM WIDTH IN INCHES
- DENOTES POINT OF THEORETICAL NO MOVEMENT FOR ONE-END STRESSING
- DENOTES DECK DRAIN TYPE D-2 (B7-6 / B7-8 / B7-10)
- DENOTES DIRECTION OF DRAINAGE FLOW
- DENOTES DECK ACCESS OPENING, MANHOLE FRAME & COVER, AND LADDER RUNG (B7-11 / U43, B7-11 / U44, B7-11 / U45)

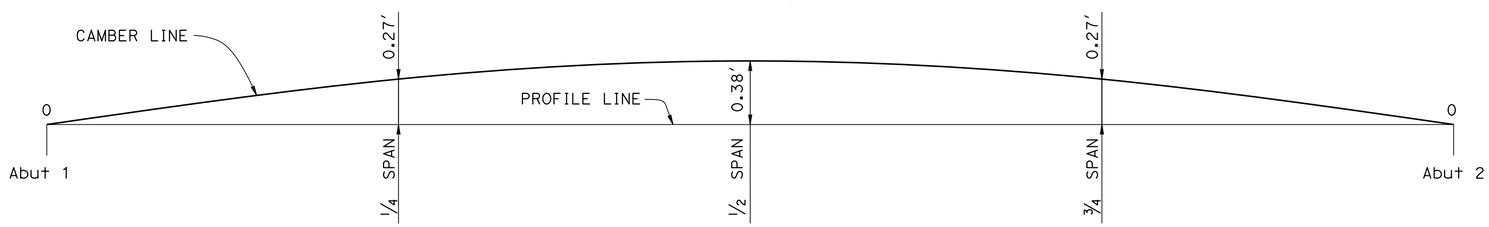

CAMBER DIAGRAM - LEFT

NO SCALE

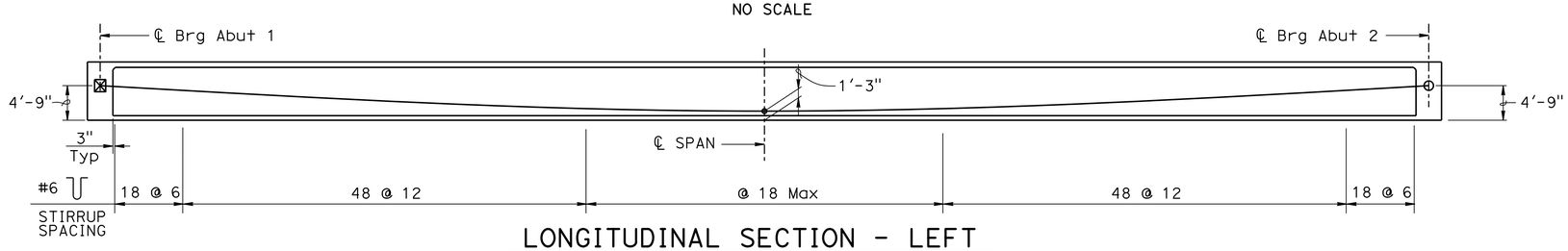

LONGITUDINAL SECTION - LEFT

1" = 10'

PRESTRESSING NOTES

270 KSI Low Relaxation Strand:

P_{jack} = 18,500 kips

Anchor Set = 3/8 in

Friction curvature coefficient, μ = 15×10^{-2} (1/rad)

Friction wobble coefficient, K = 0.0002 (1/ft)

Assumed long term losses = 20 (ksi)

Total Number of Girders = 5

The final force ratio (larger divided by smaller) between any two girders must not exceed the ratio of 10:9

Concrete: f'_c = 5000 psi @ 28 days

f'_{ci} = 3500 psi @ time of stressing

Contractor shall submit elongation calculations based on initial stress at

⊠ = 0.943 times jacking stress.

One end stressing shall be performed from the long-span end only.

DESIGN	BY V. RENGANATHAN	CHECKED S. MORIMOTO	
DETAILS	BY D. ELLIOTT / S. NG	CHECKED S. MORIMOTO	
QUANTITIES	BY R. WASHINGTON	CHECKED G. REYES-GUTIERREZ	

STATE OF CALIFORNIA
DEPARTMENT OF TRANSPORTATION

DIVISION OF ENGINEERING SERVICES
STRUCTURE DESIGN
DESIGN BRANCH 6

BRIDGE NO. 49-0262R/L
POST MILE 46.0/50.2

CHOLAME CREEK BRIDGE
GIRDER LAYOUT No. 1

STRUCTURES DESIGN DETAIL SHEET (ENGLISH) (REV. 09-01-10)

ORIGINAL SCALE IN INCHES FOR REDUCED PLANS 0 1 2 3

UNIT: 3591
PROJECT NUMBER & PHASE: 05 1200 0076 1 CONTRACT NO.: 05-330784

DISREGARD PRINTS BEARING EARLIER REVISION DATES

REVISION DATES: 5-10-13 10-24-14 2-06-15

SHEET 12 OF 28

FILE => 49-0262rl-l-g_lo_o1.dgn

USERNAME => s115755 DATE PLOTTED => 26-OCT-2015 TIME PLOTTED => 10:26

DIST	COUNTY	ROUTE	POST MILES TOTAL PROJECT	SHEET No.	TOTAL SHEETS
05	SLO	46	46.0/50.2	536	551

R. Vaikunthan 12-08-14
REGISTERED STRUCTURAL ENGINEER DATE

6-1-15
PLANS APPROVAL DATE

REGISTERED PROFESSIONAL ENGINEER VAIKUNTHAN RENGANATHAN No. S 5686 EXP. 6-30-2016 STRUCTURAL STATE OF CALIFORNIA

The State of California or its officers or agents must not be responsible for the accuracy or completeness of electronic copies of this plan sheet.

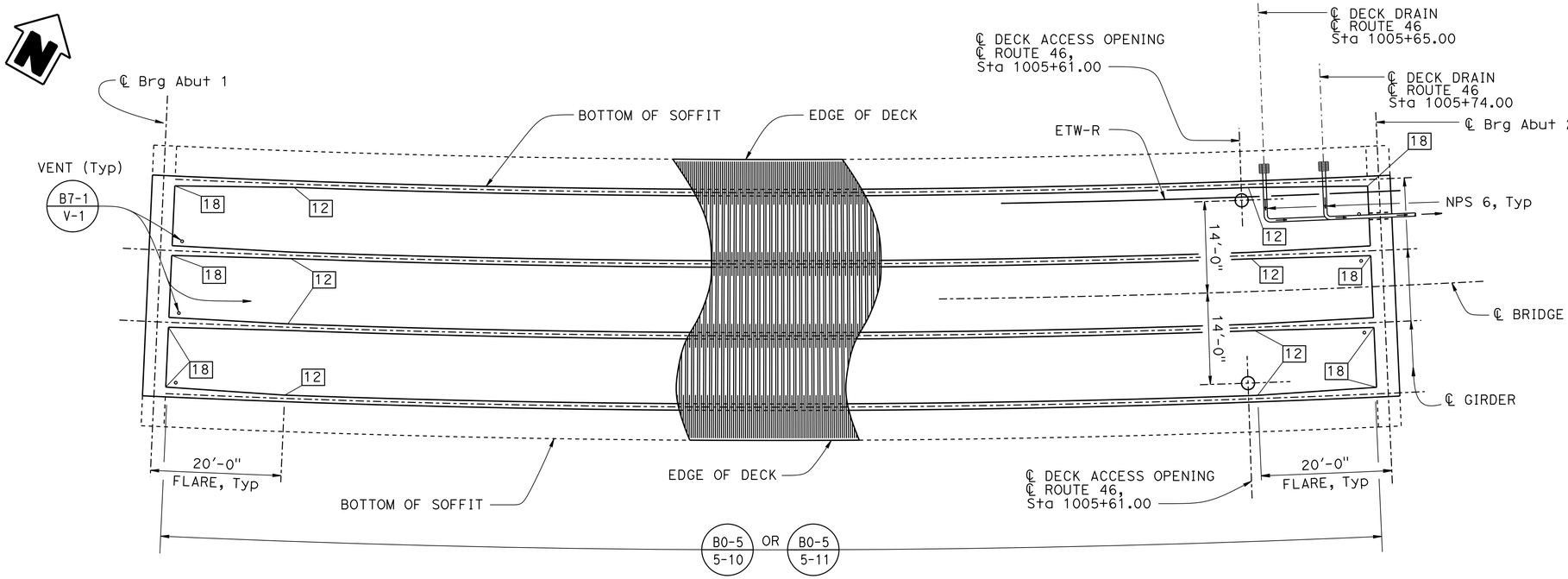

LEGEND:

- INDICATES MINIMUM GIRDER STEM WIDTH IN INCHES
- DENOTES POINT OF THEORETICAL NO MOVEMENT FOR ONE-END STRESSING
- DENOTES DECK DRAIN TYPE D-2 (B7-6, B7-8, B7-10)
- DENOTES DIRECTION OF DRAINAGE FLOW
- DENOTES DECK ACCESS OPENING, MANHOLE FRAME & COVER, AND LADDER RUNG (B7-11 U43, B7-11 U44, B7-11 U45)

GIRDER LAYOUT - RIGHT

1" = 10'

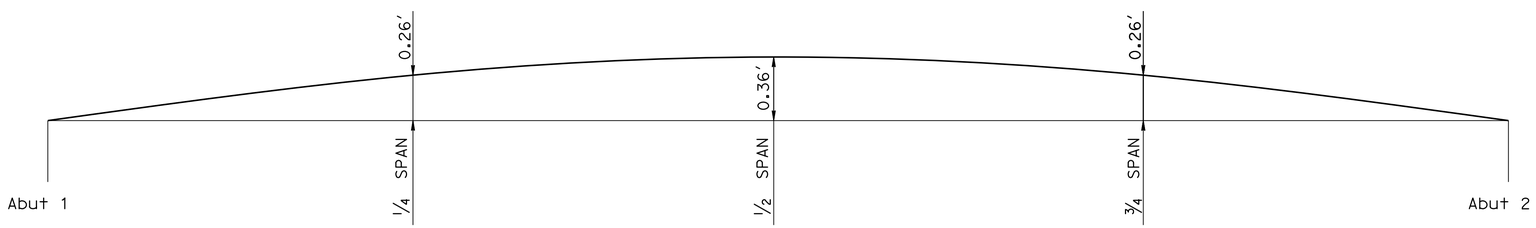

CAMBER DIAGRAM - RIGHT

NO SCALE

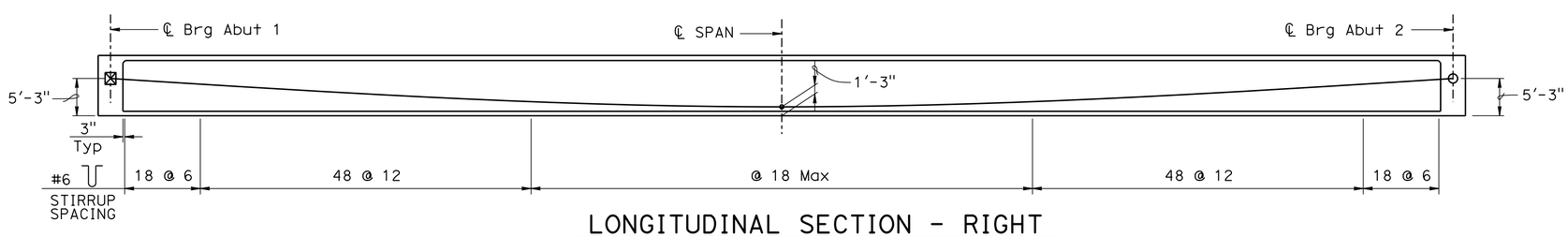

LONGITUDINAL SECTION - RIGHT

1" = 10'

PRESTRESSING NOTES

270 KSI Low Relaxation Strand:

P_{jack} = 16,000 kips

Anchor Set = 3/8 in

Friction curvature coefficient, μ = 15×10^{-2} (1/rad)

Friction wobble coefficient, K = 0.0002 (1/ft)

Assumed long term losses = 20 (ksi)

Total Number of Girders = 4

The final force ratio (larger divided by smaller) between any two girders must not exceed the ratio of 10:9

Concrete: f'_c = 5000 psi @ 28 days

f'_{ci} = 3500 psi @ time of stressing

Contractor shall submit elongation calculations based on initial stress at

⊠ = 0.935 times jacking stress.

Perform one end stressing.

	BY	CHECKED
DESIGN	V. RENGANATHAN	S. MORIMOTO
DETAILS	D. ELLIOTT / S. NG	S. MORIMOTO
QUANTITIES	R. WASHINGTON	G. REYES-GUTIERREZ

STATE OF CALIFORNIA
DEPARTMENT OF TRANSPORTATION

DIVISION OF ENGINEERING SERVICES
STRUCTURE DESIGN
DESIGN BRANCH 6

BRIDGE NO. 49-0262R/L
POST MILE 46.0/50.2

CHOLAME CREEK BRIDGE
GIRDER LAYOUT No. 2

STRUCTURES DESIGN DETAIL SHEET (ENGLISH) (REV. 09-01-10)

ORIGINAL SCALE IN INCHES FOR REDUCED PLANS 0 1 2 3

UNIT: 3591
PROJECT NUMBER & PHASE: 05 1200 0076 1 CONTRACT NO.: 05-330784

DISREGARD PRINTS BEARING EARLIER REVISION DATES

REVISION DATES: 5-10-13 2-10-15 10-24-16

SHEET 13 OF 28

FILE => 49-0262rl-l-g_lo_o2.dgn

USERNAME => s115755 DATE PLOTTED => 26-OCT-2015 TIME PLOTTED => 10:26

DIST	COUNTY	ROUTE	POST MILES TOTAL PROJECT	SHEET No.	TOTAL SHEETS
05	SLO	46	46.0/50.2	537	551

R. Vaikunthan 12-08-14
REGISTERED STRUCTURAL ENGINEER DATE

6-1-15
PLANS APPROVAL DATE

REGISTERED PROFESSIONAL ENGINEER
VAIKUNTHAN RENGANATHAN
No. S 5686
EXP. 6-30-2016
STRUCTURAL
STATE OF CALIFORNIA

The State of California or its officers or agents must not be responsible for the accuracy or completeness of electronic copies of this plan sheet.

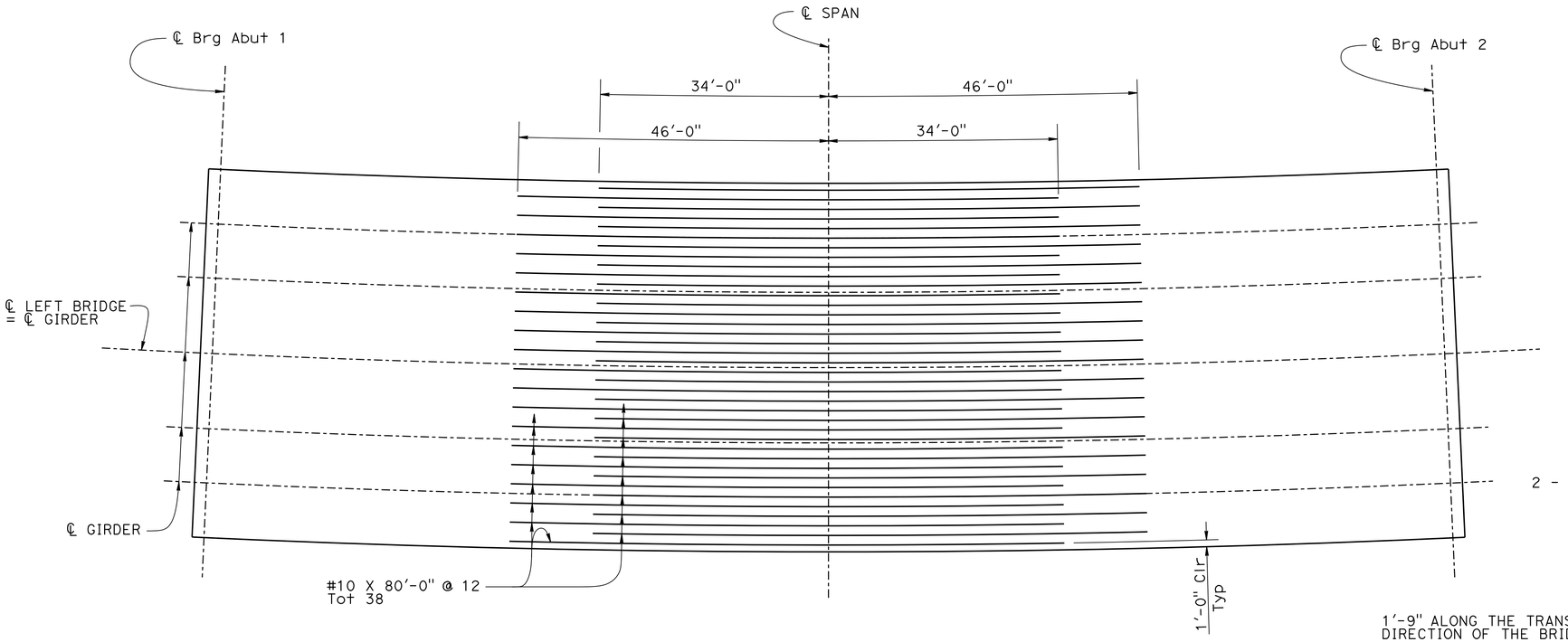

ADDITIONAL BOTTOM REINFORCEMENT - LEFT BRIDGE

1" = 10′

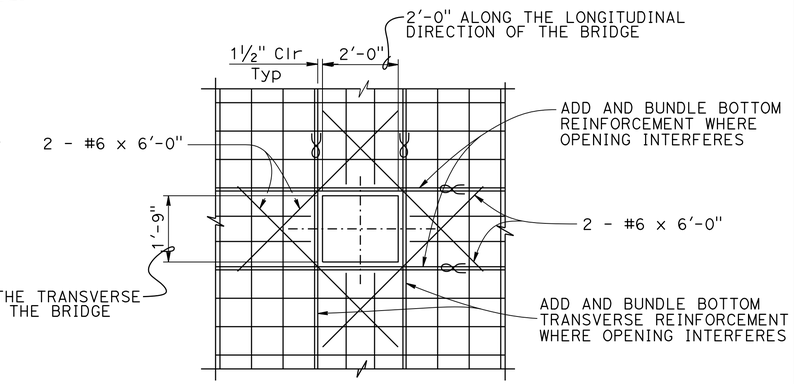

DETAIL D

½" = 1′-0"

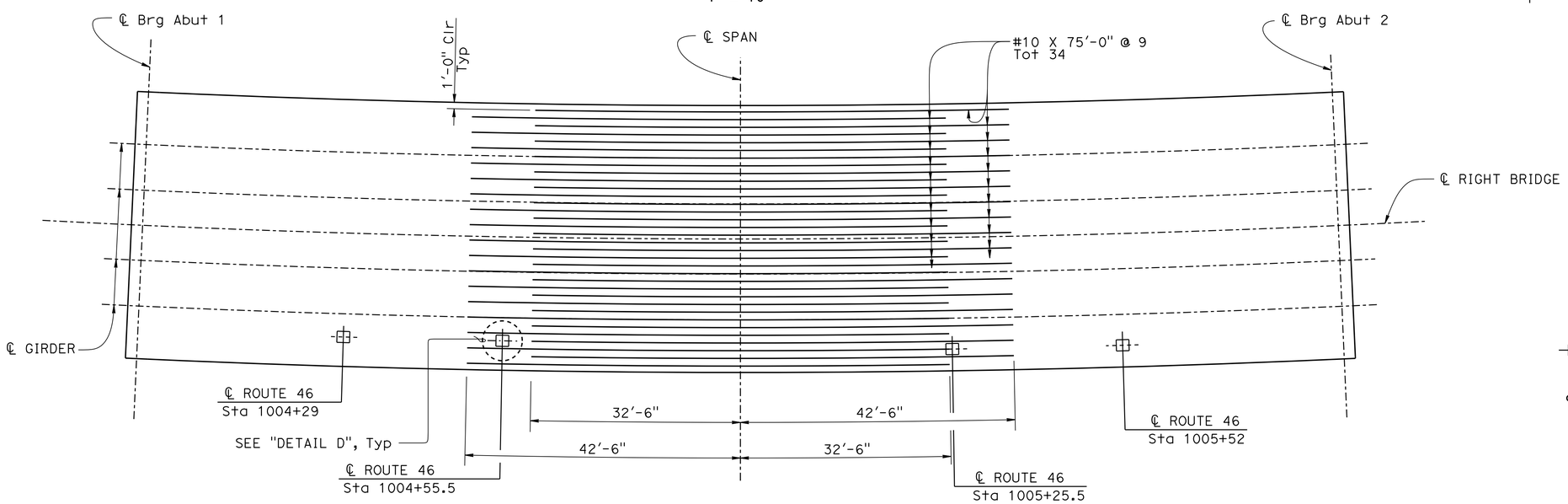

ADDITIONAL BOTTOM REINFORCEMENT - RIGHT BRIDGE

1" = 10′

LEGEND:

- Denotes 1′-9" x 2′-0" Soffit Opening for Bat Habitat. For details, see "BAT HABITATE DETAILS" sheets
- Denotes bundled bars.

DESIGN	BY V. RENGANATHAN	CHECKED S. MORIMOTO	
DETAILS	BY D. ELLIOTT / S. NG	CHECKED S. MORIMOTO	
QUANTITIES	BY R. WASHINGTON	CHECKED G. REYES-GUTIERREZ	

STATE OF CALIFORNIA
DEPARTMENT OF TRANSPORTATION

DIVISION OF ENGINEERING SERVICES
STRUCTURE DESIGN
DESIGN BRANCH 6

BRIDGE NO. 49-0262R/L
POST MILE 46.0/50.2

CHOLAME CREEK BRIDGE
GIRDER REINFORCEMENT

STRUCTURES DESIGN DETAIL SHEET (ENGLISH) (REV. 09-01-10)

ORIGINAL SCALE IN INCHES FOR REDUCED PLANS 0 1 2 3

UNIT: 3591
PROJECT NUMBER & PHASE: 05 1200 0076 1 CONTRACT NO.: 05-330784

DISREGARD PRINTS BEARING EARLIER REVISION DATES

REVISION DATES: 5-14-13 | 11-14-14 | 11-24-14 | 2-05-15

SHEET 14 OF 28

FILE => 49-0262rl-o-bottom_reinf.dgn

USERNAME => s115755 DATE PLOTTED => 26-OCT-2015 TIME PLOTTED => 10:26

DIST	COUNTY	ROUTE	POST MILES TOTAL PROJECT	SHEET No.	TOTAL SHEETS
05	SLO	46	46.0/50.2	538	551

R. Vaikunthan 12-08-14
REGISTERED CIVIL ENGINEER DATE

6-1-15
PLANS APPROVAL DATE

REGISTERED PROFESSIONAL ENGINEER VAIKUNTHAN RENGANATHAN No. S 5686 Exp. 6-30-2016 CIVIL STATE OF CALIFORNIA

The State of California or its officers or agents shall not be responsible for the accuracy or completeness of electronic copies of this plan sheet.

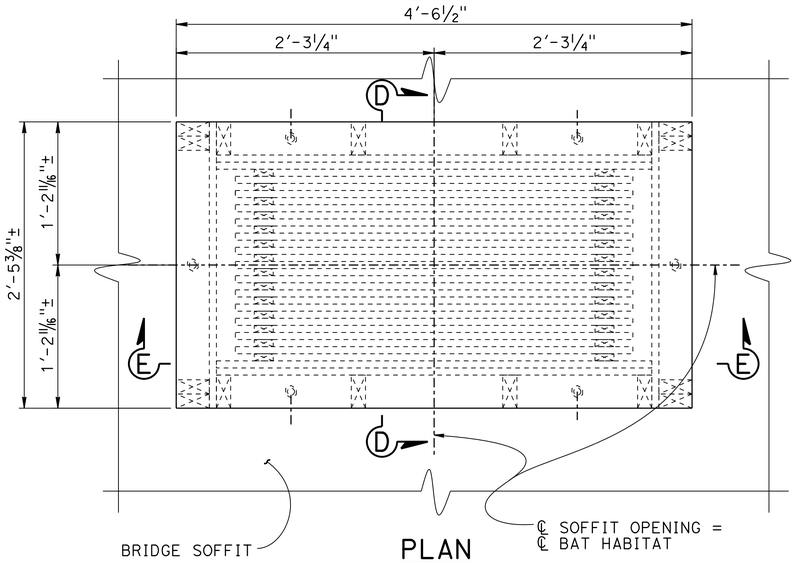

PLAN
1½" = 1'-0"

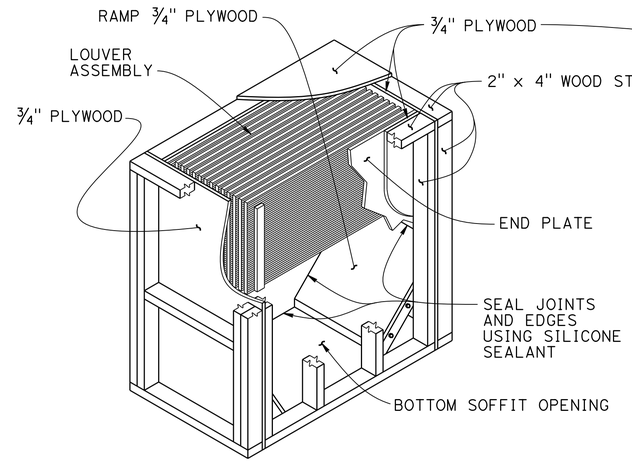

INSIDE OF BAT HABITAT
No Scale

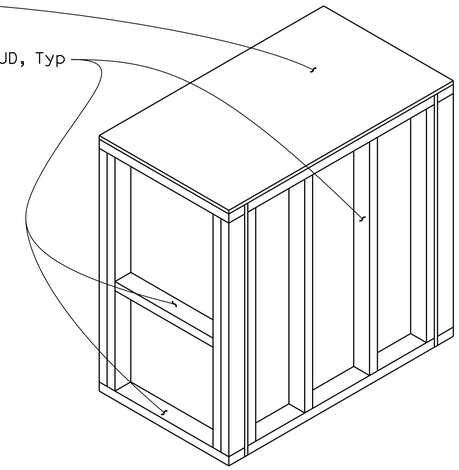

BAT HABITAT
No Scale

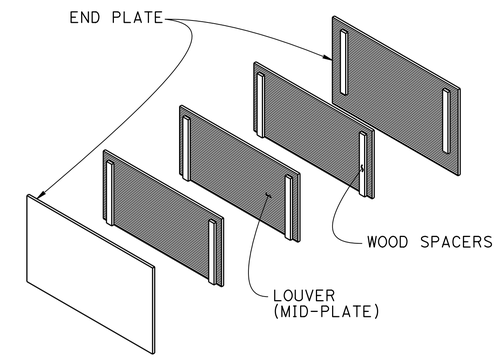

LOUVER ASSEMBLY
No Scale

NOTES:

1. For "SECTION B-B", "SECTION C-C" and "SECTION D-D", see "BAT HABITAT DETAILS No. 2" sheet.
2. For details of Louver Assembly, see "BAT HABITAT DETAILS No. 2" sheet.
3. Use 1½" #8 wood screws at 6" C-C to fasten plywood to studs.
4. Use 3" #10 wood screws at stud-to-stud "T" joints.
5. Seal all seams with siliconized latex caulk.

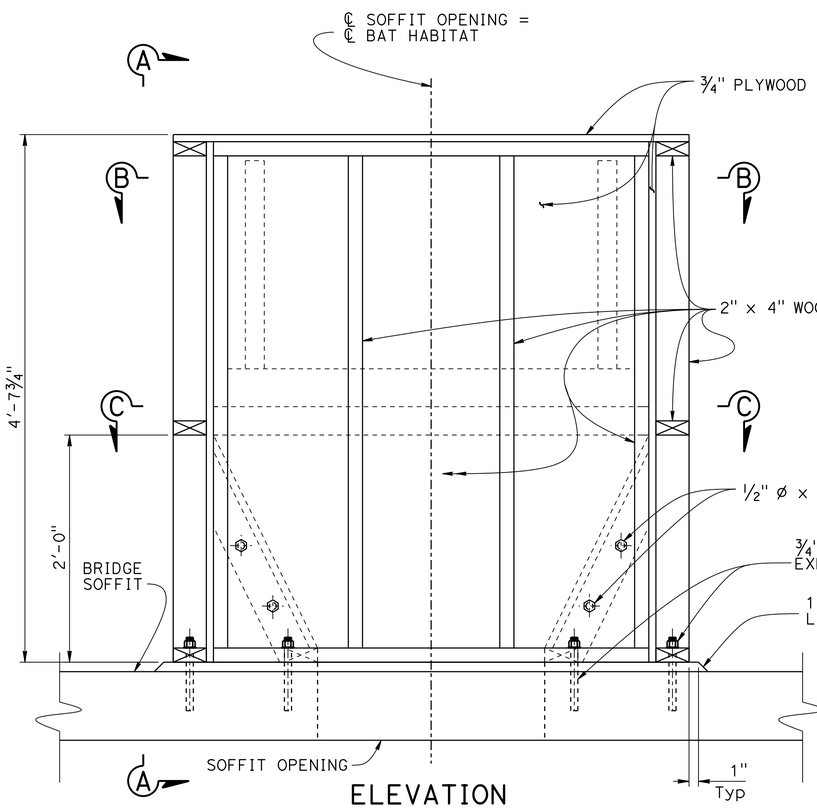

ELEVATION
1½" = 1'-0"

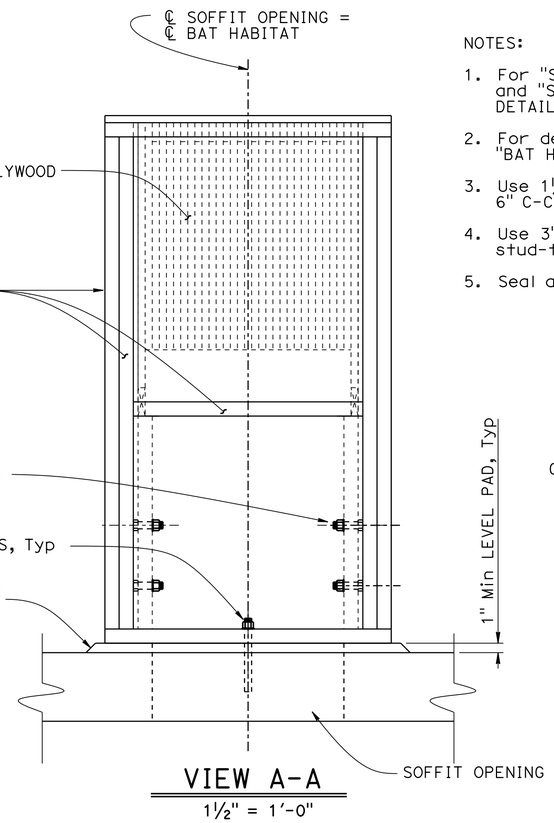

VIEW A-A
1½" = 1'-0"

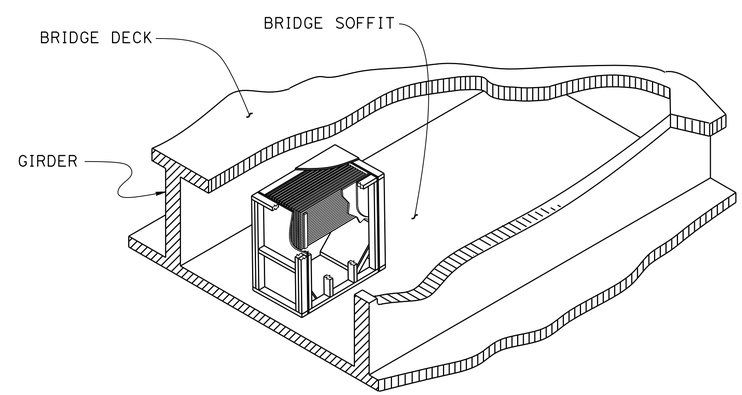

VIEW OF BAT HABITAT INSIDE BOX GIRDER BRIDGE
No Scale

DESIGN	BY V. RENGANATHAN	CHECKED S. MORIMOTO	
DETAILS	BY D. PATO	CHECKED S. MORIMOTO	
QUANTITIES	BY R. WASHINGTON	CHECKED V. RENGANATHAN	

STATE OF CALIFORNIA
DEPARTMENT OF TRANSPORTATION

DIVISION OF ENGINEERING SERVICES
STRUCTURE DESIGN
DESIGN BRANCH 6

BRIDGE NO. 49-0262R/L
POST MILE 46.0/50.2

CHOLAME CREEK BRIDGE
BAT HABITAT DETAILS No. 1

STRUCTURES DESIGN DETAIL SHEET (ENGLISH) (REV. 09-01-10)

ORIGINAL SCALE IN INCHES FOR REDUCED PLANS 0 1 2 3

UNIT: 3591
PROJECT NUMBER & PHASE: 0512000076-1
CONTRACT NO.: 05-330784

DISREGARD PRINTS BEARING EARLIER REVISION DATES

REVISION DATES 11-17-14 11-24-14 12-05-14

SHEET 15 OF 28

FILE => 49-0262rl-p-batdet01.dgn

USERNAME => s115755 DATE PLOTTED => 26-OCT-2015 TIME PLOTTED => 10:26

DIST	COUNTY	ROUTE	POST MILES TOTAL PROJECT	SHEET No.	TOTAL SHEETS
05	SLO	46	46.0/50.2	539	551

R. Vaikunthan 12-08-14
REGISTERED CIVIL ENGINEER DATE

6-1-15
PLANS APPROVAL DATE

REGISTERED PROFESSIONAL ENGINEER VAIKUNTHAN RENGANATHAN No. S 5686 Exp. 6-30-2016 CIVIL STATE OF CALIFORNIA

The State of California or its officers or agents shall not be responsible for the accuracy or completeness of electronic copies of this plan sheet.

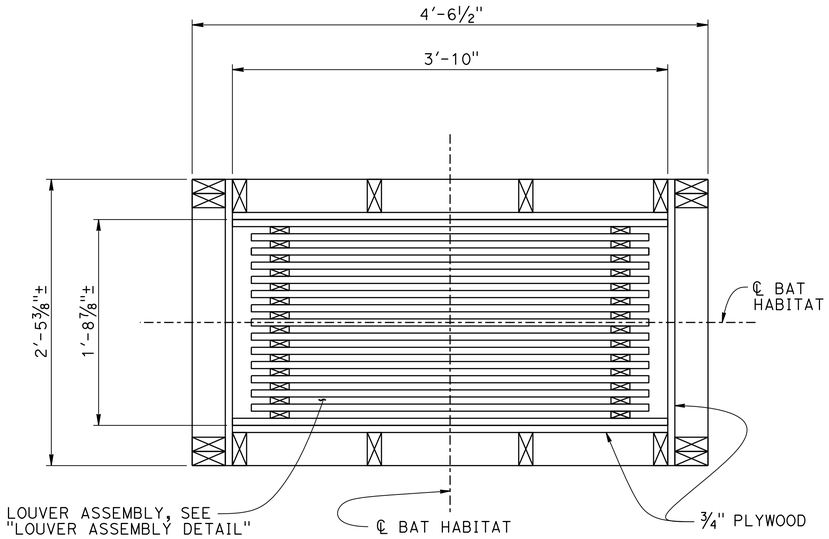

SECTION B-B

1½" = 1'-0"

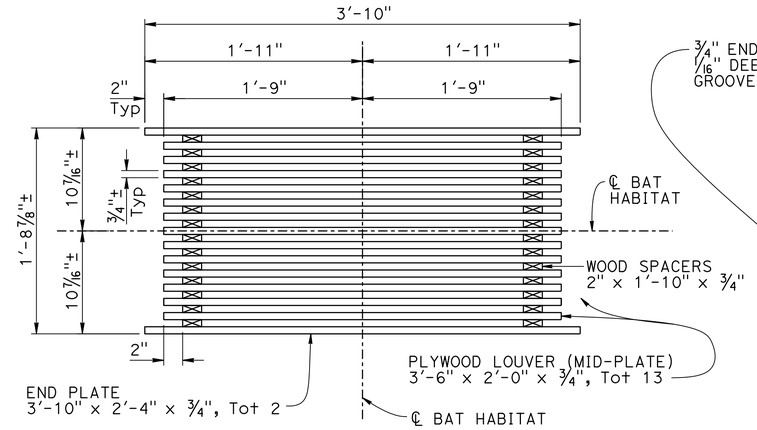

LOUVER ASSEMBLY DETAIL

1½" = 1'-0"

NOTE: Attach ¾" wood spacers to plywood using 6d nails

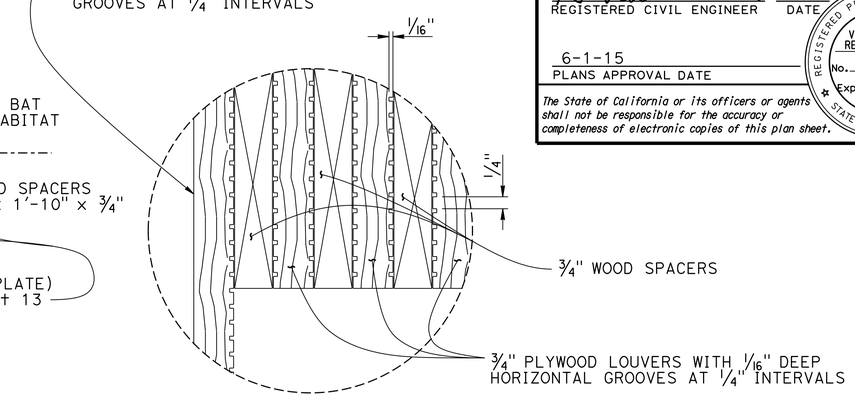

DETAIL A

No Scale

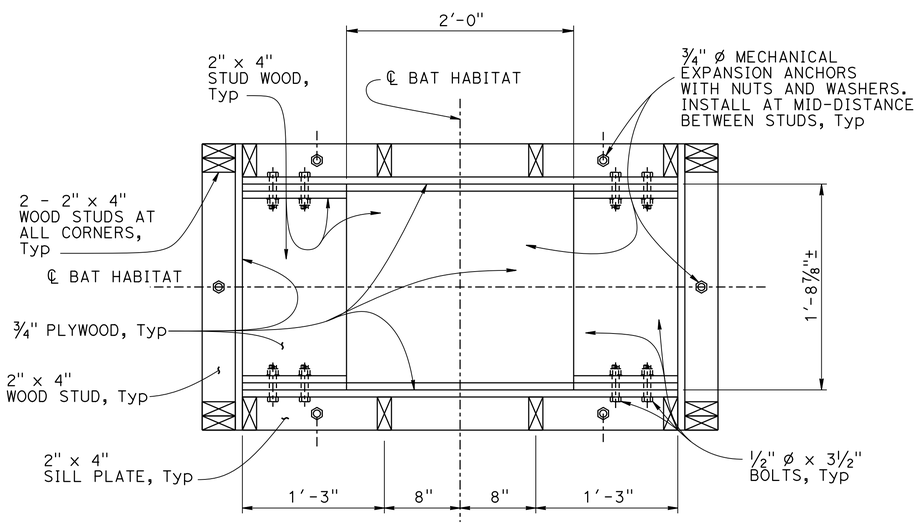

SECTION C-C

1½" = 1'-0"

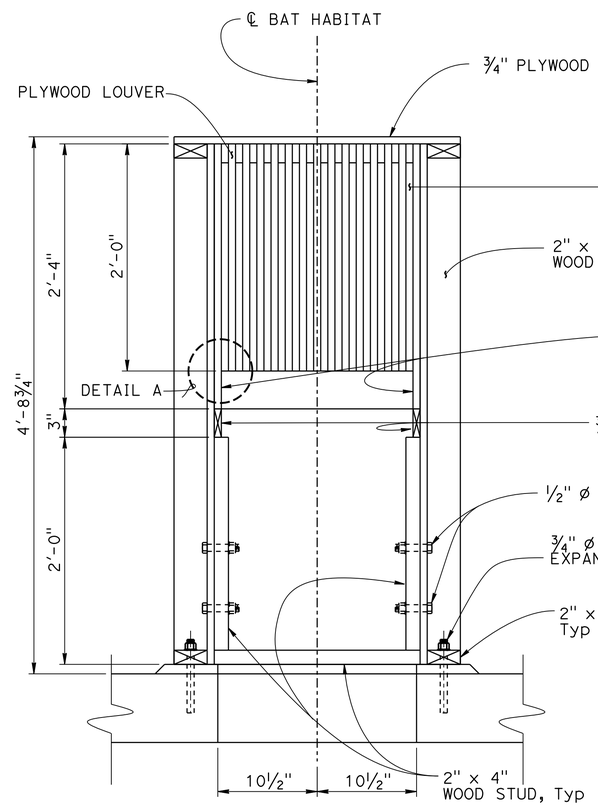

SECTION D-D

1½" = 1'-0"

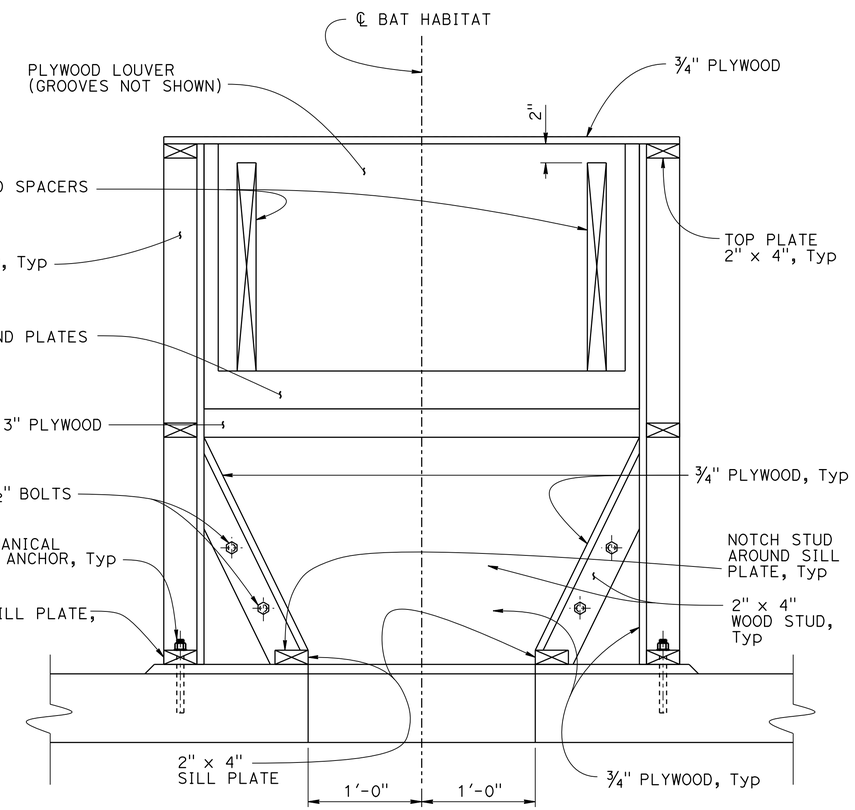

SECTION E-E

1½" = 1'-0"

	BY	CHECKED
DESIGN	V. RENGANATHAN	S. MORIMOTO
DETAILS	D. PATO	S. MORIMOTO
QUANTITIES	R. WASHINGTON	V. RENGANATHAN

STATE OF CALIFORNIA
DEPARTMENT OF TRANSPORTATION

DIVISION OF ENGINEERING SERVICES
STRUCTURE DESIGN
DESIGN BRANCH 6

BRIDGE NO. 49-0262R/L
POST MILE 46.0/50.2

CHOLAME CREEK BRIDGE
BAT HABITAT DETAILS No. 2

STRUCTURES DESIGN DETAIL SHEET (ENGLISH) (REV. 09-01-10)

ORIGINAL SCALE IN INCHES FOR REDUCED PLANS 0 1 2 3

UNIT: 3591
PROJECT NUMBER & PHASE: 0512000076-1
CONTRACT NO.: 05-330784

DISREGARD PRINTS BEARING EARLIER REVISION DATES

REVISION DATES 11-17-14 11-24-14 12-05-14

SHEET 16 OF 28

FILE => 49-0262rl-p-batdet02.dgn

USERNAME => s115755 DATE PLOTTED => 26-OCT-2015 TIME PLOTTED => 10:26

DIST	COUNTY	ROUTE	POST MILES TOTAL PROJECT	SHEET No.	TOTAL SHEETS
05	SLO	46	46.0/50.2	540	551

R. Vaikunthan 12-08-14
REGISTERED STRUCTURAL ENGINEER DATE

6-1-15
PLANS APPROVAL DATE

REGISTERED PROFESSIONAL ENGINEER VAIKUNTHAN RENGANATHAN No. S 5686 EXP. 6-30-2016 STRUCTURAL STATE OF CALIFORNIA

The State of California or its officers or agents must not be responsible for the accuracy or completeness of scanned copies of this plan sheet.

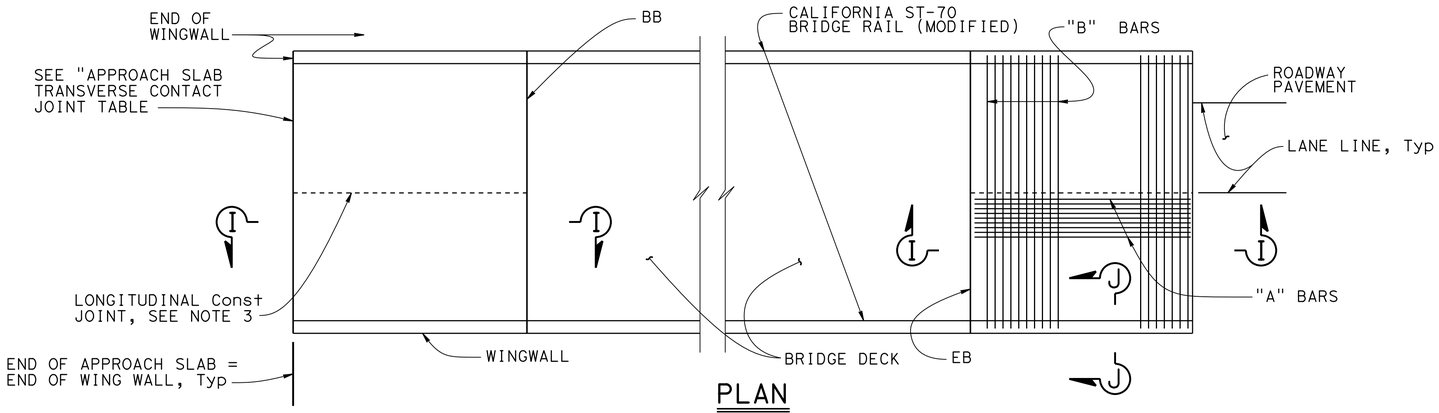

PLAN
NO SCALE

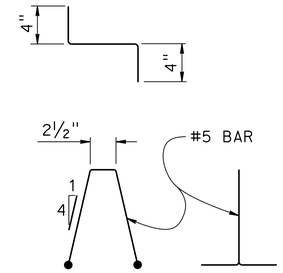

BAR CHAIR DETAIL
1½"=1'-0"

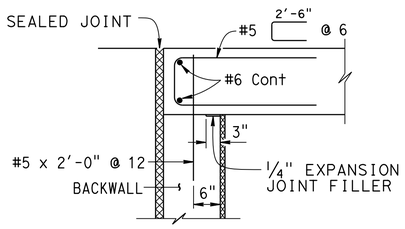

SEAT TYPE ABUTMENT TIE DETAILS (SEE NOTE 1)
¾"=1'-0"

APPROACH SLAB TRANSVERSE CONTACT JOINT	
APPROACH SKEW	WITH AC ROADWAY PAVEMENT
< 20°	PARALLEL TO FACE OF PN

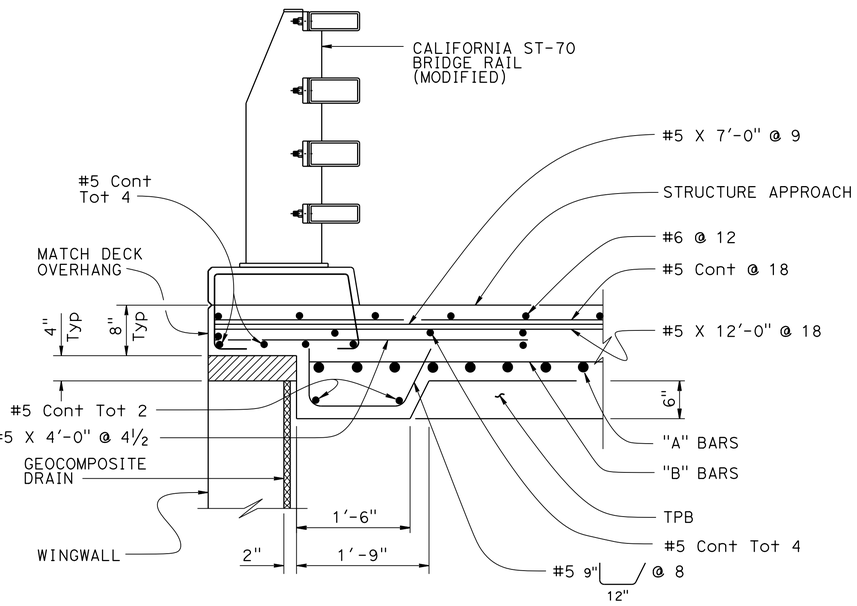

SECTION J-J
1" = 1'-0"

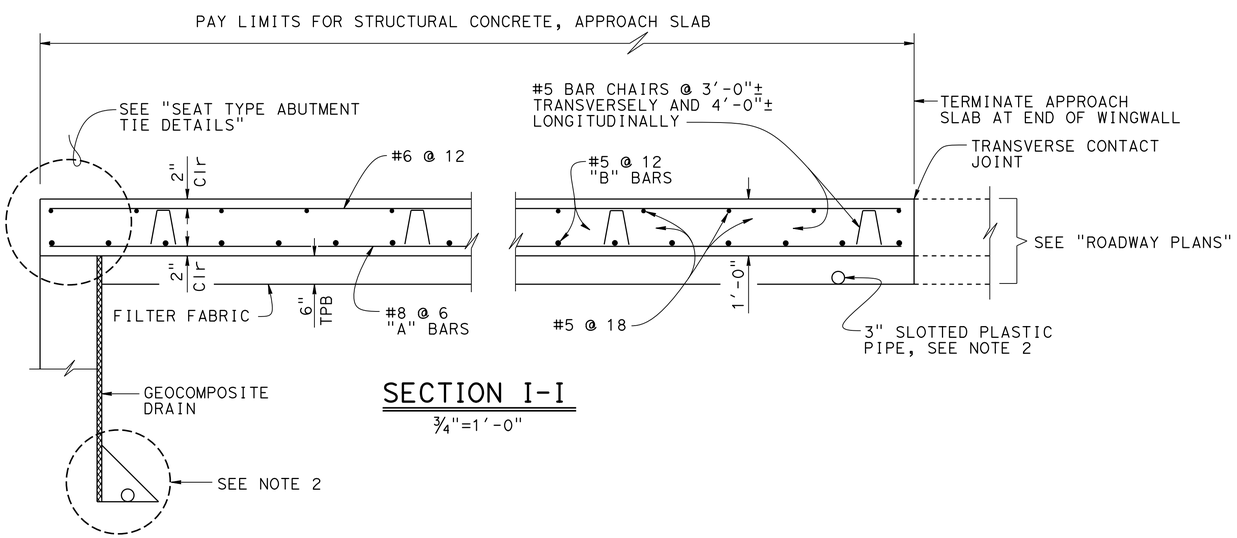

SECTION I-I
¾"=1'-0"

NOTES:

1. For details not shown, see Structure Plans. For MR ≤ 2", adjust bar reinforcement to clear a sawcut for sealed joint, when required.
2. For drainage details, see "STRUCTURE APPROACH DRAINAGE DETAILS" sheet.
3. Longitudinal construction joints, when permitted by the Engineer, shall be located on lane lines.

CHOLAME CREEK BRIDGE
STRUCTURE APPROACH TYPE N (30S) MODIFIED

	BY	CHECKED
DESIGN	V. RENGANATHAN	S. MORIMOTO
DETAILS	S. NG	S. MORIMOTO
QUANTITIES	R. WASHINGTON	V. RENGANATHAN

STATE OF CALIFORNIA
DEPARTMENT OF TRANSPORTATION

DIVISION OF ENGINEERING SERVICES
STRUCTURE DESIGN
DESIGN BRANCH 6

BRIDGE NO. 49-0262R/L
POST MILE 46.0/50.2

STRUCTURES DESIGN DETAIL SHEET (ENGLISH) (REV. 09-01-10)

ORIGINAL SCALE IN INCHES FOR REDUCED PLANS 0 1 2 3

UNIT: 3591
PROJECT NUMBER & PHASE: 05 1200 0076 1 CONTRACT NO.: 05-330784

DISREGARD PRINTS BEARING EARLIER REVISION DATES

REVISION DATES: 06-03-14 7-13-15 12-03-14

SHEET 17 OF 28

FILE => 49-0262rl-r-sa-t-n30s-sa.dgn

USERNAME => s115755 DATE PLOTTED => 26-OCT-2015 TIME PLOTTED => 10:26

DIST	COUNTY	ROUTE	POST MILES TOTAL PROJECT	SHEET No.	TOTAL SHEETS
05	SLO	46	46.0/50.2	541	551

R. Vaikunthan 12-08-14
REGISTERED STRUCTURAL ENGINEER DATE

6-1-15
PLANS APPROVAL DATE

REGISTERED PROFESSIONAL ENGINEER VAIKUNTHAN RENGANATHAN No. S 5686 EXP. 6-30-2016 STRUCTURAL STATE OF CALIFORNIA

The State of California or its officers or agents must not be responsible for the accuracy or completeness of scanned copies of this plan sheet.

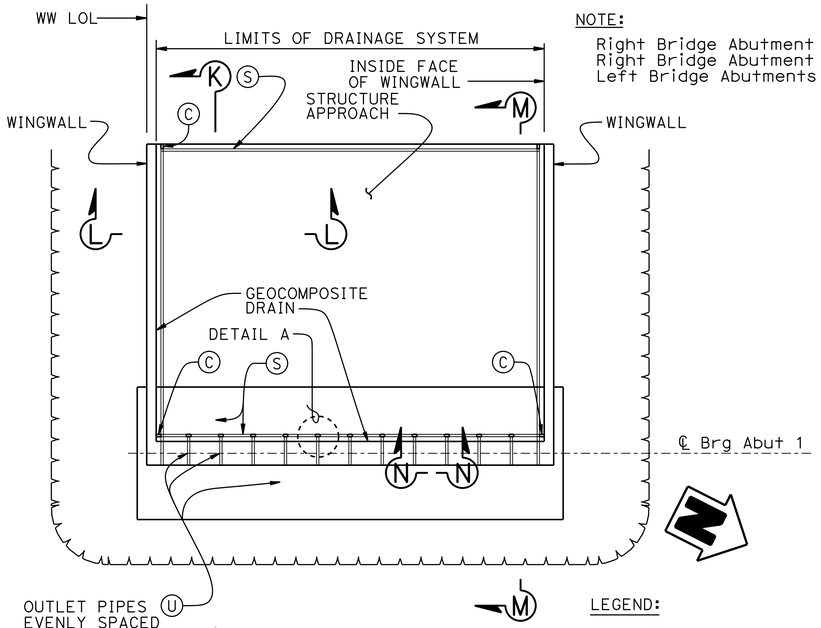

NOTE:
Right Bridge Abutment 1 shown;
Right Bridge Abutment 2, and
Left Bridge Abutments 1 & 2 similar.

TYPICAL PLAN
NO SCALE

LEGEND:
- (U) UNSLOTTED 3" PLASTIC PIPE
- (S) SLOTTED 3" PLASTIC PIPE
- (C) END CAP

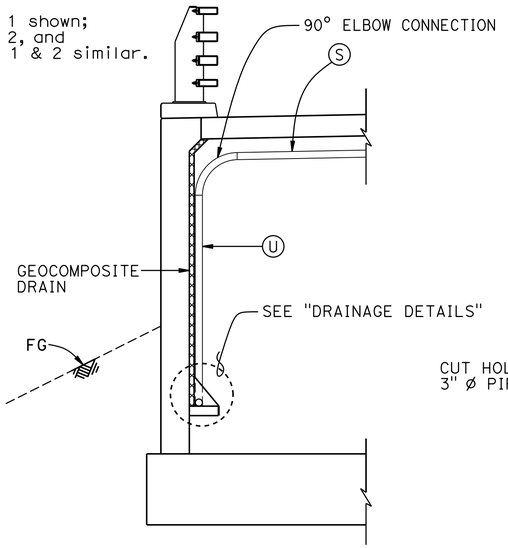

SECTION L-L
NO SCALE

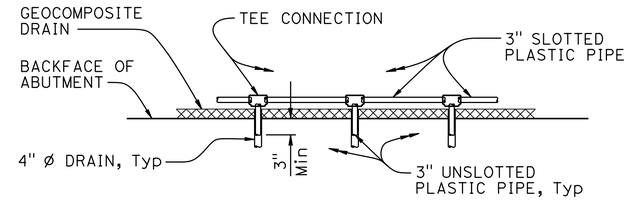

DETAIL A
NO SCALE

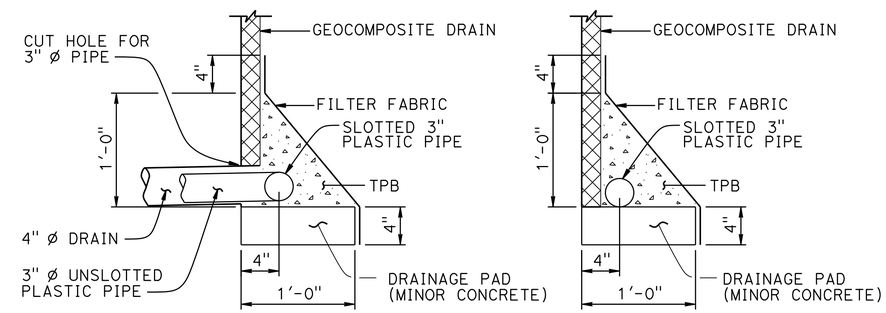

DRAINAGE DETAILS
1½" = 1'-0"

NOTE 1: PROVIDE 14 OUTLETS FOR LEFT ABUTMENTS
PROVIDE 11 OUTLETS FOR RIGHT ABUTMENTS

NOTE 2: SEE ROADWAY PLANS FOR LAYOUT AND DETAILS OF RSP

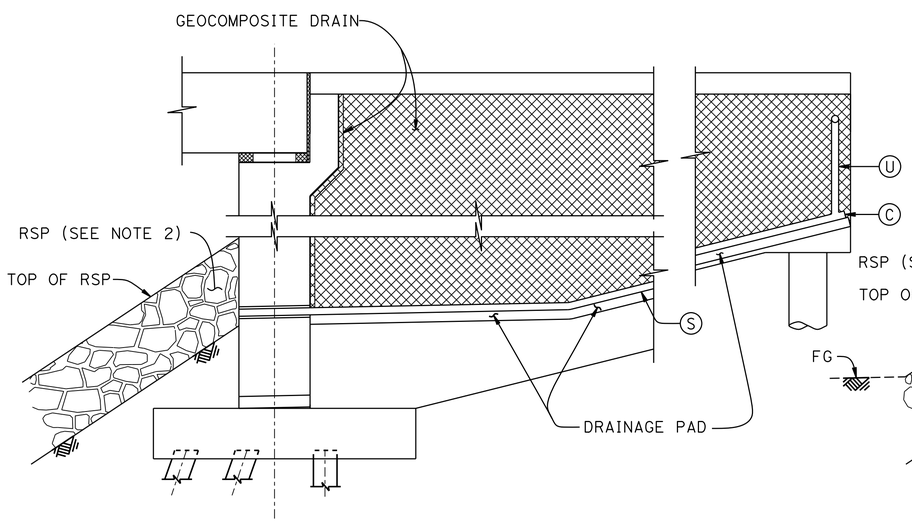

SECTION K-K
NO SCALE

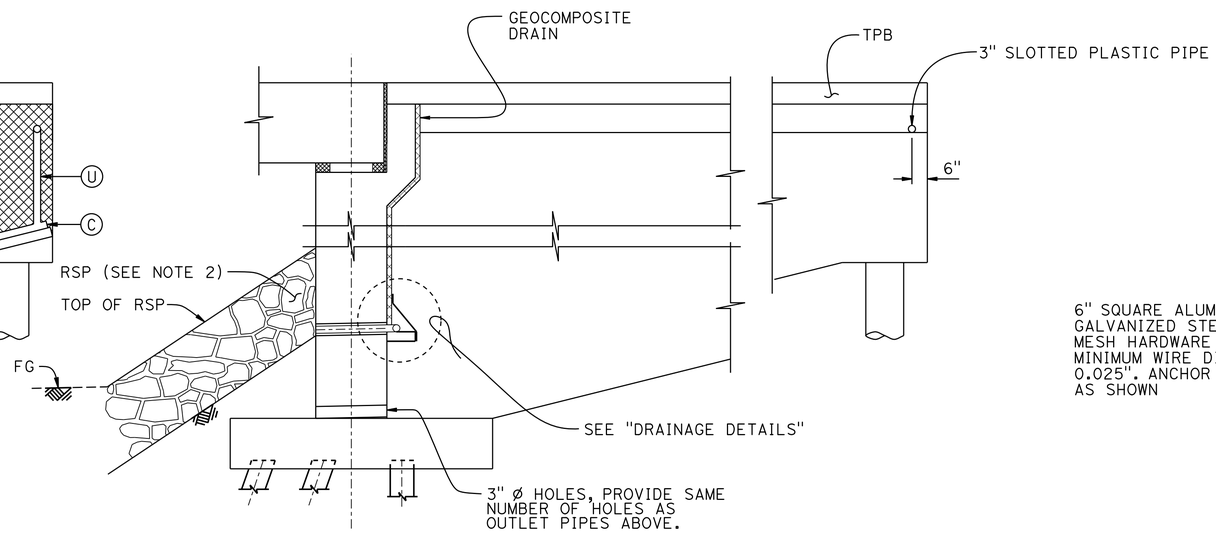

SECTION M-M
NO SCALE

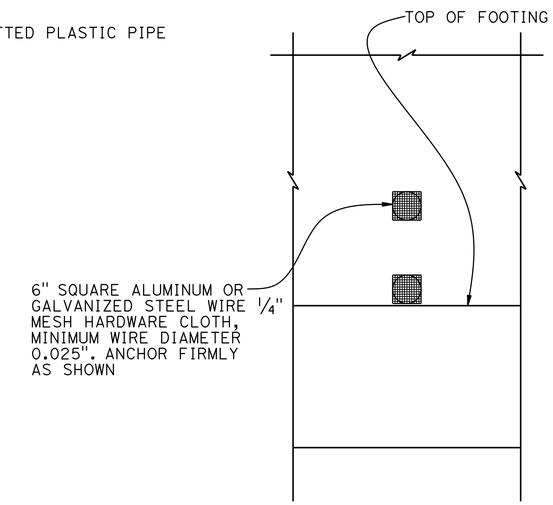

SECTION N-N
¾" = 1'-0"

	BY	CHECKED
DESIGN	V. RENGANATHAN	S. MORIMOTO
DETAILS	S. NG	S. MORIMOTO
QUANTITIES	R. WASHINGTON	V. RENGANATHAN

STATE OF CALIFORNIA
DEPARTMENT OF TRANSPORTATION

DIVISION OF ENGINEERING SERVICES
STRUCTURE DESIGN
DESIGN BRANCH 6

BRIDGE NO. 49-0262R/L
POST MILE 46.0/50.2

CHOLAME CREEK BRIDGE
STRUCTURE APPROACH DRAINAGE DETAILS

STRUCTURES DESIGN DETAIL SHEET (ENGLISH) (REV. 09-01-10)

ORIGINAL SCALE IN INCHES FOR REDUCED PLANS 0 1 2 3

UNIT: 3591
PROJECT NUMBER & PHASE: 05 1200 0076 1 CONTRACT NO.: 05-330784

DISREGARD PRINTS BEARING EARLIER REVISION DATES

REVISION DATES: 06-05-14 11-17-14 10-16-14

SHEET 18 OF 28

FILE => 49-0262rl-s-sa-dd.dgn

USERNAME => s115755 DATE PLOTTED => 26-OCT-2015 TIME PLOTTED => 10:26

DIST	COUNTY	ROUTE	POST MILES TOTAL PROJECT	SHEET No.	TOTAL SHEETS
05	SLO	46	46.0/50.2	542	551

R. Vaikunthan 12-08-14
REGISTERED STRUCTURAL ENGINEER DATE

6-1-15
PLANS APPROVAL DATE

REGISTERED PROFESSIONAL ENGINEER VAIKUNTHAN RENGANATHAN No. S 5686 Exp. 6-30-2016 STRUCTURAL STATE OF CALIFORNIA

The State of California or its officers or agents shall not be responsible for the accuracy or completeness of scanned copies of this plan sheet.

NOTES:

1. Bridge Rail posts must be vertical.
2. Typical rail system showing the rail at lower side of the deck. Rail at higher side of the deck is similar.

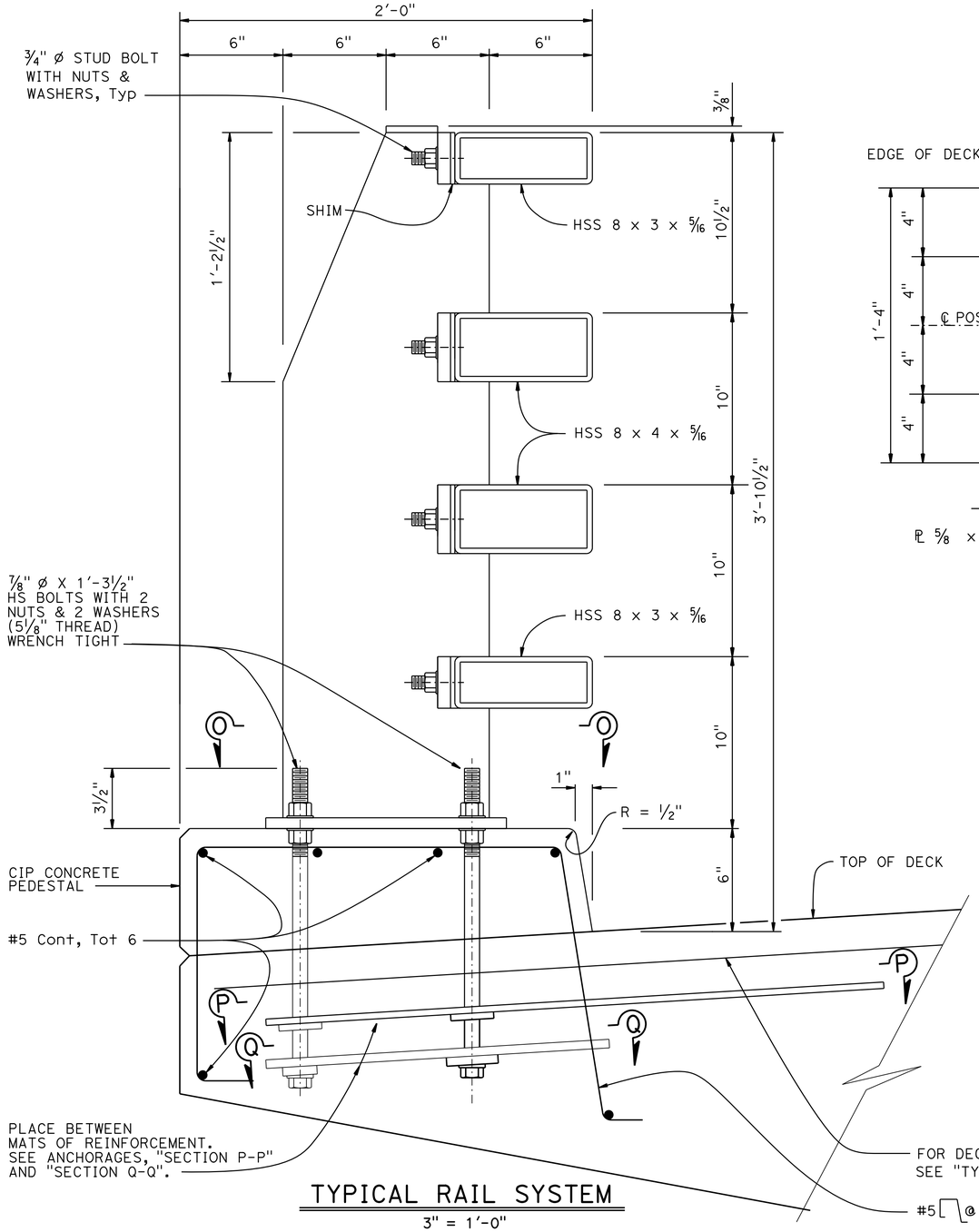

TYPICAL RAIL SYSTEM
3" = 1'-0"

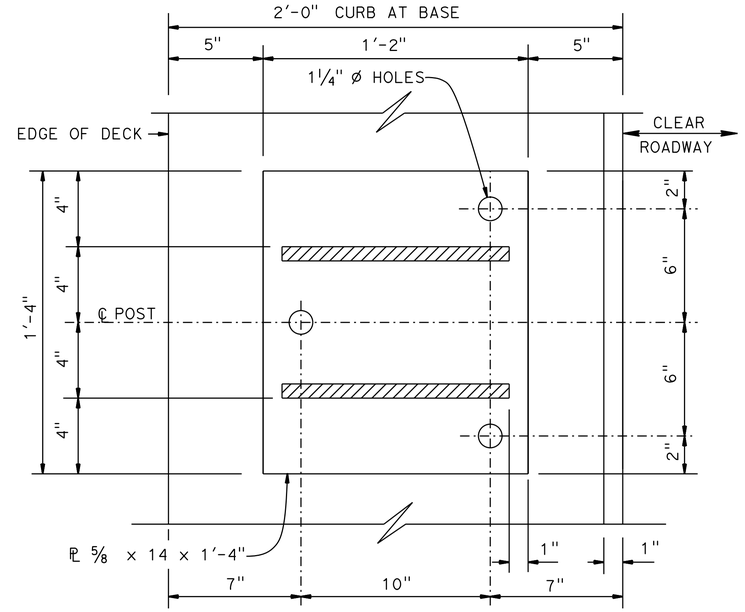

SECTION O-O
3" = 1'-0"

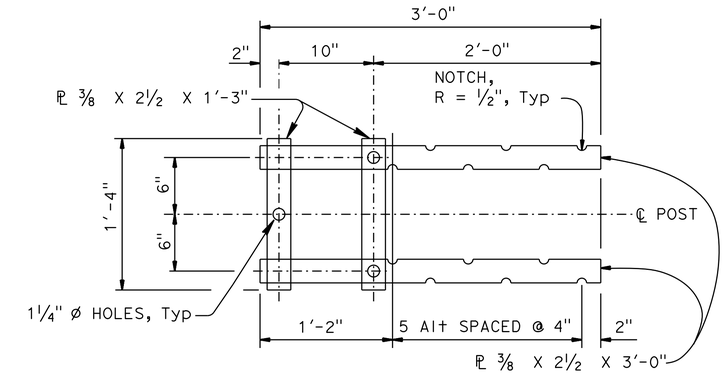

TOP ANCHORAGE
SECTION P-P
1 1/2" = 1'-0"

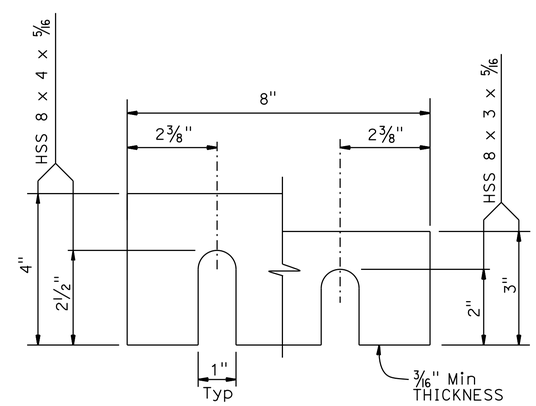

SHIMS REQUIRED FOR ALL RAILS
6" = 1'-0"

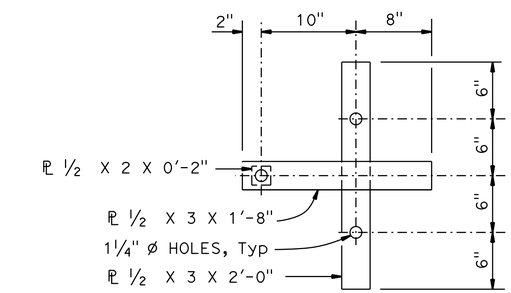

LOWER ANCHORAGE
SECTION Q-Q
1 1/2" = 1'-0"

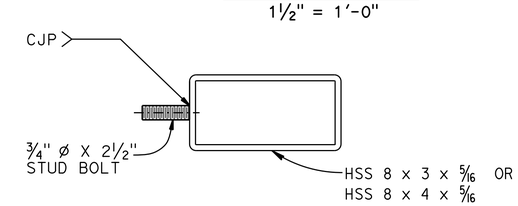

SECTION AT POST
3" = 1'-0"

DESIGN	BY V. RENGANATHAN	CHECKED S. MORIMOTO	
DETAILS	BY S. NG	CHECKED S. MORIMOTO	
QUANTITIES	BY R. WASHINGTON	CHECKED V. RENGANATHAN	

STATE OF CALIFORNIA
DEPARTMENT OF TRANSPORTATION

DIVISION OF ENGINEERING SERVICES
STRUCTURE DESIGN
DESIGN BRANCH 6

BRIDGE NO. 49-0262R/L
POST MILE 46.0/50.2

CHOLAME CREEK BRIDGE
CALIFORNIA ST-70 BRIDGE RAIL (MODIFIED) DETAILS No. 1

STRUCTURES DESIGN DETAIL SHEET (ENGLISH) (REV. 09-01-10)

ORIGINAL SCALE IN INCHES FOR REDUCED PLANS 0 1 2 3

UNIT: 3591
PROJECT NUMBER & PHASE: 05 1200 0076 1 CONTRACT NO.: 05-330784

DISREGARD PRINTS BEARING EARLIER REVISION DATES

REVISION DATES 07-09-14 07-18-14 10-01-14 11-17-14

SHEET 19 OF 28

FILE => 49-0262rl-u-st70-rail-1.dgn

USERNAME => s115755 DATE PLOTTED => 26-OCT-2015 TIME PLOTTED => 10:27

DIST	COUNTY	ROUTE	POST MILES TOTAL PROJECT	SHEET No.	TOTAL SHEETS
05	SLO	46	46.0/50.2	543	551

R. Vaikunthan 12-08-14
REGISTERED STRUCTURAL ENGINEER DATE

6-1-15
PLANS APPROVAL DATE

REGISTERED PROFESSIONAL ENGINEER VAIKUNTHAN RENGANATHAN No. S 5686 Exp. 6-30-2016 STRUCTURAL STATE OF CALIFORNIA

The State of California or its officers or agents shall not be responsible for the accuracy or completeness of scanned copies of this plan sheet.

NOTES:

1. Provide beveled date on right side of approach end for each bridge. See "GENERAL PLAN" for locations.
2. "RAIL POST LAYOUT ON BRIDGE & STRUCTURE APPROACH" shown is for left bridge along north side or right bridge along south side. Other two locations are similar except beleved date is not needed.

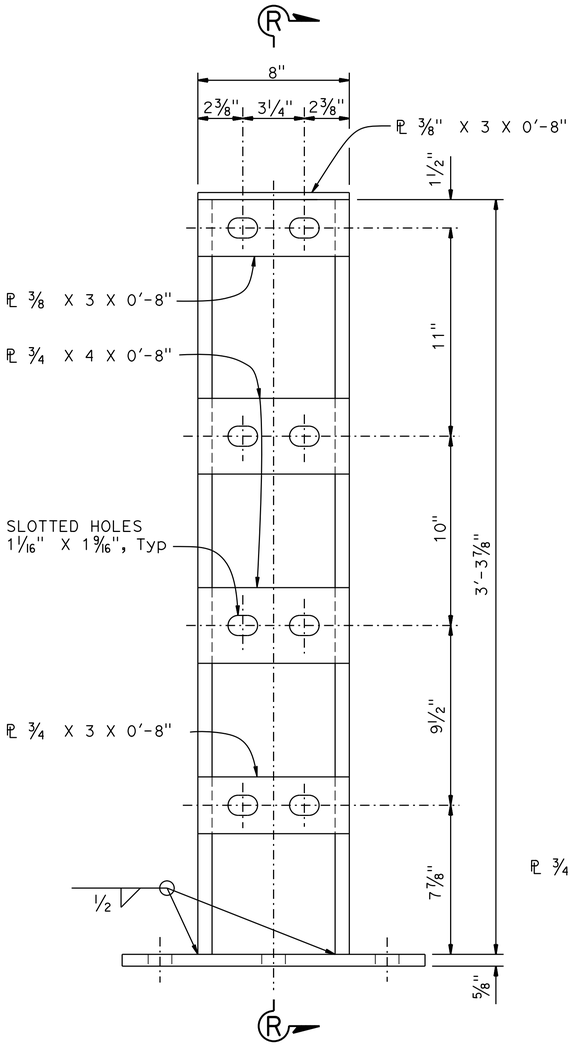

ELEVATION
3" = 1'-0"

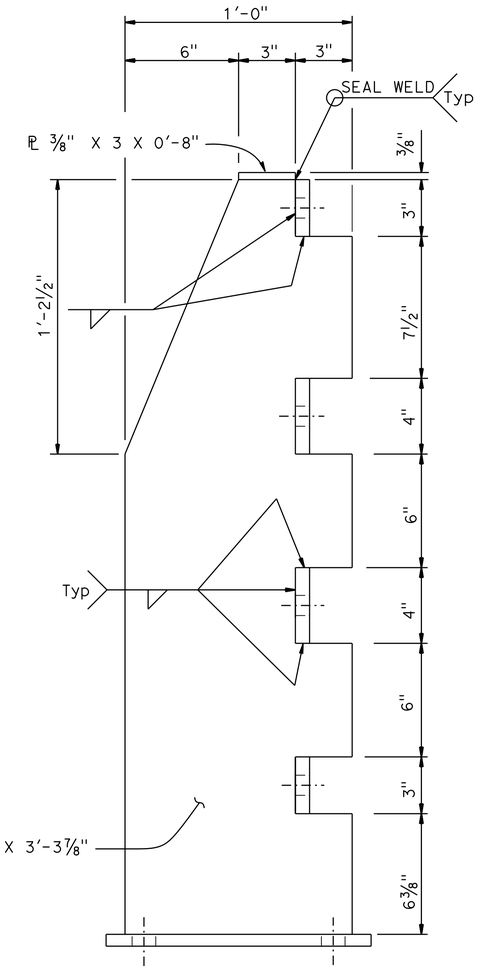

SECTION R-R
3" = 1'-0"

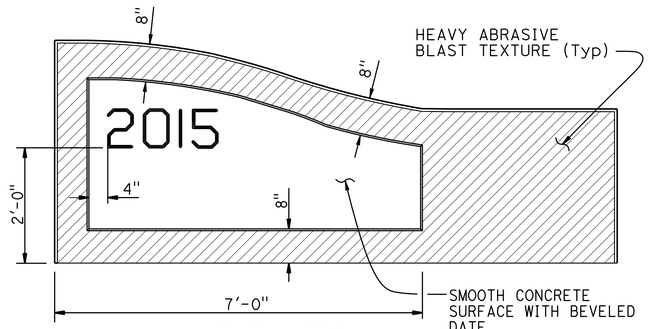

ELEVATION
3/4" = 1'-0"

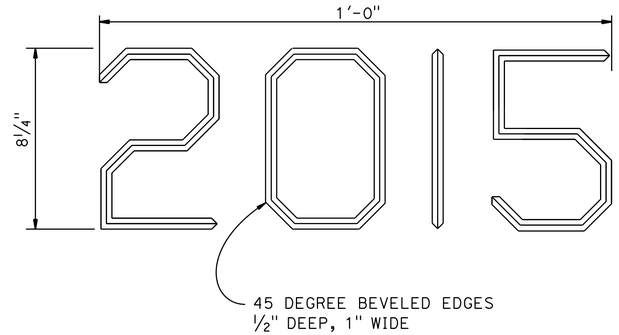

BEVELED DATE DETAIL
NO SCALE

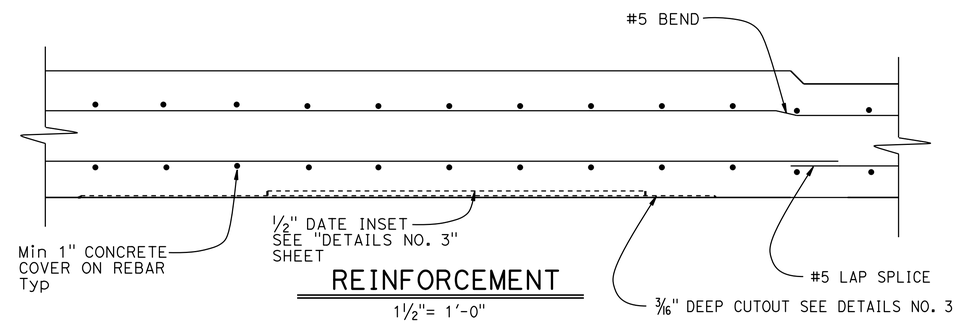

REINFORCEMENT
1 1/2"= 1'-0"

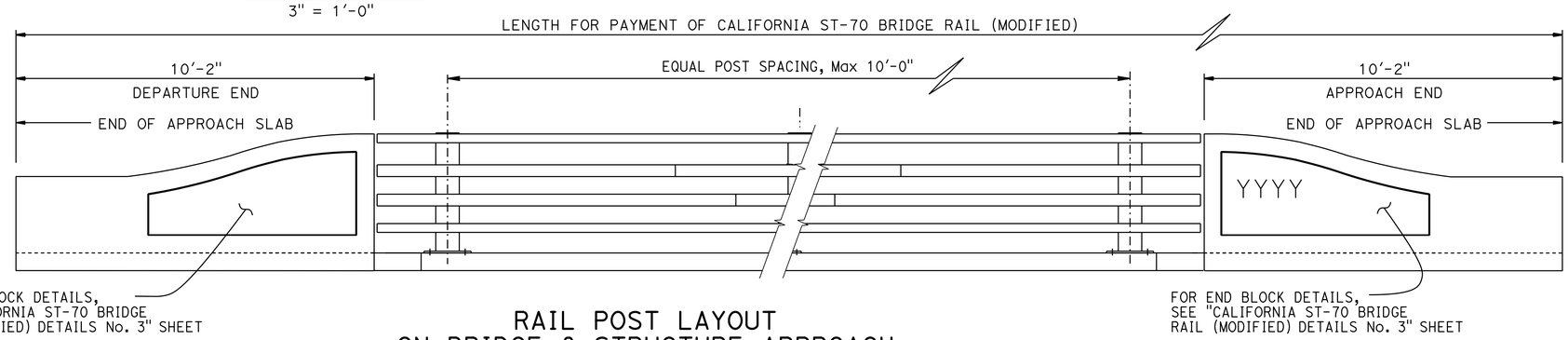

RAIL POST LAYOUT
ON BRIDGE & STRUCTURE APPROACH
1/2" = 1'-0"

	BY	CHECKED
DESIGN	V. RENGANATHAN	S. MORIMOTO
DETAILS	S. NG	S. MORIMOTO
QUANTITIES	R. WASHINGTON	V. RENGANATHAN

STATE OF CALIFORNIA
DEPARTMENT OF TRANSPORTATION

DIVISION OF ENGINEERING SERVICES
STRUCTURE DESIGN
DESIGN BRANCH 6

BRIDGE NO. 49-0262R/L
POST MILE 46.0/50.2

CHOLAME CREEK BRIDGE
CALIFORNIA ST-70 BRIDGE RAIL (MODIFIED) DETAILS No. 2

STRUCTURES DESIGN DETAIL SHEET (ENGLISH) (REV. 09-01-10)

ORIGINAL SCALE IN INCHES FOR REDUCED PLANS 0 1 2 3

UNIT: 3591
PROJECT NUMBER & PHASE: 05 1200 0076 1 CONTRACT NO.: 05-330784

DISREGARD PRINTS BEARING EARLIER REVISION DATES

REVISION DATES: 07-08-14 11-17-14 10-01-14 10-24-14

SHEET 20 OF 28

FILE => 49-0262rl-u-st70-rail-2.dgn

USERNAME => s115755 DATE PLOTTED => 26-OCT-2015 TIME PLOTTED => 10:27

DIST	COUNTY	ROUTE	POST MILES TOTAL PROJECT	SHEET No.	TOTAL SHEETS
05	SLO	46	46.0/50.2	544	551

R. Vaikunthan 12-08-14
REGISTERED STRUCTURAL ENGINEER DATE

6-1-15
PLANS APPROVAL DATE

REGISTERED PROFESSIONAL ENGINEER VAIKUNTHAN RENGANATHAN No. S 5686 EXP. 6-30-2016 STRUCTURAL STATE OF CALIFORNIA

The State of California or its officers or agents shall not be responsible for the accuracy or completeness of scanned copies of this plan sheet.

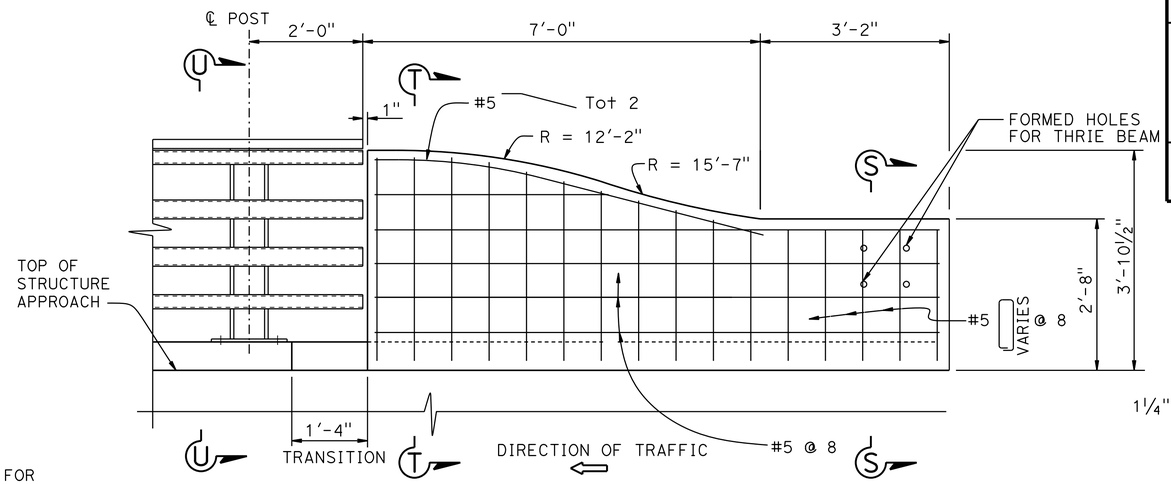

ELEVATION

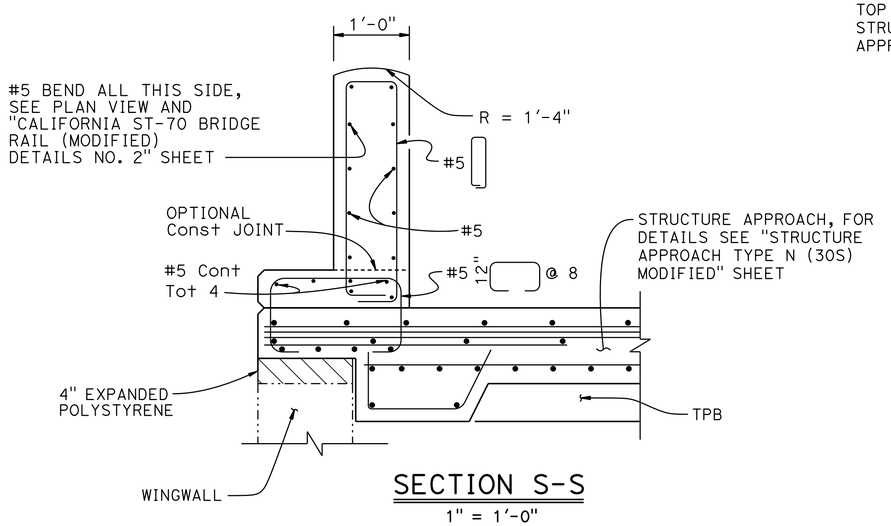

SECTION S-S

1" = 1'-0"

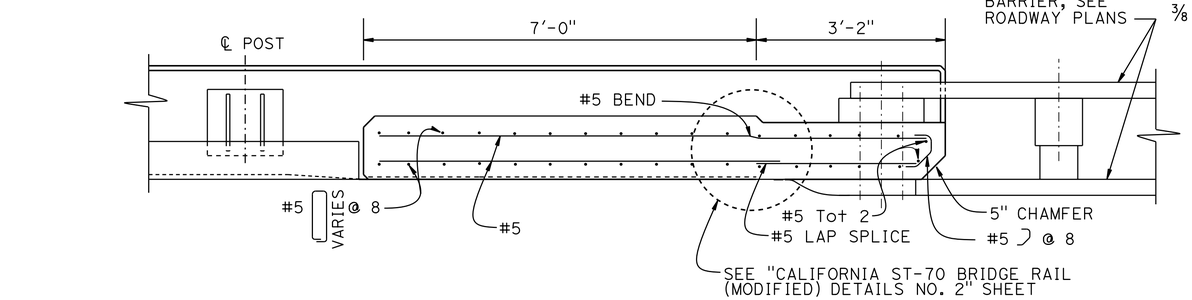

PLAN

END BLOCK DETAIL

¾" = 1'-0"

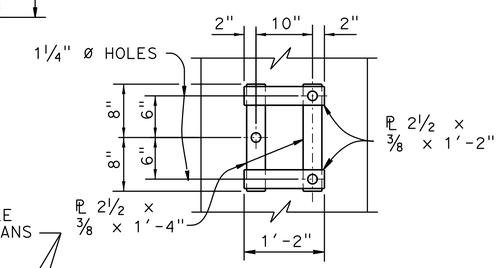

VIEW V-V

NO SCALE

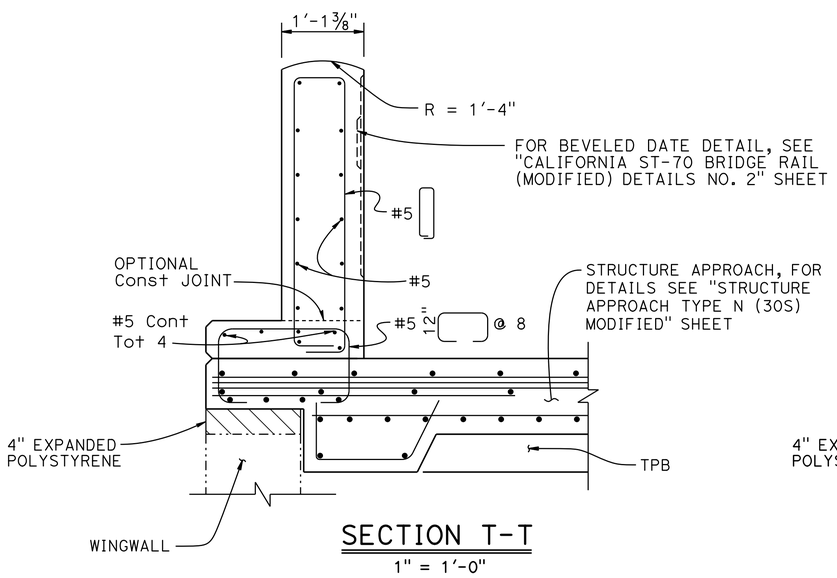

SECTION T-T

1" = 1'-0"

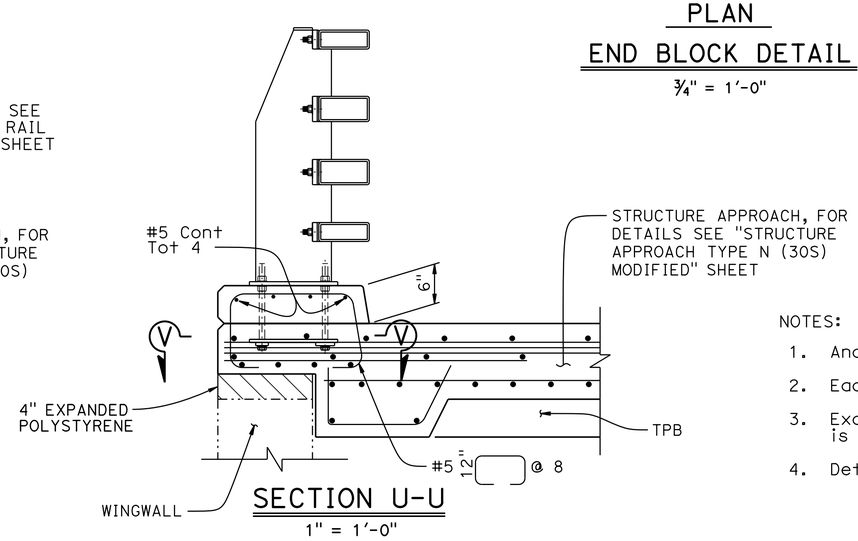

SECTION U-U

1" = 1'-0"

NOTES:

1. Anchor bolts may be tack welded (shop or field) to anchorage.
2. Each rail length must be continuous over a minimum of two posts.
3. Except for expansion splices, not more than one splice is permitted per same side of post.
4. Details for approach end is shown. Details for departure end is similar.

CHOLAME CREEK BRIDGE

CALIFORNIA ST-70 BRIDGE RAIL (MODIFIED) DETAILS No. 3

	BY	CHECKED
DESIGN	V. RENGANATHAN	S. MORIMOTO
DETAILS	S. NG	S. MORIMOTO
QUANTITIES	R. WASHINGTON	V. RENGANATHAN

STATE OF CALIFORNIA
DEPARTMENT OF TRANSPORTATION

DIVISION OF ENGINEERING SERVICES
STRUCTURE DESIGN
DESIGN BRANCH 6

BRIDGE NO. 49-0262R/L
POST MILE 46.0/50.2

STRUCTURES DESIGN DETAIL SHEET (ENGLISH) (REV. 09-01-10)

ORIGINAL SCALE IN INCHES FOR REDUCED PLANS 0 1 2 3

UNIT: 3591
PROJECT NUMBER & PHASE: 05 1200 0076 1 CONTRACT NO.: 05-330784

DISREGARD PRINTS BEARING EARLIER REVISION DATES

REVISION DATES: 07-09-14 12-04-14 7-13-15

SHEET 21 OF 28

FILE => 49-0262rl-u-st70-rail-3.dgn

USERNAME => s115755 DATE PLOTTED => 26-OCT-2015 TIME PLOTTED => 10:27

DIST	COUNTY	ROUTE	POST MILES TOTAL PROJECT	SHEET No.	TOTAL SHEETS
05	SLO	46	46.0/50.2	545	551

R. Vaikunthan 12-08-14
REGISTERED STRUCTURAL ENGINEER DATE

6-1-15
PLANS APPROVAL DATE

REGISTERED PROFESSIONAL ENGINEER VAIKUNTHAN RENGANATHAN No. S 5686 Exp. 6-30-2016 STRUCTURAL STATE OF CALIFORNIA

The State of California or its officers or agents shall not be responsible for the accuracy or completeness of scanned copies of this plan sheet.

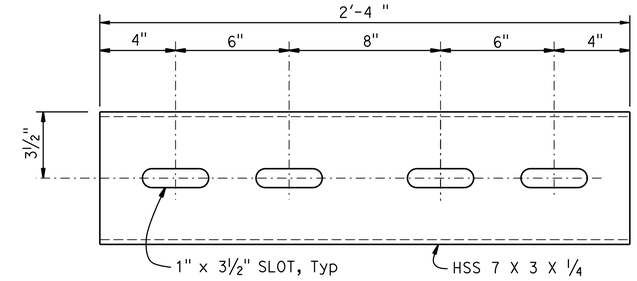

STANDARD SLEEVE DETAIL

3" = 1'-0"
(FOR HSS 8 X 4 X 5/16 RAIL)

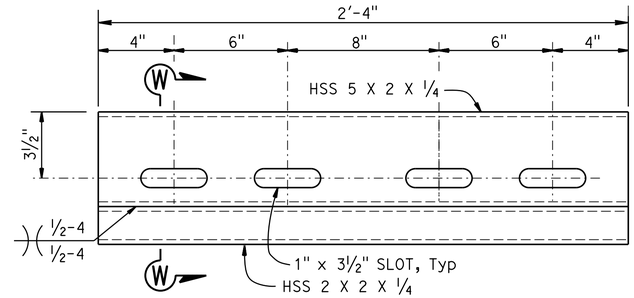

STANDARD SLEEVE DETAIL

3" = 1'-0"
(FOR HSS 8 X 3 X 5/16 RAIL)

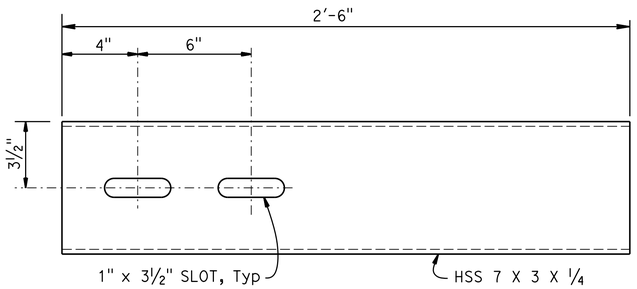

EXPANSION SLEEVE DETAIL

3" = 1'-0"
(FOR HSS 8 X 4 X 5/16 RAIL)

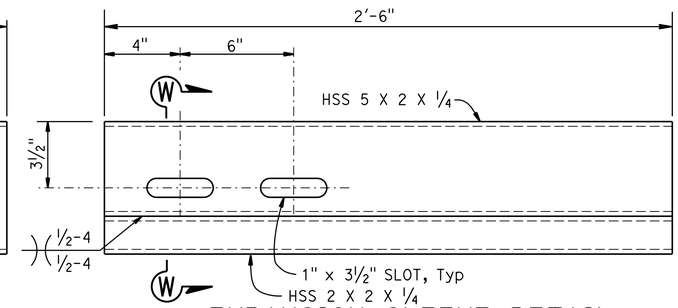

EXPANSION SLEEVE DETAIL

3" = 1'-0"
(FOR HSS 8 X 3 X 5/16 RAIL)

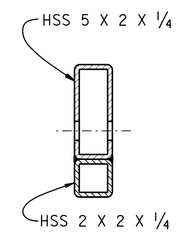

SECTION W-W

3" = 1'-0"

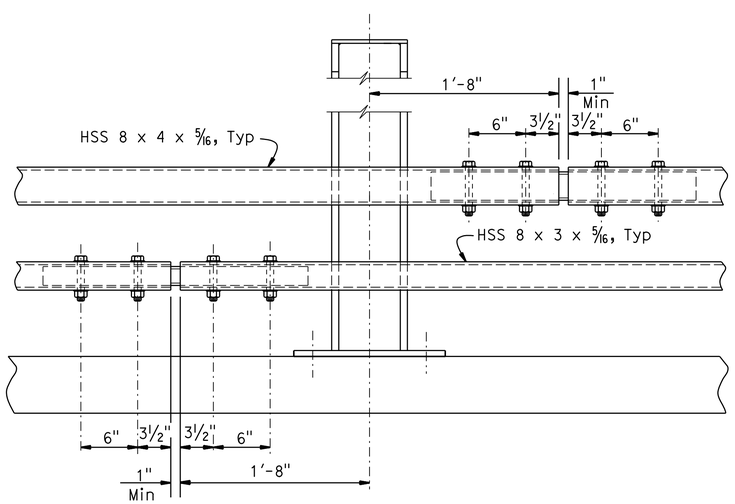

STANDARD SPLICE

1½"= 1'-0"

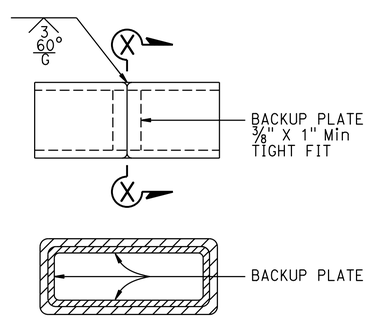

SECTION X-X

ALTERNATE TUBE WELDED SPLICE

3" = 1'-0"

NOTES:
HS bolts with washers, wrench tightened
Use ¾" ø X 5¼ (HSS 8 X 4 X 5/16)
Use ¾" ø X 4¼ (HSS 8 X 3 X 5/16)

2 rails are not shown for clarity

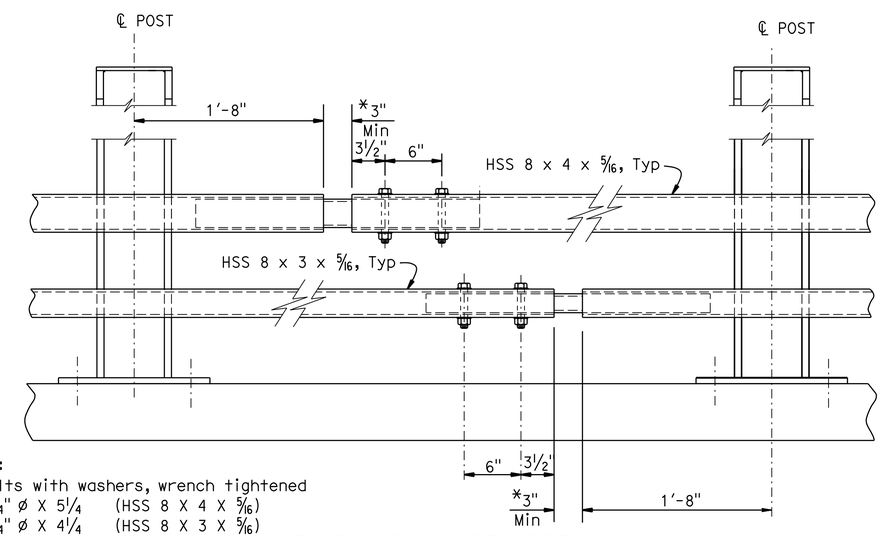

EXPANSION SPLICE

1½"= 1'-0"
* MATCH EXPANSION JOINT GAP

CHOLAME CREEK BRIDGE

CALIFORNIA ST-70 BRIDGE RAIL (MODIFIED) DETAILS No. 4

	BY	CHECKED
DESIGN	V. RENGANATHAN	S. MORIMOTO
DETAILS	S. NG	S. MORIMOTO
QUANTITIES	R. WASHINGTON	V. RENGANATHAN

STATE OF CALIFORNIA
DEPARTMENT OF TRANSPORTATION

DIVISION OF ENGINEERING SERVICES
STRUCTURE DESIGN
DESIGN BRANCH 6

BRIDGE NO. 49-0262R/L
POST MILE 46.0/50.2

STRUCTURES DESIGN DETAIL SHEET (ENGLISH) (REV. 09-01-10)

ORIGINAL SCALE IN INCHES FOR REDUCED PLANS 0 1 2 3

UNIT: 3591
PROJECT NUMBER & PHASE: 05 1200 0076 1 CONTRACT NO.: 05-330784

DISREGARD PRINTS BEARING EARLIER REVISION DATES

REVISION DATES: 06-03-14 07-31-14 10-01-14

SHEET 22 OF 28

FILE => 49-0262rl-u-st70-rail-4.dgn

USERNAME => s115755 DATE PLOTTED => 26-OCT-2015 TIME PLOTTED => 10:27

DIST	COUNTY	ROUTE	POST MILES TOTAL PROJECT	SHEET No.	TOTAL SHEETS
05	SLO	46	46.0/50.2	546	551

REGISTERED CIVIL ENGINEER 5-16-14 DATE

6-1-15
PLANS APPROVAL DATE

REGISTERED PROFESSIONAL ENGINEER Dan Appelbaum No. C50001 Exp. 6-30-15 CIVIL STATE OF CALIFORNIA

The State of California or its officers or agents must not be responsible for the accuracy or completeness of electronic copies of this plan sheet.

This LOTB sheet was prepared in accordance with the Caltrans Soil & Rock Logging, Classification, & Presentation Manual (2010 Edition).

See 2010 Standard Plans A10F and A10G for Soil Legend, and A10H for Rock Legend.

BENCH MARK

SLO 46 PM 48.33

Fnd 1" ip w/caltrans control pp
112.40' Lt "RTE46" Line ℄ Rte 46
Sta 1004+18.50
N 2,436,044.74
E 5,859,627.14
Elev = 1049.37 (NGVD29)

SLO 46 PM 48.36

Fnd 1"ip w/caltrans control pp
182.16' Lt "RTE46" Line ℄ Rte 46
Sta 1006+09.44
N 2,436,193.78
E 5,859,745.25
Elev = 1042.02 (NGVD29)

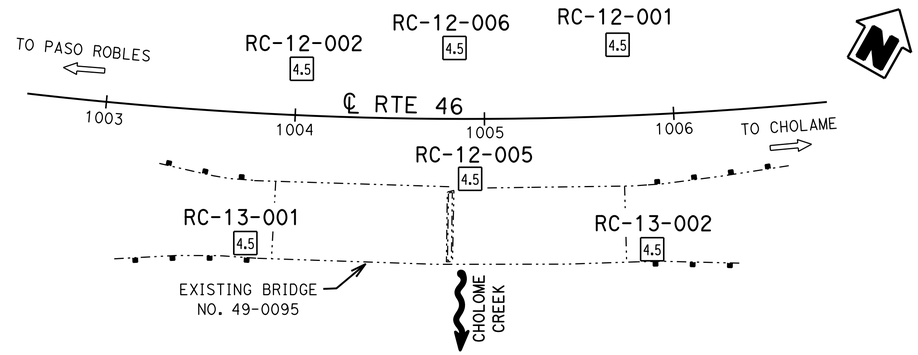

PLAN
1" = 40'

Note: Groundwater encountered but not measured.

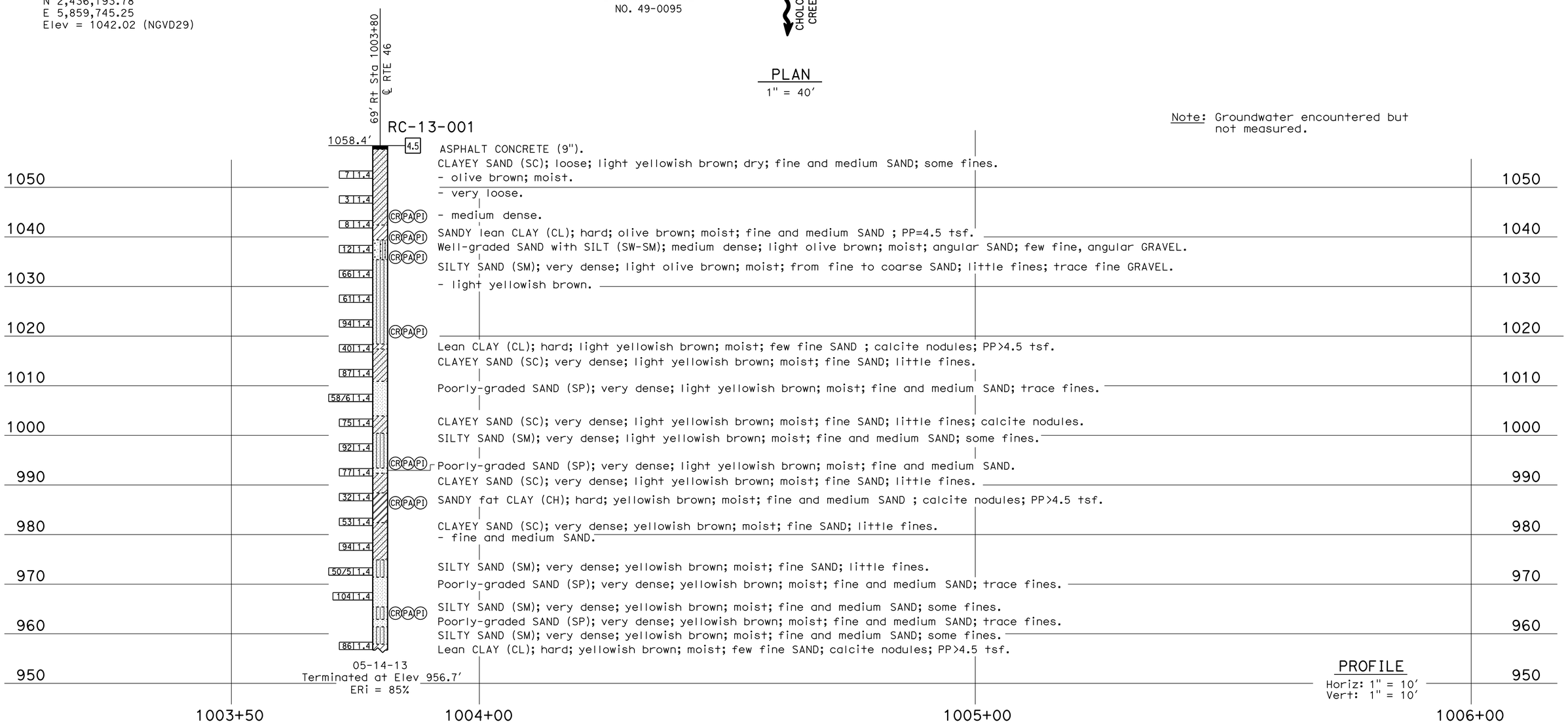

PROFILE
Horiz: 1" = 10'
Vert: 1" = 10'

ENGINEERING SERVICES	MATERIALS AND GEOTECHNICAL SERVICES	STATE OF CALIFORNIA DEPARTMENT OF TRANSPORTATION	DIVISION OF ENGINEERING SERVICES STRUCTURE DESIGN DESIGN BRANCH 6	BRIDGE NO. 49-0262 R/L POST MILE 48.3	CHOLAME CREEK BRIDGE LOG OF TEST BORINGS 1 OF 6
FUNCTIONAL SUPERVISOR NAME: M. Finegan	DRAWN BY: D. Appelbaum, I. G-Remmen CHECKED BY: J. Scardine	FIELD INVESTIGATION BY: D. Appelbaum			

OGS CIVIL LOG OF TEST BORINGS SHEET

ORIGINAL SCALE IN INCHES FOR REDUCED PLANS 0 1 2 3

UNIT: 3643
PROJECT NUMBER & PHASE: 05120000761 CONTRACT NO.: 05-330784

DISREGARD PRINTS BEARING EARLIER REVISION DATES

REVISION DATES				SHEET	OF
04-24-14	04-29-14			23	28

FILE => 49-0262rl-z-lotb-1.dgn

USERNAME => s115755 DATE PLOTTED => 26-OCT-2015 TIME PLOTTED => 10:27

DIST	COUNTY	ROUTE	POST MILES TOTAL PROJECT	SHEET No.	TOTAL SHEETS
05	SLO	46	46.0/50.2	547	551

REGISTERED CIVIL ENGINEER 5-16-14 DATE

6-1-15
PLANS APPROVAL DATE

REGISTERED PROFESSIONAL ENGINEER Dan Appelbaum No. C50001 Exp. 6-30-15 CIVIL STATE OF CALIFORNIA

The State of California or its officers or agents must not be responsible for the accuracy or completeness of electronic copies of this plan sheet.

This LOTB sheet was prepared in accordance with the Caltrans Soil & Rock Logging, Classification, & Presentation Manual (2010 Edition).

See 2010 Standard Plans A10F and A10G for Soil Legend, and A10H for Rock Legend.

FOR PLAN VIEW, SEE
"LOG OF TEST BORINGS 1 OF 6"

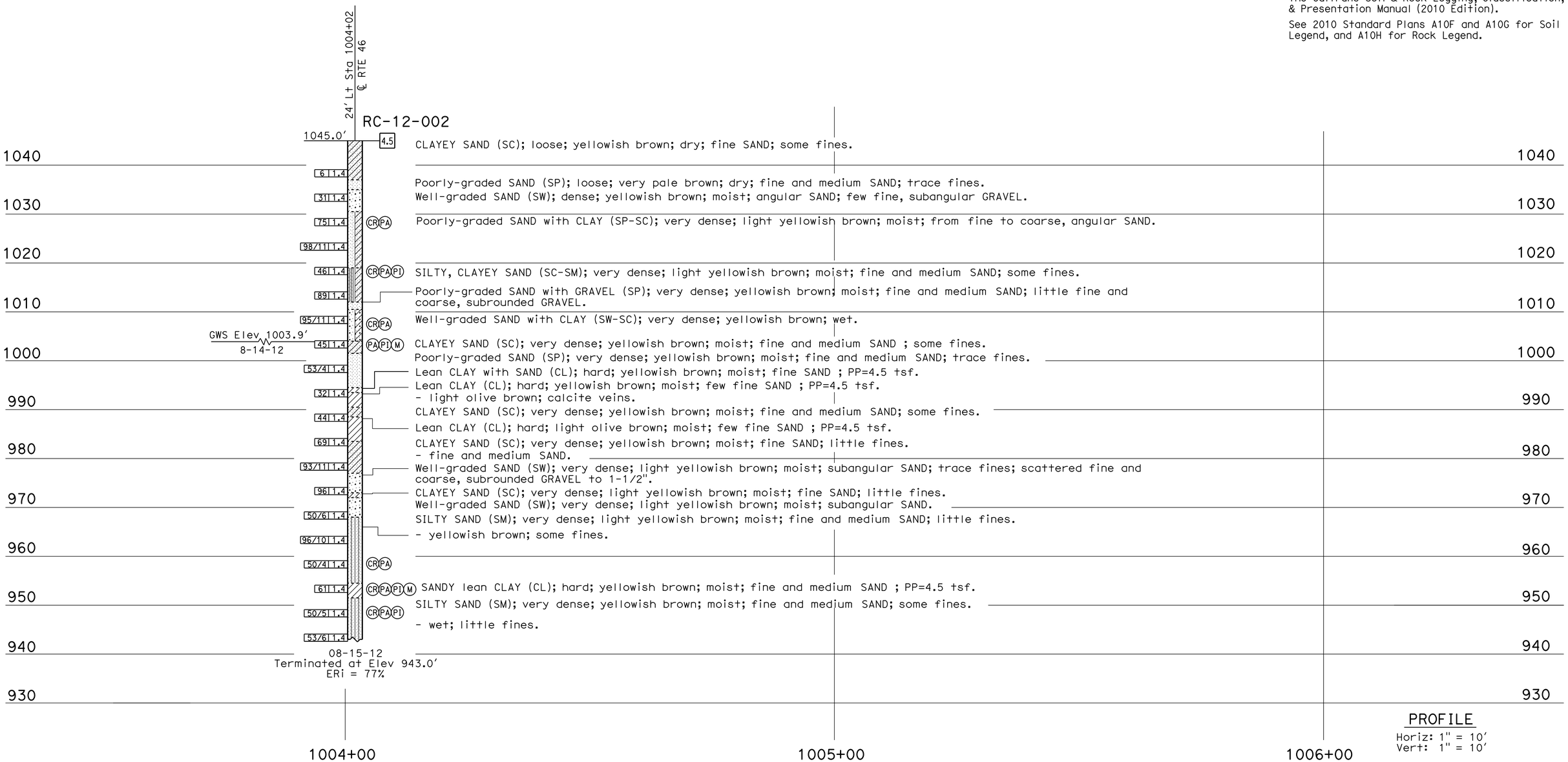

ENGINEERING SERVICES	MATERIALS AND GEOTECHNICAL SERVICES	STATE OF CALIFORNIA DEPARTMENT OF TRANSPORTATION	DIVISION OF ENGINEERING SERVICES STRUCTURE DESIGN DESIGN BRANCH 6	BRIDGE NO. 49-0262 R/L POST MILE 48.3	CHOLAME CREEK BRIDGE LOG OF TEST BORINGS 2 OF 6
FUNCTIONAL SUPERVISOR NAME: M. Finegan	DRAWN BY: D. Appelbaum, I. G-Remmen CHECKED BY: J. Scardine	FIELD INVESTIGATION BY: D. Appelbaum			

OGS CIVIL LOG OF TEST BORINGS SHEET

ORIGINAL SCALE IN INCHES FOR REDUCED PLANS 0 1 2 3

UNIT: 3643
PROJECT NUMBER & PHASE: 05120000761 CONTRACT NO.: 05-330784

DISREGARD PRINTS BEARING EARLIER REVISION DATES → REVISION DATES ~~04-24-14~~ 04-29-14 SHEET 24 OF 28

FILE => 49-0262rl-z-lotb-2.dgn

USERNAME => s115755 DATE PLOTTED => 26-OCT-2015 TIME PLOTTED => 10:27

FOR PLAN VIEW, SEE
"LOG OF TEST BORINGS 1 OF 6"

Note: Groundwater encountered but not measured.

37' Lt Sta 1004+84
℄ RTE 46

RC-12-006

1022.0' | 4.5

1020 — Well-graded SAND with GRAVEL (SW); loose; light gray; dry; subangular SAND; little fine, subrounded GRAVEL.

Well-graded SAND with CLAY and GRAVEL (SW-SC); medium dense; dark grayish brown; dry; subangular SAND; little fine and coarse, subrounded GRAVEL.

1010

1000 — CLAYEY SAND (SC); very dense; yellowish brown; moist; fine and medium SAND; some fines.

Poorly-graded SAND with CLAY (SP-SC); very dense; light yellowish brown; moist; fine and medium SAND; trace fine, angular GRAVEL.
- from fine to coarse, subangular SAND.

990 — Lean CLAY with SAND (CL) moderately bedded with moderate interbeds of Lean CLAY (CL). Lean CLAY with SAND; hard; yellowish brown; moist; fine SAND; PP>4.5 tsf. Lean CLAY; hard; yellowish brown; moist; calcite nodules; PP>4.5 tsf.

980

970 — CLAYEY SAND (SC); very dense; yellowish brown; moist; from fine to coarse, subangular SAND; some fines.
- fine and medium SAND.

Well-graded SAND with CLAY (SW-SC); very dense; yellowish brown; moist; angular SAND.

960 — CLAYEY SAND (SC); very dense; yellowish brown; moist; fine and medium SAND; some fines.

CLAYEY SAND (SC) moderately bedded with moderate interbeds of Lean CLAY (CL). CLAYEY SAND; very dense; yellowish brown; moist; fine and medium SAND; little fines. Lean CLAY; hard; yellowish brown; moist; few fine SAND; PP>4.5 tsf.

950 — Lean CLAY with SAND (CL); hard; yellowish brown; moist; fine SAND; PP>4.5 tsf.

SILTY SAND (SM); very dense; light yellowish brown; wet; fine and medium SAND; some fines.

940 — Well-graded SAND with CLAY (SW-SC); very dense; light yellowish brown; wet; subangular SAND.

Lean CLAY with SAND (CL); hard; yellowish brown; moist; fine SAND; PP>4.5 tsf.

SILTY SAND (SM); very dense; light yellowish brown; moist; fine SAND; some fines.

930 — Lean CLAY (CL); hard; yellowish brown; moist; PP=4.5 tsf.

CLAYEY SAND (SC); very dense; yellowish brown; moist; fine and medium SAND; little fines.

SILTY SAND (SM); very dense; light yellowish brown; moist; fine SAND; little fines.

Lean CLAY (CL); hard; yellowish brown; moist; trace fine SAND; PP>4.5 tsf.

920 — Lean CLAY with SAND (CL); hard; yellowish brown; moist; fine SAND; PP=4.5 tsf.

CLAYEY SAND (SC); very dense; yellowish brown; moist; fine SAND; some fines.

Poorly-graded SAND with CLAY (SP-SC); very dense; yellowish brown; moist; fine and medium SAND.
- from fine to coarse, angular SAND.

910 — SILTY, CLAYEY SAND (SC-SM); very dense; yellowish brown; moist; from fine to coarse, angular SAND; little fines; trace fine, angular GRAVEL.
- fine and medium SAND; some fines.

900 — - little fines.

Well-graded SAND with CLAY (SW-SC); very dense; yellowish brown; wet; angular SAND; trace fine, subrounded GRAVEL.

890 — SILTY SAND (SM); very dense; yellowish brown; moist; from fine to coarse, angular SAND; little fines.

Poorly-graded SAND with CLAY (SP-SC); very dense; yellowish brown; wet; fine and medium SAND.

880 — Lean CLAY (CL); hard; yellowish brown; moist; PP>4.5 tsf.

CLAYEY SAND (SC); very dense; yellowish brown; moist; fine and medium SAND; some fines.

Lean CLAY (CL); hard; yellowish brown; moist; PP>4.5 tsf.

870 — CLAYEY SAND (SC); very dense; yellowish brown; moist; fine SAND; little fines.

Lean CLAY (CL); hard; yellowish brown; moist; trace fine SAND; calcite nodules; PP=4.5 tsf.

860 — SANDY lean CLAY (CL); hard; yellowish brown; moist; fine SAND; PP>4.5 tsf.

CLAYEY SAND (SC) moderately bedded with thin interbeds of Lean CLAY (CL). CLAYEY SAND; very dense; yellowish brown; moist; fine SAND; some fines. Lean CLAY; hard; yellowish brown; moist; few fine SAND; PP>4.5 tsf.

850 — Well-graded SAND with CLAY (SW-SC) moderately bedded with moderate interbeds of CLAYEY SAND (SC). Well-graded SAND with CLAY; very dense; yellowish brown; moist; angular SAND. CLAYEY SAND; very dense; yellowish brown; moist; from fine to coarse, angular SAND; little fines.

840 — Well-graded SAND with CLAY (SW-SC); very dense; yellowish brown; moist; angular SAND; trace fine, subrounded GRAVEL.

830 — SANDY SILTY CLAY (CL-ML); hard; yellowish brown; moist; fine and medium SAND; PP>4.5 tsf.

820 — SILTY SAND (SM); very dense; yellowish brown; moist; fine SAND; some fines.

10-16-12
Terminated at Elev 821.6'
ERi = 81%

1004+80 — 1005+50

PROFILE
Horiz: 1" = 10'
Vert: 1" = 10'

This LOTB sheet was prepared in accordance with the Caltrans Soil & Rock Logging, Classification, & Presentation Manual (2010 Edition).
See 2010 Standard Plans A10F and A10G for Soil Legend, and A10H for Rock Legend.

DIST	COUNTY	ROUTE	POST MILES TOTAL PROJECT	SHEET NO.	TOTAL SHEETS
05	SLO	46	46.0/50.2	548	551

REGISTERED CIVIL ENGINEER 5-16-14 DATE

6-1-15
PLANS APPROVAL DATE

REGISTERED PROFESSIONAL ENGINEER
Dan Appelbaum
No. C50001
Exp. 6-30-15
CIVIL
STATE OF CALIFORNIA

The state of California or its officers or agents must not be responsible for the accuracy or completeness of electronic copies of this plan sheet.

ENGINEERING SERVICES
MATERIALS AND GEOTECHNICAL SERVICES

FUNCTIONAL SUPERVISOR
NAME: M. Finegan

DRAWN BY: D. Appelbaum, I. G-Remmen
CHECKED BY: J. Scardine

FIELD INVESTIGATION BY:
D. Appelbaum

STATE OF CALIFORNIA
DEPARTMENT OF TRANSPORTATION

DIVISION OF ENGINEERING SERVICES
STRUCTURE DESIGN
DESIGN BRANCH 6

BRIDGE NO. 49-0262 R/L
POST MILE 48.3

CHOLAME CREEK BRIDGE
LOG OF TEST BORINGS 3 OF 6

UNIT: 3643
PROJECT NUMBER & PHASE: 0512000076L
CONTRACT NO.: 05-330784

DISREGARD PRINTS BEARING EARLIER REVISION DATES
REVISION DATES 06-24-14 06-29-14

SHEET 25 OF 28

ORIGINAL SCALE IN INCHES FOR REDUCED PLANS 0 1 2 3

005 CIVIL LOG OF TEST BORINGS SHEET

FILE => 49-0262r1-2-lotb-3.dgn

USERNAME => s115755 DATE PLOTTED => 26-OCT-2015 TIME PLOTTED => 10:27

FOR PLAN VIEW, SEE
"LOG OF TEST BORINGS 1 OF 6"

Note: Groundwater encountered but not measured.

32' Rt Sta 1004+92
℄ RTE 46

RC-12-005

1021.0'

Elev	Blows	Description
1020	4.5	Well-graded SAND with SILT (SW-SM); loose; grayish brown; dry; subrounded SAND; few fine, subrounded GRAVEL.
	17 1.4	- medium dense.
1010	74/11 1.4	CLAYEY SAND (SC); very dense; light yellowish brown; dry; fine and medium SAND; some fines. CLAYEY SAND with GRAVEL (SC); very dense; grayish brown; dry; fine and medium SAND; some fines; little fine and coarse, subangular GRAVEL.
	70 1.4	SILTY SAND (SM); very dense; light yellowish brown; dry; fine and medium SAND; some fines.
1000	48 1.4	CLAYEY SAND (SC); very dense; yellowish brown; dry; fine and medium SAND; some fines.
	82 1.4	SILTY SAND (SM); very dense; yellowish brown; moist; from fine to coarse SAND; some fines.
990	33 1.4	Lean CLAY (CL) moderately bedded with moderate interbeds of SANDY lean CLAY (CL). Lean CLAY; hard; yellowish brown; moist; trace fine SAND; PP>4.5 tsf. SANDY lean CLAY; hard; light yellowish brown; moist; fine and medium SAND; PP>4.5 tsf.
	46 1.4	
980		
	78 1.4	CLAYEY SAND (SC); very dense; yellowish brown; moist; fine and medium SAND; some fines.
970	83/10 1.4	Poorly-graded SAND with SILT (SP-SM); very dense; yellowish brown; moist; from fine to coarse SAND; weak cementation.
	87/10 1.4	
960	CR PA PI 97/11 1.4	SILTY SAND (SM); very dense; yellowish brown; moist; fine and medium SAND; some fines; weak cementation.
	69 1.4	CLAYEY SAND (SC); very dense; yellowish brown; moist; fine and medium SAND; some fines.
950	58 1.4	SANDY lean CLAY (CL); hard; yellowish brown; moist; fine and medium SAND; PP>4.5 tsf.
	59/9 1.4	SILTY SAND (SM); very dense; yellowish brown; moist; fine and medium SAND; some fines; weak cementation.
940	50/4 1.4	- fine SAND.
	CR PA PI REF 1.4	- fine and medium SAND; little fines. - fine SAND; weak cementation. SANDY lean CLAY (CL); hard; yellowish brown; moist; fine SAND; PP>4.5 tsf.
930	REF 1.4	Well-graded SAND (SW); very dense; brown; moist; subangular SAND; trace fines. - trace fine, subrounded GRAVEL.
	76/9 1.4	Lean CLAY (CL); hard; yellowish brown; moist; few fine SAND; PP>4.5 tsf. CLAYEY SAND (SC); very dense; light yellowish brown; moist; fine SAND; some fines.
920	50/5 1.4	Lean CLAY (CL); hard; yellowish brown; moist; few fine SAND; PP>4.5 tsf. CLAYEY SAND (SC); very dense; light yellowish brown; moist; fine SAND; little fines.
910	REF 1.4	Poorly-graded SAND with CLAY (SP-SC); very dense; light yellowish brown; moist; from fine to coarse, subangular SAND. CLAYEY SAND (SC); very dense; light yellowish brown; moist; fine and medium SAND; some fines. Lean CLAY (CL); hard; yellowish brown; moist; few fine SAND; PP>4.5 tsf.
900	REF 1.4	SILTY SAND (SM); very dense; light yellowish brown; moist; fine and medium SAND; some fines. - little fines.
890	CR PA PI REF 1.4	
880	50/2 1.4	- trace fine, subangular GRAVEL. - weakly cemented with calcite.
870		- not cemented. - wet.
860	83 1.4	Lean CLAY (CL); hard; yellowish brown; moist; few fine SAND; PP>4.5 tsf. - calcite nodules. Lean CLAY with SAND (CL); hard; yellowish brown; moist; fine SAND; PP>4.5 tsf.
850		CLAYEY SAND (SC); very dense; yellowish brown; moist; fine SAND; some fines. - little fines. Poorly-graded SAND with CLAY (SP-SC); very dense; yellowish brown; moist; fine and medium SAND.
840	REF 1.4	CLAYEY SAND (SC); very dense; yellowish brown; moist; fine SAND; some fines. SILTY SAND (SM); very dense; light yellowish brown; moist; from fine to coarse, subangular SAND; little fines; trace fine, angular GRAVEL.
830	CR PA PI	Poorly-graded SAND (SP); very dense; light yellowish brown; moist; medium and coarse, angular SAND; few fine, angular GRAVEL. Well-graded SAND with CLAY (SW-SC); very dense; light yellowish brown; moist; angular SAND.
820		CLAYEY SAND (SC); very dense; light yellowish brown; moist; from fine to coarse, angular SAND; some fines. Well-graded SAND with CLAY (SW-SC); very dense; light yellowish brown; moist; angular SAND.

10-09-12
Terminated at Elev 820.8'
ERi = 81%

PROFILE
Horiz: 1" = 10'
Vert: 1" = 10'

1005+00 1006+00

This LOTB sheet was prepared in accordance with the Caltrans Soil & Rock Logging, Classification, & Presentation Manual (2010 Edition). See 2010 Standard Plans A10F and A10G for Soil Legend, and A10H for Rock Legend.

REGISTERED CIVIL ENGINEER 5-16-14 DATE

6-1-15
PLANS APPROVAL DATE

REGISTERED PROFESSIONAL ENGINEER
Dan Appelbaum
No. C50001
Exp. 6-30-15
CIVIL
STATE OF CALIFORNIA

The state of California or its officers or agents must not be responsible for the accuracy or completeness of electronic copies of this plan sheet.

DIST	COUNTY	ROUTE	POST MILES TOTAL PROJECT	SHEET NO.	TOTAL SHEETS
05	SLO	46	46.0/50.2	549	551

ENGINEERING SERVICES
MATERIALS AND GEOTECHNICAL SERVICES

FUNCTIONAL SUPERVISOR
NAME: M. Finegan

DRAWN BY: D. Appelbaum, I. G-Remmen
CHECKED BY: J. Scardine

FIELD INVESTIGATION BY:
D. Appelbaum, R. Turner

ORIGINAL SCALE IN INCHES FOR REDUCED PLANS 0 1 2 3

STATE OF CALIFORNIA
DEPARTMENT OF TRANSPORTATION

DIVISION OF ENGINEERING SERVICES
STRUCTURE DESIGN
DESIGN BRANCH 6

BRIDGE NO. 49-0262 R/L
POST MILE 48.3

CHOLAME CREEK BRIDGE
LOG OF TEST BORINGS 4 OF 6

UNIT: 3643
PROJECT NUMBER & PHASE: 0512000076L
CONTRACT NO.: 05-330784

DISREGARD PRINTS BEARING EARLIER REVISION DATES

REVISION DATES 06-24-14 04-29-14

SHEET 26 OF 28

005 CIVIL LOG OF TEST BORINGS SHEET

FILE => 49-0262r1-2-lotb-4.dgn

USERNAME => s115755 DATE PLOTTED => 26-OCT-2015 TIME PLOTTED => 10:27

DIST	COUNTY	ROUTE	POST MILES TOTAL PROJECT	SHEET No.	TOTAL SHEETS
05	SLO	46	46.0/50.2	550	551

REGISTERED CIVIL ENGINEER — DATE 5-16-14

6-1-15
PLANS APPROVAL DATE

REGISTERED PROFESSIONAL ENGINEER — Dan Appelbaum — No. C50001 — Exp. 6-30-15 — CIVIL — STATE OF CALIFORNIA

The State of California or its officers or agents must not be responsible for the accuracy or completeness of electronic copies of this plan sheet.

This LOTB sheet was prepared in accordance with the Caltrans Soil & Rock Logging, Classification, & Presentation Manual (2010 Edition).

See 2010 Standard Plans A10F and A10G for Soil Legend, and A10H for Rock Legend.

FOR PLAN VIEW, SEE
"LOG OF TEST BORINGS 1 OF 6"

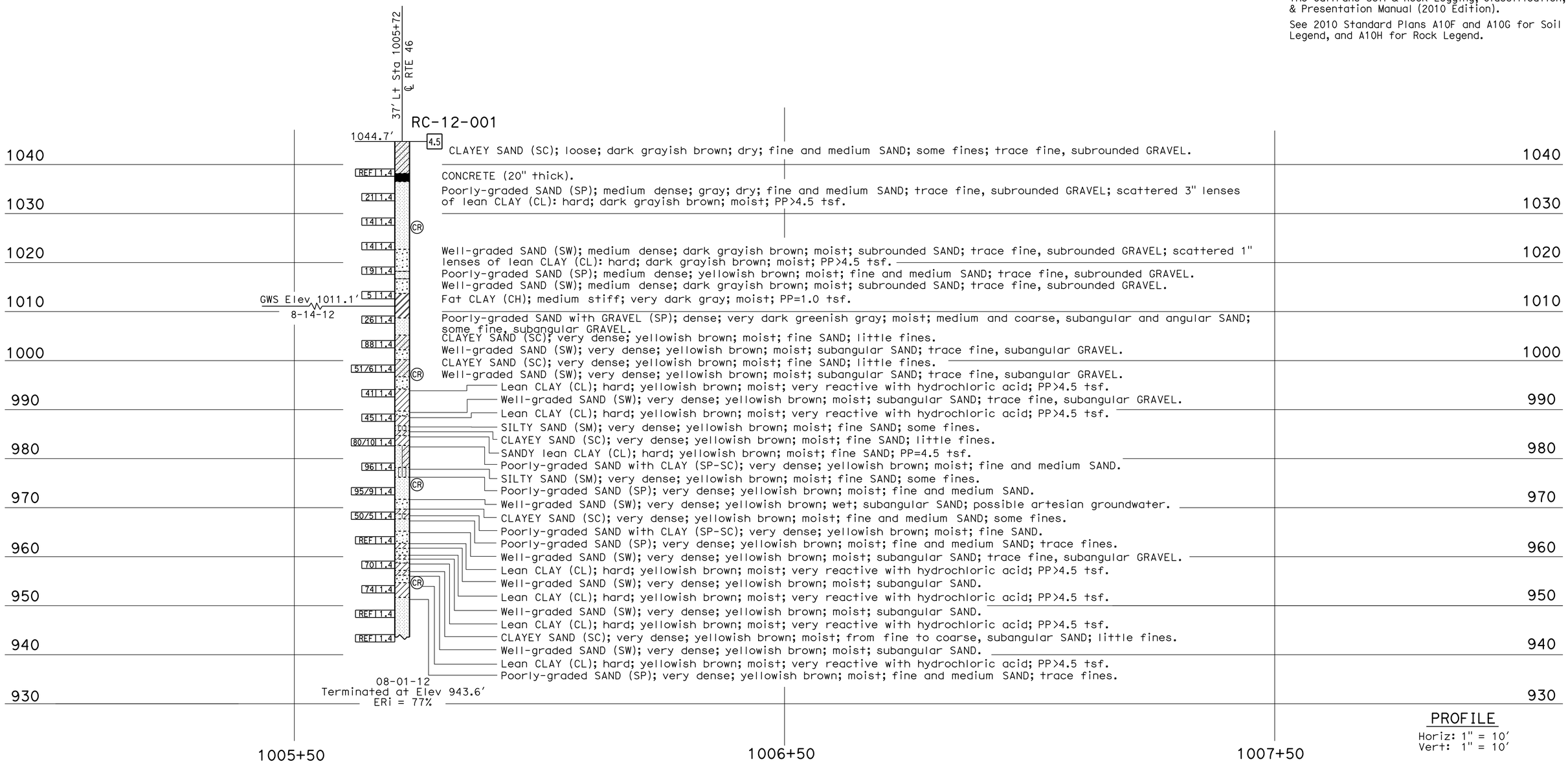

ENGINEERING SERVICES	MATERIALS AND GEOTECHNICAL SERVICES	STATE OF CALIFORNIA DEPARTMENT OF TRANSPORTATION	DIVISION OF ENGINEERING SERVICES STRUCTURE DESIGN DESIGN BRANCH 6	BRIDGE NO. 49-0262 R/L POST MILE 48.3	CHOLAME CREEK BRIDGE LOG OF TEST BORINGS 5 OF 6
FUNCTIONAL SUPERVISOR NAME: M. Finegan	DRAWN BY: D. Appelbaum, I. G-Remmen CHECKED BY: J. Scardine	FIELD INVESTIGATION BY: D. Appelbaum			

OGS CIVIL LOG OF TEST BORINGS SHEET — ORIGINAL SCALE IN INCHES FOR REDUCED PLANS 0 1 2 3 — UNIT: 3643 — PROJECT NUMBER & PHASE: 05120000761 — CONTRACT NO.: 05-330784 — DISREGARD PRINTS BEARING EARLIER REVISION DATES — REVISION DATES ~~04-24-14~~ 04-29-14 — SHEET 27 OF 28

FILE => 49-0262rl-z-lotb-5.dgn

USERNAME => s115755 DATE PLOTTED => 26-OCT-2015 TIME PLOTTED => 10:27

DIST	COUNTY	ROUTE	POST MILES TOTAL PROJECT	SHEET No.	TOTAL SHEETS
05	SLO	46	46.0/50.2	551	551

REGISTERED CIVIL ENGINEER — DATE 5-16-14

6-1-15
PLANS APPROVAL DATE

REGISTERED PROFESSIONAL ENGINEER — Dan Appelbaum — No. C50001 — Exp. 6-30-15 — CIVIL — STATE OF CALIFORNIA

The State of California or its officers or agents must not be responsible for the accuracy or completeness of electronic copies of this plan sheet.

This LOTB sheet was prepared in accordance with the Caltrans Soil & Rock Logging, Classification, & Presentation Manual (2010 Edition).

See 2010 Standard Plans A10F and A10G for Soil Legend, and A10H for Rock Legend.

FOR PLAN VIEW, SEE
"LOG OF TEST BORINGS 1 OF 6"

Note: Groundwater encountered but not measured.

71' Rt Sta 1005+85
℄ RTE 46

RC-13-002

1054.3

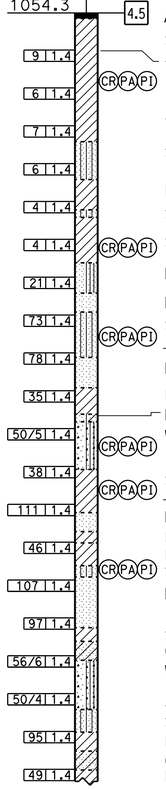

ASPHALT CONCRETE (9").
SANDY lean CLAY (CL); very stiff; light yellowish brown; dry; fine and medium SAND; PP=3.0 tsf.
- moist.
- olive brown; PP=2.75 tsf.
SILTY SAND (SM); loose; gray; moist; fine and medium SAND; little fines.
Lean CLAY (CL); very stiff; gray; moist; PP=3.0 tsf.
SILTY SAND (SM); loose; gray; moist; fine and medium SAND; little fines.
SANDY lean CLAY (CL); stiff; gray; moist; fine and medium SAND; PP=1.5 tsf.
Poorly-graded SAND with SILT (SP-SM); medium dense; light olive brown; wet; fine and medium SAND.
Poorly-graded SAND (SP); dense; light olive brown; wet; fine and medium SAND; trace fine, subrounded GRAVEL.
SILTY SAND (SM); very dense; yellowish brown; moist; fine and medium SAND; some fines.
Poorly-graded SAND (SP); very dense; gray; moist; fine and medium SAND; trace fines.
Lean CLAY with SAND (CL); hard; yellowish brown; moist; fine SAND; calcite nodules; PP>4.5 tsf.
Poorly-graded SAND with CLAY (SP-SC); very dense; yellowish brown; moist; fine and medium SAND.
Well-graded SAND with SILT (SW-SM); very dense; brownish yellow; moist; subrounded SAND; trace fine, subrounded GRAVEL.
SANDY lean CLAY (CL); hard; yellowish brown; moist; fine and medium SAND; PP>4.5 tsf.
Poorly-graded SAND (SP); very dense; yellowish brown; moist; fine and medium SAND.
Lean CLAY (CL); hard; yellowish brown; moist; trace fine SAND; calcite nodules; PP>4.5 tsf.
Lean CLAY with SAND (CL); hard; yellowish brown; moist; fine SAND; calcite nodules; PP>4.5 tsf.
SILTY SAND (SM); very dense; yellowish brown; moist; from fine to coarse SAND; some fines.
Poorly-graded SAND (SP); very dense; yellowish brown; moist; fine and medium SAND; trace fines.
SANDY lean CLAY (CL); hard; yellowish brown; moist; fine and medium SAND; PP>4.5 tsf.
CLAYEY SAND (SC); very dense; yellowish brown; moist; fine and medium SAND; little fines.
Well-graded SAND with SILT (SW-SM); very dense; yellowish brown; moist; subangular SAND; trace fine, subangular GRAVEL.
- few fine and coarse, subangular GRAVEL.
SILTY SAND (SM); very dense; yellowish brown; moist; fine and medium SAND; some fines.
Lean CLAY (CL); hard; yellowish brown; moist; trace fine SAND; PP>4.5 tsf.
CLAYEY SAND (SC); very dense; yellowish brown; moist; fine and medium SAND; little fines.
Lean CLAY (CL); hard; yellowish brown; moist; few fine SAND; PP>4.5 tsf.

05-15-13
Terminated at Elev 952.8'
ERi = 85%

1050 1040 1030 1020 1010 1000 990 980 970 960 950

1005+00 1006+00 1007+00

PROFILE
Horiz: 1" = 10'
Vert: 1" = 10'

ENGINEERING SERVICES	MATERIALS AND GEOTECHNICAL SERVICES	STATE OF CALIFORNIA DEPARTMENT OF TRANSPORTATION	DIVISION OF ENGINEERING SERVICES STRUCTURE DESIGN DESIGN BRANCH 6	BRIDGE NO. 49-0262 R/L POST MILE 48.3	CHOLAME CREEK BRIDGE LOG OF TEST BORINGS 6 OF 6
FUNCTIONAL SUPERVISOR NAME: M. Finegan	DRAWN BY: D. Appelbaum, I. G-Remmen CHECKED BY: J. Scardine	FIELD INVESTIGATION BY: D. Appelbaum			

OGS CIVIL LOG OF TEST BORINGS SHEET — ORIGINAL SCALE IN INCHES FOR REDUCED PLANS 0 1 2 3

UNIT: 3643
PROJECT NUMBER & PHASE: 05120000761 — CONTRACT NO.: 05-330784

DISREGARD PRINTS BEARING EARLIER REVISION DATES — REVISION DATES ~~04-24-14~~ 04-29-14 — SHEET 28 OF 28

FILE => 49-0262rl-z-lotb-6.dgn

USERNAME => s115755 DATE PLOTTED => 26-OCT-2015 TIME PLOTTED => 10:27