Dist	COUNTY	ROUTE	POST MILES TOTAL PROJECT	SHEET No.	TOTAL SHEETS
06	Fre	41	R30.7/R31.7	1	42

SARRAE-P041(115)E

STATE OF CALIFORNIA
DEPARTMENT OF TRANSPORTATION

PROJECT PLANS FOR CONSTRUCTION ON
STATE HIGHWAY
IN FRESNO COUNTY
IN FRESNO
FROM 0.3 MILE NORTH OF HERNDON AVENUE UNDERCROSSING TO FRIANT ROAD UNDERCROSSING

TO BE SUPPLEMENTED BY STANDARD PLANS DATED MAY 2006

INDEX OF PLANS

SHEET No.	DESCRIPTION
1	TITLE AND LOCATION MAP
2-6	LAYOUTS PLANS
7-9	CONSTRUCTION DETAILS
10	CONSTRUCTION AREA SIGNS
11	SUMMARY OF QUANTITIES
12	PLANT LIST
13-18	PLANTING PLANS
19-24	IRRIGATION PLANS
25-26	LANDSCAPE DETAILS
27-30	IRRIGATION QUANTITIES
31-42	REVISED AND NEW STANDARD PLANS

THE STANDARD PLANS LIST APPLICABLE TO THIS CONTRACT IS INCLUDED IN THE NOTICE TO BIDDERS AND SPECIAL PROVISIONS BOOK.

LOCATION MAP

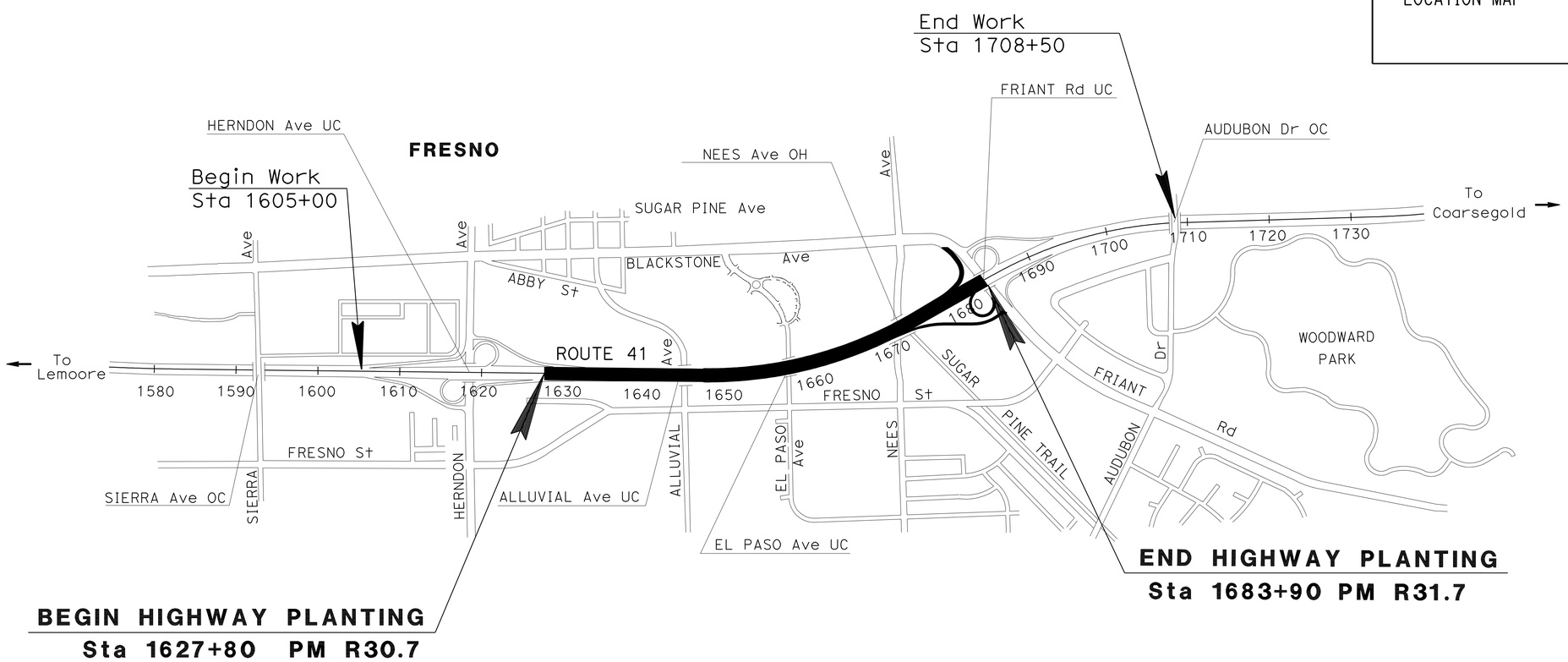

PROJECT MANAGER: ABDUL EL-DAHABI

SENIOR LANDSCAPE ARCHITECT: ELBERT COX

Michael W. Mills
LICENSED LANDSCAPE ARCHITECT

November 30, 2009
PLANS APPROVAL DATE

LICENSED LANDSCAPE ARCHITECT — MICHAEL W. MILLS No. 4770 — SIGNATURE — 11/30/10 EXPIRATION DATE — 06/18/09 DATE — STATE OF CALIFORNIA

THE STATE OF CALIFORNIA OR ITS OFFICERS OR AGENTS SHALL NOT BE RESPONSIBLE FOR THE ACCURACY OR COMPLETENESS OF SCANNED COPIES OF THIS PLAN SHEET.

THE CONTRACTOR SHALL POSSESS THE CLASS (OR CLASSES) OF LICENSE AS SPECIFIED IN THE "NOTICE TO BIDDERS."

NO SCALE

CONTRACT No. 06-0A4904

LAST REVISION 06-18-09 | DATE PLOTTED => 10-FEB-2010 | TIME PLOTTED => 05:54

Dist	COUNTY	ROUTE	POST MILES TOTAL PROJECT	SHEET No.	TOTAL SHEETS
06	Fre	41	R30.7/R31.7	2	42

LICENSED LANDSCAPE ARCHITECT

11-30-09
PLANS APPROVAL DATE

LICENSED LANDSCAPE ARCHITECT
MICHAEL W. MILLS No. 4770
Expiration 11/30/10
Renewal Date 06/18/09
Date
STATE OF CALIFORNIA

THE STATE OF CALIFORNIA OR ITS OFFICERS OR AGENTS SHALL NOT BE RESPONSIBLE FOR THE ACCURACY OR COMPLETENESS OF SCANNED COPIES OF THIS PLAN SHEET.

NOTE: FOR ACCURATE RIGHT OF WAY AND ACCESS DATA, CONTACT RIGHT OF WAY ENGINEERING AT THE DISTRICT OFFICE.

LEGEND

- (E) PLANTING TO REMAIN (NOT TO BE DISTURBED)
- MAINTENANCE VEHICLE PAD (ROCK) (MVPR)
- TEMPORARY DRAINAGE INLET PROTECTION
- MINOR CONCRETE (TEXTURED PAVING)

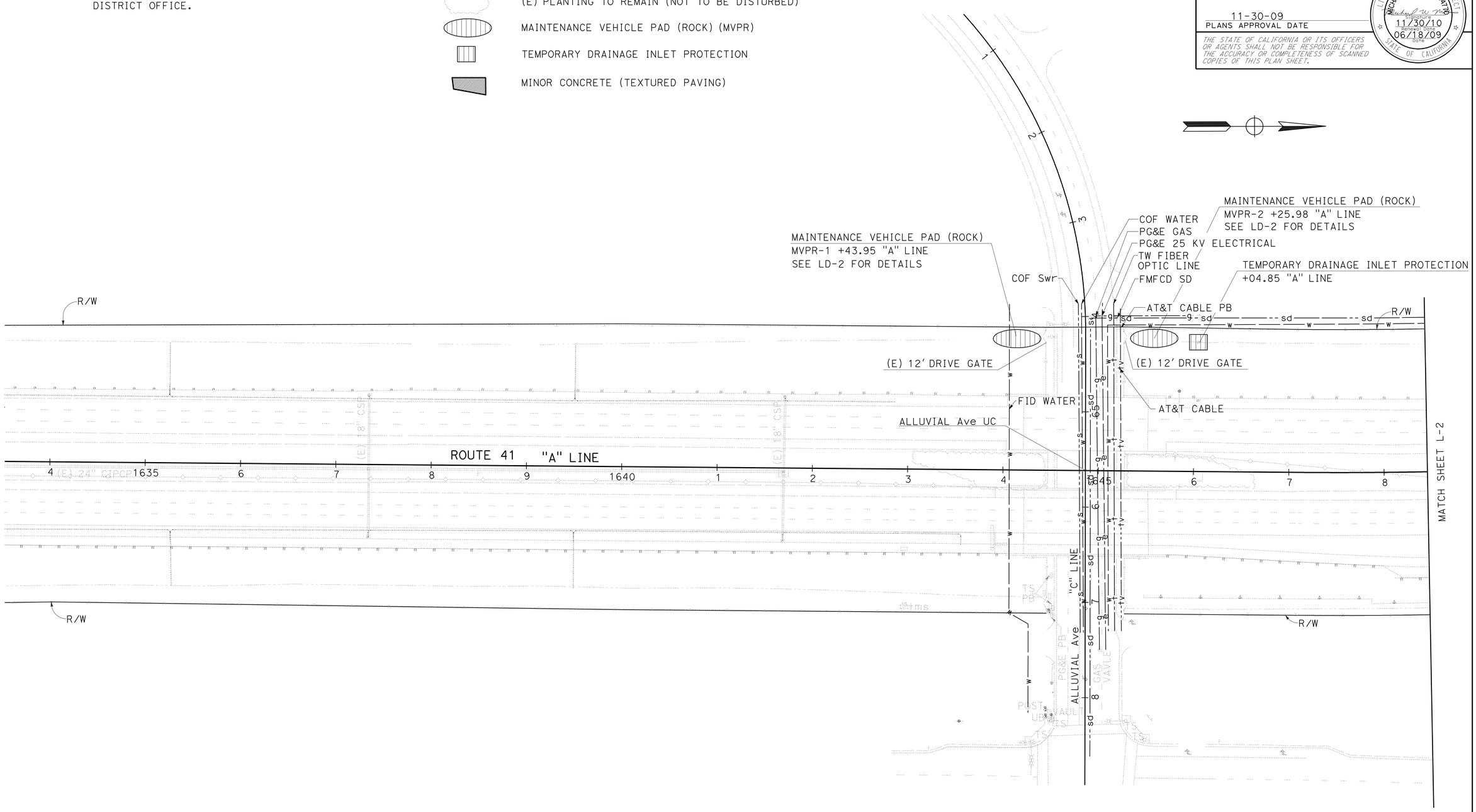

SCALE: 1"=50'

LAYOUT L-1

STATE OF CALIFORNIA - DEPARTMENT OF TRANSPORTATION
Caltrans® LANDSCAPE ARCHITECTURE

SENIOR LANDSCAPE ARCHITECT: ELBERT COX
CALCULATED-DESIGNED BY: MICHAEL MILLS
CHECKED BY: KEVIN GALLO
REVISED BY
DATE REVISED

LAST REVISION 06-18-09
DATE PLOTTED => 03-DEC-2009
TIME PLOTTED => 13:31

Dist	COUNTY	ROUTE	POST MILES TOTAL PROJECT	SHEET No.	TOTAL SHEETS
06	Fre	41	R30.7/R31.7	3	42

LICENSED LANDSCAPE ARCHITECT

11-30-09
PLANS APPROVAL DATE

LICENSED LANDSCAPE ARCHITECT
MICHAEL W. MILLS No. 4170
Signature
11/30/10
Renewal Date
06/18/09
Date
STATE OF CALIFORNIA

THE STATE OF CALIFORNIA OR ITS OFFICERS OR AGENTS SHALL NOT BE RESPONSIBLE FOR THE ACCURACY OR COMPLETENESS OF SCANNED COPIES OF THIS PLAN SHEET.

NOTE: FOR ACCURATE RIGHT OF WAY AND ACCESS DATA, CONTACT RIGHT OF WAY ENGINEERING AT THE DISTRICT OFFICE.

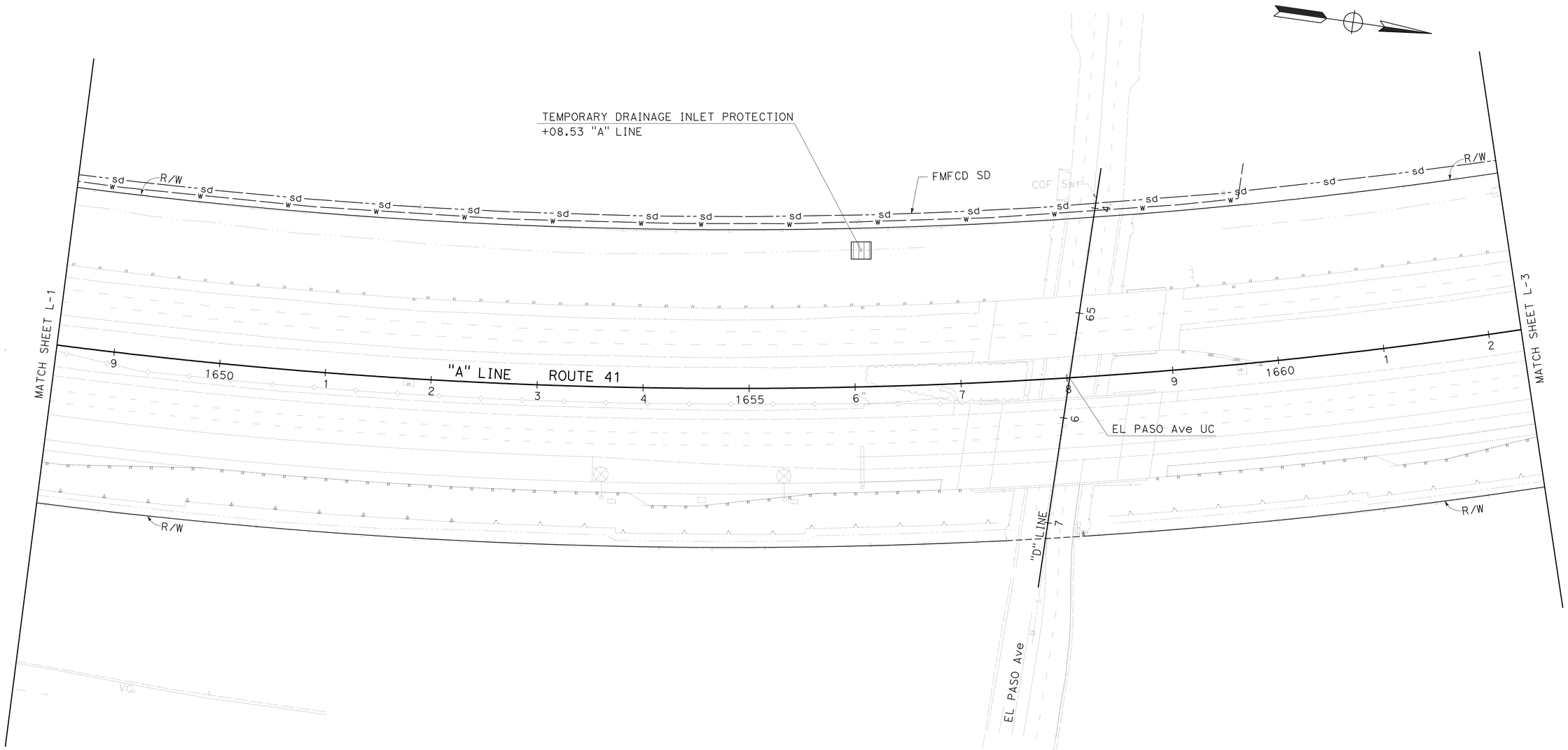

SCALE: 1"=50'

LAYOUT
L-2

REVISED BY	DATE REVISED

CALCULATED-DESIGNED BY	CHECKED BY
MICHAEL MILLS	KEVIN GALLO

SENIOR LANDSCAPE ARCHITECT
ELBERT COX

STATE OF CALIFORNIA - DEPARTMENT OF TRANSPORTATION
Caltrans® LANDSCAPE ARCHITECTURE

LAST REVISION 06-18-09
DATE PLOTTED => 03-DEC-2009
TIME PLOTTED => 13:31

Dist	COUNTY	ROUTE	POST MILES TOTAL PROJECT	SHEET No.	TOTAL SHEETS
06	Fre	41	R30.7/R31.7	4	42

LICENSED LANDSCAPE ARCHITECT

11-30-09
PLANS APPROVAL DATE

LICENSED LANDSCAPE ARCHITECT MICHAEL W. MILLS No. 4770 Expiration 11/30/10 Renewal Date 06/18/09 Date STATE OF CALIFORNIA

THE STATE OF CALIFORNIA OR ITS OFFICERS OR AGENTS SHALL NOT BE RESPONSIBLE FOR THE ACCURACY OR COMPLETENESS OF SCANNED COPIES OF THIS PLAN SHEET.

NOTE: FOR ACCURATE RIGHT OF WAY AND ACCESS DATA, CONTACT RIGHT OF WAY ENGINEERING AT THE DISTRICT OFFICE.

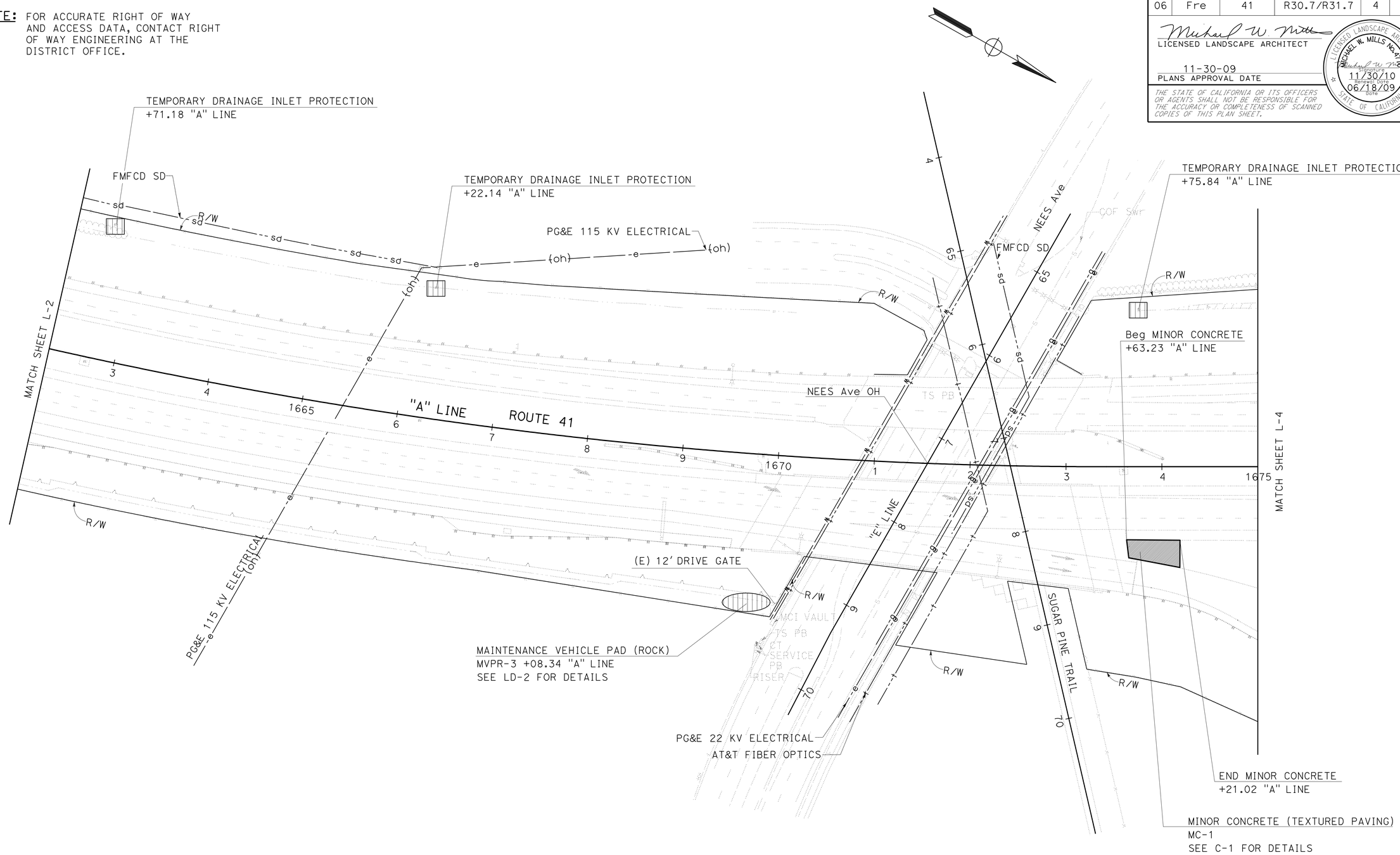

SCALE: 1"=50'

LAYOUT L-3

STATE OF CALIFORNIA - DEPARTMENT OF TRANSPORTATION
Caltrans LANDSCAPE ARCHITECTURE

SENIOR LANDSCAPE ARCHITECT: ELBERT COX
CHECKED BY
CALCULATED-DESIGNED BY: KEVIN GALLO
REVISED BY: MICHAEL MILLS
DATE REVISED

LAST REVISION 06-18-09
DATE PLOTTED => 03-DEC-2009
TIME PLOTTED => 13:31

Dist	COUNTY	ROUTE	POST MILES TOTAL PROJECT	SHEET No.	TOTAL SHEETS
06	Fre	41	R30.7/R31.7	5	42

LICENSED LANDSCAPE ARCHITECT

11-30-09
PLANS APPROVAL DATE

LICENSED LANDSCAPE ARCHITECT
MICHAEL W. MILLS No. 4770
Expiration 11/30/10
Renewal Date 06/18/09
Date
STATE OF CALIFORNIA

THE STATE OF CALIFORNIA OR ITS OFFICERS OR AGENTS SHALL NOT BE RESPONSIBLE FOR THE ACCURACY OR COMPLETENESS OF SCANNED COPIES OF THIS PLAN SHEET.

NOTE: FOR ACCURATE RIGHT OF WAY AND ACCESS DATA, CONTACT RIGHT OF WAY ENGINEERING AT THE DISTRICT OFFICE.

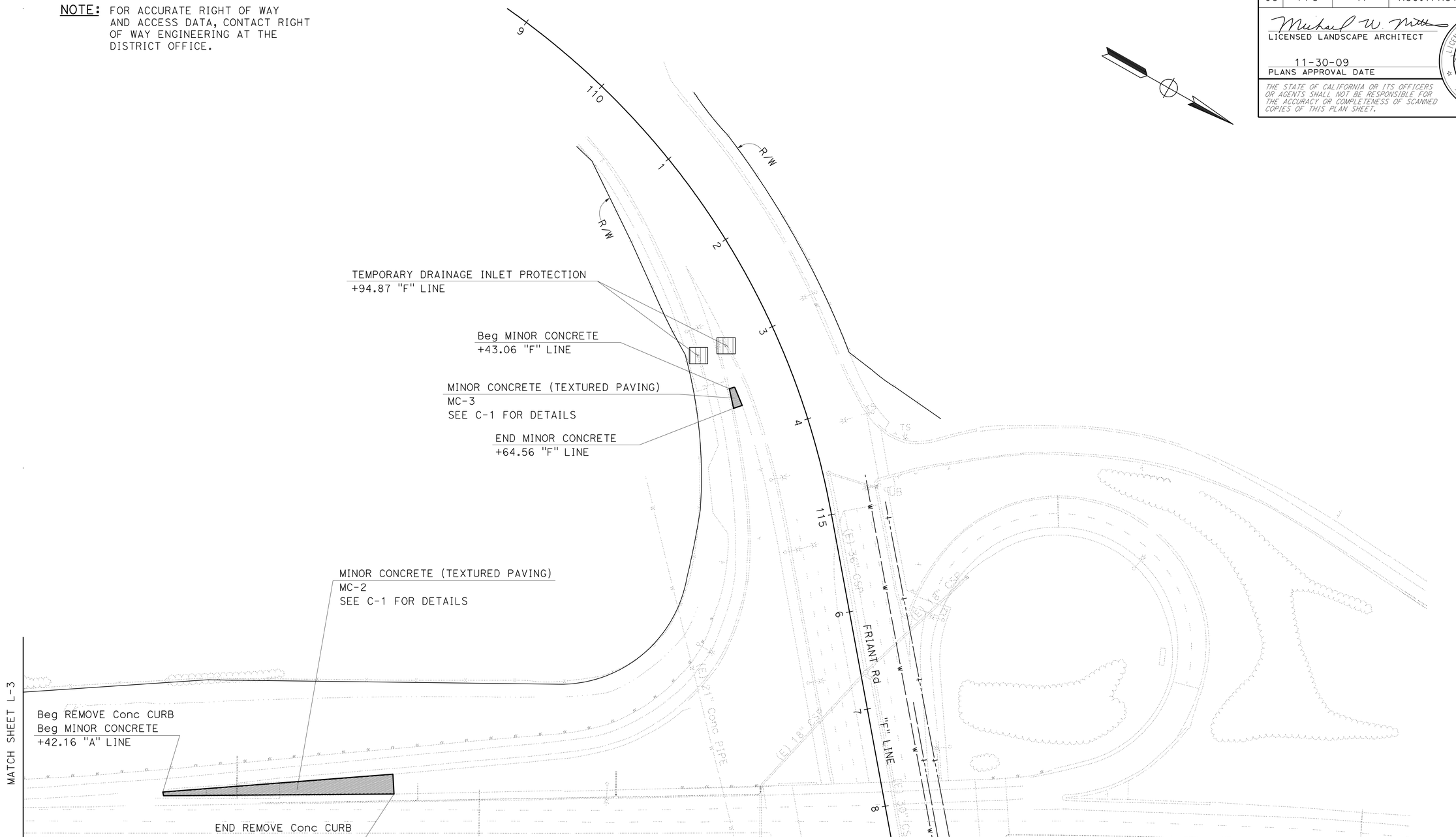

SCALE: 1"=50'

LAYOUT L-4

STATE OF CALIFORNIA - DEPARTMENT OF TRANSPORTATION
Caltrans® LANDSCAPE ARCHITECTURE

SENIOR LANDSCAPE ARCHITECT: ELBERT COX
CALCULATED-DESIGNED BY: MICHAEL MILLS
CHECKED BY: KEVIN GALLO
REVISED BY
DATE REVISED

LAST REVISION 06-18-09
DATE PLOTTED => 03-DEC-2009
TIME PLOTTED => 13:31

Dist	COUNTY	ROUTE	POST MILES TOTAL PROJECT	SHEET No.	TOTAL SHEETS
06	Fre	41	R30.7/R31.7	6	42

Michael W. Mills
LICENSED LANDSCAPE ARCHITECT

11-30-09
PLANS APPROVAL DATE

LICENSED LANDSCAPE ARCHITECT
MICHAEL W. MILLS No. 4170
Signature
11/30/10
Renewal Date
06/18/09
Date
STATE OF CALIFORNIA

THE STATE OF CALIFORNIA OR ITS OFFICERS OR AGENTS SHALL NOT BE RESPONSIBLE FOR THE ACCURACY OR COMPLETENESS OF SCANNED COPIES OF THIS PLAN SHEET.

NOTE: FOR ACCURATE RIGHT OF WAY AND ACCESS DATA, CONTACT RIGHT OF WAY ENGINEERING AT THE DISTRICT OFFICE.

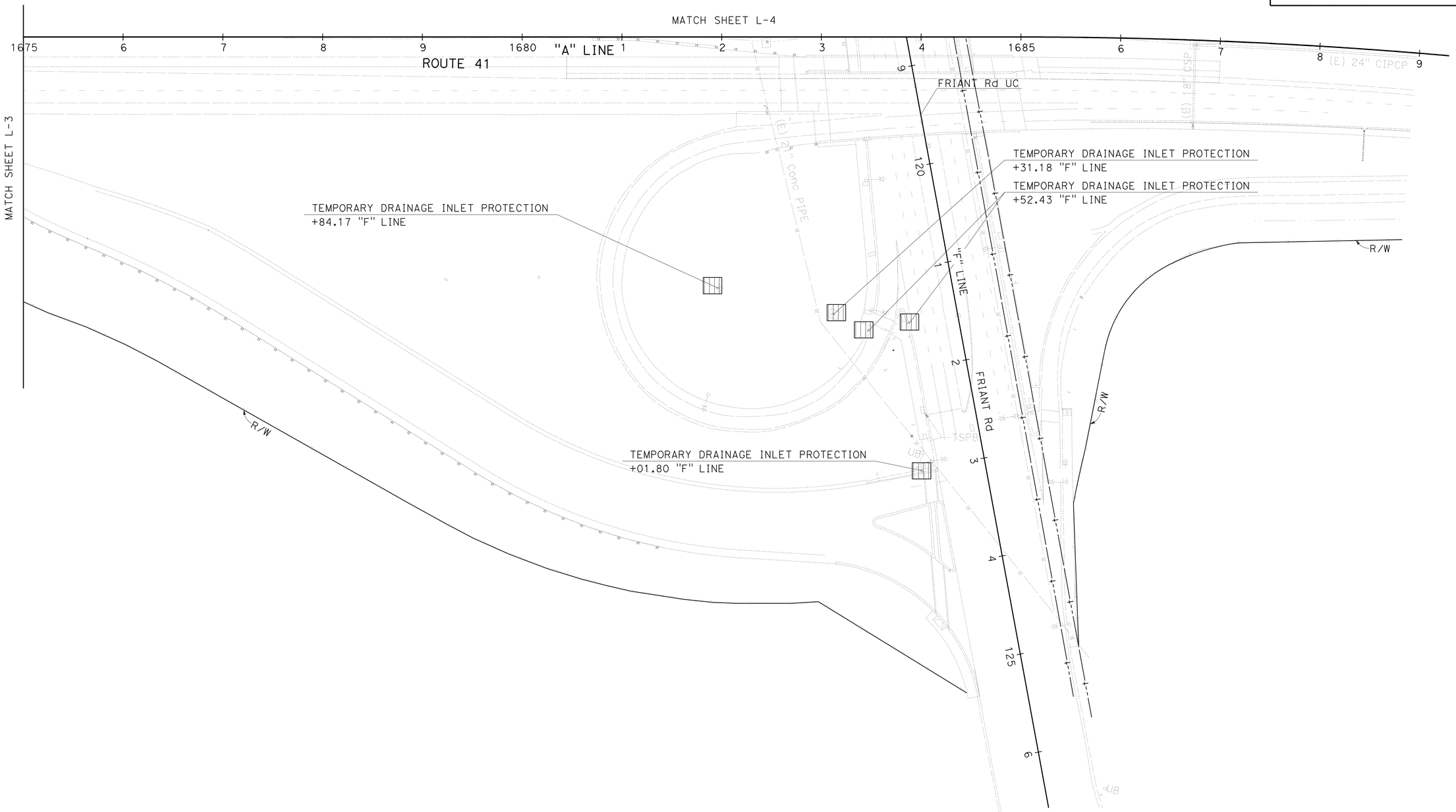

SCALE: 1"=50'

LAYOUT L-5

MICHAEL MILLS	REVISED BY
KEVIN GALLO	DATE REVISED
CALCULATED-DESIGNED BY	
CHECKED BY	
SENIOR LANDSCAPE ARCHITECT	
ELBERT COX	

STATE OF CALIFORNIA - DEPARTMENT OF TRANSPORTATION
Caltrans® LANDSCAPE ARCHITECTURE

LAST REVISION 06-18-09
DATE PLOTTED => 03-DEC-2009
TIME PLOTTED => 13:31

Dist	COUNTY	ROUTE	POST MILES TOTAL PROJECT	SHEET No.	TOTAL SHEETS
06	Fre	41	R30.7/R31.7	7	42

REGISTERED CIVIL ENGINEER 6-18-09 DATE

11-30-09
PLANS APPROVAL DATE

REGISTERED PROFESSIONAL ENGINEER MICHAEL S. BETTEGA No. C 34348 Exp. 9/30/09 CIVIL STATE OF CALIFORNIA

THE STATE OF CALIFORNIA OR ITS OFFICERS OR AGENTS SHALL NOT BE RESPONSIBLE FOR THE ACCURACY OR COMPLETENESS OF SCANNED COPIES OF THIS PLAN SHEET.

NOTE: 6" x 6" - MW9 x MW9 (STEEL MESH)

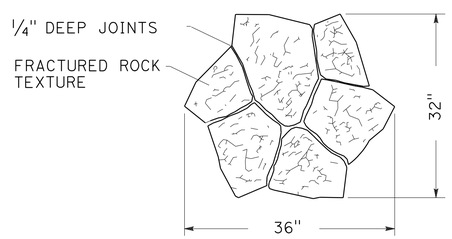

PLAN
STAMPED STONE PATTERN

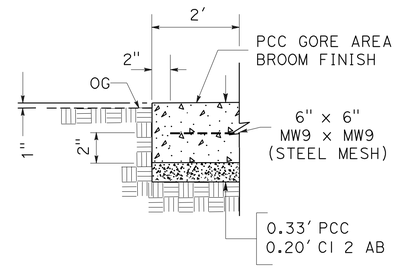

SECTION C-C

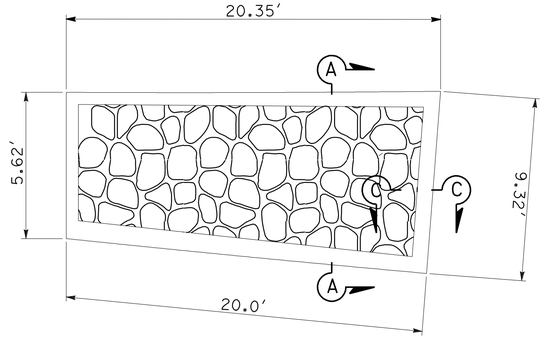

PLAN
(LOCATION #1)

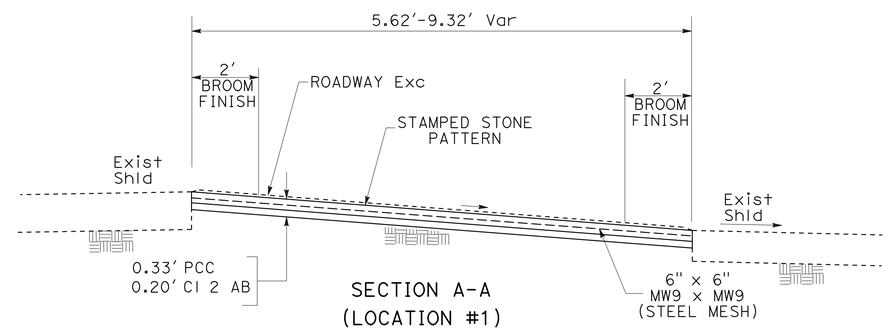

SECTION A-A
(LOCATION #1)

MINOR CONCRETE (TEXTURED PAVING)

CONSTRUCTION DETAILS

NO SCALE

C-1

STATE OF CALIFORNIA - DEPARTMENT OF TRANSPORTATION
Caltrans®
DESIGN

FUNCTIONAL SUPERVISOR: GETACHEW ESHETE
CALCULATED-DESIGNED BY: MIKE BETEGA
CHECKED BY: MICHAEL MILLS
REVISED BY
DATE REVISED

LAST REVISION 06-18-09
DATE PLOTTED => 03-DEC-2009
TIME PLOTTED => 13:31

Dist	COUNTY	ROUTE	POST MILES TOTAL PROJECT	SHEET No.	TOTAL SHEETS
06	Fre	41	R30.7/R31.7	8	42

REGISTERED CIVIL ENGINEER 6-18-09 DATE

11-30-09
PLANS APPROVAL DATE

REGISTERED PROFESSIONAL ENGINEER MICHAEL S. BETTEGA No. C 34348 Exp. 9/30/09 CIVIL STATE OF CALIFORNIA

THE STATE OF CALIFORNIA OR ITS OFFICERS OR AGENTS SHALL NOT BE RESPONSIBLE FOR THE ACCURACY OR COMPLETENESS OF SCANNED COPIES OF THIS PLAN SHEET.

NOTE: 1. 6" x 6" - MW9 x MW9 (STEEL MESH)
2. SEE SHEET C-1 FOR SECTION C-C

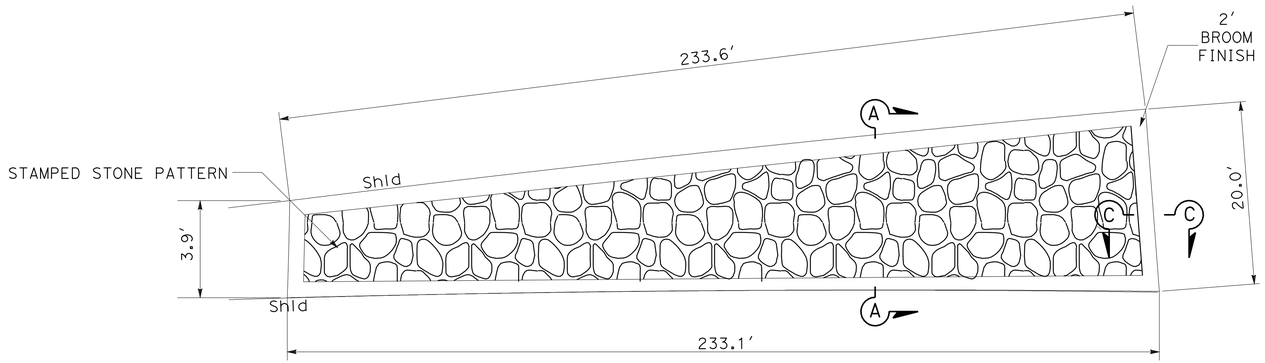

PLAN
(LOCATION #2)

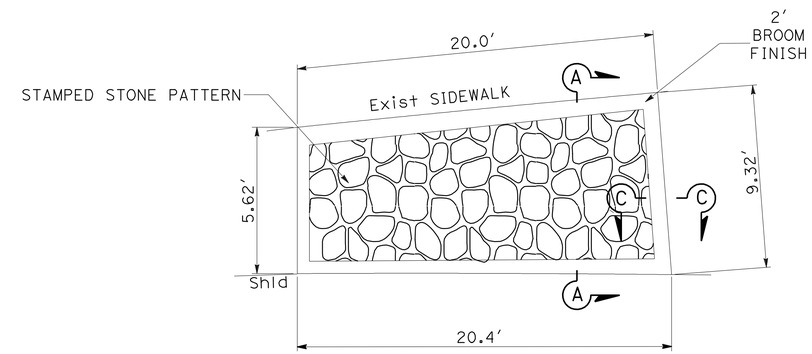

PLAN
(LOCATION #3)

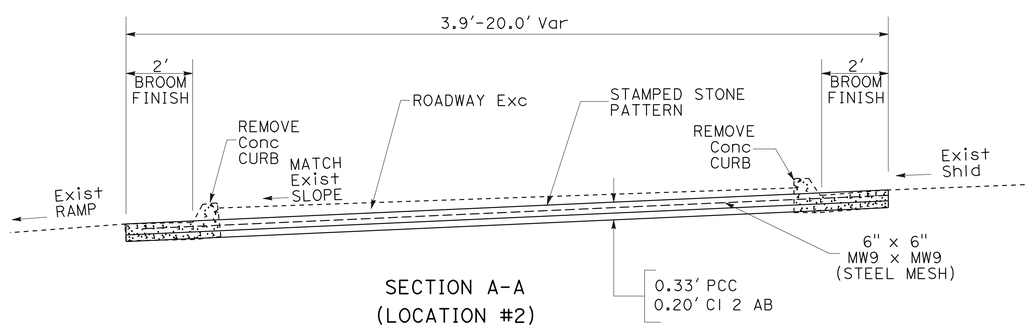

SECTION A-A
(LOCATION #2)

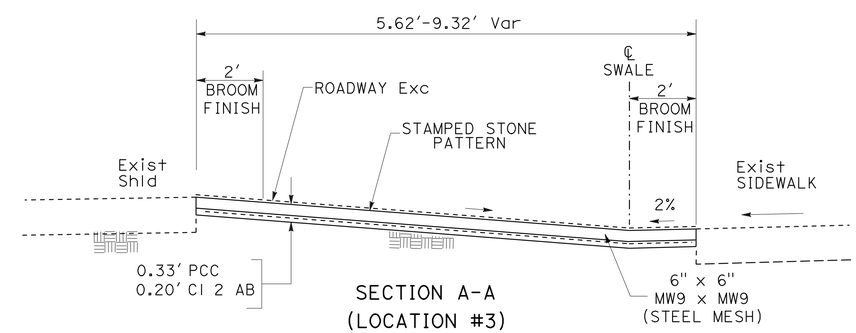

SECTION A-A
(LOCATION #3)

MINOR CONCRETE (TEXTURED PAVING)

CONSTRUCTION DETAILS

NO SCALE

C-2

STATE OF CALIFORNIA - DEPARTMENT OF TRANSPORTATION
Caltrans
DESIGN

FUNCTIONAL SUPERVISOR: GETACHEW ESHETE

CALCULATED-DESIGNED BY: MIKE BETEGA
CHECKED BY: MICHAEL MILLS

REVISED BY | DATE REVISED

LAST REVISION 06-18-09 | DATE PLOTTED => 03-DEC-2009 | TIME PLOTTED => 13:32

Dist	COUNTY	ROUTE	POST MILES TOTAL PROJECT	SHEET No.	TOTAL SHEETS
06	Fre	41	R30.7/R31.7	9	42

LICENSED LANDSCAPE ARCHITECT

11-30-09
PLANS APPROVAL DATE

LICENSED LANDSCAPE ARCHITECT
MICHAEL W. MILLS No. 4170
Expiration 11/30/10
Renewal Date 06/18/09
Date
STATE OF CALIFORNIA

THE STATE OF CALIFORNIA OR ITS OFFICERS OR AGENTS SHALL NOT BE RESPONSIBLE FOR THE ACCURACY OR COMPLETENESS OF SCANNED COPIES OF THIS PLAN SHEET.

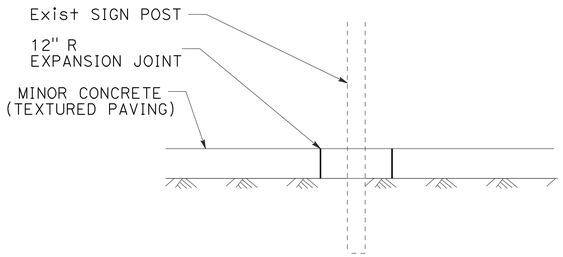

SIGN POST EXPANSION JOINT

SECTION B-B

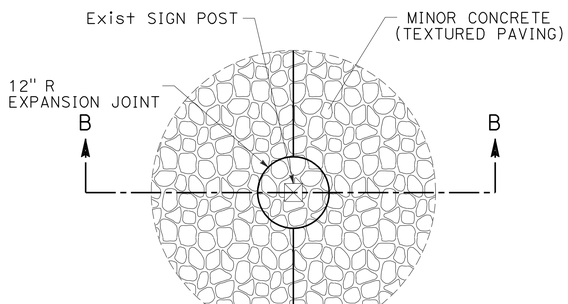

SIGN POST EXPANSION JOINT

PLAN

SIGN POST EXPANSION JOINT LOCATION

LINE	SIDE		STATION	ONE POST EA (N)
	R	L		
"A" LINE	-	X	1673+63.23	1
"A" LINE	X	-	1676+85.63	1
"F" LINE	X	-	113+43.10	1

(N) NOT A SEPARATE PAY ITEM . FOR INFORMATION ONLY

CONSTRUCTION DETAILS

NO SCALE

C-3

REVISED BY | DATE REVISED
MICHAEL MILLS | KEVIN GALLO
CALCULATED-DESIGNED BY | CHECKED BY
SENIOR LANDSCAPE ARCHITECT
ELBERT COX
STATE OF CALIFORNIA - DEPARTMENT OF TRANSPORTATION
Caltrans® LANDSCAPE ARCHITECTURE

LAST REVISION 06-18-09 | DATE PLOTTED => 03-DEC-2009 | TIME PLOTTED => 13:32

Dist	COUNTY	ROUTE	POST MILES TOTAL PROJECT	SHEET No.	TOTAL SHEETS
06	Fre	41	R30.7/R31.7	10	42

Hassan Taha 05-06-09
REGISTERED CIVIL ENGINEER DATE

11-30-09
PLANS APPROVAL DATE

REGISTERED PROFESSIONAL ENGINEER
HASSAN M. TAHA
No. 60130
Exp. 06/30/10
CIVIL
STATE OF CALIFORNIA

THE STATE OF CALIFORNIA OR ITS OFFICERS OR AGENTS SHALL NOT BE RESPONSIBLE FOR THE ACCURACY OR COMPLETENESS OF SCANNED COPIES OF THIS PLAN SHEET.

STATIONARY MOUNTED CONSTRUCTION AREA SIGNS

SIGN No.	SIGN CODE	PANEL SIZE (in)	SIGN MESSAGE	No. OF POST AND SIZE(in)	No. OF SIGNS
A	W20-1	60 x 60	ROAD WORK AHEAD	2- 6 x 6	4
B	W20-1	48 x 48	ROAD WORK AHEAD	1- 6 x 6	7
C	G20-2	60 x 24	END ROAD WORK	2- 4 x 4	4
D	G20-2	48 x 24	END ROAD WORK	1- 4 x 4	2

NOTE: LOCATIONS OF CONSTRUCTION AREA SIGNS SHOWN ARE APPROXIMATE.
EXACT LOCATIONS TO BE DETERMINED BY THE ENGINEER.

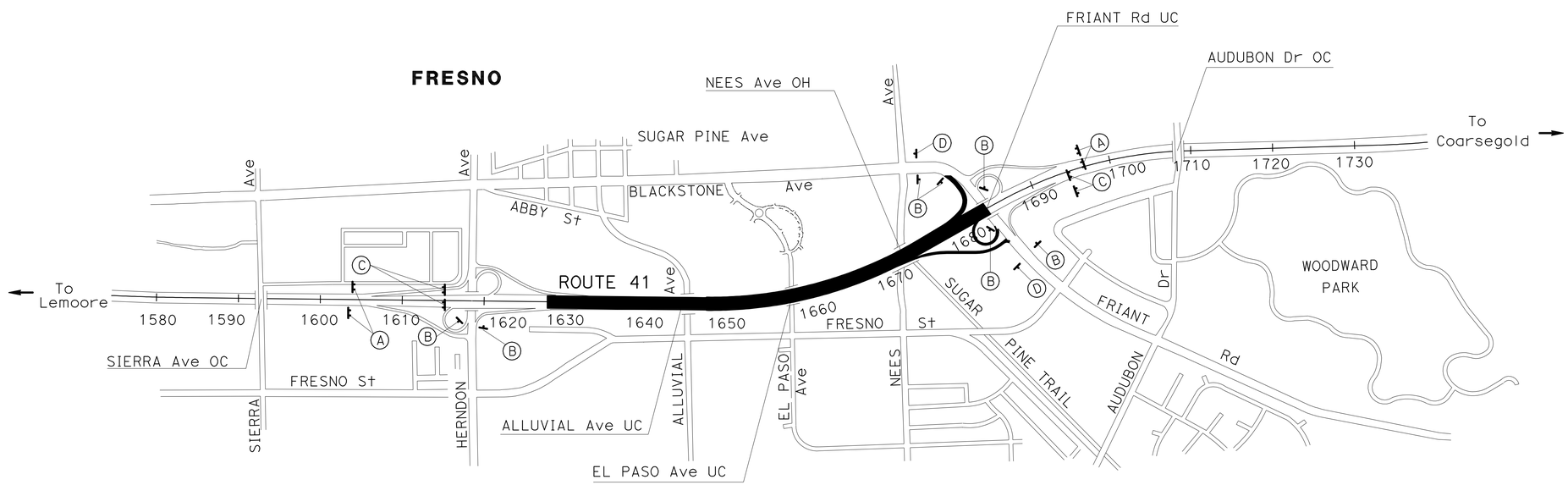

THIS PLAN ACCURATE FOR CONSTRUCTION AREA SIGNS ONLY.

CONSTRUCTION AREA SIGNS

NO SCALE

CS-1

STATE OF CALIFORNIA - DEPARTMENT OF TRANSPORTATION
Caltrans
TRAFFIC DESIGN

FUNCTIONAL SUPERVISOR: M. QATAMI
CALCULATED-DESIGNED BY: KHONDOKER IMTEAZ UDDIN
CHECKED BY: HASSAN TAHA
REVISED BY
DATE REVISED

LAST REVISION 04-02-09
DATE PLOTTED => 03-DEC-2009
TIME PLOTTED => 13:32

Dist	COUNTY	ROUTE	POST MILES TOTAL PROJECT	SHEET No.	TOTAL SHEETS
06	Fre	41	R30.7/R31.7	11	42

LICENSED LANDSCAPE ARCHITECT

11-30-09
PLANS APPROVAL DATE

LICENSED LANDSCAPE ARCHITECT MICHAEL W. MILLS No. 4770 STATE OF CALIFORNIA
Original 11/30/10
Renewal Date 06/18/09
Date

THE STATE OF CALIFORNIA OR ITS OFFICERS OR AGENTS SHALL NOT BE RESPONSIBLE FOR THE ACCURACY OR COMPLETENESS OF SCANNED COPIES OF THIS PLAN SHEET.

ROADWAY EXCAVATION

LOCATION	STATION	CY
MC-1	1673+63.23 TO 1674+21.02 "A" LINE L†	3.5
MC-2	1676+42.16 TO 1678+74.74 "A" LINE R†	50.8
MC-3	113+43.06 TO 113+64.56 "F" LINE R†	2.9
	TOTAL	57.2

REMOVE CURB

LOCATION	STATION	LF
MC-2	1676+42.16 TO 1678+74.74 "A" LINE R†	470.6
	TOTAL	470.6

MINOR CONCRETE (TEXTURED PAVING)

LOCATION	STATION	MINOR CONCRETE (TEXTURED PAVING)	(N) MINOR CONCRETE (TEXTURE PAVING)	(N) CLASS 2 AB AGGREGATE BASE
		SQFT	CY	CY
MC-1	1673+63.23 TO 1674+21.02 "A" LINE L†	180.0	2.2	1.3
MC-2	1676+42.16 TO 1678+74.74 "A" LINE R†	2590.0	31.7	19.2
MC-3	113+43.06 TO 113+64.56 "F" LINE R†	150.0	1.8	1.1
	TOTAL	2920.0		

(N) NOT A SEPARATE PAY ITEM, FOR INFORMATION ONLY.

MAINTENANCE VEHICLE PAD (ROCK)

LOCATION	STATION	MAINTENANCE VEHICLE PAD (ROCK)	(N) ROCKS	(N) LANDSCAPE FABRIC
		EA	CY	SQYD
MVPR-1	1644+43.95 "A" LINE L†	1	29.6	88.9
MVPR-2	1645+25.98 "A" LINE L†	1	29.6	88.9
MVPR-3	1670+08.34 "A" LINE R†	1	29.6	88.9
	TOTAL	3		

(N) NOT A SEPARATE PAY ITEM, FOR INFORMATION ONLY.

TEMPORARY DRAINAGE INLET PROTECTION

SHEET	LINE	SIDE		STATION	EA
		R†	L†		
L-1	"A" LINE	X		1646+04.85	1
L-2	"A" LINE	X		1656+08.53	1
L-3	"A" LINE	X		1662+71.18	1
L-3	"A" LINE	X		1666+22.14	1
L-3	"A" LINE	X		1673+75.84	1
L-4	"F" LINE	X		112+94.87	2
L-5	"F" LINE	X		120+84.17	1
L-5	"F" LINE	X		121+31.18	1
L-5	"F" LINE	X		121+52.43	2
L-5	"F" LINE	X		123+01.80	1
				TOTAL	12

X - DENOTES REQUIREMENT

SUMMARY OF QUANTITIES
Q-1

STATE OF CALIFORNIA - DEPARTMENT OF TRANSPORTATION
Caltrans LANDSCAPE ARCHITECTURE

SENIOR LANDSCAPE ARCHITECT: ELBERT COX
CALCULATED-DESIGNED BY: MICHAEL MILLS
CHECKED BY: KEVIN GALLO
REVISED BY
DATE REVISED

LAST REVISION 06-18-09
DATE PLOTTED => 03-DEC-2009
TIME PLOTTED => 13:32

Dist	COUNTY	ROUTE	POST MILES TOTAL PROJECT	SHEET No.	TOTAL SHEETS
06	Fre	41	R30.7/R31.7	12	42

LICENSED LANDSCAPE ARCHITECT

11-30-09
PLANS APPROVAL DATE

LICENSED LANDSCAPE ARCHITECT MICHAEL W. MILLS No. 4170 Expiration 11/30/10 Renewal Date 06/18/09 Date STATE OF CALIFORNIA

THE STATE OF CALIFORNIA OR ITS OFFICERS OR AGENTS SHALL NOT BE RESPONSIBLE FOR THE ACCURACY OR COMPLETENESS OF SCANNED COPIES OF THIS PLAN SHEET.

LEGEND

(E) PLANTING TO REMAIN

MAINTENANCE VEHICLE PAD (ROCK) (SEE LAYOUT SHEETS)

PLANT LIST AND PLANTING SPECIFICATIONS

PLANT GROUP	PLANT No.	SYMBOL	BOTANICAL NAME	COMMON NAME	SIZE	QUANTITY EACH	HOLE SIZE (in) Dia	HOLE SIZE (in) DEPTH	BASIN TYPE	IRON SULFATE	SOIL AMEND (CF) (1)	COMMERCIAL FERTILIZER (1) PLANTING	COMMERCIAL FERTILIZER (1) PLT ESTB	BASIN MULCH (CF) (1)	STAKING	PLANTING LIMITS MINIMUM DISTANCE (ft) FROM TRVD WAY	Pvmt	FENCE	WALL	PAVED DITCH	EARTH DITCH	ON CENTER (ft)	REMARKS
A	1		CEANOTHUS 'CONCHA'	NCN	No. 1	352	8	2	II	---	0.5	1 Pkt	0.25 lb	2	---	-	10	10	8	8	10	8	SHRUB 9
	2		CERCIS OCCIDENTALIS	WESTERN REDBUD	No. 1	83	8	2	II	---	0.5	1 Pkt	0.25 lb	2	---	-	15	15	15	15	15	4	SHRUB 9
	3		CISTUS X 'BRILLANCY'	ROCKROSE	No. 1	804	8	2	II	---	0.5	1 Pkt	0.25 lb	3	---	-	6	10	6	6	6	6	SHRUB 9
	4		DIANELLA CAERULEA 'LITTLE BECCA'	BLUE FLAX LILY	No. 1	694	8	2	II	---	0.5	1 Pkt	0.25 lb	3	---	-	3	3	3	3	5	3	SHRUB 9
	5		DIANELLA TASMANICA 'TASRED'	FLAX LILY	No. 1	408	8	2	II	---	0.5	1 Pkt	0.25 lb	3	---	-	3	3	3	3	5	3	SHRUB 9
	6		HETEROMELES ARBUTIFOLIA	TOYON	No. 1	27	8	2	II	---	0.5	1 Pkt	0.25 lb	2	---	-	15	15	10	10	12	15	SHRUB 9
	7		LANTANA SELLOWIANA 'MONMA'	TRAILING LANTANA	No. 1	3911	8	2	II	---	0.5	1 Pkt	0.25 lb	3	---	-	6	10	6	6	8	3	SHRUB 9
	8		LOMANDRA LONGIFOLIA 'BREEZE'	BREEZE	No. 1	558	8	2	II	---	0.5	1 Pkt	0.25 lb	3	---	-	3	3	3	3	5	3	SHRUB 9
	9		PARTHENOCISSUS TRICUSPIDATA	BOSTION IVY	No. 1	292	8	2	II	---	0.5	1 Pkt	0.25 lb	3	---	-	-	-	-	4	15	10	VINE 9
	10		RHAMNUS CALIFORNICA 'TOMENTELLA'	COFFEEBERRY	No. 1	54	8	2	II	---	0.5	1 Pkt	0.25 lb	2	---	-	15	15	10	10	12	15	SHRUB 9
	11		ROSA BANKSIAE	LADY BANKS' ROSE	No. 1	897	8	2	II	---	0.5	1 Pkt	0.25 lb	2	---	-	15	15	-	13	8	10	SHRUB 9
	12		MUHLENBERGIA RIGENS	DEER GRASS	No. 1	1724	8	2	II	---	0.5	1 Pkt	0.25 lb	3	---	-	6	10	6	6	6	4	SHRUB 9
B	13		ACACIA STENOPHYLLA	SHOESTRING ACACIA	No. 5	36	8	2	II	---	1.0	3 Pkt	0.38 lb	2	10	20	-	15	15	15	17	4	SHRUB 9
	14		CALLISTEMON CITRINUS	LEMON BOTTLEBRUSH	No. 5	130	8	2	II	---	1.0	3 Pkt	0.38 lb	2	10	-	15	15	15	15	17	4	SHRUB 9
	15		CASUARINA CUNNINGHAMIANA	RIVER SHE-OAK	No. 5	31	8	2	II	---	1.0	3 Pkt	0.38 lb	2	10	30	6	15	10	10	12	4	TREE 9
	16		EUCALYPTUS CITRIODORA	LEMON-SCENTED GUM	No. 5	22	8	2	II	---	1.0	3 Pkt	0.38 lb	2	10	40	-	30	30	15	17	4	TREE 9
	17		OLEA EUROPEA 'MONHER'	OLIVE	No. 5	34	8	2	II	---	1.0	3 Pkt	0.38 lb	2	10	30	-	15	15	10	12	4	TREE 9
	18		PLATANUS RACEMOSA	CALIFORNIA SYCAMORE	No. 5	47	8	2	II	---	1.0	3 Pkt	0.38 lb	2	10	40	-	20	20	10	12	4	TREE 9
	19		QUERCUS AGRIFOLIA	VALLEY OAK	No. 5	19	8	2	II	---	1.0	3 Pkt	0.38 lb	2	10	30	-	20	15	15	17	4	TREE 9
	20		QUERCUS LOBATA	VALLEY OAK	No. 5	26	8	2	II	---	1.0	3 Pkt	0.38 lb	2	10	30	-	20	20	20	22	4	TREE 9
	21		QUERCUS WIZLIZENII	COAST LIVE OAK	No. 5	30	8	2	II	---	1.0	3 Pkt	0.38 lb	2	10	30	-	15	15	10	10	4	TREE 9
M	22		ERIOGONUM FASCICULATUM	CALIFORNIA BUCKWHEAT	LINER 7	2234	8	2	II	---	0.25	1 Pkt	0.25 lb	2	---	-	10	10	8	8	10	4	SHRUB

APPLICABLE WHEN CIRCLED:

1 - QUANTITIES SHOWN ARE "PER PLANT" UNLESS SHOWN AS SQUARE FEET APPLICATION RATES.
2 - SUFFICIENT TO RECEIVE ROOT BALL.
3 - DOES NOT APPLY TO MULCH AREAS.
4 - AS SHOWN ON PLANS.
5 - UNLESS OTHERWISE SHOWN ON PLANS.
6 - SEE DETAIL.
7 - SEE SPECIAL PROVISIONS.
8 - TWICE THE ROOTBALL DIAMETER.
9 - ROOT PROTECTOR REQUIRED.
10 - SEE STANDARD PLANS FOR DETAIL.

NOTES:

1. SEE STANDARD PLANS FOR ABBREVIATIONS
2. UNDERLINED PORTIONS OF BOTANICAL NAME INDICATE ABBREVIATIONS USED ON PLANTING PLANS.

PLANT LIST
PL-1

REVISED BY | DATE REVISED
MICHAEL MILLS | KEVIN GALLO
CALCULATED-DESIGNED BY | CHECKED BY
SENIOR LANDSCAPE ARCHITECT
ELBERT COX
STATE OF CALIFORNIA - DEPARTMENT OF TRANSPORTATION
Caltrans® LANDSCAPE ARCHITECTURE

LAST REVISION 06-18-09
DATE PLOTTED => 03-DEC-2009
TIME PLOTTED => 13:32

Dist	COUNTY	ROUTE	POST MILES TOTAL PROJECT	SHEET No.	TOTAL SHEETS
06	Fre	41	R30.7/R31.7	13	42

LICENSED LANDSCAPE ARCHITECT

11-30-09
PLANS APPROVAL DATE

LICENSED LANDSCAPE ARCHITECT
MICHAEL W. MILLS No. 4170
Signature
11/30/10
Renewal Date
06/18/09
Date
STATE OF CALIFORNIA

THE STATE OF CALIFORNIA OR ITS OFFICERS OR AGENTS SHALL NOT BE RESPONSIBLE FOR THE ACCURACY OR COMPLETENESS OF SCANNED COPIES OF THIS PLAN SHEET.

NOTE: FOR ACCURATE RIGHT OF WAY AND ACCESS DATA, CONTACT RIGHT OF WAY ENGINEERING AT THE DISTRICT OFFICE.

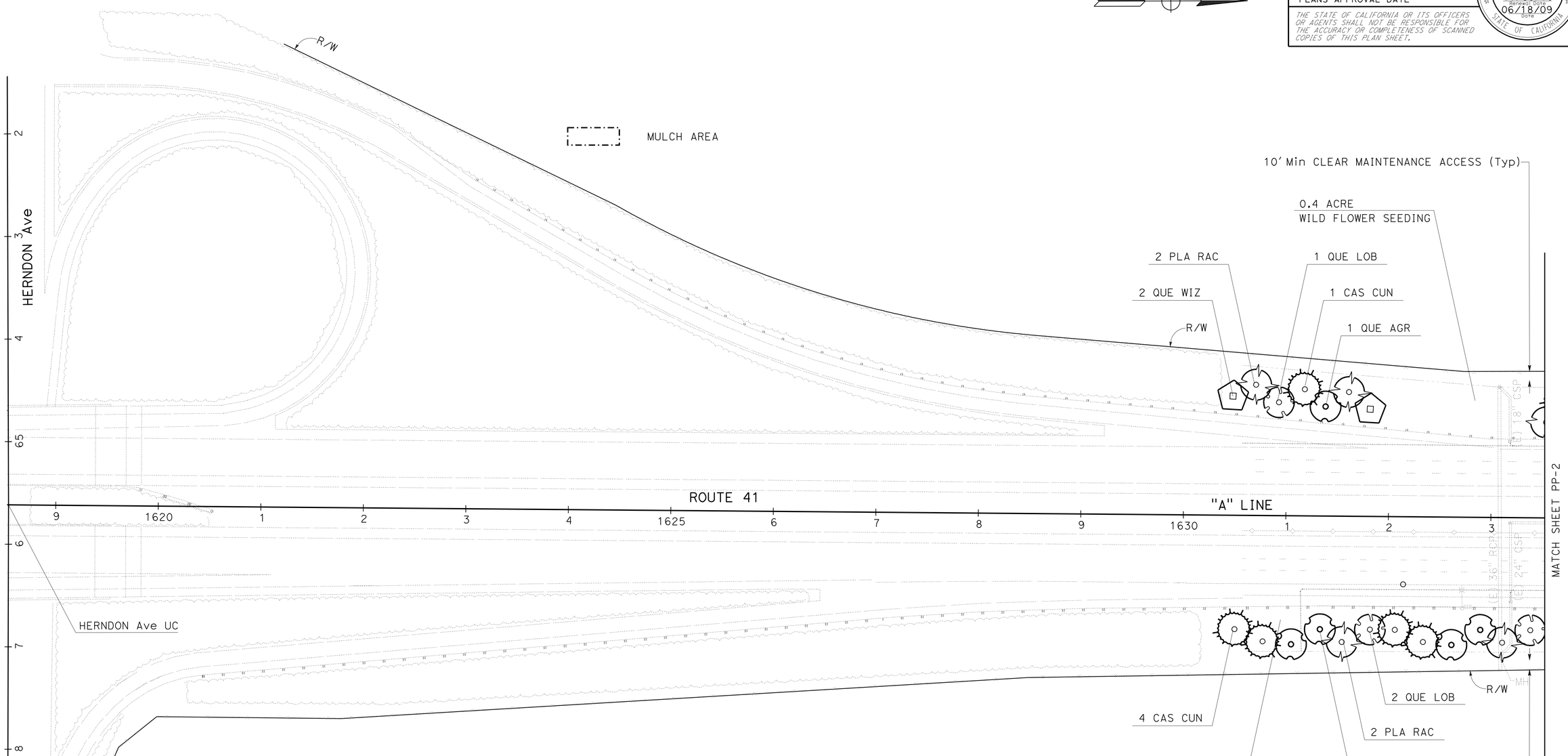

THIS PLAN ACCURATE FOR PLANTING WORK ONLY.

PLANTING PLAN

SCALE: 1"=50'

PP-1

REVISED BY	DATE REVISED

CALCULATED-DESIGNED BY: MICHAEL MILLS
CHECKED BY: KEVIN GALLO
SENIOR LANDSCAPE ARCHITECT: ELBERT COX

STATE OF CALIFORNIA - DEPARTMENT OF TRANSPORTATION
Caltrans® LANDSCAPE ARCHITECTURE

LAST REVISION 06-18-09
DATE PLOTTED => 03-DEC-2009
TIME PLOTTED => 13:33

Dist	COUNTY	ROUTE	POST MILES TOTAL PROJECT	SHEET No.	TOTAL SHEETS
06	Fre	41	R30.7/R31.7	14	42

LICENSED LANDSCAPE ARCHITECT

11-30-09
PLANS APPROVAL DATE

LICENSED LANDSCAPE ARCHITECT MICHAEL W. MILLS No. 4720 Expiration 11/30/10 Renewal Date 06/18/09 Date STATE OF CALIFORNIA

THE STATE OF CALIFORNIA OR ITS OFFICERS OR AGENTS SHALL NOT BE RESPONSIBLE FOR THE ACCURACY OR COMPLETENESS OF SCANNED COPIES OF THIS PLAN SHEET.

NOTE: FOR ACCURATE RIGHT OF WAY AND ACCESS DATA, CONTACT RIGHT OF WAY ENGINEERING AT THE DISTRICT OFFICE.

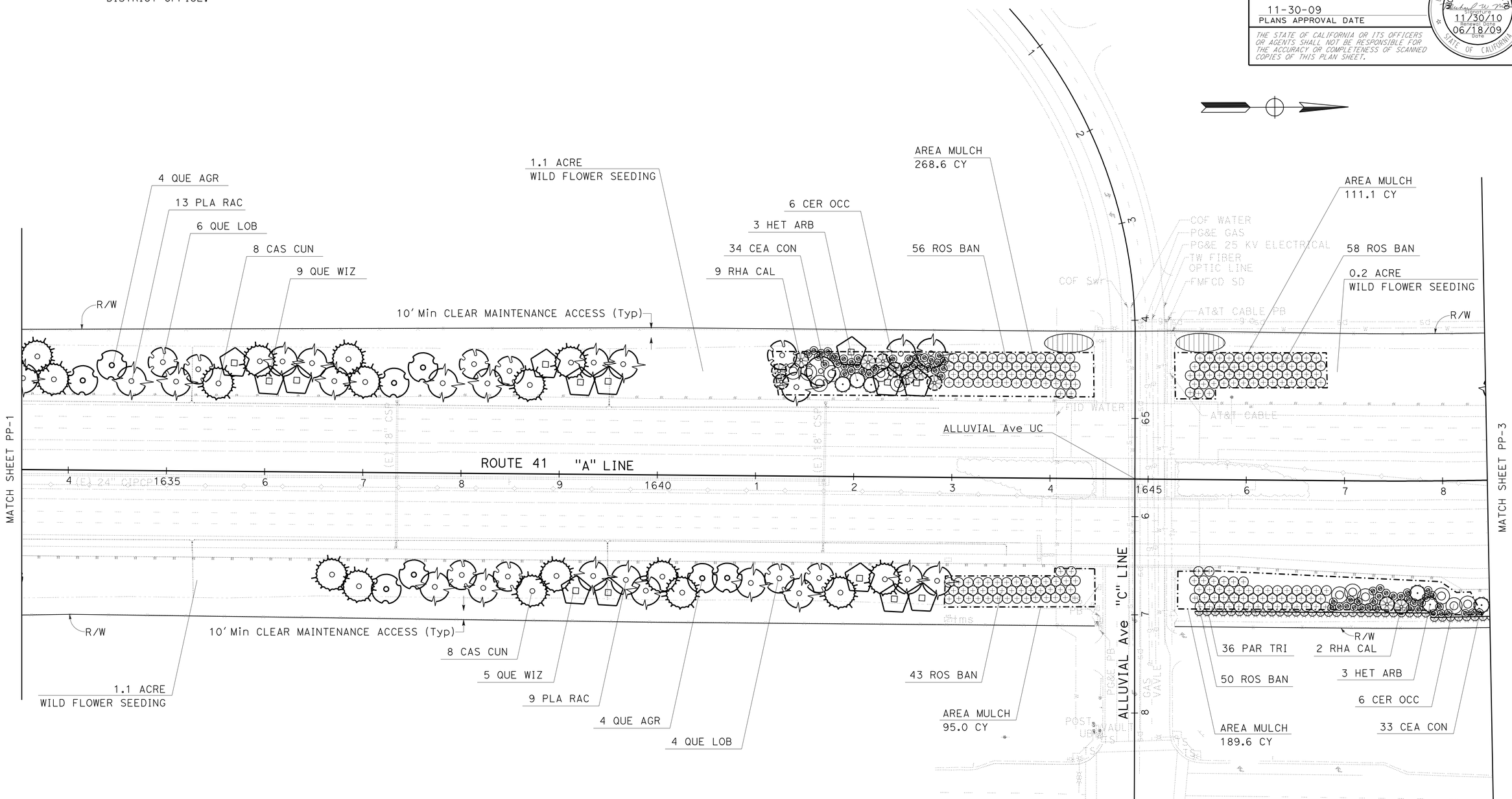

THIS PLAN ACCURATE FOR PLANTING WORK ONLY.

PLANTING PLAN

SCALE: 1"=50'

PP-2

STATE OF CALIFORNIA - DEPARTMENT OF TRANSPORTATION
Caltrans® LANDSCAPE ARCHITECTURE

SENIOR LANDSCAPE ARCHITECT: ELBERT COX
CALCULATED-DESIGNED BY: MICHAEL MILLS
CHECKED BY: KEVIN GALLO
REVISED BY
DATE REVISED

LAST REVISION 06-18-09
DATE PLOTTED => 03-DEC-2009
TIME PLOTTED => 13:33

Dist	COUNTY	ROUTE	POST MILES TOTAL PROJECT	SHEET No.	TOTAL SHEETS
06	Fre	41	R30.7/R31.7	15	42

LICENSED LANDSCAPE ARCHITECT

11-30-09
PLANS APPROVAL DATE

LICENSED LANDSCAPE ARCHITECT MICHAEL W. MILLS No. 4170 STATE OF CALIFORNIA
Expiration 11/30/10
Renewal Date 06/18/09
Date

THE STATE OF CALIFORNIA OR ITS OFFICERS OR AGENTS SHALL NOT BE RESPONSIBLE FOR THE ACCURACY OR COMPLETENESS OF SCANNED COPIES OF THIS PLAN SHEET.

NOTE: FOR ACCURATE RIGHT OF WAY AND ACCESS DATA, CONTACT RIGHT OF WAY ENGINEERING AT THE DISTRICT OFFICE.

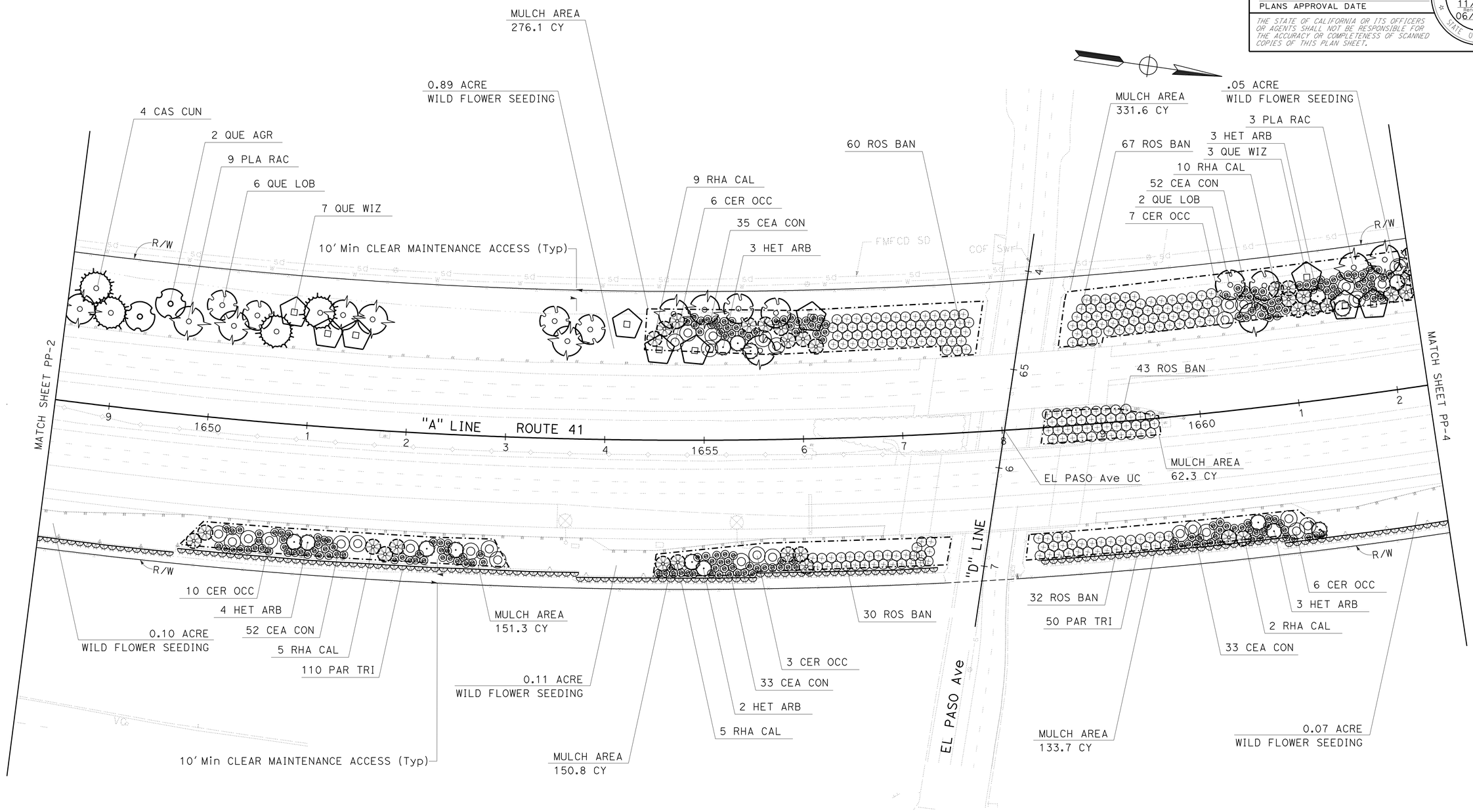

THIS PLAN ACCURATE FOR PLANTING WORK ONLY.

PLANTING PLAN

SCALE: 1"=50'

PP-3

REVISED BY	DATE REVISED
MICHAEL MILLS	KEVIN GALLO
CALCULATED-DESIGNED BY	CHECKED BY
SENIOR LANDSCAPE ARCHITECT	ELBERT COX

STATE OF CALIFORNIA - DEPARTMENT OF TRANSPORTATION
Caltrans® LANDSCAPE ARCHITECTURE

LAST REVISION 06-18-09 | DATE PLOTTED => 03-DEC-2009 | TIME PLOTTED => 13:33

Dist	COUNTY	ROUTE	POST MILES TOTAL PROJECT	SHEET No.	TOTAL SHEETS
06	Fre	41	R30.7/R31.7	16	42

LICENSED LANDSCAPE ARCHITECT

11-30-09
PLANS APPROVAL DATE

LICENSED LANDSCAPE ARCHITECT MICHAEL W. MILLS No. 4170 STATE OF CALIFORNIA
Expiration 11/30/10
Renewal Date 06/18/09
Date

THE STATE OF CALIFORNIA OR ITS OFFICERS OR AGENTS SHALL NOT BE RESPONSIBLE FOR THE ACCURACY OR COMPLETENESS OF SCANNED COPIES OF THIS PLAN SHEET.

NOTE: FOR ACCURATE RIGHT OF WAY AND ACCESS DATA, CONTACT RIGHT OF WAY ENGINEERING AT THE DISTRICT OFFICE.

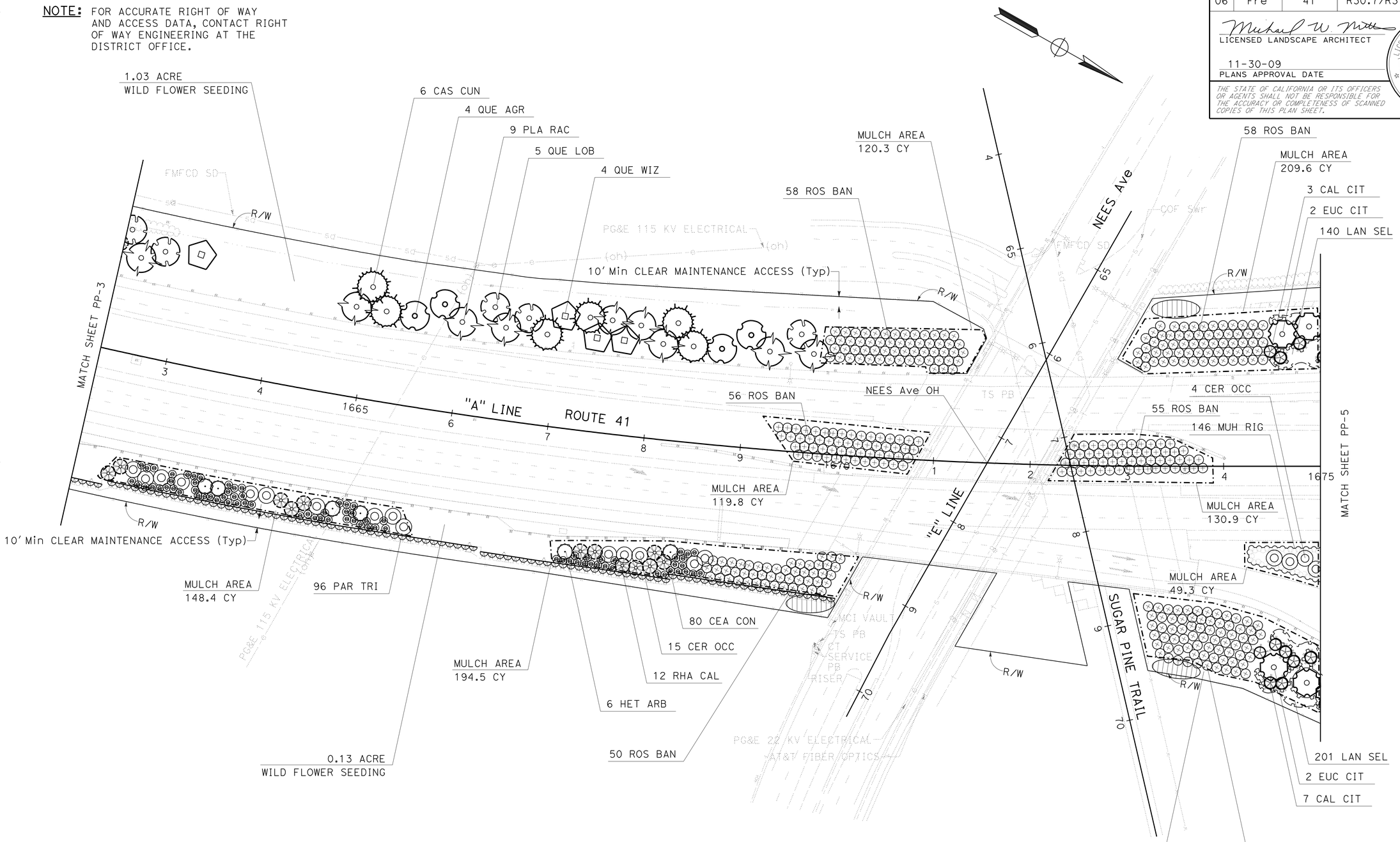

THIS PLAN ACCURATE FOR PLANTING WORK ONLY.

PLANTING PLAN

SCALE: 1"=50'

PP-4

REVISED BY	DATE REVISED
MICHAEL MILLS	KEVIN GALLO
CALCULATED-DESIGNED BY	CHECKED BY
SENIOR LANDSCAPE ARCHITECT	ELBERT COX

STATE OF CALIFORNIA - DEPARTMENT OF TRANSPORTATION
Caltrans® LANDSCAPE ARCHITECTURE

LAST REVISION 06-18-09 | DATE PLOTTED => 03-DEC-2009 | TIME PLOTTED => 13:33

Dist	COUNTY	ROUTE	POST MILES TOTAL PROJECT	SHEET No.	TOTAL SHEETS
06	Fre	41	R30.7/R31.7	17	42

Michael W. Mills
LICENSED LANDSCAPE ARCHITECT

11-30-09
PLANS APPROVAL DATE

LICENSED LANDSCAPE ARCHITECT
MICHAEL W. MILLS No. 4170
Expiration 11/30/10
Renewal Date 06/18/09
Date
STATE OF CALIFORNIA

THE STATE OF CALIFORNIA OR ITS OFFICERS OR AGENTS SHALL NOT BE RESPONSIBLE FOR THE ACCURACY OR COMPLETENESS OF SCANNED COPIES OF THIS PLAN SHEET.

NOTE: FOR ACCURATE RIGHT OF WAY AND ACCESS DATA, CONTACT RIGHT OF WAY ENGINEERING AT THE DISTRICT OFFICE.

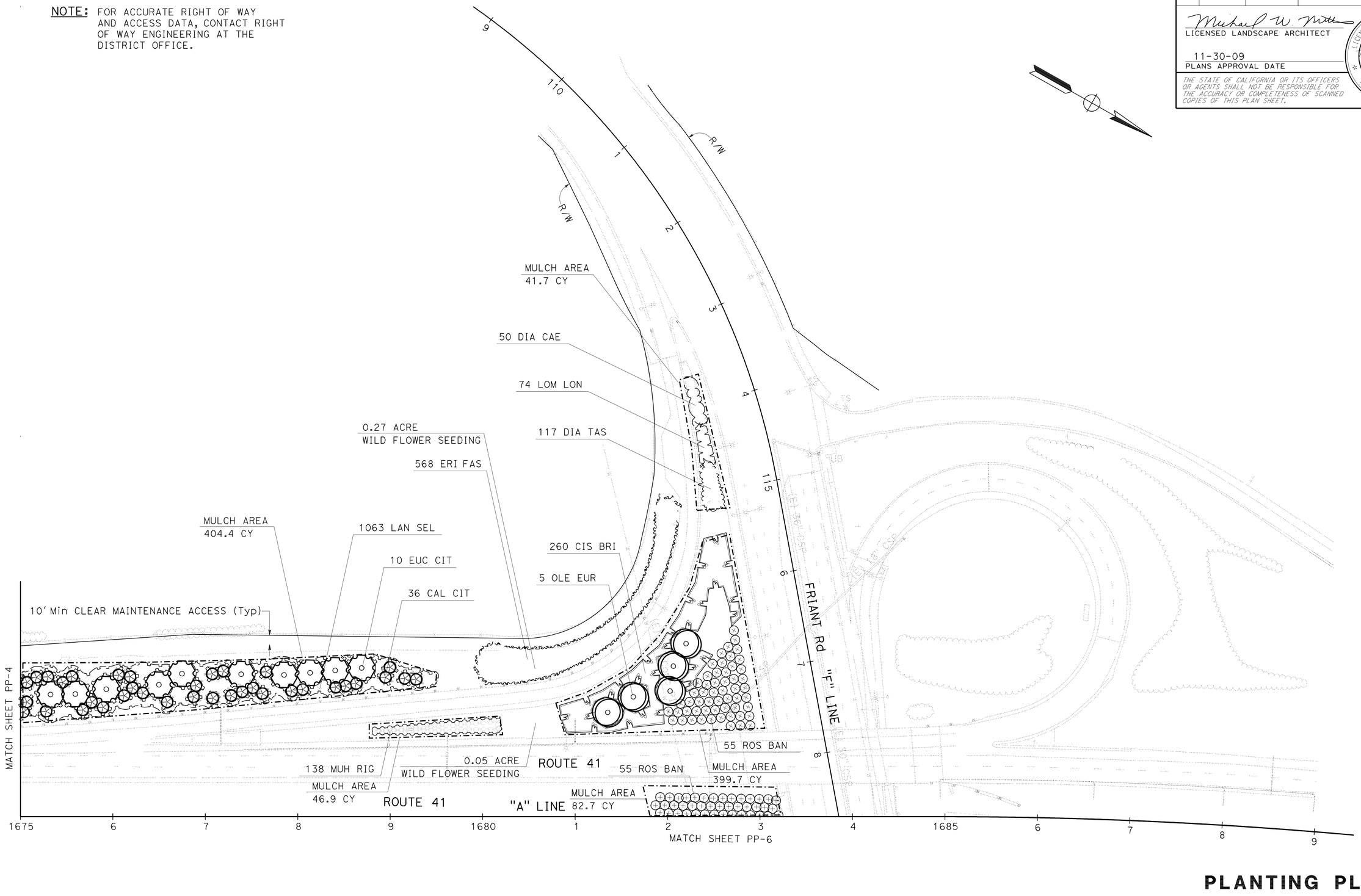

THIS PLAN ACCURATE FOR PLANTING WORK ONLY.

PLANTING PLAN

SCALE: 1"=50'

PP-5

STATE OF CALIFORNIA - DEPARTMENT OF TRANSPORTATION
Caltrans® LANDSCAPE ARCHITECTURE

SENIOR LANDSCAPE ARCHITECT: ELBERT COX
CALCULATED-DESIGNED BY: MICHAEL MILLS
CHECKED BY: KEVIN GALLO
REVISED BY
DATE REVISED

LAST REVISION 06-18-09
DATE PLOTTED => 03-DEC-2009
TIME PLOTTED => 13:33

Dist	COUNTY	ROUTE	POST MILES TOTAL PROJECT	SHEET No.	TOTAL SHEETS
06	Fre	41	R30.7/R31.7	18	42

LICENSED LANDSCAPE ARCHITECT

11-30-09
PLANS APPROVAL DATE

LICENSED LANDSCAPE ARCHITECT MICHAEL W. MILLS No. 4170 Expiration 11/30/10 Renewal Date 06/18/09 Date STATE OF CALIFORNIA

THE STATE OF CALIFORNIA OR ITS OFFICERS OR AGENTS SHALL NOT BE RESPONSIBLE FOR THE ACCURACY OR COMPLETENESS OF SCANNED COPIES OF THIS PLAN SHEET.

NOTE: FOR ACCURATE RIGHT OF WAY AND ACCESS DATA, CONTACT RIGHT OF WAY ENGINEERING AT THE DISTRICT OFFICE.

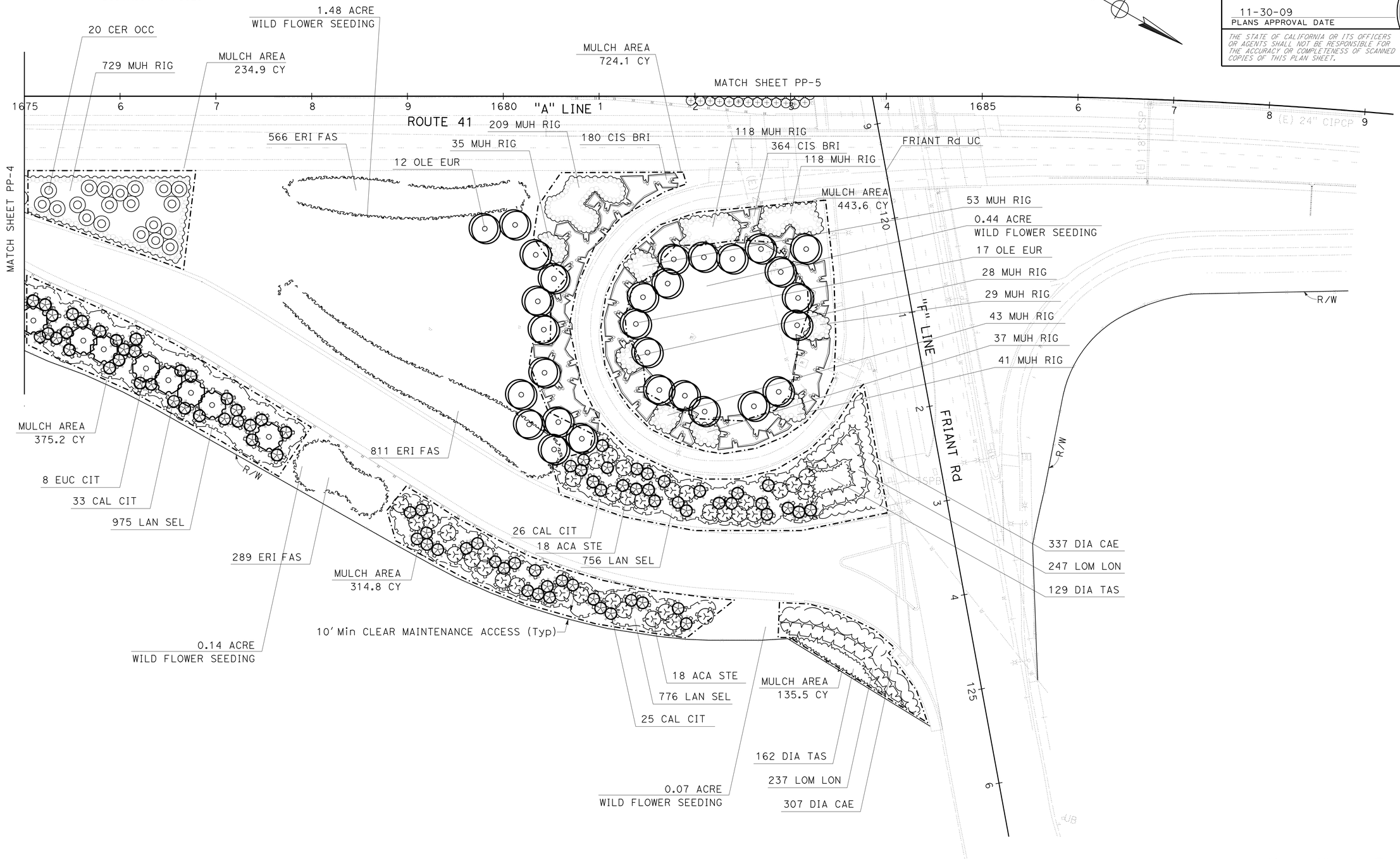

THIS PLAN ACCURATE FOR PLANTING WORK ONLY.

PLANTING PLAN

SCALE: 1"=50'

PP-6

STATE OF CALIFORNIA - DEPARTMENT OF TRANSPORTATION
Caltrans® LANDSCAPE ARCHITECTURE

SENIOR LANDSCAPE ARCHITECT: ELBERT COX
CALCULATED-DESIGNED BY: KEVIN GALLO
CHECKED BY: MICHAEL MILLS
REVISED BY
DATE REVISED

LAST REVISION 06-18-09
DATE PLOTTED => 03-DEC-2009
TIME PLOTTED => 13:34

Dist	COUNTY	ROUTE	POST MILES TOTAL PROJECT	SHEET No.	TOTAL SHEETS
06	Fre	41	R30.7/R31.7	19	42

LICENSED LANDSCAPE ARCHITECT

11-30-09
PLANS APPROVAL DATE

LICENSED LANDSCAPE ARCHITECT MICHAEL W. MILLS No. 4170 Signature 11/30/10 Renewal Date 06/18/09 Date STATE OF CALIFORNIA

THE STATE OF CALIFORNIA OR ITS OFFICERS OR AGENTS SHALL NOT BE RESPONSIBLE FOR THE ACCURACY OR COMPLETENESS OF SCANNED COPIES OF THIS PLAN SHEET.

NOTES:
1. FOR ACCURATE RIGHT OF WAY AND ACCESS DATA, CONTACT RIGHT OF WAY ENGINEERING AT THE DISTRICT OFFICE.
2. WHERE EXISTING LATERAL SUPPLY LINES ARE SHOWN WITH NEW SPRINKLERS, PLACE NEW SPRINKLERS ON EXISTING RISERS.
3. WHERE EXISTING SYSTEMS ARE BEING CONNECTED INTO, EXISTING SYSTEMS ARE LESS THAN THREE YEARS OLD.

LEGEND

[P] ELECTRIC AND PRESSURE REGULATING REMOTE CONTROL VALVE

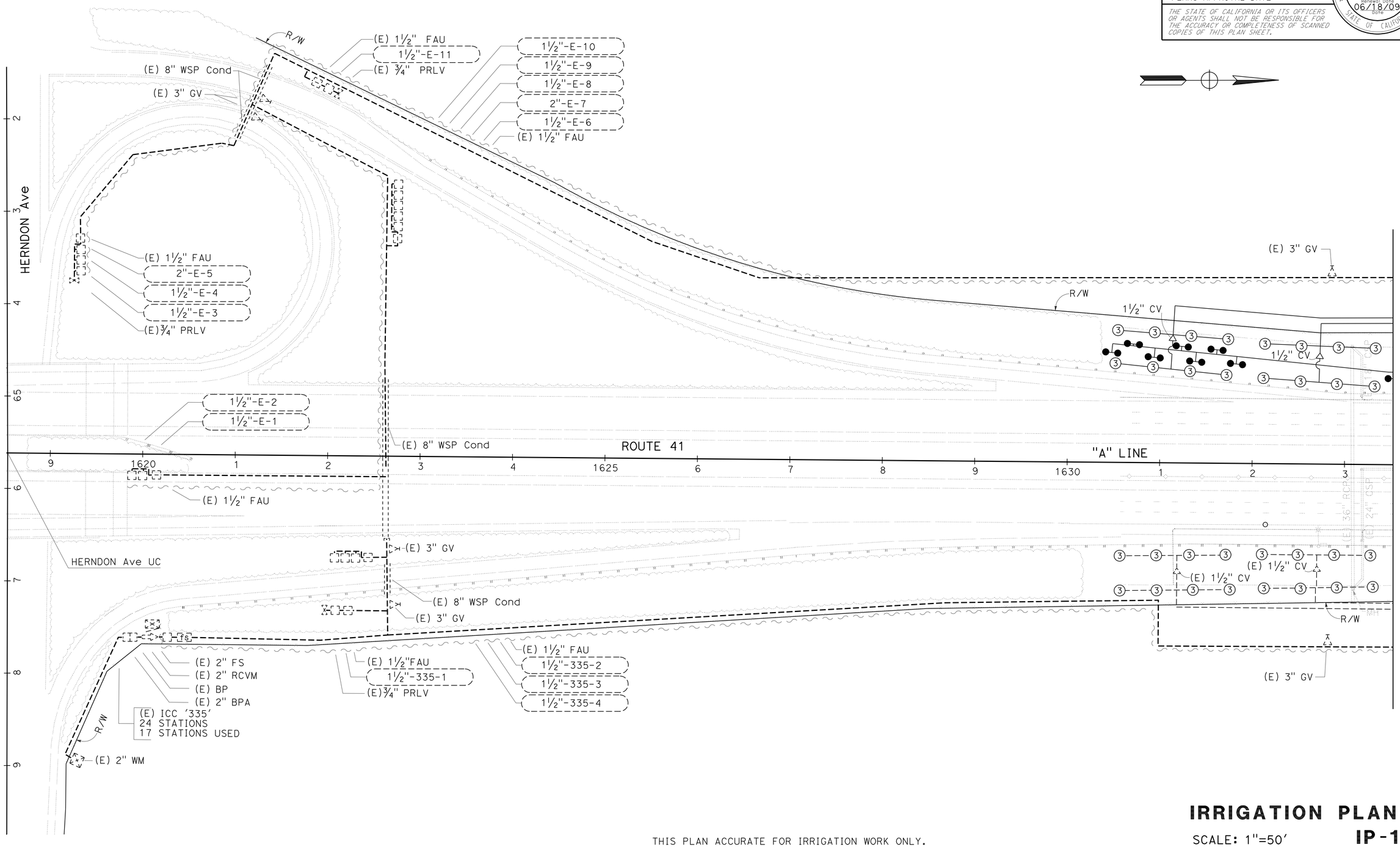

THIS PLAN ACCURATE FOR IRRIGATION WORK ONLY.

IRRIGATION PLAN

SCALE: 1"=50'

IP-1

STATE OF CALIFORNIA - DEPARTMENT OF TRANSPORTATION
Caltrans® LANDSCAPE ARCHITECTURE

SENIOR LANDSCAPE ARCHITECT: ELBERT COX
CALCULATED-DESIGNED BY: MICHAEL MILLS
CHECKED BY: KEVIN GALLO
REVISED BY / DATE REVISED

LAST REVISION 06-18-09
DATE PLOTTED => 03-DEC-2009
TIME PLOTTED => 13:34

Dist	COUNTY	ROUTE	POST MILES TOTAL PROJECT	SHEET No.	TOTAL SHEETS
06	Fre	41	R30.7/R31.7	20	42

LICENSED LANDSCAPE ARCHITECT

11-30-09
PLANS APPROVAL DATE

LICENSED LANDSCAPE ARCHITECT MICHAEL W. MILLS No. 4770 Expiration 11/30/10 Renewal Date 06/18/09 Date STATE OF CALIFORNIA

THE STATE OF CALIFORNIA OR ITS OFFICERS OR AGENTS SHALL NOT BE RESPONSIBLE FOR THE ACCURACY OR COMPLETENESS OF SCANNED COPIES OF THIS PLAN SHEET.

NOTES:
1. FOR ACCURATE RIGHT OF WAY AND ACCESS DATA, CONTACT RIGHT OF WAY ENGINEERING AT THE DISTRICT OFFICE.
2. WHERE EXISTING LATERAL SUPPLY LINES ARE SHOWN WITH NEW SPRINKLERS, PLACE NEW SPRINKLERS ON EXISTING RISERS.
3. WHERE EXISTING SYSTEMS ARE BEING CONNECTED INTO, EXISTING SYSTEMS ARE LESS THAN THREE YEARS OLD.

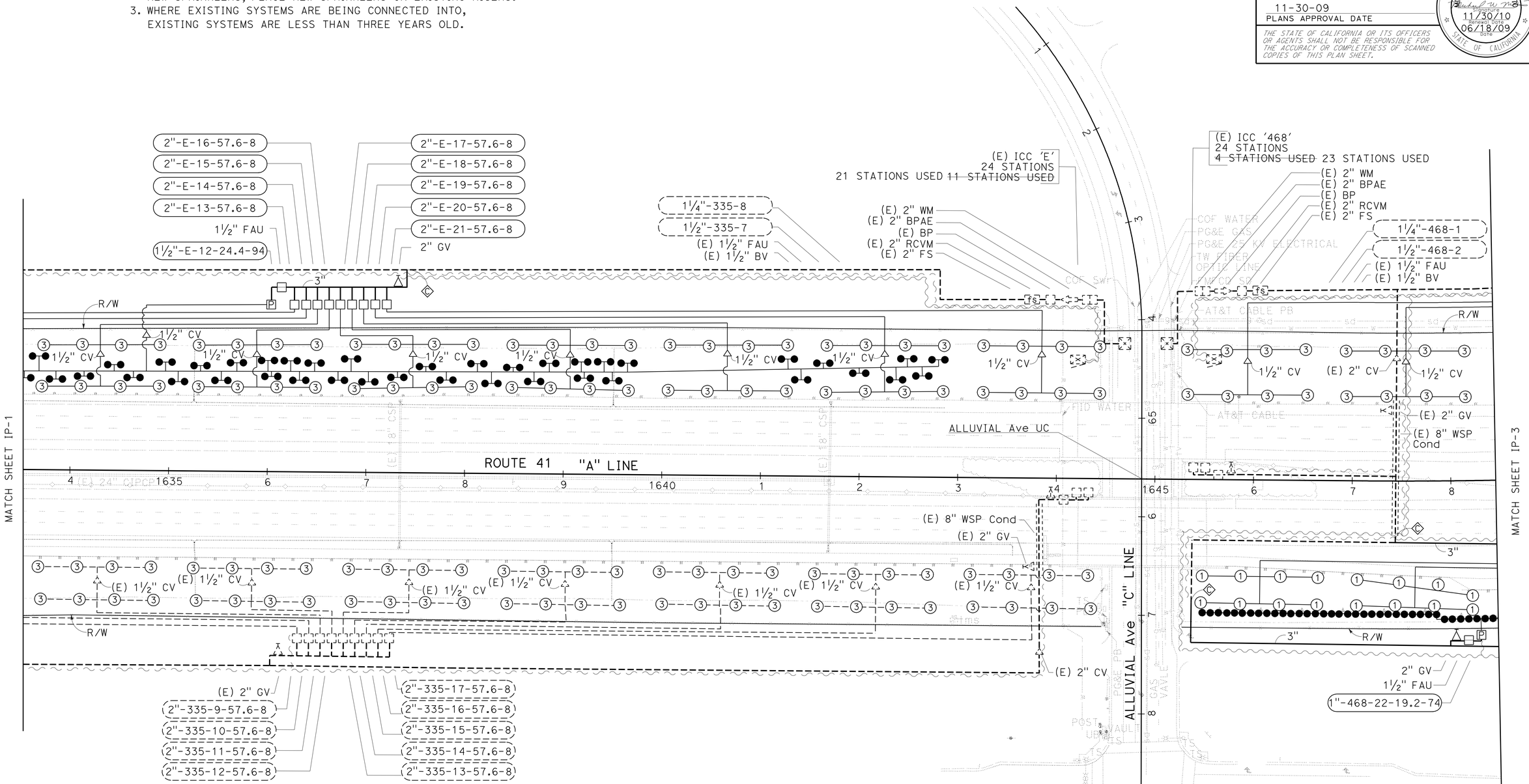

THIS PLAN ACCURATE FOR IRRIGATION WORK ONLY.

IRRIGATION PLAN

SCALE: 1"=50'

IP-2

STATE OF CALIFORNIA - DEPARTMENT OF TRANSPORTATION
Caltrans® LANDSCAPE ARCHITECTURE

SENIOR LANDSCAPE ARCHITECT: ELBERT COX
CALCULATED-DESIGNED BY: KEVIN GALLO
CHECKED BY: MICHAEL MILLS
REVISED BY / DATE REVISED

LAST REVISION 06-18-09
DATE PLOTTED => 03-DEC-2009
TIME PLOTTED => 13:34

Dist	COUNTY	ROUTE	POST MILES TOTAL PROJECT	SHEET No.	TOTAL SHEETS
06	Fre	41	R30.7/R31.7	21	42

LICENSED LANDSCAPE ARCHITECT

11-30-09
PLANS APPROVAL DATE

LICENSED LANDSCAPE ARCHITECT
MICHAEL W. MILLS No. 4770
Signature
11/30/10
Renewal Date
06/18/09
Date
STATE OF CALIFORNIA

THE STATE OF CALIFORNIA OR ITS OFFICERS OR AGENTS SHALL NOT BE RESPONSIBLE FOR THE ACCURACY OR COMPLETENESS OF SCANNED COPIES OF THIS PLAN SHEET.

NOTES: 1. FOR ACCURATE RIGHT OF WAY AND ACCESS DATA, CONTACT RIGHT OF WAY ENGINEERING AT THE DISTRICT OFFICE.
2. WHERE EXISTING LATERAL SUPPLY LINES ARE SHOWN WITH NEW SPRINKLERS, PLACE NEW SPRINKLERS ON EXISTING RISERS.
3. WHERE EXISTING SYSTEMS ARE BEING CONNECTED INTO, EXISTING SYSTEMS ARE LESS THAN THREE YEARS OLD.

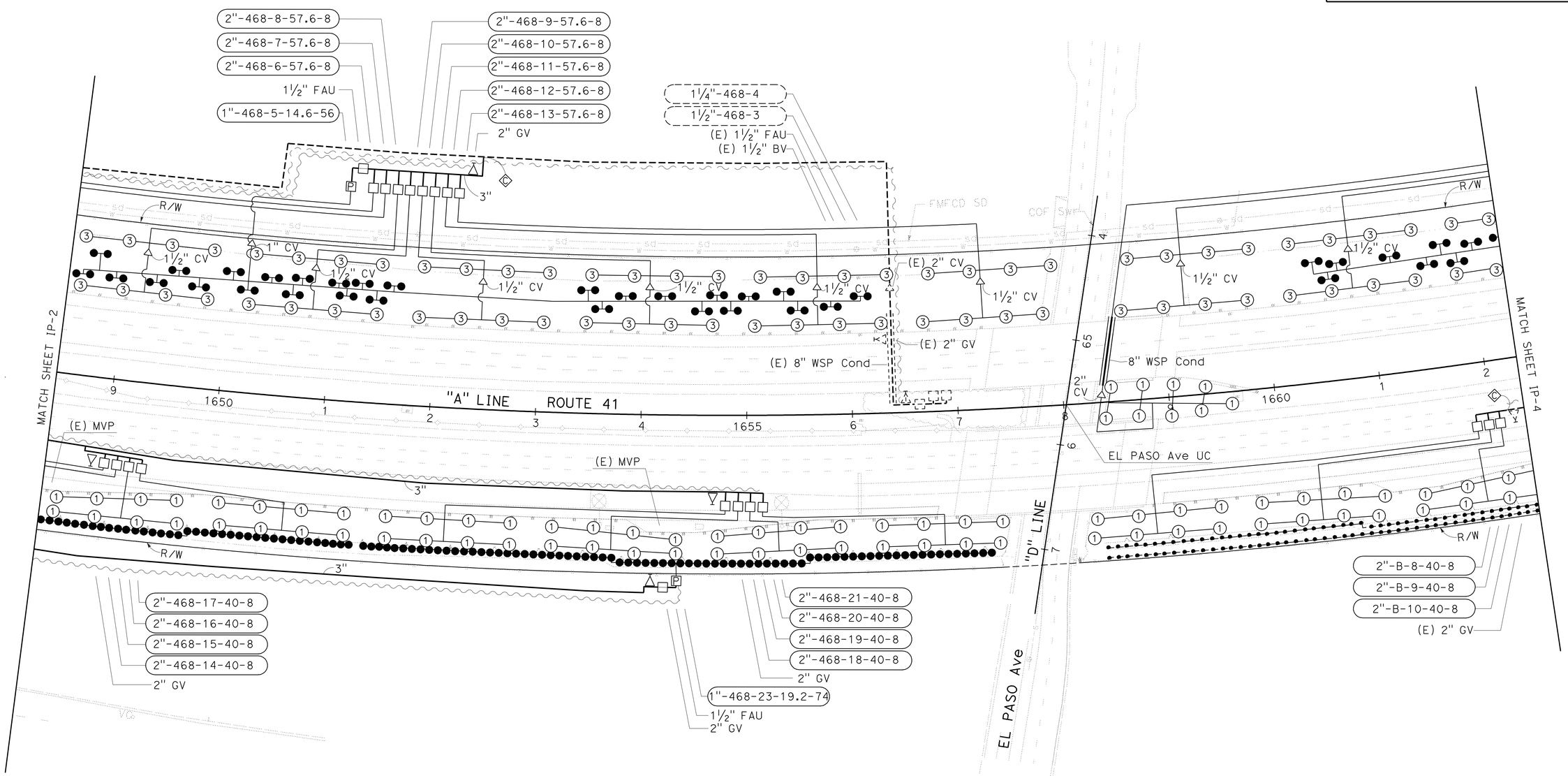

THIS PLAN ACCURATE FOR IRRIGATION WORK ONLY.

IRRIGATION PLAN
IP-3

SCALE: 1" = 50'

STATE OF CALIFORNIA - DEPARTMENT OF TRANSPORTATION
Caltrans® LANDSCAPE ARCHITECTURE

SENIOR LANDSCAPE ARCHITECT: ELBERT COX
CALCULATED-DESIGNED BY: MICHAEL MILLS
CHECKED BY: KEVIN GALLO
REVISED BY
DATE REVISED

LAST REVISION 06-18-09
DATE PLOTTED => 03-DEC-2009
TIME PLOTTED => 13:34

Dist	COUNTY	ROUTE	POST MILES TOTAL PROJECT	SHEET No.	TOTAL SHEETS
06	Fre	41	R30.7/R31.7	22	42

LICENSED LANDSCAPE ARCHITECT

11-30-09
PLANS APPROVAL DATE

LICENSED LANDSCAPE ARCHITECT
MICHAEL W. MILLS No. 4170
Expiration Date 11/30/10
Renewal Date 06/18/09
STATE OF CALIFORNIA

THE STATE OF CALIFORNIA OR ITS OFFICERS OR AGENTS SHALL NOT BE RESPONSIBLE FOR THE ACCURACY OR COMPLETENESS OF SCANNED COPIES OF THIS PLAN SHEET.

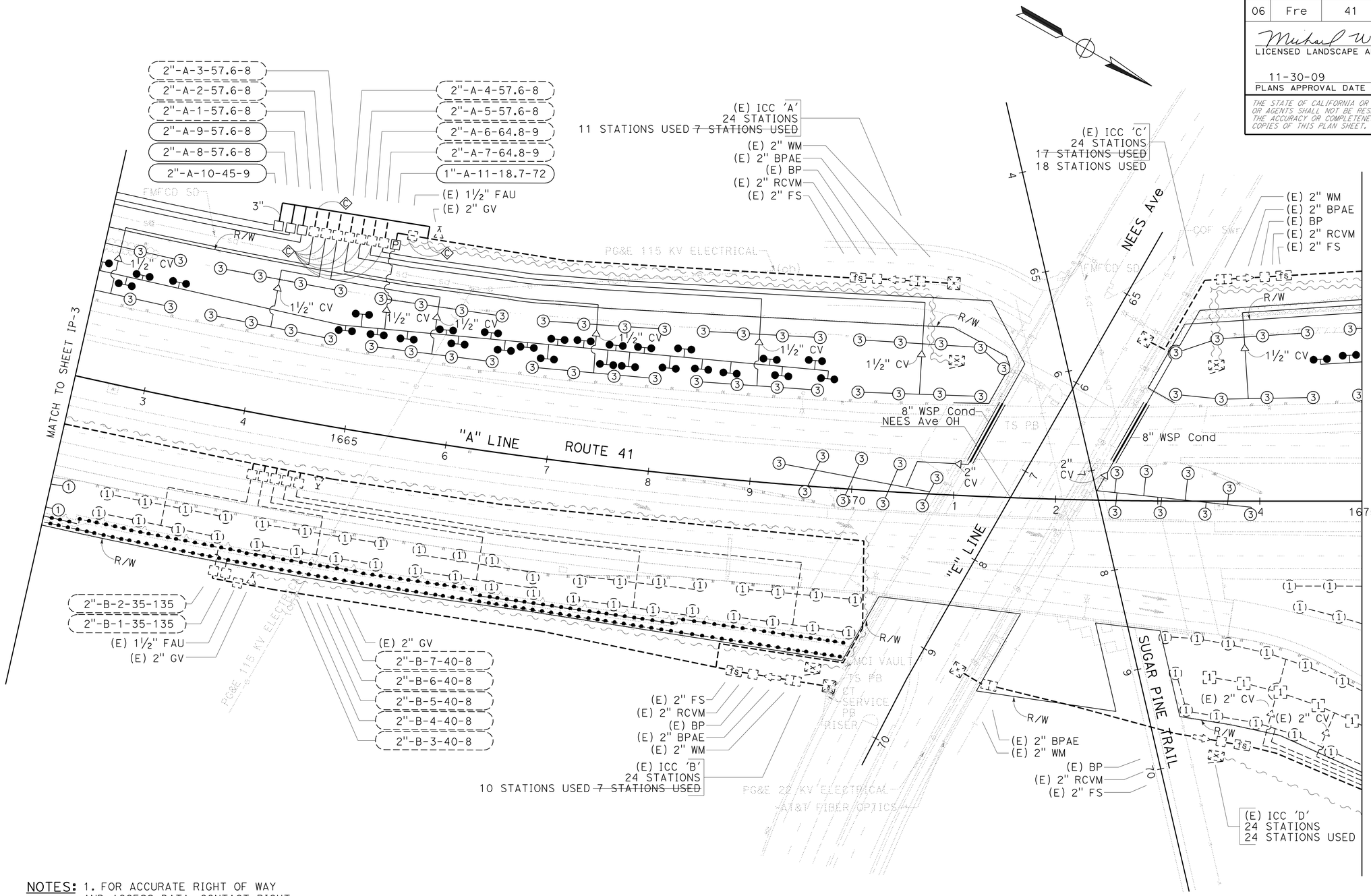

NOTES: 1. FOR ACCURATE RIGHT OF WAY AND ACCESS DATA, CONTACT RIGHT OF WAY ENGINEERING AT THE DISTRICT OFFICE.
2. WHERE EXISTING LATERAL SUPPLY LINES ARE SHOWN WITH NEW SPRINKLERS, PLACE NEW SPRINKLERS ON EXISTING RISERS.
3. WHERE EXISTING SYSTEMS ARE BEING CONNECTED INTO, EXISTING SYSTEMS ARE LESS THAN THREE YEARS OLD.

THIS PLAN ACCURATE FOR IRRIGATION WORK ONLY.

IRRIGATION PLAN
IP-4

SCALE: 1" = 50'

STATE OF CALIFORNIA - DEPARTMENT OF TRANSPORTATION
Caltrans® LANDSCAPE ARCHITECTURE

SENIOR LANDSCAPE ARCHITECT: ELBERT COX
CALCULATED-DESIGNED BY: MICHAEL MILLS
CHECKED BY: KEVIN GALLO
REVISED BY
DATE REVISED

LAST REVISION 06-18-09
DATE PLOTTED => 03-DEC-2009
TIME PLOTTED => 13:35

Dist	COUNTY	ROUTE	POST MILES TOTAL PROJECT	SHEET No.	TOTAL SHEETS
06	Fre	41	R30.7/R31.7	23	42

LICENSED LANDSCAPE ARCHITECT

11-30-09
PLANS APPROVAL DATE

LICENSED LANDSCAPE ARCHITECT
MICHAEL W. MILLS No. 4770
Expiration 11/30/10
Renewal Date 06/18/09
Date
STATE OF CALIFORNIA

THE STATE OF CALIFORNIA OR ITS OFFICERS OR AGENTS SHALL NOT BE RESPONSIBLE FOR THE ACCURACY OR COMPLETENESS OF SCANNED COPIES OF THIS PLAN SHEET.

NOTES: 1. FOR ACCURATE RIGHT OF WAY AND ACCESS DATA, CONTACT RIGHT OF WAY ENGINEERING AT THE DISTRICT OFFICE.
2. WHERE EXISTING LATERAL SUPPLY LINES ARE SHOWN WITH NEW SPRINKLERS, PLACE NEW SPRINKLERS ON EXISTING RISERS.
3. WHERE EXISTING SYSTEMS ARE BEING CONNECTED INTO, EXISTING SYSTEMS ARE LESS THAN THREE YEARS OLD.

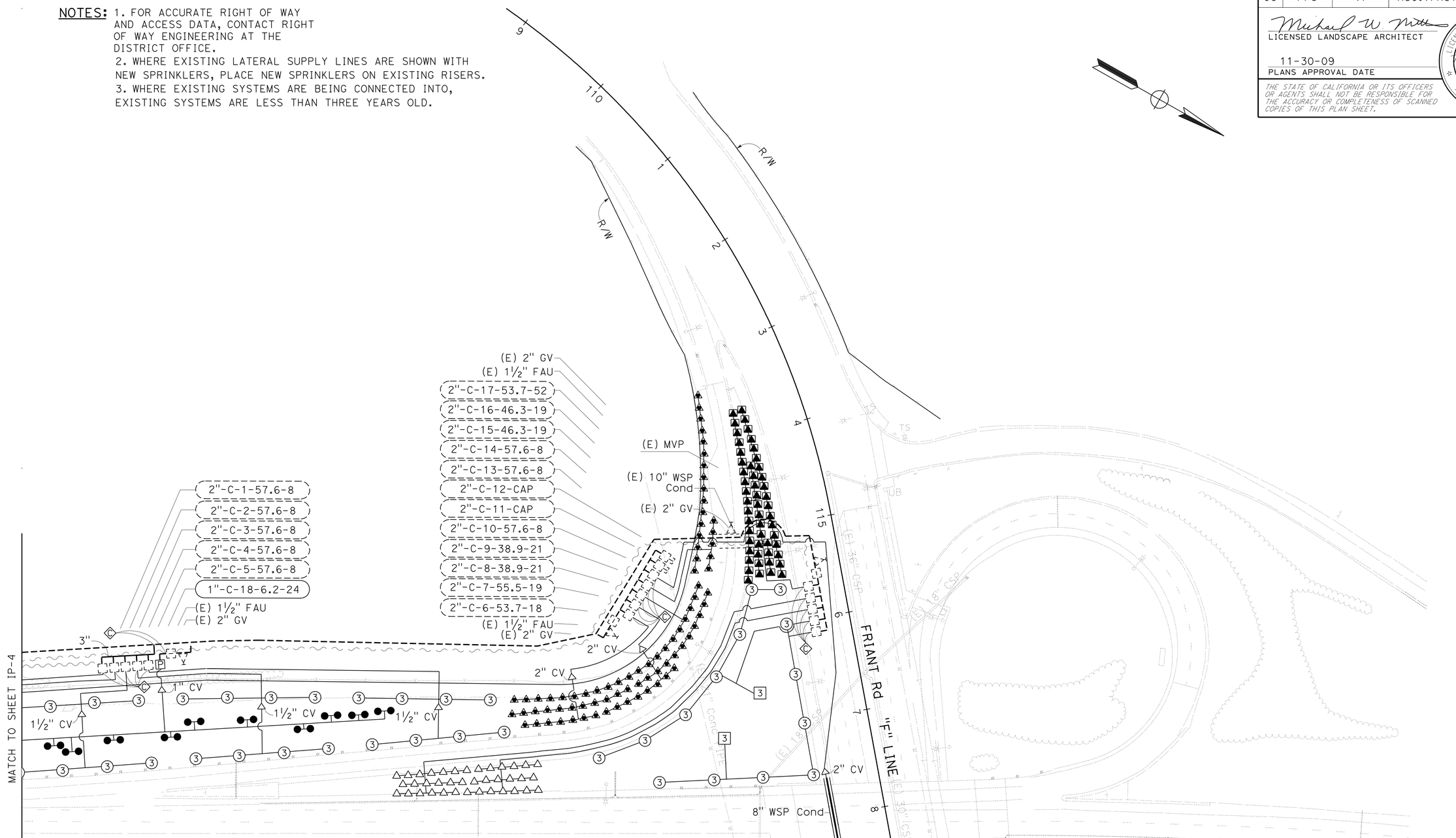

THIS PLAN ACCURATE FOR IRRIGATION WORK ONLY.

IRRIGATION PLAN

SCALE: 1" = 50'

IP-5

STATE OF CALIFORNIA - DEPARTMENT OF TRANSPORTATION
Caltrans® LANDSCAPE ARCHITECTURE

SENIOR LANDSCAPE ARCHITECT: ELBERT COX

CALCULATED-DESIGNED BY: MICHAEL MILLS
CHECKED BY: KEVIN GALLO

REVISED BY
DATE REVISED

LAST REVISION 06-18-09
DATE PLOTTED => 03-DEC-2009
TIME PLOTTED => 13:35

Dist	COUNTY	ROUTE	POST MILES TOTAL PROJECT	SHEET No.	TOTAL SHEETS
06	Fre	41	R30.7/R31.7	24	42

LICENSED LANDSCAPE ARCHITECT

11-30-09
PLANS APPROVAL DATE

LICENSED LANDSCAPE ARCHITECT MICHAEL W. MILLS No. 4770 Signature 11/30/10 Renewal Date 06/18/09 Date STATE OF CALIFORNIA

THE STATE OF CALIFORNIA OR ITS OFFICERS OR AGENTS SHALL NOT BE RESPONSIBLE FOR THE ACCURACY OR COMPLETENESS OF SCANNED COPIES OF THIS PLAN SHEET.

NOTES:
1. FOR ACCURATE RIGHT OF WAY AND ACCESS DATA, CONTACT RIGHT OF WAY ENGINEERING AT THE DISTRICT OFFICE.
2. WHERE EXISTING LATERAL SUPPLY LINES ARE SHOWN WITH NEW SPRINKLERS, PLACE NEW SPRINKLERS ON EXISTING RISERS.
3. WHERE EXISTING SYSTEMS ARE BEING CONNECTED INTO, EXISTING SYSTEMS ARE LESS THAN THREE YEARS OLD.

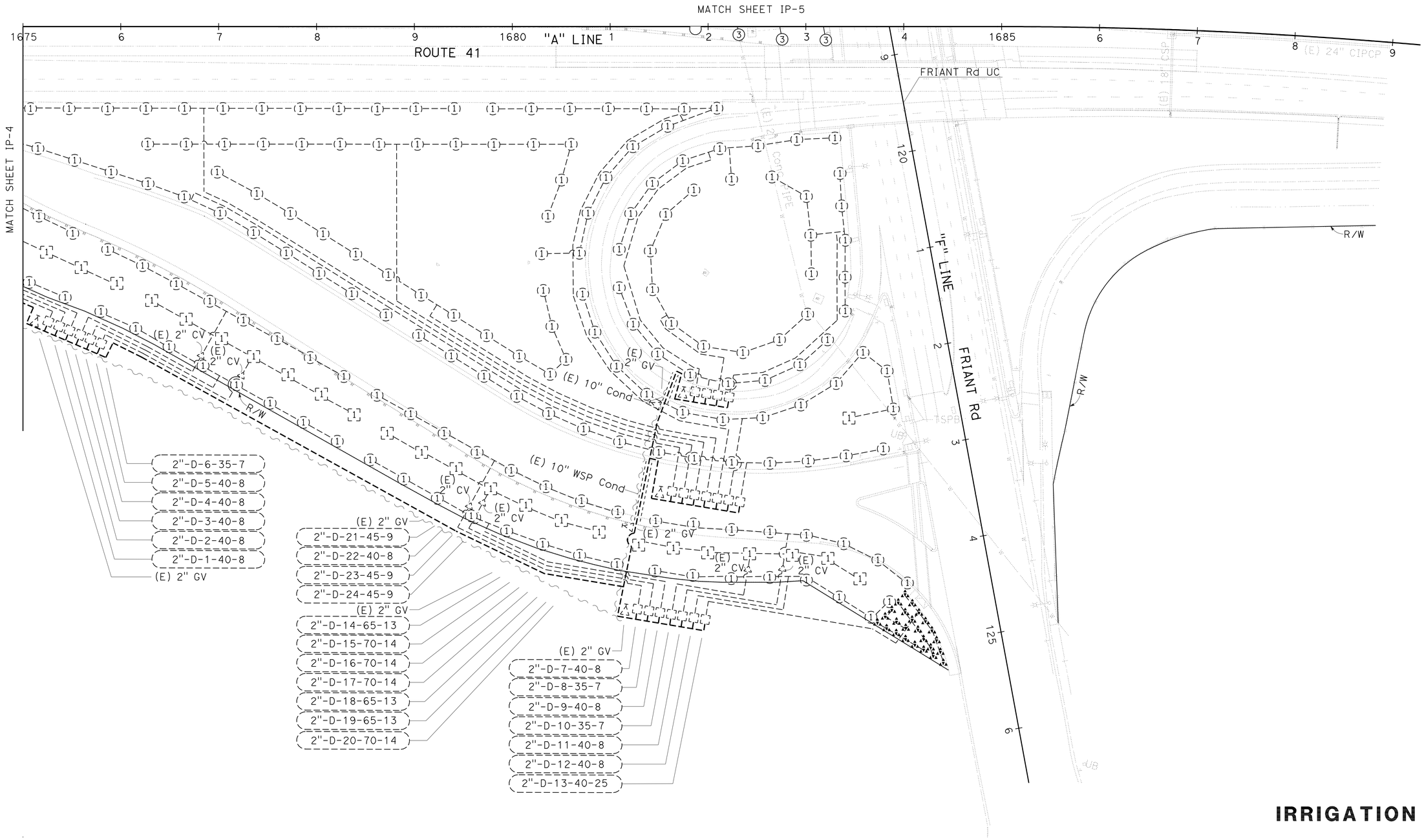

THIS PLAN ACCURATE FOR IRRIGATION WORK ONLY.

IRRIGATION PLAN

SCALE: 1" = 50'

IP-6

STATE OF CALIFORNIA - DEPARTMENT OF TRANSPORTATION
Caltrans® LANDSCAPE ARCHITECTURE

SENIOR LANDSCAPE ARCHITECT: ELBERT COX
CALCULATED-DESIGNED BY: MICHAEL MILLS
CHECKED BY: KEVIN GALLO
REVISED BY / DATE REVISED

LAST REVISION 06-18-09
DATE PLOTTED => 03-DEC-2009
TIME PLOTTED => 13:35

Dist	COUNTY	ROUTE	POST MILES TOTAL PROJECT	SHEET No.	TOTAL SHEETS
06	Fre	41	R30.7/R31.7	25	42

LICENSED LANDSCAPE ARCHITECT

11-30-09
PLANS APPROVAL DATE

LICENSED LANDSCAPE ARCHITECT MICHAEL W. MILLS No. 4770 Expiration 11/30/10 Renewal Date 06/18/09 Date STATE OF CALIFORNIA

THE STATE OF CALIFORNIA OR ITS OFFICERS OR AGENTS SHALL NOT BE RESPONSIBLE FOR THE ACCURACY OR COMPLETENESS OF SCANNED COPIES OF THIS PLAN SHEET.

SPRINKLER SCHEDULE

SYMBOL	TYPE	DESCRIPTION	SPRAY PATTERN	OPERATING PRESSURE (PSI)	PRESSURE COMPENSATING	PLUS/MINUS 5% ② DISCHARGE: GALLONS PER MINUTE (GPM)	DISCHARGE: GALLONS PER HOUR (GPH)	RADIUS (Ft)	WIDTH x LENGTH (Ft)	MATERIAL	INLET CONNECTION (NPT INCH)	③ ⑤ POSITIVE-LOCKING ADJ ARC STOP	BACKSPLASH PREVENTER	DIFFUSER PIN	DISTANCE CONTROL FLAP	ADJ DISCHARGE	RISER: TYPE	RISER: MATERIAL: PLASTIC	RISER: MATERIAL: GALVANIZED	RISER: SIZE (IPS INCH)	RISER: HEIGHT (INCH)	RISER: FLOW SHUTOFF DEVICE	SWING JOINT (TYPE)	RISER SUPPORT	SPRINKLER PROTECTOR (TYPE)	REMARKS
①	A-1	SIDE IMPACT	P	50	-	5.0	-	41	-	B/B	½	X	X	X	X	-	IV	-	X	½	30	X	II	-	-	
3	A-3	SIDE IMPACT	F	50	-	7.2	-	49	-	B/B	¾	X	X	X	X	-	IV	-	X	¾	30	X	II	-	-	
③	A-3	SIDE IMPACT	P	50	-	7.2	-	49	-	B/B	¾	X	X	X	X	-	IV	-	X	¾	30	X	II	-	-	
△	B-1	SHRUB SPRAY	F / H	30	X	3.7 / 1.9	-	15	-	PL	½	-	-	-	-	X	IV	-	X	½	30	X	II	-	-	
◪	B-2	SHRUB SPRAY	F / H	30	X	1.6 / 0.8	-	10	-	PL	½	-	-	-	-	X	VI	X	-	½	-	X	II	-	I	12" POP-UP. SPRINKLER PROTECTOR. ①
◭	B-2	SHRUB SPRAY	F / H	30	X	3.7 / 1.9	-	15	-	PL	½	-	-	-	-	X	VI	X	-	½	-	X	II	-	I	12" POP-UP
●	C-3	SPRAY	Q	30	X	0.26	-	8	-	PL	½	-	-	-	-	X	III	X	-	½	6	X	II	-	-	

X IN BOX DENOTES REQUIREMENT

APPLICABLE WHEN CIRCLED BELOW:

① - See special provisions.
② - If a pressure compensating device is specified, the discharge and radii shown reflect its use.
③ - Arc stop for impacts shall be fitted with a nut and bolt.
4 - Vinyl-coated cast iron housing.
⑤ - Required adjacent to shoulders, curbs, sidewalks, and dikes.
6 - Unless otherwise shown on plans.

ABBREVIATIONS

F — full circle
P — part circle
F/P — full/part circle
Q — quarter circle
T — third circle
H — half circle
TT — two third circle
TQ — three quarter circle
CST — center strip
SST — side strip
EST — end strip
Ft — feet/foot
GPM — gallons per minute
GPH — gallons per hour
Adj — adjustable
PL — plastic
B/B — brass/bronze
B/PL — brass/plastic
B/B/PL — brass/bronze/plastic
NPT — national pipe thread
IPS — iron pipe size
PSI — pounds per square inch

LATERAL SUPPLY SIDE PIPE SIZING CHART

No. OF HEADS BY TYPE							PIPE SIZE (INCH)
A-1	A-3	B-1 & B-2 (15' R) F	B-1 & B-2 (15' R) P	B-2 (10' R) F	B-2 (10' R) P	C-3	
1	0	1-2	1-4	1-5	1-11	1-16	¾
2	1	3-4	5-7	6-8	12-17	17-36	1
3-4	2-3	5-6	8-12	9-15	18-30	37-64	1¼
5-6	4	7-8	13-16	16-19	31-38	65-96	1½
7-9	5-6	9-13	17-26	20-31	39-63	97-160	2
	7-9	14-19	27-37				2½

IRRIGATION CROSSOVERS

LOCATION: LINE	LOCATION: STATION	SIDE: R+	SIDE: L+	CONDUIT TYPE ④ SIZE (INCH) 8	CONDUIT TYPE ④ LENGTH (LF)	(N) WATER LINE CROSSOVER SIZE (INCH)	(N) SPRINKLER CONTROL CROSSOVER SIZE (INCH)
"A"	1658+43		X	66.0		3"	2"
"A"	1670+85		X	68.0		3"	2"
"A"	1672+37		X	73.0		3"	2"
"A"	1683+15		X	66.0		3"	2"
TOTAL							

(N) - NOT A SEPARATE PAY ITEM FOR INFORMATION ONLY
X - DENOTES REQUIREMENT

CONDUIT TYPE

(Applicable when circled below and shown under the 'CONDUIT TYPE' column heading)

1 -Bituminous Coated Corrugated Steel Pipe (0.064" thick)
2 -Corrugated Steel Pipe (0.064" thick)
3 -Corrugated High Density Polyethylene Pipe
④ -Alternative Conduit

LANDSCAPE DETAILS
LD-1

STATE OF CALIFORNIA - DEPARTMENT OF TRANSPORTATION
LANDSCAPE ARCHITECTURE
SENIOR LANDSCAPE ARCHITECT: ELBERT COX
CALCULATED-DESIGNED BY: KEVIN GALLO
CHECKED BY: MICHAEL MILLS
REVISED BY / DATE REVISED

LAST REVISION 06-18-09
DATE PLOTTED => 03-DEC-2009
TIME PLOTTED => 13:35

Dist	COUNTY	ROUTE	POST MILES TOTAL PROJECT	SHEET No.	TOTAL SHEETS
06	Fre	41	R30.7/R31.7	26	42

LICENSED LANDSCAPE ARCHITECT

11-30-09
PLANS APPROVAL DATE

LICENSED LANDSCAPE ARCHITECT MICHAEL W. MILLS No. 4170 Expiration 11/30/10 Renewal Date 06/18/09 Date STATE OF CALIFORNIA

THE STATE OF CALIFORNIA OR ITS OFFICERS OR AGENTS SHALL NOT BE RESPONSIBLE FOR THE ACCURACY OR COMPLETENESS OF SCANNED COPIES OF THIS PLAN SHEET.

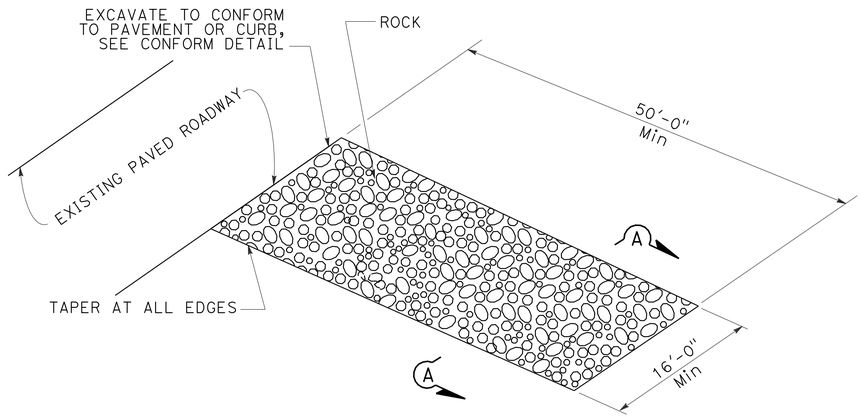

PERSPECTIVE

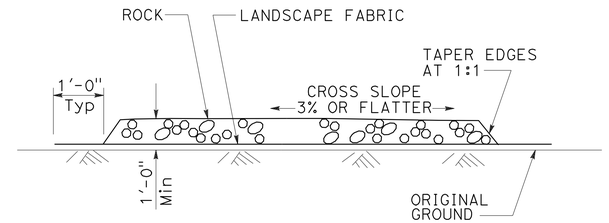

SECTION A-A

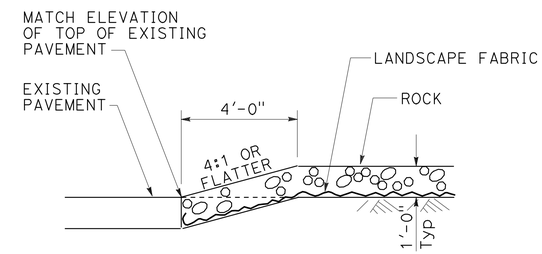

SECTION

CONFORM DETAIL

MAINTENANCE VEHICLE PAD (ROCK)

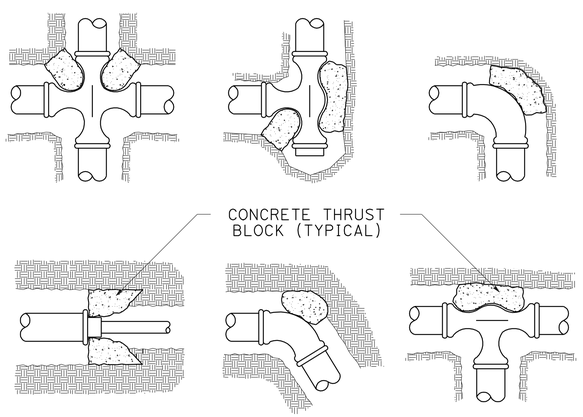

TYPICAL THRUST BLOCK

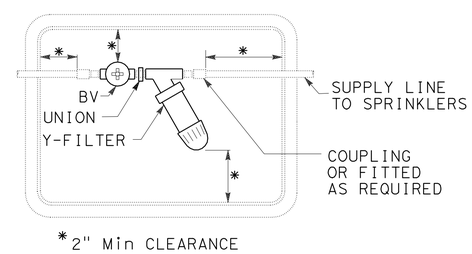

PLAN VIEW

FILTER ASSEMBLY UNIT

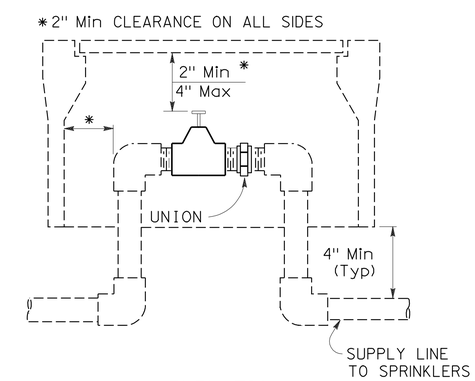

ELEVATION

REMOTE CONTROL VALVE

LANDSCAPE DETAILS
LD-2

NO SCALE

REVISED BY	DATE REVISED

MICHAEL MILLS — KEVIN GALLO

CALCULATED-DESIGNED BY — CHECKED BY

SENIOR LANDSCAPE ARCHITECT — ELBERT COX

STATE OF CALIFORNIA - DEPARTMENT OF TRANSPORTATION
Caltrans® LANDSCAPE ARCHITECTURE

LAST REVISION 06-18-09 — DATE PLOTTED => 03-DEC-2009 TIME PLOTTED => 13:35

Dist	COUNTY	ROUTE	POST MILES TOTAL PROJECT	SHEET No.	TOTAL SHEETS
06	Fre	41	R30.7/R31.7	27	42

LICENSED LANDSCAPE ARCHITECT

11-30-09
PLANS APPROVAL DATE

LICENSED LANDSCAPE ARCHITECT MICHAEL W. MILLS No. 4770 STATE OF CALIFORNIA
Expiration 11/30/10
Renewal Date 06/18/09
Date

THE STATE OF CALIFORNIA OR ITS OFFICERS OR AGENTS SHALL NOT BE RESPONSIBLE FOR THE ACCURACY OR COMPLETENESS OF SCANNED COPIES OF THIS PLAN SHEET.

SUBTOTALS PER VALVE ON LATERAL SUPPLY SIDE OF CONTROL VALVE

DESCRIPTION			UNIT	VALVE OR ASSEMBLY NUMBER '335'									SUBTOTALS	UNIT	DESCRIPTION		
				9	10	11	12	13	14	15	16	17					
PLASTIC PIPE SUPPLY LINE	PR 200	(E)		(E)	(E)	(E)	(E)	(E)	(E)	(E)	(E)	(E)	(E)		(E)	PR 200	PLASTIC PIPE SUPPLY LINE
PLASTIC PIPE SUPPLY LINE	PR 315															PR 315	PLASTIC PIPE SUPPLY LINE
GSP																	GSP
CV																	DIP
SPRINKLER TYPE		A-3	EA	8	8	8	8	8	8	8	8	8	72	EA	A-3		SPRINKLER TYPE

DESCRIPTION			UNIT	VALVE OR ASSEMBLY NUMBER '468'																					SUBTOTALS	UNIT	DESCRIPTION		
				1	2	3	4	5	6	7	8	9	10	11	12	13	14	15	16	17	18	19	20	21	22	23					
PLASTIC PIPE SUPPLY LINE	PR 200	¾"	LF	(E)	(E)	(E)	(E)	565	–	–	–	–	–	–	–	–	160	160	160	160	160	160	160	160	265	250	2360	LF	¾"	PR 200	PLASTIC PIPE SUPPLY LINE
		1"	LF					375	160	160	160	160	160	160	160	160	80	80	80	80	80	80	80	80	340	355	2990	LF	1"		
		1¼"	LF					150	80	80	80	80	80	80	80	80	30	20	20	20	20	15	20	20	–	–	955	LF	1¼"		
		1½"	LF					–	50	50	50	50	50	50	50	50	–	–	–	–	–	–	–	–	15	15	430	LF	1½"		
		2"	LF					–	–	–	–	–	–	–	–	–	315	180	25	150	285	145	45	185	–	–	1330	LF	2"		
		2½"	LF					–	525	370	230	85	65	205	350	490	–	–	–	–	–	–	–	–	–	–	2320	LF	2½"		
PLASTIC PIPE SUPPLY LINE	PR 315																													PR 315	PLASTIC PIPE SUPPLY LINE
GSP																															GSP
CV		1"	EA					1	–	–	–	–	–	–	–	–	–	–	–	–	–	–	–	–	–	–	1	EA	1"		CV
		1½"	EA					–	1	1	1	1	1	1	1	1	–	–	–	–	–	–	–	–	–	–	8	EA	1½"		
		2"	EA					–	–	–	–	–	–	–	–	–	–	–	–	–	–	–	–	–	–	–	–	EA	2"		
SPRINKLER TYPE		A-1	EA					–	–	–	–	–	–	–	–	–	8	8	8	8	8	8	8	8	–	–	64	EA	A-1		SPRINKLER TYPE
		A-3	EA					–	8	8	8	8	8	8	8	8	–	–	–	–	–	–	–	–	–	–	64	EA	A-3		
		B-1	EA					–	–	–	–	–	–	–	–	–	–	–	–	–	–	–	–	–	–	–	–	EA	B-1		
		B-2 (10' R)	EA					–	–	–	–	–	–	–	–	–	–	–	–	–	–	–	–	–	–	–	–	EA	B-2 (10' R)		
		B-2 (15' R)	EA					–	–	–	–	–	–	–	–	–	–	–	–	–	–	–	–	–	–	–	–	EA	B-2 (15' R)		
		C-3	EA					56	–	–	–	–	–	–	–	–	–	–	–	–	–	–	–	–	74	74	204	EA	C-3		

IRRIGATION QUANTITIES IQ-1

REVISED BY | DATE REVISED
MICHAEL MILLS | KEVIN GALLO
CALCULATED-DESIGNED BY | CHECKED BY
SENIOR LANDSCAPE ARCHITECT
ELBERT COX

STATE OF CALIFORNIA - DEPARTMENT OF TRANSPORTATION
Caltrans® LANDSCAPE ARCHITECTURE

LAST REVISION 06-18-09 | DATE PLOTTED => 03-DEC-2009 | TIME PLOTTED => 13:36

Dist	COUNTY	ROUTE	POST MILES TOTAL PROJECT	SHEET No.	TOTAL SHEETS
06	Fre	41	R30.7/R31.7	28	42

Michael W. Mills
LICENSED LANDSCAPE ARCHITECT

11-30-09
PLANS APPROVAL DATE

LICENSED LANDSCAPE ARCHITECT MICHAEL W. MILLS No. 4170 STATE OF CALIFORNIA
Expiration 11/30/10
Renewal Date 06/18/09
Date

THE STATE OF CALIFORNIA OR ITS OFFICERS OR AGENTS SHALL NOT BE RESPONSIBLE FOR THE ACCURACY OR COMPLETENESS OF SCANNED COPIES OF THIS PLAN SHEET.

SUBTOTALS PER VALVE ON LATERAL SUPPLY SIDE OF CONTROL VALVE

DESCRIPTION			UNIT	VALVE OR ASSEMBLY NUMBER 'A' 1	2	3	4	5	6	7	8	9	10	11	SUBTOTALS	UNIT	DESCRIPTION		
PLASTIC PIPE SUPPLY LINE	PR 200	¾"	LF	-	-	-	-	-	-	-	-	-	145	830	975	LF	¾"	PR 200	PLASTIC PIPE SUPPLY LINE
		1"	LF	160	160	160	160	160	160	185	160	160	30	470	1965	LF	1"		
		1¼"	LF	80	80	80	80	80	80	60	80	80	40	70	810	LF	1¼"		
		1½"	LF	50	50	50	50	50	50	-	50	50	20	80	500	LF	1½"		
		2"	LF	-	-	-	-	-	-	40	-	-	800	-	840	LF	2"		
		2½"	LF	230	85	160	300	445	60	880	520	375	-	-	3055	LF	2½"		
	PR 315																	PR 315	
GSP																			GSP
CV		1"	EA	-	-	-	-	-	-	-	-	-	-	-	-	EA	1"		CV
		1½"	EA	1	1	1	1	1	1	-	1	1	-	1	9	EA	1½"		
		2"	EA	-	-	-	-	-	-	1	-	-	1	-	2	EA	2"		
SPRINKLER TYPE		A-1	EA	-	-	-	-	-	-	-	-	-	9	-	9	EA	A-1		SPRINKLER TYPE
		A-3	EA	8	8	8	8	8	9	9	8	8	-	-	74	EA	A-3		
		B-1	EA	-	-	-	-	-	-	-	-	-	-	-	-	EA	B-1		
		B-2 (10′ R)	EA	-	-	-	-	-	-	-	-	-	-	-	-	EA	B-2 (10′ R)		
		B-2 (15′ R)	EA	-	-	-	-	-	-	-	-	-	-	-	-	EA	B-2 (15′ R)		
		C-3	EA	-	-	-	-	-	-	-	-	-	-	72	72	EA	C-3		

DESCRIPTION			UNIT	VALVE OR ASSEMBLY NUMBER 'B' 1	2	3	4	5	6	7	8	9	10	SUBTOTALS	UNIT	DESCRIPTION		
PLASTIC PIPE SUPPLY LINE	PR 200	¾"	LF	(E)	(E)	(E)	(E)	(E)	(E)	(E)	160	160	160	480	LF	¾"	PR 200	PLASTIC PIPE SUPPLY LINE
		1"	LF								80	80	80	240	LF	1"		
		1¼"	LF								20	20	20	60	LF	1¼"		
		1½"	LF								-	-	-	-	LF	1½"		
		2"	LF								355	215	75	645	LF	2"		
		2½"	LF								-	-	-	-	LF	2½"		
	PR 315																PR 315	
GSP																		GSP
CV		1"	EA								-	-	-	-	EA	1"		CV
		1½"	EA								-	-	-	-	EA	1½"		
		2"	EA								-	-	-	-	EA	2"		
SPRINKLER TYPE		A-1	EA								8	8	8	24	EA	A-1		SPRINKLER TYPE
		A-3	EA								-	-	-	-	EA	A-3		
		B-1	EA								-	-	-	-	EA	B-1		
		B-2 (10′ R)	EA								-	-	-	-	EA	B-2 (10′ R)		
		B-2 (15′ R)	EA								-	-	-	-	EA	B-2 (15′ R)		
		C-3	EA								-	-	-	-	EA	C-3		

IRRIGATION QUANTITIES IQ-2

REVISED BY | DATE REVISED
MICHAEL MILLS | KEVIN GALLO
CALCULATED-DESIGNED BY | CHECKED BY
SENIOR LANDSCAPE ARCHITECT | ELBERT COX

STATE OF CALIFORNIA - DEPARTMENT OF TRANSPORTATION
Caltrans® LANDSCAPE ARCHITECTURE

LAST REVISION 06-18-09 | DATE PLOTTED => 03-DEC-2009 | TIME PLOTTED => 13:36

Dist	COUNTY	ROUTE	POST MILES TOTAL PROJECT	SHEET No.	TOTAL SHEETS
06	Fre	41	R30.7/R31.7	29	42

LICENSED LANDSCAPE ARCHITECT

11-30-09
PLANS APPROVAL DATE

LICENSED LANDSCAPE ARCHITECT MICHAEL W. MILLS No. 4170 Expiration 11/30/10 Renewal Date 06/18/09 Date STATE OF CALIFORNIA

THE STATE OF CALIFORNIA OR ITS OFFICERS OR AGENTS SHALL NOT BE RESPONSIBLE FOR THE ACCURACY OR COMPLETENESS OF SCANNED COPIES OF THIS PLAN SHEET.

SUBTOTALS PER VALVE ON LATERAL SUPPLY SIDE OF CONTROL VALVE

DESCRIPTION			UNIT	VALVE OR ASSEMBLY NUMBER 'C' 1	2	3	4	5	6	7	8	9	10	11	12	13	14	15	16	17	18	SUBTOTALS	UNIT	DESCRIPTION		
PLASTIC PIPE SUPPLY LINE	PR 200	¾"	LF	-	-	-	-	-	125	120	85	125	-	CAP	CAP	-	-	125	125	405	500	1610	LF	¾"	PR 200	PLASTIC PIPE SUPPLY LINE
		1"	LF	165	160	160	160	160	70	50	35	50	155			150	145	25	25	-	65	1575	LF	1"		
		1¼"	LF	40	80	80	80	80	25	35	60	35	45			95	110	-	-	20	-	785	LF	1¼"		
		1½"	LF	25	60	65	55	40	-	25	45	15	45			55	110	15	15	-	-	570	LF	1½"		
		2"	LF	45	-	-	-	-	150	90	60	90	45			55	-	180	210	330	-	1255	LF	2"		
		2½"	LF	470	245	80	155	325	-	-	-	-	480			110	30	-	-	-	-	1895	LF	2½"		
	PR 315																								PR 315	
GSP																										GSP
CV		1"	EA	-	-	-	-	-	-	-	-	-	-			-	-	-	-	-	1	1	EA	1"		CV
		1½"	EA	-	1	1	1	1	-	-	-	-	-			-	-	-	-	-	-	4	EA	1½"		
		2"	EA	1	-	-	-	-	1	1	-	-	1			-	-	-	-	-	-	4	EA	2"		
SPRINKLER TYPE		A-1	EA	-	-	-	-	-	-	-	-	-	-			-	-	-	-	-	-	-	EA	A-1		SPRINKLER TYPE
		A-3	EA	8	8	8	8	8	-	-	-	-	8			8	8	-	-	-	-	64	EA	A-3		
		B-1	EA	-	-	-	-	-	-	-	-	-	-			-	-	19	19	-	-	38	EA	B-1		
		B-2 (10′ R)	EA	-	-	-	-	-	-	-	-	-	-			-	-	-	-	52	-	52	EA	B-2 (10′ R)		
		B-2 (15′ R)	EA	-	-	-	-	-	18	19	21	21	-			-	-	-	-	-	-	79	EA	B-2 (15′ R)		
		C-3	EA	-	-	-	-	-	-	-	-	-	-			-	-	-	-	-	24	24	EA	C-3		

DESCRIPTION			UNIT	VALVE OR ASSEMBLY NUMBER 'E' 1	2	3	4	5	6	7	8	9	10	11	12	13	14	15	16	17	18	19	20	21	SUBTOTALS	UNIT	DESCRIPTION		
PLASTIC PIPE SUPPLY LINE	PR 200	¾"	LF	(E)	(E)	(E)	(E)	(E)	(E)	(E)	(E)	(E)	(E)	(E)	1320	-	-	-	-	-	-	-	-	-	1320	LF	¾"	PR 200	PLASTIC PIPE SUPPLY LINE
		1"	LF												295	160	160	160	160	160	160	160	160	160	1735	LF	1"		
		1¼"	LF												275	80	80	80	80	80	80	80	80	80	995	LF	1¼"		
		1½"	LF												225	50	50	50	50	50	50	50	50	50	675	LF	1½"		
		2"	LF												-	-	-	-	-	-	-	-	-	-	-	LF	2"		
		2½"	LF												-	550	400	260	110	110	260	405	560	705	3360	LF	2½"		
	PR 315																											PR 315	
GSP																													GSP
CV		1"	EA												-	-	-	-	-	-	-	-	-	-	-	EA	1"		CV
		1½"	EA												1	1	1	1	1	1	1	1	1	1	10	EA	1½"		
		2"	EA												-	-	-	-	-	-	-	-	-	-	-	EA	2"		
SPRINKLER TYPE		A-1	EA												-	-	-	-	-	-	-	-	-	-	-	EA	A-1		SPRINKLER TYPE
		A-3	EA												-	8	8	8	8	8	8	8	8	8	72	EA	A-3		
		B-1	EA												-	-	-	-	-	-	-	-	-	-	-	EA	B-1		
		B-2 (10′ R)	EA												-	-	-	-	-	-	-	-	-	-	-	EA	B-2 (10′ R)		
		B-2 (15′ R)	EA												-	-	-	-	-	-	-	-	-	-	-	EA	B-2 (15′ R)		
		C-3	EA												94	-	-	-	-	-	-	-	-	-	94	EA	C-3		

IRRIGATION QUANTITIES IQ-3

STATE OF CALIFORNIA - DEPARTMENT OF TRANSPORTATION
Caltrans® LANDSCAPE ARCHITECTURE

SENIOR LANDSCAPE ARCHITECT: ELBERT COX
CALCULATED-DESIGNED BY: MICHAEL MILLS
CHECKED BY: KEVIN GALLO
REVISED BY
DATE REVISED

LAST REVISION 06-18-09
DATE PLOTTED => 03-DEC-2009
TIME PLOTTED => 13:36

Dist	COUNTY	ROUTE	POST MILES TOTAL PROJECT	SHEET No.	TOTAL SHEETS
06	Fre	41	R30.7/R31.7	30	42

LICENSED LANDSCAPE ARCHITECT

11-30-09
PLANS APPROVAL DATE

LICENSED LANDSCAPE ARCHITECT MICHAEL W. MILLS No. 4770 Expiration 11/30/10 Renewal Date 06/18/09 Date STATE OF CALIFORNIA

THE STATE OF CALIFORNIA OR ITS OFFICERS OR AGENTS SHALL NOT BE RESPONSIBLE FOR THE ACCURACY OR COMPLETENESS OF SCANNED COPIES OF THIS PLAN SHEET.

SUBTOTALS PER PLAN SHEET ON MAIN SUPPLY SIDE OF CONTROL VALVE

DESCRIPTION			UNIT	SHEET NUMBER IP-1	IP-2	IP-3	IP-4	IP-5	IP-6	SUBTOTALS
BPA				(E)	(E)	(E)	(E)	(E)	(E)	
BPA		ENCLOSURE		(E)	(E)	(E)	(E)	(E)	(E)	
BOOSTER PUMP				(E)	(E)	(E)	(E)	(E)	(E)	
IRRIGATION CONTROLLER		STATION		(E)	(E)	(E)	(E)	(E)	(E)	
IRRIGATION CONTROLLER		STATION								
IRRIGATION CONTROLLER		STATION								
IRRIGATION CONTROLLER	CEC	SINGLE		(E)	(E)	(E)	(E)	(E)	(E)	
IRRIGATION CONTROLLER	CEC	DOUBLE								
VALVES AND ASSEMBLIES	RCV	1"	EA	-	1	2	1	1	-	5
VALVES AND ASSEMBLIES	RCV	1½"	EA	-	1	-	-	-	-	1
VALVES AND ASSEMBLIES	RCV	2"	EA	-	9	19	3	-	-	31
VALVES AND ASSEMBLIES	GV	2"	EA	-	2	4	-	-	-	6
VALVES AND ASSEMBLIES	FAU	1½"	EA	-	2	2	-	-	-	4
CONDUIT	WSP CSP	8"	LF	-	-	66	141	66	-	273
PLASTIC PIPE SUPPLY LINE	PR 200	¾"	LF							
PLASTIC PIPE SUPPLY LINE	PR 200	1"	LF							
PLASTIC PIPE SUPPLY LINE	PR 200	1¼"	LF							
PLASTIC PIPE SUPPLY LINE	PR 200	1½"	LF							
PLASTIC PIPE SUPPLY LINE	PR 200	2"	LF							
PLASTIC PIPE SUPPLY LINE	PR 200	2½"	LF							
PLASTIC PIPE SUPPLY LINE	PR 200	3"	LF	-	410	1300	10	10	-	1730
PLASTIC PIPE SUPPLY LINE	PR 315	2½"	LF	-	-	65	130	65	-	260
GSP										
CV										

TOTAL QUANTITIES

TOTALS	UNIT	DESCRIPTION		
				BPA
		ENCLOSURE		BPA
		BOOSTER PUMP		
		STATION		IRRIGATION CONTROLLER
		STATION		IRRIGATION CONTROLLER
		STATION		IRRIGATION CONTROLLER
		SINGLE	CEC	IRRIGATION CONTROLLER
		DOUBLE	CEC	IRRIGATION CONTROLLER
5	EA	1"	RCV	VALVES AND ASSEMBLIES
1	EA	1½"	RCV	VALVES AND ASSEMBLIES
31	EA	2"	RCV	VALVES AND ASSEMBLIES
6	EA	2"	GV	VALVES AND ASSEMBLIES
4	EA	1½"	FAU	VALVES AND ASSEMBLIES
273	LF	8"	WSP CSP	CONDUIT
6745	LF	¾"	PR 200	PLASTIC PIPE SUPPLY LINE
8505	LF	1"	PR 200	PLASTIC PIPE SUPPLY LINE
3605	LF	1¼"	PR 200	PLASTIC PIPE SUPPLY LINE
2175	LF	1½"	PR 200	PLASTIC PIPE SUPPLY LINE
4070	LF	2"	PR 200	PLASTIC PIPE SUPPLY LINE
10630	LF	2½"	PR 200	PLASTIC PIPE SUPPLY LINE
1730	LF	3"	PR 200	PLASTIC PIPE SUPPLY LINE
260	LF	2½"	PR 315	PLASTIC PIPE SUPPLY LINE
			GSP	
2	EA	1"	CV	
31	EA	1½"	CV	
6	EA	2"	CV	
97	EA	A-1	SPRINKLER TYPE	
346	EA	A-3	SPRINKLER TYPE	
38	EA	B-1	SPRINKLER TYPE	
52	EA	B-2 (10′ R)	SPRINKLER TYPE	
79	EA	B-2 (15′ R)	SPRINKLER TYPE	
394	EA	C-3	SPRINKLER TYPE	

ABBREVIATIONS

BPA — backflow preventer assembly
BV — ball valve
CV — check valve
CEC — controller enclosure cabinet
CSP — corrugated steel pipe
DIP — ductile iron pipe
EA — each
FAU — filter assembly unit
FCV — flow control valve
FS — flow sensor
FV — flush valve
GSP — galvanized steel pipe
GV — gate valve
MCV — manual control valve
Ft — foot/feet
PR — pressure rated
PRV — pressure reducing valve
PRLV — pressure relief valve
QCV — quick coupling valve
RCV — remote control valve
RCVM — remote control valve (master)
VAU — valve assembly unit
WSP — welded steel pipe
WS — wye strainer

IRRIGATION QUANTITIES
IQ-4

STATE OF CALIFORNIA - DEPARTMENT OF TRANSPORTATION
Caltrans® LANDSCAPE ARCHITECTURE
SENIOR LANDSCAPE ARCHITECT: ELBERT COX
CALCULATED-DESIGNED BY: KEVIN GALLO
CHECKED BY: MICHAEL MILLS
REVISED BY
DATE REVISED

LAST REVISION 06-18-09
DATE PLOTTED => 03-DEC-2009
TIME PLOTTED => 13:36

DIST	COUNTY	ROUTE	POST MILES TOTAL PROJECT	SHEET NO.	TOTAL SHEETS
06	Fre	41	R30.7/R31.7	31	42

LICENSED LANDSCAPE ARCHITECT

June 5, 2009
PLANS APPROVAL DATE

LICENSED LANDSCAPE ARCHITECT
Gregory A. Balzer 2576
10 (previous) 2-28-11 (renewal) date
5-14-09 date
STATE OF CALIFORNIA

The State of California or its officers or agents shall not be responsible for the accuracy or completeness of electronic copies of this plan sheet.

To accompany plans dated 11-30-09

A

AB	aggregate base
ABS	acrylonitrile-butadiene-styrene
AC	asphalt concrete
Adj	adjacent/adjustable
AIC	auxiliary irrigation controller
Alt	alternative
AMEND	amendment
ARV	air release valve
AUTO	automatic
AUX	auxiliary
AVB	atmospheric vacuum breaker

B

B&B	balled and burlapped
B/B	brass/bronze
B/B/PL	brass/bronze/plastic
B/PL	brass/plastic
BFM	bonded fiber matrix
Bit Ctd	bituminous coated
BP	booster pump
BPA	backflow preventer assembly
BPAE	backflow preventer assembly in enclosure
BPE	backflow preventer enclosure
BV	ball valve

C

CAP	corrugated aluminum pipe
CARV	combination air release valve
CCA	cam coupler assembly
CEC	controller enclosure cabinet
CHDPE	corrugated high density polyethylene
CL	chain link
CNC	control and neutral conductors
Conc	concrete
Cond	conduit
CSP	corrugated steel pipe
CST	center strip
CV	check valve

D

Dia	diameter
DIP	ductile iron pipe
DN	diameter nominal

E

EA	each
Elect	electric/electrical
Elev	elevation
ENCL	enclosure
EP	edge of pavement
ES	edge of shoulder
EST	end strip
ESTB	establishment
ETW	edge of traveled way

F

F	full circle
F/P	full/part circle
FAU	filter assembly unit
FCV	flow control valve
FERT	fertilizer
FG	finished grade
FIPT	female iron pipe thread
FIS	fertilizer injector system
FL	flow line
FM	flow monitor
FS	flow sensor
Ft	foot/feet
FV	flush valve

G

GAL	Gallon(s)
Galv	galvanized
GARV	garden valve
GPH	gallons per hour
GPM	gallons per minute
GSP	galvanized steel pipe
GV	gate valve

H

H	half circle
HB	hose bib
HDPE	high density polyethylene
HP	horsepower/hinge point
HPL	high pressure line
Hwy	highway

I

IC	irrigation controller
ICC	irrigation controller(s) in controller enclosure cabinet
ID	inside diameter
In	inches
IFS	irrigation filtration system
IPS	iron pipe size
IPT	iron pipe thread
Irr	irrigation

L

L	length
LF	linear foot

M

Max	maximum
MBGR	metal beam guard railing
MCV	manual control valve
MIC	master irrigation controller
Min	minimum
MIPT	male iron pipe thread
Misc	miscellaneous
Mtl	material
MVP	maintenance vehicle pullout

N

NCN	no common name
NL	nozzle line
No.	number
NPT	national pipe thread

O

O/C	on center
OD	outside diameter
Oz	ounce

P

P	part circle
PB	pull box
PCC	portland cement concrete
PE	polyethylene
Pkt	packet
PL	plastic
PLT	plant/planting
PLT ESTB	plant establishment
PM	post mile
PR	pressure rated
PRLV	pressure relief valve
PSFM	polymer stabilized fiber matrix
PSI	pounds per square inch
PRV	pressure reducing valve
PVC	polyvinyl chloride
Pvmt	pavement

Q

Q	quarter circle
QCV	quick coupling valve

R

R	radius
RCP	reinforced concrete pipe
RCV	remote control valve
RCVM	remote control valve (master)
RCVMF	remote control valve (master) w/ flow meter
RCW	recycled/reclaimed water
RECP	rolled erosion control product
REQ	required
R/W	right of way

S

S	slip
SCC	sprinkler control conduit
SCH	schedule
SF	state-furnished
Shld	shoulder
SQFT	square foot/feet
SQYD	square yard(s)
SST	side strip
Sta	station
Std	standard
SW	sidewalk/sound wall

T

T	third circle/thread
TLS	truck loading standpipe
TQ	three quarter circle
TRM	turf reinforcement mat
TRVD	traveled
TT	two third circle
Typ	typical

U

UG	underground

V

VAU	valve assembly unit

W

W	width
W/	with
WM	water meter
WS	wye strainer
WSP	welded steel pipe
WWM	welded wire mesh

NOTE:

FOR ADDITIONAL ABBREVIATIONS, SEE STANDARD PLANS A10A AND A10B.

STATE OF CALIFORNIA
DEPARTMENT OF TRANSPORTATION

PLANTING AND IRRIGATION ABBREVIATIONS

NO SCALE

RSP H1 DATED JUNE 5, 2009 SUPERSEDES STANDARD PLAN H1
DATED MAY 1, 2006 - PAGE 201 OF THE STANDARD PLANS BOOK DATED MAY 2006.

REVISED STANDARD PLAN RSP H1

2006 REVISED STANDARD PLAN RSP H1

5-28-09

DIST	COUNTY	ROUTE	POST MILES TOTAL PROJECT	SHEET NO.	TOTAL SHEETS
06	Fre	41	R30.7/R31.7	32	42

LICENSED LANDSCAPE ARCHITECT

June 5, 2009
PLANS APPROVAL DATE

The State of California or its officers or agents shall not be responsible for the accuracy or completeness of electronic copies of this plan sheet.

LICENSED LANDSCAPE ARCHITECT — Gregory A. Bolzer — 2576 — 10 (expiration) 2-28-11 (renewal) date — 5-14-09 date — STATE OF CALIFORNIA

To accompany plans dated 11-30-09

EXISTING	PROPOSED	ITEM DESCRIPTION
		WATER METER (WM)
		BACKFLOW PREVENTER ASSEMBLY (BPA)
		BACKFLOW PREVENTER ASSEMBLY IN ENCLOSURE (BPAE)
		BACKFLOW PREVENTER ENCLOSURE (BPE)
		BOOSTER PUMP (BP)
		TRUCK LOADING STANDPIPE (TLS)
FS	FS	FLOW SENSOR (FS)
X	X	MASTER IRRIGATION CONTROLLER (MIC)
		AUXILIARY IRRIGATION CONTROLLER (AIC)
		IRRIGATION CONTROLLER (IC)/ IRRIGATION CONTROLLER (IC) (BATTERY) IRRIGATION CONTROLLER (IC) (SOLAR)
		IRRIGATION CONTROLLER(S) IN CONTROLLER ENCLOSURE CABINET (ICC)
		CONTROL AND NEUTRAL CONDUCTORS (CNC)
SCC	SCC	SPRINKLER CONTROL CONDUIT (SCC)
		IRRIGATION CROSSOVER
		EXTEND IRRIGATION CROSSOVER
		IRRIGATION SLEEVE
dip	DIP	DUCTILE IRON PIPE (SUPPLY LINE) (MAIN) (DIP)
		GALVANIZED STEEL PIPE (SUPPLY LINE) (MAIN) (GSP)
		GALVANIZED STEEL PIPE (SUPPLY LINE) (LATERAL) (GSP)
		PLASTIC PIPE (PR 200) (SUPPLY LINE) (MAIN)
		PLASTIC PIPE (PR 200) (SUPPLY LINE) (LATERAL)
		PLASTIC PIPE (IRRIGATION LINE)
		REMOTE CONTROL VALVE (RCV) REMOTE CONTROL VALVE (MASTER) (RCVM) REMOTE CONTROL VALVE (MASTER) W/FLOW METER (RCVMF)
		MANUAL CONTROL VALVE (MCV)
		VALVE ASSEMBLY UNIT (VAU)
		WYE STRAINER (WS)
		FILTER ASSEMBLY UNIT (FAU)
		GATE VALVE (GV)
		BALL VALVE (BV)

EXISTING	PROPOSED	ITEM DESCRIPTION
		QUICK COUPLING VALVE (QCV)
		CAM COUPLER ASSEMBLY (CCA)
		PRESSURE REDUCING VALVE (PRV)
		PRESSURE RELIEF VALVE (PRLV)
		FLOW CONTROL VALVE (FCV)
		COMBINATION AIR RELEASE VALVE (CARV)
		CHECK VALVE (CV)
		FLUSH VALVE (FV)
		NOZZLE LINE W/TURNING UNION
		IRRIGATION SYSTEM
		IRRIGATION SYSTEM TO BE REMOVED
		CHAIN LINK GATE
		QUICK COUPLING VALVE W/SPRINKLER PROTECTOR
3	3	SPRINKLER W/SPRINKLER PROTECTOR
	C	CONNECT TO EXISTING SYSTEM
		CAP
		CAP EXISTING

VALVE CODE

RCV SIZE
IRRIGATION CONTROLLER
CONTROLLER STATION
VALVE IN PARALLEL (IF APPLICABLE)
GPM
QUANTITY OF SPRINKLERS (WHEN SHOWN)

* 2½"-A-2b-40 -60

MCV SIZE
VALVE NUMBER
GPM
QUANTITY OF TYPE SPRINKLERS (WHEN SHOWN)

* 2"-3-30 -50

* VALVE CODES FOR EXISTING VALVES ARE SHOWN IN A DASHED ENCLOSURE.

STATE OF CALIFORNIA
DEPARTMENT OF TRANSPORTATION

PLANTING AND IRRIGATION SYMBOLS

NO SCALE

RSP H2 DATED JUNE 5, 2009 SUPERSEDES RSP H2 DATED MARCH 7, 2008 AND STANDARD PLAN H2 DATED MAY 1, 2006 - PAGE 202 OF THE STANDARD PLANS BOOK DATED MAY 2006.

REVISED STANDARD PLAN RSP H2

2006 REVISED STANDARD PLAN RSP H2

5-11-09

DIST	COUNTY	ROUTE	POST MILES TOTAL PROJECT	SHEET NO.	TOTAL SHEETS
06	Fre	41	R30.7/R31.7	33	42

LICENSED LANDSCAPE ARCHITECT

June 5, 2009
PLANS APPROVAL DATE

The State of California or its officers or agents shall not be responsible for the accuracy or completeness of electronic copies of this plan sheet.

LICENSED LANDSCAPE ARCHITECT
Gregory A. Balzer 2576
10-31-11
(Renewal Date)
5-14-09
Date
STATE OF CALIFORNIA

To accompany plans dated 11-30-09

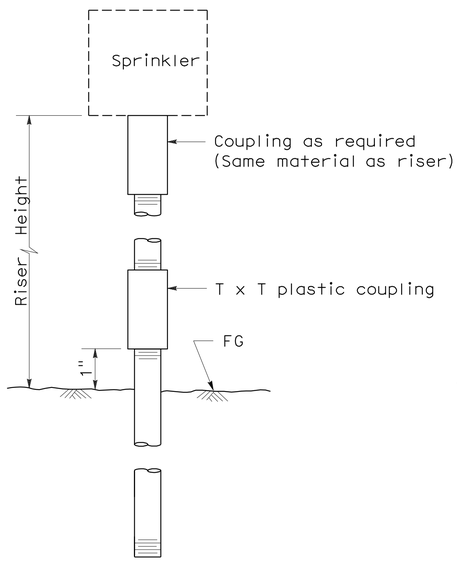

ELEVATION
RISER TYPE I

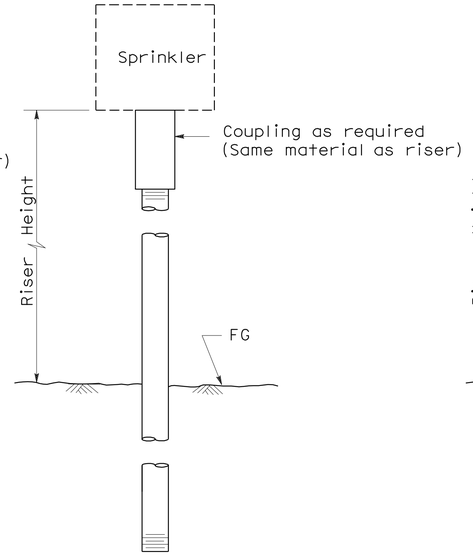

ELEVATION
RISER TYPE II

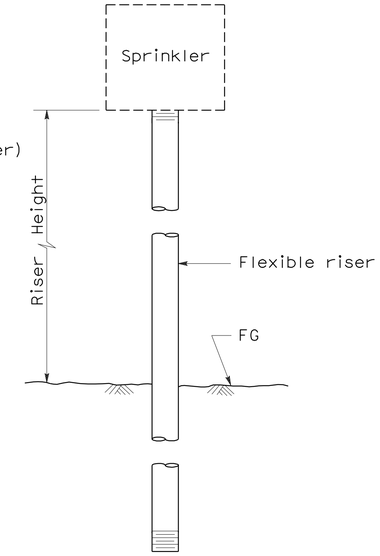

ELEVATION
RISER TYPE III

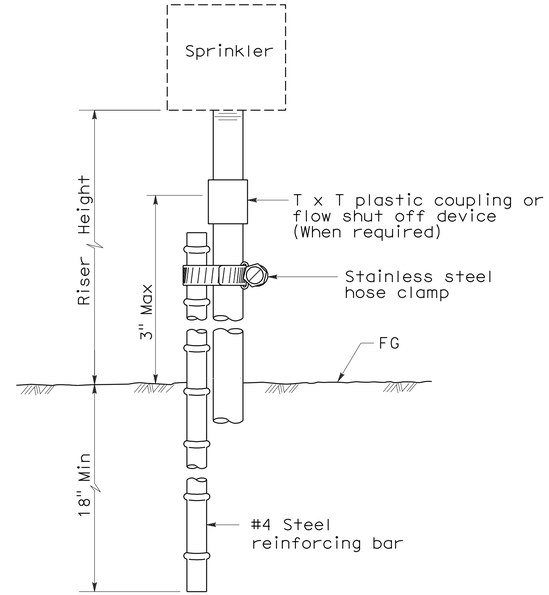

ELEVATION
RISER TYPE IV

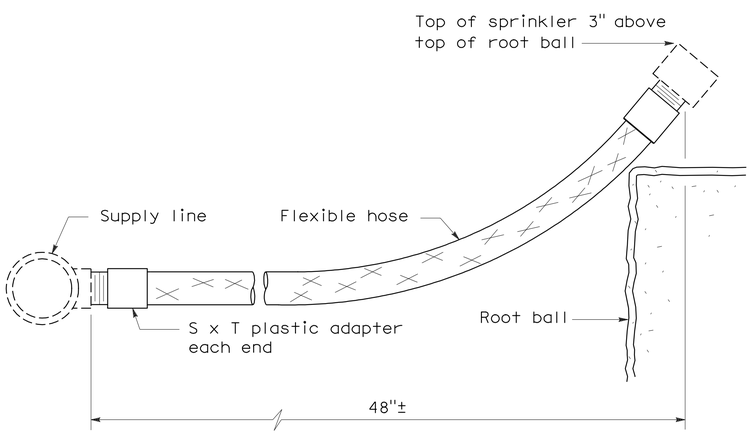

ELEVATION
RISER TYPE V

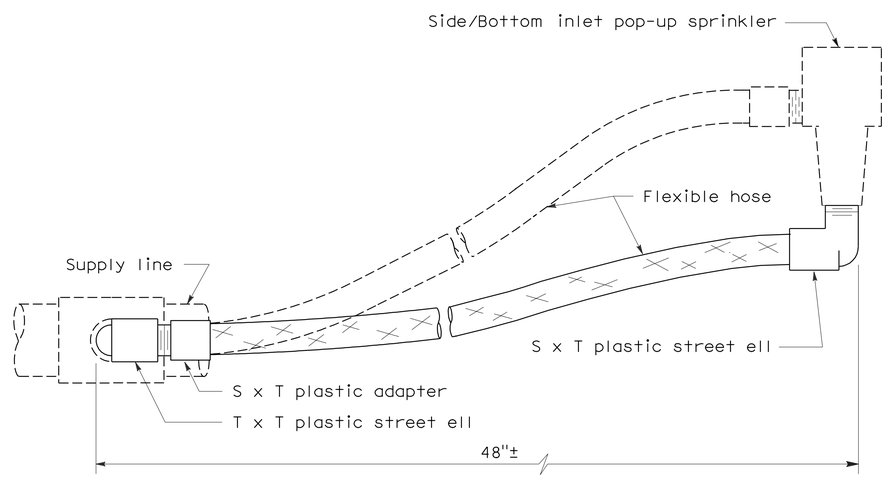

ELEVATION
RISER TYPE VI

STATE OF CALIFORNIA
DEPARTMENT OF TRANSPORTATION

PLANTING AND IRRIGATION DETAILS

NO SCALE

RSP H5 DATED JUNE 5, 2009 SUPERSEDES STANDARD PLAN H5
DATED MAY 1, 2006 - PAGE 205 OF THE STANDARD PLANS BOOK DATED MAY 2006.

REVISED STANDARD PLAN RSP H5

2006 REVISED STANDARD PLAN RSP H5

DIST	COUNTY	ROUTE	POST MILES TOTAL PROJECT	SHEET NO.	TOTAL SHEETS
06	Fre	41	R30.7/R31.7	34	42

LICENSED LANDSCAPE ARCHITECT

June 5, 2009
PLANS APPROVAL DATE

Gregory A. Balzer 2576
10 December 2-28-11 (Renewal) Date
5-14-09 Date
LICENSED LANDSCAPE ARCHITECT STATE OF CALIFORNIA

The State of California or its officers or agents shall not be responsible for the accuracy or completeness of electronic copies of this plan sheet.

To accompany plans dated 11-30-09

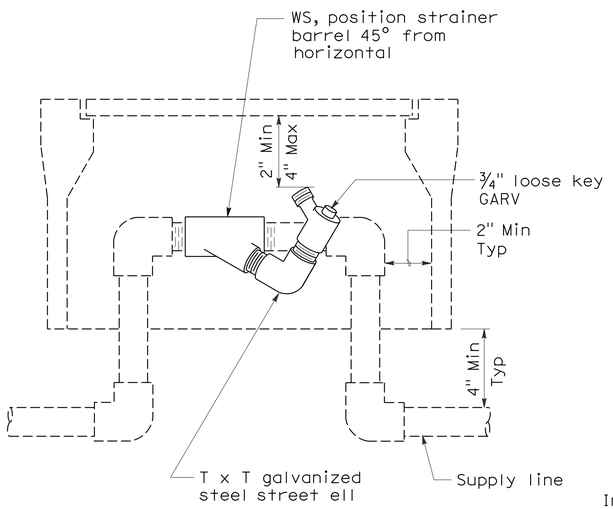

ELEVATION
WYE STRAINER

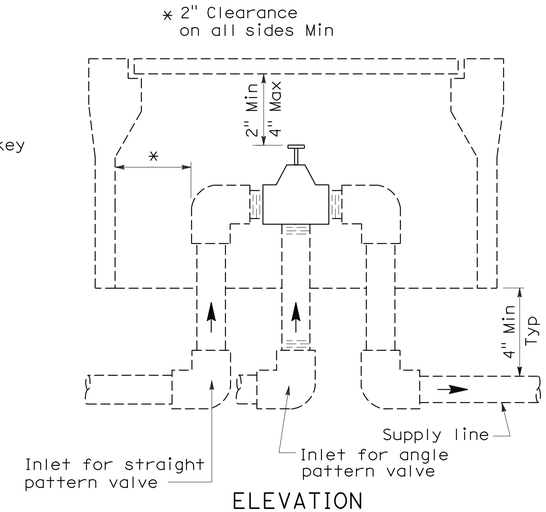

ELEVATION
VALVE

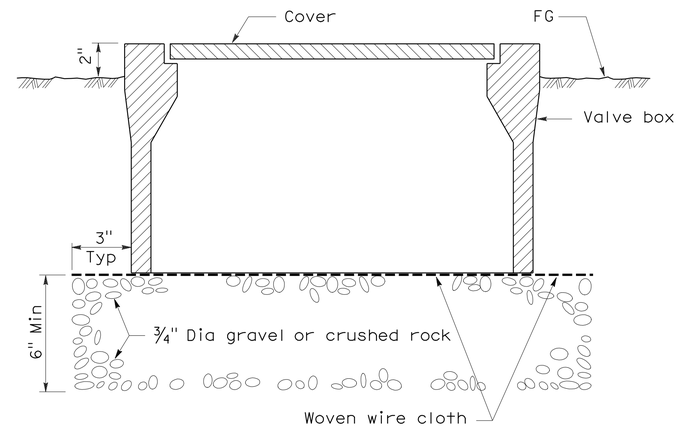

SECTION
VALVE BOX

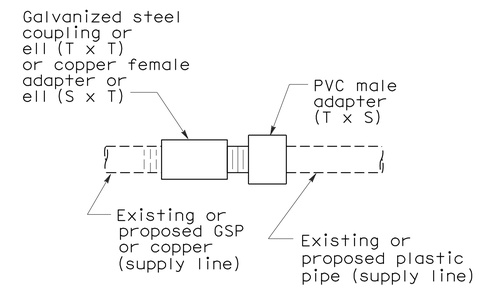

PLAN
GALVANIZED OR COPPER PIPE CONNECTION TO PLASTIC PIPE

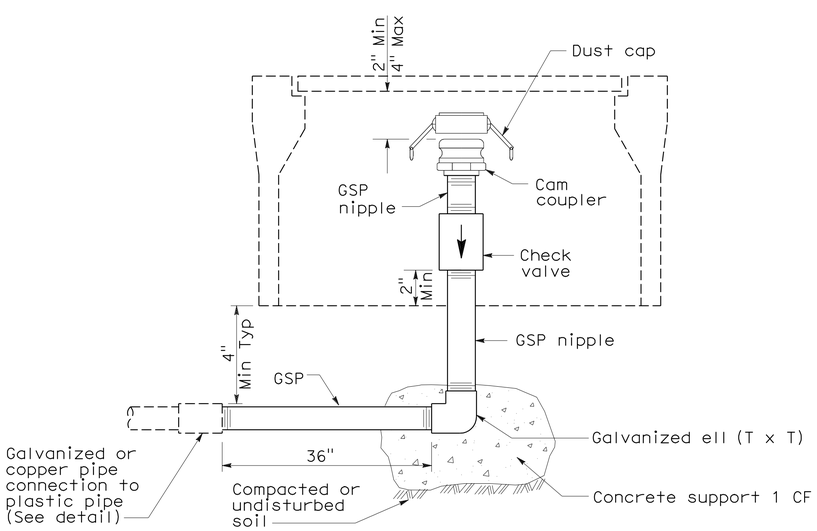

ELEVATION
CAM COUPLER ASSEMBLY

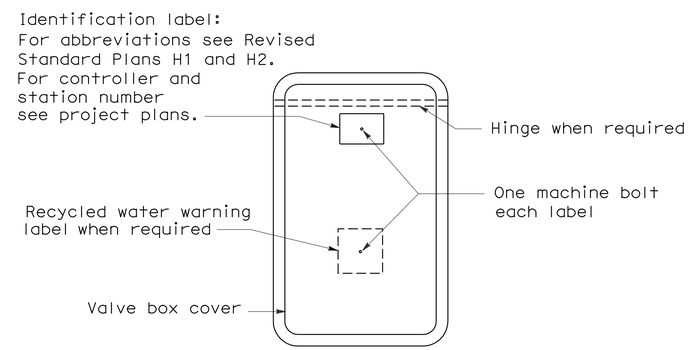

PLAN

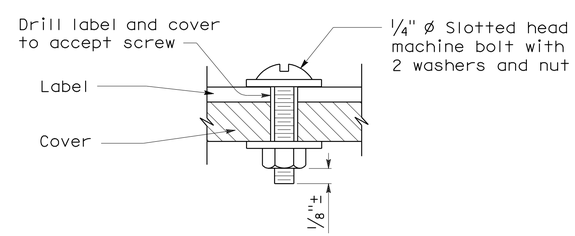

SECTION
VALVE BOX IDENTIFICATION

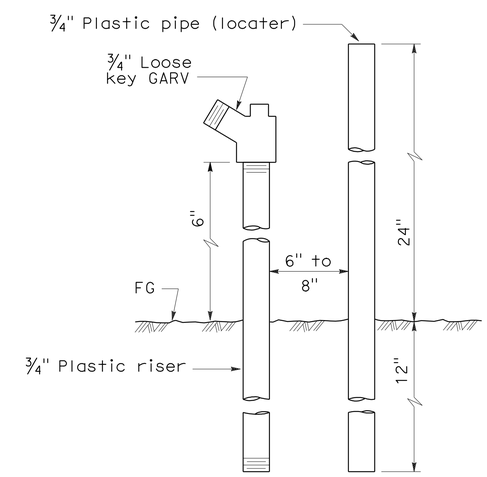

ELEVATION
FLUSH VALVE

STATE OF CALIFORNIA
DEPARTMENT OF TRANSPORTATION

PLANTING AND IRRIGATION DETAILS

NO SCALE

RSP H7 DATED JUNE 5, 2009 SUPERSEDES STANDARD PLAN H7
DATED MAY 1, 2006 - PAGE 207 OF THE STANDARD PLANS BOOK DATED MAY 2006.

REVISED STANDARD PLAN RSP H7

2006 REVISED STANDARD PLAN RSP H7

5-28-09

DIST	COUNTY	ROUTE	POST MILES TOTAL PROJECT	SHEET NO.	TOTAL SHEETS
06	Fre	41	R30.7/R31.7	35	42

Gregory A. Balzer
LICENSED LANDSCAPE ARCHITECT

June 5, 2009
PLANS APPROVAL DATE

LICENSED LANDSCAPE ARCHITECT Gregory A. Balzer 2576 STATE OF CALIFORNIA
10-31-10 Expiration
2-28-11 Renewal Date
5-14-09 Date

The State of California or its officers or agents shall not be responsible for the accuracy or completeness of electronic copies of this plan sheet.

To accompany plans dated 11-30-09

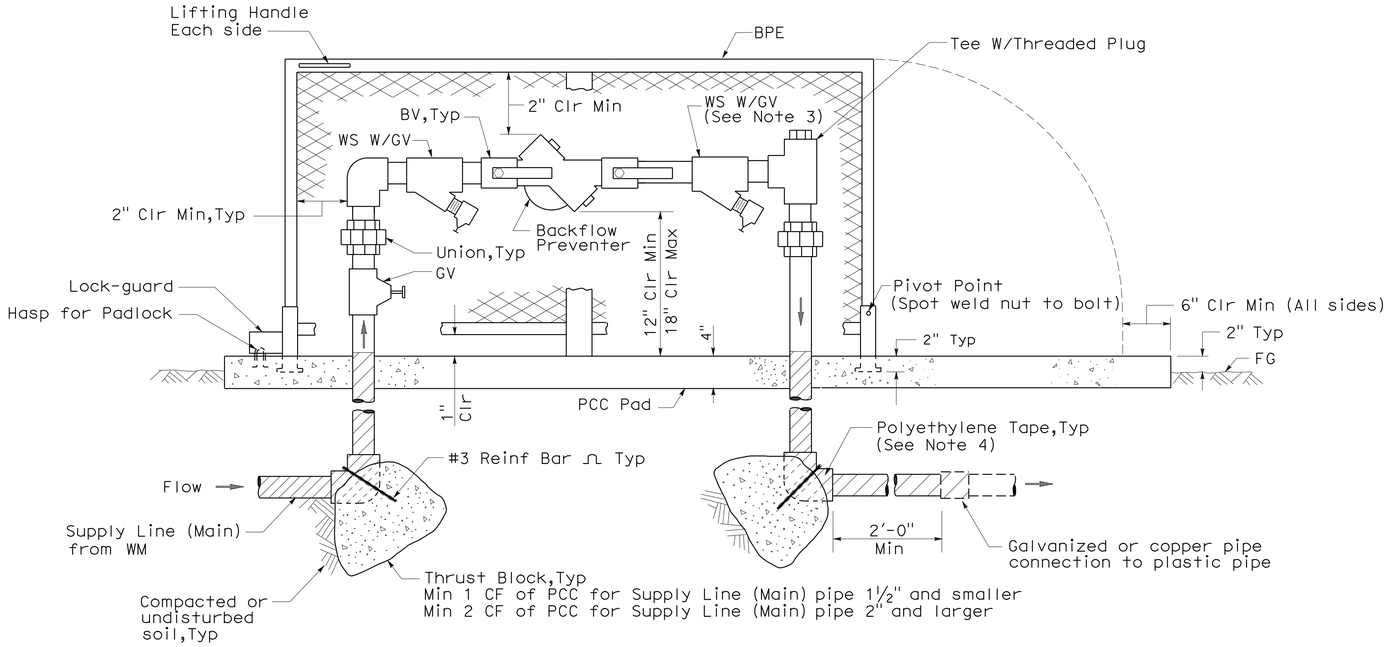

ELEVATION

BACKFLOW PREVENTER ASSEMBLY IN ENCLOSURE (ONE PIECE)

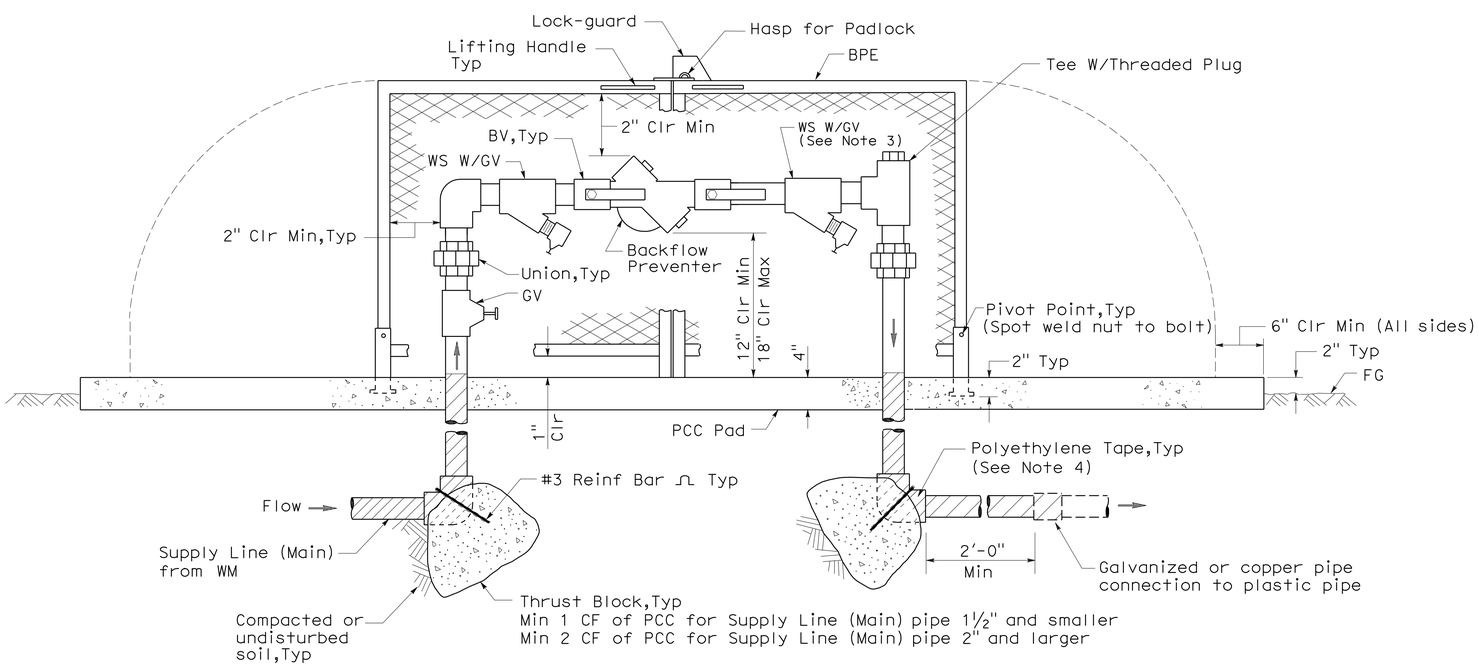

ELEVATION

BACKFLOW PREVENTER ASSEMBLY IN ENCLOSURE (TWO PIECE)

NOTES:

1. Wye strainer and fittings must be the same size as the backflow preventer shown on the plans.
2. Backflow preventer assembly manifold pipe must be the same pipe as the supply line (main) pipe to be installed from the water meter to the backflow preventer assembly.
3. Wye strainer location shown downstream of the backflow preventer is for District 11 projects only.
4. All metal in contact with soil and Portland Cement Concrete must be polyethylene wrapped using 2" wide plastic backed adhesive tape 20 mil thick with ½" overlap.

STATE OF CALIFORNIA
DEPARTMENT OF TRANSPORTATION

PLANTING AND IRRIGATION DETAILS

NO SCALE

RSP H8 DATED JUNE 5, 2009 SUPERSEDES STANDARD PLAN H8
DATED MAY 1, 2006 - PAGE 208 OF THE STANDARD PLANS BOOK DATED MAY 2006.

REVISED STANDARD PLAN RSP H8

2006 REVISED STANDARD PLAN RSP H8

5-28-09

DIST	COUNTY	ROUTE	POST MILES TOTAL PROJECT	SHEET NO.	TOTAL SHEETS
06	Fre	41	R30.7/R31.7	36	42

Randell D. Hiatt
REGISTERED CIVIL ENGINEER

June 6, 2008
PLANS APPROVAL DATE

REGISTERED PROFESSIONAL ENGINEER
Randell D. Hiatt
No. C50200
Exp. 6-30-09
CIVIL
STATE OF CALIFORNIA

The State of California or its officers or agents shall not be responsible for the accuracy or completeness of electronic copies of this plan sheet.

To accompany plans dated 11-30-09

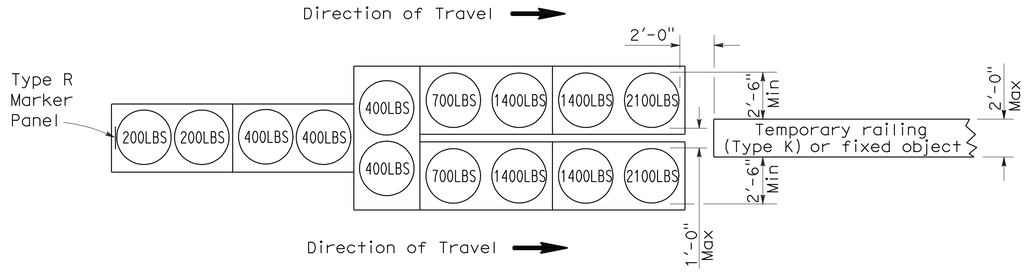

ARRAY 'TU14'

Approach speed 45 mph or more

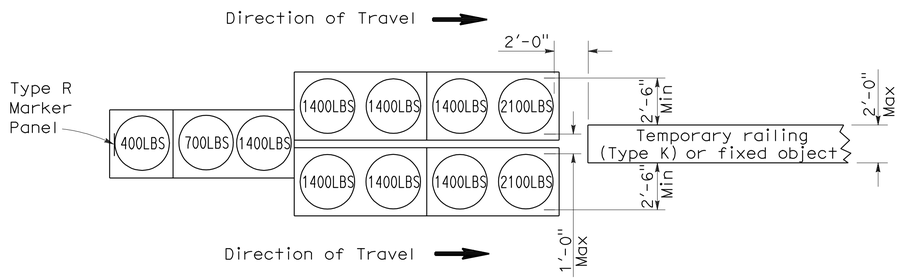

ARRAY 'TU11'

Approach speed less than 45 mph

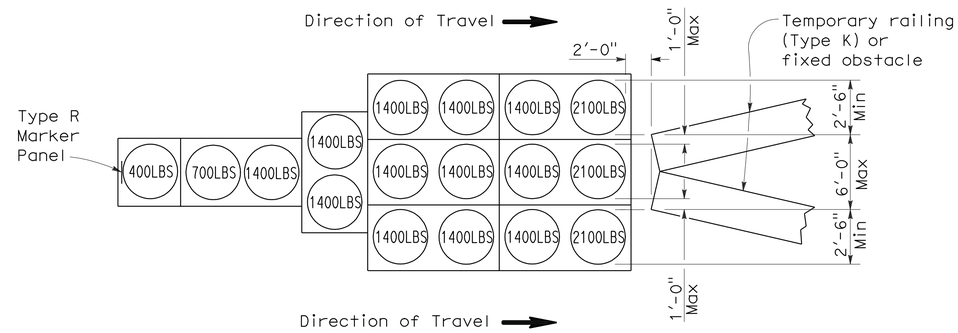

ARRAY 'TU17'

Approach speed less than 45 mph

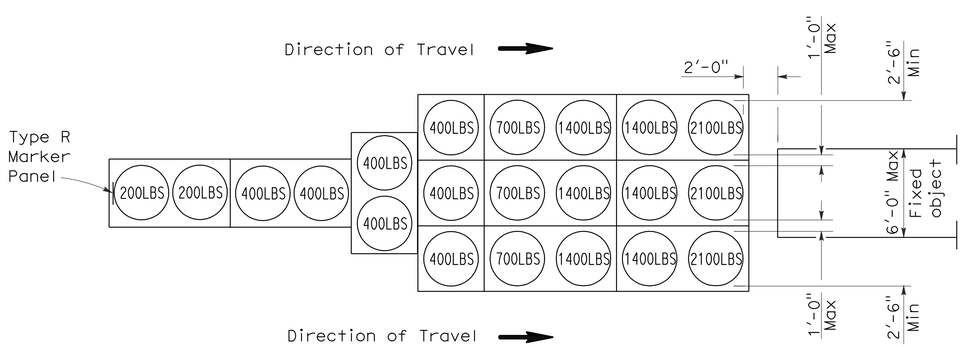

ARRAY 'TU21'

Approach speed 45 mph or more

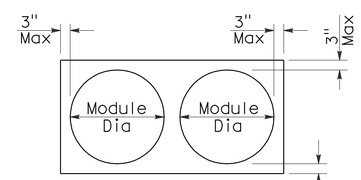

PLAN

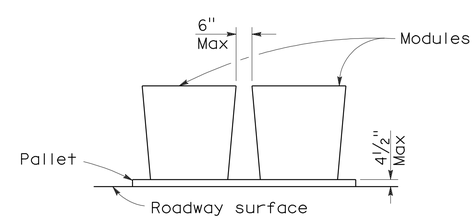

ELEVATION

CRASH CUSHION PALLET DETAIL

See Note 7

NOTES:

1. (XXX) Indicates sand filled module location and weight of sand in pounds for each module. Module spacing is based on the greater diameter of the module.
2. All sand weights are nominal.
3. Temporary crash cushion arrays shall not encroach on the traveled way.
4. Place the top of Type R marker panel 1" below the module lid.
5. Refer to Standard Plan A73B for marker details.
6. Approach speeds indicated conform to NCHRP 350 Report criteria.
7. Use of pallets is optional.

STATE OF CALIFORNIA
DEPARTMENT OF TRANSPORTATION

TEMPORARY CRASH CUSHION, SAND FILLED (UNIDIRECTIONAL)

NO SCALE

RSP T1A DATED JUNE 6, 2008 SUPERSEDES STANDARD PLAN T1A
DATED MAY 1, 2006 - PAGE 211 OF THE STANDARD PLANS BOOK DATED MAY 2006.

REVISED STANDARD PLAN RSP T1A

2006 REVISED STANDARD PLAN RSP T1A

5-15-08

DIST	COUNTY	ROUTE	POST MILES TOTAL PROJECT	SHEET NO.	TOTAL SHEETS
06	Fre	41	R30.7/R31.7	37	42

Randell D. Hiatt
REGISTERED CIVIL ENGINEER

June 6, 2008
PLANS APPROVAL DATE

REGISTERED PROFESSIONAL ENGINEER
Randell D. Hiatt
No. C50200
Exp. 6-30-09
CIVIL
STATE OF CALIFORNIA

The State of California or its officers or agents shall not be responsible for the accuracy or completeness of electronic copies of this plan sheet.

To accompany plans dated 11-30-09

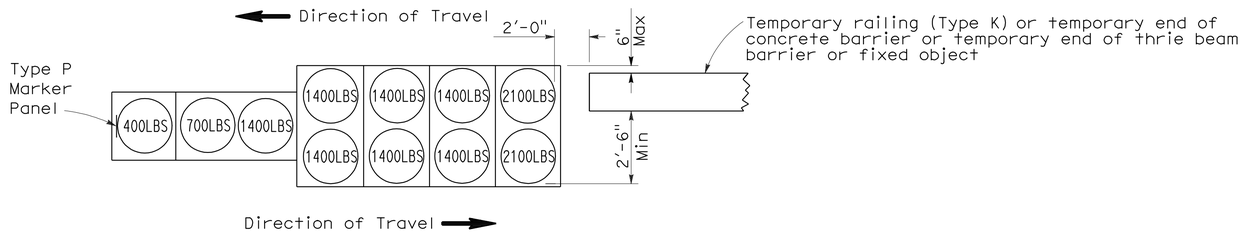

ARRAY 'TB11'

Approach speed less than 45 mph

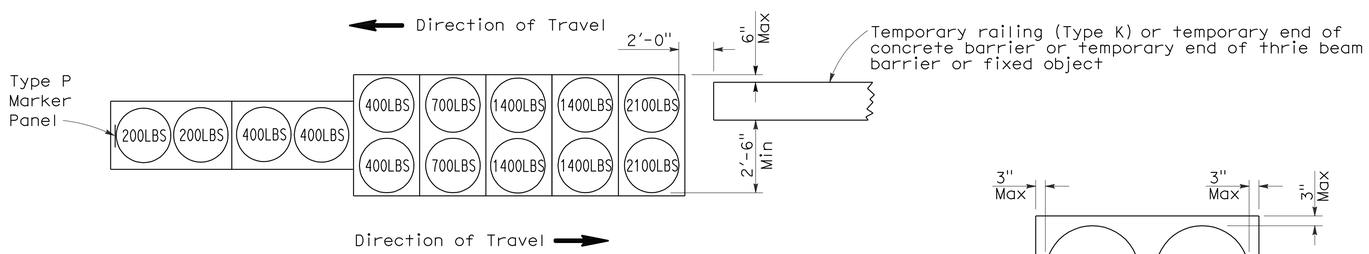

ARRAY 'TB14'

Approach speed 45 mph or more

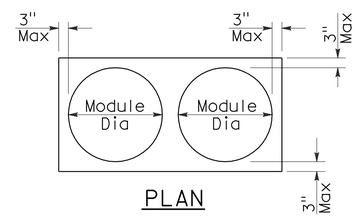

PLAN

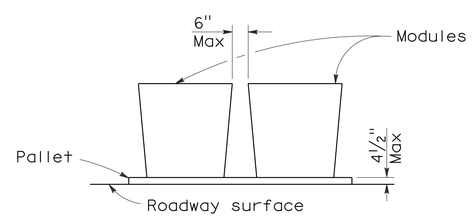

ELEVATION

CRASH CUSHION PALLET DETAIL

See Note 7

NOTES:

1. (XXX) Indicates sand filled module location and weight of sand in pounds for each module. Module spacing is based on the greater diameter of the module.
2. All sand weights are nominal.
3. Temporary crash cushion arrays shall not encroach on the traveled way.
4. Place the Type P marker panel so that the bottom of the panel rests upon the pallet.
5. Refer to Standard Plan A73B for marker details.
6. Approach speeds indicated conform to NCHRP 350 Report criteria.
7. Use of pallets is optional.

STATE OF CALIFORNIA
DEPARTMENT OF TRANSPORTATION

TEMPORARY CRASH CUSHION, SAND FILLED (BIDIRECTIONAL)

NO SCALE

RSP T1B DATED JUNE 6, 2008 SUPERSEDES STANDARD PLAN T1B
DATED MAY 1, 2006 - PAGE 212 OF THE STANDARD PLANS BOOK DATED MAY 2006.

REVISED STANDARD PLAN RSP T1B

2006 REVISED STANDARD PLAN RSP T1B

5-15-08

DIST	COUNTY	ROUTE	POST MILES TOTAL PROJECT	SHEET NO.	TOTAL SHEETS
06	Fre	41	R30.7/R31.7	38	42

Randell D. Hiatt
REGISTERED CIVIL ENGINEER

June 6, 2008
PLANS APPROVAL DATE

REGISTERED PROFESSIONAL ENGINEER
Randell D. Hiatt
No. C50200
Exp. 6-30-09
CIVIL
STATE OF CALIFORNIA

The State of California or its officers or agents shall not be responsible for the accuracy or completeness of electronic copies of this plan sheet.

To accompany plans dated 11-30-09

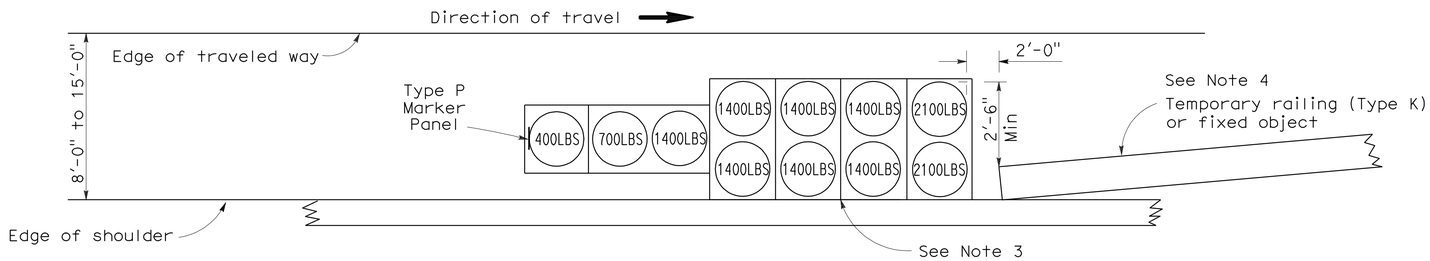

ARRAY 'TS11'

Approach speed less than 45 mph
See Note 9

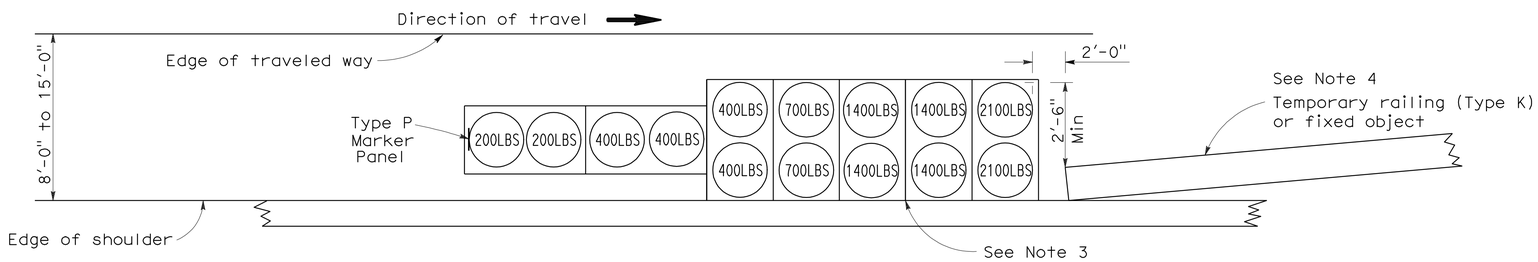

ARRAY 'TS14'

Approach speed 45 mph or more
See Note 9

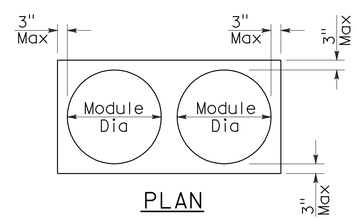

PLAN

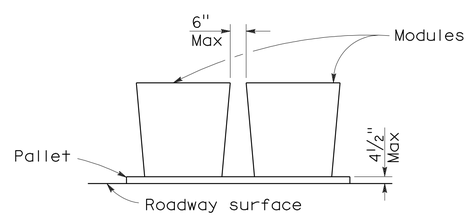

ELEVATION

CRASH CUSHION PALLET DETAIL

See Note 11

NOTES:

1. (XXX) Indicates sand filled module location and weight of sand in pounds for each module. Module spacing is based on the greater diameter of the module.
2. All sand weights are nominal.
3. The temporary crash cushion arrays shown on this plan shall be used only in locations where there will be traffic on one side of the temporary crash cushion array.
4. If the fixed object or approach end of the temporary railing is less than 15'-0" from the edge of traveled way, a temporary crash cushion is required in a construction or work zone.
5. Temporary crash cushion arrays shall not encroach on the traveled way.
6. Arrays for median shoulders shall conform to details shown on this plan for outside shoulders.
7. Place the Type P marker panel so that the bottom of the panel rests upon the pallet and faces traffic.
8. Refer to Standard Plan A73B for marker details.
9. For shoulder widths less than 8'-0", appropriate approved crash cushion protection, other than sand filled modules, shall be provided at fixed objects and at approach ends of temporary railing. The specific type of crash cushion shall be as shown on the project plans or as specified in the Special Provisions, or if not shown on the project plans or specified in the Special Provisions, shall be as approved by the Engineer.
10. Approach speeds indicated conform to NCHRP 350 Report criteria.
11. Use of pallets is optional.

STATE OF CALIFORNIA
DEPARTMENT OF TRANSPORTATION

TEMPORARY CRASH CUSHION, SAND FILLED (SHOULDER INSTALLATIONS)

NO SCALE

RSP T2 DATED JUNE 6, 2008 SUPERSEDES STANDARD PLAN T2
DATED MAY 1, 2006 - PAGE 213 OF THE STANDARD PLANS BOOK DATED MAY 2006.

REVISED STANDARD PLAN RSP T2

2006 REVISED STANDARD PLAN RSP T2

5-15-08

DIST	COUNTY	ROUTE	POST MILES TOTAL PROJECT	SHEET NO.	TOTAL SHEETS
06	Fre	41	R30.7/R31.7	39	42

LICENSED LANDSCAPE ARCHITECT

August 15, 2008
PLANS Approval DATE

LICENSED LANDSCAPE ARCHITECT
Robert B. Schott 3625
Signature
11-04-08
Renewal Date
08-11-08
Date
STATE OF CALIFORNIA

The State of California or its officers or agents shall not be responsible for the accuracy or completeness of electronic copies of this plan sheet.

To accompany plans dated 11-30-09

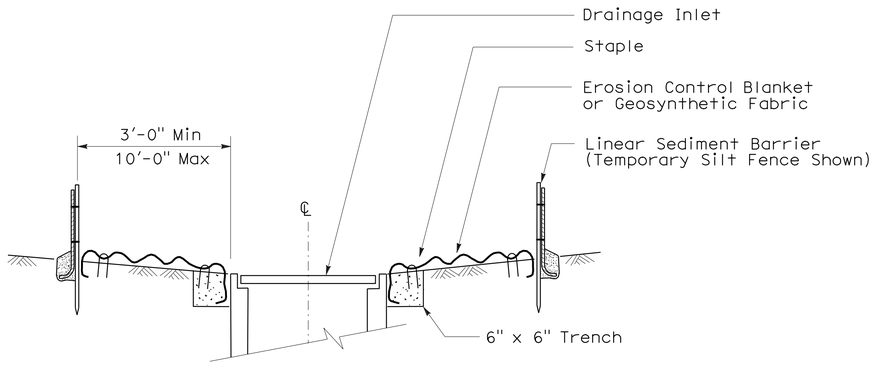

SECTION A-A

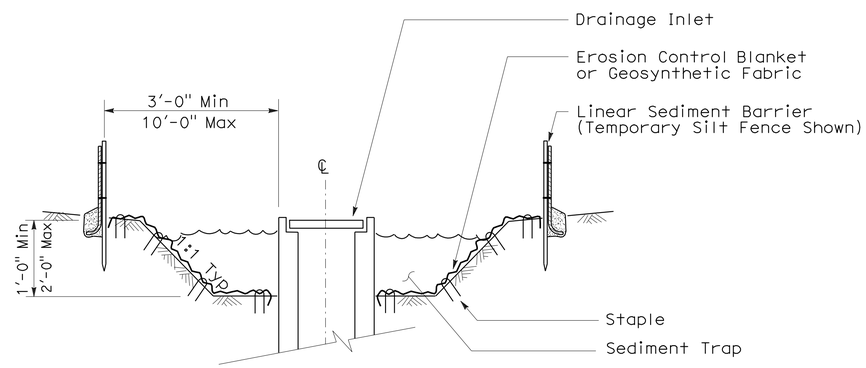

SECTION B-B

NOTES:

1. See Standard Plan T51 for Temporary Silt Fence.
2. Dimensions may vary to fit field conditions.

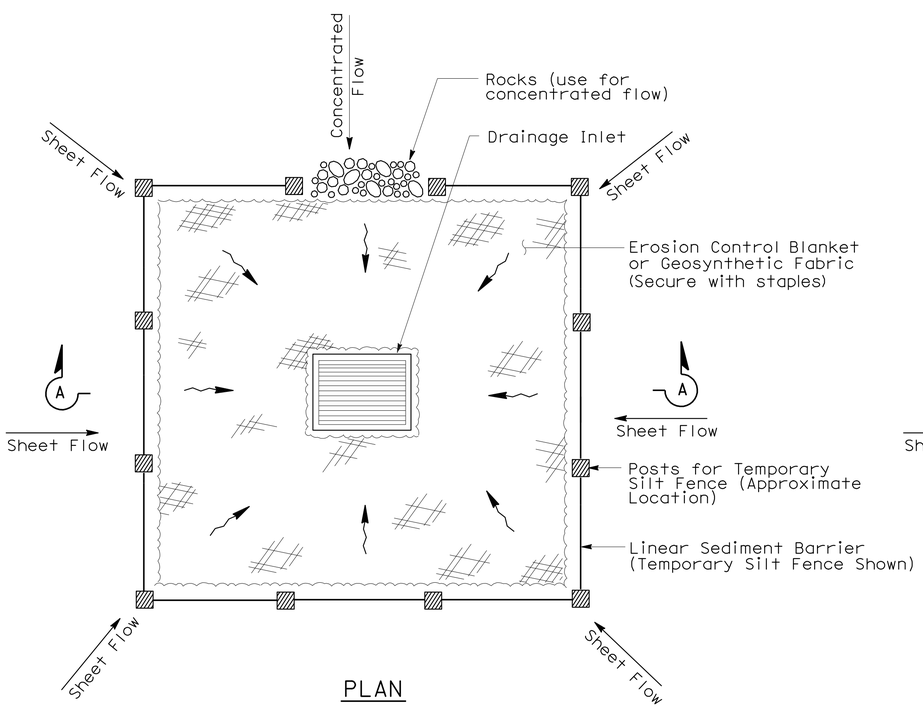

PLAN

TEMPORARY DRAINAGE INLET PROTECTION (TYPE 1)

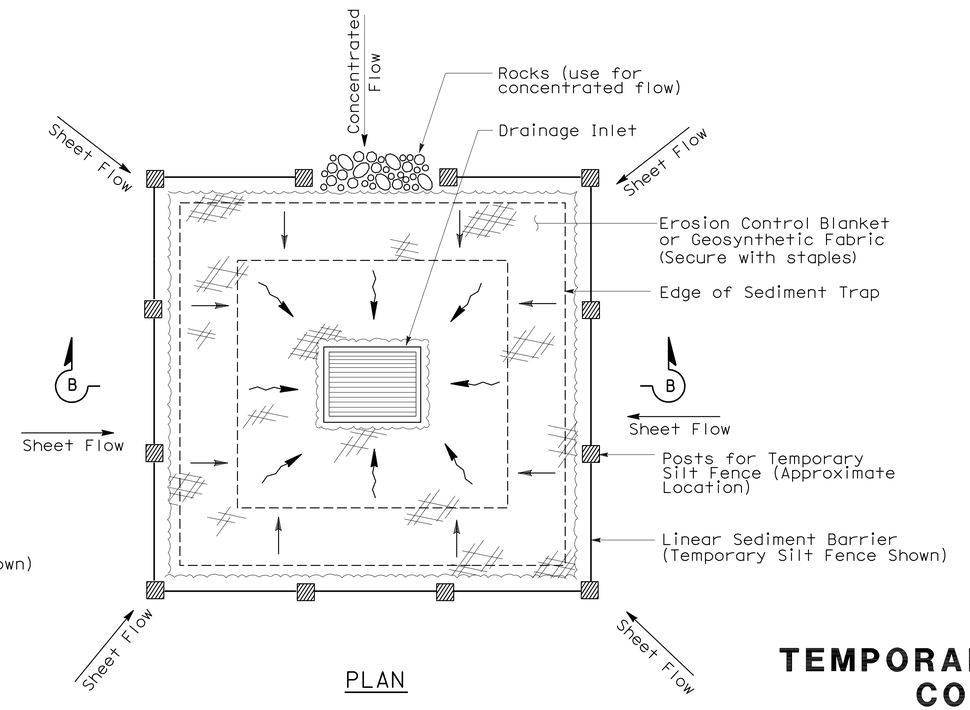

PLAN

TEMPORARY DRAINAGE INLET PROTECTION (TYPE 2) (EXCAVATED SEDIMENT TRAP)

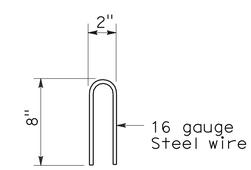

STAPLE DETAIL

STATE OF CALIFORNIA
DEPARTMENT OF TRANSPORTATION

TEMPORARY WATER POLLUTION CONTROL DETAILS (TEMPORARY DRAINAGE INLET PROTECTION)

NO SCALE

NSP T61 DATED AUGUST 15, 2008 SUPPLEMENTS THE STANDARD PLANS BOOK DATED MAY 2006.

NEW STANDARD PLAN NSP T61

2006 NEW STANDARD PLAN NSP T61

7-11-08

DIST	COUNTY	ROUTE	POST MILES TOTAL PROJECT	SHEET NO.	TOTAL SHEETS
06	Fre	41	R30.7/R31.7	40	42

LICENSED LANDSCAPE ARCHITECT

August 15, 2008
PLANS APPROVAL DATE

LICENSED LANDSCAPE ARCHITECT Robert B. Schott 3625 Signature 11-04-08 Renewal Date 08-11-08 Date STATE OF CALIFORNIA

The State of California or its officers or agents shall not be responsible for the accuracy or completeness of electronic copies of this plan sheet.

To accompany plans dated 11-30-09

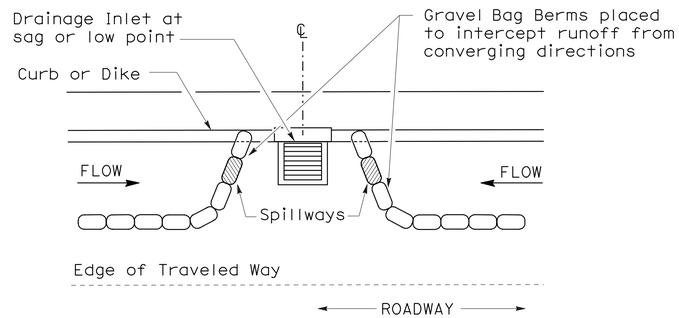

PLAN

CONFIGURATION FOR SAG POINT INLET (GRAVEL BAG BERM)

GRAVEL BAG BERM (TYPE 3A) SPACING TABLE

SLOPE OF ROADWAY (PERCENT)	1 to 3.9	4 to 5.9	6 to 7.9	8 to 10	10+
INTERVAL BETWEEN BERM	100′	75′	50′	25′	12′

For slope of less than 1%, install barriers only if erosion/sediment is prevalent

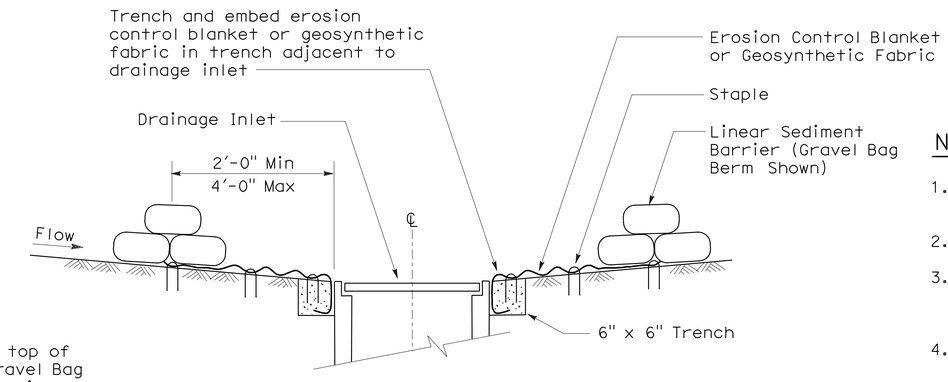

SECTION A-A

NOTES:

1. Place safety cones adjacent to drainage inlet protection.
2. Dimensions may vary to fit field conditions.
3. Install a minimum of 3 gravel bag berms upstream of each drainage inlet to be protected.
4. Position erosion control blanket or geosynthetic fabric at edge of concrete apron and secure in trench.
5. Erosion control blanket or geosynthetic fabric is not required if the area adjacent to the drainage inlet is vegetated or paved.

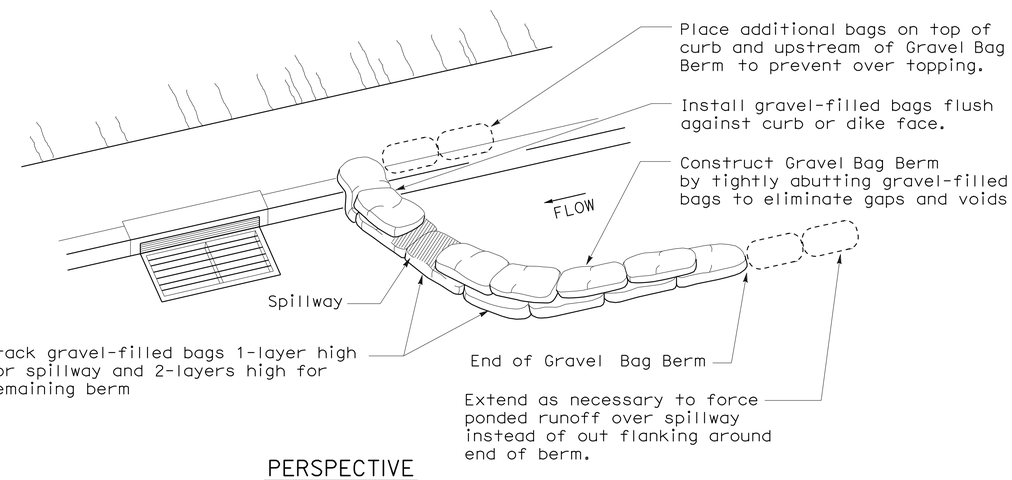

PERSPECTIVE

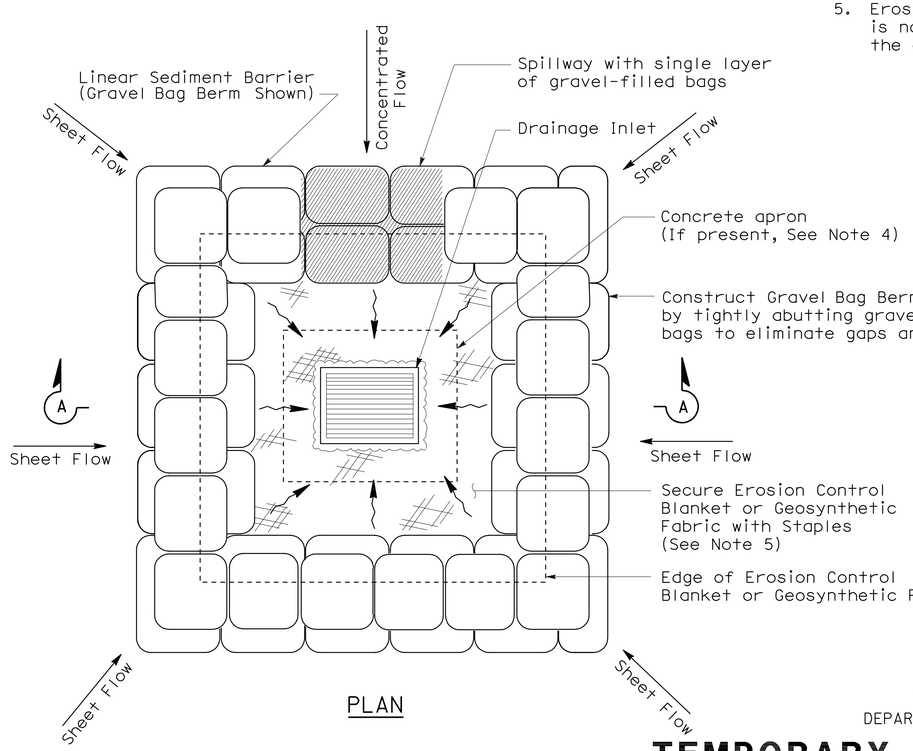

PLAN

TEMPORARY DRAINAGE INLET PROTECTION (TYPE 3B)

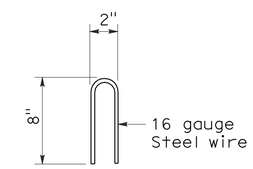

STAPLE DETAIL

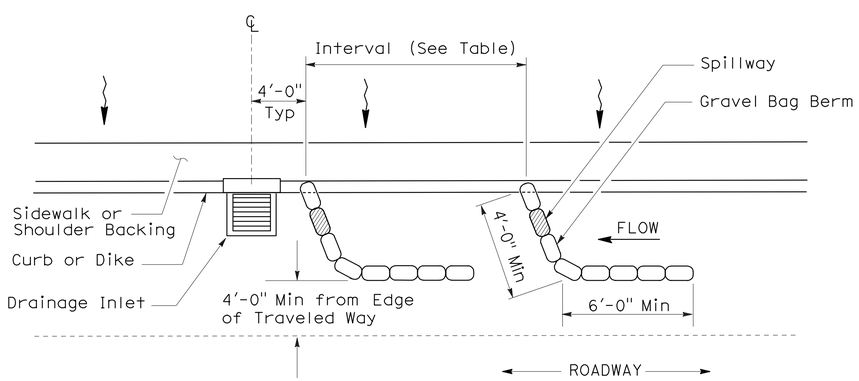

PLAN

TEMPORARY DRAINAGE INLET PROTECTION (TYPE 3A) (GRAVEL BAG BERM)

STATE OF CALIFORNIA
DEPARTMENT OF TRANSPORTATION

TEMPORARY WATER POLLUTION CONTROL DETAILS (TEMPORARY DRAINAGE INLET PROTECTION)

NO SCALE

NSP T62 DATED AUGUST 15, 2008 SUPPLEMENTS THE STANDARD PLANS BOOK DATED MAY 2006.

NEW STANDARD PLAN NSP T62

2006 NEW STANDARD PLAN NSP T62

7-11-08

DIST	COUNTY	ROUTE	POST MILES TOTAL PROJECT	SHEET NO.	TOTAL SHEETS
06	Fre	41	R30.7/R31.7	41	42

Robert B Schott
LICENSED LANDSCAPE ARCHITECT

August 15, 2008
PLANS APPROVAL DATE

LICENSED LANDSCAPE ARCHITECT Robert B. Schott 3625 Signature 11-04-08 Renewal Date 08-11-08 Date STATE OF CALIFORNIA

The State of California or its officers or agents shall not be responsible for the accuracy or completeness of electronic copies of this plan sheet.

To accompany plans dated 11-30-09

2006 NEW STANDARD PLAN NSP T63

FLEXIBLE SEDIMENT BARRIER SPACING TABLE

SLOPE OF ROADWAY (PERCENT)	0 to 0.9	1 to 1.9	2 to 2.9	3 to 4	5+
INTERVAL BETWEEN BARRIERS	50′	35′	30′	25′	20′
ANGLE FROM FACE OF CURB	70°	70°	70°	45°	45°
SUGGESTED BARRIER LENGTH	6′	6′	6′	6′	6′

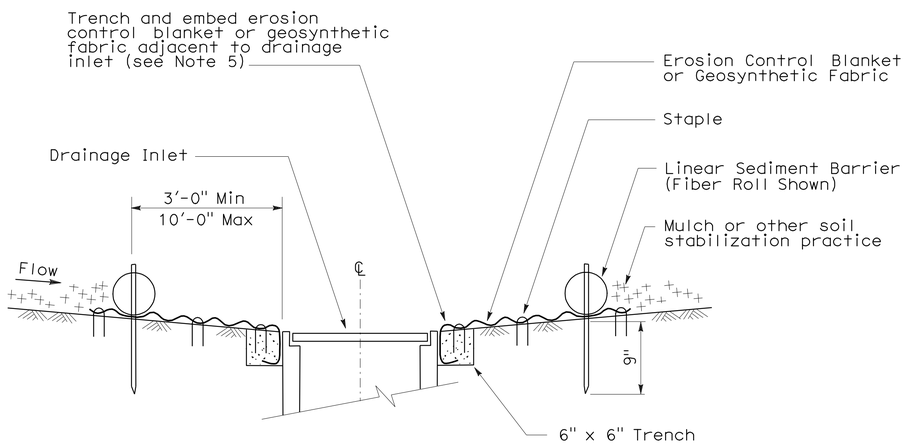

SECTION A-A

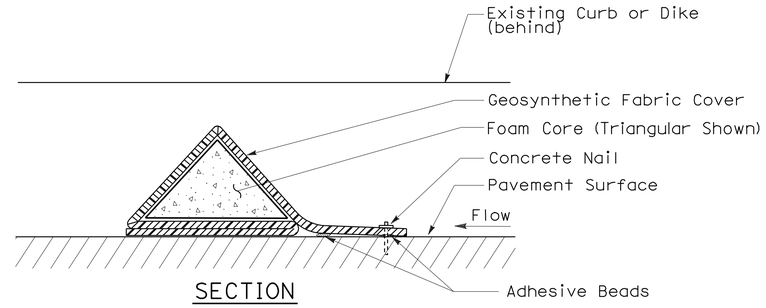

SECTION

FLEXIBLE SEDIMENT BARRIER DETAIL (FOAM BARRIER SHOWN)

NOTES:

1. See Standard Plan T51 for Temporary Silt Fence.
2. Dimensions may vary to fit field conditions.
3. Install a minimum of 3 flexible sediment barriers upstream of each drainage inlet to be protected.
4. Position erosion control blanket or geosynthetic fabric at edge of concrete apron and secure in trench.
5. Erosion control blanket or geosynthetic fabric is not required if the area adjacent to the drainage inlet is vegetated.

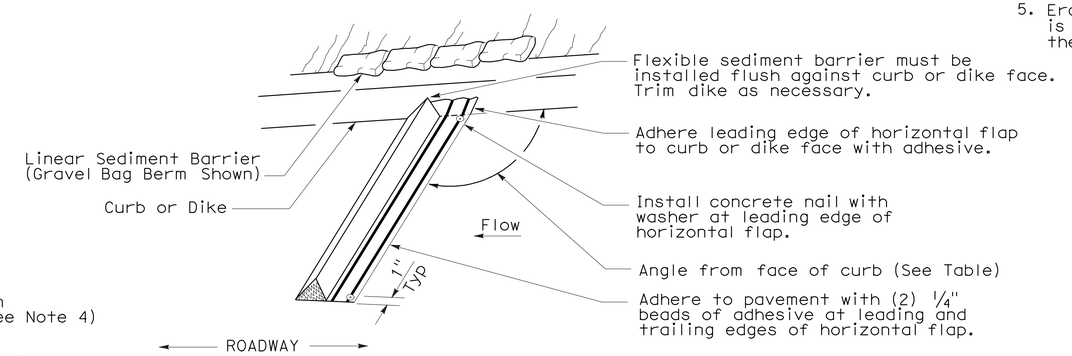

PERSPECTIVE

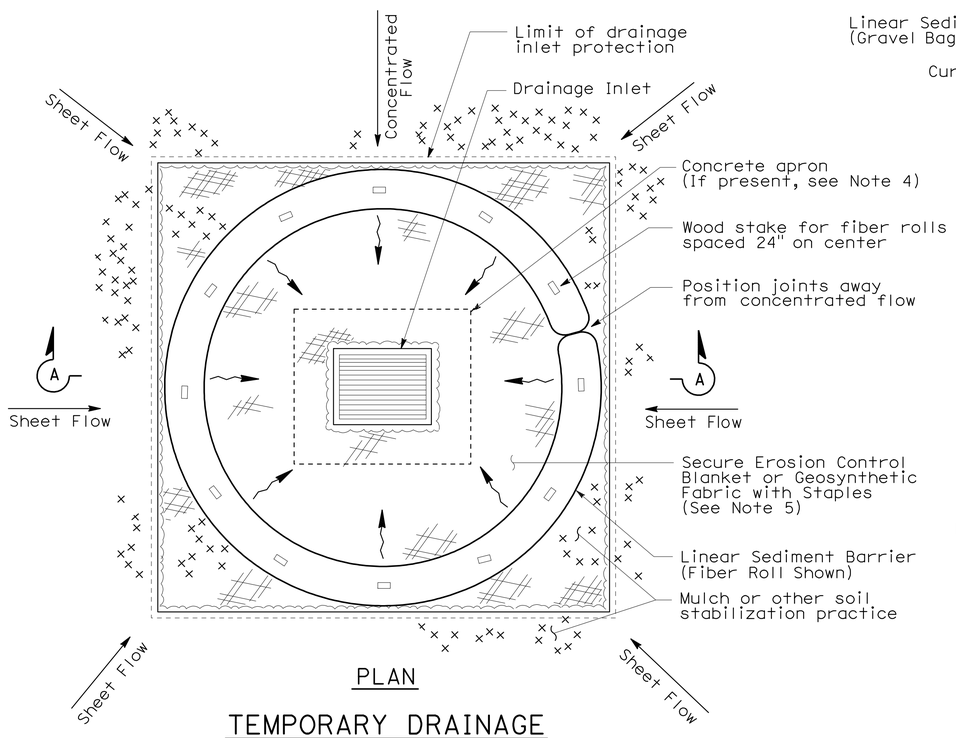

PLAN

TEMPORARY DRAINAGE INLET PROTECTION (TYPE 4A)

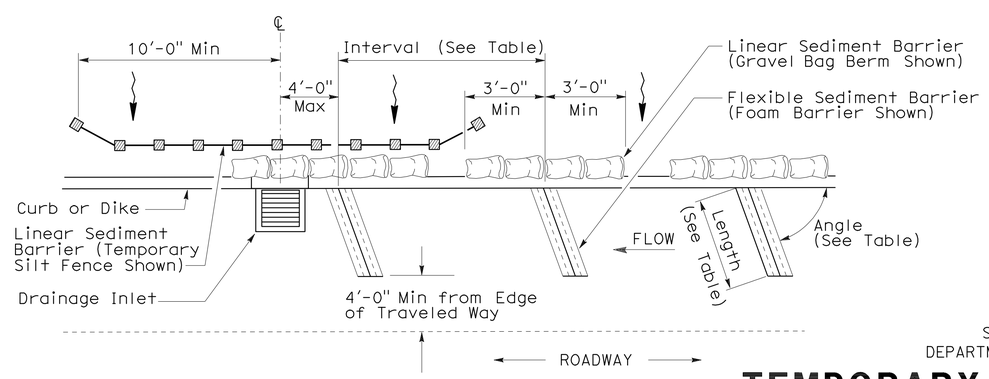

PLAN

TEMPORARY DRAINAGE INLET PROTECTION (TYPE 4B) FLEXIBLE SEDIMENT BARRIER

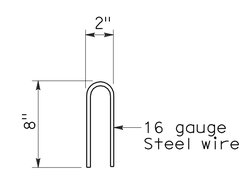

STAPLE DETAIL

STATE OF CALIFORNIA
DEPARTMENT OF TRANSPORTATION

TEMPORARY WATER POLLUTION CONTROL DETAILS (TEMPORARY DRAINAGE INLET PROTECTION)

NO SCALE

NSP T63 DATED AUGUST 15, 2008 SUPPLEMENTS THE STANDARD PLANS BOOK DATED MAY 2006.

NEW STANDARD PLAN NSP T63

7-11-08

DIST	COUNTY	ROUTE	POST MILES TOTAL PROJECT	SHEET NO.	TOTAL SHEETS
06	Fre	41	R30.7/R31.7	42	42

LICENSED LANDSCAPE ARCHITECT

August 15, 2008
PLANS APPROVAL DATE

LICENSED LANDSCAPE ARCHITECT
Robert B. Schott 3625
Signature
11-04-08
Renewal Date
08-11-08
Date
STATE OF CALIFORNIA

The State of California or its officers or agents shall not be responsible for the accuracy or completeness of electronic copies of this plan sheet.

To accompany plans dated 11-30-09

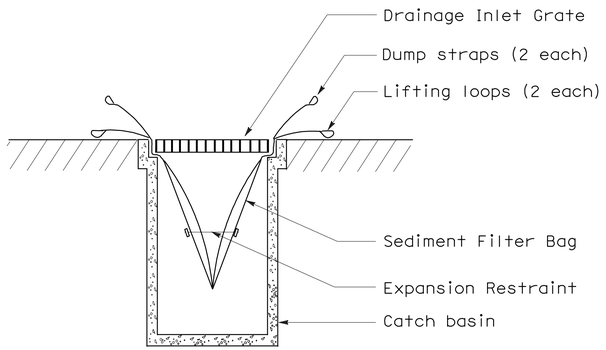

SECTION B-B

SEDIMENT FILTER BAG DETAIL

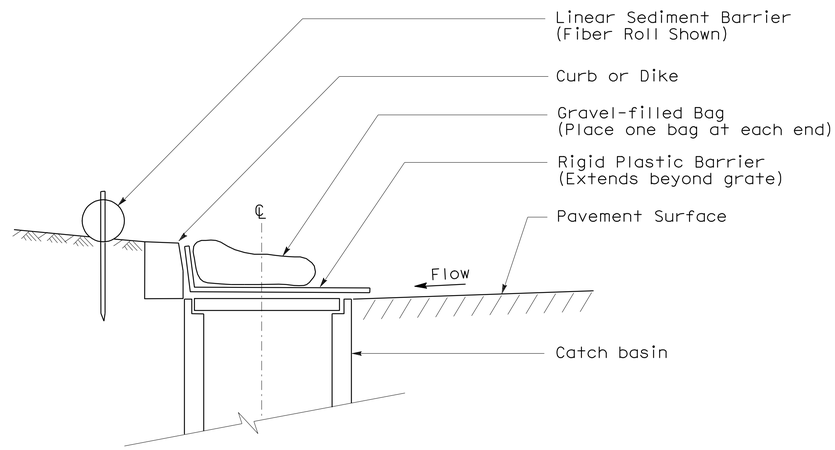

SECTION

TEMPORARY DRAINAGE INLET PROTECTION (TYPE 6A) (CATCH BASIN WITH GRATE)

NOTES:

1. See Standard Plan T51 for Temporary Silt Fence.
2. Dimensions may vary to fit field conditions.

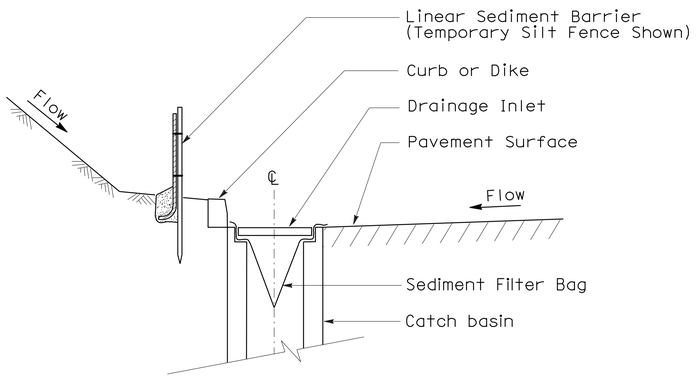

SECTION A-A

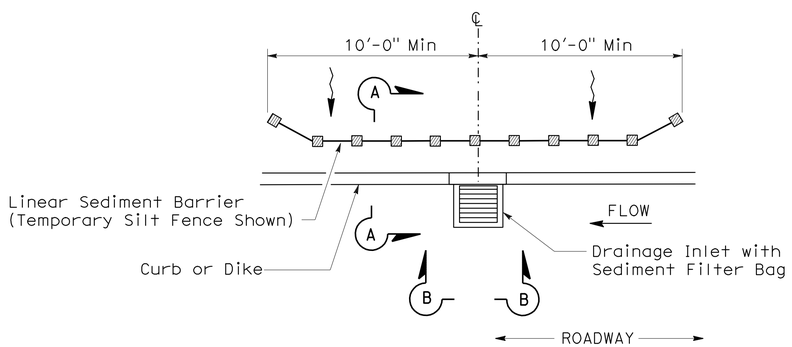

PLAN

TEMPORARY DRAINAGE INLET PROTECTION (TYPE 5) (SEDIMENT FILTER BAG)

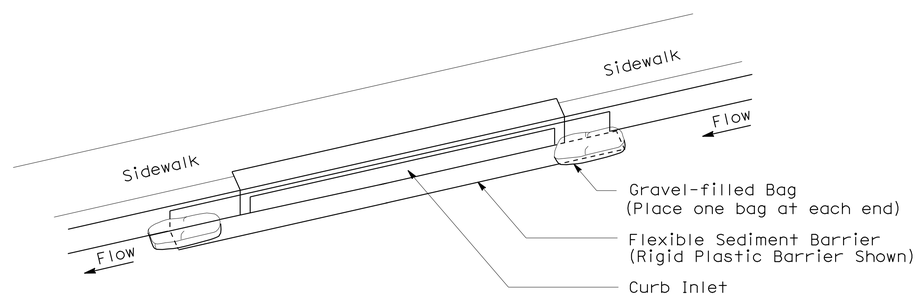

PERSPECTIVE

TEMPORARY DRAINAGE INLET PROTECTION (TYPE 6B) (CURB INLET WITHOUT GRATE)

STATE OF CALIFORNIA
DEPARTMENT OF TRANSPORTATION

TEMPORARY WATER POLLUTION CONTROL DETAILS (TEMPORARY DRAINAGE INLET PROTECTION)

NO SCALE

NSP T64 DATED AUGUST 15, 2008 SUPPLEMENTS
THE STANDARD PLANS BOOK DATED MAY 2006.

NEW STANDARD PLAN NSP T64

2006 NEW STANDARD PLAN NSP T64

7-11-08