Dist	COUNTY	ROUTE	POST MILES TOTAL PROJECT	SHEET No.	TOTAL SHEETS
06	Ker	99	49.6	1	106

STATE OF CALIFORNIA

DEPARTMENT OF TRANSPORTATION

ACNHP-P099(603)E

PROJECT PLANS FOR CONSTRUCTION ON

STATE HIGHWAY

IN KERN COUNTY
IN MCFARLAND
AT KERN AVENUE PEDESTRIAN OVERCROSSING

TO BE SUPPLEMENTED BY STANDARD PLANS DATED 2010

INDEX OF PLANS

SHEET No.	DESCRIPTION
1	TITLE AND LOCATION MAP
2	LAYOUT
3-6	CONSTRUCTION DETAILS
7	CONSTRUCTION AREA SIGNS
8-10	MOTORIST INFORMATION PLAN AND QUANTITIES
11-14	TRAFFIC HANDLING PLAN AND QUANTITIES
15	SUMMARY OF QUANTITIES
16	MAINTAIN EXISTING PLANTED AREAS
17	IRRIGATION REMOVAL PLANS
18	IRRIGATION PLANS
19	PLANTING PLANS
20	LANDSCAPE QUANTITIES
21	EROSION CONTROL LEGEND AND QUANTITIES
22-24	LIGHTING AND ELECTRICAL QUANTITIES
25	SPECIAL ELECTRICAL STRUCTURES
26-64	REVISED STANDARD PLANS
65-106	STRUCTURE PLANS

THE STANDARD PLANS LIST APPLICABLE TO THIS CONTRACT IS INCLUDED IN THE NOTICE TO BIDDERS AND SPECIAL PROVISIONS BOOK.

LOCATION MAP

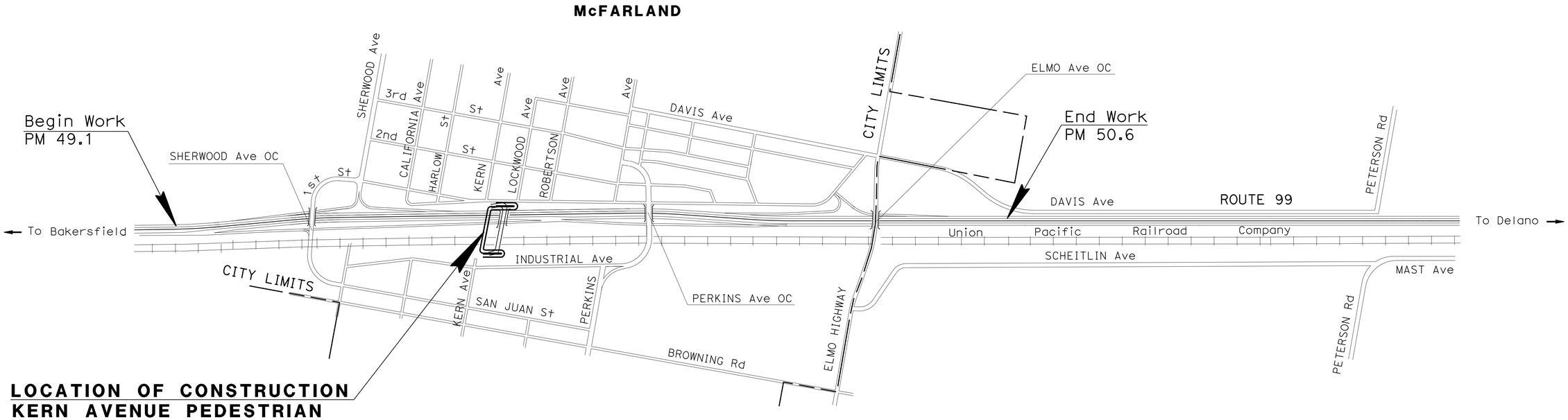

LOCATION OF CONSTRUCTION
KERN AVENUE PEDESTRIAN OVERCROSSING
Br No. 50-0224 PM 49.6

Cheng Cheong Yew . 11-16-15
PROJECT ENGINEER DATE
REGISTERED CIVIL ENGINEER

REGISTERED PROFESSIONAL ENGINEER
CHEONG YEW CHENG
No. 57900
Exp. 6-30-16
CIVIL
STATE OF CALIFORNIA

November 16, 2015
PLANS APPROVAL DATE

THE STATE OF CALIFORNIA OR ITS OFFICERS OR AGENTS SHALL NOT BE RESPONSIBLE FOR THE ACCURACY OR COMPLETENESS OF SCANNED COPIES OF THIS PLAN SHEET.

THE CONTRACTOR SHALL POSSESS THE CLASS (OR CLASSES) OF LICENSE AS SPECIFIED IN THE "NOTICE TO BIDDERS."

NO SCALE

CONTRACT No.	06-0H6424
PROJECT ID	0614000266

PROJECT MANAGER: PAUL PINEDA
DESIGN ENGINEER: NICHOLAS CHAN

LAST REVISION 10-28-15
DATE PLOTTED => 05-JUL-2016
TIME PLOTTED => 14:10

Dist	COUNTY	ROUTE	POST MILES TOTAL PROJECT	SHEET No.	TOTAL SHEETS
06	Ker	99	49.6	2	106

REGISTERED CIVIL ENGINEER DATE XX-XX-XX

11-16-15
PLANS APPROVAL DATE

REGISTERED PROFESSIONAL ENGINEER CHEONG YEW CHENG No. 57900 Exp. 6-30-16 CIVIL STATE OF CALIFORNIA

THE STATE OF CALIFORNIA OR ITS OFFICERS OR AGENTS SHALL NOT BE RESPONSIBLE FOR THE ACCURACY OR COMPLETENESS OF SCANNED COPIES OF THIS PLAN SHEET.

NOTE:

FOR ACCURATE RIGHT OF WAY DATA, CONTACT RIGHT OF WAY ENGINEERING AT THE DISTRICT OFFICE.

ABBREVIATIONS:

P OBJECT MARKER (TYPE P)

GF GUARD RAILING DELINEATOR

CURVE DATA

No.	R	Δ	T	L
1	6.0′	179°59′59"	2736841.87′	18.85′
2	6.0′	90°5′52"	6.01′	9.44′
3	6.0′	90°0′00"	6.00′	9.43′
4	6.0′	179°59′56"	620907.37′	18.85′

POSITIVE LOCATION INFORMATION

No.	UTILITY	ELEVATION	NORTHING	EASTING	METHOD
1	8" PETROLEUM	352.2	2435427.67	6197212.25	POTHOLE
2	8" PETROLEUM	353.1	2435370.77	6197221.95	POTHOLE
3	8" PETROLEUM	353.8	2435298.03	6197238.05	POTHOLE
4	8" PETROLEUM	352.5	2435259.88	6197254.48	POTHOLE

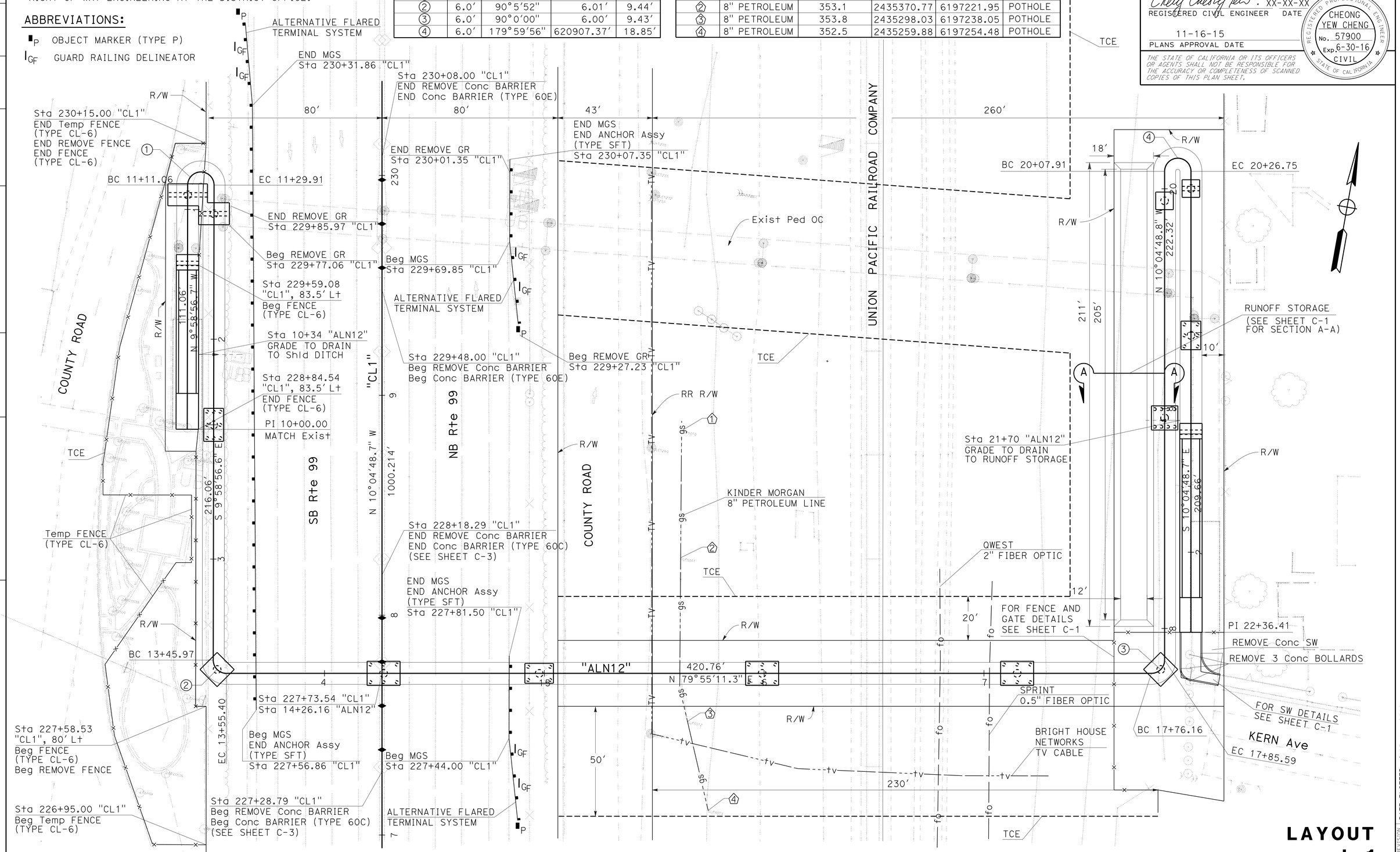

SCALE 1"=20′

LAYOUT L-1

STATE OF CALIFORNIA - DEPARTMENT OF TRANSPORTATION
DESIGN
Caltrans

FUNCTIONAL SUPERVISOR: NICHOLAS CHAN
CALCULATED-DESIGNED BY: INDERPAL GILL
CHECKED BY: CHEONG-YEW-CHENG
REVISED BY / DATE REVISED

LAST REVISION 11-15-15
DATE PLOTTED => 05-JUL-2016
TIME PLOTTED => 14:10

Dist	COUNTY	ROUTE	POST MILES TOTAL PROJECT	SHEET No.	TOTAL SHEETS
06	Ker	99	49.6	3	106

Cheng Cheng Yew . 11-16-15
REGISTERED CIVIL ENGINEER DATE

11-16-15
PLANS APPROVAL DATE

REGISTERED PROFESSIONAL ENGINEER CHEONG YEW CHENG No. 57900 Exp. 6-30-16 CIVIL STATE OF CALIFORNIA

THE STATE OF CALIFORNIA OR ITS OFFICERS OR AGENTS SHALL NOT BE RESPONSIBLE FOR THE ACCURACY OR COMPLETENESS OF SCANNED COPIES OF THIS PLAN SHEET.

CURVE DATA

No. (X)	R	Δ	T	L
1	7.5′	79°37′02"	6.25′	10.42′
2	10.0′	79°42′54"	8.34′	13.91′
3	5.0′	79°37′02"	4.16′	6.95′

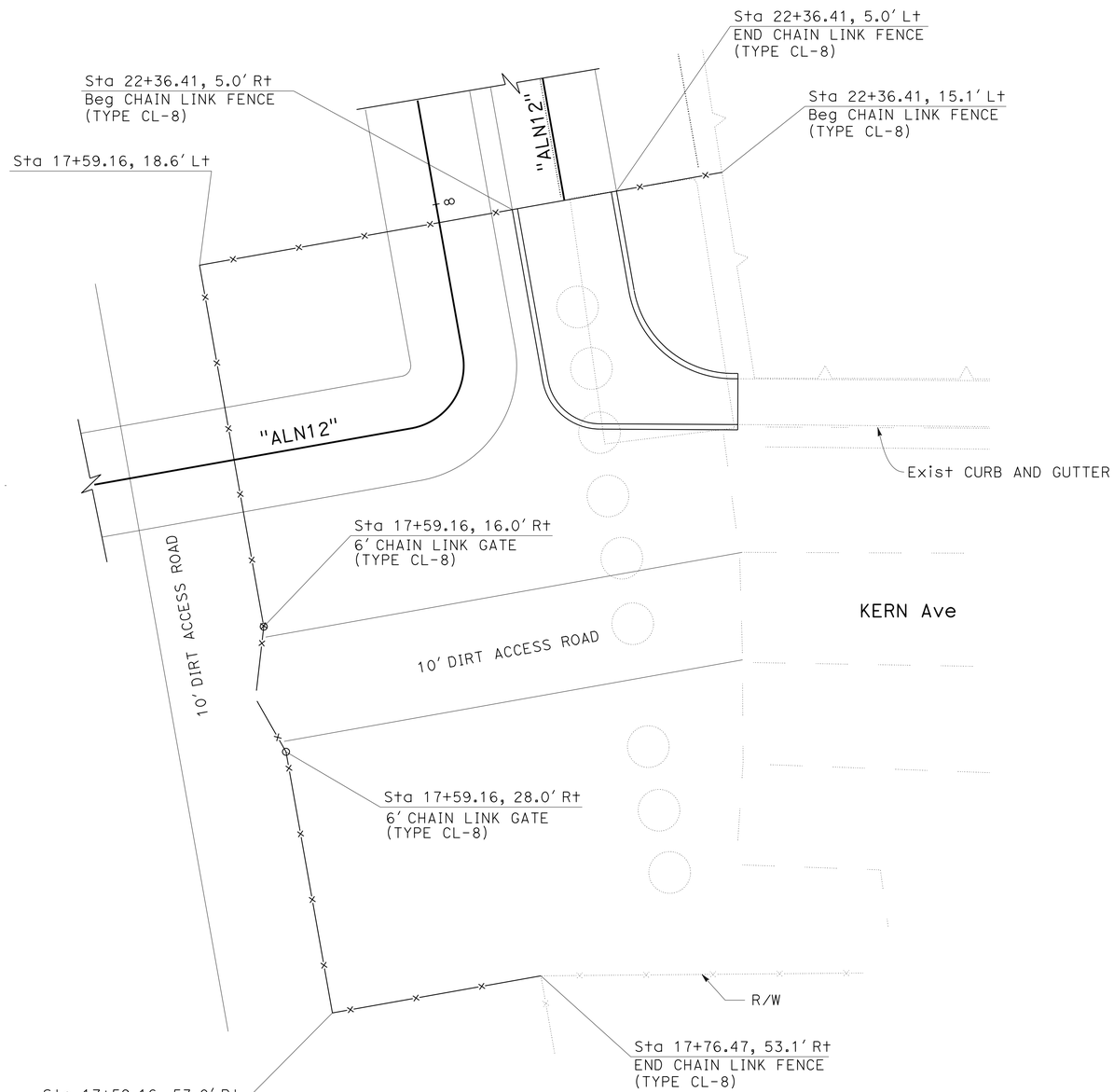

CHAIN LINK FENCE AND GATE DETAIL

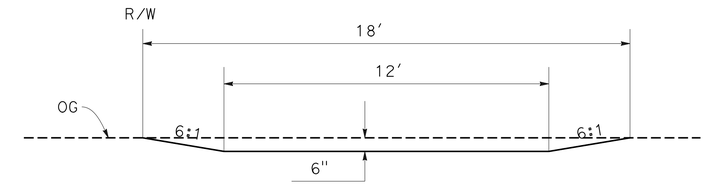

SECTION A-A

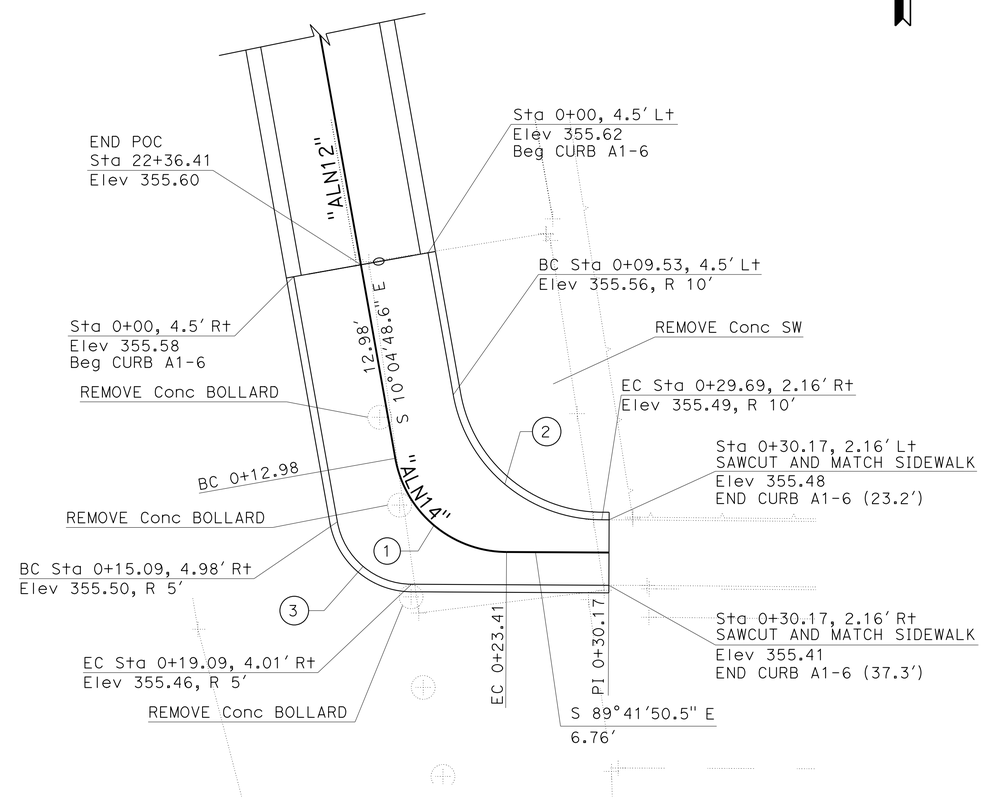

SIDEWALK DETAIL

NO SCALE

CONSTRUCTION DETAILS
C-1

STATE OF CALIFORNIA - DEPARTMENT OF TRANSPORTATION
Caltrans® DESIGN

FUNCTIONAL SUPERVISOR: NICHOLAS CHAN

CALCULATED-DESIGNED BY: INDERPAL GILL
CHECKED BY: CHEONG-YEW-CHENG

REVISED BY | DATE REVISED

LAST REVISION 08-14-15 | DATE PLOTTED => 05-JUL-2016 | TIME PLOTTED => 14:10

Dist	COUNTY	ROUTE	POST MILES TOTAL PROJECT	SHEET No.	TOTAL SHEETS
06	Ker	99	49.6	4	106

REGISTERED CIVIL ENGINEER 11-16-15 DATE

11-16-15
PLANS APPROVAL DATE

REGISTERED PROFESSIONAL ENGINEER CHEONG YEW CHENG No. 57900 Exp. 6-30-16 CIVIL STATE OF CALIFORNIA

THE STATE OF CALIFORNIA OR ITS OFFICERS OR AGENTS SHALL NOT BE RESPONSIBLE FOR THE ACCURACY OR COMPLETENESS OF SCANNED COPIES OF THIS PLAN SHEET.

NOTES:

1. FOR COVER PLATE LENGTH SEE "TABLE 1" ON SHEET C-3
2. ADJUST HEIGHT OF CONCRETE BARRIERS WALL ON LOW SIDE OF OFFSET OR SUPERELEVATED ROADWAYS TO PROVIDE LEVEL GRADE ACROSS TOP OF CONCRETE BARRIER CAP.

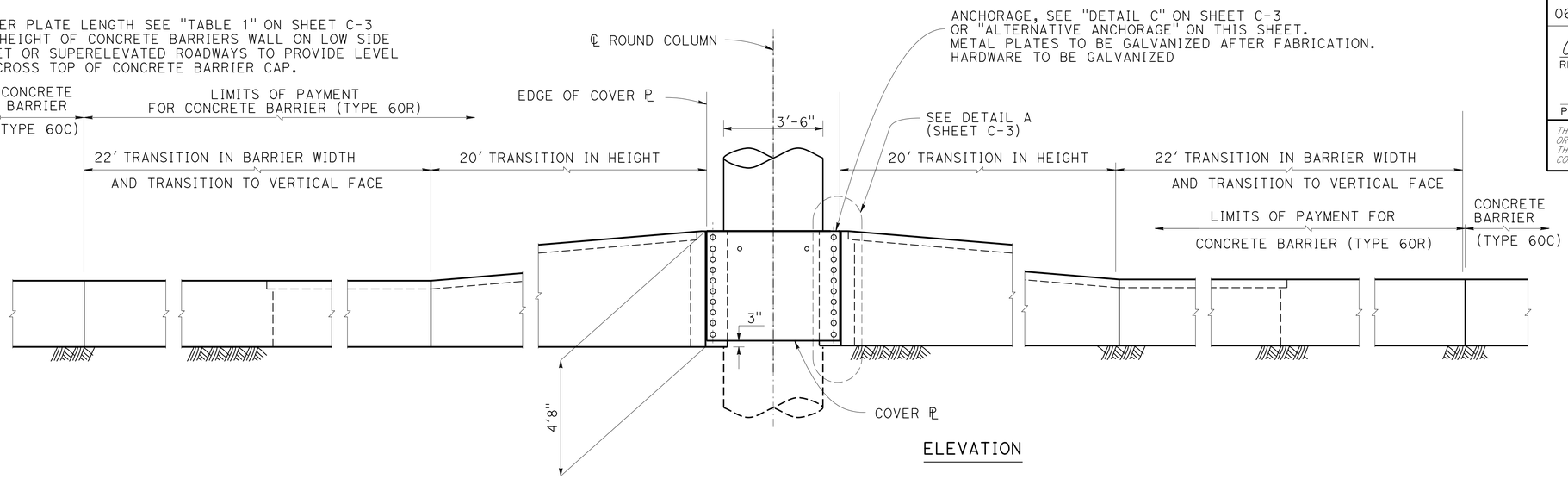

ELEVATION

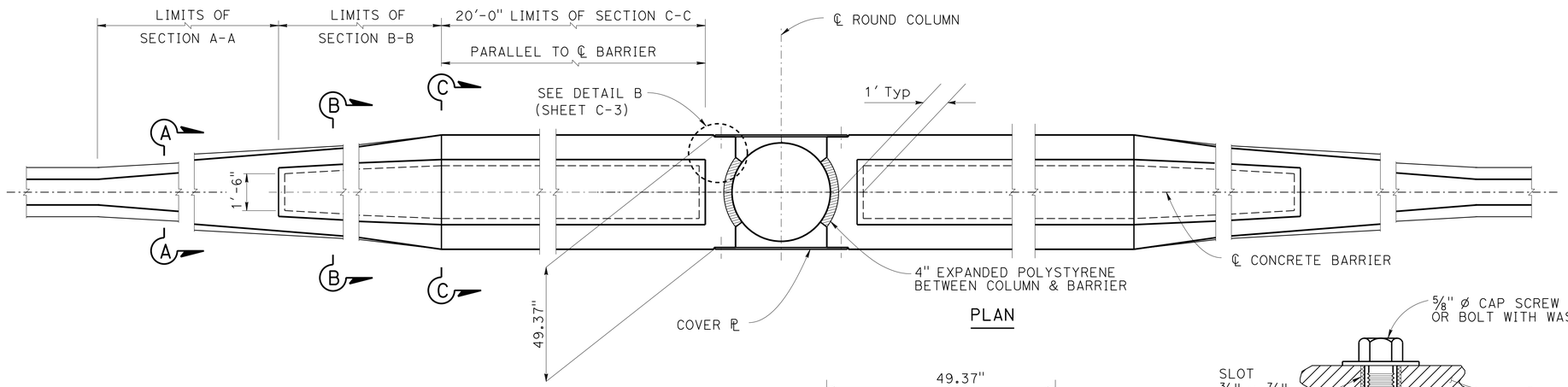

PLAN

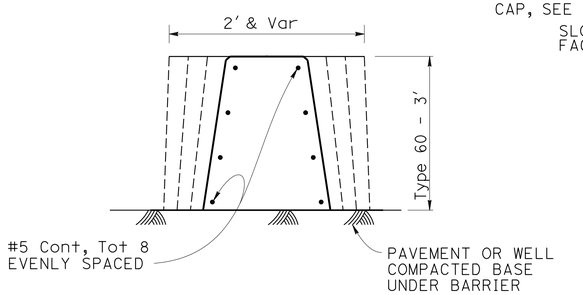

SECTION A-A

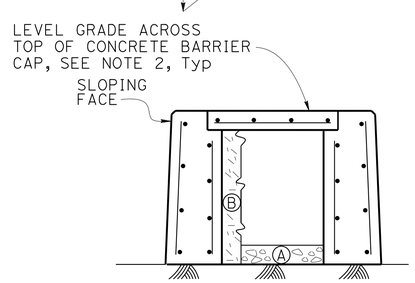

SECTION B-B

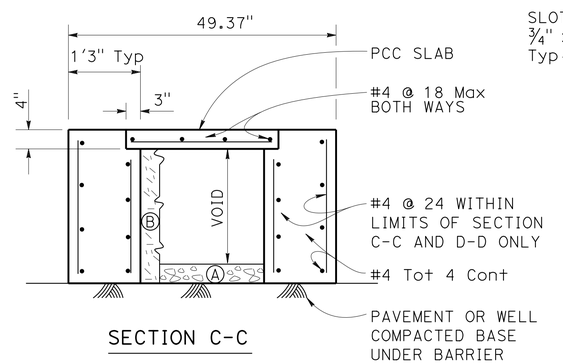

SECTION C-C

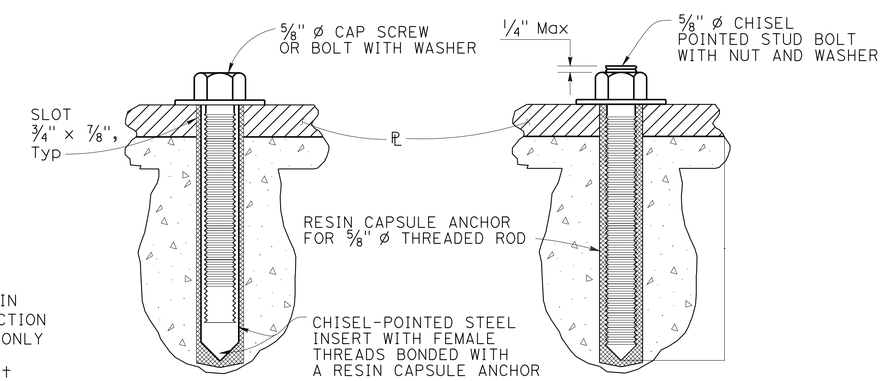

ALTERNATIVE A

ALTERNATIVE B

ALTERNATIVE ANCHORAGE

NOTES:

1. CONTRACTOR OPTIONS FOR FILL BETWEEN BARRIER WALLS
   - Ⓐ PLACE 4" PCC AT BASE BETWEEN BARRIER WALLS
   - Ⓑ PLACE GRANULAR MATERIAL FROM BASE TO BOTTOM OF 4" CAP

CONCRETE BARRIER TYPE 60R TRANSITION AT BRIDGE COLUMN

CONSTRUCTION DETAILS C-2

NO SCALE

STATE OF CALIFORNIA - DEPARTMENT OF TRANSPORTATION
Caltrans®
DESIGN

FUNCTIONAL SUPERVISOR: NICHOLAS CHAN
CALCULATED-DESIGNED BY: INDERPAL GILL
CHECKED BY: CHEONG-YEW-CHENG
REVISED BY
DATE REVISED

LAST REVISION 10-30-15
DATE PLOTTED => 05-JUL-2016
TIME PLOTTED => 14:10

Dist	COUNTY	ROUTE	POST MILES TOTAL PROJECT	SHEET No.	TOTAL SHEETS
06	Ker	99	49.6	5	106

REGISTERED CIVIL ENGINEER 11-16-15 DATE

11-16-15
PLANS APPROVAL DATE

REGISTERED PROFESSIONAL ENGINEER CHEONG YEW CHENG No. 57900 Exp. 6-30-16 CIVIL STATE OF CALIFORNIA

THE STATE OF CALIFORNIA OR ITS OFFICERS OR AGENTS SHALL NOT BE RESPONSIBLE FOR THE ACCURACY OR COMPLETENESS OF SCANNED COPIES OF THIS PLAN SHEET.

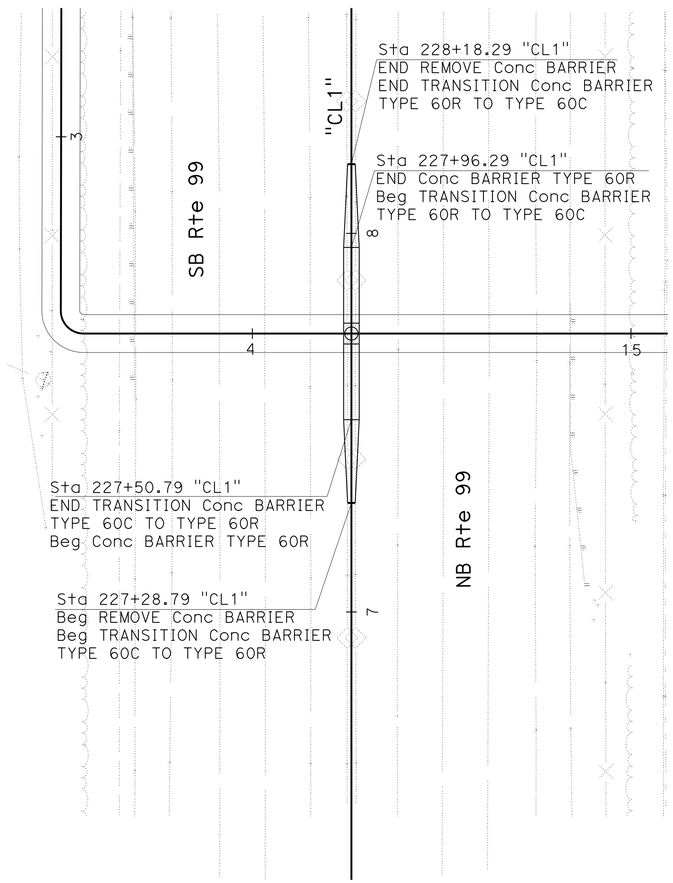

CONCRETE BARRIER DETAIL

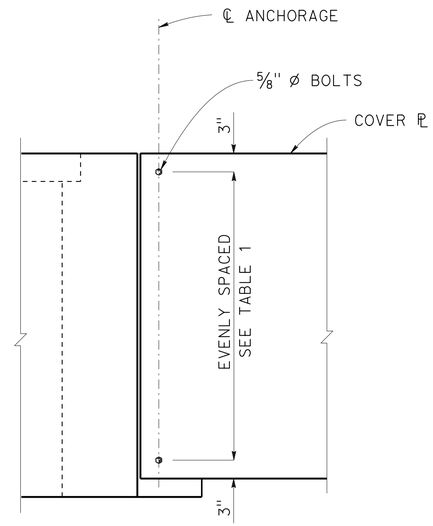

DETAIL A

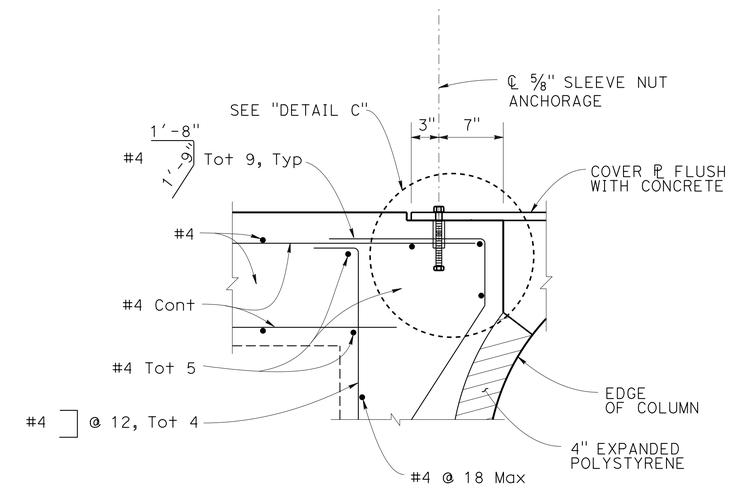

DETAIL B

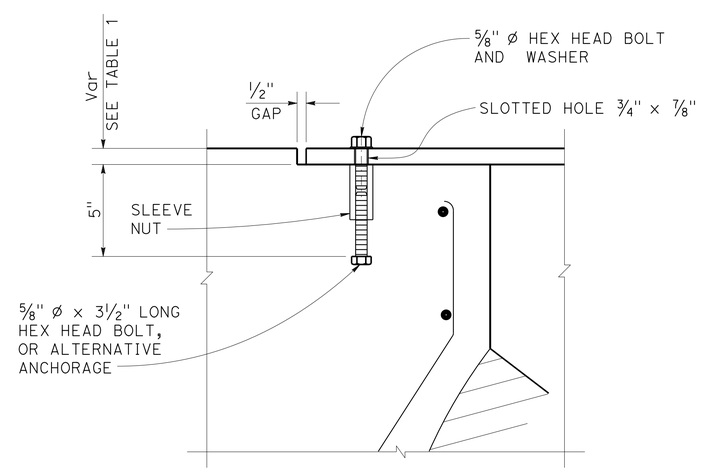

DETAIL C

TABLE 1		
LENGTH	PLATE THICKNESS	TOTAL No. OF BOLTS
8'-6" Max	7/8"	10
6'-6" Max	11/16"	7
4'-6" Max	7/16"	5

NOTE:

Structural steel, f_y = 50,000 psi
Unless otherwise noted

NO SCALE

CONSTRUCTION DETAILS
C-3

STATE OF CALIFORNIA - DEPARTMENT OF TRANSPORTATION
Caltrans® DESIGN

FUNCTIONAL SUPERVISOR: NICHOLAS CHAN
CALCULATED-DESIGNED BY: INDERPAL GILL
CHECKED BY: CHEONG-YEW-CHENG
REVISED BY
DATE REVISED

LAST REVISION 12-10-14 | DATE PLOTTED => 05-JUL-2016 | TIME PLOTTED => 14:10

Dist	COUNTY	ROUTE	POST MILES TOTAL PROJECT	SHEET No.	TOTAL SHEETS
06	Ker	99	49.6	6	106

Cheng Cheong Yew . 11-16-15
REGISTERED CIVIL ENGINEER DATE

11-16-15
PLANS APPROVAL DATE

REGISTERED PROFESSIONAL ENGINEER
CHEONG YEW CHENG
No. 57900
Exp. 6-30-16
CIVIL
STATE OF CALIFORNIA

THE STATE OF CALIFORNIA OR ITS OFFICERS OR AGENTS SHALL NOT BE RESPONSIBLE FOR THE ACCURACY OR COMPLETENESS OF SCANNED COPIES OF THIS PLAN SHEET.

NOTE:
1. USE 15'-7½" LENGTH RAIL.

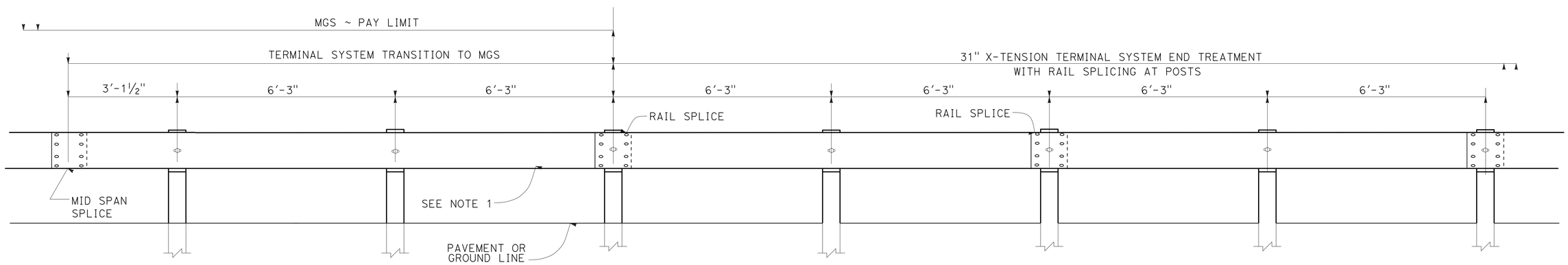

TRANSITION DETAIL FOR 31" X-TENSION TERMINAL SYSTEM END TREATMENT WITH RAIL SPLICING AT POSTS TO MIDWEST GUARDRAIL SYSTEM

NO SCALE

CONSTRUCTION DETAILS
C-4

STATE OF CALIFORNIA - DEPARTMENT OF TRANSPORTATION
Caltrans®
DESIGN
FUNCTIONAL SUPERVISOR: NICHOLAS CHAN
CALCULATED-DESIGNED BY: INDERPAL GILL
CHECKED BY: CHEONG-YEW-CHENG
REVISED BY
DATE REVISED

LAST REVISION 10-07-15
DATE PLOTTED => 05-JUL-2016
TIME PLOTTED => 14:10

Dist	COUNTY	ROUTE	POST MILES TOTAL PROJECT	SHEET No.	TOTAL SHEETS
06	Ker	99	49.6	7	106

REGISTERED CIVIL ENGINEER 11-16-15 DATE

11-16-15
PLANS APPROVAL DATE

REGISTERED PROFESSIONAL ENGINEER HUE NGUYEN No. 74484 Exp. 12/31/15 CIVIL STATE OF CALIFORNIA

THE STATE OF CALIFORNIA OR ITS OFFICERS OR AGENTS SHALL NOT BE RESPONSIBLE FOR THE ACCURACY OR COMPLETENESS OF SCANNED COPIES OF THIS PLAN SHEET.

STATIONARY MOUNTED CONSTRUCTION AREA SIGNS

SIGN	SIGN CODE FEDERAL	SIGN CODE CALIFORNIA	PANEL SIZE	No. OF POST AND SIZE	SIGN MESSAGE	No. OF SIGNS
A	W20-1		48" x 48"	1 - 6" x 6"	ROAD WORK AHEAD	4
B	G20-2		36" x 18"	1 - 4" x 6"	END ROAD WORK	3
C	W20-1		36" x 36"	1 - 4" x 6"	ROAD WORK AHEAD	1

NOTE: EXACT SIGN LOCATIONS WILL BE DETERMINED BY THE ENGINEER.

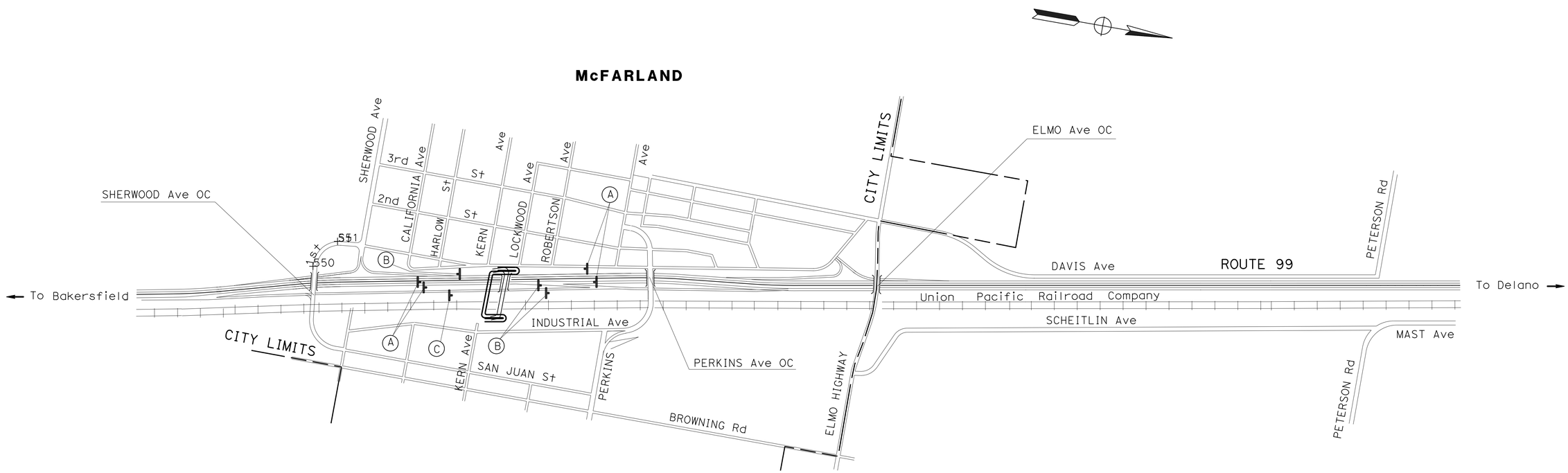

APPROVED FOR CONSTRUCTION AREA SIGN WORK ONLY

CONSTRUCTION AREA SIGNS

NO SCALE

CS-1

STATE OF CALIFORNIA - DEPARTMENT OF TRANSPORTATION
Caltrans
TRAFFIC DESIGN

FUNCTIONAL SUPERVISOR: MOHAMMED QATAMI
CALCULATED-DESIGNED BY: RAJINI TEKALKOTE
CHECKED BY: HUE NGUYEN
REVISED BY
DATE REVISED

LAST REVISION 09-04-15
DATE PLOTTED => 05-JUL-2016
TIME PLOTTED => 14:10

Dist	COUNTY	ROUTE	POST MILES TOTAL PROJECT	SHEET No.	TOTAL SHEETS
06	Ker	99	49.6	8	106

REGISTERED CIVIL ENGINEER 11-16-15 DATE

11-16-15
PLANS APPROVAL DATE

REGISTERED PROFESSIONAL ENGINEER HUE NGUYEN No. 74484 Exp 12/31/15 CIVIL STATE OF CALIFORNIA

THE STATE OF CALIFORNIA OR ITS OFFICERS OR AGENTS SHALL NOT BE RESPONSIBLE FOR THE ACCURACY OR COMPLETENESS OF SCANNED COPIES OF THIS PLAN SHEET.

LEGEND:

NB - NORTHBOUND
SB - SOUTHBOUND
- PORTABLE CHANGEABLE MESSAGE SIGN (PCMS)
(X) - ROADSIDE SIGN No.
- CONSTRUCTION AREA SIGN (ONE-POST)
- DIRECTION OF TRAFFIC
- TYPE III BARRICADE
- CLOSURE OF NB & SB ROUTE 99

NOTES:

1. DURING THE SB ROUTE 99 LANE CLOSURE THE PCMS MESSAGE AT (A) SHOULD READ

FREEWAY CLOSED AHEAD	→	USE DETOUR
1st FRAME		2nd FRAME

2. DURING THE NB ROUTE 99 LANE CLOSURE THE PCMS MESSAGE AT (B) SHOULD READ

FREEWAY CLOSED AHEAD	→	USE DETOUR
1st FRAME		2nd FRAME

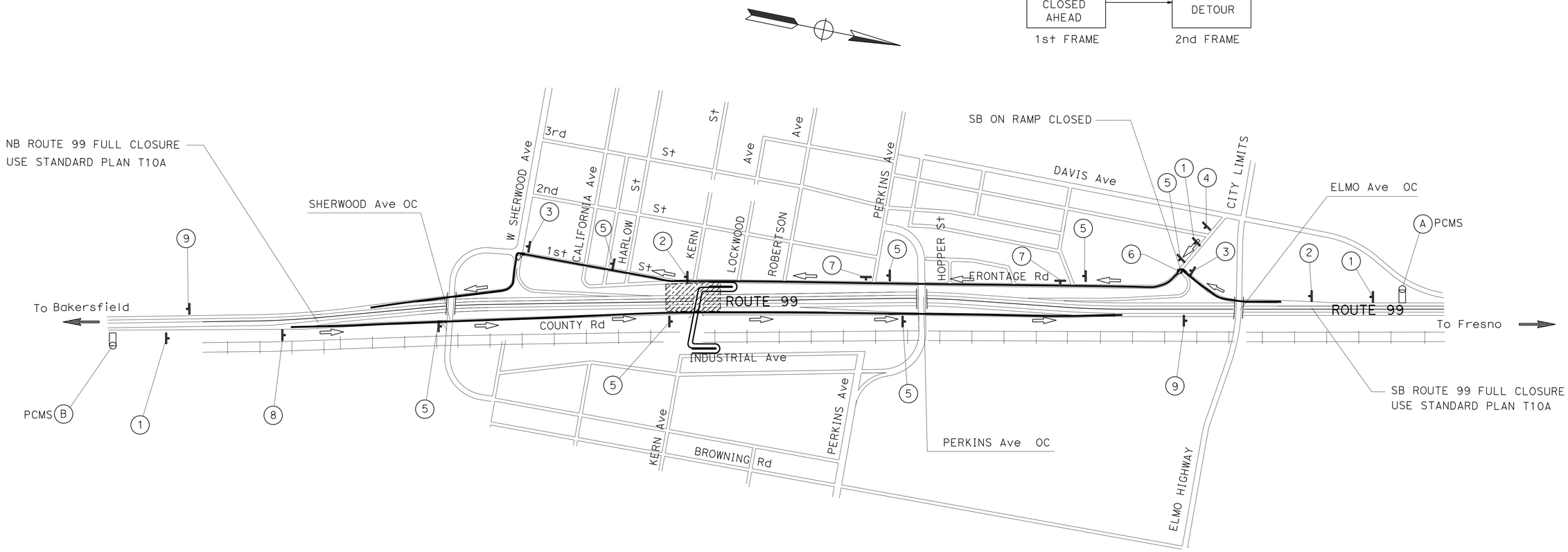

APPROVED FOR DETOUR CONSTRUCTION WORK ONLY

MOTORIST INFORMATION PLAN

NO SCALE

MI-1

STATE OF CALIFORNIA - DEPARTMENT OF TRANSPORTATION
Caltrans® **TRAFFIC DESIGN**

FUNCTIONAL SUPERVISOR: MOHAMMED QATAMI
CALCULATED-DESIGNED BY: HUE NGUYEN
CHECKED BY: RAJINI TEKALKOTE
REVISED BY
DATE REVISED

LAST REVISION 10-28-15
DATE PLOTTED => 05-JUL-2016
TIME PLOTTED => 14:10

Dist	COUNTY	ROUTE	POST MILES TOTAL PROJECT	SHEET No.	TOTAL SHEETS
06	Ker	99	49.6	9	106

REGISTERED CIVIL ENGINEER 11-16-15 DATE

11-16-15
PLANS APPROVAL DATE

REGISTERED PROFESSIONAL ENGINEER HUE NGUYEN No. 74484 Exp 12/31/15 CIVIL STATE OF CALIFORNIA

THE STATE OF CALIFORNIA OR ITS OFFICERS OR AGENTS SHALL NOT BE RESPONSIBLE FOR THE ACCURACY OR COMPLETENESS OF SCANNED COPIES OF THIS PLAN SHEET.

LEGEND:

▨ - CLOSURE OF COUNTY ROAD (FRONTAGE ROAD)

NOTE:

1. DURING THE COUNTY ROAD CLOSURE THE PCMS MESSAGE AT (A) SHOULD READ

ROAD CLOSED AHEAD	→	USE DETOUR
1st FRAME		2nd FRAME

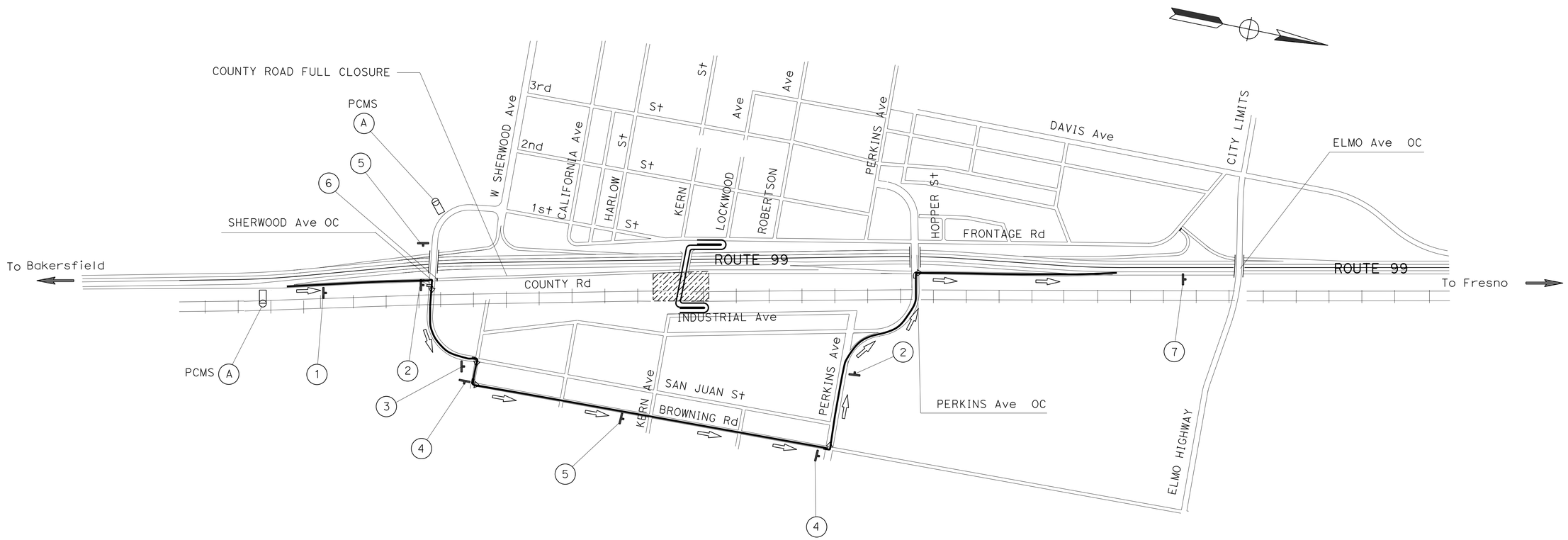

APPROVED FOR DETOUR CONSTRUCTION WORK ONLY

MOTORIST INFORMATION PLAN

NO SCALE

MI-2

STATE OF CALIFORNIA - DEPARTMENT OF TRANSPORTATION
Caltrans® TRAFFIC DESIGN

FUNCTIONAL SUPERVISOR: MOHAMMED QATAMI
CALCULATED-DESIGNED BY: FERNANDO LOPEZ
CHECKED BY: HUE NGUYEN
REVISED BY
DATE REVISED

LAST REVISION 10-28-15 | DATE PLOTTED => 05-JUL-2016 | TIME PLOTTED => 14:10

Dist	COUNTY	ROUTE	POST MILES TOTAL PROJECT	SHEET No.	TOTAL SHEETS
06	Ker	99	49.6	10	106

REGISTERED CIVIL ENGINEER 11-16-15 DATE

11-16-15
PLANS APPROVAL DATE

REGISTERED PROFESSIONAL ENGINEER HUE NGUYEN No. 74484 Exp 12/31/15 CIVIL STATE OF CALIFORNIA

THE STATE OF CALIFORNIA OR ITS OFFICERS OR AGENTS SHALL NOT BE RESPONSIBLE FOR THE ACCURACY OR COMPLETENESS OF SCANNED COPIES OF THIS PLAN SHEET.

STATIONARY MOUNTED CONSTRUCTION AREA SIGNS

SHEET No.	SIGN No.	SIGN CODE FEDERAL	SIGN CODE CALIFORNIA	PANEL SIZE	SIGN MESSAGE	No. OF POST AND SIZE	No. OF SIGNS
DE-1	1	W20-2		48" x 48"	DETOUR AHEAD	1 - 6" x 6"	3
	2	M4-8		48" x 18"	DETOUR	1 - 6" x 6"	2
		M6-2		21" x 15"	DIRECTIONAL ARROW AUXILIARY		
		M3-3		24" x 12"	SOUTH		
			G28-2(CA)(99)	21" x 18"	STATE ROUTE MARKER(99)		
	3	M4-10(Lt)		48" x 18"	DETOUR (LEFT)	1 - 4" x 6"	2
	4	W20-3		36" x 36"	RAMP CLOSED AHEAD	1 - 4" x 4"	1
	5		SC3(CA)	48" x 18"	DETOUR WITH ARROW	1 - 4" x 4"	7
	6		SC6-4(CA)	48" x 60"	RAMP CLOSED	MOUNT ON BARRICADE	1
	7	M4-10(Rt)		48" x 18"	DETOUR (RIGHT)	1 - 4" x 6"	2
		M3-3		24" x 12"	SOUTH		
			G28-2(CA)(99)	21" x 18"	STATE ROUTE MARKER(99)		
	8	M4-8		48" x 18"	DETOUR	1 - 6" x 6"	1
		M6-2		21" x 15"	DIRECTIONAL ARROW AUXILIARY		
		M3-1		24" x 12"	NORTH		
			G28-2(CA)(99)	21" x 18"	STATE ROUTE MARKER(99)		
	9	M4-8a		24" x 18"	END DETOUR	1 - 4" x 4"	2
DE-2	1	W20-2		48" x 48"	DETOUR AHEAD	1 - 6" x 6"	1
	2	M3-1		24" x 12"	NORTH	1 - 6" x 6"	2
		W16-8P		36" x 8"	COUNTY ROAD		
		M4-10(Rt)		48" x 18"	DETOUR ARROW (RIGHT)		
	3	M4-10(Rt)		48" x 18"	DETOUR ARROW (RIGHT)	1 - 4" x 4"	1
	4	M3-1		24" x 12"	NORTH	1 - 6" x 6"	2
		W16-8P		36" x 8"	COUNTY ROAD		
		M4-8		24" x 12"	DETOUR		
		M6-1(Lt)		21" x 15"	DIRECTIONAL ARROW (LEFT)		
	5		SC3(CA)	48" x 18"	DETOUR WITH ARROW	1 - 4" x 4"	2
	6	R11-2		48" x 30"	ROAD CLOSED	MOUNT ON BARRICADE	2
	7	M4-8a		24" x 18"	END DETOUR	1 - 4" x 4"	1

FOR ADDITIONAL CONSTRUCTION AREA SIGNS, REFER TO CS AND TH PLANS.

TYPE III BARRICADE

SHEET No.	EA
DE-1	3
DE-2	6
TOTAL	9

MOTORIST INFORMATION QUANTITIES
MIQ-1

REVISED BY | DATE REVISED
HUE NGUYEN | RAJINI TEKALKOTE
CALCULATED-DESIGNED BY | CHECKED BY
FUNCTIONAL SUPERVISOR
MOHAMMED QATAMI
STATE OF CALIFORNIA - DEPARTMENT OF TRANSPORTATION
Caltrans® TRAFFIC DESIGN

LAST REVISION 10-28-15 | DATE PLOTTED => 05-JUL-2016 | TIME PLOTTED => 14:10

Dist	COUNTY	ROUTE	POST MILES TOTAL PROJECT	SHEET No.	TOTAL SHEETS
06	Ker	99	49.6	11	106

REGISTERED CIVIL ENGINEER 11-16-15 DATE

11-16-15
PLANS APPROVAL DATE

REGISTERED PROFESSIONAL ENGINEER HUE NGUYEN No. 74484 Exp. 12/31/15 CIVIL STATE OF CALIFORNIA

THE STATE OF CALIFORNIA OR ITS OFFICERS OR AGENTS SHALL NOT BE RESPONSIBLE FOR THE ACCURACY OR COMPLETENESS OF SCANNED COPIES OF THIS PLAN SHEET.

LEGEND:

- TEMPORARY RAILING (TYPE K)
- CHANNELIZER (SURFACE MOUNTED)
- TEMPORARY TRAFFIC STRIPE (TAPE) DETAIL No.
- CONSTRUCTION AREA SIGN No.
- DIRECTION OF TRAFFIC
- TEMPORARY CRASH CUSHION (ARRAY AS NOTED)
- OBJECT MARKER (TYPE P)
- PORTABLE CHANGEABLE MESSAGE SIGN (PCMS)

NOTES:

1. COVER ALL CONFLICTING SIGNS OR WHEN NOT IN USE.
2. SIGN LOCATIONS AND POSITIONS SHOWN ARE APPROXIMATE, EXACT LOCATIONS AND POSITIONS WILL BE DETERMINED BY THE ENGINEER.
3. FOR ACCURATE RIGHT OF WAY DATA, CONTACT RIGHT OF WAY ENGINEERING AT THE DISTRICT OFFICE.

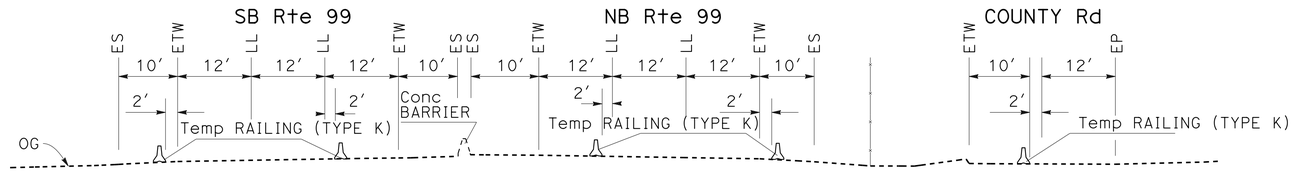

SECTION A-A
NO SCALE

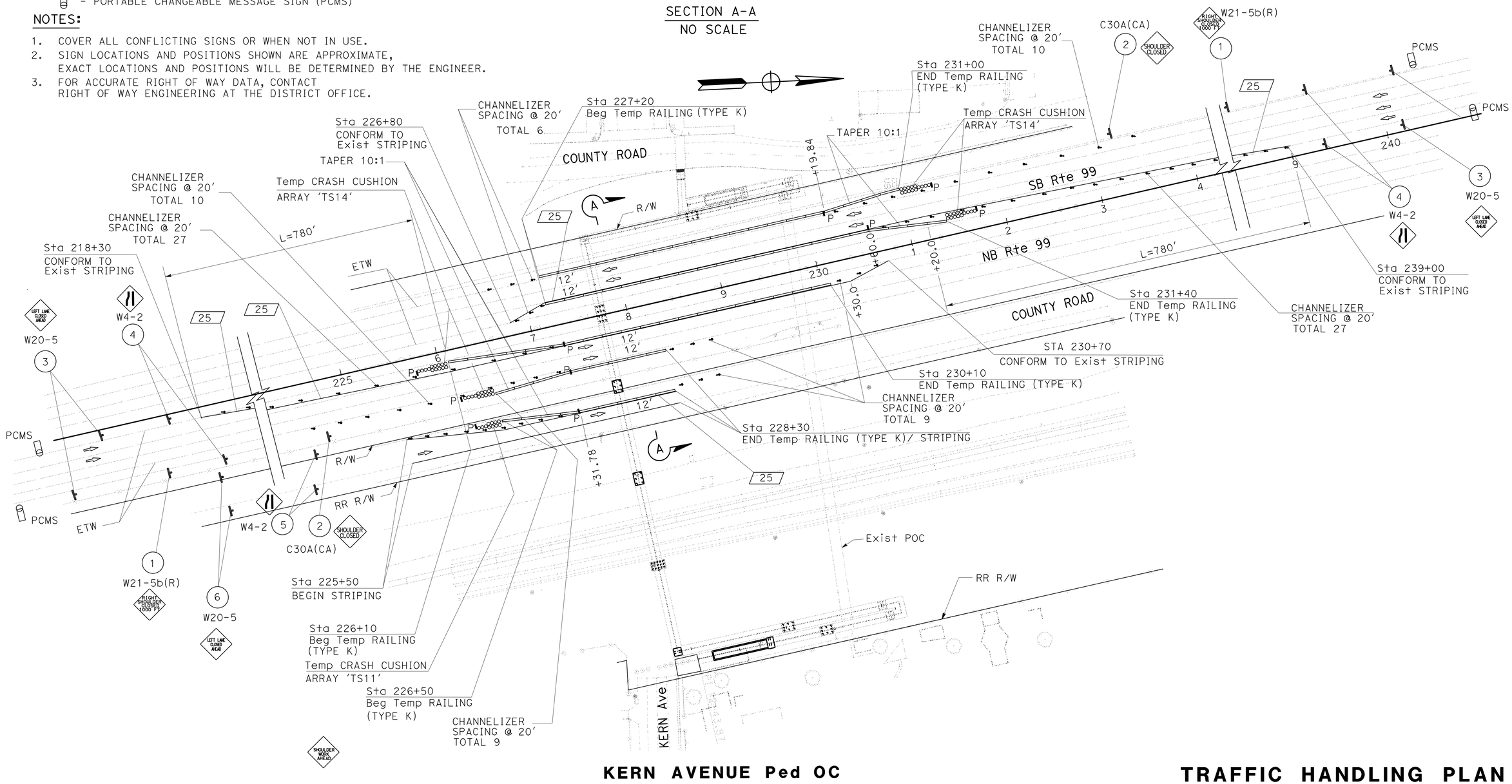

KERN AVENUE Ped OC

TRAFFIC HANDLING PLAN
(TWO LANES TRAFFIC OPEN FOR EACH DIRECTION)

TH-1

APPROVED FOR TRAFFIC HANDLING WORK ONLY

SCALE:1"=50′

STATE OF CALIFORNIA - DEPARTMENT OF TRANSPORTATION
Caltrans® TRAFFIC DESIGN

FUNCTIONAL SUPERVISOR: MOHAMMED QATAMI
CALCULATED-DESIGNED BY: HUE NGUYEN
CHECKED BY: RAJINI TEKALKOTE
REVISED BY / DATE REVISED

LAST REVISION 10-28-15 | DATE PLOTTED => 05-JUL-2016 | TIME PLOTTED => 14:10

Dist	COUNTY	ROUTE	POST MILES TOTAL PROJECT	SHEET No.	TOTAL SHEETS
06	Ker	99	49.6	12	106

REGISTERED CIVIL ENGINEER 11-16-15 DATE

11-16-15
PLANS APPROVAL DATE

REGISTERED PROFESSIONAL ENGINEER HUE NGUYEN No. 74484 Exp. 12/31/15 CIVIL STATE OF CALIFORNIA

THE STATE OF CALIFORNIA OR ITS OFFICERS OR AGENTS SHALL NOT BE RESPONSIBLE FOR THE ACCURACY OR COMPLETENESS OF SCANNED COPIES OF THIS PLAN SHEET.

NOTES:

1. COVER ALL CONFLICTING SIGNS OR WHEN NOT IN USE.
2. SIGN LOCATIONS AND POSITIONS SHOWN ARE APPROXIMATE, EXACT LOCATIONS AND POSITIONS WILL BE DETERMINED BY THE ENGINEER.
3. FOR ACCURATE RIGHT OF WAY DATA, CONTACT RIGHT OF WAY ENGINEERING AT THE DISTRICT OFFICE.

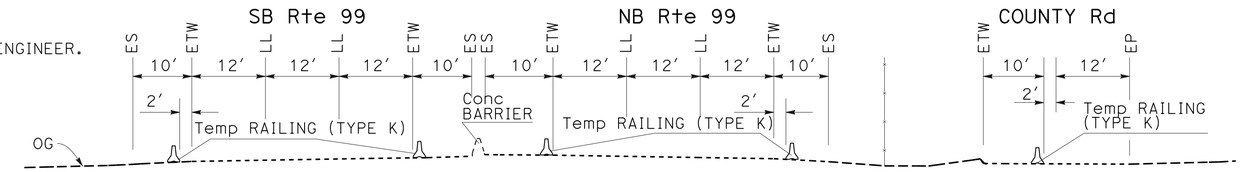

SECTION A-A
NO SCALE

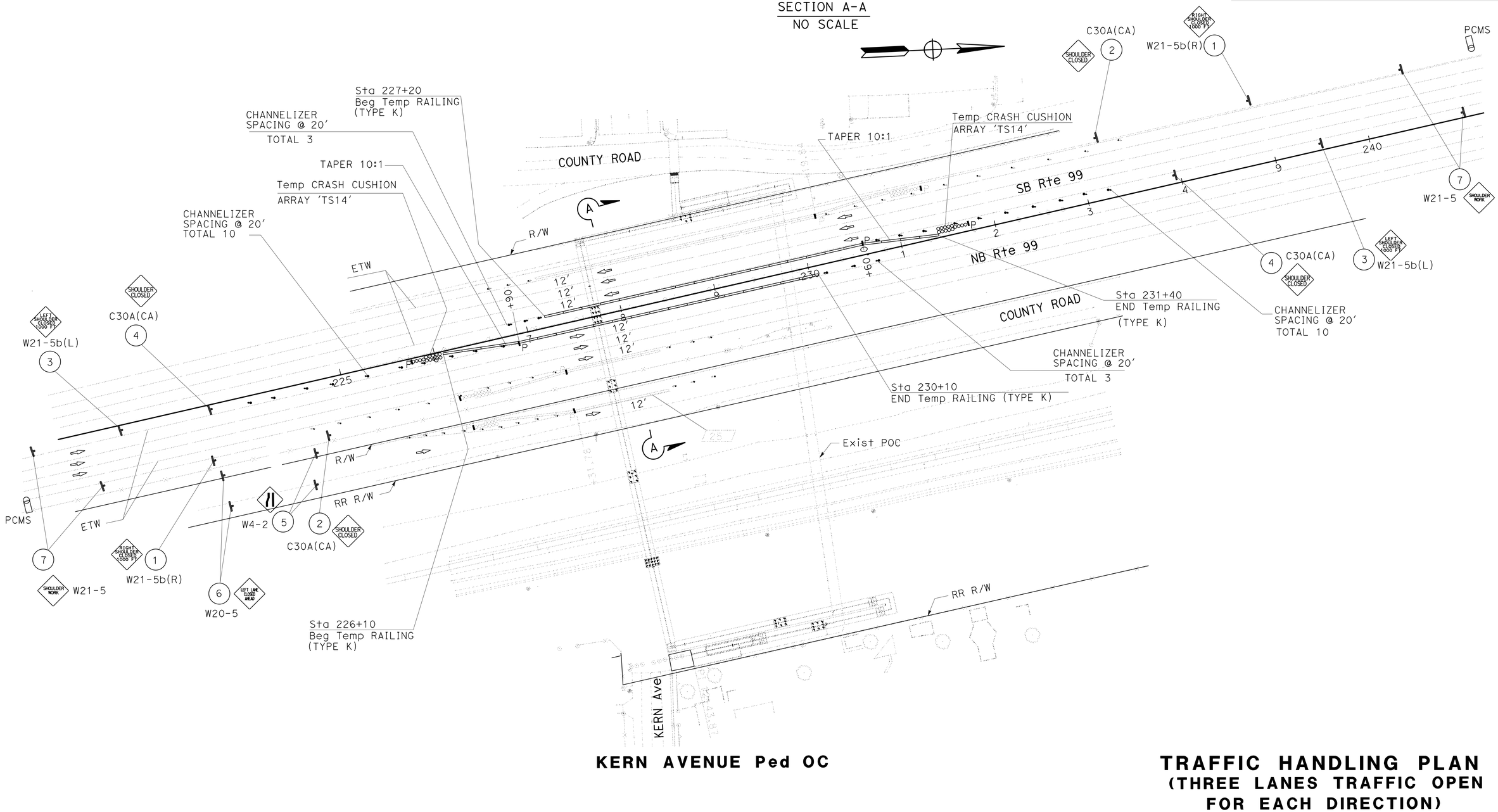

KERN AVENUE Ped OC

TRAFFIC HANDLING PLAN
(THREE LANES TRAFFIC OPEN FOR EACH DIRECTION)
TH-2

APPROVED FOR TRAFFIC HANDLING WORK ONLY

SCALE:1"=50′

STATE OF CALIFORNIA - DEPARTMENT OF TRANSPORTATION
Caltrans® TRAFFIC DESIGN

FUNCTIONAL SUPERVISOR: MOHAMMED QATAMI
CALCULATED-DESIGNED BY: HUE NGUYEN
CHECKED BY: RAJINI TEKALKOTE
REVISED BY
DATE REVISED

LAST REVISION 10-28-15
DATE PLOTTED => 05-JUL-2016
TIME PLOTTED => 14:10

Dist	COUNTY	ROUTE	POST MILES TOTAL PROJECT	SHEET No.	TOTAL SHEETS
06	Ker	99	49.6	13	106

REGISTERED CIVIL ENGINEER 11-16-15 DATE

11-16-15
PLANS APPROVAL DATE

REGISTERED PROFESSIONAL ENGINEER HUE NGUYEN No. 74484 Exp 12/31/15 CIVIL STATE OF CALIFORNIA

THE STATE OF CALIFORNIA OR ITS OFFICERS OR AGENTS SHALL NOT BE RESPONSIBLE FOR THE ACCURACY OR COMPLETENESS OF SCANNED COPIES OF THIS PLAN SHEET.

STATIONARY MOUNTED CONSTRUCTION AREA SIGNS

SHEET No.	SIGN No.	SIGN CODE FEDERAL	SIGN CODE CALIFORNIA	SIGN MESSAGE	PANEL SIZE	No. POST AND SIZE	No. OF SIGNS EA	REMARKS
TH-1	1	W21-5b(R)		RIGHT SHOULDER CLOSED 1000 FT	48" x 48"	1 - 6" x 6"	2	
	2		C30A(CA)	SHOULDER CLOSED	48" x 48"	1 - 6" x 6"	2	
	3	W20-5		LEFT LANE CLOSED AHEAD	48" x 48"	1 - 6" x 6"	4	
	4	W4-2		LANE ENDS	48" x 48"	1 - 6" x 6"	4	
	5	W4-2		LANE ENDS	36" x 36"	1 - 4" x 4"	2	
	6	W20-5		LEFT LANE CLOSED AHEAD	36" x 36"	1 - 4" x 4"	2	
TH-2	1	W21-5b(R)		RIGHT SHOULDER CLOSED 1000 FT	48" x 48"	1 - 6" x 6"	2	TO REMAIN FROM TH-1
	2		C30A(CA)	SHOULDER CLOSED	48" x 48"	1 - 6" x 6"	2	TO REMAIN FROM TH-1
	3	W21-5b(L)		LEFT SHOULDER CLOSED 1000 FT	48" x 48"	1 - 6" x 6"	2	
	4		C30A(CA)	SHOULDER CLOSED	48" x 48"	1 - 6" x 6"	2	
	5	W4-2		LANE ENDS	36" x 36"	1 - 4" x 4"	2	TO REMAIN FROM TH-1
	6	W20-5		LEFT LANE CLOSED AHEAD	36" x 36"	1 - 4" x 4"	2	TO REMAIN FROM TH-1
	7	W21-5		SHOULDER WORK	48" x 48"	1 - 6" x 6"	4	

NOTE: FOR ADDITIONAL CONSTRUCTION AREA SIGNS REFER TO CONSTRUCTION AREA SIGN SHEET.

TRAFFIC HANDLING QUANTITIES
THQ-1

REVISED BY | DATE REVISED
RAJINI TEKALKOTE | HUE NGUYEN
CALCULATED-DESIGNED BY | CHECKED BY
FUNCTIONAL SUPERVISOR
MOHAMMED QATAMI

STATE OF CALIFORNIA - DEPARTMENT OF TRANSPORTATION
Caltrans® TRAFFIC DESIGN

LAST REVISION 10-28-15 | DATE PLOTTED => 05-JUL-2016 | TIME PLOTTED => 14:10

Dist	COUNTY	ROUTE	POST MILES TOTAL PROJECT	SHEET No.	TOTAL SHEETS
06	Ker	99	49.6	14	106

REGISTERED CIVIL ENGINEER 11-16-15 DATE

11-16-15
PLANS APPROVAL DATE

REGISTERED PROFESSIONAL ENGINEER HUE NGUYEN No. 74484 Exp 12/31/15 CIVIL STATE OF CALIFORNIA

THE STATE OF CALIFORNIA OR ITS OFFICERS OR AGENTS SHALL NOT BE RESPONSIBLE FOR THE ACCURACY OR COMPLETENESS OF SCANNED COPIES OF THIS PLAN SHEET.

TEMPORARY PAVEMENT DELINEATION QUANTITIES

SHEET No.	LOCATION/STATION	ROUTE	DIRECTION	TEMPORARY TRAFFIC STRIPE (TAPE) 4" SOLID YELLOW DETAIL 25	TEMPORARY TRAFFIC STRIPE (TAPE) 4" SOLID WHITE DETAIL 27B	TEMPORARY PAVEMENT MARKER TYPE H	TEMPORARY RAILING (TYPE K)	TEMPORARY CRASH CUSHION MODULE ARRAY 'TS11'	TEMPORARY CRASH CUSHION MODULE ARRAY 'TS14'	CHANNELIZER (SURFACE MOUNTED)	REMARKS
				LF	LF	EA	LF	EA	EA	EA	
TH-1	ROUTE 99	99									
	Sta 226+80 TO Sta 239+00		SB	1220		22					
	Sta 227+20 TO Sta 231+40						420		14	30	
	Sta 227+20 TO Sta 231+00						380		14	13	TO REMAIN FROM TH-1
	Sta 218+30 TO Sta 230+70		NB	1240		22					
	Sta 226+10 TO Sta 230+10						400		14	30	TO REMAIN FROM TH-1
	Sta 226+50 TO Sta 228+30						180		14	13	TO REMAIN FROM TH-1
	COUNTY ROAD	COUNTY ROAD									
	Sta 225+50 TO Sta 228+30			280	280	6					TO REMAIN FROM TH-1
	Sta 226+50 TO Sta 228+30						180	11		12	
TH-2	ROUTE 99	99									
	Sta 227+20 TO Sta 231+40		SB				420		14	13	
	Sta 227+20 TO Sta 231+00										
	Sta 226+10 TO Sta 231+10		NB				400		14	13	
	Sta 226+50 TO Sta 228+30										
	COUNTY ROAD	COUNTY ROAD									
	Sta 225+50 TO Sta 228+30										
	Sta 226+50 TO Sta 228+30										
			SUB-TOTAL	2740	280			11	84		
			TOTAL	3020		50	2380	94		124	

TRAFFIC HANDLING QUANTITIES
THQ-2

STATE OF CALIFORNIA - DEPARTMENT OF TRANSPORTATION
Caltrans® TRAFFIC DESIGN

FUNCTIONAL SUPERVISOR: MOHAMMED QATAMI
CALCULATED-DESIGNED BY: RAJINI TEKALKOTE
CHECKED BY: HUE NGUYEN
REVISED BY
DATE REVISED

LAST REVISION 10-28-15 DATE PLOTTED => 05-JUL-2016 TIME PLOTTED => 14:10

Dist	COUNTY	ROUTE	POST MILES TOTAL PROJECT	SHEET No.	TOTAL SHEETS
06	Ker	99	49.6	15	106

Cheng Cheng Yew . 11-16-15
REGISTERED CIVIL ENGINEER DATE

11-16-15
PLANS APPROVAL DATE

REGISTERED PROFESSIONAL ENGINEER CHEONG YEW CHENG No. 57900 Exp. 6-30-16 CIVIL STATE OF CALIFORNIA

THE STATE OF CALIFORNIA OR ITS OFFICERS OR AGENTS SHALL NOT BE RESPONSIBLE FOR THE ACCURACY OR COMPLETENESS OF SCANNED COPIES OF THIS PLAN SHEET.

MIDWEST GUARDRAIL SYSTEM

SHEET No.	STATION	SIDE	MIDWEST GUARDRAIL SYSTEM (STEEL POST)	ALTERNATIVE FLARED TERMINAL SYSTEM	END ANCHOR ASSEMBLY (TYPE SFT)	REMOVE GUARDRAIL	TREATED WOOD WASTE	REMARKS
			LF	EA	EA	LF	LB	
L-1	"CL1" Sta 229+77.06 TO Sta 229+85.97	Lt				9.0	420	
L-1	"CL1" Sta 229+27.23 TO Sta 230+01.35	Rt				75.0	1155	
L-1	"CL1" Sta 227+56.86 TO Sta 230+31.86	Lt	275.0	1	1			TYPE 16B LAYOUT
L-1	"CL1" Sta 227+44.00 TO Sta 227+81.50	Rt	37.5	1	1			TYPE 16B LAYOUT
L-1	"CL1" Sta 229+69.85 TO Sta 230+07.35	Rt	37.5	1	1			TYPE 16B LAYOUT
TOTAL			350.0	3	3	84.0	1575	

OBJECT MARKER AND GUARDRAIL DELINEATOR

SHEET No.	LOCATION	OBJECT MARKER (TYPE P)	GURAD RAILING DELINEATOR
		EA	EA
L-1	SB ROUTE 99	1	2
L-1	NB ROUTE 99	2	4
TOTAL		3	6

ROADWAY QUANTITIES

SHEET No.	DESCRIPTION	MINOR Conc (Misc CONSTRUCTION) RETAINING CURB	MINOR Conc (Misc CONSTRUCTION) SIDEWALK	REMOVE CONCRETE	REMOVE Conc BARRIER	CONCRETE BARRIER (TYPE 60R)	CONCRETE BARRIER (TYPE 60C)	CHAIN LINK FENCE (TYPE CL-8)	6' CHAIN LINK GATE (TYPE CL-8)	CHAIN LINK FENCE (TYPE CL-6)	REMOVE FENCE
		CY	CY	CY	LF	LF	LF	LF	EA	LF	LF
C-1/L-1	SIDEWALK DETAIL ON EAST OF Rte 99 TO KERN Ave, Conc BOLLARDS	1.6	4.5	6.0							
L-1	"CL1" Sta 229+48.00 TO Sta 230+08.00				60.0		60.0				
C-2/L-1	"CL1" Sta 227+28.79 TO Sta 228+18.29				89.5	89.5					
C-1	"ALN12" Sta 22+36.41 TO Sta 17+76.47							119.0	2		
L-1	"CL1" Sta 227+58.53 TO Sta 228+84.54									131.0	
L-1	"CL1" Sta 229+59.08 TO Sta 230+15.00									56.0	
L-1	"CL1" Sta 227+58.53 TO Sta 230+15.00										257.0
SUB-TOTAL		1.6	4.5	6.0	149.5	89.5	60.0	119.0	2	187.0	257.0
TOTAL		6.1		6.0	149.5	89.5	60.0	119.0	2	187.0	257.0

TEMPORARY FENCE

SHEET No.	STATION	SIDE	(TYPE CL-6)
			LF
L-1	"CL1" Sta 226+95.00 TO Sta 230+15.00	Lt	425.0
TOTAL			425.0

SUMMARY OF QUANTITIES
Q-1

STATE OF CALIFORNIA - DEPARTMENT OF TRANSPORTATION
Caltrans DESIGN
FUNCTIONAL SUPERVISOR: NICHOLAS CHAN
CALCULATED-DESIGNED BY: INDERPAL GILL
CHECKED BY: CHEONG-YEW-CHENG
REVISED BY
DATE REVISED

LAST REVISION 11-15-15 DATE PLOTTED => 05-JUL-2016 TIME PLOTTED => 14:10

Dist	COUNTY	ROUTE	POST MILES TOTAL PROJECT	SHEET No.	TOTAL SHEETS
06	Ker	99	49.6	16	106

LICENSED LANDSCAPE ARCHITECT

11-16-15
PLANS APPROVAL DATE

LICENSED LANDSCAPE ARCHITECT
KEVIN GALLO No. 2556
Expires
12/31/15
Renewal Date
11-16-15
Date
STATE OF CALIFORNIA

THE STATE OF CALIFORNIA OR ITS OFFICERS OR AGENTS SHALL NOT BE RESPONSIBLE FOR THE ACCURACY OR COMPLETENESS OF SCANNED COPIES OF THIS PLAN SHEET.

NOTE:

FOR ACCURATE RIGHT OF WAY DATA, CONTACT RIGHT OF WAY ENGINEERING AT THE DISTRICT OFFICE.

LEGEND:

- Exist TREES
- Exist SHRUBS
- LIMITS OF MAINTAIN Exist PLANTED AREAS, CHECK AND TEST, AND OPERATE Exist IRRIGATION FACILITIES

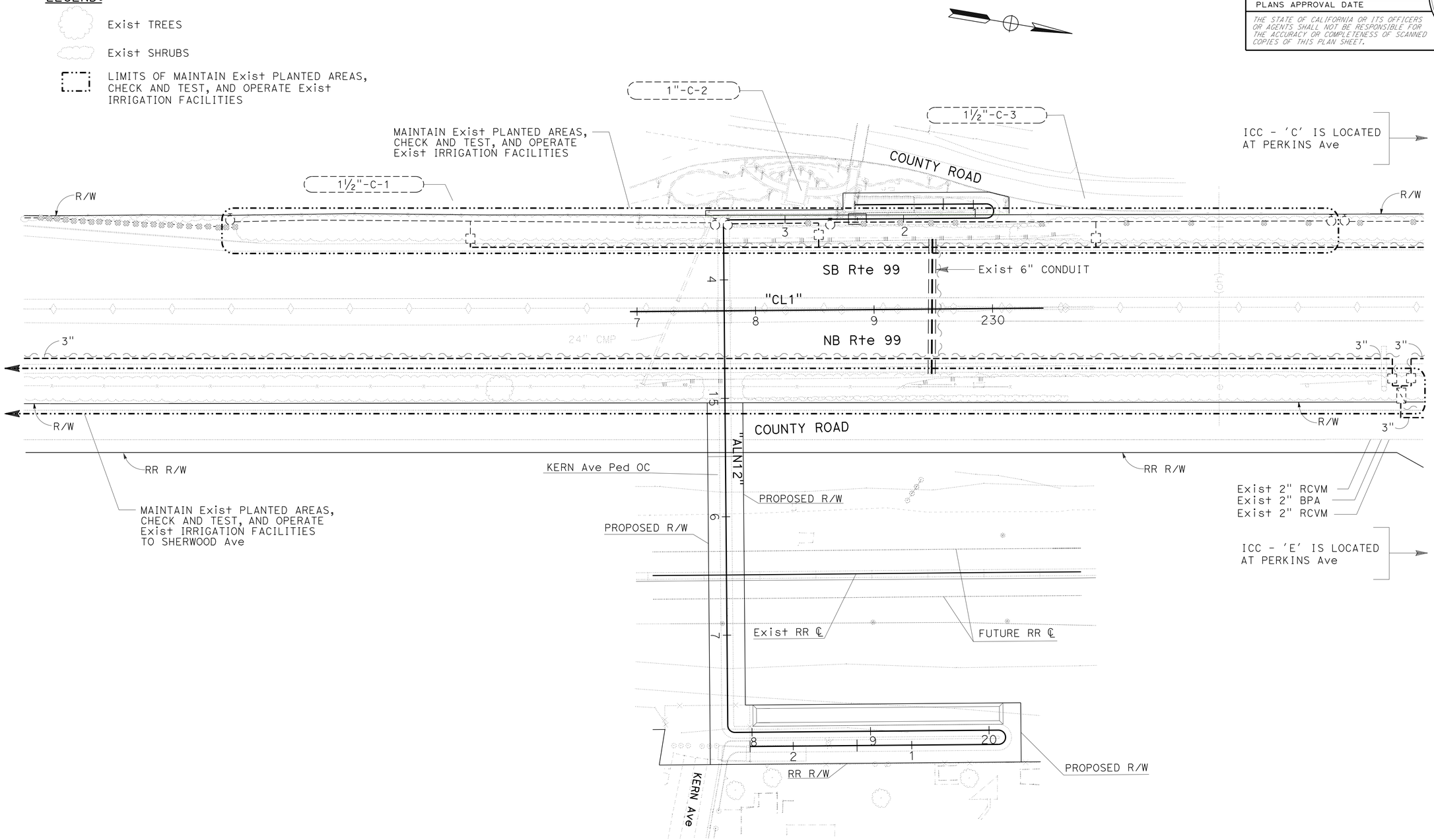

APPROVED FOR MAINTAIN EXISTING PLANTED AREA WORK ONLY

MAINTAIN EXISTING PLANTED AREAS
MEPA-1

SCALE: 1"=50'

STATE OF CALIFORNIA - DEPARTMENT OF TRANSPORTATION
Caltrans® LANDSCAPE ARCHITECTURE

SENIOR LANDSCAPE ARCHITECT: BRAD COLE
CALCULATED-DESIGNED BY: KEVIN GALLO
CHECKED BY: DAVID MARTIN
REVISED BY / DATE REVISED

LAST REVISION 10-26-15
DATE PLOTTED => 05-JUL-2016
TIME PLOTTED => 14:10

Dist	COUNTY	ROUTE	POST MILES TOTAL PROJECT	SHEET No.	TOTAL SHEETS
06	Ker	99	49.6	17	106

LICENSED LANDSCAPE ARCHITECT

11-16-15
PLANS APPROVAL DATE

LICENSED LANDSCAPE ARCHITECT
KEVIN GALLO No. 2556
Expiration Date
12/31/15
Renewal Date
11-16-15
Date
STATE OF CALIFORNIA

THE STATE OF CALIFORNIA OR ITS OFFICERS OR AGENTS SHALL NOT BE RESPONSIBLE FOR THE ACCURACY OR COMPLETENESS OF SCANNED COPIES OF THIS PLAN SHEET.

NOTE:

FOR ACCURATE RIGHT OF WAY DATA, CONTACT
RIGHT OF WAY ENGINEERING AT THE DISTRICT OFFICE.

LEGEND:

	REMOVE Exist IRRIGATION PIPE
	REMOVE Exist RCV
	REMOVE Exist FV
	REMOVE Exist SPRINKLER

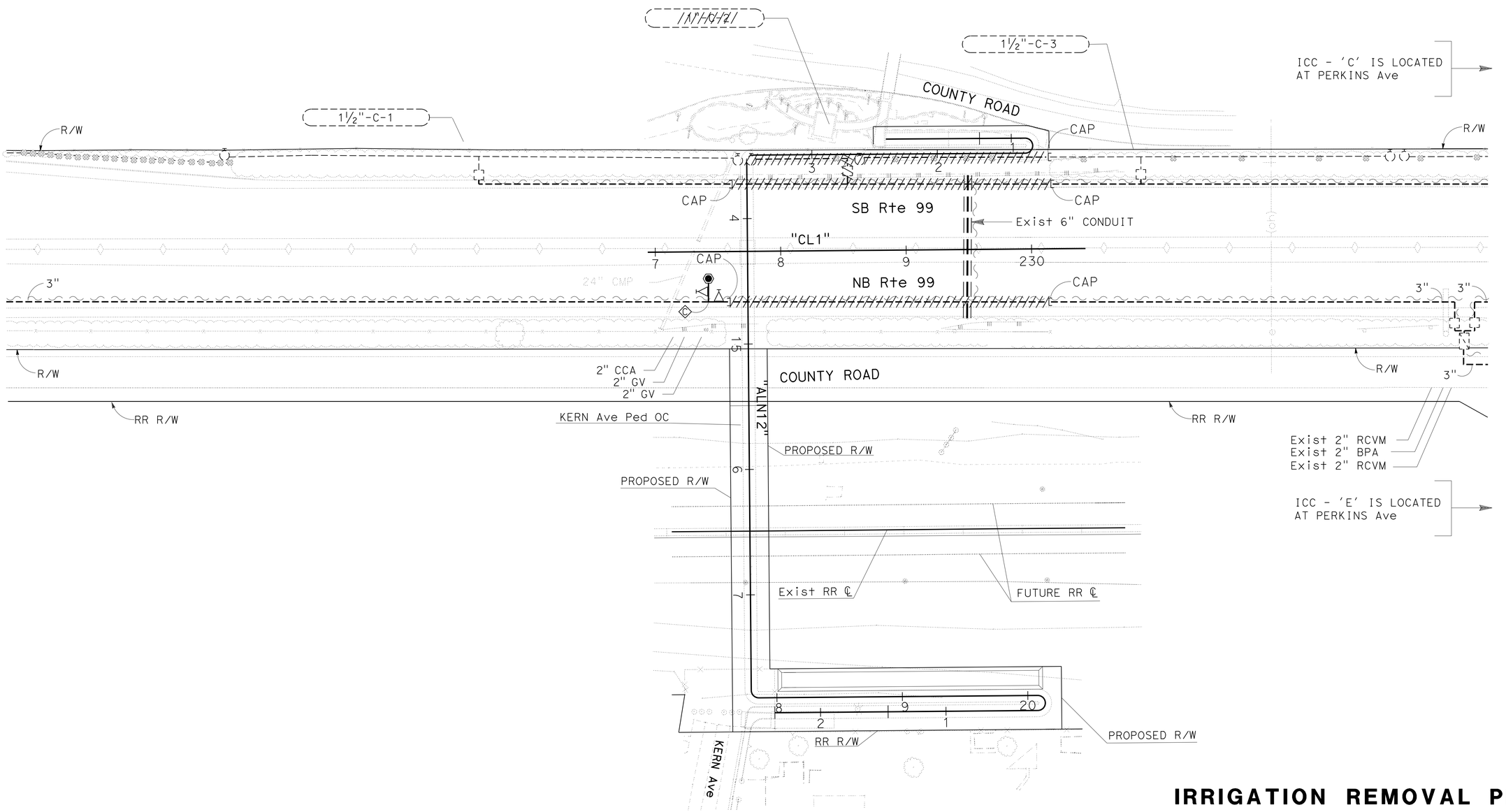

APPROVED FOR IRRIGATION REMOVAL WORK ONLY

IRRIGATION REMOVAL PLAN
IR-1

SCALE: 1"=50'

STATE OF CALIFORNIA - DEPARTMENT OF TRANSPORTATION
Caltrans® LANDSCAPE ARCHITECTURE

SENIOR LANDSCAPE ARCHITECT: BRAD COLE
CALCULATED-DESIGNED BY: KEVIN GALLO
CHECKED BY: DAVID MARTIN
REVISED BY / DATE REVISED

LAST REVISION 10-26-15
DATE PLOTTED => 05-JUL-2016
TIME PLOTTED => 14:10

Dist	COUNTY	ROUTE	POST MILES TOTAL PROJECT	SHEET No.	TOTAL SHEETS
06	Ker	99	49.6	18	106

LICENSED LANDSCAPE ARCHITECT

11-16-15
PLANS APPROVAL DATE

LICENSED LANDSCAPE ARCHITECT
KEVIN GALLO No. 2556
Expires
12/31/15
Renewal Date
11-16-15
Date
STATE OF CALIFORNIA

THE STATE OF CALIFORNIA OR ITS OFFICERS OR AGENTS SHALL NOT BE RESPONSIBLE FOR THE ACCURACY OR COMPLETENESS OF SCANNED COPIES OF THIS PLAN SHEET.

NOTE:

FOR ACCURATE RIGHT OF WAY DATA, CONTACT RIGHT OF WAY ENGINEERING AT THE DISTRICT OFFICE.

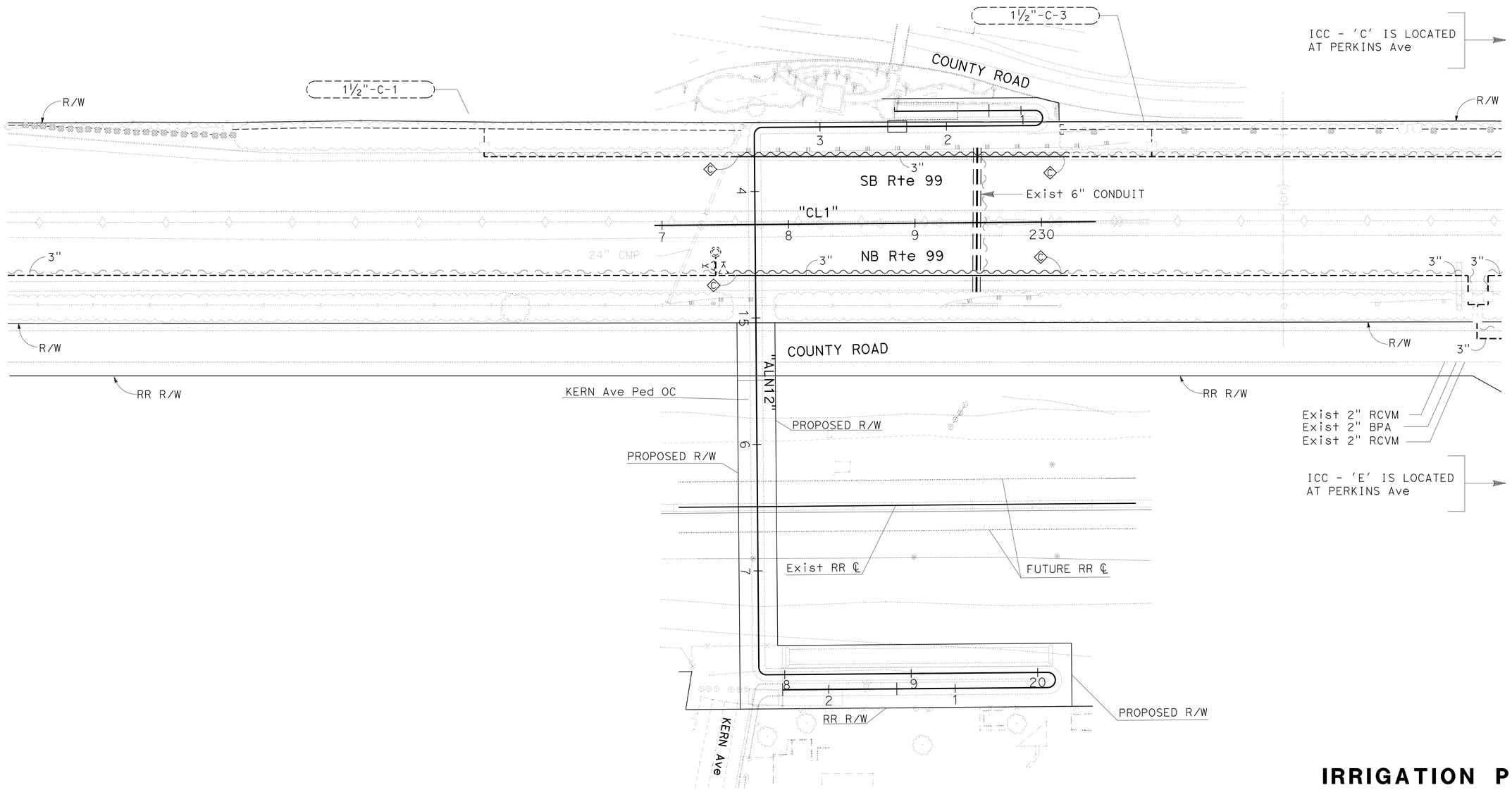

APPROVED FOR IRRIGATION WORK ONLY

IRRIGATION PLAN
IP-1

SCALE: 1"=50'

STATE OF CALIFORNIA - DEPARTMENT OF TRANSPORTATION
Caltrans® LANDSCAPE ARCHITECTURE

SENIOR LANDSCAPE ARCHITECT: BRAD COLE
CALCULATED-DESIGNED BY: KEVIN GALLO
CHECKED BY: DAVID MARTIN
REVISED BY
DATE REVISED

LAST REVISION 10-26-15
DATE PLOTTED => 05-JUL-2016
TIME PLOTTED => 14:10

Dist	COUNTY	ROUTE	POST MILES TOTAL PROJECT	SHEET No.	TOTAL SHEETS
06	Ker	99	49.6	19	106

LICENSED LANDSCAPE ARCHITECT

11-16-15
PLANS APPROVAL DATE

LICENSED LANDSCAPE ARCHITECT
KEVIN GALLO No. 2556
Expires
12/31/15
Renewal Date
11-16-15
Date
STATE OF CALIFORNIA

THE STATE OF CALIFORNIA OR ITS OFFICERS OR AGENTS SHALL NOT BE RESPONSIBLE FOR THE ACCURACY OR COMPLETENESS OF SCANNED COPIES OF THIS PLAN SHEET.

NOTE:

FOR ACCURATE RIGHT OF WAY DATA, CONTACT RIGHT OF WAY ENGINEERING AT THE DISTRICT OFFICE.

LEGEND:

- WOOD MULCH (WOOD CHIP) (6" DEPTH)
- ROADSIDE CLEARING
- EROSION CONTROL

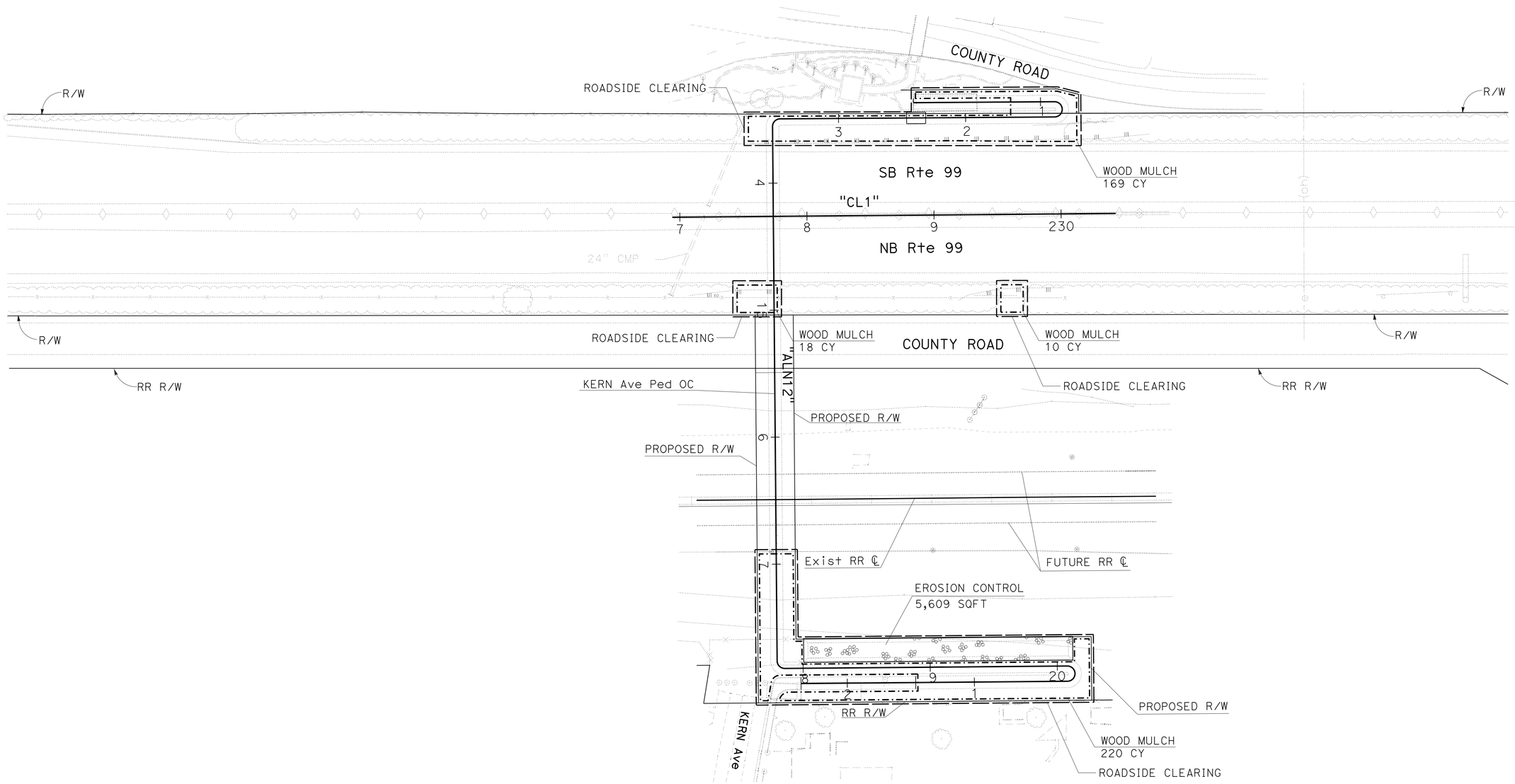

APPROVED FOR PLANTING WORK ONLY

PLANTING PLAN
PP-1

SCALE: 1"=50'

STATE OF CALIFORNIA - DEPARTMENT OF TRANSPORTATION
Caltrans® LANDSCAPE ARCHITECTURE

SENIOR LANDSCAPE ARCHITECT: BRAD COLE
CALCULATED-DESIGNED BY: KEVIN GALLO
CHECKED BY: DAVID MARTIN
REVISED BY
DATE REVISED

LAST REVISION 10-26-15
DATE PLOTTED => 05-JUL-2016
TIME PLOTTED => 14:10

Dist	COUNTY	ROUTE	POST MILES TOTAL PROJECT	SHEET No.	TOTAL SHEETS
06	Ker	99	49.6	20	106

LICENSED LANDSCAPE ARCHITECT

11-16-15
PLANS APPROVAL DATE

LICENSED LANDSCAPE ARCHITECT
KEVIN GALLO No. 5555
Expires 12/31/15
Renewal Date
11-16-15
Date
STATE OF CALIFORNIA

THE STATE OF CALIFORNIA OR ITS OFFICERS OR AGENTS SHALL NOT BE RESPONSIBLE FOR THE ACCURACY OR COMPLETENESS OF SCANNED COPIES OF THIS PLAN SHEET.

IRRIGATION SUBTOTALS PER PLAN SHEET ON MAIN SUPPLY SIDE OF CONTROL VALVE

DESCRIPTION			UNIT	SHEET NUMBER IR-1	IP-1		SUBTOTALS
VALVES AND ASSEMBLIES	CCA	2 INCH	EA	1			1
VALVES AND ASSEMBLIES	GV	2 INCH	EA	2			2
PLASTIC PIPE SUPPLY LINE	SCHEDULE 40 CL 315	3 INCH	LF	10	610		610

IRRIGATION TOTAL QUANTITIES FOR LATERAL AND MAIN

TOTALS	UNIT	DESCRIPTION		
1	EA	2 INCH	CCA	VALVES AND ASSEMBLIES
2	EA	2 INCH	GV	VALVES AND ASSEMBLIES
620	LF	3 INCH	SCHEDULE 40 CL 315	PLASTIC PIPE SUPPLY LINE

WOOD MULCH

SHEET	LOCATION	WOOD CHIP (6" DEPTH) CY
PP-1	SR 99	169
		18
		10
		220
TOTAL		417

LANDSCAPE QUANTITIES
LQ-1

STATE OF CALIFORNIA - DEPARTMENT OF TRANSPORTATION
Caltrans® LANDSCAPE ARCHITECTURE

SENIOR LANDSCAPE ARCHITECT: BRAD COLE

CALCULATED-DESIGNED BY: KEVIN GALLO
CHECKED BY: DAVID MARTIN

REVISED BY
DATE REVISED

LAST REVISION 10-26-15
DATE PLOTTED => 05-JUL-2016
TIME PLOTTED => 14:10

Dist	COUNTY	ROUTE	POST MILES TOTAL PROJECT	SHEET No.	TOTAL SHEETS
06	Ker	99	49.6	21	106

LICENSED LANDSCAPE ARCHITECT

11-16-15
PLANS APPROVAL DATE

LICENSED LANDSCAPE ARCHITECT
KEVIN GALLO No. 2556
CALIFORNIA
12/31/15
Renewal Date
11-16-15
Date
STATE OF CALIFORNIA

THE STATE OF CALIFORNIA OR ITS OFFICERS OR AGENTS SHALL NOT BE RESPONSIBLE FOR THE ACCURACY OR COMPLETENESS OF SCANNED COPIES OF THIS PLAN SHEET.

SEED MIX

BOTANICAL NAME (COMMON NAME)	PERCENT GERMINATION (MINIMUM)	POUNDS PURE LIVE SEED PER ACRE (SLOPE MEASUREMENT)
BROMUS CARINATUS (CALIFORNIA BROME)	85	21.7
ELYMUS GLAUCUS BUCKLEY (BLUE WILDRYE)	85	19.6
HORDEUM BRACHYANTHERUM (BARLEY)	80	30.1
KOELERIA MACRANTHA (JUNEGRASS)	60	1.3
MELICA IMPERFECTA (MELIC)	70	1.8
NASSELLA PULCHRA (PURPLE NEEDLEGRASS)	75	23.3

EROSION CONTROL

SEQUENCE	ITEM	MATERIAL		APPLICATION RATE	REMARKS
		DESCRIPTION	TYPE		
STEP 1	COMPOST	COMPOST	MEDIUM	130 CY/ACRE	
STEP 2	INCORPORATE MATERIALS	COMPOST	-	-	4" DEPTH
STEP 3	HYDROSEED	SEED	SEED MIX	97.8 LB/ACRE	
		FIBER	WOOD	500 LB/ACRE	
STEP 4	HYDROMULCH	FIBER	WOOD	1,500 LB/ACRE	
		TACKIFIER	PSYLLIUM	125 LB/ACRE	

EROSION CONTROL QUANTITIES

SHEET	COMPOST	INCORPORATE MATERIALS	HYDROSEED	HYDROMULCH
	SQFT	SQFT	SQFT	SQFT
PP-1	5,609	5,609	5,609	5,609
TOTAL	5,609	5,609	5,609	5,609

EROSION CONTROL LEGEND AND QUANTITIES
ECL-1

REVISED BY | DATE REVISED
KEVIN GALLO | DAVID MARTIN
CALCULATED-DESIGNED BY | CHECKED BY
SENIOR LANDSCAPE ARCHITECT
BRAD COLE

STATE OF CALIFORNIA - DEPARTMENT OF TRANSPORTATION
Caltrans® LANDSCAPE ARCHITECTURE

LAST REVISION 10-26-15
DATE PLOTTED => 05-JUL-2016
TIME PLOTTED => 14:10

Dist	COUNTY	ROUTE	POST MILES TOTAL PROJECT	SHEET No.	TOTAL SHEETS
06	Ker	99	49.6	22	106

REGISTERED ELECT ENGINEER 11-16-15 DATE

11-16-15
PLANS APPROVAL DATE

REGISTERED PROFESSIONAL ENGINEER HASHIM KHALID No. 18054 Exp. 6/30/17 ELECT STATE OF CALIFORNIA

THE STATE OF CALIFORNIA OR ITS OFFICERS OR AGENTS SHALL NOT BE RESPONSIBLE FOR THE ACCURACY OR COMPLETENESS OF SCANNED COPIES OF THIS PLAN SHEET.

LEGEND: (FOR THIS SHEET ONLY)

1 120/240 V, 1Ø, 3-WIRE, TYPE III-AF SERVICE EQUIPMENT ENCLOSURE WITH THE FOLLOWING CIRCUIT BREAKERS:

CITY SERVICE (KERN Ave)

AMPERES	VOLTS	POLES	NAMEPLATE	METER	PHOTOELECTRIC CONTROL TYPE
100	240	2	MAIN BREAKER	YES	——
30	240	2	Ped Ltg N	YES	V
15	120	1	LIGHTING CONTROL (Ped Ltg N)	YES	——
30	240	2	Ped LTG S	YES	V
15	120	1	LIGHTING CONTROL (Ped Ltg S)	YES	——
15	120	1	SPARE	YES	——
——	——	3	SPACE	——	——

2 PB PER PG&E REQUIREMENTS.

3 1½"C, PT.

4 1½"C, 3#6 (Ped Ltg N).

5 1½"C, 3#6 (Ped Ltg S).

6 Exist MODEL 334L CONTROLLER CABINET FOR TMS.

7 Exist 120/240 V, 1Ø, 3-WIRE, TYPE III-AF SERVICE EQUIPMENT ENCLOSURE.

NOTES:

1. INSTALL LIGHTING STANDARDS AND 1½"C (TYPE 1) ON BOTH SIDES OF Ped OC STRUCTURE. FOR MORE DETAILS REFER TO WIRING DIAGRAM BELOW.
2. SEE STRUCTURE PLANS FOR DETAILS OF ELECTRICAL EQUIPMENT ON Ped OC.
3. ALL PULL BOXES MUST BE No. 9 UNLESS OTHERWISE NOTED.
4. FOR ACCURATE RIGHT OF WAY DATA, CONTACT RIGHT OF WAY ENGINEERING AT THE DISTRICT OFFICE.
5. SEE STRUCTURE PLANS FOR COMMUNICATION CONDUIT (BRIDGE) ON Ped OC.

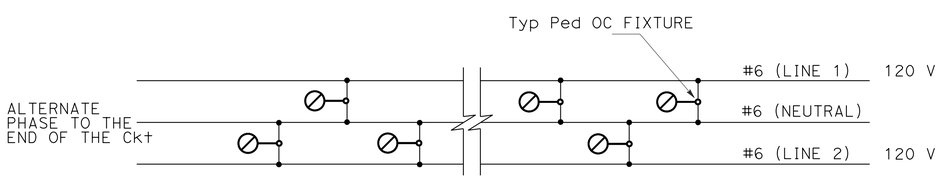

WIRING DIAGRAM
NO SCALE

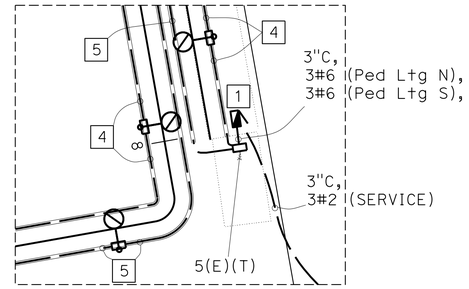

DETAIL A
NO SCALE

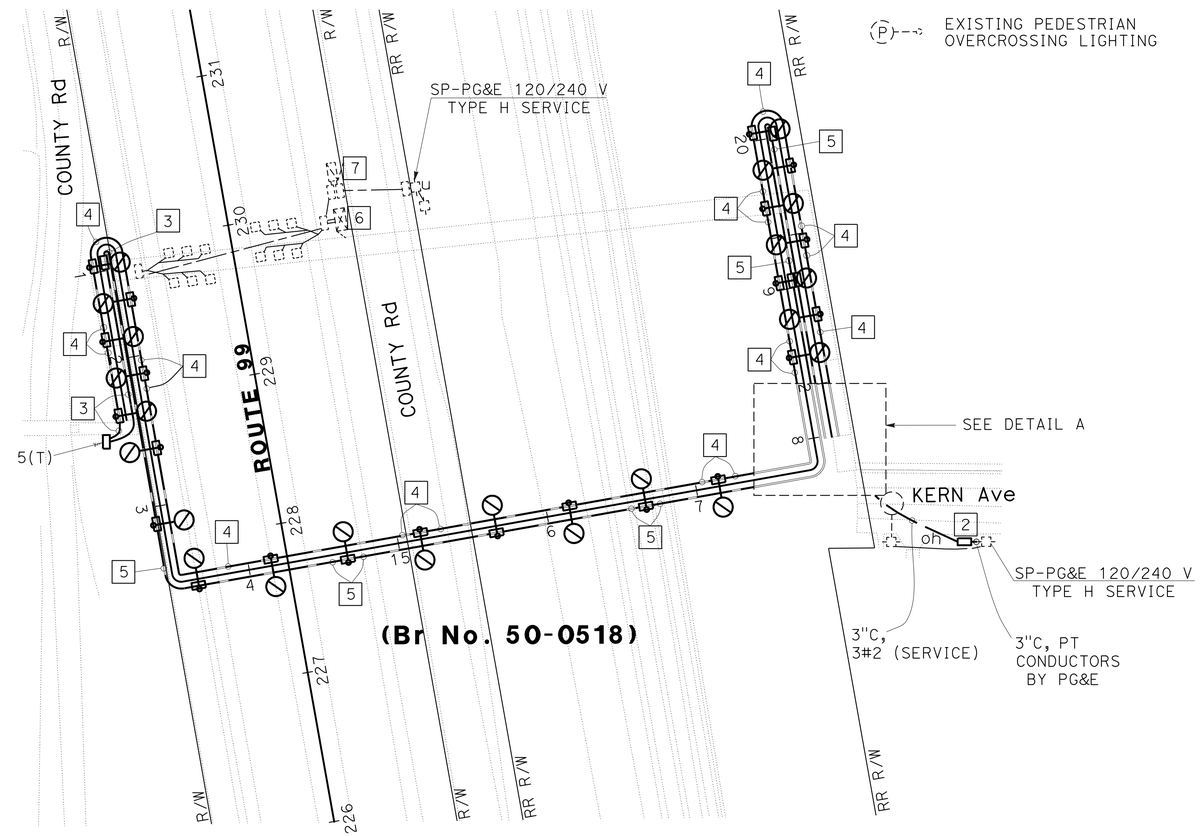

ABBREVIATIONS:

PG&E	PACIFIC GAS AND ELECTRIC COMPANY
Al	ALUMINUM
Cu	COPPER

SYMBOLS:

LIGHTING STANDARD ON STRUCTURE WITH 30 W LED Ped LUMINAIRE, REFER TO ISOFOOTCANDLE CURVE ON SHEET E-2.

EXISTING PEDESTRIAN OVERCROSSING LIGHTING

APPROVED FOR ELECTRICAL WORK ONLY

SCALE: 1"=50'

LIGHTING SYSTEM
E-1

REVISED BY	HK
DATE REVISED	04-20-15
CALCULATED-DESIGNED BY	HASHIM MOHAMED KHALID
CHECKED BY	PAUL MATOS
FUNCTIONAL SUPERVISOR	ALI BAKHDOUD

STATE OF CALIFORNIA - DEPARTMENT OF TRANSPORTATION
Caltrans® ELECTRICAL DESIGN

LAST REVISION 05-30-16 | DATE PLOTTED => 07-JUL-2016 TIME PLOTTED => 09:53

Dist	COUNTY	ROUTE	POST MILES TOTAL PROJECT	SHEET No.	TOTAL SHEETS
06	Ker	99	49.6	23	106

REGISTERED ELECT ENGINEER 11-16-15 DATE

11-16-15
PLANS APPROVAL DATE

REGISTERED PROFESSIONAL ENGINEER HASHIM KHALID No. 18054 Exp. 6/30/17 ELECT STATE OF CALIFORNIA

THE STATE OF CALIFORNIA OR ITS OFFICERS OR AGENTS SHALL NOT BE RESPONSIBLE FOR THE ACCURACY OR COMPLETENESS OF SCANNED COPIES OF THIS PLAN SHEET.

LEGEND:

1 COORDINATE WITH PG&E FOR DISCONNECT AND REMOVAL OF Existing OVERHEAD CONDUCTORS.

2 Exist BILLBOARD. DISCONNECT OVERHEAD POWER LINES PRIOR TO Ped BRIDGE DEMOLITION. SC AFTER DEMOLITION IS COMPLETE.

NOTE:

FOR ACCURATE RIGHT OF WAY DATA, CONTACT RIGHT OF WAY ENGINEERING AT THE DISTRICT OFFICE.

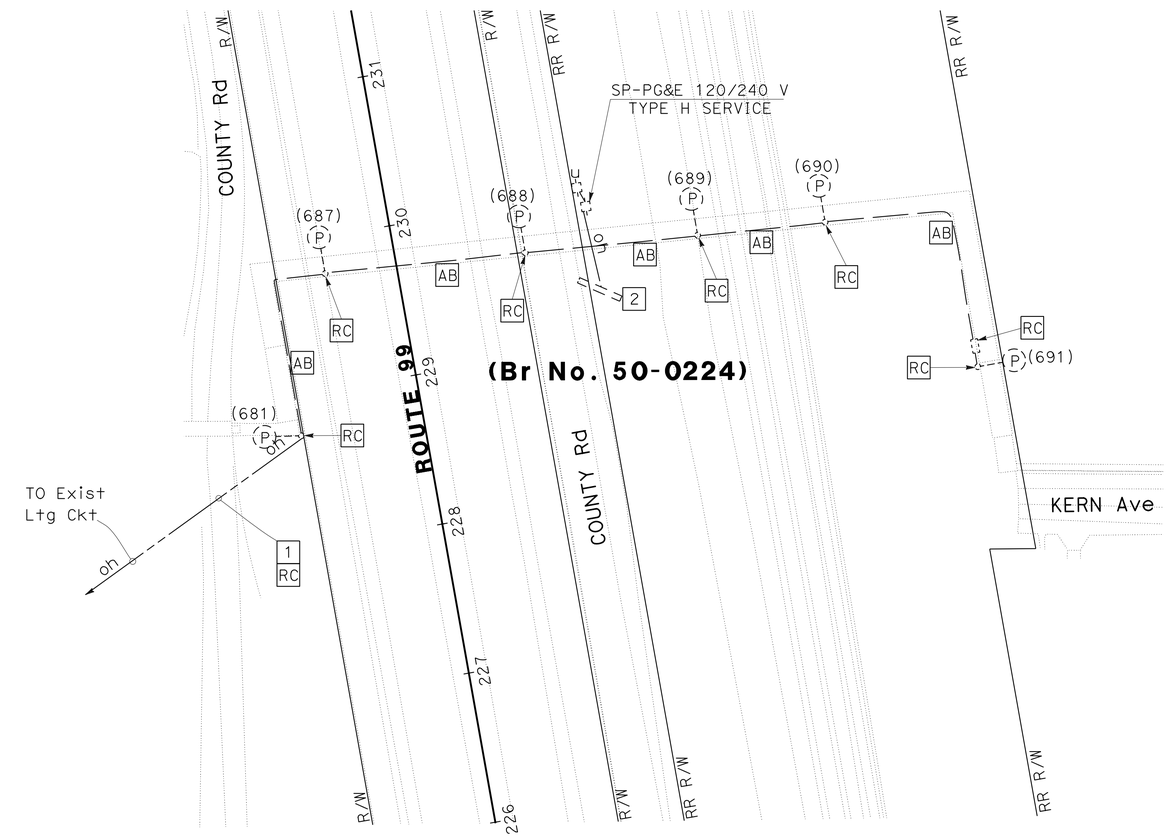

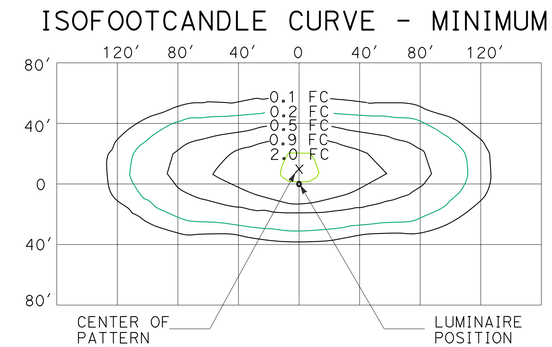

LED Ped LUMINAIRE
30-W at 16′ Mounting Height

APPROVED FOR ELECTRICAL WORK ONLY

MODIFYING EXISTING ELECTRICAL SYSTEM

SCALE: 1"=50′

E-2

REVISED BY	DATE REVISED
HK	04-20-15

HASHIM MOHAMED KHALID — PAUL MATOS
CALCULATED-DESIGNED BY — CHECKED BY
FUNCTIONAL SUPERVISOR — ALI BAKHDOUD

STATE OF CALIFORNIA - DEPARTMENT OF TRANSPORTATION
Caltrans® ELECTRICAL DESIGN

LAST REVISION 05-30-16 | DATE PLOTTED => 05-JUL-2016 | TIME PLOTTED => 14:10

Dist	COUNTY	ROUTE	POST MILES TOTAL PROJECT	SHEET No.	TOTAL SHEETS
06	Ker	99	49.6	24	106

REGISTERED ELECT ENGINEER 11-16-15 DATE

11-16-15
PLANS APPROVAL DATE

REGISTERED PROFESSIONAL ENGINEER HASHIM KHALID No. 18054 Exp. 6/30/17 ELECT STATE OF CALIFORNIA

THE STATE OF CALIFORNIA OR ITS OFFICERS OR AGENTS SHALL NOT BE RESPONSIBLE FOR THE ACCURACY OR COMPLETENESS OF SCANNED COPIES OF THIS PLAN SHEET.

NOTE:

THE QUANTITIES SHOWN IN THE TABLES ARE NOT SEPARATE PAY ITEMS, FOR INFORMATION ONLY.

LIGHTING SYSTEM

SHEET No.	No. 2 CONDUCTOR (Al)	No. 6 CONDUCTOR (Al)	No. 8 CONDUCTOR (Cu)(G)	3"C, TYPE 3	3"C, TYPE 1	1½"C, TYPE 1	No. 5(E)(T) PB	No. 5(T) PB	No. 9 PB	PB PER PG&E REQUIREMENT	Ped OC LED Ltg STANDARD	TYPE III-AF SERVICE EQUIPMENT ENCLOSURE	TYPE III-AF SERVICE EQUIPMENT ENCLOSURE FOUNDATION
	LF						EA						
E-1	450	6,800	2,300	150	20	2,550	1	1	29	1	25	1	1

ELECTRICAL QUANTITIES
E-3

STATE OF CALIFORNIA - DEPARTMENT OF TRANSPORTATION
Caltrans ELECTRICAL DESIGN

FUNCTIONAL SUPERVISOR: ALI BAKHDOUD
CALCULATED-DESIGNED BY: HASHIM MOHAMED KHALID
CHECKED BY: PAUL MATOS
REVISED BY: HK
DATE REVISED: 04-20-15

LAST REVISION 05-30-16
DATE PLOTTED => 05-JUL-2016
TIME PLOTTED => 14:10

DIST	COUNTY	ROUTE	POST MILES TOTAL PROJECT	SHEET No	TOTAL SHEETS
06	Ker	99	49.6	25	106

REGISTERED CIVIL ENGINEER 8/3/15 DATE

11-16-15
PLANS APPROVAL DATE

REGISTERED PROFESSIONAL ENGINEER JUAN J. JAUREGUI JR. No. C63939 Exp. 9/30/16 CIVIL STATE OF CALIFORNIA

The State of California or its officers or agents shall not be responsible for the accuracy or completeness of electronic copies of this plan sheet.

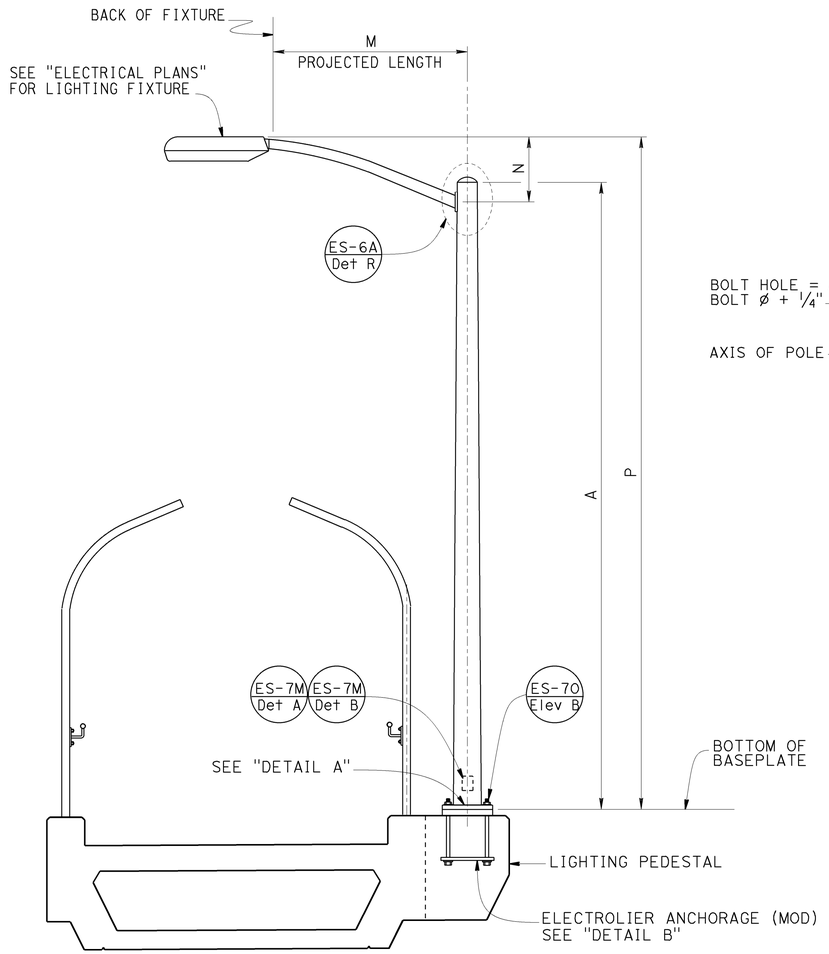

TYPE 15 (MOD) BRIDGE MOUNTED ELEVATION

NOTE: Bridge and Lighting Pedestal configuration may vary.

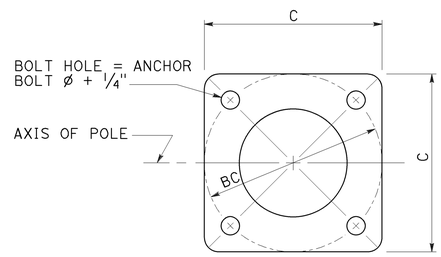

BASE PLATE DETAIL A

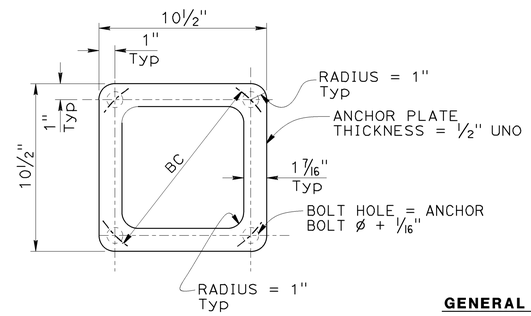

ANCHOR PLATE DETAIL C

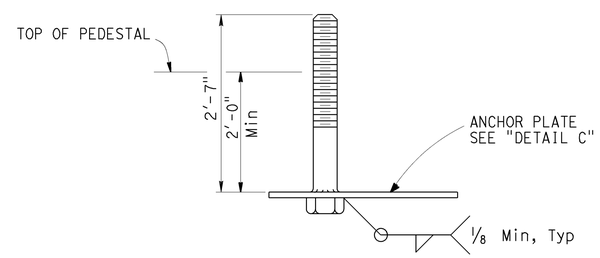

ELECTROLIER ANCHORAGE (MODIFIED) DETAIL B

GENERAL NOTES:

SPECIFICATIONS

Design: AASHTO Standard Specifications for Structural Supports for Highway Signs, Luminaires and Traffic Signals, Fifth Edition.

LOADING
Wind Loading: 100 MPH

UNIT STRESSES
Structural steel: fy = 55,000 psi (Tapered steel tube and anchor bolts)
fy = 50,000 psi unless otherwise noted

NOTES:

1. For pole locations, see "ELECTRICAL" plans.
2. All steel shall be galvanized after fabrication.
3. During pole erection the pole shall be raked as necessary with the use of leveling nuts to provide a plumb pole axis.
4. For Anchor Details not shown see "DETAIL A" on "2010 STANDARD PLANS" ES-7M.
5. This plan accurate only for lighting pole and anchorage. For bridge and lighting pedestal details see"BRIDGE PLANS".
6. For details not shown, see "2010 STANDARD PLANS".

POLE TYPE	POLE DATA				BASE PLATE DATA				LUMINAIRE MAST ARM DATA				
	A HEIGHT	Min OD BASE	Min OD TOP	THICKNESS	C	BC = BOLT CIRCLE	THICKNESS	ANCHOR BOLT SIZE	M PROJECTED LENGTH	N RISE	Min OD AT POLE	THICKNESS	P
15 (MODIFIED)	15'-0"	8"	5 13/16"	0.1196"	1'-0"	1'-0"	2"	1" ø x 2'-7"	4'-9"	1'-6"±	3 1/4"	0.1196"	16'-0"±

NOTE:
THE CONTRACTOR MUST VERIFY ALL CONTROLLING FIELD DIMENSIONS BEFORE ORDERING OR FABRICATING ANY MATERIAL.

STANDARD PLAN SHEET NO.
DETAIL NO.

NO SCALE

BRANCH CHIEF JEFF WOODY

	BY	CHECKED
DESIGN	J. JAUREGUI	E. LOPEZ
DETAILS	T. NGUYEN	J. JAUREGUI
QUANTITIES		

STATE OF CALIFORNIA
DEPARTMENT OF TRANSPORTATION

DIVISION OF ENGINEERING SERVICES
DESIGN AND TECHNICAL SERVICES
SPECIAL DESIGNS BRANCH A

BRIDGE NO. 50-0518
POST MILE 49.6

KERN AVENUE PEDESTRIAN OC
TYPE 15 MODIFIED - DETAILS

SES-1

(ENGLISH) SPECIAL DESIGNS BRANCH BORDER SHEET (REV. 7-1-09)

ORIGINAL SCALE IN INCHES FOR REDUCED PLANS 0 1 2 3

UNIT: 3619
PROJECT NUMBER & PHASE: 0614000266-1
CONTRACT NO.: 06-0H6424

DISREGARD PRINTS BEARING EARLIER REVISION DATES
REVISION DATES 7/31/15 10/19/15 11/20/15
SHEET OF

FILE => 2015\06-0h6424_ses-1.dgn

USERNAME => s129055 DATE PLOTTED => 20-NOV-2015 TIME PLOTTED => 09:43

M

Maint	MAINTENANCE
Max	MAXIMUM
MB	METAL BEAM
MBB	METAL BEAM BARRIER
MBGR	METAL BEAM GUARD RAILING
Med	MEDIAN
MGS	MIDWEST GUARDRAIL SYSTEM
MH	MANHOLE
Min	MINIMUM
Misc	MISCELLANEOUS
Misc I & S	MISCELLANEOUS IRON AND STEEL
Mkr	MARKER
Mod	MODIFIED, MODIFY
Mon	MONUMENT
MP	METAL PLATE
MPGR	METAL PLATE GUARD RAILING
MR	MOVEMENT RATING
MSE	MECHANICALLY STABILIZED EMBANKMENT
Mt	MOUNTAIN, MOUNT
Mtl	MATERIAL
MVP	MAINTENANCE VEHICLE PULLOUT

N

N	NORTH
NB	NORTHBOUND
No.	NUMBER (MUST HAVE PERIOD)
Nos.	NUMBERS (MUST HAVE PERIOD)
NPS	NOMINAL PIPE SIZE
NS	NEAR SIDE
NSP	NEW STANDARD PLAN
NTS	NOT TO SCALE

O

Oblr	OBLITERATE
OC	OVERCROSSING
OD	OUTSIDE DIAMETER
OF	OUTSIDE FACE
OG	ORIGINAL GROUND
OGAC	OPEN GRADED ASPHALT CONCRETE
OGFC	OPEN GRADED FRICTION COURSE
OH	OVERHEAD
OHWM	ORDINARY HIGH WATER MARK
O-O	OUT TO OUT
Opp	OPPOSITE
OSD	OVERSIDE DRAIN

P

P	PAGE
PAP	PERFORATED ALUMINUM PIPE
PB	PULL BOX
PC	POINT OF CURVATURE, PRECAST
PCC	POINT OF COMPOUND CURVE, PORTLAND CEMENT CONCRETE
PCMS	PORTABLE CHANGEABLE MESSAGE SIGN
PCP	PERFORATED CONCRETE PIPE, PRESTRESSED CONCRETE PIPE
PCVC	POINT OF COMPOUND VERTICAL CURVE
PEC	PERMIT TO ENTER AND CONSTRUCT
Ped	PEDESTRIAN
Ped OC	PEDESTRIAN OVERCROSSING
Ped UC	PEDESTRIAN UNDERCROSSING
Perm Mtl	PERMEABLE MATERIAL

P continued

PG	PROFILE GRADE
PI	POINT OF INTERSECTION
PJP	PARTIAL JOINT PENETRATION
Pkwy	PARKWAY
₱,PL	PLATE
P/L	PROPERTY LINE
PM	POST MILE, TIME FROM NOON TO MIDNIGHT
PN	PAVING NOTCH
POC	POINT OF HORIZONTAL CURVE
POT	POINT OF TANGENT
POVC	POINT OF VERTICAL CURVE
PP	PIPE PILE, PLASTIC PIPE, POWER POLE
PPL	PREFORMED PERMEABLE LINER
PPP	PERFORATED PLASTIC PIPE
PRC	POINT OF REVERSE CURVE
PRF	PAVEMENT REINFORCING FABRIC
PRVC	POINT OF REVERSE VERTICAL CURVE
PS&E	PLANS, SPECIFICATIONS AND ESTIMATES
PS, P/S	PRESTRESSED
PSP	PERFORATED STEEL PIPE
PT	POINT OF TANGENCY
PVC	POLYVINYL CHLORIDE
Pvmt	PAVEMENT

Q

Qty	QUANTITY

R

R	RADIUS
R & D	REMOVE AND DISPOSE
R & S	REMOVE AND SALVAGE
R/C	RATE OF CHANGE
RCA	REINFORCED CONCRETE ARCH
RCB	REINFORCED CONCRETE BOX
RCP	REINFORCED CONCRETE PIPE
RCPA	REINFORCED CONCRETE PIPE ARCH
Rd	ROAD
Reinf	REINFORCED, REINFORCEMENT, REINFORCING
Rel	RELOCATE
Repl	REPLACEMENT
Ret	RETAINING
Rev	REVISED, REVISION
Rdwy	ROADWAY
RHMA	RUBBERIZED HOT MIX ASPHALT
Riv	RIVER
RM	ROAD-MIXED
RP	RADIUS POINT, REFERENCE POINT
RR	RAILROAD
RSP	ROCK SLOPE PROTECTION, REVISED STANDARD PLAN
Rt	RIGHT
Rte	ROUTE
RW	REDWOOD, RETAINING WALL
R/W	RIGHT OF WAY
Rwy	RAILWAY

S

S	SOUTH, SUPPLEMENT
SAE	STRUCTURE APPROACH EMBANKMENT
Salv	SALVAGE
SAPP	STRUCTURAL ALUMINUM PLATE PIPE
SB	SOUTHBOUND
SC	SAND CUSHION
SCSP	SLOTTED CORRUGATED STEEL PIPE
SD	STORM DRAIN
Sec	SECOND, SECTION
Sep	SEPARATION
SG	SUBGRADE
Shld	SHOULDER
Sht	SHEET
Sim	SIMILAR
₤	STATION LINE
SM	SELECTED MATERIAL
Spec	SPECIAL, SPECIFICATIONS
SPP	SLOTTED PLASTIC PIPE
SS	SLOPE STAKE
SSBM	STRAP AND SADDLE BRACKET METHOD
SSD	STRUCTURAL SECTION DRAIN
SSPA	STRUCTURAL STEEL PLATE ARCH
SSPP	STRUCTURAL STEEL PLATE PIPE
SSPPA	STRUCTURAL STEEL PLATE PIPE ARCH
SSRP	STEEL SPIRAL RIB PIPE
St	STREET
Sta	STATION
STBB	SINGLE THRIE BEAM BARRIER
Std	STANDARD
Str	STRUCTURE
Surf	SURFACING
SW	SIDEWALK, SOUND WALL
Swr	SEWER
Sym	SYMMETRICAL
S4S	SURFACE 4 SIDES

T

T	SEMI-TANGENT
Tan	TANGENT
TBB	THRIE BEAM BARRIER
Tbr	TIMBER
TC	TOP OF CURB
TCB	TRAFFIC CONTROL BOX
TCE	TEMPORARY CONSTRUCTION EASEMENT
Tel	TELEPHONE
Temp	TEMPORARY
TG	TOP OF GRADE
Tot	TOTAL
TP	TELEPHONE POLE
TPB	TREATED PERMEABLE BASE
TPM	TREATED PERMEABLE MATERIAL
Trans	TRANSITION

T continued

TS	TRANSVERSE, TRAFFIC SIGNAL, TUBULAR STEEL
Typ	TYPICAL

U

UC	UNDERCROSSING
UD	UNDERDRAIN
UG	UNDERGROUND
UON	UNLESS OTHERWISE NOTED
UP	UNDERPASS

V

V	VALVE, DESIGN SPEED
Var	VARIABLE, VARIES
VC	VERTICAL CURVE
VCP	VITRIFIED CLAY PIPE
Vert	VERTICAL
Via	VIADUCT
Vol	VOLUME

W

W	WEST, WIDTH
WB	WESTBOUND
WH	WEEP HOLE
WM	WIRE MESH
WS	WATER SURFACE
WSP	WELDED STEEL PIPE
Wt	WEIGHT
WV	WATER VALVE
WW	WINGWALL
WWLOL	WINGWALL LAYOUT LINE

X

X Sec	CROSS SECTION
Xing	CROSSING

Y

Yr	YEAR
Yrs	YEARS

Dist	COUNTY	ROUTE	POST MILES TOTAL PROJECT	SHEET No.	TOTAL SHEETS
06	Ker	99	49.6	26	106

Grace M. Tsushima
REGISTERED CIVIL ENGINEER

July 19, 2013
PLANS APPROVAL DATE

REGISTERED PROFESSIONAL ENGINEER
Grace M. Tsushima
No. C49814
Exp. 9-30-14
CIVIL
STATE OF CALIFORNIA

THE STATE OF CALIFORNIA OR ITS OFFICERS OR AGENTS SHALL NOT BE RESPONSIBLE FOR THE ACCURACY OR COMPLETENESS OF SCANNED COPIES OF THIS PLAN SHEET.

TO ACCOMPANY PLANS DATED 11-16-15

UNIT OF MEASUREMENT SYMBOLS:

Some of the symbols used in the project plan quantity tables and in the Bid Item List are:

TABLE A

SYMBOL USED	DEFINITIONS
ACRE	ACRE
CF	CUBIC FOOT
CY	CUBIC YARD
EA	EACH
GAL	GALLON
LB	POUND
LF	LINEAR FOOT
SQFT	SQUARE FOOT
SQYD	SQUARE YARD
STA	100 FEET
TAB	TABLET
TON	2,000 POUNDS

Some of the symbols used in the plans other than in the project plan quantity tables are:

TABLE B

SYMBOL USED	DEFINITIONS
ksi	KIPS PER SQUARE INCH
ksf	KIPS PER SQUARE FOOT
psi	POUNDS PER SQUARE INCH
psf	POUNDS PER SQUARE FOOT
lb/ft^3, pcf	POUNDS PER CUBIC FOOT
tsf	TONS PER SQUARE FOOT
mph, MPH *	MILES PER HOUR
ø	NOMINAL DIAMETER
oz	OUNCE
lb	POUND
kip	1,000 POUNDS
cal	CALORIE
ft	FOOT OR FEET
gal	GALLON

* For use on a sign panel only

STATE OF CALIFORNIA
DEPARTMENT OF TRANSPORTATION

ABBREVIATIONS (SHEET 2 OF 2)

NO SCALE

RSP A10B DATED JULY 19, 2013 SUPERSEDES STANDARD PLAN A10B DATED MAY 20, 2011 - PAGE 2 OF THE STANDARD PLANS BOOK DATED 2010.

REVISED STANDARD PLAN RSP A10B

2010 REVISED STANDARD PLAN RSP A10B

6-7-13

Dist	COUNTY	ROUTE	POST MILES TOTAL PROJECT	SHEET No.	TOTAL SHEETS
06	Ker	99	49.6	27	106

CERTIFIED ENGINEERING GEOLOGIST

October 30, 2015
PLANS APPROVAL DATE

REGISTERED GEOLOGIST
CHRIS A. RISDEN
CERTIFIED ENGINEERING GEOLOGIST
No. 2541
Exp. 9-30-17
STATE OF CALIFORNIA

THE STATE OF CALIFORNIA OR ITS OFFICERS OR AGENTS SHALL NOT BE RESPONSIBLE FOR THE ACCURACY OR COMPLETENESS OF SCANNED COPIES OF THIS PLAN SHEET.

TO ACCOMPANY PLANS DATED 11-16-15

REFERENCE: CALTRANS SOIL & ROCK LOGGING, CLASSIFICATION, AND PRESENTATION MANUAL (2010)

ABBREVIATION:

GWS = Ground Water Surface

CEMENTATION

DESCRIPTION	CRITERIA
WEAK	CRUMBLES OR BREAKS WITH HANDLING OR LITTLE FINGER PRESSURE.
MODERATE	CRUMBLES OR BREAKS WITH CONSIDERABLE FINGER PRESSURE.
STRONG	WILL NOT CRUMBLE OR BREAK WITH FINGER PRESSURE.

BOREHOLE IDENTIFICATION

SYMBOL	HOLE TYPE	DESCRIPTION
Size	A	AUGER BORING (HOLLOW OR SOLID STEM BUCKET)
Size	R	ROTARY DRILLED BORING (CONVENTIONAL)
	RW	ROTARY DRILLED WITH SELF-CASING WIRE-LINE
	RC	ROTARY CORE WITH CONTINUOUSLY-SAMPLED, SELF-CASING WIRE-LINE
	P	ROTARY PERCUSSION BORING (AIR)
Size	R	ROTARY DRILLED DIAMOND CORE
	RC	ROTARY DRILLED DIAMOND CORE, CONTINUOUSLY SAMPLED
Size	HD	HAND DRIVEN (1-INCH SOIL TUBE)
	HA	HAND AUGER
●	D	DYNAMIC CONE PENETRATION BORING
▲	CPT	CONE PENETRATION TEST (ASTM D 5778)
[ ]	O	OTHER (NOTE ON LOTB)

Note: Size in inches.

CONSISTENCY OF COHESIVE SOILS

DESCRIPTION	SHEAR STRENGTH (tsf)	POCKET PENETROMETER MEASUREMENT, PP, (tsf)	TORVANE MEASUREMENT, TV, (tsf)	VANE SHEAR MEASUREMENT, VS, (tsf)
VERY SOFT	LESS THAN 0.12	LESS THAN 0.25	LESS THAN 0.12	LESS THAN 0.12
SOFT	0.12 - 0.25	0.25 - 0.5	0.12 - 0.25	0.12 - 0.25
MEDIUM STIFF	0.25 - 0.5	0.5 - 1	0.25 - 0.5	0.25 - 0.5
STIFF	0.5 - 1	1 - 2	0.5 - 1	0.5 - 1
VERY STIFF	1 - 2	2 - 4	1 - 2	1 - 2
HARD	GREATER THAN 2	GREATER THAN 4	GREATER THAN 2	GREATER THAN 2

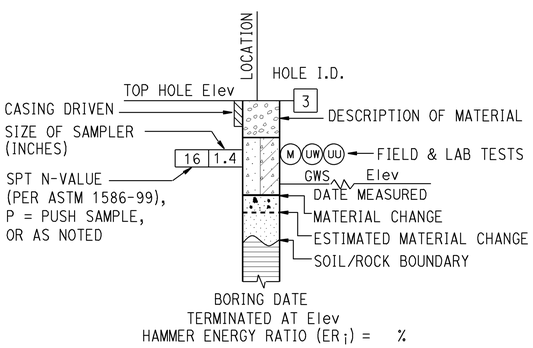

ROTARY BORING

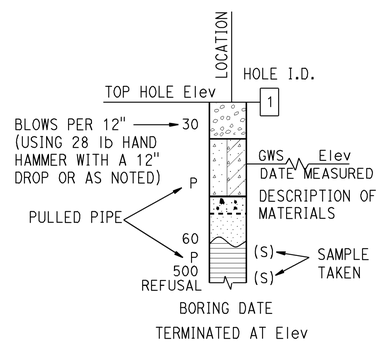

HAND BORING

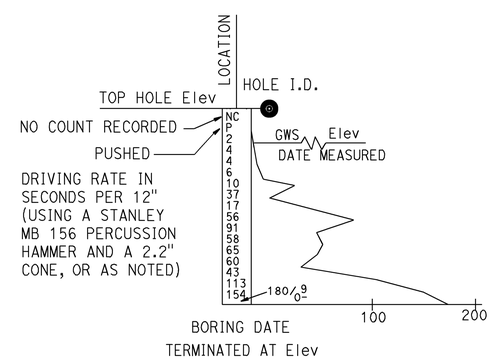

DYNAMIC CONE PENETRATION BORING

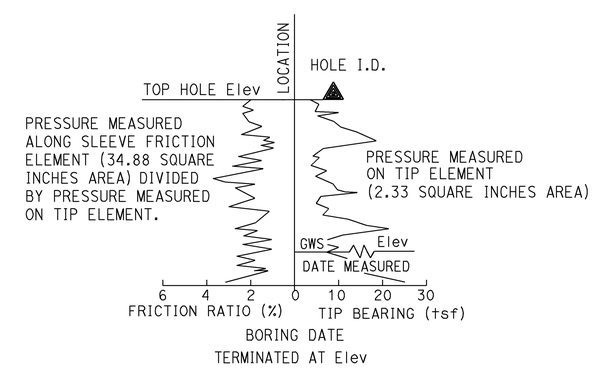

CONE PENETRATION TEST (CPT) BORING

STATE OF CALIFORNIA
DEPARTMENT OF TRANSPORTATION

LEGEND - SOIL (SHEET 1 OF 2)

NO SCALE

RSP A10F DATED OCTOBER 30, 2015 SUPERSEDES STANDARD PLAN A10F DATED MAY 20, 2011 - PAGE 6 OF THE STANDARD PLANS BOOK DATED 2010.

REVISED STANDARD PLAN RSP A10F

2010 REVISED STANDARD PLAN RSP A10F

8-18-15

REFERENCE: CALTRANS SOIL & ROCK LOGGING, CLASSIFICATION, AND PRESENTATION MANUAL (2010)

Dist	COUNTY	ROUTE	POST MILES TOTAL PROJECT	SHEET No.	TOTAL SHEETS
06	Ker	99	49.6	28	106

CERTIFIED ENGINEERING GEOLOGIST

October 30, 2015
PLANS APPROVAL DATE

REGISTERED GEOLOGIST
CHRIS A. RISDEN
CERTIFIED ENGINEERING GEOLOGIST
No. 2541
Exp. 9-30-17
STATE OF CALIFORNIA

THE STATE OF CALIFORNIA OR ITS OFFICERS OR AGENTS SHALL NOT BE RESPONSIBLE FOR THE ACCURACY OR COMPLETENESS OF SCANNED COPIES OF THIS PLAN SHEET.

TO ACCOMPANY PLANS DATED 11-16-15

GROUP SYMBOLS AND NAMES

GRAPHIC/SYMBOL	GROUP NAMES	GRAPHIC/SYMBOL	GROUP NAMES
GW	WELL-GRADED GRAVEL WELL-GRADED GRAVEL WITH SAND	CL	LEAN CLAY LEAN CLAY WITH SAND LEAN CLAY WITH GRAVEL SANDY LEAN CLAY SANDY LEAN CLAY WITH GRAVEL GRAVELLY LEAN CLAY GRAVELLY LEAN CLAY WITH SAND
GP	POORLY-GRADED GRAVEL POORLY-GRADED GRAVEL WITH SAND		
GW-GM	WELL-GRADED GRAVEL WITH SILT WELL-GRADED GRAVEL WITH SILT AND SAND	CL-ML	SILTY CLAY SILTY CLAY WITH SAND SILTY CLAY WITH GRAVEL SANDY SILTY CLAY SANDY SILTY CLAY WITH GRAVEL GRAVELLY SILTY CLAY GRAVELLY SILTY CLAY WITH SAND
GW-GC	WELL-GRADED GRAVEL WITH CLAY (OR SILTY CLAY) WELL-GRADED GRAVEL WITH CLAY AND SAND (OR SILTY CLAY AND SAND)		
GP-GM	POORLY-GRADED GRAVEL WITH SILT POORLY-GRADED GRAVEL WITH SILT AND SAND	ML	SILT SILT WITH SAND SILT WITH GRAVEL SANDY SILT SANDY SILT WITH GRAVEL GRAVELLY SILT GRAVELLY SILT WITH SAND
GP-GC	POORLY-GRADED GRAVEL WITH CLAY (OR SILTY CLAY) POORLY-GRADED GRAVEL WITH CLAY AND SAND (OR SILTY CLAY AND SAND)		
GM	SILTY GRAVEL SILTY GRAVEL WITH SAND	OL	ORGANIC LEAN CLAY ORGANIC LEAN CLAY WITH SAND ORGANIC LEAN CLAY WITH GRAVEL SANDY ORGANIC LEAN CLAY SANDY ORGANIC LEAN CLAY WITH GRAVEL GRAVELLY ORGANIC LEAN CLAY GRAVELLY ORGANIC LEAN CLAY WITH SAND
GC	CLAYEY GRAVEL CLAYEY GRAVEL WITH SAND		
GC-GM	SILTY, CLAYEY GRAVEL SILTY, CLAYEY GRAVEL WITH SAND	OL	ORGANIC SILT ORGANIC SILT WITH SAND ORGANIC SILT WITH GRAVEL SANDY ORGANIC SILT SANDY ORGANIC SILT WITH GRAVEL GRAVELLY ORGANIC SILT GRAVELLY ORGANIC SILT WITH SAND
SW	WELL-GRADED SAND WELL-GRADED SAND WITH GRAVEL		
SP	POORLY-GRADED SAND POORLY-GRADED SAND WITH GRAVEL	CH	FAT CLAY FAT CLAY WITH SAND FAT CLAY WITH GRAVEL SANDY FAT CLAY SANDY FAT CLAY WITH GRAVEL GRAVELLY FAT CLAY GRAVELLY FAT CLAY WITH SAND
SW-SM	WELL-GRADED SAND WITH SILT WELL-GRADED SAND WITH SILT AND GRAVEL		
SW-SC	WELL-GRADED SAND WITH CLAY (OR SILTY CLAY) WELL-GRADED SAND WITH CLAY AND GRAVEL (OR SILTY CLAY AND GRAVEL)	MH	ELASTIC SILT ELASTIC SILT WITH SAND ELASTIC SILT WITH GRAVEL SANDY ELASTIC SILT SANDY ELASTIC SILT WITH GRAVEL GRAVELLY ELASTIC SILT GRAVELLY ELASTIC SILT WITH SAND
SP-SM	POORLY-GRADED SAND WITH SILT POORLY-GRADED SAND WITH SILT AND GRAVEL		
SP-SC	POORLY-GRADED SAND WITH CLAY (OR SILTY CLAY) POORLY-GRADED SAND WITH CLAY AND GRAVEL (OR SILTY CLAY AND GRAVEL)	OH	ORGANIC FAT CLAY ORGANIC FAT CLAY WITH SAND ORGANIC FAT CLAY WITH GRAVEL SANDY ORGANIC FAT CLAY SANDY ORGANIC FAT CLAY WITH GRAVEL GRAVELLY ORGANIC FAT CLAY GRAVELLY ORGANIC FAT CLAY WITH SAND
SM	SILTY SAND SILTY SAND WITH GRAVEL		
SC	CLAYEY SAND CLAYEY SAND WITH GRAVEL	OH	ORGANIC ELASTIC SILT ORGANIC ELASTIC SILT WITH SAND ORGANIC ELASTIC SILT WITH GRAVEL SANDY ORGANIC ELASTIC SILT SANDY ORGANIC ELASTIC SILT WITH GRAVEL GRAVELLY ORGANIC ELASTIC SILT GRAVELLY ORGANIC ELASTIC SILT WITH SAND
SC-SM	SILTY, CLAYEY SAND SILTY, CLAYEY SAND WITH GRAVEL		
PT	PEAT	OL/OH	ORGANIC SOIL ORGANIC SOIL WITH SAND ORGANIC SOIL WITH GRAVEL SANDY ORGANIC SOIL SANDY ORGANIC SOIL WITH GRAVEL GRAVELLY ORGANIC SOIL GRAVELLY ORGANIC SOIL WITH SAND
	COBBLES COBBLES AND BOULDERS BOULDERS		

FIELD AND LABORATORY TESTING

- (C) CONSOLIDATION (ASTM D2435)
- (CL) COLLAPSE POTENTIAL (ASTM D4546)
- (CP) COMPACTION CURVE (CTM 216)
- (CR) CORROSIVITY TESTING (CTM 643, CTM 422, CTM 417)
- (CU) CONSOLIDATED UNDRAINED TRIAXIAL (ASTM D4767)
- (DS) DIRECT SHEAR (ASTM D3080)
- (EI) EXPANSION INDEX (ASTM D4829)
- (M) MOISTURE CONTENT (ASTM D2216)
- (OC) ORGANIC CONTENT-% (ASTM D2974)
- (P) PERMEABILITY (CTM 220)
- (PA) PARTICLE SIZE ANALYSIS (ASTM D422)
- (PI) PLASTICITY INDEX (AASHTO T 90) LIQUID LIMIT (AASHTO T 89)
- (PL) POINT LOAD INDEX (ASTM D5731)
- (PM) PRESSURE METER
- (R) R-VALUE (CTM 301)
- (SE) SAND EQUIVALENT (CTM 217)
- (SG) SPECIFIC GRAVITY (AASHTO T 100)
- (SL) SHRINKAGE LIMIT (ASTM D4943)
- (SW) SWELL POTENTIAL (ASTM D4546)
- (UC) UNCONFINED COMPRESSION-SOIL (ASTM D2166) UNCONFINED COMPRESSION-ROCK (ASTM D7012 - METHOD C)
- (UU) UNCONSOLIDATED UNDRAINED TRIAXIAL (ASTM D2850)
- (UW) UNIT WEIGHT (ASTM D7263 - METHOD B)

APPARENT DENSITY OF COHESIONLESS SOILS

DESCRIPTION	SPT N_{60} (BLOWS / 12 INCHES)
VERY LOOSE	0 - 5
LOOSE	5 - 10
MEDIUM DENSE	10 - 30
DENSE	30 - 50
VERY DENSE	GREATER THAN 50

MOISTURE

DESCRIPTION	CRITERIA
DRY	NO DISCERNABLE MOISTURE
MOIST	MOISTURE PRESENT, BUT NO FREE WATER
WET	VISIBLE FREE WATER

PERCENT OR PROPORTION OF SOILS

DESCRIPTION	CRITERIA
TRACE	PARTICLES ARE PRESENT BUT ESTIMATED TO BE LESS THAN 5%
FEW	5% - 10%
LITTLE	15% - 25%
SOME	30% - 45%
MOSTLY	50% - 100%

PARTICLE SIZE

DESCRIPTION		SIZE
BOULDER		GREATER THAN 12"
COBBLE		3" - 12"
GRAVEL	COARSE	3/4" - 3"
	FINE	1/5" - 3/4"
SAND	COARSE	1/16" - 1/5"
	MEDIUM	1/64" - 1/16"
	FINE	1/300" - 1/64"
SILT AND CLAY		LESS THAN 1/300"

STATE OF CALIFORNIA
DEPARTMENT OF TRANSPORTATION

LEGEND - SOIL (SHEET 2 OF 2)

NO SCALE

RSP A10G DATED OCTOBER 30, 2015 SUPERSEDES STANDARD PLAN A10G DATED MAY 20, 2011 - PAGE 7 OF THE STANDARD PLANS BOOK DATED 2010.

REVISED STANDARD PLAN RSP A10G

2010 REVISED STANDARD PLAN RSP A10G

9-22-15

Dist	COUNTY	ROUTE	POST MILES TOTAL PROJECT	SHEET No.	TOTAL SHEETS
06	Ker	99	49.6	29	106

Randell D. Hiatt
REGISTERED CIVIL ENGINEER

October 30, 2015
PLANS APPROVAL DATE

REGISTERED PROFESSIONAL ENGINEER
Randell D. Hiatt
No. C50200
Exp. 6-30-17
CIVIL
STATE OF CALIFORNIA

THE STATE OF CALIFORNIA OR ITS OFFICERS OR AGENTS SHALL NOT BE RESPONSIBLE FOR THE ACCURACY OR COMPLETENESS OF SCANNED COPIES OF THIS PLAN SHEET.

TO ACCOMPANY PLANS DATED 11-16-15

2010 REVISED STANDARD PLAN RSP A76A

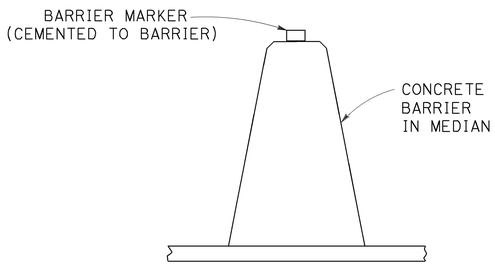

CONCRETE BARRIER TYPE 60 DELINEATION

See Note 5

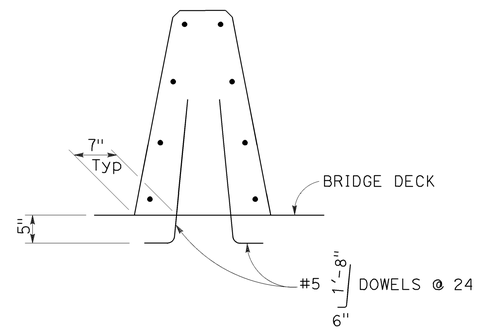

CONCRETE BARRIER TYPE 60A

Details similar to Type 60 except as noted.

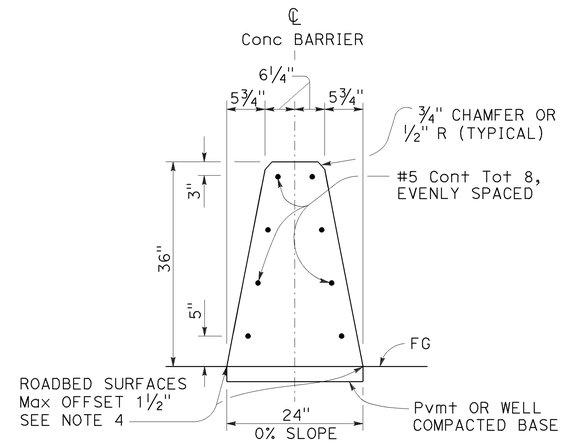

CONCRETE BARRIER TYPE 60

NOTES:

1. See Standard Plan A76B for details of Concrete Barrier Type 60 end anchors, connection to structures and transitions to Concrete Barrier Type 50 and Concrete Barrier Type 60S.
2. See Revised Standard Plan RSP A76C for Concrete Barrier Type 60 transitions at bridge column and sign pedestals.
3. Where glare screen is required on Concrete Barrier Type 60, use Concrete Barrier Type 60G.
4. Where roadbed offset is greater than 1½", see Concrete Barrier Type 60C.
5. See Project Plans for barrier delineation locations.
6. Reinforcing stirrup not required for roadbed offsets less than 1'-0".
7. For roadbed surfaces offset greater than 1½" and less than or equal to 3", no reinforcement required. For roadbed surfaces offset greater than 3" and less than or equal to 8", use two #4 Reinf at 3" above the lower roadbed surface. For roadbed surfaces offset greater than 8" and less than or equal to 12", use two #4 Reinf at 3" above the lower roadbed surface and two #4 Reinf at 8" above the lower roadbed surface. For roadbed surfaces offset greater than 12" and less than or equal to 36", use two #4 Reinf at 3" above the lower roadbed surface and two #4 Reinf at every 8" increment vertical spacing above the first two #4 Reinf.

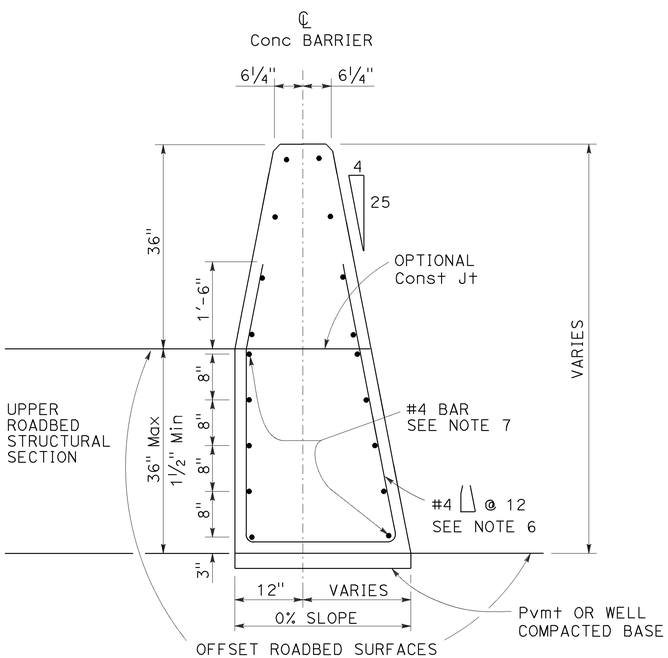

CONCRETE BARRIER TYPE 60C

Details similar to Type 60 except as noted.
Use concrete barrier end anchor when necessary.
36" roadbed surfaces offset shown.

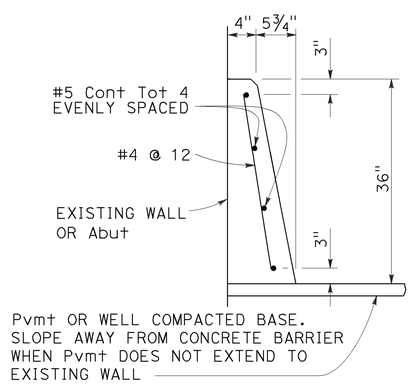

CONCRETE BARRIER TYPE 60D

STATE OF CALIFORNIA
DEPARTMENT OF TRANSPORTATION

CONCRETE BARRIER TYPE 60

NO SCALE

RSP A76A DATED OCTOBER 30, 2015 SUPERSEDES STANDARD PLAN A76A DATED MAY 20, 2011 - PAGE 34 OF THE STANDARD PLANS BOOK DATED 2010.

REVISED STANDARD PLAN RSP A76A

10-7-15

Dist	COUNTY	ROUTE	POST MILES TOTAL PROJECT	SHEET No.	TOTAL SHEETS
06	Ker	99	49.6	30	106

Randell D. Hiatt
REGISTERED CIVIL ENGINEER

July 19, 2013
PLANS APPROVAL DATE

REGISTERED PROFESSIONAL ENGINEER
Randell D. Hiatt
No. C50200
Exp. 6-30-15
CIVIL
STATE OF CALIFORNIA

THE STATE OF CALIFORNIA OR ITS OFFICERS OR AGENTS SHALL NOT BE RESPONSIBLE FOR THE ACCURACY OR COMPLETENESS OF SCANNED COPIES OF THIS PLAN SHEET.

TO ACCOMPANY PLANS DATED 11-16-15

2010 REVISED STANDARD PLAN RSP A77L2

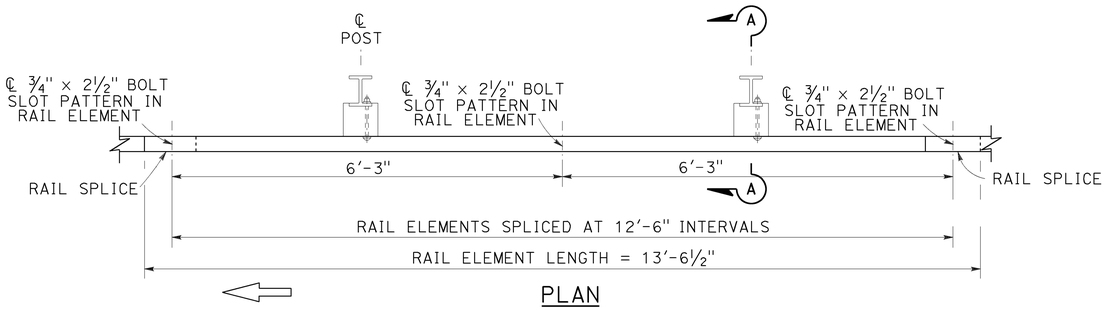

PLAN

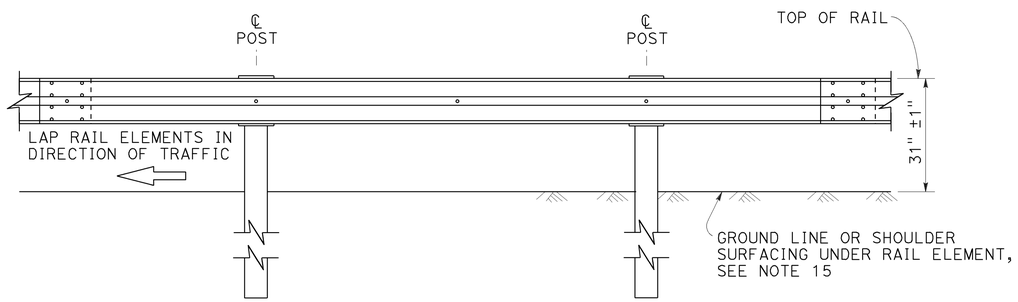

ELEVATION

MIDWEST GUARDRAIL SYSTEM WITH STEEL POSTS AND NOTCHED WOOD OR NOTCHED RECYCLED PLASTIC BLOCKS

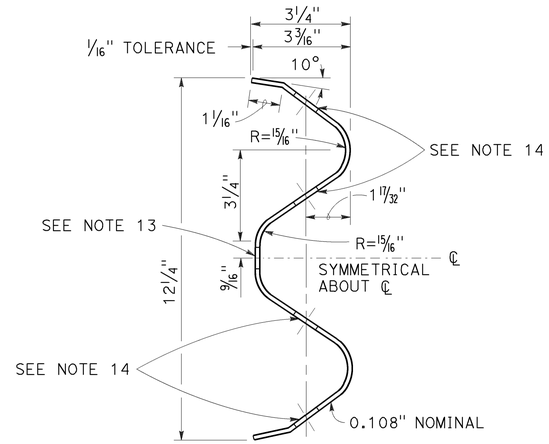

SECTION THRU RAIL ELEMENT

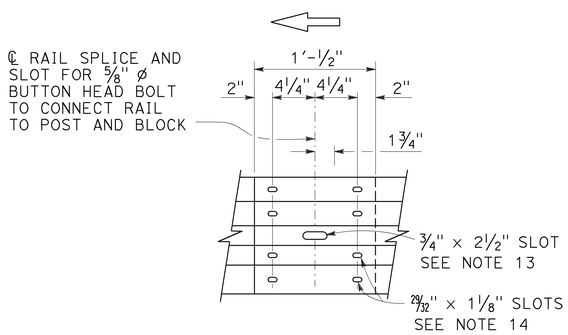

ELEVATION

RAIL ELEMENT SPLICE DETAIL

a) Connect the over lapped end of the rail elements with ⅝" ø × 1⅜" button head oval shoulder splice bolts inserted into the 29⁄32" × 1⅛" slots and bolted together with ⅝" ø recessed hex nuts. Recess of hex nut points toward rail element. A total of 8 bolts and nuts are to be used at each rail splice connection.

b) The ends of the rail elements are to be overlapped in the direction of traffic (see details).

c) Where end cap is to be attached to the end of a rail element, a total of 4 of the above described splice bolts and nuts are to be used.

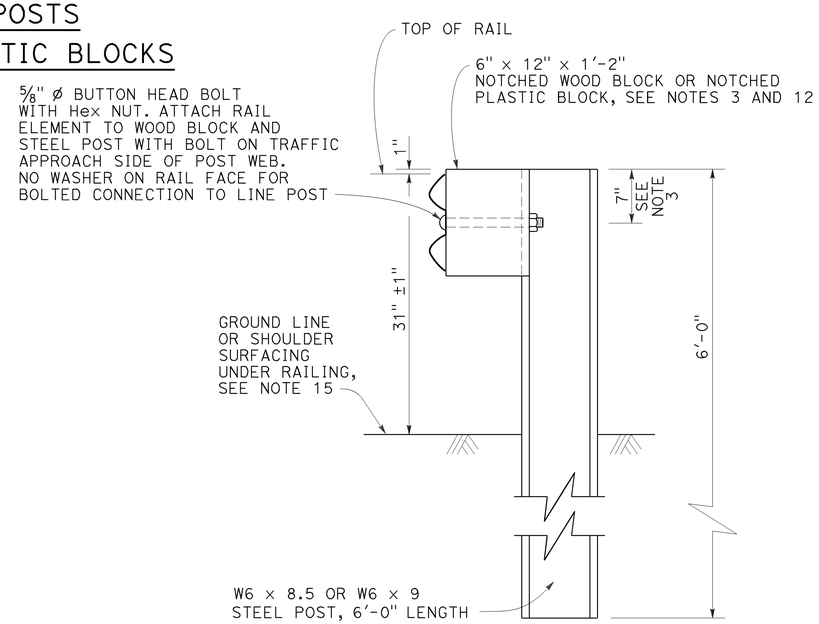

SECTION A-A

TYPICAL STEEL LINE POST INSTALLATION

See Note 4

NOTES:

1. For details of wood post installations, see Revised Standard Plan RSP A77L1.
2. For details of standard hardware used to construct MGS, see Revised Standard Plan RSP A77M1.
3. For details of steel posts and notched wood blocks used to construct MGS, see Revised Standard Plan RSP A77N2.
4. For additional installation details, see Revised Standard Plan RSP A77N3.
5. MGS post spacing to be 6'-3" center to center, except as otherwise noted.
6. For MGS typical layouts, see the A77P, A77Q and A77R Series of Standard Plans.
7. If railing is connected to terminal system end treatment, use 31" height terminal system end treatment.
8. For MGS end anchor details, see Revised Standard Plans RSP A77S1 and RSP A77T2.
9. For details of MGS transition to bridge railing, see Revised Standard Plan RSP A77U4.
10. For additional details of MGS connection to bridge railings, see Revised Standard Plans RSP A77U1, RSP A77U2 and RSP A77V1.
11. For dike positioning and MGS delineation details, see Revised Standard Plan RSP A77N4.
12. Notched face of block faces steel post.
13. Slotted hole for bolted connection of rail element to block and post. See "Section Thru Rail Element".
14. Slotted holes for splice bolts to overlap ends of rail element. See "Section Thru Rail Element".
15. Install posts in soil.

STATE OF CALIFORNIA
DEPARTMENT OF TRANSPORTATION

MIDWEST GUARDRAIL SYSTEM STANDARD RAILING SECTION (STEEL POST WITH NOTCHED WOOD OR NOTCHED RECYCLED PLASTIC BLOCK)

NO SCALE

RSP A77L2 DATED JULY 19, 2013 SUPPLEMENTS THE STANDARD PLANS BOOK DATED 2010.

REVISED STANDARD PLAN RSP A77L2

Dist	COUNTY	ROUTE	POST MILES TOTAL PROJECT	SHEET No.	TOTAL SHEETS
06	Ker	99	49.6	31	106

Randell D. Hiatt
REGISTERED CIVIL ENGINEER

July 19, 2013
PLANS APPROVAL DATE

REGISTERED PROFESSIONAL ENGINEER
Randell D. Hiatt
No. C50200
Exp. 6-30-15
CIVIL
STATE OF CALIFORNIA

THE STATE OF CALIFORNIA OR ITS OFFICERS OR AGENTS SHALL NOT BE RESPONSIBLE FOR THE ACCURACY OR COMPLETENESS OF SCANNED COPIES OF THIS PLAN SHEET.

TO ACCOMPANY PLANS DATED 11-16-15

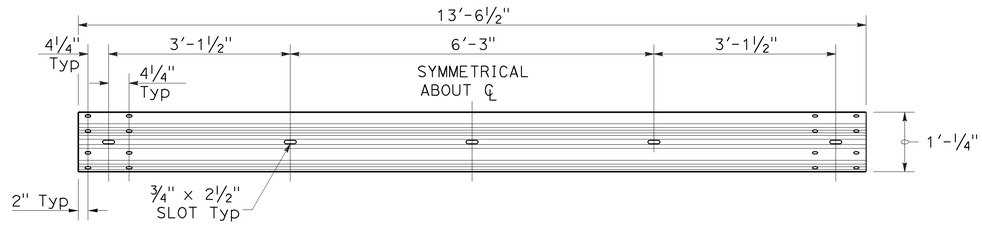

TYPICAL RAIL ELEMENT

NOTE:

1. Slotted holes for splice bolts to overlap ends of rail element.

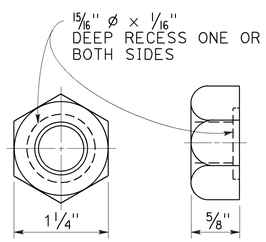

⅝" ø RECESS NUT

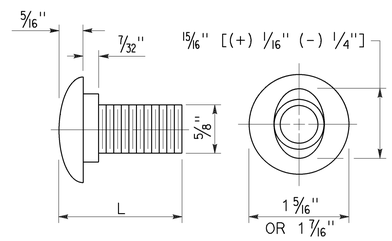

⅝" ø BUTTON HEAD BOLT

BUTTON HEAD BOLT

L	THREAD LENGTH
1⅜"	FULL THREAD LENGTH
2"	FULL THREAD LENGTH
10"	4" Min THREAD LENGTH
18"	4" Min THREAD LENGTH
20"	4" Min THREAD LENGTH
22"	4" Min THREAD LENGTH
26"	4" Min THREAD LENGTH
36"	4" Min THREAD LENGTH
** 2¾"	2" Min THREAD LENGTH
** 19"	4" Min THREAD LENGTH

** For nested rail applications.

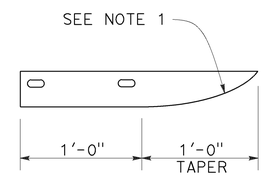

PLAN

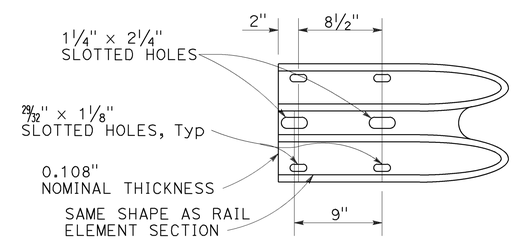

ELEVATION

END CAP (TYPE A)

STATE OF CALIFORNIA
DEPARTMENT OF TRANSPORTATION

MIDWEST GUARDRAIL SYSTEM STANDARD HARDWARE

NO SCALE

RSP A77M1 DATED JULY 19, 2013 SUPPLEMENTS THE STANDARD PLANS BOOK DATED 2010.

REVISED STANDARD PLAN RSP A77M1

2010 REVISED STANDARD PLAN RSP A77M1

7-3-13

Dist	COUNTY	ROUTE	POST MILES TOTAL PROJECT	SHEET No.	TOTAL SHEETS
06	Ker	99	49.6	32	106

Randell D. Hiatt
REGISTERED CIVIL ENGINEER

November 15, 2013
PLANS APPROVAL DATE

REGISTERED PROFESSIONAL ENGINEER
Randell D. Hiatt
No. C50200
Exp. 6-30-15
CIVIL
STATE OF CALIFORNIA

THE STATE OF CALIFORNIA OR ITS OFFICERS OR AGENTS SHALL NOT BE RESPONSIBLE FOR THE ACCURACY OR COMPLETENESS OF SCANNED COPIES OF THIS PLAN SHEET.

TO ACCOMPANY PLANS DATED 11-16-15

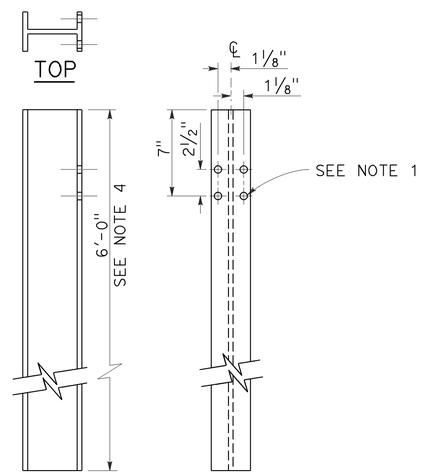

SIDE FRONT

W6 x 9 OR W6 x 8.5
STEEL POST
See Note 4

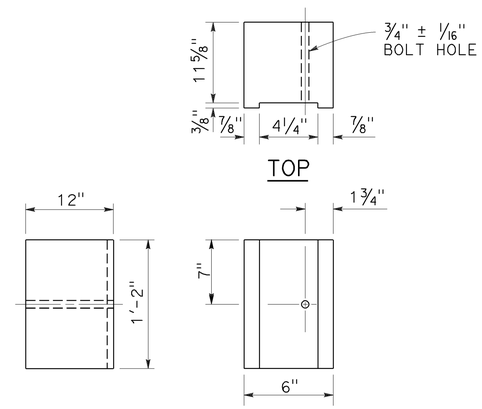

SIDE FRONT

6" x 12"
NOTCHED WOOD BLOCK
See Notes 2 and 3

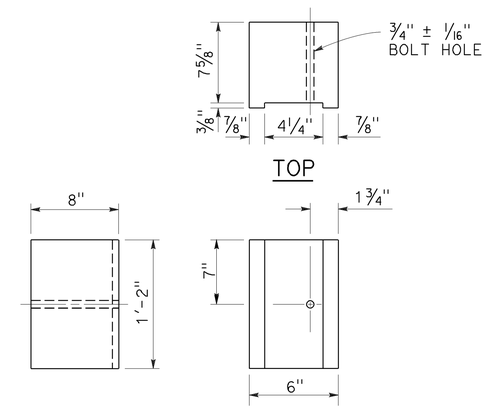

SIDE FRONT

6" x 8"
NOTCHED WOOD BLOCK
Only for use with metal beam guard railing. See Note 5

NOTES:

1. All holes in steel post shall be 13/16" Dia maximum.
2. Dimensions shown for wood block are nominal.
3. Notched face of block faces steel post.
4. 6'-0" length posts to be used for typical roadway installation. See Revised Standard Plan RSP A77N3.
5. See Revised Standard Plan RSP A77L3 for use of 6" x 8" and 8" x 8" notched wood blocks.
6. This post and 8" x 12" block combination to be used for line post sections of MGS on narrow roadways and where strengthened line post sections of MGS are warranted to shield fixed objects.

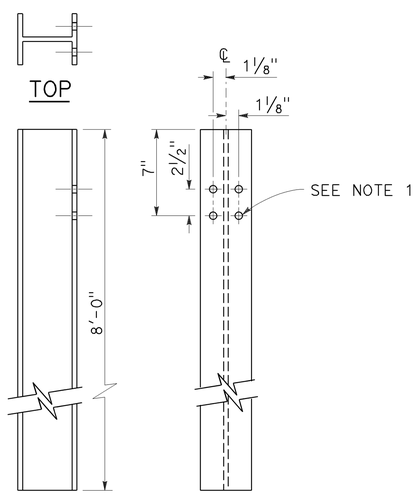

SIDE FRONT

W6 x 15
STEEL POST
See Note 6

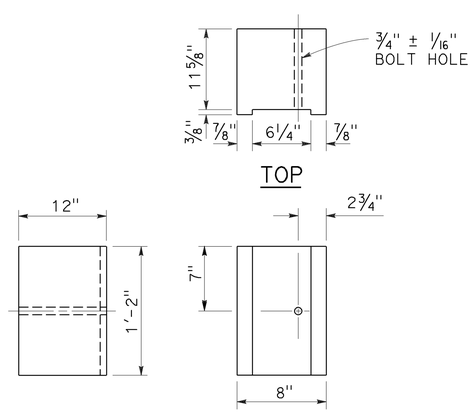

SIDE FRONT

8" x 12"
NOTCHED WOOD BLOCK
See Notes 2 and 3

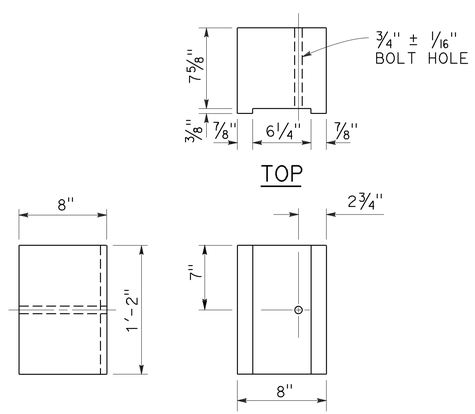

SIDE FRONT

8" x 8"
NOTCHED WOOD BLOCK
Only for use with metal beam guard railing. See Note 5

STATE OF CALIFORNIA
DEPARTMENT OF TRANSPORTATION

MIDWEST GUARDRAIL SYSTEM STEEL POST AND NOTCHED WOOD BLOCK DETAILS

NO SCALE

RSP A77N2 DATED NOVEMBER 15, 2013 SUPERSEDES RSP A77N2
DATED JULY 19, 2013 THAT SUPPLEMENTS THE STANDARD PLANS BOOK DATED 2010.

REVISED STANDARD PLAN RSP A77N2

2010 REVISED STANDARD PLAN RSP A77N2

10-29-13

Dist	COUNTY	ROUTE	POST MILES TOTAL PROJECT	SHEET No.	TOTAL SHEETS
06	Ker	99	49.6	33	106

Randell D. Hiatt
REGISTERED CIVIL ENGINEER

November 15, 2013
PLANS APPROVAL DATE

REGISTERED PROFESSIONAL ENGINEER
Randell D. Hiatt
No. C50200
Exp. 6-30-15
CIVIL
STATE OF CALIFORNIA

THE STATE OF CALIFORNIA OR ITS OFFICERS OR AGENTS SHALL NOT BE RESPONSIBLE FOR THE ACCURACY OR COMPLETENESS OF SCANNED COPIES OF THIS PLAN SHEET.

TO ACCOMPANY PLANS DATED 11-16-15

2010 REVISED STANDARD PLAN RSP A77N3

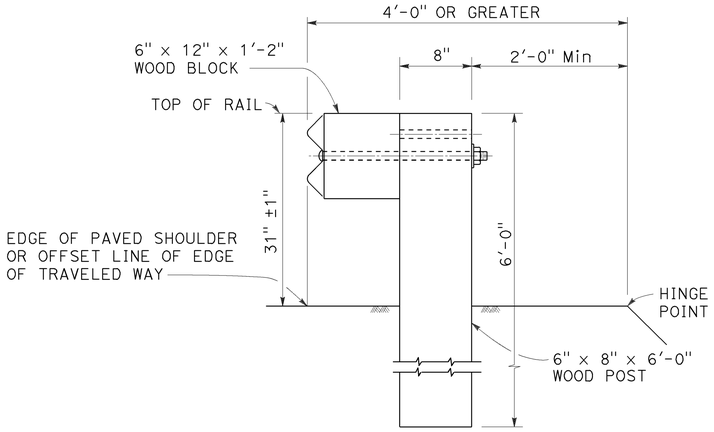

DETAIL A

TYPICAL ROADWAY INSTALLATION

See Note 1

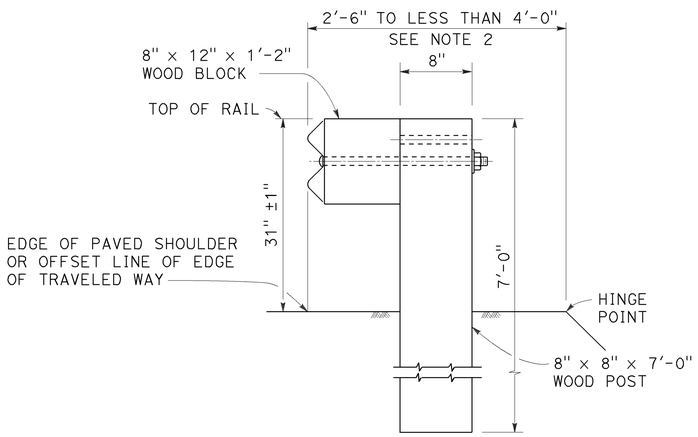

DETAIL B

NARROW ROADWAY INSTALLATION

See Note 1

POST EMBEDMENT

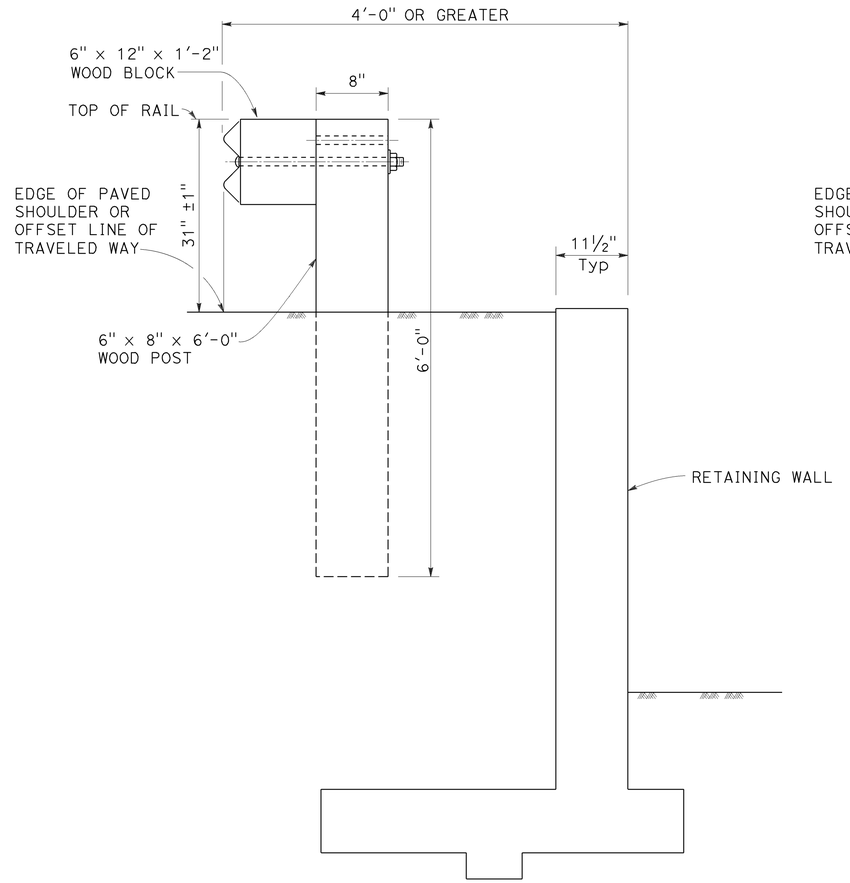

DETAIL C

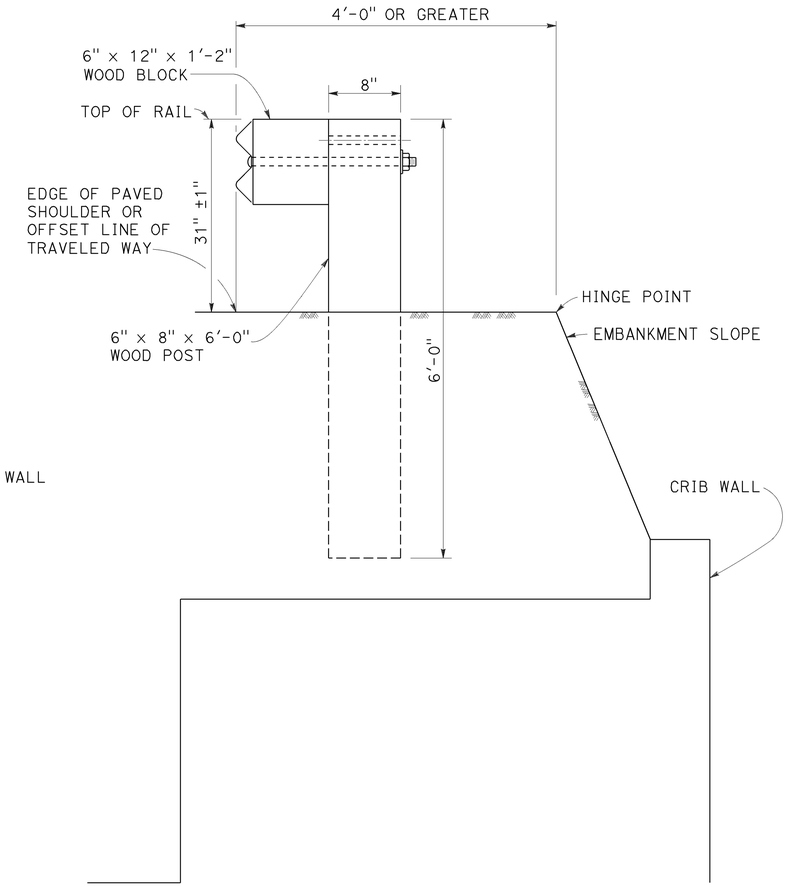

DETAIL D

INSTALLATION AT EARTH RETAINING WALLS

NOTES:

1. These installation details also applicable to steel line post installations. For Detail A, C, and D, where steel line post installations are constructed, W6 x 8.5 or W6 x 9 steel post, 6'-0" in length, with 6" x 12" x 1'-2" notched wood blocks or notched recycled plastic blocks are to be used in place of the size of wood post and wood block shown. For Detail B, where steel line post installations are constructed, W6 x 15 steel post, 8'-0" in length, with 8" x 12" x 1'-2" notched wood blocks or notched recycled plastic blocks are to be used in place of the size of wood post and wood block shown. For additional installation details, see Revised Standard Plan RSP A77L1 and RSP A77L2.
2. Where the distance between the face of the rail and the hinge point is less than 2'-6", see the Project Plans for special details.
3. For dike positioning with MGS installations, see Revised Standard Plan RSP A77N4.

STATE OF CALIFORNIA
DEPARTMENT OF TRANSPORTATION

MIDWEST GUARDRAIL SYSTEM TYPICAL LINE POST EMBEDMENT AND HINGE POINT OFFSET DETAILS

NO SCALE

RSP A77N3 DATED NOVEMBER 15, 2013 SUPERSEDES RSP A77N3
DATED JULY 19, 2013 THAT SUPPLEMENTS THE STANDARD PLANS BOOK DATED 2010.

REVISED STANDARD PLAN RSP A77N3

10-29-13

Dist	COUNTY	ROUTE	POST MILES TOTAL PROJECT	SHEET No.	TOTAL SHEETS
06	Ker	99	49.6	34	106

Randell D. Hiatt
REGISTERED CIVIL ENGINEER

July 19, 2013
PLANS APPROVAL DATE

REGISTERED PROFESSIONAL ENGINEER
Randell D. Hiatt
No. C50200
Exp. 6-30-15
CIVIL
STATE OF CALIFORNIA

THE STATE OF CALIFORNIA OR ITS OFFICERS OR AGENTS SHALL NOT BE RESPONSIBLE FOR THE ACCURACY OR COMPLETENESS OF SCANNED COPIES OF THIS PLAN SHEET.

TO ACCOMPANY PLANS DATED 11-16-15

NOTES:

1. When necessary to place dike more than 7" in front of face of MGS, only Type C dike may be used. For dike details, see Revised Standard Plan RSP A87B.
2. For standard railing post embedment, see Revised Standard Plan RSP A77N3.
3. MGS delineation to be used where shown on the Project Plans.
4. When dike or curb is placed under MGS, the maximum height of the dike or curb shall be 6". Mountable dike should not be used. For dike and curb details, see Revised Standard Plans RSP A87A and RSP A87B.
5. For details of typical distance between the face of rail and hinge point, see Revised Standard Plan RSP A77N3.
6. For steel line posts, use 1/4 - 20 self-tapping screws in 0.22" diameter holes or 1/4" bolts in 9/32" diameter holes.

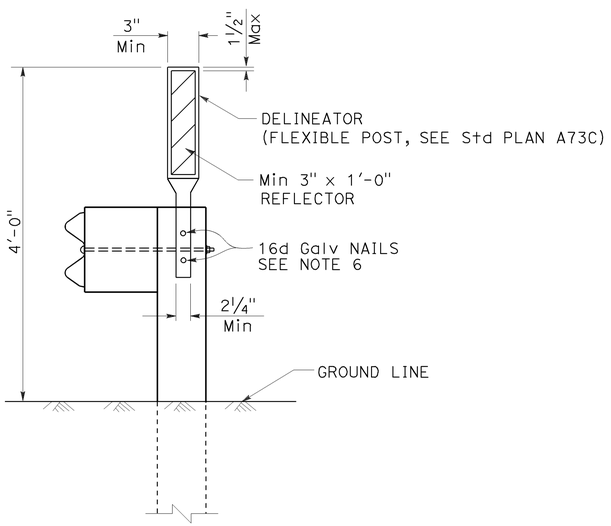

MGS DELINEATION

See Note 3

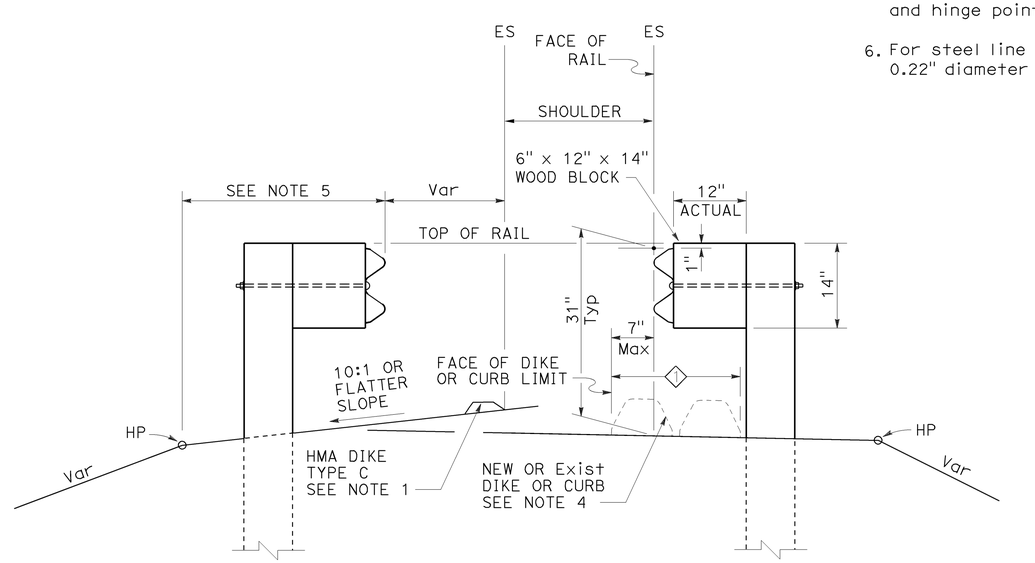

DIKE POSITIONING

See Note 1

1 PERMISSIBLE DIKE OR CURB PLACEMENT AREA

STATE OF CALIFORNIA
DEPARTMENT OF TRANSPORTATION

MIDWEST GUARDRAIL SYSTEM TYPICAL RAILING DELINEATION AND DIKE POSITIONING DETAILS

NO SCALE

RSP A77N4 DATED JULY 19, 2013 SUPPLEMENTS THE STANDARD PLANS BOOK DATED 2010.

REVISED STANDARD PLAN RSP A77N4

2010 REVISED STANDARD PLAN RSP A77N4

7-10-13

Dist	COUNTY	ROUTE	POST MILES TOTAL PROJECT	SHEET No.	TOTAL SHEETS
06	Ker	99	49.6	35	106

Randell D. Hiatt
REGISTERED CIVIL ENGINEER

July 19, 2013
PLANS APPROVAL DATE

REGISTERED PROFESSIONAL ENGINEER
Randell D. Hiatt
No. C50200
Exp. 6-30-15
CIVIL
STATE OF CALIFORNIA

THE STATE OF CALIFORNIA OR ITS OFFICERS OR AGENTS SHALL NOT BE RESPONSIBLE FOR THE ACCURACY OR COMPLETENESS OF SCANNED COPIES OF THIS PLAN SHEET.

TO ACCOMPANY PLANS DATED 11-16-15

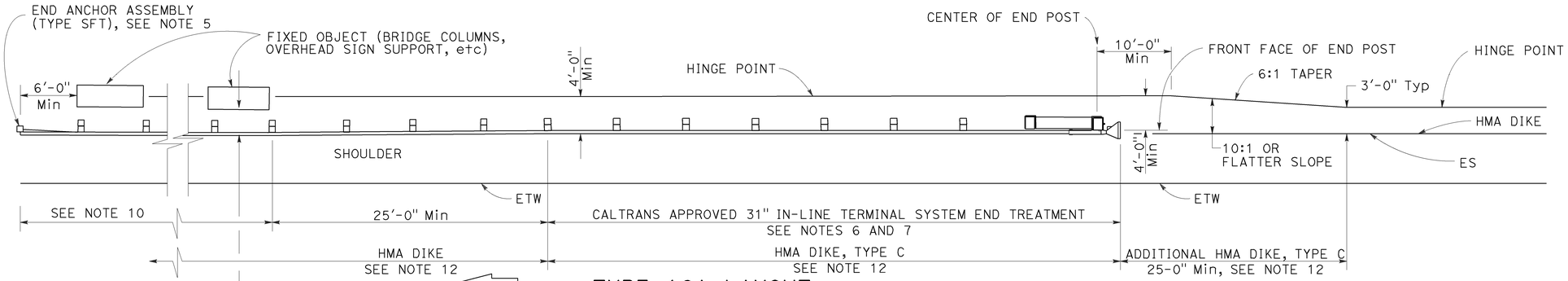

TYPE 16A LAYOUT

(MGS installation at roadside fixed object or objects with 31" in-line end treatment at traffic approach end of railing)
See Notes 11 and 12

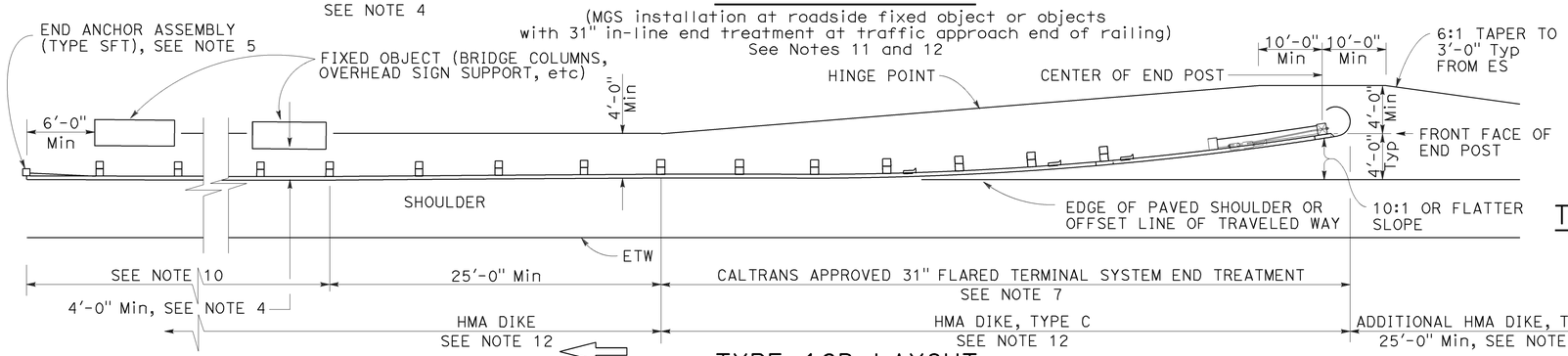

TYPE 16B LAYOUT

(MGS installation at roadside fixed object or objects with 31' flared end treatment at traffic approach end of railing)
See Notes 11 and 12

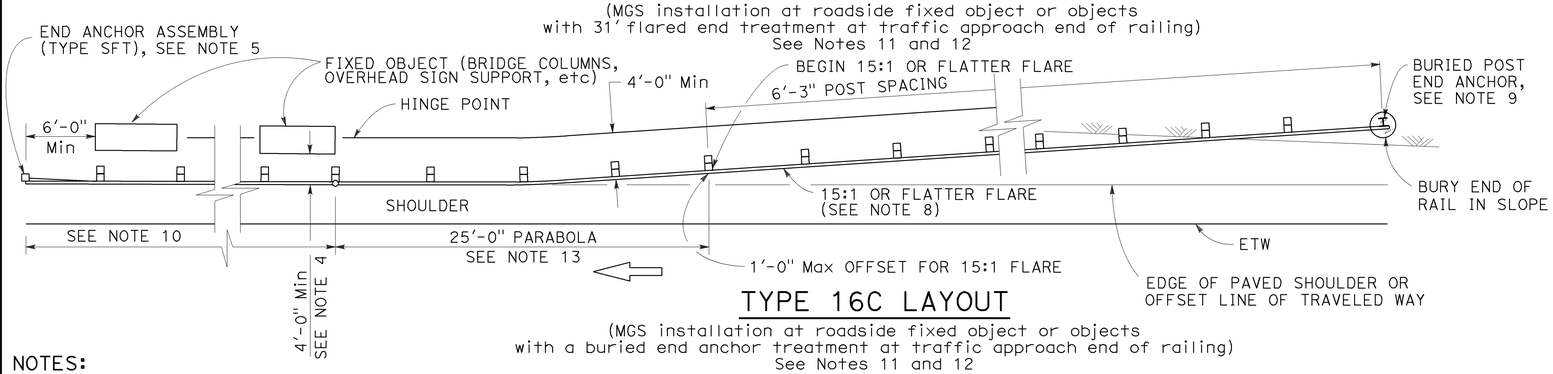

TYPE 16C LAYOUT

(MGS installation at roadside fixed object or objects with a buried end anchor treatment at traffic approach end of railing)
See Notes 11 and 12

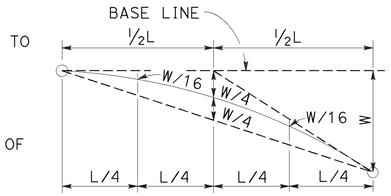

TYPIC AL PARABOLIC LAYOUT

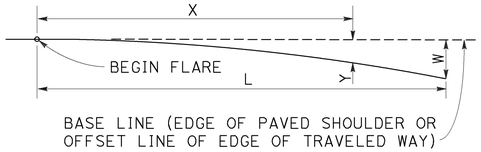

BASE LINE (EDGE OF PAVED SHOULDER OR OFFSET LINE OF EDGE OF TRAVELED WAY)

$$Y = \frac{WX^2}{L^2}$$

Y = OFFSET FROM BASE LINE
W = MAXIMUM OFFSET
X = DISTANCE ALONG BASE LINE
L = LENGTH OF FLARE

PARABOLIC FLARE OFFSETS

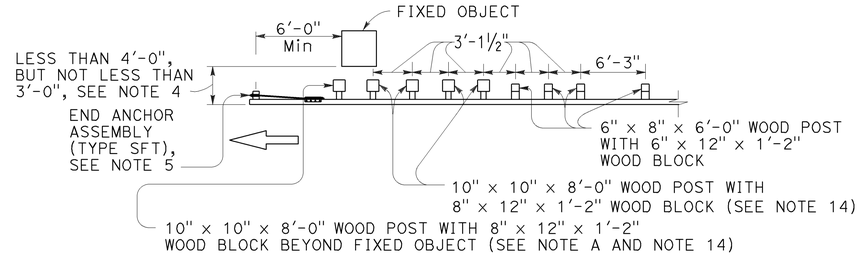

NOTE A: For a series of fixed objects (bridge columns, overhead sign supports, etc.) additional 10" x 10" x 8'-0" wood post with 8" x 12" x 1'-2" wood blocks at 3'-1½" center to center spacing are to be used between fixed objects.

STRENGTHENED MIDWEST GUARDRAIL SYSTEM SECTIONS FOR FIXED OBJECT

Use strengthened MGS sections with Types 16A, 16B or 16C layouts where minimum clearance between the face of the railing and fixed object(s) is less than 4'-0", but not less than 3'-0". See Note 4

NOTES:

1. Line post, blocks and hardware to be used are shown on Revised Standard Plans RSP A77L1, RSP A77L2, RSP A77M1, RSP A77N1 and RSP A77N2.
2. MGS post spacing to be 6'-3" center to center, except as otherwise noted.
3. Except as noted, line posts are 6" x 8" x 6'-0" wood with 6" x 12" x 1'-2" wood blocks. W6 x 8.5 or W6 x 9 steel posts, 6'-0" in length, with 6" x 12" x 1'-2" notched wood blocks or notched recycled plastic blocks may be used for 6" x 8" x 6'-0" wood line posts with 6" x 12" x 1'-2" wood blocks where applicable and when specified.
4. A 4'-0" minimum clearance is required between the face of the railing and the face of a fixed object located directly behind MGS sections with post spacing of 6'-3". Construct MGS as shown in the detail "Strengthened Midwest Guardrail System Sections for Fixed Object" on this plan, where the clearance between the face of the railing and the face of a fixed object is less than 4'-0", but not less than 3'-0". Where the clearance is less than 3'-0", a concrete wall or barrier should be constructed to shield the fixed object(s).
5. For End Anchor Assembly (Type SFT) details, see Revised Standard Plan RSP A77S1.
6. 31" in-line terminal system end treatments are used where site conditions will not accommodate a 31" flared end treatment.
7. The type of 31" terminal system to be used will be shown on the Project Plans.
8. The 15:1 or flatter flare used with Type 16C Layout is based on the edge of the paved shoulder or offset line of edge of the traveled way. The length of MGS within the 15:1 or flatter flare is based on site conditions and should be a length equal to multiples of 12'-6".
9. For details of the Buried Post End Anchor used with Type 16C Layout, see Revised Standard Plan RSP A77T2.
10. As site conditions dictate, construct additional MGS to shield fixed object(s). Additional MGS length equal to multiples of 12'-6". Post spacing at 6'-3" except as specified in Note 4.
11. Layout Types 16A, 16B or 16C are typically used where MGS is recommended to shield roadside fixed object(s) and a crashworthy 31" end treatment is required for only one direction of traffic.
12. Where placement of dike is required with MGS, see Revised Standard Plan RSP A77N4 for dike positioning details.
13. For typical flare offsets for 25'-0" length parabola with maximum offset of 1'-0", see Revised Standard Plan RSP A77P1.
14. W6 x 15 steel post, 8'-0" in length, with 8" x 12" x 1'-2" notched wood block or notched recycled plastic blocks may be used in place of the 10" x 10" x 8'-0" wood post with 8" x 12" x 1'-2" wood block shown in the detail "Strengthened Midwest Guardrail System Sections for Fixed Object".

STATE OF CALIFORNIA
DEPARTMENT OF TRANSPORTATION

MIDWEST GUARDRAIL SYSTEM TYPICAL LAYOUTS FOR ROADSIDE FIXED OBJECTS

NO SCALE

RSP A77R3 DATED JULY 19, 2013 SUPPLEMENTS THE STANDARD PLANS BOOK DATED 2010.

REVISED STANDARD PLAN RSP A77R3

2010 REVISED STANDARD PLAN RSP A77R3

6-20-13

Dist	COUNTY	ROUTE	POST MILES TOTAL PROJECT	SHEET No.	TOTAL SHEETS
06	Ker	99	49.6	36	106

Randell D. Hiatt
REGISTERED CIVIL ENGINEER

November 15, 2013
PLANS APPROVAL DATE

REGISTERED PROFESSIONAL ENGINEER
Randell D. Hiatt
No. C50200
Exp. 6-30-15
CIVIL
STATE OF CALIFORNIA

THE STATE OF CALIFORNIA OR ITS OFFICERS OR AGENTS SHALL NOT BE RESPONSIBLE FOR THE ACCURACY OR COMPLETENESS OF SCANNED COPIES OF THIS PLAN SHEET.

TO ACCOMPANY PLANS DATED 11-16-15

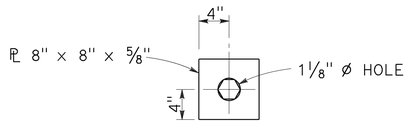

DETAIL "A"
CABLE CONNECTION
END PLATE

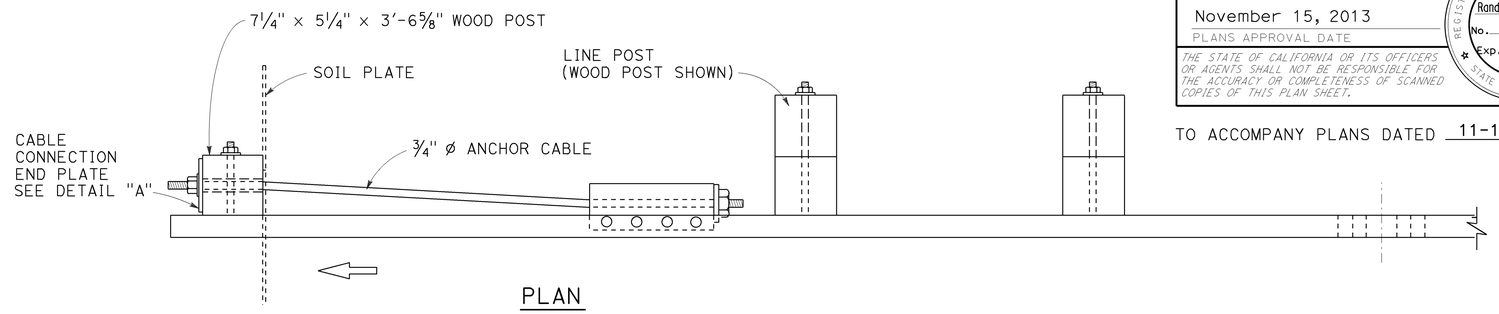

PLAN

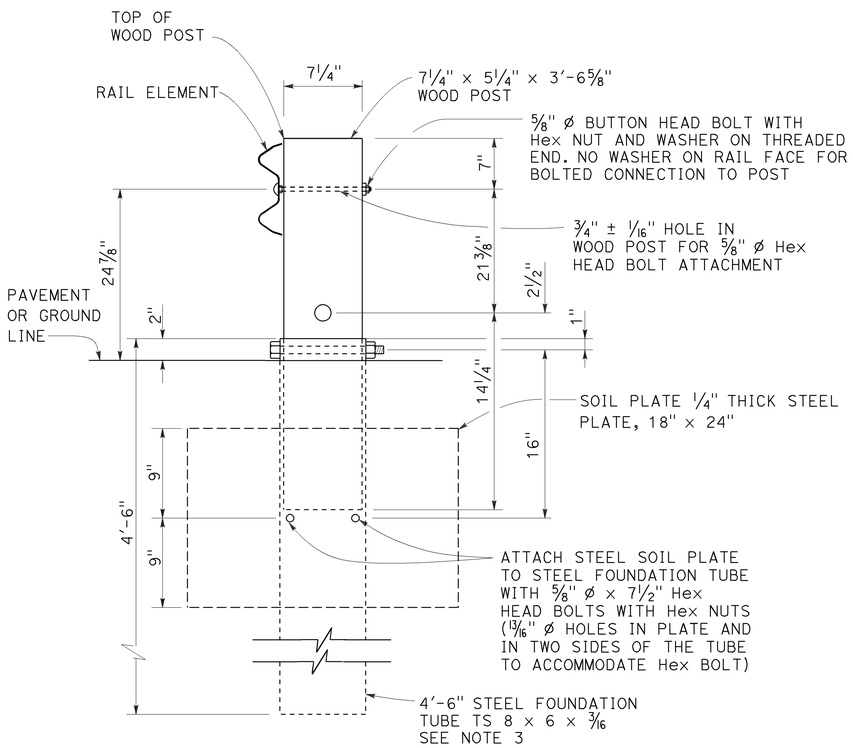

SECTION A-A

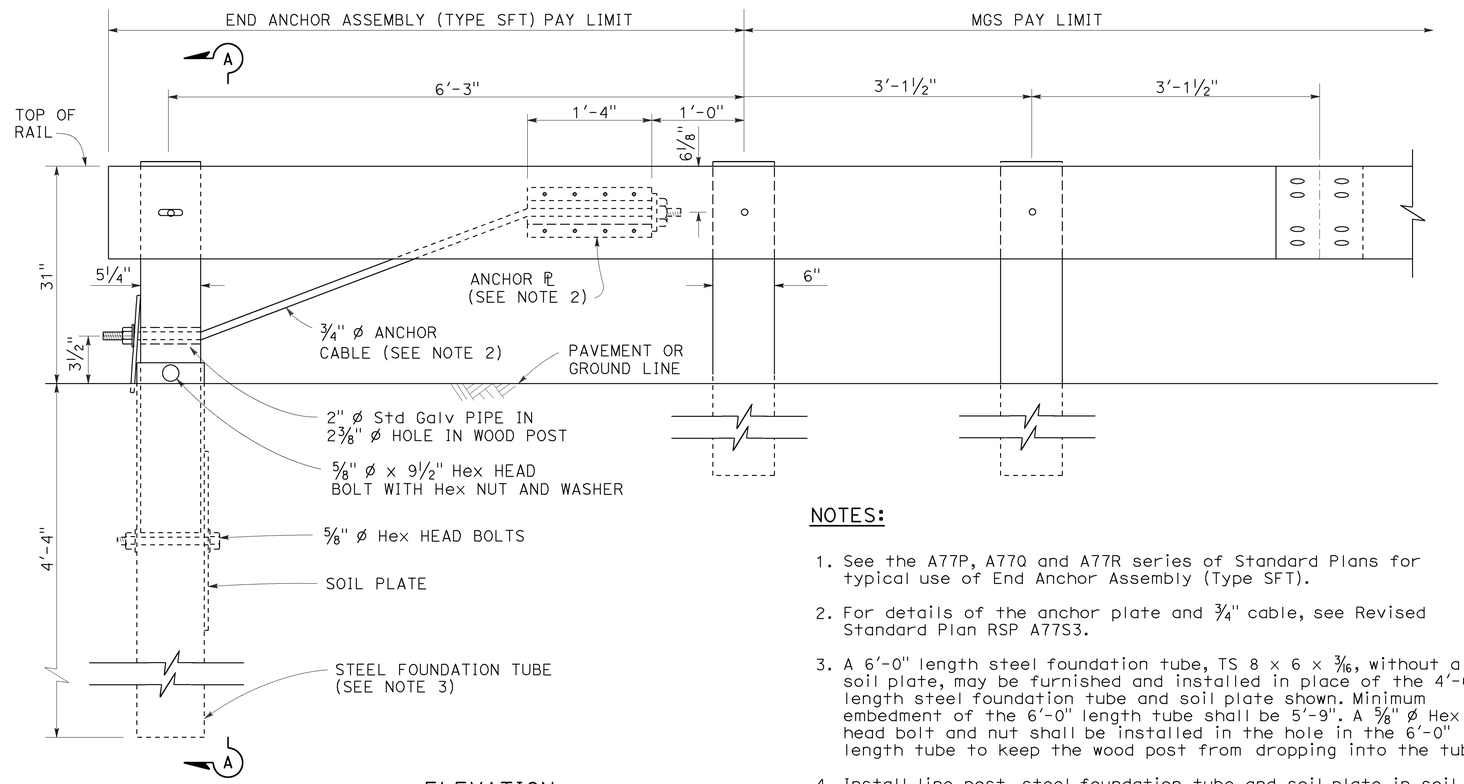

ELEVATION

END ANCHOR
ASSEMBLY (TYPE SFT)
See Note 1

NOTES:

1. See the A77P, A77Q and A77R series of Standard Plans for typical use of End Anchor Assembly (Type SFT).
2. For details of the anchor plate and 3/4" cable, see Revised Standard Plan RSP A77S3.
3. A 6'-0" length steel foundation tube, TS 8 x 6 x 3/16, without a soil plate, may be furnished and installed in place of the 4'-6" length steel foundation tube and soil plate shown. Minimum embedment of the 6'-0" length tube shall be 5'-9". A 5/8" ø Hex head bolt and nut shall be installed in the hole in the 6'-0" length tube to keep the wood post from dropping into the tube.
4. Install line post, steel foundation tube and soil plate in soil.

STATE OF CALIFORNIA
DEPARTMENT OF TRANSPORTATION

MIDWEST GUARDRAIL SYSTEM END ANCHOR ASSEMBLY (TYPE SFT)

NO SCALE

RSP A77S1 DATED NOVEMBER 15, 2013 SUPERSEDES RSP A77S1
DATED JULY 19, 2013 THAT SUPPLEMENTS THE STANDARD PLANS BOOK DATED 2010.

REVISED STANDARD PLAN RSP A77S1

2010 REVISED STANDARD PLAN RSP A77S1

10-4-13

Dist	COUNTY	ROUTE	POST MILES TOTAL PROJECT	SHEET No.	TOTAL SHEETS
06	Ker	99	49.6	37	106

REGISTERED CIVIL ENGINEER

July 18, 2014
PLANS APPROVAL DATE

Glenn DeCou No. C34547 Exp. 9-30-15 CIVIL — REGISTERED PROFESSIONAL ENGINEER — STATE OF CALIFORNIA

THE STATE OF CALIFORNIA OR ITS OFFICERS OR AGENTS SHALL NOT BE RESPONSIBLE FOR THE ACCURACY OR COMPLETENESS OF SCANNED COPIES OF THIS PLAN SHEET.

TO ACCOMPANY PLANS DATED 11-16-15

2010 REVISED STANDARD PLAN RSP A85

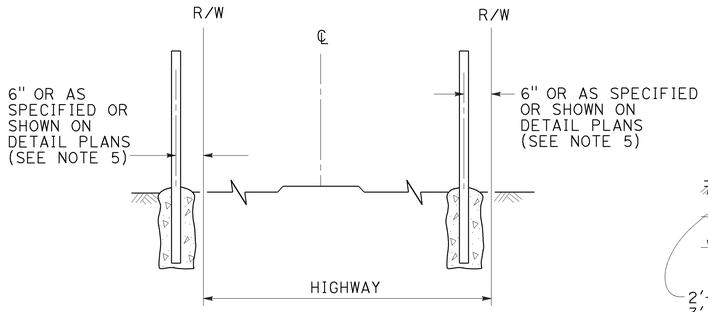

OTHER HIGHWAYS — FREEWAYS

FENCE LOCATION

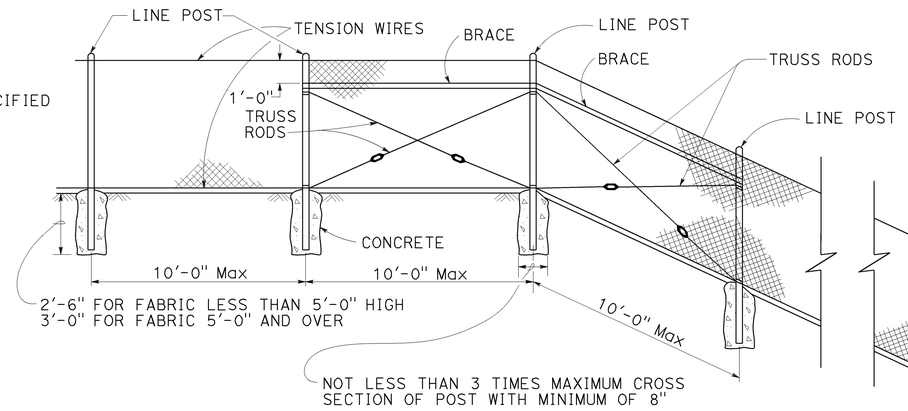

CHAIN LINK FENCE ON SHARP BREAK IN GRADE

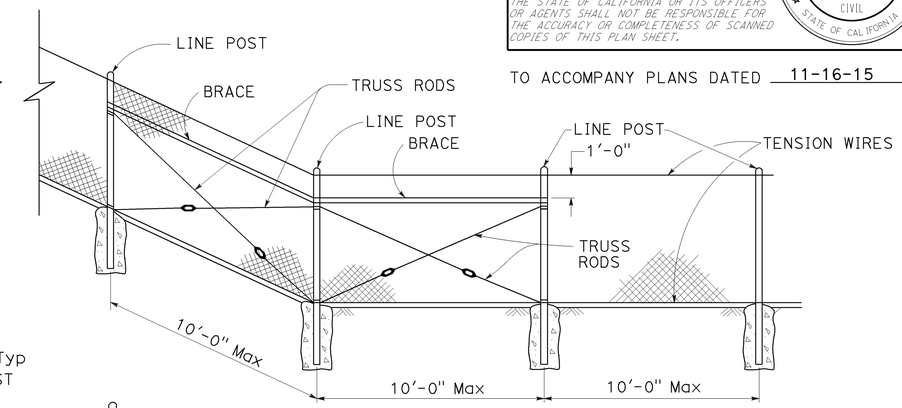

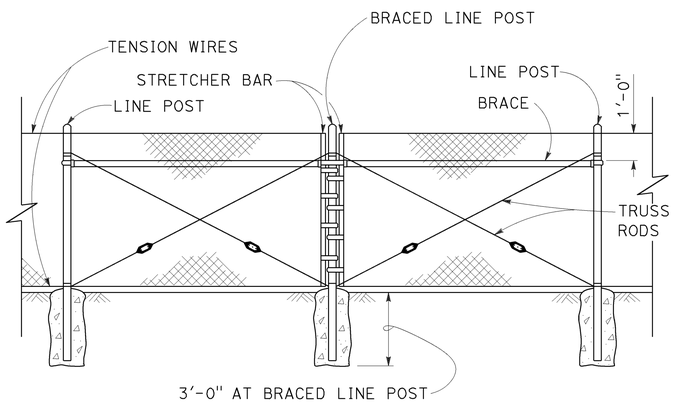

BRACED LINE POST INSTALLATION

Braced line post at intervals not exceeding 1000'

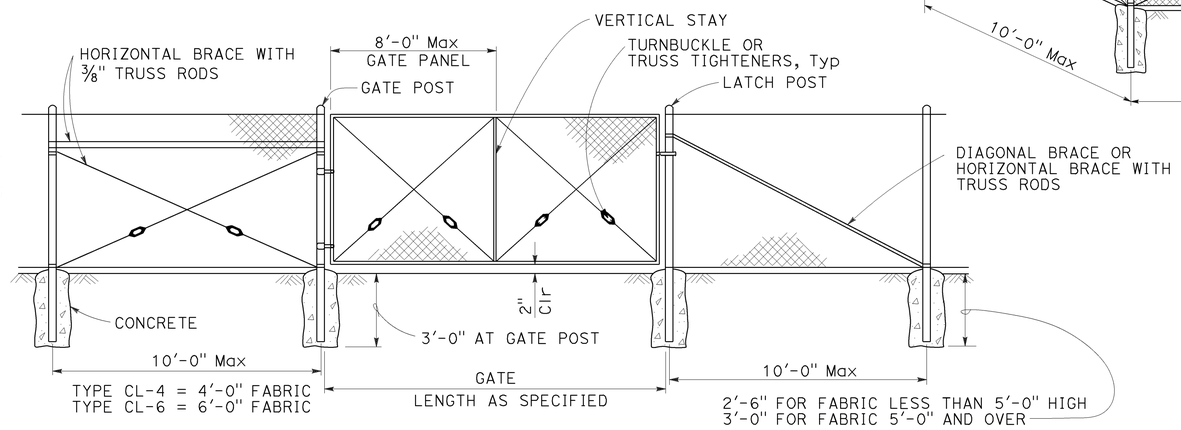

CHAIN LINK GATE INSTALLATION

GATE POST			
FENCE HEIGHT	GATE WIDTHS	ROUND OD PIPE	WEIGHT (lb/ft)
6'-0" AND LESS	UP THRU 6'-0"	2.875"	5.80
	OVER 6'-0" THRU 12'-0"	4.500"	10.80
	OVER 12'-0" THRU 18'-0"	5.563"	14.63
	OVER 18'-0" TO 24'-0" Max	6.625"	18.99
OVER 6'-0" TO 8'-0" Max	UP THRU 6'-0"	3.500"	7.58
	OVER 6'-0" THRU 12'-0"	5.563"	14.63
	OVER 12'-0" THRU 18'-0"	6.625"	18.99
	OVER 18'-0" TO 24'-0" Max	8.625"	28.58

Above post dimensions and weights are minimums. Larger sizes may be used upon approval.

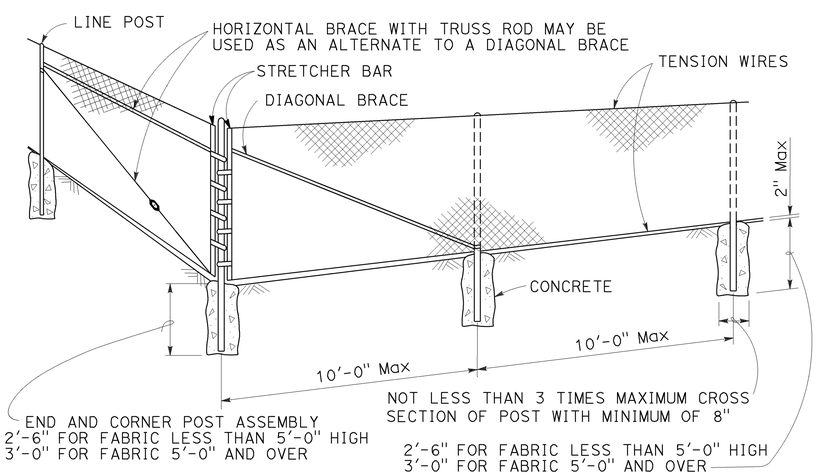

CORNER POST

NOTES:

1. The table below shows minimum sized posts and braces complying with the specifications. Larger or heavier post and brace sizes may be used upon approval.
2. Sections shown in the tables must also comply with the strength requirements and other provisions of the Specifications.
3. Other sections which comply with the strength requirements and other provisions of the Specifications may be used upon approval.
4. Options exercised shall be uniform on any one project.
5. Offset to be 2'-0" at monument locations, measured at right angles to R/W lines. Taper to achieve offset to be at least 20'-0" long.
6. See Revised Standard Plan RSP A85B for Brace, Stretcher Bar, and Truss Tightener Details.

TYPICAL MEMBER DIMENSIONS (See Notes)										
FENCE HEIGHT	LINE POSTS				END, LATCH AND CORNER POSTS		BRACES			
	ROUND OD PIPE	WEIGHT (lb/ft)	ROLL FORMED		ROUND OD PIPE	WEIGHT (lb/ft)	ROUND OD PIPE	WEIGHT (lb/ft)	ROLL FORMED	
			SECTION	WEIGHT (lb/ft)					SECTION	WEIGHT (lb/ft)
6'-0" AND LESS	1.900"	2.72	1.875" x 1.625"	1.85	2.375"	3.65	1.66"	2.27	1.625" x 1.25"	1.35
OVER 6'-0" TO 8'-0" Max	2.375"	3.65	2.25" x 1.70"	2.78	2.875"	5.80	1.66"	2.27	1.625" x 1.25"	1.35

STATE OF CALIFORNIA
DEPARTMENT OF TRANSPORTATION

CHAIN LINK FENCE

NO SCALE

RSP A85 DATED JULY 18, 2014 SUPERSEDES STANDARD PLAN A85 DATED MAY 20, 2011 - PAGE 112 OF THE STANDARD PLANS BOOK DATED 2010.

REVISED STANDARD PLAN RSP A85

7-1-14

Dist	COUNTY	ROUTE	POST MILES TOTAL PROJECT	SHEET No.	TOTAL SHEETS
06	Ker	99	49.6	38	106

REGISTERED CIVIL ENGINEER

October 19, 2012
PLANS APPROVAL DATE

REGISTERED PROFESSIONAL ENGINEER
Glenn DeCou
No. C34547
Exp. 9-30-13
CIVIL
STATE OF CALIFORNIA

THE STATE OF CALIFORNIA OR ITS OFFICERS OR AGENTS SHALL NOT BE RESPONSIBLE FOR THE ACCURACY OR COMPLETENESS OF SCANNED COPIES OF THIS PLAN SHEET.

TO ACCOMPANY PLANS DATED 11-16-15

2010 REVISED STANDARD PLAN RSP A85B

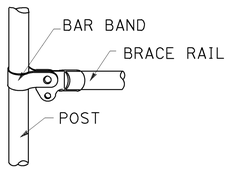

BRACE RAIL

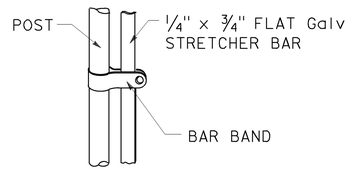

STRETCHER BAR

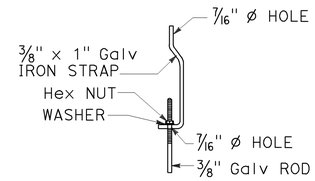

TRUSS TIGHTENER

NOTES:

1. All material for abutment connection to be galvanized.
2. The chain link fabric shall be replaced by barbed wire strands at 12" maximum centers between the double posts.
3. When the width of the culvert makes it necessary to anchor a post to the top of the culvert, a cast iron shoe or other device approved by the Engineer shall be used.
4. Fencing over stream and around headwall may also use Barbed Wire or Wire Mesh fencing with either wood post or steel post installation.
5. See Standard Plan A85 for Chain Link fence dimensions. See Standard Plan A86 for Barbed Wire and Wire Mesh fence dimensions and for wood post and steel post installation.

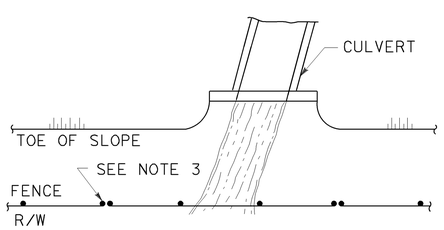

PLAN

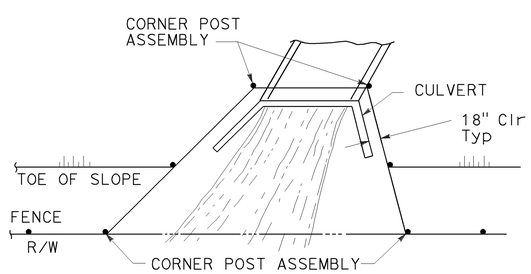

PLAN

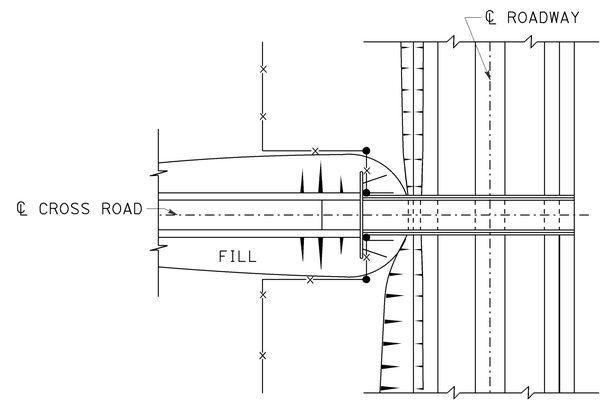

PLAN OF ROADWAY - OVERCROSSING

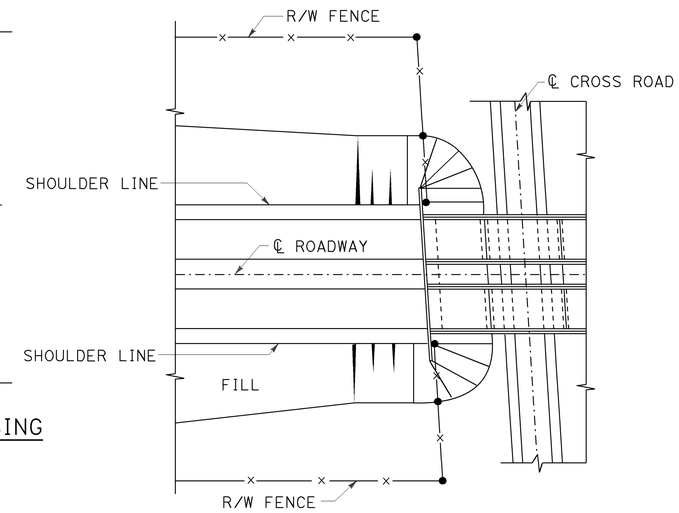

PLAN OF ROADWAY - UNDERCROSSING

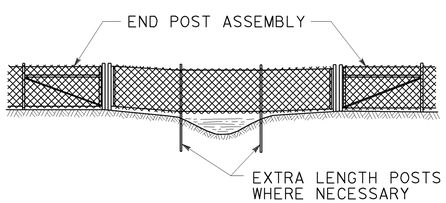

ELEVATION

INSTALLATION OVER STREAM

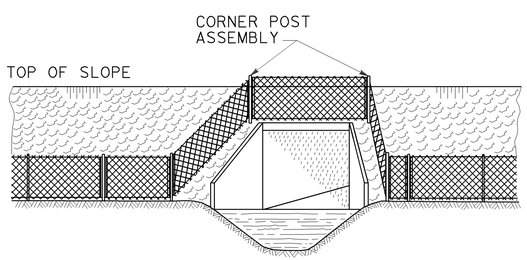

ELEVATION

INSTALLATION AROUND HEADWALL

See Note 4

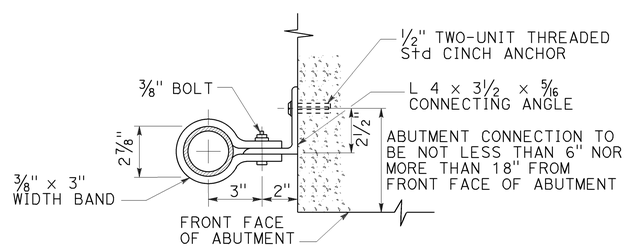

ABUTMENT CONNECTION

TYPICAL INSTALLATION AT BRIDGES

STATE OF CALIFORNIA
DEPARTMENT OF TRANSPORTATION

CHAIN LINK FENCE DETAILS

NO SCALE

RSP A85B DATED OCTOBER 19, 2012 SUPERSEDES STANDARD PLAN A85B
DATED MAY 20, 2011 - PAGE 114 OF THE STANDARD PLANS BOOK DATED 2010.

REVISED STANDARD PLAN RSP A85B

7-19-12

Dist	COUNTY	ROUTE	POST MILES TOTAL PROJECT	SHEET No.	TOTAL SHEETS
06	Ker	99	49.6	39	106

REGISTERED CIVIL ENGINEER

July 19, 2013
PLANS APPROVAL DATE

REGISTERED PROFESSIONAL ENGINEER Michael Janzen No. 44788 Exp. 03-31-14 CIVIL STATE OF CALIFORNIA

THE STATE OF CALIFORNIA OR ITS OFFICERS OR AGENTS SHALL NOT BE RESPONSIBLE FOR THE ACCURACY OR COMPLETENESS OF SCANNED COPIES OF THIS PLAN SHEET.

TO ACCOMPANY PLANS DATED 11-16-15

2010 REVISED STANDARD PLAN RSP A87A

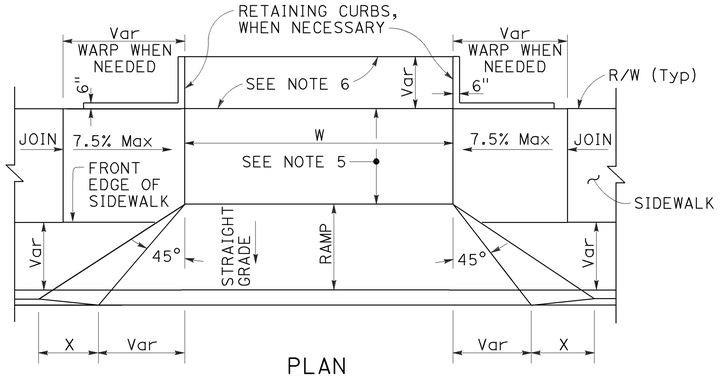

PLAN

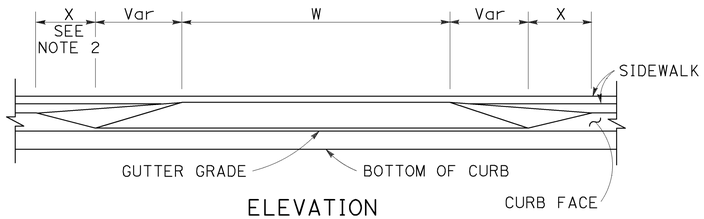

ELEVATION

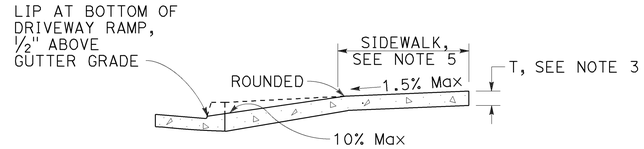

CASE A

Typical driveway, sidewalk not depressed

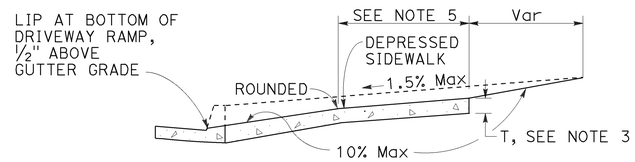

CASE B

Driveway with depressed sidewalk

SECTIONS

TABLE A

CURB TYPE	DIMENSIONS			
	"H1"	"H2"	"W1"	"W2"
A1-6	1'-2"	6"	7½"	1½"
A1-8	1'-4"	8"	8"	2"
A2-6	1'-0"	6"	2'-7½"	1½"
A2-8	1'-2"	8"	2'-8"	2"
A3-6	6"	5"	7¼"	1¼"
A3-8	8"	7"	7¾"	1¾"
B1-4	1'-0"	4"	7½"	2½"
B1-6	1'-2"	6"	9"	4"
B2-4	10"	4"	2'-7½"	2½"
B2-6	1'-0"	6"	2'-9"	4"
B3-4	4"	3"	7"	2"
B3-6	6"	5"	8½"	3½"
D-4	10"	4"	1'-6"	1'-1"
D-6	1'-0"	6"	2'-2"	1'-9"

CURB QUANTITIES

TYPE	CUBIC YARDS PER LINEAR FOOT
A1-6	0.02585
A1-8	0.03084
A2-6	0.05903
A2-8	0.06379
A3-6	0.01036
A3-8	0.01435
B1-4	0.02185
B1-6	0.02930
B2-4	0.05515
B2-6	0.06171
B3-4	0.00641
B3-6	0.01074
B4	0.05709
D-4	0.04083
D-6	0.06804
E	0.06661

DRIVEWAYS

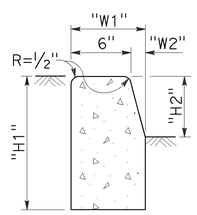

TYPE A1 CURBS

See Table A

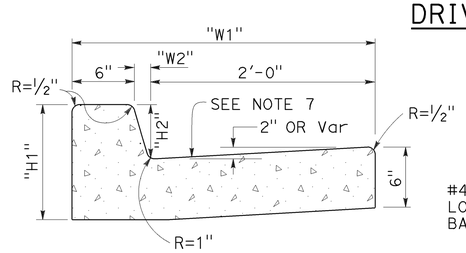

TYPE A2 CURBS

See Table A

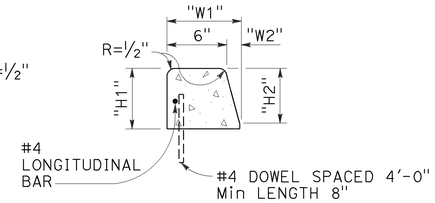

TYPE A3 CURBS

Superimposed on existing pavement
See Table A

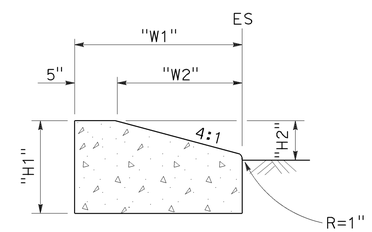

TYPE D CURBS

See Table A

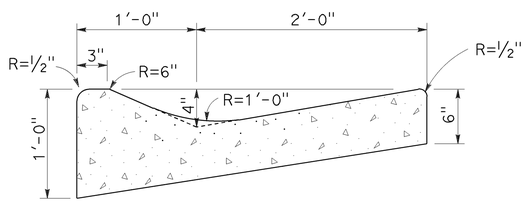

TYPE E CURB

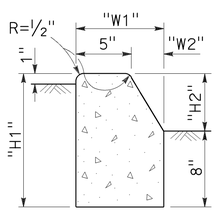

TYPE B1 CURBS

See Table A

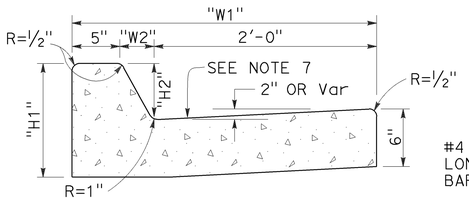

TYPE B2 CURBS

See Table A

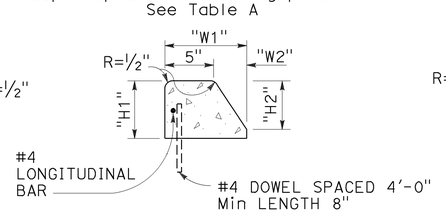

TYPE B3 CURBS

Superimposed on existing pavement
See Table A

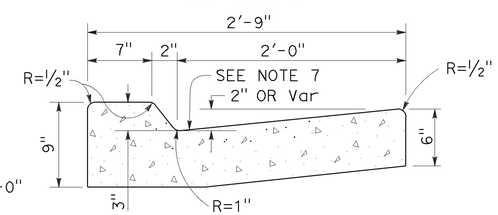

TYPE B4 CURBS

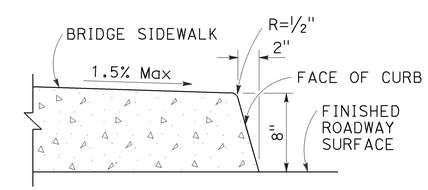

TYPE H CURB

On Bridges

CURBS

NOTES:

1. Case A driveway section typically applies.
2. X=3'-0" except for curb heights over 10" where 4:1 slopes shall be used on curb slope.
3. Sidewalk and ramp thickness "T" at driveway shall be 4" for residental and 6" for commercial.
4. Difference in slope of the driveway ramp and the slope of a line between the gutter and a point on the roadway 5'-0" from gutter line shall not exceed 15%. Reduce driveway ramp slope, not gutter slope, where required.
5. Minimum width of clear passageway for sidewalk shall be 4'-2".
6. Retaining curbs and acquisition of construction easement may be necessary for narrow sidewalks or curb heights in excess of 6".
7. Across the pedestrian route at curb ramp locations, the gutter pan slope shall not exceed 1" of depth for each 2'-0" of width.

STATE OF CALIFORNIA
DEPARTMENT OF TRANSPORTATION

CURBS AND DRIVEWAYS

NO SCALE

RSP A87A DATED JULY 19, 2013 SUPERSEDES STANDARD PLAN A87A
DATED MAY 20, 2011 - PAGE 119 OF THE STANDARD PLANS BOOK DATED 2010.

REVISED STANDARD PLAN RSP A87A

7-8-13

Dist	COUNTY	ROUTE	POST MILES TOTAL PROJECT	SHEET No.	TOTAL SHEETS
06	Ker	99	49.6	40	106

LICENSED LANDSCAPE ARCHITECT

July 19, 2013
PLANS APPROVAL DATE

THE STATE OF CALIFORNIA OR ITS OFFICERS OR AGENTS SHALL NOT BE RESPONSIBLE FOR THE ACCURACY OR COMPLETENESS OF SCANNED COPIES OF THIS PLAN SHEET.

LICENSED LANDSCAPE ARCHITECT — Gregory A. Belzer 2576 — 06 Revision Date 2-28-15 — Renewal Date 7-19-13 — Date — STATE OF CALIFORNIA

TO ACCOMPANY PLANS DATED 11-16-15

2010 REVISED STANDARD PLAN RSP H1

A

AB	AGGREGATE BASE
ABS	ACRYLONITRILE-BUTADIENE-STYRENE
AC	ASPHALT CONCRETE
ACC	ARMOR-CLAD CONDUCTORS
Adj	ADJACENT/ADJUSTABLE
AIC	AUXILIARY IRRIGATION CONTROLLER
Alt	ALTERNATIVE
AMEND	AMENDMENT
ARV	AIR RELEASE VALVE
AUTO	AUTOMATIC
AUX	AUXILIARY
AVB	ATMOSPHERIC VACUUM BREAKER

B

B&B	BALLED AND BURLAPPED
B/B	BRASS/BRONZE
B/B/PL	BRASS/BRONZE/PLASTIC
B/PL	BRASS/PLASTIC
BFM	BONDED FIBER MATRIX
Bit Ctd	BITUMINOUS COATED
BP	BOOSTER PUMP
BPA	BACKFLOW PREVENTER ASSEMBLY
BPE	BACKFLOW PREVENTER ENCLOSURE
BV	BALL VALVE

C

C	CONDUIT
CAP	CORRUGATED ALUMINUM PIPE
CARV	COMBINATION AIR RELEASE VALVE
CB	COUPLING BAND
CCA	CAM COUPLER ASSEMBLY
CEC	CONTROLLER ENCLOSURE CABINET
CHDPE	CORRUGATED HIGH DENSITY POLYETHYLENE
CL	CHAIN LINK
CNC	CONTROL AND NEUTRAL CONDUCTORS
Conc	CONCRETE
CP	COPPER PIPE
CS	COMPOST SOCK
CSP	CORRUGATED STEEL PIPE
CST	CENTER STRIP
CV	CHECK VALVE

D

Dia	DIAMETER
DIP	DUCTILE IRON PIPE
DIT	DRIP IRRIGATION TUBING
DG	DECOMPOSED GRANITE
DN	DIAMETER NOMINAL
DVA	DRIP VALVE ASSEMBLY

E

EC	EROSION CONTROL
ECTC	EROSION CONTROL TECHNOLOGY COUNCIL
Elect	ELECTRIC/ELECTRICAL
Elev	ELEVATION
ELL	ELBOW
ENCL	ENCLOSURE
EP	EDGE OF PAVEMENT
ES	EDGE OF SHOULDER
EST	END STRIP
ESTB	ESTABLISHMENT
ETW	EDGE OF TRAVELED WAY

F

F	FULL CIRCLE
F/P	FULL/PART CIRCLE
FCV	FLOW CONTROL VALVE
FERT	FERTILIZER
FG	FINISHED GRADE
FH	FLEXIBLE HOSE
FIPT	FEMALE IRON PIPE THREAD
FIS	FERTILIZER INJECTOR SYSTEM
FL	FLOW LINE
FR	FIBER ROLL
FS	FLOW SENSOR
FSC	FLOW SENSOR CABLE
FV	FLUSH VALVE

G

Galv	GALVANIZED
GARV	GARDEN VALVE
GARVA	GARDEN VALVE ASSEMBLY
GM	GRAVEL MULCH
GPH	GALLONS PER HOUR
GPM	GALLONS PER MINUTE
GSP	GALVANIZED STEEL PIPE
GV	GATE VALVE

H

H	HALF CIRCLE
HDPE	HIGH DENSITY POLYETHYLENE
HP	HORSEPOWER/HINGE POINT
HPL	HIGH PRESSURE LINE
Hwy	HIGHWAY

I

IC	IRRIGATION CONTROLLER
ICC	IRRIGATION CONTROLLER(S) IN CONTROLLER ENCLOSURE CABINET
ID	INSIDE DIAMETER
IFS	IRRIGATION FILTRATION SYSTEM
IPS	IRON PIPE SIZE
IPT	IRON PIPE THREAD
Irr	IRRIGATION

L

L	LENGTH

M

Max	MAXIMUM
MBGR	METAL BEAM GUARD RAILING
MCV	MANUAL CONTROL VALVE
MIC	MASTER IRRIGATION CONTROLLER
Min	MINIMUM
MIPT	MALE IRON PIPE THREAD
Misc	MISCELLANEOUS
Mtl	MATERIAL
MVP	MAINTENANCE VEHICLE PULLOUT

N

NCN	NO COMMON NAME
NL	NOZZLE LINE
No.	NUMBER
NPT	NATIONAL PIPE THREAD

O

O/C	ON CENTER
OD	OUTSIDE DIAMETER
OL	OVERLAP

P

P	PART CIRCLE
PB	PULL BOX
PCC	PORTLAND CEMENT CONCRETE
PE	POLYETHYLENE
Pkt	PACKET
PL	PLASTIC
PLS	PURE LIVE SEED
PLT	PLANT/PLANTING
PLT ESTB	PLANT ESTABLISHMENT
PM	POST MILE
PR	PRESSURE RATED
PRLV	PRESSURE RELIEF VALVE
PRV	PRESSURE REGULATING VALVE
PVC	POLYVINYL CHLORIDE
Pvmt	PAVEMENT

Q

Q	QUARTER CIRCLE
QCV	QUICK COUPLING VALVE

R

R	RADIUS
RCP	REINFORCED CONCRETE PIPE
RCV	REMOTE CONTROL VALVE
RCVM	REMOTE CONTROL VALVE (MASTER)
RCVMF	REMOTE CONTROL VALVE (MASTER) W/FLOW SENSOR
RCVP	REMOTE CONTROL VALVE W/PRESSURE REGULATOR
RCW	RECYCLED WATER
RECP	ROLLED EROSION CONTROL PRODUCT
REQ	REQUIRED
RICS	REMOTE IRRIGATION CONTROL SYSTEM
R/W	RIGHT OF WAY

S

S	SLIP
SCH	SCHEDULE
SF	STATE-FURNISHED
Shld	SHOULDER
Sq	SQUARE
SST	SIDE STRIP
Sta	STATION
Std	STANDARD
SW	SIDEWALK/SOUND WALL

T

T	THIRD CIRCLE/THREAD
TLS	TRUCK LOADING STANDPIPE
TQ	THREE QUARTER CIRCLE
TRM	TURF REINFORCEMENT MAT
TT	TWO-THIRDS CIRCLE
TWSA	TREE WELL SPRINKLER ASSEMBLY
Typ	TYPICAL

U

UG	UNDERGROUND

W

W	WIDTH
W/	WITH
WM	WATER METER
WS	WYE STRAINER
WSA	WYE STRAINER ASSEMBLY
WSP	WELDED STEEL PIPE
WWM	WELDED WIRE MESH

NOTE:
For additional abbreviations, see Standard Plans A10A and A10B.

STATE OF CALIFORNIA
DEPARTMENT OF TRANSPORTATION

LANDSCAPE AND EROSION CONTROL ABBREVIATIONS

NO SCALE

RSP H1 DATED JULY 19, 2013 SUPERSEDES STANDARD PLAN H1 DATED MAY 20, 2011 - PAGE 218 OF THE STANDARD PLANS BOOK DATED 2010.

REVISED STANDARD PLAN RSP H1

Dist	COUNTY	ROUTE	POST MILES TOTAL PROJECT	SHEET No.	TOTAL SHEETS
06	Ker	99	49.6	41	106

LICENSED LANDSCAPE ARCHITECT

November 15, 2013
PLANS APPROVAL DATE

LICENSED LANDSCAPE ARCHITECT — Gregory A. Belzer 2016 — 06-30-16 — 2-28-15 Renewal Date — 11-15-13 Date — STATE OF CALIFORNIA

THE STATE OF CALIFORNIA OR ITS OFFICERS OR AGENTS SHALL NOT BE RESPONSIBLE FOR THE ACCURACY OR COMPLETENESS OF SCANNED COPIES OF THIS PLAN SHEET.

TO ACCOMPANY PLANS DATED 11-16-15

EXISTING	NEW	ITEM DESCRIPTION
		WATER METER (WM)
		BACKFLOW PREVENTER ASSEMBLY (BPA)
		BACKFLOW PREVENTER ENCLOSURE (BPE)
		BOOSTER PUMP (BP)
		TRUCK LOADING STANDPIPE (TLS)
	FS	FLOW SENSOR (FS)
		MASTER IRRIGATION CONTROLLER (MIC)
		AUXILIARY IRRIGATION CONTROLLER (AIC)
		IRRIGATION CONTROLLER (IC) IRRIGATION CONTROLLER (IC) (BATTERY) IRRIGATION CONTROLLER (IC) (SOLAR) IRRIGATION CONTROLLER (IC) (TWO WIRE) IRRIGATION CONTROLLER(S) IN CONTROLLER ENCLOSURE CABINET (ICC)
acc	ACC	ARMOR-CLAD CONDUCTORS (ACC)
cnc	CNC	CONTROL AND NEUTRAL CONDUCTORS (CNC)
		IRRIGATION CONDUIT
		EXTEND IRRIGATION CONDUIT
dip	DIP	DUCTILE IRON PIPE (SUPPLY LINE) (MAIN) (DIP)
		GALVANIZED STEEL PIPE (SUPPLY LINE) (MAIN) (GSP)
		GALVANIZED STEEL PIPE (SUPPLY LINE) (LATERAL) (GSP)
		PLASTIC PIPE (SUPPLY LINE) (MAIN)
		PLASTIC PIPE (SUPPLY LINE) (LATERAL)
cp	CP	COPPER PIPE (SUPPLY LINE)
dit	DIT	DRIP IRRIGATION TUBING
		REMOTE CONTROL VALVE (RCV) REMOTE CONTROL VALVE (MASTER) (RCVM) REMOTE CONTROL VALVE (MASTER) W/FLOW METER (RCVMF)
P	P	REMOTE CONTROL VALVE W/PRESSURE REGULATOR (RCVP)
		EXISTING MANUAL CONTROL VALVE (MCV)
	V	DRIP VALVE ASSEMBLY (DVA)
	Y	WYE STRAINER ASSEMBLY (WSA)

EXISTING	NEW	ITEM DESCRIPTION
		GATE VALVE (GV)
		BALL VALVE (BV)
		QUICK COUPLING VALVE (QCV)
		CAM COUPLER ASSEMBLY (CCA)
		GARDEN VALVE ASSEMBLY (GARVA)
		PRESSURE REGULATING VALVE (PRV)
		PRESSURE RELIEF VALVE (PRLV)
		FLOW CONTROL VALVE (FCV)
		COMBINATION AIR RELEASE VALVE (CARV)
		CHECK VALVE (CV)
		FLUSH VALVE (FV)
		EXISTING NOZZLE LINE W/TURNING UNION
		EXISTING IRRIGATION SYSTEM
		EXISTING IRRIGATION SYSTEM TO BE REMOVED
		CHAIN LINK GATE
		QUICK COUPLING VALVE W/SPRINKLER PROTECTOR
3	3	SPRINKLER W/SPRINKLER PROTECTOR
	C	CONNECT TO EXISTING SYSTEM
		CAP
		CAP EXISTING
	\\\FR\\\	FIBER ROLL
	\\\CS\\\	COMPOST SOCK

RCV SIZE
IRRIGATION CONTROLLER
CONTROLLER STATION
VALVE IN PARALLEL (IF APPLICABLE)
GPM
QUANTITY OF SPRINKLERS (WHEN SHOWN)

* 2½"-A-2b-40-60

VALVE CODE

* VALVE CODES FOR EXISTING VALVES ARE SHOWN IN A DASHED ENCLOSURE.

STATE OF CALIFORNIA
DEPARTMENT OF TRANSPORTATION

LANDSCAPE AND EROSION CONTROL SYMBOLS

NO SCALE

RSP H2 DATED NOVEMBER 15, 2013 SUPERSEDES RSP H2 DATED JULY 19, 2013 AND STANDARD PLAN H2 DATED MAY 20, 2011 - PAGE 219 OF THE STANDARD PLANS BOOK DATED 2010.

REVISED STANDARD PLAN RSP H2

2010 REVISED STANDARD PLAN RSP H2

10-9-13

Dist	COUNTY	ROUTE	POST MILES TOTAL PROJECT	SHEET No.	TOTAL SHEETS
06	Ker	99	49.6	42	106

Gregory A. Belzer
LICENSED LANDSCAPE ARCHITECT

July 19, 2013
PLANS APPROVAL DATE

LICENSED LANDSCAPE ARCHITECT
Gregory A. Belzer 2516
Gregory A. Belzer
Original Date
2-28-15
Renewal Date
7-19-13
Date
STATE OF CALIFORNIA

THE STATE OF CALIFORNIA OR ITS OFFICERS OR AGENTS SHALL NOT BE RESPONSIBLE FOR THE ACCURACY OR COMPLETENESS OF SCANNED COPIES OF THIS PLAN SHEET.

TO ACCOMPANY PLANS DATED 11-16-15

2010 REVISED STANDARD PLAN RSP H6

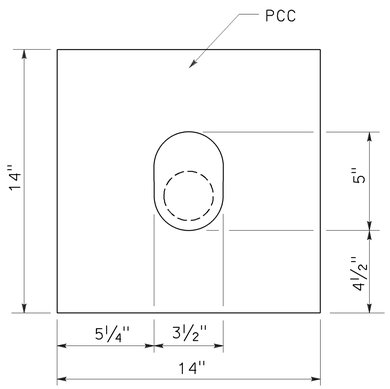

PLAN

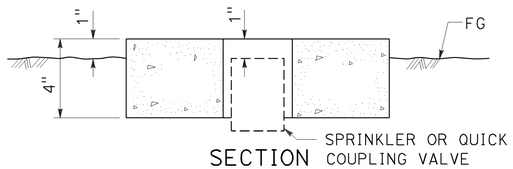

SECTION

SPRINKLER PROTECTOR TYPE I

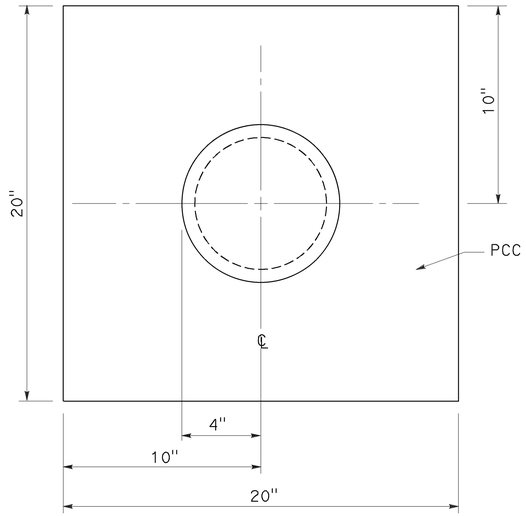

PLAN

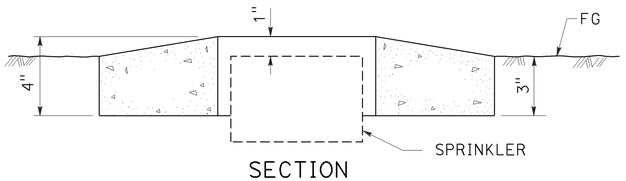

SECTION

SPRINKLER PROTECTOR TYPE II

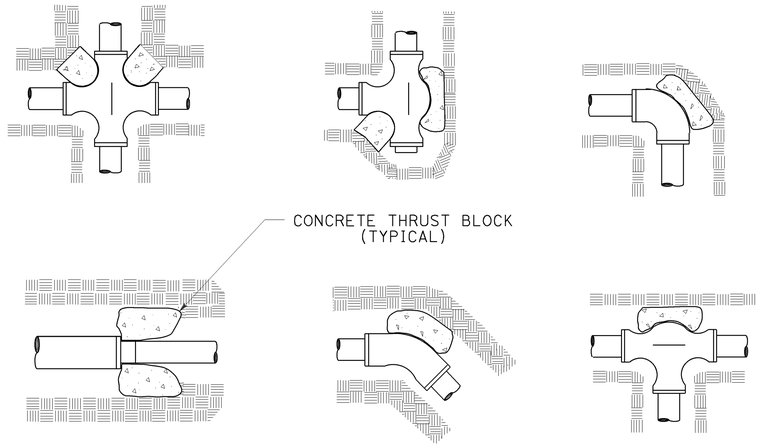

TYPICAL THRUST BLOCKS

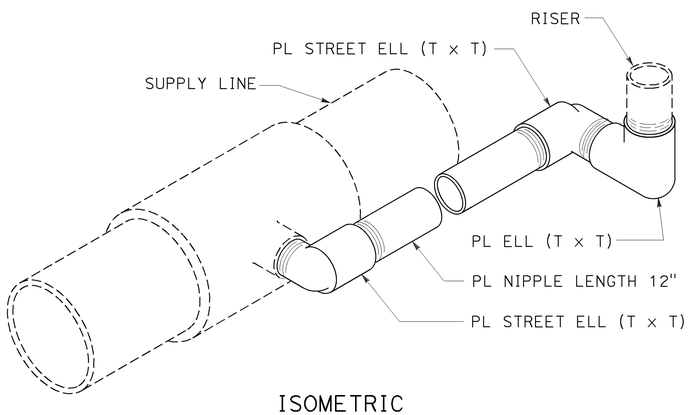

ISOMETRIC

POP-UP SPRINKLER ASSEMBLY TYPE I

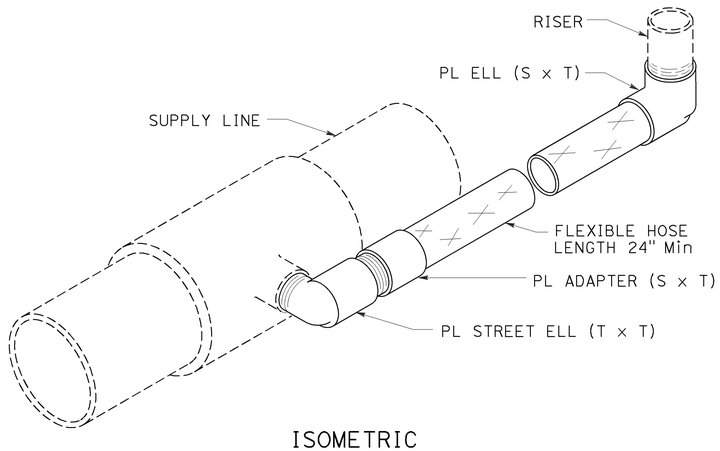

ISOMETRIC

POP-UP SPRINKLER ASSEMBLY TYPE II

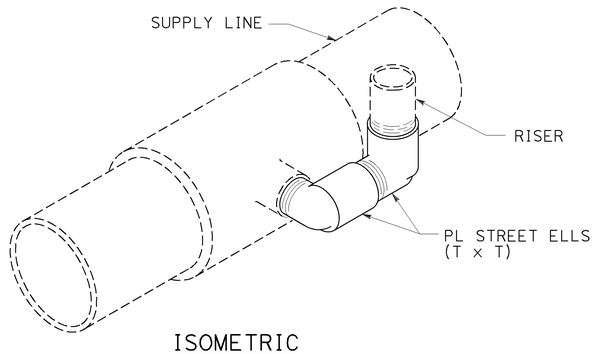

ISOMETRIC

POP-UP SPRINKLER ASSEMBLY TYPE III

STATE OF CALIFORNIA
DEPARTMENT OF TRANSPORTATION

LANDSCAPE DETAILS

NO SCALE

RSP H6 DATED JULY 19, 2013 SUPERSEDES STANDARD PLAN H6
DATED MAY 20, 2011 - PAGE 223 OF THE STANDARD PLANS BOOK DATED 2010.

REVISED STANDARD PLAN RSP H6

6-28-13

Dist	COUNTY	ROUTE	POST MILES TOTAL PROJECT	SHEET No.	TOTAL SHEETS
06	Ker	99	49.6	43	106

LICENSED LANDSCAPE ARCHITECT

July 19, 2013
PLANS APPROVAL DATE

LICENSED LANDSCAPE ARCHITECT Gregory A. Belzer 2576 STATE OF CALIFORNIA
Gregory A. Belzer
09-30-14
Expiration Date
2-28-15
Renewal Date
7-19-13
Date

THE STATE OF CALIFORNIA OR ITS OFFICERS OR AGENTS SHALL NOT BE RESPONSIBLE FOR THE ACCURACY OR COMPLETENESS OF SCANNED COPIES OF THIS PLAN SHEET.

TO ACCOMPANY PLANS DATED 11-16-15

2010 REVISED STANDARD PLAN RSP H7

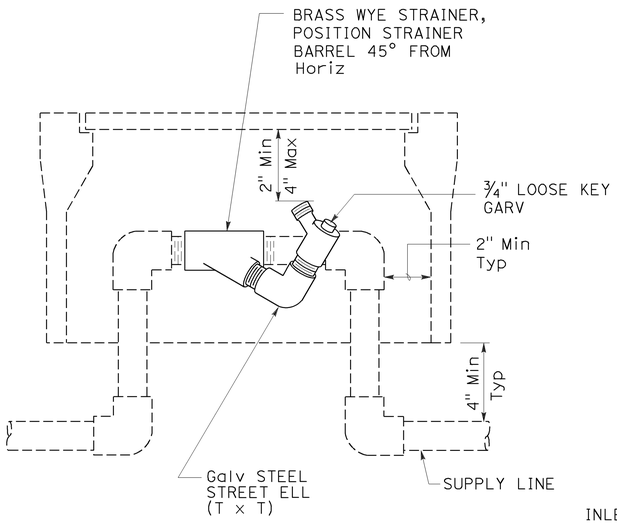

ELEVATION
WYE STRAINER ASSEMBLY

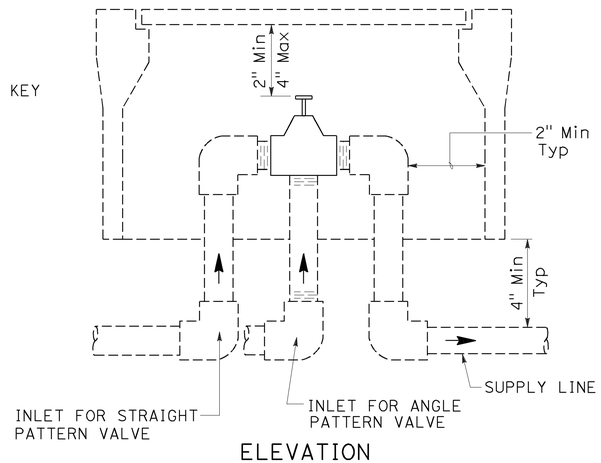

ELEVATION
VALVE

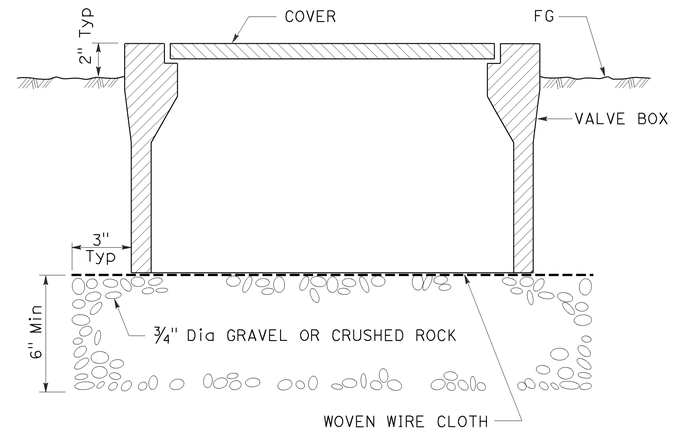

SECTION
VALVE BOX

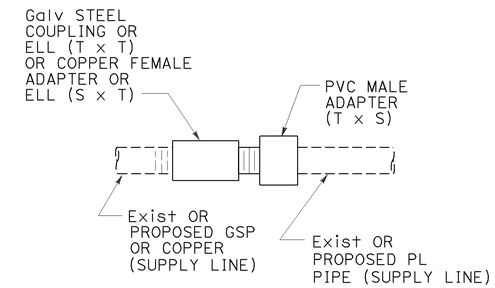

GALVANIZED OR COPPER PIPE CONNECTION TO PLASTIC PIPE

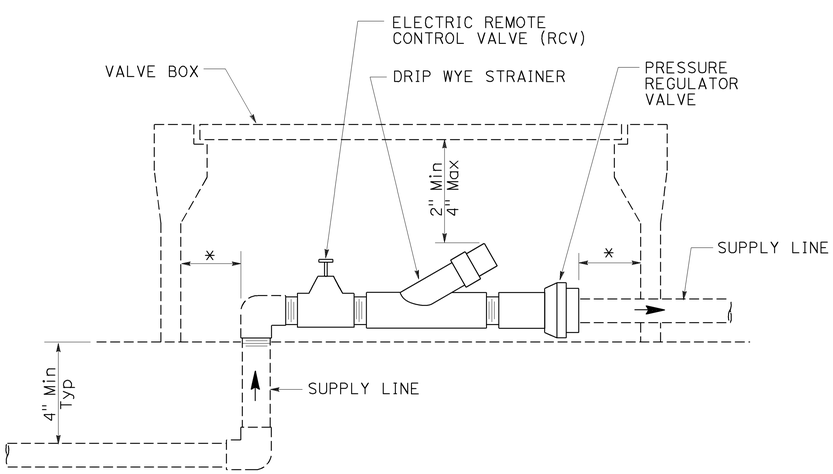

ELEVATION
DRIP VALVE ASSEMBLY

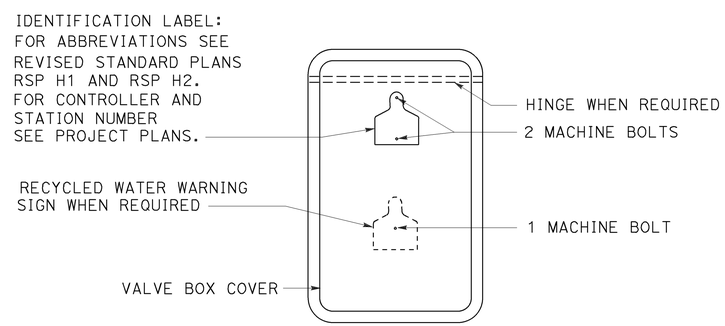

PLAN

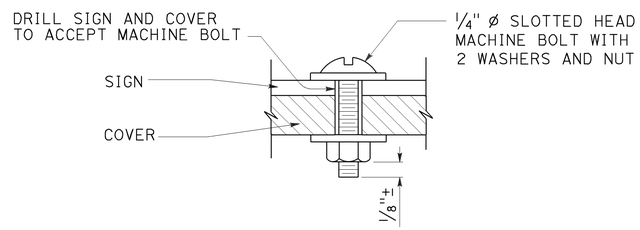

SECTION
VALVE BOX IDENTIFICATION

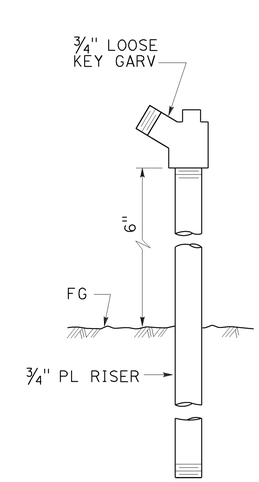

ELEVATION
GARDEN VALVE ASSEMBLY

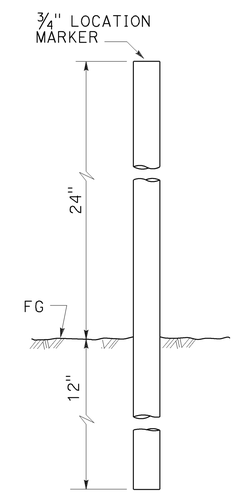

ELEVATION
LOCATION MARKER

GARDEN VALVE ASSEMBLY

STATE OF CALIFORNIA
DEPARTMENT OF TRANSPORTATION

LANDSCAPE DETAILS

NO SCALE

RSP H7 DATED JULY 19, 2013 SUPERSEDES STANDARD PLAN H7
DATED MAY 20, 2011 - PAGE 224 OF THE STANDARD PLANS BOOK DATED 2010.

REVISED STANDARD PLAN RSP H7

6-20-13

Dist	COUNTY	ROUTE	POST MILES TOTAL PROJECT	SHEET No.	TOTAL SHEETS
06	Ker	99	49.6	44	106

LICENSED LANDSCAPE ARCHITECT

April 15, 2016
PLANS APPROVAL DATE

LICENSED LANDSCAPE ARCHITECT
Michael V. Ferrara 3859
Licensed Architect
9-30-17
Renewal Date
Date
STATE OF CALIFORNIA

THE STATE OF CALIFORNIA OR ITS OFFICERS OR AGENTS SHALL NOT BE RESPONSIBLE FOR THE ACCURACY OR COMPLETENESS OF SCANNED COPIES OF THIS PLAN SHEET.

TO ACCOMPANY PLANS DATED 11-16-15

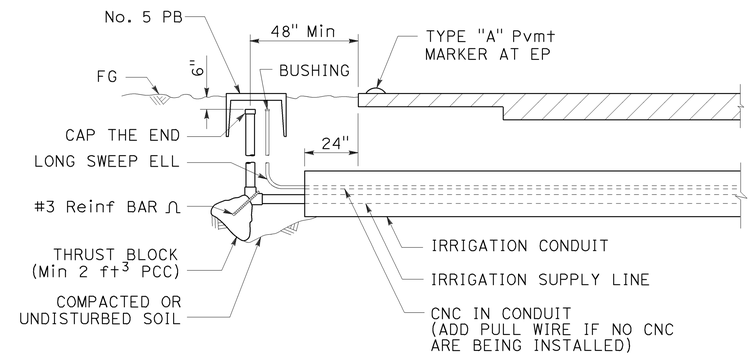

SECTION

IRRIGATION CONDUIT

UNDER TRAVELED WAY

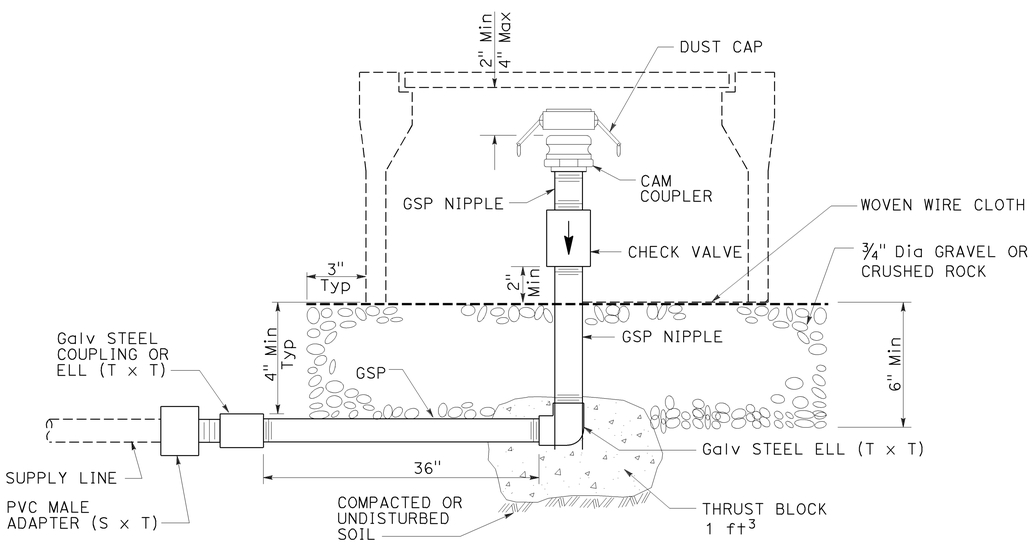

ELEVATION

CAM COUPLER ASSEMBLY

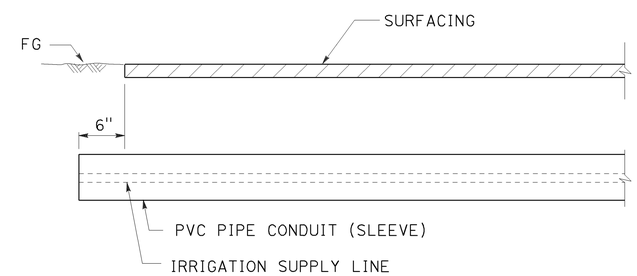

SECTION

PVC PIPE CONDUIT (SLEEVE)

UNDER SIDEWALKS, DRIVEWAYS AND PATHS

STATE OF CALIFORNIA
DEPARTMENT OF TRANSPORTATION

LANDSCAPE DETAILS

NO SCALE

RSP H9 DATED APRIL 15, 2016 SUPERSEDES RSP H9 DATED JULY 19, 2013 AND STANDARD PLAN H9 DATED MAY 20, 2011 - PAGE 226 OF THE STANDARD PLANS BOOK DATED 2010.

REVISED STANDARD PLAN RSP H9

2010 REVISED STANDARD PLAN RSP H9

3-24-16

Dist	COUNTY	ROUTE	POST MILES TOTAL PROJECT	SHEET No.	TOTAL SHEETS
06	Ker	99	49.6	45	106

REGISTERED CIVIL ENGINEER

July 19, 2013
PLANS APPROVAL DATE

REGISTERED PROFESSIONAL ENGINEER
Gurinderpal Bhullar
No. C48815
Exp. 9-30-14
CIVIL
STATE OF CALIFORNIA

THE STATE OF CALIFORNIA OR ITS OFFICERS OR AGENTS SHALL NOT BE RESPONSIBLE FOR THE ACCURACY OR COMPLETENESS OF SCANNED COPIES OF THIS PLAN SHEET.

TO ACCOMPANY PLANS DATED 11-16-15

2010 REVISED STANDARD PLAN RSP T9

TABLE 1

TAPER LENGTH CRITERIA AND CHANNELIZING DEVICE SPACING

SPEED (S)	MINIMUM TAPER LENGTH * FOR WIDTH OF OFFSET 12 FEET (W)				MAXIMUM CHANNELIZING DEVICE SPACING		
					X	Y	Z **
	TANGENT 2L	MERGING L	SHIFTING L/2	SHOULDER L/3	TAPER	TANGENT	CONFLICT
mph	ft	ft	ft	ft	ft	ft	ft
20	160	80	40	27	20	40	10
25	250	125	63	42	25	50	12
30	360	180	90	60	30	60	15
35	490	245	123	82	35	70	17
40	640	320	160	107	40	80	20
45	1080	540	270	180	45	90	22
50	1200	600	300	200	50	100	25
55	1320	660	330	220	55	110	27
60	1440	720	360	240	60	120	30
65	1560	780	390	260	65	130	32
70	1680	840	420	280	70	140	35

* - For other offsets, use the following merging taper length formula for L:
For speed of 40 mph or less, $L = WS^2/60$
For speed of 45 mph or more, $L = WS$

Where: L = Taper length in feet
W = Width of offset in feet
S = Posted speed limit, off-peak 85th-percentile speed prior to work starting, or the anticipated operating speed in mph

** - Use for taper and tangent sections where there are no pavement markings or where there is a conflict between existing pavement markings and channelizers (CA).

TABLE 2

LONGITUDINAL BUFFER SPACE AND FLAGGER STATION SPACING

SPEED *	Min D **	DOWNGRADE Min D ***		
		-3%	-6%	-9%
mph	ft	ft	ft	ft
20	115	116	120	126
25	155	158	165	173
30	200	205	215	227
35	250	257	271	287
40	305	315	333	354
45	360	378	400	427
50	425	446	474	507
55	495	520	553	593
60	570	598	638	686
65	645	682	728	785
70	730	771	825	891

* - Speed is posted speed limit, off-peak 85th-percentile speed prior to work starting, or the anticipated operating speed in mph

** - Longitudinal buffer space or flagger station spacing

*** - Use on sustained downgrade steeper than -3 percent and longer than 1 mile.

TABLE 3

ADVANCE WARNING SIGN SPACING

ROAD TYPE	DISTANCE BETWEEN SIGNS *		
	A	B	C
	ft	ft	ft
URBAN - 25 mph OR LESS	100	100	100
URBAN - MORE THAN 25 mph TO 40 mph	250	250	250
URBAN - MORE THAN 40 mph	350	350	350
RURAL	500	500	500
EXPRESSWAY / FREEWAY	1000	1500	2640

* - The distances are approximate, are intended for guidance purposes only, and should be applied with engineering judgment. These distances should be adjusted by the Engineer for field conditions, if necessary, by increasing or decreasing the recommmended distances.

STATE OF CALIFORNIA
DEPARTMENT OF TRANSPORTATION

TRAFFIC CONTROL SYSTEM TABLES FOR LANE AND RAMP CLOSURES

NO SCALE

RSP T9 DATED JULY 19, 2013 SUPERSEDES RSP T9 DATED APRIL 19, 2013 THAT SUPPLEMENTS THE STANDARD PLANS BOOK DATED 2010.

REVISED STANDARD PLAN RSP T9

TO ACCOMPANY PLANS DATED 11-16-15

Dist	COUNTY	ROUTE	POST MILES TOTAL PROJECT	SHEET No.	TOTAL SHEETS
06	Ker	99	49.6	46	106

REGISTERED CIVIL ENGINEER

April 19, 2013
PLANS APPROVAL DATE

REGISTERED PROFESSIONAL ENGINEER Gurinderpal Bhullar No. C48815 Exp. 9-30-14 CIVIL STATE OF CALIFORNIA

THE STATE OF CALIFORNIA OR ITS OFFICERS OR AGENTS SHALL NOT BE RESPONSIBLE FOR THE ACCURACY OR COMPLETENESS OF SCANNED COPIES OF THIS PLAN SHEET.

NOTES:

See Revised Standard Plan RSP T9 for tables.

Use cone spacing X for taper segment, Y for tangent segment or Z for conflict situations, as approriate, per Table 1, unless X, Y, or Z cone spacing is shown on this sheet.

Unless otherwise specified in the special provisions, all temporary warning signs shall have black legend on fluorescent orange background.

California codes are designated by (CA). Otherwise, Federal (MUTCD) codes are shown.

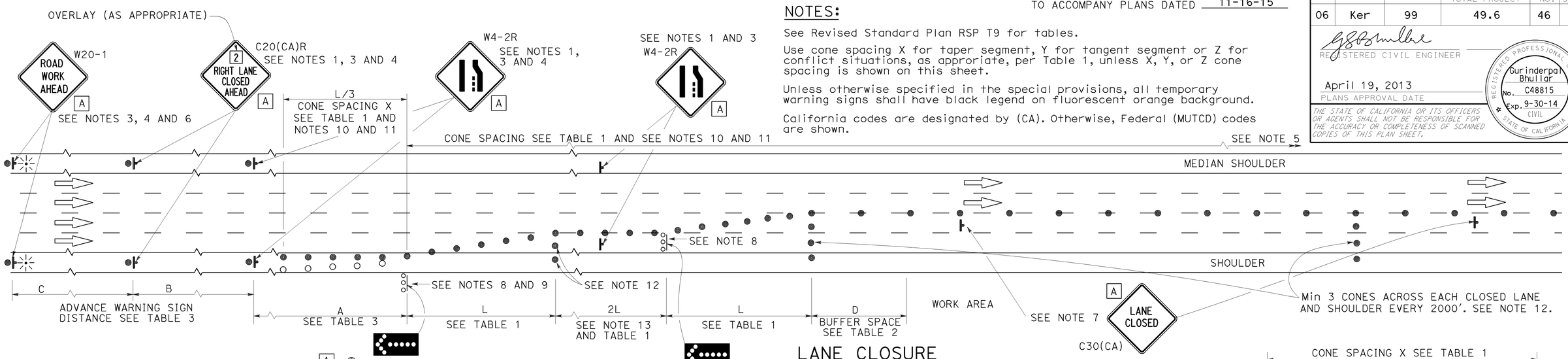

LANE CLOSURE

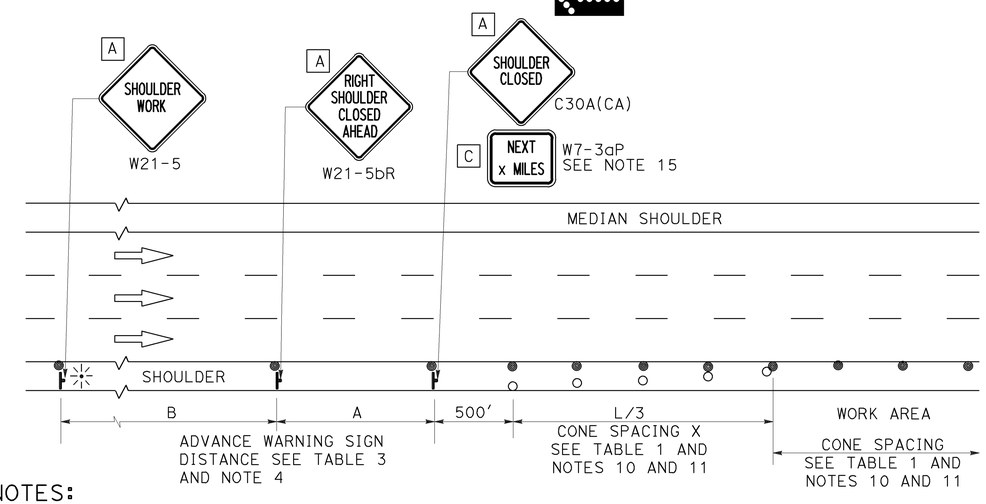

SHOULDER CLOSURE

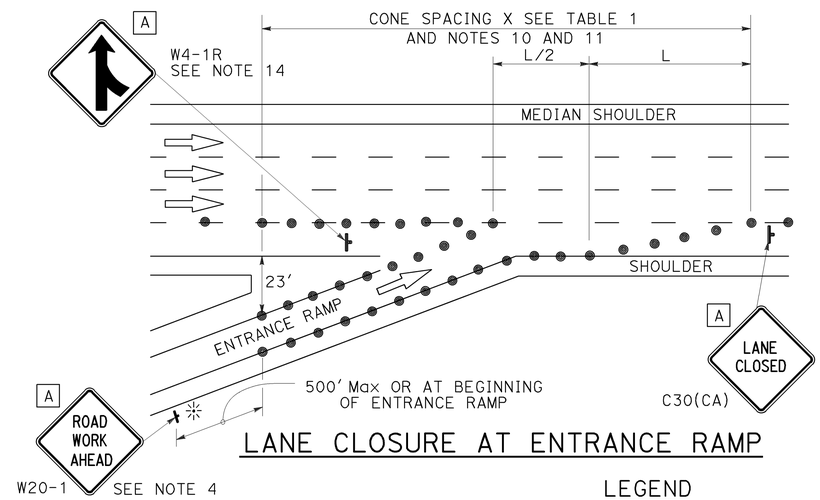

LANE CLOSURE AT ENTRANCE RAMP

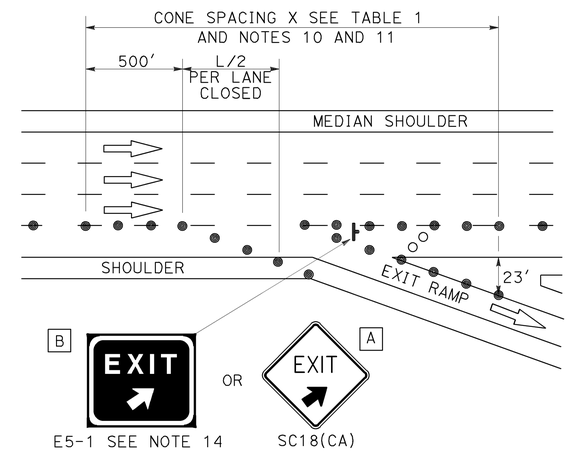

LANE CLOSURE AT EXIT RAMP

NOTES:

1. Median lane closures shall conform to the details as shown except that C20(CA)L and W4-2L signs shall be used.
2. At least one person shall be assigned to provide full time maintenance of traffic control devices for lane closures.
3. Duplicate sign installations are not required:
   a) On opposite shoulder if at least one-half of the available lanes remain open to traffic.
   b) In the median if the width of the median shoulder is less than 8' and the outside lanes are to be closed.
4. Each advance warning sign on each side of the roadway shall be equipped with at least two flags for daytime closure. Each flag shall be at least 16" x 16" in size and shall be orange or fluorescent red-orange in color. Flashing beacons shall be placed at the locations indicated for lane closure during hours of darkness.
5. A G20-2 "END ROAD WORK" sign, with minimum size of 48" x 24" as appropriate, shall be placed at the end of the lane closure unless the end of work area is obvious or ends within a larger project's limits.
6. If the W20-1 sign would follow within 2000' of a stationary W20-1 or G20-1 "ROAD WORK NEXT _____ MILES", use a C20(CA) sign for the first advance warning sign.
7. Place a C30(CA) sign every 2000' throughout length of lane closure.
8. One flashing arrow sign for each lane closed. The flashing arrow signs shall be Type I.
9. A minimum 1500' of sight distance shall be provided where possible for vehicles approaching the first flashing arrow sign. Lane closures shall not begin at top of crest vertical curve or on a horizontal curve.
10. All cones used for lane closures during the hours of darkness shall be fitted with retroreflective bands (or sleeves) as specified in the specifications.
11. Portable delineators, placed at one-half the spacing indicated for traffic cones may be used instead of cones for daytime closures only.
12. Unless otherwise specified in the special provisions, a minimum of 3 cones shall be placed transversely across each closed lane and shoulder at each location where a taper across a traffic lane ends and every 2000' as shown on the "Lane Closure" detail. Two Type II barricades may be used instead of the 3 cones. The transverse alignment of the cones or barricades on the closed shoulder may be shifted from the transverse alignment to provide access to the work.
13. Unless otherwise specified in the special provisions, the 2L tangent shown along lane lines shall be used between the L tapers required for each closed traffic lane.
14. Unless otherwise specified in the special provisions, the E5-1 or SC18(CA) and W4-1 signs shall be used as shown.
15. A W7-3aP "NEXT____ MILES" plaque must be used if theshoulder closure extends beyond the distance that can be perceived by road users.

LEGEND

- TRAFFIC CONE
- TRAFFIC CONE (OPTIONAL TAPER)
- TEMPORARY TRAFFIC CONTROL SIGN
- FLASHING ARROW SIGN (FAS)
- FAS SUPPORT OR TRAILER
- PORTABLE FLASHING BEACON

SIGN PANEL SIZE (Min)

A	48" x 48"
B	72" x 60"
C	36" x 30"

STATE OF CALIFORNIA
DEPARTMENT OF TRANSPORTATION

TRAFFIC CONTROL SYSTEM FOR LANE CLOSURE ON FREEWAYS AND EXPRESSWAYS

NO SCALE

RSP T10 DATED APRIL 19, 2013 SUPERSEDES STANDARD PLAN T10 DATED MAY 20, 2011 - PAGE 237 OF THE STANDARD PLANS BOOK DATED 2010.

REVISED STANDARD PLAN RSP T10

2010 REVISED STANDARD PLAN RSP T10

12-18-12

TO ACCOMPANY PLANS DATED 11-16-15

Dist	COUNTY	ROUTE	POST MILES TOTAL PROJECT	SHEET No.	TOTAL SHEETS
06	Ker	99	49.6	47	106

REGISTERED CIVIL ENGINEER

April 19, 2013
PLANS APPROVAL DATE

REGISTERED PROFESSIONAL ENGINEER Gurinderpal Bhullar No. C48815 Exp. 9-30-14 CIVIL STATE OF CALIFORNIA

THE STATE OF CALIFORNIA OR ITS OFFICERS OR AGENTS SHALL NOT BE RESPONSIBLE FOR THE ACCURACY OR COMPLETENESS OF SCANNED COPIES OF THIS PLAN SHEET.

NOTES: See Revised Standard Plan RSP T9 for tables.

Use cone spacing X for taper segment, Y for tangent segment or Z for conflict situations, as approriate, per Table 1, unless X, Y, or Z cone spacing is shown on this sheet.

Unless otherwise specified in the special provisions, all temporary warning signs shall have black legend on fluorescent orange background.

California codes are designated by (CA). Otherwise, Federal (MUTCD) codes are shown.

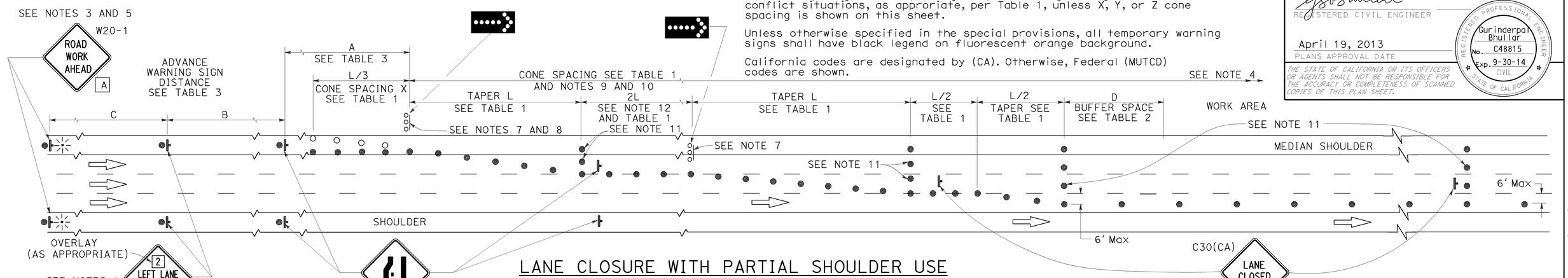

LANE CLOSURE WITH PARTIAL SHOULDER USE

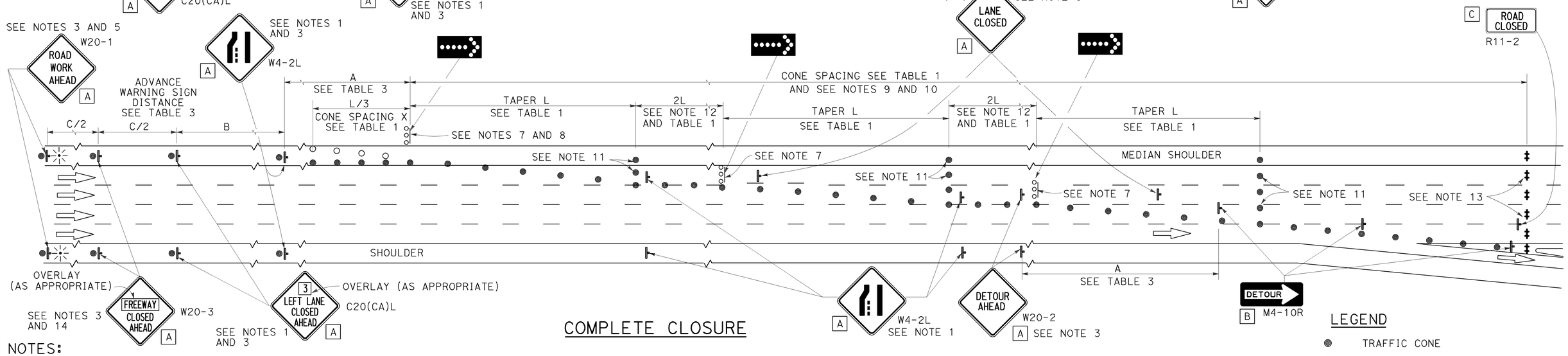

COMPLETE CLOSURE

NOTES:

1. Lane closures on the right side using partial median shoulder as a traffic lane shall conform to the details as shown except that C20(CA)R and W4-2R signs shall be used.
2. At least one person shall be assigned to provide full time maintenance of traffic control devices for lane closures.
3. Each advance warning sign on each side of the roadway shall be equipped with at least two flags for daytime closure. Each flag shall be at least 16" X 16" in size and shall be orange or fluorescent red-orange in color. Flashing beacons shall be placed at the locations indicated for lane closure during hours of darkness.
4. A G20-2 "END ROAD WORK" sign, with minimum size of 48" x 24" as appropriate, shall be placed at the end of the lane closure unless the end of work area is obvious or ends within a larger project's limits.
5. If the W20-1 sign would follow within 2000' of a stationary W20-1 or G20-1 "ROAD WORK NEXT ___ MILES", use a C20(CA) sign for the first advance warning sign.
6. Place a C30(CA) sign every 2000' throughout length of lane closure.
7. One flashing arrow sign for each lane closed. The flashing arrow signs shall be Type I.
8. A minimum 1500' of sight distance shall be provided where possible for vehicles approaching the first flashing arrow sign. Lane closures shall not begin at the top of crest vertical curve or on a horizontal curve.
9. All cones used for lane closures during the hours of darkness shall be fitted with retroreflective bands (or sleeves) as specified in the specifications.
10. Portable delineators, placed at one-half the spacing indicated for traffic cones, may be used instead of cones for daytime closures only.
11. Unless otherwise specified in the special provisions, a minimum of 3 cones shall be placed transversely across each closed lane and shoulder at each location where a taper across a traffic lane ends and every 2000' as shown on the "Lane Closure With Partial Shoulder Use" detail. Two Type II barricades may be used instead of the 3 cones. The transverse alignment of the cones or barricades on the closed shoulder may be shifted from the transverse alignment to provide access to the work.
12. Unless otherwise specified in the special provisions, the 2L tangent shown along lane lines shall be used between the L tapers required for each closed traffic lane.
13. A minimum of Two Type II or III barricades shall be placed across each closed lane and shoulder at the location shown and every 2000' within the complete closure area. Within the complete closure area, the transverse alignment of the barricades on the closed shoulder may be shifted from the transverse alignment to provide access to the work.
14. When specified in the special provisions, a W20-2 "DETOUR AHEAD" sign is to be used in place of the W20-3 "FREEWAY CLOSED AHEAD" sign.

SIGN PANEL SIZE (Min)

A	48" x 48"
B	48" x 18"
C	48" x 30"

LEGEND

- TRAFFIC CONE
- TRAFFIC CONE (OPTIONAL TAPER)
- TEMPORARY TRAFFIC CONTROL SIGN
- FLASHING ARROW SIGN (FAS)
- FAS SUPPORT OR TRAILER
- PORTABLE FLASHING BEACON

STATE OF CALIFORNIA
DEPARTMENT OF TRANSPORTATION

TRAFFIC CONTROL SYSTEM FOR LANE CLOSURES ON FREEWAYS AND EXPRESSWAYS

NO SCALE

RSP T10A DATED APRIL 19, 2013 SUPERSEDES STANDARD PLAN T10A DATED MAY 20, 2011 - PAGE 238 OF THE STANDARD PLANS BOOK DATED 2010.

REVISED STANDARD PLAN RSP T10A

2010 REVISED STANDARD PLAN RSP T10A

12-18-12

Dist	COUNTY	ROUTE	POST MILES TOTAL PROJECT	SHEET No.	TOTAL SHEETS
06	Ker	99	49.6	48	106

REGISTERED CIVIL ENGINEER

April 19, 2013
PLANS APPROVAL DATE

REGISTERED PROFESSIONAL ENGINEER Gurinderpal Bhullar No. C48815 Exp. 9-30-14 CIVIL STATE OF CALIFORNIA

THE STATE OF CALIFORNIA OR ITS OFFICERS OR AGENTS SHALL NOT BE RESPONSIBLE FOR THE ACCURACY OR COMPLETENESS OF SCANNED COPIES OF THIS PLAN SHEET.

TO ACCOMPANY PLANS DATED 11-16-15

TYPICAL RAMP CLOSURES

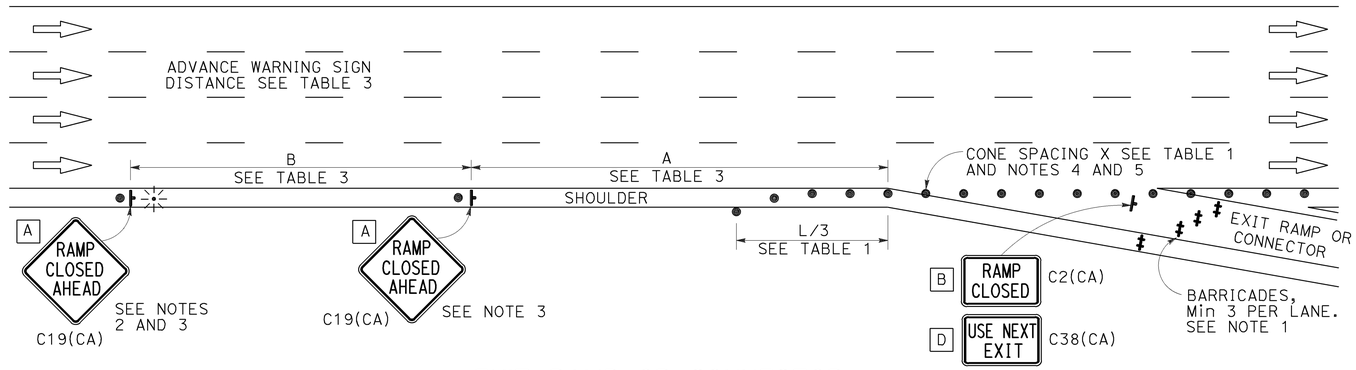

EXIT RAMP OR CONNECTOR

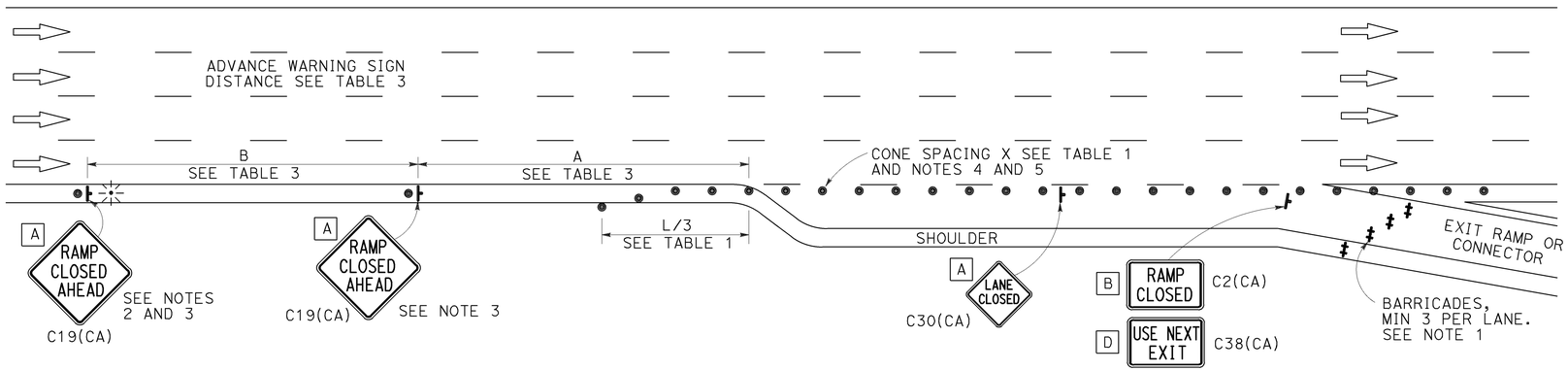

EXIT RAMP OR CONNECTOR WITH ADDITIONAL LANE

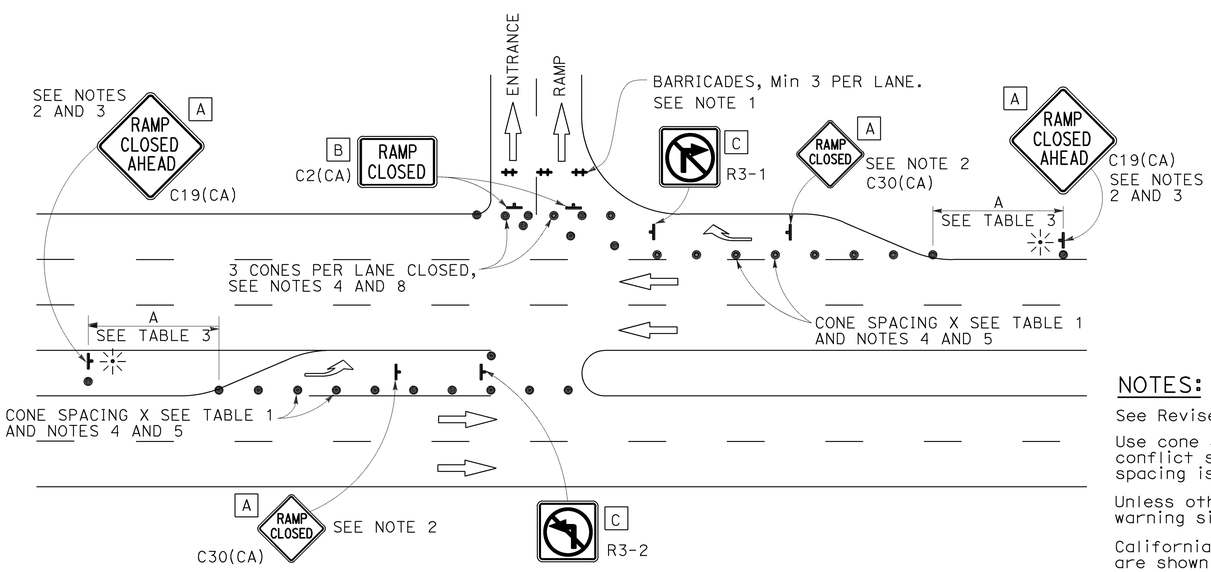

ENTRANCE RAMP WITH TURNING POCKETS

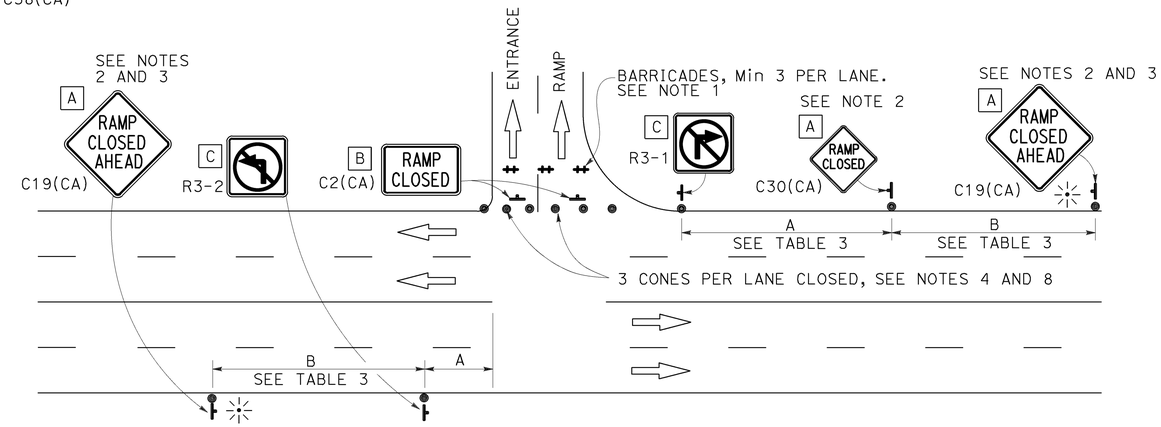

ENTRANCE RAMP WITHOUT TURNING POCKETS

SIGN PANEL SIZE (Min)

- A 48" × 48"
- B 48" × 30"
- C 36" × 36"
- D 48" × 36"

LEGEND

- TRAFFIC CONE
- TEMPORARY TRAFFIC CONTROL SIGN
- BARRICADES
- PORTABLE FLASHING BEACON

NOTES:

1. Barricades shall be Type I, II, or III for closures lasting one week or less and Type III for closures lasting longer than one week.
2. In addition to placing the C19(CA) "RAMP CLOSED AHEAD" and C30(CA) "RAMP CLOSED" signs, black on orange overlay plates with the word "CLOSED" may be mounted, as directed by the Engineer, on all guide signs that refer to the closed ramp. The letter size on the overlay shall be the same as the guide sign.
3. Each advance C19(CA) "RAMP CLOSED AHEAD" sign shall be equipped with at least two flags for daytime closure. Each flag shall be at least 16" × 16" in size and shall be orange or fluorescent red-orange in color. A flashing beacon shall be placed on top of the first C19(CA) sign during hours of darkness.
4. All cones used for ramp closures during the hours of darkness shall be fitted with retroreflective bands (or sleeves) as specified in the specifications.
5. Portable delineators, placed at one-half the spacing indicated for traffic cones, may be used instead of cones for daytime ramp closures only.
6. At least one person shall be assigned to provide full time maintenance of traffic control devices, unless otherwise directed by the Engineer.
7. The existing "EXIT" signs shall be covered during ramp closures.
8. A minimum of 3 cones shall be placed transversely across each closed lane and shoulder.

NOTES:

See Revised Standard Plan RSP T9 for tables.

Use cone spacing X for taper segment, Y for tangent segment or Z for conflict situations, as approriate, per Table 1, unless X, Y, or Z cone spacing is shown on this sheet.

Unless otherwise specified in the special provisions, all temporary warning signs shall have black legend on fluorescent orange background.

California codes are designated by (CA). Otherwise, Federal (MUTCD) codes are shown.

STATE OF CALIFORNIA
DEPARTMENT OF TRANSPORTATION

TRAFFIC CONTROL SYSTEM FOR RAMP CLOSURE

NO SCALE

RSP T14 DATED APRIL 19, 2013 SUPERSEDES STANDARD PLAN T14
DATED MAY 20, 2011 - PAGE 242 OF THE STANDARD PLANS BOOK DATED 2010.

REVISED STANDARD PLAN RSP T14

2010 REVISED STANDARD PLAN RSP T14

12-18-12

Dist	COUNTY	ROUTE	POST MILES TOTAL PROJECT	SHEET No.	TOTAL SHEETS
06	Ker	99	49.6	49	106

REGISTERED CIVIL ENGINEER

October 30, 2015
PLANS APPROVAL DATE

REGISTERED PROFESSIONAL ENGINEER Efthymios Delis No. C51434 Exp. 6-30-17 CIVIL STATE OF CALIFORNIA

THE STATE OF CALIFORNIA OR ITS OFFICERS OR AGENTS SHALL NOT BE RESPONSIBLE FOR THE ACCURACY OR COMPLETENESS OF SCANNED COPIES OF THIS PLAN SHEET.

TO ACCOMPANY PLANS DATED 11-16-15

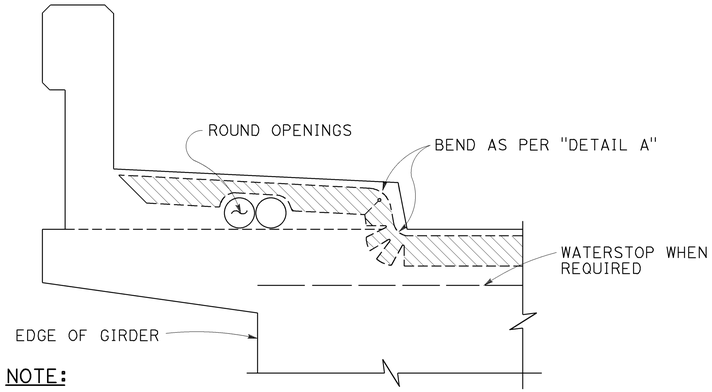

NOTE:
Type "B" seal shown. Type "A" seals to comform to the general path of seal shown, cuts for bending not required. Bend type "A" seals 3" up into curb or barrier rail on only the low end of the seal.

CONCRETE BARRIER AND SIDEWALK

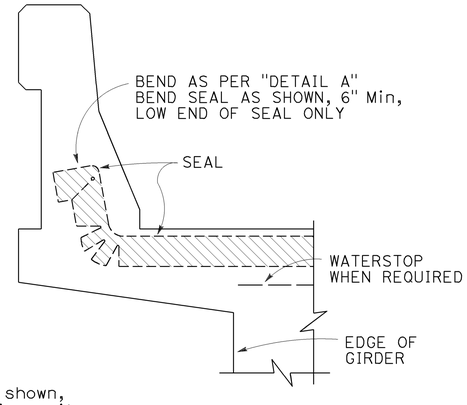

CONCRETE BARRIER

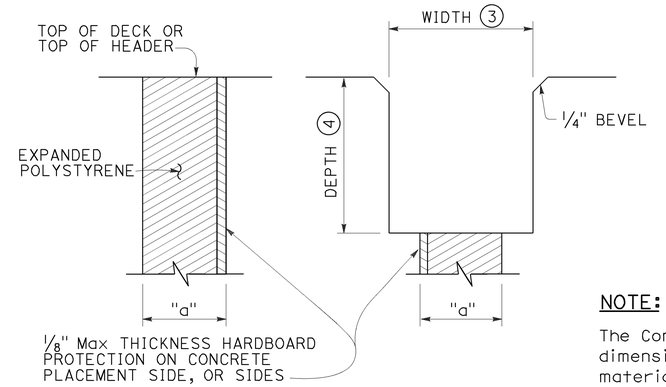

FORMING DETAIL SAWCUT DETAIL

NOTE:
The Contractor shall verify all controlling field dimensions before ordering or fabricatiing any material.

JOINT SEALS DETAILS

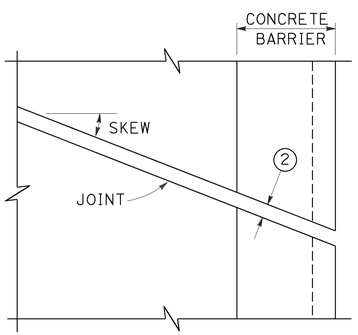

PLAN OF JOINT (SKEW ≤ 20°)

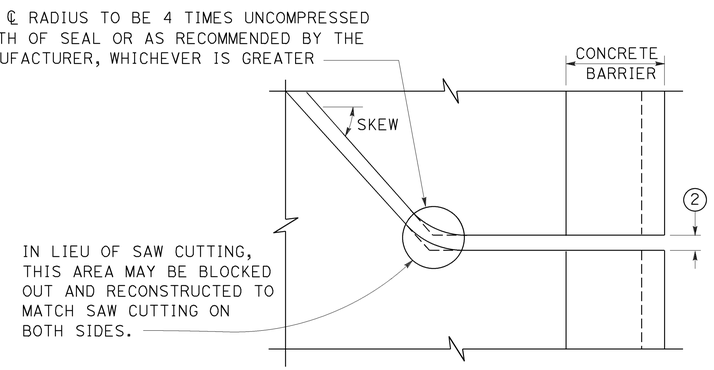

PLAN OF JOINT (SKEW > 20°)

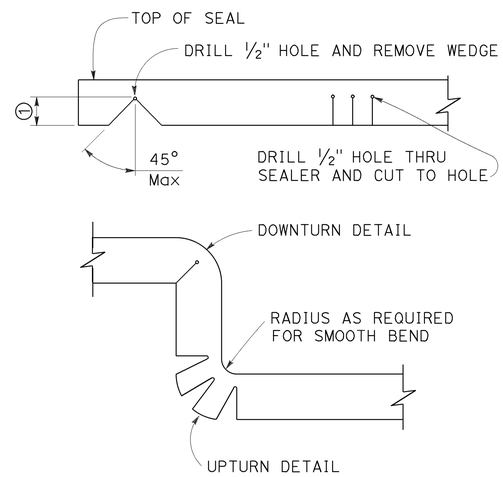

DETAIL A

NOTES:

1. Make smooth cuts from the bottom of seal to 1½" clear of top leaving at least one complete cell between the top of the cut and top of the seal. When necessary cut back of seal to clear conduit and round openings.
2. Opening in barrier to match width of sawn deck joint.
3. Sawcut groove widths shall be as ordered by the Engineer.
4. Depth of sawcut: Type A - Depth to be 2" minimum.
   Type B - Depth to be equal to or greater than the depth of seal measured along the contact surface, when compressed to minimum width position (W_2) plus dimensions shown.
5. MR (movement rating) as shown on other plan sheets.
6. Other depths must be approved by the Engineer.
7. A sidewalk joint shall be covered by an expansion joint armor.

DIMENSIONS "a" OF JOINT REQUIRED

MOVEMENT RATING (MR) (5)	BRIDGE TYPE	"a" DIMENSION DECK CONCRETE PLACED		
		WINTER	FALL-SPRING	SUMMER
2"	ALL EXCEPT CIP/PS	1½"	1¼"	¾"
	CIP/PS	1¼"	1"	½"
1½"	ALL EXCEPT CIP/PS	1¼"	1"	½"
	CIP/PS	1"	¾"	½"
1"	ALL EXCEPT CIP/PS	1"	¾"	½"
	CIP/PS	¾"	½"	½"
½"	ALL EXCEPT CIP/PS	¾"	¾"	½"
	CIP/PS	½"	½"	½"

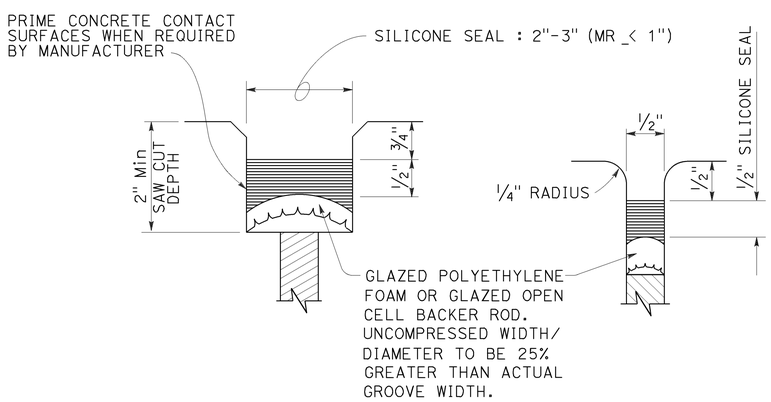

TYPE A SEAL
Movement rating : Silicone = 1" Max

TYPE AL SEAL
Longitudinal joints only

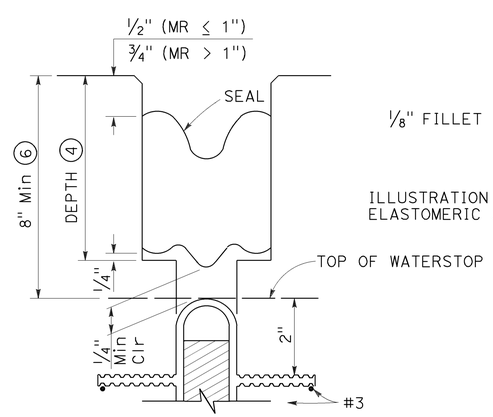

TYPE B JOINT SEAL
IN MINIMUM WIDTH POSITION (W_2)

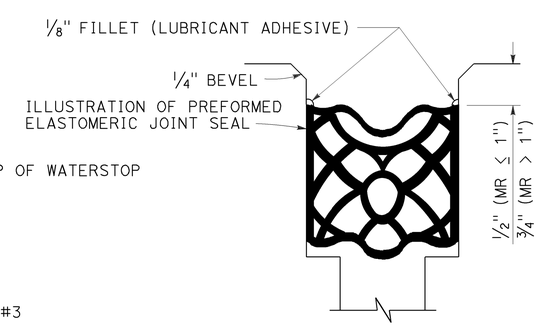

TYPE B SEAL
Movement Rating ≤ 2"

STATE OF CALIFORNIA
DEPARTMENT OF TRANSPORTATION

JOINT SEALS (MAXIMUM MOVEMENT RATING = 2")

NO SCALE

RSP B6-21 DATED OCTOBER 30, 2015 SUPERSEDES STANDARD PLAN B6-21 DATED MAY 20, 2011 - PAGE 283 OF THE STANDARD PLANS BOOK DATED 2010.

REVISED STANDARD PLAN RSP B6-21

2010 REVISED STANDARD PLAN RSP B6-21

8-18-15

Dist	COUNTY	ROUTE	POST MILES TOTAL PROJECT	SHEET No.	TOTAL SHEETS
06	Ker	99	49.6	50	106

Theresa Gabriel
REGISTERED ELECTRICAL ENGINEER

October 30, 2015
PLANS APPROVAL DATE

REGISTERED PROFESSIONAL ENGINEER
Theresa Aziz Gabriel
No. E15129
Exp. 6-30-16
ELECTRICAL
STATE OF CALIFORNIA

THE STATE OF CALIFORNIA OR ITS OFFICERS OR AGENTS SHALL NOT BE RESPONSIBLE FOR THE ACCURACY OR COMPLETENESS OF SCANNED COPIES OF THIS PLAN SHEET.

TO ACCOMPANY PLANS DATED 11-16-15

LEGEND:

- AB — ABANDON. IF APPLIED TO CONDUIT, REMOVE CONDUCTORS
- BC — INSTALL PULL BOX IN EXISTING CONDUIT RUN
- BP — PEDESTRIAN BARRICADE, TYPE AS INDICATED ON PLAN
- CB — INSTALL CONDUIT INTO EXISTING PULL BOX
- CC — CONNECT NEW AND EXISTING CONDUIT. REMOVE EXISTING CONDUCTORS AND INSTALL CONDUCTORS AS INDICATED
- CF — CONDUIT TO REMAIN FOR FUTURE USE. REMOVE CONDUCTORS. INSTALL PULL TAPE
- DH — DETECTOR HANDHOLE
- FA — FOUNDATION TO BE ABANDONED
- IS — INSTALL SIGN ON SIGNAL MAST ARM
- NS — NO SLIP BASE ON STANDARD
- PEC — PHOTOELECTRIC CONTROL
- PEU — PHOTOELECTRIC UNIT
- RC — EQUIPMENT OR MATERIAL TO BE REMOVED AND BECOME THE PROPERTY OF THE CONTRACTOR
- RE — REMOVE ELECTROLIER, FUSES AND BALLAST. TAPE ENDS OF CONDUCTORS
- RL — RELOCATE EQUIPMENT
- RR — REMOVE AND REUSE EQUIPMENT
- RS — REMOVE AND SALVAGE EQUIPMENT
- SC — SPLICE NEW TO EXISTING CONDUCTORS
- SD — SERVICE DISCONNECT
- TSP — TELEPHONE SERVICE POINT

ABBREVIATIONS

AC+	UNDERGROUNDED CONDUCTOR
APS	ACCESSIBLE PEDESTRIAN SIGNAL
Batt	BATTERY
BBS	BATTERY BACKUP SYSTEM
BC	BOLT CIRCLE
Blk	BLACK
BP	BYPASS
BPB	BICYCLE PUSH BUTTON
C	CONDUIT
CB	CIRCUIT BREAKER
CCTV	CLOSED CIRCUIT TELEVISION
Ckt	CIRCUIT
CMS	CHANGEABLE MESSAGE SIGN
Ctid	CALTRANS IDENTIFICATION
Comm	COMMUNICATION
Cntl	CONTROL
DF	DEPARTMENT-FURNISHED
DLC	LOOP DETECTOR LEAD-IN CABLE
EMS	EXTINGUISHABLE MESSAGE SIGN
EVUC	EMERGENCY VEHICLE UNIT CABLE
EVUD	EMERGENCY VEHICLE UNIT DETECTOR
FB	FLASHING BEACON
FBCA	FLASHING BEACON CONTROL ASSEMBLY
FBS	FLASHING BEACON WITH SLIP BASE
FO	FIBER OPTIC
G	EQUIPMENT GROUNDING CONDUCTOR
GB	GROUND BUS
GFCI	GROUND FAULT CIRCUIT INTERRUPTER
Grn	GREEN
HAR	HIGHWAY ADVISORY RADIO
Hex	HEXAGONAL
HPS	HIGH PRESSURE SODIUM
IISNS	INTERNALLY ILLUMINATED STREET NAME SIGN
ISL	INDUCTION SIGN LIGHTING
LED	LIGHT EMITTING DIODE
LMA	LUMINAIRE MAST ARM
LPS	LOW PRESSURE SODIUM
Ltg	LIGHTING
Lum	LUMINAIRE
M	METERED
MAT	MAST ARM MOUNTING TOP ATTACHMENT
MAS	MAST ARM MOUNTING SIDE ATTACHMENT
MBPS	MANUAL BYPASS SWITCH
M/M	MULTIPLE TO MULTIPLE TRANSFORMER
Mtg	MOUNTING
MV	MERCURY VAPOR LIGHTING FIXTURE
MVDS	MICROWAVE VEHICLE DETECTION SYSTEM
N	NEUTRAL (GROUNDED CONDUCTOR)
NB	NEUTRAL BUS
NC	NORMALLY CLOSE
NO	NORMALLY OPEN
P	CIRCUIT BREAKER'S POLE
PB	PULL BOX
PBA	PUSH BUTTON ASSEMBLY
PEC	PHOTOELECTRIC CONTROL
Ped	PEDESTRIAN
PEU	PHOTOELECTRIC UNIT
PT	CONDUIT WITH PULL TAPE
PTR	POWER TRANSFER RELAY
RE	RELOCATED EQUIPMENT
RM	RAMP METERING
RWIS	ROADSIDE WEATHER INFORMATION SYSTEM
SB	SLIP BASE
SIC	SIGNAL INTERCONNECT CABLE
Sig	SIGNAL
SMA	SIGNAL MAST ARM
SNS	STREET NAME SIGN
SP	SERVICE POINT
TB	TERMINAL BOARD
TDC	TELEPHONE DEMARCATION CABINET
Temp	TEMPERATURE
TMS	TRAFFIC MONITORING STATION
TOS	TRAFFIC OPERATIONS SYSTEM
UPS	UNINTERRUPTABLE POWER SUPPLY
UPSC	UNINTERRUPTABLE POWER SUPPLY CONTROLLER
Veh	VEHICLE
VIVDS	VIDEO IMAGE VEHICLE DETECTION SYSTEM
Wht	WHITE
WIM	WEIGH-IN-MOTION
Xfmr	TRANSFORMER

SOFFIT AND WALL-MOUNTED LUMINAIRES

- PENDANT SOFFIT LUMINAIRE, 70 W HPS UNLESS OTHERWISE SPECIFIED
- FLUSH-MOUNTED SOFFIT LUMINAIRE, 70 W HPS UNLESS OTHERWISE SPECIFIED
- WALL-MOUNTED LUMINAIRE, 70 W HPS UNLESS OTHERWISE SPECIFIED
- EXISTING SOFFIT OR WALL-MOUNTED LUMINAIRE TO REMAIN UNMODIFIED
- EXISTING SOFFIT OR WALL-MOUNTED LUMINAIRE TO BE MODIFIED AS SPECIFIED

NOTE:
Arrow indicates "street side" of luminaire.

COMMONLY USED SYMBOLS FOR UNITED STATES CUSTOMARY UNITS OF MEASUREMENT:

SYMBOL	DEFINITIONS
Ω	OHMS
min	MINUTE
s	SECOND
bps	BITS PER SECOND
Bps	BYTES PER SECOND
A	AMPERE
V	VOLT
V(dc)	VOLT (DIRECT CURRENT)
V(ac)	VOLT (ALTERNATING CURRENT)
FC	FOOT - CANDLE
W	WATTS
VA	VOLT-AMPERE
M	MEGA
k	KILO
m	MILLI
μ	MICRO
P	PICO
Hz	HERTZ

MISCELLANEOUS ELECTROLIERS

NEW	EXISTING	
		LUMINAIRE ON WOOD POLE
		NON-STANDARD ELECTROLIER (SEE PROJECT LEGEND)
		CITY ELECTROLIER
		ELECTROLIER FOUNDATION (FUTURE INSTALLATION)

NOTES:

1. LED luminaires shall be 235 W when installed on Type 21, 21D, 30, 31 and 32 Standards, unless otherwise specified. LED luminaires shall be 165 W when installed on other type standards or poles, unless otherwise specified.
2. Luminaires shall be the cutoff type, ANSI Type III medium cutoff lighting distribution, unless otherwise specified.

STANDARD ELECTROLIER

NEW	EXISTING	STANDARD TYPE
		15
		15D
		15 STRUCTURE
		15D STRUCTURE
		21
		21D
		21 STRUCTURE
		21D STRUCTURE
		30
		31
		32

STATE OF CALIFORNIA
DEPARTMENT OF TRANSPORTATION

ELECTRICAL SYSTEMS (LEGEND AND ABBREVIATIONS)

NO SCALE

RSP ES-1A DATED OCTOBER 30, 2015 SUPERSEDES RSP ES-1A DATED JULY 19, 2013 AND STANDARD PLAN ES-1A DATED MAY 20, 2011 - PAGE 425 OF THE STANDARD PLANS BOOK DATED 2010.

REVISED STANDARD PLAN RSP ES-1A

2010 REVISED STANDARD PLAN RSP ES-1A

9-29-15

Dist	COUNTY	ROUTE	POST MILES TOTAL PROJECT	SHEET No.	TOTAL SHEETS
06	Ker	99	49.6	51	106

Theresa Gabriel
REGISTERED ELECTRICAL ENGINEER

October 30, 2015
PLANS APPROVAL DATE

REGISTERED PROFESSIONAL ENGINEER
Theresa Aziz Gabriel
No. E15129
Exp. 6-30-16
ELECTRICAL
STATE OF CALIFORNIA

THE STATE OF CALIFORNIA OR ITS OFFICERS OR AGENTS SHALL NOT BE RESPONSIBLE FOR THE ACCURACY OR COMPLETENESS OF SCANNED COPIES OF THIS PLAN SHEET.

TO ACCOMPANY PLANS DATED 11-16-15

CONDUIT

NEW	EXISTING	
		LIGHTING CONDUIT, UNLESS OTHERWISE INDICATED OR NOTED
		TRAFFIC SIGNAL CONDUIT
C	c	COMMUNICATION CONDUIT
T	t	TELEPHONE CONDUIT
F	f	FIRE ALARM CONDUIT
FO	fo	FIBER OPTIC CONDUIT
		CONDUIT TERMINATION
R	r	CONDUIT RISER ATTACHED TO THE STRUCTURE OR SERVICE POLE

SERVICE EQUIPMENT

NEW	EXISTING	
OH	oh	OVERHEAD LINES
U	U	WOOD POLE, "U" INDICATES UTILITY OWNED
		POLE GUY WITH ANCHOR
		UTILITY TRANSFORMER - GROUND MOUNTED
III	III	SERVICE EQUIPMENT ENCLOSURE TYPE. DOOR INDICATES FRONT OF ENCLOSURE
T	t	TELEPHONE DEMARCATION CABINET

POLE-MOUNTED SERVICE DESIGNATION

TYPE H SERVICE, 28'-10" — TYPE OF INSTALLATION AND POLE HEIGHT ABOVE GRADE

FLASHING BEACON

NEW	EXISTING	
R	R	FLASHING BEACON (ONE VEHICLE SIGNAL HEAD WITH BACKPLATE AND VISOR) "R" INDICATES RED INDICATION, "Y" INDICATES YELLOW INDICATION
Y Y	Y Y	FLASHING BEACON WITH TYPE 15-FBS STANDARD AND A SIGN.
R R	R R	FLASHING BEACON WITH TYPES 9, 9A OR 9B SIGN UNLESS OTHERWISE SPECIFIED OR INDICATED

SIGNAL EQUIPMENT

NEW	EXISTING	
		PEDESTRIAN SIGNAL HEAD
		PUSH BUTTON ASSEMBLY POST
		PEDESTRIAN BARRICADE
		VEHICLE SIGNAL HEAD (WITH BACKPLATE AND 3-SECTIONS: RED, YELLOW AND GREEN)
		VEHICLE SIGNAL HEAD WITH ANGLE VISOR
PV	PV	MODIFICATIONS OF BASIC SYMBOL: "L" INDICATES ALL NON-ARROW SECTIONS LOUVERED "LG" INDICATES LOUVERED GREEN SECTION ONLY "PV" INDICATES ALL 12" SECTIONS PROGRAMMED VISIBILITY "8" INDICATES ALL 8" SECTIONS (ONLY WHEN SPECIFIED)
		VEHICLE SIGNAL HEAD CONSISTING OF RED, YELLOW AND GREEN LEFT ARROW SECTIONS
		VEHICLE SIGNAL HEAD CONSISTING OF RED AND YELLOW SECTIONS WITH AN UP GREEN ARROW SECTION
		VEHICLE SIGNAL HEAD (5 SECTION) CONSISTING OF RED, YELLOW AND GREEN SECTIONS WITH YELLOW AND GREEN RIGHT ARROW SECTIONS
		TYPE 15TS STANDARD WITH VEHICLE SIGNAL HEAD AND LUMINAIRE
		TYPE 21TS STANDARD WITH VEHICLE SIGNAL HEAD AND LUMINAIRE
		STANDARD WITH LUMINAIRE AND SIGNAL MAST ARMS AND ATTACHED VEHICLE SIGNAL HEADS
		TYPE 1 STANDARD WITH ATTACHED VEHICLE SIGNAL HEADS
		STANDARD WITH A SIGNAL MAST ARM, ATTACHED VEHICLE SIGNAL HEADS AND INTERNALLY ILLUMINATED STREET NAME SIGN
		CONTROLLER ASSEMBLY. DOOR INDICATES FRONT OF CABINET

SIGNAL EQUIPMENT Cont

NEW	EXISTING	
		GUARD POST
		TYPE 1 STANDARD WITH RAMP METERING SIGN
		OPTICAL DETECTOR FOR THE EMERGENCY VEHICLE DETECTION

NOTES:

1. All signal sections shall be 12" unless shown otherwise.
2. Signal heads shall be provided with backplates unless shown otherwise.

ILLUMINATED OVERHEAD SIGN

NEW	EXISTING	
		SINGLE POST, SINGLE ILLUMINATED SIGN, BALANCED BUTTERFLY
		SINGLE POST, DOUBLE ILLUMINATED SIGN, BALANCED BUTTERFLY
		SINGLE POST, SINGLE ILLUMINATED SIGN, FULL CANTILEVER
		DOUBLE POST, SINGLE ILLUMINATED SIGN
		SINGLE ILLUMINATED SIGN MOUNTED ON STRUCTURE
		DOUBLE POST, SINGLE ILLUMINATED SIGN WITH ELECTROLIER

STATE OF CALIFORNIA
DEPARTMENT OF TRANSPORTATION

ELECTRICAL SYSTEMS (LEGEND AND ABBREVIATIONS)

NO SCALE

RSP ES-1B DATED OCTOBER 30, 2015 SUPERSEDES RSP ES-1B DATED JULY 19, 2013 AND STANDARD PLAN ES-1B DATED MAY 20, 2011 - PAGE 426 OF THE STANDARD PLANS BOOK DATED 2010.

REVISED STANDARD PLAN RSP ES-1B

2010 REVISED STANDARD PLAN RSP ES-1B

8-19-15

Dist	COUNTY	ROUTE	POST MILES TOTAL PROJECT	SHEET No.	TOTAL SHEETS
06	Ker	99	49.6	52	106

Theresa Gabriel
REGISTERED ELECTRICAL ENGINEER

April 15, 2016
PLANS APPROVAL DATE

REGISTERED PROFESSIONAL ENGINEER
Theresa Aziz Gabriel
No. E15129
Exp. 6-30-16
ELECTRICAL
STATE OF CALIFORNIA

THE STATE OF CALIFORNIA OR ITS OFFICERS OR AGENTS SHALL NOT BE RESPONSIBLE FOR THE ACCURACY OR COMPLETENESS OF SCANNED COPIES OF THIS PLAN SHEET.

TO ACCOMPANY PLANS DATED 11-16-15

EQUIPMENT IDENTIFICATION

ILLUMINATED SIGN IDENTIFICATION:

SIGN No. 12345
10 ISL SCI 1.0

- SIGN EQUIPMENT IDENTIFICATION CHARACTERS - PLACE ON POST OR STRUCTURE
- TRANSFORMER RATING (kVA)
- LIGHTING CONTROL TYPE
- NUMBER AND TYPE OF FIXTURES

} DO NOT PLACE ON STANDARD OR STRUCTURE

ELECTROLIER OR EQUIPMENT IDENTIFICATION:

L2745 - 15'-0"

- MAST ARM LENGTH, IF SHOWN. DO NOT PLACE ON STANDARD OR STRUCTURE
- EQUIPMENT IDENTIFICATION CHARACTERS - PLACE ON STANDARD OR STRUCTURE. EXISTING EQUIPMENT IDENTIFICATION CHARACTERS ARE SHOWN IN PARENTHESIS

CONDUIT AND CONDUCTOR IDENTIFICATION:

1½"C, 2#10, 15#14, 2 DLC, 12P#18 (PAIR)

- NUMBER AND SIZE OF CONDUCTORS AND CABLES
- SIZE OF CONDUIT IN INCHES

ø1, ø2, ø2P, etc.	TRAFFIC PHASE IDENTIFICATION FOR SIGNALS, DETECTORS AND PHASE DIAGRAMS
1 2 3	LEGEND NUMBERS
A B C	EQUIPMENT, SIGNAL POLES, INSTALLATION OR ITEMS
1 2 3	CONDUIT RUN NUMBERS

SIGNAL AND LIGHTING STANDARD (TYPICAL DESIGNATION):

19A - 3 - 100

- WIND VELOCITY = 100 mph
- CASE 3 ARM LOADING
- STANDARD TYPE
- STANDARD PLAN SHEET NUMBER
- DETAIL, NUMBER, SECTION, TYPE OR ELEVATION

MISCELLANEOUS EQUIPMENT

NEW	EXISTING	
CMS	cms	CHANGEABLE MESSAGE SIGN
		CLOSED CIRCUIT TELEVISION CAMERA
		HIGHWAY ADVISORY RADIO POLE AND ANTENNA
EMS	ems	LED EXTINGUISHABLE MESSAGE SIGN
M V	m v	DETECTION DEVICE M = MICROWAVE SENSOR V = VIDEO IMAGE SENSOR

WIRING DIAGRAM LEGEND

- EXTERNAL CONDUCTOR
- CONDUCTOR OR BUS
- TIE POINT
- CONTACTOR COIL
- CONTACTOR, NO CONTACT
- TERMINAL BLOCKS
- CONTACTOR, NC CONTACT
- ENCLOSURE BOND
- GROUNDING ELECTRODE
- CIRCUIT BREAKER
- RECEPTACLE

PULL BOXES

NEW	EXISTING	
		PULL BOX, No. 5 UNLESS OTHERWISE INDICATED OR NOTED
3	9A(21)	PULL BOX, ADDITIONAL DESIGNATIONS OR DESCRIPTIONS

3 No. 3½ PULL BOX
5 No. 5 PULL BOX
6 No. 6 PULL BOX
7 No. 7 PULL BOX (CEILING)
8 No. 8 PULL BOX
9 No. 9 PULL BOX (STRUCTURE)
9A No. 9A PULL BOX (STRUCTURE)

(C) COMMUNICATIONS PULL BOX
(E) PULL BOX WITH EXTENSION
(S) SPRINKLER CONTROL PULL BOX
(21) ANCHOR BOLTS AND CONDUIT FOR FUTURE INSTALLATION OF TYPE 21 STANDARD
(T) TRAFFIC PULL BOX

VEHICLE DETECTORS

5 J 9 U

- VEHICLE DETECTOR DESIGNATION
- U = UPPER
  L = LOWER
- SLOT NUMBER IN INPUT FILE
- INPUT FILE (I OR J)
- PHASE

NEW	EXISTING	
		TYPE A LOOP DETECTOR. OUTLINE OF SAW CUT SHOWN
		TYPE B LOOP DETECTOR. OUTLINE OF SAW CUT SHOWN
		TYPE C LOOP DETECTOR. OUTLINE OF SAW CUT SHOWN
		TYPE D LOOP DETECTOR. OUTLINE OF SAW CUT SHOWN
		TYPE E LOOP DETECTOR. OUTLINE OF SAW CUT SHOWN
		TYPE Q LOOP DETECTOR. OUTLINE OF SAW CUT SHOWN
DH	dh	DETECTOR HANDHOLE
		MICROWAVE OR VIDEO DETECTION ZONE

STATE OF CALIFORNIA
DEPARTMENT OF TRANSPORTATION

ELECTRICAL SYSTEMS (LEGEND AND ABBREVIATIONS)

NO SCALE

RSP ES-1C DATED APRIL 15, 2016 SUPERSEDES RSP ES-1C DATED OCTOBER 30, 2015 AND RSP ES-1C DATED JULY 19, 2013 AND STANDARD PLAN ES-1C DATED MAY 20, 2011 - PAGE 427 OF THE STANDARD PLANS BOOK DATED 2010.

REVISED STANDARD PLAN RSP ES-1C

2010 REVISED STANDARD PLAN RSP ES-1C

1-22-16

Dist	COUNTY	ROUTE	POST MILES TOTAL PROJECT	SHEET No.	TOTAL SHEETS
06	Ker	99	49.6	53	106

REGISTERED ELECTRICAL ENGINEER

October 30, 2015
PLANS APPROVAL DATE

THE STATE OF CALIFORNIA OR ITS OFFICERS OR AGENTS SHALL NOT BE RESPONSIBLE FOR THE ACCURACY OR COMPLETENESS OF SCANNED COPIES OF THIS PLAN SHEET.

REGISTERED PROFESSIONAL ENGINEER Theresa Aziz Gabriel No. E15129 Exp. 6-30-16 ELECTRICAL STATE OF CALIFORNIA

TO ACCOMPANY PLANS DATED 11-16-15

2010 REVISED STANDARD PLAN RSP ES-2A

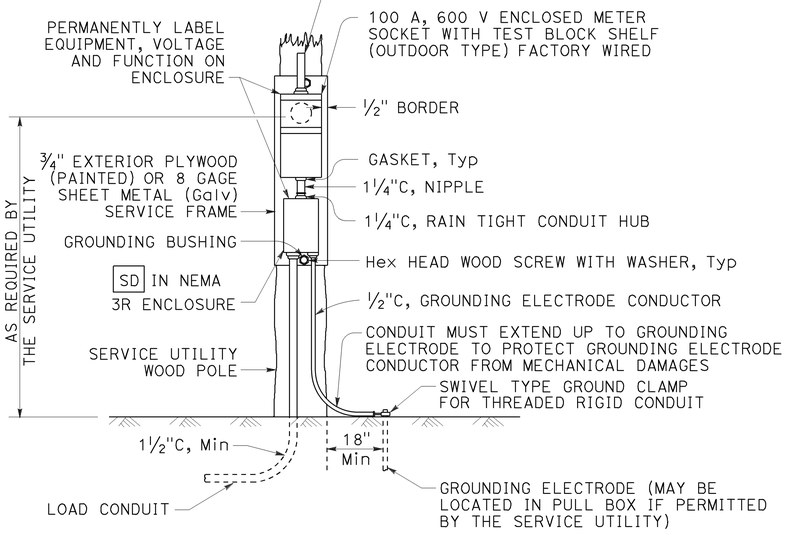

TYPE SCE-1
DETAIL A

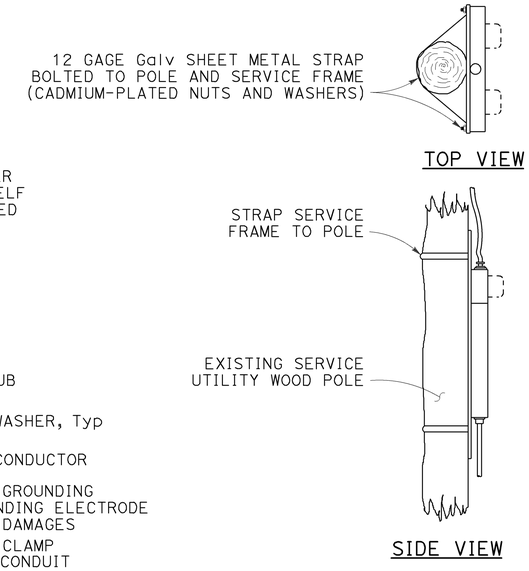

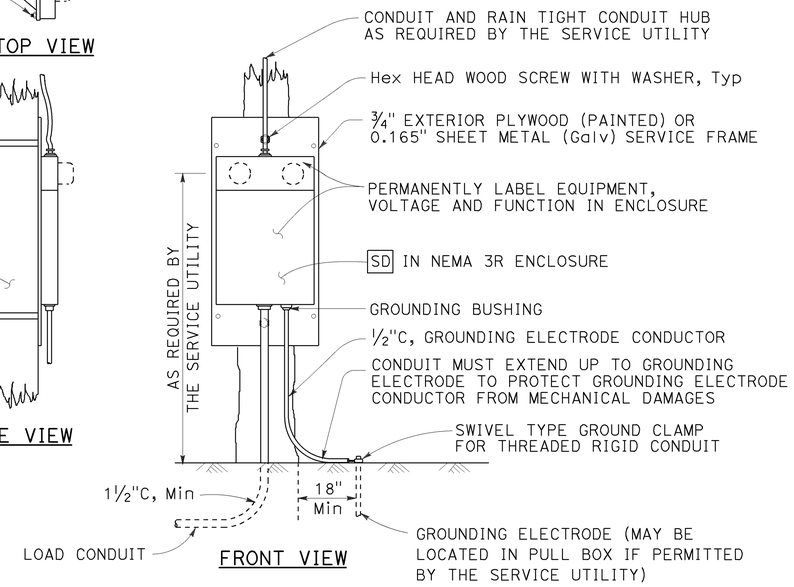

TYPE SCE-2
DETAIL B

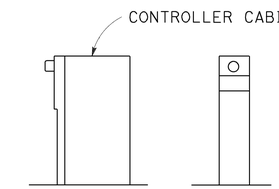

TYPE OF SERVICE (TYPICAL)
DETAIL C

See Notes 1 and 2

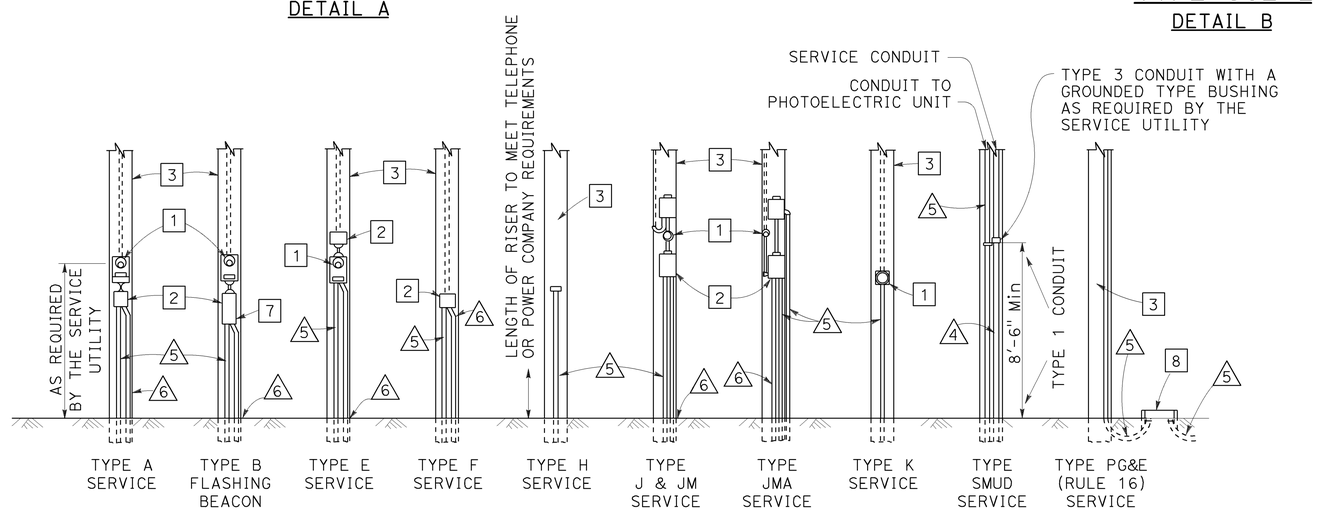

POLE MOUNTED SERVICE INSTALLATIONS
DETAIL D

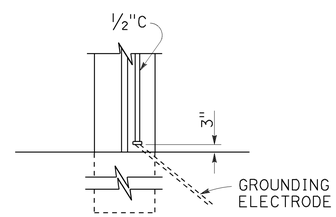

TYPE A
See Note 3

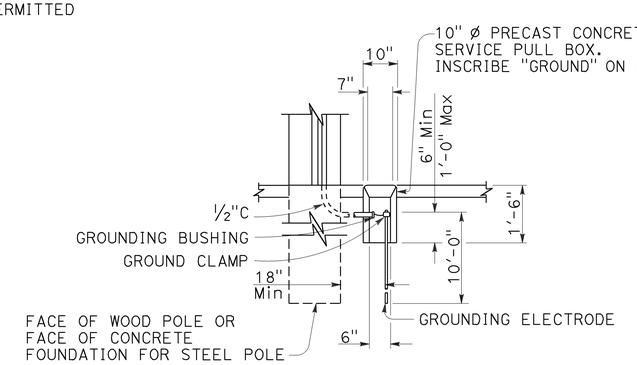

TYPE B
See Note 4

SERVICE GROUNDING
DETAIL E

LEGEND:

1. METER SOCKET.
2. SERVICE ENCLOSURE WITH A MINIMUM 60 A RATED MAIN CIRCUIT BREAKER, UNLESS OTHERWISE SHOWN.
3. A. UTILITY OWNED POLE. THE SERVICE UTILITY WILL FURNISH AND INSTALL REQUIRED SERVICE RISER, PEU WITH CONDUCTORS AND OTHER EQUIPMENT AS NEEDED.
   B. STATE OWNED POLE. THE CONTRACTOR SHALL FURNISH AND INSTALL REQUIRED SERVICE RISER AND EQUIPMENT.
4. 2"C, SERVICE CONDUIT MUST HAVE A GROUNDED TYPE BUSHING INSTALLED AT UPPER END OF THE METALLIC POLE RISER CONDUIT. A GROUNDING CONDUCTOR MUST BE ATTACHED TO THE BUSHING, CARRIED THROUGH THE CONDUIT RUN AND ATTACHED TO THE SERVICE EQUIPMENT ENCLOSURE'S GROUNDING ELECTRODE.
5. CONDUIT, LENGTH AND SIZE AS REQUIRED.
6. ½"C, 1#6. SEE DETAIL E.
7. FLASHING BEACON CONTROL ASSEMBLY.
8. SERVICE PULL BOX, No. 5 UNLESS OTHERWISE NOTED, FURNISHED AND INSTALLED BY THE CONTRACTOR. SERVICE UTILITY SHALL DETERMINE THE EXACT LOCATION.

NOTES:

1. Type II service equipment enclosure mounted on the side of a controller cabinet.
2. Type III complete free-standing service equipment enclosure.
3. Ground clamp and required fittings must be accessible. Conduit must extend to protect grounding electrode conductor from mechanical damage.
4. Use where service utility requires 18" clearance between grounding electrode and the pole or service equipment enclosure. Installation shown is for sidewalk or paved areas. In unpaved areas, omit special service pull box and locate ground clamp above ground or locate ground clamp in nearest pull box.

STATE OF CALIFORNIA
DEPARTMENT OF TRANSPORTATION

ELECTRICAL SYSTEMS (SERVICE EQUIPMENT)

NO SCALE

RSP ES-2A DATED OCTOBER 30, 2015 SUPERSEDES STANDARD PLAN ES-2A DATED MAY 20, 2011 - PAGE 428 OF THE STANDARD PLANS BOOK DATED 2010.

REVISED STANDARD PLAN RSP ES-2A

8-20-15

Dist	COUNTY	ROUTE	POST MILES TOTAL PROJECT	SHEET No.	TOTAL SHEETS
06	Ker	99	49.6	54	106

Theresa Gabriel
REGISTERED ELECTRICAL ENGINEER

October 30, 2015
PLANS APPROVAL DATE

REGISTERED PROFESSIONAL ENGINEER
Theresa Aziz Gabriel
No. E15129
Exp. 6-30-16
ELECTRICAL
STATE OF CALIFORNIA

THE STATE OF CALIFORNIA OR ITS OFFICERS OR AGENTS SHALL NOT BE RESPONSIBLE FOR THE ACCURACY OR COMPLETENESS OF SCANNED COPIES OF THIS PLAN SHEET.

TO ACCOMPANY PLANS DATED 11-16-15

2010 REVISED STANDARD PLAN RSP ES-2C

NOTES:

1. The plan shows the approximate location of devices within the enclosure. Components may be rearranged, however, the "working" clearances within the service equipment enclosure shall be maintained.

2. In unpaved areas a raised portland cement concrete pad 2'-0" x 4" x width of foundation shall be constructed in front of new service equipment enclosure installation. Pad shall be set to elevation of foundation.

3. Plug-in circuit breakers may be mounted in the vertical or horizontal position. Cable-in/cable-out circuit breakers shall be mounted in the vertical position.

4. Type III-AF and Type III-BF service equipment enclosures shall have the meter viewing windows located on the front side of the service equipment enclosures.

5. Type III-AR and Type III-BR service equipment enclosure shall be similarly constructed as Type III-AF and Type III-BF respectively, except the meter viewing windows shall be located on the back side of the service equipment enclosures.

STATE OF CALIFORNIA
DEPARTMENT OF TRANSPORTATION

ELECTRICAL SYSTEMS (SERVICE EQUIPMENT ENCLOSURE NOTES TYPE III SERIES)

NO SCALE

RSP ES-2C DATED OCTOBER 30, 2015 SUPERSEDES STANDARD PLAN ES-2C DATED MAY 20, 2011 - PAGE 430 OF THE STANDARD PLANS BOOK DATED 2010.

REVISED STANDARD PLAN RSP ES-2C

Dist	COUNTY	ROUTE	POST MILES TOTAL PROJECT	SHEET No.	TOTAL SHEETS
06	Ker	99	49.6	55	106

Theresa Gabriel
REGISTERED ELECTRICAL ENGINEER

October 30, 2015
PLANS APPROVAL DATE

REGISTERED PROFESSIONAL ENGINEER Theresa Aziz Gabriel No. E15129 Exp. 6-30-16 ELECTRICAL STATE OF CALIFORNIA

THE STATE OF CALIFORNIA OR ITS OFFICERS OR AGENTS SHALL NOT BE RESPONSIBLE FOR THE ACCURACY OR COMPLETENESS OF SCANNED COPIES OF THIS PLAN SHEET.

TO ACCOMPANY PLANS DATED 11-16-15

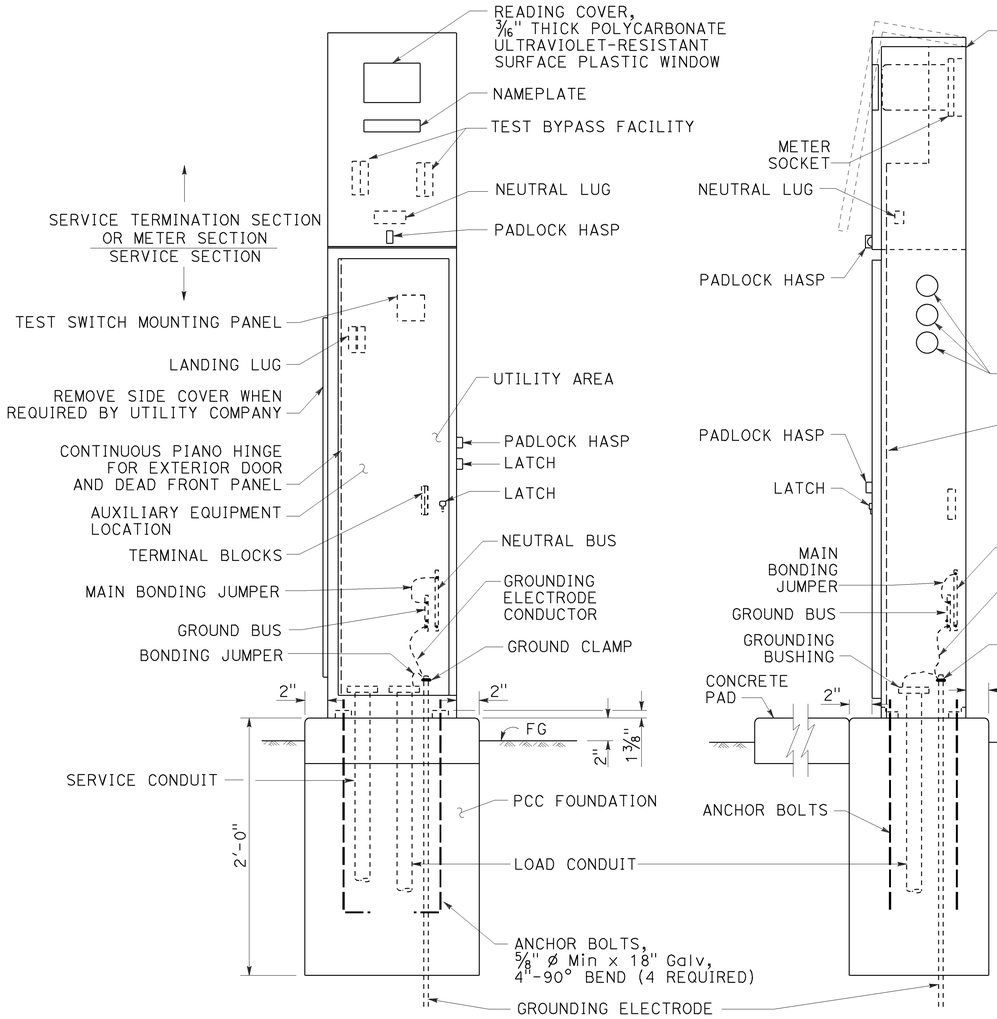

FRONT VIEW

SIDE VIEW

TYPE III-AF SERVICE EQUIPMENT ENCLOSURE (TYPICAL)

DETAIL A

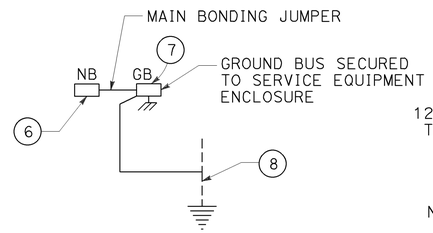

DETAIL D

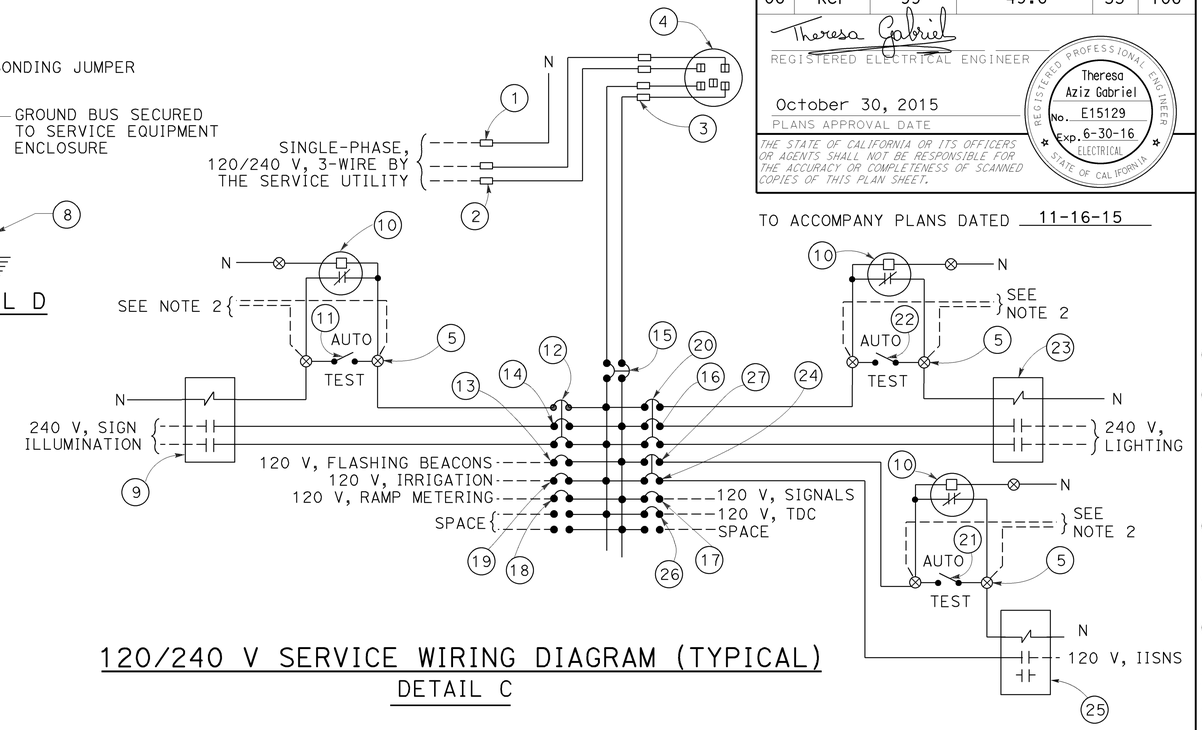

120/240 V SERVICE WIRING DIAGRAM (TYPICAL)

DETAIL C

TYPE III-A SERVICE EQUIPMENT ENCLOSURE LEGEND (120/240 V)					
ITEM	COMPONENT	NAMEPLATE DESCRIPTION	ITEM	COMPONENT	NAMEPLATE DESCRIPTION
1	NEUTRAL LUG		14	30 A, 240 V, 2P, CB	SIGN ILLUMINATION
2	LANDING LUG		15	100 A, 240 V, 2P, CB	MAIN BREAKER
3	TEST BYPASS FACILITY		16	30 A, 240 V, 2P, CB	LIGHTING
4	METER SOCKET AND SUPPORT		17	50 A, 120 V, 1P, CB	SIGNALS
5	TERMINAL BLOCKS		18	30 A, 120 V, 1P, CB	RAMP METERING
6	NEUTRAL BUS		19	20 A, 120 V, 1P, CB	IRRIGATION
7	GROUND BUS		20	15 A, 120 V, 1P, CB	LIGHTING CONTROL
8	GROUNDING ELECTRODE		21	15 A, 1P, TEST SWITCH	IISNS TEST SWITCH
9	30 A, 2P, NO CONTACTOR	SIGN ILLUMINATION	22	15 A, 1P, TEST SWITCH	LIGHTING TEST SWITCH
10	PHOTOELECTRIC UNIT (NOTE 4)	PEU	23	60 A, 2P, NO CONTACTOR	LIGHTING
11	15 A, 1P, TEST SWITCH	SIGN ILLUMINATION TEST SWITCH	24	15 A, 120 V, 1P, CB	IISNS
12	15 A, 120 V, 1P, CB	SIGN ILLUMINATION CONTROL	25	30 A, 2P, NO CONTACTOR	IISNS
13	15 A, 120 V, 1P, CB	FLASHING BEACON	26	20 A, 120 V, 1P, CB	TELEPHONE DEMARCATION CABINET
			27	15 A, 120 V, 1P, CB	IISNS CONTROL

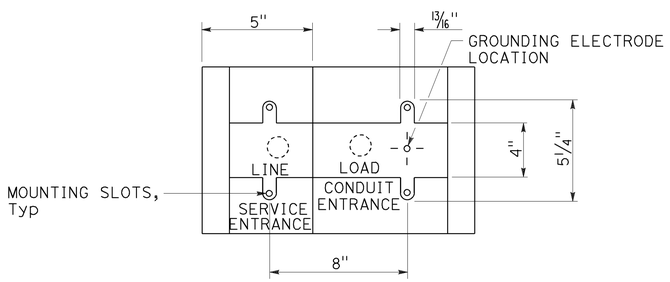

BASE FOR TYPE III-A SERVICE EQUIPMENT ENCLOSURE

DETAIL B

NOTES:

1. Unless otherwise indicated on the plans, service equipment items shall be provided for each service equipment enclosure as shown.
2. Connect to remote test switch mounted on lighting standards, sign post or structure when required.
3. Items 1 and 6 shall be isolated from the service equipment enclosure.
4. Type V photoelectric control shall be used unless otherwise indicated on the plans.
5. Item 12, 20 and 27 shall be ganged operated CB.

STATE OF CALIFORNIA
DEPARTMENT OF TRANSPORTATION

ELECTRICAL SYSTEMS (SERVICE EQUIPMENT ENCLOSURE AND TYPICAL WIRING DIAGRAM, TYPE III-A SERIES)

NO SCALE

RSP ES-2D DATED OCTOBER 30, 2015 SUPERSEDES STANDARD PLAN ES-2D DATED MAY 20, 2011 - PAGE 431 OF THE STANDARD PLANS BOOK DATED 2010.

REVISED STANDARD PLAN RSP ES-2D

2010 REVISED STANDARD PLAN RSP ES-2D

8-20-15

Dist	COUNTY	ROUTE	POST MILES TOTAL PROJECT	SHEET No.	TOTAL SHEETS
06	Ker	99	49.6	56	106

REGISTERED CIVIL ENGINEER

October 30, 2015
PLANS APPROVAL DATE

REGISTERED PROFESSIONAL ENGINEER
Stanley P. Johnson
No. C57793
Exp. 3-31-16
CIVIL
STATE OF CALIFORNIA

THE STATE OF CALIFORNIA OR ITS OFFICERS OR AGENTS SHALL NOT BE RESPONSIBLE FOR THE ACCURACY OR COMPLETENESS OF SCANNED COPIES OF THIS PLAN SHEET.

TO ACCOMPANY PLANS DATED 11-16-15

2010 REVISED STANDARD PLAN RSP ES-6A

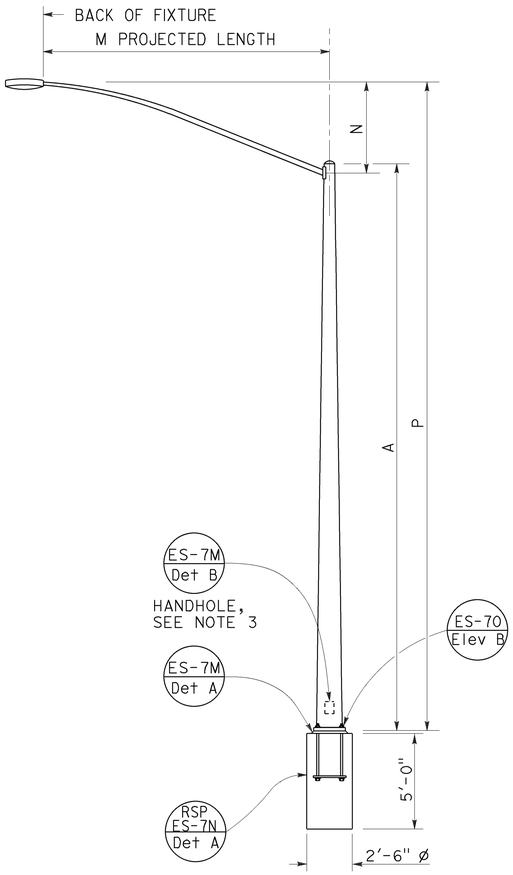

TYPE 15 AND TYPE 21
ELEVATION A

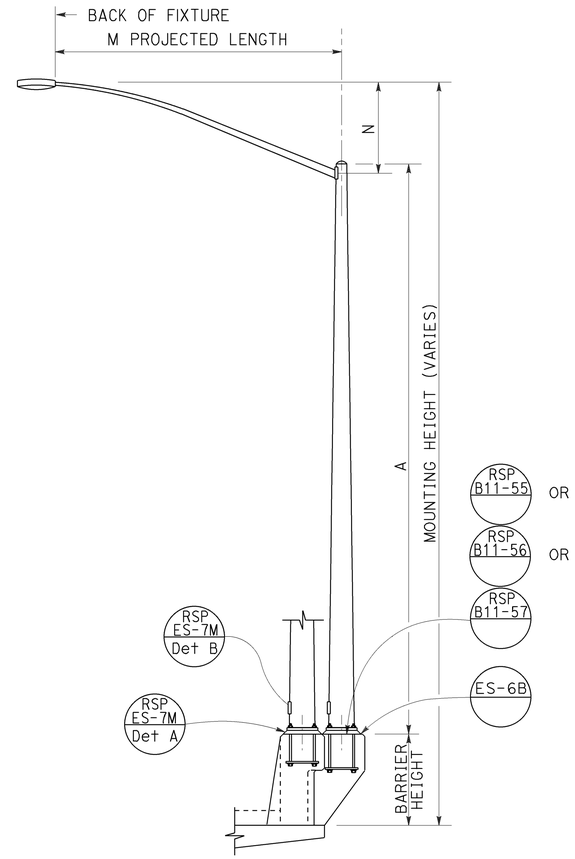

TYPE 15 AND TYPE 21 BARRIER RAIL MOUNTED
ELEVATION B

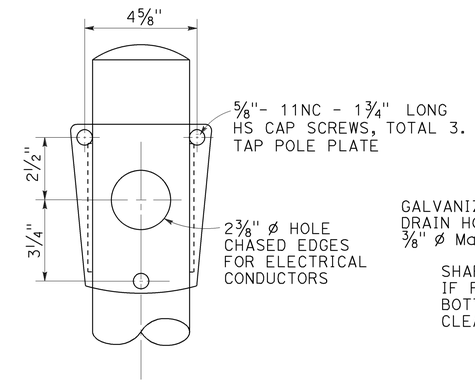

FRONT VIEW

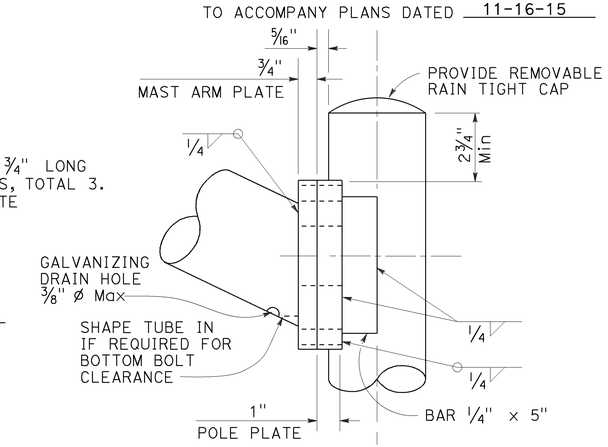

SIDE VIEW

LUMINAIRE MAST ARM CONNECTION
DETAIL R

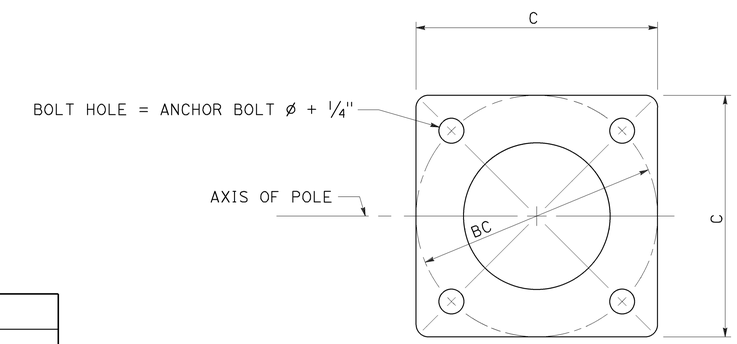

BASE PLATE
DETAIL A

POLE TYPE	POLE DATA				BASE PLATE DATA			
	A HEIGHT	Min OD BASE	Min OD TOP	WALL THICKNESS	C	BC = BOLT CIRCLE	THICKNESS	ANCHOR BOLT SIZE
15	30'-0"	8"	3 11/16"	0.1196"	1'-0"	1'-0"	2"	1" ø x 3'-0" *
21	35'-0"	8 5/8"	3 9/16"	0.1793"				1 1/4" ø x 3'-0" *

* FOR BARRIER RAIL BOLTS, SEE STANDARD PLAN ES-6B.

LUMINAIRE MAST ARM DATA					
M PROJECTED LENGTH	N RISE	Min OD AT POLE	NOMINAL THICKNESS	P TYPE 15	P TYPE 21
6'-0"	2'-0"±	3 1/4"	0.1196"	31'-6"±	36'-6"±
8'-0"	2'-6"±	3 1/2"		32'-0"±	37'-0"±
10'-0"	3'-3"±	3 7/8"		32'-9"±	37'-9"±
12'-0"	4'-3"±			33'-9"±	38'-9"±
15'-0"	4'-9"±	4 1/4"		34'-3"±	39'-3"±

NOTES:

1. ☐ Indicates mast arm length to be used unless otherwise noted on the plans.
2. For Type 15-SB, use Type 15 standard with Type 30 slip base plate details, see Revised Standard Plan RSP ES-6F.
3. Handhole shall be located on the downstream side of traffic.
4. For additional notes and details, see Revised Standard Plans RSP ES-7M and RSP ES-7N.

STATE OF CALIFORNIA
DEPARTMENT OF TRANSPORTATION

ELECTRICAL SYSTEMS (LIGHTING STANDARD, TYPES 15 AND 21)

NO SCALE

RSP ES-6A DATED OCTOBER 30, 2015 SUPERSEDES STANDARD PLAN ES-6A DATED MAY 20, 2011 - PAGE 452 OF THE STANDARD PLANS BOOK DATED 2010.

REVISED STANDARD PLAN RSP ES-6A

8-24-15

Dist	COUNTY	ROUTE	POST MILES TOTAL PROJECT	SHEET No.	TOTAL SHEETS
06	Ker	99	49.6	57	106

REGISTERED CIVIL ENGINEER

October 30, 2015
PLANS APPROVAL DATE

REGISTERED PROFESSIONAL ENGINEER
Stanley P. Johnson
No. C57793
Exp. 3-31-16
CIVIL
STATE OF CALIFORNIA

THE STATE OF CALIFORNIA OR ITS OFFICERS OR AGENTS SHALL NOT BE RESPONSIBLE FOR THE ACCURACY OR COMPLETENESS OF SCANNED COPIES OF THIS PLAN SHEET.

TO ACCOMPANY PLANS DATED 11-16-15

2010 REVISED STANDARD PLAN RSP ES-7M

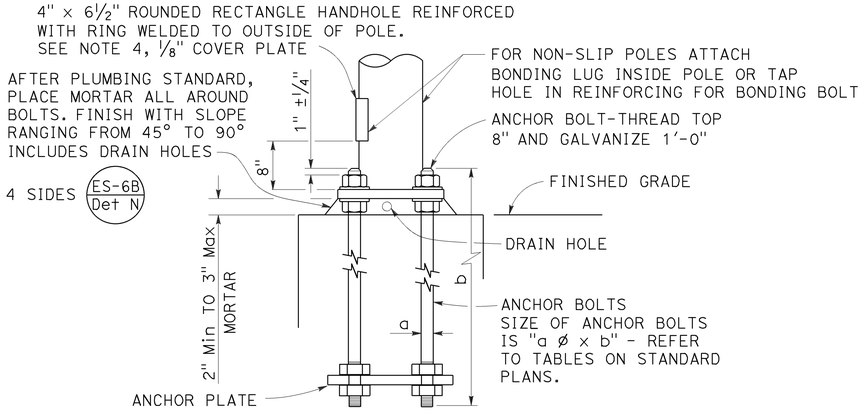

HANDHOLE AND ANCHORAGE
DETAIL A

IDENTIFICATION NUMBER

1. Attach a stamped metal tag with pole's identification number above the handhole. ¼" high number, minimum.
2. Attach a stamped metal tag with mast arm's identification number to the bottom of the signal mast arm near the pole plate. ¼" high number, minimum.

Type — Load case (Use SL for special load case) — Design wind velocity (mph) — Signal mast arm length (ft) {Near handhole: Maximum signal mast arm length for pole type; Near pole plate: Installed signal mast arm length} — Standard plan year — Only for poles or mast arms using Detail F — Only for poles or mast arms using ES-7D

26A - 3 - 100 - 45 - 10 - F or FB

SAMPLE IDENTIFICATION NUMBER

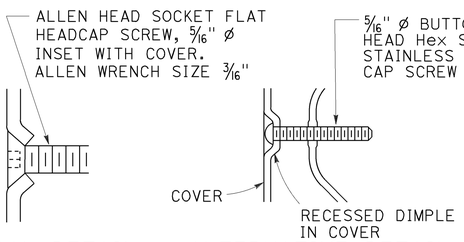

TYPICAL DETAIL
DETAIL B-1

ALTERNATIVE DETAIL
DETAIL B-2

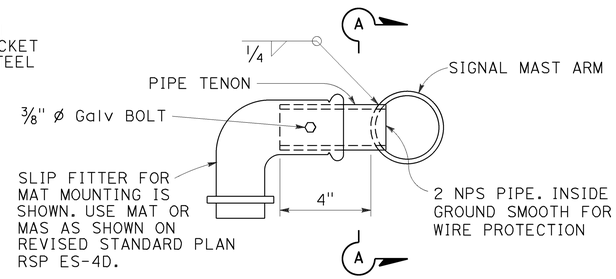

SIDE TENON
DETAIL S-1

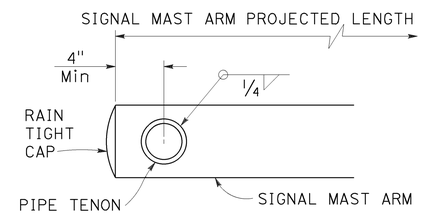

SECTION A-A

PIPE TENONS
DETAIL S

NOTES:

1. Provide a Hex nut, leveling nut and 2 washers for each bolt.
2. Luminaire mast arms shall be round, tapered steel tubes, taper of 0.1375" to 0.143-inch per foot with an end section 2⅜" OD for mounting hardware. Extensions of 2 NPS Standard pipe and 7" long may be used at the option of the manufacturer. When low pressure sodium luminaires are required, the extension shall be 1'-3".
3. Signal mast arms shall be round, tapered steel tubes, maximum taper 0.143-inch per foot.
4. Handhole reinforcement ring shall be ¼" x 2" for 0.1196" to 0.2391" thick poles, ⅜" x 2" for 0.3125" thick poles.
5. Handholes shall be located on the downstream side of traffic.
6. Detail F, fatigue resistant weld, is required at socket welded signal mast arm plate and pole base plate.
7. Cap screws shall be tightened by the turn-of-nut method ⅓ turn from a snug tight condition. No washer will be required.
8. Outside diameter, wall thickness, and corresponding section properties of poles and mast arms as shown in the Standard Plans are minimums. Unless otherwise specified, alternative sections shall require approval by the Engineer.
9. Wind Loading (3 seconds gust): 100 mph
10. Unit Stresses (Structural steel):
    fy = 55,000 psi (tapered steel tube and anchor bolts)
    fy = 50,000 psi (unless otherwise noted)
11. Unit Stresses (Reinforced concrete):
    f'c = 3,625 psi
    fy = 60,000 psi

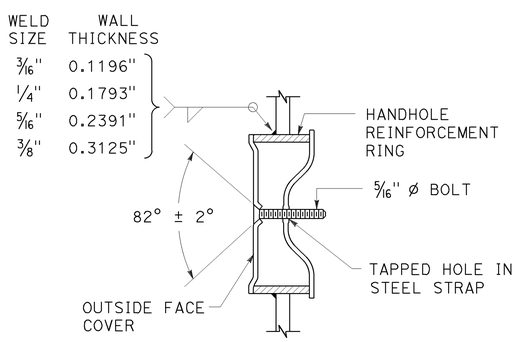

TAMPER RESISTANT HANDHOLE COVER
DETAIL B

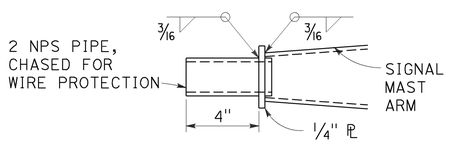

TIP TENON
DETAIL TL

This detail supersedes Detail S when so designated

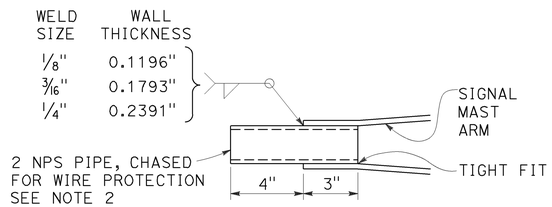

TIP TENON
DETAIL TS

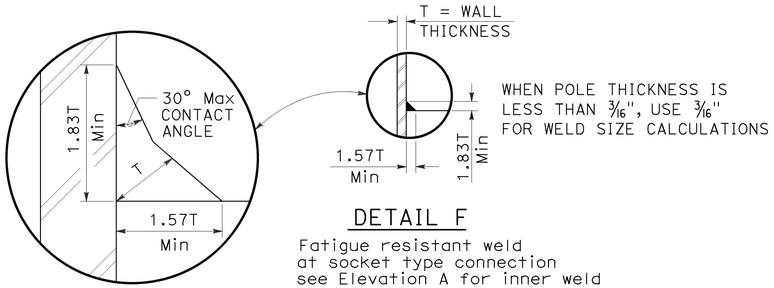

DETAIL F

Fatigue resistant weld at socket type connection see Elevation A for inner weld

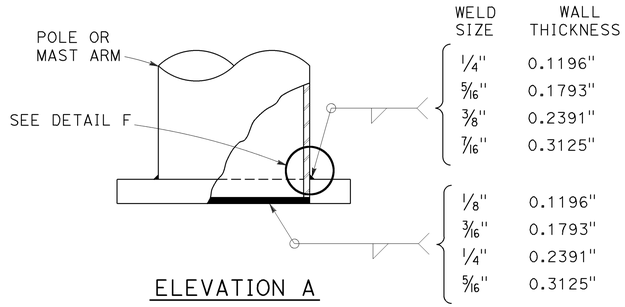

ELEVATION A

STATE OF CALIFORNIA
DEPARTMENT OF TRANSPORTATION

ELECTRICAL SYSTEMS (SIGNAL AND LIGHTING STANDARD, DETAIL No. 1)

NO SCALE

RSP ES-7M DATED OCTOBER 30, 2015 SUPERSEDES STANDARD PLAN ES-7M DATED MAY 20, 2011 - PAGE 474 OF THE STANDARD PLANS BOOK DATED 2010.

REVISED STANDARD PLAN RSP ES-7M

DIST	COUNTY	ROUTE	POST MILES TOTAL PROJECT	SHEET NO.	TOTAL SHEETS
06	Ker	99	49.6	58	106

Theresa Gabriel
REGISTERED ELECTRICAL ENGINEER

April 15, 2016
PLANS APPROVAL DATE

REGISTERED PROFESSIONAL ENGINEER
Theresa Aziz Gabriel
No. E15129
Exp. 6-30-16
ELECTRICAL
STATE OF CALIFORNIA

THE STATE OF CALIFORNIA OR ITS OFFICERS OR AGENTS SHALL NOT BE RESPONSIBLE FOR THE ACCURACY OR COMPLETENESS OF SCANNED COPIES OF THIS PLAN SHEET.

TO ACCOMPANY PLANS DATED 11-16-15

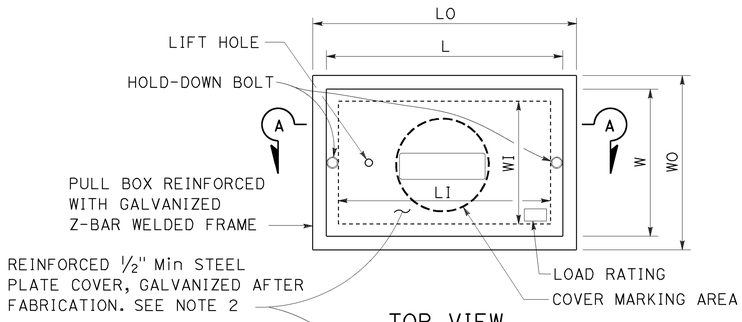

TOP VIEW

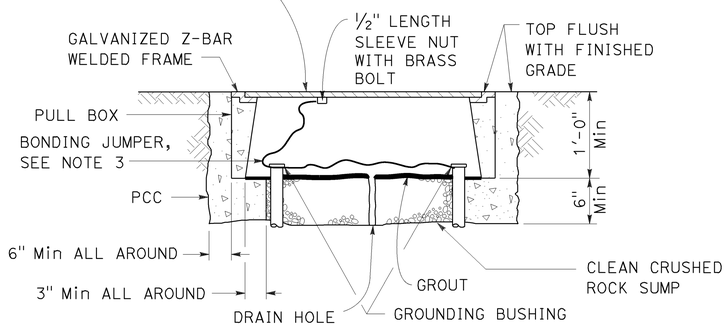

SECTION A-A

No. 3½(T), No. 5(T) AND No. 6(T) TRAFFIC PULL BOX

NOTES:

1. Traffic pull box shall be provided with steel cover and special concrete footing. Steel cover shall have embossed non-skid pattern.
2. Steel reinforcing shall be as regularly used in the standard products of the respective manufacturer.
3. Bonding jumper for metal covers shall be 3' long, minimum.
4. The nominal dimensions of the opening in which the cover sets shall be the same as the cover dimensions except the length and width dimensions shall be ⅛" greater.
5. Covers and boxes shall be interchangeable with California standard male and female gages. When interchanged with a standard male or female gage, the top surfaces shall be flush within ⅛".

DIMENSION TABLE

PULL BOX	PULL BOX						COVER	
	MINIMUM * THICKNESS	MINIMUM DEPTH BOX AND EXTENSION	LO	LI	WO	WI	L **	W **
No. 3½(T)	1½"	1'-0"	1'-10" - 1'-11"	1'-5" - 1'-6½"	1'-3" - 1'-4"	10" - 1'-0"	1'-8" -1'-8½"	1'-1" - 1'-2"
No. 5(T)	1¾"	1'-0"	2'-5" - 2'-6"	2'-0" - 2'-1"	1'-6" - 1'-7"	1'-1" - 1'-2"	2'-3" - 2'-3½"	1'-4" - 1'-4½"
No. 6(T)	2"	1'-0"	2'-11" - 3'-1"	2'-6" - 2'-7"	1'-10" - 2'-0"	1'-5" - 1'-6"	2'-9" - 2'-9½"	1'-8" - 1'-8½"

* EXCLUDING CONDUIT WEB ** TOP DIMENSION

STATE OF CALIFORNIA
DEPARTMENT OF TRANSPORTATION

ELECTRICAL SYSTEMS (TRAFFIC PULL BOX)

NO SCALE

RSP ES-8B DATED APRIL 15, 2016 SUPERSEDES RSP ES-8B DATED OCTOBER 30, 2015 AND RSP ES-8B DATED JULY 19, 2013 AND RSP ES-8B DATED JANUARY 20, 2012 THAT SUPPLEMENTS THE STANDARD PLANS BOOK DATED 2010.

REVISED STANDARD PLAN RSP ES-8B

2010 REVISED STANDARD PLAN RSP ES-8B

1-22-16

Dist	COUNTY	ROUTE	POST MILES TOTAL PROJECT	SHEET No.	TOTAL SHEETS
06	Ker	99	49.6	59	106

Theresa Gabriel
REGISTERED ELECTRICAL ENGINEER

October 30, 2015
PLANS APPROVAL DATE

REGISTERED PROFESSIONAL ENGINEER
Theresa Aziz Gabriel
No. E15129
Exp. 6-30-16
ELECTRICAL
STATE OF CALIFORNIA

THE STATE OF CALIFORNIA OR ITS OFFICERS OR AGENTS SHALL NOT BE RESPONSIBLE FOR THE ACCURACY OR COMPLETENESS OF SCANNED COPIES OF THIS PLAN SHEET.

TO ACCOMPANY PLANS DATED 11-16-15

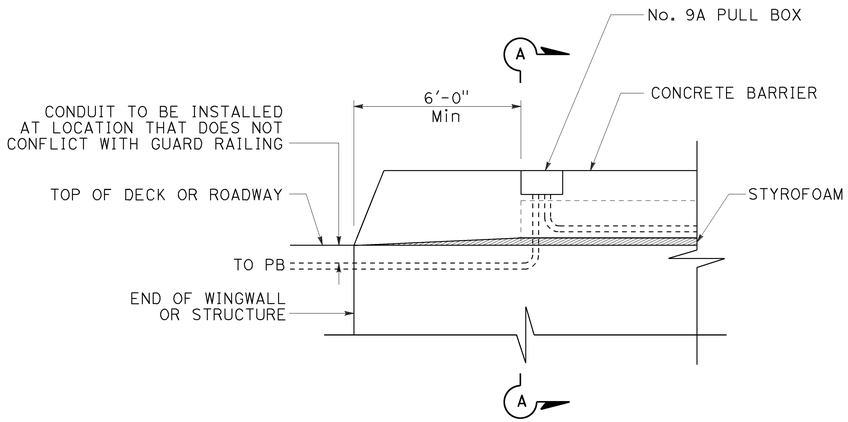

SIDE VIEW

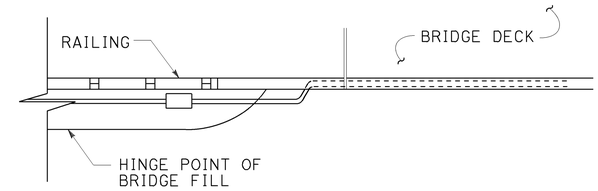

TOP VIEW

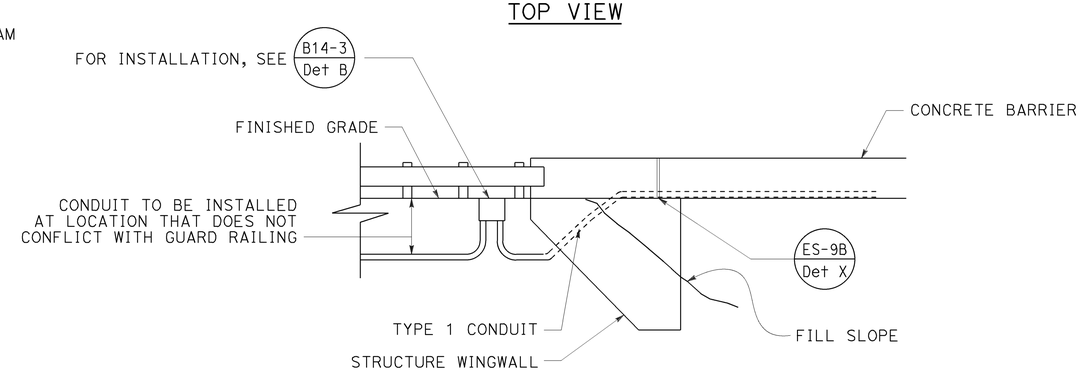

SIDE VIEW

CONDUIT TERMINATION
DETAIL I

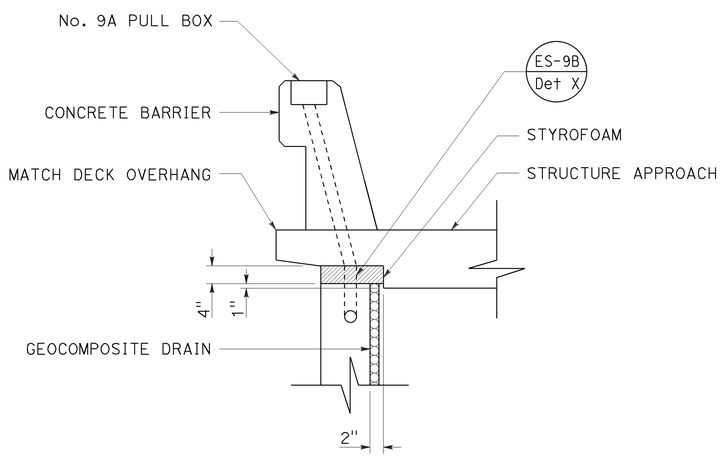

SECTION A-A

CONDUIT TERMINATION
DETAIL A

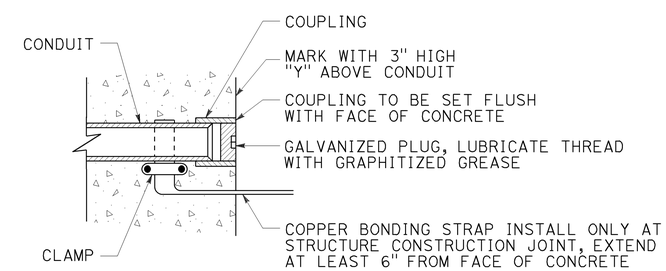

CONDUIT TERMINATION
DETAIL C

STATE OF CALIFORNIA
DEPARTMENT OF TRANSPORTATION

ELECTRICAL SYSTEMS (STRUCTURE PULL BOX INSTALLATIONS)

NO SCALE

RSP ES-9A DATED OCTOBER 30, 2015 SUPERSEDES STANDARD PLAN ES-9A DATED MAY 20, 2011 - PAGE 481 OF THE STANDARD PLANS BOOK DATED 2010.

REVISED STANDARD PLAN RSP ES-9A

2010 REVISED STANDARD PLAN RSP ES-9A

8-20-15

Dist	COUNTY	ROUTE	POST MILES TOTAL PROJECT	SHEET No.	TOTAL SHEETS
06	Ker	99	49.6	60	106

Jagswinder S Gill
REGISTERED ELECTRICAL ENGINEER

October 30, 2015
PLANS APPROVAL DATE

REGISTERED PROFESSIONAL ENGINEER Jagswinder S. Gill No. E18551 Exp. 12-31-16 ELECTRICAL STATE OF CALIFORNIA

THE STATE OF CALIFORNIA OR ITS OFFICERS OR AGENTS SHALL NOT BE RESPONSIBLE FOR THE ACCURACY OR COMPLETENESS OF SCANNED COPIES OF THIS PLAN SHEET.

TO ACCOMPANY PLANS DATED 11-16-15

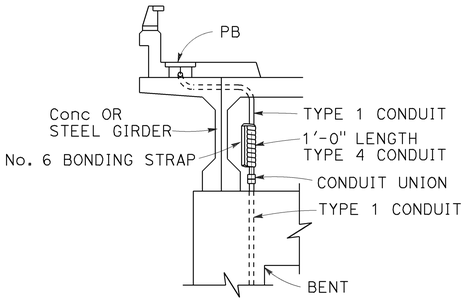

CONDUIT RISER CONNECTION

DETAIL R

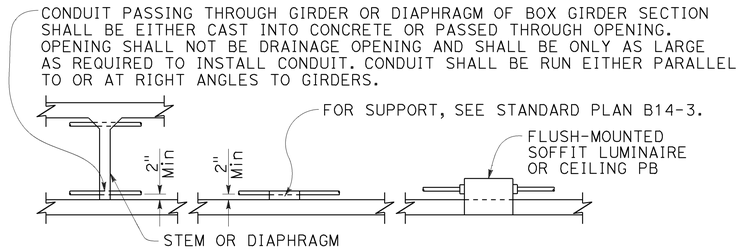

CONDUIT INSTALLATION WITHIN BOX GIRDER SECTIONS

DETAIL S

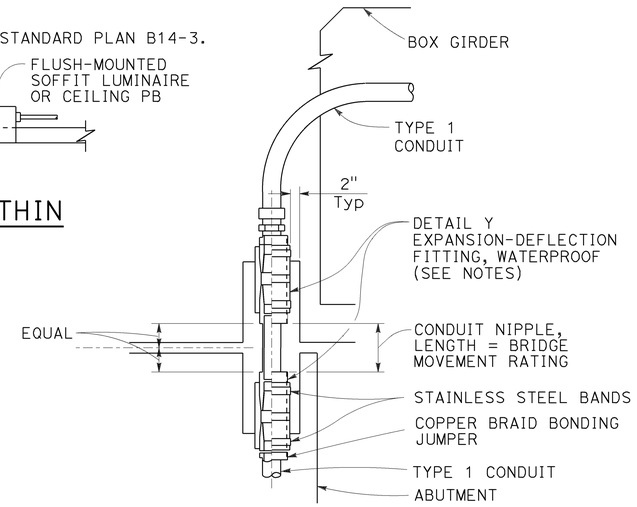

NOTES:

1. Except for sidewalk joints, a conduit expansion fitting or expansion-deflection fitting shall be installed at each ½" or greater structure joint, hinge or abutment.
2. Fittings or combination of fittings shall be installed to accommodate the movement rating as shown on the structure plans.
3. Fittings shall be installed parallel to superstructure girders.
4. Where lateral movement greater than ¼" may occur, a neoprene sleeve expansion-deflection fitting shall be installed straddling the joint.

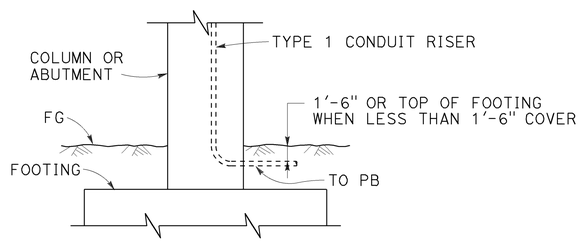

LOWER END OF CONDUIT RISER AT COLUMN OR ABUTMENT

DETAIL T

NOTES:

1. Fitting and pocket required only where movement can occur between girder and abutment.
2. Fill pocket around fitting with resilient waterproof compound.

CONDUIT RISER CONNECTION AT COLUMN, ABUTMENT OR STRUCTURE WING WALL

DETAIL U

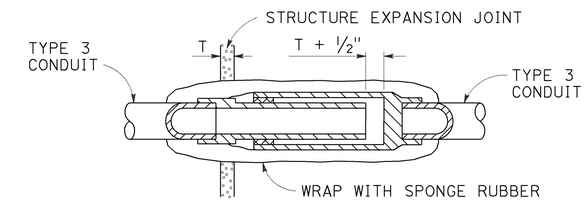

NON-METALLIC CONDUIT EXPANSION FITTING INSTALLATION DETAIL

To be used only when shown or specified on Project Plans

DETAIL V

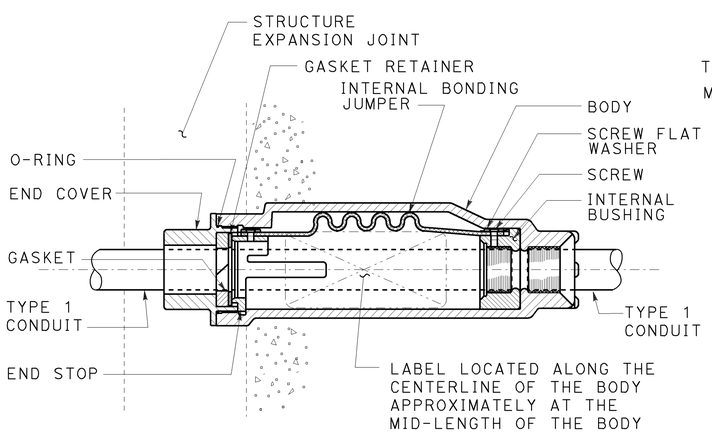

CONDUIT EXPANSION FITTING

DETAIL X

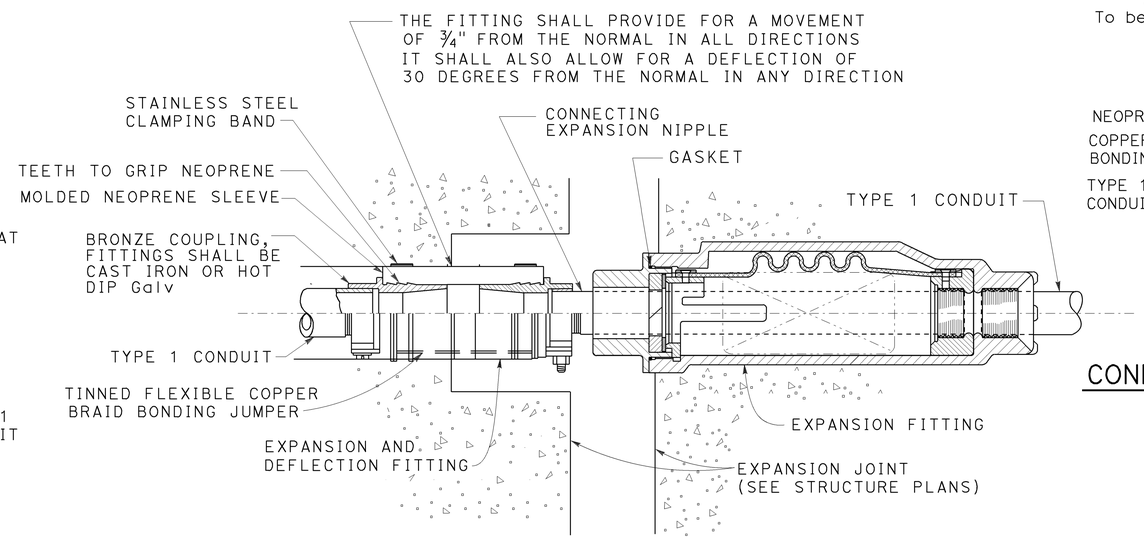

COMBINATION EXPANSION-DEFLECTION FITTINGS

METALLIC CONDUIT INSTALLATION

DETAIL XY

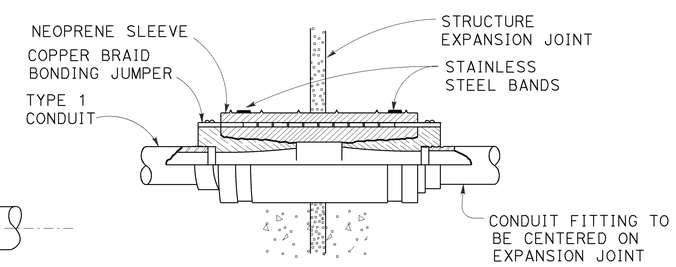

CONDUIT EXPANSION-DEFLECTION FITTING

DETAIL Y

STATE OF CALIFORNIA
DEPARTMENT OF TRANSPORTATION

ELECTRICAL SYSTEMS (CONDUIT RISER AND EXPANSION FITTING, STRUCTURE INSTALLATIONS)

NO SCALE

RSP ES-9B DATED OCTOBER 30, 2015 SUPERSEDES STANDARD PLAN ES-9B DATED MAY 20, 2011 - PAGE 482 OF THE STANDARD PLANS BOOK DATED 2010.

REVISED STANDARD PLAN RSP ES-9B

2010 REVISED STANDARD PLAN RSP ES-9B

9-1-15

Dist	COUNTY	ROUTE	POST MILES TOTAL PROJECT	SHEET No.	TOTAL SHEETS
06	Ker	99	49.6	61	106

Theresa Gabriel
REGISTERED ELECTRICAL ENGINEER

April 15, 2016
PLANS APPROVAL DATE

REGISTERED PROFESSIONAL ENGINEER Theresa Aziz Gabriel No. E15129 Exp. 6-30-16 ELECTRICAL STATE OF CALIFORNIA

THE STATE OF CALIFORNIA OR ITS OFFICERS OR AGENTS SHALL NOT BE RESPONSIBLE FOR THE ACCURACY OR COMPLETENESS OF SCANNED COPIES OF THIS PLAN SHEET.

TO ACCOMPANY PLANS DATED 11-16-15

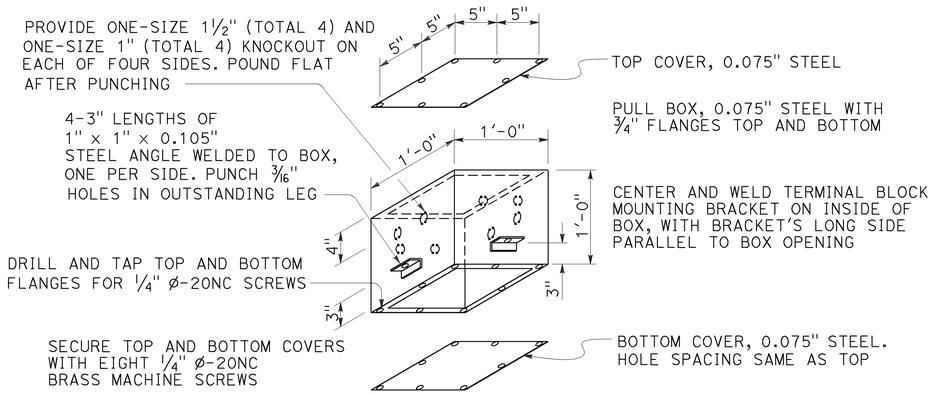

No. 7 PULL BOX (CEILING)

See Note 6

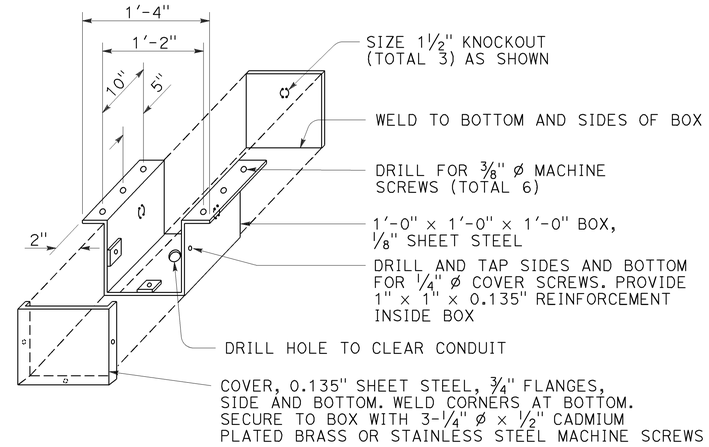

No. 8 PULL BOX

NOTES:

1. Corner joints shall be lapped and secured by spot welding or riveting.
2. Where cap screws are used to attach cover to box, either of the following methods of providing adequate threading may be used:
   a. Tack weld stainless steel Hex nut to bottom of flange (total 4)
   b. Tack weld a ¼" × ⅝" × 8" bar beneath flange (total 2)
3. Pound knockouts flat after punching.
4. Multiple size knockouts (concentric) shall not be permitted.
5. Pull box covers shall be marked as specified.
6. Installation of No. 7 pull box:
   a) Install with bottom flange flush with concrete.
   b) Both covers shall be on a box during pouring.
7. Install box parallel to top of railing. Cover box during pouring with ¼" plywood of sufficient size to provide 1:1 chamfer on 3 sides of cover. Upper edge of plywood shall fit against lower edge of rain tight hood.

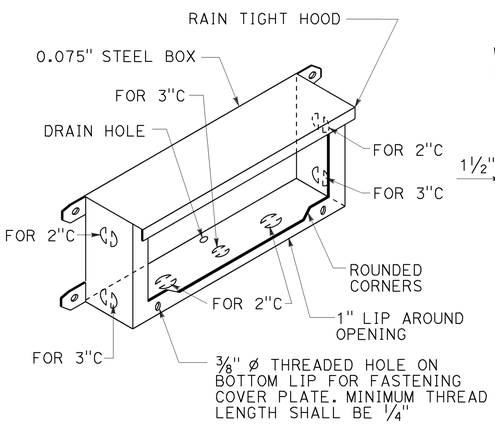

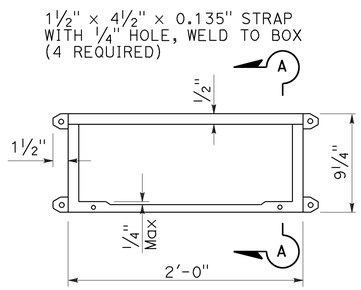

PLAN

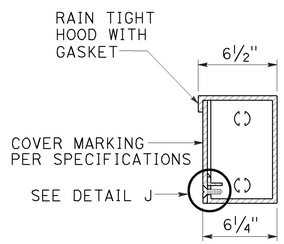

SECTION A-A

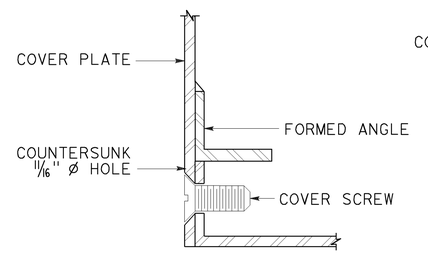

DETAIL J

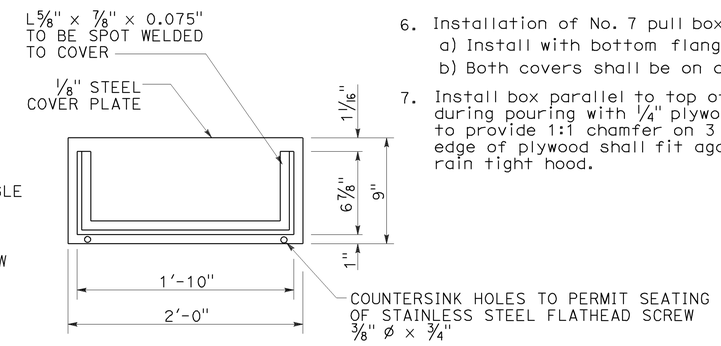

COVER DETAIL

No. 9 PULL BOX (STRUCTURE)

See Note 7

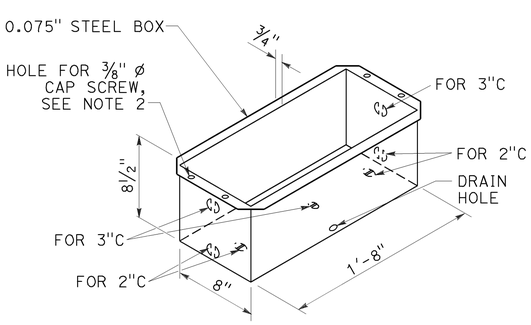

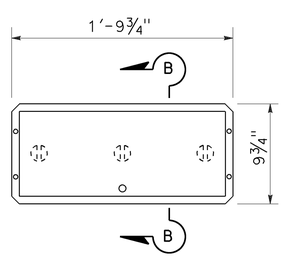

PLAN

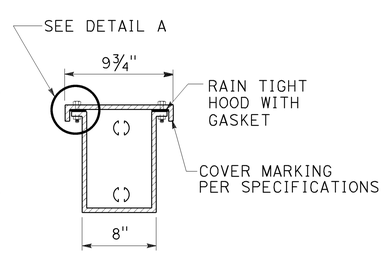

SECTION B-B

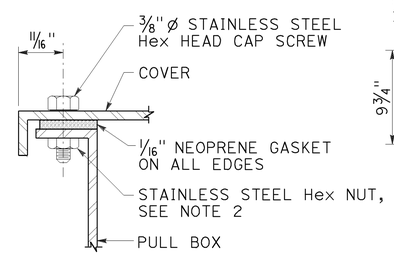

DETAIL A

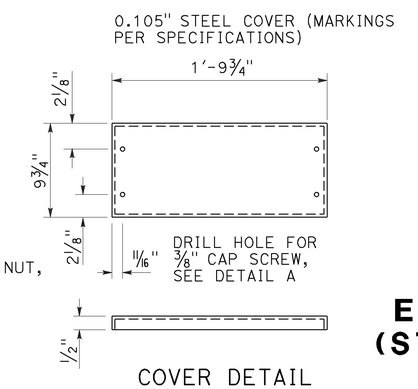

COVER DETAIL

No. 9A PULL BOX (STRUCTURE)

STATE OF CALIFORNIA
DEPARTMENT OF TRANSPORTATION

ELECTRICAL SYSTEMS (STRUCTURE PULL BOX)

NO SCALE

RSP ES-9C DATED APRIL 15, 2016 SUPERSEDES RSP ES-9C DATED OCTOBER 30, 2015 AND STANDARD PLAN ES-9C DATED MAY 20, 2011 - PAGE 483 OF THE STANDARD PLANS BOOK DATED 2010.

REVISED STANDARD PLAN RSP ES-9C

2010 REVISED STANDARD PLAN RSP ES-9C

1-12-16

Dist	COUNTY	ROUTE	POST MILES TOTAL PROJECT	SHEET No.	TOTAL SHEETS
06	Ker	99	49.6	62	106

REGISTERED ELECTRICAL ENGINEER

April 15, 2016
PLANS APPROVAL DATE

Theresa Aziz Gabriel No. E15129 Exp. 6-30-16 ELECTRICAL — REGISTERED PROFESSIONAL ENGINEER — STATE OF CALIFORNIA

THE STATE OF CALIFORNIA OR ITS OFFICERS OR AGENTS SHALL NOT BE RESPONSIBLE FOR THE ACCURACY OR COMPLETENESS OF SCANNED COPIES OF THIS PLAN SHEET.

TO ACCOMPANY PLANS DATED 11-16-15

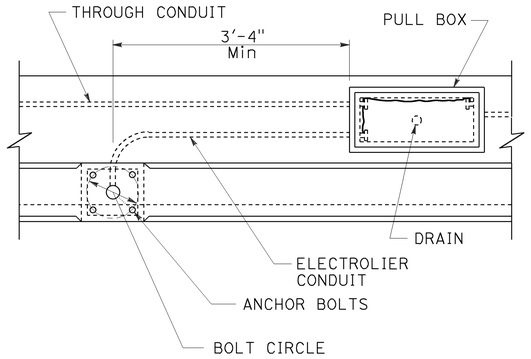

TOP VIEW

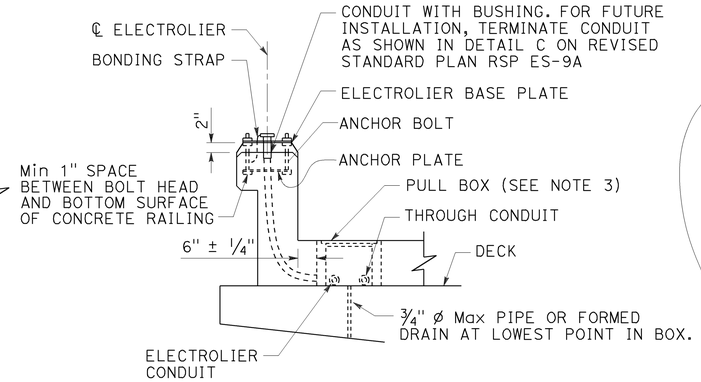

END VIEW

No. 3½, 5, OR 6 PULL BOX INSTALLATION

DETAIL A

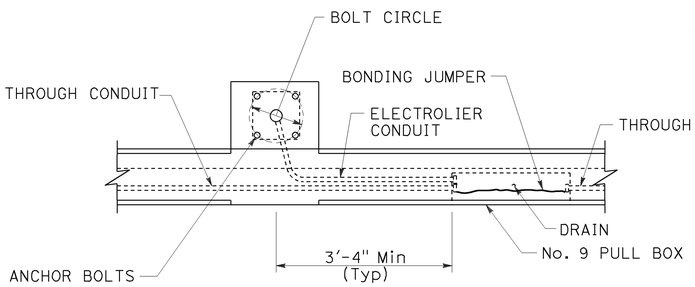

TOP VIEW

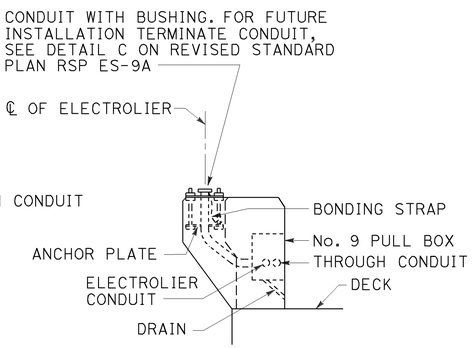

END VIEW

No. 9 PULL BOX INSTALLATION

DETAIL B

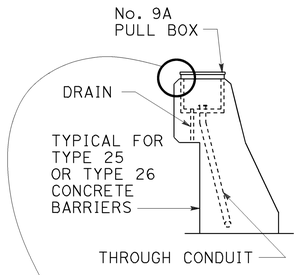

END VIEW

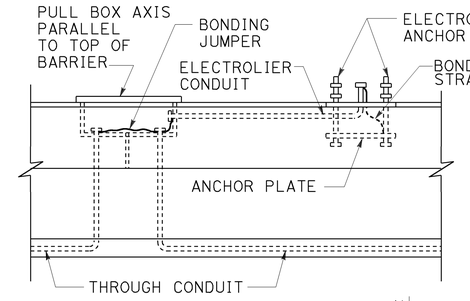

SIDE VIEW

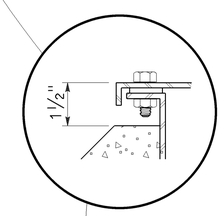

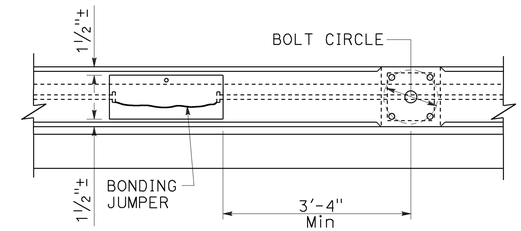

TOP VIEW

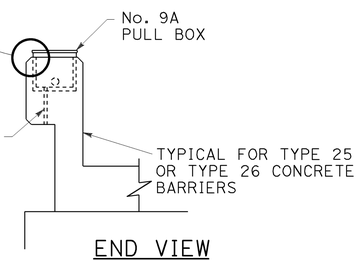

END VIEW

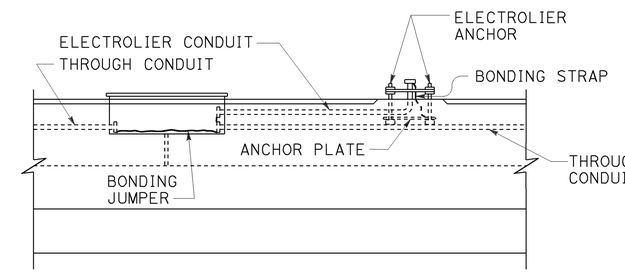

SIDE VIEW

No. 9A PULL BOX INSTALLATION

DETAIL C

NOTES:

1. Axis of pull box shall be parallel to top of barrier, sidewalk or railing.
2. See railing sheet for reinforcement and structural details at electroliers and pull boxes.
3. Top of pull boxes in sidewalk areas shall be flush with sidewalk. Modify base of pull box as required.
4. Boxes inside of vertical barrier or railing shall be closed during pouring of PCC with 1/4" plywood of sufficient size to provide 1:1 chamfer on 3 sides of cover. Upper edge of plywood shall fit against lower edge of raintight hood.
5. Use drain in center if box is horizontal, or at low end if box is inclined. When box is mounted in sloping parapet 1/2" elongated drain hole inside at center or near end as required for drainage.
6. For electrolier anchorage bolts and grouting details, see Revised Standard Plan RSP ES-6B.
7. See Standard Plan B14-3 for conduit in concrete barrier.

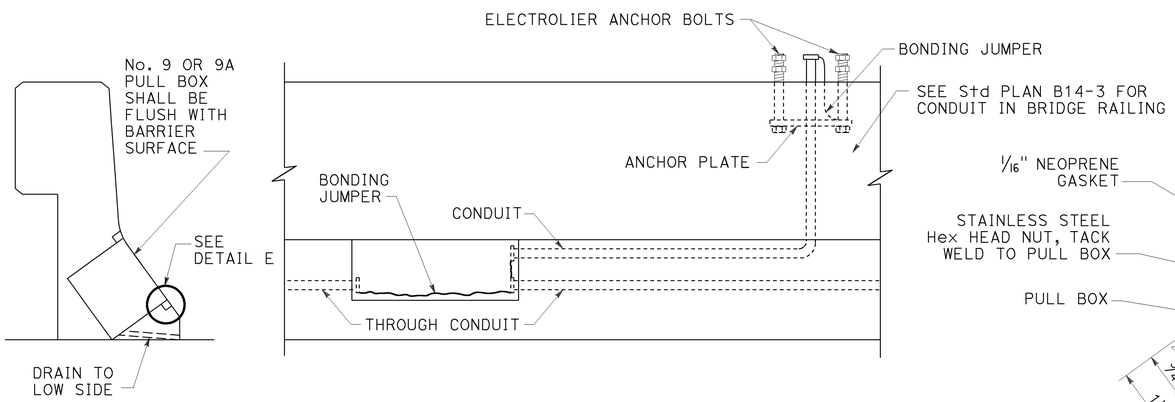

INSTALLATION IN SLOPING PARAPETS

DETAIL D

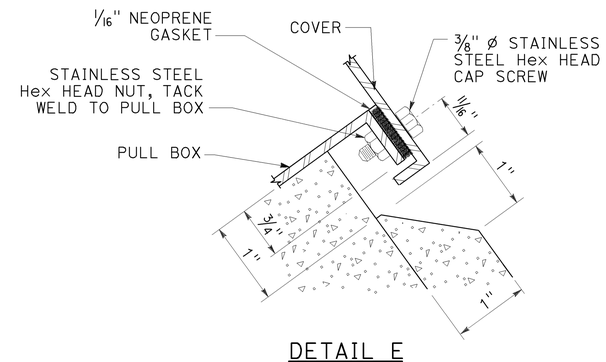

DETAIL E

STATE OF CALIFORNIA
DEPARTMENT OF TRANSPORTATION

ELECTRICAL SYSTEMS (STRUCTURE PULL BOX INSTALLATIONS)

NO SCALE

RSP ES-9D DATED APRIL 15, 2016 SUPERSEDES RSP ES-9D DATED OCTOBER 30, 2015 AND STANDARD PLAN ES-9D DATED MAY 20, 2011 - PAGE 484 OF THE STANDARD PLANS BOOK DATED 2010.

REVISED STANDARD PLAN RSP ES-9D

2010 REVISED STANDARD PLAN RSP ES-9D

1-22-16

Dist	COUNTY	ROUTE	POST MILES TOTAL PROJECT	SHEET No.	TOTAL SHEETS
06	Ker	99	49.6	63	106

Theresa Gabriel
REGISTERED ELECTRICAL ENGINEER

April 15, 2016
PLANS APPROVAL DATE

REGISTERED PROFESSIONAL ENGINEER
Theresa Aziz Gabriel
No. E15129
Exp. 6-30-16
ELECTRICAL
STATE OF CALIFORNIA

THE STATE OF CALIFORNIA OR ITS OFFICERS OR AGENTS SHALL NOT BE RESPONSIBLE FOR THE ACCURACY OR COMPLETENESS OF SCANNED COPIES OF THIS PLAN SHEET.

TO ACCOMPANY PLANS DATED 11-16-15

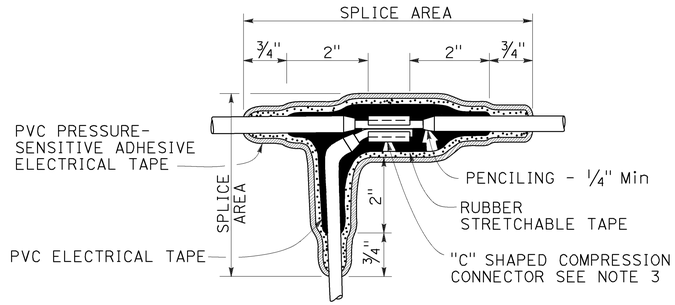

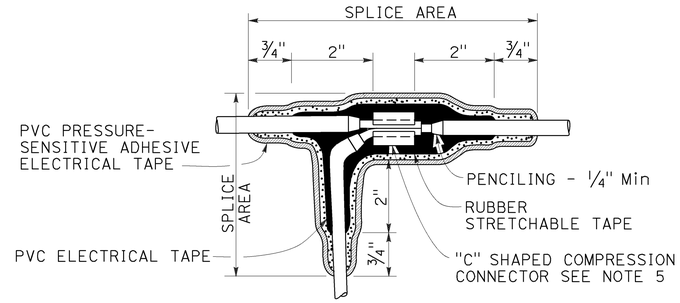

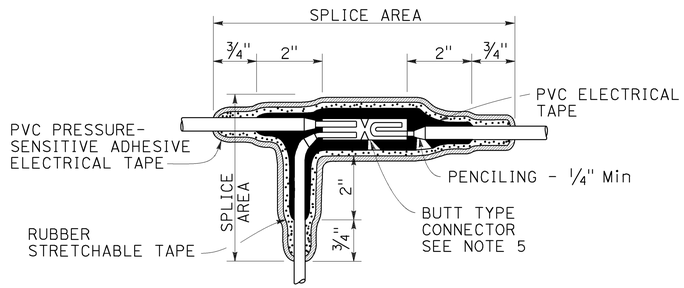

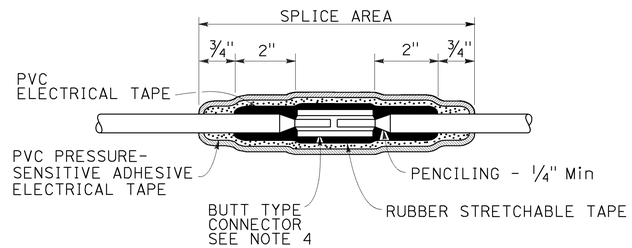

TYPICAL SPLICE INSULATION METHOD B

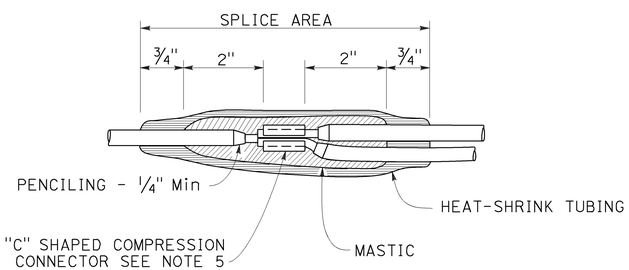

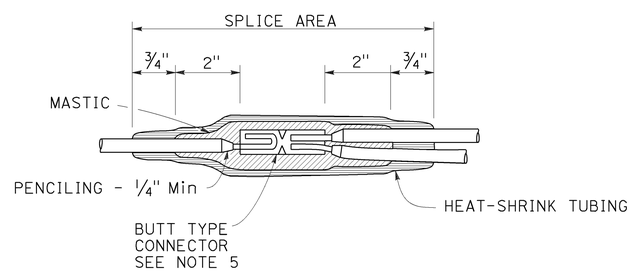

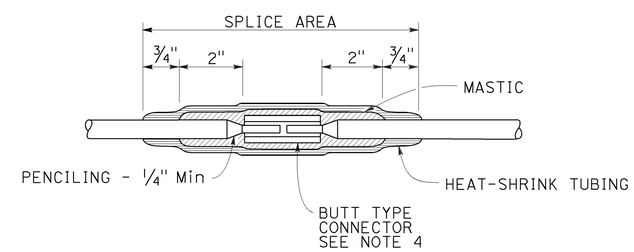

TYPICAL SPLICE INSULATION HEAT-SHRINK TUBING

NOTES:

1. Dimensions are minimum.
2. Rubber tapes shall be rolled after application.
3. Between 1 free-end and 1 through conductor.
4. Between 2 free-end conductors.
5. Between 3 free-end conductors.

STATE OF CALIFORNIA
DEPARTMENT OF TRANSPORTATION

ELECTRICAL SYSTEMS (SPLICE INSULATION METHODS DETAILS)

NO SCALE

RSP ES-13A DATED APRIL 15, 2016 SUPERSEDES RSP ES-13A DATED OCTOBER 30, 2015 AND STANDARD PLAN ES-13A DATED MAY 20, 2011 - PAGE 491 OF THE STANDARD PLANS BOOK DATED 2010.

REVISED STANDARD PLAN RSP ES-13A

2010 REVISED STANDARD PLAN RSP ES-13A

1-22-16

Dist	COUNTY	ROUTE	POST MILES TOTAL PROJECT	SHEET No.	TOTAL SHEETS
06	Ker	99	49.6	64	106

Theresa Gabriel
REGISTERED ELECTRICAL ENGINEER

April 15, 2016
PLANS APPROVAL DATE

REGISTERED PROFESSIONAL ENGINEER
Theresa Aziz Gabriel
No. E15129
Exp. 6-30-16
ELECTRICAL
STATE OF CALIFORNIA

THE STATE OF CALIFORNIA OR ITS OFFICERS OR AGENTS SHALL NOT BE RESPONSIBLE FOR THE ACCURACY OR COMPLETENESS OF SCANNED COPIES OF THIS PLAN SHEET.

TO ACCOMPANY PLANS DATED 11-16-15

CIRCUIT VOLTAGE	FUSE VOLTAGE RATING	FUSE CURRENT RATING						
		HPS LAMP BALLAST		LOW PRESSURE SODIUM BALLAST	INDUCTION SIGN LIGHTING	SINGLE PHASE (TWO WIRE) TRANSFORMERS (PRIMARY SIDE)		
		70 W	100 W	180 W	85 W	1 kVA	2 kVA	3 kVA
120 V	250 V	5 A	5 A	5 A	5 A	10 A	20 A	30 A
240 V	250 V	5 A	5 A	5 A	5 A	6 A	10 A	20 A
480 V	500-600 V	5 A	5 A	3 A	1 A (SEE NOTE 2)	3 A	6 A	10 A

NOTES:

1. Primary lines of multiple ballasts shall be provided with fused connectors. Fuse ratings shall be as noted above.
2. See Revised Standard Plan RSP ES-15D, Type SC3 control.

FUSE RATINGS FOR FUSED CONNECTORS

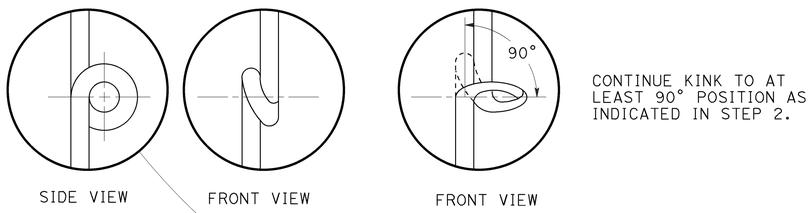

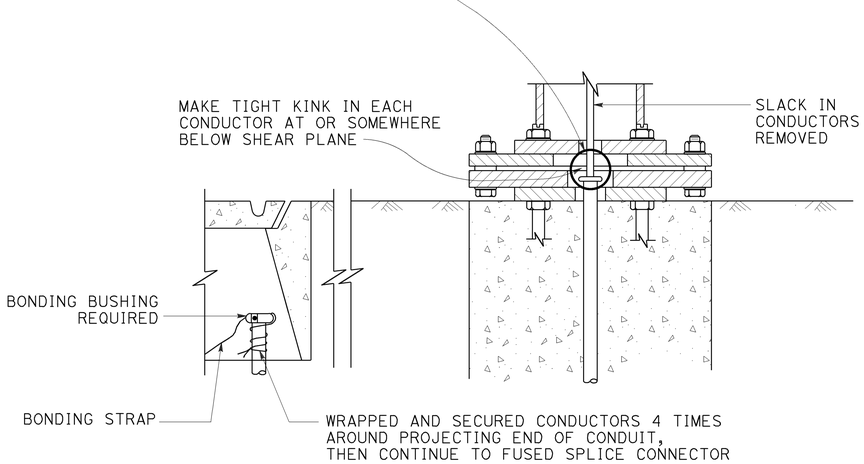

KINKING DETAIL FOR SLIP BASE STANDARDS

DETAIL A

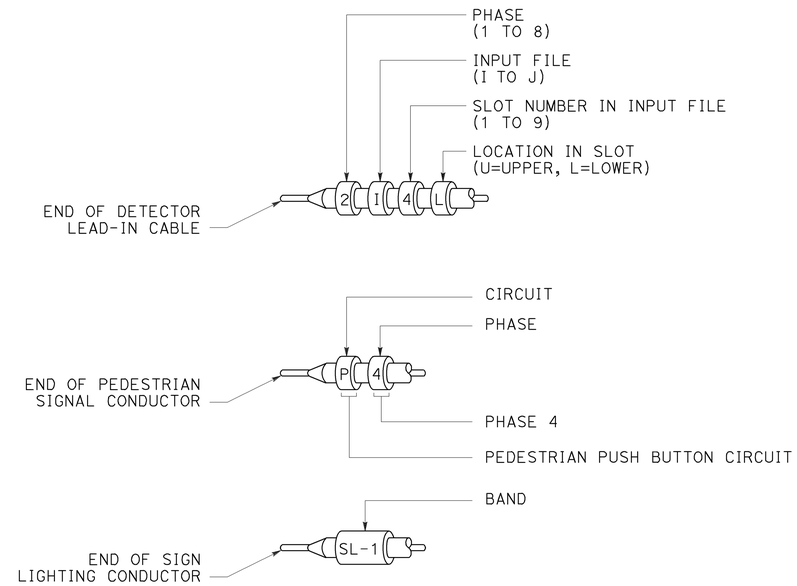

TYPICAL BANDING DETAILS

DETAIL B

STATE OF CALIFORNIA
DEPARTMENT OF TRANSPORTATION

ELECTRICAL SYSTEMS (FUSE RATING, KINKING AND BANDING DETAIL)

NO SCALE

RSP ES-13B DATED APRIL 15, 2016 SUPERSEDES STANDARD PLAN ES-13B DATED MAY 20, 2011 - PAGE 492 OF THE STANDARD PLANS BOOK DATED 2010.

REVISED STANDARD PLAN RSP ES-13B

2010 REVISED STANDARD PLAN RSP ES-13B

1-12-16

DIST	COUNTY	ROUTE	POST MILES TOTAL PROJECT	SHEET No.	TOTAL SHEETS
06	Ker	99	49.6	65	106

REGISTERED CIVIL ENGINEER — DATE 10-20-15

11-16-15
PLANS APPROVAL DATE

REGISTERED PROFESSIONAL ENGINEER — DON NGUYEN-TAN — No. C 57510 — Exp. 12-31-15 — CIVIL — STATE OF CALIFORNIA

The State of California or its officers or agents shall not be responsible for the accuracy or completeness of scanned copies of this plan sheet.

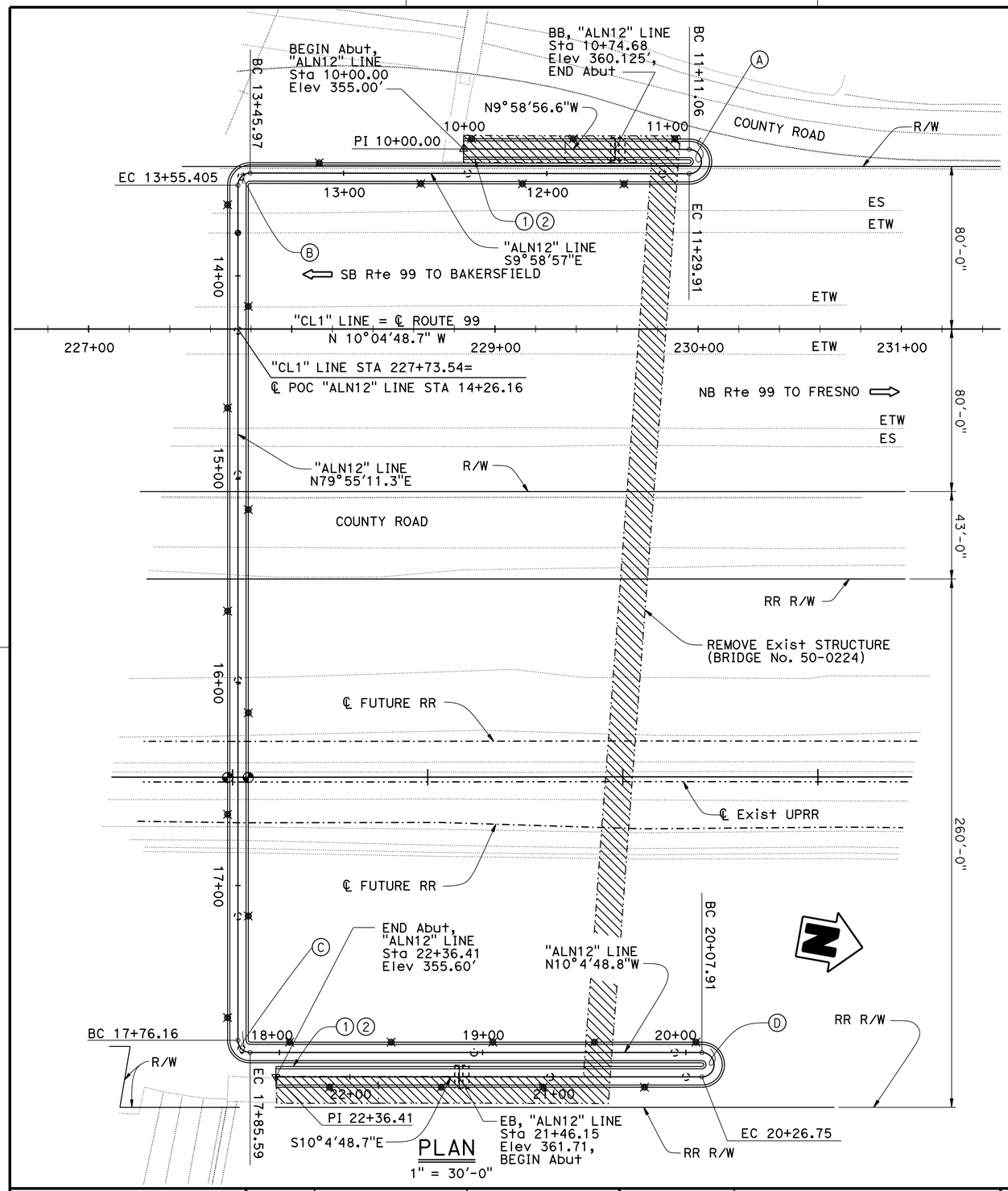

CURVE DATA TABLE

No. ⊛	R	Δ	T	L
Ⓐ	6.0'	180°0'0"	NA	18.85'
Ⓑ	6.0'	90°5'52"	6.01'	9.43'
Ⓒ	6.0'	90°0'00"	6.00'	9.43'
Ⓓ	6.0'	180°0'0"	NA	18.84'

LEGEND:

- Indicates existing structure.
- Indicates Bridge Removal.
- Indicates point of minimum vertical clearance.
- Indicates Electrolier, see ROADWAY PLANS and "LIGHTING PEDESTAL DETAILS" sheet.
- ① Paint "Bridge No. 50-0518"
- ② Paint "Kern Ave Pedestrian Overcrossing"
- ③ Chain Link Railing Type 7 (Mod)
- ④ 1½"ø Lighting Conduit (Bridge), Typ
- ⑤ 1½"ø Communication Conduit (Bridge) for future utilities, see "STRUCTURE PLAN" sheets
- ⑥ Deck Drain System
- ⑦ Tubular Handrailing

NOTE:
VERIFY ALL CONTROLLING FIELD DIMENSIONS BEFORE ORDERING OR FABRICATING MATERIAL.

NOTES:

1. For STRUCTURE QUANTITIES see "STRUCTURE PLAN No. 1" sheet.
2. For ELEVATION VIEW, PROFILE GRADE, INDEX TO PLANS and STANDARD PLANS list, see "GENERAL PLAN No. 2" sheet.
3. For PILE DATA TABLE and SPREAD FOOTING DATA TABLE, see "GENERAL NOTES" sheet.

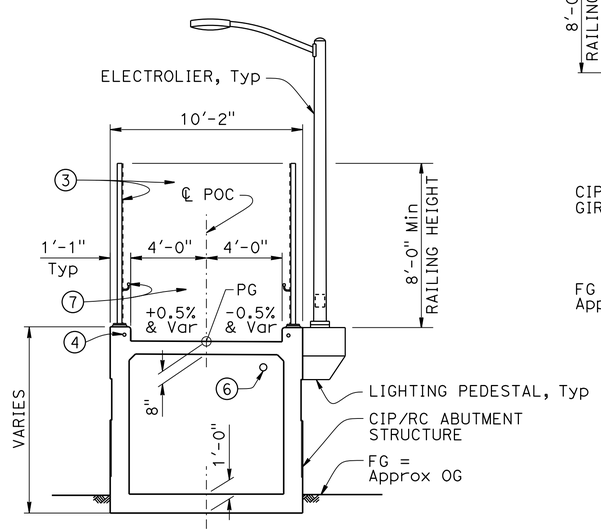

ABUTMENT STRUCTURE
TYPICAL SECTION
¼" = 1'-0"

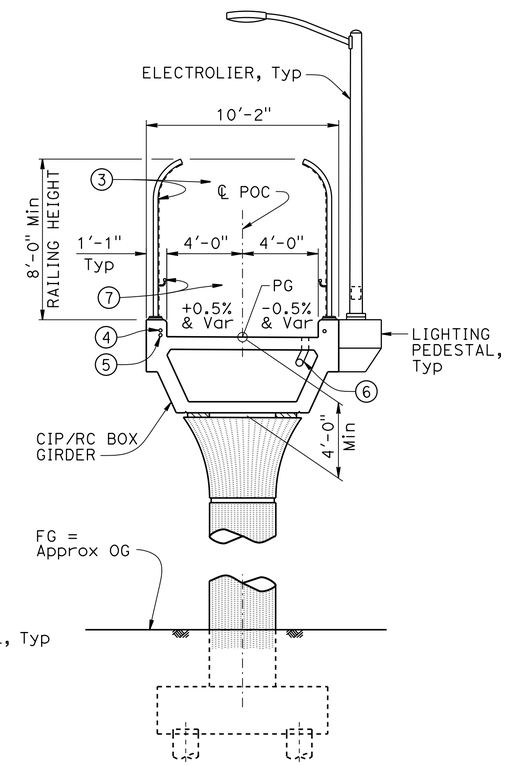

BRIDGE
TYPICAL SECTION
¼" = 1'-0"

DESIGN	BY DAVID ALVAREZ	CHECKED MIKE CULLEN	LOAD & RESISTANCE FACTOR DESIGN	LIVE LOADING: HL93 W/"LOW-BOY"; PERMIT DESIGN VEHICLE
DETAILS	BY SUSAN NG	CHECKED DON NGUYEN-TAN	LAYOUT BY SUSAN NG	CHECKED MIKE CULLEN
QUANTITIES	BY GLORIA REYES-GUTIERREZ	CHECKED DAVID ALVAREZ	SPECIFICATIONS BY MICHAEL KETELTAS	PLANS AND SPECS COMPARED DON NGUYEN-TAN

GARY BLAKESLEY
DESIGN ENGINEER

ORIGINAL SCALE IN INCHES FOR REDUCED PLANS 0 1 2 3

STATE OF CALIFORNIA
DEPARTMENT OF TRANSPORTATION

DIVISION OF ENGINEERING SERVICES
STRUCTURE DESIGN
DESIGN BRANCH 6

BRIDGE NO. 50-0518
POST MILE 49.6

KERN AVENUE POC (REPLACE)
GENERAL PLAN No. 1

UNIT: 3591
PROJECT NUMBER & PHASE: 06 1400 0266 1 CONTRACT NO.: 06-0H6424

DISREGARD PRINTS BEARING EARLIER REVISION DATES

REVISION DATES 11-04-12 10-28-15 10-16-15 — SHEET 1 OF 42

USERNAME => s119704 DATE PLOTTED => 01-JUL-2016 TIME PLOTTED => 14:30

STRUCTURES DESIGN GENERAL PLAN SHEET (ENGLISH) (REV.09-01-10)

FILE => 50-0518-a-gp-01.dgn

DIST	COUNTY	ROUTE	POST MILES TOTAL PROJECT	SHEET No.	TOTAL SHEETS
06	Ker	99	49.6	66	106

REGISTERED CIVIL ENGINEER 10-20-15 DATE

11-16-15
PLANS APPROVAL DATE

REGISTERED PROFESSIONAL ENGINEER DON NGUYEN-TAN No. C 57510 Exp. 12-31-15 CIVIL STATE OF CALIFORNIA

The State of California or its officers or agents shall not be responsible for the accuracy or completeness of scanned copies of this plan sheet.

LEGEND:

1. County Road
2. ℄ Future RR track
3. ETW
4. NB Route 99
5. SB Route 99
6. ES
7. Top of Exist RR Track, Elev 357.48'±
8. Western limit of 50' wide easement for ramp
9. Top of Chain Link Railing
10. Top of Parapet
11. Soffit

⊛ Clear distance from soffit to Approx OG

* Clear distance from soffit to top of RR track

STANDARD PLANS DATED MAY 2010

	A10A	ABBREVIATIONS (SHEET 1 OF 2)
	A10B	ABBREVIATIONS (SHEET 2 OF 2)
	A10C	LINES AND SYMBOLS (SHEET 1 OF 3)
	A10D	LINES AND SYMBOLS (SHEET 2 OF 3)
	A10E	LINES AND SYMBOLS (SHEET 3 OF 3)
	A10F	LEGEND - SOIL (SHEET 1 OF 2)
	A10G	LEGEND - SOIL (SHEET 2 OF 2)
	A10H	LEGEND - ROCK
	A62C	LIMITS OF PAYMENT FOR EXCAVATION AND BACKFILL - BRIDGE
	B0-1	BRIDGE DETAILS
	B0-5	BRIDGE DETAILS
	B0-13	BRIDGE DETAILS
	B2-8	PILE DETAILS CLASS 200
RSP	B6-21	JOINT SEALS (MAXIMUM MOVEMENT RATING = 2")
	B7-1	BOX GIRDER DETAILS
	B7-5	DECK DRAINS
	B7-8	DECK DRAINAGE DETAILS
	B7-10	UTILITY OPENING-BOX GIRDER
	B14-3	COMMUNICATION AND SPRINKLER CONTROL CONDUITS (CONDUIT LESS THAN 4")
	B14-5	WATER SUPPLY LINE (DETAILS) (PIPE LESS THAN 4")
	ES-6A	ELECTRICAL SYSTEMS (LIGHTING STANDARD, TYPES 15 AND 21)
	ES-7M	ELECTRICAL SYSTEMS (SIGNAL AND LIGHTING STANDARDS - DETAILS NO.1)
RSP	ES-8A	ELECTRICAL SYSTEMS (NON-TRAFFIC PULL BOX)
	ES-9A	ELECTRICAL SYSTEMS (STRUCTURE PULL BOX INSTALLATION)
	ES-9B	ELECTRICAL SYSTEMS (CONDUIT RISER AND EXPANSION FITTING, STRUCTURE INSTALLATIONS)
	ES-9C	ELECTRICAL SYSTEMS (STRUCTURE PULL BOX)
	ES-9D	ELECTRICAL SYSTEMS (STRUCTURE PULL BOX INSTALLATIONS)

STANDARD PLAN SHEET NO.
REVISED STANDARD PLAN — RSP — DETAIL NO.

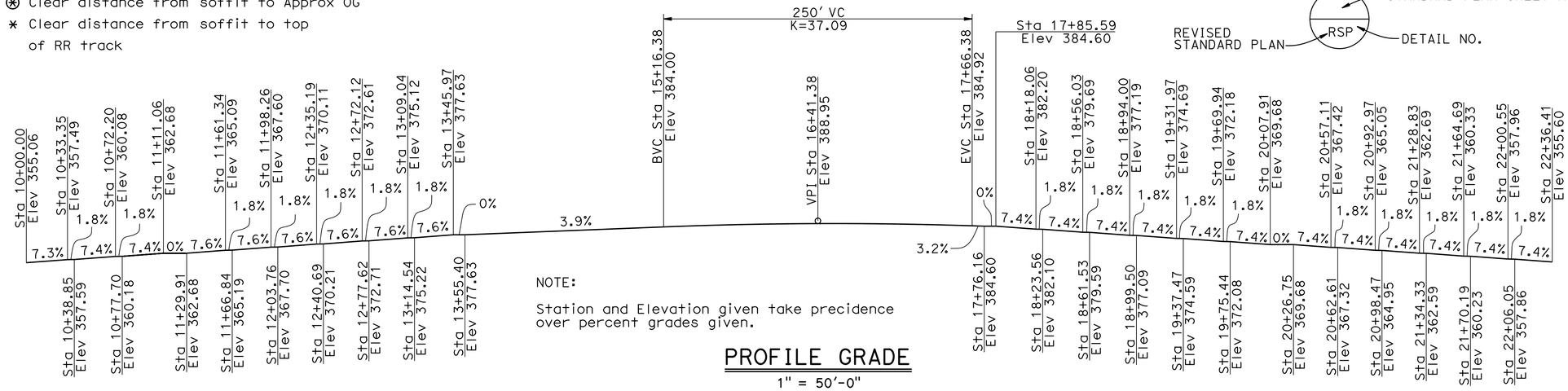

NOTE:

Station and Elevation given take precidence over percent grades given.

PROFILE GRADE

1" = 50'-0"

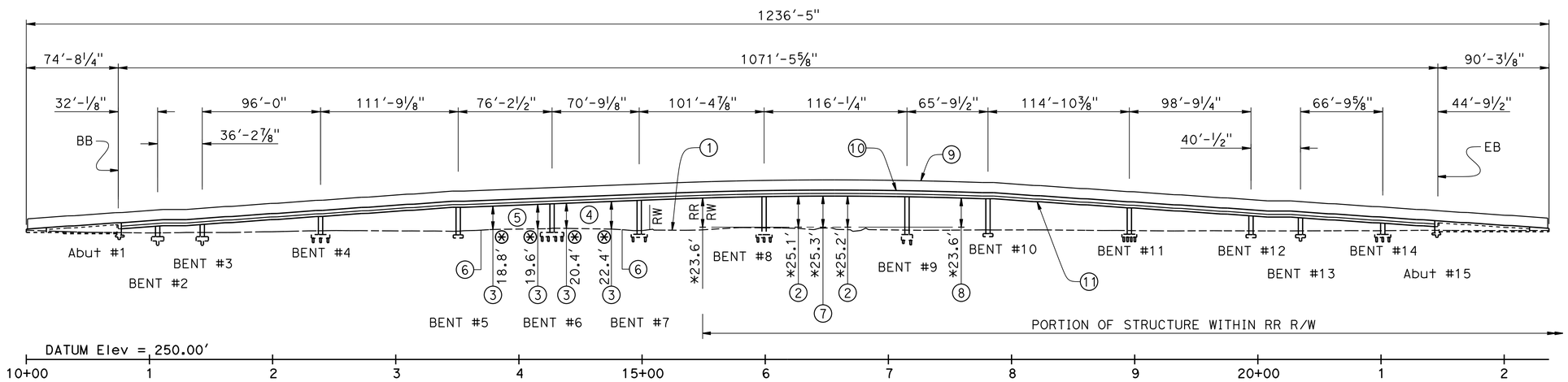

DEVELOPED ELEVATION

1" = 50'-0"

INDEX TO PLANS

1 GENERAL PLAN No. 1
2 GENERAL PLAN No. 2
3 GENERAL NOTES
4 STRUCTURE PLAN No. 1
5 STRUCTURE PLAN No. 2
6 STRUCTURE PLAN No. 3
7 STRUCTURE PLAN No. 4
8 STRUCTURE PLAN No. 5
9 STRUCTURE PLAN No. 6
10 DECK CONTOURS No. 1
11 DECK CONTOURS No. 2
12 DECK CONTOURS No. 3
13 DECK CONTOURS No. 4
14 DECK CONTOURS No. 5
15 DECK CONTOURS No. 6
16 DECK CONTOURS No. 7
17 FOUNDATION PLAN
18 ABUTMENT LAYOUT
19 ABUTMENT DETAILS No. 1
20 ABUTMENT DETAILS No. 2
21 BENT LAYOUT
22 BENT DETAILS No. 1
23 BENT DETAILS No. 2
24 BENT DETAILS No. 3
25 BENT DETAILS No. 4
26 BENT DETAILS No. 5
27 BENT DETAILS No. 6
28 BENT DETAILS No. 7
29 TYPICAL SECTION
30 LIGHTING PEDESTAL DETAILS
31 GIRDER LAYOUT No. 1
32 GIRDER LAYOUT No. 2
33 GIRDER LAYOUT No. 3
34 GIRDER LAYOUT No. 4
35 ADDITIONAL REINFORCEMENT No. 1
36 ADDITIONAL REINFORCEMENT No. 2
37 ADDITIONAL REINFORCEMENT No. 3
38 ADDITIONAL REINFORCEMENT No. 4
39 ADDITIONAL REINFORCEMENT No. 5
40 CHAIN LINK RAILING TYPE 7 (MOD) No. 1
41 CHAIN LINK RAILING TYPE 7 (MOD) No. 2
42 LOG OF TEST BORINGS (AS-BUILT)

NOTE:
For SUPERELEVATION DIAGRAM, See "GENERAL NOTES" sheet.

NOTE:
VERIFY ALL CONTROLLING FIELD DIMENSIONS BEFORE ORDERING OR FABRICATING MATERIAL.

GARY BLAKESLEY
DESIGN ENGINEER

	BY	CHECKED			
DESIGN	DAVID ALVAREZ	MIKE CULLEN	LOAD & RESISTANCE FACTOR DESIGN	LIVE LOADING: PEDESTRIAN AND H5	
DETAILS	SUSAN NG	DON NGUYEN-TAN	LAYOUT	SUSAN NG	MIKE CULLEN
QUANTITIES	GLORIA REYES-GUTIERREZ	DAVID ALVAREZ	SPECIFICATIONS	MICHAEL KETELTAS	PLANS AND SPECS COMPARED DON NGUYEN-TAN

ORIGINAL SCALE IN INCHES FOR REDUCED PLANS 0 1 2 3

STATE OF CALIFORNIA
DEPARTMENT OF TRANSPORTATION

DIVISION OF ENGINEERING SERVICES
STRUCTURE DESIGN
DESIGN BRANCH 6

BRIDGE NO. 50-0518
POST MILE 49.6

KERN AVENUE POC (REPLACE)
GENERAL PLAN No. 2

UNIT: 3591
PROJECT NUMBER & PHASE: 06 1400 0266 1 CONTRACT NO.: 06-0H6424

DISREGARD PRINTS BEARING EARLIER REVISION DATES

REVISION DATES: ~~11-01-12~~ 9-30-15 ~~02-24-14~~

SHEET 2 OF 42

USERNAME => s119704 DATE PLOTTED => 01-JUL-2016 TIME PLOTTED => 14:30

STRUCTURES DESIGN GENERAL PLAN SHEET (ENGLISH) (REV.09-01-10)

FILE => 50-0518-a-gp-02.dgn

DIST	COUNTY	ROUTE	POST MILES TOTAL PROJECT	SHEET No.	TOTAL SHEETS
06	Ker	99	49.6	67	106

REGISTERED CIVIL ENGINEER 10-20-15 DATE

11-16-15
PLANS APPROVAL DATE

REGISTERED PROFESSIONAL ENGINEER DON NGUYEN-TAN No. C 57510 Exp. 12-31-15 CIVIL STATE OF CALIFORNIA

The State of California or its officers or agents shall not be responsible for the accuracy or completeness of scanned copies of this plan sheet.

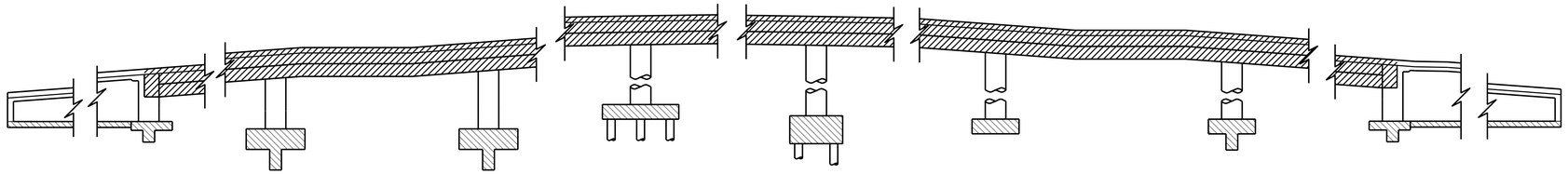

Structural Concrete, Bridge (4000 psi @ 28 days)
Structural Concrete, Bridge
Structural Concrete, Bridge Footing

CONCRETE STRENGTH AND TYPE LIMITS

No Scale

SPREAD FOOTING DATA TABLE

Support Location	Working Stress Design (WSD)		Load and Resistance Factor Design (LRFD)		
	Permissible Gross Contact Stress (Settlement)(ksf)	Allowable Gross Bearing Capacity (Ksf)	Service Permissible Net Contact Stress (Settlement) (ksf)	Strength Factored Gross Nominal Bearing Resistance ϕb = 0.45 (ksf)	Extreme Event Factored Gross Nominal Bearing Resistance ϕb = 1.00 (ksf)
Abut 1	7.9	9.0	N/A	N/A	N/A
Bent 2	N/A	N/A	6.3	17.7	39.4
Bent 3	N/A	N/A	6.4	18.1	40.2
Bent 5	N/A	N/A	7.5	16.6	36.9
Bent 10	N/A	N/A	4.1	17.6	39.0
Bent 12	N/A	N/A	4.5	17.1	38.0
Bent 13	N/A	N/A	5.0	16.6	36.9
Abut 15	4.8	7.5	N/A	N/A	N/A

NOTES:
1. Stresses and restistances were calculated for controlling load combinations.
2. Controlling load combination for Service Limit State is the one resulting in the highest ratio of $q_{n,u}/q_{pn}$ for foundations on soil, or $q_{n,max}/q_{pn}$ for foundations on rock.
3. Controlling load combination for Strength, Construction and Extreme Event is the one resulting in the highest ratio of $q_{g,u}/q_R$ for foundations on soil, or $q_{g,max}/q_R$ for foundations on rock.

Acceleration Response Spectrum

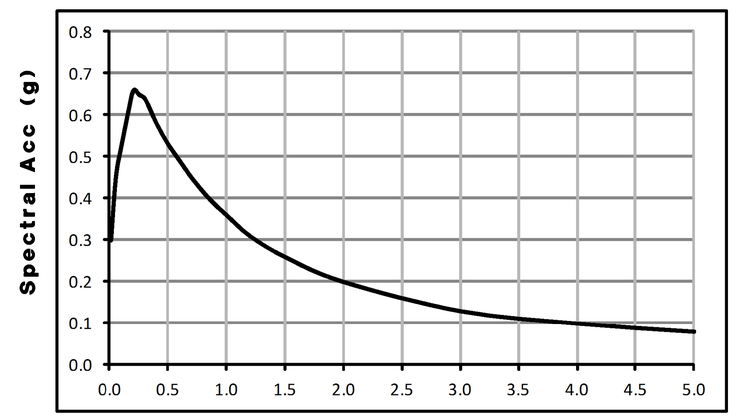

GENERAL NOTES
LOAD AND RESISTANCE FACTOR DESIGN

DESIGN:
2012 AASHTO LRFD Bridge Design Specifications, and the California Amendments dated January 2014.

AASHTO LRFD Guide Specifications for the Design of Pedestrian Bridges, December 2009.

SEISMIC DESIGN:
Caltrans Seismic Design Criteria (SDC), Version 1.7 dated April 2013.

LIVE LOADING:
Pedestrian and H5 Design loading.

SEISMIC LOADING:
USGS Interactive Deaggregation procedure with 5% probability of exceedance in 50 years.
PGA = 0.3g
M_{Max} = 7.9
V_{S30} = 920 ft/s
See "Acceleration Response Spectrum"

REINFORCED CONCRETE:
fy = 60,000 psi
f'c = See "CONCRETE STRENGTH AND TYPE LIMITS"

PILE DATA TABLE

Support Location	Pile Type	Nominal Resistance (kips)		Design Tip Elevations (ft)	Specified Tip Elevation (ft)	Nominal Driving Resistance (kips)
		Compression	Tension			
Bent 4	Class 200 Alt "W"	290	190	295 (a) 299 (b)	295	290
Bent 6	Class 200 Alt "W"	300	150	296 (a) 307 (b)	296	300
Bent 7	Class 200 Alt "W"	400	200	285 (a) 298 (b)	285	400
Bent 8	Class 200 Alt "W"	350	160	293 (a) 304 (b)	293	350
Bent 9	Class 200 Alt "W"	330	160	289 (a) 304 (b)	289	330
Bent 11	Class 200 Alt "W"	240	130	302 (a) 310 (b)	302	240
Bent 14	Class 200 Alt "W"	280	170	296 (a) 301 (b)	296	280

Design tip elevations for Bents are controlled by:
(a) Compression, (b) Tension

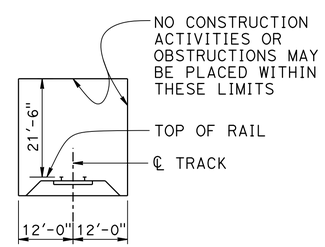

MINIMUM TEMPORARY CONSTRUCTION CLEARANCES

(NORMAL TO RAILROAD - NO SCALE)

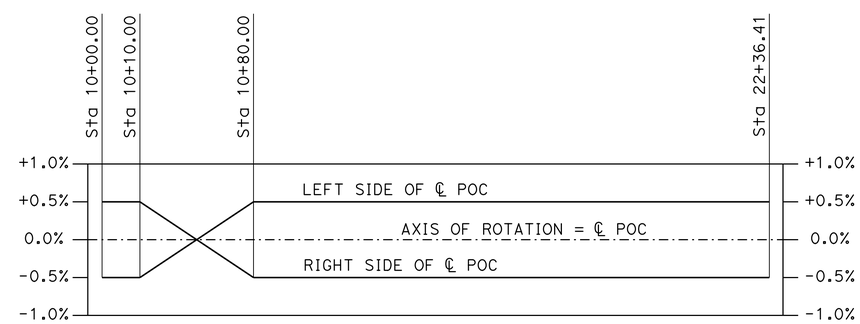

SUPERELEVATION DIAGRAM

No Scale

	BY	CHECKED
DESIGN	DAVID ALVAREZ	MIKE CULLEN
DETAILS	SUSAN NG	DON NGUYEN-TAN
QUANTITIES	GLORIA REYES-GUTIERREZ	DAVID ALVAREZ

STATE OF CALIFORNIA
DEPARTMENT OF TRANSPORTATION

DIVISION OF ENGINEERING SERVICES
STRUCTURE DESIGN
DESIGN BRANCH 6

BRIDGE NO. 50-0518
POST MILE 49.6

KERN AVENUE POC (REPLACE)
GENERAL NOTES

STRUCTURES DESIGN DETAIL SHEET (ENGLISH) (REV. 09-01-10)

ORIGINAL SCALE IN INCHES FOR REDUCED PLANS 0 1 2 3

UNIT: 3591
PROJECT NUMBER & PHASE: 06 1400 0266 1 CONTRACT NO.: 06-0H6424

DISREGARD PRINTS BEARING EARLIER REVISION DATES → 06-09-13 09-30-15 09-06-16

SHEET 3 OF 42

FILE => 50-0518-b-gnotes.dgn

USERNAME => s119704 DATE PLOTTED => 01-JUL-2016 TIME PLOTTED => 14:30

DIST	COUNTY	ROUTE	POST MILES TOTAL PROJECT	SHEET No.	TOTAL SHEETS
06	Ker	99	49.6	68	106

REGISTERED CIVIL ENGINEER — DATE 10-20-15

11-16-15
PLANS APPROVAL DATE

REGISTERED PROFESSIONAL ENGINEER — DON NGUYEN-TAN — No. C 57510 — Exp. 12-31-15 — CIVIL — STATE OF CALIFORNIA

The State of California or its officers or agents shall not be responsible for the accuracy or completeness of scanned copies of this plan sheet.

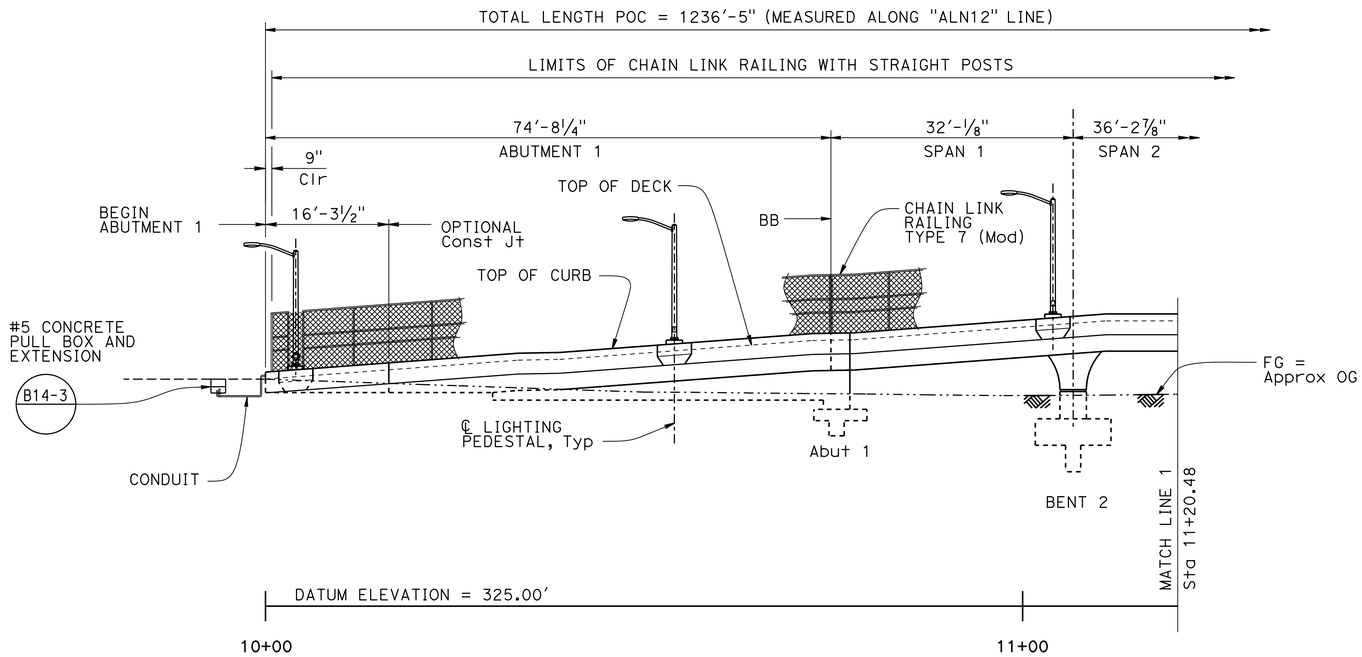

MIRRORED DEVELOPED ELEVATION

1" = 10'

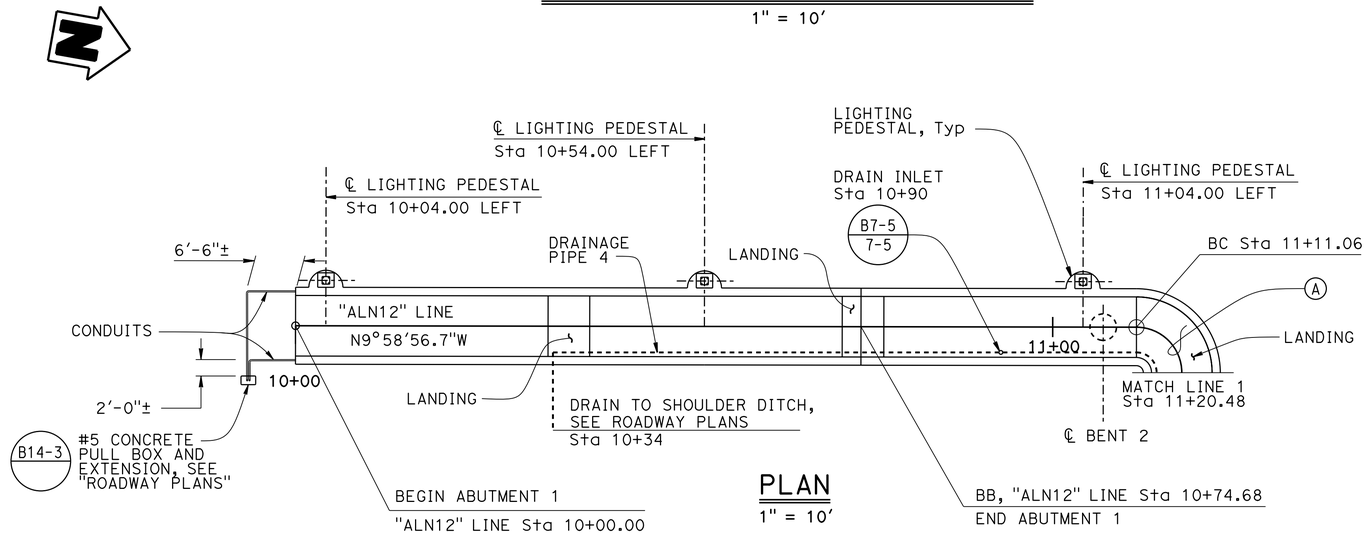

PLAN

1" = 10'

NOTES:

1. For clarity, not all chain link railing details are shown.
2. For Column Architectural details, see "BENT DETAILS No. 7" sheet.
3. For Abutment Architectural details, see "ABUTMENT LAYOUT" and "ABUTMENT DETAILS" sheets.
4. For Lighting Pedestal details, see "LIGHTING PEDESTAL DETAIL" sheet.

CURVE DATA

No. ⊛	R	Δ	T	L
A	6.0'	180°0'0"	NA	18.85'
B	6.0'	90°5'52"	6.01'	9.43'
C	6.0'	90°0'00"	6.00'	9.43'
D	6.0'	180°0'0"	NA	18.84'

QUANTITIES

LEAD COMPLIANCE PLAN	LUMP	SUM
WORK AREA MONITORING (BRIDGE)	LUMP	SUM
BRIDGE REMOVAL	LUMP	SUM
STRUCTURE EXCAVATION (BRIDGE)	662	CY
STRUCTURE BACKFILL (BRIDGE)	361	CY
FURNISH PILING (CLASS 200) (ALTERNATIVE W)	2,403	LF
DRIVE PILE (CLASS 200) (ALTERNATIVE W)	44	EA
STRUCTURAL CONCRETE, BRIDGE FOOTING	204	CY
STRUCTURAL CONCRETE, BRIDGE	979	CY
FRACTURED RIB TEXTURE	2,788	SQFT
JOINT SEAL (MR 1½")	20	LF
BAR REINFORCING STEEL (BRIDGE)	350,600	LB
MISCELLANEOUS METAL (BRIDGE)	895	LB
BRIDGE DECK DRAINAGE SYSTEM	7,292	LB
CHAIN LINK RAILING (TYPE 7 MODIFIED)	2,472	LF
LIGHTING CONDUIT (BRIDGE) (LF)	2,523	LF
COMMUNICATION CONDUIT (BRIDGE) (LF)	490	LF

	BY	CHECKED
DESIGN	DAVID ALVAREZ	MIKE CULLEN
DETAILS	SUSAN NG	DON NGUYEN-TAN
QUANTITIES	GLORIA REYES-GUTIERREZ	DAVID ALVAREZ

STATE OF CALIFORNIA
DEPARTMENT OF TRANSPORTATION

DIVISION OF ENGINEERING SERVICES
STRUCTURE DESIGN
DESIGN BRANCH 6

BRIDGE NO. 50-0518
POST MILE 49.60

KERN AVENUE POC (REPLACE)
STRUCTURE PLAN No. 1

STRUCTURES DESIGN DETAIL SHEET (ENGLISH) (REV. 09-01-10)

ORIGINAL SCALE IN INCHES FOR REDUCED PLANS 0 1 2 3

UNIT: 3591
PROJECT NUMBER & PHASE: 06 1400 0266 1 CONTRACT NO.: 06-0H6424

DISREGARD PRINTS BEARING EARLIER REVISION DATES → 9-10-13 10-20-15 10-28-15

SHEET 4 OF 42

FILE => 50-0518-c-sp1.dgn

USERNAME => s119704 DATE PLOTTED => 01-JUL-2016 TIME PLOTTED => 14:30

DIST	COUNTY	ROUTE	POST MILES TOTAL PROJECT	SHEET No.	TOTAL SHEETS
06	Ker	99	49.6	69	106

REGISTERED CIVIL ENGINEER 10-20-15 DATE

11-16-15
PLANS APPROVAL DATE

REGISTERED PROFESSIONAL ENGINEER DON NGUYEN-TAN No. C 57510 Exp. 12-31-2015 CIVIL STATE OF CALIFORNIA

The State of California or its officers or agents shall not be responsible for the accuracy or completeness of scanned copies of this plan sheet.

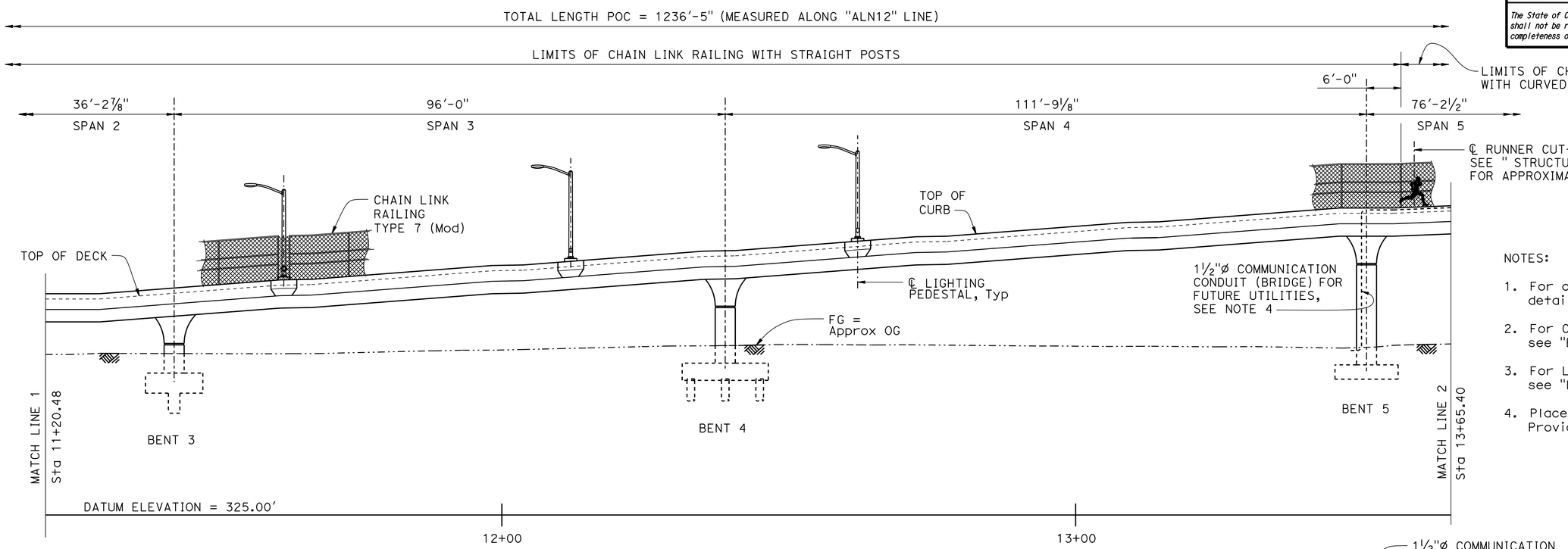

MIRRORED DEVELOPED ELEVATION

1" = 10'

NOTES:

1. For clarity, not all chain link railing details are shown.
2. For Column Architectural details, see "BENT DETAILS No. 7" sheet.
3. For Lighting Pedestal details, see "LIGHTING PEDESTAL DETAIL" sheet.
4. Place outlet to conduit 6" below FG. Provide 12" of stickout and cap end.

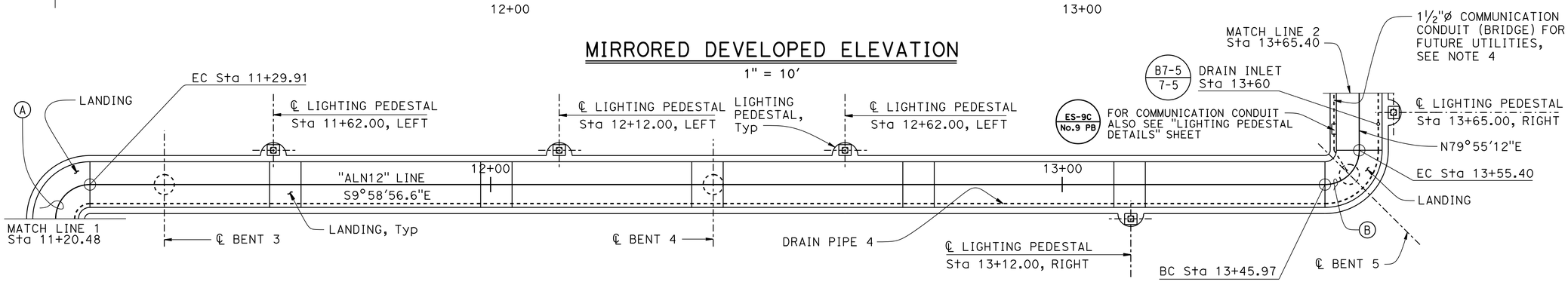

PLAN

1" = 10'

CURVE DATA

No. ⊕	R	Δ	T	L
Ⓐ	6.0'	180°0'0"	NA	18.85'
Ⓑ	6.0'	90°5'52"	6.01'	9.43'
Ⓒ	6.0'	90°0'00"	6.00'	9.43'
Ⓓ	6.0'	180°0'0"	NA	18.84'

	BY	CHECKED
DESIGN	DAVID ALVAREZ	MIKE CULLEN
DETAILS	SUSAN NG	DON NGUYEN-TAN
QUANTITIES	GLORIA REYES-GUTIERREZ	DAVID ALVAREZ

STATE OF CALIFORNIA DEPARTMENT OF TRANSPORTATION

DIVISION OF ENGINEERING SERVICES STRUCTURE DESIGN DESIGN BRANCH 6

BRIDGE NO. 50-0518
POST MILE 49.60

KERN AVENUE POC (REPLACE)
STRUCTURE PLAN No. 2

STRUCTURES DESIGN DETAIL SHEET (ENGLISH) (REV. 09-01-10)

ORIGINAL SCALE IN INCHES FOR REDUCED PLANS 0 1 2 3

UNIT: 3591
PROJECT NUMBER & PHASE: 06 1400 0266 1 CONTRACT NO.: 06-0H6424

DISREGARD PRINTS BEARING EARLIER REVISION DATES

REVISION DATES 9-10-13 10-16-15 10-28-15

SHEET 5 OF 42

FILE => 50-0518-c-sp2.dgn

USERNAME => s119704 DATE PLOTTED => 01-JUL-2016 TIME PLOTTED => 14:30

DIST	COUNTY	ROUTE	POST MILES TOTAL PROJECT	SHEET No.	TOTAL SHEETS
06	Ker	99	49.6	70	106

REGISTERED CIVIL ENGINEER 10-20-15 DATE

11-16-15
PLANS APPROVAL DATE

REGISTERED PROFESSIONAL ENGINEER DON NGUYEN-TAN No. C 57510 Exp. 12-31-2015 CIVIL STATE OF CALIFORNIA

The State of California or its officers or agents shall not be responsible for the accuracy or completeness of scanned copies of this plan sheet.

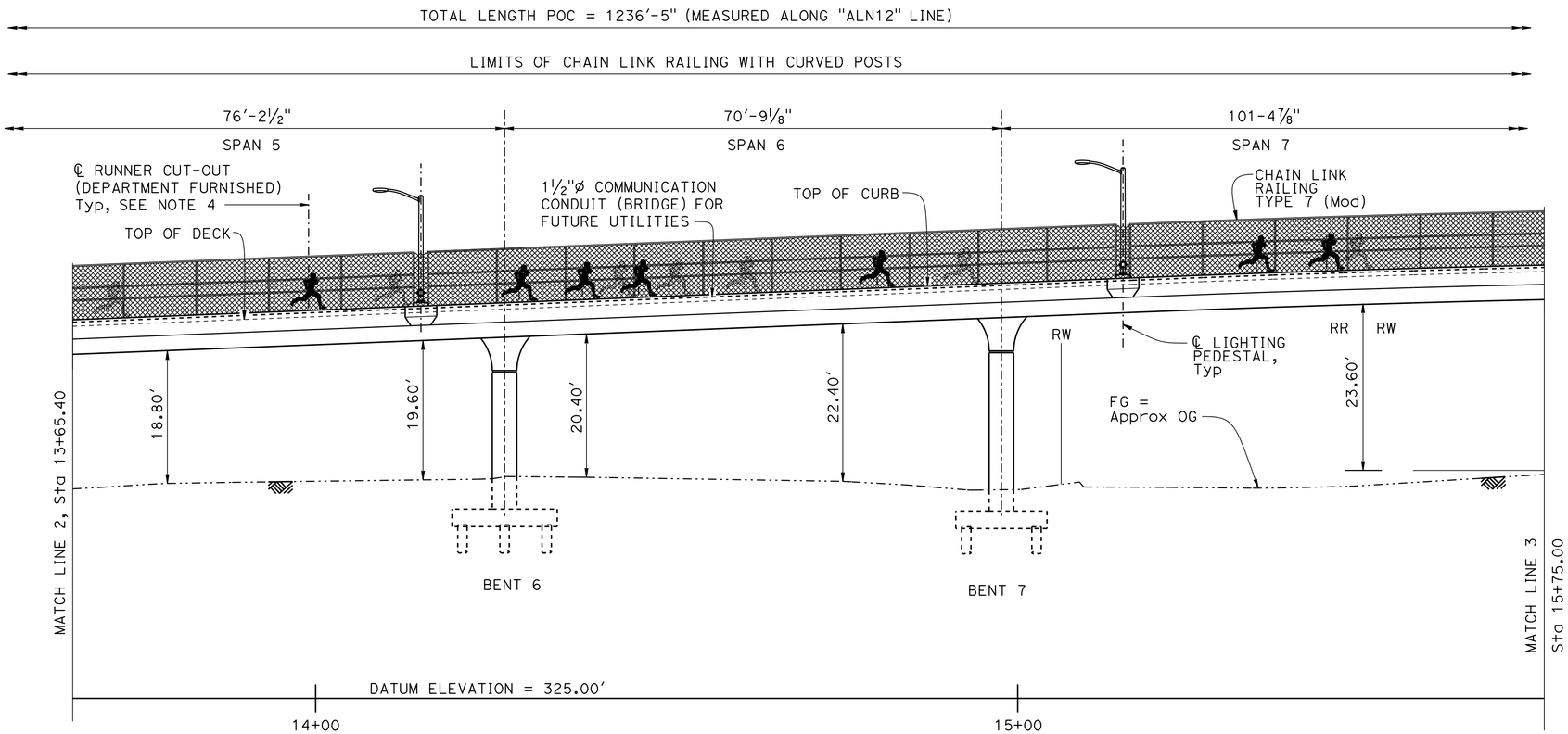

MIRRORED DEVELOPED ELEVATION

1" = 10'

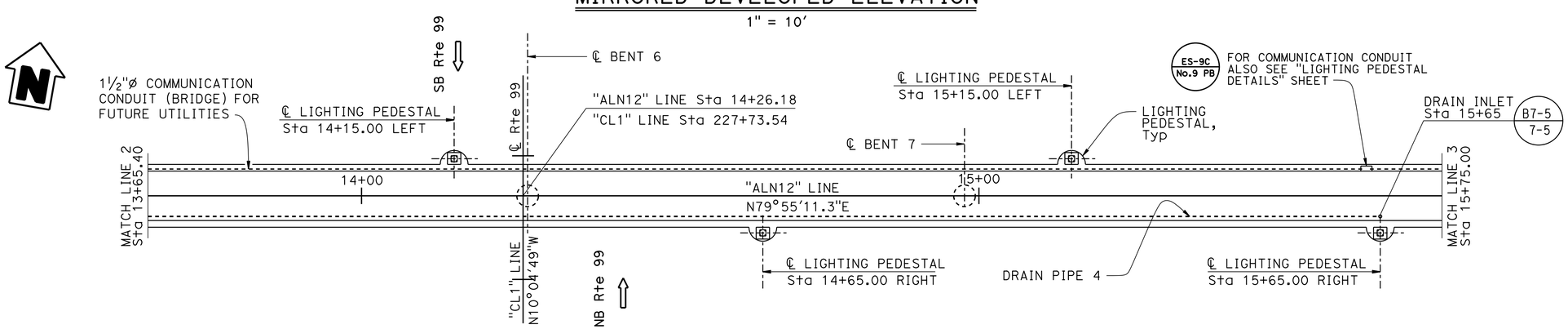

PLAN

1" = 10'

NOTES:

1. For clarity, not all chain link railing details are shown.
2. For Column Architectural details, see "BENT DETAILS No. 7" sheet.
3. For Lighting Pedestal details, see "LIGHTING PEDESTAL DETAIL" sheet.
4. For Runner Cut-out (Department Furnished) attachment details, see "CHAIN LINK RAILING TYPE 7 (Mod) No. 1" sheet.

APPROXIMATE LOCATION OF RUNNER CUT-OUTS	
Station	Side of POC
13+59	Left
13+71	Right
13+99	Left
14+11	Right
14+29	Left
14+38	Left
14+43	Right
14+46	Left
14+51	Right
14+61	Right
14+80	Left
14+92	Right
15+34	Left
15+44	Left
15+48	Right

	BY	CHECKED
DESIGN	DAVID ALVAREZ	MIKE CULLEN
DETAILS	SUSAN NG	DON NGUYEN-TAN
QUANTITIES	GLORIA REYES-GUTIERREZ	DAVID ALVAREZ

STATE OF CALIFORNIA DEPARTMENT OF TRANSPORTATION

DIVISION OF ENGINEERING SERVICES STRUCTURE DESIGN
DESIGN BRANCH 6

BRIDGE NO. 50-0518
POST MILE 49.60

KERN AVENUE POC (REPLACE)
STRUCTURE PLAN No. 3

STRUCTURES DESIGN DETAIL SHEET (ENGLISH) (REV. 09-01-10)

ORIGINAL SCALE IN INCHES FOR REDUCED PLANS 0 1 2 3

UNIT: 3591
PROJECT NUMBER & PHASE: 06 1400 0266 1 CONTRACT NO.: 06-0H6424

DISREGARD PRINTS BEARING EARLIER REVISION DATES

REVISION DATES: 9-10-13 10-28-15 10-16-15

SHEET 6 OF 42

FILE => 50-0518-c-sp3.dgn

USERNAME => s119704 DATE PLOTTED => 01-JUL-2016 TIME PLOTTED => 14:30

DIST	COUNTY	ROUTE	POST MILES TOTAL PROJECT	SHEET No.	TOTAL SHEETS
06	Ker	99	49.6	71	106

REGISTERED CIVIL ENGINEER 10-20-15 DATE

11-16-15
PLANS APPROVAL DATE

REGISTERED PROFESSIONAL ENGINEER DON NGUYEN-TAN No. C 57510 Exp. 12-31-15 CIVIL STATE OF CALIFORNIA

The State of California or its officers or agents shall not be responsible for the accuracy or completeness of scanned copies of this plan sheet.

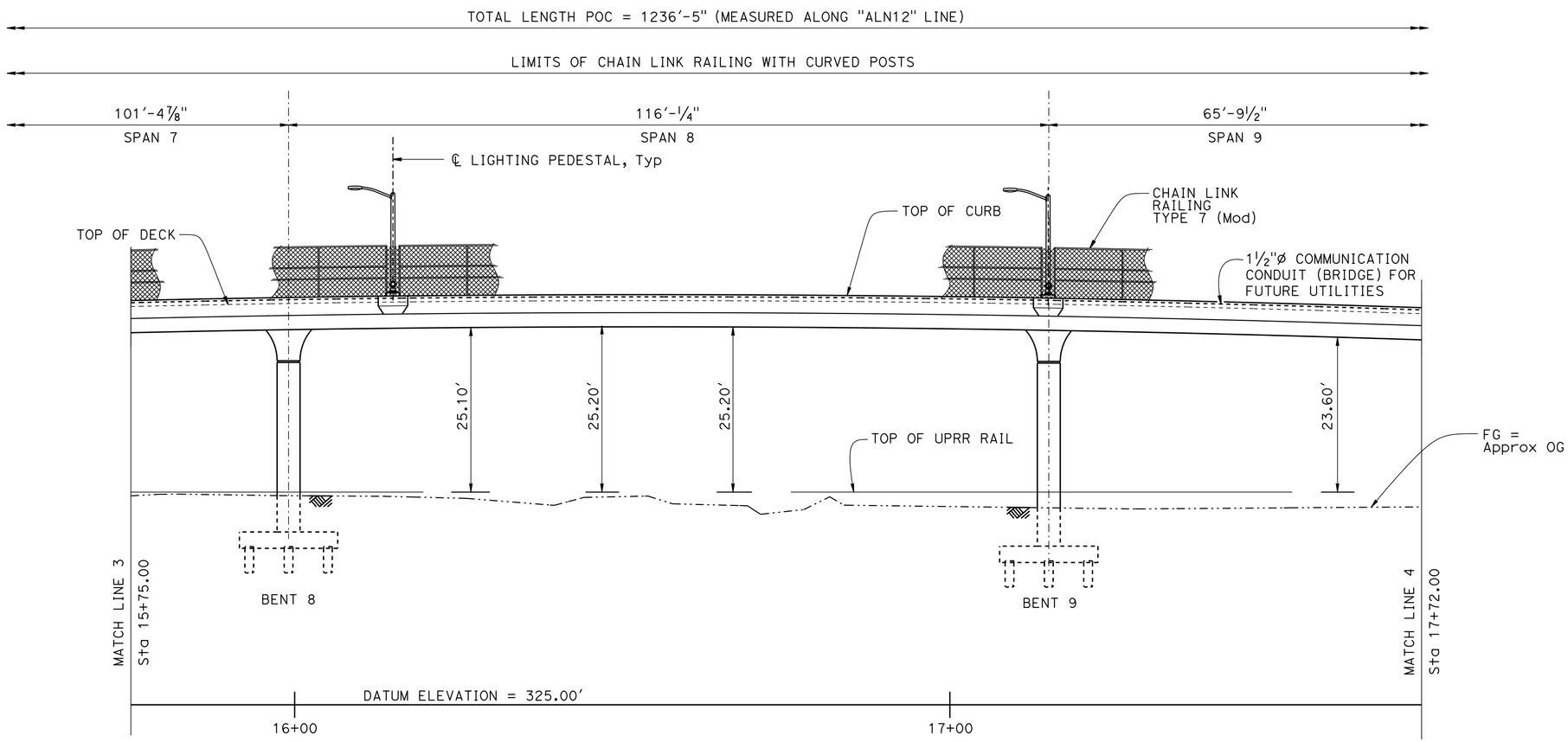

MIRRORED DEVELOPED ELEVATION

1" = 10'

NOTES:

1. For clarity, not all chain link railing details are shown.
2. For Column Architectural details, see "BENT DETAILS No. 7" sheet.
3. For Lighting Pedestal details, see "LIGHTING PEDESTAL DETAIL" sheet.

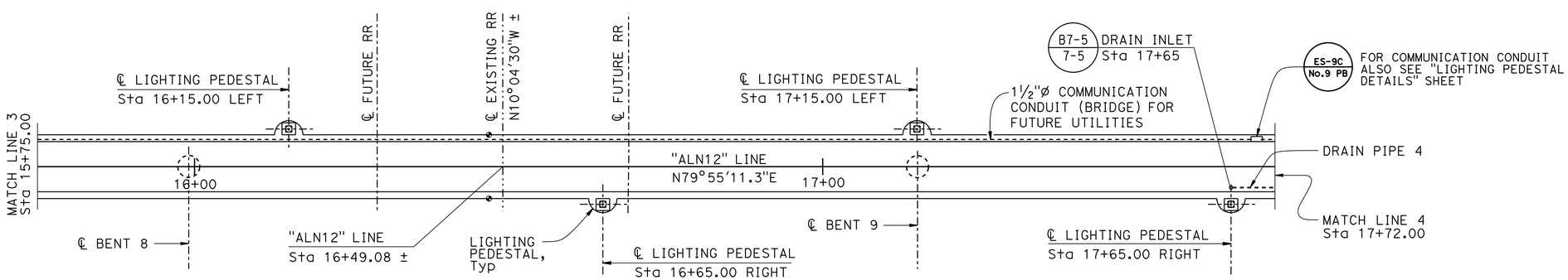

PLAN

1" = 10'

	BY	CHECKED
DESIGN	DAVID ALVAREZ	MIKE CULLEN
DETAILS	SUSAN NG	DON NGUYEN-TAN
QUANTITIES	GLORIA REYES-GUTIERREZ	DAVID ALVAREZ

STATE OF CALIFORNIA
DEPARTMENT OF TRANSPORTATION

DIVISION OF ENGINEERING SERVICES
STRUCTURE DESIGN
DESIGN BRANCH 6

BRIDGE NO. 50-0518
POST MILE 49.60

KERN AVENUE POC (REPLACE)
STRUCTURE PLAN No. 4

STRUCTURES DESIGN DETAIL SHEET (ENGLISH) (REV. 09-01-10)

ORIGINAL SCALE IN INCHES FOR REDUCED PLANS 0 1 2 3

UNIT: 3591
PROJECT NUMBER & PHASE: 06 1400 0266 1 CONTRACT NO.: 06-0H6424

DISREGARD PRINTS BEARING EARLIER REVISION DATES

REVISION DATES: 9-10-13 10-16-15 10-28-15

SHEET 7 OF 42

FILE => 50-0518-c-sp4.dgn

USERNAME => s119704 DATE PLOTTED => 01-JUL-2016 TIME PLOTTED => 14:30

DIST	COUNTY	ROUTE	POST MILES TOTAL PROJECT	SHEET No.	TOTAL SHEETS
06	Ker	99	49.6	72	106

REGISTERED CIVIL ENGINEER — DATE 10-20-15

11-16-15
PLANS APPROVAL DATE

REGISTERED PROFESSIONAL ENGINEER — DON NGUYEN-TAN — No. C 57510 — Exp. 12-31-15 — CIVIL — STATE OF CALIFORNIA

The State of California or its officers or agents shall not be responsible for the accuracy or completeness of scanned copies of this plan sheet.

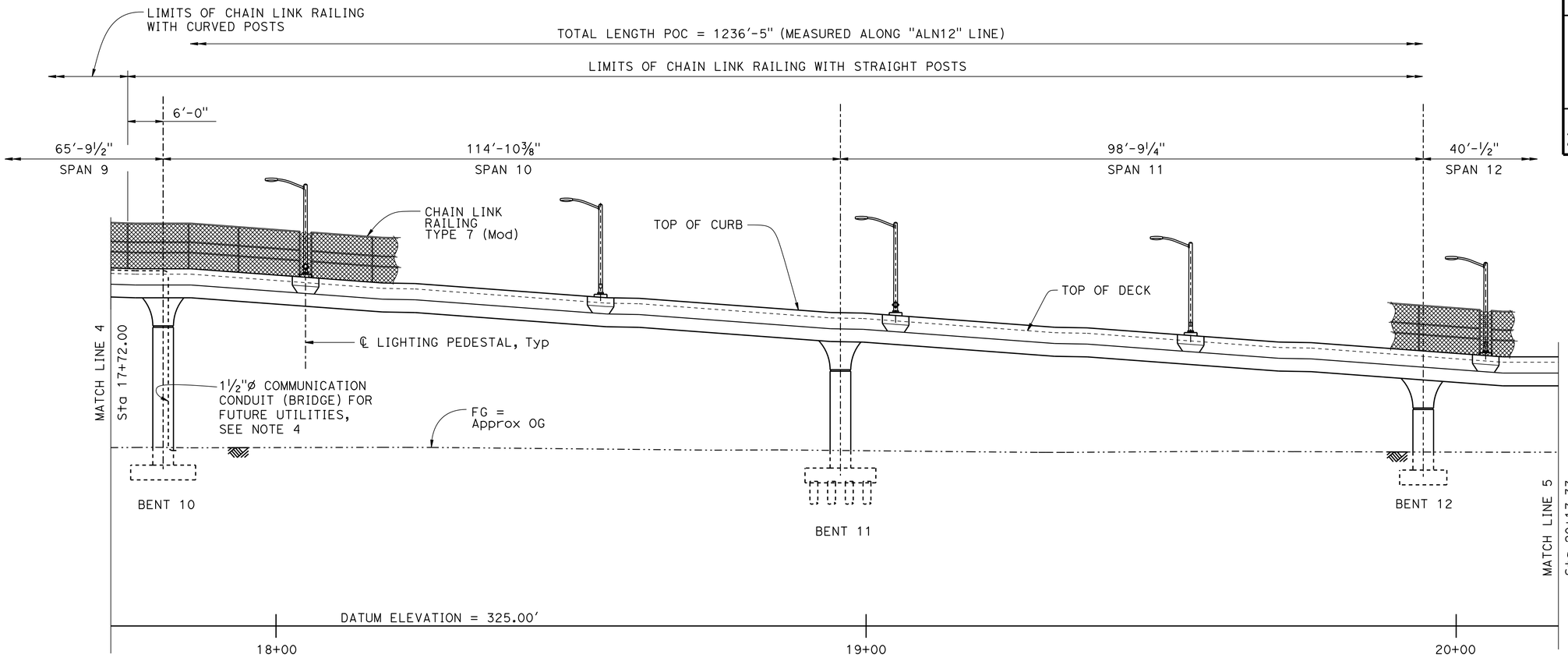

MIRRORED DEVELOPED ELEVATION

1" = 10'

NOTES:

1. For clarity, not all chain link railing details are shown.
2. For Column Architectural details, see "BENT DETAILS No. 7" sheet.
3. For Lighting Pedestal details, see "LIGHTING PEDESTAL DETAIL" sheet.
4. Place outlet to conduit 6" below FG. Provide 12" of stickout and cap end.

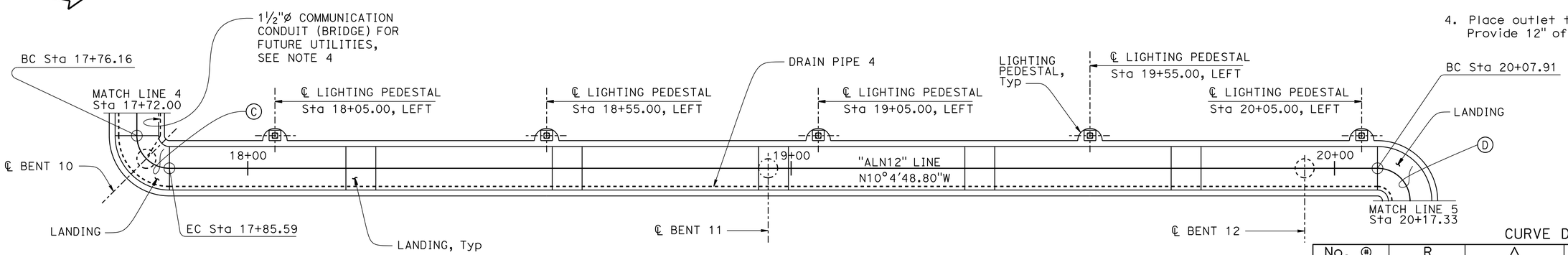

PLAN

1" = 10'

CURVE DATA

No. ⊛	R	Δ	T	L
A	6.0'	180°0'0"	NA	18.85'
B	6.0'	90°5'52"	6.01'	9.43'
C	6.0'	90°0'00"	6.00'	9.43'
D	6.0'	180°0'0"	NA	18.84'

DESIGN	BY DAVID ALVAREZ	CHECKED MIKE CULLEN	
DETAILS	BY SUSAN NG	CHECKED DON NGUYEN-TAN	
QUANTITIES	BY GLORIA REYES-GUTIERREZ	CHECKED DAVID ALVAREZ	

STATE OF CALIFORNIA
DEPARTMENT OF TRANSPORTATION

DIVISION OF ENGINEERING SERVICES
STRUCTURE DESIGN
DESIGN BRANCH 6

BRIDGE NO. 50-0518
POST MILE 49.60

KERN AVENUE POC (REPLACE)
STRUCTURE PLAN No. 5

STRUCTURES DESIGN DETAIL SHEET (ENGLISH) (REV. 09-01-10)

ORIGINAL SCALE IN INCHES FOR REDUCED PLANS 0 1 2 3

UNIT: 3591
PROJECT NUMBER & PHASE: 06 1400 0266 1 CONTRACT NO.: 06-0H6424

DISREGARD PRINTS BEARING EARLIER REVISION DATES

REVISION DATES: 9-10-13 10-16-15 10-06-15

SHEET 8 OF 42

FILE => 50-0518-c-sp5.dgn

USERNAME => s119704 DATE PLOTTED => 01-JUL-2016 TIME PLOTTED => 14:30

DIST	COUNTY	ROUTE	POST MILES TOTAL PROJECT	SHEET No.	TOTAL SHEETS
06	Ker	99	49.6	73	106

REGISTERED CIVIL ENGINEER 10-20-15 DATE

11-16-15
PLANS APPROVAL DATE

REGISTERED PROFESSIONAL ENGINEER DON NGUYEN-TAN No. C 57510 Exp. 12-31-15 CIVIL STATE OF CALIFORNIA

The State of California or its officers or agents shall not be responsible for the accuracy or completeness of scanned copies of this plan sheet.

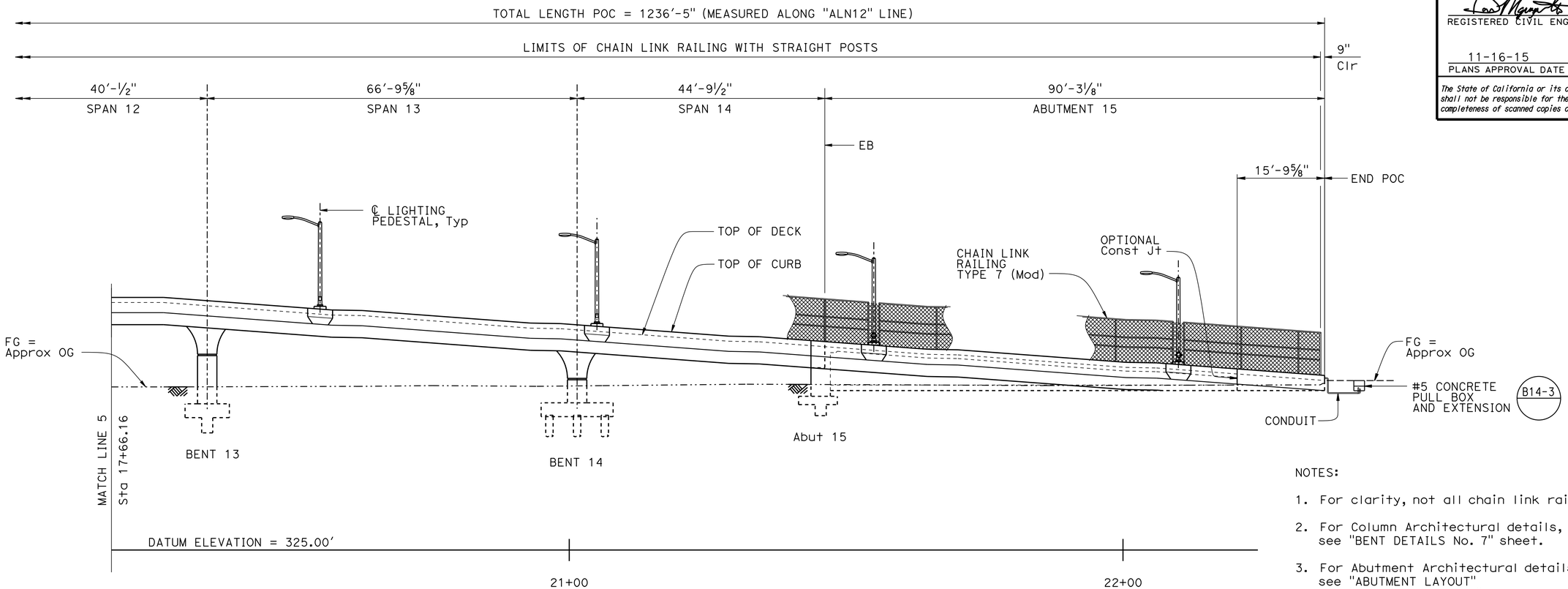

MIRRORED DEVELOPED ELEVATION

1" = 10'

NOTES:

1. For clarity, not all chain link railing details are shown.
2. For Column Architectural details, see "BENT DETAILS No. 7" sheet.
3. For Abutment Architectural details, see "ABUTMENT LAYOUT" and "ABUTMENT DETAILS" sheets.
4. For Lighting Pedestal details, see "LIGHTING PEDESTAL DETAIL" sheet.

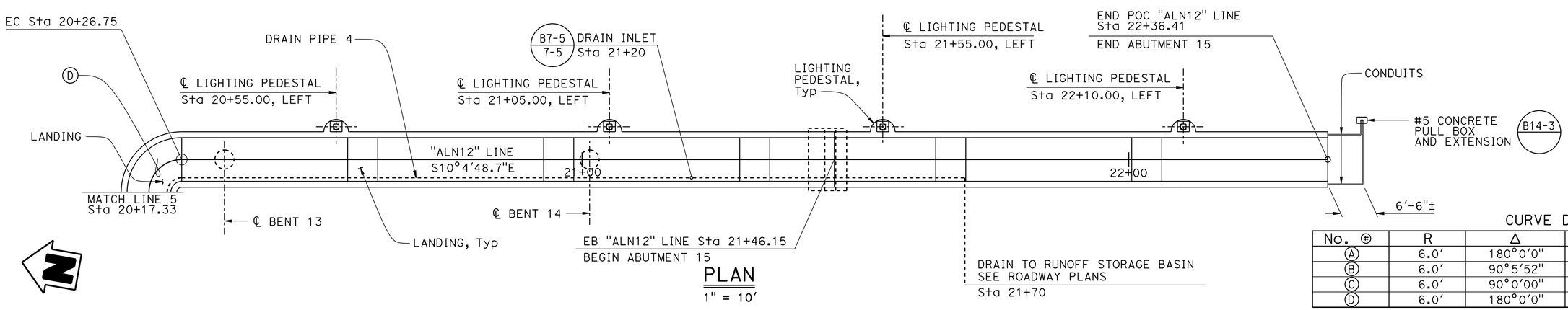

PLAN

1" = 10'

CURVE DATA

No. ⊛	R	Δ	T	L
Ⓐ	6.0'	180°0'0"	NA	18.85'
Ⓑ	6.0'	90°5'52"	6.01'	9.43'
Ⓒ	6.0'	90°0'00"	6.00'	9.43'
Ⓓ	6.0'	180°0'0"	NA	18.84'

	BY	CHECKED
DESIGN	DAVID ALVAREZ	MIKE CULLEN
DETAILS	SUSAN NG	DON NGUYEN-TAN
QUANTITIES	GLORIA REYES-GUTIERREZ	DAVID ALVAREZ

STATE OF CALIFORNIA DEPARTMENT OF TRANSPORTATION

DIVISION OF ENGINEERING SERVICES STRUCTURE DESIGN DESIGN BRANCH 6

BRIDGE NO. 50-0518
POST MILE 49.60

KERN AVENUE POC (REPLACE)
STRUCTURE PLAN No. 6

STRUCTURES DESIGN DETAIL SHEET (ENGLISH) (REV. 09-01-10)

ORIGINAL SCALE IN INCHES FOR REDUCED PLANS 0 1 2 3

UNIT: 3591
PROJECT NUMBER & PHASE: 06 1400 0266 1 CONTRACT NO.: 06-0H6424

DISREGARD PRINTS BEARING EARLIER REVISION DATES

REVISION DATES: 9-10-13 05-14-15 10-06-15

SHEET 9 OF 42

FILE => 50-0518-c-sp6.dgn

USERNAME => s119704 DATE PLOTTED => 01-JUL-2016 TIME PLOTTED => 14:30

DIST	COUNTY	ROUTE	POST MILES TOTAL PROJECT	SHEET No.	TOTAL SHEETS
06	Ker	99	49.6	74	106

REGISTERED CIVIL ENGINEER — DATE 10-20-15

11-16-15
PLANS APPROVAL DATE

REGISTERED PROFESSIONAL ENGINEER — DON NGUYEN-TAN — No. C 57510 — Exp. 12-31-15 — CIVIL — STATE OF CALIFORNIA

The State of California or its officers or agents shall not be responsible for the accuracy or completeness of scanned copies of this plan sheet.

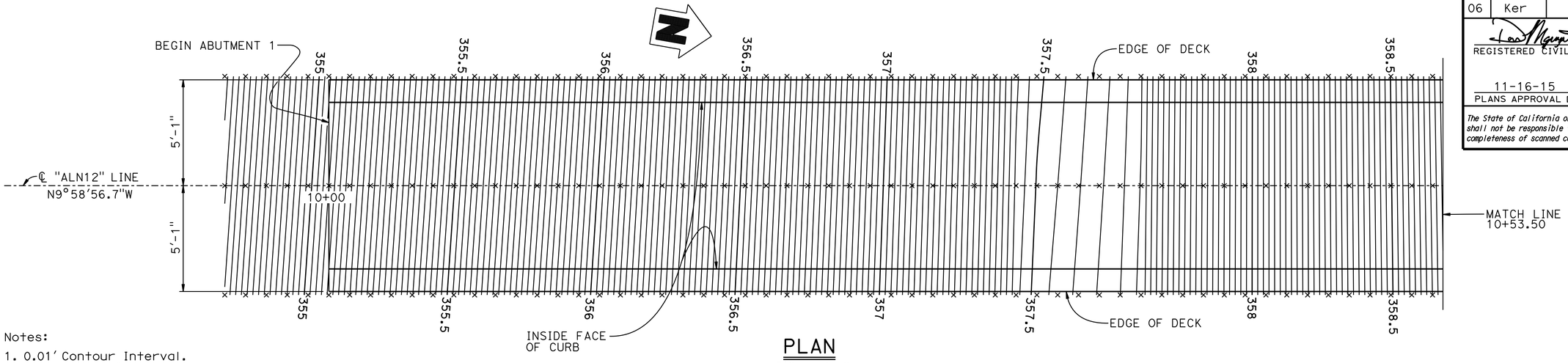

PLAN

3/8" = 1'-0"

Notes:

1. 0.01' Contour Interval.
   X - 1.0' Station Interval.
   Contours do not include camber.
2. Deck Contours extended past exterior edge of curb. Determine curb contour by adding curb height to deck contour.

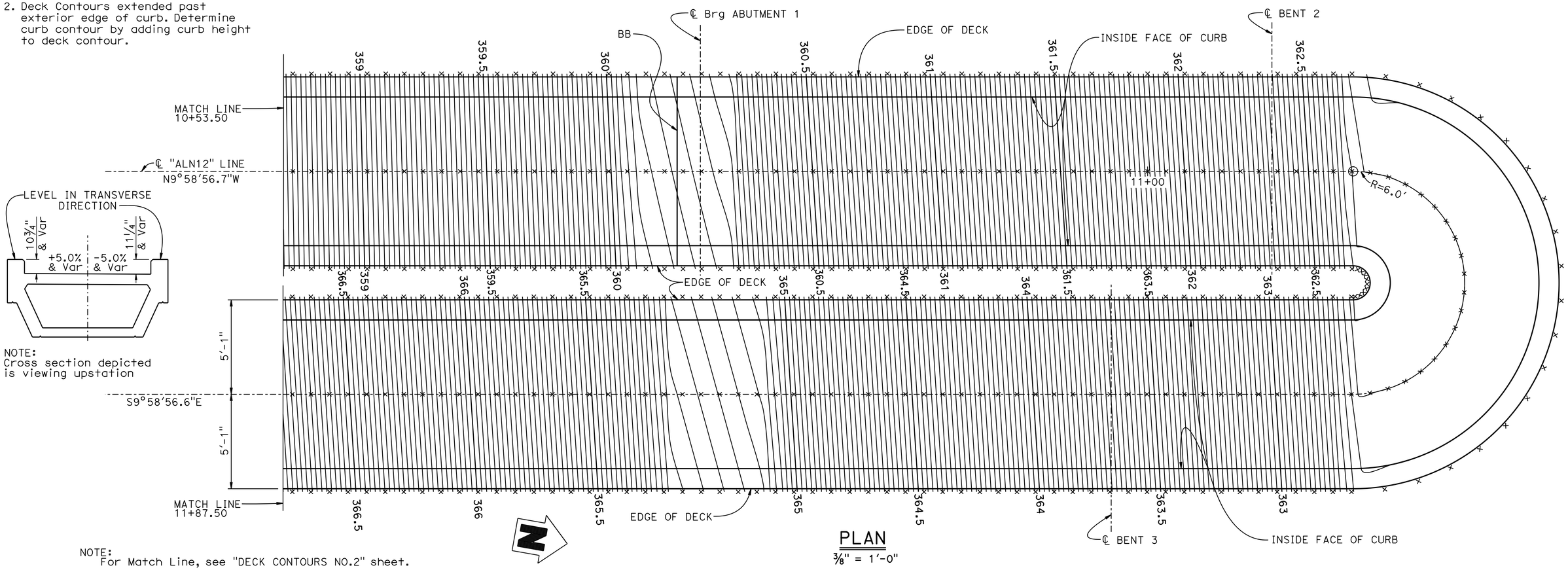

NOTE:
Cross section depicted is viewing upstation

PLAN

3/8" = 1'-0"

NOTE:
For Match Line, see "DECK CONTOURS NO.2" sheet.

DESIGN	BY DAVID ALVAREZ	CHECKED MIKE CULLEN	
DETAILS	BY DAVID PATO	CHECKED DON NGUYEN-TAN	
QUANTITIES	BY GLORIA REYES-GUTIERREZ	CHECKED DAVID ALVAREZ	

STATE OF CALIFORNIA
DEPARTMENT OF TRANSPORTATION

DIVISION OF ENGINEERING SERVICES
STRUCTURE DESIGN
DESIGN BRANCH 6

BRIDGE NO. 50-0518
POST MILE 49.6

KERN AVENUE POC (REPLACE)
DECK CONTOURS No. 1

STRUCTURES DESIGN DETAIL SHEET (ENGLISH) (REV. 09-01-10)

ORIGINAL SCALE IN INCHES FOR REDUCED PLANS 0 1 2 3

UNIT: 3591
PROJECT NUMBER & PHASE: 0614000266-1
CONTRACT NO.: 06-0H6424

DISREGARD PRINTS BEARING EARLIER REVISION DATES

REVISION DATES: 05-11-15 10-28-15

SHEET 10 OF 42

FILE => 50-0518-d-dc-1.dgn

USERNAME => s113704 DATE PLOTTED => 01-JUL-2016 TIME PLOTTED => 14:30

DIST	COUNTY	ROUTE	POST MILES TOTAL PROJECT	SHEET No.	TOTAL SHEETS
06	Ker	99	49.6	75	106

REGISTERED CIVIL ENGINEER 10-20-15 DATE

11-16-15
PLANS APPROVAL DATE

REGISTERED PROFESSIONAL ENGINEER
DON NGUYEN-TAN
No. C 57510
Exp. 12-31-15
CIVIL
STATE OF CALIFORNIA

The State of California or its officers or agents shall not be responsible for the accuracy or completeness of scanned copies of this plan sheet.

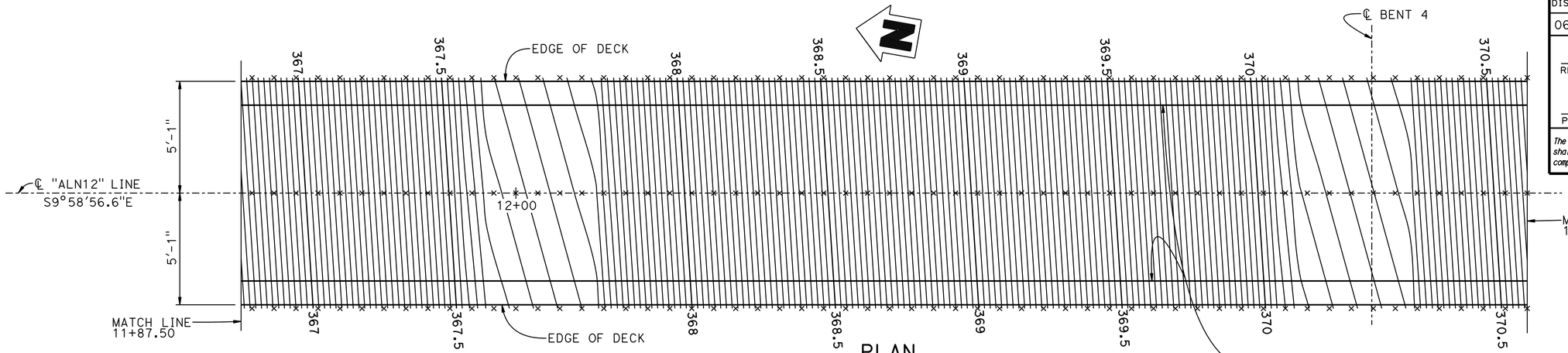

PLAN
3/8" = 1'-0"

INSIDE FACE OF CURB

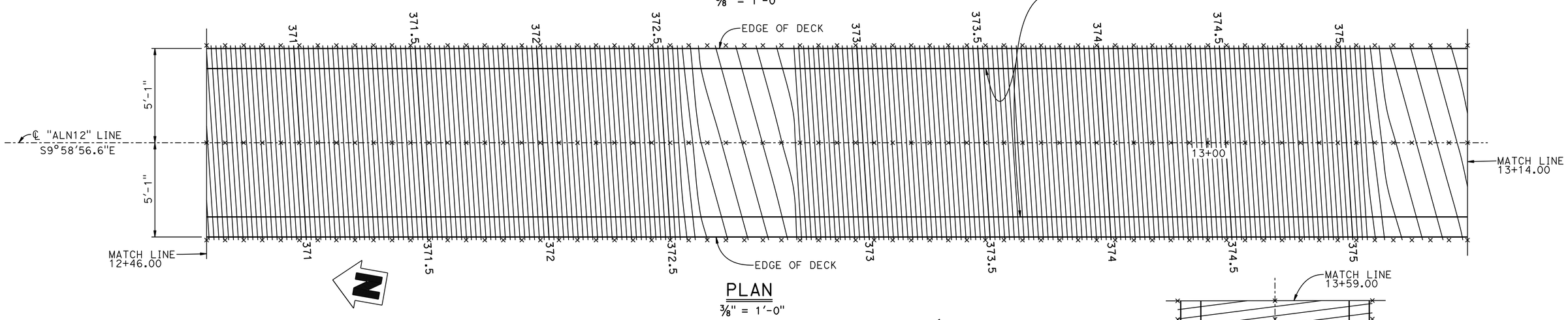

PLAN
3/8" = 1'-0"

Notes:

1. 0.01' Contour Interval.
   X - 1.0' Station Interval.
   Contours do not include camber.

2. Deck Contours extended past exterior edge of curb. Determine curb contour by adding curb height to deck contour.

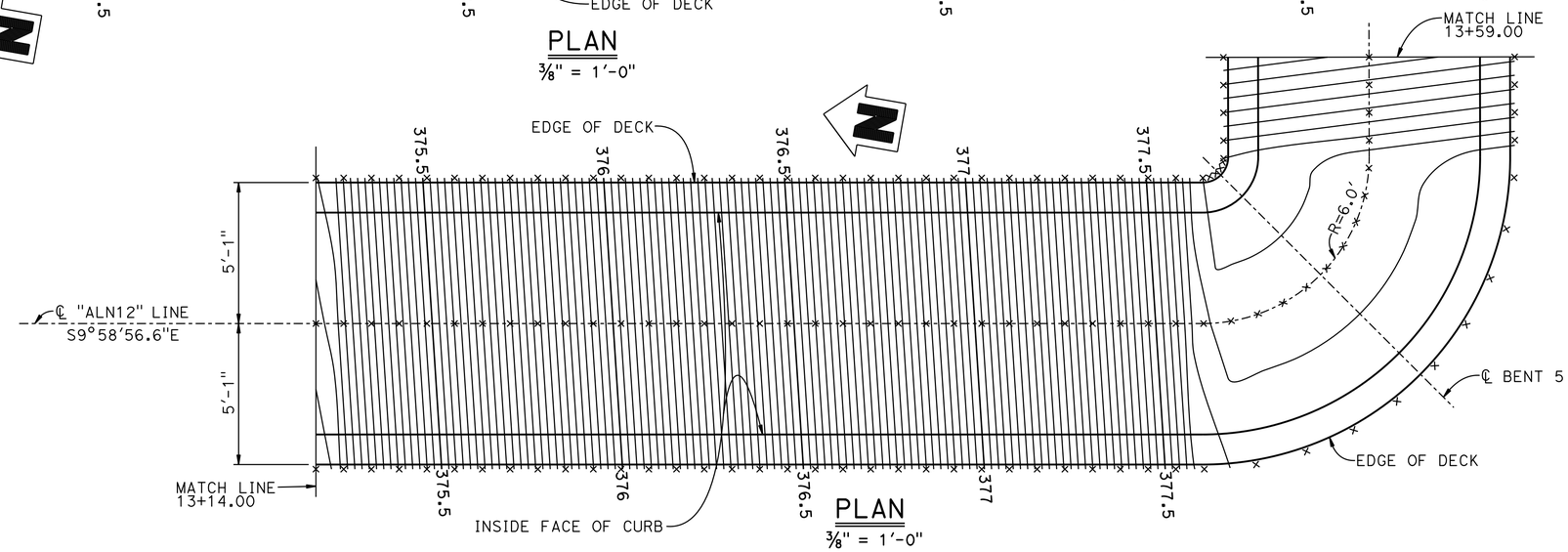

PLAN
3/8" = 1'-0"

NOTE:
For Match Line, see "DECK CONTOURS NO.1" and "DECK CONTOURS NO.3" sheets.

	BY	CHECKED
DESIGN	DAVID ALVAREZ	MIKE CULLEN
DETAILS	DAVID PATO	DON NGUYEN-TAN
QUANTITIES	GLORIA REYES-GUTIERREZ	DAVID ALVAREZ

STATE OF CALIFORNIA
DEPARTMENT OF TRANSPORTATION

DIVISION OF ENGINEERING SERVICES
STRUCTURE DESIGN
DESIGN BRANCH 6

BRIDGE NO. 50-0518
POST MILE 49.6

KERN AVENUE POC (REPLACE)
DECK CONTOURS No. 2

STRUCTURES DESIGN DETAIL SHEET (ENGLISH) (REV. 09-01-10)

ORIGINAL SCALE IN INCHES FOR REDUCED PLANS 0 1 2 3

UNIT: 3591
PROJECT NUMBER & PHASE: 0614000266-1
CONTRACT NO.: 06-0H6424

DISREGARD PRINTS BEARING EARLIER REVISION DATES

REVISION DATES: 05-12-15 10-28-15

SHEET 11 OF 42

FILE => 50-0518-d-dc-2.dgn

USERNAME => s119704 DATE PLOTTED => 01-JUL-2016 TIME PLOTTED => 14:30

DIST	COUNTY	ROUTE	POST MILES TOTAL PROJECT	SHEET No.	TOTAL SHEETS
06	Ker	99	49.6	76	106

REGISTERED CIVIL ENGINEER — DATE 10-20-15

11-16-15
PLANS APPROVAL DATE

REGISTERED PROFESSIONAL ENGINEER — DON NGUYEN-TAN — No. C 57510 — Exp. 12-31-15 — CIVIL — STATE OF CALIFORNIA

The State of California or its officers or agents shall not be responsible for the accuracy or completeness of scanned copies of this plan sheet.

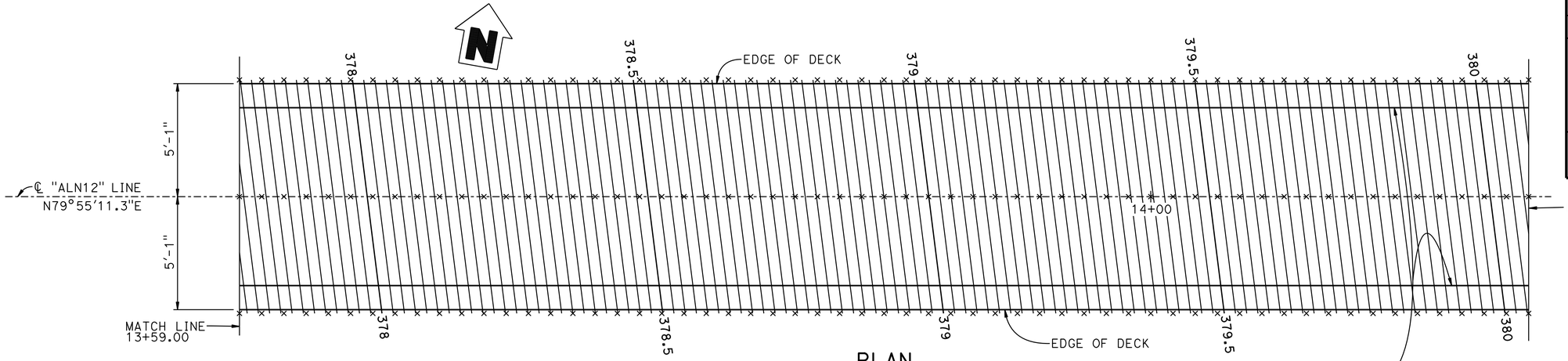

PLAN
3/8" = 1'-0"

Notes:

1. 0.01' Contour Interval.
   X - 1.0' Station Interval.
   Contours do not include camber.
2. Deck Contours extended past exterior edge of curb. Determine curb contour by adding curb height to deck contour.

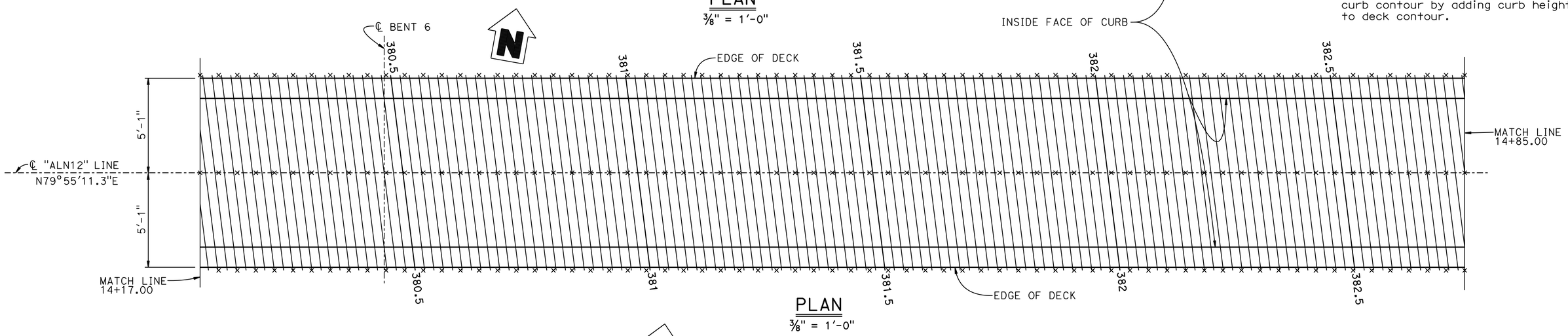

PLAN
3/8" = 1'-0"

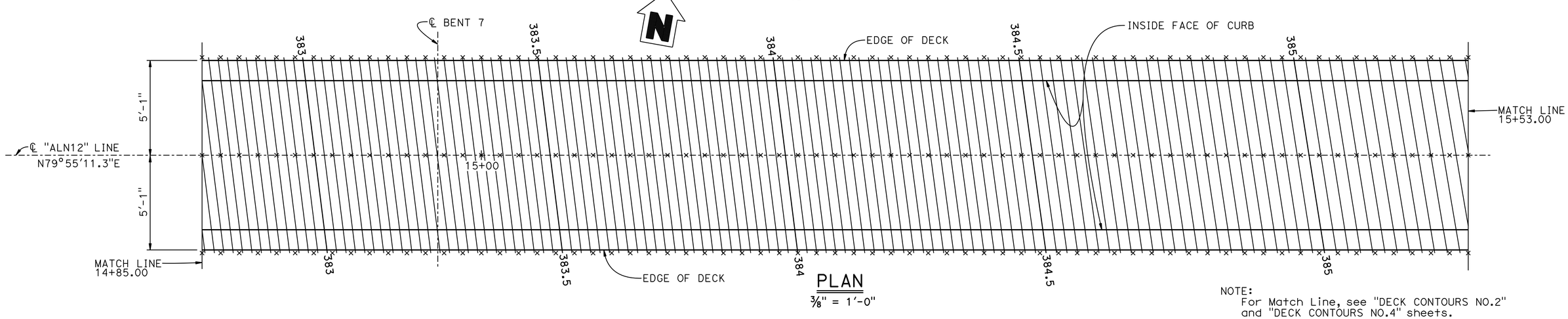

PLAN
3/8" = 1'-0"

NOTE:
For Match Line, see "DECK CONTOURS NO.2" and "DECK CONTOURS NO.4" sheets.

	BY	CHECKED
DESIGN	DAVID ALVAREZ	MIKE CULLEN
DETAILS	DAVID PATO	DON NGUYEN-TAN
QUANTITIES	GLORIA REYES-GUTIERREZ	DAVID ALVAREZ

STATE OF CALIFORNIA
DEPARTMENT OF TRANSPORTATION

DIVISION OF ENGINEERING SERVICES
STRUCTURE DESIGN
DESIGN BRANCH 6

BRIDGE NO. 50-0518
POST MILE 49.6

KERN AVENUE POC (REPLACE)
DECK CONTOURS No. 3

STRUCTURES DESIGN DETAIL SHEET (ENGLISH) (REV. 09-01-10)

ORIGINAL SCALE IN INCHES FOR REDUCED PLANS 0 1 2 3

UNIT: 3591
PROJECT NUMBER & PHASE: 0614000266-1
CONTRACT NO.: 06-0H6424

DISREGARD PRINTS BEARING EARLIER REVISION DATES

REVISION DATES: 05-13-15 10-28-15

SHEET 12 OF 42

FILE => 50-0518-d-dc-3.dgn

USERNAME => s119704 DATE PLOTTED => 01-JUL-2016 TIME PLOTTED => 14:30

DIST	COUNTY	ROUTE	POST MILES TOTAL PROJECT	SHEET No.	TOTAL SHEETS
06	Ker	99	49.6	77	106

REGISTERED CIVIL ENGINEER 10-20-15 DATE

11-16-15
PLANS APPROVAL DATE

REGISTERED PROFESSIONAL ENGINEER DON NGUYEN-TAN No. C 57510 Exp. 12-31-15 CIVIL STATE OF CALIFORNIA

The State of California or its officers or agents shall not be responsible for the accuracy or completeness of scanned copies of this plan sheet.

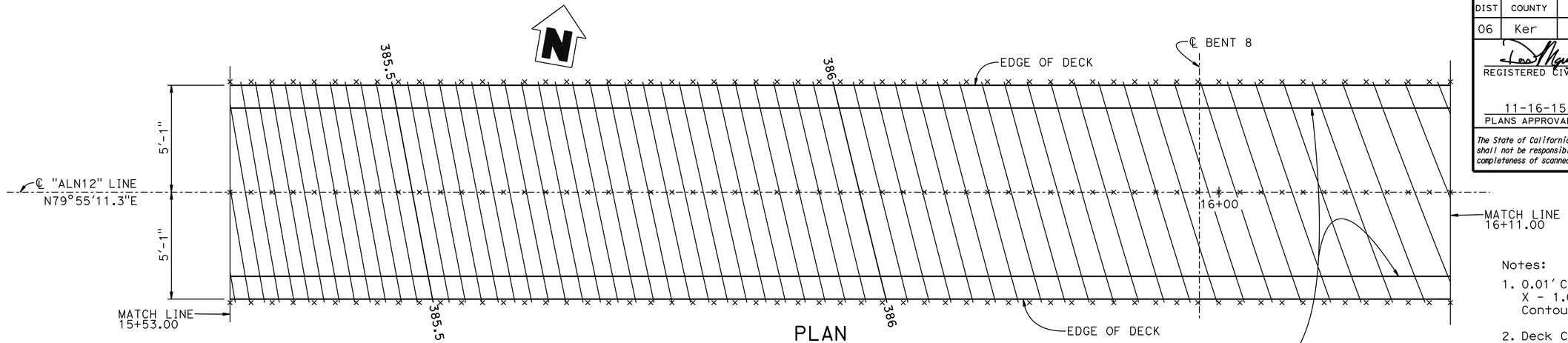

PLAN
3/8" = 1'-0"

Notes:

1. 0.01' Contour Interval.
   X - 1.0' Station Interval.
   Contours do not include camber.
2. Deck Contours extended past exterior edge of curb. Determine curb contour by adding curb height to deck contour.

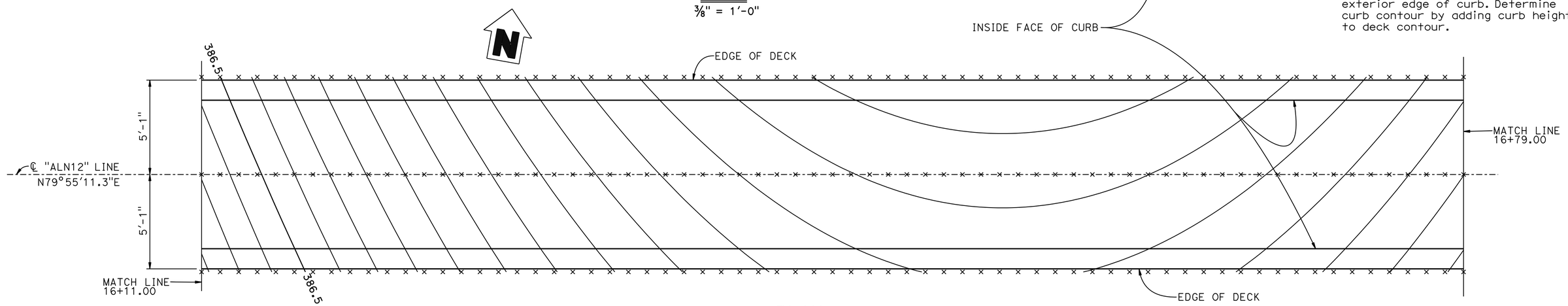

PLAN
3/8" = 1'-0"

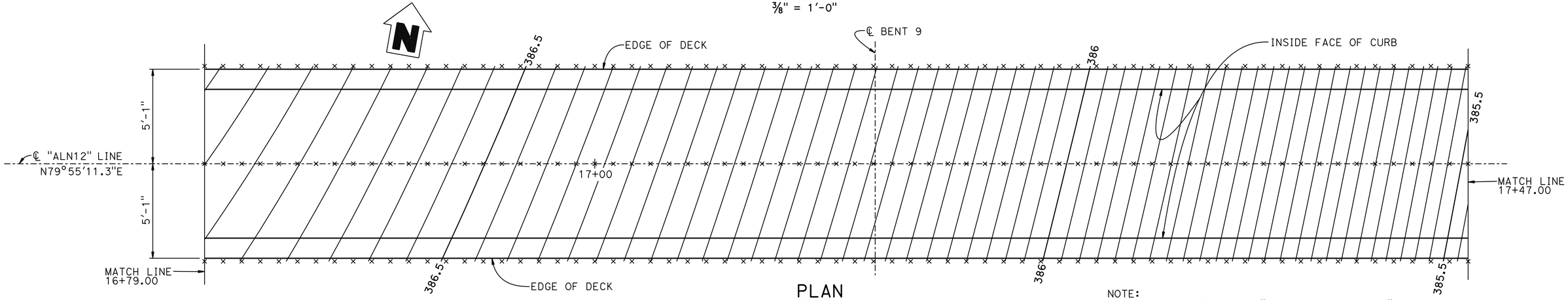

PLAN
3/8" = 1'-0"

NOTE:
For Match Line, see "DECK CONTOURS NO.3" and "DECK CONTOURS NO.5" sheets.

	BY	CHECKED
DESIGN	DAVID ALVAREZ	MIKE CULLEN
DETAILS	DAVID PATO	DON NGUYEN-TAN
QUANTITIES	GLORIA REYES-GUTIERREZ	DAVID ALVAREZ

STATE OF CALIFORNIA
DEPARTMENT OF TRANSPORTATION

DIVISION OF ENGINEERING SERVICES
STRUCTURE DESIGN
DESIGN BRANCH 6

BRIDGE NO. 50-0518
POST MILE 49.6

KERN AVENUE POC (REPLACE)
DECK CONTOURS No. 4

STRUCTURES DESIGN DETAIL SHEET (ENGLISH) (REV. 09-01-10)

ORIGINAL SCALE IN INCHES FOR REDUCED PLANS 0 1 2 3

UNIT: 3591
PROJECT NUMBER & PHASE: 0614000266-1
CONTRACT NO.: 06-0H6424

DISREGARD PRINTS BEARING EARLIER REVISION DATES

REVISION DATES: 05-14-15 10-28-15

SHEET 13 OF 42

FILE => 50-0518-d-dc-4.dgn

USERNAME => s113704 DATE PLOTTED => 01-JUL-2016 TIME PLOTTED => 14:30

DIST	COUNTY	ROUTE	POST MILES TOTAL PROJECT	SHEET No.	TOTAL SHEETS
06	Ker	99	49.6	78	106

REGISTERED CIVIL ENGINEER — DATE 10-20-15

11-16-15
PLANS APPROVAL DATE

REGISTERED PROFESSIONAL ENGINEER — DON NGUYEN-TAN — No. C 57510 — Exp. 12-31-15 — CIVIL — STATE OF CALIFORNIA

The State of California or its officers or agents shall not be responsible for the accuracy or completeness of scanned copies of this plan sheet.

NOTE:
For Match Line, see "DECK CONTOURS NO.4" and "DECK CONTOURS NO.6" sheets.

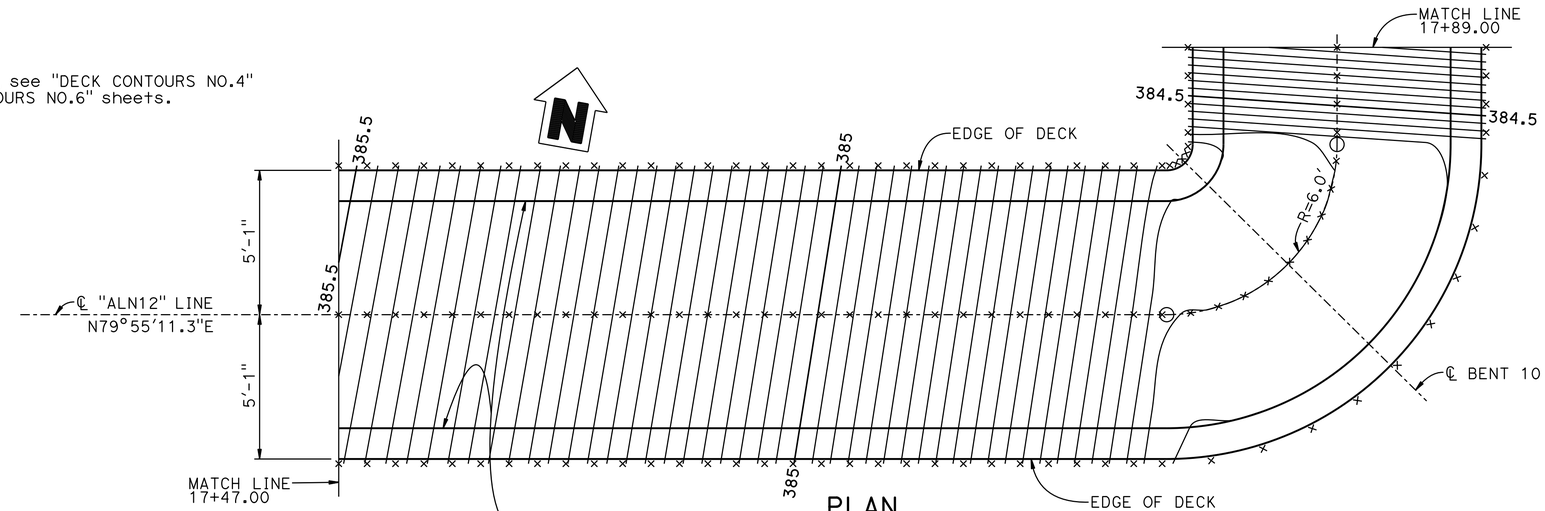

PLAN
3/8" = 1'-0"

Notes:

1. 0.01' Contour Interval.
   X - 1.0' Station Interval.
   Contours do not include camber.

2. Deck Contours extended past exterior edge of curb. Determine curb contour by adding curb height to deck contour.

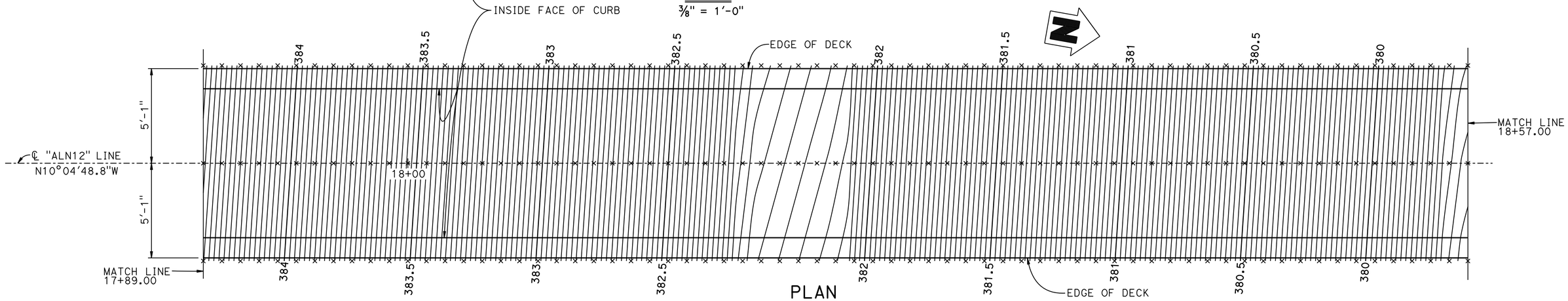

PLAN
3/8" = 1'-0"

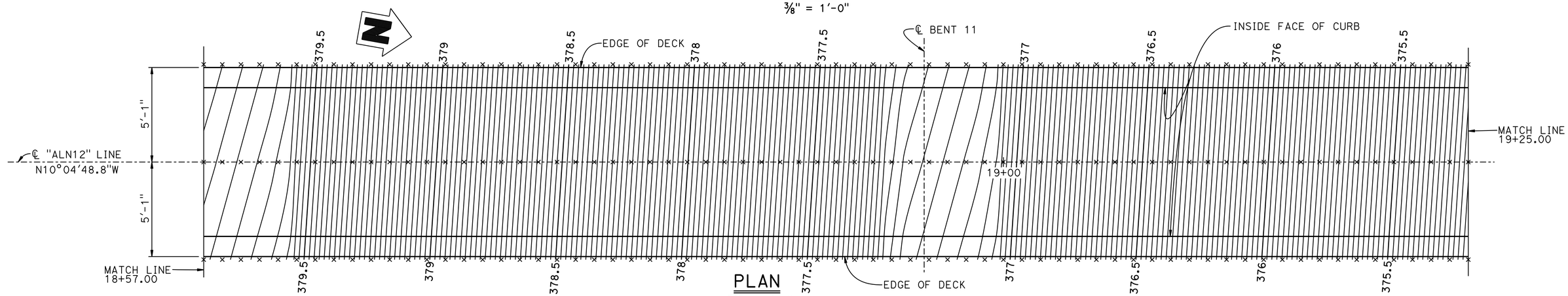

PLAN
3/8" = 1'-0"

	BY	CHECKED
DESIGN	DAVID ALVAREZ	MIKE CULLEN
DETAILS	DAVID PATO	DON NGUYEN-TAN
QUANTITIES	GLORIA REYES-GUTIERREZ	DAVID ALVAREZ

STATE OF CALIFORNIA
DEPARTMENT OF TRANSPORTATION

DIVISION OF ENGINEERING SERVICES
STRUCTURE DESIGN
DESIGN BRANCH 6

BRIDGE NO. 50-0518
POST MILE 49.6

KERN AVENUE POC (REPLACE)
DECK CONTOURS No. 5

STRUCTURES DESIGN DETAIL SHEET (ENGLISH) (REV. 09-01-10)

ORIGINAL SCALE IN INCHES FOR REDUCED PLANS 0 1 2 3

UNIT: 3591
PROJECT NUMBER & PHASE: 0614000266-1
CONTRACT NO.: 06-0H6424

DISREGARD PRINTS BEARING EARLIER REVISION DATES

REVISION DATES: 05-14-15 10-28-15

SHEET 14 OF 42

FILE => 50-0518-d-dc-5.dgn

USERNAME => s119704 DATE PLOTTED => 01-JUL-2016 TIME PLOTTED => 14:30

DIST	COUNTY	ROUTE	POST MILES TOTAL PROJECT	SHEET No.	TOTAL SHEETS
06	Ker	99	49.6	79	106

REGISTERED CIVIL ENGINEER 10-20-15 DATE

11-16-15
PLANS APPROVAL DATE

REGISTERED PROFESSIONAL ENGINEER DON NGUYEN-TAN No. C 57510 Exp. 12-31-15 CIVIL STATE OF CALIFORNIA

The State of California or its officers or agents shall not be responsible for the accuracy or completeness of scanned copies of this plan sheet.

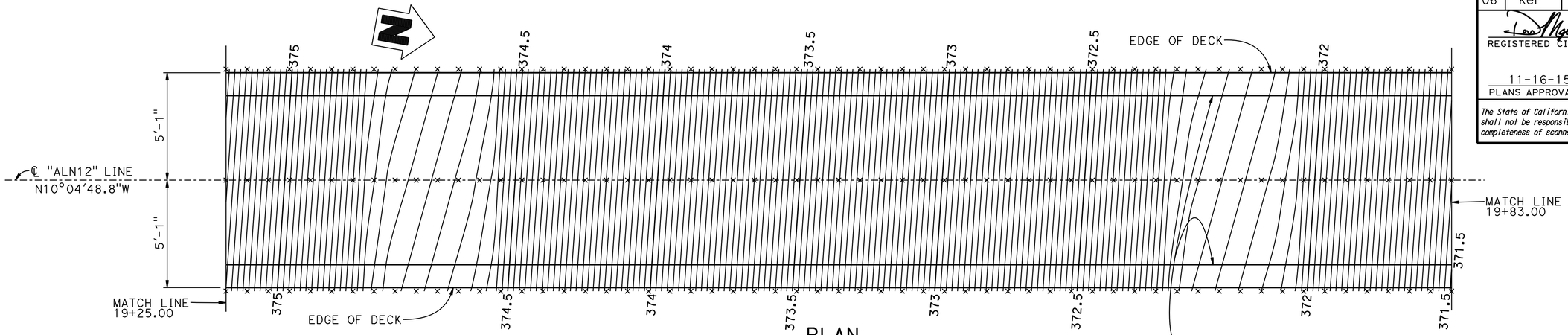

PLAN
3/8" = 1'-0"

Notes:

1. 0.01' Contour Interval.
   X - 1.0' Station Interval.
   Contours do not include camber.

2. Deck Contours extended past exterior edge of curb. Determine curb contour by adding curb height to deck contour.

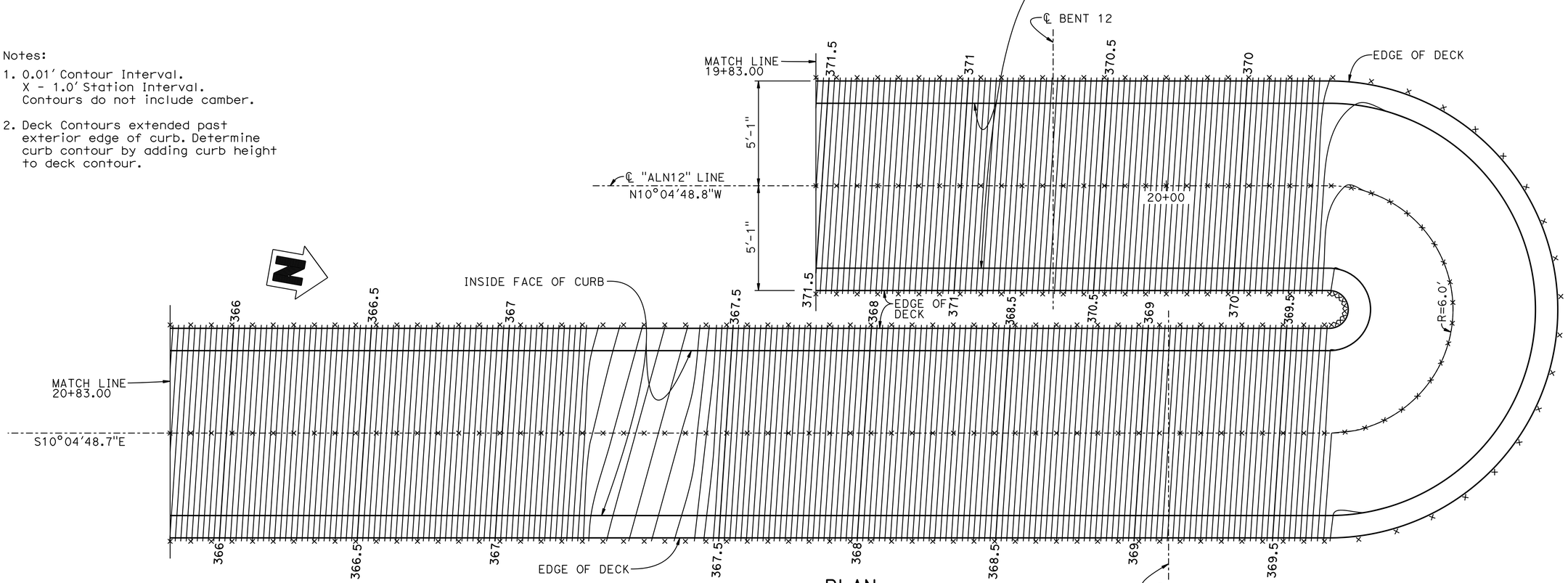

PLAN
3/8" = 1'-0"

NOTE:
For Match Line, see "DECK CONTOURS NO.5" and "DECK CONTOURS NO.7" sheets.

	BY	CHECKED
DESIGN	DAVID ALVAREZ	MIKE CULLEN
DETAILS	DAVID PATO	DON NGUYEN-TAN
QUANTITIES	GLORIA REYES-GUTIERREZ	DAVID ALVAREZ

STATE OF CALIFORNIA
DEPARTMENT OF TRANSPORTATION

DIVISION OF ENGINEERING SERVICES
STRUCTURE DESIGN
DESIGN BRANCH 6

BRIDGE NO. 50-0518
POST MILE 49.6

KERN AVENUE POC (REPLACE)
DECK CONTOURS No. 6

STRUCTURES DESIGN DETAIL SHEET (ENGLISH) (REV. 09-01-10)

ORIGINAL SCALE IN INCHES FOR REDUCED PLANS 0 1 2 3

UNIT: 3591
PROJECT NUMBER & PHASE: 0614000266-1
CONTRACT NO.: 06-0H6424

DISREGARD PRINTS BEARING EARLIER REVISION DATES

REVISION DATES: ~~05-18-15~~ 10-28-15

SHEET 15 OF 42

FILE => 50-0518-d-dc-6.dgn

USERNAME => s119704 DATE PLOTTED => 01-JUL-2016 TIME PLOTTED => 14:30

DIST	COUNTY	ROUTE	POST MILES TOTAL PROJECT	SHEET No.	TOTAL SHEETS
06	Ker	99	49.6	80	106

REGISTERED CIVIL ENGINEER 10-20-15 DATE

11-16-15
PLANS APPROVAL DATE

REGISTERED PROFESSIONAL ENGINEER
DON NGUYEN-TAN
No. C 57510
Exp. 12-31-15
CIVIL
STATE OF CALIFORNIA

The State of California or its officers or agents shall not be responsible for the accuracy or completeness of scanned copies of this plan sheet.

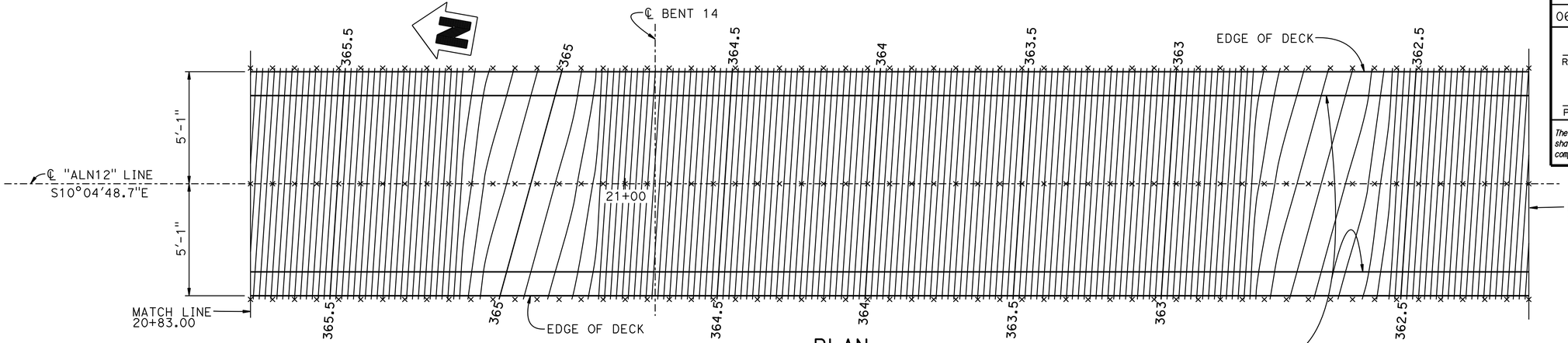

PLAN
3/8" = 1'-0"

Notes:

1. 0.01' Contour Interval.
   X - 1.0' Station Interval.
   Contours do not include camber.
2. Deck Contours extended past exterior edge of curb. Determine curb contour by adding curb height to deck contour.

INSIDE FACE OF CURB

NOTE:
For Match Line, see "DECK CONTOURS NO.6" sheet.

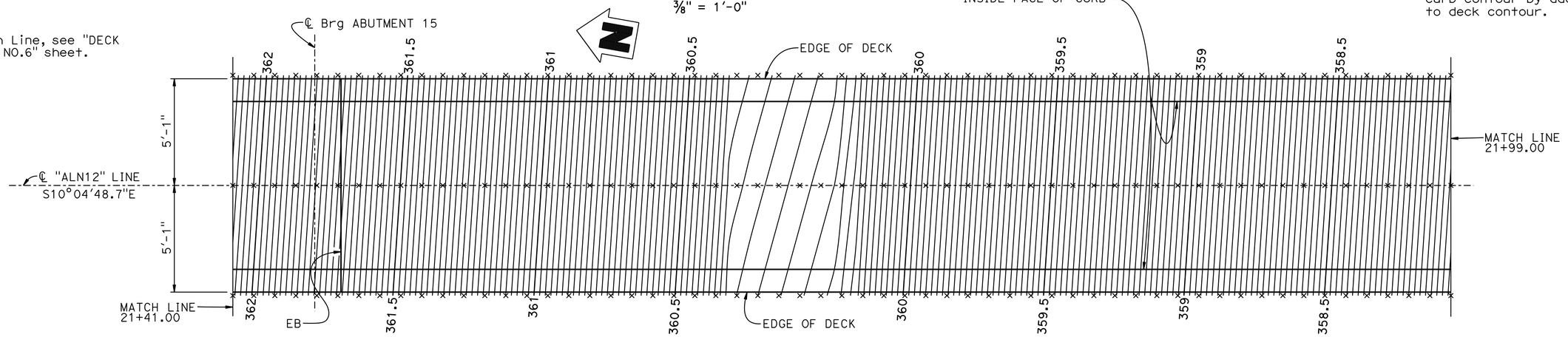

PLAN
3/8" = 1'-0"

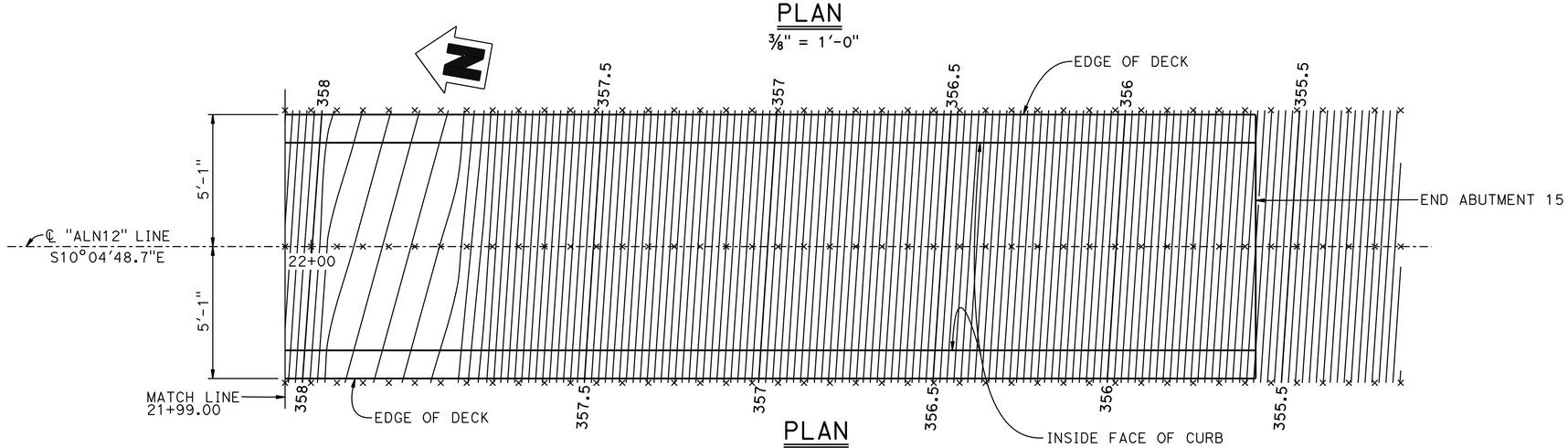

PLAN
3/8" = 1'-0"

	BY	CHECKED
DESIGN	DAVID ALVAREZ	MIKE CULLEN
DETAILS	DAVID PATO	DON NGUYEN-TAN
QUANTITIES	GLORIA REYES-GUTIERREZ	DAVID ALVAREZ

STATE OF CALIFORNIA
DEPARTMENT OF TRANSPORTATION

DIVISION OF ENGINEERING SERVICES
STRUCTURE DESIGN
DESIGN BRANCH 6

BRIDGE NO. 50-0518
POST MILE 49.6

KERN AVENUE POC (REPLACE)
DECK CONTOURS No. 7

STRUCTURES DESIGN DETAIL SHEET (ENGLISH) (REV. 09-01-10)

ORIGINAL SCALE IN INCHES FOR REDUCED PLANS 0 1 2 3

UNIT: 3591
PROJECT NUMBER & PHASE: 0614000266-1
CONTRACT NO.: 06-0H6424

DISREGARD PRINTS BEARING EARLIER REVISION DATES

REVISION DATES: ~~05-15-15~~ 10-28-15

SHEET 16 OF 42

FILE => 50-0518-d-dc-7.dgn

USERNAME => s119704 DATE PLOTTED => 01-JUL-2016 TIME PLOTTED => 14:30

DIST	COUNTY	ROUTE	POST MILES TOTAL PROJECT	SHEET No.	TOTAL SHEETS
06	Ker	99	49.6	81	106

REGISTERED CIVIL ENGINEER — DATE 10-20-15

11-16-15
PLANS APPROVAL DATE

The State of California or its officers or agents shall not be responsible for the accuracy or completeness of electronic copies of this plan sheet.

REGISTERED PROFESSIONAL ENGINEER — DON NGUYEN-TAN — No. C 57510 — Exp. 12-31-15 — CIVIL — STATE OF CALIFORNIA

CURVE DATA

No. ⊕	R	Δ	T	L
Ⓐ	6.0′	180°0′0"	NA	18.85′
Ⓑ	6.0′	90°5′52"	6.01′	9.43′
Ⓒ	6.0′	90°0′00"	6.00′	9.43′
Ⓓ	6.0′	180°0′0"	NA	18.84′

SURVEY CONTROL

SUHV223
Fnd 1/2" REBAR WITH YELLOW CT CAP
202.61 FT Rt. Rte 99
Sta. 229+15.51
N 2,435,470.48
E 6,197,272.01
Elev. = 356.45

SUHV225 (AJ00225) (NOT SHOWN ON PLAN)
Fnd 2" CALDOT BCM IN WELL N/B 99 Shdr
55.02 FT Rt. Rte 99
Sta. 233+00.20
N 2,435,823.38
E 6,197,059.39
Elev. = 353.36

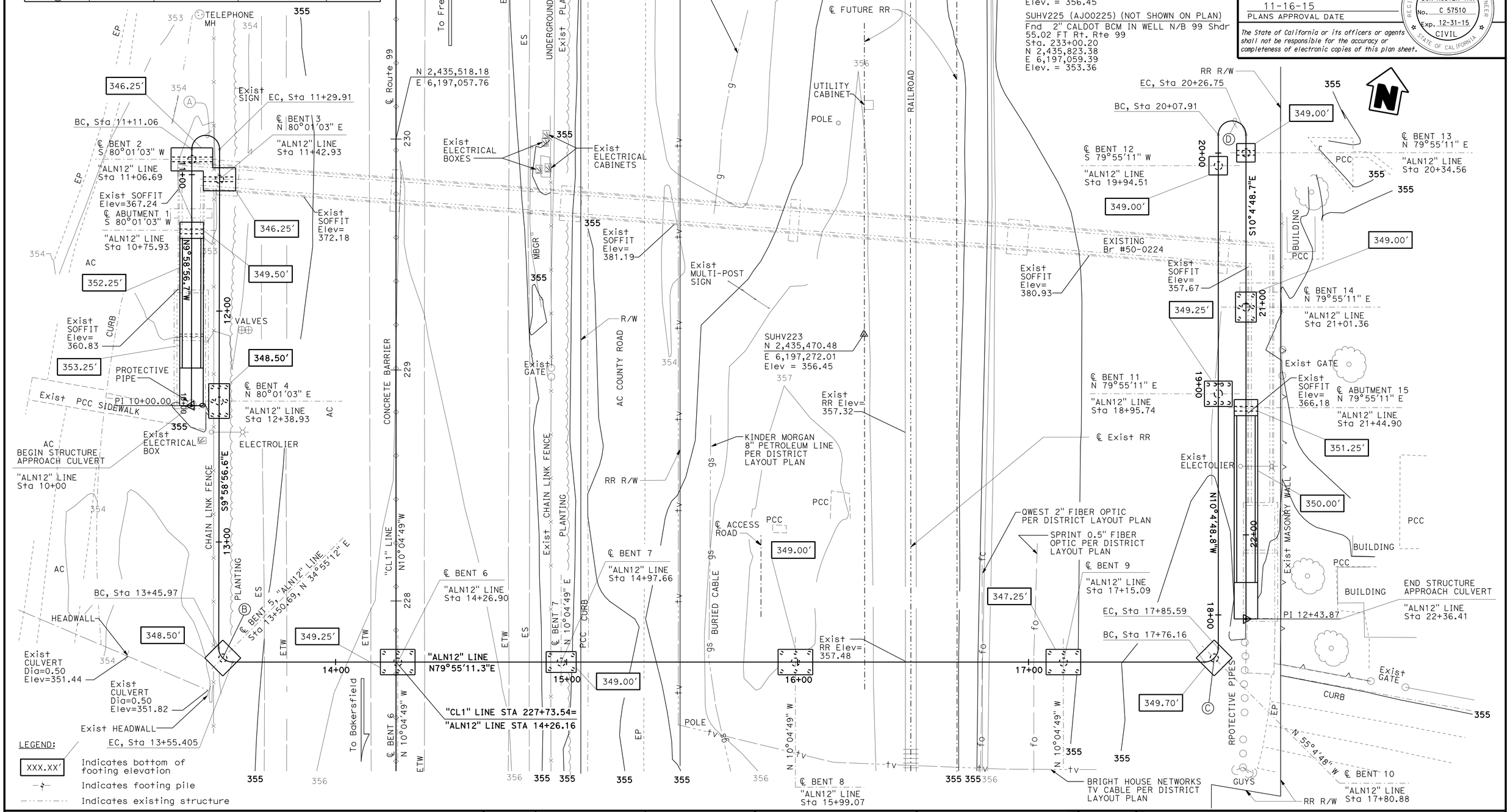

LEGEND:

XXX.XX′ — Indicates bottom of footing elevation

Indicates footing pile

Indicates existing structure

PRELIMINARY INVESTIGATION SECTION					
SCALE 1"=20′	VERT.DATUM NAVD88	PHOTOGRAMMETRY AS OF: X			
	HORZ.DATUM NAD83 (2007)	SURVEYED	BY DISTRICT	CHECKED	BY C. FASSETT 11/2012
ALIGNMENT TIES Dist. Traverse Sheet		DRAFTED	BY T. ZOLNIKOV 11/2012	CHECKED	BY S. SOU 11/2012

	BY	CHECKED
DESIGN	DAVID ALVAREZ	MIKE CULLEN
DETAILS	SUSAN NG	DON NGUYEN-TAN
QUANTITIES	GLORIA REYES-GUTIERREZ	DAVID ALVAREZ

STATE OF CALIFORNIA
DEPARTMENT OF TRANSPORTATION

DIVISION OF ENGINEERING SERVICES
STRUCTURE DESIGN
DESIGN BRANCH 6

BRIDGE NO. 50-0518
POST MILE 49.60

KERN AVENUE POC (REPLACE)
FOUNDATION PLAN

STRUCTURES FOUNDATION PLAN SHEET (ENGLISH) (REV. 09-01-10)

ORIGINAL SCALE IN INCHES FOR REDUCED PLANS 0 1 2 3

UNIT: 3646
PROJECT NUMBER & PHASE: 06 1400 0266 1 CONTRACT NO.: 06-0H6424

DISREGARD PRINTS BEARING EARLIER REVISION DATES

REVISION DATES: 11-21-12 10-28-15 05-18-15

SHEET 17 OF 42

FILE => 50-0518-e-fp101.dgn

DIST	COUNTY	ROUTE	POST MILES TOTAL PROJECT	SHEET No.	TOTAL SHEETS
06	Ker	99	49.6	82	106

REGISTERED CIVIL ENGINEER — DATE 10-20-15

11-16-15
PLANS APPROVAL DATE

REGISTERED PROFESSIONAL ENGINEER — DON NGUYEN-TAN — No. C 57510 — Exp. 12-31-15 — CIVIL — STATE OF CALIFORNIA

The State of California or its officers or agents shall not be responsible for the accuracy or completeness of scanned copies of this plan sheet.

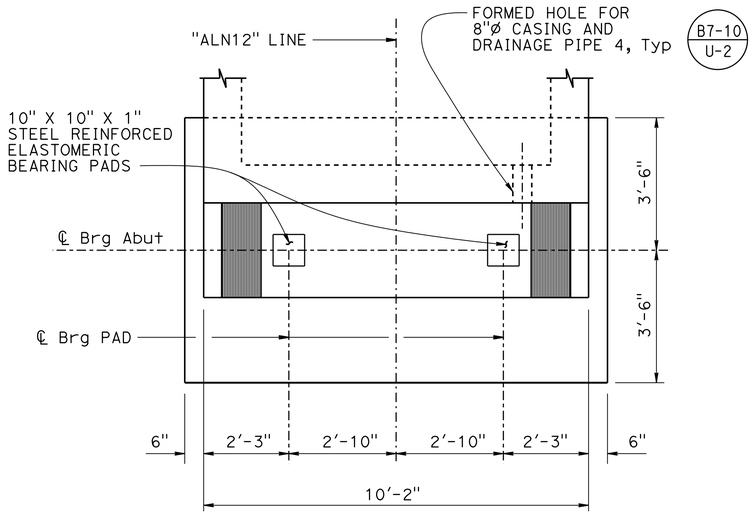

PLAN

½" = 1'-0"

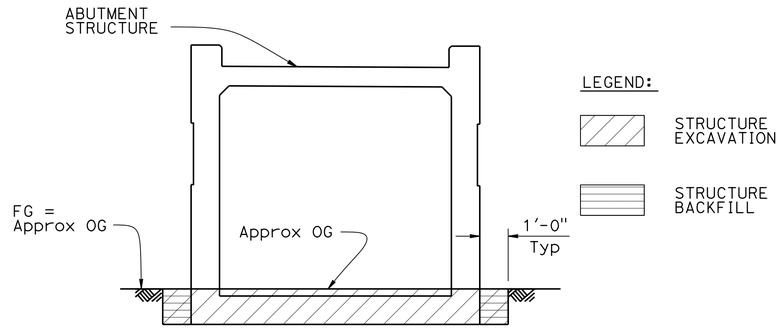

ABUTMENT STRUCTURE

LIMITS OF PAYMENT FOR EXCAVATION AND BACKFILL

⅜" = 1'-0"

NOTES:

1. Abutment 1 shown, Abutment 15 similar.
2. For SECTIONS A-A, B-B, C-C and D-D see "ABUTMENT DETAILS No. 1" sheet.

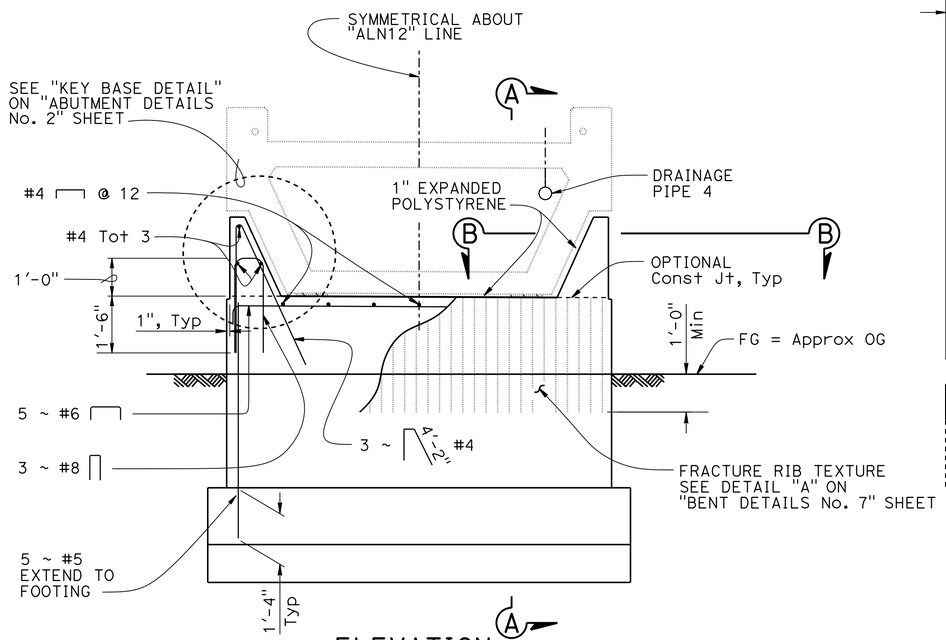

ELEVATION

½" = 1'-0"

NOTE: For Reinf not shown, see SECTION A-A.

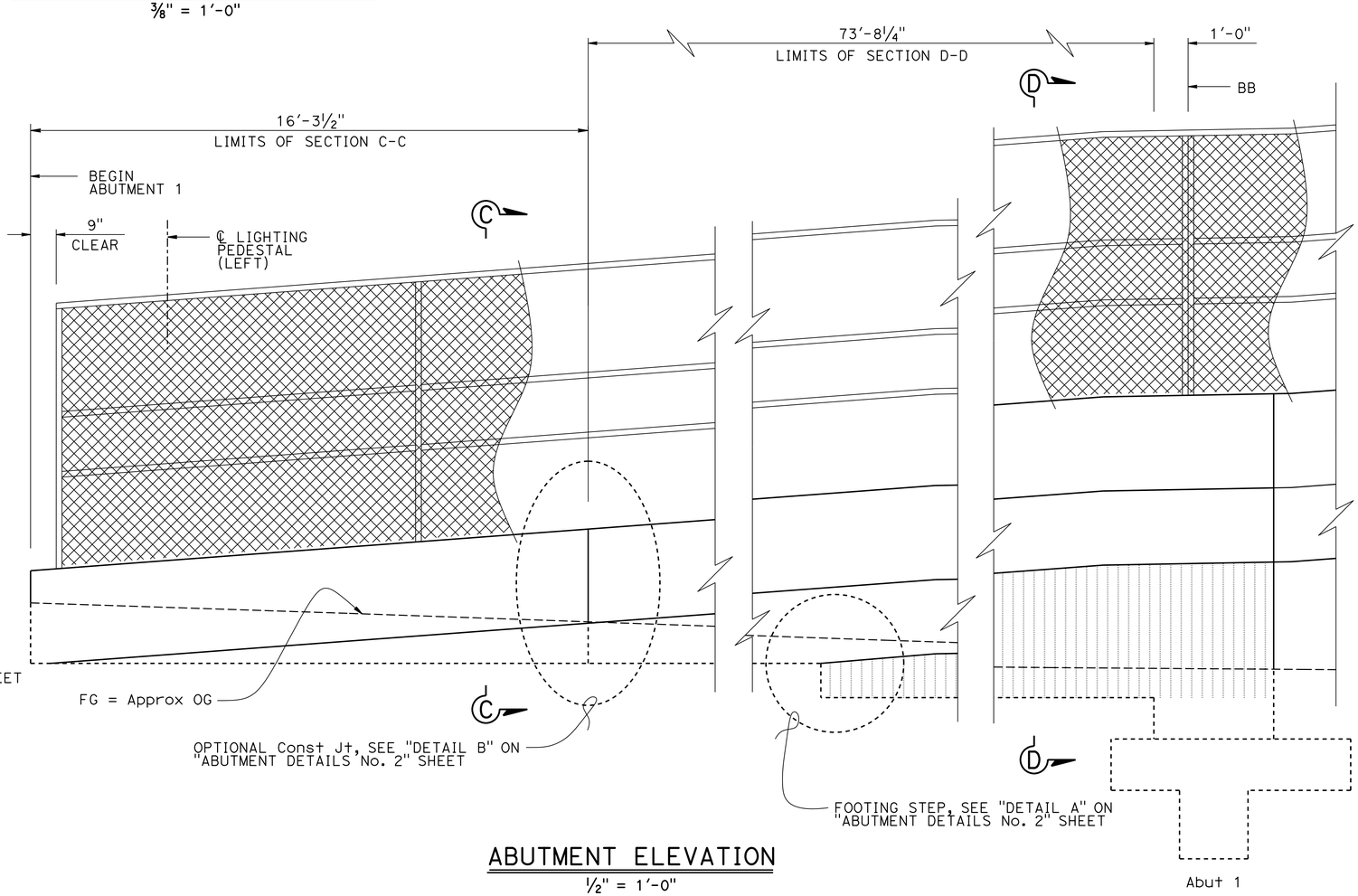

ABUTMENT ELEVATION

½" = 1'-0"

DESIGN	BY DAVID ALVAREZ	CHECKED MIKE CULLEN	
DETAILS	BY SUSAN NG	CHECKED DON NGUYEN-TAN	
QUANTITIES	BY GLORIA REYES-GUTIERREZ	CHECKED DAVID ALVAREZ	

STATE OF CALIFORNIA
DEPARTMENT OF TRANSPORTATION

DIVISION OF ENGINEERING SERVICES
STRUCTURE DESIGN
DESIGN BRANCH 6

BRIDGE NO. 50-0518
POST MILE 49.6

KERN AVENUE POC (REPLACE)
ABUTMENT LAYOUT

STRUCTURES DESIGN DETAIL SHEET (ENGLISH) (REV. 09-01-10)

ORIGINAL SCALE IN INCHES FOR REDUCED PLANS 0 1 2 3

UNIT: 3591
PROJECT NUMBER & PHASE: 06 1400 0266 1 CONTRACT NO.: 06-0H6424

DISREGARD PRINTS BEARING EARLIER REVISION DATES

REVISION DATES: 09-30-13 10-02-15 10-28-15

SHEET 18 OF 42

FILE => 50-0518-f-abt-lo-01.dgn

USERNAME => e119704 DATE PLOTTED => 01-JUL-2016 TIME PLOTTED => 14:30

DIST	COUNTY	ROUTE	POST MILES TOTAL PROJECT	SHEET No.	TOTAL SHEETS
06	Ker	99	49.6	83	106

REGISTERED CIVIL ENGINEER — DATE 10-20-15

11-16-15
PLANS APPROVAL DATE

REGISTERED PROFESSIONAL ENGINEER — DON NGUYEN-TAN — No. C 57510 — Exp. 12-31-15 — CIVIL — STATE OF CALIFORNIA

The State of California or its officers or agents shall not be responsible for the accuracy or completeness of scanned copies of this plan sheet.

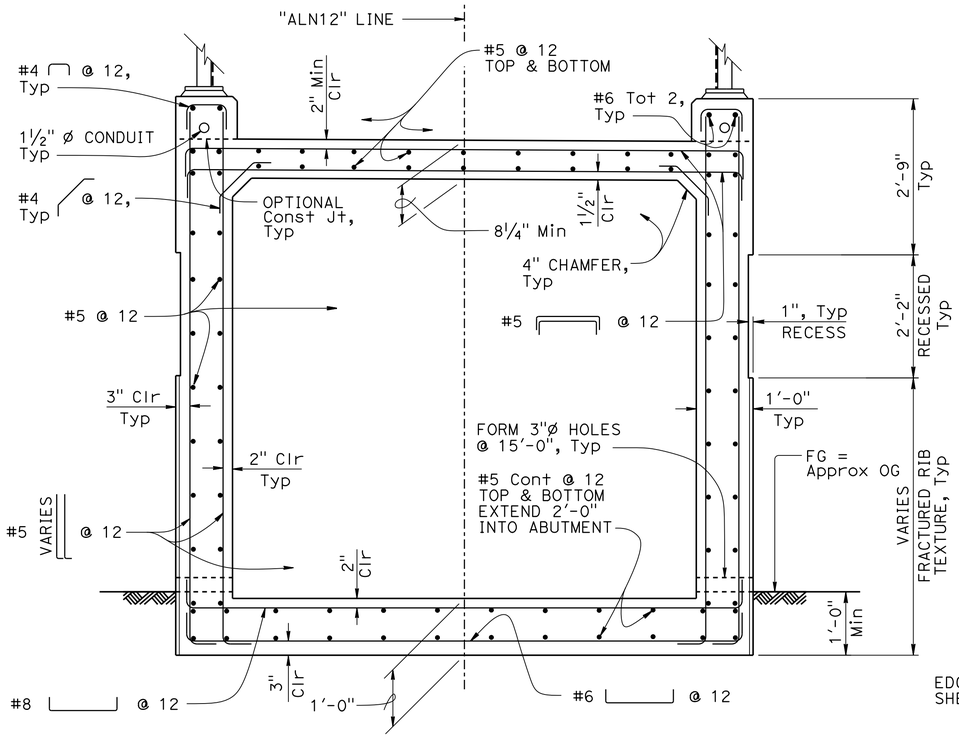

SECTION D-D

¾" = 1'-0"

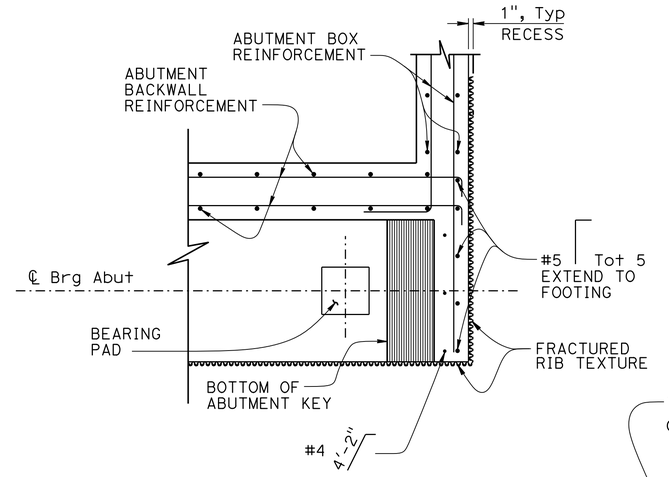

SECTION B-B

¾" = 1'-0"

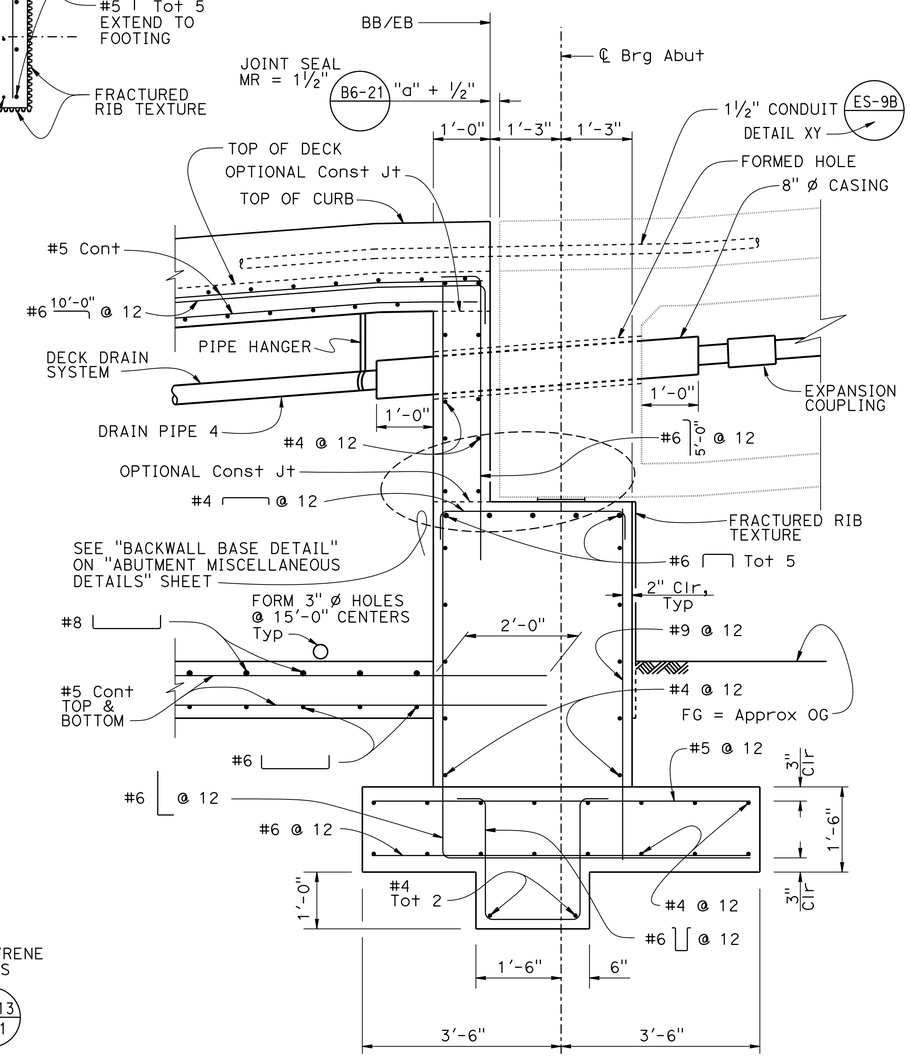

SECTION A-A

¾" = 1'-0"

B7-8 | B7-10 U-2 | B7-10 U-3

NOTE:
Abutment 1 shown, Abutment 15 similar

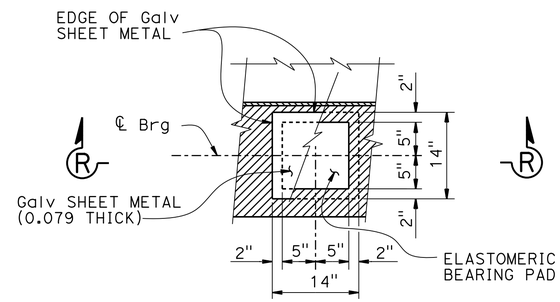

PLAN

Note:

Coat top of Bearing Pad with grease prior to placing sheet metal.

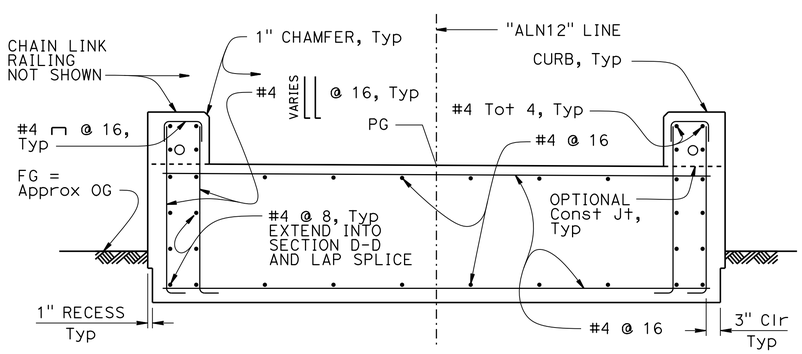

SECTION C-C

¾" = 1'-0"

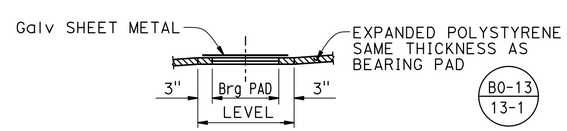

SECTION R-R
BEARING PAD DETAIL

NO SCALE

NOTE: Details typical at all bearing pads

DESIGN	BY DAVID ALVAREZ	CHECKED MIKE CULLEN	
DETAILS	BY SUSAN NG	CHECKED DON NGUYEN-TAN	
QUANTITIES	BY GLORIA REYES-GUTIERREZ	CHECKED DAVID ALVAREZ	

STATE OF CALIFORNIA
DEPARTMENT OF TRANSPORTATION

DIVISION OF ENGINEERING SERVICES
STRUCTURE DESIGN
DESIGN BRANCH 6

BRIDGE NO. 50-0518
POST MILE 49.6

KERN AVENUE POC (REPLACE)
ABUTMENT DETAILS No. 1

STRUCTURES DESIGN DETAIL SHEET (ENGLISH) (REV. 09-01-10)

ORIGINAL SCALE IN INCHES FOR REDUCED PLANS 0 1 2 3

UNIT: 3591
PROJECT NUMBER & PHASE: 06 1400 0266 1 CONTRACT NO.: 06-0H6424

DISREGARD PRINTS BEARING EARLIER REVISION DATES

REVISION DATES: 10-02-13 | 10-09-15 | 9-30-15

SHEET 19 OF 42

FILE => 50-0518-f-abt-sa-dt-01.dgn

USERNAME => s119704 DATE PLOTTED => 01-JUL-2016 TIME PLOTTED => 14:31

DIST	COUNTY	ROUTE	POST MILES TOTAL PROJECT	SHEET No.	TOTAL SHEETS
06	Ker	99	49.6	84	106

REGISTERED CIVIL ENGINEER — DATE 10-20-15

11-16-15
PLANS APPROVAL DATE

REGISTERED PROFESSIONAL ENGINEER — DON NGUYEN-TAN — No. C 57510 — Exp. 12-31-15 — CIVIL — STATE OF CALIFORNIA

The State of California or its officers or agents shall not be responsible for the accuracy or completeness of scanned copies of this plan sheet.

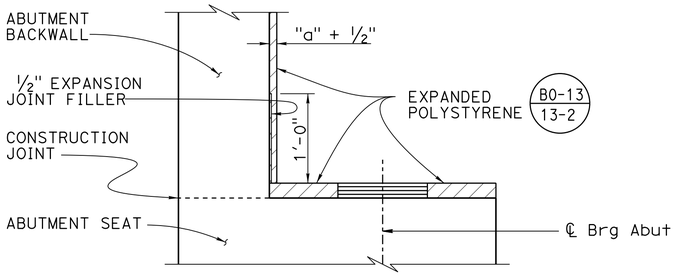

BACKWALL BASE DETAIL
NO SCALE

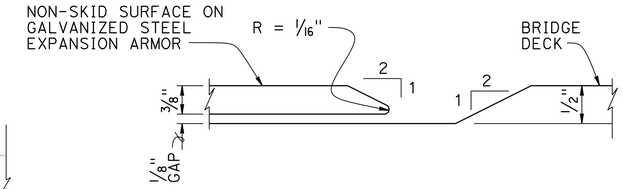

EDGE OF PLATE DETAIL
NO SCALE

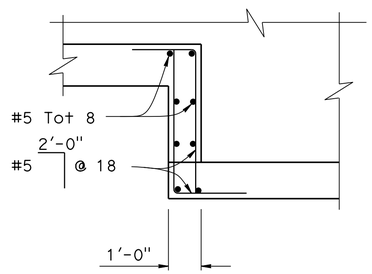

DETAIL A
NO SCALE

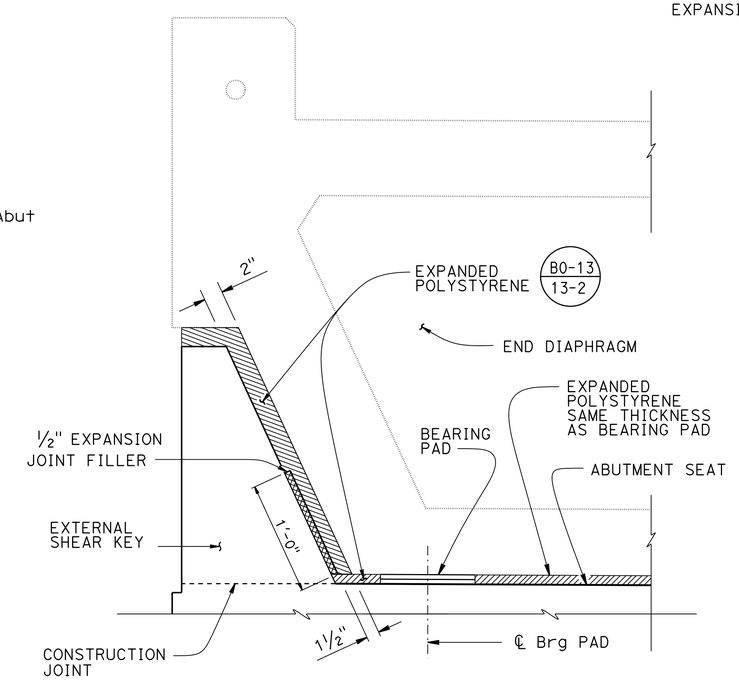

KEY BASE DETAIL
NO SCALE

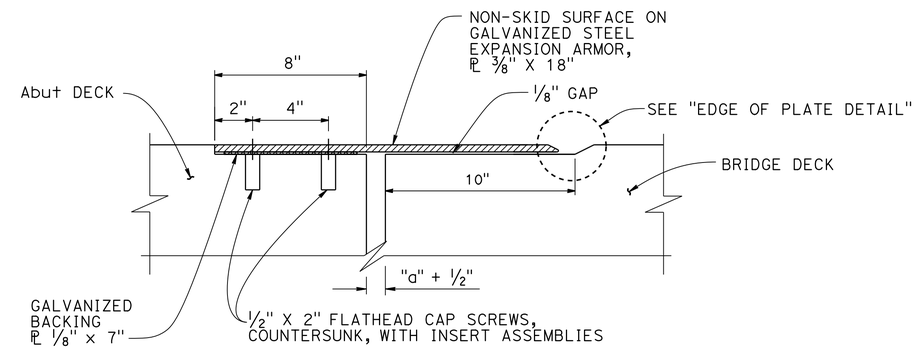

SECTION F-F
NO SCALE

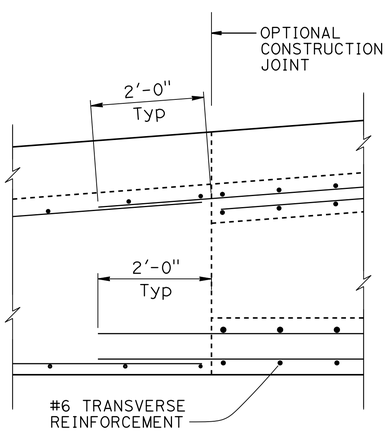

DETAIL B
NO SCALE

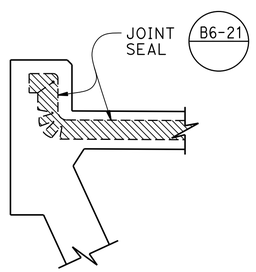

JOINT SEALS DETAILS
NO SCALE

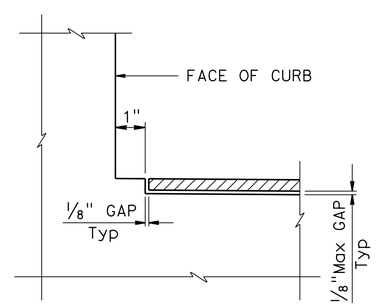

SECTION E-E
NO SCALE

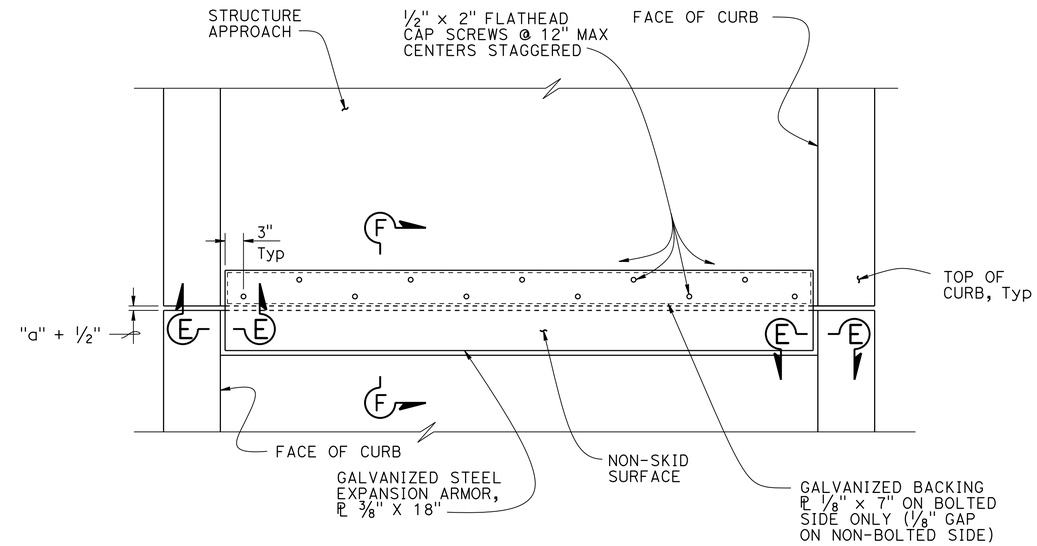

SIDEWALK EXPANSION JOINT ARMOR
NO SCALE

	BY	CHECKED
DESIGN	DAVID ALVAREZ	MIKE CULLEN
DETAILS	SUSAN NG	DON NGUYEN-TAN
QUANTITIES	GLORIA REYES-GUTIERREZ	DAVID ALVAREZ

STATE OF CALIFORNIA
DEPARTMENT OF TRANSPORTATION

DIVISION OF ENGINEERING SERVICES
STRUCTURE DESIGN
DESIGN BRANCH 6

BRIDGE NO. 50-0518
POST MILE 49.6

KERN AVENUE POC (REPLACE)
ABUTMENT DETAILS No. 2

STRUCTURES DESIGN DETAIL SHEET (ENGLISH) (REV. 09-01-10)

ORIGINAL SCALE IN INCHES FOR REDUCED PLANS 0 1 2 3

UNIT: 3591
PROJECT NUMBER & PHASE: 06 1400 0266 1 CONTRACT NO.: 06-0H6424

DISREGARD PRINTS BEARING EARLIER REVISION DATES

REVISION DATES: 10-29-13 10-28-15 10-05-15

SHEET 20 OF 42

FILE => 50-0518-f-abt-sa-dt-02.dgn

USERNAME => s119704 DATE PLOTTED => 01-JUL-2016 TIME PLOTTED => 14:31

DIST	COUNTY	ROUTE	POST MILES TOTAL PROJECT	SHEET No.	TOTAL SHEETS
06	Ker	99	49.6	85	106

REGISTERED CIVIL ENGINEER 10-20-15 DATE

11-16-15
PLANS APPROVAL DATE

REGISTERED PROFESSIONAL ENGINEER DON NGUYEN-TAN No. C 57510 Exp. 12-31-15 CIVIL STATE OF CALIFORNIA

The State of California or its officers or agents shall not be responsible for the accuracy or completeness of scanned copies of this plan sheet.

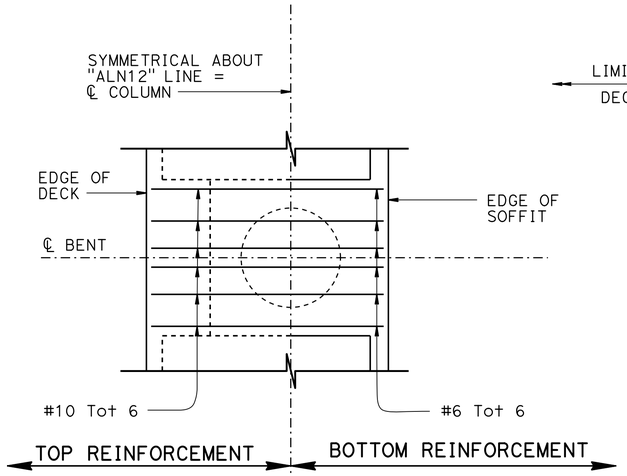

PLAN
3/8" = 1'-0"

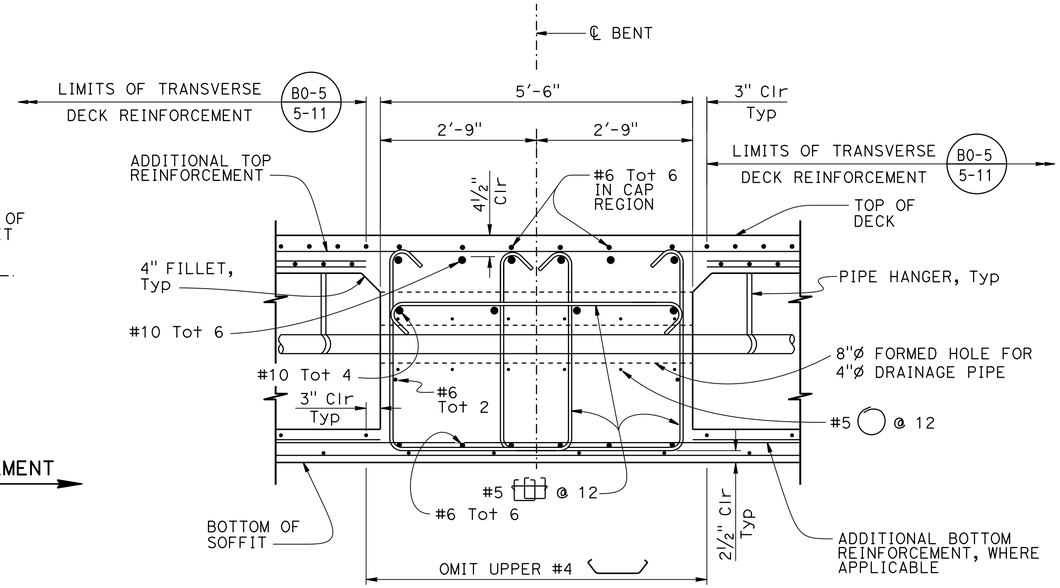

SECTION F-F
3/4" = 1'-0"

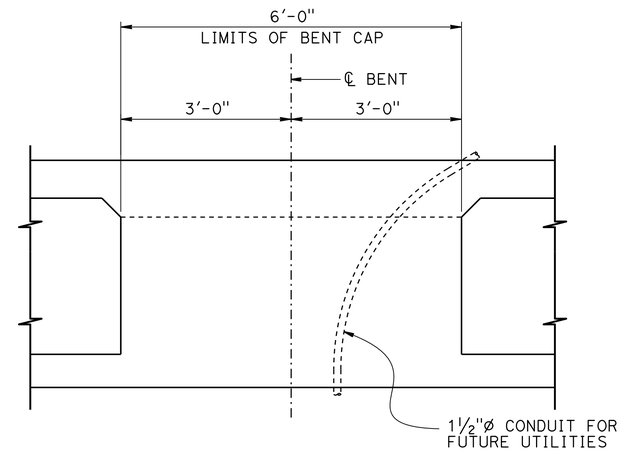

BENTS 5 & 10
3/4" = 1'-0"

NOTE:
For Reinforcement and formed hole details, see "SECTION E-E" and "SECTION F-F"

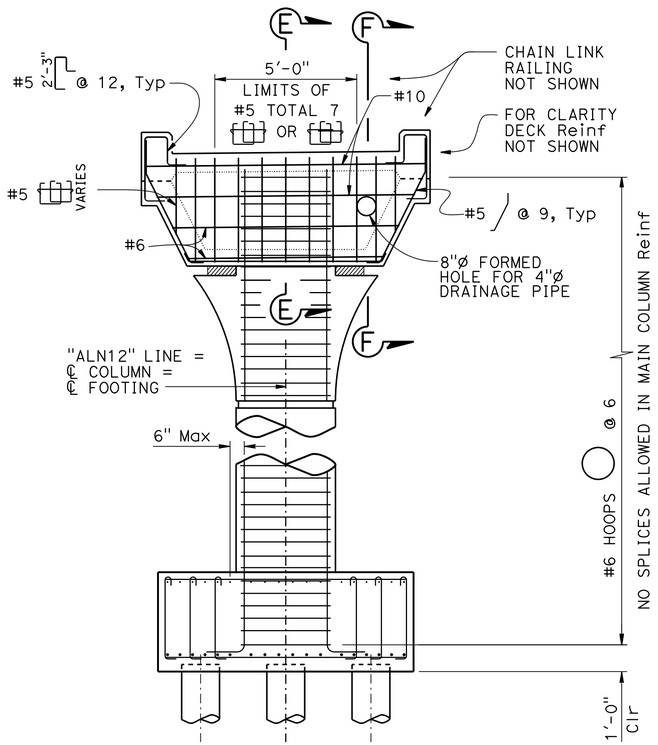

NOTE:
Bent 4 shown, others similar except Bents 5 & 10.
For Column and Footing details see "BENT DETAILS" sheets

ELEVATION
3/8" = 1'-0"

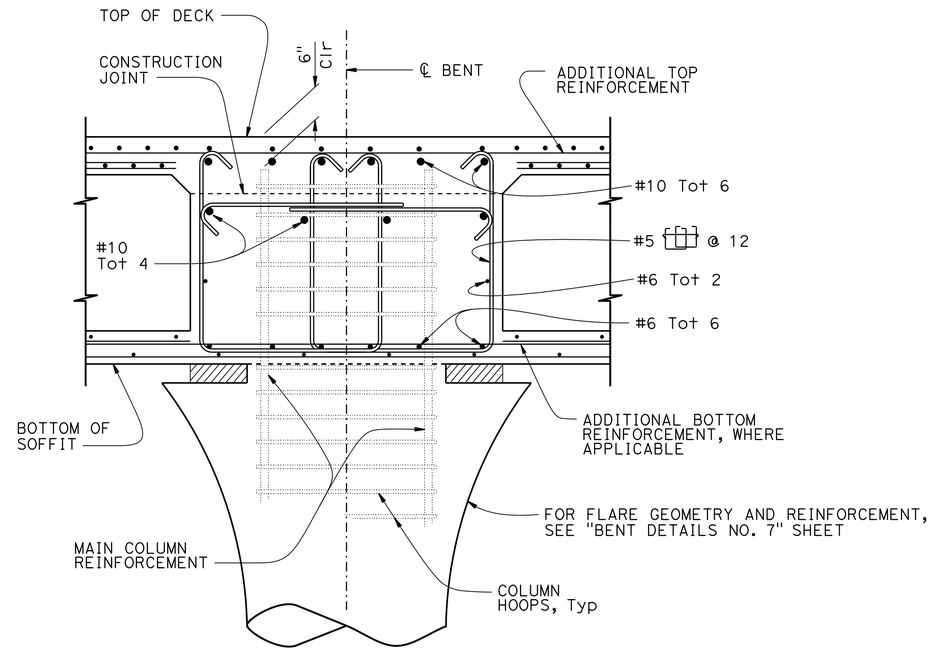

SECTION E-E
3/4" = 1'-0"

NOTES:

1. Bent 4 shown, others similar. For Column and Footing details see "BENT DETAILS" sheets.
2. Use "Ultimate Butt" splice to fabricate column hoop Reinf.
3. See "BENT DETAILS No. 7" sheet for column flare geometry, flare reinforcing, and architectural details.

LEGEND:

Denotes expanded polystyrene

	BY	CHECKED
DESIGN	DAVID ALVAREZ	MIKE CULLEN
DETAILS	SUSAN NG	DON NGUYEN-TAN
QUANTITIES	GLORIA REYES-GUTIERREZ	DAVID ALVAREZ

STATE OF CALIFORNIA
DEPARTMENT OF TRANSPORTATION

DIVISION OF ENGINEERING SERVICES
STRUCTURE DESIGN
DESIGN BRANCH 6

BRIDGE NO. 50-0518
POST MILE 49.6

KERN AVENUE POC (REPLACE)
BENT LAYOUT

STRUCTURES DESIGN DETAIL SHEET (ENGLISH) (REV. 09-01-10)

ORIGINAL SCALE IN INCHES FOR REDUCED PLANS 0 1 2 3

UNIT: 3591
PROJECT NUMBER & PHASE: 06 1400 0266 1 CONTRACT NO.: 06-0H6424

DISREGARD PRINTS BEARING EARLIER REVISION DATES

REVISION DATES: ~~06-01-13~~ 10-28-15 ~~09-09-15~~

SHEET 21 OF 42

FILE => 50-0518-h-b-lo-1.dgn

USERNAME => s119704 DATE PLOTTED => 01-JUL-2016 TIME PLOTTED => 14:31

DIST	COUNTY	ROUTE	POST MILES TOTAL PROJECT	SHEET No.	TOTAL SHEETS
06	Ker	99	49.6	86	106

REGISTERED CIVIL ENGINEER 10-20-15 DATE

11-16-15
PLANS APPROVAL DATE

REGISTERED PROFESSIONAL ENGINEER DON NGUYEN-TAN No. C 57510 Exp. 12-31-15 CIVIL STATE OF CALIFORNIA

The State of California or its officers or agents shall not be responsible for the accuracy or completeness of scanned copies of this plan sheet.

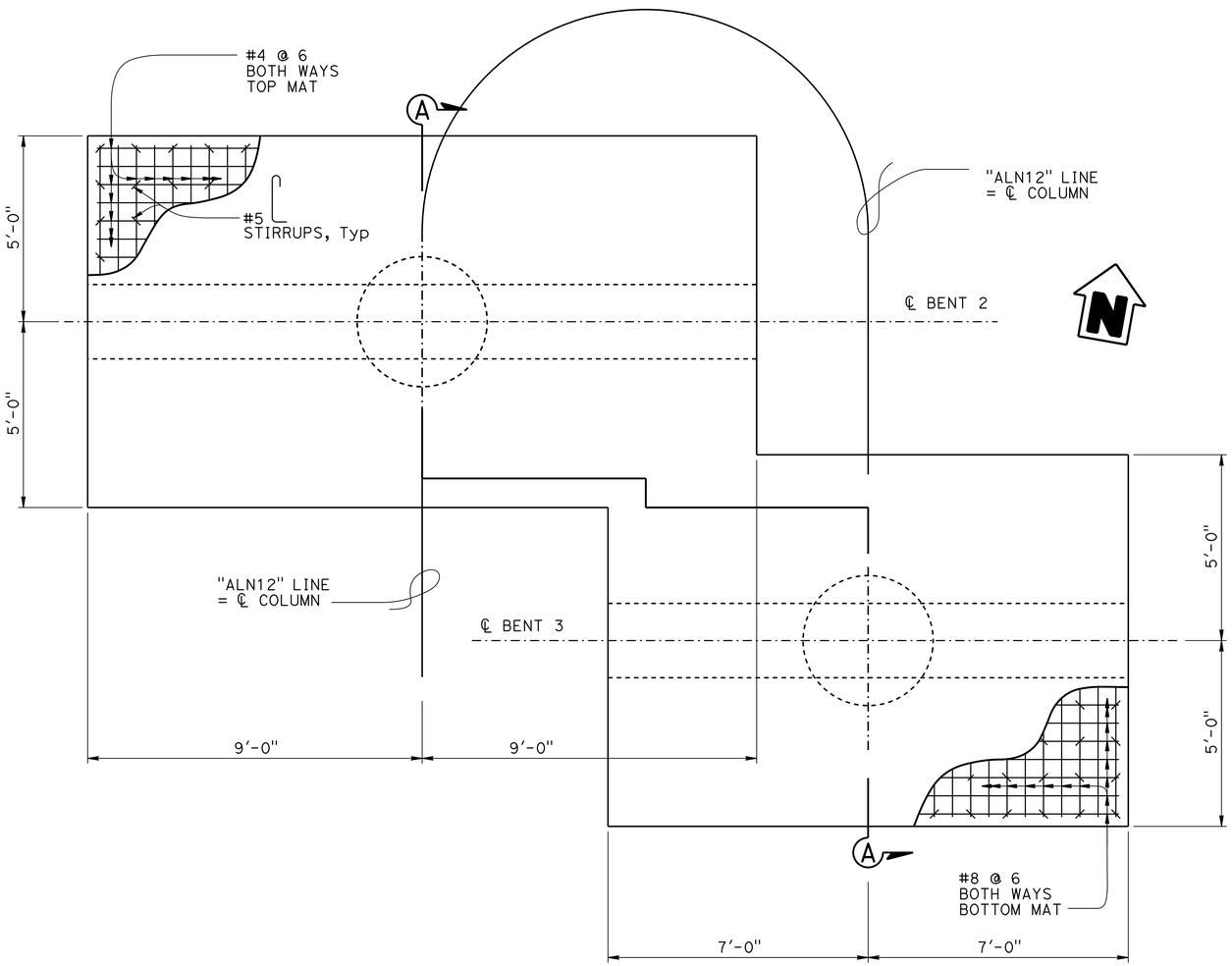

BENTS 2 & 3 FOOTING PLAN

½" = 1'-0"

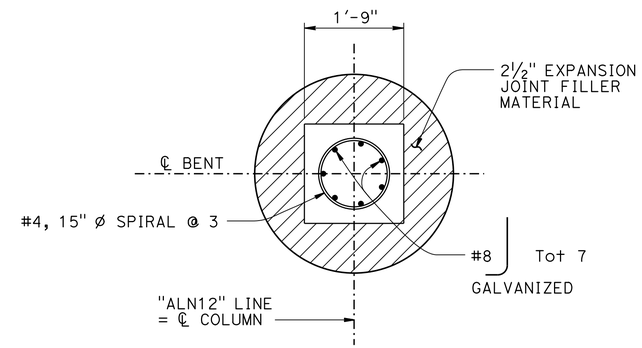

BENTS 2 & 3 COLUMN KEY

¾" = 1'-0"

NOTE:

For Column Details, see on "BENT DETAILS No. 6" sheet.

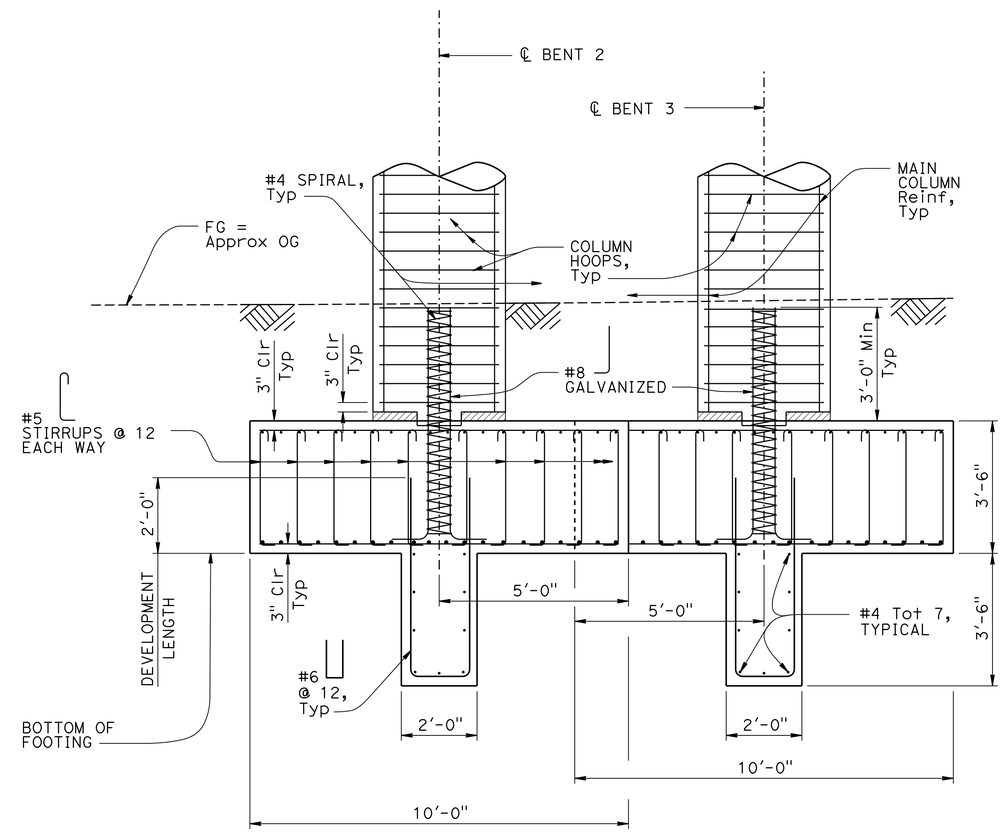

BENTS 2 & 3 SECTION A-A

½" = 1'-0"

	BY	CHECKED
DESIGN	DAVID ALVAREZ	MIKE CULLEN
DETAILS	SUSAN NG	DON NGUYEN-TAN
QUANTITIES	GLORIA REYES-GUTIERREZ	DAVID ALVAREZ

STATE OF CALIFORNIA
DEPARTMENT OF TRANSPORTATION

DIVISION OF ENGINEERING SERVICES
STRUCTURE DESIGN
DESIGN BRANCH 6

BRIDGE NO. 50-0518
POST MILE 49.6

KERN AVENUE POC (REPLACE)
BENT DETAILS No. 1

STRUCTURES DESIGN DETAIL SHEET (ENGLISH) (REV. 09-01-10)

ORIGINAL SCALE IN INCHES FOR REDUCED PLANS 0 1 2 3

UNIT: 3591
PROJECT NUMBER & PHASE: 06 1400 0266 1 CONTRACT NO.: 06-0H6424

DISREGARD PRINTS BEARING EARLIER REVISION DATES

REVISION DATES 01-17-13 10-28-15 01-18-14

SHEET 22 OF 42

FILE => 50-0518-j-details-1.dgn

USERNAME => s119704 DATE PLOTTED => 01-JUL-2016 TIME PLOTTED => 14:31

DIST	COUNTY	ROUTE	POST MILES TOTAL PROJECT	SHEET No.	TOTAL SHEETS
06	Ker	99	49.6	87	106

REGISTERED CIVIL ENGINEER — DATE 10-20-15

11-16-15
PLANS APPROVAL DATE

REGISTERED PROFESSIONAL ENGINEER — DON NGUYEN-TAN — No. C 57510 — Exp. 12-31-15 — CIVIL — STATE OF CALIFORNIA

The State of California or its officers or agents shall not be responsible for the accuracy or completeness of scanned copies of this plan sheet.

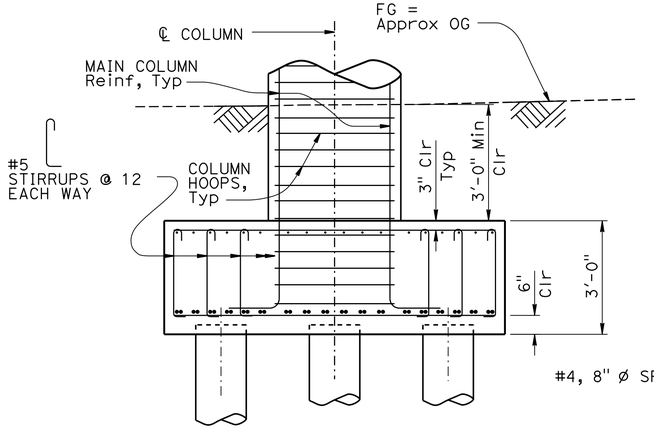

BENT 4 SECTION B-B

½" = 1'-0"

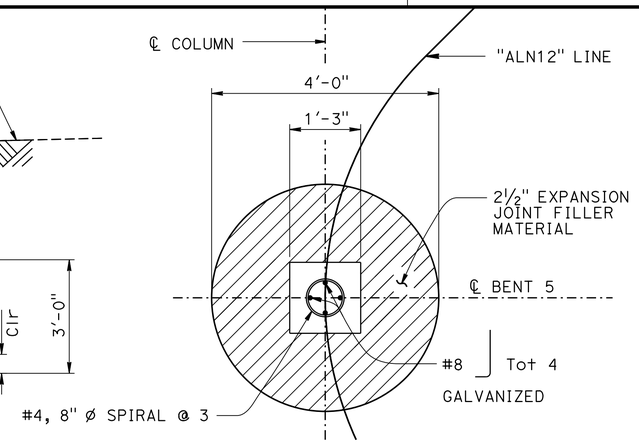

NOTE: Bent 5 shown, Bent 10 similar

BENT 5 COLUMN KEY

¾" = 1'-0"

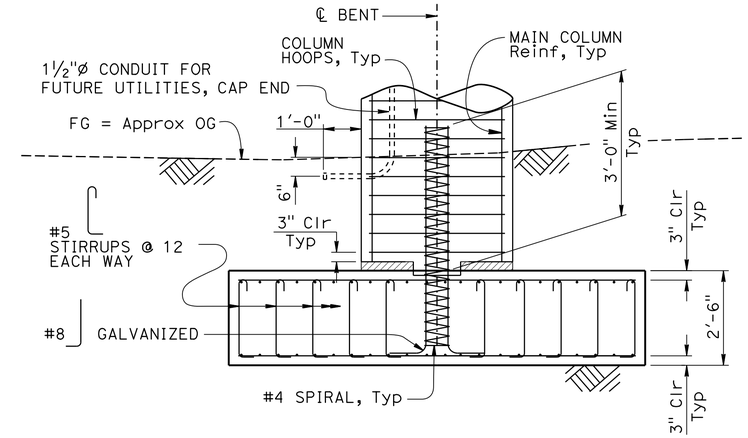

NOTE: Bent 5 shown, Bent 10 similar

BENT 5 SECTION C-C

½" = 1'-0"

NOTE:

For Column Reinforcement Details see "BENT DETAILS No. 6" sheet.

LEGEND:
∝ Indicates bundled bars

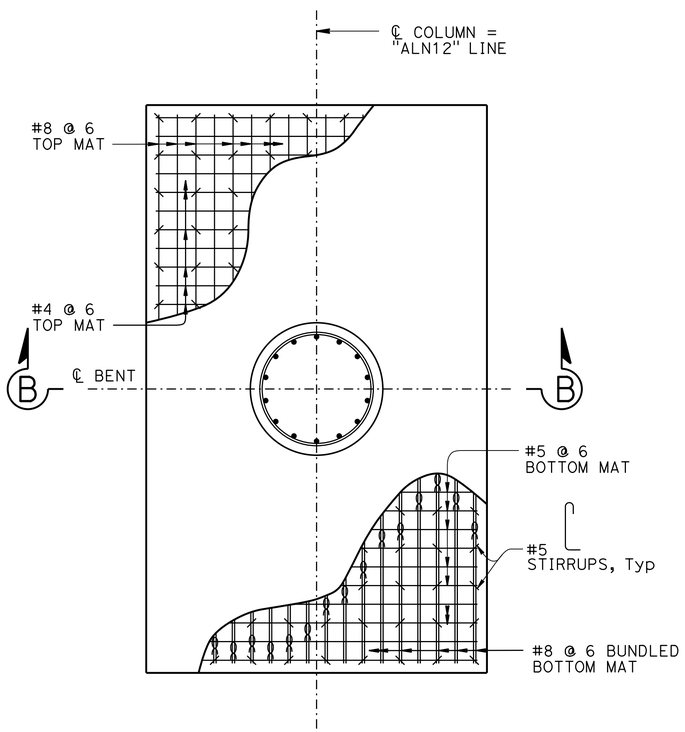

BENT 4 FOOTING PLAN

½" = 1'-0"

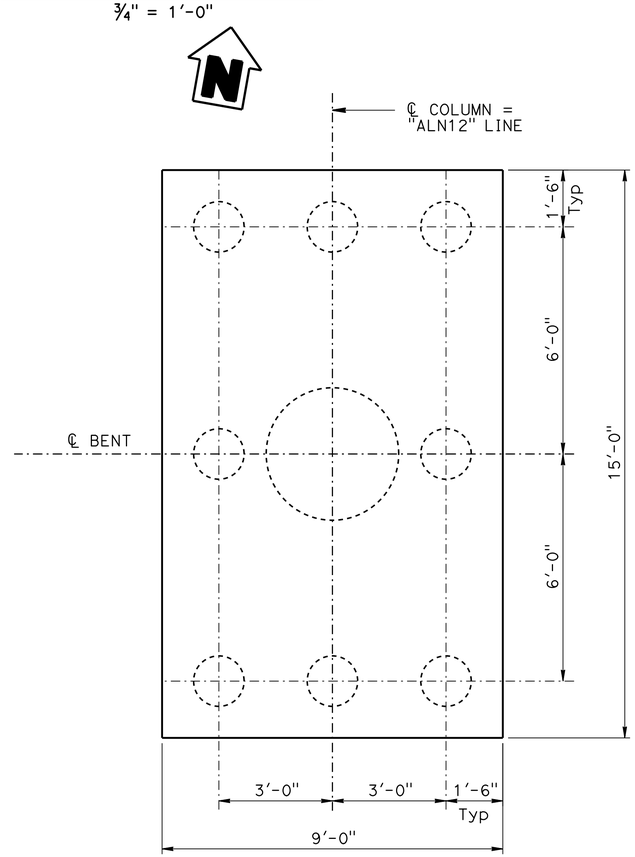

BENT 4 PILE LAYOUT

½" = 1'-0"

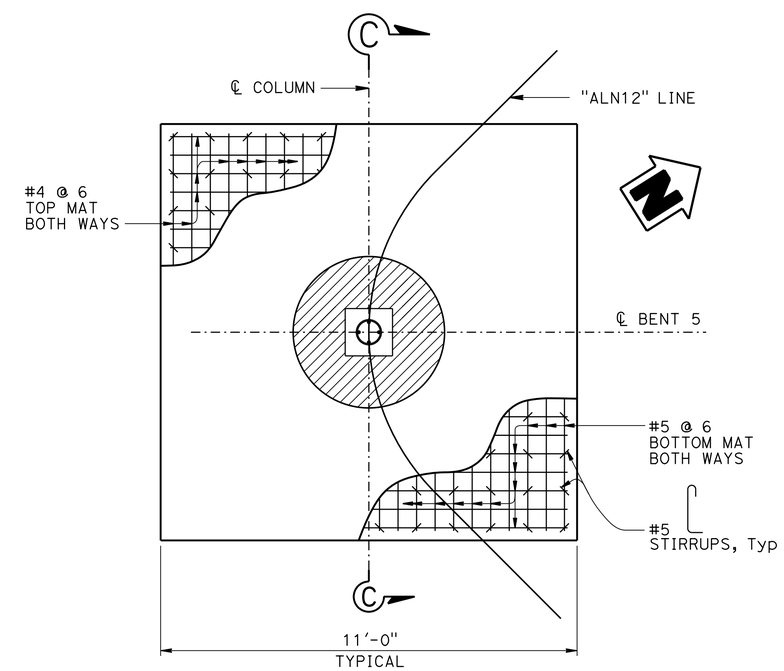

NOTE: Bent 5 shown, Bent 10 similar

BENT 5 FOOTING PLAN

½" = 1'-0"

	BY	CHECKED
DESIGN	DAVID ALVAREZ	MIKE CULLEN
DETAILS	SUSAN NG	DON NGUYEN-TAN
QUANTITIES	GLORIA REYES-GUTIERREZ	DAVID ALVAREZ

STATE OF CALIFORNIA
DEPARTMENT OF TRANSPORTATION

DIVISION OF ENGINEERING SERVICES
STRUCTURE DESIGN
DESIGN BRANCH 6

BRIDGE NO. 50-0518
POST MILE 49.6

KERN AVENUE POC (REPLACE)
BENT DETAILS No. 2

STRUCTURES DESIGN DETAIL SHEET (ENGLISH) (REV. 09-01-10)

ORIGINAL SCALE IN INCHES FOR REDUCED PLANS 0 1 2 3

UNIT: 3591
PROJECT NUMBER & PHASE: 06 1400 0266 1 CONTRACT NO.: 06-0H6424

DISREGARD PRINTS BEARING EARLIER REVISION DATES

REVISION DATES: 08-09-13 | 01-12-14 | 10-02-15 | 10-28-15

SHEET 23 OF 42

FILE => 50-0518-J-details-2.dgn

USERNAME => s113704 DATE PLOTTED => 01-JUL-2016 TIME PLOTTED => 14:31

DIST	COUNTY	ROUTE	POST MILES TOTAL PROJECT	SHEET No.	TOTAL SHEETS
06	Ker	99	49.6	88	106

REGISTERED CIVIL ENGINEER — DATE 10-20-15

11-16-15
PLANS APPROVAL DATE

REGISTERED PROFESSIONAL ENGINEER — DON NGUYEN-TAN — No. C 57510 — Exp. 12-31-15 — CIVIL — STATE OF CALIFORNIA

The State of California or its officers or agents shall not be responsible for the accuracy or completeness of scanned copies of this plan sheet.

NOTE:

For Column Details, see "BENT DETAILS No. 6" sheet.

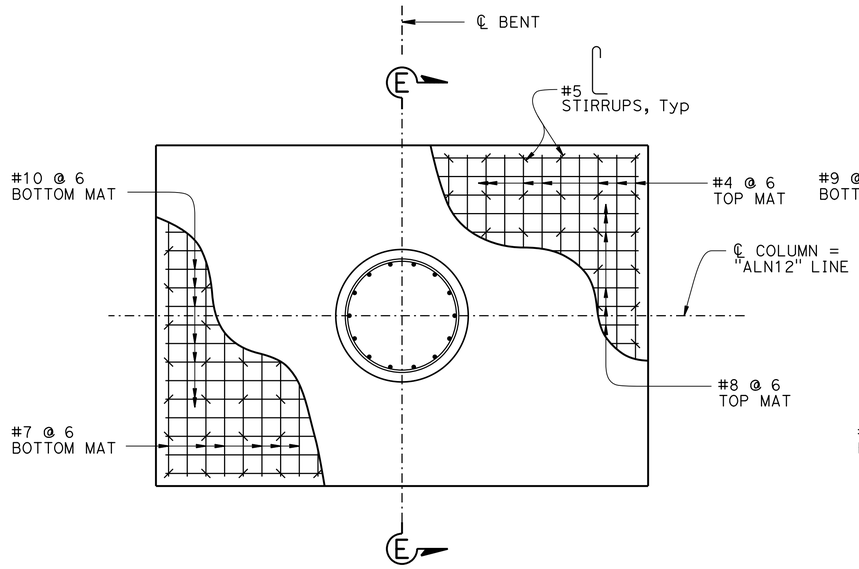

BENT 7 FOOTING PLAN

½" = 1'-0"

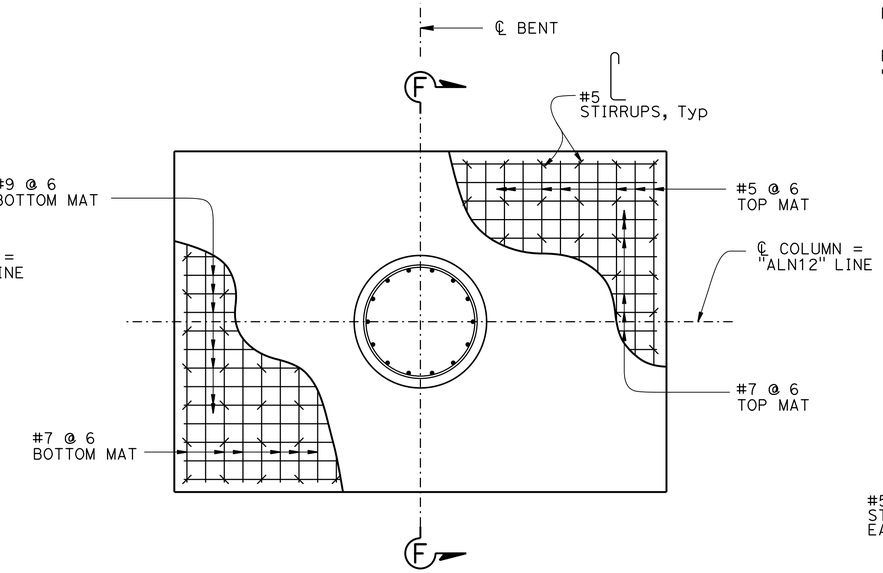

BENTS 6, 8 & 9 FOOTING PLAN

½" = 1'-0"

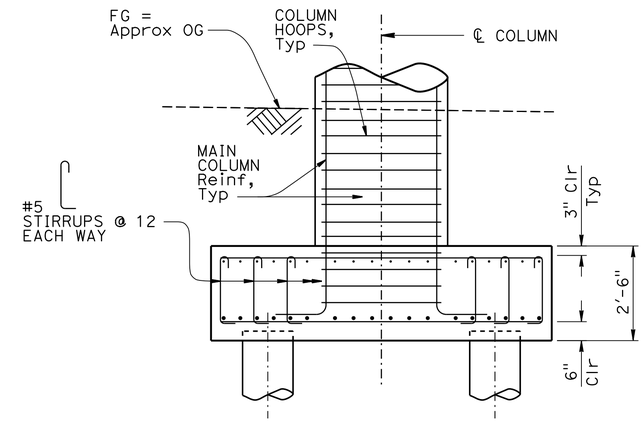

BENT 7 SECTION E-E

½" = 1'-0"

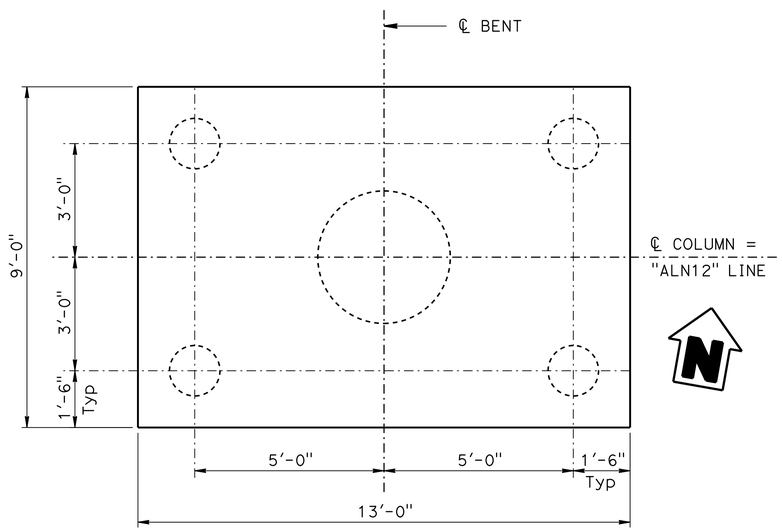

BENT 7 PILE LAYOUT

½" = 1'-0"

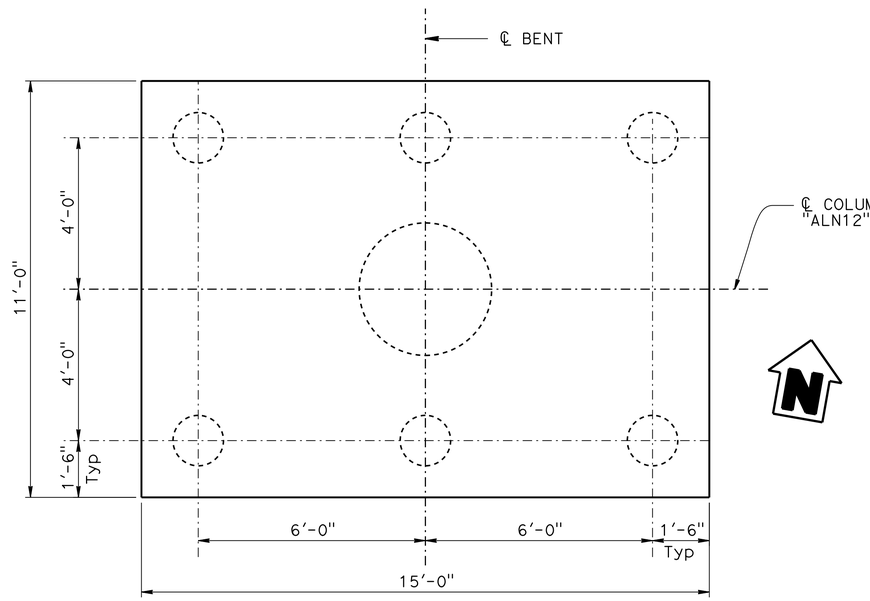

BENTS 6, 8 & 9 PILE LAYOUT

½" = 1'-0"

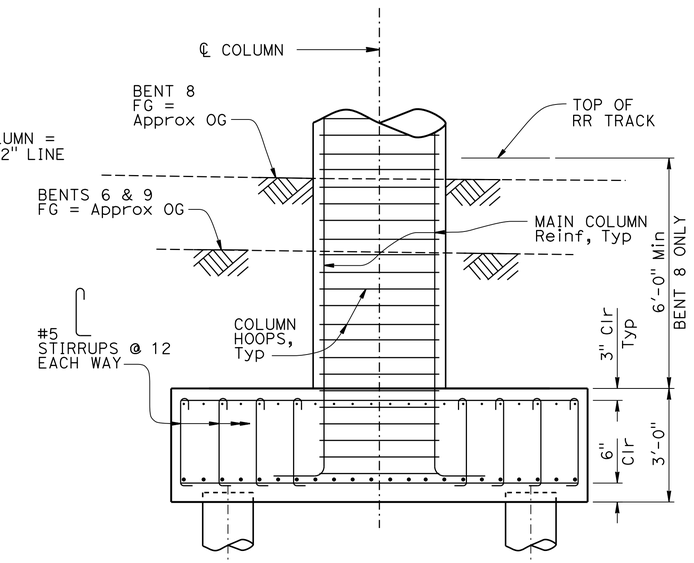

BENTS 6, 8 & 9 SECTION F-F

½" = 1'-0"

DESIGN	BY DAVID ALVAREZ	CHECKED MIKE CULLEN	
DETAILS	BY SUSAN NG	CHECKED DON NGUYEN-TAN	
QUANTITIES	BY GLORIA REYES-GUTIERREZ	CHECKED DAVID ALVAREZ	

STATE OF CALIFORNIA
DEPARTMENT OF TRANSPORTATION

DIVISION OF ENGINEERING SERVICES
STRUCTURE DESIGN
DESIGN BRANCH 6

BRIDGE NO. 50-0518
POST MILE 49.6

KERN AVENUE POC (REPLACE)
BENT DETAILS No. 3

STRUCTURES DESIGN DETAIL SHEET (ENGLISH) (REV. 09-01-10)

ORIGINAL SCALE IN INCHES FOR REDUCED PLANS 0 1 2 3

UNIT: 3591
PROJECT NUMBER & PHASE: 06 1400 0266 1 CONTRACT NO.: 06-0H6424

DISREGARD PRINTS BEARING EARLIER REVISION DATES

REVISION DATES: 08-02-13 01-13-14 03-04-14 10-28-15

SHEET 24 OF 42

FILE => 50-0518-j-details-3.dgn

USERNAME => e119704 DATE PLOTTED => 01-JUL-2016 TIME PLOTTED => 14:31

DIST	COUNTY	ROUTE	POST MILES TOTAL PROJECT	SHEET No.	TOTAL SHEETS
06	Ker	99	49.6	89	106

REGISTERED CIVIL ENGINEER 10-20-15 DATE

11-16-15
PLANS APPROVAL DATE

REGISTERED PROFESSIONAL ENGINEER DON NGUYEN-TAN No. C 57510 Exp. 12-31-15 CIVIL STATE OF CALIFORNIA

The State of California or its officers or agents shall not be responsible for the accuracy or completeness of scanned copies of this plan sheet.

NOTE:

For Column Details, see "BENT DETAILS No. 6" sheet.

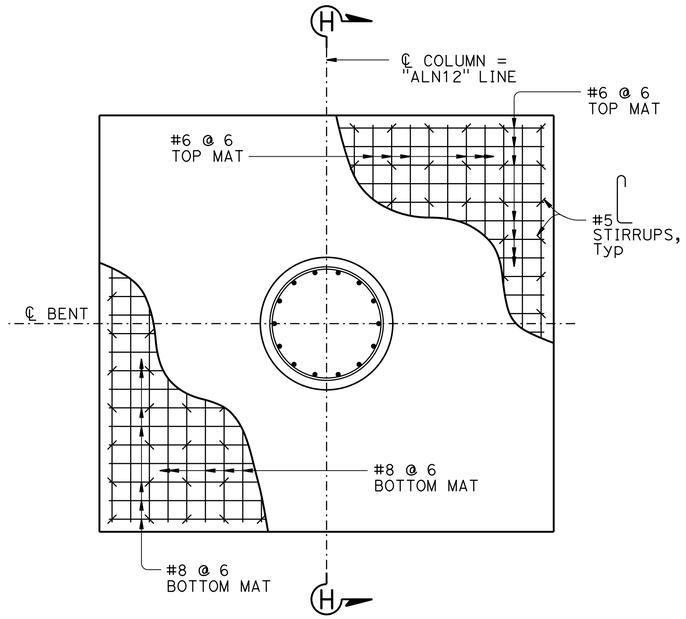

BENT 11 FOOTING PLAN

½" = 1'-0"

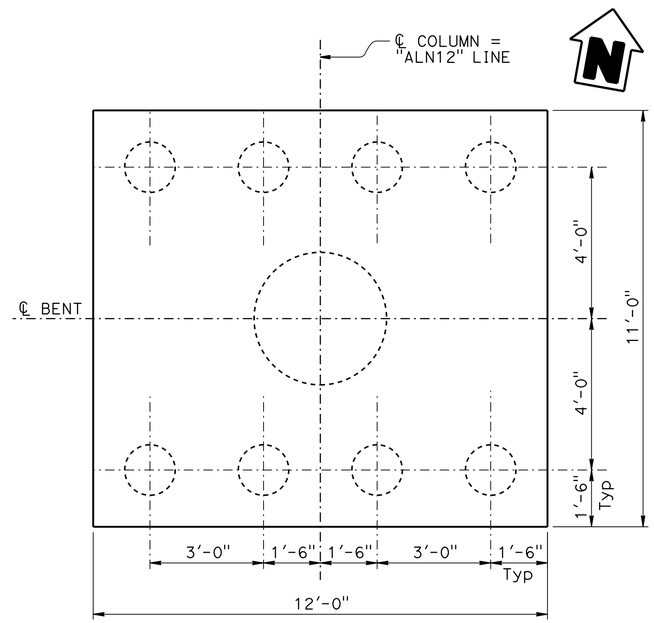

BENT 11 PILE LAYOUT

½" = 1'-0"

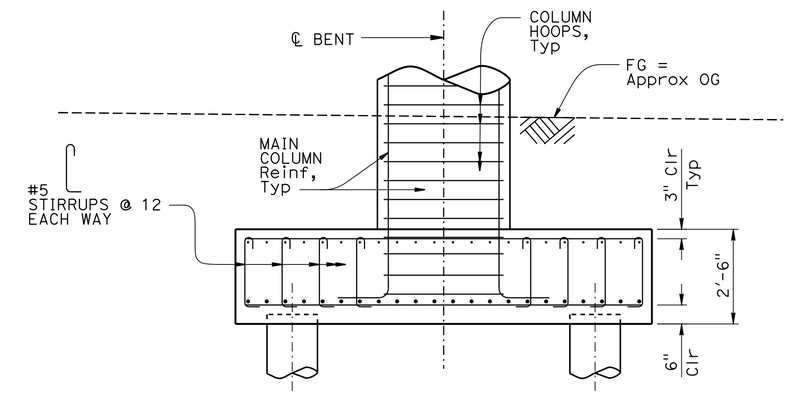

BENT 11 SECTION H-H

½" = 1'-0"

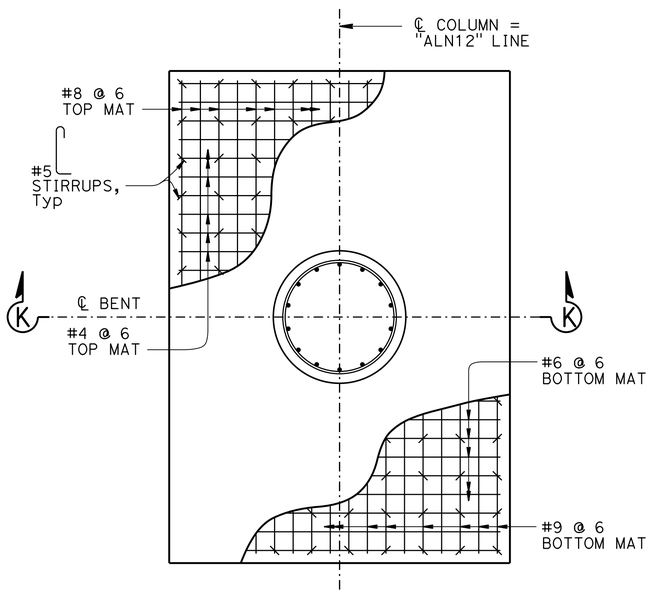

BENT 14 FOOTING PLAN

½" = 1'-0"

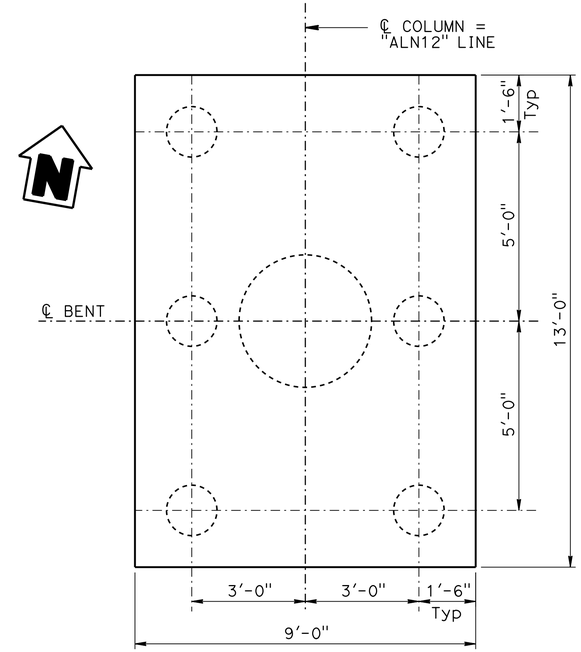

BENT 14 PILE LAYOUT

½" = 1'-0"

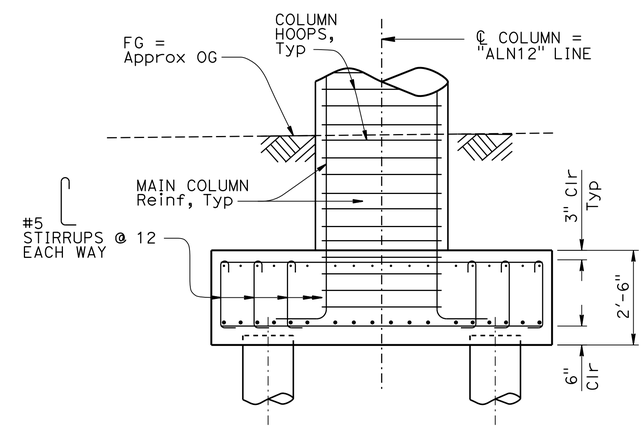

BENT 14 SECTION K-K

½" = 1'-0"

DESIGN	BY DAVID ALVAREZ	CHECKED MIKE CULLEN	
DETAILS	BY SUSAN NG	CHECKED DON NGUYEN-TAN	
QUANTITIES	BY GLORIA REYES-GUTIERREZ	CHECKED DAVID ALVAREZ	

STATE OF CALIFORNIA
DEPARTMENT OF TRANSPORTATION

DIVISION OF ENGINEERING SERVICES
STRUCTURE DESIGN
DESIGN BRANCH 6

BRIDGE NO. 50-0518
POST MILE 49.6

KERN AVENUE POC (REPLACE)
BENT DETAILS No. 4

STRUCTURES DESIGN DETAIL SHEET (ENGLISH) (REV. 09-01-10)

ORIGINAL SCALE IN INCHES FOR REDUCED PLANS 0 1 2 3

UNIT: 3591
PROJECT NUMBER & PHASE: 06 1400 0266 1 CONTRACT NO.: 06-0H6424

DISREGARD PRINTS BEARING EARLIER REVISION DATES

REVISION DATES: 08-02-13 01-13-14 03-04-14 10-28-15

SHEET 25 OF 42

FILE => 50-0518-j-details-4.dgn

USERNAME => s119704 DATE PLOTTED => 01-JUL-2016 TIME PLOTTED => 14:31

NOTE:

For Column Details, see "BENT DETAILS No. 6" sheet.

DIST	COUNTY	ROUTE	POST MILES TOTAL PROJECT	SHEET No.	TOTAL SHEETS
06	Ker	99	49.6	90	106

REGISTERED CIVIL ENGINEER 10-20-15 DATE

11-16-15
PLANS APPROVAL DATE

REGISTERED PROFESSIONAL ENGINEER DON NGUYEN-TAN No. C 57510 Exp. 12-31-15 CIVIL STATE OF CALIFORNIA

The State of California or its officers or agents shall not be responsible for the accuracy or completeness of scanned copies of this plan sheet.

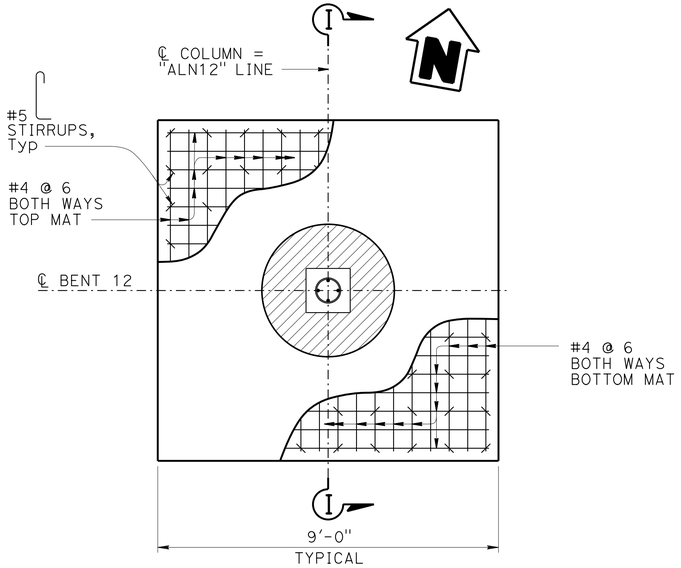

BENTS 12 FOOTING PLAN

½" = 1'-0"

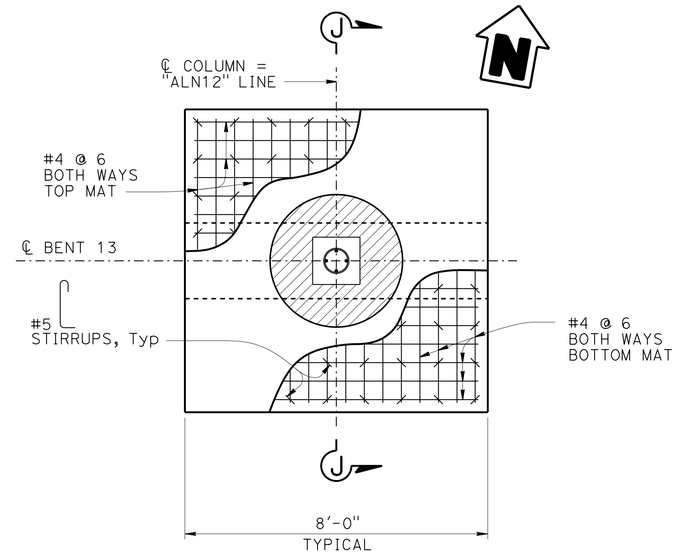

BENT 13 FOOTING PLAN

½" = 1'-0"

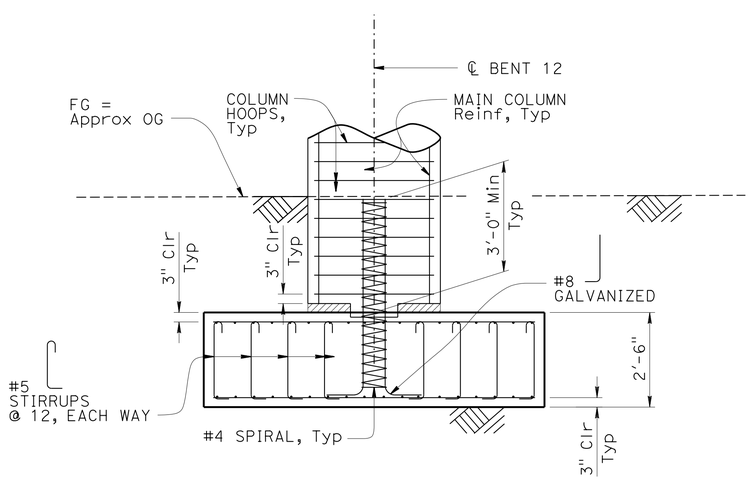

BENT 12 SECTION I-I

½" = 1'-0"

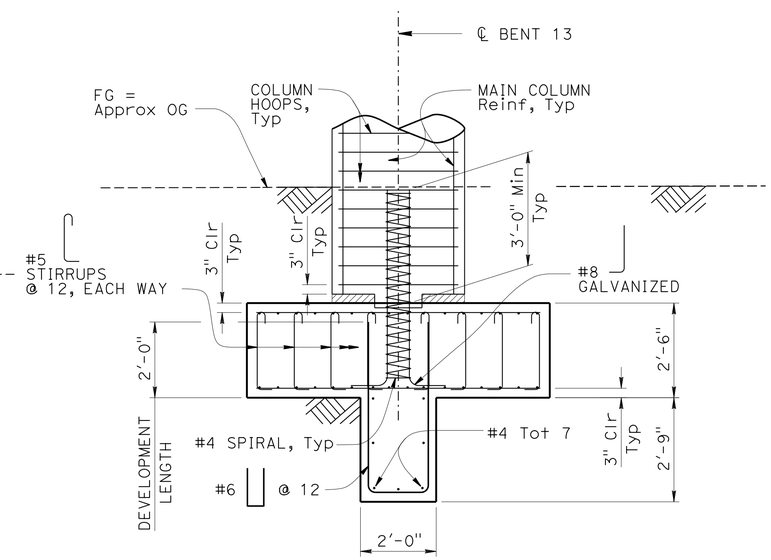

BENT 13 SECTION J-J

½" = 1'-0"

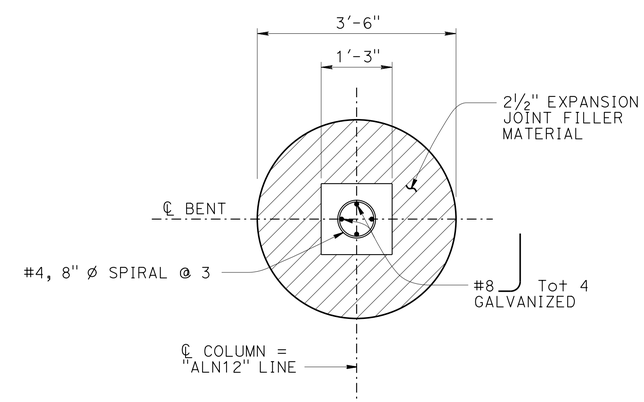

BENTS 12 & 13 COLUMN KEY

¾" = 1'-0"

	BY	CHECKED
DESIGN	DAVID ALVAREZ	MIKE CULLEN
DETAILS	SUSAN NG	DON NGUYEN-TAN
QUANTITIES	GLORIA REYES-GUTIERREZ	DAVID ALVAREZ

STATE OF CALIFORNIA DEPARTMENT OF TRANSPORTATION

DIVISION OF ENGINEERING SERVICES STRUCTURE DESIGN DESIGN BRANCH 6

BRIDGE NO. 50-0518 POST MILE 49.6

KERN AVENUE POC (REPLACE)

BENT DETAILS No. 5

STRUCTURES DESIGN DETAIL SHEET (ENGLISH) (REV. 09-01-10)

ORIGINAL SCALE IN INCHES FOR REDUCED PLANS 0 1 2 3

UNIT: 3591
PROJECT NUMBER & PHASE: 06 1400 0266 1 CONTRACT NO.: 06-0H6424

DISREGARD PRINTS BEARING EARLIER REVISION DATES

REVISION DATES 08-02-13 01-14-14 03-04-14 10-28-15

SHEET 26 OF 42

FILE => 50-0518-j-details-5.dgn

USERNAME => s113704 DATE PLOTTED => 01-JUL-2016 TIME PLOTTED => 14:31

DIST	COUNTY	ROUTE	POST MILES TOTAL PROJECT	SHEET No.	TOTAL SHEETS
06	Ker	99	49.6	91	106

REGISTERED CIVIL ENGINEER 10-20-15 DATE

11-16-15
PLANS APPROVAL DATE

REGISTERED PROFESSIONAL ENGINEER
DON NGUYEN-TAN
No. C 57510
Exp. 12-31-15
CIVIL
STATE OF CALIFORNIA

The State of California or its officers or agents shall not be responsible for the accuracy or completeness of scanned copies of this plan sheet.

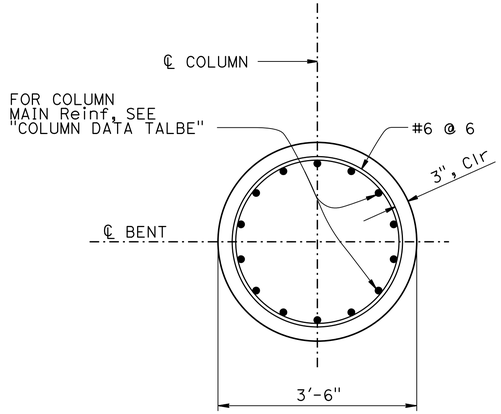

3'-6" Ø COLUMN DETAILS

¾" = 1'-0"

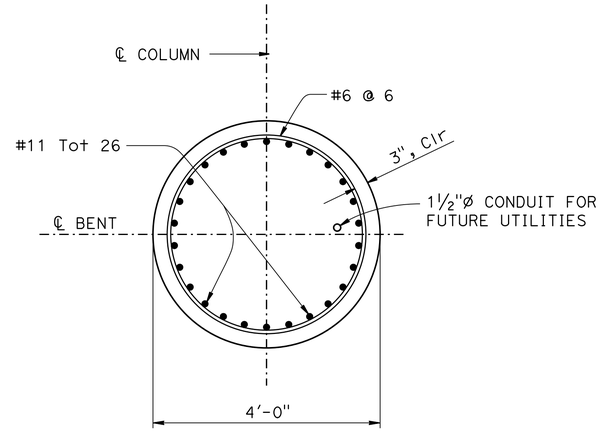

4'-0" Ø COLUMN DETAILS

¾" = 1'-0"

COLUMN DATA TABLE

COLUMN LOCATION	COLUMN DIAMETER	COLUMN HOOPS	COLUMN MAIN Reinf
BENT 2	3'-6"	#6 @ 6	#11 Tot 14
BENT 3	3'-6"	#6 @ 6	#11 Tot 14
BENT 4	3'-6"	#6 @ 6	#11 Tot 14
BENT 5	4'-0"	#6 @ 6	#11 Tot 26
BENT 6	3'-6"	#6 @ 6	#11 Tot 17
BENT 7	3'-6"	#6 @ 6	#11 Tot 14
BENT 8	3'-6"	#6 @ 6	#11 Tot 20
BENT 9	3'-6"	#6 @ 6	#11 Tot 19
BENT 10	4'-0"	#6 @ 6	#11 Tot 26
BENT 11	3'-6"	#6 @ 6	#10 Tot 14
BENT 12	3'-6"	#6 @ 6	#10 Tot 14
BENT 13	3'-6"	#6 @ 6	#9 Tot 14
BENT 14	3'-6"	#6 @ 6	#9 Tot 14

	BY	CHECKED
DESIGN	DAVID ALVAREZ	SEIJI MORIMOTO
DETAILS	SUSAN NG	SEIJI MORIMOTO
QUANTITIES	RACHEL WASHINGTON	DAVID ALVAREZ

STATE OF CALIFORNIA
DEPARTMENT OF TRANSPORTATION

DIVISION OF ENGINEERING SERVICES
STRUCTURE DESIGN
DESIGN BRANCH 6

BRIDGE NO. 50-0518
POST MILE 49.6

KERN AVENUE POC (REPLACE)
BENT DETAILS No. 6

STRUCTURES DESIGN DETAIL SHEET (ENGLISH) (REV. 09-01-10)

ORIGINAL SCALE IN INCHES FOR REDUCED PLANS 0 1 2 3

UNIT: 3591
PROJECT NUMBER & PHASE: 06 1400 0266 1 CONTRACT NO.: 06-0H6424

DISREGARD PRINTS BEARING EARLIER REVISION DATES

REVISION DATES: 08-02-13 01-22-14 03-04-14

SHEET 27 OF 42

FILE => 50-0518-j-details-6.dgn

USERNAME => s119704 DATE PLOTTED => 01-JUL-2016 TIME PLOTTED => 14:31

DIST	COUNTY	ROUTE	POST MILES TOTAL PROJECT	SHEET No.	TOTAL SHEETS
06	Ker	99	49.6	92	106

REGISTERED CIVIL ENGINEER — DATE 10-20-15

11-16-15
PLANS APPROVAL DATE

REGISTERED PROFESSIONAL ENGINEER — DON NGUYEN-TAN — No. C57510 — Exp. 12-31-15 — CIVIL — STATE OF CALIFORNIA

The State of California or its officers or agents shall not be responsible for the accuracy or completeness of scanned copies of this plan sheet.

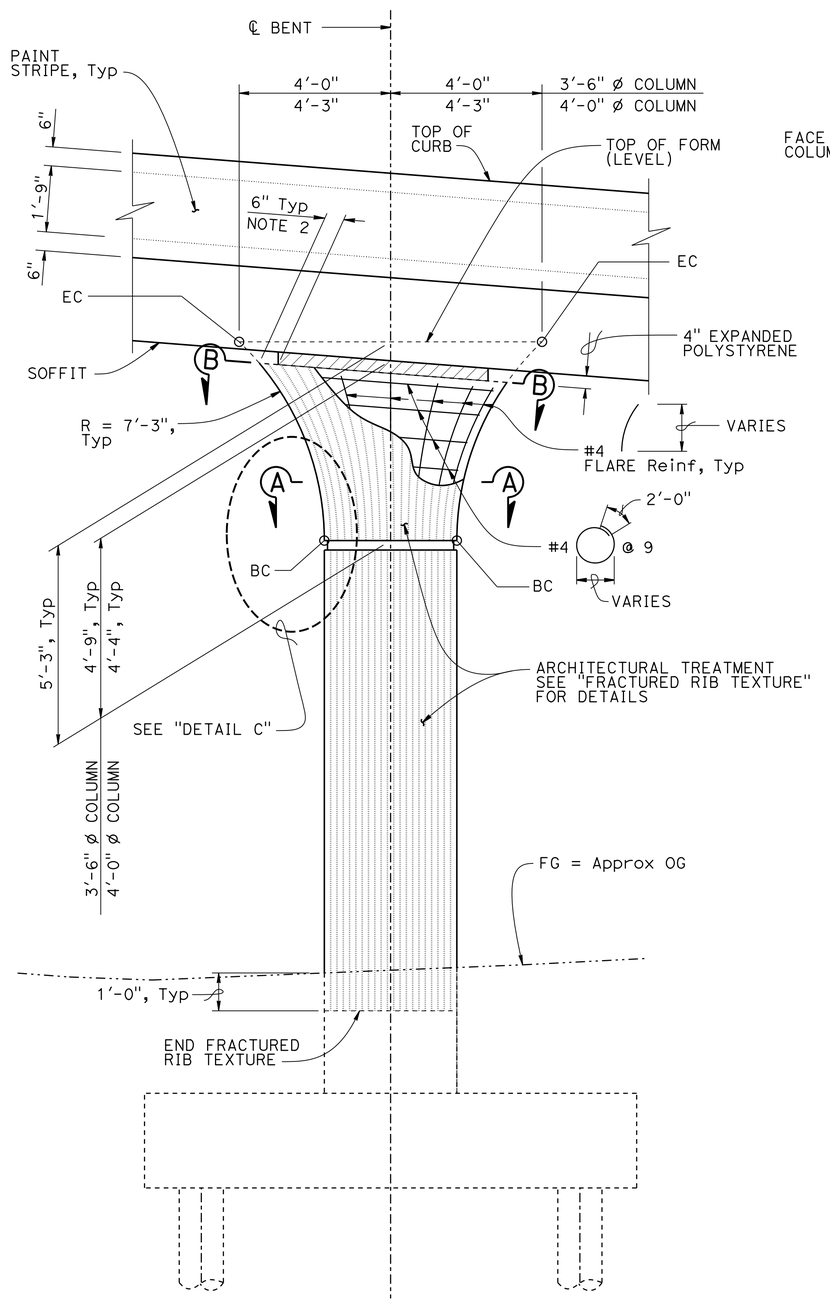

COLUMN GEOMETRY

½" = 1'-0"

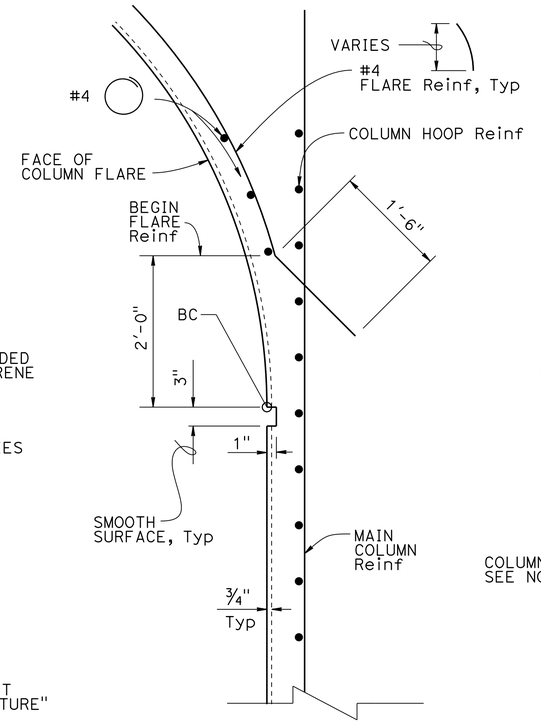

DETAIL C

1½" = 1'-0"

LEGEND:

Denotes Expanded Polystyrene

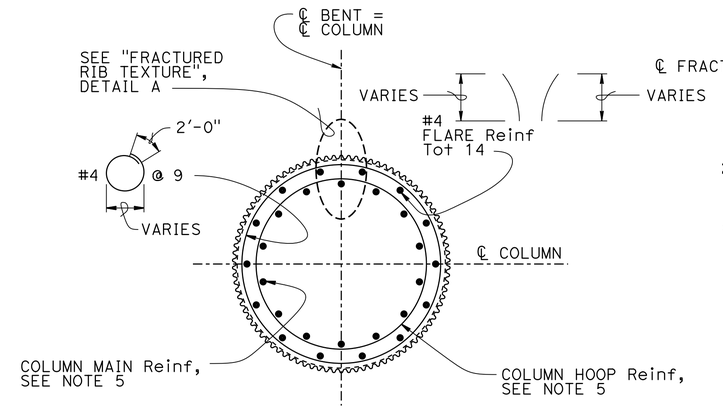

SECTION A-A

¾" = 1'-0"

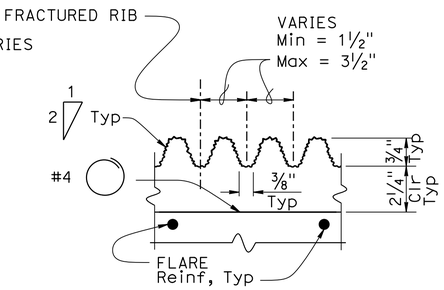

DETAIL A

NO SCALE

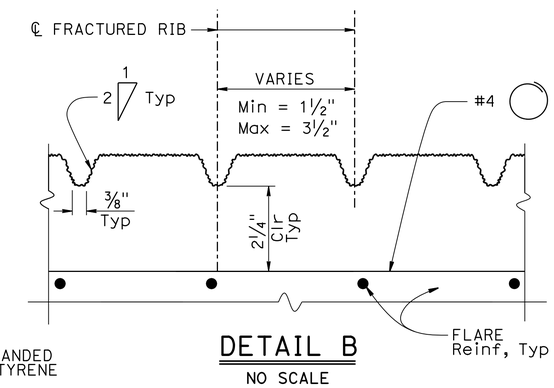

DETAIL B

NO SCALE

FRACTURED RIB TEXTURE

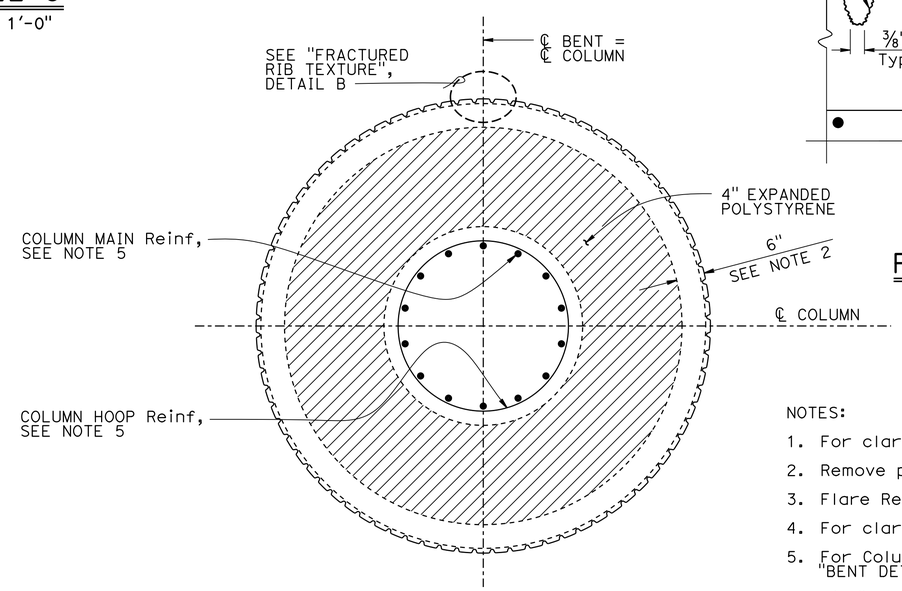

SECTION B-B

¾" = 1'-0"

NOTES:

1. For clarity, not all reinforcement shown.
2. Remove polystyrene.
3. Flare Reinf concrete cover = 2".
4. For clarity, Chain Link Railing not shown.
5. For Column Reinforcing Details, see "BENT DETAILS No. 6" sheet.
6. 3'-6" Dia column shown, 4'-0" Dia column similar.

DESIGN	BY DAVID ALVAREZ	CHECKED MIKE CULLEN	
DETAILS	BY DAVID ELLIOTT/SUSAN NG	CHECKED DON NGUYEN-TAN	
QUANTITIES	BY GLORIA REYES-GUTIERREZ	CHECKED DAVID ALVAREZ	

STATE OF CALIFORNIA
DEPARTMENT OF TRANSPORTATION

DIVISION OF ENGINEERING SERVICES
STRUCTURE DESIGN
DESIGN BRANCH 6

BRIDGE NO. 50-0518
POST MILE 49.6

ARCHITECTURAL TREATMENT DETAILS
KERN AVENUE POC (REPLACE)
BENT DETAILS No. 7

STRUCTURES DESIGN DETAIL SHEET (ENGLISH) (REV. 09-01-10)

ORIGINAL SCALE IN INCHES FOR REDUCED PLANS 0 1 2 3

UNIT: 3591
PROJECT NUMBER & PHASE: 06 1400 0266 1 CONTRACT NO.: 06-0H6424

DISREGARD PRINTS BEARING EARLIER REVISION DATES

REVISION DATES: ~~9-6-13~~ 05-19-15 ~~01-21-14~~ — SHEET 28 OF 42

FILE => 50-0518-j-details-7.dgn

USERNAME => s119704 DATE PLOTTED => 01-JUL-2016 TIME PLOTTED => 14:31

DIST	COUNTY	ROUTE	POST MILES TOTAL PROJECT	SHEET No.	TOTAL SHEETS
06	Ker	99	49.6	93	106

REGISTERED CIVIL ENGINEER — DATE 10-20-15

11-16-15
PLANS APPROVAL DATE

REGISTERED PROFESSIONAL ENGINEER — DON NGUYEN-TAN — No. C 57510 — Exp. 12-31-15 — CIVIL — STATE OF CALIFORNIA

The State of California or its officers or agents shall not be responsible for the accuracy or completeness of scanned copies of this plan sheet.

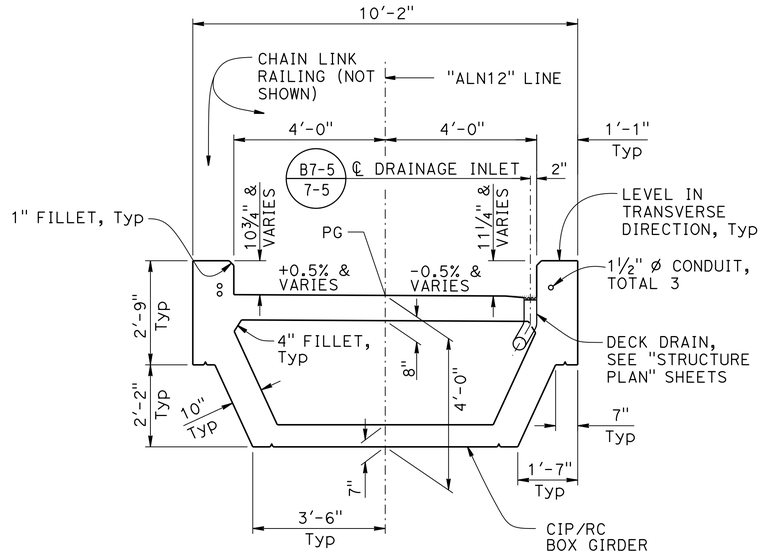

TYPICAL SECTION

½" = 1'-0"

Notes:

1. For additional top and bottom reinforcement, see "ADDITIONAL TOP REINFORCEMENT" and "ADDITIONAL BOTTOM REINFORCEMENT" details.
2. For clarity, chain link railing and lighting pedestal not shown.

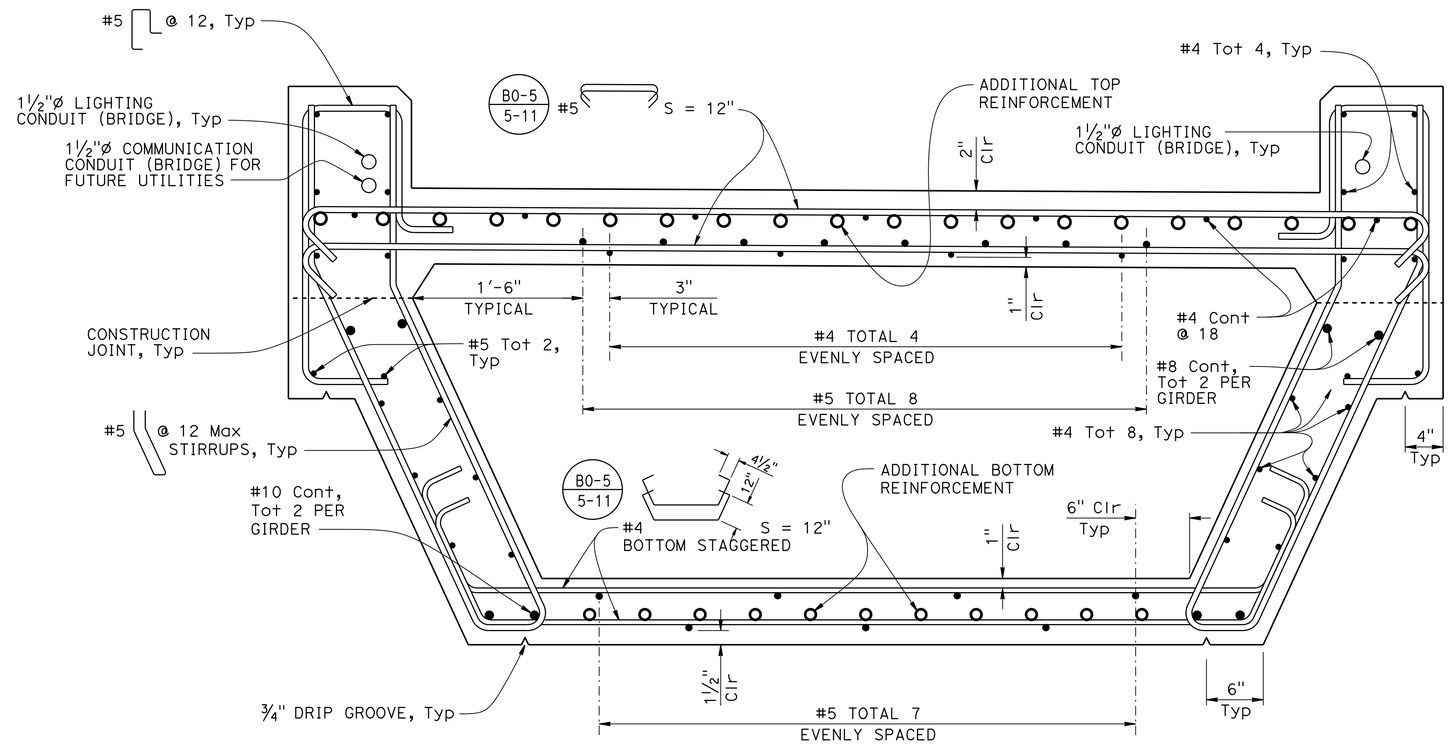

PART TYPICAL SECTION

1½" = 1'-0"

B7-1

	BY	CHECKED
DESIGN	DAVID ALVAREZ	MIKE CULLEN
DETAILS	SUSAN NG	DON NGUYEN-TAN
QUANTITIES	GLORIA REYES-GUTIERREZ	DAVID ALVAREZ

STATE OF CALIFORNIA
DEPARTMENT OF TRANSPORTATION

DIVISION OF ENGINEERING SERVICES
STRUCTURE DESIGN
DESIGN BRANCH 6

BRIDGE NO. 50-0518
POST MILE 49.6

KERN AVENUE POC (REPLACE)
TYPICAL SECTION

STRUCTURES DESIGN DETAIL SHEET (ENGLISH) (REV. 09-01-10)

ORIGINAL SCALE IN INCHES FOR REDUCED PLANS 0 1 2 3

UNIT: 3591
PROJECT NUMBER & PHASE: 06 1400 0266 1 CONTRACT NO.: 06-0H6424

DISREGARD PRINTS BEARING EARLIER REVISION DATES

REVISION DATES: 06-09-13 10-16-15 10-28-15

SHEET 29 OF 42

FILE => 50-0518-K-ts-01.dgn

USERNAME => s119704 DATE PLOTTED => 01-JUL-2016 TIME PLOTTED => 14:31

DIST	COUNTY	ROUTE	POST MILES TOTAL PROJECT	SHEET No.	TOTAL SHEETS
06	Ker	99	49.6	94	106

REGISTERED CIVIL ENGINEER 10-20-15 DATE

11-16-15
PLANS APPROVAL DATE

REGISTERED PROFESSIONAL ENGINEER DON NGUYEN-TAN No. C 57510 Exp. 12-31-15 CIVIL STATE OF CALIFORNIA

The State of California or its officers or agents shall not be responsible for the accuracy or completeness of scanned copies of this plan sheet.

NOTES:

1. Pedestal shall have a minimum of 2" concrete cover over rebar.
2. For clarity, curb-mounted fence not shown.
3. For clarity, box girder and POC curb reinforcement not shown.

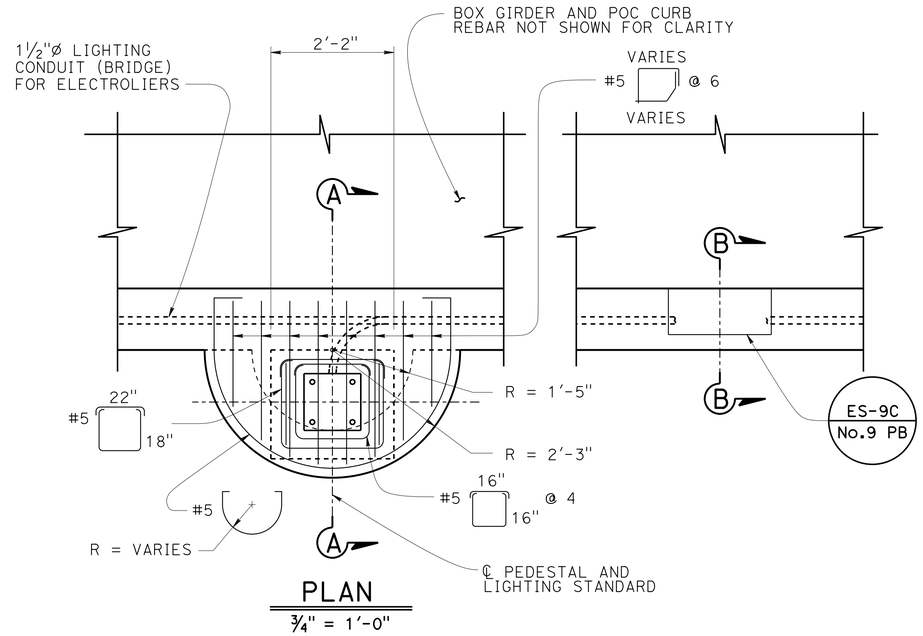

PLAN
¾" = 1'-0"

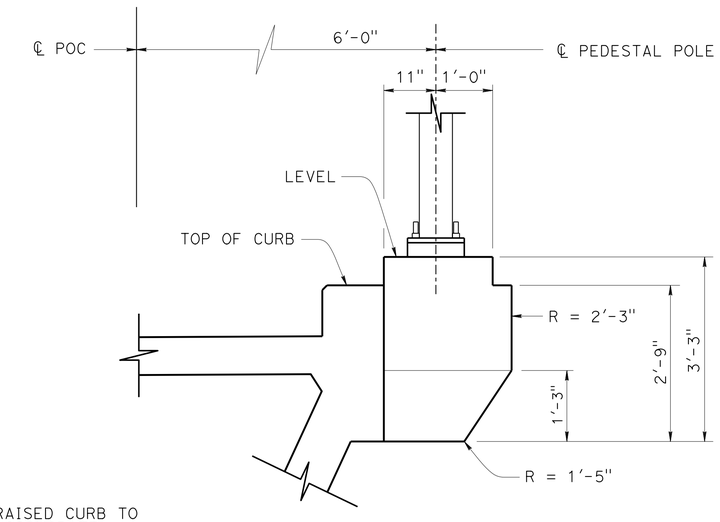

PROFILE VIEW
¾" = 1'-0"

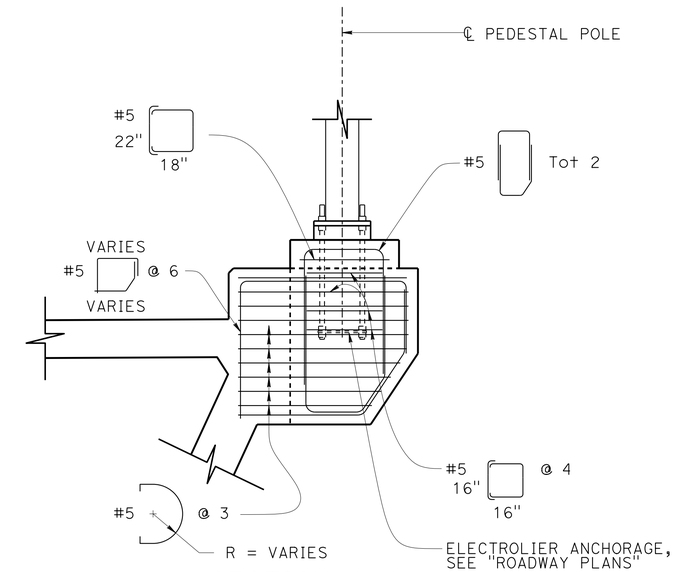

SECTION A-A
¾"= 1'-0"

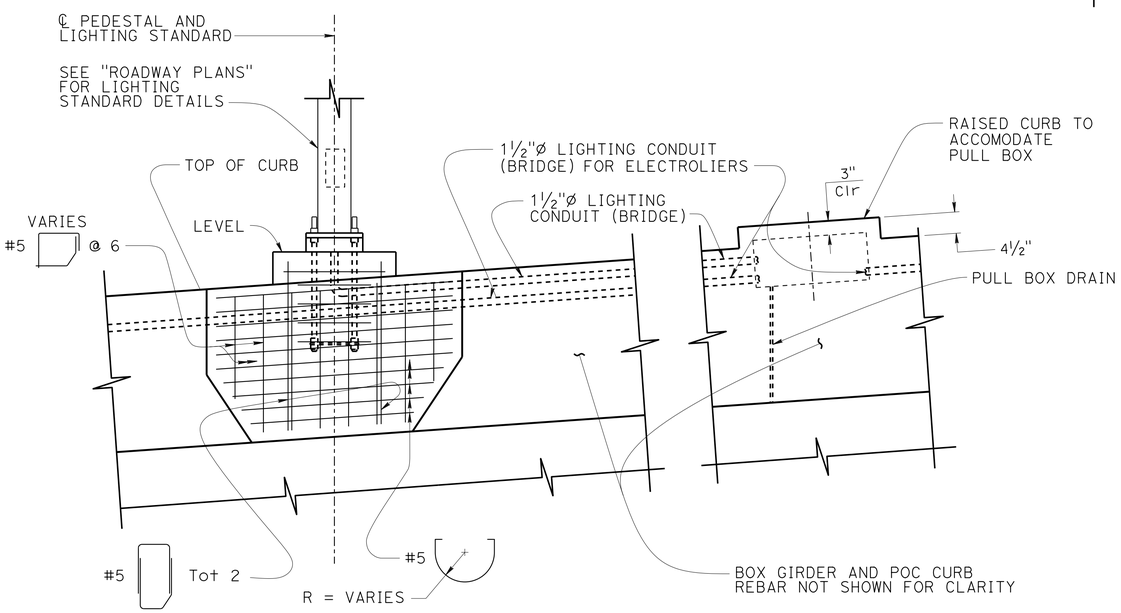

ELEVATION
¾" = 1'-0"

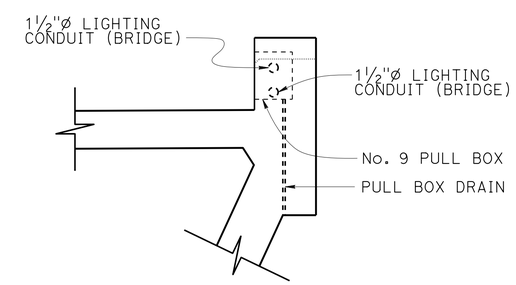

SECTION B-B
¾"= 1'-0"

DESIGN	BY DAVID ALVAREZ	CHECKED MIKE CULLEN	
DETAILS	BY DAVID ELLIOTT/SUSAN NG	CHECKED DON NGUYEN-TAN	
QUANTITIES	BY GLORIA REYES-GUTIERREZ	CHECKED DAVID ALVAREZ	

STATE OF CALIFORNIA
DEPARTMENT OF TRANSPORTATION

DIVISION OF ENGINEERING SERVICES
STRUCTURE DESIGN
DESIGN BRANCH 6

BRIDGE NO. 50-0518
POST MILE 49.6

KERN AVENUE POC (REPLACE) LIGHTING PEDESTAL DETAILS

STRUCTURES DESIGN DETAIL SHEET (ENGLISH) (REV. 09-01-10)

ORIGINAL SCALE IN INCHES FOR REDUCED PLANS 0 1 2 3

UNIT: 3591
PROJECT NUMBER & PHASE: 06 1400 0266 1 CONTRACT NO.: 06-0H6424

DISREGARD PRINTS BEARING EARLIER REVISION DATES

REVISION DATES: ~~10-9-13~~ ~~10-08-15~~ 10-16-15

SHEET 30 OF 42

FILE => 50-0518-k-ts-ltg-ped.dgn

USERNAME => s119704 DATE PLOTTED => 01-JUL-2016 TIME PLOTTED => 14:31

DIST	COUNTY	ROUTE	POST MILES TOTAL PROJECT	SHEET No.	TOTAL SHEETS
06	Ker	99	49.6	95	106

REGISTERED CIVIL ENGINEER 10-20-15 DATE

11-16-15
PLANS APPROVAL DATE

REGISTERED PROFESSIONAL ENGINEER
DON NGUYEN-TAN
No. C 57510
Exp. 12-31-15
CIVIL
STATE OF CALIFORNIA

The State of California or its officers or agents shall not be responsible for the accuracy or completeness of scanned copies of this plan sheet.

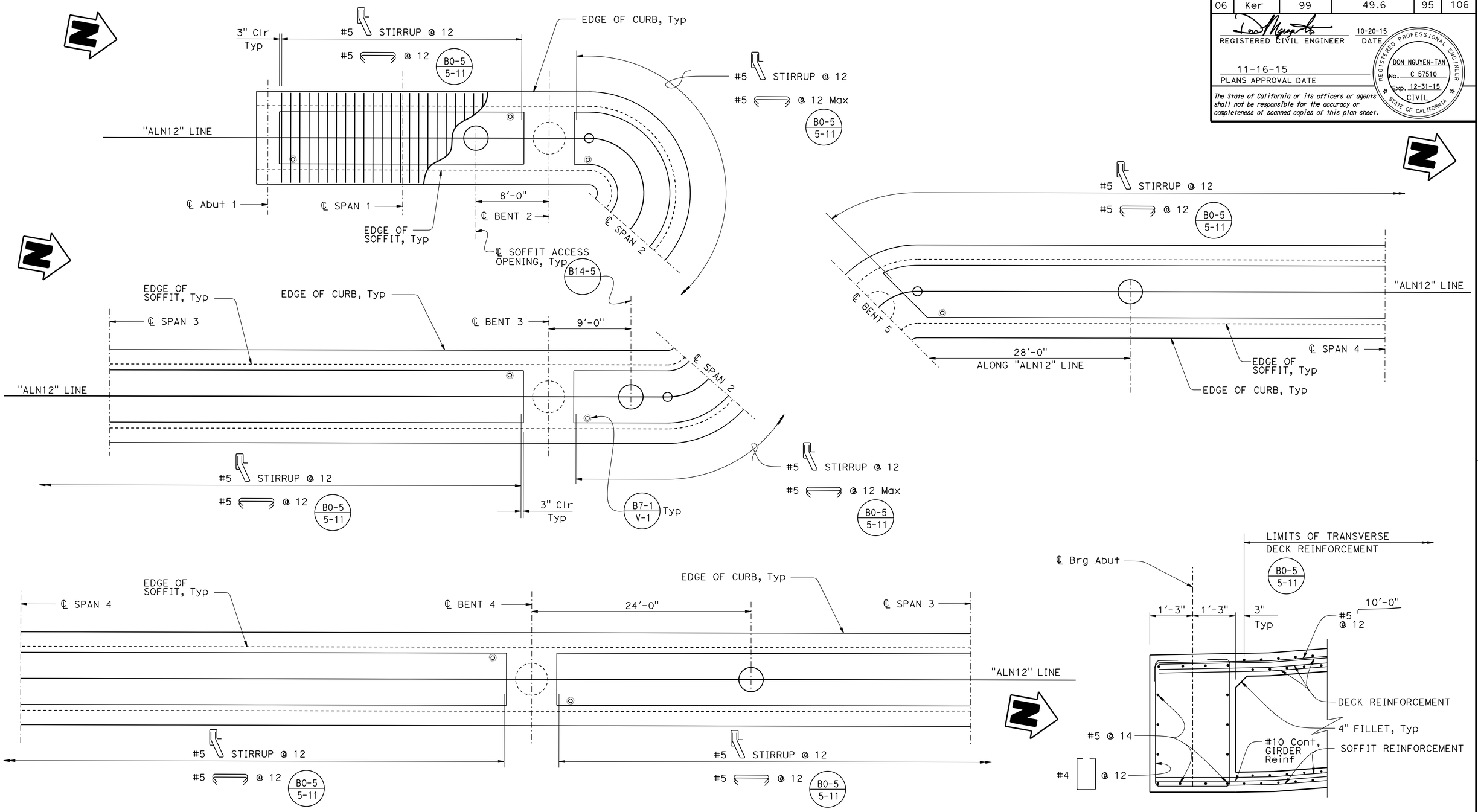

GIRDER LAYOUT
1" = 5'-0"

END DIAPHRAGM
3/4" = 1'-0"

DESIGN	BY DAVID ALVAREZ	CHECKED MIKE CULLEN	
DETAILS	BY SUSAN NG	CHECKED DON NGUYEN-TAN	
QUANTITIES	BY GLORIA REYES-GUTIERREZ	CHECKED DAVID ALVAREZ	

STATE OF CALIFORNIA
DEPARTMENT OF TRANSPORTATION

DIVISION OF ENGINEERING SERVICES
STRUCTURE DESIGN
DESIGN BRANCH 6

BRIDGE NO. 50-0518
POST MILE 49.6

KERN AVENUE POC (REPLACE)
GIRDER LAYOUT No. 1

STRUCTURES DESIGN DETAIL SHEET (ENGLISH) (REV. 09-01-10)

ORIGINAL SCALE IN INCHES FOR REDUCED PLANS 0 1 2 3

UNIT: 3591
PROJECT NUMBER & PHASE: 06 1400 0266 1 CONTRACT NO.: 06-0H6424

DISREGARD PRINTS BEARING EARLIER REVISION DATES

REVISION DATES: 09-24-13 | 10-06-15 | 09-09-15

SHEET 31 OF 42

FILE => 50-0518-I-gdr-lo-01.dgn

USERNAME => s119704 DATE PLOTTED => 01-JUL-2016 TIME PLOTTED => 14:31

DIST	COUNTY	ROUTE	POST MILES TOTAL PROJECT	SHEET No.	TOTAL SHEETS
06	Ker	99	49.6	96	106

REGISTERED CIVIL ENGINEER 10-20-15 DATE

11-16-15
PLANS APPROVAL DATE

REGISTERED PROFESSIONAL ENGINEER DON NGUYEN-TAN No. C 57510 Exp. 12-31-15 CIVIL STATE OF CALIFORNIA

The State of California or its officers or agents shall not be responsible for the accuracy or completeness of scanned copies of this plan sheet.

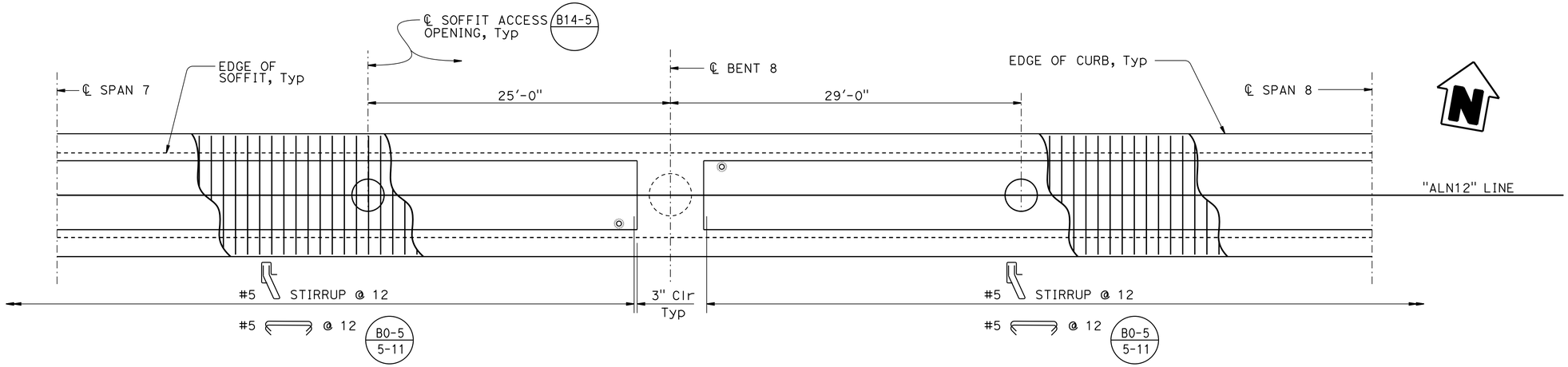

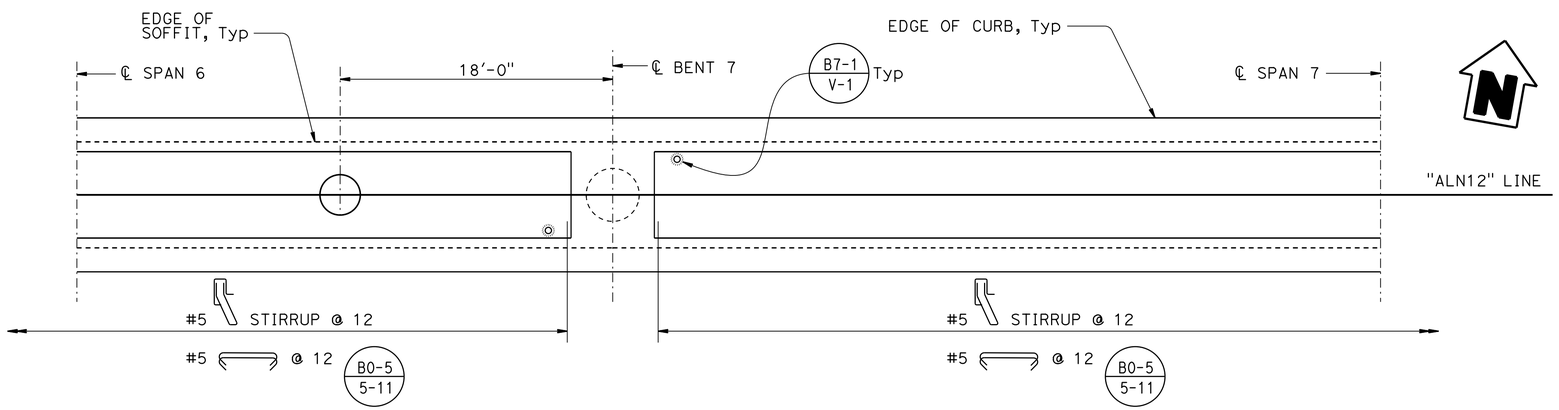

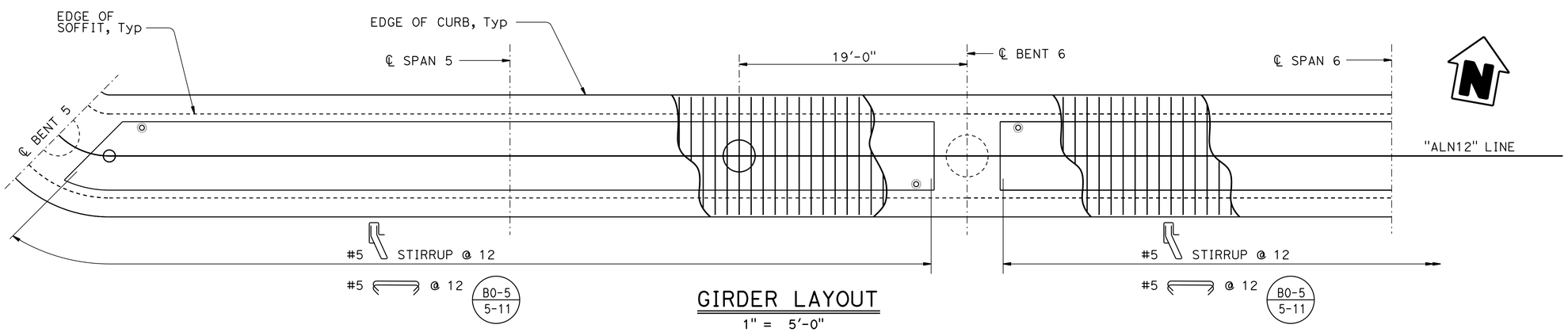

GIRDER LAYOUT

1" = 5'-0"

DESIGN	BY DAVID ALVAREZ	CHECKED MIKE CULLEN	
DETAILS	BY SUSAN NG	CHECKED DON NGUYEN-TAN	
QUANTITIES	BY GLORIA REYES-GUTIERREZ	CHECKED DAVID ALVAREZ	

STATE OF CALIFORNIA
DEPARTMENT OF TRANSPORTATION

DIVISION OF ENGINEERING SERVICES
STRUCTURE DESIGN
DESIGN BRANCH 6

BRIDGE NO. 50-0518
POST MILE 49.6

KERN AVENUE POC (REPLACE)
GIRDER LAYOUT No. 2

STRUCTURES DESIGN DETAIL SHEET (ENGLISH) (REV. 09-01-10)

ORIGINAL SCALE IN INCHES FOR REDUCED PLANS 0 1 2 3

UNIT: 3591
PROJECT NUMBER & PHASE: 06 1400 0266 1 CONTRACT NO.: 06-0H6424

DISREGARD PRINTS BEARING EARLIER REVISION DATES

REVISION DATES: 09-27-13 01-17-14

SHEET 32 OF 42

FILE => 50-0518-1-gdr-lo-02.dgn

USERNAME => s119704 DATE PLOTTED => 01-JUL-2016 TIME PLOTTED => 14:31

DIST	COUNTY	ROUTE	POST MILES TOTAL PROJECT	SHEET No.	TOTAL SHEETS
06	Ker	99	49.6	97	106

REGISTERED CIVIL ENGINEER 10-20-15 DATE

11-16-15
PLANS APPROVAL DATE

REGISTERED PROFESSIONAL ENGINEER
DON NGUYEN-TAN
No. C 57510
Exp. 12-31-15
CIVIL
STATE OF CALIFORNIA

The State of California or its officers or agents shall not be responsible for the accuracy or completeness of scanned copies of this plan sheet.

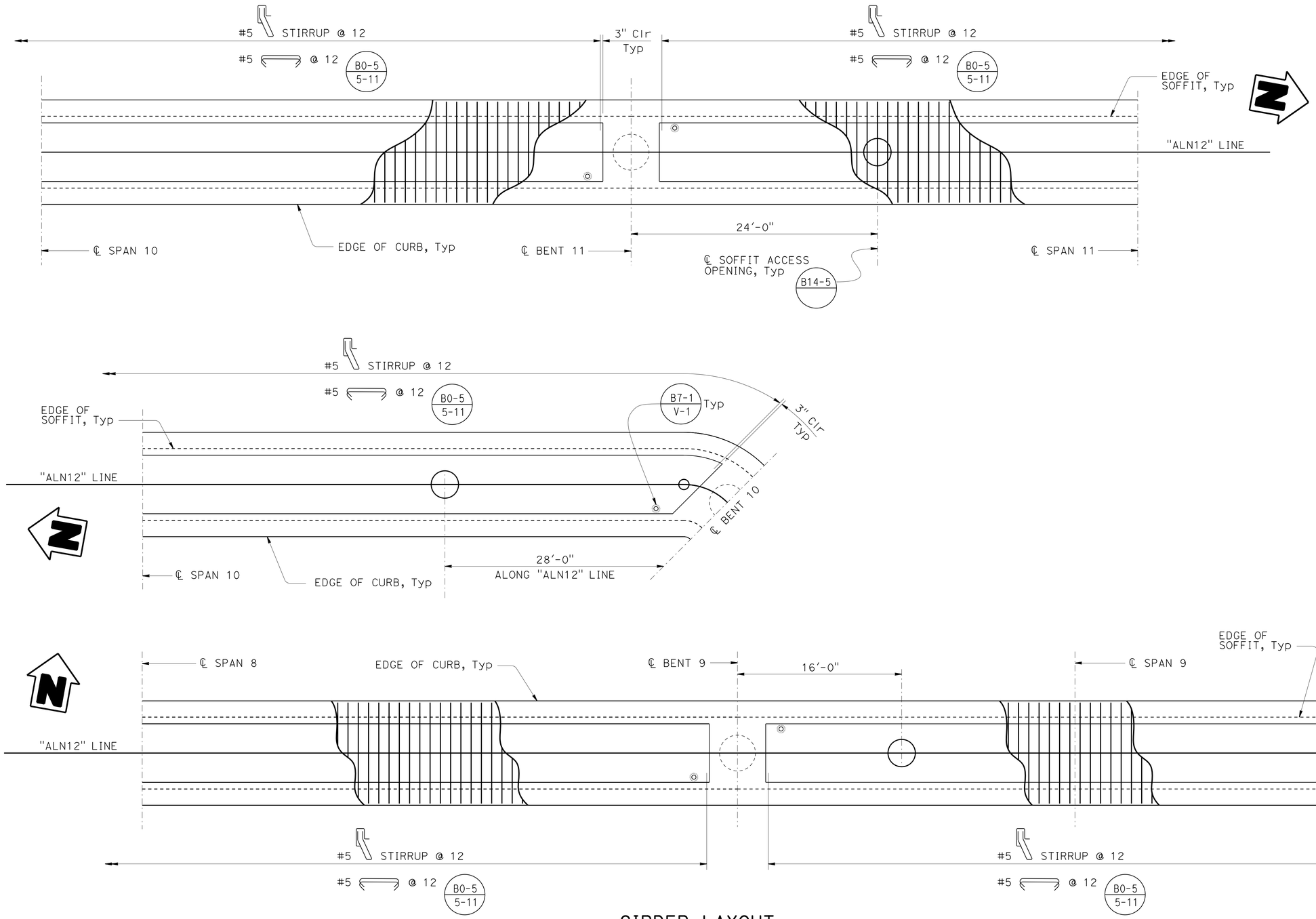

GIRDER LAYOUT

1" = 5'-0"

DESIGN	BY DAVID ALVAREZ	CHECKED MIKE CULLEN	
DETAILS	BY SUSAN NG	CHECKED DON NGUYEN-TAN	
QUANTITIES	BY GLORIA REYES-GUTIERREZ	CHECKED DAVID ALVAREZ	

STATE OF CALIFORNIA
DEPARTMENT OF TRANSPORTATION

DIVISION OF ENGINEERING SERVICES
STRUCTURE DESIGN
DESIGN BRANCH 6

BRIDGE NO. 50-0518
POST MILE 49.6

KERN AVENUE POC (REPLACE)
GIRDER LAYOUT No. 3

STRUCTURES DESIGN DETAIL SHEET (ENGLISH) (REV. 09-01-10)

ORIGINAL SCALE IN INCHES FOR REDUCED PLANS 0 1 2 3

UNIT: 3591
PROJECT NUMBER & PHASE: 06 1400 0266 1 CONTRACT NO.: 06-0H6424

DISREGARD PRINTS BEARING EARLIER REVISION DATES

REVISION DATES: 09-24-13 01-07-14 10-06-15

SHEET 33 OF 42

FILE => 50-0518-I-gdr-lo-03.dgn

USERNAME => s119704 DATE PLOTTED => 01-JUL-2016 TIME PLOTTED => 14:31

DIST	COUNTY	ROUTE	POST MILES TOTAL PROJECT	SHEET No.	TOTAL SHEETS
06	Ker	99	49.6	98	106

REGISTERED CIVIL ENGINEER 10-20-15 DATE

11-16-15
PLANS APPROVAL DATE

REGISTERED PROFESSIONAL ENGINEER
DON NGUYEN-TAN
No. C 57510
Exp. 12-31-15
CIVIL
STATE OF CALIFORNIA

The State of California or its officers or agents shall not be responsible for the accuracy or completeness of scanned copies of this plan sheet.

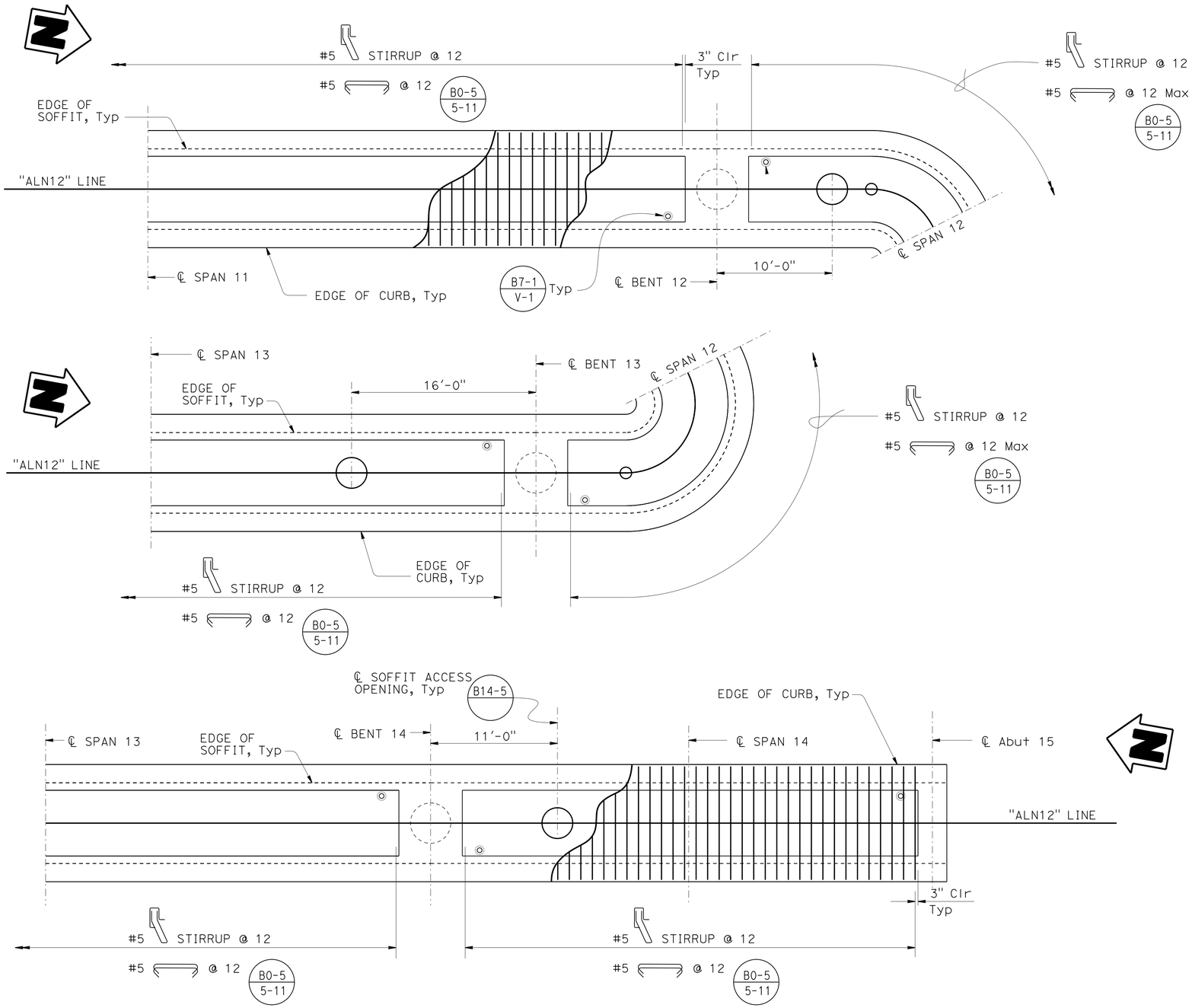

GIRDER LAYOUT

1" = 5'-0"

DESIGN	BY DAVID ALVAREZ	CHECKED MIKE CULLEN	
DETAILS	BY SUSAN NG	CHECKED DON NGUYEN-TAN	
QUANTITIES	BY GLORIA REYES-GUTIERREZ	CHECKED DAVID ALVAREZ	

STATE OF CALIFORNIA
DEPARTMENT OF TRANSPORTATION

DIVISION OF ENGINEERING SERVICES
STRUCTURE DESIGN
DESIGN BRANCH 6

BRIDGE NO. 50-0518
POST MILE 49.6

KERN AVENUE POC (REPLACE)
GIRDER LAYOUT No. 4

STRUCTURES DESIGN DETAIL SHEET (ENGLISH) (REV. 09-01-10)

ORIGINAL SCALE IN INCHES FOR REDUCED PLANS 0 1 2 3

UNIT: 3591
PROJECT NUMBER & PHASE: 06 1400 0266 1 CONTRACT NO.: 06-0H6424

DISREGARD PRINTS BEARING EARLIER REVISION DATES

REVISION DATES: 09-24-13 01-17-14

SHEET 34 OF 42

FILE => 50-0518-1-gdr-1o-04.dgn

USERNAME => s119704 DATE PLOTTED => 01-JUL-2016 TIME PLOTTED => 14:31

DIST	COUNTY	ROUTE	POST MILES TOTAL PROJECT	SHEET No.	TOTAL SHEETS
06	Ker	99	49.6	99	106

REGISTERED CIVIL ENGINEER 10-20-15 DATE

11-16-15
PLANS APPROVAL DATE

REGISTERED PROFESSIONAL ENGINEER
DON NGUYEN-TAN
No. C 57510
Exp. 12-31-15
CIVIL
STATE OF CALIFORNIA

The State of California or its officers or agents shall not be responsible for the accuracy or completeness of scanned copies of this plan sheet.

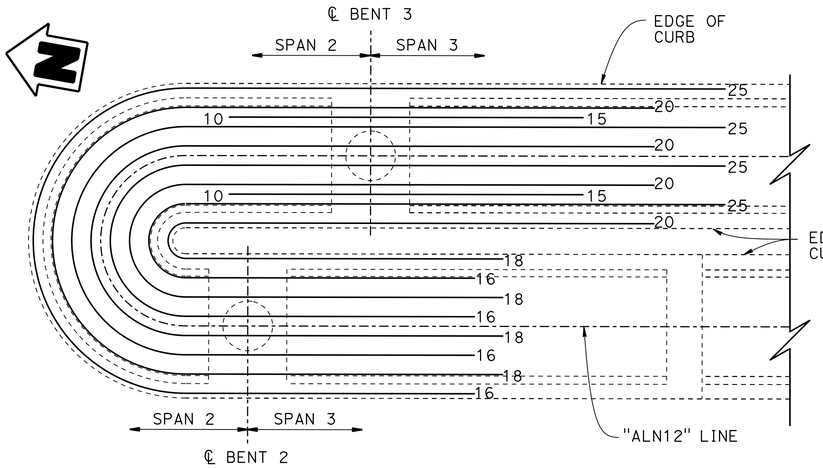

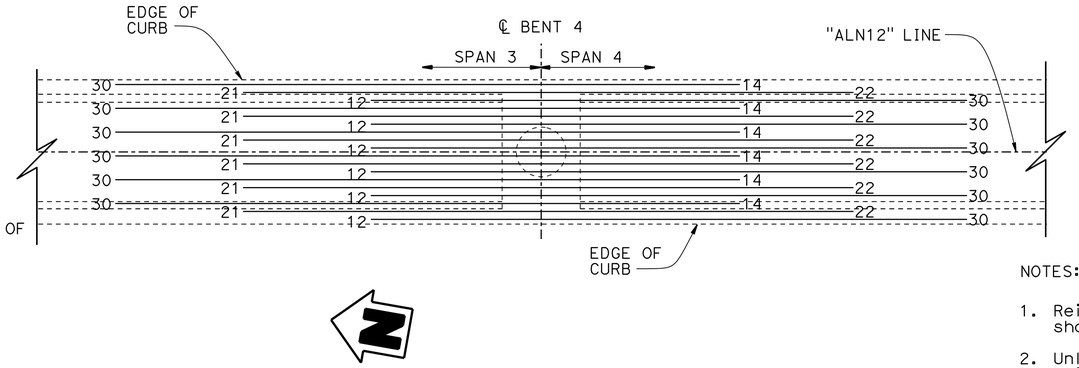

NOTES:

1. Reinforcement shown are in addition to those shown on "TYPICAL SECTION" sheet.
2. Unless otherwise noted, all additional top reinforcement must be #11 bar.
3. Space bars evenly within limit shown.
4. Numbers located at ends of reinforcement denotes the distance from ℄ Bent to end of bar.
5. When splices are required in additional slab reinforcement, use service splices.

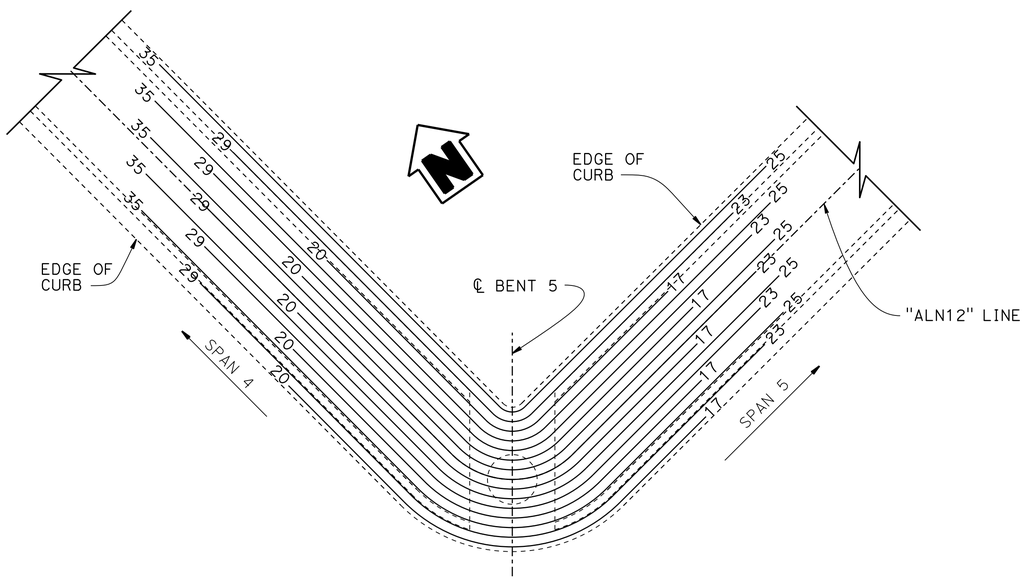

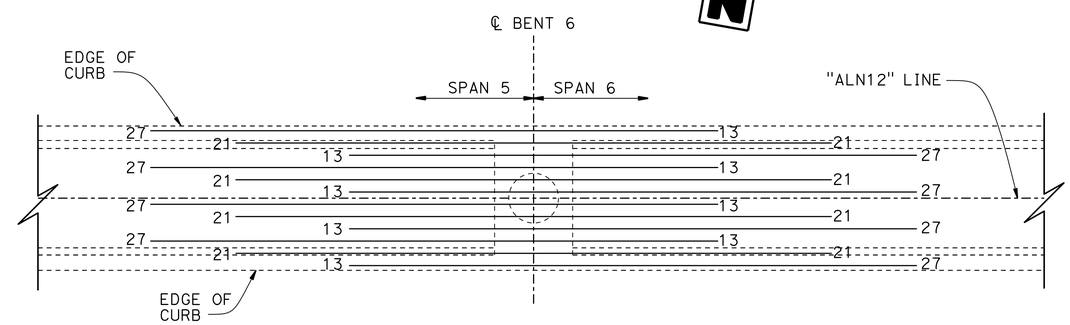

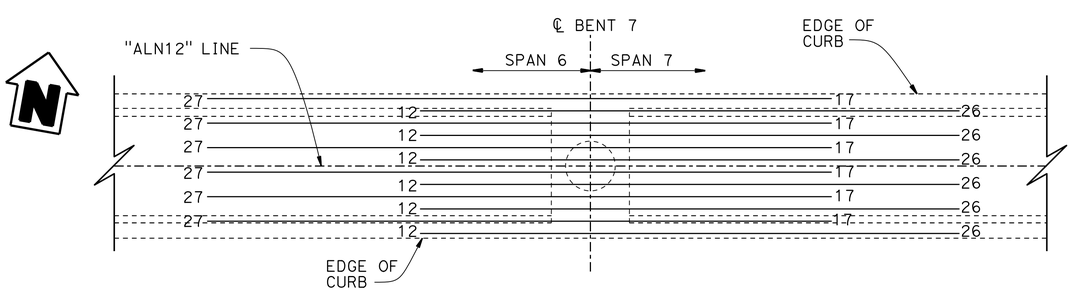

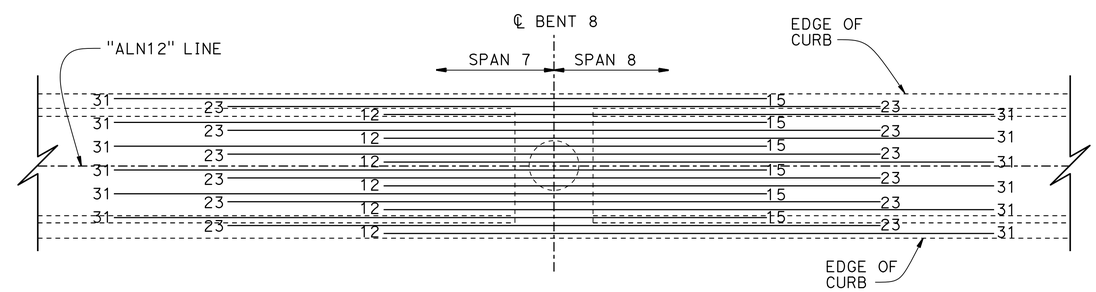

ADDITIONAL TOP SLAB REINFORCEMENT

3/16" = 1'-0"

DESIGN	BY DAVID ALVAREZ	CHECKED MIKE CULLEN	
DETAILS	BY SUSAN NG/DAVID ELLIOTT	CHECKED DON NGUYEN-TAN	
QUANTITIES	BY GLORIA REYES-GUTIERREZ	CHECKED DAVID ALVAREZ	

STATE OF CALIFORNIA
DEPARTMENT OF TRANSPORTATION

DIVISION OF ENGINEERING SERVICES
STRUCTURE DESIGN
DESIGN BRANCH 6

BRIDGE NO. 50-0518
POST MILE 49.6

KERN AVENUE POC (REPLACE)
ADDITIONAL REINFORCEMENT No. 1

STRUCTURES DESIGN DETAIL SHEET (ENGLISH) (REV. 09-01-10)

ORIGINAL SCALE IN INCHES FOR REDUCED PLANS 0 1 2 3

UNIT: 3591
PROJECT NUMBER & PHASE: 06 1400 0266 1 CONTRACT NO.: 06-0H6424

DISREGARD PRINTS BEARING EARLIER REVISION DATES

REVISION DATES: 09-04-13 12-13-13 01-17-14 02-28-14

SHEET 35 OF 42

FILE => 50-0518-o-gr-det-01.dgn

USERNAME => s113704 DATE PLOTTED => 01-JUL-2016 TIME PLOTTED => 14:31

DIST	COUNTY	ROUTE	POST MILES TOTAL PROJECT	SHEET No.	TOTAL SHEETS
06	Ker	99	49.6	100	106

REGISTERED CIVIL ENGINEER — DATE 10-20-15

11-16-15
PLANS APPROVAL DATE

REGISTERED PROFESSIONAL ENGINEER — DON NGUYEN-TAN — No. C 57510 — Exp. 12-31-15 — CIVIL — STATE OF CALIFORNIA

The State of California or its officers or agents shall not be responsible for the accuracy or completeness of scanned copies of this plan sheet.

NOTES:

1. Reinforcement shown are in addition to those shown on "TYPICAL SECTION" sheet.
2. Unless otherwise noted, all additional top reinforcement must be #11 bar.
3. Space bars evenly within limit shown.
4. Numbers located at ends of reinforcement denotes the distance from ℄ Bent to end of bar.
5. When splices are required in additional slab reinforcement, use service splices.

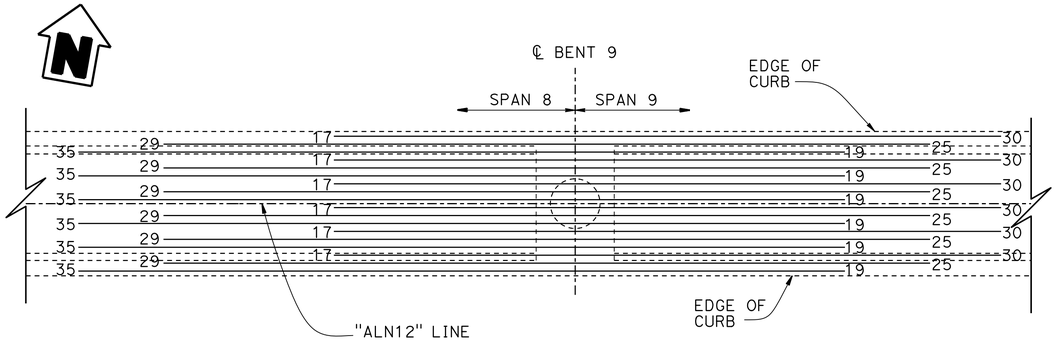

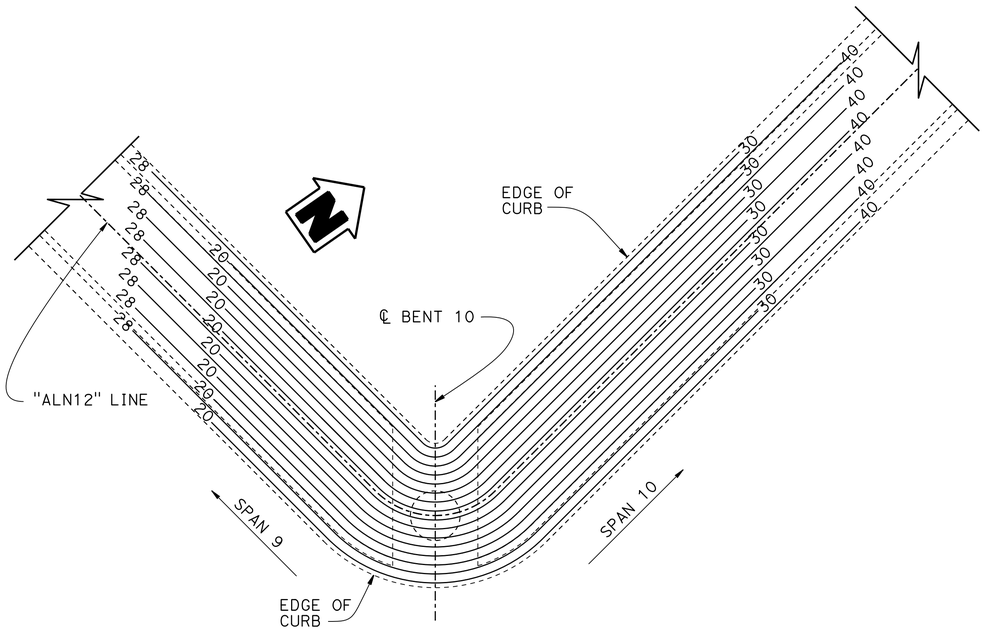

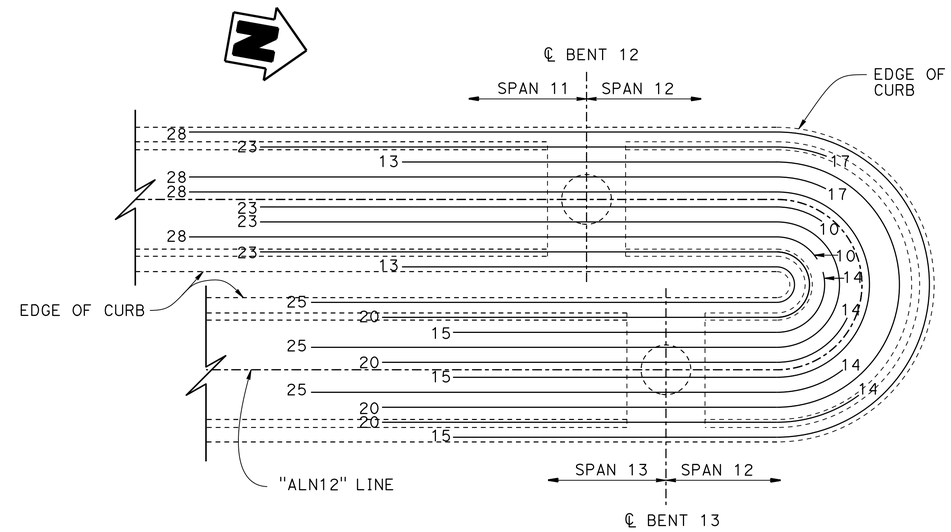

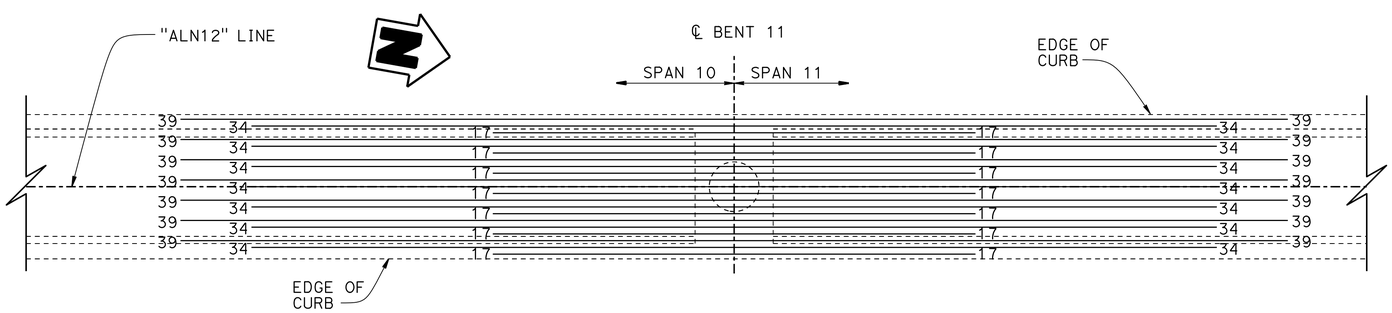

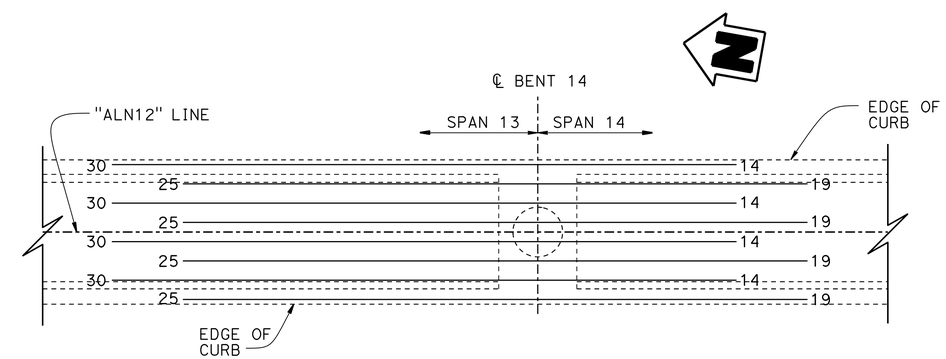

ADDITIONAL TOP SLAB REINFORCEMENT

3/16" = 1'-0"

DESIGN	BY DAVID ALVAREZ	CHECKED MIKE CULLEN
DETAILS	BY SUSAN NG/DAVID ELLIOTT	CHECKED DON NGUYEN-TAN
QUANTITIES	BY GLORIA REYES-GUTIERREZ	CHECKED DAVID ALVAREZ

STATE OF CALIFORNIA
DEPARTMENT OF TRANSPORTATION

DIVISION OF ENGINEERING SERVICES
STRUCTURE DESIGN
DESIGN BRANCH 6

BRIDGE NO. 50-0518
POST MILE 49.6

KERN AVENUE POC (REPLACE)
ADDITIONAL REINFORCEMENT No. 2

STRUCTURES DESIGN DETAIL SHEET (ENGLISH) (REV. 09-01-10)

ORIGINAL SCALE IN INCHES FOR REDUCED PLANS 0 1 2 3

UNIT: 3591
PROJECT NUMBER & PHASE: 06 1400 0266 1 CONTRACT NO.: 06-0H6424

DISREGARD PRINTS BEARING EARLIER REVISION DATES

REVISION DATES: 09-06-13 12-18-13 01-17-14 02-28-14

SHEET 36 OF 42

FILE => 50-0518-o-gr-det-02.dgn

USERNAME => s113704 DATE PLOTTED => 01-JUL-2016 TIME PLOTTED => 14:31

DIST	COUNTY	ROUTE	POST MILES TOTAL PROJECT	SHEET No.	TOTAL SHEETS
06	Ker	99	49.6	101	106

REGISTERED CIVIL ENGINEER — DATE 10-20-15

11-16-15
PLANS APPROVAL DATE

REGISTERED PROFESSIONAL ENGINEER — DON NGUYEN-TAN — No. C 57510 — Exp. 12-31-15 — CIVIL — STATE OF CALIFORNIA

The State of California or its officers or agents shall not be responsible for the accuracy or completeness of scanned copies of this plan sheet.

NOTES:

1. Reinforcement shown are in addition to those shown on "TYPICAL SECTION" sheet.
2. Unless otherwise noted, all additional bottom reinforcement must be #10 bar.
3. Space bars evenly within limit shown.
4. Numbers located at ends of reinforcement denotes the distance from ℄ Bent to end of bar.
5. When splices are required in additional slab reinforcement, use service splices.

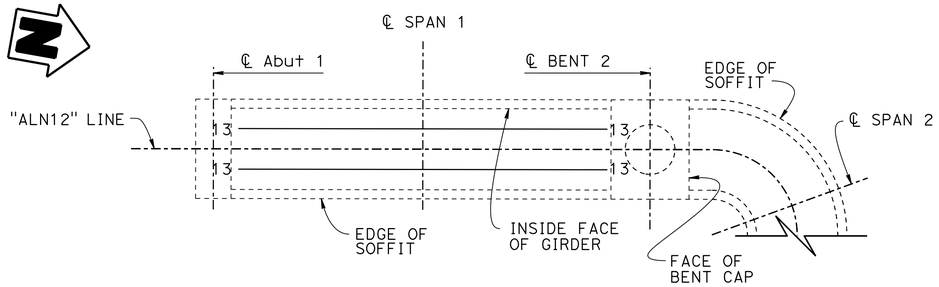

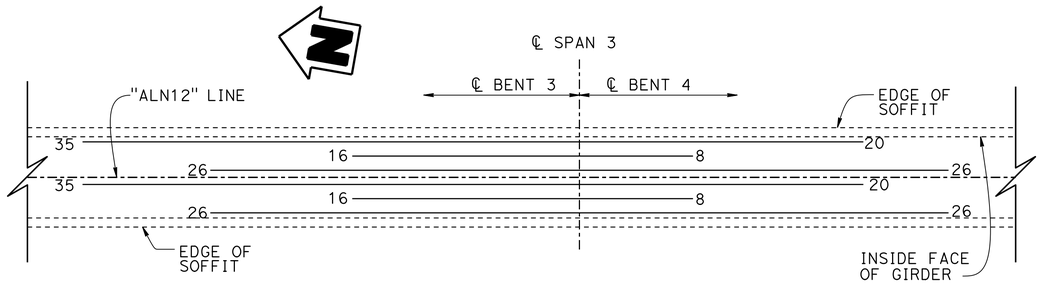

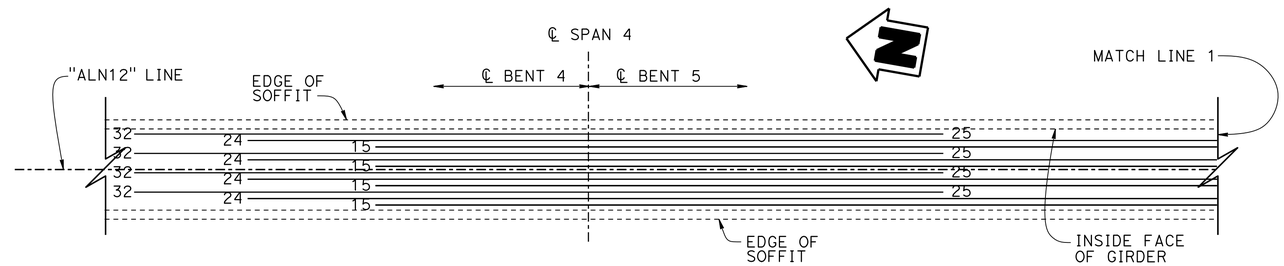

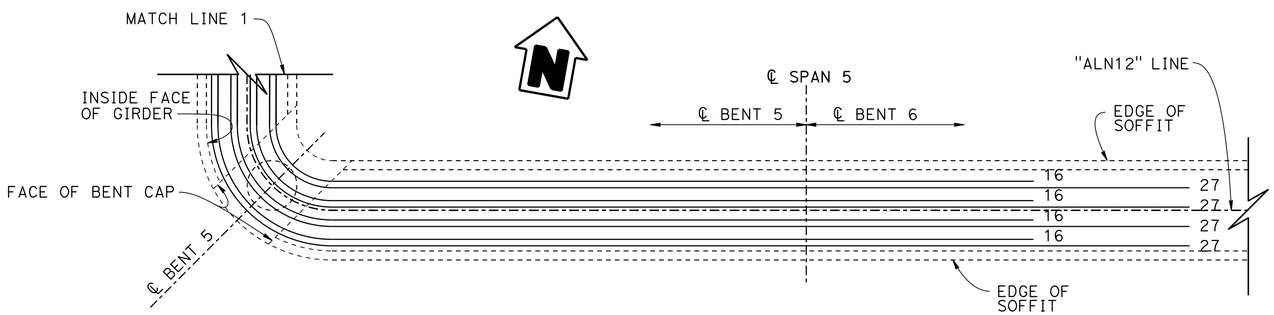

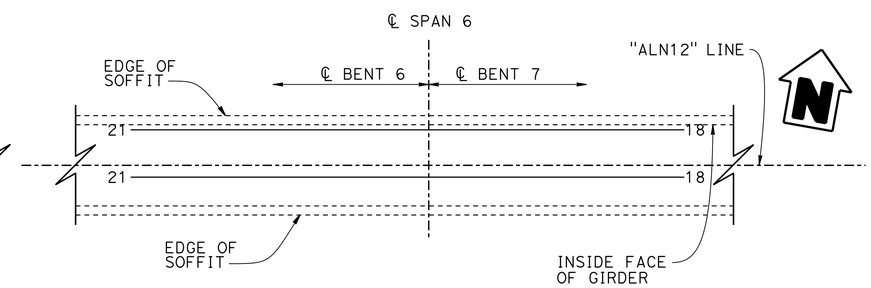

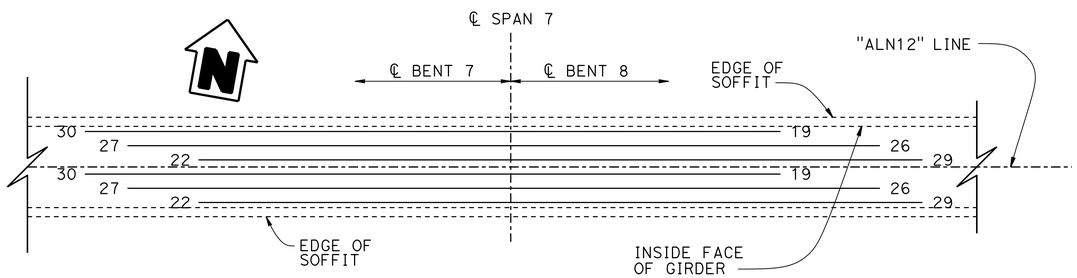

ADDITIONAL BOTTOM SLAB REINFORCEMENT

3/16" = 1'-0"

DESIGN	BY DAVID ALVAREZ	CHECKED MIKE CULLEN	
DETAILS	BY SUSAN NG/DAVID ELLIOTT	CHECKED DON NGUYEN-TAN	
QUANTITIES	BY GLORIA REYES-GUTIERREZ	CHECKED DAVID ALVAREZ	

STATE OF CALIFORNIA
DEPARTMENT OF TRANSPORTATION

DIVISION OF ENGINEERING SERVICES
STRUCTURE DESIGN
DESIGN BRANCH 6

BRIDGE NO. 50-0518
POST MILE 49.6

KERN AVENUE POC (REPLACE)
ADDITIONAL REINFORCEMENT No. 3

STRUCTURES DESIGN DETAIL SHEET (ENGLISH) (REV. 09-01-10)

ORIGINAL SCALE IN INCHES FOR REDUCED PLANS 0 1 2 3

UNIT: 3591
PROJECT NUMBER & PHASE: 06 1400 0266 1 CONTRACT NO.: 06-0H6424

DISREGARD PRINTS BEARING EARLIER REVISION DATES

REVISION DATES: 09-06-13 02-28-14 01-27-14

SHEET 37 OF 42

FILE => 50-0518-o-gr-det-03.dgn

USERNAME => s119704 DATE PLOTTED => 01-JUL-2016 TIME PLOTTED => 14:31

DIST	COUNTY	ROUTE	POST MILES TOTAL PROJECT	SHEET No.	TOTAL SHEETS
06	Ker	99	49.6	102	106

REGISTERED CIVIL ENGINEER — DATE 10-20-15

11-16-15
PLANS APPROVAL DATE

REGISTERED PROFESSIONAL ENGINEER — DON NGUYEN-TAN — No. C 57510 — Exp. 12-31-15 — CIVIL — STATE OF CALIFORNIA

The State of California or its officers or agents shall not be responsible for the accuracy or completeness of scanned copies of this plan sheet.

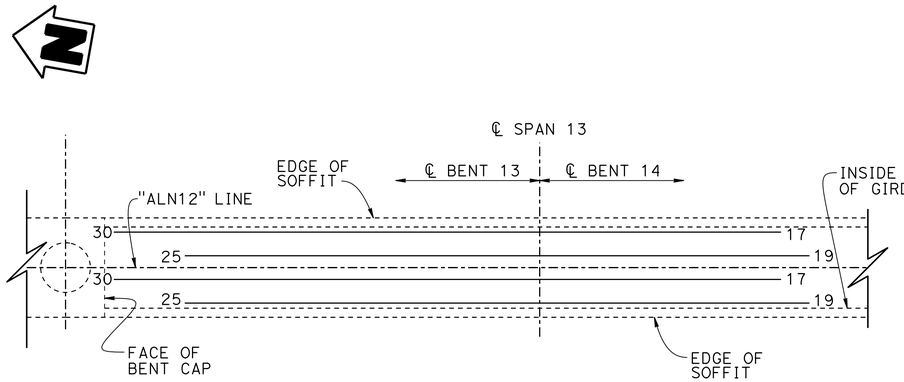

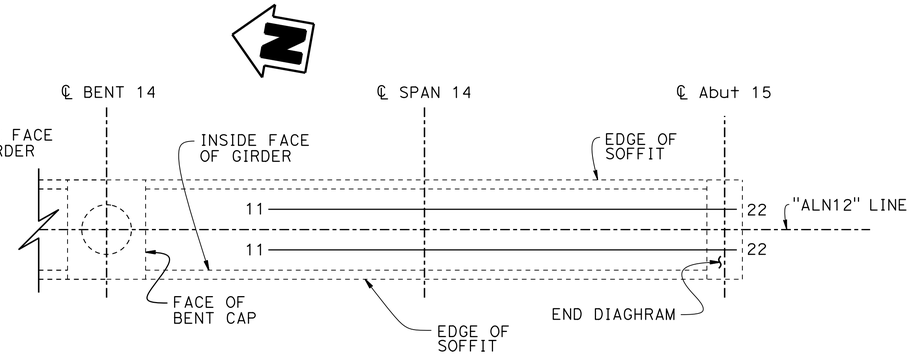

NOTES:

1. Reinforcement shown are in addition to those shown on "TYPICAL SECTION" sheet.
2. Unless otherwise noted, all additional bottom reinforcement must be #10 bar.
3. Space bars evenly within limit shown.
4. Numbers located at ends of reinforcement denotes the distance from ℄ Bent to end of bar.
5. When splices are required in additional slab reinforcement, use service splices.

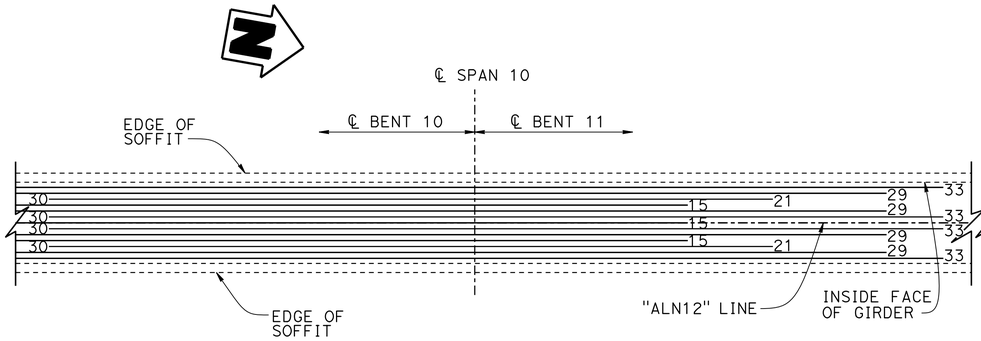

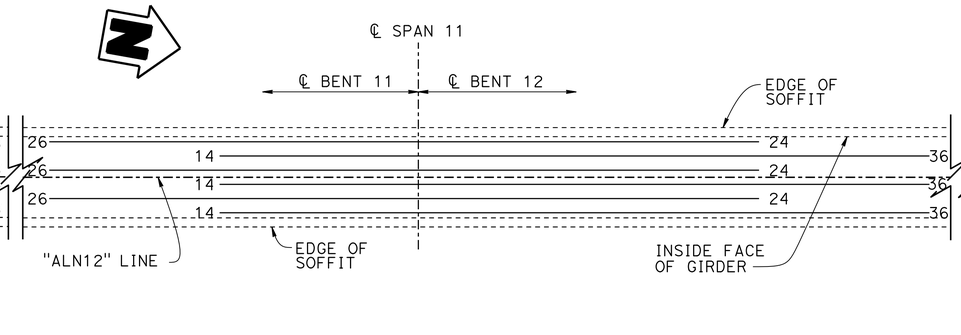

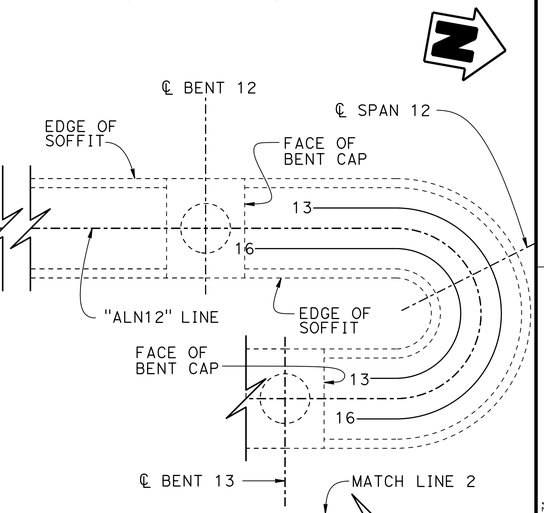

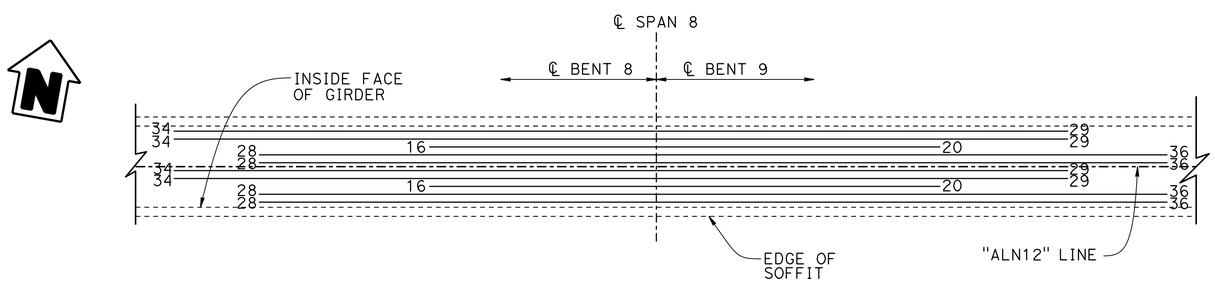

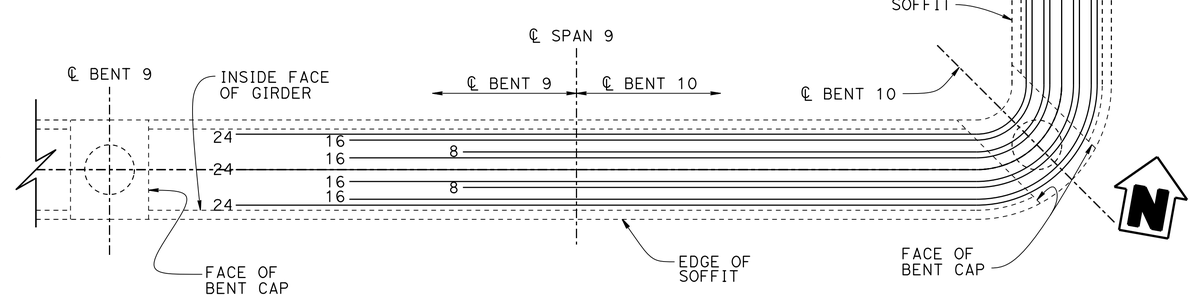

ADDITIONAL BOTTOM SLAB REINFORCEMENT

3/16" = 1'-0"

DESIGN	BY DAVID ALVAREZ	CHECKED MIKE CULLEN	
DETAILS	BY SUSAN NG/DAVID ELLIOTT	CHECKED DON NGUYEN-TAN	
QUANTITIES	BY GLORIA REYES-GUTIERREZ	CHECKED DAVID ALVAREZ	

STATE OF CALIFORNIA
DEPARTMENT OF TRANSPORTATION

DIVISION OF ENGINEERING SERVICES
STRUCTURE DESIGN
DESIGN BRANCH 6

BRIDGE NO. 50-0518
POST MILE 49.6

KERN AVENUE POC (REPLACE)
ADDITIONAL REINFORCEMENT No. 4

STRUCTURES DESIGN DETAIL SHEET (ENGLISH) (REV. 09-01-10)

ORIGINAL SCALE IN INCHES FOR REDUCED PLANS 0 1 2 3

UNIT: 3591
PROJECT NUMBER & PHASE: 06 1400 0266 1 CONTRACT NO.: 06-0H6424

DISREGARD PRINTS BEARING EARLIER REVISION DATES

REVISION DATES: ~~09-06-13~~ 02-28-14 ~~01-17-14~~

SHEET 38 OF 42

FILE => 50-0518-o-gr-det-04.dgn

USERNAME => s113704 DATE PLOTTED => 01-JUL-2016 TIME PLOTTED => 14:31

DIST	COUNTY	ROUTE	POST MILES TOTAL PROJECT	SHEET No.	TOTAL SHEETS
06	Ker	99	49.6	103	106

REGISTERED CIVIL ENGINEER 10-20-15 DATE

11-16-15
PLANS APPROVAL DATE

REGISTERED PROFESSIONAL ENGINEER DON NGUYEN-TAN No. C 57510 Exp. 12-31-15 CIVIL STATE OF CALIFORNIA

The State of California or its officers or agents shall not be responsible for the accuracy or completeness of scanned copies of this plan sheet.

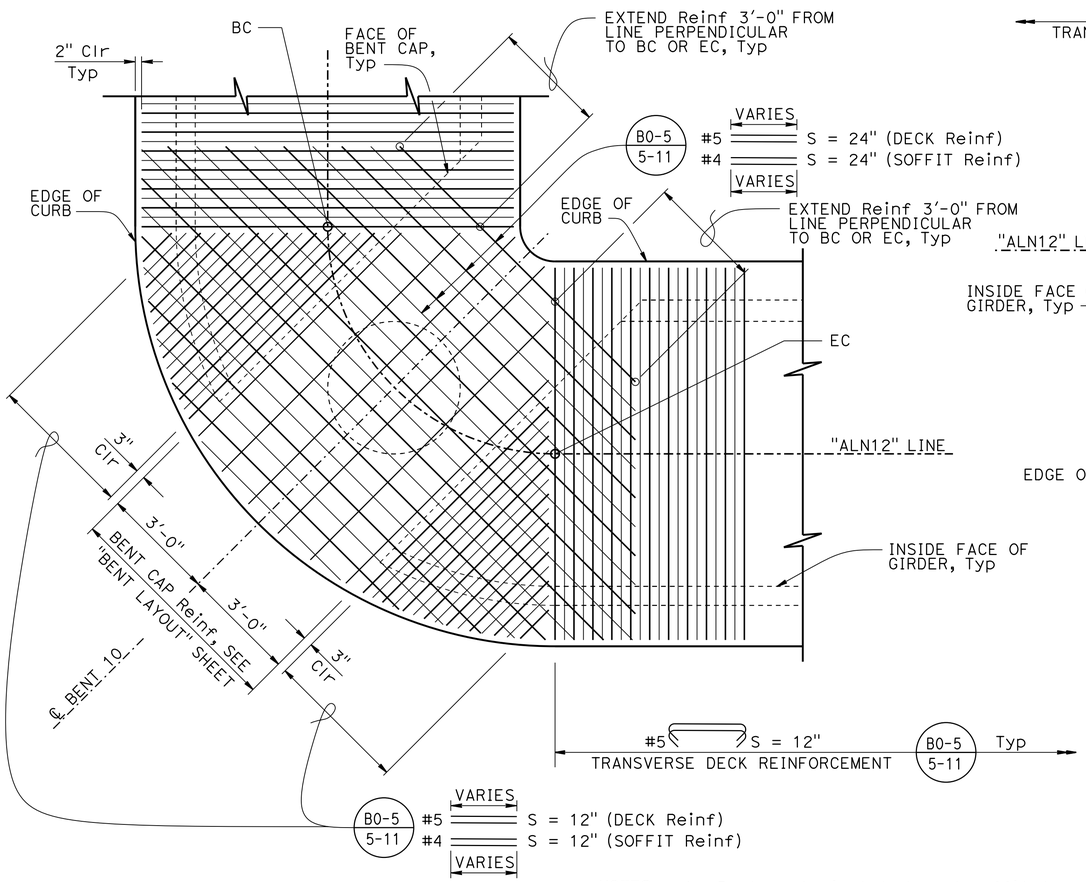

NOTE: Bents 10 shown, Bents 5 similar.

CURVES AT BENTS 5 & 10

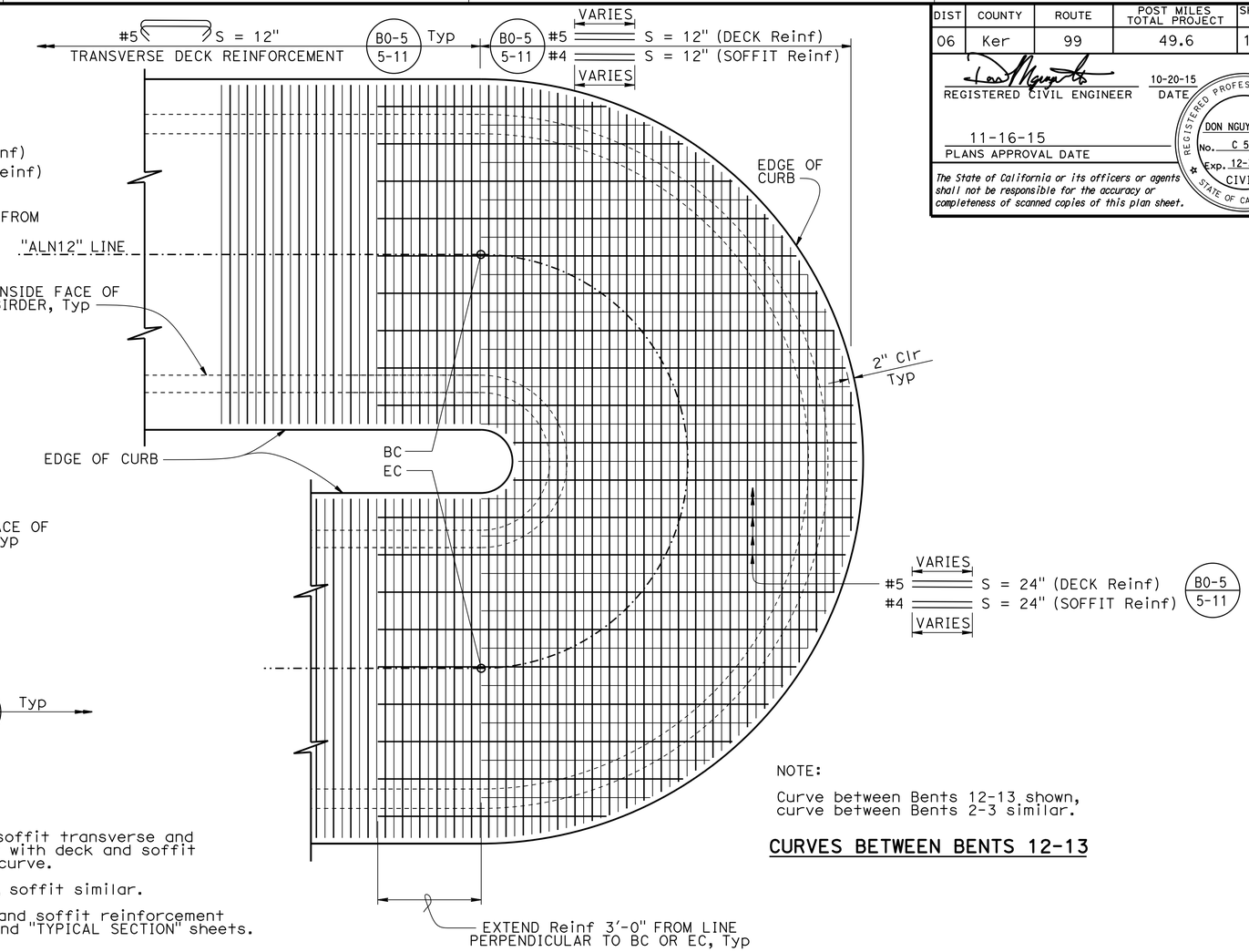

NOTES:

1. Replace typical deck and soffit transverse and longitudinal reinforcement with deck and soffit reinforcement details at curve.
2. Deck reinforcement shown, soffit similar.
3. For clarity, not all deck and soffit reinforcement shown, see "BENT LAYOUT" and "TYPICAL SECTION" sheets.

NOTE:

Curve between Bents 12-13 shown, curve between Bents 2-3 similar.

CURVES BETWEEN BENTS 12-13

DECK AND SOFFIT REINFORCEMENT DETAILS AT CURVES

½" = 1'-0"

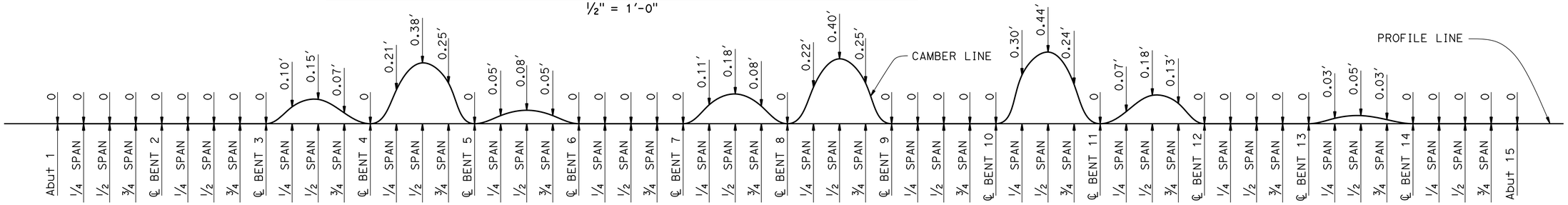

CAMBER DIAGRAM

NO SCALE
(Does not include allowance for falsework settlement)

DESIGN	BY DAVID ALVAREZ	CHECKED MIKE CULLEN	
DETAILS	BY SUSAN NG	CHECKED DON NGUYEN-TAN	
QUANTITIES	BY GLORIA REYES-GUTIERREZ	CHECKED DAVID ALVAREZ	

STATE OF CALIFORNIA
DEPARTMENT OF TRANSPORTATION

DIVISION OF ENGINEERING SERVICES
STRUCTURE DESIGN
DESIGN BRANCH 6

BRIDGE NO. 50-0518
POST MILE 49.6

KERN AVENUE POC (REPLACE)
ADDITIONAL REINFORCEMENT No. 5

STRUCTURES DESIGN DETAIL SHEET (ENGLISH) (REV. 09-01-10)

ORIGINAL SCALE IN INCHES FOR REDUCED PLANS 0 1 2 3

UNIT: 3591
PROJECT NUMBER & PHASE: 06 1400 0266 1 CONTRACT NO.: 06-0H6424

DISREGARD PRINTS BEARING EARLIER REVISION DATES

REVISION DATES 01-21-14 02-28-14 05-19-15

SHEET 39 OF 42

FILE => 50-0518-o-gr-det-05.dgn

USERNAME => s119704 DATE PLOTTED => 01-JUL-2016 TIME PLOTTED => 14:32

DIST	COUNTY	ROUTE	POST MILES TOTAL PROJECT	SHEET No.	TOTAL SHEETS
06	Ker	99	49.6	104	106

REGISTERED CIVIL ENGINEER 10-20-15 DATE

11-16-15
PLANS APPROVAL DATE

REGISTERED PROFESSIONAL ENGINEER DON NGUYEN-TAN No. C 57510 Exp. 12-31-15 CIVIL STATE OF CALIFORNIA

The State of California or its officers or agents shall not be responsible for the accuracy or completeness of scanned copies of this plan sheet.

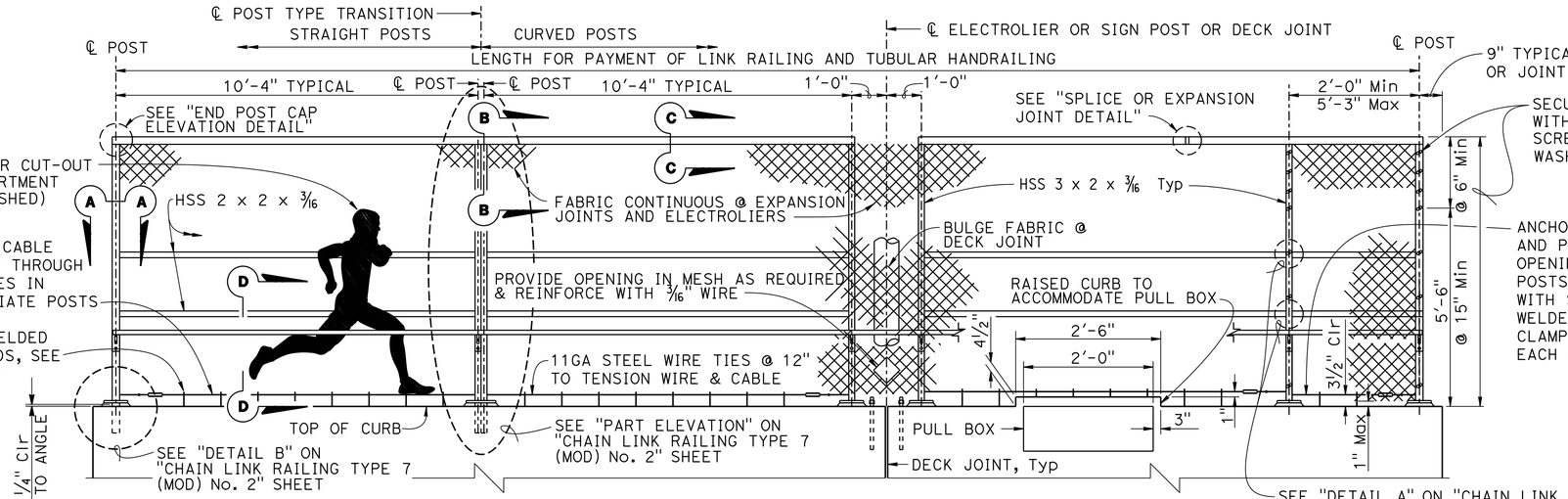

END PANEL | **TYPICAL INTERIOR PANEL** | **AT OBSTRUCTIONS & DECK JOINTS** | **ALTERNATE END PANEL**

ELEVATION

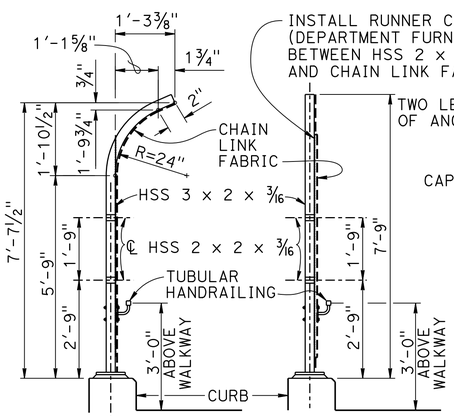

CURVED POST | **STRAIGHT POST**

TYPICAL SECTION

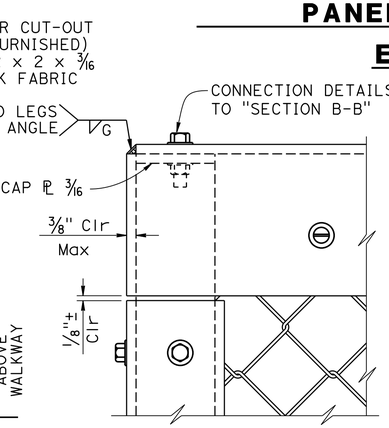

END POST CAP ELEVATION

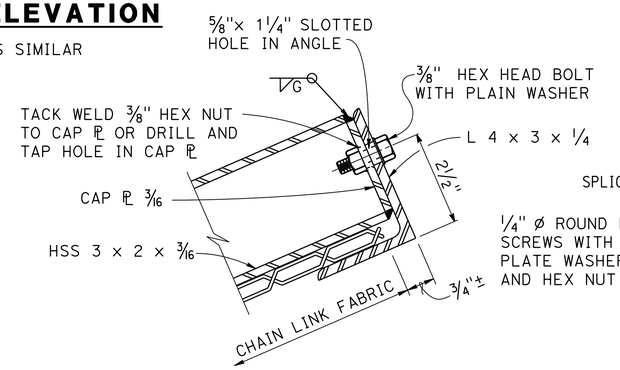

SECTION B-B

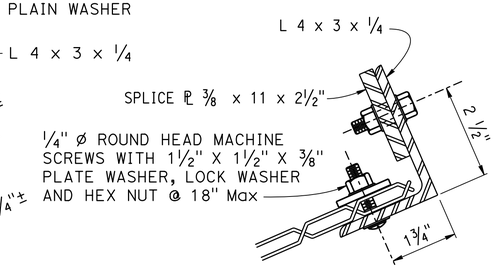

SECTION C-C

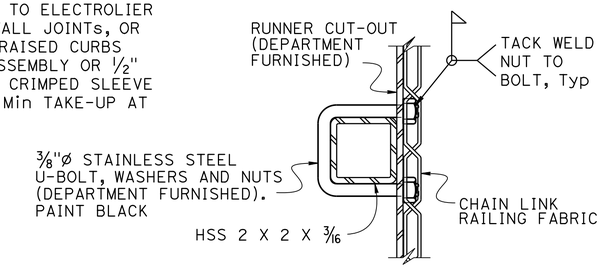

SECTION D-D

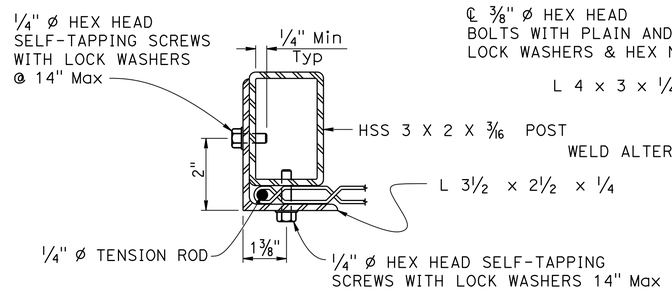

SECTION A-A

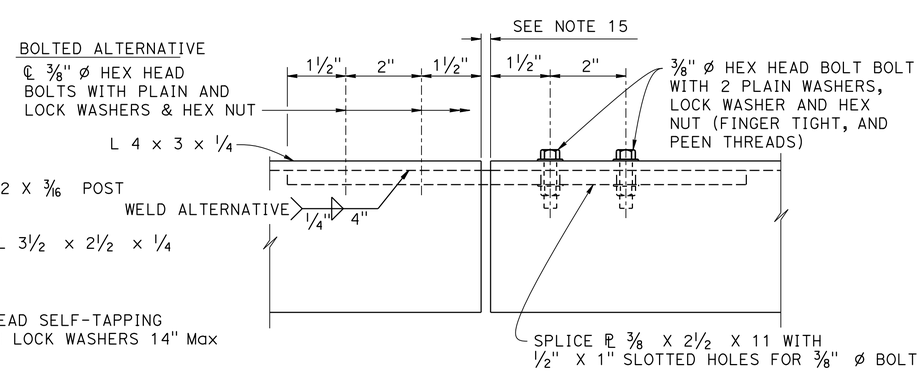

SPLICE OR EXPANSION JOINT DETAIL

NOTES:

1. Vinyl coat railing assembly and chain link fabric, black, after fabrication.
2. Horizontal angle shall be continuous over not less than two intermediate posts except that a shorter length is permitted at expansion joints, electroliers, and other rail discontinuities.
3. Except for posts adjacent to electroliers, install straight posts and straight portions of curved posts normal to bridge profile grade. At electroliers install posts vertical.
4. Fabricate and install top horizontal angle parallel to bridge profile grade. Shop bend top horizontal angle to fit horizontal curves and grade breaks.
5. When railing is on slope, place fabric parallel to the slope.
6. Alternative details may be submitted for Engineer's approval.
7. For details and reinforcement not shown, see "TYPICAL SECTION" sheet.
8. See "STRUCTURE PLAN" sheets for limits of Chain Link Railing.
9. Provide thimbles at all cable loops.
10. Chain link fabric to be 96" wide with 1" mesh and with knuckled selvage top and bottom.
11. When railing is placed on a horizontal alignment with a radius of 150'-0" or less, thread 5/16" cable through 3/8" * welded eye embedded rods 4" into the top of the concrete curb and equally spaced to limit the middle ordinate distance between the 5/16" cable and the curve to 1" max.
12. Holes in posts for 5/16" cable and its anchorages may be field drilled and painted with zinc rich paint.
13. For fencing panels at locations containing pull boxes, adjust location of 5/16" cable and height of 3/8" ø welded eye rods.
14. Bend horizontal components to conform to curve.
15. At expansion joint, provide gap dimension equal to gap for deck joint. Increase slotted hole length and splice PL length accordingly.

	BY	CHECKED
DESIGN	DON NGUYEN-TAN	MIKE CULLEN
DETAILS	D. ELLIOTT/G. DICKERSON	DON NGUYEN-TAN
QUANTITIES	GLORIA REYES-GUTIERREZ	DAVID ALVAREZ

STATE OF CALIFORNIA
DEPARTMENT OF TRANSPORTATION

DIVISION OF ENGINEERING SERVICES
STRUCTURE DESIGN
DESIGN BRANCH 6

BRIDGE NO. 50-0518
POST MILE 49.6

KERN AVENUE POC (REPLACE)
CHAIN LINK RAILING TYPE 7 (MOD) No. 1

STRUCTURES DESIGN DETAIL SHEET (ENGLISH) (REV. 09-01-10)

ORIGINAL SCALE IN INCHES FOR REDUCED PLANS 0 1 2 3

UNIT: 3591
PROJECT NUMBER & PHASE: 06 1400 0266 1 CONTRACT NO.: 06-0H6424

DISREGARD PRINTS BEARING EARLIER REVISION DATES

REVISION DATES 05-06-15 08-28-15 10-06-15

SHEET 40 OF 42

FILE => 50-0518-u-clr_01.dgn

USERNAME => s119704 DATE PLOTTED => 01-JUL-2016 TIME PLOTTED => 14:32

DIST	COUNTY	ROUTE	POST MILES TOTAL PROJECT	SHEET No.	TOTAL SHEETS
06	Ker	99	49.6	105	106

REGISTERED CIVIL ENGINEER — DATE 10-20-15

11-16-15
PLANS APPROVAL DATE

REGISTERED PROFESSIONAL ENGINEER — DON NGUYEN-TAN — No. C 57510 — Exp. 12-31-15 — CIVIL — STATE OF CALIFORNIA

The State of California or its officers or agents shall not be responsible for the accuracy or completeness of scanned copies of this plan sheet.

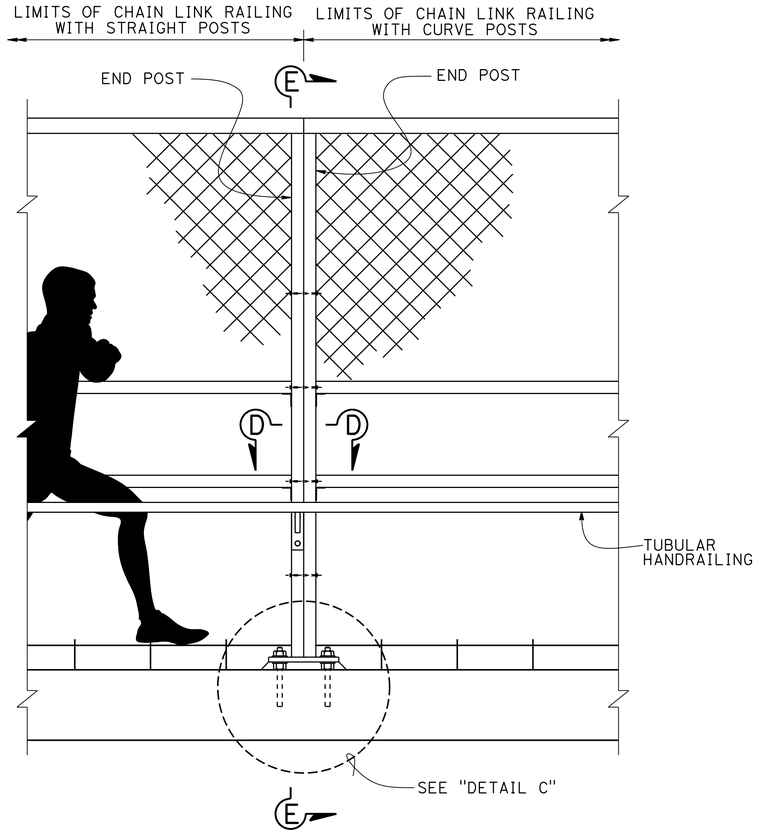

PART ELEVATION
NO SCALE

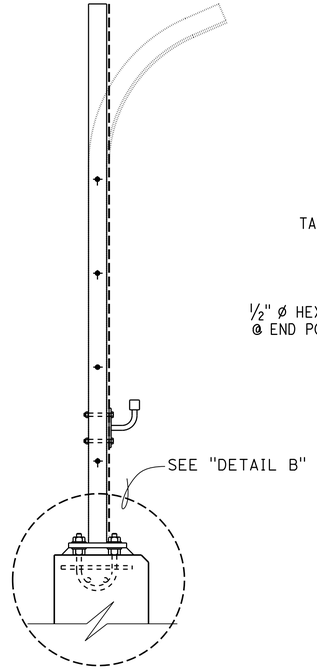

SECTION E-E
NO SCALE

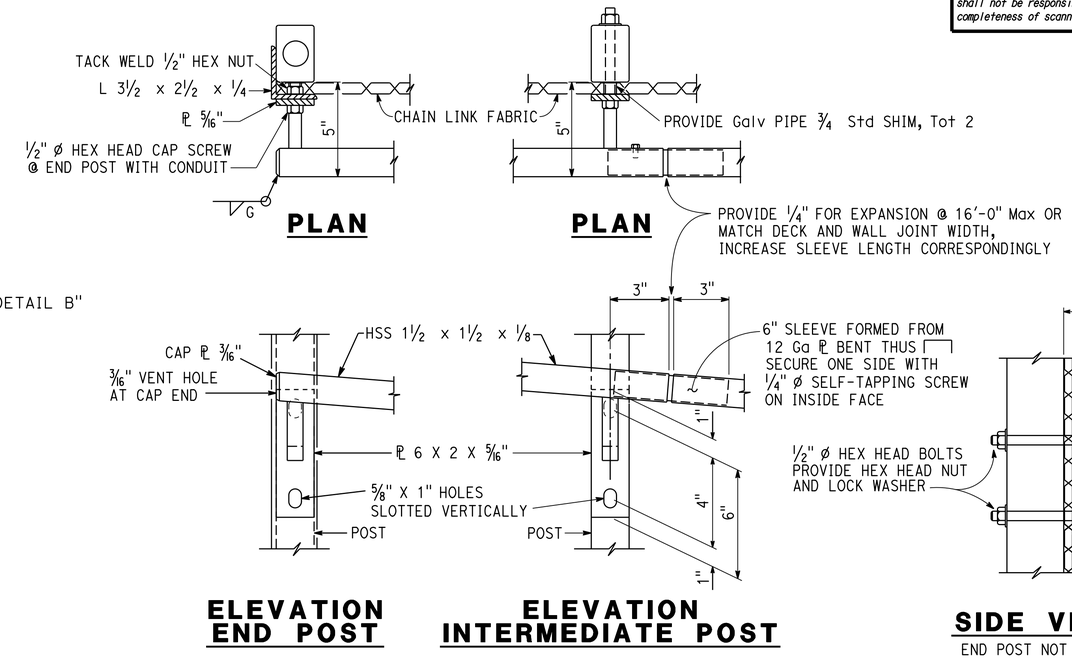

ELEVATION END POST

ELEVATION INTERMEDIATE POST

SIDE VIEW
END POST NOT SHOWN

TUBULAR HANDRAILING BRACKET DETAILS
NO SCALE

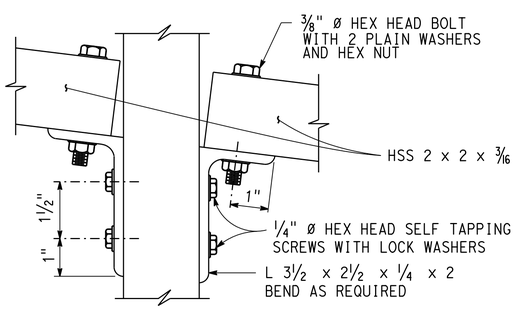

DETAIL A
NO SCALE

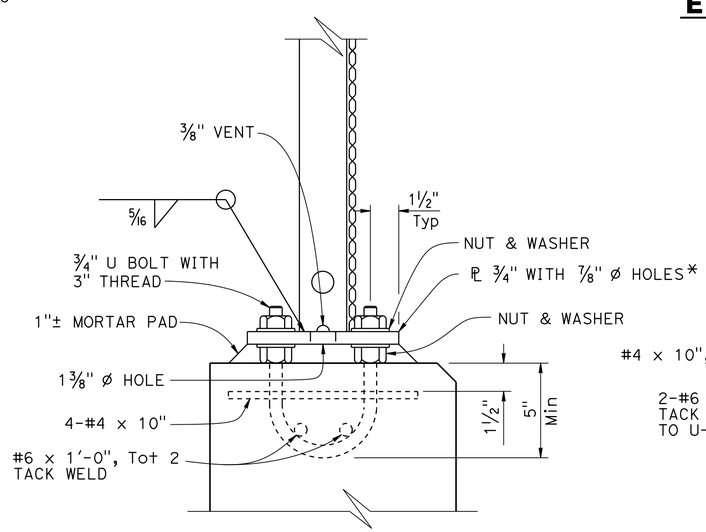

NOTE:
* PL 8 x 8 x 3/4", FOR SINGLE POST
PL 8 x 10 x 3/4", FOR DOUBLE POST

DETAIL B
NO SCALE

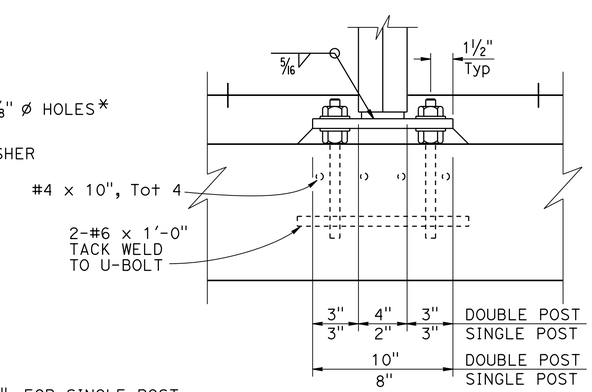

DETAIL C
NO SCALE

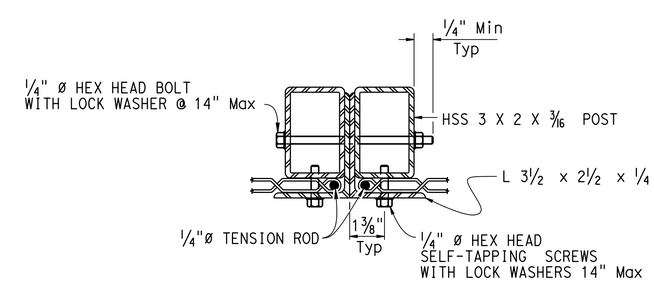

SECTION D-D
NO SCALE

	BY	CHECKED
DESIGN	DON NGUYEN-TAN	MIKE CULLEN
DETAILS	D. ELLIOTT/G. DICKERSON	DON NGUYEN-TAN
QUANTITIES	GLORIA REYES-GUTIERREZ	DAVID ALVAREZ

STATE OF CALIFORNIA
DEPARTMENT OF TRANSPORTATION

DIVISION OF ENGINEERING SERVICES
STRUCTURE DESIGN
DESIGN BRANCH 6

BRIDGE NO. 50-0518
POST MILE 49.6

KERN AVENUE POC (REPLACE)
CHAIN LINK RAILING TYPE 7 (MOD) No. 2

STRUCTURES DESIGN DETAIL SHEET (ENGLISH) (REV. 09-01-10)

ORIGINAL SCALE IN INCHES FOR REDUCED PLANS 0 1 2 3

UNIT: 3591
PROJECT NUMBER & PHASE: 06 1400 0266 1 CONTRACT NO.: 06-0H6424

DISREGARD PRINTS BEARING EARLIER REVISION DATES
REVISION DATES: 05-06-15 08-20-15 10-06-15

SHEET 41 OF 42

FILE => 50-0518-u-clr_02.dgn

USERNAME => s119704 DATE PLOTTED => 01-JUL-2016 TIME PLOTTED => 14:32

FED. ROAD DIV. NO.	STATE	PROJ. NO.	FISCAL YEAR	SHEET NO.	TOTAL SHEETS
7	CAL.			20	21

DIST.	COUNTY	ROUTE	SECTION	SHEET NO.	TOTAL SHEETS
VI	Ker	99	McF	15	14

BRIDGE ENGINEER — CIVIL ENGINEER — LICENSE 1893

DATE APPROVED _____

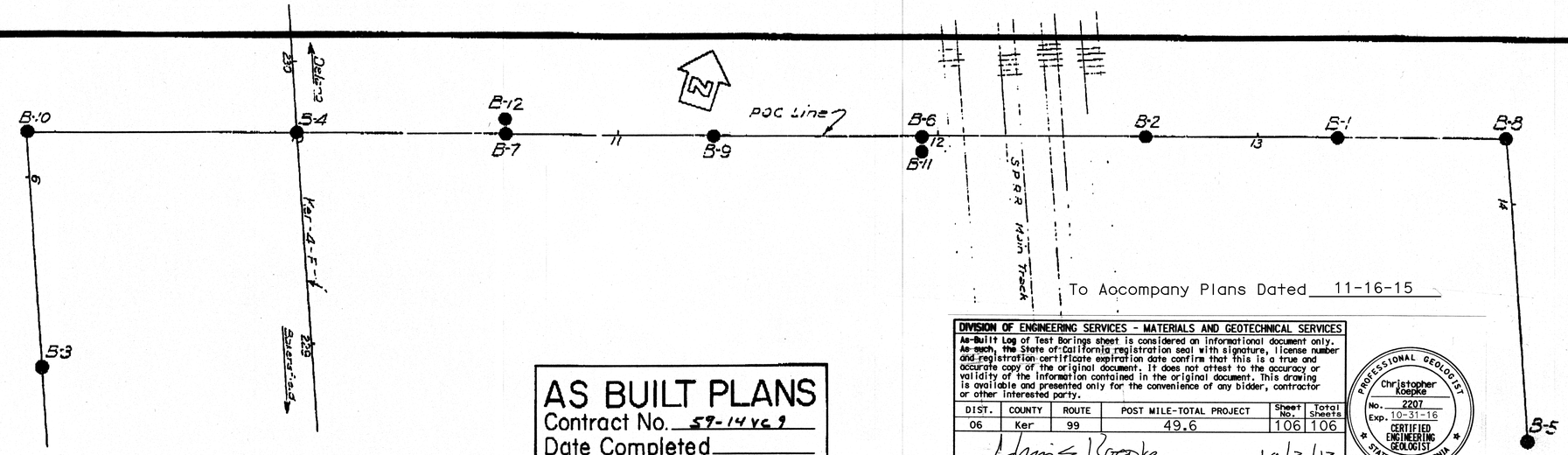

To Accompany Plans Dated 11-16-15

AS BUILT PLANS
Contract No. 59-14 VC 9
Date Completed _____
Document No. 60000973

DIVISION OF ENGINEERING SERVICES - MATERIALS AND GEOTECHNICAL SERVICES

As-Built Log of Test Borings sheet is considered an informational document only. As such, the State of California registration seal with signature, license number and registration certificate expiration date confirm that this is a true and accurate copy of the original document. It does not attest to the accuracy or validity of the information contained in the original document. This drawing is available and presented only for the convenience of any bidder, contractor or other interested party.

DIST.	COUNTY	ROUTE	POST MILE-TOTAL PROJECT	Sheet No.	Total Sheets
06	Ker	99	49.6	106	106

CERTIFIED ENGINEERING GEOLOGIST — DATE 10/3/13

PROFESSIONAL GEOLOGIST — Christopher Koepke — No. 2207 — Exp. 10-31-16 — CERTIFIED ENGINEERING GEOLOGIST — STATE OF CALIFORNIA

KERN AVENUE POC (REPLACE)

LOG OF TEST BORINGS

		CONTRACT No.	BRIDGE No.
UNIT:	3643		
PROJ. No. & PHASE:	0614000266 1	06-0H6424	50-0518

AS-BUILT VERT. DATUM: N/A — DATUM CONVERSION: N/A — Sheet 42 of 42

NOTE: A COPY OF THIS LOG OF TEST BORINGS IS AVAILABLE AT OFFICE OF STRUCTURE MAINTENANCE AND INVESTIGATIONS, SACRAMENTO, CALIFORNIA

BRIDGE DEPARTMENT

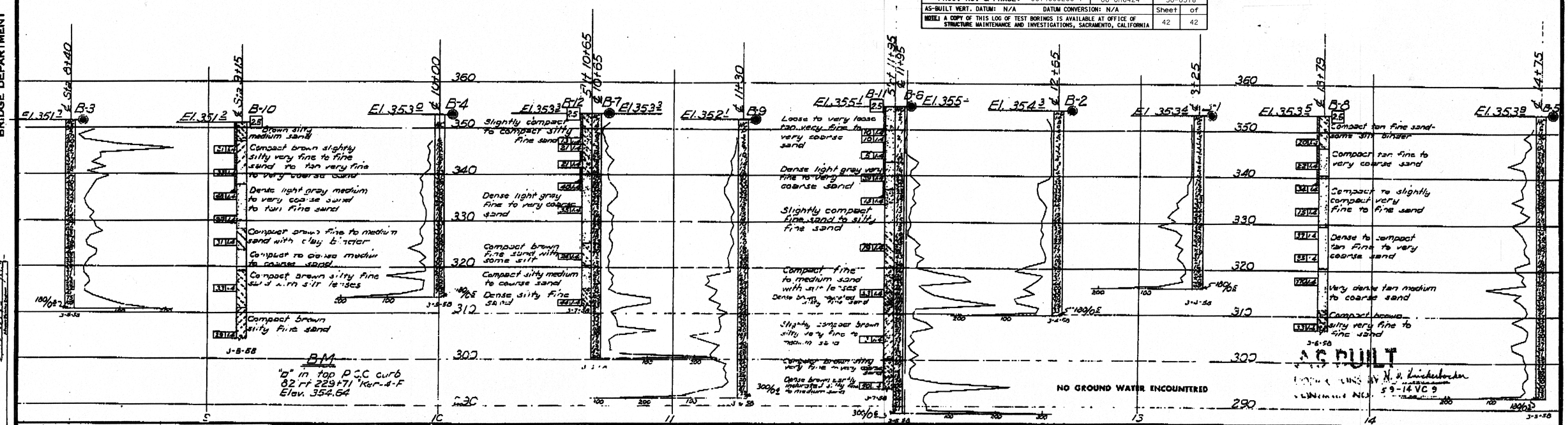

FIELD STUDY	M. Shaulis	3-58
DRAWN	J. Dell	3-58
CHECKED	J. C. Marck	3-58

Approval Recommended by: Geotechnical Engineer

CLASSIFICATION OF MATERIAL BASED ON STANDARD GRADE SIZE LIMITS

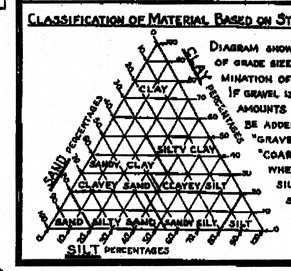

DIAGRAM SHOWING THE BASIS FOR ESTIMATES OF GRADE SIZE DISTRIBUTION USED IN DETERMINATION OF CLASS NAMES. IF GRAVEL IS PRESENT IN APPRECIABLE AMOUNTS THE TERM "GRAVELLY" MAY BE ADDED TO THE CLASS NAME, VIZ. "GRAVELLY SAND." THE TERMS "COARSE", "MEDIUM" AND "FINE" WHEN USED TO DESCRIBE SAND, SILT AND GRAVEL, REFER TO STANDARD GRADE SIZE LIMITS.

LEGEND OF EARTH MATERIALS

- Gravel
- Sand
- Silt
- Clay
- Sandy Clay or Clayey Sand
- Sandy Silt or Silty Sand
- Silty Clay or Clayey Silt
- Peat and/or Organic Matter
- Fill Material
- Igneous Rock
- Sedimentary Rock
- Metamorphic Rock

LEGEND OF BORING OPERATIONS

- Plan of any boring
- Penetrometer
- 2½" Cone Penetrometer
- Sampler boring (dry)
- Rotary boring (wet)
- Auger boring (dry)
- Jet boring
- Core boring
- Test pit

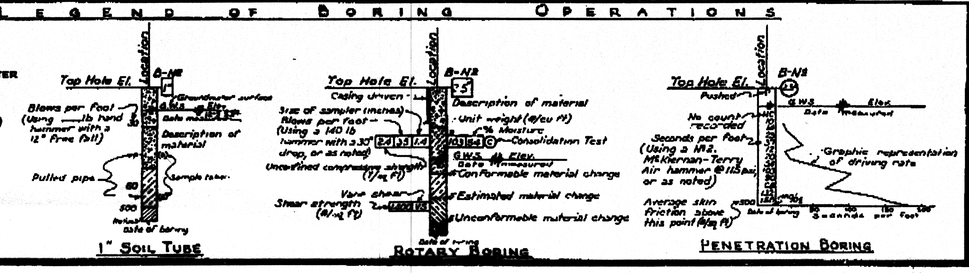

NOTES

The contractor's attention is directed to Section 2, Article (c) of the Standard Specifications and to the Special Provisions accompanying this set of plans.

Classification of earth material as shown on this sheet is based upon field inspection and is not to be construed to imply mechanical analysis.

STATE OF CALIFORNIA
DEPARTMENT OF PUBLIC WORKS
DIVISION OF HIGHWAYS

KERN AVENUE PEDESTRIAN OVERCROSSING

LOG OF TEST BORINGS

SCALE Horiz. 1"=30' Vert. 1"=10' — BRIDGE 50-224 — FILE 6-50 — DRAWING C-5450-13

PREL. DRAWING NO. P-5450 — 26/32

20