ACSTP-000C(442)E

Dist	COUNTY	ROUTE	POST MILES TOTAL PROJECT	SHEET No.	TOTAL SHEETS
06	Fre, Kin	33, 41, 43	Var	1	62

STATE OF CALIFORNIA

DEPARTMENT OF TRANSPORTATION

PROJECT PLANS FOR CONSTRUCTION ON

STATE HIGHWAY

IN FRESNO AND KINGS COUNTIES AT VARIOUS LOCATIONS

TO BE SUPPLEMENTED BY STANDARD PLANS DATED JULY 2010

INDEX OF PLANS

SHEET No.	DESCRIPTION
1	TITLE AND LOCATION MAP
2-5	CONSTRUCTION DETAILS
6	UTILITIES
7	CONSTRUCTION AREA SIGNS
8	SUMMARY OF QUANTITIES
9-13	EROSION CONTROL PLANS
14-27	RSP
28-62	STRUCTURAL PLANS

THE STANDARD PLANS LIST APPLICABLE TO THIS CONTRACT IS INCLUDED IN THE NOTICE TO BIDDERS AND SPECIAL PROVISIONS BOOK.

LOCATION MAP

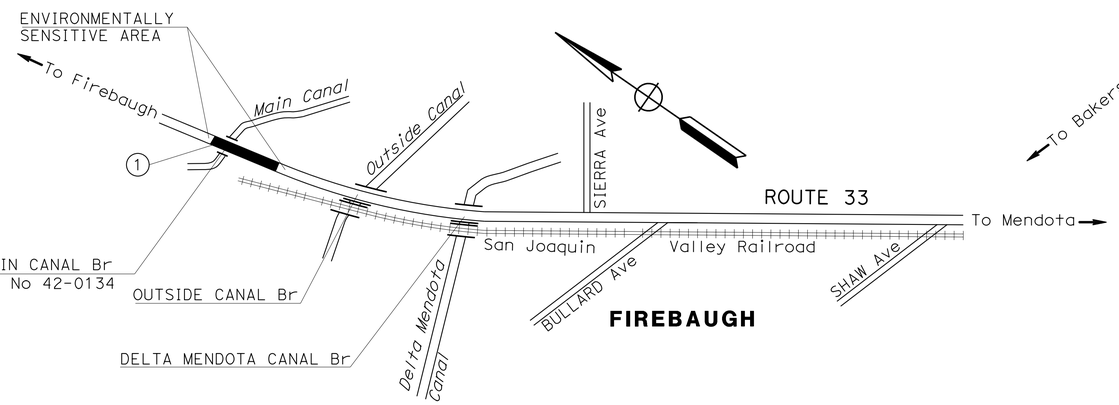

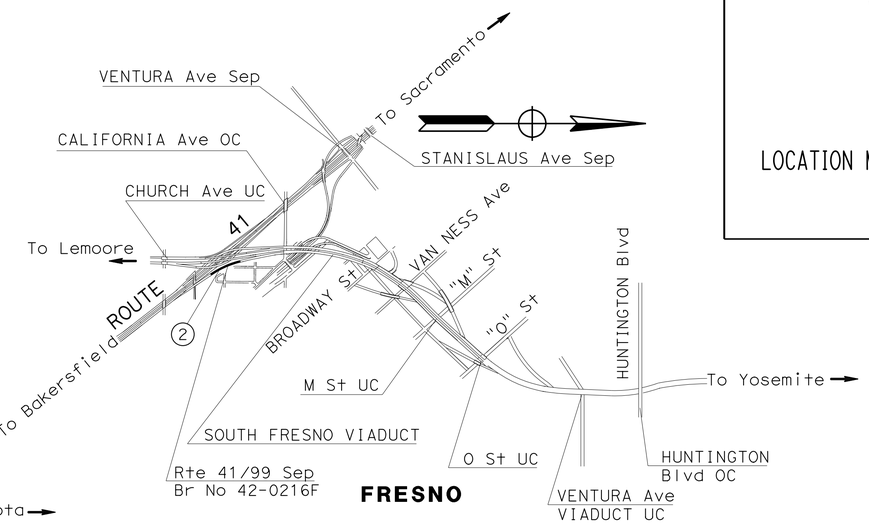

LOCATIONS OF CONSTRUCTION

LOC	COUNTY	ROUTE	PM	NAME OF BRIDGE	BRIDGE NO.
1	Fre	33	69.1	Central California Irrigation District (CCID) Main Canal	42-0134
2	Fre	41	R21.81	Rte 41-99 Connector	42-0216F
3	Kin	41	32.26	Kings River	45-0007
4	Kin	43	26.76	Kings River	45-0064

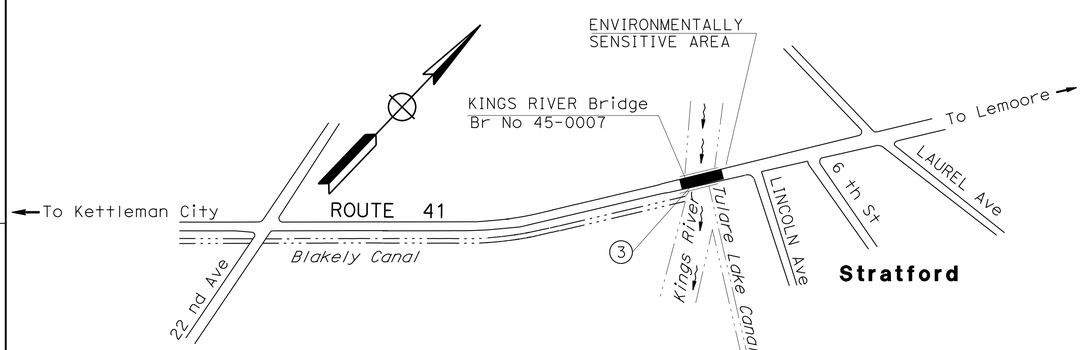

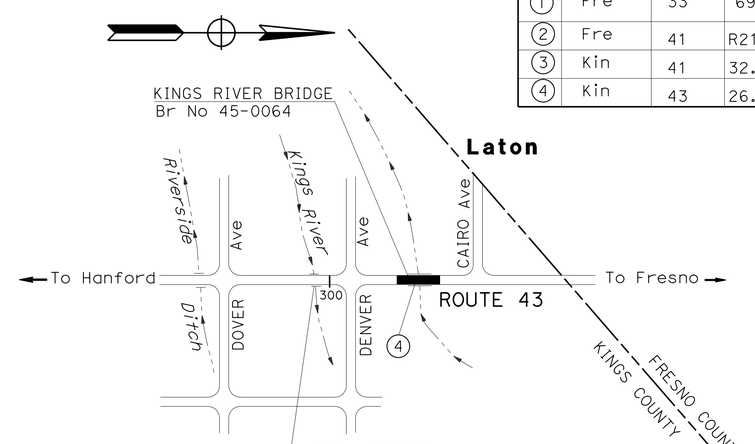

NO SCALE

THE CONTRACTOR SHALL POSSESS THE CLASS (OR CLASSES) OF LICENSE AS SPECIFIED IN THE "NOTICE TO BIDDERS."

Amit Nijhawan 03-15-16
PROJECT ENGINEER DATE
REGISTERED CIVIL ENGINEER

March 28, 2016
PLANS APPROVAL DATE

REGISTERED PROFESSIONAL ENGINEER AMIT NIJHAWAN No. 78061 Exp. 09-30-17 CIVIL STATE OF CALIFORNIA

THE STATE OF CALIFORNIA OR ITS OFFICERS OR AGENTS SHALL NOT BE RESPONSIBLE FOR THE ACCURACY OR COMPLETENESS OF SCANNED COPIES OF THIS PLAN SHEET.

CONTRACT No.	06-0K8004
PROJECT ID	0612000110

PROJECT MANAGER JEANNIE WILEY
DESIGN ENGINEER ARTHUR RAMIREZ

LAST REVISION 03-15-16 DATE PLOTTED => 30-JUN-2016 TIME PLOTTED => 08:52

Dist	COUNTY	ROUTE	POST MILES TOTAL PROJECT	SHEET No.	TOTAL SHEETS
06	Fre,Kin	33,41,43	Var	2	62

REGISTERED CIVIL ENGINEER 03-15-16 DATE

3-28-16
PLANS APPROVAL DATE

REGISTERED PROFESSIONAL ENGINEER AMIT NIJHAWAN No. 78061 Exp 09-30-17 CIVIL STATE OF CALIFORNIA

THE STATE OF CALIFORNIA OR ITS OFFICERS OR AGENTS SHALL NOT BE RESPONSIBLE FOR THE ACCURACY OR COMPLETENESS OF SCANNED COPIES OF THIS PLAN SHEET.

LEGEND:

INDICATES EXISTING STRUCTURE

INDICATES LOCATION OF EXISTING HINGE OPENING (TO REMAIN)

0.20′ COLD PLANE AC Pvmt
0.20′ HMA (TYPE A)

PAVEMENT TRANSITION

0′-0.06′ HMA (TYPE A)
0.20′ COLD PLANE AC Pvmt
0.20′ HMA (TYPE A)

PAVEMENT CLIMATE REGION

INLAND VALLEY

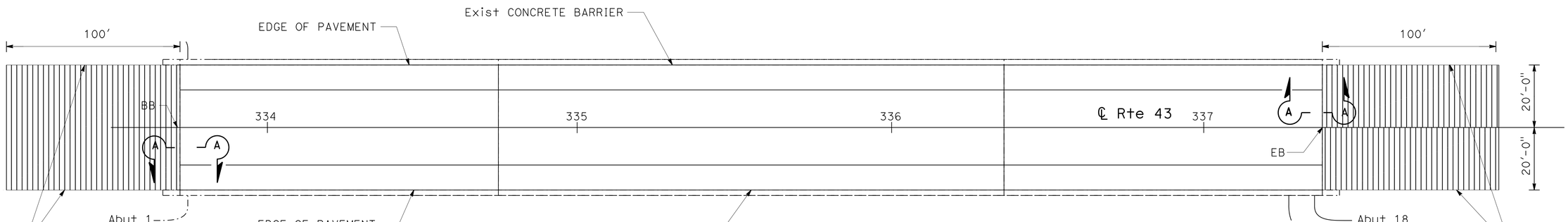

PLAN

Kin-43-26.76
(Br No 45-0064)
Loc 4

TYPICAL PAVEMENT TRANSITION

SECTION A-A

CONSTRUCTION DETAILS

NO SCALE

C-1

STATE OF CALIFORNIA - DEPARTMENT OF TRANSPORTATION
Caltrans®
DESIGN

FUNCTIONAL SUPERVISOR: ARTHUR RAMIREZ
CALCULATED-DESIGNED BY: SHAKILA HANIF
CHECKED BY: AMIT NIJHAWAN
REVISED BY
DATE REVISED

LAST REVISION 03-15-16
DATE PLOTTED => 01-APR-2016
TIME PLOTTED => 10:33

Dist	COUNTY	ROUTE	POST MILES TOTAL PROJECT	SHEET No.	TOTAL SHEETS
06	Fre,Kin	33,41,43	Var	3	62

Amit Nijhawan - 03-15-16
REGISTERED CIVIL ENGINEER DATE

3-28-16
PLANS APPROVAL DATE

REGISTERED PROFESSIONAL ENGINEER AMIT NIJHAWAN No. 78061 Exp. 09-30-17 CIVIL STATE OF CALIFORNIA

THE STATE OF CALIFORNIA OR ITS OFFICERS OR AGENTS SHALL NOT BE RESPONSIBLE FOR THE ACCURACY OR COMPLETENESS OF SCANNED COPIES OF THIS PLAN SHEET.

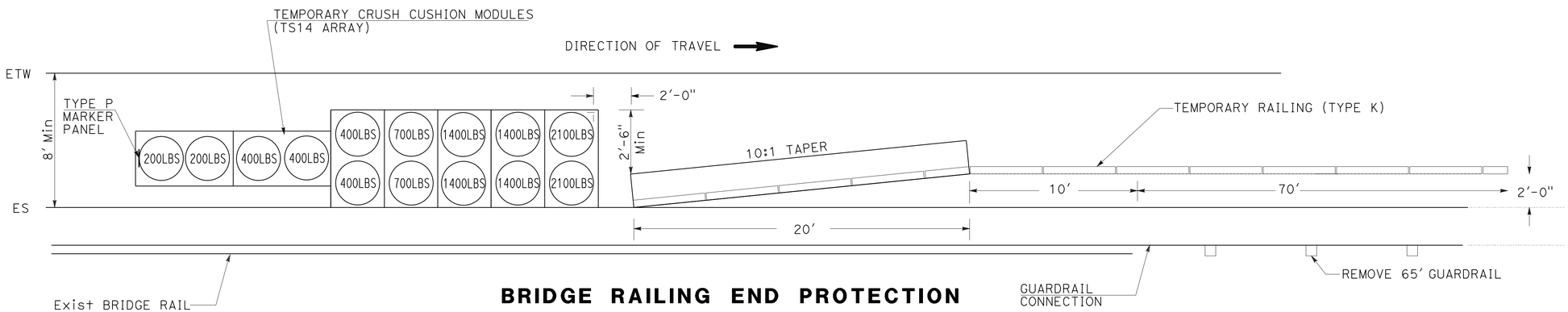

BRIDGE RAILING END PROTECTION

NB/SB Rte 43 AT KINGS RIVER BRIDGE APPROACH
LOC 4

CONSTRUCTION DETAILS

NO SCALE

C-2

STATE OF CALIFORNIA - DEPARTMENT OF TRANSPORTATION
Caltrans
DESIGN

FUNCTIONAL SUPERVISOR: ARTHUR RAMIREZ
CALCULATED-DESIGNED BY: SHAKILA HANIF
CHECKED BY: AMIT NIJHAWAN
REVISED BY
DATE REVISED

LAST REVISION 03-15-16
DATE PLOTTED => 01-APR-2016
TIME PLOTTED => 10:33

Dist	COUNTY	ROUTE	POST MILES TOTAL PROJECT	SHEET No.	TOTAL SHEETS
06	Fre, Kin	33,41,43	Var	4	62

REGISTERED CIVIL ENGINEER 03-15-16 DATE

3-28-16
PLANS APPROVAL DATE

REGISTERED PROFESSIONAL ENGINEER AMIT NIJHAWAN No. 78061 Exp. 09-30-17 CIVIL STATE OF CALIFORNIA

THE STATE OF CALIFORNIA OR ITS OFFICERS OR AGENTS SHALL NOT BE RESPONSIBLE FOR THE ACCURACY OR COMPLETENESS OF SCANNED COPIES OF THIS PLAN SHEET.

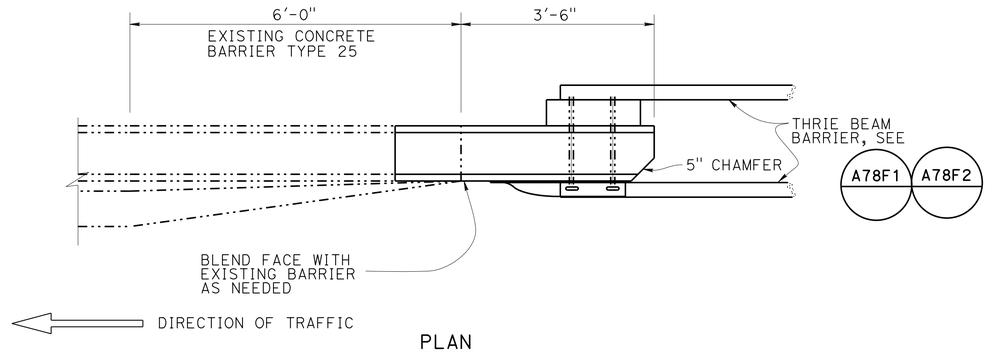

PLAN

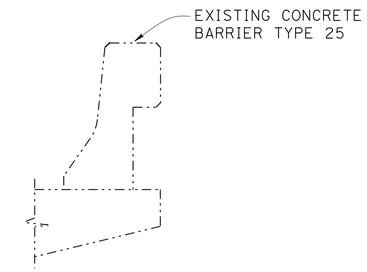

Exist CONCRETE BARRIER TYPE 25

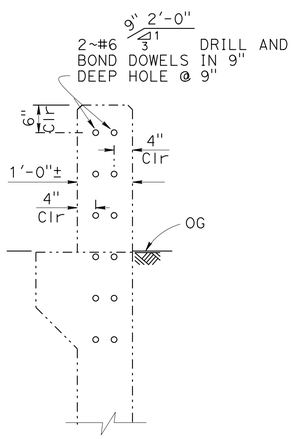

SECTION A-A

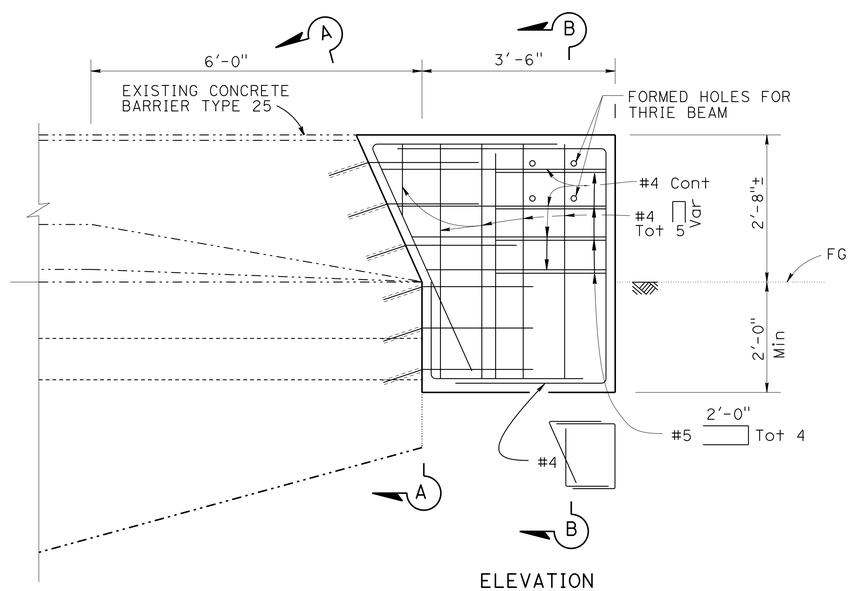

ELEVATION

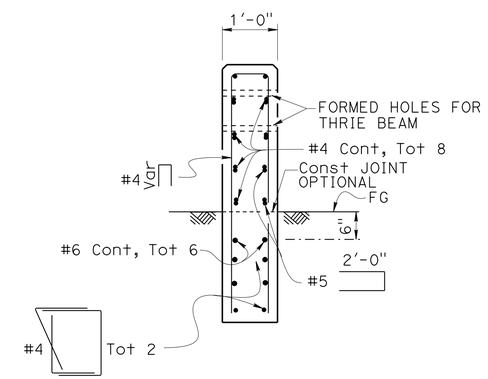

NOTE:
Thrie Beam not shown

SECTION B-B

BRIDGE RAILING CONNECTION - ANCHOR BLOCK TO TYPE 25 BARRIER
KINGS RIVER BRIDGE AT ROUTE 43

CONSTRUCTION DETAILS

SCALE: 3/4"=1'-0"

C-3

STATE OF CALIFORNIA - DEPARTMENT OF TRANSPORTATION
DESIGN
Caltrans
FUNCTIONAL SUPERVISOR: ARTHUR RAMIREZ
CALCULATED-DESIGNED BY: SHAKILA HANIF
CHECKED BY: AMIT NIJHAWAN
REVISED BY
DATE REVISED

LAST REVISION 03-15-16
DATE PLOTTED => 01-APR-2016
TIME PLOTTED => 10:33

Dist	COUNTY	ROUTE	POST MILES TOTAL PROJECT	SHEET No.	TOTAL SHEETS
06	Fre,Kin	33,41,43	Var	5	62

REGISTERED CIVIL ENGINEER DATE 03-15-16

3-28-16
PLANS APPROVAL DATE

REGISTERED PROFESSIONAL ENGINEER AMIT NIJHAWAN No. 78061 Exp. 09-30-17 CIVIL STATE OF CALIFORNIA

THE STATE OF CALIFORNIA OR ITS OFFICERS OR AGENTS SHALL NOT BE RESPONSIBLE FOR THE ACCURACY OR COMPLETENESS OF SCANNED COPIES OF THIS PLAN SHEET.

SPECIES PROTECTION AREAS

IDENTIFICATION	LOCATION
SPA 1: MAIN CANAL, BR NO 42-0134	FRE-33-PM 69.1
SPA 2: SR 41/SR 99 CONNECTOR BR NO 42-0216F	FRE-41-PM R21.81
SPA 3: KINGS RIVER, BR NO 45-0007	KIN-41-PM 32.26
SPA 4: KINGS RIVER DUTCH JOHN CUT BR NO 45-0064	KIN-43-PM 26.76

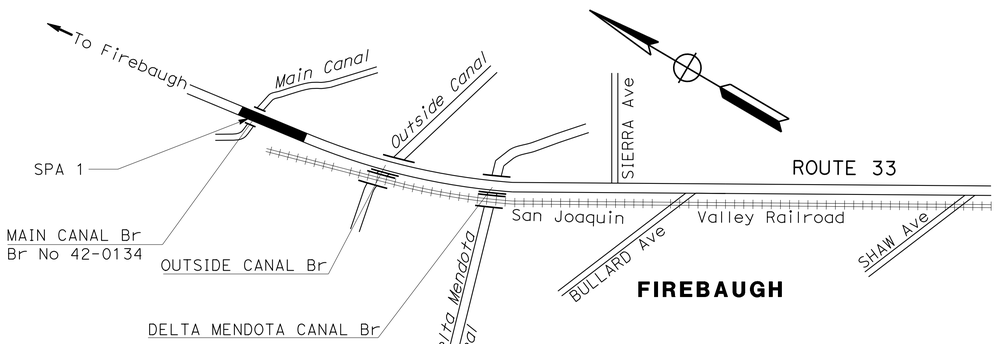

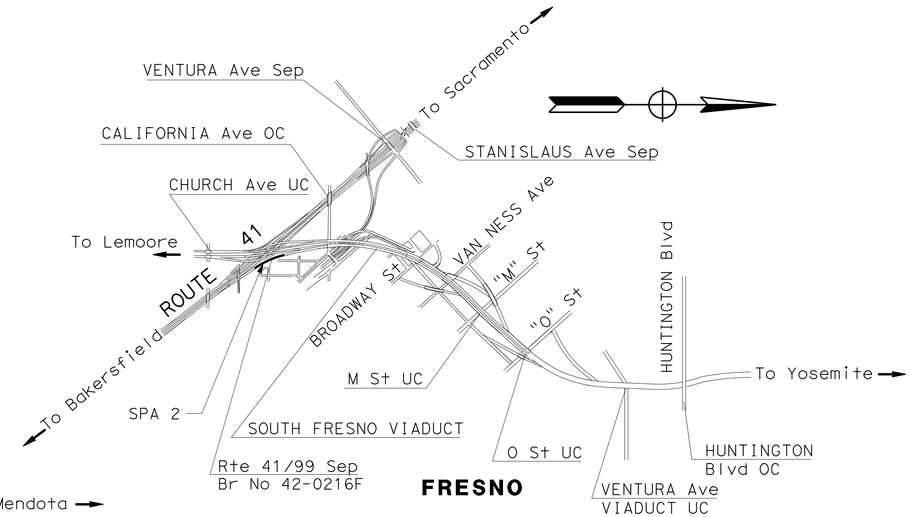

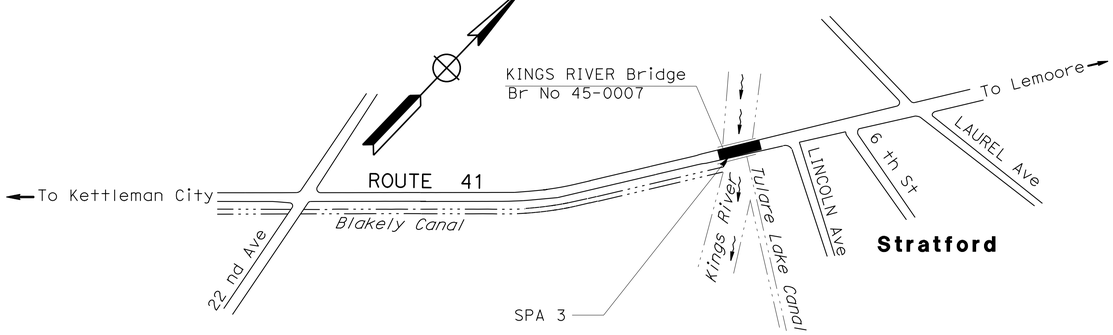

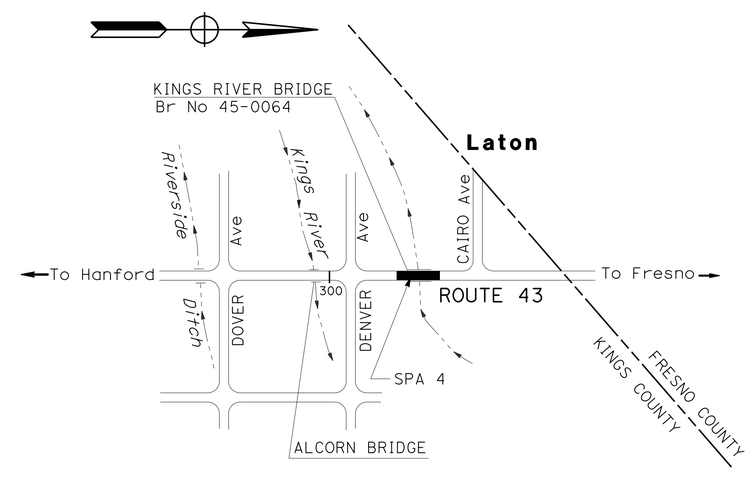

CONSTRUCTION DETAILS

NO SCALE

C-4

STATE OF CALIFORNIA - DEPARTMENT OF TRANSPORTATION
DESIGN
Caltrans

FUNCTIONAL SUPERVISOR: ARTHUR RAMIREZ
CALCULATED-DESIGNED BY: SHAKILA HANIF
CHECKED BY: AMIT NIJHAWAN
REVISED BY
DATE REVISED

LAST REVISION 03-15-16 | DATE PLOTTED => 01-APR-2016 | TIME PLOTTED => 10:33

Dist	COUNTY	ROUTE	POST MILES TOTAL PROJECT	SHEET No.	TOTAL SHEETS
06	Fre, Kin	33,41,43	Var	6	62

REGISTERED CIVIL ENGINEER DATE 03-15-16

3-28-16
PLANS APPROVAL DATE

REGISTERED PROFESSIONAL ENGINEER AMIT NIJHAWAN No. 78061 Exp. 09-30-17 CIVIL STATE OF CALIFORNIA

THE STATE OF CALIFORNIA OR ITS OFFICERS OR AGENTS SHALL NOT BE RESPONSIBLE FOR THE ACCURACY OR COMPLETENESS OF SCANNED COPIES OF THIS PLAN SHEET.

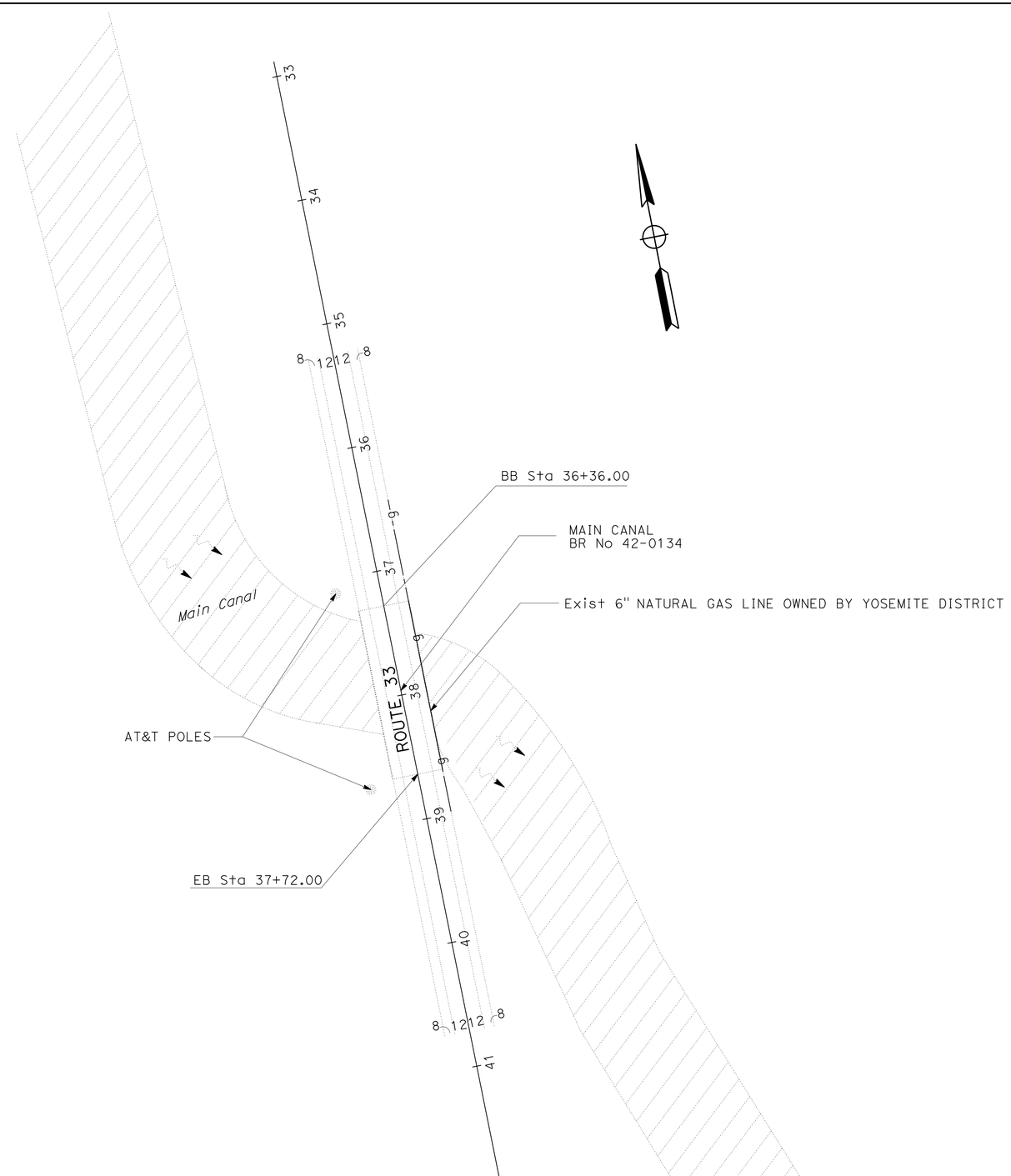

Br No 42-0134
CCID MAIN CANAL
Fre-33-69.1

NO SCALE

UTILITIES

U-1

STATE OF CALIFORNIA - DEPARTMENT OF TRANSPORTATION	FUNCTIONAL SUPERVISOR	CALCULATED-DESIGNED BY	REVISED BY
Caltrans® DESIGN	ARTHUR RAMIREZ	SHAKILA HANIF	
		CHECKED BY	DATE REVISED
		AMIT NIJHAWAN	

LAST REVISION 03-15-16 | DATE PLOTTED => 01-APR-2016 | TIME PLOTTED => 10:34

Dist	COUNTY	ROUTE	POST MILES TOTAL PROJECT	SHEET No.	TOTAL SHEETS
06	Fre, Kin	33, 41, 43	Var	7	62

REGISTERED CIVIL ENGINEER 09-16-15 DATE

3-28-16
PLANS APPROVAL DATE

REGISTERED PROFESSIONAL ENGINEER HASSAN M. TAHA No. 60130 Exp. 06/30/16 CIVIL STATE OF CALIFORNIA

THE STATE OF CALIFORNIA OR ITS OFFICERS OR AGENTS SHALL NOT BE RESPONSIBLE FOR THE ACCURACY OR COMPLETENESS OF SCANNED COPIES OF THIS PLAN SHEET.

STATIONARY MOUNTED CONSTRUCTION AREA SIGNS

SIGN No.	SIGN CODE	PANEL SIZE	SIGN MESSAGE	No. OF POSTS AND SIZE	NUMBER OF SIGNS
A	W20-1	60" x 60"	ROAD WORK AHEAD	2 - 6" x 6"	7
B	C14 (CA)	48" x 24"	END WORK AHEAD	1 - 4" x 6"	7

NOTE: LOCATION OF CONSTRUCTION AREA SIGNS ARE APPROXIMATE.
EXACT LOCATIONS TO BE DETERMINED BY THE ENGINEER.

PAVEMENT DELINEATION QUANTITIES

ROUTE 43 KINGS RIVER BR No 45-0064		DIRECTION	DETAIL No.	PAVEMENT MARKER (RETROREFLECTIVE)	THERMOPLASTIC TRAFFIC STRIPE	
				TYPE D	4" SOLID	4" (BROKEN 36-12)
FROM	TO			EA	LF	LF
332+50	338+50	NB	27B		600	
			19	16	600	600
		SB	27B		600	
TOTAL				16	1800	600

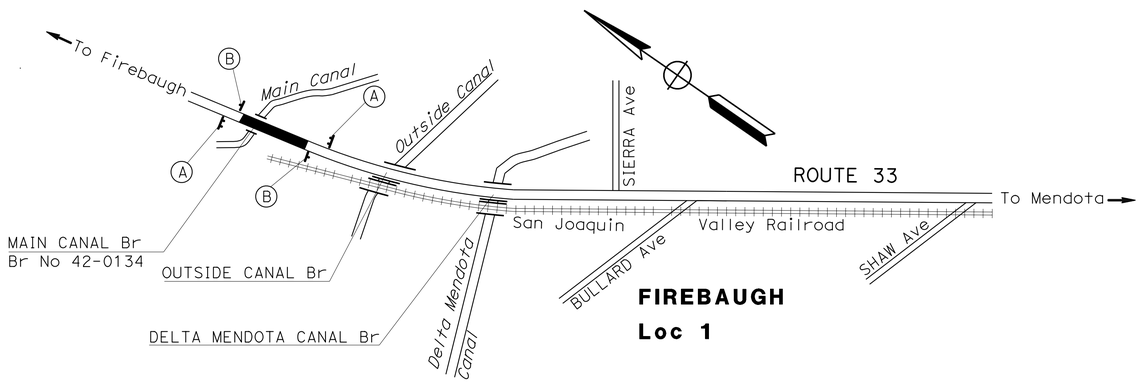

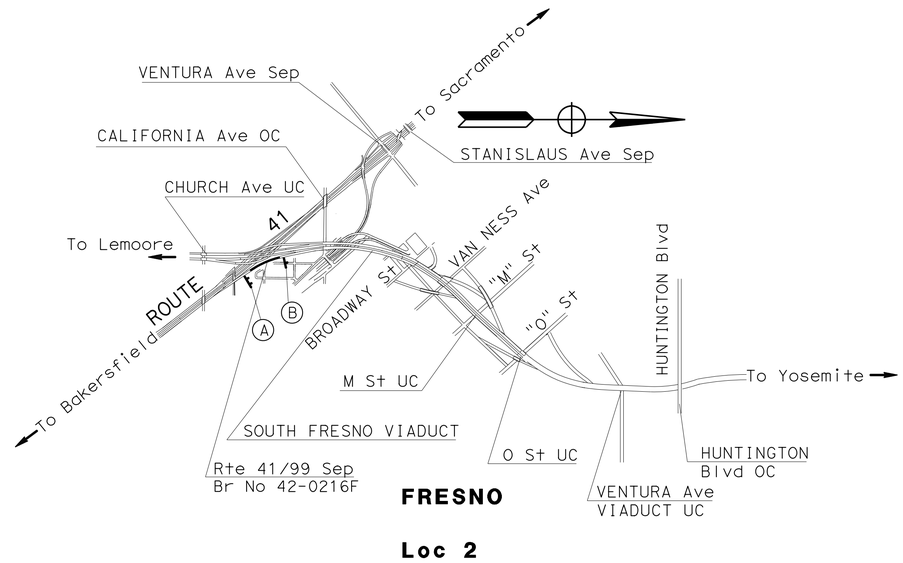

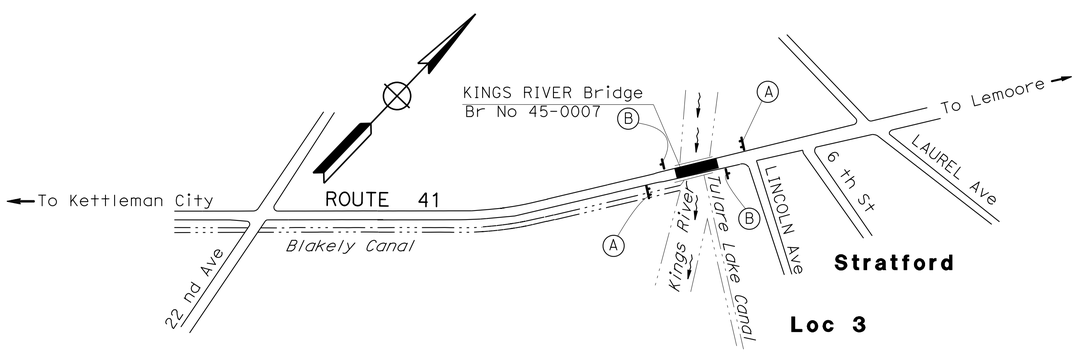

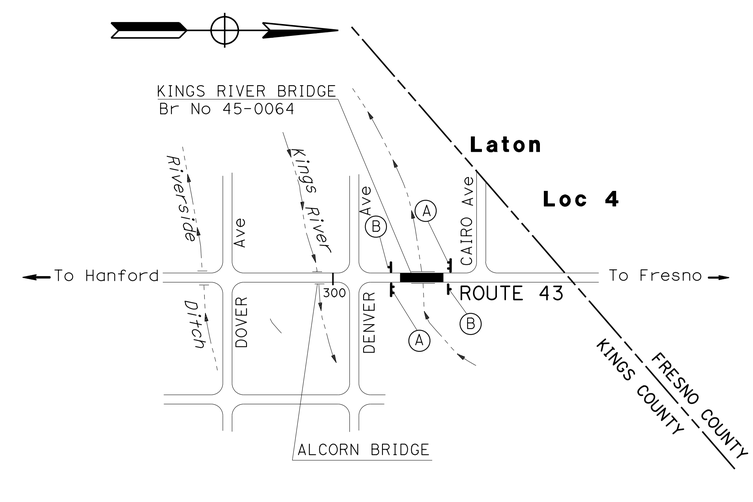

APPROVED FOR CONSTRUCTION AREA SIGN WORK ONLY

CONSTRUCTION AREA SIGNS AND PAVEMENT DELINEATION QUANTITIES

NO SCALE

CS-1

STATE OF CALIFORNIA - DEPARTMENT OF TRANSPORTATION
Caltrans
TRAFFIC DESIGN

FUNCTIONAL SUPERVISOR: MOHAMMED QATAMI
CALCULATED-DESIGNED BY: AMARJIT S DHILLON
CHECKED BY: HASSAN TAHA
REVISED BY
DATE REVISED

LAST REVISION 03-08-16 | DATE PLOTTED => 01-APR-2016 | TIME PLOTTED => 10:34

Dist	COUNTY	ROUTE	POST MILES TOTAL PROJECT	SHEET No.	TOTAL SHEETS
06	Fre,Kin	33,41,43	Var	8	62

REGISTERED CIVIL ENGINEER DATE 03-15-16

3-28-16
PLANS APPROVAL DATE

REGISTERED PROFESSIONAL ENGINEER AMIT NIJHAWAN No. 78061 Exp 09-30-17 CIVIL STATE OF CALIFORNIA

THE STATE OF CALIFORNIA OR ITS OFFICERS OR AGENTS SHALL NOT BE RESPONSIBLE FOR THE ACCURACY OR COMPLETENESS OF SCANNED COPIES OF THIS PLAN SHEET.

MIDWEST GUARDRAIL, Temp RAILING, Temp CRASH CUSHION

DIRECTION	LOCATION		MIDWEST GUARDRAIL SYSTEM (STEEL POST)	ALTERNATIVE FLARED TERMINAL SYSTEM	LAYOUT TYPE (N)	TRANSITION RAILING (TYPE WB-31)	REMOVE GUARDRAIL	CONCRETE BARRIER TRANSITION	TREATED WOOD WASTE	TEMPORARY RAILING (TYPE K)	TEMPORARY CRASH CUSHION MODULE (TS 14 ARRAY)
	PM	DESCRIPTION	LF	EA		EA	LF	LF	LB	LF	EA
SB	26.71	Rte 43 KINGS RIVER (Br No 45-0064)	25.0	1	12B	1	63.0	3.5	1200	100	14
NB	26.78	Rte 43 KINGS RIVER (Br No 45-0064)	25.0	1	12B	1	63.0	3.5	1200	100	14
		TOTAL	50.0	2		2	126.0	7.0	2400	200	28

(N)-NOT A SEPARATE PAY ITEM, FOR INFORMATION ONLY

WATER POLLUTION CONTROL

DIRECTION	DESCRIPTION	LOCATION	Temp CONSTRUCTION ENTRANCE
			EA
NB	CCID MAIN CANAL	Rte 33 PM 69.1 (Br No 42-0134)	1
NB	SR 41-99 CONNECTOR	Rte 41 PM R21.81 (Br No 42-0216F)	1
NB	KINGS RIVER	Rte 41 PM 32.26 (Br No 45-0007)	1
NB	KINGS RIVER	Rte 43 26.76 (Br No 45-0064)	1
		TOTAL	4

ROADWAY QUANTITES

DIRECTION	LOCATION	HOT MIX ASPHALT (TYPE A)	COLD PLANE ASPHALT CONCRETE PAVEMENT	SHOULDER BACKING
		TON	SQYD	TON
NB	Rte 43 26.76 (Br No 45-0064)	70	450	5
SB	Rte 43 26.76 (Br No 45-0064)	70	450	5
	TOTAL	140	900	10

SUMMARY OF QUANTITIES

Q-1

STATE OF CALIFORNIA - DEPARTMENT OF TRANSPORTATION
Caltrans DESIGN

FUNCTIONAL SUPERVISOR: ARTHUR RAMIREZ
CALCULATED-DESIGNED BY: SHAKILA HANIF
CHECKED BY: AMIT NIJHAWAN
REVISED BY
DATE REVISED

LAST REVISION 03-15-16 | DATE PLOTTED => 01-APR-2016 | TIME PLOTTED => 10:34

Dist	COUNTY	ROUTE	POST MILES TOTAL PROJECT	SHEET No.	TOTAL SHEETS
06	Fre,Kin	33,41,43	Var	9	62

LICENSED LANDSCAPE ARCHITECT

3-28-16

PLANS APPROVAL DATE

LICENSED LANDSCAPE ARCHITECT MICHAEL W. MILLS No.4179 Signature 11/30/16 Renewal Date 2/22/16 Date STATE OF CALIFORNIA

THE STATE OF CALIFORNIA OR ITS OFFICERS OR AGENTS SHALL NOT BE RESPONSIBLE FOR THE ACCURACY OR COMPLETENESS OF SCANNED COPIES OF THIS PLAN SHEET.

EROSION CONTROL

SEQUENCE	ITEM	MATERIAL DESCRIPTION	MATERIAL TYPE	APPLICATION RATE	REMARKS
STEP 1	COMPOST	COMPOST	MEDIUM	1,000 LB/ACRE	
STEP 2	INCORPORATE MATERIALS	COMPOST			4" DEPTH
STEP 3	HYDROSEED	ORGANIC FERTILIZER		800 LB/ACRE	
		MYCORRHIZAL INOCULUM	AM 120	60 LB/ACRE	
		SEED	MIX	24.0 LB/ACRE	
		FIBER	WOOD	500 LB/ACRE	
STEP 4	HYDROMULCH	FIBER	WOOD	2,000 LB/ACRE	
		TACKIFIER	PSYLLIUM	150 LB/ACRE	

SEED MIX

BOTANICAL NAME (COMMON NAME)	PERCENT GERMINATION (MINIMUM)	POUNDS PURE LIVE SEED PER ACRE (SLOPE MEASUREMENT)
AMSINCKIA INTERMEDIA (COMMON FIDDLENECK)	60	2.0
ATRIPLEX LENTIFORMIS (BIG SALTBUSH)	50	4.0
CROTON SETIGERUS (DOVE WEED)	40	2.0
DATURA WRIGHTII (JIMSONWEED)	80	1.0
HORDEUM DEPRESSUM (ALKALI BARLEY)	70	8.0
LEPTOCHLOA FUSCA FASCICULARIS (BEARDED SPRANGLETOP)	70	1.0
LEYMUS TRITICOIDES (CREEPING WILD RYE)	80	4.0
SCHOENOPLECTUS CALIFORNICUS (CALIFORNIA BULRUSH)	70	2.0

TEMPORARY FENCE (TYPE ESA)

SHEET	LOCATION STATION	L†	R†	TFESA LF
EC-1	Fre 33 35+57.00 TO 36+55.00	X		140
EC-1	Fre 33 37+37.00 TO 38+75.00		X	260
EC-3	Kin 41 205+30.00 TO 206+70.00	X		140
EC-3	Kin 41 205+02.00 TO 205+52.00		X	50
EC-4	Kin 43 335+28.00 TO 335+78.00	X		50
EC-4	Kin 43 336+60.00 TO 337+74.00		X	378
TOTAL				1018

EROSION CONTROL QUANTITIES

SHEET	LOCATION STATION	L†	R†	COMPOST SQFT	INCORPORATE MATERIALS SQFT	HYDROSEED SQFT	HYDROMULCH SQFT	WOOD MULCH SHREDDED BARK CY	REMARKS
EC-1	Fre 33 35+57.00 TO 36+55.00		X	1,550	1,550	1,550	1,550		
EC-1	Fre 33 37+64.00 TO 38+75.00	X		2,100	2,100	2,100	2,100		
EC-1	Fre 33 37+37.00 TO 38+75.00		X	6,840	6,840	6,840	6,840		
EC-2	Fre 41 1116+00.00 TO 1118+35	X	X					460	6" DEEP
EC-3	Kin 41 202+41.00 TO 203+39.00		X	1,890	1,890	1,890	1,890		
EC-3	Kin 41 205+00.00 TO 206+71.00		X	3,250	3,250	3,250	3,250		
EC-4	Kin 43 333+35.00 TO 334+23.00	X		1,650	1,650	1,650	1,650		
EC-4	Kin 43 335+27.00 TO 338+39.00	X		5,900	5,900	5,900	5,900		
TOTAL				23,180	23,180	23,180	23,180	460	

EROSION CONTROL LEGEND AND QUANTITIES

ECL-1

REVISED BY | DATE REVISED

MICHAEL MILLS | CHARLES LaRUE

CALCULATED-DESIGNED BY | CHECKED BY

SENIOR LANDSCAPE ARCHITECT

BRAD COLE

STATE OF CALIFORNIA - DEPARTMENT OF TRANSPORTATION

Caltrans® LANDSCAPE ARCHITECTURE

LAST REVISION 02-22-16 | DATE PLOTTED => 01-APR-2016 | TIME PLOTTED => 10:34

Dist	COUNTY	ROUTE	POST MILES TOTAL PROJECT	SHEET No.	TOTAL SHEETS
06	Fre,Kin	33,41,43	Var	10	62

LICENSED LANDSCAPE ARCHITECT

3-28-16

PLANS APPROVAL DATE

LICENSED LANDSCAPE ARCHITECT MICHAEL W. MILLS No. 4179 Expiration 11/30/16 Renewal Date 2/22/16 Date STATE OF CALIFORNIA

THE STATE OF CALIFORNIA OR ITS OFFICERS OR AGENTS SHALL NOT BE RESPONSIBLE FOR THE ACCURACY OR COMPLETENESS OF SCANNED COPIES OF THIS PLAN SHEET.

NOTE:

FOR ACCURATE RIGHT OF WAY DATA, CONTACT RIGHT OF WAY ENGINEERING AT THE DISTRICT OFFICE.

LEGEND:

EROSION CONTROL

WOOD MULCH

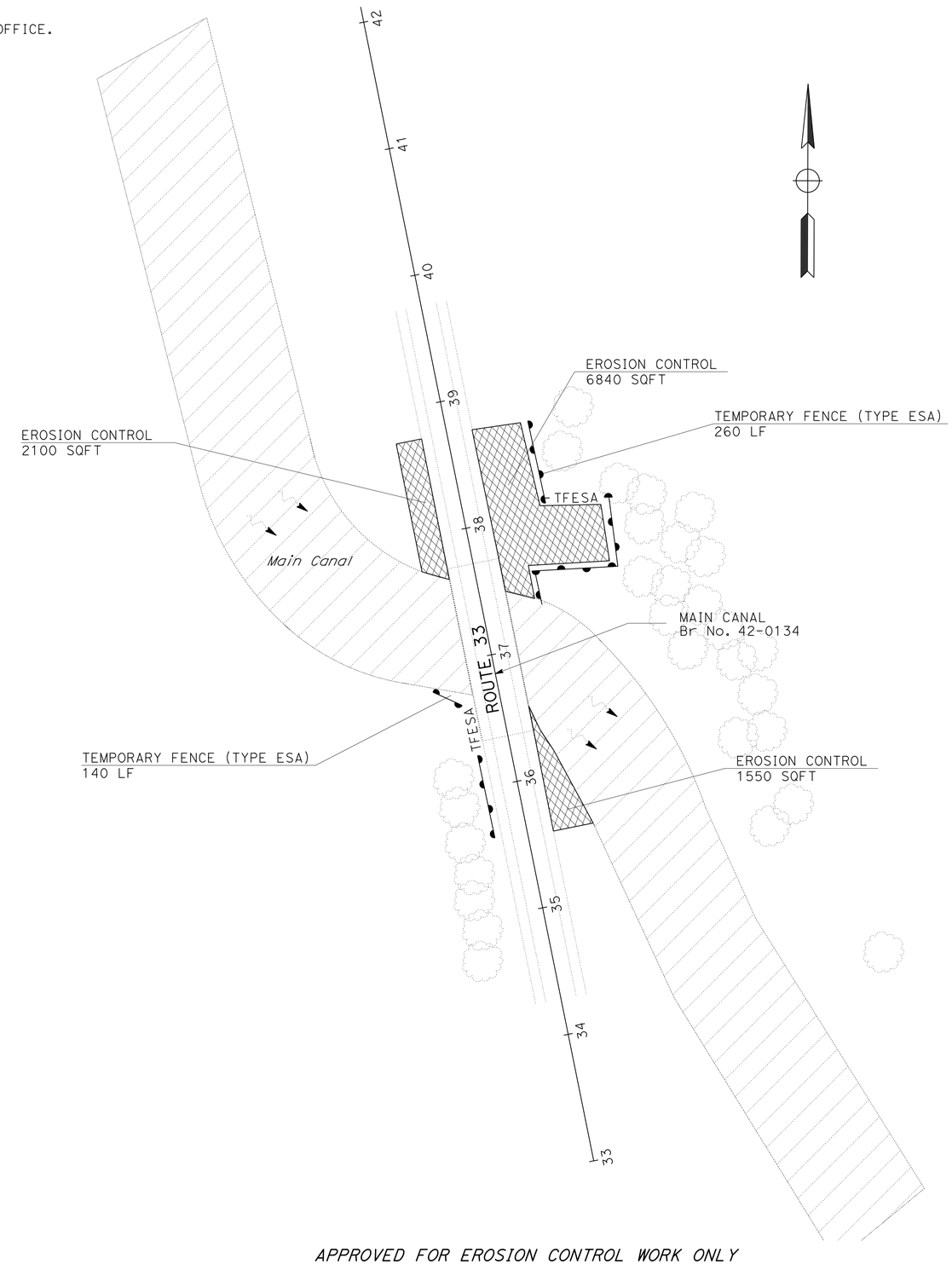

APPROVED FOR EROSION CONTROL WORK ONLY

LOCATION 1
EROSION CONTROL PLAN
EC-1

SCALE: 1"=50'

REVISED BY | DATE REVISED

MICHAEL MILLS | CHARLES LaRUE

CALCULATED-DESIGNED BY | CHECKED BY

SENIOR LANDSCAPE ARCHITECT | BRAD COLE

STATE OF CALIFORNIA - DEPARTMENT OF TRANSPORTATION

Caltrans® LANDSCAPE ARCHITECTURE

LAST REVISION 02-22-16 | DATE PLOTTED => 01-APR-2016 | TIME PLOTTED => 10:34

Dist	COUNTY	ROUTE	POST MILES TOTAL PROJECT	SHEET No.	TOTAL SHEETS
06	Fre,Kin	33,41,43	Var	11	62

Michael W. Mills
LICENSED LANDSCAPE ARCHITECT

3-28-16
PLANS APPROVAL DATE

LICENSED LANDSCAPE ARCHITECT
MICHAEL W. MILLS No.4179
Signature
11/30/16
Renewal Date
2/22/16
Date
STATE OF CALIFORNIA

THE STATE OF CALIFORNIA OR ITS OFFICERS OR AGENTS SHALL NOT BE RESPONSIBLE FOR THE ACCURACY OR COMPLETENESS OF SCANNED COPIES OF THIS PLAN SHEET.

NOTE:

FOR ACCURATE RIGHT OF WAY DATA, CONTACT RIGHT OF WAY ENGINEERING AT THE DISTRICT OFFICE.

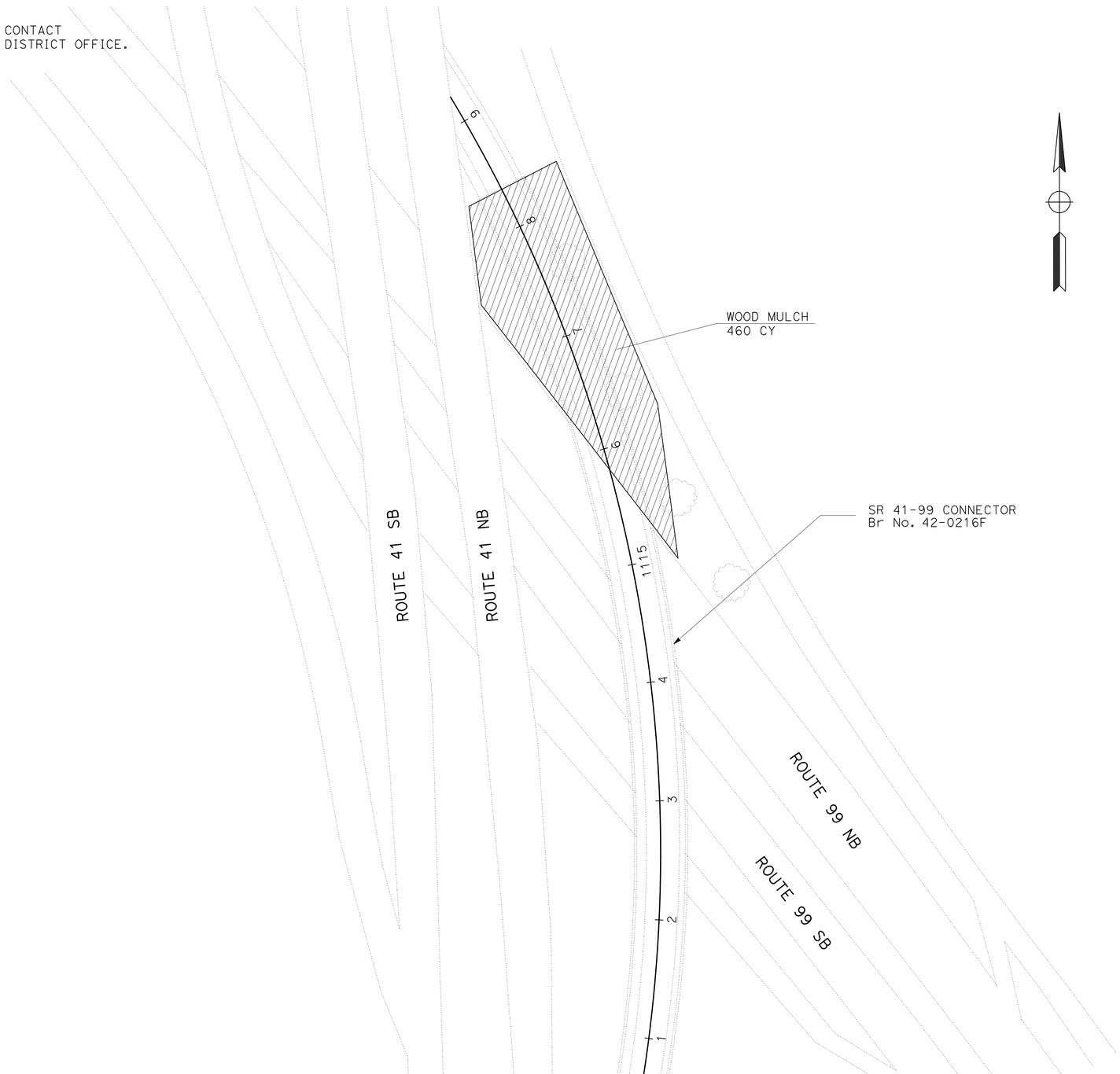

APPROVED FOR EROSION CONTROL WORK ONLY

LOCATION 2
EROSION CONTROL PLAN
EC-2

SCALE: 1"=50'

STATE OF CALIFORNIA - DEPARTMENT OF TRANSPORTATION
Caltrans® LANDSCAPE ARCHITECTURE

SENIOR LANDSCAPE ARCHITECT: BRAD COLE
CALCULATED-DESIGNED BY: MICHAEL MILLS
CHECKED BY: CHARLES LaRUE
REVISED BY
DATE REVISED

LAST REVISION 02-22-16 | DATE PLOTTED => 01-APR-2016 | TIME PLOTTED => 10:34

Dist	COUNTY	ROUTE	POST MILES TOTAL PROJECT	SHEET No.	TOTAL SHEETS
06	Fre,Kin	33,41,43	Var	12	62

LICENSED LANDSCAPE ARCHITECT

3-28-16

PLANS APPROVAL DATE

LICENSED LANDSCAPE ARCHITECT MICHAEL W. MILLS No.4179 Expiration Date 11/30/16 Renewal Date 2/22/16 Date STATE OF CALIFORNIA

THE STATE OF CALIFORNIA OR ITS OFFICERS OR AGENTS SHALL NOT BE RESPONSIBLE FOR THE ACCURACY OR COMPLETENESS OF SCANNED COPIES OF THIS PLAN SHEET.

NOTE:

FOR ACCURATE RIGHT OF WAY DATA, CONTACT RIGHT OF WAY ENGINEERING AT THE DISTRICT OFFICE.

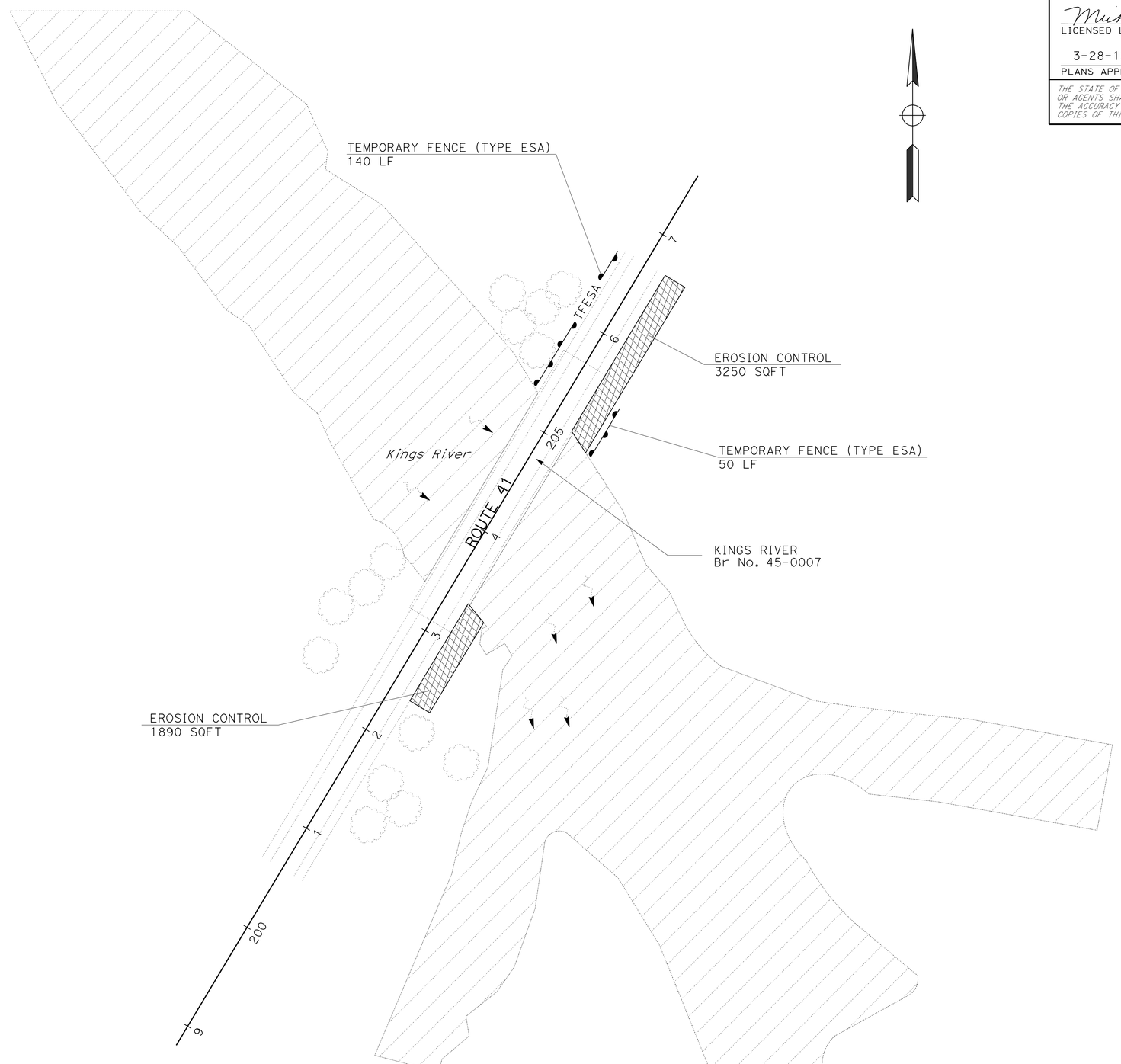

APPROVED FOR EROSION CONTROL WORK ONLY

LOCATION 3
EROSION CONTROL PLAN
EC-3

SCALE: 1"=50'

STATE OF CALIFORNIA - DEPARTMENT OF TRANSPORTATION

Caltrans® LANDSCAPE ARCHITECTURE

SENIOR LANDSCAPE ARCHITECT: BRAD COLE

CALCULATED-DESIGNED BY: MICHAEL MILLS

CHECKED BY: XXXXX

REVISED BY

DATE REVISED

LAST REVISION 02-22-16

DATE PLOTTED => 01-APR-2016

TIME PLOTTED => 10:34

Dist	COUNTY	ROUTE	POST MILES TOTAL PROJECT	SHEET No.	TOTAL SHEETS
06	Fre,Kin	33,41,43	Var	13	62

LICENSED LANDSCAPE ARCHITECT

3-28-16

PLANS APPROVAL DATE

LICENSED LANDSCAPE ARCHITECT
MICHAEL W. MILLS No. 4179
Expiration Date 11/30/16
Renewal Date 2/22/16
Date
STATE OF CALIFORNIA

THE STATE OF CALIFORNIA OR ITS OFFICERS OR AGENTS SHALL NOT BE RESPONSIBLE FOR THE ACCURACY OR COMPLETENESS OF SCANNED COPIES OF THIS PLAN SHEET.

NOTE:

FOR ACCURATE RIGHT OF WAY DATA, CONTACT RIGHT OF WAY ENGINEERING AT THE DISTRICT OFFICE.

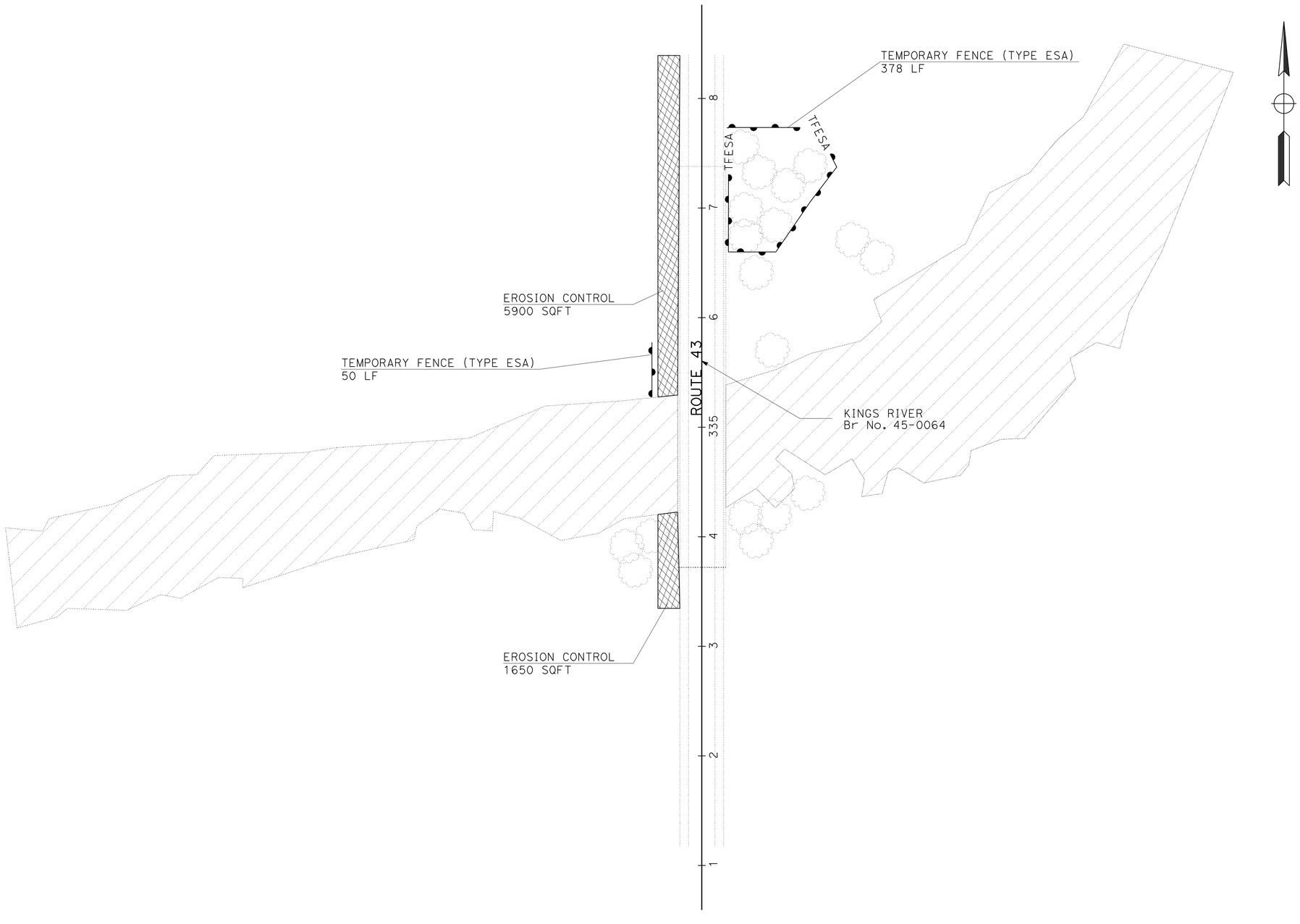

APPROVED FOR EROSION CONTROL WORK ONLY

LOCATION 4
EROSION CONTROL PLAN
EC-4

SCALE: 1"=50'

STATE OF CALIFORNIA - DEPARTMENT OF TRANSPORTATION
Caltrans® LANDSCAPE ARCHITECTURE

SENIOR LANDSCAPE ARCHITECT: BRAD COLE

CALCULATED-DESIGNED BY: MICHAEL MILLS
CHECKED BY: CHARLES LaRUE

REVISED BY
DATE REVISED

LAST REVISION 03-17-16
DATE PLOTTED => 01-APR-2016
TIME PLOTTED => 10:34

M

Maint	MAINTENANCE
Max	MAXIMUM
MB	METAL BEAM
MBB	METAL BEAM BARRIER
MBGR	METAL BEAM GUARD RAILING
Med	MEDIAN
MGS	MIDWEST GUARDRAIL SYSTEM
MH	MANHOLE
Min	MINIMUM
Misc	MISCELLANEOUS
Misc I & S	MISCELLANEOUS IRON AND STEEL
Mkr	MARKER
Mod	MODIFIED,
	MODIFY
Mon	MONUMENT
MP	METAL PLATE
MPGR	METAL PLATE GUARD RAILING
MR	MOVEMENT RATING
MSE	MECHANICALLY STABILIZED EMBANKMENT
Mt	MOUNTAIN, MOUNT
Mtl	MATERIAL
MVP	MAINTENANCE VEHICLE PULLOUT

N

N	NORTH
NB	NORTHBOUND
No.	NUMBER (MUST HAVE PERIOD)
Nos.	NUMBERS (MUST HAVE PERIOD)
NPS	NOMINAL PIPE SIZE
NS	NEAR SIDE
NSP	NEW STANDARD PLAN
NTS	NOT TO SCALE

O

Oblr	OBLITERATE
OC	OVERCROSSING
OD	OUTSIDE DIAMETER
OF	OUTSIDE FACE
OG	ORIGINAL GROUND
OGAC	OPEN GRADED ASPHALT CONCRETE
OGFC	OPEN GRADED FRICTION COURSE
OH	OVERHEAD
OHWM	ORDINARY HIGH WATER MARK
O-O	OUT TO OUT
Opp	OPPOSITE
OSD	OVERSIDE DRAIN

P

P	PAGE
PAP	PERFORATED ALUMINUM PIPE
PB	PULL BOX
PC	POINT OF CURVATURE,
	PRECAST
PCC	POINT OF COMPOUND CURVE,
	PORTLAND CEMENT CONCRETE
PCMS	PORTABLE CHANGEABLE MESSAGE SIGN
PCP	PERFORATED CONCRETE PIPE,
	PRESTRESSED CONCRETE PIPE
PCVC	POINT OF COMPOUND VERTICAL CURVE
PEC	PERMIT TO ENTER AND CONSTRUCT
Ped	PEDESTRIAN
Ped OC	PEDESTRIAN OVERCROSSING
Ped UC	PEDESTRIAN UNDERCROSSING
Perm Mtl	PERMEABLE MATERIAL

P continued

PG	PROFILE GRADE
PI	POINT OF INTERSECTION
PJP	PARTIAL JOINT PENETRATION
Pkwy	PARKWAY
ℙ,PL	PLATE
P/L	PROPERTY LINE
PM	POST MILE,
	TIME FROM NOON TO MIDNIGHT
PN	PAVING NOTCH
POC	POINT OF HORIZONTAL CURVE
POT	POINT OF TANGENT
POVC	POINT OF VERTICAL CURVE
PP	PIPE PILE,
	PLASTIC PIPE,
	POWER POLE
PPL	PREFORMED PERMEABLE LINER
PPP	PERFORATED PLASTIC PIPE
PRC	POINT OF REVERSE CURVE
PRF	PAVEMENT REINFORCING FABRIC
PRVC	POINT OF REVERSE VERTICAL CURVE
PS&E	PLANS, SPECIFICATIONS AND ESTIMATES
PS, P/S	PRESTRESSED
PSP	PERFORATED STEEL PIPE
PT	POINT OF TANGENCY
PVC	POLYVINYL CHLORIDE
Pvmt	PAVEMENT

Q

Qty	QUANTITY

R

R	RADIUS
R & D	REMOVE AND DISPOSE
R & S	REMOVE AND SALVAGE
R/C	RATE OF CHANGE
RCA	REINFORCED CONCRETE ARCH
RCB	REINFORCED CONCRETE BOX
RCP	REINFORCED CONCRETE PIPE
RCPA	REINFORCED CONCRETE PIPE ARCH
Rd	ROAD
Reinf	REINFORCED,
	REINFORCEMENT,
	REINFORCING
Rel	RELOCATE
Repl	REPLACEMENT
Ret	RETAINING
Rev	REVISED, REVISION
Rdwy	ROADWAY
RHMA	RUBBERIZED HOT MIX ASPHALT
Riv	RIVER
RM	ROAD-MIXED
RP	RADIUS POINT,
	REFERENCE POINT
RR	RAILROAD
RSP	ROCK SLOPE PROTECTION,
	REVISED STANDARD PLAN
Rt	RIGHT
Rte	ROUTE
RW	REDWOOD,
	RETAINING WALL
R/W	RIGHT OF WAY
Rwy	RAILWAY

S

S	SOUTH,
	SUPPLEMENT
SAE	STRUCTURE APPROACH EMBANKMENT
Salv	SALVAGE
SAPP	STRUCTURAL ALUMINUM PLATE PIPE
SB	SOUTHBOUND
SC	SAND CUSHION
SCSP	SLOTTED CORRUGATED STEEL PIPE
SD	STORM DRAIN
Sec	SECOND,
	SECTION
Sep	SEPARATION
SG	SUBGRADE
Shld	SHOULDER
Sht	SHEET
Sim	SIMILAR
₤	STATION LINE
SM	SELECTED MATERIAL
Spec	SPECIAL,
	SPECIFICATIONS
SPP	SLOTTED PLASTIC PIPE
SS	SLOPE STAKE
SSBM	STRAP AND SADDLE BRACKET METHOD
SSD	STRUCTURAL SECTION DRAIN
SSPA	STRUCTURAL STEEL PLATE ARCH
SSPP	STRUCTURAL STEEL PLATE PIPE
SSPPA	STRUCTURAL STEEL PLATE PIPE ARCH
SSRP	STEEL SPIRAL RIB PIPE
St	STREET
Sta	STATION
STBB	SINGLE THRIE BEAM BARRIER
Std	STANDARD
Str	STRUCTURE
Surf	SURFACING
SW	SIDEWALK,
	SOUND WALL
Swr	SEWER
Sym	SYMMETRICAL
S4S	SURFACE 4 SIDES

T

T	SEMI-TANGENT
Tan	TANGENT
TBB	THRIE BEAM BARRIER
Tbr	TIMBER
TC	TOP OF CURB
TCB	TRAFFIC CONTROL BOX
TCE	TEMPORARY CONSTRUCTION EASEMENT
Tel	TELEPHONE
Temp	TEMPORARY
TG	TOP OF GRADE
Tot	TOTAL
TP	TELEPHONE POLE
TPB	TREATED PERMEABLE BASE
TPM	TREATED PERMEABLE MATERIAL
Trans	TRANSITION

T continued

TS	TRANSVERSE,
	TRAFFIC SIGNAL,
	TUBULAR STEEL
Typ	TYPICAL

U

UC	UNDERCROSSING
UD	UNDERDRAIN
UG	UNDERGROUND
UON	UNLESS OTHERWISE NOTED
UP	UNDERPASS

V

V	VALVE,
	DESIGN SPEED
Var	VARIABLE,
	VARIES
VC	VERTICAL CURVE
VCP	VITRIFIED CLAY PIPE
Vert	VERTICAL
Via	VIADUCT
Vol	VOLUME

W

W	WEST,
	WIDTH
WB	WESTBOUND
WH	WEEP HOLE
WM	WIRE MESH
WS	WATER SURFACE
WSP	WELDED STEEL PIPE
Wt	WEIGHT
WV	WATER VALVE
WW	WINGWALL
WWLOL	WINGWALL LAYOUT LINE

X

X Sec	CROSS SECTION
Xing	CROSSING

Y

Yr	YEAR
Yrs	YEARS

Dist	COUNTY	ROUTE	POST MILES TOTAL PROJECT	SHEET No.	TOTAL SHEETS
06	Fre,Kin	33,41,43	Var	14	62

Grace M. Tsushima
REGISTERED CIVIL ENGINEER

July 19, 2013
PLANS APPROVAL DATE

REGISTERED PROFESSIONAL ENGINEER Grace M. Tsushima No. C49814 Exp. 9-30-14 CIVIL STATE OF CALIFORNIA

THE STATE OF CALIFORNIA OR ITS OFFICERS OR AGENTS SHALL NOT BE RESPONSIBLE FOR THE ACCURACY OR COMPLETENESS OF SCANNED COPIES OF THIS PLAN SHEET.

TO ACCOMPANY PLANS DATED 3-28-16

UNIT OF MEASUREMENT SYMBOLS:

Some of the symbols used in the project plan quantity tables and in the Bid Item List are:

TABLE A

SYMBOL USED	DEFINITIONS
ACRE	ACRE
CF	CUBIC FOOT
CY	CUBIC YARD
EA	EACH
GAL	GALLON
LB	POUND
LF	LINEAR FOOT
SQFT	SQUARE FOOT
SQYD	SQUARE YARD
STA	100 FEET
TAB	TABLET
TON	2,000 POUNDS

Some of the symbols used in the plans other than in the project plan quantity tables are:

TABLE B

SYMBOL USED	DEFINITIONS
ksi	KIPS PER SQUARE INCH
ksf	KIPS PER SQUARE FOOT
psi	POUNDS PER SQUARE INCH
psf	POUNDS PER SQUARE FOOT
lb/ft^3, pcf	POUNDS PER CUBIC FOOT
tsf	TONS PER SQUARE FOOT
mph, MPH *	MILES PER HOUR
ø	NOMINAL DIAMETER
oz	OUNCE
lb	POUND
kip	1,000 POUNDS
cal	CALORIE
ft	FOOT OR FEET
gal	GALLON

* For use on a sign panel only

STATE OF CALIFORNIA
DEPARTMENT OF TRANSPORTATION

ABBREVIATIONS (SHEET 2 OF 2)

NO SCALE

RSP A10B DATED JULY 19, 2013 SUPERSEDES STANDARD PLAN A10B DATED MAY 20, 2011 - PAGE 2 OF THE STANDARD PLANS BOOK DATED 2010.

REVISED STANDARD PLAN RSP A10B

2010 REVISED STANDARD PLAN RSP A10B

6-7-13

REFERENCE: CALTRANS SOIL & ROCK LOGGING, CLASSIFICATION, AND PRESENTATION MANUAL (2010)

Dist	COUNTY	ROUTE	POST MILES TOTAL PROJECT	SHEET No.	TOTAL SHEETS
06	Fre,Kin	33,41,43	Var	15	62

CERTIFIED ENGINEERING GEOLOGIST

October 30, 2015
PLANS APPROVAL DATE

REGISTERED GEOLOGIST
CHRIS A. RISDEN
CERTIFIED ENGINEERING GEOLOGIST
No. 2541
Exp. 9-30-17
STATE OF CALIFORNIA

THE STATE OF CALIFORNIA OR ITS OFFICERS OR AGENTS SHALL NOT BE RESPONSIBLE FOR THE ACCURACY OR COMPLETENESS OF SCANNED COPIES OF THIS PLAN SHEET.

TO ACCOMPANY PLANS DATED 3-28-16

ABBREVIATION:

GWS = Ground Water Surface

CEMENTATION

DESCRIPTION	CRITERIA
WEAK	CRUMBLES OR BREAKS WITH HANDLING OR LITTLE FINGER PRESSURE.
MODERATE	CRUMBLES OR BREAKS WITH CONSIDERABLE FINGER PRESSURE.
STRONG	WILL NOT CRUMBLE OR BREAK WITH FINGER PRESSURE.

BOREHOLE IDENTIFICATION

SYMBOL	HOLE TYPE	DESCRIPTION
Size	A	AUGER BORING (HOLLOW OR SOLID STEM BUCKET)
Size	R RW RC P	ROTARY DRILLED BORING (CONVENTIONAL) ROTARY DRILLED WITH SELF-CASING WIRE-LINE ROTARY CORE WITH CONTINUOUSLY-SAMPLED, SELF-CASING WIRE-LINE ROTARY PERCUSSION BORING (AIR)
Size	R RC	ROTARY DRILLED DIAMOND CORE ROTARY DRILLED DIAMOND CORE, CONTINUOUSLY SAMPLED
Size	HD HA	HAND DRIVEN (1-INCH SOIL TUBE) HAND AUGER
●	D	DYNAMIC CONE PENETRATION BORING
▲	CPT	CONE PENETRATION TEST (ASTM D 5778)
[ ]	O	OTHER (NOTE ON LOTB)

Note: Size in inches.

CONSISTENCY OF COHESIVE SOILS

DESCRIPTION	SHEAR STRENGTH (tsf)	POCKET PENETROMETER MEASUREMENT, PP, (tsf)	TORVANE MEASUREMENT, TV, (tsf)	VANE SHEAR MEASUREMENT, VS, (tsf)
VERY SOFT	LESS THAN 0.12	LESS THAN 0.25	LESS THAN 0.12	LESS THAN 0.12
SOFT	0.12 - 0.25	0.25 - 0.5	0.12 - 0.25	0.12 - 0.25
MEDIUM STIFF	0.25 - 0.5	0.5 - 1	0.25 - 0.5	0.25 - 0.5
STIFF	0.5 - 1	1 - 2	0.5 - 1	0.5 - 1
VERY STIFF	1 - 2	2 - 4	1 - 2	1 - 2
HARD	GREATER THAN 2	GREATER THAN 4	GREATER THAN 2	GREATER THAN 2

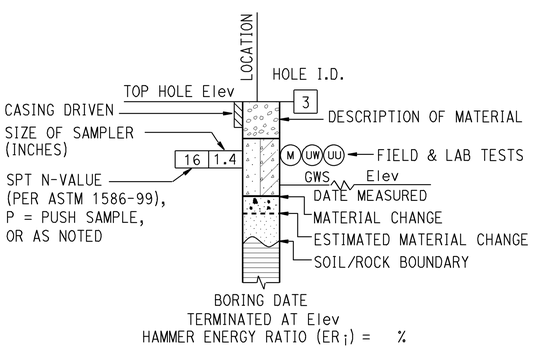

ROTARY BORING

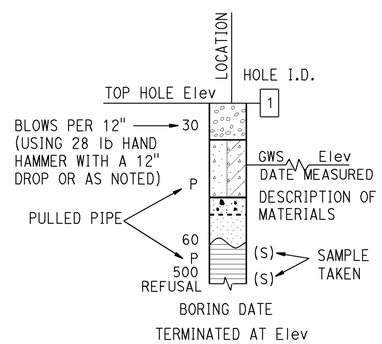

HAND BORING

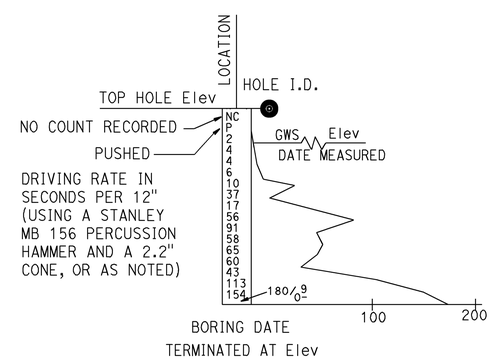

DYNAMIC CONE PENETRATION BORING

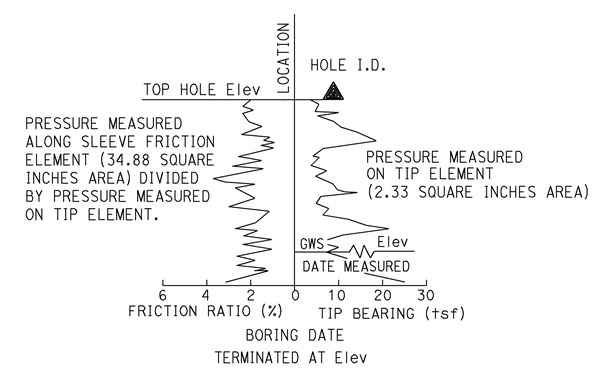

CONE PENETRATION TEST (CPT) BORING

STATE OF CALIFORNIA
DEPARTMENT OF TRANSPORTATION

LEGEND - SOIL (SHEET 1 OF 2)

NO SCALE

RSP A10F DATED OCTOBER 30, 2015 SUPERSEDES STANDARD PLAN A10F DATED MAY 20, 2011 - PAGE 6 OF THE STANDARD PLANS BOOK DATED 2010.

REVISED STANDARD PLAN RSP A10F

2010 REVISED STANDARD PLAN RSP A10F

8-18-15

REFERENCE: CALTRANS SOIL & ROCK LOGGING, CLASSIFICATION, AND PRESENTATION MANUAL (2010)

Dist	COUNTY	ROUTE	POST MILES TOTAL PROJECT	SHEET No.	TOTAL SHEETS
06	Fre,Kin	33,41,43	Var	16	62

CERTIFIED ENGINEERING GEOLOGIST

October 30, 2015
PLANS APPROVAL DATE

REGISTERED GEOLOGIST
CHRIS A. RISDEN
CERTIFIED ENGINEERING GEOLOGIST
No. 2541
Exp. 9-30-17
STATE OF CALIFORNIA

THE STATE OF CALIFORNIA OR ITS OFFICERS OR AGENTS SHALL NOT BE RESPONSIBLE FOR THE ACCURACY OR COMPLETENESS OF SCANNED COPIES OF THIS PLAN SHEET.

TO ACCOMPANY PLANS DATED 3-28-16

GROUP SYMBOLS AND NAMES

GRAPHIC/SYMBOL	GROUP NAMES	GRAPHIC/SYMBOL	GROUP NAMES
GW	WELL-GRADED GRAVEL WELL-GRADED GRAVEL WITH SAND	CL	LEAN CLAY LEAN CLAY WITH SAND LEAN CLAY WITH GRAVEL SANDY LEAN CLAY SANDY LEAN CLAY WITH GRAVEL GRAVELLY LEAN CLAY GRAVELLY LEAN CLAY WITH SAND
GP	POORLY-GRADED GRAVEL POORLY-GRADED GRAVEL WITH SAND		
GW-GM	WELL-GRADED GRAVEL WITH SILT WELL-GRADED GRAVEL WITH SILT AND SAND	CL-ML	SILTY CLAY SILTY CLAY WITH SAND SILTY CLAY WITH GRAVEL SANDY SILTY CLAY SANDY SILTY CLAY WITH GRAVEL GRAVELLY SILTY CLAY GRAVELLY SILTY CLAY WITH SAND
GW-GC	WELL-GRADED GRAVEL WITH CLAY (OR SILTY CLAY) WELL-GRADED GRAVEL WITH CLAY AND SAND (OR SILTY CLAY AND SAND)		
GP-GM	POORLY-GRADED GRAVEL WITH SILT POORLY-GRADED GRAVEL WITH SILT AND SAND	ML	SILT SILT WITH SAND SILT WITH GRAVEL SANDY SILT SANDY SILT WITH GRAVEL GRAVELLY SILT GRAVELLY SILT WITH SAND
GP-GC	POORLY-GRADED GRAVEL WITH CLAY (OR SILTY CLAY) POORLY-GRADED GRAVEL WITH CLAY AND SAND (OR SILTY CLAY AND SAND)		
GM	SILTY GRAVEL SILTY GRAVEL WITH SAND	OL	ORGANIC LEAN CLAY ORGANIC LEAN CLAY WITH SAND ORGANIC LEAN CLAY WITH GRAVEL SANDY ORGANIC LEAN CLAY SANDY ORGANIC LEAN CLAY WITH GRAVEL GRAVELLY ORGANIC LEAN CLAY GRAVELLY ORGANIC LEAN CLAY WITH SAND
GC	CLAYEY GRAVEL CLAYEY GRAVEL WITH SAND		
GC-GM	SILTY, CLAYEY GRAVEL SILTY, CLAYEY GRAVEL WITH SAND	OL	ORGANIC SILT ORGANIC SILT WITH SAND ORGANIC SILT WITH GRAVEL SANDY ORGANIC SILT SANDY ORGANIC SILT WITH GRAVEL GRAVELLY ORGANIC SILT GRAVELLY ORGANIC SILT WITH SAND
SW	WELL-GRADED SAND WELL-GRADED SAND WITH GRAVEL		
SP	POORLY-GRADED SAND POORLY-GRADED SAND WITH GRAVEL	CH	FAT CLAY FAT CLAY WITH SAND FAT CLAY WITH GRAVEL SANDY FAT CLAY SANDY FAT CLAY WITH GRAVEL GRAVELLY FAT CLAY GRAVELLY FAT CLAY WITH SAND
SW-SM	WELL-GRADED SAND WITH SILT WELL-GRADED SAND WITH SILT AND GRAVEL		
SW-SC	WELL-GRADED SAND WITH CLAY (OR SILTY CLAY) WELL-GRADED SAND WITH CLAY AND GRAVEL (OR SILTY CLAY AND GRAVEL)	MH	ELASTIC SILT ELASTIC SILT WITH SAND ELASTIC SILT WITH GRAVEL SANDY ELASTIC SILT SANDY ELASTIC SILT WITH GRAVEL GRAVELLY ELASTIC SILT GRAVELLY ELASTIC SILT WITH SAND
SP-SM	POORLY-GRADED SAND WITH SILT POORLY-GRADED SAND WITH SILT AND GRAVEL		
SP-SC	POORLY-GRADED SAND WITH CLAY (OR SILTY CLAY) POORLY-GRADED SAND WITH CLAY AND GRAVEL (OR SILTY CLAY AND GRAVEL)	OH	ORGANIC FAT CLAY ORGANIC FAT CLAY WITH SAND ORGANIC FAT CLAY WITH GRAVEL SANDY ORGANIC FAT CLAY SANDY ORGANIC FAT CLAY WITH GRAVEL GRAVELLY ORGANIC FAT CLAY GRAVELLY ORGANIC FAT CLAY WITH SAND
SM	SILTY SAND SILTY SAND WITH GRAVEL		
SC	CLAYEY SAND CLAYEY SAND WITH GRAVEL	OH	ORGANIC ELASTIC SILT ORGANIC ELASTIC SILT WITH SAND ORGANIC ELASTIC SILT WITH GRAVEL SANDY ORGANIC ELASTIC SILT SANDY ORGANIC ELASTIC SILT WITH GRAVEL GRAVELLY ORGANIC ELASTIC SILT GRAVELLY ORGANIC ELASTIC SILT WITH SAND
SC-SM	SILTY, CLAYEY SAND SILTY, CLAYEY SAND WITH GRAVEL		
PT	PEAT	OL/OH	ORGANIC SOIL ORGANIC SOIL WITH SAND ORGANIC SOIL WITH GRAVEL SANDY ORGANIC SOIL SANDY ORGANIC SOIL WITH GRAVEL GRAVELLY ORGANIC SOIL GRAVELLY ORGANIC SOIL WITH SAND
	COBBLES COBBLES AND BOULDERS BOULDERS		

FIELD AND LABORATORY TESTING

- (C) CONSOLIDATION (ASTM D2435)
- (CL) COLLAPSE POTENTIAL (ASTM D4546)
- (CP) COMPACTION CURVE (CTM 216)
- (CR) CORROSIVITY TESTING (CTM 643, CTM 422, CTM 417)
- (CU) CONSOLIDATED UNDRAINED TRIAXIAL (ASTM D4767)
- (DS) DIRECT SHEAR (ASTM D3080)
- (EI) EXPANSION INDEX (ASTM D4829)
- (M) MOISTURE CONTENT (ASTM D2216)
- (OC) ORGANIC CONTENT-% (ASTM D2974)
- (P) PERMEABILITY (CTM 220)
- (PA) PARTICLE SIZE ANALYSIS (ASTM D422)
- (PI) PLASTICITY INDEX (AASHTO T 90) LIQUID LIMIT (AASHTO T 89)
- (PL) POINT LOAD INDEX (ASTM D5731)
- (PM) PRESSURE METER
- (R) R-VALUE (CTM 301)
- (SE) SAND EQUIVALENT (CTM 217)
- (SG) SPECIFIC GRAVITY (AASHTO T 100)
- (SL) SHRINKAGE LIMIT (ASTM D4943)
- (SW) SWELL POTENTIAL (ASTM D4546)
- (UC) UNCONFINED COMPRESSION-SOIL (ASTM D2166) UNCONFINED COMPRESSION-ROCK (ASTM D7012 - METHOD C)
- (UU) UNCONSOLIDATED UNDRAINED TRIAXIAL (ASTM D2850)
- (UW) UNIT WEIGHT (ASTM D7263 - METHOD B)

APPARENT DENSITY OF COHESIONLESS SOILS

DESCRIPTION	SPT N_{60} (BLOWS / 12 INCHES)
VERY LOOSE	0 - 5
LOOSE	5 - 10
MEDIUM DENSE	10 - 30
DENSE	30 - 50
VERY DENSE	GREATER THAN 50

MOISTURE

DESCRIPTION	CRITERIA
DRY	NO DISCERNABLE MOISTURE
MOIST	MOISTURE PRESENT, BUT NO FREE WATER
WET	VISIBLE FREE WATER

PERCENT OR PROPORTION OF SOILS

DESCRIPTION	CRITERIA
TRACE	PARTICLES ARE PRESENT BUT ESTIMATED TO BE LESS THAN 5%
FEW	5% - 10%
LITTLE	15% - 25%
SOME	30% - 45%
MOSTLY	50% - 100%

PARTICLE SIZE

DESCRIPTION		SIZE
BOULDER		GREATER THAN 12"
COBBLE		3" - 12"
GRAVEL	COARSE	3/4" - 3"
	FINE	1/5" - 3/4"
SAND	COARSE	1/16" - 1/5"
	MEDIUM	1/64" - 1/16"
	FINE	1/300" - 1/64"
SILT AND CLAY		LESS THAN 1/300"

STATE OF CALIFORNIA
DEPARTMENT OF TRANSPORTATION

LEGEND - SOIL (SHEET 2 OF 2)

NO SCALE

RSP A10G DATED OCTOBER 30, 2015 SUPERSEDES STANDARD PLAN A10G DATED MAY 20, 2011 - PAGE 7 OF THE STANDARD PLANS BOOK DATED 2010.

REVISED STANDARD PLAN RSP A10G

2010 REVISED STANDARD PLAN RSP A10G

9-22-15

Dist	COUNTY	ROUTE	POST MILES TOTAL PROJECT	SHEET No.	TOTAL SHEETS
06	Fre,Kin	33,41,43	Var	17	62

Randell D. Hiatt
REGISTERED CIVIL ENGINEER

July 19, 2013
PLANS APPROVAL DATE

REGISTERED PROFESSIONAL ENGINEER
Randell D. Hiatt
No. C50200
Exp. 6-30-15
CIVIL
STATE OF CALIFORNIA

THE STATE OF CALIFORNIA OR ITS OFFICERS OR AGENTS SHALL NOT BE RESPONSIBLE FOR THE ACCURACY OR COMPLETENESS OF SCANNED COPIES OF THIS PLAN SHEET.

TO ACCOMPANY PLANS DATED 3-28-16

2010 REVISED STANDARD PLAN RSP A77L2

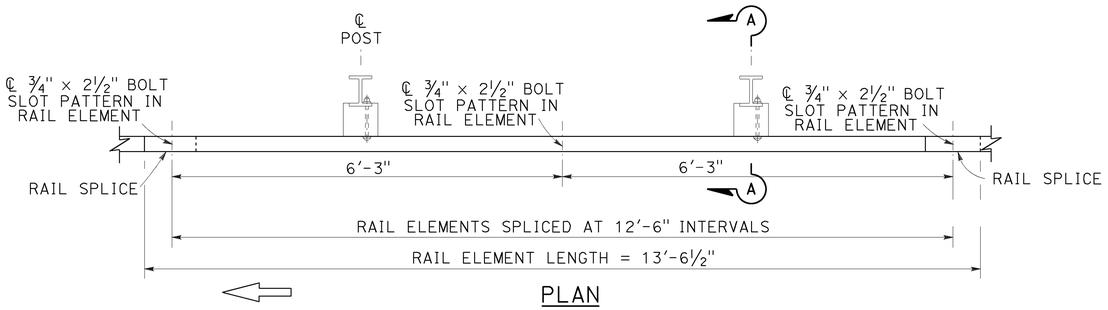

PLAN

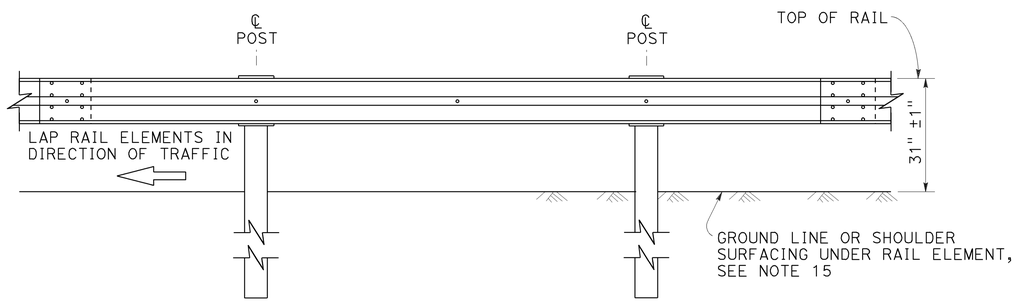

ELEVATION

MIDWEST GUARDRAIL SYSTEM WITH STEEL POSTS AND NOTCHED WOOD OR NOTCHED RECYCLED PLASTIC BLOCKS

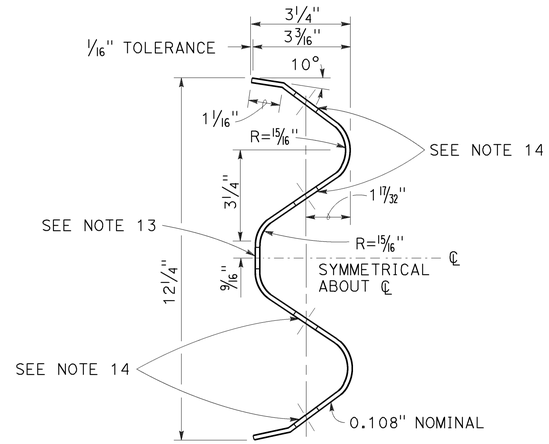

SECTION THRU RAIL ELEMENT

NOTES:

1. For details of wood post installations, see Revised Standard Plan RSP A77L1.
2. For details of standard hardware used to construct MGS, see Revised Standard Plan RSP A77M1.
3. For details of steel posts and notched wood blocks used to construct MGS, see Revised Standard Plan RSP A77N2.
4. For additional installation details, see Revised Standard Plan RSP A77N3.
5. MGS post spacing to be 6'-3" center to center, except as otherwise noted.
6. For MGS typical layouts, see the A77P, A77Q and A77R Series of Standard Plans.
7. If railing is connected to terminal system end treatment, use 31" height terminal system end treatment.
8. For MGS end anchor details, see Revised Standard Plans RSP A77S1 and RSP A77T2.
9. For details of MGS transition to bridge railing, see Revised Standard Plan RSP A77U4.
10. For additional details of MGS connection to bridge railings, see Revised Standard Plans RSP A77U1, RSP A77U2 and RSP A77V1.
11. For dike positioning and MGS delineation details, see Revised Standard Plan RSP A77N4.
12. Notched face of block faces steel post.
13. Slotted hole for bolted connection of rail element to block and post. See "Section Thru Rail Element".
14. Slotted holes for splice bolts to overlap ends of rail element. See "Section Thru Rail Element".
15. Install posts in soil.

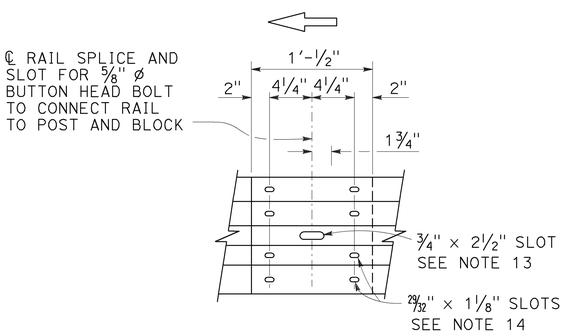

ELEVATION

RAIL ELEMENT SPLICE DETAIL

a) Connect the over lapped end of the rail elements with ⅝" ø × 1⅜" button head oval shoulder splice bolts inserted into the 29⁄32" × 1⅛" slots and bolted together with ⅝" ø recessed hex nuts. Recess of hex nut points toward rail element. A total of 8 bolts and nuts are to be used at each rail splice connection.

b) The ends of the rail elements are to be overlapped in the direction of traffic (see details).

c) Where end cap is to be attached to the end of a rail element, a total of 4 of the above described splice bolts and nuts are to be used.

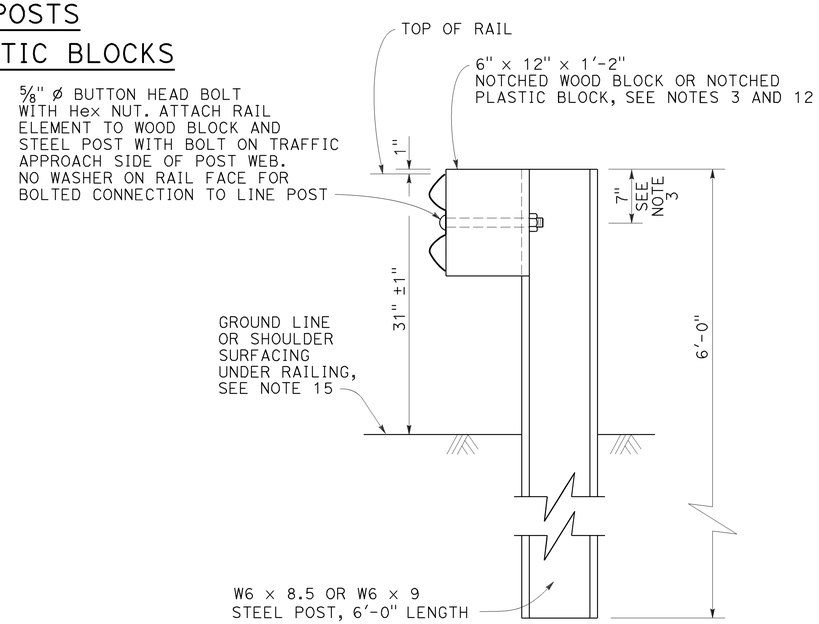

SECTION A-A

TYPICAL STEEL LINE POST INSTALLATION

See Note 4

STATE OF CALIFORNIA
DEPARTMENT OF TRANSPORTATION

MIDWEST GUARDRAIL SYSTEM STANDARD RAILING SECTION (STEEL POST WITH NOTCHED WOOD OR NOTCHED RECYCLED PLASTIC BLOCK)

NO SCALE

RSP A77L2 DATED JULY 19, 2013 SUPPLEMENTS THE STANDARD PLANS BOOK DATED 2010.

REVISED STANDARD PLAN RSP A77L2

Dist	COUNTY	ROUTE	POST MILES TOTAL PROJECT	SHEET No.	TOTAL SHEETS
06	Fre,Kin	33,41,43	Var	18	62

Randell D. Hiatt
REGISTERED CIVIL ENGINEER

July 19, 2013
PLANS APPROVAL DATE

REGISTERED PROFESSIONAL ENGINEER
Randell D. Hiatt
No. C50200
Exp. 6-30-15
CIVIL
STATE OF CALIFORNIA

THE STATE OF CALIFORNIA OR ITS OFFICERS OR AGENTS SHALL NOT BE RESPONSIBLE FOR THE ACCURACY OR COMPLETENESS OF SCANNED COPIES OF THIS PLAN SHEET.

TO ACCOMPANY PLANS DATED 3-28-16

2010 REVISED STANDARD PLAN RSP A77M1

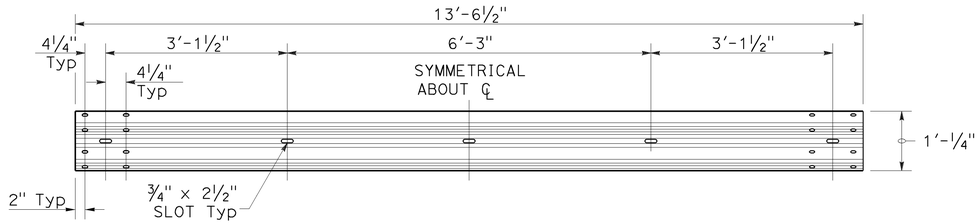

TYPICAL RAIL ELEMENT

NOTE:

1. Slotted holes for splice bolts to overlap ends of rail element.

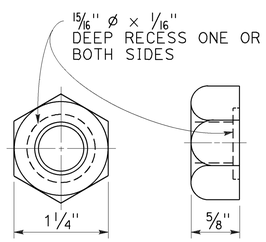

⅝" ø RECESS NUT

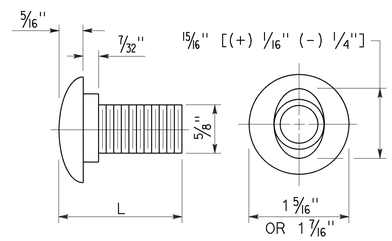

⅝" ø BUTTON HEAD BOLT

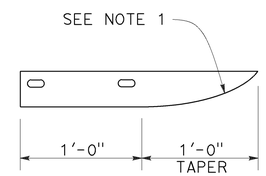

PLAN

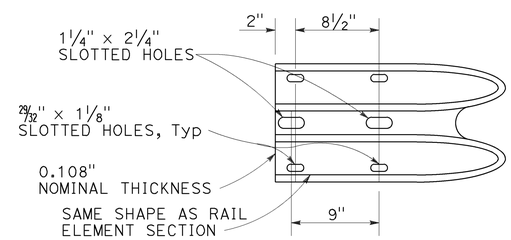

ELEVATION

END CAP (TYPE A)

BUTTON HEAD BOLT

L	THREAD LENGTH
1⅜"	FULL THREAD LENGTH
2"	FULL THREAD LENGTH
10"	4" Min THREAD LENGTH
18"	4" Min THREAD LENGTH
20"	4" Min THREAD LENGTH
22"	4" Min THREAD LENGTH
26"	4" Min THREAD LENGTH
36"	4" Min THREAD LENGTH
** 2¾"	2" Min THREAD LENGTH
** 19"	4" Min THREAD LENGTH

** For nested rail applications.

STATE OF CALIFORNIA
DEPARTMENT OF TRANSPORTATION

MIDWEST GUARDRAIL SYSTEM STANDARD HARDWARE

NO SCALE

RSP A77M1 DATED JULY 19, 2013 SUPPLEMENTS THE STANDARD PLANS BOOK DATED 2010.

REVISED STANDARD PLAN RSP A77M1

Dist	COUNTY	ROUTE	POST MILES TOTAL PROJECT	SHEET No.	TOTAL SHEETS
06	Fre,Kin	33,41,43	Var	19	62

Randell D. Hiatt
REGISTERED CIVIL ENGINEER

November 15, 2013
PLANS APPROVAL DATE

REGISTERED PROFESSIONAL ENGINEER
Randell D. Hiatt
No. C50200
Exp. 6-30-15
CIVIL
STATE OF CALIFORNIA

THE STATE OF CALIFORNIA OR ITS OFFICERS OR AGENTS SHALL NOT BE RESPONSIBLE FOR THE ACCURACY OR COMPLETENESS OF SCANNED COPIES OF THIS PLAN SHEET.

TO ACCOMPANY PLANS DATED 3-28-16

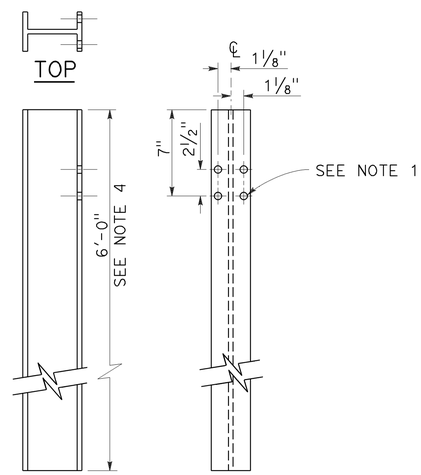

W6 x 9 OR W6 x 8.5
STEEL POST
See Note 4

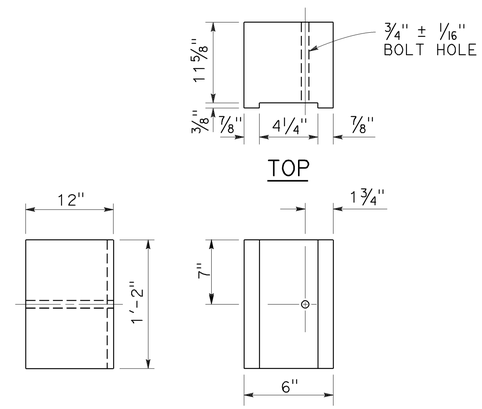

6" x 12"
NOTCHED WOOD BLOCK
See Notes 2 and 3

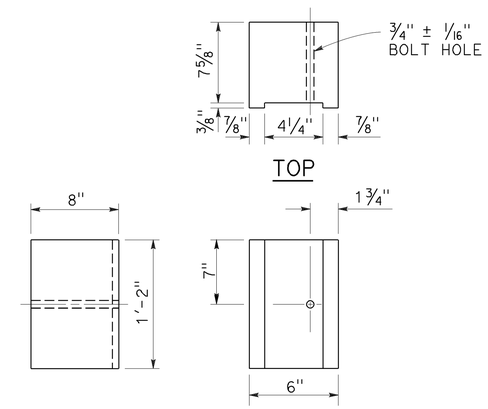

6" x 8"
NOTCHED WOOD BLOCK
Only for use with metal beam guard railing. See Note 5

NOTES:

1. All holes in steel post shall be 13/16" Dia maximum.
2. Dimensions shown for wood block are nominal.
3. Notched face of block faces steel post.
4. 6'-0" length posts to be used for typical roadway installation. See Revised Standard Plan RSP A77N3.
5. See Revised Standard Plan RSP A77L3 for use of 6" x 8" and 8" x 8" notched wood blocks.
6. This post and 8" x 12" block combination to be used for line post sections of MGS on narrow roadways and where strengthened line post sections of MGS are warranted to shield fixed objects.

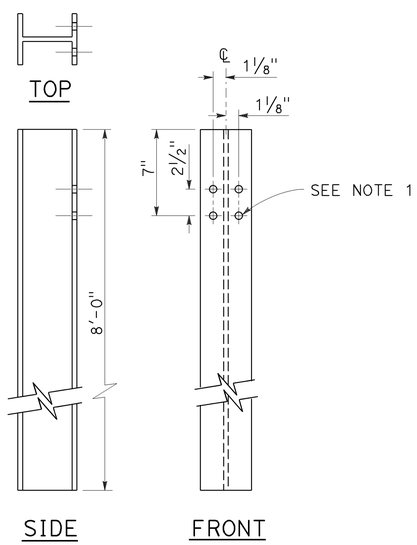

W6 x 15
STEEL POST
See Note 6

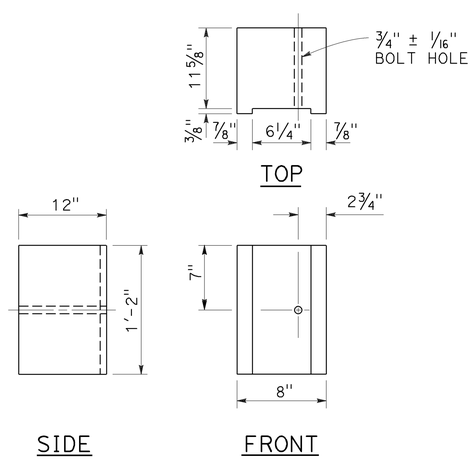

8" x 12"
NOTCHED WOOD BLOCK
See Notes 2 and 3

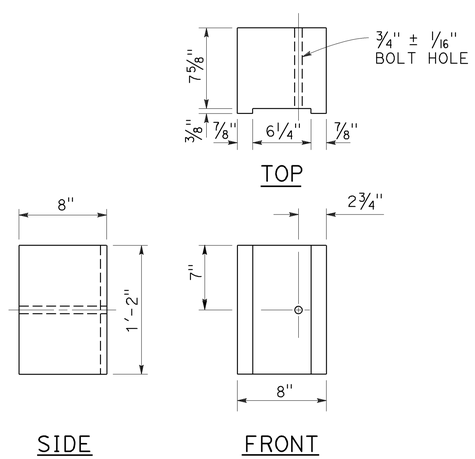

8" x 8"
NOTCHED WOOD BLOCK
Only for use with metal beam guard railing. See Note 5

STATE OF CALIFORNIA
DEPARTMENT OF TRANSPORTATION

MIDWEST GUARDRAIL SYSTEM STEEL POST AND NOTCHED WOOD BLOCK DETAILS

NO SCALE

RSP A77N2 DATED NOVEMBER 15, 2013 SUPERSEDES RSP A77N2
DATED JULY 19, 2013 THAT SUPPLEMENTS THE STANDARD PLANS BOOK DATED 2010.

REVISED STANDARD PLAN RSP A77N2

2010 REVISED STANDARD PLAN RSP A77N2

10-29-13

Dist	COUNTY	ROUTE	POST MILES TOTAL PROJECT	SHEET No.	TOTAL SHEETS
06	Fre,Kin	33,41,43	Var	20	62

Randell D. Hiatt
REGISTERED CIVIL ENGINEER

July 19, 2013
PLANS APPROVAL DATE

REGISTERED PROFESSIONAL ENGINEER
Randell D. Hiatt
No. C50200
Exp. 6-30-15
CIVIL
STATE OF CALIFORNIA

THE STATE OF CALIFORNIA OR ITS OFFICERS OR AGENTS SHALL NOT BE RESPONSIBLE FOR THE ACCURACY OR COMPLETENESS OF SCANNED COPIES OF THIS PLAN SHEET.

TO ACCOMPANY PLANS DATED 3-28-16

NOTES:

1. When necessary to place dike more than 7" in front of face of MGS, only Type C dike may be used. For dike details, see Revised Standard Plan RSP A87B.
2. For standard railing post embedment, see Revised Standard Plan RSP A77N3.
3. MGS delineation to be used where shown on the Project Plans.
4. When dike or curb is placed under MGS, the maximum height of the dike or curb shall be 6". Mountable dike should not be used. For dike and curb details, see Revised Standard Plans RSP A87A and RSP A87B.
5. For details of typical distance between the face of rail and hinge point, see Revised Standard Plan RSP A77N3.
6. For steel line posts, use 1/4 - 20 self-tapping screws in 0.22" diameter holes or 1/4" bolts in 9/32" diameter holes.

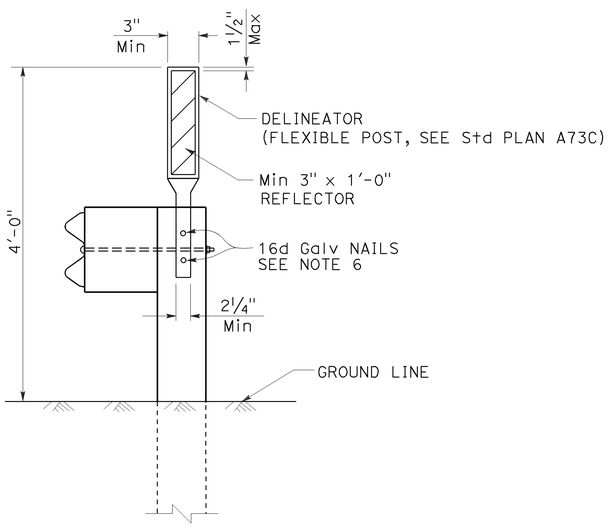

MGS DELINEATION

See Note 3

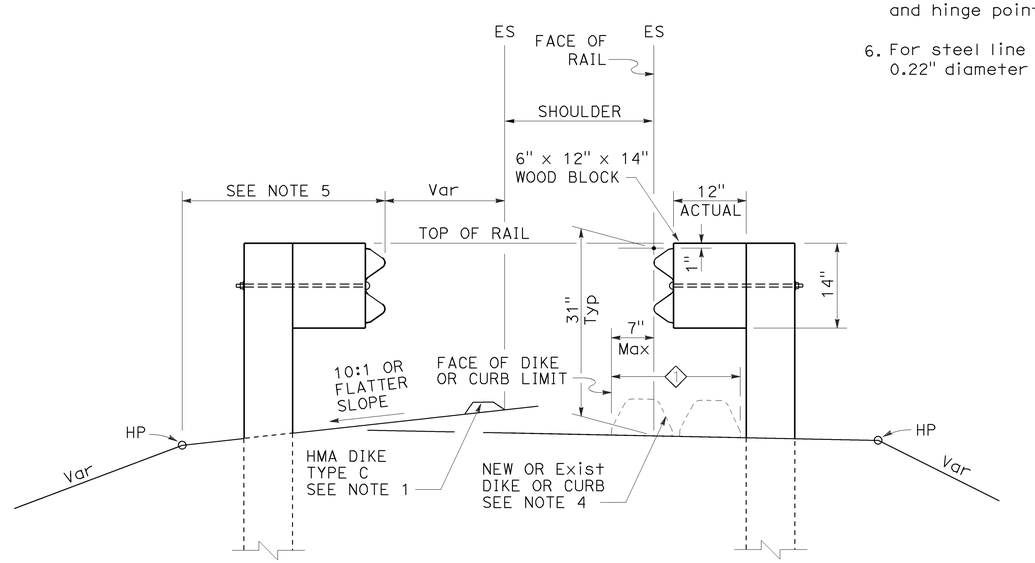

DIKE POSITIONING

See Note 1

1 PERMISSIBLE DIKE OR CURB PLACEMENT AREA

STATE OF CALIFORNIA
DEPARTMENT OF TRANSPORTATION

MIDWEST GUARDRAIL SYSTEM TYPICAL RAILING DELINEATION AND DIKE POSITIONING DETAILS

NO SCALE

RSP A77N4 DATED JULY 19, 2013 SUPPLEMENTS THE STANDARD PLANS BOOK DATED 2010.

REVISED STANDARD PLAN RSP A77N4

2010 REVISED STANDARD PLAN RSP A77N4

7-10-13

Dist	COUNTY	ROUTE	POST MILES TOTAL PROJECT	SHEET No.	TOTAL SHEETS
06	Fre,Kin	33,41,43	Var	21	62

Randell D. Hiatt
REGISTERED CIVIL ENGINEER

August 14, 2015
PLANS APPROVAL DATE

REGISTERED PROFESSIONAL ENGINEER
Randell D. Hiatt
No. C50200
Exp. 6-30-17
CIVIL
STATE OF CALIFORNIA

THE STATE OF CALIFORNIA OR ITS OFFICERS OR AGENTS SHALL NOT BE RESPONSIBLE FOR THE ACCURACY OR COMPLETENESS OF SCANNED COPIES OF THIS PLAN SHEET.

TO ACCOMPANY PLANS DATED 3-28-16

2010 REVISED STANDARD PLAN RSP A77Q1

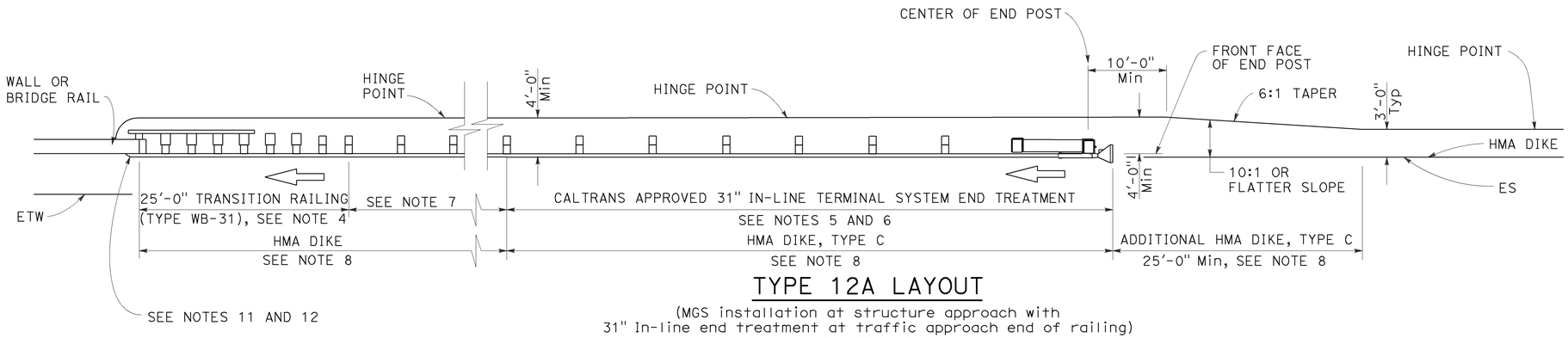

TYPE 12A LAYOUT

(MGS installation at structure approach with
31" In-line end treatment at traffic approach end of railing)
See Note 9

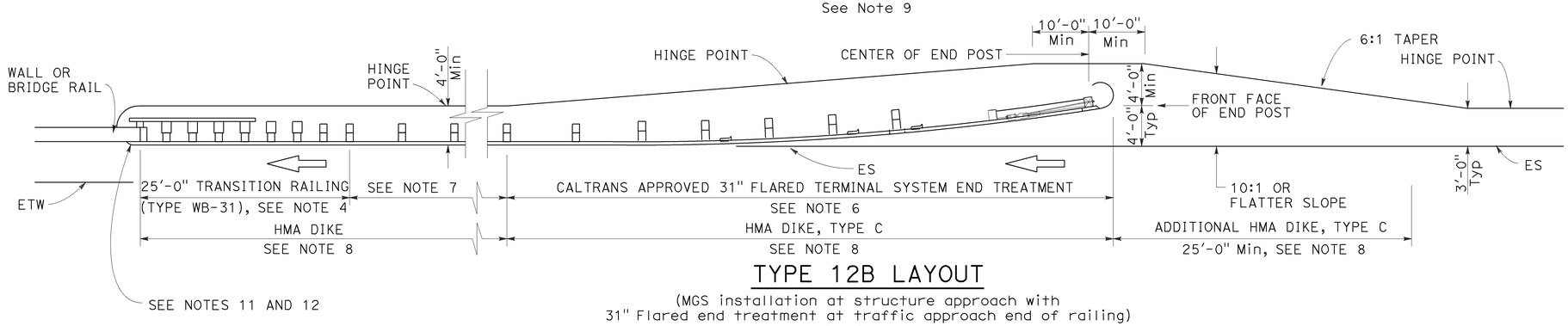

TYPE 12B LAYOUT

(MGS installation at structure approach with
31" Flared end treatment at traffic approach end of railing)
See Note 9

NOTES:

1. Line post, blocks and hardware to be used are shown on Revised Standard Plans RSP A77L1, RSP A77L2, RSP A77M1, RSP A77N1 and RSP A77N2.
2. MGS post spacing to be 6'-3" center to center, except as otherwise noted.
3. Except as noted, line posts are 6" x 8" x 6'-0" wood with 6" x 12" x 1'-2" wood blocks. W6 x 8.5 or W6 x 9 steel posts, 6'-0" in length, with 6" x 12" x 1'-2" notched wood blocks or plastic blocks may be used for 6" x 8" x 6'-0" wood posts with 6" x 12" x 1'-2" wood blocks where applicable and when specified.
4. For Transition Railing (Type WB-31) details for Types 12A and 12B Layouts, see Revised Standard Plan RSP A77U4.
5. 31" in-line terminal system end treatments are used where site conditions will not accommodate a 31" flared end treatment.
6. The type of 31" terminal system end treatment to be used will be shown on the Project Plans.
7. Dependent on site conditions (embankment height, side slopes, or other fixed objects), it may be advisable to construct additional guard railing (a length equal to multiples of 12'-6" with 6'-3" post spacing) between the transition railing and end treatment. A 12.5 degree angle of departure can be drawn on the Project Plans from the edge of traveled way through the outer most point of the fixed object to determine the additional length of railing needed.
8. Where placement of dike is required with guard railing installations, see Revised Standard Plan RSP A77N4 for dike positioning details.
9. Type 12A or Type 12B Layouts are typically used:
   a. To the right of approaching traffic, at the end of a structure, on two-lane conventional highway where the roadbed width across the structure is less than 40 feet.
   b. To the left of approaching traffic, at the end of a structure, on two-lane conventional highway where the roadbed width across the structure is less than 40 feet.
   c. To the right of approaching traffic at the end of each structure on multilane freeways or expressways with separate adjacent or parallel bridges.
   d. To the right of approaching traffic at the end of the structure on multilane freeways or expressways with decked median on the bridge.
10. See Revised Standard Plan RSP A77Q3 for typical layout used left of approaching traffic at the ends of each structure on multilane freeways or expressways with separate adjacent or parallel bridges.
11. For additional details of typical connections to bridge rail, see Connection Detail AA on Revised Standard Plans RSP A77U1 and RSP A77U2 and Connection Detail FF on Revised Standard Plans RSP A77V1 and RSP A77V2.
12. For additional details of a typical connection to walls or abutments, see Revised Standard Plan RSP A77U3.

STATE OF CALIFORNIA
DEPARTMENT OF TRANSPORTATION

MIDWEST GUARDRAIL SYSTEM TYPICAL LAYOUTS FOR STRUCTURE APPROACH

NO SCALE

RSP A77Q1 DATED AUGUST 14, 2015 SUPERSEDES RSP A77Q1 DATED JULY 19, 2013 THAT SUPPLEMENTS THE STANDARD PLANS BOOK DATED 2010.

REVISED STANDARD PLAN RSP A77Q1

8-12-15

Dist	COUNTY	ROUTE	POST MILES TOTAL PROJECT	SHEET No.	TOTAL SHEETS
06	Fre,Kin	33,41,43	Var	22	62

Randell D. Hiatt
REGISTERED CIVIL ENGINEER

July 19, 2013
PLANS APPROVAL DATE

REGISTERED PROFESSIONAL ENGINEER
Randell D. Hiatt
No. C50200
Exp. 6-30-15
CIVIL
STATE OF CALIFORNIA

THE STATE OF CALIFORNIA OR ITS OFFICERS OR AGENTS SHALL NOT BE RESPONSIBLE FOR THE ACCURACY OR COMPLETENESS OF SCANNED COPIES OF THIS PLAN SHEET.

TO ACCOMPANY PLANS DATED 3-28-16

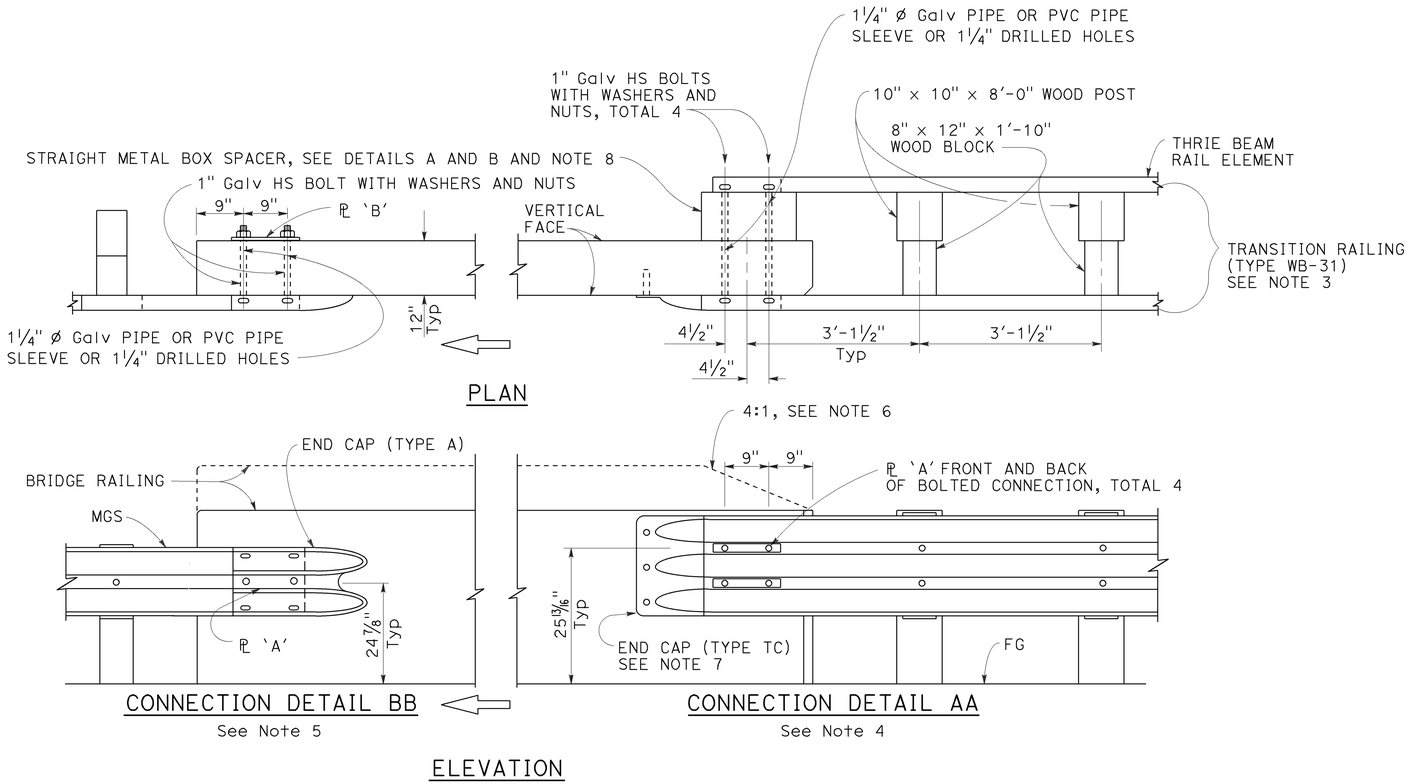

MIDWEST GUARDRAIL SYSTEM CONNECTION TO BRIDGE RAILING WITHOUT SIDEWALK

NOTES:

1. See Revised Standard Plan RSP A77U2 for additional connection details to bridges without sidewalks.
2. Additional details of posts, blocks and hardware are shown on Revised Standard Plans RSP A77M1, RSP A77N1 and RSP A77N2.
3. For additional details of Transition Railing (Type WB-31), see Revised Standard Plan RSP A77U4. Transition Railing (Type WB-31) transitions the 12 gauge MGS railing section to a heavier gage nested thrie beam railing section which is connected to the concrete bridge railing.
4. For typical use of Connection Detail AA, see Layout Types 12A and 12B on Revised Standard Plan RSP A77Q1, Layout Types 12C and 12D on Revised Standard Plan RSP A77Q2, and Layout Type 12E on Revised Standard Plan RSP A77Q3.
5. For typical use of Connection Detail BB, see Layout Type 12D (structure departure railing connection) on Revised Standard Plan RSP A77Q2 and Layout Type 12DD on Revised Standard Plan RSP A77Q5.
6. Where the height of the bridge railing exceeds the height of the thrie beam railing by more than 1" at Connection Detail AA, taper the top of the end of the bridge railing at 4:1 to match the top elevation of the thrie beam rail.
7. For details of End Cap (Type TC), see Revised Standard Plan RSP A77U4.
8. See Revised Standard Plan RSP A77U4 for additional details regarding depth dimension for straight metal box spacer.

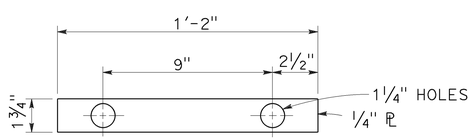

PLATE 'A'

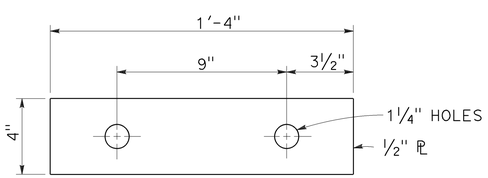

PLATE 'B'
(For backside of connection BB)

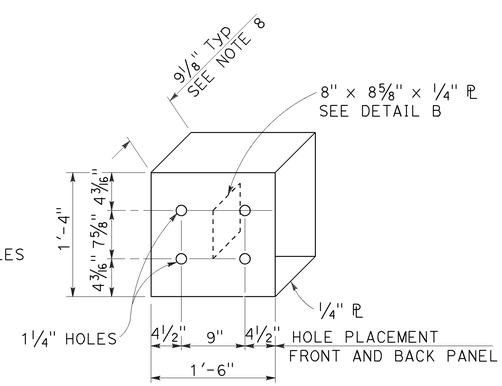

DETAIL A

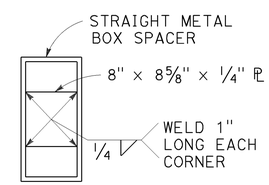

DETAIL B

STRAIGHT METAL BOX SPACER

STATE OF CALIFORNIA
DEPARTMENT OF TRANSPORTATION

MIDWEST GUARDRAIL SYSTEM CONNECTIONS TO BRIDGE RAILINGS WITHOUT SIDEWALKS DETAILS No. 1

NO SCALE

RSP A77U1 DATED JULY 19, 2013 SUPPLEMENTS THE STANDARD PLANS BOOK DATED 2010.

REVISED STANDARD PLAN RSP A77U1

2010 REVISED STANDARD PLAN RSP A77U1

7-8-13

Dist	COUNTY	ROUTE	POST MILES TOTAL PROJECT	SHEET No.	TOTAL SHEETS
06	Fre,Kin	33,41,43	Var	23	62

Randell D. Hiatt
REGISTERED CIVIL ENGINEER

July 19, 2013
PLANS APPROVAL DATE

REGISTERED PROFESSIONAL ENGINEER
Randell D. Hiatt
No. C50200
Exp. 6-30-15
CIVIL
STATE OF CALIFORNIA

THE STATE OF CALIFORNIA OR ITS OFFICERS OR AGENTS SHALL NOT BE RESPONSIBLE FOR THE ACCURACY OR COMPLETENESS OF SCANNED COPIES OF THIS PLAN SHEET.

TO ACCOMPANY PLANS DATED 3-28-16

2010 REVISED STANDARD PLAN RSP A77U2

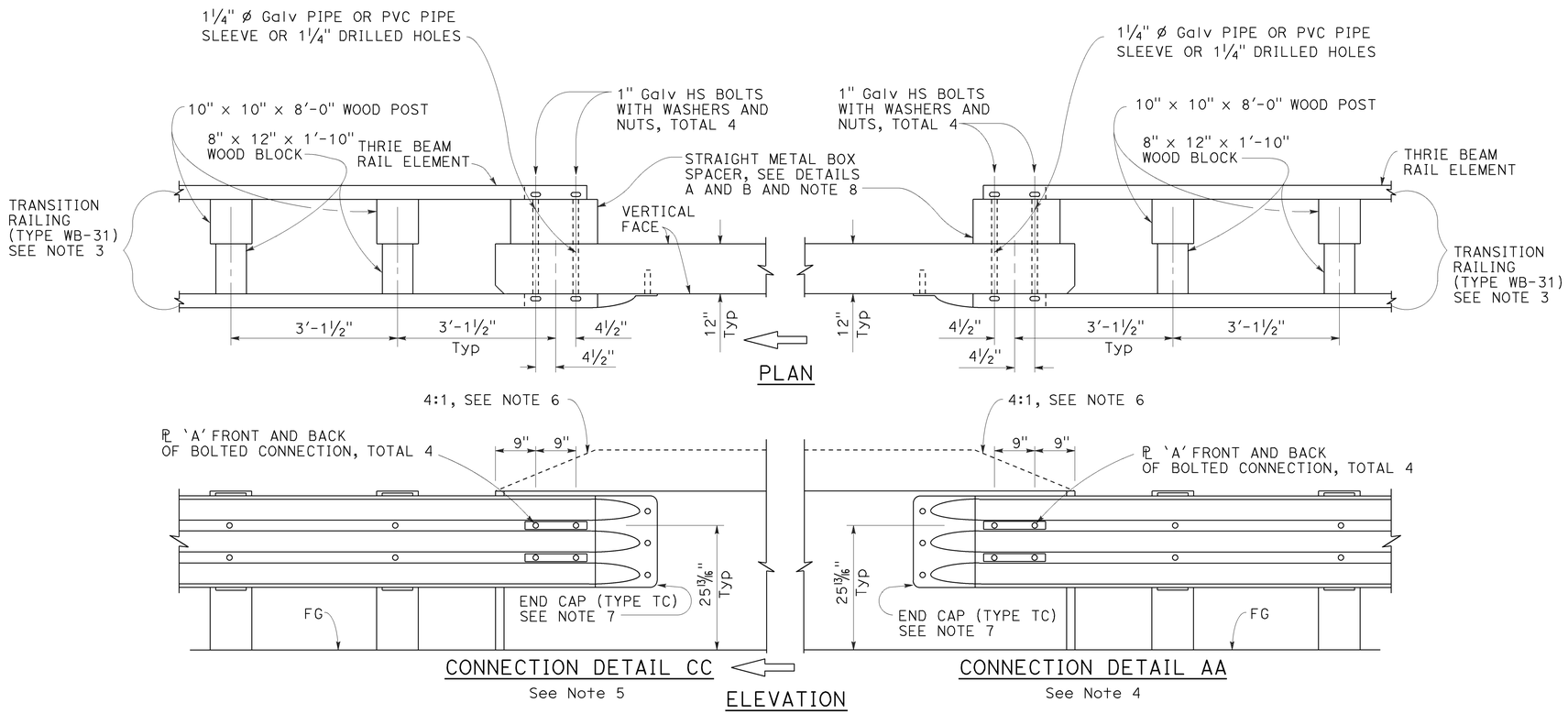

MIDWEST GUARDRAIL SYSTEM CONNECTION TO BRIDGE RAILING WITHOUT SIDEWALK

NOTES:

1. See Revised Standard Plan RSP A77U1 for additional connection details to bridges without sidewalks.
2. Additional details of posts, blocks and hardware are shown on Revised Standard Plans RSP A77M1, RSP A77N1 and RSP A77N2.
3. For additional details of Transition Railing (Type WB-31), see Revised Standard Plan RSP A77U4. Transition Railing (Type WB-31) transitions the 12 gauge MGS railing section to a heavier gage nested thrie beam railing section which is connected to the concrete bridge railing.
4. For typical use of Connection Detail AA, see Layout Types 12A and 12B on Revised Standard Plan RSP A77Q1, Layout Types 12C and 12D on Revised Standard Plan RSP A77Q2, and Layout Type 12E on Revised Standard Plan RSP A77Q3.
5. For typical use of Connection Detail CC, see Layout Types 12AA and 12BB on Revised Standard Plan RSP A77Q4 and Layout Type 12CC on Revised Standard Plan RSP A77Q5.
6. Where the height of the bridge railing exceeds the height of the thrie beam railing by more than 1" at Connection Detail AA and connection Detail CC, taper the top of the end of the bridge railing at 4:1 to match the top elevation of the thrie beam railing.
7. For details of End Cap (Type TC), see Revised Standard Plan RSP A77U4.
8. See Revised Standard Plan RSP A77U4 for additional details regarding depth dimension for straight metal box spacer.

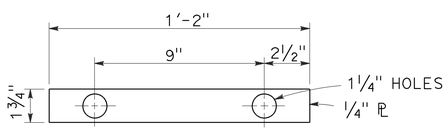

PLATE 'A'

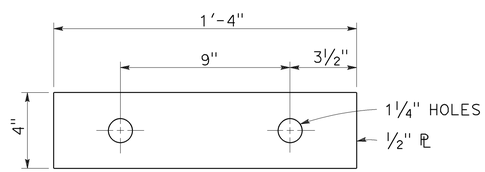

PLATE 'B'
(For backside of connection BB)

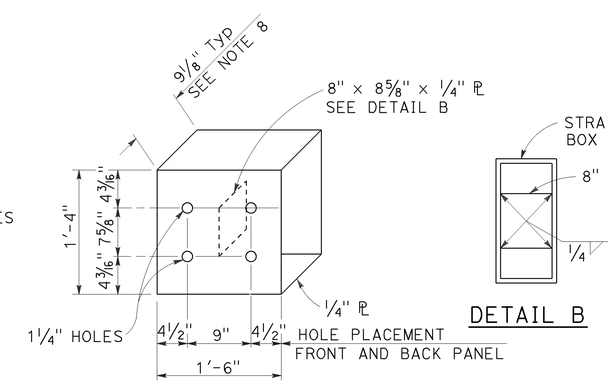

STATE OF CALIFORNIA
DEPARTMENT OF TRANSPORTATION

MIDWEST GUARDRAIL SYSTEM CONNECTIONS TO BRIDGE RAILINGS WITHOUT SIDEWALKS DETAILS No. 2

NO SCALE

RSP A77U2 DATED JULY 19, 2013 SUPPLEMENTS THE STANDARD PLANS BOOK DATED 2010.

REVISED STANDARD PLAN RSP A77U2

Dist	COUNTY	ROUTE	POST MILES TOTAL PROJECT	SHEET No.	TOTAL SHEETS
06	Fre,Kin	33,41,43	Var	24	62

REGISTERED CIVIL ENGINEER

July 19, 2013
PLANS APPROVAL DATE

REGISTERED PROFESSIONAL ENGINEER
Gurinderpal Bhullar
No. C48815
Exp. 9-30-14
CIVIL
STATE OF CALIFORNIA

THE STATE OF CALIFORNIA OR ITS OFFICERS OR AGENTS SHALL NOT BE RESPONSIBLE FOR THE ACCURACY OR COMPLETENESS OF SCANNED COPIES OF THIS PLAN SHEET.

TO ACCOMPANY PLANS DATED 3-28-16

2010 REVISED STANDARD PLAN RSP T9

TABLE 1

TAPER LENGTH CRITERIA AND CHANNELIZING DEVICE SPACING

SPEED (S)	MINIMUM TAPER LENGTH * FOR WIDTH OF OFFSET 12 FEET (W)				MAXIMUM CHANNELIZING DEVICE SPACING		
					X	Y	Z **
	TANGENT 2L	MERGING L	SHIFTING L/2	SHOULDER L/3	TAPER	TANGENT	CONFLICT
mph	ft	ft	ft	ft	ft	ft	ft
20	160	80	40	27	20	40	10
25	250	125	63	42	25	50	12
30	360	180	90	60	30	60	15
35	490	245	123	82	35	70	17
40	640	320	160	107	40	80	20
45	1080	540	270	180	45	90	22
50	1200	600	300	200	50	100	25
55	1320	660	330	220	55	110	27
60	1440	720	360	240	60	120	30
65	1560	780	390	260	65	130	32
70	1680	840	420	280	70	140	35

* - For other offsets, use the following merging taper length formula for L:
For speed of 40 mph or less, $L = WS^2/60$
For speed of 45 mph or more, $L = WS$

Where: L = Taper length in feet
W = Width of offset in feet
S = Posted speed limit, off-peak 85th-percentile speed prior to work starting, or the anticipated operating speed in mph

** - Use for taper and tangent sections where there are no pavement markings or where there is a conflict between existing pavement markings and channelizers (CA).

TABLE 2

LONGITUDINAL BUFFER SPACE AND FLAGGER STATION SPACING

SPEED *	Min D **	DOWNGRADE Min D ***		
		-3%	-6%	-9%
mph	ft	ft	ft	ft
20	115	116	120	126
25	155	158	165	173
30	200	205	215	227
35	250	257	271	287
40	305	315	333	354
45	360	378	400	427
50	425	446	474	507
55	495	520	553	593
60	570	598	638	686
65	645	682	728	785
70	730	771	825	891

* - Speed is posted speed limit, off-peak 85th-percentile speed prior to work starting, or the anticipated operating speed in mph

** - Longitudinal buffer space or flagger station spacing

*** - Use on sustained downgrade steeper than -3 percent and longer than 1 mile.

TABLE 3

ADVANCE WARNING SIGN SPACING

ROAD TYPE	DISTANCE BETWEEN SIGNS *		
	A	B	C
	ft	ft	ft
URBAN - 25 mph OR LESS	100	100	100
URBAN - MORE THAN 25 mph TO 40 mph	250	250	250
URBAN - MORE THAN 40 mph	350	350	350
RURAL	500	500	500
EXPRESSWAY / FREEWAY	1000	1500	2640

* - The distances are approximate, are intended for guidance purposes only, and should be applied with engineering judgment. These distances should be adjusted by the Engineer for field conditions, if necessary, by increasing or decreasing the recommmended distances.

STATE OF CALIFORNIA
DEPARTMENT OF TRANSPORTATION

TRAFFIC CONTROL SYSTEM TABLES FOR LANE AND RAMP CLOSURES

NO SCALE

RSP T9 DATED JULY 19, 2013 SUPERSEDES RSP T9 DATED APRIL 19, 2013 THAT SUPPLEMENTS THE STANDARD PLANS BOOK DATED 2010.

REVISED STANDARD PLAN RSP T9

TO ACCOMPANY PLANS DATED 3-28-16

Dist	COUNTY	ROUTE	POST MILES TOTAL PROJECT	SHEET No.	TOTAL SHEETS
06	Fre,Kin	33,41,43	Var	25	62

REGISTERED CIVIL ENGINEER

April 19, 2013
PLANS APPROVAL DATE

REGISTERED PROFESSIONAL ENGINEER Gurinderpal Bhullar No. C48815 Exp. 9-30-14 CIVIL STATE OF CALIFORNIA

THE STATE OF CALIFORNIA OR ITS OFFICERS OR AGENTS SHALL NOT BE RESPONSIBLE FOR THE ACCURACY OR COMPLETENESS OF SCANNED COPIES OF THIS PLAN SHEET.

NOTES:

See Revised Standard Plan RSP T9 for tables.

Use cone spacing X for taper segment, Y for tangent segment or Z for conflict situations, as approriate, per Table 1, unless X, Y, or Z cone spacing is shown on this sheet.

Unless otherwise specified in the special provisions, all temporary warning signs shall have black legend on fluorescent orange background.

California codes are designated by (CA). Otherwise, Federal (MUTCD) codes are shown.

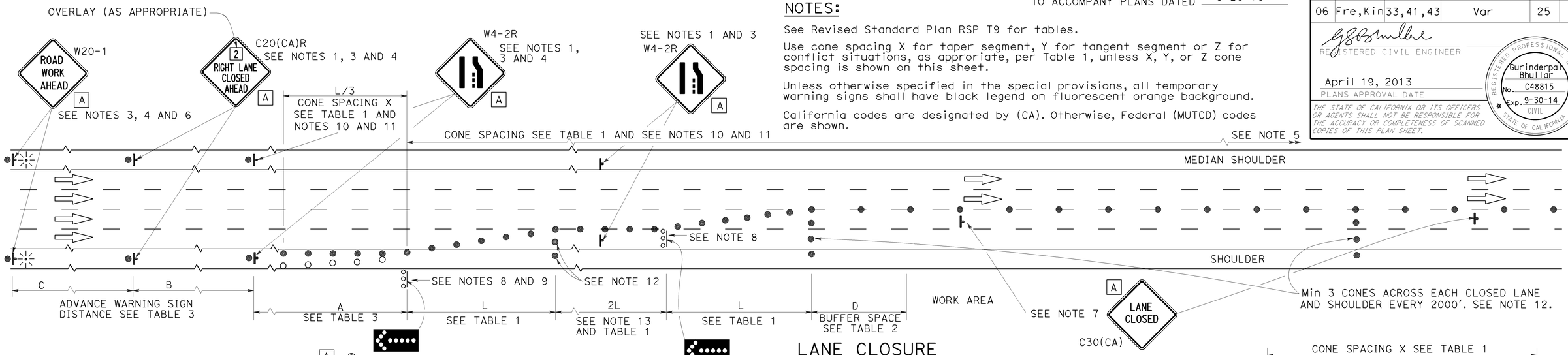

LANE CLOSURE

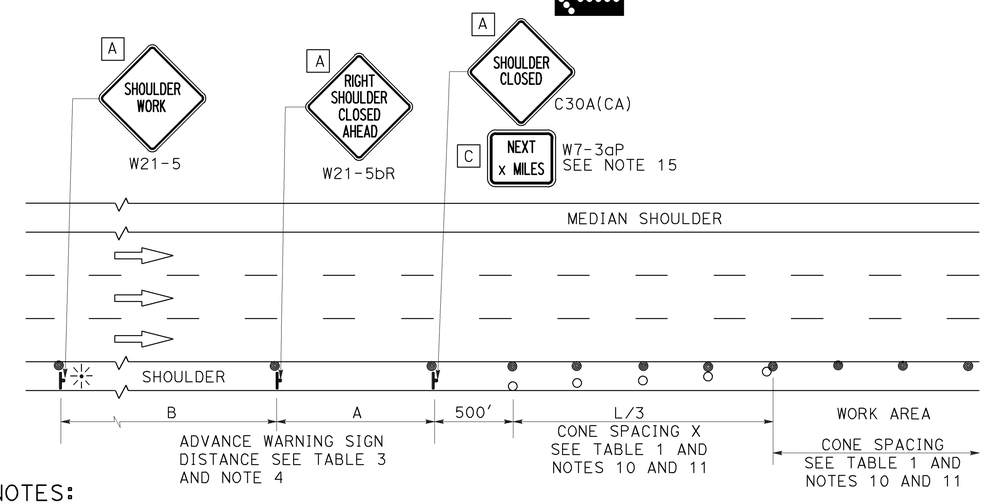

SHOULDER CLOSURE

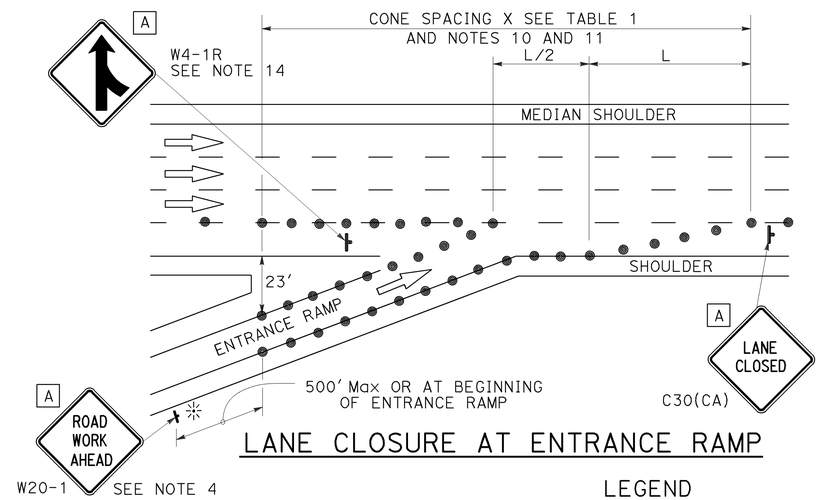

LANE CLOSURE AT ENTRANCE RAMP

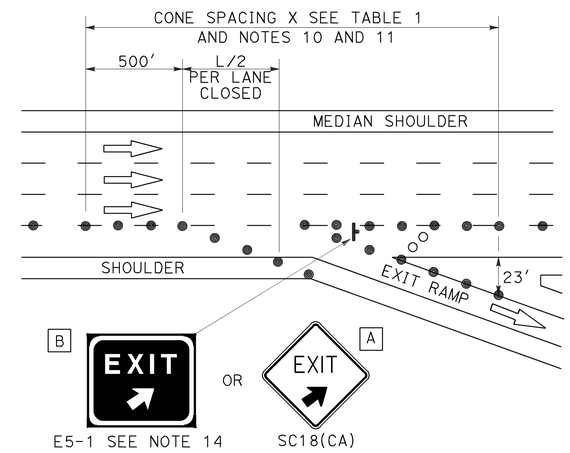

LANE CLOSURE AT EXIT RAMP

NOTES:

1. Median lane closures shall conform to the details as shown except that C20(CA)L and W4-2L signs shall be used.
2. At least one person shall be assigned to provide full time maintenance of traffic control devices for lane closures.
3. Duplicate sign installations are not required:
   a) On opposite shoulder if at least one-half of the available lanes remain open to traffic.
   b) In the median if the width of the median shoulder is less than 8' and the outside lanes are to be closed.
4. Each advance warning sign on each side of the roadway shall be equipped with at least two flags for daytime closure. Each flag shall be at least 16" x 16" in size and shall be orange or fluorescent red-orange in color. Flashing beacons shall be placed at the locations indicated for lane closure during hours of darkness.
5. A G20-2 "END ROAD WORK" sign, with minimum size of 48" x 24" as appropriate, shall be placed at the end of the lane closure unless the end of work area is obvious or ends within a larger project's limits.
6. If the W20-1 sign would follow within 2000' of a stationary W20-1 or G20-1 "ROAD WORK NEXT _____ MILES", use a C20(CA) sign for the first advance warning sign.
7. Place a C30(CA) sign every 2000' throughout length of lane closure.
8. One flashing arrow sign for each lane closed. The flashing arrow signs shall be Type I.
9. A minimum 1500' of sight distance shall be provided where possible for vehicles approaching the first flashing arrow sign. Lane closures shall not begin at top of crest vertical curve or on a horizontal curve.
10. All cones used for lane closures during the hours of darkness shall be fitted with retroreflective bands (or sleeves) as specified in the specifications.
11. Portable delineators, placed at one-half the spacing indicated for traffic cones may be used instead of cones for daytime closures only.
12. Unless otherwise specified in the special provisions, a minimum of 3 cones shall be placed transversely across each closed lane and shoulder at each location where a taper across a traffic lane ends and every 2000' as shown on the "Lane Closure" detail. Two Type II barricades may be used instead of the 3 cones. The transverse alignment of the cones or barricades on the closed shoulder may be shifted from the transverse alignment to provide access to the work.
13. Unless otherwise specified in the special provisions, the 2L tangent shown along lane lines shall be used between the L tapers required for each closed traffic lane.
14. Unless otherwise specified in the special provisions, the E5-1 or SC18(CA) and W4-1 signs shall be used as shown.
15. A W7-3aP "NEXT____ MILES" plaque must be used if theshoulder closure extends beyond the distance that can be perceived by road users.

LEGEND

- TRAFFIC CONE
- TRAFFIC CONE (OPTIONAL TAPER)
- TEMPORARY TRAFFIC CONTROL SIGN
- FLASHING ARROW SIGN (FAS)
- FAS SUPPORT OR TRAILER
- PORTABLE FLASHING BEACON

SIGN PANEL SIZE (Min)

A	48" x 48"
B	72" x 60"
C	36" x 30"

STATE OF CALIFORNIA
DEPARTMENT OF TRANSPORTATION

TRAFFIC CONTROL SYSTEM FOR LANE CLOSURE ON FREEWAYS AND EXPRESSWAYS

NO SCALE

RSP T10 DATED APRIL 19, 2013 SUPERSEDES STANDARD PLAN T10 DATED MAY 20, 2011 - PAGE 237 OF THE STANDARD PLANS BOOK DATED 2010.

REVISED STANDARD PLAN RSP T10

2010 REVISED STANDARD PLAN RSP T10

12-18-12

Dist	COUNTY	ROUTE	POST MILES TOTAL PROJECT	SHEET No.	TOTAL SHEETS
06	Fre,Kin	33,41,43	Var	26	62

REGISTERED CIVIL ENGINEER

April 19, 2013
PLANS APPROVAL DATE

REGISTERED PROFESSIONAL ENGINEER Gurinderpal Bhullar No. C48815 Exp. 9-30-14 CIVIL STATE OF CALIFORNIA

THE STATE OF CALIFORNIA OR ITS OFFICERS OR AGENTS SHALL NOT BE RESPONSIBLE FOR THE ACCURACY OR COMPLETENESS OF SCANNED COPIES OF THIS PLAN SHEET.

TO ACCOMPANY PLANS DATED 3-28-16

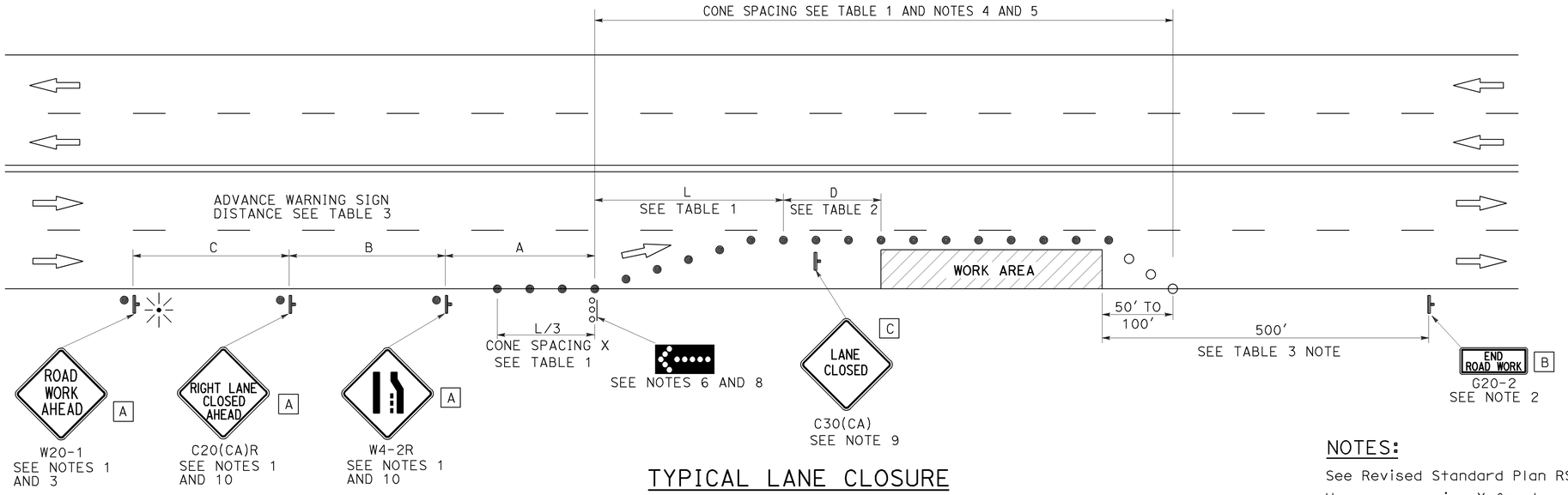

TYPICAL LANE CLOSURE

NOTES:

See Revised Standard Plan RSP T9 for tables.

Use cone spacing X for taper segment, Y for tangent segment or Z for conflict situations, as approriate, per Table 1, unless X, Y, or Z cone spacing is shown on this sheet.

Unless otherwise specified in the special provisions, all temporary warning signs shall have black legend on fluorescent orange background.

California codes are designated by (CA). Otherwise, Federal (MUTCD) codes are shown.

NOTES:

1. Each advance warning sign shall be equipped with at least two flags for daytime closure. Each flag shall be at least 16" x 16" in size and shall be orange or fluorescent red-orange in color. Flashing beacons shall be placed at the locations indicated for lane closure during hours of darkness.
2. A G20-2 "END ROAD WORK" sign, as appropriate, shall be placed at the end of the lane closure unless the end of work area is obvious, or ends within a larger project's limits.
3. If the W20-1 sign would follow within 2000' of a stationary W20-1 or G20-1 "ROAD WORK NEXT _____ MILES", use a C20(CA) sign for the first advance warning sign.
4. All cones used for lane closures during the hours of darkness shall be fitted with retroreflective bands (or sleeves) as specified in the specifications.
5. Portable delineators, placed at one-half the spacing indicated for traffic cones, may be used instead of cones for daytime closures only.
6. Flashing arrow sign shall be either Type I or Type II.
7. For approach speeds over 50 mph, use the "Traffic Control System for Lane Closure On Freeways And Expressways" plan for lane closure details and requirements.
8. A minimum 1500' of sight distance shall be provided where possible for vehicles approaching the first flashing arrow sign. Lane closures shall not begin at the top of crest vertical curve or on a horizontal curve.
9. Place a C30(CA) sign every 2000' throughout length of lane closure.
10. Median lane closures shall conform to the details as shown except that C20(CA)L and W4-2L signs shall be used.
11. At least one person shall be assigned to provide full time maintenance of traffic control devices for lane closure unless, otherwise directed by the Engineer.

LEGEND

- TRAFFIC CONE
- TRAFFIC CONE (OPTIONAL TAPER)
- TEMPORARY TRAFFIC CONTROL SIGN
- FLASHING ARROW SIGN (FAS)
- FAS SUPPORT OR TRAILER
- PORTABLE FLASHING BEACON

SIGN PANEL SIZE (Min)

A	48" x 48"
B	36" x 18"
C	30" x 30"

STATE OF CALIFORNIA
DEPARTMENT OF TRANSPORTATION

TRAFFIC CONTROL SYSTEM FOR LANE CLOSURE ON MULTILANE CONVENTIONAL HIGHWAYS

NO SCALE

RSP T11 DATED APRIL 19, 2013 SUPERSEDES STANDARD PLAN T11 DATED MAY 20, 2011 - PAGE 239 OF THE STANDARD PLANS BOOK DATED 2010.

REVISED STANDARD PLAN RSP T11

2010 REVISED STANDARD PLAN RSP T11

4-2-13

Dist	COUNTY	ROUTE	POST MILES TOTAL PROJECT	SHEET No.	TOTAL SHEETS
06	Fre,Kin	33,41,43	Var	27	62

Devinder Singh
REGISTERED CIVIL ENGINEER

October 30, 2015
PLANS APPROVAL DATE

REGISTERED PROFESSIONAL ENGINEER
Devinder Singh
No. C50470
Exp. 6-30-17
CIVIL
STATE OF CALIFORNIA

THE STATE OF CALIFORNIA OR ITS OFFICERS OR AGENTS SHALL NOT BE RESPONSIBLE FOR THE ACCURACY OR COMPLETENESS OF SCANNED COPIES OF THIS PLAN SHEET.

TO ACCOMPANY PLANS DATED 3-28-16

NOTES:

See Revised Standard Plan RSP T9 for tables.

Use cone spacing X for taper segment, Y for tangent segment or Z for conflict situations, as approriate, per Table 1, unless X, Y, or Z cone spacing is shown on this sheet.

Unless otherwise specified in the special provisions, all temporary warning signs shall have black legend on fluorescent orange background.

California codes are designated by (CA). Otherwise, Federal (MUTCD) codes are shown.

TYPICAL LANE CLOSURE WITH REVERSIBLE CONTROL

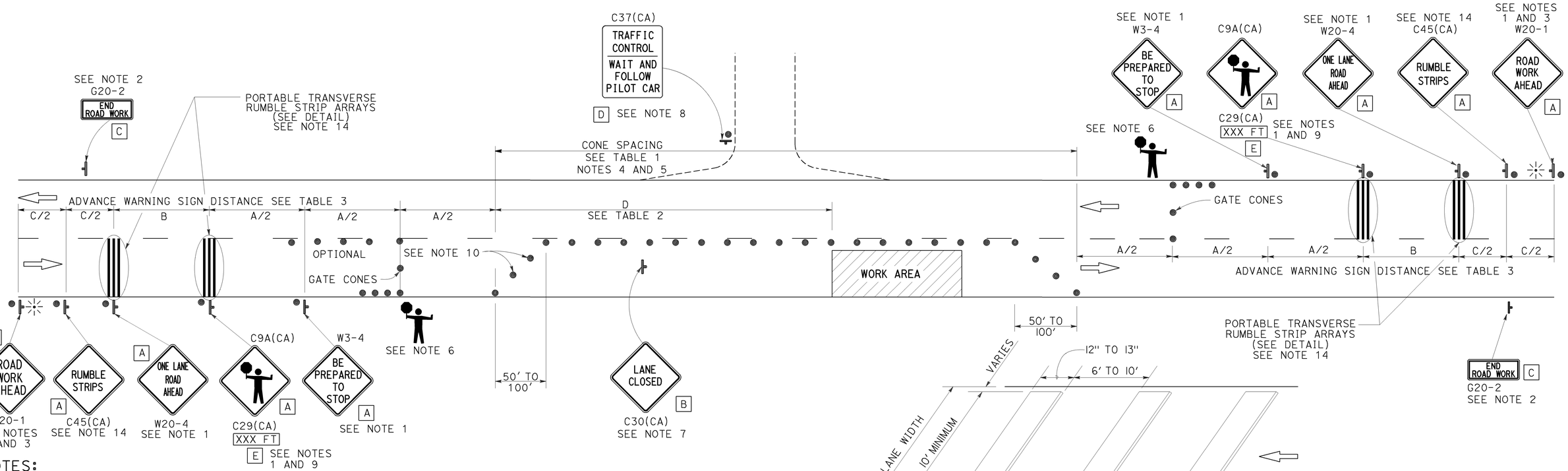

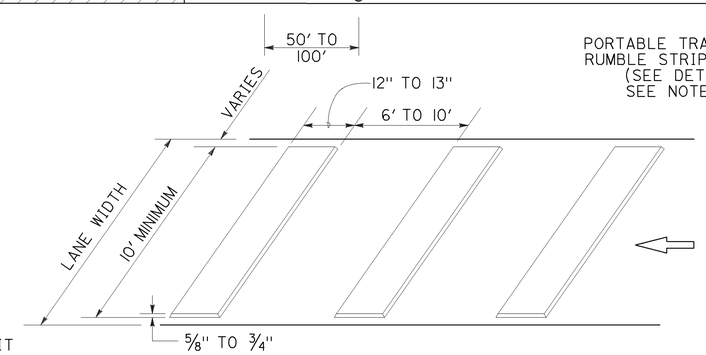

PORTABLE TRANSVERSE RUMBLE STRIP ARRAY DETAIL

NOTES:

1. Each advance warning sign in each direction of travel shall be equipped with at least two flags for daytime closure. Each flag shall be at least 16" x 16" in size and shall be orange or fluorescent red-orange in color. Flashing beacons shall be placed at the locations indicated for lane closure during hours of darkness.
2. A G20-2 "END ROAD WORK" sign, as appropriate, shall be placed at the end of the lane control unless the end of work area is obvious, or ends within a larger project's limits.
3. If the W20-1 sign would follow within 2000' of a stationary W20-1 or G20-1 "ROAD WORK NEXT _____ MILES", use a W20-4 sign for the first advance warning sign.
4. All cones used for lane closures during the hours of darkness shall be fitted with retroreflective bands (or sleeves) as specified in the specifications.
5. Portable delineators, placed at one-half the spacing indicated for traffic cones, may be used instead of cones for daytime closures only.
6. Additional advance flaggers may be required. Flagger should stand in a conspicuous place, be visible to approaching traffic as well as approaching vehicles after the first vehicle has stopped. During the hours of darkness, the flagging-station and flagger shall be illuminated and clearly visible to approaching traffic. The illumination footprint of the lighting on the ground shall be at least 20' in diameter. Place a minimum of four cones at 50' intervals in advance of flagger station as shown.
7. Place C30(CA) "LANE CLOSED" sign at 500' to 1000' intervals throughout extended work areas. They are optional if the work area is visible from the flagger station.
8. When a pilot car is used, place a C37(CA) "TRAFFIC CONTROL-WAIT AND FOLLOW PILOT CAR" sign with black legend on white background at all intersections, driveways and alleys without a flagger within traffic control area. Signs shall be clean and visible at all times. Where traffic can not be effectively self-regulated, at least one flagger shall be used at each intersection within traffic control area.
9. An optional C29(CA) sign may be placed below the C9A(CA) sign.
10. Either traffic cones or barricades shall be placed on the taper. Barricades shall be Type I, II, or III.
11. The color of the portable transverse rumble strips shall be black or orange. Use 2 arrays, each array shall consist of 3 rumble strips.
12. Portable transverse rumble strips shall not be placed on sharp horizontal or vertical curves nor shall they be placed through pedestrian crossings.
13. If the portable transverse rumble strips become out of alignment (skewed) by more than 6 inches, measured from one end to the other, they shall be readjusted to bring the placement back to the original location.
14. Portable transverse rumble strips are not required if any one of the following conditions is satisfied:
    A. Work duration occupies a location for four hours or less
    B. Posted speed limit is below 45 MPH
    C. Work is of emergency nature
    D. Work zone is in snow or icy weather conditions

SIGN PANEL SIZE (Min)

A	48" x 48"
B	30" x 30"
C	36" x 18"
D	36" x 42"
E	20" x 7"

LEGEND

- TRAFFIC CONE
- TEMPORARY TRAFFIC CONTROL SIGN
- PORTABLE FLASHING BEACON
- FLAGGER

STATE OF CALIFORNIA
DEPARTMENT OF TRANSPORTATION

TRAFFIC CONTROL SYSTEM FOR LANE CLOSURE ON TWO LANE CONVENTIONAL HIGHWAYS

NO SCALE

RSP T13 DATED OCTOBER 30, 2015 SUPERSEDES RSP T13 DATED OCTOBER 17, 2014, RSP T13 DATED JULY 18, 2014 AND RSP T13 DATED APRIL 19, 2013 AND STANDARD PLAN T13 DATED MAY 20, 2011 - PAGE 241 OF THE STANDARD PLANS BOOK DATED 2010.

REVISED STANDARD PLAN RSP T13

2010 REVISED STANDARD PLAN RSP T13

10-13-15

DIST	COUNTY	ROUTE	POST MILES TOTAL PROJECT	SHEET No.	TOTAL SHEETS
06	Fre,Kin	33,41,43	Var	28	62

REGISTERED CIVIL ENGINEER — DATE 10-14-15

3-28-16
PLANS APPROVAL DATE

REGISTERED PROFESSIONAL ENGINEER — Sara P. Yip No. C73841 Exp. 06-30-17 CIVIL — STATE OF CALIFORNIA

The State of California or its officers or agents shall not be responsible for the accuracy or completeness of electronic copies of this plan sheet.

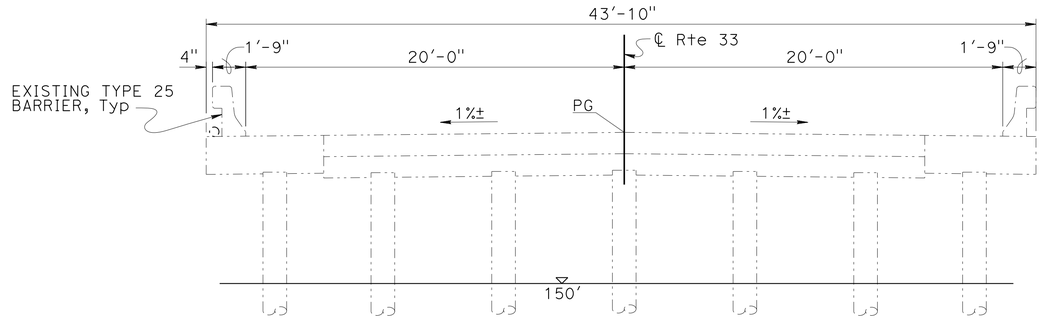

TYPICAL SECTION

1/4" = 1'-0"

GENERAL NOTES
LOAD AND RESISTANCE FACTOR DESIGN

DESIGN: AASHTO LRFD BRIDGE DESIGN SPECIFICATIONS, 6th EDITION WITH CALIFORNIA AMENDMENTS

SEISMIC DESIGN: CALTRANS SEISMIC DESIGN CRITERIA (SDC), Version 1.7, April 2013

SEISMIC LOADING: SEE "SITE SPECIFIC ACCELERATION RESPONSE SPECTRUM" Peak Ground Acceleration 0.37g

AS-BUILT REINFORCED CONCRETE:
$f_{y_{Original}}$ = 40 ksi
$f_{y_{Widen}}$ = 60 ksi
f'c = 3.25 ksi

STRUCTURAL STEEL:
fy = 36 ksi, except for HSS 12x6x3/8
fy = 46 ksi (HSS 12x6x3/8 only)

INDEX TO PLANS

SHEET No.	TITLE
1	GENERAL PLAN
2	FOUNDATION PLAN
3	SLAB BRIDGE SEAT EXTENDER DETAILS No. 1
4	SLAB BRIDGE SEAT EXTENDER DETAILS No. 2
5	LOG OF TEST BORINGS 1 OF 3
6	LOG OF TEST BORINGS 2 OF 3
7	LOG OF TEST BORINGS 3 OF 3

STANDARD PLANS 2010

A10A	ABBREVIATIONS (SHEET 1 OF 2)
RSP A10B	ABBREVIATIONS (SHEET 2 OF 2)
A10C	LINES AND SYMBOLS (SHEET 1 OF 3)
A10D	LINES AND SYMBOLS (SHEET 2 OF 3)
A10E	LINES AND SYMBOLS (SHEET 3 OF 3)
RSP A10F	LEGEND - SOIL (SHEET 1 OF 2)
RSP A10G	LEGEND - SOIL (SHEET 2 OF 2)
A10H	LEGEND - ROCK

STANDARD PLAN SHEET No.

DETAIL No.

NOTE:
Elevations shown on "GENERAL PLAN" are based on NGVD 29.

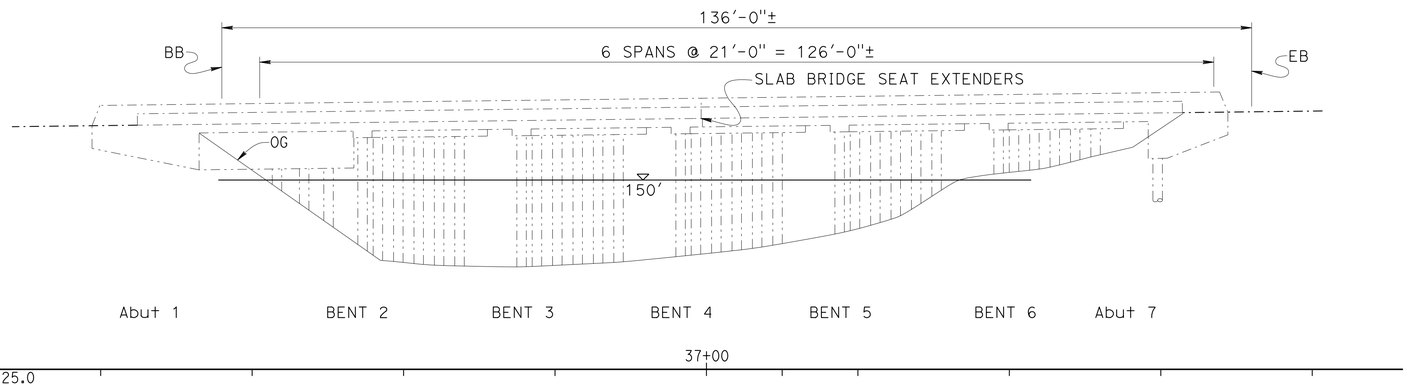

ELEVATION

1" = 10'

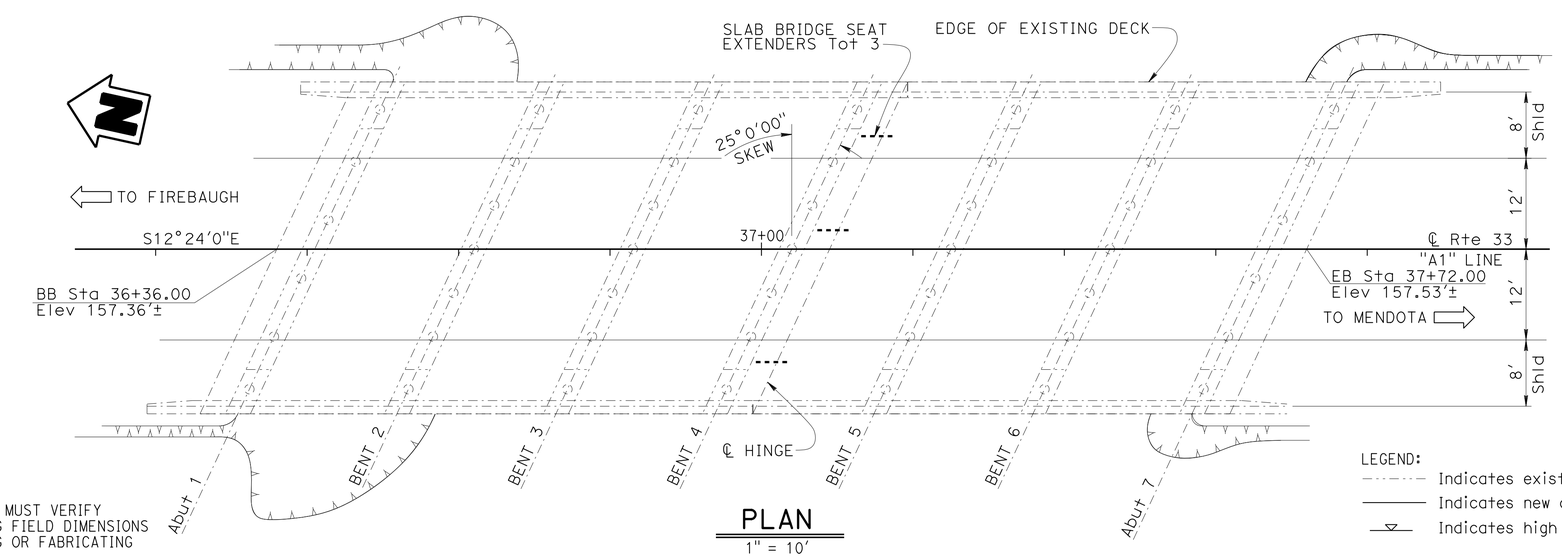

PLAN

1" = 10'

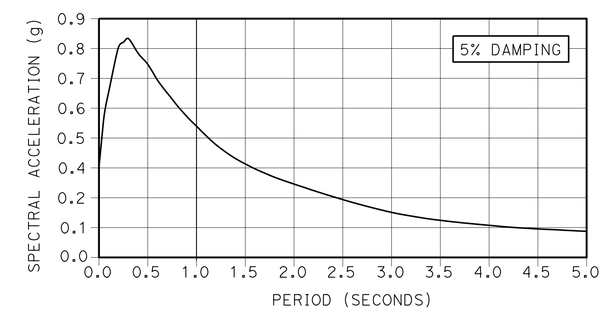

SITE SPECIFIC ACCELERATION RESPONSE SPECTRUM

QUANTITIES

CORE CONCRETE (1")	28	LF
BEARING PAD	6	EA
STRUCTURAL STEEL (BRIDGE)	970	LB

LEGEND:
Indicates existing structure
Indicates new construction
Indicates high water level

NOTE:
THE CONTRACTOR MUST VERIFY ALL CONTROLLING FIELD DIMENSIONS BEFORE ORDERING OR FABRICATING ANY MATERIAL.

Jose Higareda
DESIGN ENGINEER

	BY	CHECKED			
DESIGN	Anthony Logus	Victor Romo	LOAD & RESISTANCE FACTOR DESIGN	LIVE LOADING: 240 psf SURCHARGE	
DETAILS	Tim Trefz	Victor Romo	LAYOUT	Anthony Logus	Victor Romo
QUANTITIES	Christine Chan	Victor Romo	SPECIFICATIONS	Sirisha Nelapatla	PLANS AND SPECS COMPARED Sara Yip

ORIGINAL SCALE IN INCHES FOR REDUCED PLANS 0 1 2 3

STATE OF CALIFORNIA
DEPARTMENT OF TRANSPORTATION

DIVISION OF ENGINEERING SERVICES
STRUCTURE DESIGN
DESIGN BRANCH 15

BRIDGE NO. 42-0134
POST MILE 69.1

ROUTE 33 MAIN CANAL BRIDGE SEISMIC RETROFIT
GENERAL PLAN

UNIT: 3604
PROJECT NUMBER & PHASE: 0612000110
CONTRACT NO.: 06-0K8001

DISREGARD PRINTS BEARING EARLIER REVISION DATES

REVISION DATES 01-21-16 07-22-15 09-24-15 — SHEET 1 OF 7

DIST	COUNTY	ROUTE	POST MILES TOTAL PROJECT	SHEET No.	TOTAL SHEETS
06	Fre,Kin	33,41,43	Var	29	62

REGISTERED CIVIL ENGINEER — DATE 10-14-15

3-28-16
PLANS APPROVAL DATE

REGISTERED PROFESSIONAL ENGINEER — Sara P. Yip No. C73841 Exp. 06-30-17 CIVIL — STATE OF CALIFORNIA

The State of California or its officers or agents shall not be responsible for the accuracy or completeness of electronic copies of this plan sheet.

SOFFIT ELEVATIONS

1	151.69	8	151.79
2	151.62	9	151.78
3	151.66	10	151.85
4	151.68	11	151.78
5	151.71	12	151.78
6	151.73	13	151.77
7	151.71	14	151.82
		15	151.72

Bridge Location (42-0134)

1. 16.02 Lt Rte 33, Sta 36+42.83, Elev = 152.79±
2. 15.88 Rt Rte 33, Sta 36+28.10, Elev = 152.79±
3. 16.10 Lt Rte 33, Sta 37+79.50, Elev = 152.94±
4. 15.49 Rt Rte 33, Sta 37+64.99, Elev = 152.91±

SURVEY CONTROL

PT-DNK0332
Fnd 1" IRON PIPE W/RED CT PLUG AND TACK
77.01 Ft Lt "MC" LINE
Sta 35+81.19
N 2,193,822.88
E 6,137,391.65
Elev = 148.65

PT-DNK0335
Fnd 1" IRON PIPE W/RED CT PLUG AND TACK
34.08 Ft Rt "MC" LINE
Sta 38+27.27
N 2,193,603.76
E 6,137,549.39
Elev = 152.13

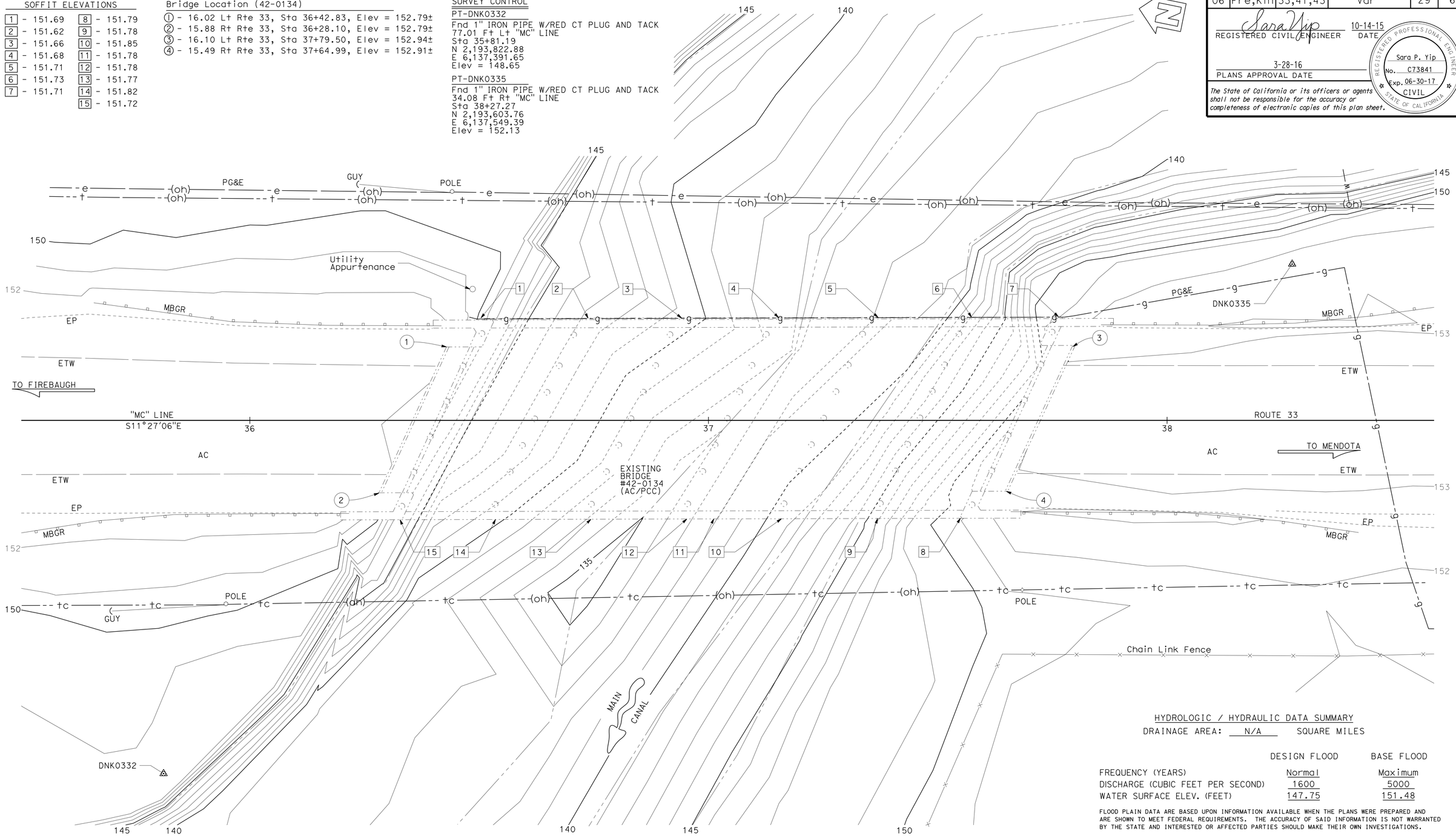

HYDROLOGIC / HYDRAULIC DATA SUMMARY

DRAINAGE AREA: N/A SQUARE MILES

	DESIGN FLOOD	BASE FLOOD
FREQUENCY (YEARS)	Normal	Maximum
DISCHARGE (CUBIC FEET PER SECOND)	1600	5000
WATER SURFACE ELEV. (FEET)	147.75	151.48

FLOOD PLAIN DATA ARE BASED UPON INFORMATION AVAILABLE WHEN THE PLANS WERE PREPARED AND ARE SHOWN TO MEET FEDERAL REQUIREMENTS. THE ACCURACY OF SAID INFORMATION IS NOT WARRANTED BY THE STATE AND INTERESTED OR AFFECTED PARTIES SHOULD MAKE THEIR OWN INVESTIGATIONS.

PRELIMINARY INVESTIGATION SECTION

SCALE 1"=10'	VERT.DATUM NAVD88	PHOTOGRAMMETRY AS OF: X		
	HORZ.DATUM NAD83 (2010.16)	SURVEYED	BY DISTRICT 6	CHECKED BY C. FASSETT 7/2015
	ALIGNMENT TIES Dist TRAVERSE SHEET	DRAFTED	BY C. FASSETT 7/2015	CHECKED BY S. SOU 7/2015

DESIGN	BY Anthony Logus	CHECKED Victor Romo
DETAILS	BY Tim Trefz	CHECKED Victor Romo
QUANTITIES	BY Christine Chan	CHECKED Victor Romo

STATE OF CALIFORNIA
DEPARTMENT OF TRANSPORTATION

DIVISION OF ENGINEERING SERVICES
STRUCTURE DESIGN
DESIGN BRANCH 15

BRIDGE NO. 42-0134
POST MILE 69.1

ROUTE 33 MAIN CANAL BRIDGE SEISMIC RETROFIT
FOUNDATION PLAN

STRUCTURES FOUNDATION PLAN SHEET (ENGLISH) (REV. 09-01-10)

ORIGINAL SCALE IN INCHES FOR REDUCED PLANS 0 1 2 3

UNIT: 3604
PROJECT NUMBER & PHASE: 0612000110
CONTRACT NO.: 06-0K8001

SUBMITTAL DATE	REVISION DATES			SHEET	OF
7/17/2015	8/13/2015			2	7

FILE => 42-0134-e-fp.dgn

USERNAME => s113541 DATE PLOTTED => 04-APR-2016 TIME PLOTTED => 14:27

DIST	COUNTY	ROUTE	POST MILES TOTAL PROJECT	SHEET No.	TOTAL SHEETS
06	Fre,Kin	33,41,43	Var	30	62

REGISTERED CIVIL ENGINEER — DATE 10-14-15

3-28-16
PLANS APPROVAL DATE

REGISTERED PROFESSIONAL ENGINEER — Sara P. Yip No. C73841 Exp. 06-30-17 CIVIL — STATE OF CALIFORNIA

The State of California or its officers or agents shall not be responsible for the accuracy or completeness of electronic copies of this plan sheet.

✳ ANCHOR BOLTS MUST CLEAR MOUNTING BARS ON EXISTING HINGE ASSEMBLY AS WELL AS EXISTING LONGITUDINAL REINFORCEMENT

NOTES:
1. Core 1"ø holes for ¾"ø A307B Heavy Hex Head galvanized bolts with length for through bolt connection. Provide ¼"x3½"ø washers at the upper end, ¼"x3½"ø beveled washers and 2 lock-nuts at the lower end. Tot 9 each assembly.
2. Plug holes with epoxy mortar or rapid setting concrete after placing bolts and washers.
3. Galvanize all steel and bolts

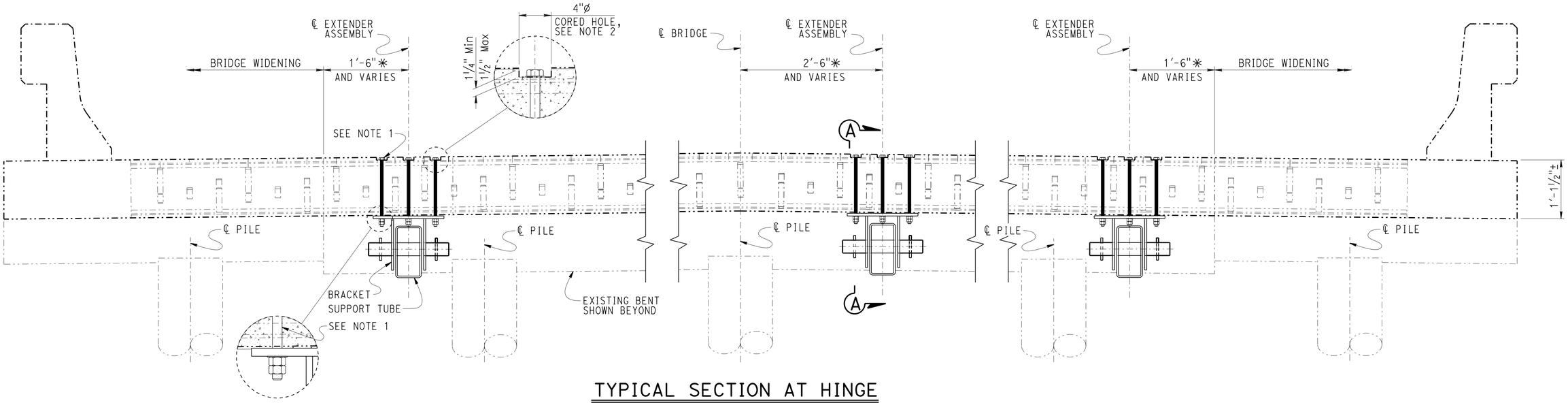

TYPICAL SECTION AT HINGE

1" = 1'-0"

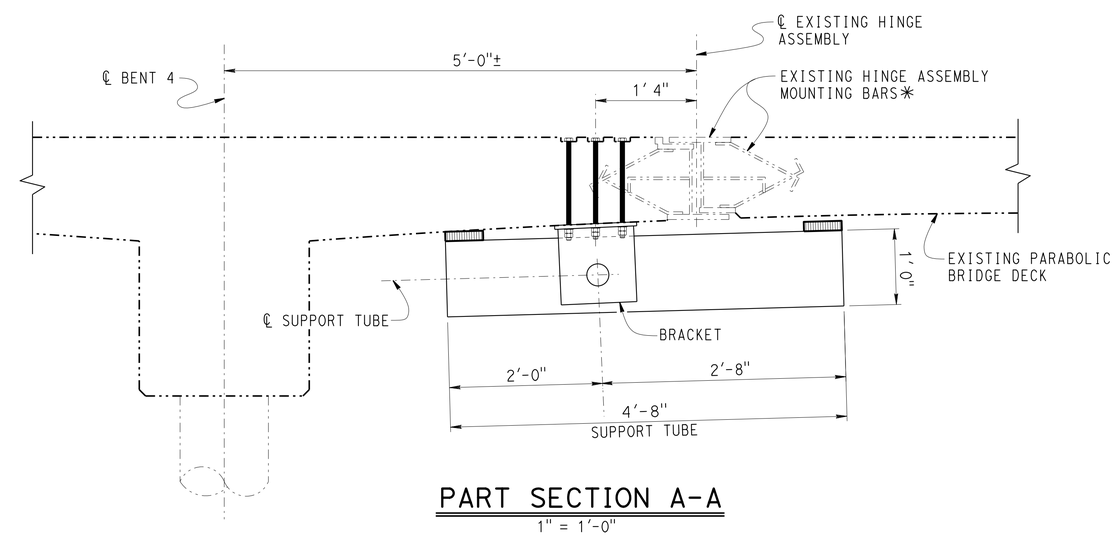

PART SECTION A-A

1" = 1'-0"

NOTE:
THE CONTRACTOR MUST VERIFY ALL CONTROLLING FIELD DIMENSIONS BEFORE ORDERING OR FABRICATING ANY MATERIAL.

	BY	CHECKED
DESIGN	Anthony Logus	Victor Romo
DETAILS	Tim Trefz	Victor Romo
QUANTITIES	Christine Chan	Victor Romo

STATE OF CALIFORNIA
DEPARTMENT OF TRANSPORTATION

DIVISION OF ENGINEERING SERVICES
STRUCTURE DESIGN
DESIGN BRANCH 15

BRIDGE NO. 42-0134
POST MILE 69.1

ROUTE 33 MAIN CANAL BRIDGE SEISMIC RETROFIT

SLAB BRIDGE SEAT EXTENDER DETAILS NO. 1

STRUCTURES DESIGN DETAIL SHEET (ENGLISH) (REV. 09-01-10)

ORIGINAL SCALE IN INCHES FOR REDUCED PLANS 0 1 2 3

UNIT: 3604
PROJECT NUMBER & PHASE: 0612000110
CONTRACT NO.: 06-0K8001

DISREGARD PRINTS BEARING EARLIER REVISION DATES

REVISION DATES: 01-24-15 10-14-15 01-19-16

SHEET 3 OF 7

FILE => 42-0134-x-hdtl_01.dgn

USERNAME => s113541 DATE PLOTTED => 04-APR-2016 TIME PLOTTED => 14:27

DIST	COUNTY	ROUTE	POST MILES TOTAL PROJECT	SHEET No.	TOTAL SHEETS
06	Fre,Kin	33,41,43	Var	31	62

REGISTERED CIVIL ENGINEER — DATE 10-14-15

3-28-16
PLANS APPROVAL DATE

REGISTERED PROFESSIONAL ENGINEER — Sara P. Yip No. C73841 Exp. 06-30-17 CIVIL — STATE OF CALIFORNIA

The State of California or its officers or agents shall not be responsible for the accuracy or completeness of electronic copies of this plan sheet.

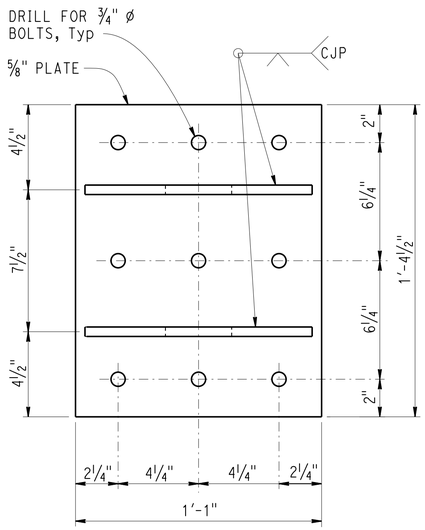

PLAN VIEW

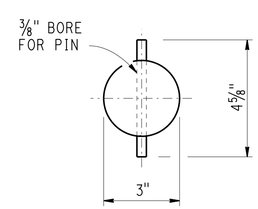

END VIEW

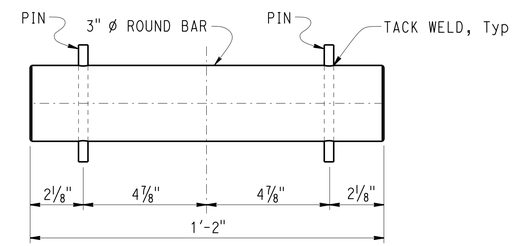

SIDE VIEW

PIN
NO SCALE

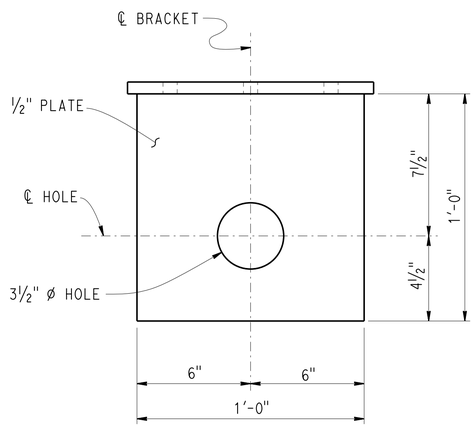

SIDE VIEW

BRACKET
3" = 1'-0"

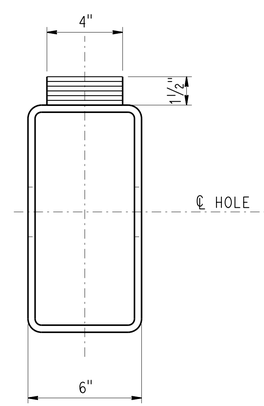

END VIEW

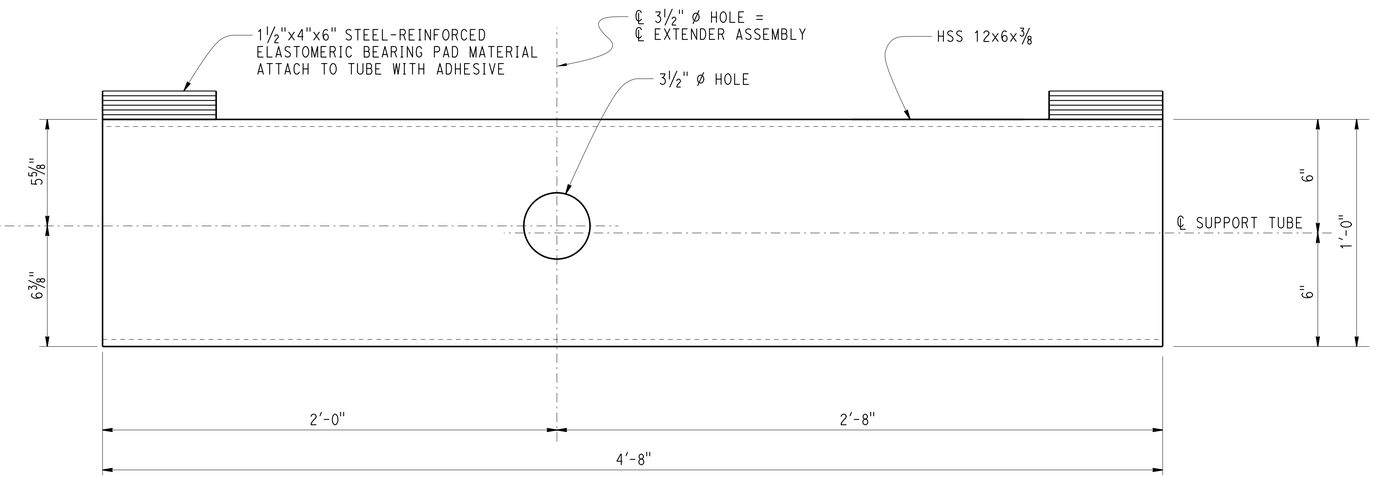

SIDE VIEW

NOTE:
For details not shown, see "SLAB BRIDGE SEAT EXTENDER DETAILS NO. 1" sheet

SUPPORT TUBE
3" = 1'-0"

NOTE:
THE CONTRACTOR MUST VERIFY ALL CONTROLLING FIELD DIMENSIONS BEFORE ORDERING OR FABRICATING ANY MATERIAL.

	BY	CHECKED
DESIGN	Anthony Logus	Victor Romo
DETAILS	Tim Trefz	Victor Romo
QUANTITIES	Christine Chan	Victor Romo

STATE OF CALIFORNIA
DEPARTMENT OF TRANSPORTATION

DIVISION OF ENGINEERING SERVICES
STRUCTURE DESIGN
DESIGN BRANCH 15

BRIDGE NO. 42-0134
POST MILE 69.1

ROUTE 33 MAIN CANAL BRIDGE SEISMIC RETROFIT

SLAB BRIDGE SEAT EXTENDER DETAILS No. 2

STRUCTURES DESIGN DETAIL SHEET (ENGLISH) (REV. 09-01-10)

ORIGINAL SCALE IN INCHES FOR REDUCED PLANS 0 1 2 3

UNIT: 3604
PROJECT NUMBER & PHASE: 0612000110
CONTRACT NO.: 06-0K8001

DISREGARD PRINTS BEARING EARLIER REVISION DATES

REVISION DATES: 06-22-15 07-24-15

SHEET 4 OF 7

FILE => 42-0134-x-hdtl_02.dgn

USERNAME => s113541 DATE PLOTTED => 04-APR-2016 TIME PLOTTED => 14:28

DIST	COUNTY	ROUTE	POST MILES TOTAL PROJECT	SHEET No	TOTAL SHEETS
06	Fre,Kin	33,41,43	Var	32	62

REGISTERED CIVIL ENGINEER 9/15/15 DATE

3-28-16
PLANS APPROVAL DATE

REGISTERED PROFESSIONAL ENGINEER Nathan Dahlen No. 71344 Exp. 12/31/15 CIVIL STATE OF CALIFORNIA

The State of California or its officers or agents shall not be responsible for the accuracy or completeness of scanned copies of this plan sheet.

KLEINFELDER
5125 N. GATES AVE., SUITE 102
FRESNO, CA 93722

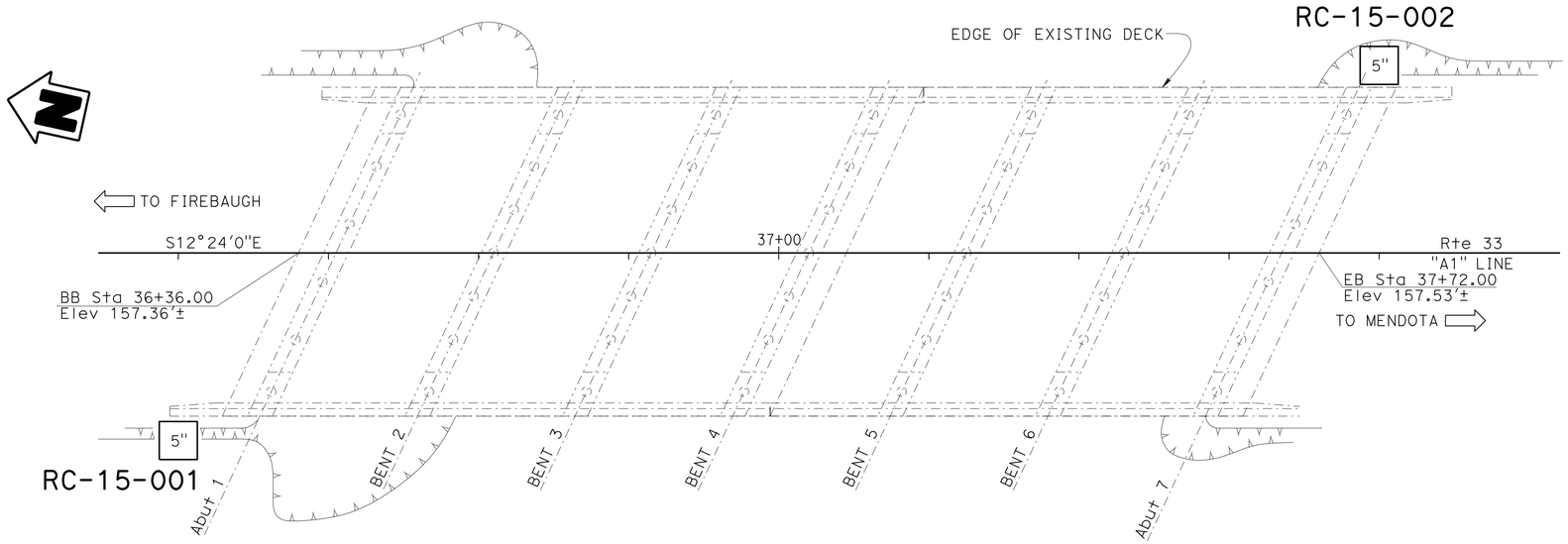

PLAN
1" = 10'

Notes:

1. 1.4" samples were taken using a SPT split-barrel sampler with an inside diameter (ID) of 1.4" and an outside diameter (OD) of 2".
2. 3.0" samples were taken using a Shelby tube sampler with an inside diameter (ID) of 3.0" and pushed.
3. 2.0" samples were taken using a CAL split-barrel sampler with an inside diameter (ID) of 2.0" and an outside diameter (OD) of 2.5"
4. An automatic hammer (140 lb) with a 30" drop was used to advance the sampler.
5. Blowcounts noted for boring are field blowcounts and have not been corrected.
6. Blowcounts 50/5 means 50 blows per 5" penetration.
7. This LOTB sheet was prepared in accordance with the Caltrans Soil & Rock Logging, Classification, and Presentation Manual (June 2010)

BENCHMARKS

STATION	OFFSET	N	E	ELEV	DESCRIPTION
35+81.19	77.01' Lt	2,193,822.88	6,137,391.65	148.65	PT-DNK0332. Found 1" Iron pipe w/ red CT plug and tack
38+27.27	34.08' Rt	2,193,603.76	6,137,549.39	152.13	PT-DNK0335. Found 1" Iron pipe w/ red CT plug and tack

SURVEY CONTROL
1. Coordinates bearing and distances are based on the California State Plane Coordinate system of NAD 83 (1986). Elevations are based on NGVD29 for Plan. Elevations are based on NAVD88 for borings.

J. Huang
DESIGN OVERSIGHT
9/22/15
SIGN OFF DATE

DRAWN BY A. Sanchez
CHECKED BY N. Dahlen

M.O. & J.W.
FIELD INVESTIGATION BY:
DATE: 5/28/15 - 6/4/15

PREPARED FOR THE STATE OF CALIFORNIA DEPARTMENT OF TRANSPORTATION

N. Dahlen
PROJECT ENGINEER

BRIDGE NO. 42-0134
POST MILES 69.1

ROUTE 33 MAIN CANAL BRIDGE SEISMIC RETROFIT
LOG OF TEST BORINGS 1 OF 3

GS CIVIL LOG OF TEST BORINGS SHEET (ENGLISH) (REV. 03/14/12)

ORIGINAL SCALE IN INCHES FOR REDUCED PLANS 0 1 2 3

UNIT: 3604
PROJECT NUMBER & PHASE: 0612000110
CONTRACT NO.: 06-0K8001

DISREGARD PRINTS BEARING EARLIER REVISION DATES → 9/23/15

REVISION DATES | SHEET 5 OF 7

FILE => 42-0134-z-1tb01.dgn

USERNAME => s113541 DATE PLOTTED => 04-APR-2016 TIME PLOTTED => 14:28

FOR PLAN VIEW AND ADDITIONAL NOTES, SEE "LOG OF TEST BORINGS" SHEET 1 OF 3

This LOTB sheet was prepared in accordance with the Caltrans Soil & Rock Logging, Classification, and Presentation Manual (2010).

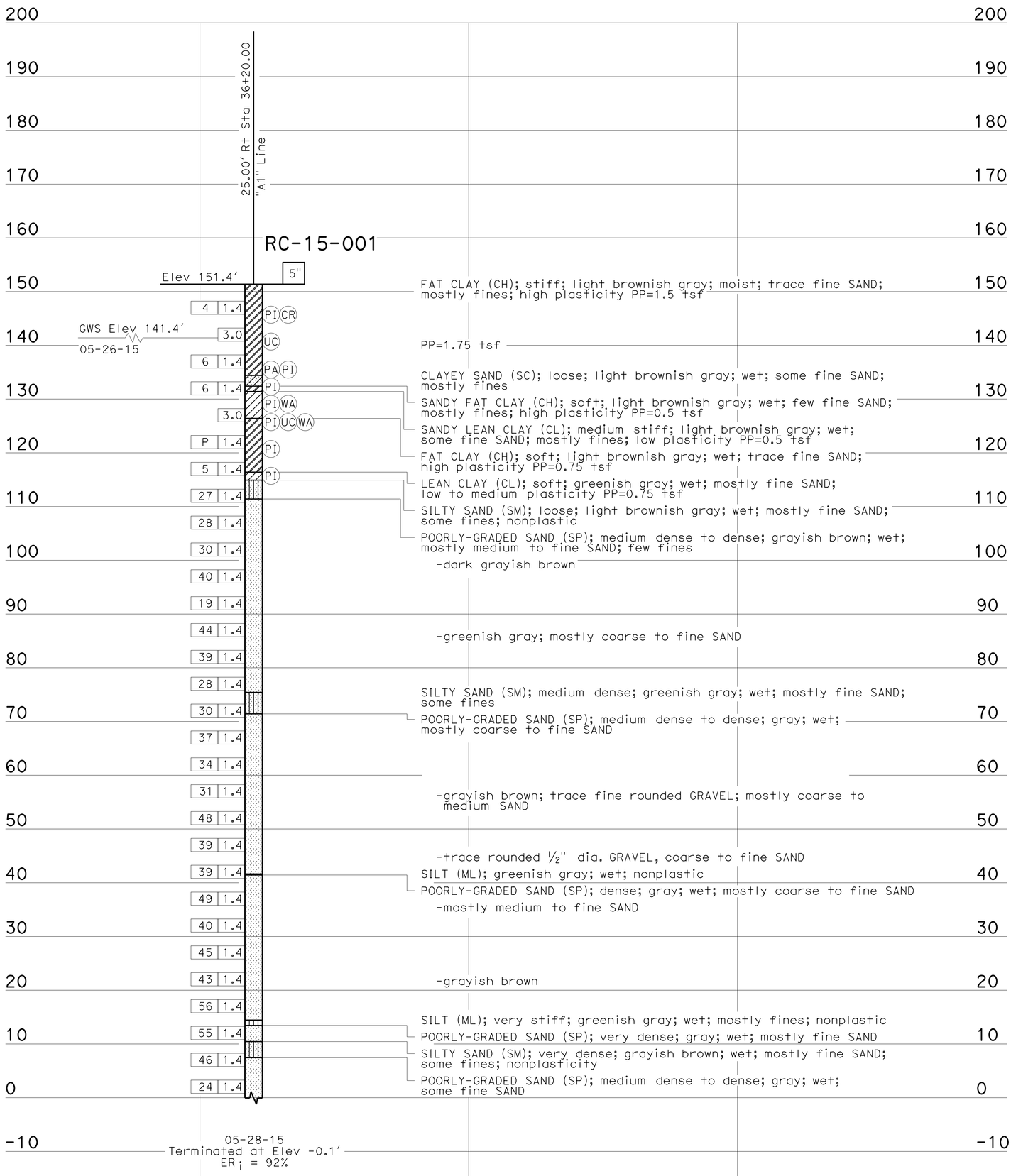

PROFILE
HOR. 1"=20'
VER. 1"=10'

KLEINFELDER
5125 N. GATES AVE., SUITE 102
FRESNO, CA 93722

REGISTERED CIVIL ENGINEER 9/15/15 DATE

PLANS APPROVAL DATE 3-28-16

The State of California or its officers or agents shall not be responsible for the accuracy or completeness of scanned copies of this plan sheet.

REGISTERED PROFESSIONAL ENGINEER Norhon Dahlen No. 71344 Exp. 12/31/15 CIVIL STATE OF CALIFORNIA

DIST	COUNTY	ROUTE	POST MILES TOTAL PROJECT	SHEET NO	TOTAL SHEETS
06	Fre,Kin	33,41,43	Var	33	62

J. Huang
DESIGN OVERSIGHT
9/22/15
SIGN OFF DATE

DRAWN BY A. Sanchez
CHECKED BY N. Dahlen

M. Owens
FIELD INVESTIGATION BY:
DATE: 5/28/15

ORIGINAL SCALE IN INCHES FOR REDUCED PLANS 0 1 2 3

PREPARED FOR THE STATE OF CALIFORNIA DEPARTMENT OF TRANSPORTATION

N. Dahlen
PROJECT ENGINEER

UNIT: 3604
PROJECT NUMBER & PHASE: 0612000110
CONTRACT NO.: 06-0K8001

BRIDGE NO. 42-0134
POST MILES 69.1

ROUTE 33 MAIN CANAL BRIDGE SEISMIC RETROFIT

LOG OF TEST BORINGS 2 OF 3

DISREGARD PRINTS BEARING EARLIER REVISION DATES

REVISION DATES 9/22/15

SHEET 6 OF 7

GS CIVIL LOG OF TEST BORINGS SHEET (ENGLISH) (REV. 03/14/12)

FILE => 42-0134-2-HBD2.dgn

USERNAME => s113541 DATE PLOTTED => 04-APR-2016 TIME PLOTTED => 14:28

FOR PLAN VIEW AND ADDITIONAL NOTES, SEE "LOG OF TEST BORINGS" SHEET 1 OF 3

This LOTB sheet was prepared in accordance with the Caltrans Soil & Rock Logging, Classification, and Presentation Manual (2010).

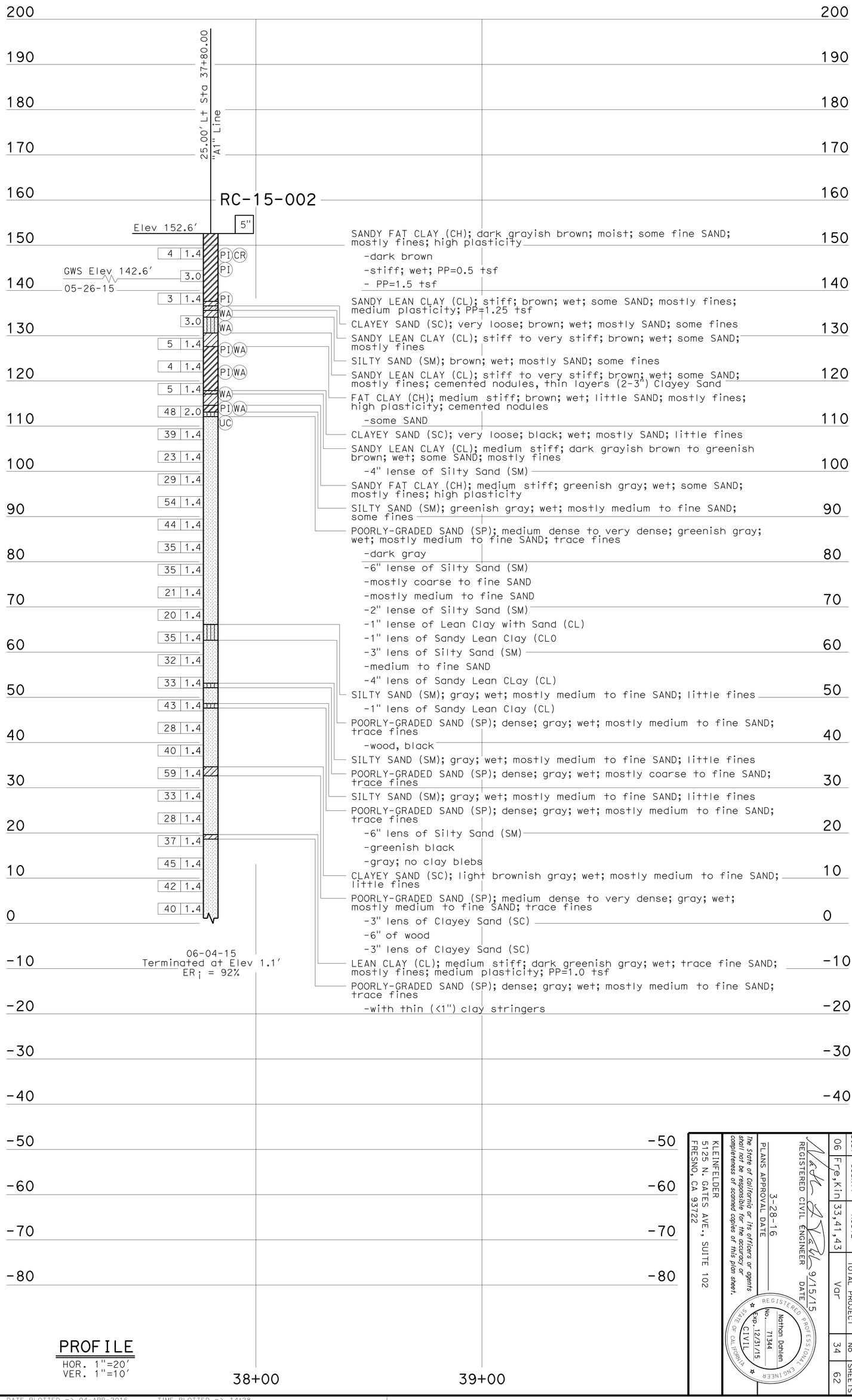

J. Huang
DESIGN OVERSIGHT
9/22/15
SIGN OFF DATE

DRAWN BY: A. Sanchez
CHECKED BY: N. Dahlen

J. Wetenkamp
FIELD INVESTIGATION BY:
DATE: 6/4/15

N. Dahlen
PROJECT ENGINEER

PREPARED FOR THE STATE OF CALIFORNIA DEPARTMENT OF TRANSPORTATION

UNIT: 3604
PROJECT NUMBER & PHASE: 0612000110

BRIDGE NO. 42-0134
POST MILES 69.1

ROUTE 33 MAIN CANAL BRIDGE SEISMIC RETROFIT

LOG OF TEST BORINGS 3 OF 3

CONTRACT NO.: 06-0K8001

ORIGINAL SCALE IN INCHES FOR REDUCED PLANS: 0 1 2 3

DISREGARD PRINTS BEARING EARLIER REVISION DATES

REVISION DATES: 9/21/15

SHEET 7 OF 7

KLEINFELDER
5125 N. GATES AVE., SUITE 102
FRESNO, CA 93722

REGISTERED CIVIL ENGINEER — DATE 9/15/15

PLANS APPROVAL DATE 3-28-16

The State of California or its officers or agents shall not be responsible for the accuracy or completeness of scanned copies of this plan sheet.

REGISTERED PROFESSIONAL ENGINEER — Norhon Dahlen — No. 71344 — Exp. 12/31/15 — CIVIL — STATE OF CALIFORNIA

DIST	COUNTY	ROUTE	POST MILES TOTAL PROJECT	SHEET No	TOTAL SHEETS
06	Fre,Kin	33,41,43	Var	34	62

GS CIVIL LOG OF TEST BORINGS SHEET (ENGLISH) (REV. 03/14/12)

FILE => 42-0134-2-HB03.dgn

USERNAME => s113541 DATE PLOTTED => 04-APR-2016 TIME PLOTTED => 14:28

DIST	COUNTY	ROUTE	POST MILES TOTAL PROJECT	SHEET No.	TOTAL SHEETS
06	Fre,Kin	33,41,43	Var	35	62

REGISTERED CIVIL ENGINEER — DATE 10-14-15

PLANS APPROVAL DATE 3-28-16

REGISTERED PROFESSIONAL ENGINEER — Sara P. Yip No. C73841 Exp. 06-30-17 CIVIL — STATE OF CALIFORNIA

The State of California or its officers or agents shall not be responsible for the accuracy or completeness of scanned copies of this plan sheet.

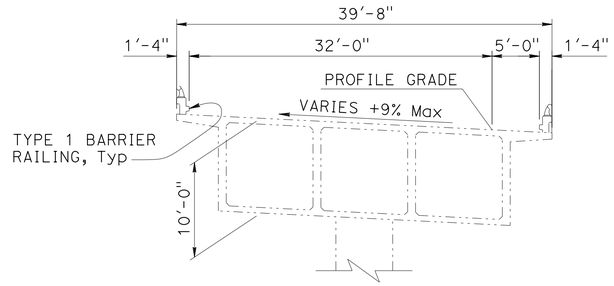

TYPICAL SECTION

1/8" = 1'-0"

GENERAL NOTES
LOAD AND RESISTANCE FACTOR DESIGN

DESIGN: AASHTO LRFD BRIDGE DESIGN SPECIFICATIONS, 6th EDITION WITH CALIFORNIA AMENDMENTS

SEISMIC DESIGN: CALTRANS SEISMIC DESIGN CRITERIA (SDC), Version 1.7, April 2013

SEISMIC LOADING: SEE "SITE SPECIFIC ACCELERATION RESPONSE SPECTRUM" Peak Ground Acceleration 0.24g

REINFORCED CONCRETE: fy = 60 ksi, f'c = 3.6 ksi, n = 8

AS-BUILT REINFORCED CONCRETE: fy = 40 ksi, f'c = 3.0 ksi

STRUCTURAL STEEL: fy = 36 ksi

INDEX TO PLANS

SHEET No.	TITLE
1	GENERAL PLAN
2	EXISTING HINGE RESTRAINER REMOVAL DETAILS
3	PIPE EXTENDER DETAILS
4	SOFFIT ACCESS OPENING DETAILS
5	LOG OF TEST BORINGS 1 OF 3
6	LOG OF TEST BORINGS 2 OF 3
7	LOG OF TEST BORINGS 3 OF 3

STANDARD PLANS 2010

A10A	ABBREVIATIONS (SHEET 1 OF 2)
RSP A10B	ABBREVIATIONS (SHEET 2 OF 2)
A10C	LINES AND SYMBOLS (SHEET 1 OF 3)
A10D	LINES AND SYMBOLS (SHEET 2 OF 3)
A10E	LINES AND SYMBOLS (SHEET 3 OF 3)
RSP A10F	LEGEND - SOIL (SHEET 1 OF 2)
RSP A10G	LEGEND - SOIL (SHEET 2 OF 2)
A10H	LEGEND - ROCK

STANDARD PLAN SHEET No.

DETAIL No.

NOTE:
Elevations shown on "GENERAL PLAN" are based on NGVD 29.

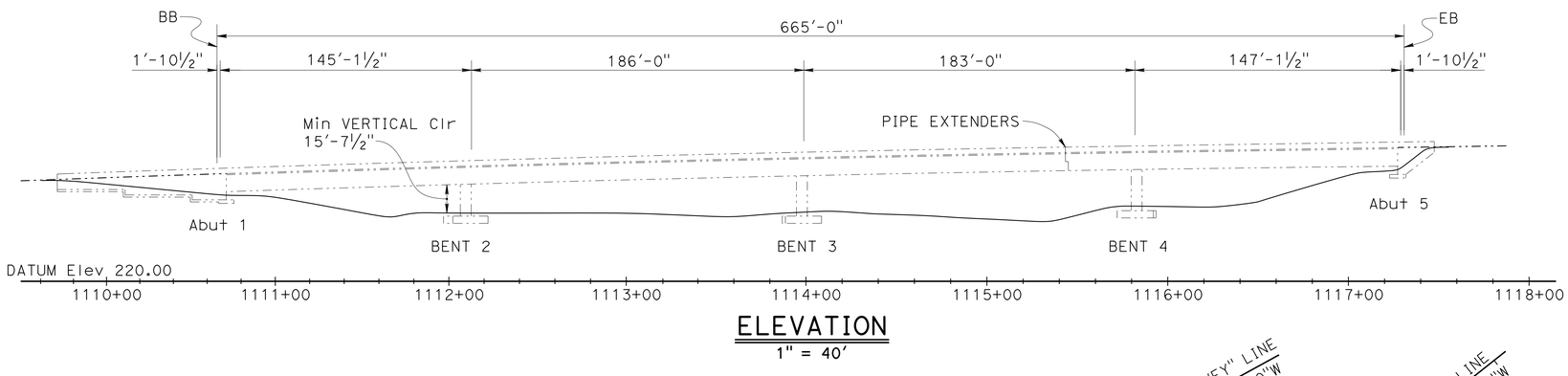

ELEVATION

1" = 40'

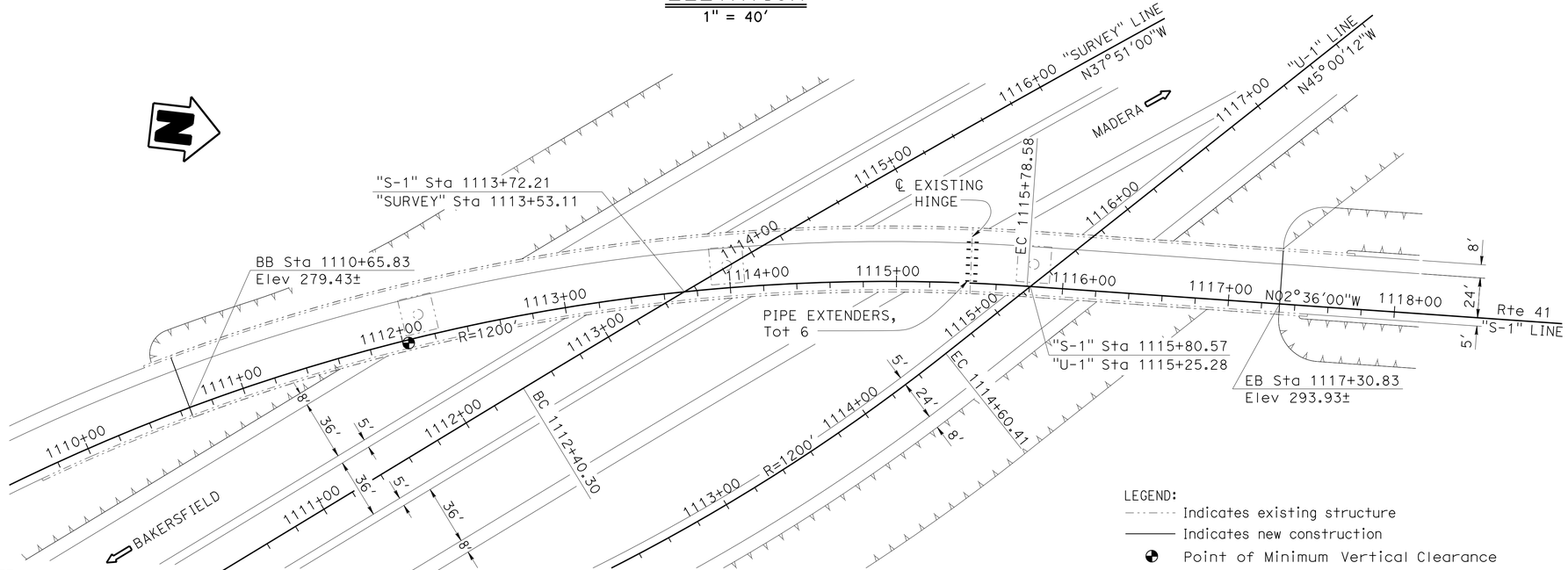

LEGEND:
- Indicates existing structure
- Indicates new construction
- Point of Minimum Vertical Clearance

NOTE:
THE CONTRACTOR SHALL VERIFY ALL CONTROLLING FIELD DIMENSIONS BEFORE ORDERING OR FABRICATING ANY MATERIAL.

PLAN

1" = 40'

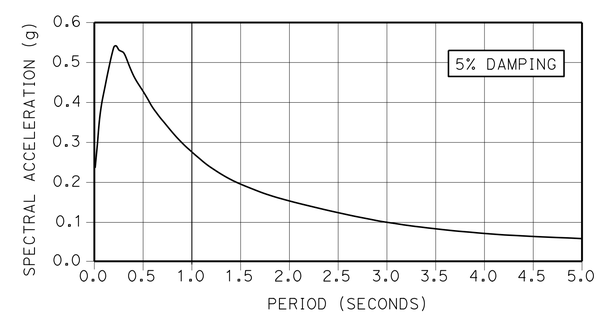

SITE SPECIFIC ACCELERATION RESPONSE SPECTRUM

QUANTITIES

CORE CONCRETE (12")	15 LF
ACCESS OPENING, SOFFIT	2 EA
BRIDGE REMOVAL (PORTION)	LUMP SUM
DIAPHRAGM BOLSTER	6 EA
MISCELLANEOUS METAL (PIPE EXTENDER)	5,000 LB

Jose Higareda
DESIGN ENGINEER

	BY	CHECKED
DESIGN	Anthony Logus	Ruslan Novik
DETAILS	Tim Trefz	Christine Chan
QUANTITIES	Christine Chan	Victor Romo

LOAD & RESISTANCE FACTOR DESIGN — LIVE LOADING: HL93 W/"LOW-BOY"; PERMIT DESIGN VEHICLE

	BY	CHECKED
LAYOUT	Anthony Logus	Ruslan Novik
SPECIFICATIONS	Sirisha Nelapatla	PLANS AND SPECS COMPARED: Sara Yip

ORIGINAL SCALE IN INCHES FOR REDUCED PLANS 0 1 2 3

STATE OF CALIFORNIA
DEPARTMENT OF TRANSPORTATION

DIVISION OF ENGINEERING SERVICES
STRUCTURE DESIGN
DESIGN BRANCH 15

UNIT: 3604
PROJECT NUMBER & PHASE: 0612000110
CONTRACT NO.: 06-0K8001

BRIDGE NO. 42-0216F
POST MILE R21.81

SR 41/99 CONNECTOR SEPARATION SEISMIC RETROFIT
GENERAL PLAN

DISREGARD PRINTS BEARING EARLIER REVISION DATES

REVISION DATES: 01-21-16 01-21-16 9-14-15

SHEET 1 OF 7

USERNAME => s113541 DATE PLOTTED => 04-APR-2016 TIME PLOTTED => 14:28

DIST	COUNTY	ROUTE	POST MILES TOTAL PROJECT	SHEET No.	TOTAL SHEETS
06	Fre,Kin	33,41,43	Var	36	62

REGISTERED CIVIL ENGINEER — DATE 10-14-15

3-28-16
PLANS APPROVAL DATE

REGISTERED PROFESSIONAL ENGINEER — Sara P. Yip — No. C73841 — Exp. 06-30-17 — CIVIL — STATE OF CALIFORNIA

The State of California or its officers or agents shall not be responsible for the accuracy or completeness of electronic copies of this plan sheet.

LEGEND:

Indicates existing structure.

Indicates Removal

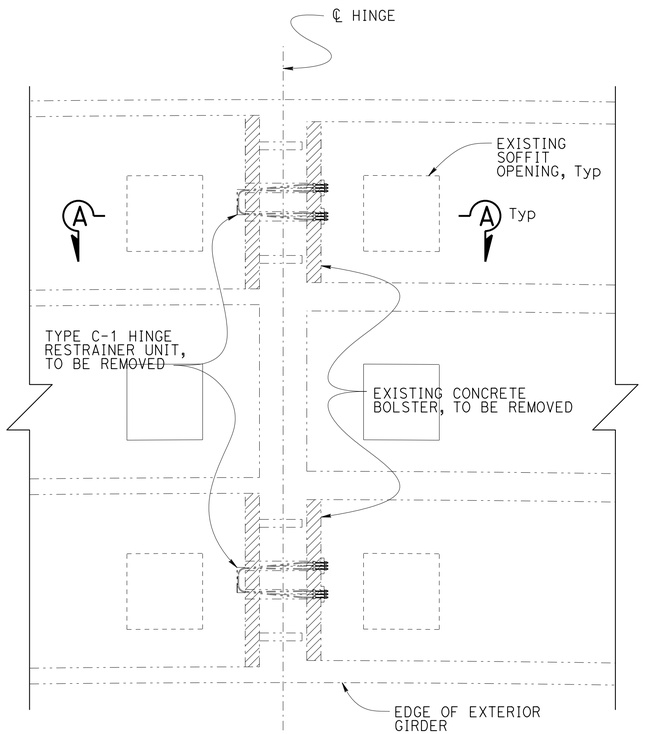

RESTRAINER TYPE C-1

1/4" = 1'-0"

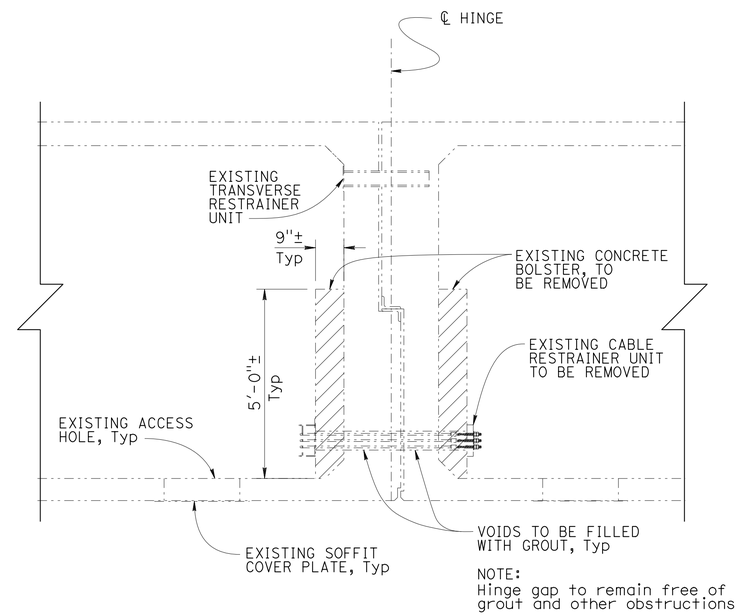

SECTION A-A

1/2" = 1'-0"

NOTE:
THE CONTRACTOR MUST VERIFY ALL CONTROLLING FIELD DIMENSIONS BEFORE ORDERING OR FABRICATING ANY MATERIAL.

	BY	CHECKED
DESIGN	Anthony Logus	Ruslan Novik
DETAILS	Herman Mauroschadt	Christine Chan
QUANTITIES	Christine Chan	Victor Romo

STATE OF CALIFORNIA
DEPARTMENT OF TRANSPORTATION

DIVISION OF ENGINEERING SERVICES
STRUCTURE DESIGN
DESIGN BRANCH 15

BRIDGE NO. 42-0216F
POST MILE R21.81

SR 41/99 CONNECTOR SEPARATION SEISMIC RETROFIT

EXISTING HINGE RESTRAINER REMOVAL DETAILS

STRUCTURES DESIGN DETAIL SHEET (ENGLISH) (REV. 09-01-10)

ORIGINAL SCALE IN INCHES FOR REDUCED PLANS 0 1 2 3

UNIT: 3604
PROJECT NUMBER & PHASE: 0612000110
CONTRACT NO.: 06-0K8001

DISREGARD PRINTS BEARING EARLIER REVISION DATES 09-14-15

REVISION DATES

SHEET 2 OF 7

FILE => 42-0216f-m-ehrrd.dgn

USERNAME => s113541 DATE PLOTTED => 04-APR-2016 TIME PLOTTED => 14:28

DIST	COUNTY	ROUTE	POST MILES TOTAL PROJECT	SHEET No.	TOTAL SHEETS
06	Fre,Kin	33,41,43	Var	37	62

REGISTERED CIVIL ENGINEER — DATE 10-14-15

PLANS APPROVAL DATE 3-28-16

REGISTERED PROFESSIONAL ENGINEER — Sara P. Yip No. C73841 Exp. 06-30-17 CIVIL — STATE OF CALIFORNIA

The State of California or its officers or agents shall not be responsible for the accuracy or completeness of electronic copies of this plan sheet.

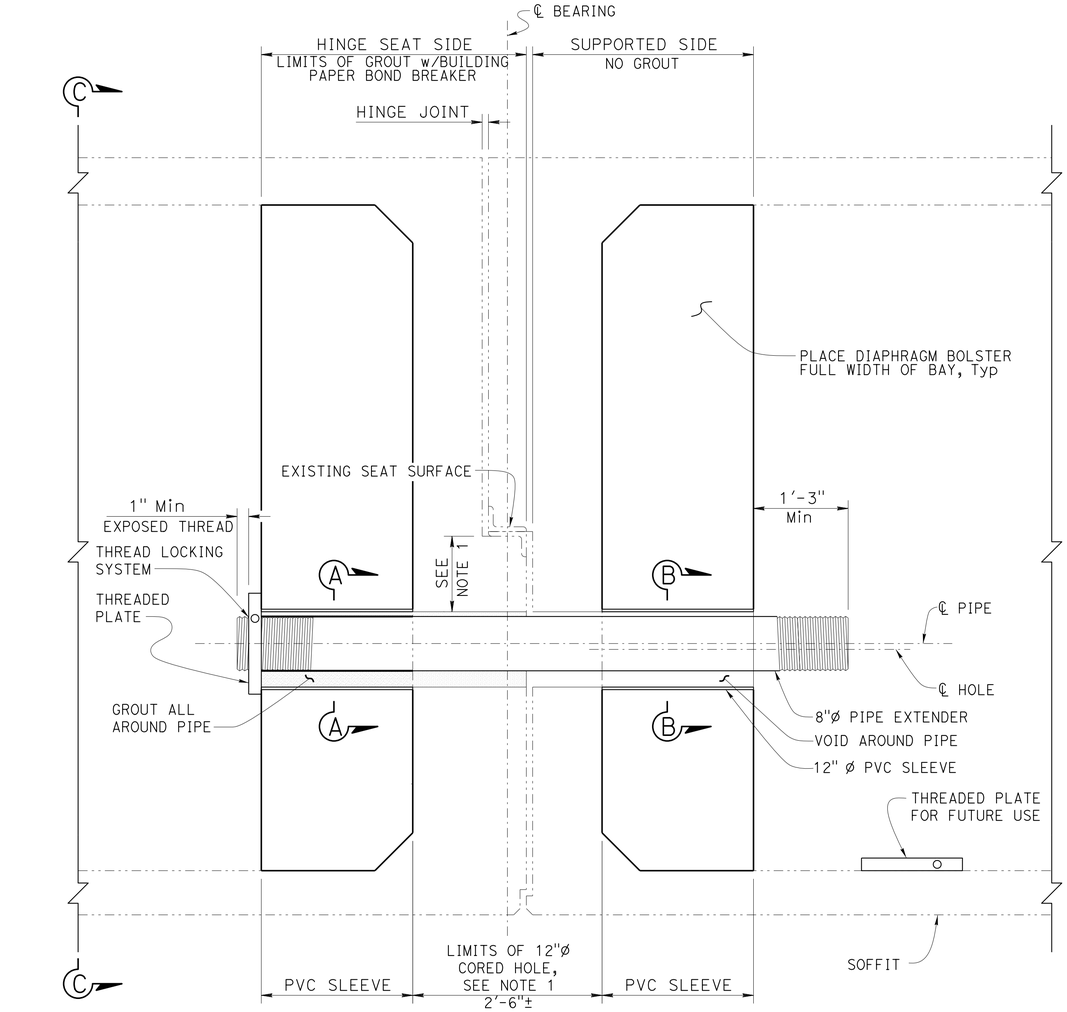

PIPE EXTENDER ELEVATION

1" = 1'-0"

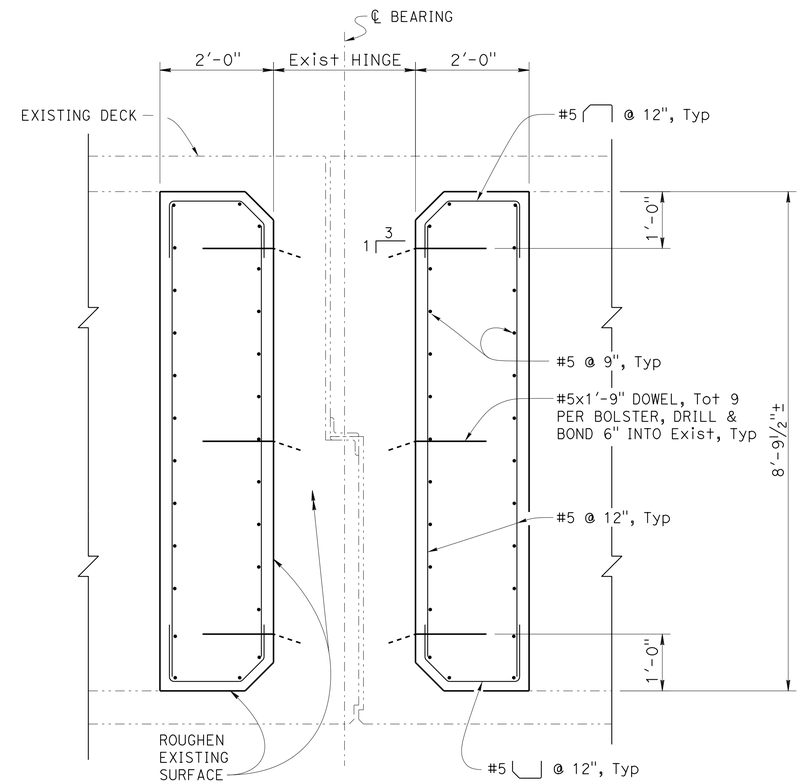

SECTION D-D

3/4" = 1'-0"

LEGEND:

- - - - Indicates existing structure.

NOTES:

1. The cored hole must be aligned to form a straight line the entire length of the Pipe Extender. The Hole must be cored with the Top of Hole 2" below the seat's top main reinforcement. During construction hole ends must be capped to prevent debris intrusion.
2. Set pipe parallel to top of hole. Maintain a 3/4" gap between pipe and top of hole.
3. Tightly wrap fixed side of pipe with 2 layers of 15 lbs building paper. Paper is to remain in place as a bond breaker.
4. Thread Pipe and Plate: 8 threads per inch per ASME B 1.20.1. Thread pipe 12" on both ends.
5. Apply Thread Locking System after grouting and tighten Threaded Plate snug against concrete surface, Hinge Seat Side only.
6. Existing reinforcement not shown.
7. The bearing surface for the Threaded Plate must be perpendicular to the hole.
8. 2 Threaded Plates per Pipe Extender. Only install Plate on Hinge Seat Side. On the Supported Side place Threaded Plate on soffit below Pipe Extender for future use.
9. The 3" deep holes in threaded plate are to receive a 1"ø rod for installation or removal of the threaded plate.
10. See "SOFFIT ACCESS OPENING LOCATIONS" on "SOFFIT ACCESS OPENING DETAILS" sheet for girder thickness.

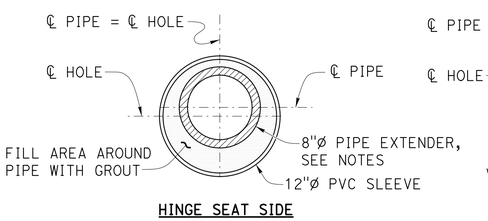

HINGE SEAT SIDE

SECTION A-A

1 1/2" = 1'-0"

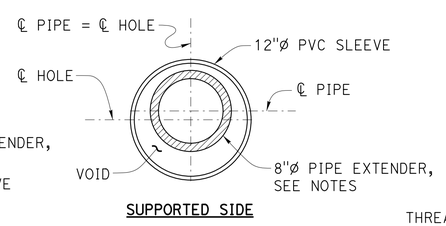

SUPPORTED SIDE

SECTION B-B

1 1/2" = 1'-0"

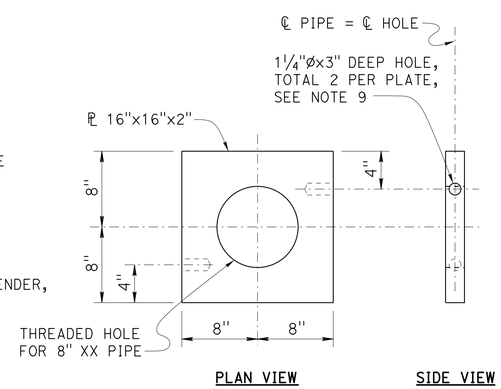

DETAIL 1

1 1/2" = 1'-0"

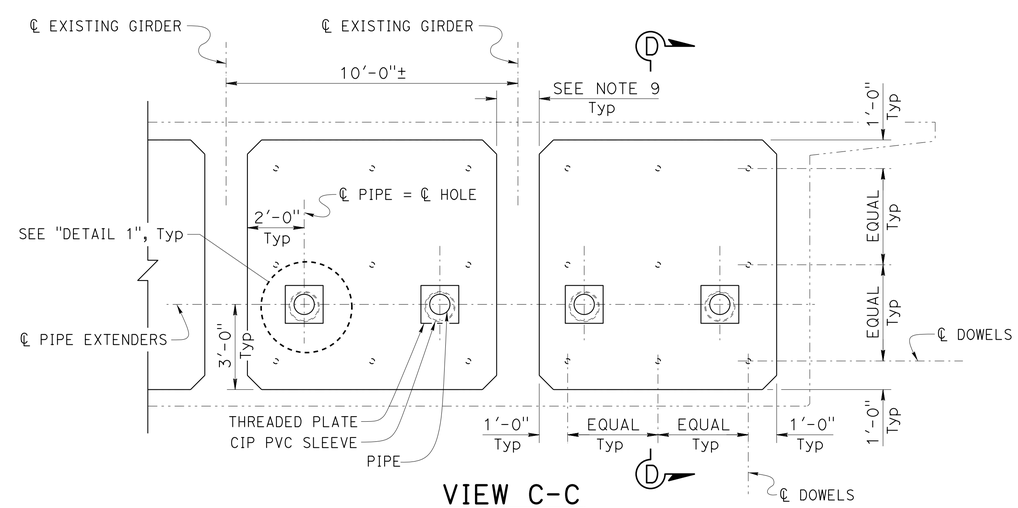

VIEW C-C

3/8" = 1'-0"

NOTE:
THE CONTRACTOR MUST VERIFY ALL CONTROLLING FIELD DIMENSIONS BEFORE ORDERING OR FABRICATING ANY MATERIAL.

	BY	CHECKED
DESIGN	Anthony Logus	Ruslan Novik
DETAILS	Tim Trefz	Christine Chan
QUANTITIES	Christine Chan	Victor Romo

STATE OF CALIFORNIA
DEPARTMENT OF TRANSPORTATION

DIVISION OF ENGINEERING SERVICES
STRUCTURE DESIGN
DESIGN BRANCH 15

BRIDGE NO. 42-0216F
POST MILE R21.81

SR 41/99 CONNECTOR SEPARATION SEISMIC RETROFIT

PIPE EXTENDER DETAILS

STRUCTURES DESIGN DETAIL SHEET (ENGLISH) (REV. 09-01-10)

ORIGINAL SCALE IN INCHES FOR REDUCED PLANS 0 1 2 3

UNIT: 3604
PROJECT NUMBER & PHASE: 0612000110
CONTRACT NO.: 06-0K8001

DISREGARD PRINTS BEARING EARLIER REVISION DATES

REVISION DATES 08-18-15 09-14-15 01-21-16

SHEET 3 OF 7

FILE => 42-0216f-x-extndr.dgn

USERNAME => s113541 DATE PLOTTED => 04-APR-2016 TIME PLOTTED => 14:28

DIST	COUNTY	ROUTE	POST MILES TOTAL PROJECT	SHEET No.	TOTAL SHEETS
06	Fre,Kin	33,41,43	Var	38	62

REGISTERED CIVIL ENGINEER — DATE 10-14-15

3-28-16
PLANS APPROVAL DATE

REGISTERED PROFESSIONAL ENGINEER — Sara P. Yip No. C73841 Exp. 06-30-17 CIVIL — STATE OF CALIFORNIA

The State of California or its officers or agents shall not be responsible for the accuracy or completeness of electronic copies of this plan sheet.

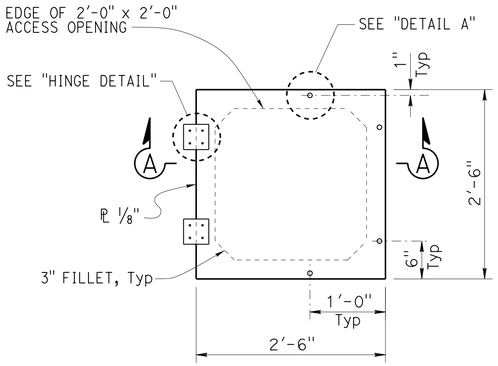

PLAN

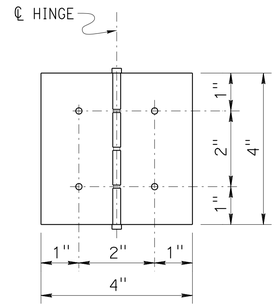

HINGE DETAIL

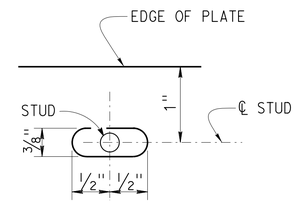

DETAIL A

NO SCALE

NOTES:
1. Non-removable pin in hinge
2. Hinge assembly to be galvanized, brass or stainless steel
3. Use thread locking system for all hinge nuts
4. Hinge assembly to be minimum 1/8" Thick

NOTE: SOFFIT ACCESS DOOR OPENING DIRECTION TO BE DETERMINED BY THE ENGINEER

SOFFIT ACCESS DOOR ASSEMBLY

NO SCALE

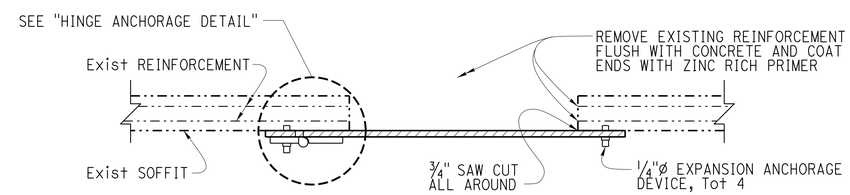

SECTION A-A

NO SCALE

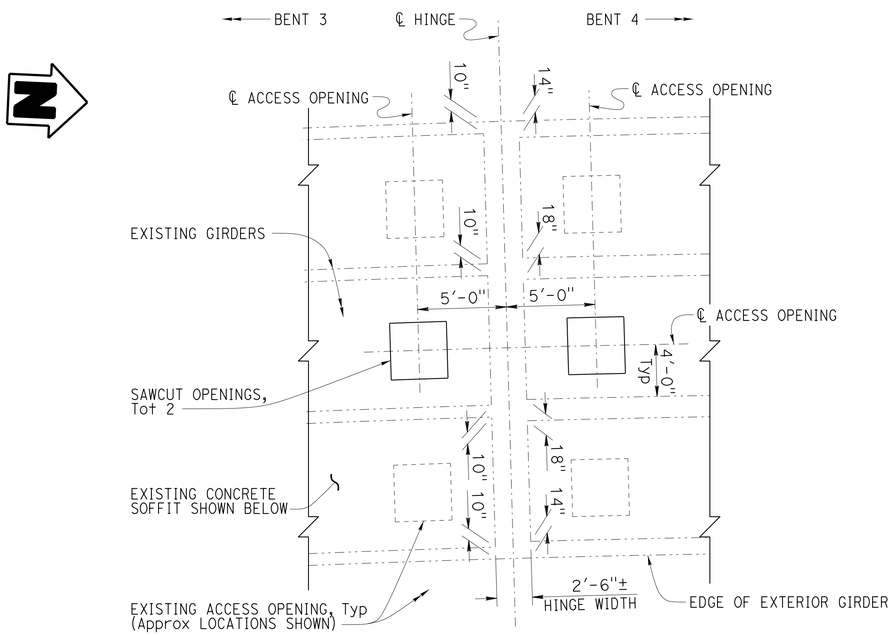

SOFFIT ACCESS OPENING LOCATIONS

PARTIAL PLAN

NO SCALE

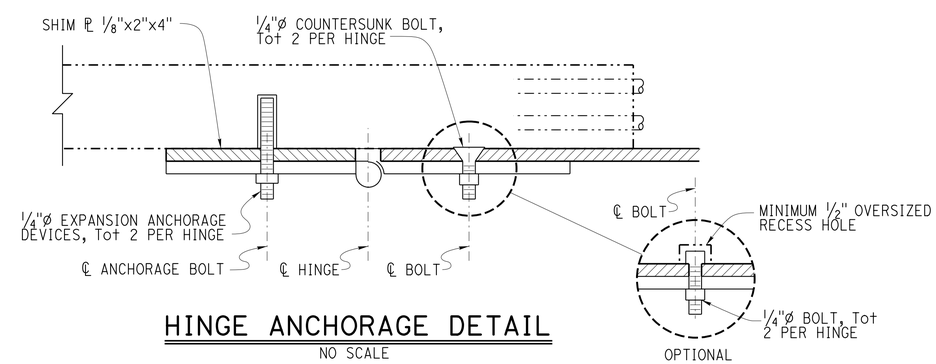

HINGE ANCHORAGE DETAIL

NO SCALE

NOTE:
THE CONTRACTOR MUST VERIFY ALL CONTROLLING FIELD DIMENSIONS BEFORE ORDERING OR FABRICATING ANY MATERIAL.

	BY	CHECKED
DESIGN	Anthony Logus	Ruslan Novik
DETAILS	Tim Trefz	Christine Chan
QUANTITIES	Christine Chan	Victor Romo

STATE OF CALIFORNIA DEPARTMENT OF TRANSPORTATION

DIVISION OF ENGINEERING SERVICES STRUCTURE DESIGN — DESIGN BRANCH 15

BRIDGE NO. 42-0216F — POST MILE R21.81

SR 41/99 CONNECTOR SEPARATION SEISMIC RETROFIT

SOFFIT ACCESS OPENING DETAILS

STRUCTURES DESIGN DETAIL SHEET (ENGLISH) (REV. 09-01-10)

ORIGINAL SCALE IN INCHES FOR REDUCED PLANS 0 1 2 3

UNIT: 3604
PROJECT NUMBER & PHASE: 0612000110
CONTRACT NO.: 06-0K8001

DISREGARD PRINTS BEARING EARLIER REVISION DATES → REVISION DATES 07-29-15 08-18-15 09-14-15

SHEET 4 OF 7

FILE => 42-0216f-x-opngs.dgn

USERNAME => s113541 DATE PLOTTED => 04-APR-2016 TIME PLOTTED => 14:28

DIST	COUNTY	ROUTE	POST MILES TOTAL PROJECT	SHEET No	TOTAL SHEETS
06	Fre,Kin	33,41,43	Var	39	62

REGISTERED CIVIL ENGINEER 9/15/15 DATE

3-28-16
PLANS APPROVAL DATE

REGISTERED PROFESSIONAL ENGINEER Nathan Dahlen No. 71344 Exp. 12/31/15 CIVIL STATE OF CALIFORNIA

The State of California or its officers or agents shall not be responsible for the accuracy or completeness of scanned copies of this plan sheet.

KLEINFELDER
5125 N. GATES AVE., SUITE 102
FRESNO, CA 93722

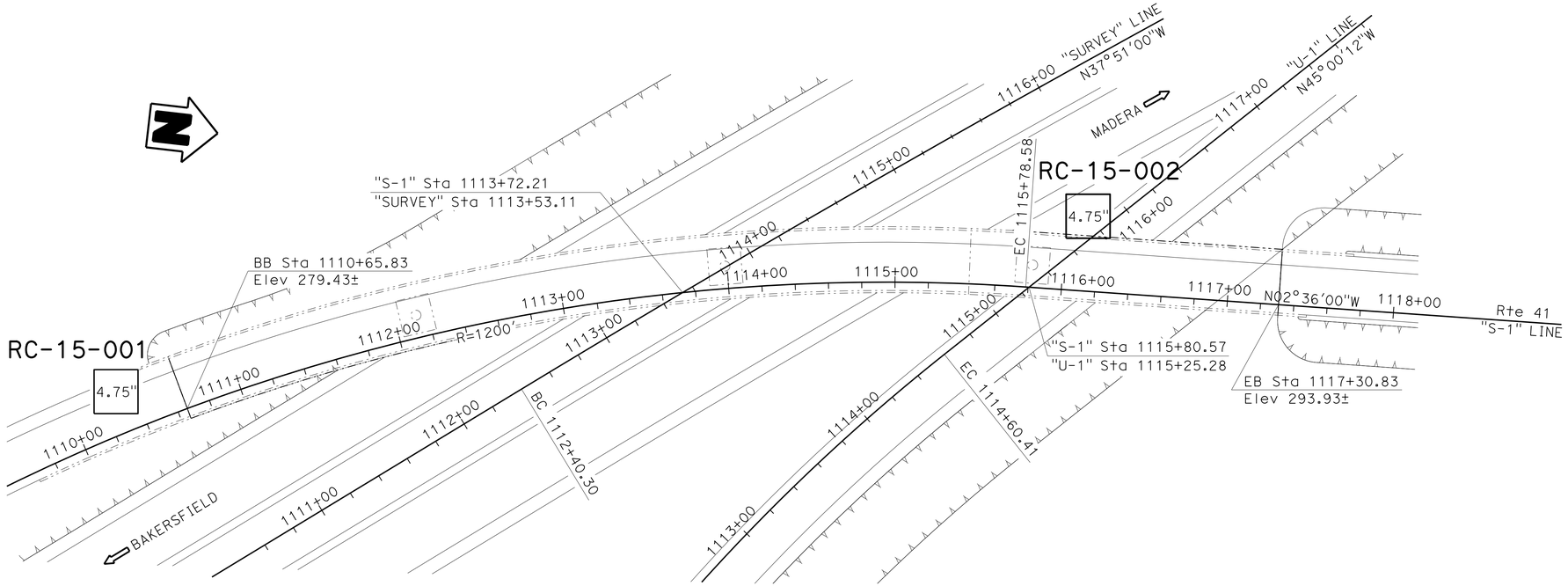

PLAN
1" = 40'

BENCHMARKS

STATION	OFFSET	N	E	ELEV	DESCRIPTION
35+81.19	77.01' Lt	2,193,822.88	6,137,391.65	280.274	"Lilly" RR spike in anchor pole NE corner Lilly & Florence (1960)

SURVEY CONTROL
1. Coordinates bearing and distances are based on the California State Plane Coordinate system of NAD 83 (1986). Elevations are based on NGVD29.

Notes:

1. 1.4" samples were taken using a SPT split-barrel sampler with an inside diameter (ID) of 1.4" and an outside diameter (OD) of 2".
2. 2.0" samples were taken using a CAL split-barrel sampler with an inside diameter (ID) of 2.0" and an outside diameter (OD) of 2.5"
3. An automatic hammer (140 lb) with a 30" drop was used to advance the sampler.
4. Blowcounts noted for boring are field blowcounts and have not been corrected.
5. Blowcounts 50/5 means 50 blows per 5" penetration.
6. This LOTB sheet was prepared in accordance with the Caltrans Soil & Rock Logging, Classification, and Presentation Manual (June 2010)

J. Huang
DESIGN OVERSIGHT
9/22/15
SIGN OFF DATE

DRAWN BY A. Sanchez
CHECKED BY N. Dahlen

A.M. & J.W.
FIELD INVESTIGATION BY:
DATE: 6/11/15

PREPARED FOR THE STATE OF CALIFORNIA DEPARTMENT OF TRANSPORTATION

N. Dahlen
PROJECT ENGINEER

BRIDGE NO. 42-0216F
POST MILES R21.81

SR 41/99 CONNECTOR SEPARATION SEISMIC RETROFIT
LOG OF TEST BORINGS 1 OF 3

GS CIVIL LOG OF TEST BORINGS SHEET (ENGLISH) (REV. 03/14/12)

ORIGINAL SCALE IN INCHES FOR REDUCED PLANS 0 1 2 3

UNIT: 3604
PROJECT NUMBER & PHASE: 0612000110
CONTRACT NO.: 06-0K8001

DISREGARD PRINTS BEARING EARLIER REVISION DATES → 9/23/15

REVISION DATES | SHEET 5 OF 7

FILE => 42-0216f-z-ltb01.dgn

USERNAME => s113541 DATE PLOTTED => 04-APR-2016 TIME PLOTTED => 14:28

FOR PLAN VIEW AND ADDITIONAL NOTES, SEE
"LOG OF TEST BORINGS" SHEET 1 OF 3

This LOTB sheet was prepared in accordance with the Caltrans Soil & Rock Logging, Classification, and Presentation Manual (2010).

DIST	COUNTY	ROUTE	POST MILES TOTAL PROJECT	SHEET No	TOTAL SHEETS
06	Fre,Kin	33,41,43	Var	40	62

REGISTERED CIVIL ENGINEER 9/15/15 DATE

3-28-16
PLANS APPROVAL DATE

REGISTERED PROFESSIONAL ENGINEER
Nathan Dahlen
No. 71344
Exp. 12/31/15
CIVIL
STATE OF CALIFORNIA

The State of California or its officers or agents shall not be responsible for the accuracy or completeness of scanned copies of this plan sheet.

KLEINFELDER
5125 N. GATES AVE., SUITE 102
FRESNO, CA 93722

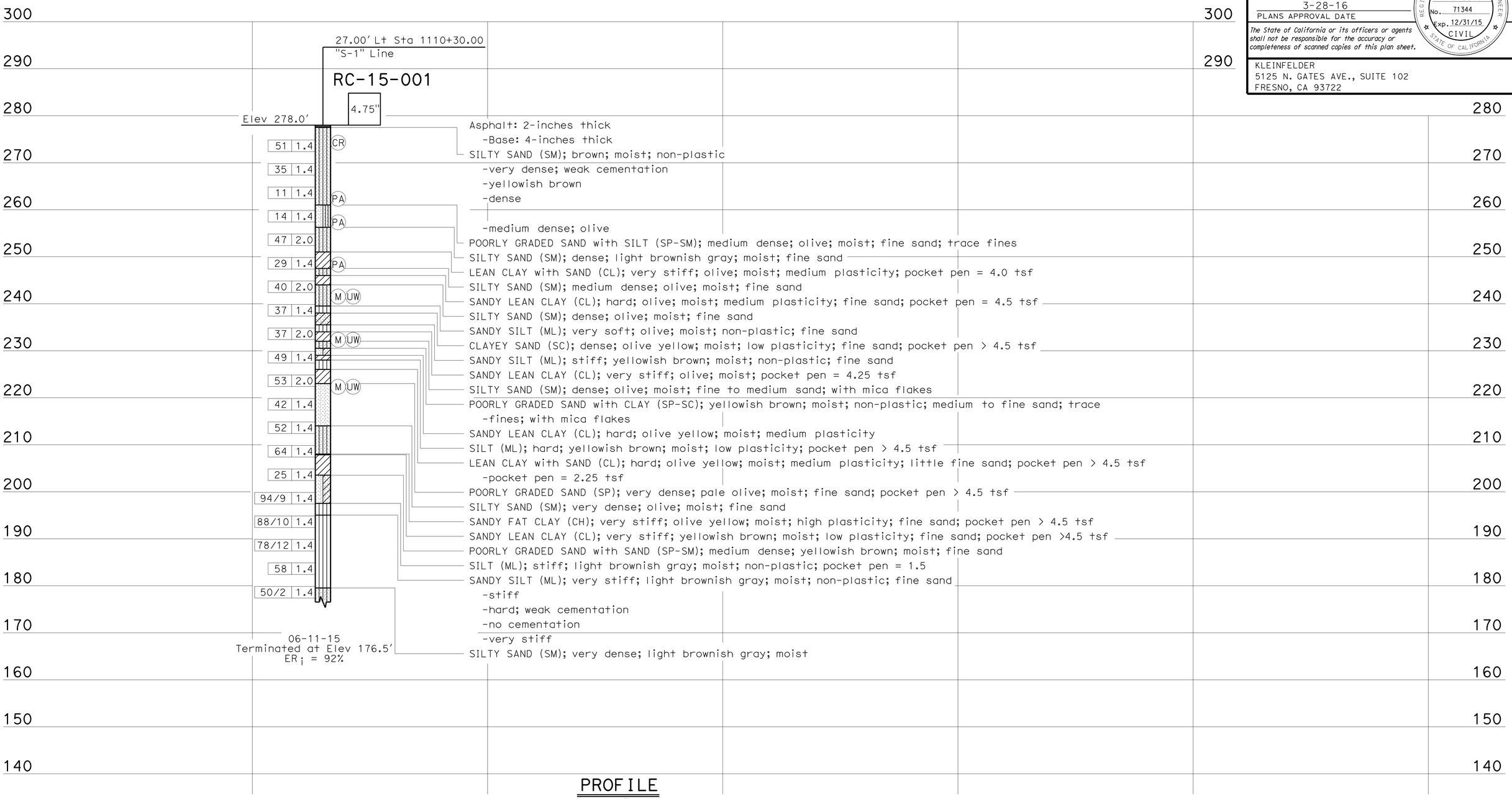

PROFILE
HOR. 1"=20'
VER. 1"=10'

J. Huang DESIGN OVERSIGHT 9/22/15 SIGN OFF DATE	DRAWN BY CHECKED BY	A. Sanchez N. Dahlen	A. Mohammad FIELD INVESTIGATION BY: DATE: 6/11/15	PREPARED FOR THE STATE OF CALIFORNIA DEPARTMENT OF TRANSPORTATION	N. Dahlen PROJECT ENGINEER	BRIDGE NO. 42-0216F POST MILES R21.81	SR 41/99 CONNECTOR SEPARATION SEISMIC RETROFIT LOG OF TEST BORINGS 2 OF 3

GS CIVIL LOG OF TEST BORINGS SHEET (ENGLISH) (REV. 03/14/12)

ORIGINAL SCALE IN INCHES FOR REDUCED PLANS 0 1 2 3

UNIT: 3604
PROJECT NUMBER & PHASE: 0612000110 CONTRACT NO.: 06-0K8001

DISREGARD PRINTS BEARING EARLIER REVISION DATES → 9/23/15

REVISION DATES | SHEET 6 OF 7

FILE => 42-0216f-z-ltb02.dgn

USERNAME => s113541 DATE PLOTTED => 04-APR-2016 TIME PLOTTED => 14:28

FOR PLAN VIEW AND ADDITIONAL NOTES, SEE
"LOG OF TEST BORINGS" SHEET 1 OF 3

This LOTB sheet was prepared in accordance with the Caltrans Soil & Rock Logging, Classification, and Presentation Manual (2010).

DIST	COUNTY	ROUTE	POST MILES TOTAL PROJECT	SHEET No	TOTAL SHEETS
06	Fre,Kin	33,41,43	Var	41	62

REGISTERED CIVIL ENGINEER 9/15/15 DATE

3-28-16
PLANS APPROVAL DATE

REGISTERED PROFESSIONAL ENGINEER
Nathan Dahlen
No. 71344
Exp. 12/31/15
CIVIL
STATE OF CALIFORNIA

The State of California or its officers or agents shall not be responsible for the accuracy or completeness of scanned copies of this plan sheet.

KLEINFELDER
5125 N. GATES AVE., SUITE 102
FRESNO, CA 93722

PROFILE
HOR. 1"=20'
VER. 1"=10'

J. Huang DESIGN OVERSIGHT 9/22/15 SIGN OFF DATE	DRAWN BY A. Sanchez CHECKED BY N. Dahlen	J. Wetenkamp FIELD INVESTIGATION BY: DATE: 6/11/15	PREPARED FOR THE STATE OF CALIFORNIA DEPARTMENT OF TRANSPORTATION

N. Dahlen
PROJECT ENGINEER

BRIDGE NO. 42-0216F
POST MILES R21.81

SR 41/99 CONNECTOR SEPARATION SEISMIC RETROFIT

LOG OF TEST BORINGS 3 OF 3

GS CIVIL LOG OF TEST BORINGS SHEET (ENGLISH) (REV. 03/14/12)

ORIGINAL SCALE IN INCHES FOR REDUCED PLANS 0 1 2 3

UNIT: 3604
PROJECT NUMBER & PHASE: 0612000110 CONTRACT NO.: 06-0K8001

DISREGARD PRINTS BEARING EARLIER REVISION DATES → 9/23/15

REVISION DATES | SHEET 7 OF 7

FILE => 42-0216f-z-ltb03.dgn

USERNAME => s113541 DATE PLOTTED => 04-APR-2016 TIME PLOTTED => 14:28

DIST	COUNTY	ROUTE	POST MILES TOTAL PROJECT	SHEET No.	TOTAL SHEETS
06	Fre,Kin	33,41,43	Var	42	62

REGISTERED CIVIL ENGINEER — DATE 10-14-15

3-28-16
PLANS APPROVAL DATE

REGISTERED PROFESSIONAL ENGINEER — Sara P. Yip No. C73841 Exp. 06-30-17 CIVIL — STATE OF CALIFORNIA

The State of California or its officers or agents shall not be responsible for the accuracy or completeness of electronic copies of this plan sheet.

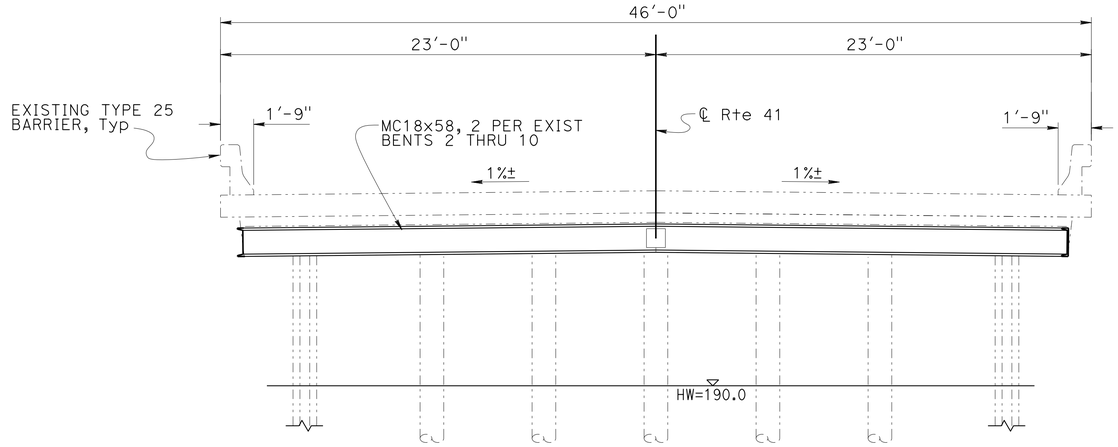

TYPICAL SECTION

1/4" = 1'-0"

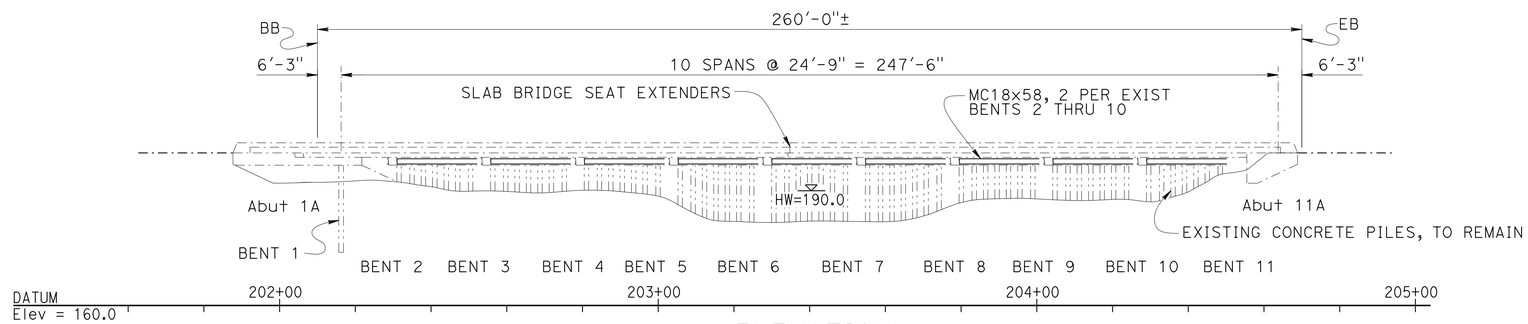

ELEVATION

1" = 20'

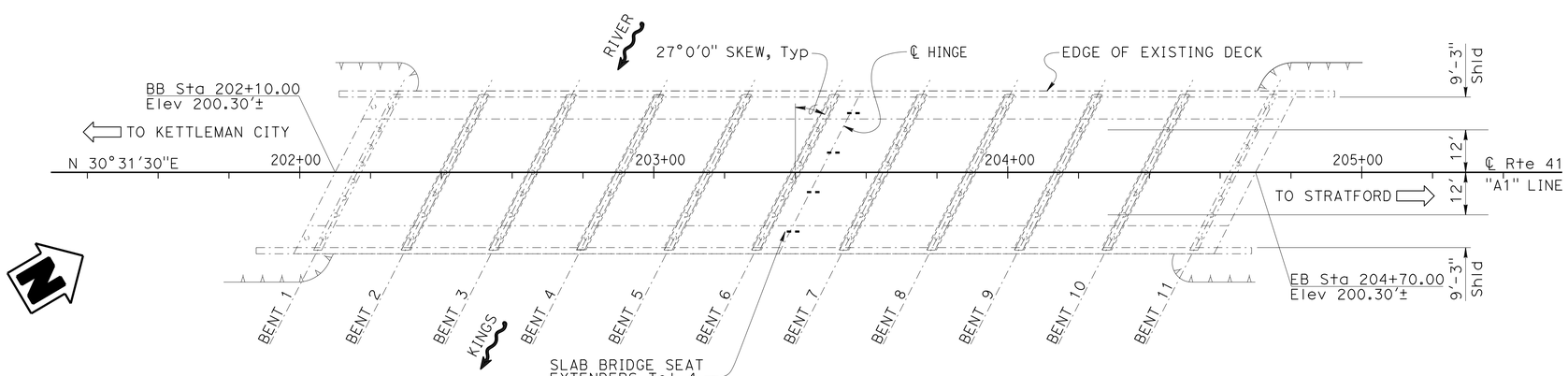

PLAN

1" = 20'

NOTE:
Elevations shown on "GENERAL PLAN" are based on NGVD 29.

LEGEND:
- Indicates existing structure
- Indicates new construction
- Indicates high water (HW) level

QUANTITIES

CORE CONCRETE (1")	47 LF
CORE CONCRETE (1½")	504 LF
BEARING PAD	8 EA
STRUCTURAL STEEL (BRIDGE)	86,100 LB
CLEAN AND PAINT STRUCTURAL STEEL	LUMP SUM

NOTE:
THE CONTRACTOR MUST VERIFY ALL CONTROLLING FIELD DIMENSIONS BEFORE ORDERING OR FABRICATING ANY MATERIAL.

Jose Higareda
DESIGN ENGINEER

	BY	CHECKED
DESIGN	Anthony Logus	Sara Yip
DETAILS	Tim Trefz	Sara Yip
QUANTITIES	S. Yip/C. Chan	Victor Romo

LOAD & RESISTANCE FACTOR DESIGN — LIVE LOADING: 240 psf SURCHARGE

	BY	CHECKED
LAYOUT	Anthony Logus	Sara Yip
SPECIFICATIONS	Sirisha Nelapatla	PLANS AND SPECS COMPARED Sara Yip

ORIGINAL SCALE IN INCHES FOR REDUCED PLANS 0 1 2 3

STATE OF CALIFORNIA
DEPARTMENT OF TRANSPORTATION

DIVISION OF ENGINEERING SERVICES
STRUCTURE DESIGN
DESIGN BRANCH 15

BRIDGE NO. 45-0007
POST MILE 32.26

ROUTE 41 KINGS RIVER BRIDGE SEISMIC RETROFIT
GENERAL PLAN

UNIT: 3604
PROJECT NUMBER & PHASE: 0612000110
CONTRACT NO.: 06-0K8001

DISREGARD PRINTS BEARING EARLIER REVISION DATES

REVISION DATES: 08-19-15 09-11-15 07-30-15

SHEET 1 OF 10

STRUCTURES DESIGN GENERAL PLAN SHEET (ENGLISH) (REV.09-01-10)

FILE => 45-0007-a-gp.dgn

DATE PLOTTED => 04-APR-2016 TIME PLOTTED => 14:28

DIST	COUNTY	ROUTE	POST MILES TOTAL PROJECT	SHEET No.	TOTAL SHEETS
06	Fre,Kin	33,41,43	Var	43	62

REGISTERED CIVIL ENGINEER — DATE 10-14-15

3-28-16
PLANS APPROVAL DATE

REGISTERED PROFESSIONAL ENGINEER — Sara P. Yip — No. C73841 — Exp. 06-30-17 — CIVIL — STATE OF CALIFORNIA

The State of California or its officers or agents shall not be responsible for the accuracy or completeness of electronic copies of this plan sheet.

GENERAL NOTES
LOAD AND RESISTANCE FACTOR DESIGN

DESIGN: AASHTO LRFD BRIDGE DESIGN SPECIFICATIONS, 6th EDITION WITH CALIFORNIA AMENDMENTS

SEISMIC DESIGN: CALTRANS SEISMIC DESIGN CRITERIA (SDC), Version 1.7, April 2013

SEISMIC LOADING: SEE "SITE SPECIFIC ACCELERATION RESPONSE SPECTRUM" Peak Ground Acceleration 0.39g

AS-BUILT REINFORCED CONCRETE: fy = 40 ksi
f'c = 3.0 ksi

STRUCTURAL STEEL: fy = 36 ksi, except for HSS12x6x⅜
fy = 46 ksi (HSS12x6x⅜ only)

INDEX TO PLANS

SHEET No.	TITLE
1	GENERAL PLAN
2	INDEX TO PLANS
3	FOUNDATION PLAN
4	BENT DETAILS NO. 1
5	BENT DETAILS NO. 2
6	BENT DETAILS NO. 3
7	SLAB BRIDGE SEAT EXTENDER DETAILS No. 1
8	SLAB BRIDGE SEAT EXTENDER DETAILS No. 2
9	LOG OF TEST BORINGS, 1 of 2
10	LOG OF TEST BORINGS, 2 of 2

STANDARD PLANS 2010

A10A	ABBREVIATIONS (SHEET 1 OF 2)
RSP A10B	ABBREVIATIONS (SHEET 2 OF 2)
A10C	LINES AND SYMBOLS (SHEET 1 OF 3)
A10D	LINES AND SYMBOLS (SHEET 2 OF 3)
A10E	LINES AND SYMBOLS (SHEET 3 OF 3)
RSP A10F	LEGEND - SOIL (SHEET 1 OF 2)
RSP A10G	LEGEND - SOIL (SHEET 2 OF 2)
A10H	LEGEND - ROCK

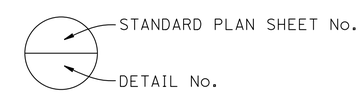

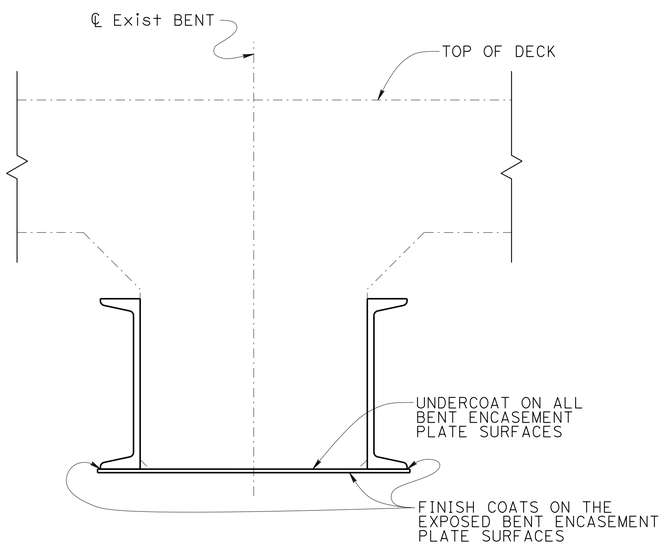

PART ELEVATION

NOTE:
NOT ALL DETAILS SHOWN FOR CLARITY

LIMITS OF CLEAN & PAINT BENT ENCASEMENT PLATE
NO SCALE

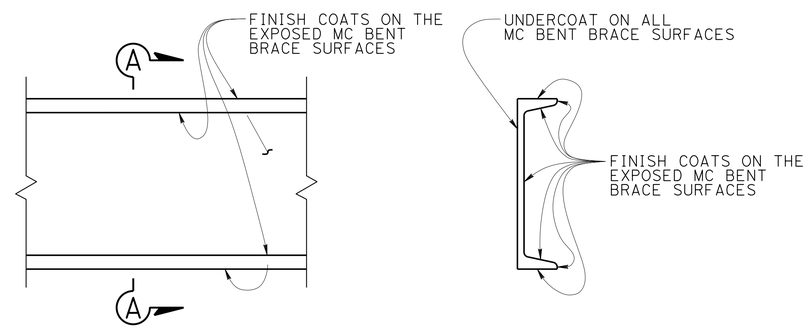

PART ELEVATION **PART SECTION A-A**

LIMITS OF CLEAN & PAINT MC BENT BRACE
NO SCALE

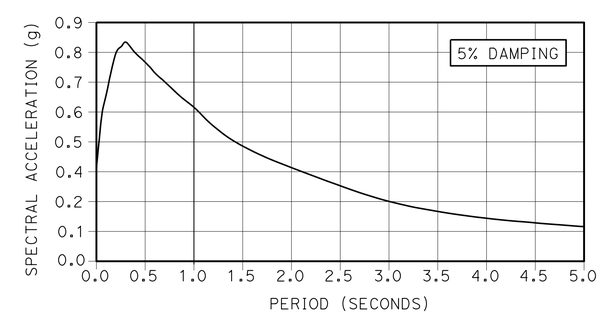

SITE SPECIFIC ACCELERATION RESPONSE SPECTRUM

NOTE:
THE CONTRACTOR MUST VERIFY ALL CONTROLLING FIELD DIMENSIONS BEFORE ORDERING OR FABRICATING ANY MATERIAL.

	BY	CHECKED
DESIGN	Anthony Logus	Sara Yip
DETAILS	Tim Trefz	Sara Yip
QUANTITIES	S. Yip/C. Chan	Victor Romo

STATE OF CALIFORNIA
DEPARTMENT OF TRANSPORTATION

DIVISION OF ENGINEERING SERVICES
STRUCTURE DESIGN
DESIGN BRANCH 15

BRIDGE NO. 45-0007
POST MILE 32.26

ROUTE 41 KINGS RIVER BRIDGE SEISMIC RETROFIT
INDEX TO PLANS

STRUCTURES DESIGN DETAIL SHEET (ENGLISH) (REV. 09-01-10)

ORIGINAL SCALE IN INCHES FOR REDUCED PLANS 0 1 2 3

UNIT: 3604
PROJECT NUMBER & PHASE: 0612000110
CONTRACT NO.: 06-0K8001

DISREGARD PRINTS BEARING EARLIER REVISION DATES

REVISION DATES: 09-30-15 01-21-16

SHEET 2 OF 10

FILE => 45-0007-a-itp.dgn

USERNAME => s113541 DATE PLOTTED => 04-APR-2016 TIME PLOTTED => 14:28

DIST	COUNTY	ROUTE	POST MILES TOTAL PROJECT	SHEET No.	TOTAL SHEETS
06	Fre,Kin	33,41,43	Var	44	62

REGISTERED CIVIL ENGINEER — DATE 10-14-15

3-28-16
PLANS APPROVAL DATE

REGISTERED PROFESSIONAL ENGINEER — Sara P. Yip — No. C73841 — Exp. 06-30-17 — CIVIL — STATE OF CALIFORNIA

The State of California or its officers or agents shall not be responsible for the accuracy or completeness of electronic copies of this plan sheet.

NOTE:
THE CONTRACTOR MUST VERIFY ALL CONTROLLING FIELD DIMENSIONS BEFORE ORDERING OR FABRICATING ANY MATERIAL.

Bridge Location (45-0007)

Ⓐ - 21.49 Lt Rte 41, Sta 3+39.03, Elev = 199.54
Ⓑ - 19.76 Rt Rte 41, Sta 3+20.17, Elev = 199.59
Ⓒ - 21.41 Lt Rte 41, Sta 5+97.17, Elev = 199.51
Ⓓ - 19.91 Rt Rte 41, Sta 5+81.25, Elev = 199.59

SOFFIT ELEVATIONS

1	198.20	12	198.19
2	198.22	13	198.19
3	198.24	14	198.22
4	198.33	15	198.22
5	198.30	16	198.16
6	198.34	17	198.22
7	198.31	18	198.24
8	198.30	19	198.23
9	198.29	20	198.22
10	198.28	21	198.25
11	198.15	22	198.01

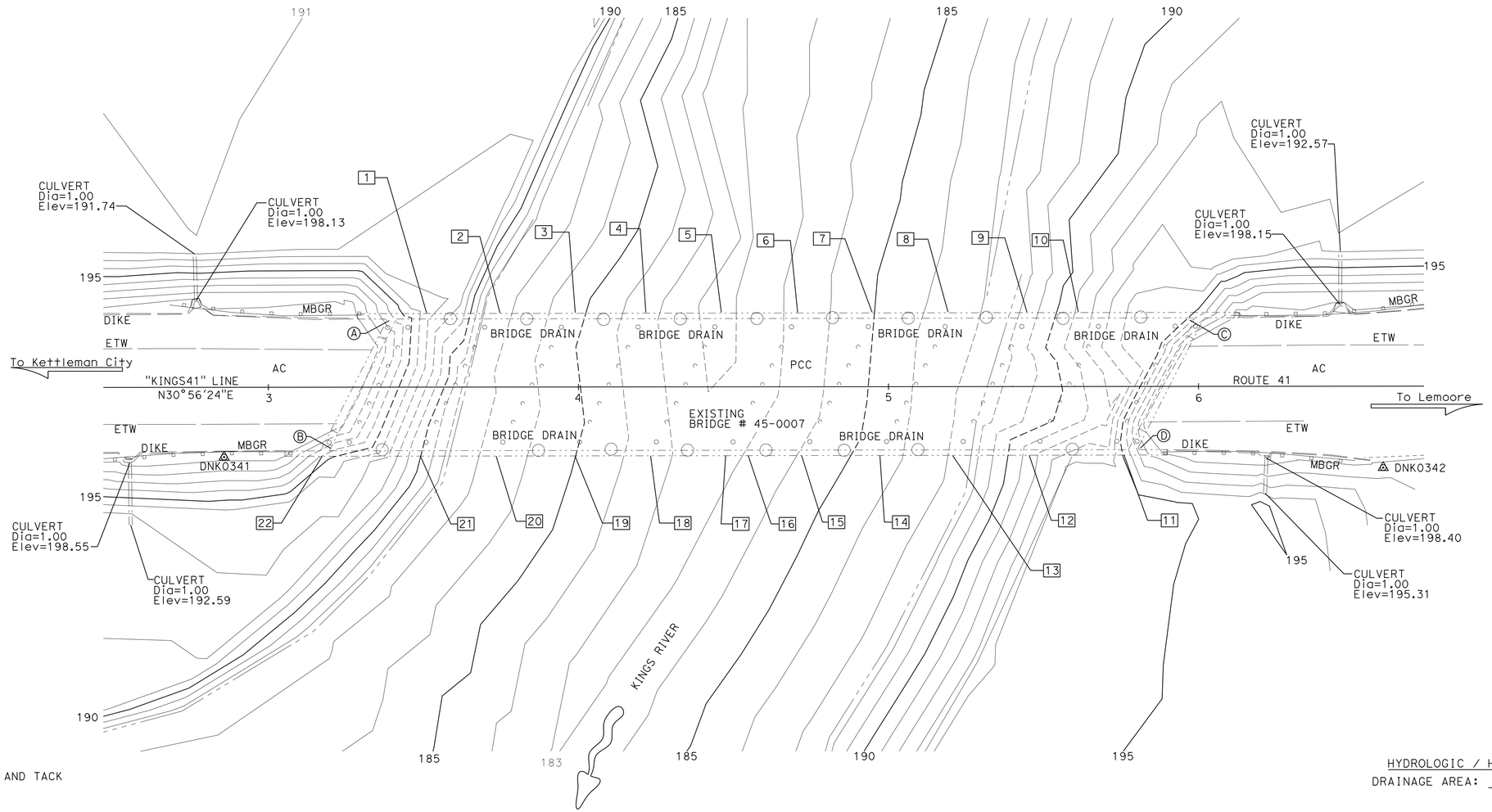

SURVEY CONTROL

DNK0341
Fnd 1" IRON PIPE W/RED CT PLUG AND TACK
22.52 Ft Rt "KINGS-41" LINE
Sta 2+85.68
N 1949691.05
E 6315334.68
Elev = 199.15

DNK0342
Fnd 1" IRON PIPE W/RED CT PLUG AND TACK
26.26 Ft Rt "KINGS-41" LINE
Sta 6+59.54
N 1950009.80
E 6315530.10
Elev = 198.32

HYDROLOGIC / HYDRAULIC DATA SUMMARY

DRAINAGE AREA: N/A SQUARE MILES

	DESIGN FLOOD	BASE FLOOD
FREQUENCY (YEARS)	NORMAL	MAXIMUM
DISCHARGE (CUBIC FEET PER SECOND)	6000	3200
WATER SURFACE ELEV. (FEET)	191.63	190.03

FLOOD PLAIN DATA ARE BASED UPON INFORMATION AVAILABLE WHEN THE PLANS WERE PREPARED AND ARE SHOWN TO MEET FEDERAL REQUIREMENTS. THE ACCURACY OF SAID INFORMATION IS NOT WARRANTED BY THE STATE AND INTERESTED OR AFFECTED PARTIES SHOULD MAKE THEIR OWN INVESTIGATIONS.

PRELIMINARY INVESTIGATION SECTION

SCALE 1"=20'	VERT.DATUM NAVD88	PHOTOGRAMMETRY AS OF: X		
	HORZ.DATUM NAD83 (2010.16)	SURVEYED	BY DISTRICT 6	CHECKED BY C. FASSETT 7/2015
	ALIGNMENT TIES Dist TRAVERSE SHEET	DRAFTED	BY C. FASSETT 7/2015	CHECKED BY L. LEW 7/2015

	BY	CHECKED
DESIGN	Anthony Logus	Sara Yip
DETAILS	Tim Trefz	Sara Yip
QUANTITIES	S. Yip/C. Chan	Victor Romo

STATE OF CALIFORNIA
DEPARTMENT OF TRANSPORTATION

DIVISION OF ENGINEERING SERVICES
STRUCTURE DESIGN
DESIGN BRANCH 15

BRIDGE NO. 45-0007
POST MILE 32.26

ROUTE 41 KINGS RIVER BRIDGE SEISMIC RETROFIT
FOUNDATION PLAN

STRUCTURES FOUNDATION PLAN SHEET (ENGLISH) (REV. 09-01-10)

ORIGINAL SCALE IN INCHES FOR REDUCED PLANS 0 1 2 3

UNIT: 3604
PROJECT NUMBER & PHASE: 0612000110
CONTRACT NO.: 06-0K8001

SUBMITTAL DATE	REVISION DATES				SHEET	OF
7/30/2015	08-19-15				3	10

USERNAME => s113541 DATE PLOTTED => 04-APR-2016 TIME PLOTTED => 14:28

DIST	COUNTY	ROUTE	POST MILES TOTAL PROJECT	SHEET No.	TOTAL SHEETS
06	Fre,Kin	33,41,43	Var	45	62

REGISTERED CIVIL ENGINEER — DATE 10-14-15

PLANS APPROVAL DATE 3-28-16

REGISTERED PROFESSIONAL ENGINEER — Sara P. Yip — No. C73841 — Exp. 06-30-17 — CIVIL — STATE OF CALIFORNIA

The State of California or its officers or agents shall not be responsible for the accuracy or completeness of electronic copies of this plan sheet.

NOTES:

1. Contractor must verify slope angle of bottom of Bents 2 to 10 prior to fabrication of MC Bent Braces.
2. Core drill 1½"Ø holes completely through existing bents.
3. "BENT BRACE ELEVATION" at Bents 2, 3, 4, 5, 8, 9 &10 shown, Bents 6 & 7 similar.
4. Paint all Bent Encasement Plates and MC Bent Braces. See "LIMITS OF CLEAN & PAINT MC BENT BRACE" and "LIMITS OF CLEAN & PAINT BENT ENCASEMENT PLATE" details on "INDEX TO PLANS" sheet.

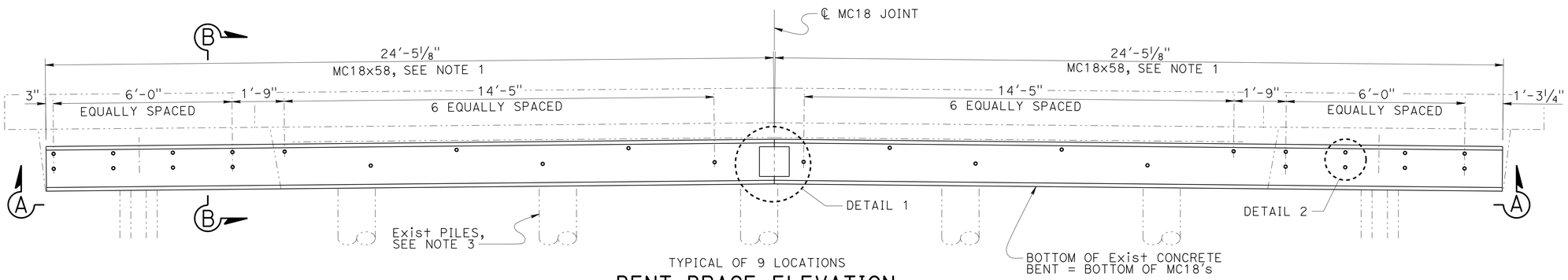

TYPICAL OF 9 LOCATIONS

BENT BRACE ELEVATION

½" = 1'-0"

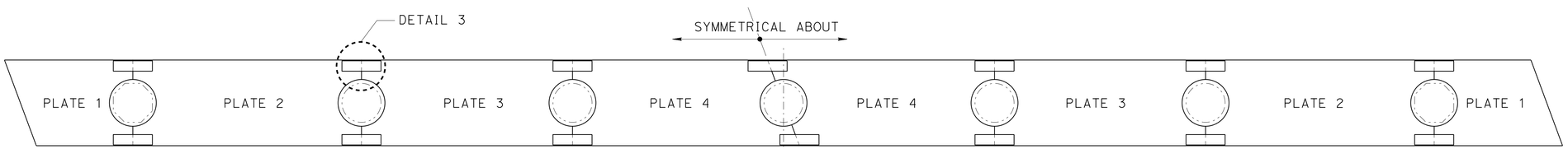

BENTS 2,3,4,5,8,9,&10

BENT ENCASEMENT PLATES

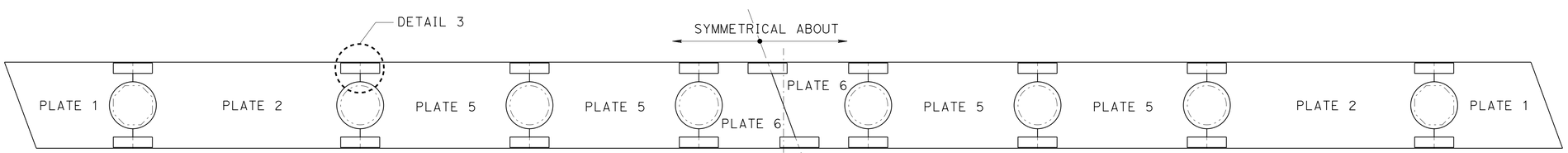

BENTS 6 & 7

BENT ENCASEMENT PLATES

VIEW A-A

½" = 1'-0"

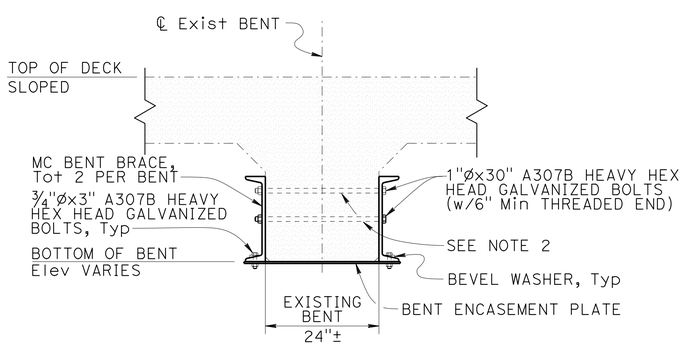

TYPICAL AT BENTS 2 TO 10

SECTION B-B

¾" = 1'-0"

NOTE:
THE CONTRACTOR MUST VERIFY ALL CONTROLLING FIELD DIMENSIONS BEFORE ORDERING OR FABRICATING ANY MATERIAL.

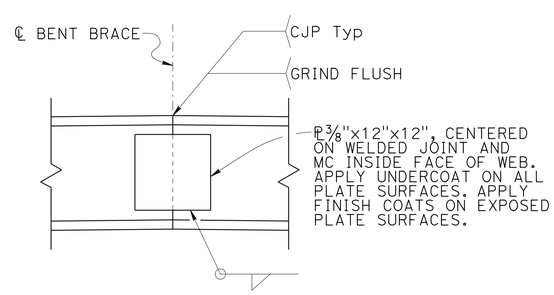

DETAIL 1

1" = 1'-0"

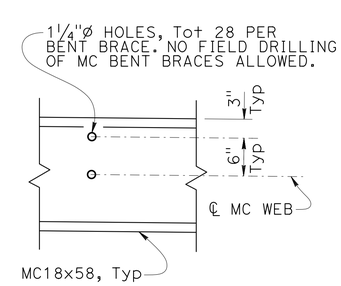

DETAIL 2

1" = 1'-0"

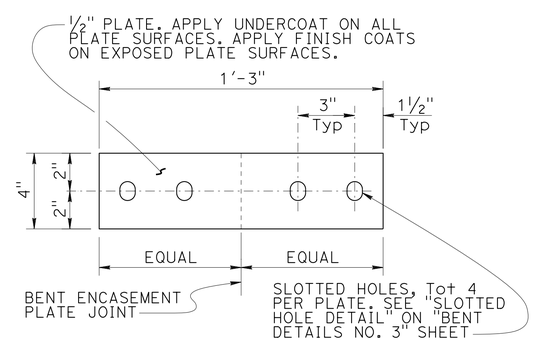

DETAIL 3

1½" = 1'-0"

DESIGN	BY Anthony Logus	CHECKED Sara Yip	
DETAILS	BY Tim Trefz	CHECKED Sara Yip	
QUANTITIES	BY S. Yip/C. Chan	CHECKED Victor Romo	

STATE OF CALIFORNIA
DEPARTMENT OF TRANSPORTATION

DIVISION OF ENGINEERING SERVICES
STRUCTURE DESIGN
DESIGN BRANCH 15

BRIDGE NO. 45-0007
POST MILE 32.26

ROUTE 41 KINGS RIVER BRIDGE SEISMIC RETROFIT

BENT DETAILS NO. 1

STRUCTURES DESIGN DETAIL SHEET (ENGLISH) (REV. 09-01-10)

ORIGINAL SCALE IN INCHES FOR REDUCED PLANS 0 1 2 3

UNIT: 3604
PROJECT NUMBER & PHASE: 0612000110
CONTRACT NO.: 06-0K8001

DISREGARD PRINTS BEARING EARLIER REVISION DATES

REVISION DATES 04-13-15 08-04-15 08-19-15

SHEET 4 OF 10

FILE => 45-0007-h-bdtl_01.dgn

USERNAME => s113541 DATE PLOTTED => 04-APR-2016 TIME PLOTTED => 14:28

DIST	COUNTY	ROUTE	POST MILES TOTAL PROJECT	SHEET No.	TOTAL SHEETS
06	Fre,Kin	33,41,43	Var	46	62

REGISTERED CIVIL ENGINEER — DATE 10-14-15

3-28-16
PLANS APPROVAL DATE

REGISTERED PROFESSIONAL ENGINEER — Sara P. Yip No. C73841 Exp. 06-30-17 CIVIL — STATE OF CALIFORNIA

The State of California or its officers or agents shall not be responsible for the accuracy or completeness of electronic copies of this plan sheet.

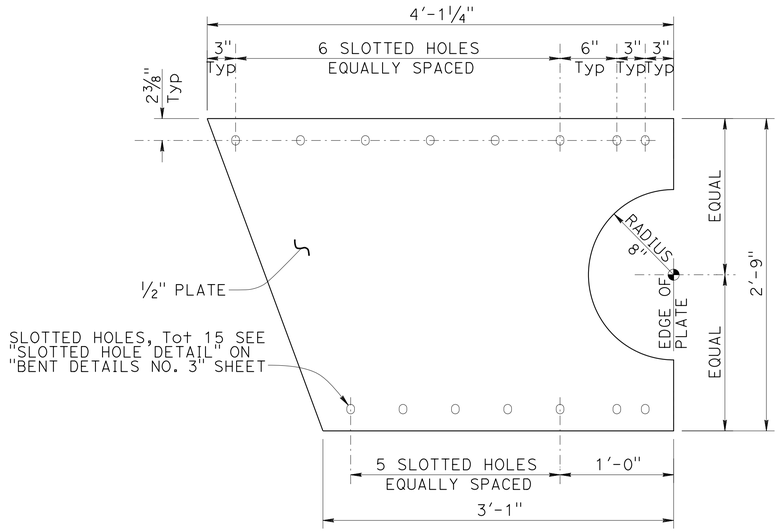

PLATE 1
1½" = 1'-0"

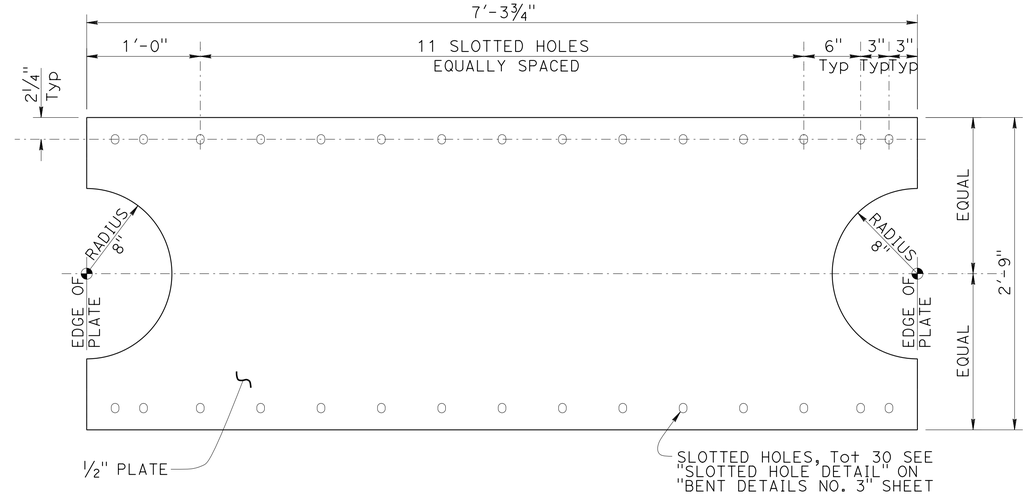

PLATE 2
1½" = 1'-0"

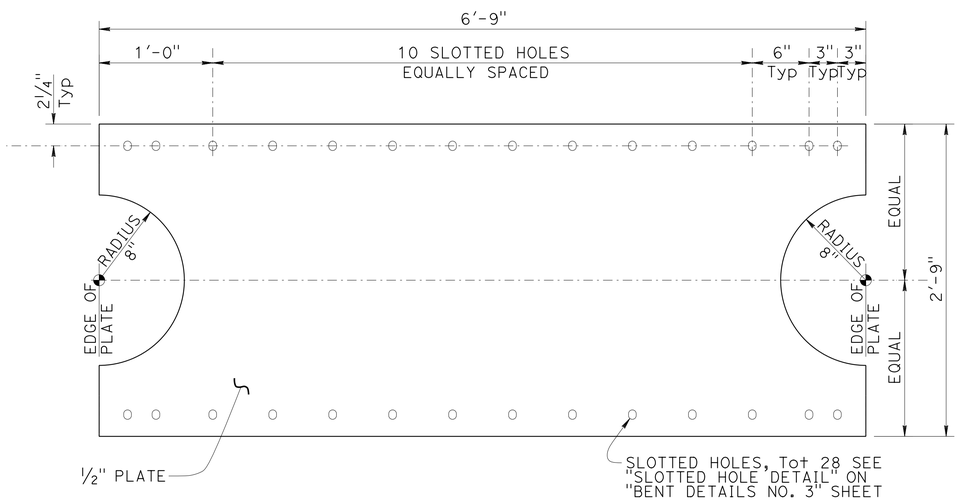

PLATE 3
1½" = 1'-0"

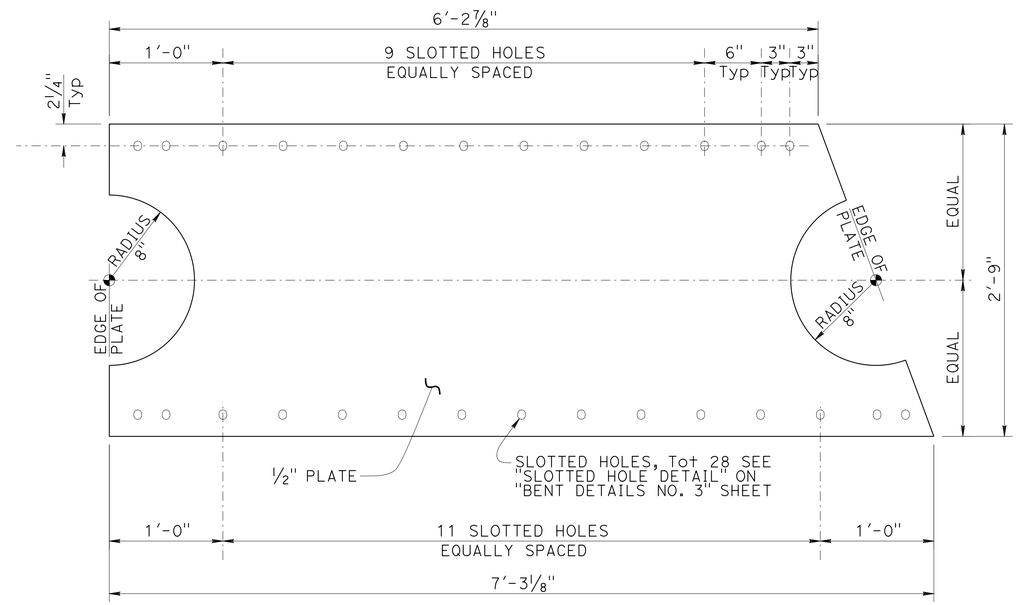

PLATE 4
1½" = 1'-0"

NOTE:
THE CONTRACTOR MUST VERIFY ALL CONTROLLING FIELD DIMENSIONS BEFORE ORDERING OR FABRICATING ANY MATERIAL.

	BY	CHECKED
DESIGN	Anthony Logus	Sara Yip
DETAILS	Tim Trefz	Sara Yip
QUANTITIES	S. Yip/C. Chan	Victor Romo

STATE OF CALIFORNIA
DEPARTMENT OF TRANSPORTATION

DIVISION OF ENGINEERING SERVICES
STRUCTURE DESIGN
DESIGN BRANCH 15

BRIDGE NO. 45-0007
POST MILE 32.26

ROUTE 41 KINGS RIVER BRIDGE SEISMIC RETROFIT
BENT DETAILS NO. 2

STRUCTURES DESIGN DETAIL SHEET (ENGLISH) (REV. 09-01-10)

ORIGINAL SCALE IN INCHES FOR REDUCED PLANS 0 1 2 3

UNIT: 3604
PROJECT NUMBER & PHASE: 0612000110
CONTRACT NO.: 06-0K8001

DISREGARD PRINTS BEARING EARLIER REVISION DATES

REVISION DATES: 07-31-15 08-19-15

SHEET 5 OF 10

FILE => 45-0007-h-bdtl_02.dgn

USERNAME => s113541 DATE PLOTTED => 04-APR-2016 TIME PLOTTED => 14:28

DIST	COUNTY	ROUTE	POST MILES TOTAL PROJECT	SHEET No.	TOTAL SHEETS
06	Fre,Kin	33,41,43	Var	47	62

REGISTERED CIVIL ENGINEER — DATE 10-14-15

3-28-16
PLANS APPROVAL DATE

REGISTERED PROFESSIONAL ENGINEER — Sara P. Yip — No. C73841 — Exp. 06-30-17 — CIVIL — STATE OF CALIFORNIA

The State of California or its officers or agents shall not be responsible for the accuracy or completeness of electronic copies of this plan sheet.

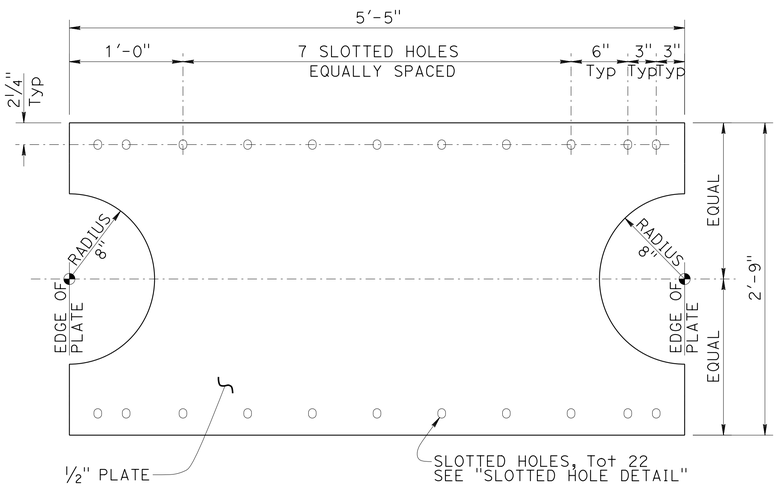

PLATE 5

1½" = 1'-0"

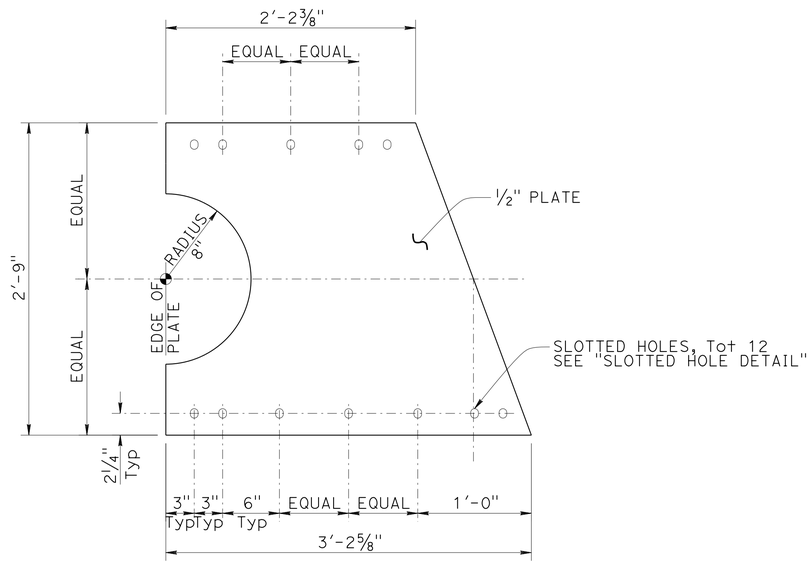

PLATE 6

1½" = 1'-0"

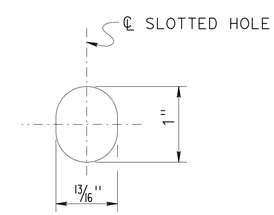

SLOTTED HOLE DETAIL

3" = 1'-0"

NOTE:
THE CONTRACTOR MUST VERIFY ALL CONTROLLING FIELD DIMENSIONS BEFORE ORDERING OR FABRICATING ANY MATERIAL.

	BY	CHECKED
DESIGN	Anthony Logus	Sara Yip
DETAILS	Tim Trefz	Sara Yip
QUANTITIES	S. Yip/C. Chan	Victor Romo

STATE OF CALIFORNIA
DEPARTMENT OF TRANSPORTATION

DIVISION OF ENGINEERING SERVICES
STRUCTURE DESIGN
DESIGN BRANCH 15

BRIDGE NO. 45-0007
POST MILE 32.26

ROUTE 41 KINGS RIVER BRIDGE SEISMIC RETROFIT
BENT DETAILS NO. 3

STRUCTURES DESIGN DETAIL SHEET (ENGLISH) (REV. 09-01-10)

ORIGINAL SCALE IN INCHES FOR REDUCED PLANS 0 1 2 3

UNIT: 3604
PROJECT NUMBER & PHASE: 0612000110
CONTRACT NO.: 06-0K8001

DISREGARD PRINTS BEARING EARLIER REVISION DATES → 08-03-15

REVISION DATES | SHEET 6 | OF 10

FILE => 45-0007-h-bdtl_03.dgn

USERNAME => s113541 DATE PLOTTED => 04-APR-2016 TIME PLOTTED => 14:28

DIST	COUNTY	ROUTE	POST MILES TOTAL PROJECT	SHEET No.	TOTAL SHEETS
06	Fre,Kin	33,41,43	Var	48	62

REGISTERED CIVIL ENGINEER — DATE 10-14-15

3-28-16
PLANS APPROVAL DATE

REGISTERED PROFESSIONAL ENGINEER — Sara P. Yip No. C73841 Exp. 06-30-17 CIVIL — STATE OF CALIFORNIA

The State of California or its officers or agents shall not be responsible for the accuracy or completeness of electronic copies of this plan sheet.

NOTES:

1. Core 1"ø holes for ¾"ø A307B Heavy Hex Head galvanized bolts with length for through bolt connection. Provide ¼"x3½"ø washers at the upper end, ¼"x3½"ø beveled washers and 2 lock-nuts at the lower end. Tot 9 each assembly.
2. Plug holes with epoxy mortar or rapid setting concrete after placing bolts and washers.
3. Galvanize all steel and bolts

✳ Anchor Bolts must clear mounting bars on existing hinge assembly as well as existing longitudunal reinforcement.

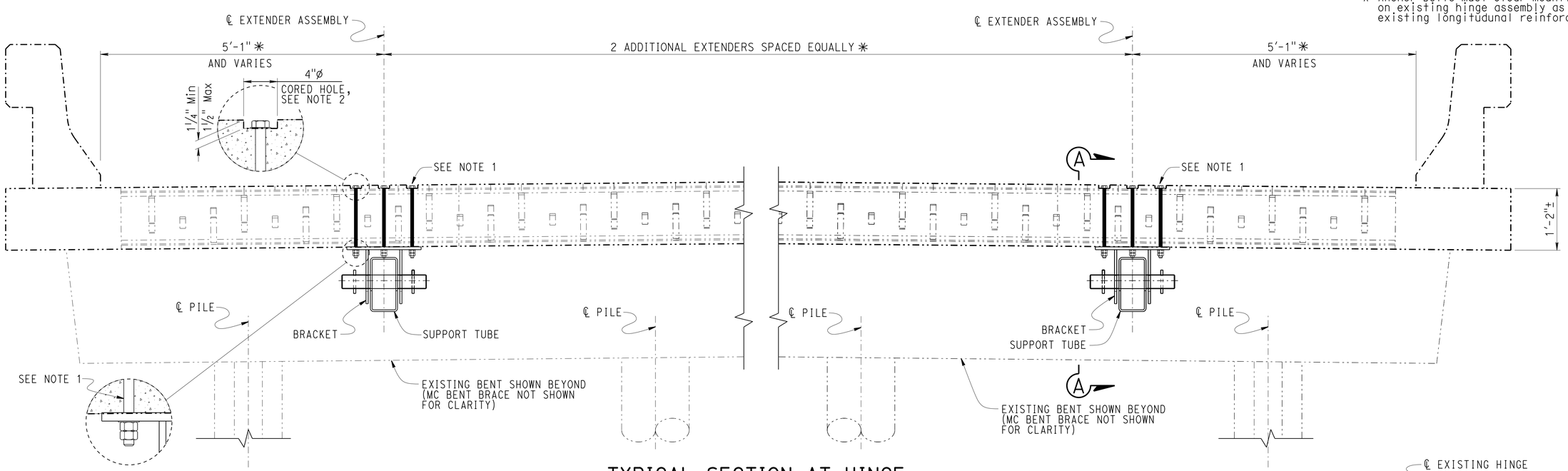

TYPICAL SECTION AT HINGE

1" = 1'-0"

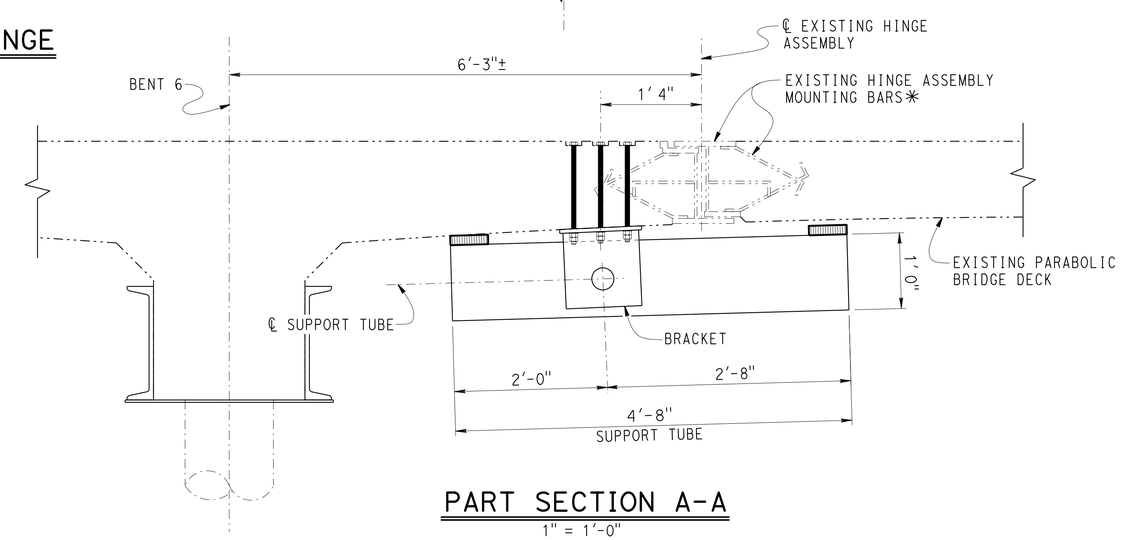

PART SECTION A-A

1" = 1'-0"

NOTE:
THE CONTRACTOR MUST VERIFY ALL CONTROLLING FIELD DIMENSIONS BEFORE ORDERING OR FABRICATING ANY MATERIAL.

	BY	CHECKED
DESIGN	Anthony Logus	Sara Yip
DETAILS	Tim Trefz	Sara Yip
QUANTITIES	S. Yip/C. Chan	Victor Romo

STATE OF CALIFORNIA
DEPARTMENT OF TRANSPORTATION

DIVISION OF ENGINEERING SERVICES
STRUCTURE DESIGN
DESIGN BRANCH 15

BRIDGE NO. 45-0007
POST MILE 32.26

ROUTE 41 KINGS RIVER BRIDGE SEISMIC RETROFIT

SLAB BRIDGE SEAT EXTENDER DETAILS NO. 1

STRUCTURES DESIGN DETAIL SHEET (ENGLISH) (REV. 09-01-10)

ORIGINAL SCALE IN INCHES FOR REDUCED PLANS 0 1 2 3

UNIT: 3604
PROJECT NUMBER & PHASE: 0612000110
CONTRACT NO.: 06-0K8001

DISREGARD PRINTS BEARING EARLIER REVISION DATES

REVISION DATES: 01-19-16 | 08-18-15 | 09-30-15

SHEET 7 OF 10

FILE => 45-0007-x-hdtl_01.dgn

USERNAME => s113541 DATE PLOTTED => 04-APR-2016 TIME PLOTTED => 14:28

DIST	COUNTY	ROUTE	POST MILES TOTAL PROJECT	SHEET No.	TOTAL SHEETS
06	Fre,Kin	33,41,43	Var	49	62

REGISTERED CIVIL ENGINEER — DATE 10-14-15

3-28-16
PLANS APPROVAL DATE

REGISTERED PROFESSIONAL ENGINEER — Sara P. Yip No. C73841 Exp. 06-30-17 CIVIL — STATE OF CALIFORNIA

The State of California or its officers or agents shall not be responsible for the accuracy or completeness of electronic copies of this plan sheet.

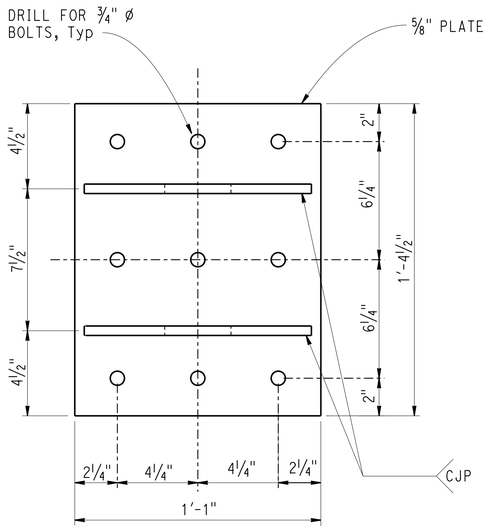

PLAN VIEW

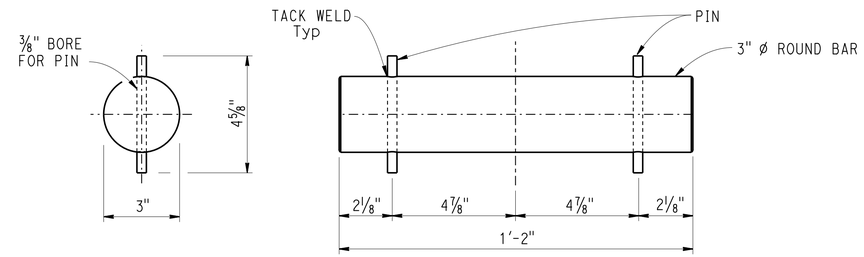

END VIEW

SIDE VIEW

PIN
NO SCALE

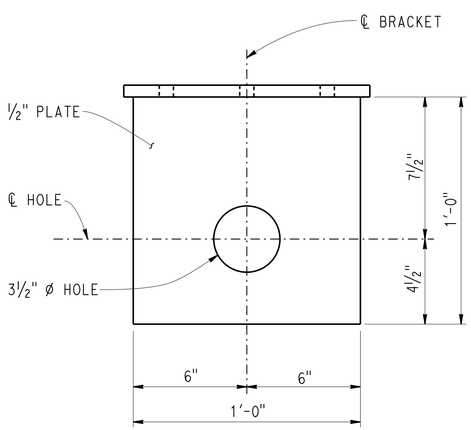

SIDE VIEW

BRACKET
3" = 1'-0"

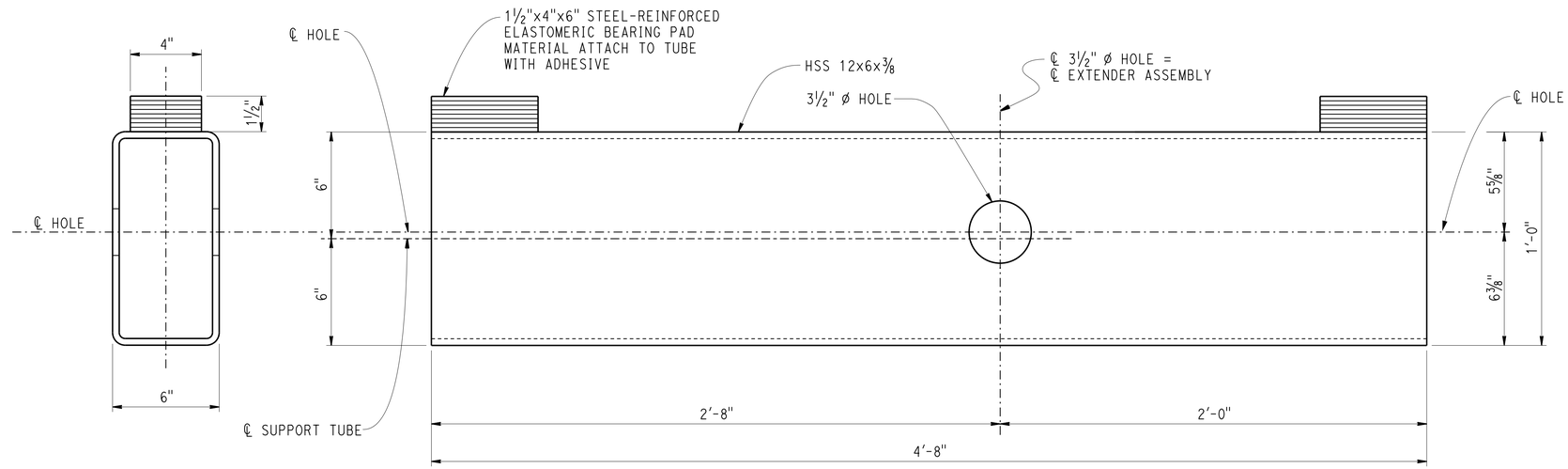

END VIEW

SIDE VIEW

SUPPORT TUBE
3" = 1'-0"

NOTE:
THE CONTRACTOR MUST VERIFY ALL CONTROLLING FIELD DIMENSIONS BEFORE ORDERING OR FABRICATING ANY MATERIAL.

NOTE:
For details not shown, see "SLAB BRIDGE SEAT EXTENDER DETAILS NO. 1", sheet

	BY	CHECKED
DESIGN	Anthony Logus	Sara Yip
DETAILS	Tim Trefz	Sara Yip
QUANTITIES	S. Yip/C. Chan	Victor Romo

STATE OF CALIFORNIA
DEPARTMENT OF TRANSPORTATION

DIVISION OF ENGINEERING SERVICES
STRUCTURE DESIGN
DESIGN BRANCH 15

BRIDGE NO. 45-0007
POST MILE 32.26

ROUTE 41 KINGS RIVER BRIDGE SEISMIC RETROFIT
SLAB BRIDGE SEAT EXTENDER DETAILS NO. 2

STRUCTURES DESIGN DETAIL SHEET (ENGLISH) (REV. 09-01-10)

ORIGINAL SCALE IN INCHES FOR REDUCED PLANS 0 1 2 3

UNIT: 3604
PROJECT NUMBER & PHASE: 0612000110
CONTRACT NO.: 06-0K8001

DISREGARD PRINTS BEARING EARLIER REVISION DATES → 07-03-15

REVISION DATES

SHEET 8 OF 10

FILE => 45-0007-x-hdtl_02.dgn

USERNAME => s113541 DATE PLOTTED => 04-APR-2016 TIME PLOTTED => 14:28

DIST	COUNTY	ROUTE	POST MILES TOTAL PROJECT	SHEET No	TOTAL SHEETS
06	Fre,Kin	33,41,43	Var	50	62

REGISTERED CIVIL ENGINEER 9/15/15 DATE

3-28-16
PLANS APPROVAL DATE

REGISTERED PROFESSIONAL ENGINEER
Nathan Dahlen
No. 71344
Exp. 12/31/15
CIVIL
STATE OF CALIFORNIA

The State of California or its officers or agents shall not be responsible for the accuracy or completeness of scanned copies of this plan sheet.

KLEINFELDER
5125 N. GATES AVE., SUITE 102
FRESNO, CA 93722

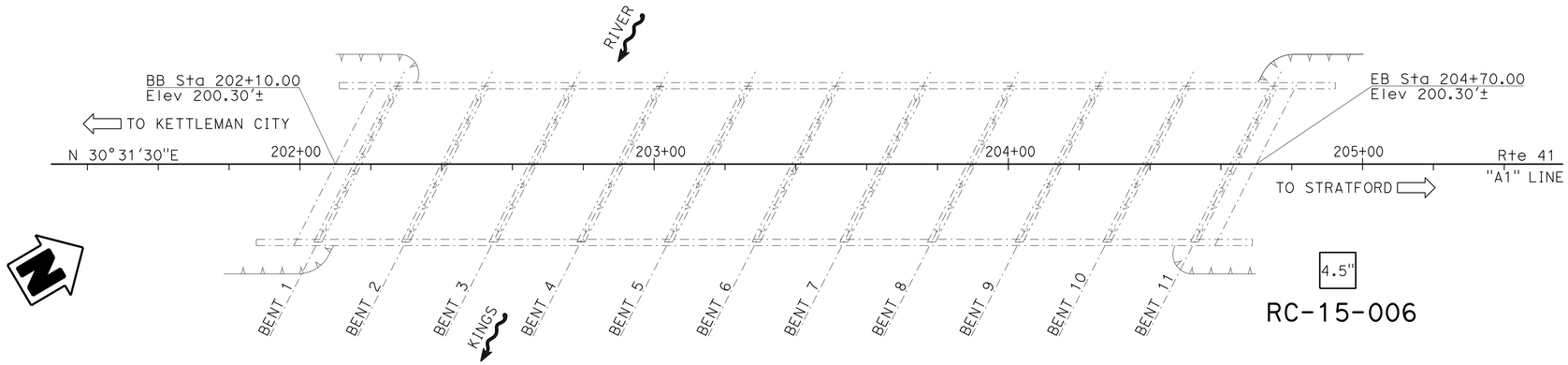

PLAN

1" = 20'

BENCHMARKS

STATION	OFFSET	N	E	ELEV	DESCRIPTION
2+85.68	22.52' Rt	1,949,691.05	6,315,334.68	199.15	DNK0341. Found 1" Iron pipe w/ red CT plug and tack
6+59.54	34.08' Rt	1,950,009.80	6,315,530.10	198.32	DNK0342. Found 1" Iron pipe w/ red CT plug and tack

SURVEY CONTROL
1. Coordinates bearing and distances are based on the California State Plane Coordinate system of NAD 83 (1986). Elevations are based on NGVD29 for Plan. Elevations are based on NAVD88 for borings.

Notes:

1. 1.4" samples were taken using a SPT split-barrel sampler with an inside diameter (ID) of 1.4" and an outside diameter (OD) of 2".
2. 2.0" samples were taken using a CAL split-barrel sampler with an inside diameter (ID) of 2.0" and an outside diameter (OD) of 2.5"
3. An automatic hammer (140 lb) with a 30" drop was used to advance the sampler.
4. Blowcounts noted for boring are field blowcounts and have not been corrected.
5. Blowcounts 50/5 means 50 blows per 5" penetration.
6. This LOTB sheet was prepared in accordance with the Caltrans Soil & Rock Logging, Classification, and Presentation Manual (June 2010)

J. Huang
DESIGN OVERSIGHT
9/22/15
SIGN OFF DATE

DRAWN BY A. Sanchez
CHECKED BY N. Dahlen

R. Shiplee
FIELD INVESTIGATION BY:
DATE: 6/24/15

PREPARED FOR THE STATE OF CALIFORNIA DEPARTMENT OF TRANSPORTATION

N. Dahlen
PROJECT ENGINEER

BRIDGE NO. 45-0007
POST MILES 32.26

ROUTE 41 KINGS RIVER BRIDGE SEISMIC RETROFIT

LOG OF TEST BORINGS 1 OF 2

GS CIVIL LOG OF TEST BORINGS SHEET (ENGLISH) (REV. 03/14/12)

ORIGINAL SCALE IN INCHES FOR REDUCED PLANS 0 1 2 3

UNIT: 3604
PROJECT NUMBER & PHASE: 0612000110
CONTRACT NO.: 06-0K8001

DISREGARD PRINTS BEARING EARLIER REVISION DATES → 9/23/15

REVISION DATES | SHEET 9 | OF 10

FILE => 45-0007-z-1tb01.dgn

USERNAME => s113541 DATE PLOTTED => 04-APR-2016 TIME PLOTTED => 14:28

FOR PLAN VIEW AND ADDITIONAL NOTES, SEE "LOG OF TEST BORINGS" SHEET 1 OF 2

This LOTB sheet was prepared in accordance with the Caltrans Soil & Rock Logging, Classification, and Presentation Manual (2010).

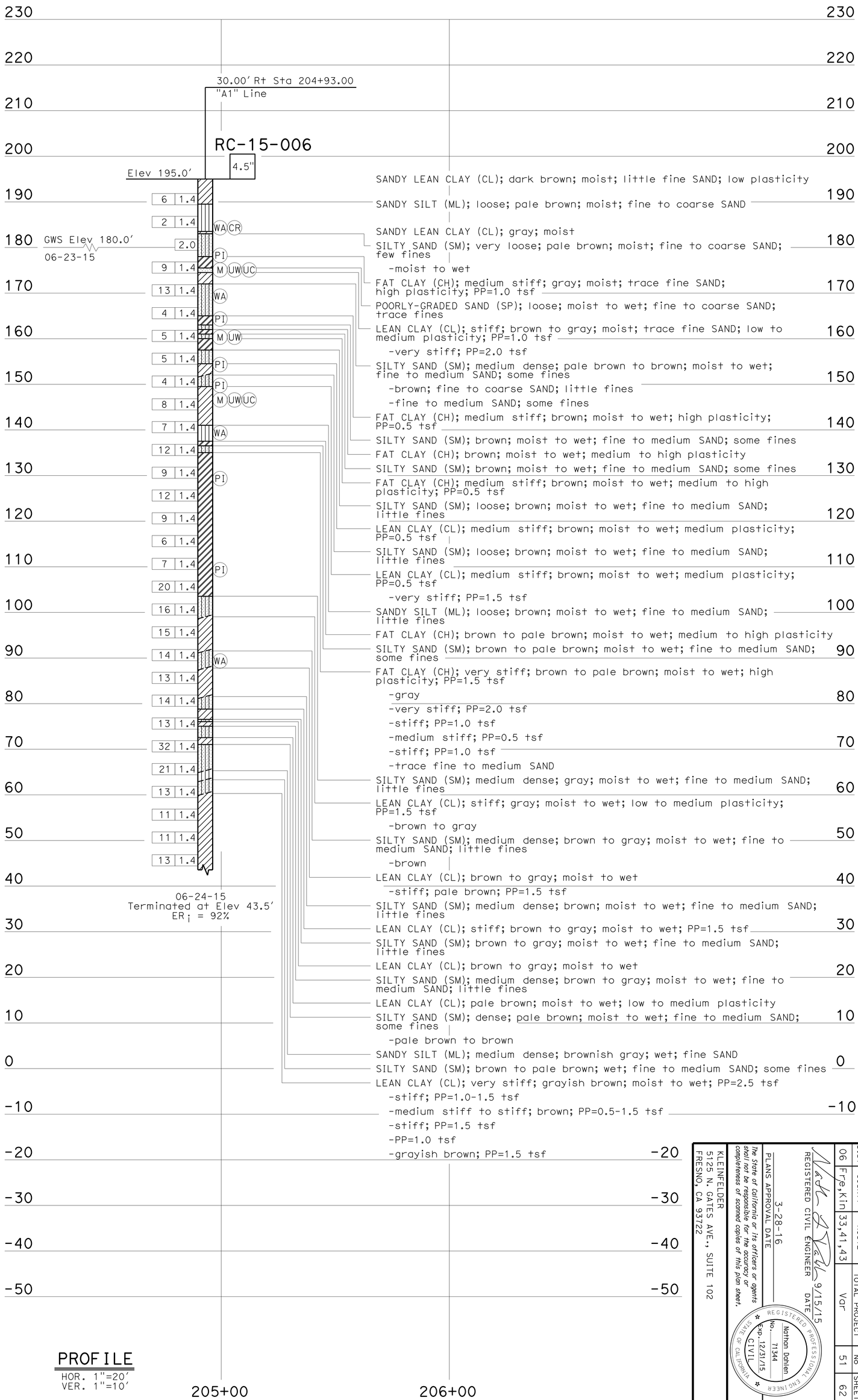

J. Huang
DESIGN OVERSIGHT
9/22/15
SIGN OFF DATE

DRAWN BY A. Sanchez
CHECKED BY N. Dahlen

R. Shiplee
FIELD INVESTIGATION BY:
DATE: 6/24/15

GS CIVIL LOG OF TEST BORINGS SHEET (ENGLISH) (REV. 03/14/12)

ORIGINAL SCALE IN INCHES FOR REDUCED PLANS 0 1 2 3

PREPARED FOR THE STATE OF CALIFORNIA DEPARTMENT OF TRANSPORTATION

N. Dahlen
PROJECT ENGINEER

UNIT: 3604
PROJECT NUMBER & PHASE: 0612000110
CONTRACT NO.: 06-0K8001

BRIDGE NO. 45-0007
POST MILES 32.26

ROUTE 41 KINGS RIVER BRIDGE SEISMIC RETROFIT

LOG OF TEST BORINGS 2 OF 2

DISREGARD PRINTS BEARING EARLIER REVISION DATES

REVISION DATES 9/21/15

SHEET 10 OF 10

KLEINFELDER
5125 N. GATES AVE., SUITE 102
FRESNO, CA 93722

REGISTERED CIVIL ENGINEER 9/15/15
DATE

PLANS APPROVAL DATE 3-28-16

The State of California or its officers or agents shall not be responsible for the accuracy or completeness of scanned copies of this plan sheet.

REGISTERED PROFESSIONAL ENGINEER
Norhon Dahlen
No. 71344
Exp. 12/31/15
CIVIL
STATE OF CALIFORNIA

DIST	COUNTY	ROUTE	POST MILES TOTAL PROJECT	SHEET NO	TOTAL SHEETS
06	Fre,Kin	33,41,43	Var	51	62

FILE => 45-0007-Z-HB02.dgn

USERNAME => s113541 DATE PLOTTED => 04-APR-2016 TIME PLOTTED => 14:28

DIST	COUNTY	ROUTE	POST MILES TOTAL PROJECT	SHEET No.	TOTAL SHEETS
06	Fre,Kin	33,41,43	Var	52	62

REGISTERED CIVIL ENGINEER — DATE 10-14-15

3-28-16
PLANS APPROVAL DATE

REGISTERED PROFESSIONAL ENGINEER — Sara P. Yip No. C73841 Exp. 06-30-17 CIVIL — STATE OF CALIFORNIA

The State of California or its officers or agents shall not be responsible for the accuracy or completeness of electronic copies of this plan sheet.

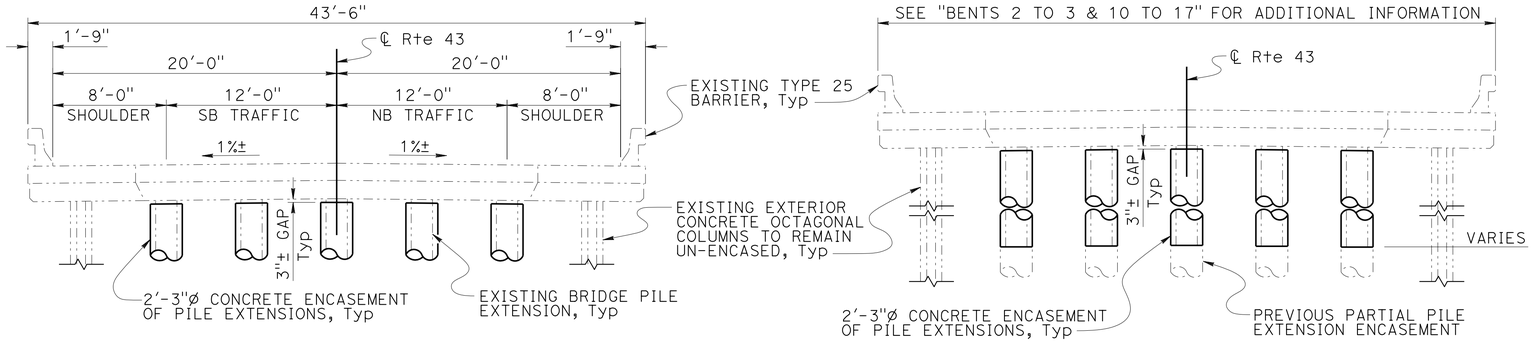

BENTS 2 TO 3 & 10 TO 17

BENTS 4 TO 9

TYPICAL SECTION

3/16" = 1'-0"

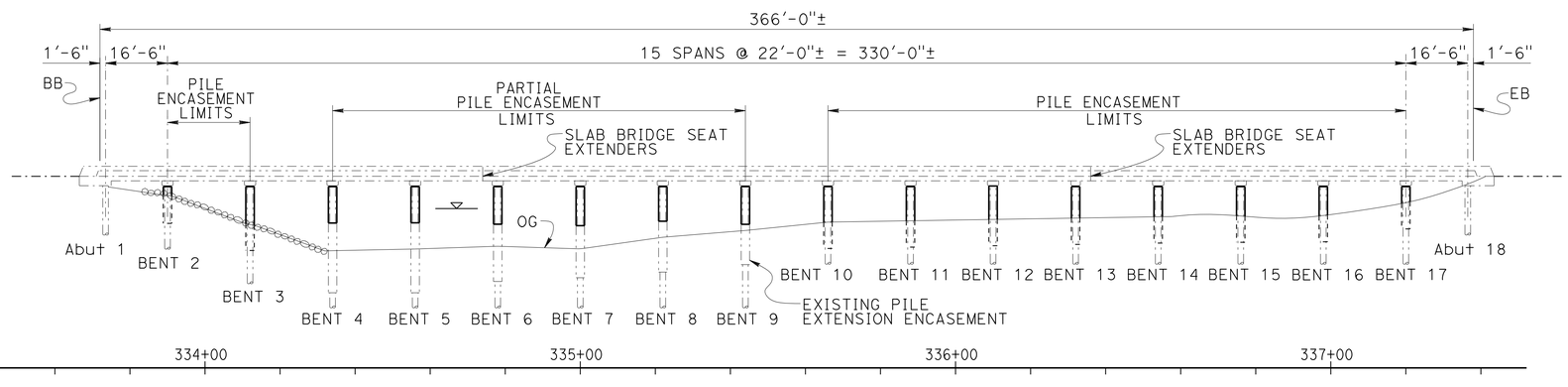

ELEVATION

1" = 20'

LEGEND:
- Indicates existing structure
- Indicates new construction
- Indicates high water level
- Indicates existing pile extensions to be encased

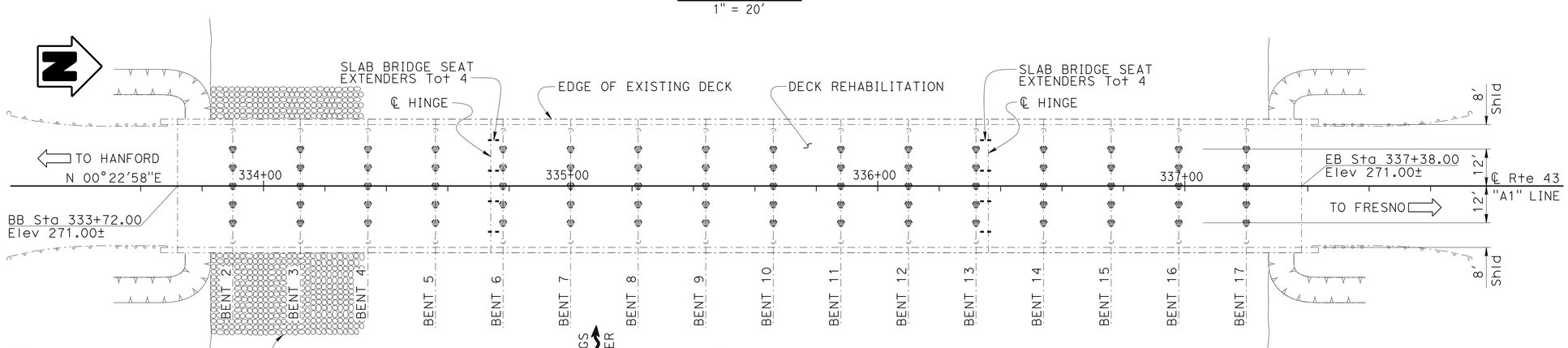

NOTE:
THE CONTRACTOR MUST VERIFY ALL CONTROLLING FIELD DIMENSIONS BEFORE ORDERING OR FABRICATING ANY MATERIAL.

EXISTING ROCK SLOPE PROTECTION TO BE TEMPORARILY REMOVED AND PLACED BACK AFTER INSTALLATION OF CONCRETE PILE EXTENSION ENCASEMENTS AND ROCK SLOPE PROTECTION FABRIC.

PLAN

1" = 20'

NOTE:
Elevations shown on "GENERAL PLAN" and "PILE DETAILS" are based on NGVD 29.

QUANTITIES

RAPID SETTING CONCRETE (PATCH)	378	CF
REMOVE AND REPLACE ROCK SLOPE PROTECTION	LUMP	SUM
REMOVE ASPHALT CONCRETE SURFACING	8,784	SQFT
REMOVE UNSOUND CONCRETE	378	CF
PREPARE CONCRETE BRIDGE DECK SURFACE	14,640	SQFT
FURNISH POLYESTER CONCRETE OVERLAY	915	CF
PLACE POLYESTER CONCRETE OVERLAY	14,640	SQFT
CORE CONCRETE (1")	93	LF
STRUCTURE EXCAVATION (TYPE D) (BRIDGE)	990	CY
STRUCTURE BACKFILL (BRIDGE)	192	CY
STRUCTURAL CONCRETE, BRIDGE	103	CY
DRILL AND BOND DOWEL	120	LF
BEARING PAD	16	EA
BAR REINFORCING STEEL (BRIDGE)	16,400	LB
STRUCTURAL STEEL (BRIDGE)	3,180	LB

Jose Higareda
DESIGN ENGINEER

	BY	CHECKED
DESIGN	Anthony Logus	Ruslan Novik
DETAILS	Tim Trefz	Ruslan Novik
QUANTITIES	R. Novik/C. Chan	S. Yip/V. Romo

LOAD & RESISTANCE FACTOR DESIGN — LIVE LOADING: 240 psf SURCHARGE

	BY	CHECKED
LAYOUT	Anthony Logus	Ruslan Novik
SPECIFICATIONS	Sirisha Nelapatla	PLANS AND SPECS COMPARED: Sara Yip

ORIGINAL SCALE IN INCHES FOR REDUCED PLANS 0 1 2 3

STATE OF CALIFORNIA
DEPARTMENT OF TRANSPORTATION

DIVISION OF ENGINEERING SERVICES
STRUCTURE DESIGN
DESIGN BRANCH 15

UNIT: 3604
PROJECT NUMBER & PHASE: 0612000110
CONTRACT NO.: 06-0K8001

BRIDGE NO. 45-0064
POST MILE 26.76

ROUTE 43 KINGS RIVER BRIDGE SEISMIC RETROFIT

GENERAL PLAN

DISREGARD PRINTS BEARING EARLIER REVISION DATES

REVISION DATES: 06-19-15 09-24-15 01-21-16

SHEET 1 OF 11

STRUCTURES DESIGN GENERAL PLAN SHEET (ENGLISH) (REV.09-01-10)

FILE => 45-0064-a-gp.dgn

DATE PLOTTED => 04-APR-2016 TIME PLOTTED => 14:28

DIST	COUNTY	ROUTE	POST MILES TOTAL PROJECT	SHEET No.	TOTAL SHEETS
06	Fre,Kin	33,41,43	Var	53	62

REGISTERED CIVIL ENGINEER — DATE 10-14-15

3-28-16
PLANS APPROVAL DATE

REGISTERED PROFESSIONAL ENGINEER — Sara P. Yip No. C73841 Exp. 06-30-17 CIVIL — STATE OF CALIFORNIA

The State of California or its officers or agents shall not be responsible for the accuracy or completeness of electronic copies of this plan sheet.

GENERAL NOTES
LOAD AND RESISTANCE FACTOR DESIGN

DESIGN: AASHTO LRFD BRIDGE DESIGN SPECIFICATIONS, 6th EDITION WITH CALIFORNIA AMENDMENTS

SEISMIC DESIGN: CALTRANS SEISMIC DESIGN CRITERIA (SDC), Version 1.7, April 2013

SEISMIC LOADING: SEE "SITE SPECIFIC ACCELERATION RESPONSE SPECTRUM" Peak Ground Acceleration 0.26g

DEAD LOAD: INCLUDES 8.5 psf FOR FUTURE WEARING SURFACE

REINFORCED CONCRETE:
- f'_c = 3.60 ksi
- f_y = 60 ksi
- n = 8

AS-BUILT REINFORCED CONCRETE:
- f'_c = 3.25 ksi
- $f_{y_{Original}}$ = 40 ksi
- $f_{y_{Widen}}$ = 60 ksi

STRUCTURAL STEEL:
- f_y = 36 ksi, except for HSS 12x6x5/8
- f_y = 46 ksi (HSS 12x6x5/8 only)

INDEX TO PLANS

SHEET No.	TITLE
1	GENERAL PLAN
2	INDEX TO PLANS
3	FOUNDATION PLAN
4	PILE DETAILS
5	SLAB BRIDGE SEAT EXTENDER DETAILS No. 1
6	SLAB BRIDGE SEAT EXTENDER DETAILS No. 2
7	DECK REPAIR DETAILS
8	LOG OF TEST BORINGS 1 OF 4
9	LOG OF TEST BORINGS 2 OF 4
10	LOG OF TEST BORINGS 3 OF 4
11	LOG OF TEST BORINGS 4 OF 4

STANDARD PLANS 2010

A10A	ABBREVIATIONS (SHEET 1 OF 2)
RSP A10B	ABBREVIATIONS (SHEET 2 OF 2)
A10C	LINES AND SYMBOLS (SHEET 1 OF 3)
A10D	LINES AND SYMBOLS (SHEET 2 OF 3)
A10E	LINES AND SYMBOLS (SHEET 3 OF 3)
RSP A10F	LEGEND - SOIL (SHEET 1 OF 2)
RSP A10G	LEGEND - SOIL (SHEET 2 OF 2)
A10H	LEGEND - ROCK

STANDARD PLAN SHEET No.

DETAIL No.

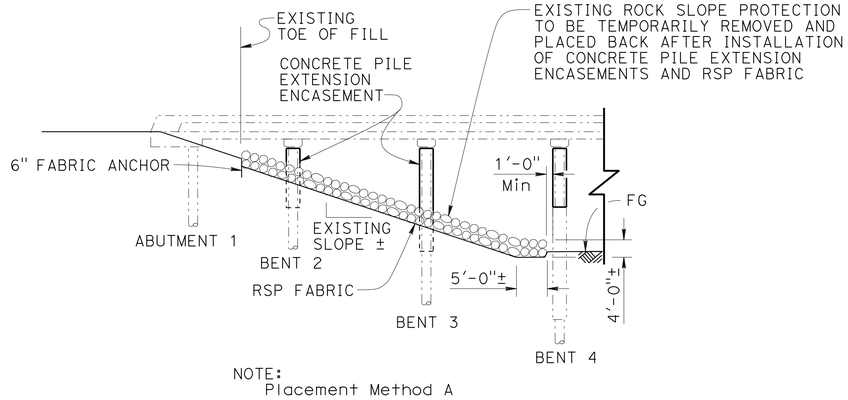

NOTE:
Placement Method A

ELEVATION

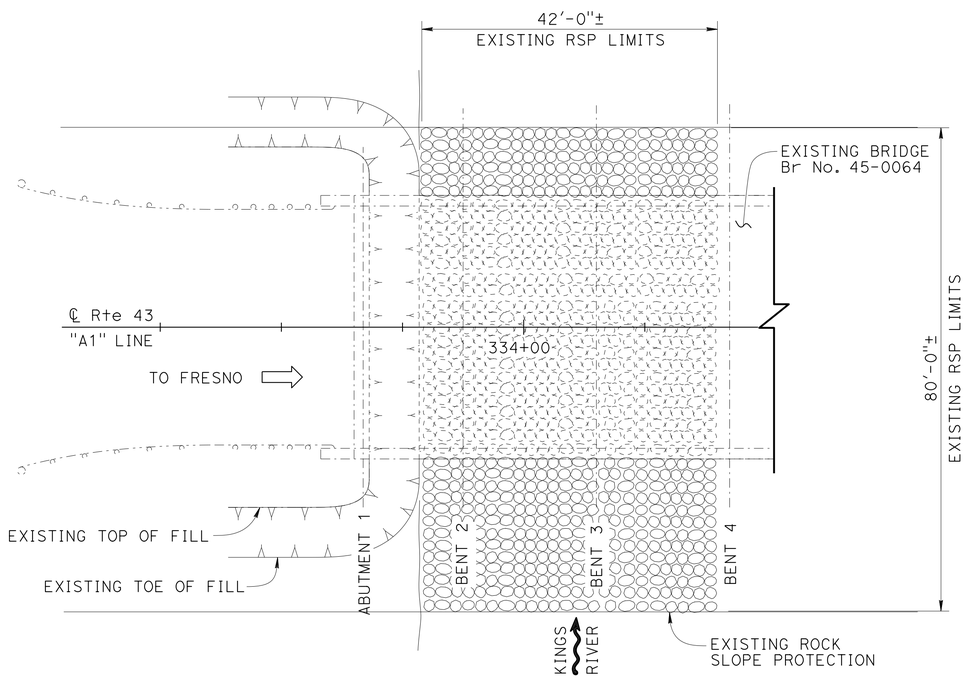

PLAN

ROCK SLOPE PROTECTION DETAIL

NO SCALE

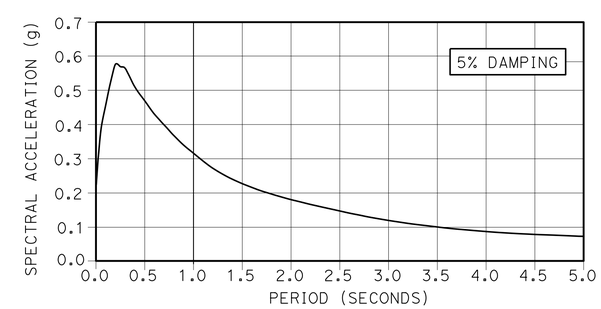

SITE SPECIFIC ACCELERATION RESPONSE SPECTRUM

NOTE:
THE CONTRACTOR MUST VERIFY ALL CONTROLLING FIELD DIMENSIONS BEFORE ORDERING OR FABRICATING ANY MATERIAL.

	BY	CHECKED
DESIGN	Anthony Logus	Ruslan Novik
DETAILS	Tim Trefz	Ruslan Novik
QUANTITIES	R. Novik/C. Chan	S. Yip/V. Romo

STATE OF CALIFORNIA
DEPARTMENT OF TRANSPORTATION

DIVISION OF ENGINEERING SERVICES
STRUCTURE DESIGN
DESIGN BRANCH 15

BRIDGE NO. 45-0064
POST MILE 26.76

ROUTE 43 KINGS RIVER BRIDGE SEISMIC RETROFIT
INDEX TO PLANS

STRUCTURES DESIGN DETAIL SHEET (ENGLISH) (REV. 09-01-10)

ORIGINAL SCALE IN INCHES FOR REDUCED PLANS 0 1 2 3

UNIT: 3604
PROJECT NUMBER & PHASE: 0612000110
CONTRACT NO.: 06-0K8001

DISREGARD PRINTS BEARING EARLIER REVISION DATES

REVISION DATES: 03-29-15 08-18-15 01-21-16

SHEET 2 OF 11

FILE => 45-0064-b-itp.dgn

USERNAME => s113541 DATE PLOTTED => 04-APR-2016 TIME PLOTTED => 14:28

Bridge Location (45-0064)-(Calculated)

Ⓐ - 21.25 Lt Rte 43, Sta 11+68.99, Elev = 273.26±
Ⓑ - 18.75 Rt Rte 43, Sta 11+68.96, Elev = 273.33±
Ⓒ - 23.68 Lt Rte 43, Sta 15+34.99, Elev = 273.23±
Ⓓ - 18.98 Rt Rte 43, Sta 15+34.96, Elev = 273.14±

DIST	COUNTY	ROUTE	POST MILES TOTAL PROJECT	SHEET No.	TOTAL SHEETS
06	Fre,Kin	33,41,43	Var	54	62

REGISTERED CIVIL ENGINEER — DATE: 10-14-15

3-28-16
PLANS APPROVAL DATE

REGISTERED PROFESSIONAL ENGINEER — Sara P. Yip No. C73841 Exp. 06-30-17 CIVIL — STATE OF CALIFORNIA

The State of California or its officers or agents shall not be responsible for the accuracy or completeness of electronic copies of this plan sheet.

NOTE:
THE CONTRACTOR MUST VERIFY ALL CONTROLLING FIELD DIMENSIONS BEFORE ORDERING OR FABRICATING ANY MATERIAL.

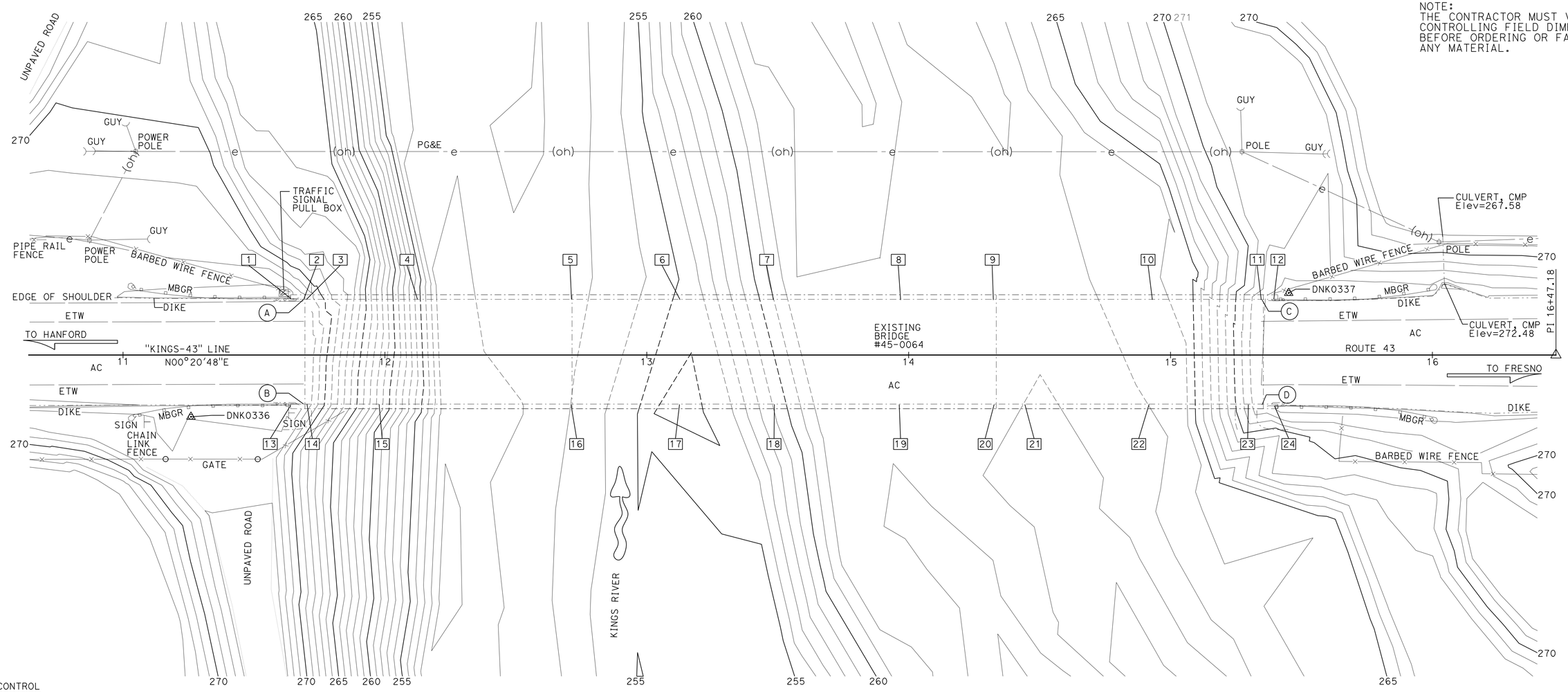

SURVEY CONTROL

DNK0336
Fnd 1" IRON PIPE W/RED CT PLUG AND TACK
23.58 Ft Rt "KINGS-43" LINE
Sta 11+25.94
N 2,041,801.40
E 6,374,552.23
Elev = 272.88

DNK0337
Fnd 1" IRON PIPE W/RED CT PLUG AND TACK
23.68 Ft Lt "KINGS-43" LINE
Sta 15+45.14
N 2,042,220.88
E 6,374,507.51
Elev = 273.62

DECK ELEVATIONS

1 - 273.18	7 - 273.24	13 - 273.28	19 - 273.26
2 - 273.20	8 - 273.22	14 - 273.32	20 - 273.11
3 - 273.26	9 - 273.22	15 - 273.28	21 - 273.23
4 - 273.22	10 - 273.23	16 - 273.21	22 - 273.27
5 - 273.21	11 - 273.23	17 - 273.26	23 - 512.23
6 - 273.25	12 - 273.44	18 - 273.28	24 - 512.19

HYDROLOGIC / HYDRAULIC DATA SUMMARY

DRAINAGE AREA: N/A SQUARE MILES

	DESIGN FLOOD	BASE FLOOD
FREQUENCY (YEARS)	Normal	Maximum
DISCHARGE (CUBIC FEET PER SECOND)	10,000	11,700
WATER SURFACE ELEV. (FEET)	N/A	263.56

FLOOD PLAIN DATA ARE BASED UPON INFORMATION AVAILABLE WHEN THE PLANS WERE PREPARED AND ARE SHOWN TO MEET FEDERAL REQUIREMENTS. THE ACCURACY OF SAID INFORMATION IS NOT WARRANTED BY THE STATE AND INTERESTED OR AFFECTED PARTIES SHOULD MAKE THEIR OWN INVESTIGATIONS.

PRELIMINARY INVESTIGATION SECTION

SCALE	VERT.DATUM NAVD88	PHOTOGRAMMETRY AS OF: X			
1"=20'	HORZ.DATUM NAD83 (2010.16)	SURVEYED	BY DISTRICT 6	CHECKED	BY C. FASSETT 8/2015
ALIGNMENT TIES Dist TRAVERSE SHEET		DRAFTED	BY L. YOUNG 8/2015	CHECKED	BY L. LEW 8/2015

DESIGN	BY Anthony Logus	CHECKED Ruslan Novik
DETAILS	BY Tim Trefz	CHECKED Ruslan Novik
QUANTITIES	BY R. Novik/C. Chan	CHECKED S. Yip/V. Romo

STATE OF CALIFORNIA
DEPARTMENT OF TRANSPORTATION

DIVISION OF ENGINEERING SERVICES
STRUCTURE DESIGN
DESIGN BRANCH 15

BRIDGE NO. 45-0064
POST MILE 26.76

ROUTE 43 KINGS RIVER BRIDGE SEISMIC RETROFIT
FOUNDATION PLAN

STRUCTURES FOUNDATION PLAN SHEET (ENGLISH) (REV. 09-01-10)

ORIGINAL SCALE IN INCHES FOR REDUCED PLANS 0 1 2 3

UNIT: 3604
PROJECT NUMBER & PHASE: 0612000110
CONTRACT NO.: 06-0K8001

DISREGARD PRINTS BEARING EARLIER REVISION DATES

REVISION DATES: 09-02-15

SHEET 3 OF 11

FILE => 45-0064-e-fp.dgn

USERNAME => s113541 DATE PLOTTED => 04-APR-2016 TIME PLOTTED => 14:28

DIST	COUNTY	ROUTE	POST MILES TOTAL PROJECT	SHEET No.	TOTAL SHEETS
06	Fre,Kin	33,41,43	Var	55	62

REGISTERED CIVIL ENGINEER — DATE 10-14-15

3-28-16
PLANS APPROVAL DATE

REGISTERED PROFESSIONAL ENGINEER — Sara P. Yip No. C73841 Exp. 06-30-17 CIVIL — STATE OF CALIFORNIA

The State of California or its officers or agents shall not be responsible for the accuracy or completeness of electronic copies of this plan sheet.

	Elev "A"	
**	BENT 2	265.9±
**	BENT 3	258.2±
*	BENT 4	258.6±
*	BENT 5	258.6±
*	BENT 6	258.3±
*	BENT 7	257.9±
*	BENT 8	259.0±
*	BENT 9	258.2±
**	BENT 10	258.8±
**	BENT 11	259.2±
**	BENT 12	259.5±
**	BENT 13	259.9±
**	BENT 14	260.2±
**	BENT 15	260.4±
**	BENT 16	260.6±
**	BENT 17	264.0±

NOTES:
* Top of existing pile encasement
** Existing grade at center of bent

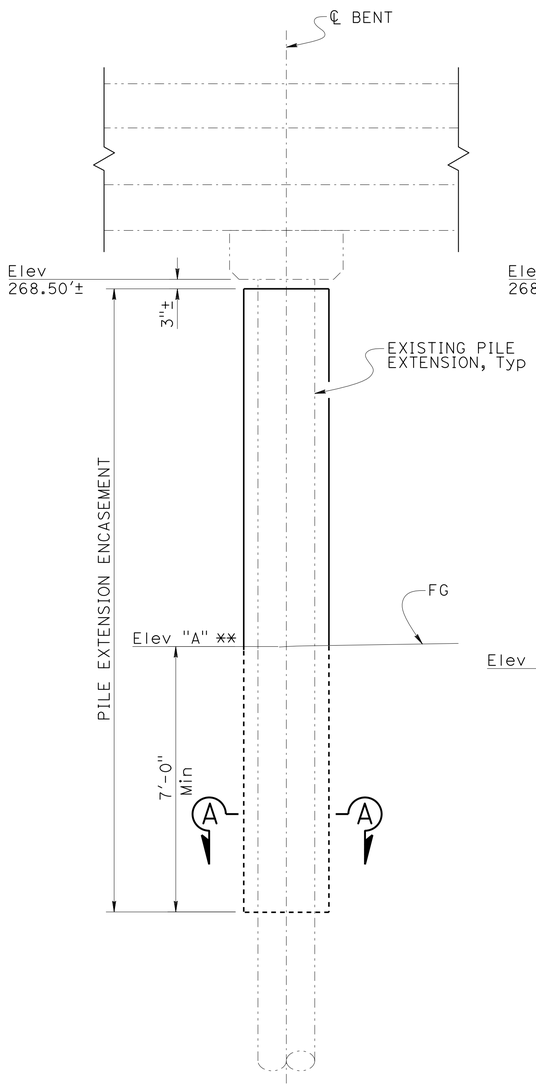

ELEVATION
BENTS 2, 3 & 10 TO 17
1/2" = 1'-0"

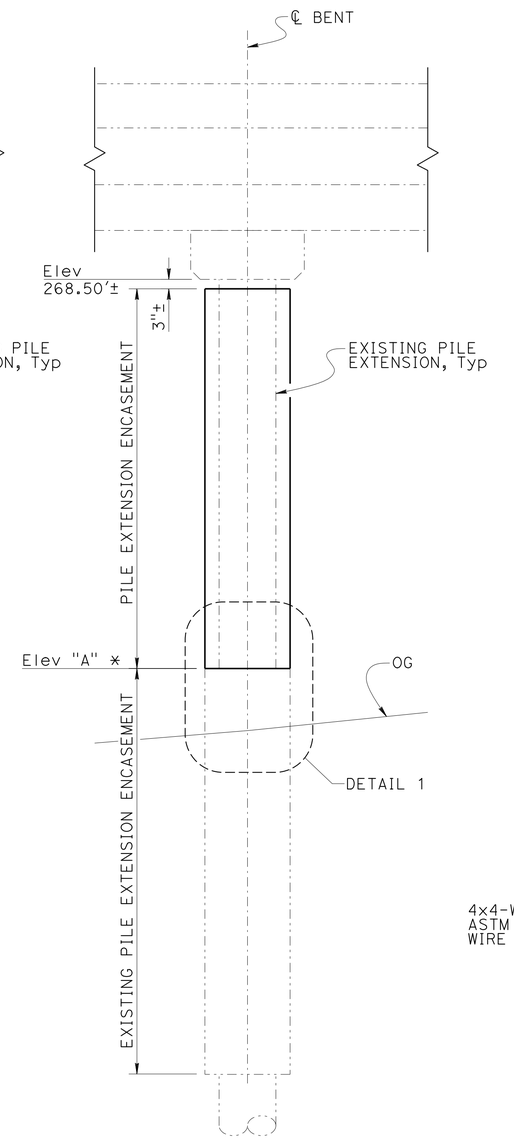

ELEVATION
BENTS 4 TO 9
1/2" = 1'-0"

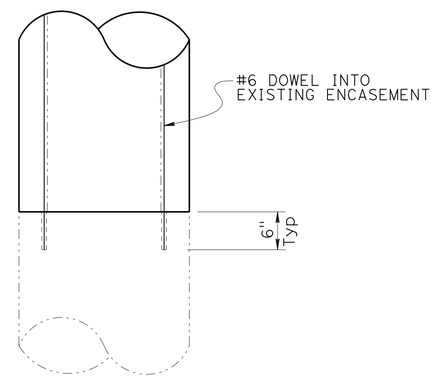

DETAIL 1
1/2" = 1'-0"

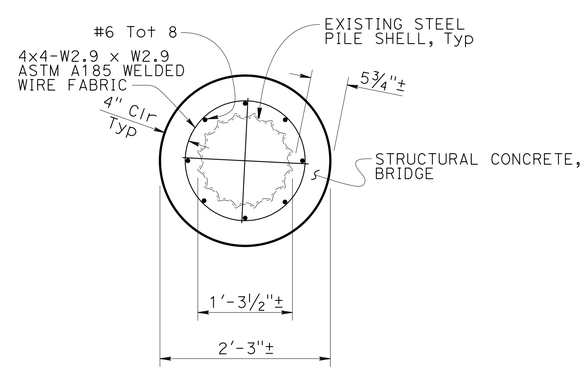

SECTION A-A
1/2" = 1'-0"

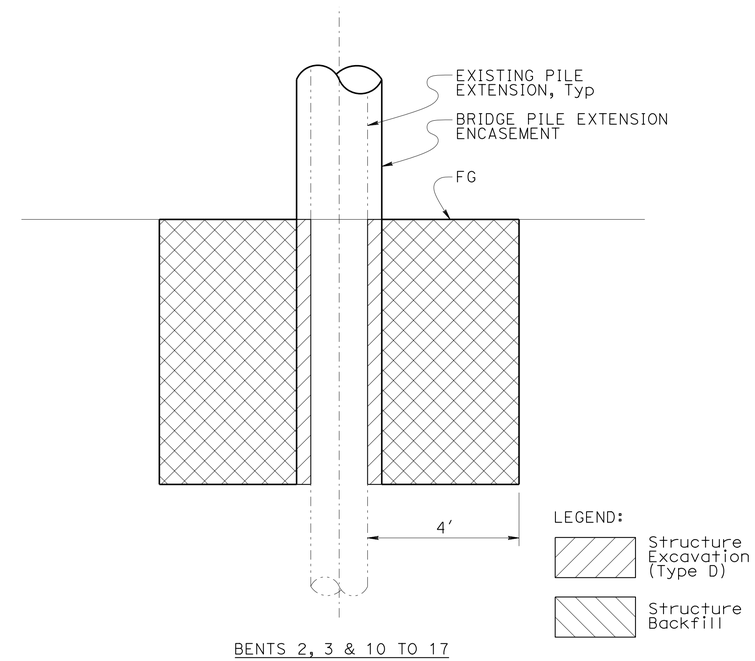

BENTS 2, 3 & 10 TO 17

LIMITS OF
EXCAVATION AND BACKFILL
NO SCALE

NOTE:
THE CONTRACTOR MUST VERIFY ALL CONTROLLING FIELD DIMENSIONS BEFORE ORDERING OR FABRICATING ANY MATERIAL.

	BY	CHECKED
DESIGN	Anthony Logus	Ruslan Novik
DETAILS	Tim Trefz	Ruslan Novik
QUANTITIES	R. Novik/C. Chan	S. Yip/V. Romo

STATE OF CALIFORNIA
DEPARTMENT OF TRANSPORTATION

DIVISION OF ENGINEERING SERVICES
STRUCTURE DESIGN
DESIGN BRANCH 15

BRIDGE NO. 45-0064
POST MILE 26.76

ROUTE 43 KINGS RIVER BRIDGE SEISMIC RETROFIT
PILE DETAILS

STRUCTURES DESIGN DETAIL SHEET (ENGLISH) (REV. 09-01-10)

ORIGINAL SCALE IN INCHES FOR REDUCED PLANS 0 1 2 3

UNIT: 3604
PROJECT NUMBER & PHASE: 0612000110
CONTRACT NO.: 06-0K8001

DISREGARD PRINTS BEARING EARLIER REVISION DATES

REVISION DATES: 03-26-15 08-18-15 01-19-16

SHEET 4 OF 11

FILE => 45-0064-h-pdtl.dgn

USERNAME => s113541 DATE PLOTTED => 04-APR-2016 TIME PLOTTED => 14:28

DIST	COUNTY	ROUTE	POST MILES TOTAL PROJECT	SHEET No.	TOTAL SHEETS
06	Fre,Kin	33,41,43	Var	56	62

REGISTERED CIVIL ENGINEER — DATE 10-14-15

3-28-16
PLANS APPROVAL DATE

REGISTERED PROFESSIONAL ENGINEER — Sara P. Yip — No. C73841 — Exp. 06-30-17 — CIVIL — STATE OF CALIFORNIA

The State of California or its officers or agents shall not be responsible for the accuracy or completeness of electronic copies of this plan sheet.

✳ Anchor Bolts must clear mounting bars on existing hinge assembly as well as existing longitudunal reinforcement.

✳✳ Bent 6 shown, Bent 13 Hinge & Seat Extenders similar about.

NOTES:
1. Core 1"ø holes for ¾"ø A307B Heavy Hex Head galvanized bolts with length for through bolt connection. Provide ¼"x3½"ø washers at the upper end, ¼"x3½"ø beveled washers and 2 lock-nuts at the lower end. Tot 9 each assembly.
2. Plug holes with epoxy mortar or rapid setting concrete after placing bolts and washers.
3. Galvanize all steel and bolts

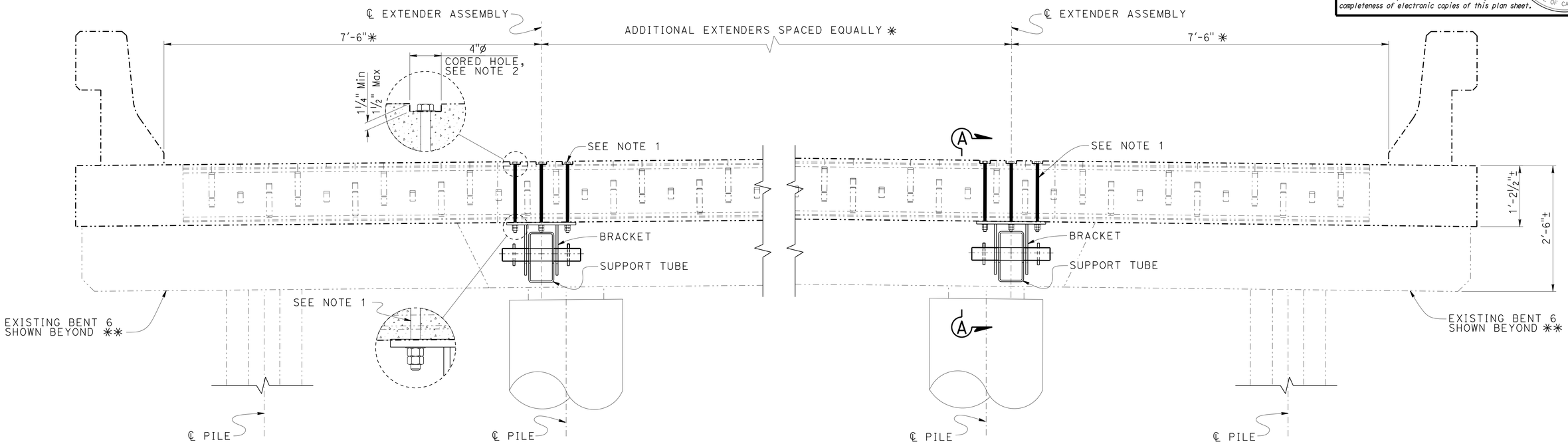

TYPICAL SECTION AT HINGE

1" = 1'-0"

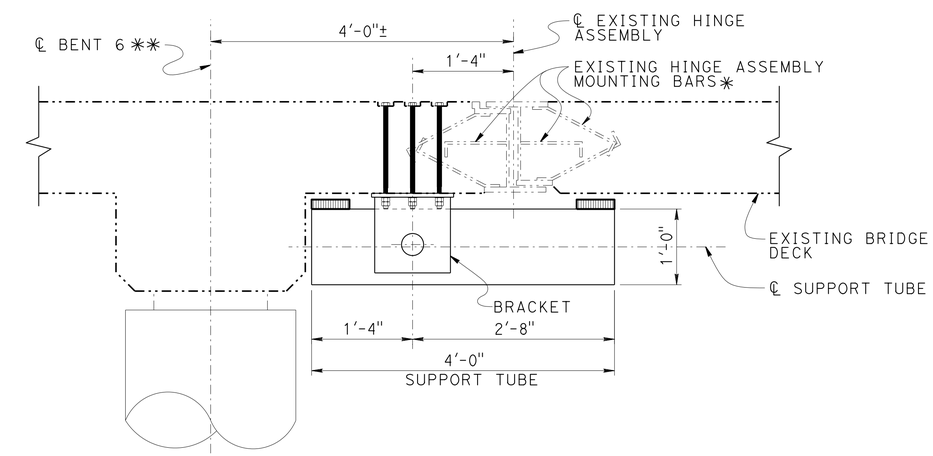

PART SECTION A-A

1" = 1'-0"

NOTE:
THE CONTRACTOR MUST VERIFY ALL CONTROLLING FIELD DIMENSIONS BEFORE ORDERING OR FABRICATING ANY MATERIAL.

	BY	CHECKED
DESIGN	Anthony Logus	R. Novik
DETAILS	Tim Trefz	R. Novik
QUANTITIES	R. Novik/C. Chan	S. Yip/V. Romo

STATE OF CALIFORNIA
DEPARTMENT OF TRANSPORTATION

DIVISION OF ENGINEERING SERVICES
STRUCTURE DESIGN
DESIGN BRANCH 15

BRIDGE NO. 45-0064
POST MILE 26.76

ROUTE 43 KINGS RIVER BRIDGE SEISMIC RETROFIT
SLAB BRIDGE SEAT EXTENDER DETAILS NO. 1

STRUCTURES DESIGN DETAIL SHEET (ENGLISH) (REV. 09-01-10)

ORIGINAL SCALE IN INCHES FOR REDUCED PLANS 0 1 2 3

UNIT: 3604
PROJECT NUMBER & PHASE: 0612000110
CONTRACT NO.: 06-0K8001

DISREGARD PRINTS BEARING EARLIER REVISION DATES

REVISION DATES: 07-24-15 08-14-15 01-19-16

SHEET 5 OF 11

FILE => 45-0064-x-hdtl_01.dgn

USERNAME => s113541 DATE PLOTTED => 04-APR-2016 TIME PLOTTED => 14:29

DIST	COUNTY	ROUTE	POST MILES TOTAL PROJECT	SHEET No.	TOTAL SHEETS
06	Fre,Kin	33,41,43	Var	57	62

REGISTERED CIVIL ENGINEER — DATE 10-14-15

3-28-16
PLANS APPROVAL DATE

REGISTERED PROFESSIONAL ENGINEER — Sara P. Yip No. C73841 Exp. 06-30-17 CIVIL — STATE OF CALIFORNIA

The State of California or its officers or agents shall not be responsible for the accuracy or completeness of electronic copies of this plan sheet.

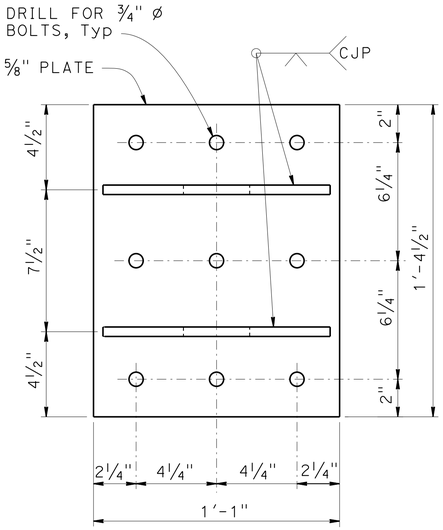

PLAN VIEW

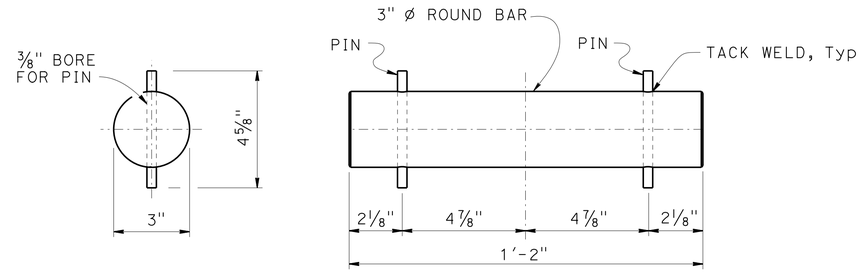

END VIEW

SIDE VIEW

PIN
NO SCALE

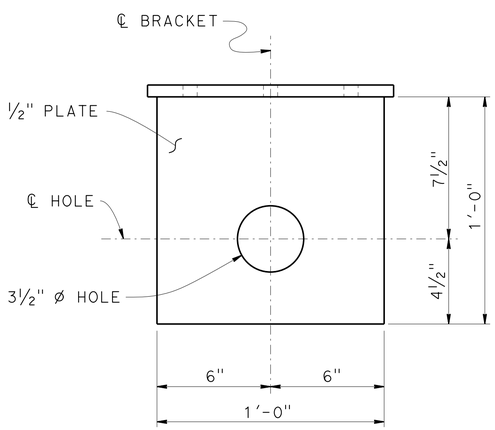

SIDE VIEW

BRACKET
3" = 1'-0"

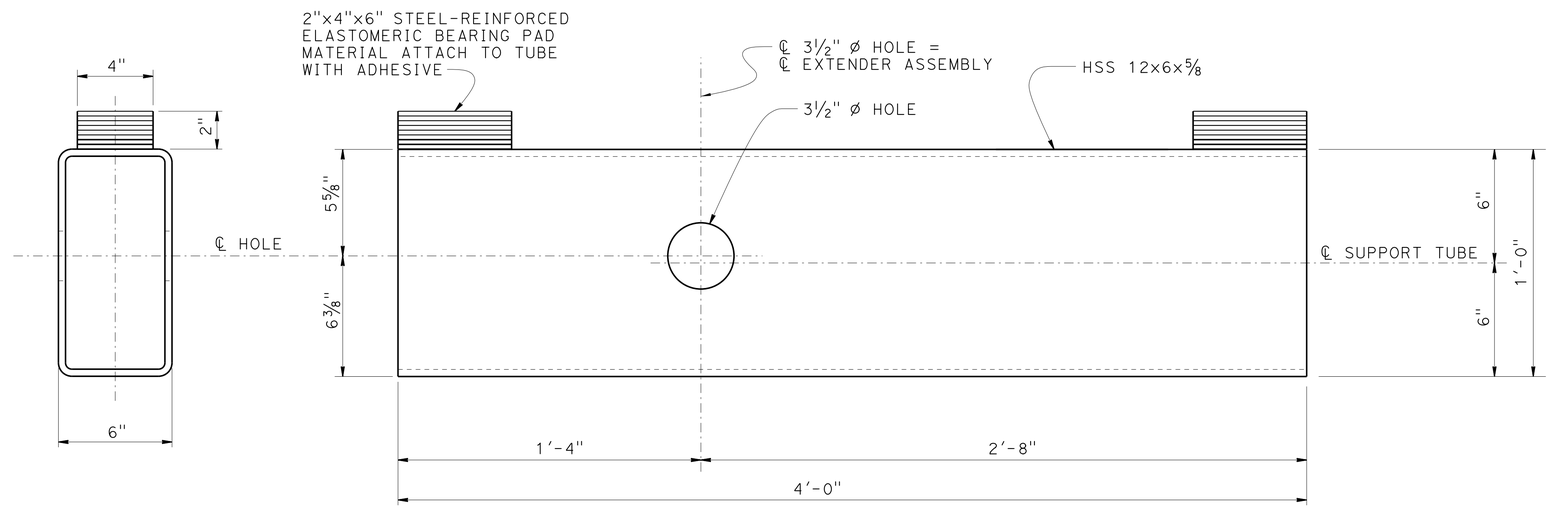

END VIEW

SIDE VIEW

NOTE:
For details not shown, see "SLAB BRIDGE SEAT EXTENDER DETAILS NO. 1" sheet

SUPPORT TUBE
3" = 1'-0"

NOTE:
THE CONTRACTOR MUST VERIFY ALL CONTROLLING FIELD DIMENSIONS BEFORE ORDERING OR FABRICATING ANY MATERIAL.

	BY	CHECKED
DESIGN	Anthony Logus	Ruslan Novik
DETAILS	Tim Trefz	Ruslan Novik
QUANTITIES	R. Novik/C. Chan	S. Yip/V. Romo

STATE OF CALIFORNIA
DEPARTMENT OF TRANSPORTATION

DIVISION OF ENGINEERING SERVICES
STRUCTURE DESIGN
DESIGN BRANCH 15

BRIDGE NO. 45-0064
POST MILE 26.76

ROUTE 43 KINGS RIVER BRIDGE SEISMIC RETROFIT

SLAB BRIDGE SEAT EXTENDER DETAILS NO. 2

STRUCTURES DESIGN DETAIL SHEET (ENGLISH) (REV. 09-01-10)

ORIGINAL SCALE IN INCHES FOR REDUCED PLANS 0 1 2 3

UNIT: 3604
PROJECT NUMBER & PHASE: 0612000110
CONTRACT NO.: 06-0K8001

DISREGARD PRINTS BEARING EARLIER REVISION DATES

REVISION DATES: 07-03-15 09-20-15

SHEET 6 OF 11

FILE => 45-0064-x-hdtl_02.dgn

USERNAME => s113541 DATE PLOTTED => 04-APR-2016 TIME PLOTTED => 14:29

DIST	COUNTY	ROUTE	POST MILES TOTAL PROJECT	SHEET No.	TOTAL SHEETS
06	Fre,Kin	33,41,43	Var	58	62

REGISTERED CIVIL ENGINEER — DATE 10-14-15

3-28-16
PLANS APPROVAL DATE

REGISTERED PROFESSIONAL ENGINEER — Sara P. Yip No. C73841 Exp. 06-30-17 CIVIL — STATE OF CALIFORNIA

The State of California or its officers or agents shall not be responsible for the accuracy or completeness of electronic copies of this plan sheet.

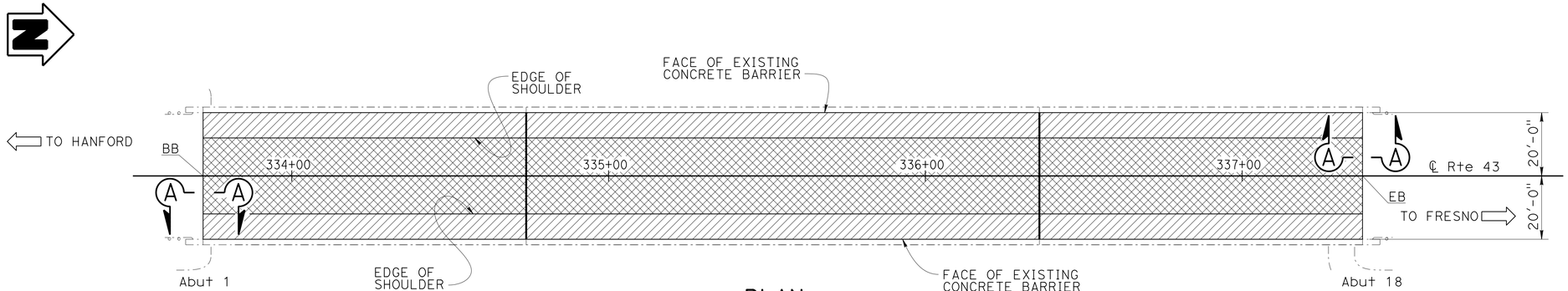

PLAN
NO SCALE

DECK DAMAGE REPAIR TABLE

BRIDGE NO.	TOTAL DECK AREA (ft^2)	Approx AREA DAMAGED (%)	Approx DEPTH (inches)
45-0064	14,640	10.0	3.0

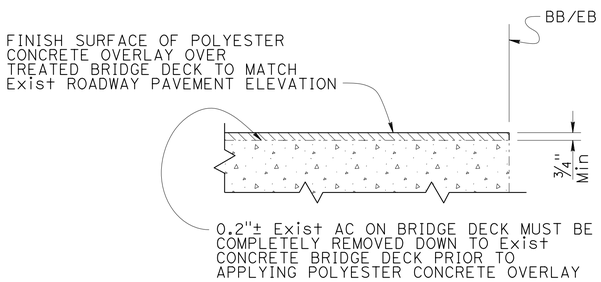

SECTION A-A
NO SCALE

LEGEND:
- Indicates existing structure
- Indicates location of existing Hinge opening (to remain)
- Indicates limits of Remove AC Surfacing
- Indicates limits of prepare concrete bridge deck surface and place new 3/4" minimum depth of polyester concrete overlay. Prior to placing polyester concrete overlay, remove any unsound concrete and patch with rapid setting concrete as shown in "DECK DAMAGE REPAIR DETAIL"

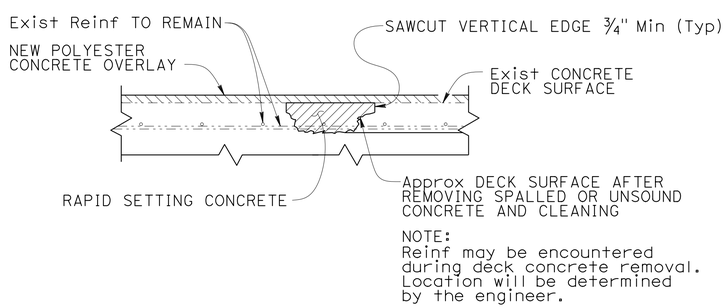

DECK DAMAGE REPAIR DETAIL
NO SCALE

NOTES:
1. Locations of deck repair will be determined by the engineer.
2. Reinforcement may be encountered during deck unsound concrete removal.
3. Existing reinforcement shall be protected in place during unsound concrete removal and patching operations.
4. It is the responsibility of the contractor to repair any reinforcement that is accidently cut by saw cutting operations.
5. When existing transverse reinforcement is exposed in the deck surface, saw cutting shall be waived with the approval of the engineer.
6. The saw cut depth shall not exceed 1 inch or the concrete cover over the top steel reinforcing bars, whichever is less.
7. Remove unsound concrete and unsound concrete patches to expose sound, hard concrete substrate. Replace original deck surface with rapid setting concrete patch.
8. Existing deck drains to remain.

NOTE:
THE CONTRACTOR MUST VERIFY ALL CONTROLLING FIELD DIMENSIONS BEFORE ORDERING OR FABRICATING ANY MATERIAL.

	BY	CHECKED
DESIGN	Anthony Logus	Ruslan Novik
DETAILS	Tim Trefz	Ruslan Novik
QUANTITIES	R. Novik/C. Chan	S. Yip/V. Romo

STATE OF CALIFORNIA
DEPARTMENT OF TRANSPORTATION

DIVISION OF ENGINEERING SERVICES
STRUCTURE DESIGN
DESIGN BRANCH 15

BRIDGE NO. 45-0064
POST MILE 26.76

ROUTE 43 KINGS RIVER BRIDGE SEISMIC RETROFIT
DECK REPAIR DETAILS

STRUCTURES DESIGN DETAIL SHEET (ENGLISH) (REV. 09-01-10)

ORIGINAL SCALE IN INCHES FOR REDUCED PLANS 0 1 2 3

UNIT: 3604
PROJECT NUMBER & PHASE: 0612000110
CONTRACT NO.: 06-0K8001

DISREGARD PRINTS BEARING EARLIER REVISION DATES 08-20-15 01-19-16

SHEET 7 OF 11

FILE => 45-0064-y-drdtl.dgn

USERNAME => s113541 DATE PLOTTED => 04-APR-2016 TIME PLOTTED => 14:29

DIST	COUNTY	ROUTE	POST MILES TOTAL PROJECT	SHEET No	TOTAL SHEETS
06	Fre,Kin	33,41,43	Var	59	62

REGISTERED CIVIL ENGINEER 9/15/15 DATE

3-28-16
PLANS APPROVAL DATE

REGISTERED PROFESSIONAL ENGINEER Nathan Dahlen No. 71344 Exp. 12/31/15 CIVIL STATE OF CALIFORNIA

The State of California or its officers or agents shall not be responsible for the accuracy or completeness of scanned copies of this plan sheet.

KLEINFELDER
5125 N. GATES AVE., SUITE 102
FRESNO, CA 93722

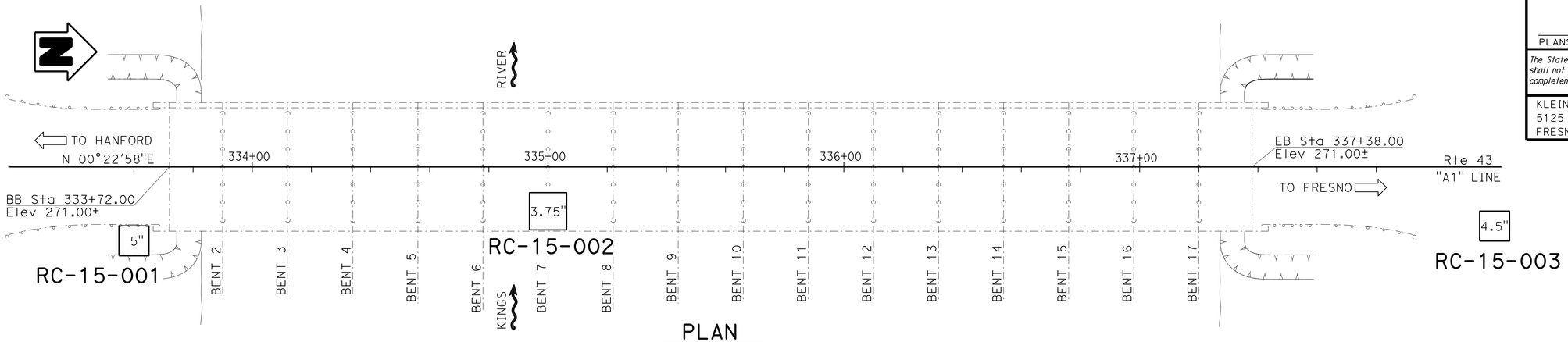

PLAN
1" = 20'

BENCHMARKS

STATION	OFFSET	N	E	ELEV	DESCRIPTION
11+25.94	23.58' Rt	2,041,801.40	6,374,552.23	272.88	DNK0336. Found 1" Iron pipe w/ red CT plug and tack
15+45.14	23.68' Lt	2,042,220.88	6,374,507.51	273.62	DNK0337. Found 1" Iron pipe w/ red CT plug and tack

SURVEY CONTROL
1. Coordinates bearing and distances are based on the California State Plane Coordinate system of NAD 83 (1986). Elevations are based on NGVD29 for Plan. Elevations are based on NAVD88 for borings.

Notes:

1. 1.4" samples were taken using a SPT split-barrel sampler with an inside diameter (ID) of 1.4" and an outside diameter (OD) of 2".
2. 2.0" samples were taken using a CAL split-barrel sampler with an inside diameter (ID) of 2.0" and an outside diameter (OD) of 2.5"
3. An automatic hammer (140 lb) with a 30" drop was used to advance the sampler.
4. Blowcounts noted for boring are field blowcounts and have not been corrected.
5. Blowcounts 50/5 means 50 blows per 5" penetration.
6. This LOTB sheet was prepared in accordance with the Caltrans Soil & Rock Logging, Classification, and Presentation Manual (June 2010)

J. Huang
DESIGN OVERSIGHT
9/22/15
SIGN OFF DATE

DRAWN BY A. Sanchez
CHECKED BY N. Dahlen

M.O. & A.M.
FIELD INVESTIGATION BY:
DATE: 6/4/15 - 6/16/15

PREPARED FOR THE STATE OF CALIFORNIA DEPARTMENT OF TRANSPORTATION

N. Dahlen
PROJECT ENGINEER

BRIDGE NO. 45-0064
POST MILES 26.76

ROUTE 43 KINGS RIVER BRIDGE SEISMIC RETROFIT
LOG OF TEST BORINGS 1 OF 4

GS CIVIL LOG OF TEST BORINGS SHEET (ENGLISH) (REV. 03/14/12)

ORIGINAL SCALE IN INCHES FOR REDUCED PLANS 0 1 2 3

UNIT: 3604
PROJECT NUMBER & PHASE: 0612000110
CONTRACT NO.: 06-0K8001

DISREGARD PRINTS BEARING EARLIER REVISION DATES
REVISION DATES 9/23/15
SHEET 8 OF 11

FILE => 45-0064-z-1tb01.dgn

USERNAME => s113541 DATE PLOTTED => 04-APR-2016 TIME PLOTTED => 14:29

FOR PLAN VIEW AND ADDITIONAL NOTES, SEE "LOG OF TEST BORINGS" SHEET 1 OF 4

This LOTB sheet was prepared in accordance with the Caltrans Soil & Rock Logging, Classification, and Presentation Manual (2010).

25.00' Rt Sta 333+60.00
"A1" Line

RC-15-001

Elev 271.0'

5"

Elevation	Blows	Recovery	Sample
270	6	1.4	WA
260	10	1.4	WA
	19	1.4	
250	12	1.4	CR
	10	1.4	WA
240	12	1.4	
	14	1.4	WA
230	13	1.4	
	25	1.4	
220	50/4	1.4	M UW
	27	1.4	
210	22	1.4	
	23	1.4	
200	32	1.4	
	17	1.4	
190	52	1.4	M UW
	50/6	1.4	
180	30	1.4	
	17	1.4	
170	34	1.4	
	27	1.4	
160	34	1.4	
	47	1.4	
150	49	1.4	
	37	1.4	
140	35	1.4	
	66	1.4	
130	40	1.4	
	64	1.4	
120	35	1.4	
	49	1.4	
110	34	1.4	

GWS Elev 186.0'
06-04-15

06-04-15
Terminated at Elev 109.5'
ER_i = 92%

SANDY SILT (ML); loose; dark grayish brown; moist; some fine SAND; non-plastic

SILTY SAND (SM); medium dense; very dark grayish brown; moist; fine SAND; some fines

POORLY-GRADED SAND with SILT (SP-SM); medium dense; brown; moist to wet; fine to medium SAND

-light brownish gray; fine SAND; few fines

-grayish brown; wet; fine to medium SAND; trace fines

SILTY SAND (SM); medium dense; light yellowish brown; moist to wet; fine SAND; some fines

SANDY SILT (ML); light brownish gray; moist; few fine SAND; non-plastic

SILT (ML); very dense; light brownish gray; moist; non-plastic

SILTY SAND (SM); light brownish gray; moist; fine to medium SAND; some fines

POORLY-GRADED SAND (SP); medium dense; light brownish gray; moist to wet; fine to medium SAND; trace

SILT (ML); grayish brown; moist; weak to moderate cementation

SANDY SILT (ML); medium dense; grayish brown; moist; few fine SAND; red-orange oxidation throughout

SILTY SAND (SM); grayish brown; moist; fine SAND; some fines

-dense

POORLY-GRADED SAND with FINES (SP-SM); medium dense; moist; fine SAND; few fines

SILT (ML)

SANDY SILT (ML); grayish brown; moist; some fine SAND

SILT (ML); very dense; brownish gray with red brown laminations of iron oxidation; trace fine SAND; non-plastic

-thinly to moderately bedded SILT and SILTY SAND

SILTY SAND (SM); very dense; brownish gray with red-orange iron oxidation; moist; fine SAND; some fines; moderate cementation

SILT (ML); dense; brownish gray; moist; non-plastic

SANDY SILT (ML); brownish gray; moist to wet; few fine SAND

SILTY SAND (SM); brownish gray; moist to wet; fine SAND; some fines; laminated

SANDY SILT (ML); medium dense; brownish gray; moist to wet; few fine SAND

SILTY SAND (SM); yellowish brown; fine SAND

POORLY-GRADED SAND with FINES (SP); dense; brown; fine to medium SAND; trace to few fines

SILTY SAND (SM); medium dense; brownish gray; fine to medium SAND; some fines; moderate cementation

-fine SAND; no cementation

POORLY-GRADED SAND (SP); dense; brownish gray; wet; fine to medium SAND; trace fines

SILTY SAND (SM); brownish gray; moist to wet; fine SAND; some fines

POORLY-GRADED SAND (SP); dense; light brownish gray; wet; fine to medium SAND; trace fines

SILTY SAND (SM); grayish brown; moist; fine SAND; some fines; weak cementation

SILT (ML); dense; pinkish gray; moist; non-plastic

SILTY SAND (SM); grayish brown; moist to wet; fine SAND; some fines

SILT (ML); light brownish gray; moist to wet; non-plastic

SILTY SAND (SM); very dense; light olive brown; moist; fine SAND; some fines

SILT (ML); light olive brown; moist to wet; trace fine SAND; non-plastic;

SANDY SILT (ML); grayish brown; moist; some fine SAND; non-plastic;

SILT (ML); dense; grayish brown; moist; trace fine SAND; non-plastic;

-laminated SAND layers; very dense

-dense

SILTY SAND (SM); brownish gray; fine SAND; some fines

SANDY SILT (ML); brownish gray; few to some fine SAND; non-plastic

POORLY-GRADED SAND (SP); brownish gray; moist to wet; fine to medium SAND; trace fines

SILT (ML); brownish gray; moist; trace fine SAND

SILTY SAND (SM); dense; brownish gray; moist; fine SAND; some fines

Elevations: 300, 290, 280, 270, 260, 250, 240, 230, 220, 210, 200, 190, 180, 170, 160, 150, 140, 130, 120, 110, 100, 90, 80, 70, 60, 50, 40, 30, 20

333+00 334+00 335+00

PROFILE

HOR. 1"=20'
VER. 1"=10'

KLEINFELDER
5125 N. GATES AVE., SUITE 102
FRESNO, CA 93722

REGISTERED CIVIL ENGINEER 9/15/15 DATE

PLANS APPROVAL DATE 3-28-16

The State of California or its officers or agents shall not be responsible for the accuracy or completeness of scanned copies of this plan sheet.

REGISTERED PROFESSIONAL ENGINEER
Norhon Dahlen
No. 71344
Exp. 12/31/15
CIVIL
STATE OF CALIFORNIA

DIST	COUNTY	ROUTE	POST MILES TOTAL PROJECT	SHEET NO	TOTAL SHEETS
06	Fre,Kin	33,41,43	Var	60	62

J. Huang
DESIGN OVERSIGHT
9/22/15
SIGN OFF DATE

DRAWN BY: A. Sanchez
CHECKED BY: N. Dahlen

M. Owens
FIELD INVESTIGATION BY:
DATE: 6/4/15

N. Dahlen
PROJECT ENGINEER

PREPARED FOR THE STATE OF CALIFORNIA DEPARTMENT OF TRANSPORTATION

BRIDGE NO. 45-0064
POST MILES 26.76

ROUTE 43 KINGS RIVER BRIDGE SEISMIC RETROFIT

LOG OF TEST BORINGS 2 OF 4

GS CIVIL LOG OF TEST BORINGS SHEET (ENGLISH) (REV. 03/14/12)

ORIGINAL SCALE IN INCHES FOR REDUCED PLANS 0 1 2 3

UNIT: 3604
PROJECT NUMBER & PHASE: 0612000110
CONTRACT NO.: 06-0K8001

DISREGARD PRINTS BEARING EARLIER REVISION DATES

REVISION DATES 9/21/15

SHEET 9 OF 11

FILE => 45-0064-Z-HB02.dgn

USERNAME => s113541 DATE PLOTTED => 04-APR-2016 TIME PLOTTED => 14:29

FOR PLAN VIEW AND ADDITIONAL NOTES, SEE "LOG OF TEST BORINGS" SHEET 1 OF 4

This LOTB sheet was prepared in accordance with the Caltrans Soil & Rock Logging, Classification, and Presentation Manual (2010).

15.00' Rt Sta 335+00.00
"A1" Line

RC-15-002

3.75"

Elev 271.0'

Elevation	Blows	Recovery	Sample	Description
270				Core through bridge deck (12.5" thick) to river bed surface at 20 feet. Case to 30 feet.
250				POORLY-GRADED SAND (SP); medium dense; light brownish gray; moist; fine to coarse SAND; non-plastic
240	12	1.4	WA	-medium dense; trace GRAVEL
	13	1.4	CR	-medium dense; few GRAVEL
				-no GRAVEL
230	28	1.4		SANDY SILT (ML); medium dense; light brownish gray; moist to wet; little fine SAND; non-plastic
	61	1.4	M UW	POORLY-GRADED SAND (SP); brown; moist to wet; fine to coarse SAND; non-plastic
220	50	1.4		SILTY SAND (SM); dense; brown; moist to wet; some fines; non-plastic to low plasticity
				SANDY SILT (ML); pale brown; moist to wet; some fine SAND; non-plastic
	23	1.4	WA	SILTY SAND (SM); pale brown; moist to wet; some fines; trace CLAY; low plasticity
210	109	1.4		SILT (ML); dense; light brownish gray; wet; few SAND; non-plastic
	37	1.4		SILTY SAND (SM); pale brown; moist to wet; fine SAND; some fines; trace CLAY; low plasticity
				SILT (ML); medium dense; pale brown; moist to wet; few fine SAND; non-plastic
200	47	1.4	M UW	SILTY SAND (SM); very dense; light brownish gray; moist to wet; fine to medium SAND; some fines; non-plastic
	65	1.4		POORLY-GRADED SAND (SP); dense; light brownish gray; wet; fine to coarse SAND
190	25	1.4		SILTY SAND (SM); pale brown; wet; some fines; non-plastic to low plasticity
				SANDY SILT (ML); pale brown; wet; some fine to medium SAND; non-plastic to low plasticity
	68	1.4	M UW	POORLY-GRADED SAND (SP); dense; brown to light brownish gray; wet; fine to coarse SAND
180	20	1.4		SILT (ML); very dense; pale brown; wet
				SILTY SAND (SM); pale brown; wet; fine to coarse SAND; some fines
	29	1.4		SANDY SILT (ML); dark brownish gray; wet; few fine SAND; non-plastic
170	32	1.4		SILTY SAND (SM); medium dense; light brownish gray; wet; fine to coarse SAND; little fines
	31	1.4	M UW	-very dense
				SANDY SILT (ML); medium dense; pale brown; wet; some fine SAND; non-plastic
160	37	1.4		SILTY SAND (SM); medium dense; pale brown; wet; fine to medium SAND; little fines
	44	1.4	M UW	POORLY-GRADED SAND (SP); dense; light brownish gray; wet; fine to coarse SAND
				SILTY SAND (SM); dense; pale brown to reddish brown; wet; fine to coarse SAND; little fines
150	23	1.4		POORLY-GRADED SAND (SP); dense; brown to pale brown; wet; fine to coarse SAND; trace fines
	19	1.4		-light brownish gray
140	50/5	1.4		SANDY SILT (ML); medium dense; pale brown; wet; some fine to medium SAND; non-plastic to low plasticity
	50/5	1.4		POORLY-GRADED SAND (SP); brown to pale brown; wet; fine to coarse SAND; trace fines
130	50/5	1.4		SILTY SAND (SM); medium dense; pale brown; wet; fine to medium SAND; some fines
				-very dense; olive; moist; fine SAND; some fines; trace mica flakes
	72	1.4		SANDY SILT (ML); light brownish gray; moist; some fine SAND; trace mica flakes; non-plastic; PP=1.5 tsf
120	69	1.4		SILT (ML); dense; light brownish gray; moist; non-plastic
				-PP>=4.5 tsf
	34	1.4		SANDY SILT (ML); very dense; light brownish gray; moist; some fine SAND; trace mica flakes; non-plastic; PP=4.5 tsf
110	46	1.4		-strong cementation; PP>=4.5 tsf
	64	1.4		SILT with SAND (ML); light brownish gray; moist; few fine SAND; trace mica flakes; non-plastic; no cementation
100	51	1.4		SILTY SAND (SM); very dense; light brownish gray; moist; some fines; trace mica flakes
				POORLY-GRADED SAND with SILT (SP-SM); very dense; light brownish gray; moist; fine SAND; few fines; trace mica flakes
90				SILTY SAND (SM); light brownish gray; moist; fine SAND; some fines; trace mica flakes
				SILT with SAND (ML); light brownish gray; moist; little fine SAND
				-SILTY SAND lense from 155 to 155.5 feet
80				SANDY SILT (ML); dense; light brownish gray; moist; some fine SAND; trace mica flakes; PP>=4.5 tsf
				SILT (ML); hard; light brownish gray; moist; trace SAND; trace mica flakes; low plasticity; PP>=4.5 tsf
70				SILTY SAND (SM); dense; yellowish brown; moist; fine SAND; some fines
				-very dense; trace mica flakes
				-olive yellow
60				POORLY-GRADED SAND (SP); very dense; light brownish gray; moist; fine SAND; trace mica flakes; non-plastic

06-16-15
Terminated at Elev 99.5'
ER_i = 84%

PROFILE
HOR. 1"=20'
VER. 1"=10'

335+00 336+00 337+00

KLEINFELDER
5125 N. GATES AVE., SUITE 102
FRESNO, CA 93722

REGISTERED CIVIL ENGINEER 9/15/15 DATE

PLANS APPROVAL DATE 3-28-16

The State of California or its officers or agents shall not be responsible for the accuracy or completeness of scanned copies of this plan sheet.

REGISTERED PROFESSIONAL ENGINEER
Norhon Dahlen
No. 71344
Exp. 12/31/15
CIVIL
STATE OF CALIFORNIA

DIST	COUNTY	ROUTE	POST MILES TOTAL PROJECT	SHEET NO	TOTAL SHEETS
06	Fre,Kin	33,41,43	Var	61	62

J. Huang
DESIGN OVERSIGHT
9/22/15
SIGN OFF DATE

DRAWN BY A. Sanchez
CHECKED BY N. Dahlen

A. Mohammad
FIELD INVESTIGATION BY:
DATE: 6/16/15

ORIGINAL SCALE IN INCHES FOR REDUCED PLANS 0 1 2 3

PREPARED FOR THE STATE OF CALIFORNIA DEPARTMENT OF TRANSPORTATION

N. Dahlen
PROJECT ENGINEER

BRIDGE NO. 45-0064
POST MILES 26.76

ROUTE 43 KINGS RIVER BRIDGE SEISMIC RETROFIT

LOG OF TEST BORINGS 3 OF 4

UNIT: 3604
PROJECT NUMBER & PHASE: 0612000110
CONTRACT NO.: 06-0K8001

DISREGARD PRINTS BEARING EARLIER REVISION DATES

REVISION DATES 9/22/15

SHEET 10 OF 11

GS CIVIL LOG OF TEST BORINGS SHEET (ENGLISH) (REV. 03/14/12)

FILE => 45-0064-Z-HB03.dgn

USERNAME => s113541 DATE PLOTTED => 04-APR-2016 TIME PLOTTED => 14:29

FOR PLAN VIEW AND ADDITIONAL NOTES, SEE "LOG OF TEST BORINGS" SHEET 1 OF 4

This LOTB sheet was prepared in accordance with the Caltrans Soil & Rock Logging, Classification, and Presentation Manual (2010).

20.00' Rt Sta 338+20.00
"A1" Line

RC-15-003

4.5"

Elev 271.0'

GWS Elev 211.0'
06-16-15

06-16-15
Terminated at Elev 109.5'
ER$_i$ = 92%

Elev	Blows	Bag	Sample	Description
270				SANDY SILT (ML); loose; dark grayish brown; some fine SAND; non-plastic
	9	2.0	UC WA	
260	17	1.4	WA	SILTY SAND (SM); medium dense; brown; moist; fine SAND; some fines; moderate cementation
	17	1.4		
250	13	1.4	WA CR	POORLY-GRADED SAND with Silt (SP-SM); medium dense; brown; moist; fine to medium SAND; few fines
				POORLY-GRADED SAND (SP); loose; brown; moist; fine to medium SAND; trace fines
	9	1.4		
240	8	1.4		-medium dense; fine to coarse SAND
	9	1.4	WA	
230	15	1.4		
	15	1.4	WA	SILTY SAND (SM); medium dense; yellowish brown; fine SAND; some fines
				SILT (ML); light gray; moist; non-plastic; PP>=2.0 tsf
220	26	1.4		SANDY SILT (ML); grayish brown; moist; some fine SAND
	19	1.4	WA	SILTY SAND (SM); grayish brown; moist; fine to medium SAND; some fines
210	28	1.4		SANDY SILT (ML); medium dense; grayish brown; moist; some fine SAND; carbonate inclusions throughout
				SILTY SAND (SM); medium dense; grayish brown; moist; fine SAND; some fines
	39	1.4		POORLY-GRADED SAND (SP); grayish brown; moist; fine SAND; trace fines
200	30	1.4		SILTY SAND (SM); medium dense; grayish brown; moist; fine SAND; some fines; reddish brown-orange iron oxidation throughout
	29	1.4		SANDY SILT (ML); dense; grayish brown; moist; some fine SAND; non-plastic
190	50/3	1.4		POORLY-GRADED SAND (SP); medium dense; light brownish gray; moist; fine to medium SAND
				SILT (ML); very dense; grayish brown; moist; non-plastic; moderate cementation
	77	1.4		-PP>=4.5 tsf
				-some fine SAND; no cementation
180	27	1.4		SILTY SAND (SM); very dense; grayish brown; moist; fine SAND; some fines; non-plastic
	17	1.4		SANDY SILT (ML); grayish brown; moist; little fine SAND
170	60	1.4		SILT (ML); medium dense; grayish brown; moist
				SANDY SILT (ML); medium dense; grayish brown; moist; little fine SAND
	31	1.4		SILTY SAND (SM); grayish brown; moist; fine SAND; some fines
160	39	1.4		SILT (ML); medium dense; light olive brown; moist; non-plastic; PP=1.25 tsf
				POORLY-GRADED SAND (SP); very dense; light olive brown; moist to wet; fine to medium SAND
	56	1.4		SILT (ML); very dense; light olive brown; trace fine SAND; non-plastic
150	45	1.4		SILTY SAND (SM); dense; light yellowish brown; moist; fine to medium SAND; some fines; non-plastic; red-orange iron oxidation throughout
	53	1.4		POORLY-GRADED SAND with Silt (SP-SM); dense; light yellowish brown; wet; fine SAND; few fines
140	49	1.4		-moderate cementation
	29	1.4		SANDY SILT (ML); light olive brown; moist; some fine SAND; moderate to high cementation
130	39	1.4		SANDY SILT (ML) and SILTY SAND (SM); dense; light olive brown; moist
	59	1.4		SILTY SAND (SM); very dense; light olive brown; moist; fine SAND; some fines; moderate cementation
				SILT (ML); very dense; light yellowish brown; moist; non-plastic
120	27	1.4		SILTY SAND (SM); light olive brown; moist; fine to medium SAND; some fines
	51	1.4		SILT (ML); medium dense; light yellowish brown; moist
				SILTY SAND (SM); dense; light yellowish brown; moist; fine SAND
110	84	1.4		-very dense
				POORLY-GRADED SAND with Silt (SP-SM); light yellowish brown; moist; fine SAND; trace to few fines
				SILTY SAND (SM); medium dense; pale brown; moist; fine to medium SAND; little fines
100				SANDY SILT (ML); very dense; pale brown; wet; some fine to medium SAND
				SILTY SAND (SM); very dense; light brownish gray; wet; fine to coarse SAND; some fines
90				-brown

300 290 280 270 260 250 240 230 220 210 200 190 180 170 160 150 140 130 120 110 100 90 80 70 60 50 40 30 20

339+00 340+00

PROFILE
HOR. 1"=20'
VER. 1"=10'

J. Huang
DESIGN OVERSIGHT
9/22/15
SIGN OFF DATE

DRAWN BY A. Sanchez
CHECKED BY N. Dahlen

M. Owens
FIELD INVESTIGATION BY:
DATE: 6/16/15

N. Dahlen
PROJECT ENGINEER

PREPARED FOR THE STATE OF CALIFORNIA DEPARTMENT OF TRANSPORTATION

ORIGINAL SCALE IN INCHES FOR REDUCED PLANS 0 1 2 3

UNIT: 3604
PROJECT NUMBER & PHASE: 0612000110
CONTRACT NO.: 06-0K8001

DISREGARD PRINTS BEARING EARLIER REVISION DATES

REVISION DATES 9/21/15

SHEET 11 OF 11

BRIDGE NO. 45-0064
POST MILES 26.76

ROUTE 43 KINGS RIVER BRIDGE SEISMIC RETROFIT

LOG OF TEST BORINGS 4 OF 4

GS CIVIL LOG OF TEST BORINGS SHEET (ENGLISH) (REV. 03/14/12)

FILE => 45-0064-Z-HB04.dgn

KLEINFELDER
5125 N. GATES AVE., SUITE 102
FRESNO, CA 93722

REGISTERED CIVIL ENGINEER 9/15/15
DATE

PLANS APPROVAL DATE 3-28-16

The State of California or its officers or agents shall not be responsible for the accuracy or completeness of scanned copies of this plan sheet.

REGISTERED PROFESSIONAL ENGINEER
Norhon Dahlen
No. 71344
Exp. 12/31/15
CIVIL
STATE OF CALIFORNIA

DIST	COUNTY	ROUTE	POST MILES TOTAL PROJECT	SHEET NO	TOTAL SHEETS
06	Fre,Kin	33,41,43	Var	62	62

USERNAME => s113541 DATE PLOTTED => 04-APR-2016 TIME PLOTTED => 14:29