INFORMATION HANDOUT

For Contract No. 06-0M2504
At 06-Fre-198-35.3/35.6

Identified by
Project ID 0612000096

PERMITS

Bureau of Reclamation Temporary Construction Permit

Department of Water Resources Code of Safe Practices 5.18; Procedure for Inflatable Boat Use

MATERIALS INFORMATION

Asbestos and Lead containing Paint Survey Report

Water Source Information

Manufacturer drawings for alternative crash cushion

CVP-2409
Index No. 14-15/Unit No. 160, 161 & 163
LND-15-05

Contract No. 15-LC-20-0731

TEMPORARY CONSTRUCTION PERMIT IN ADVANCE OF EASEMENT TO THE STATE OF CALIFORNIA, DEPARTMENT OF TRANSPORATION (CALTRANS) TO CONSTRUCT IMPROVEMENTS OVER RECLAMATION'S RIGHT-OF-WAY FOR THE SAN LUIS CANAL, WEST SAN JOAQUIN DIVISION, SAN LUIS UNIT CENTRAL VALLEY PROJECT

THIS TEMPORARY CONSTRUCTION PERMIT IN ADVANCE OF EASEMENT (Permit), made this 15th day of March, 2016, in accordance with the Act of Congress approved June 17, 1902 (32 Stat. 388) and all other acts amendatory or supplementary thereto, particularly the Reclamation Project Act of 1939 (53 Stat. 1187), is entered into, by and between the UNITED STATES OF AMERICA, through its Department of the Interior, Bureau of Reclamation (Reclamation) and the STATE OF CALIFORNIA, Department of Transportation (Caltrans).

RECITALS

A. Reclamation acquired certain lands located in the County of Fresno, California, for the construction of the San Luis Canal (SLC), a feature of the West San Joaquin Division, San Luis Unit, Central Valley Project; and

B. The State of California, Department of Water Resources (DWR) is responsible for the operation and maintenance of the SLC; and

C. Caltrans has in writing duly notified Reclamation of its desire to widen and perform other bridge improvements (Improvements) to the California State Route 198 (SR 198) Bridge, also known as California Aqueduct Bridge No. 42-0270, in the location where it crosses over the SLC at approximate Milepost 152.76, north of the City of Huron; and

D. Due to the fact that the proposed Improvements are wider than the existing road right-of-way, Caltrans has requested an approximate 0.06-acre (approximately 2,564 square foot) permanent Easement to accommodate the Improvements; and two (2) temporary construction staging areas containing approximately 0.26 total acres, or approximately 11,523 square feet (Temporary Staging), in the locations shown on the Right of Way Appraisal Maps (*"Exhibit A" & "Exhibit B")* both attached and made a part hereof; and

E. Reclamation has no objections to Caltrans' use of the land for Temporary Staging or issuance of a Permit that conveys no real property interest to Caltrans, and the proposed use of this land is, at this time, not incompatible with the purpose for which the land was acquired and is now being administered; and

ORIGINAL

F. It is Reclamation's intent to issue a permanent Easement to Caltrans, that conveys real property interest, after Caltrans completes construction of the Improvements; and

G. Because the Improvements have been funded with fiscal year 2015/2016 funds, Caltrans desires to proceed with construction of the Improvements prior to execution of the permanent Easement;

NOW THEREFORE, in consideration of the mutual agreements and subject to the terms and conditions herein contained, the parties hereto agree as follows:

1. TEMPORARY CONSTRUCTION PERMIT. Reclamation hereby issues to Caltrans, without warranty of title, the following described non-exclusive Permit for the purpose of entering upon, constructing, owning, operating and maintaining the Improvements, over and across the SLC, within that portion of the land acquired by Reclamation described as follows:

*Portions of Sections 23 and 26, Township 19 South, Range 17 East, M.D.B. & M., in the County of Fresno, State of California. The location is further described as approximate Milepost 152.76 (Station 4406+89.66) along the SLC where it intersects with SR 198, as shown on the Legal Descriptions for Caltrans Parcels 87250-1, 87250-2, and 87250-3, respectively ("**Exhibit C**," "**Exhibit D**," and "**Exhibit E**"), all attached hereto and made a part hereof.*

2. TEMPORARY CONSTRUCTION PERMIT IN ADVANCE OF EASEMENT.

(a) Caltrans understands that advance written approval from Reclamation is required before this Permit shall become effective. Caltrans shall obtain Reclamation's concurrence on the signatory page of this Permit. If concurrence to this Permit is given by Reclamation, it is Reclamation's intent to follow up this Permit with a permanent Easement to be granted by Reclamation which shall be accepted by Caltrans under terms established by Reclamation. Caltrans agrees in advance, by accepting this Permit, to pay to Reclamation, in accordance with 43 CFR 429.17, all administrative fees including, but not limited to, engineering, environmental and realty work associated with processing this Permit.

(b) Reclamation reserves the right to inspect the Improvements during and after construction. Reclamation also reserves the right to withhold the grant of Easement until any work related to this Permit is properly performed in accordance with the provisions of this Permit. Further, Reclamation reserves the right to terminate this Permit in accordance with the Article 4, TERMINATION, subparagraphs (a) (2) and (e), if Caltrans fails to perform the work to the satisfaction of Reclamation.

(c) Reclamation hereby agrees to issue to Caltrans, upon acceptance of the constructed work performed by Caltrans, without warranty of title, rights of entry to operate and maintain the Improvements until a permanent Easement is granted.

3. <u>TERMS AND CONDITIONS</u>. The Permit issued herein is subject to the following:

(a) Upon execution of a grant of Easement issued by Reclamation to Caltrans, the land use terms of this contract herein written will terminate. Any and all terms related to the construction aspects of the Improvements shall continue to remain in effect until such time as the Improvements have been completed and approval has been granted by Reclamation and DWR.

(b) The land use fees for the rights herein granted are waived in accordance with 43 CFR 429.26 (a) (3). In accordance with 43 CFR 429.17, Caltrans and/or its contractors shall be responsible for all administrative fees incurred by Reclamation in processing and issuing this Permit as provided for in Article 2 (a), above.

(c) The use permitted herein is subject to existing rights-of-way in favor of the public or third parties. Caltrans recognizes that it has sole responsibility to make whatever arrangements are necessary to obtain such rights as may be needed by Caltrans from any other party or parties holding any other interest in the premises. Caltrans shall provide <u>written</u> notice to Reclamation of the construction start date.

(d) Reclamation reserves the right of their officers, agents and employees at all times to have unrestricted access and ingress to, passage over and egress from all of said lands, to make investigations of all kinds, dig test pits, drill test holes and to survey for and construct reclamation and irrigation works and other structures incidental to Federal Reclamation Projects, for any purpose whatsoever. Reclamation will make every reasonable effort to keep damages to a minimum.

(e) Jurisdiction and supervision of Reclamation over the premises are not surrendered or subordinated by the issuance of this Permit and Reclamation reserves the right to issue easements and other agreements for the lands described in this Permit.

(f) Caltrans shall not use the premises for any purpose except as set forth in Article 1.

(g) Caltrans accepts the premises as is and acknowledges that Reclamation is under no obligation to improve the present condition of the premises.

(h) All construction work to be performed shall be accomplished to the satisfaction of Reclamation and DWR by and at the expense of Caltrans, and Caltrans shall be in full accordance with, but not limited to, the previously submitted and approved final plans and specifications entitled, "California Aqueduct Bridge Deck Rehabilitation," dated 1-28-16, Sheets 1-9, Contract No. 06-0M2504, Unit 3591, Project Number & Phase 0612000096 1, Bridge No. 42-0270, Post Mile 35.4, prepared by Hilario Tuazon, Jr., Registered Civil Engineer, No. C83114, Exp. 03-31-17, State of California, Department of Transportation, Division of Engineering Services Structure Design, Design Branch 6, as shown on ***"Exhibit F,"*** attached and made a part hereof.

All work associated with the Improvements must be coordinated with Reclamation and DWR, and any changes to the approved plans must be submitted in writing for prior approval by Reclamation and DWR. Any changes to the Improvements' construction requirements in subsequent addendums, modifications, change orders or items agreed to in construction meeting(s), which have the potential to adversely affect Reclamation facilities, will be submitted to and accepted by Reclamation and DWR and, upon acceptance, are hereby included and made a part hereof. Copies of all changes to the Improvements' construction requirements will be provided to Reclamation and DWR within five (5) days of their issuance. The Improvements shall be constructed in a manner and condition that will protect all structures, facilities and resources from damage; ensure unrestricted flow and quality of water in the SLC at its present designed capacity; not diminish the ability to own, operate and maintain the SLC, including access; protect and provide for the unrestricted use of any Reclamation easement, be it for roads, telephone/communications lines, flood and flowage easements, canals, pipelines, gauging stations, or any other purpose; and prevent an unreasonable burden of liability. Upon completion, the Improvements shall be inspected by Reclamation or its authorized representative and Caltrans will be notified in writing of the approval or disapproval thereof. In case of disapproval, Caltrans shall be advised of the corrective action required before the new Improvements will be approved.

(i) Caltrans may install temporary work platform(s) (platforms) in the SLC for use while constructing the Improvements, in accordance with ***"Exhibit F."*** No water level and/or flow restriction(s) in the SLC will be allowed to accommodate the use of platforms. The platforms shall be a floating type and must be reviewed and approved by DWR prior to use. A Safety Plan shall be prepared by Caltrans, and be provided to and approved by DWR, before lowering the platforms into the water.

(j) Should modification(s) related to the design for the Improvements become necessary or beneficial during construction, the request for a modification will be reviewed by Reclamation and DWR to ensure it is compatible with the approved design. Caltrans will be responsible for the costs associated with said modification(s). Caltrans and/or its contractor are responsible for construction and contract management. Caltrans will determine, subject to Reclamation and DWR approval, whether the contract can be amended to include any such proposed modification(s).

(k) Caltrans, at its sole expense, shall construct, reconstruct and install the Improvements substantially as shown on ***"Exhibit F."*** Any additional construction, reconstruction, relocation or use of the premises which is not in accordance with this Permit and the plans shall not be initiated without the prior written approval of Reclamation. Additionally, Caltrans will be required to reimburse Reclamation for its administrative costs involved in the review and approval of such additional activities.

(l) Caltrans and/or its contractor(s) shall execute and maintain their work so as to avoid injury or damage to any person or property. All work shall be done in conformance with applicable State of California, Division of Occupational Health and Safety and OSHA Standards.

Safety precautions as applicable shall include, but not be limited to: adequate fume protection; adequate illumination for underground and night operation; instruction in accident prevention for all employees; such machinery guards, walkways, scaffolds, ladders, bridges and other safety devices, equipment and wearing apparel as are necessary or lawfully required to prevent accidents or injuries; and the proper inspection and maintenance of all safety measures. Caltrans and its contractor(s) shall have emergency phone numbers and addresses posted on the job site.

(m) A Safety Plan (Plan) shall be submitted by the contractor prior to starting construction of the Improvements. The Plan shall cover all aspects of the work to be performed on Reclamation facilities, and must incorporate provisions for compliance with the Reclamation Safety and Health Standards (RSHS). These standards are consistent with the health and safety standards prevalent in industry, the Occupational Safety and Health Act of 1970, Public Law 91-596, and Department of the Interior regulations. The Plan shall require that all work performed on this project meets or exceeds the OSHA standards in addition to complying with the RSHS and shall specifically address the safety of employees, subcontractors and the general public. The Plan shall also cover offsite activities, equipment and facilities that primarily support the project. The Plan must include provisions for coordination with the safety and health requirements of the RSHS in the terms and conditions of all contracts, subcontracts and supply contracts. In addition to the requirements set forth in the RSHS, all operations on Reclamation facilities and operations utilizing Reclamation equipment must comply with applicable provisions of Federal, State and municipal safety, health and sanitary statutes and codes. If there is a difference between the provisions of the standards and the safety and health regulations promulgated by the U.S. Department of Labor in Title 29 CFR, Parts 1910 and 1926, Occupational Safety and Health Act of 1970, or approved State plans, the more stringent provision will prevail. The Plan will need to be submitted to Reclamation and DWR for review, approval and monitoring.

(n) No blasting or use of explosives or the storage of explosives of any kind will be allowed on Reclamation right-of-way. No transportation of explosives of any kind will be allowed over Reclamation right-of-way without express permission by Reclamation.

(o) During the construction authorized by this Permit, if a situation develops which, in the opinion of Reclamation, presents a threat to the safety of property of Reclamation or of any third party, Caltrans shall take immediate action to eliminate the threat. In the event Caltrans does not immediately provide the necessary protection, Reclamation reserves the right, after notifying Caltrans, to take such action as may be necessary to eliminate the immediate threat and Caltrans shall, upon receipt of an itemized statement, reimburse Reclamation for all such costs.

(p) The Improvements, once constructed, shall be maintained by Caltrans in a good and safe condition and to the reasonable satisfaction of Reclamation at the expense of Caltrans, and all construction, alterations and repairs shall be in accordance with plans previously approved by Reclamation. Caltrans shall at all times exercise its rights herein in accordance with all applicable statutes, orders, rules and regulations of any public authority having jurisdiction including, but not limited to, all those related to or concerned with the environment. Caltrans shall, from time to time, upon reasonable request from Reclamation, promptly repair or alter any part of the Improvements to preclude damage to Reclamation facilities.

Caltrans agrees to cause its contractor(s) to perform all such repairs or alterations in a timely manner and to the satisfaction of Reclamation and DWR, without regard to the cause, except where caused or necessitated by an act or omission of Reclamation. This provision shall not, however, relieve Caltrans from the duty of inspecting and keeping its facilities in a proper and safe condition without the request of Reclamation, nor place upon Reclamation the duty of inspecting or maintaining any of the Improvements installed by or for Caltrans. In the event Caltrans should fail to promptly make such repairs or maintain its facilities after thirty (30) days written notice by Reclamation, Reclamation may, at the direction of the Regional Director, Reclamation, Mid-Pacific Region, enter and make such repairs or perform such maintenance at the expense of Caltrans, and Caltrans shall, upon receipt of an itemized statement, reimburse Reclamation for all such costs.

(q) Caltrans shall cause its contractor(s) to repair, in a timely manner and to the satisfaction of Reclamation and DWR, at Caltrans' sole expense, any damages it causes to Reclamation service roads, access roads, culvert crossings, siphon barrels, bridges, fences, gates, posts and any other equipment/facilities of Reclamation. No vehicles, equipment or waste materials of any kind shall be left or stored on Reclamation property.

(r) Caltrans shall at all times exercise its rights herein in accordance with all State, Federal and local laws, regulations, ordinances and orders affecting such operations. Illegal use of or illegal activity on Reclamation lands or facilities shall not be permitted and shall be cause for immediate termination of this Permit.

(s) Enforcement of the terms of this Permit shall be at the discretion of Reclamation, and any forbearance by Reclamation to exercise its rights under this Permit in the event of any breach of any term of this Permit shall not be construed to be a waiver by Reclamation of such terms or of any subsequent breach of the same or any other term of this Permit or of any of Reclamation's rights under this Permit. No delay or omission by Reclamation in the exercise of any right or remedy upon any breach by Caltrans shall impair such right or remedy or be construed as a waiver. Further, nothing in this Permit creates a non-discretionary duty upon Reclamation to enforce its provisions, nor shall deviation from these terms and procedures, or failure to enforce its provisions, give rise to a private right of action against Reclamation by any third parties.

4. **TERMINATION**. During the term of this Permit, Caltrans agrees as follows:

(a) This Permit will terminate and all rights of Caltrans hereunder will cease, and Caltrans will quietly deliver to Reclamation possession of the premises in like condition as when Caltrans originally entered onto the property, reasonable wear and damage by the elements excepted:

(1) Immediately upon the occurrence of any activity deemed to be illegal on Federal lands.

(2) At the option of Reclamation, upon failure of Caltrans to observe any of the terms and conditions of this Permit, and on the tenth (10th) day following service of written notice on Caltrans because of failure to observe such conditions.

(3) Upon execution by Reclamation of a grant of Easement, with the exception of the construction terms which will continue until the Improvements have been completed and approved by Reclamation and DWR.

(4) At the option of Reclamation, upon failure of Caltrans to use said Permit, or any portion thereof, for a period of two (2) years.

(5) At the request of Caltrans by giving three (3) months written notice to Reclamation.

(b) If the termination is under Articles 4 (a) (1) or (a) (2), Reclamation reserves the right to bar Caltrans from use of the premises for a period of time as determined by the Area Manager, Reclamation, South-Central California Area Office (SCCAO).

(c) In the event Caltrans breaches or fails to perform or observe any of the terms and conditions of this Permit and then fails to cure such breach or default within thirty (30) days of Reclamation giving Caltrans written notice thereof, or within such other period of time as Reclamation determines is reasonable under the circumstances, Reclamation may terminate Caltrans' rights under this Permit in addition to and not in limitation of any other remedy of Reclamation at law and in equity. Failure of Reclamation to exercise such right at any time shall not waive the right of Reclamation to terminate for any future breach or default.

(d) Termination of the Permit issued herein, except for the reason stated in Article 4 (a) (3) above, shall not release Caltrans from any liability or obligation, including any liability or obligation with respect to any matter occurring prior to such termination, nor shall such termination release Caltrans from its obligation and liability to remove any improvements, alterations, and additions made by Caltrans and to restore the premises to a condition satisfactory to Reclamation.

(e) Upon termination of the Permit issued herein, or any portion thereof except for the reason stated in Article 4 (a) (3) above, Caltrans may be required, at the discretion of Reclamation, to remove all structures, equipment or other improvements made by it from the premises at no cost to Reclamation, and to restore the area covered by this Permit to a condition satisfactory to Reclamation and DWR. Said removal and restoration shall be completed by and at the sole expense of Caltrans within six (6) months after termination. Upon failure of Caltrans to perform such removal and restoration requirements, any remaining improvements shall, at the option of Reclamation, be removed or become the property of Reclamation. Caltrans shall pay all expenses of Reclamation, or its assigns, related to removal of such improvements.

(f) The notices provided by this Article shall be served by certified mail addressed to the respective addresses given in Article 5 herein, and the mailing of any such notice properly enclosed, addressed, stamped and certified, shall be considered service.

5. NOTICES.

(a) Unless expressly set forth elsewhere in this Permit, any notice, demand or request required or authorized by this Permit to be given or made to or upon Reclamation shall be deemed properly given or made if delivered or mailed postage-prepaid, to the Bureau of Reclamation, SCCAO, 1243 "N" Street, Fresno, CA 93721-1813.

(b) Any notice, demand or request required or authorized by this Permit to be given or made to or upon Caltrans shall be deemed properly given or made if delivered or mailed postage-prepaid, to Caltrans, District 6-Central Region, 855 M Street, Suite 200, Fresno, CA 93721.

(c) Any notice, demand or request required or authorized by this Permit to be given or made to or upon DWR shall be deemed properly given or made if delivered or mailed postage-prepaid, to the State of California, Department of Water Resources, San Luis Field Division, 31770 Gonzaga Road, Gustine, CA 95322.

(d) The designation of the person to or upon who any notice, demand or request is to be given or made, or the address of such person, may be changed at any time by notice given in the same manner as provided in this Article for other notices.

6. ENVIRONMENTAL COMMITMENTS. One (1) environmental commitment has been identified for this project and is listed in the Environmental Commitment Program (ECP) table, hereby incorporated into this Permit as ***"Exhibit G."*** Caltrans shall comply with all environmental commitment(s) as specified therein. Any questions or comments regarding the ECP should be directed to Reclamation's Supervisory Natural Resource Specialist at (559) 487-5116.

7. DISCOVERY OF CULTURAL RESOURCES. Caltrans shall immediately provide an oral notification to Reclamation's authorized official of the discovery of any and all antiquities or other objects of cultural, historic or scientific interest on Reclamation lands. Caltrans shall forward a written report of its findings to Reclamation's authorized official within forty-eight (48) hours. Objects under consideration include, but are not limited to, historic or prehistoric ruins, human remains, funerary objects and artifacts discovered as the result of activities under this Permit. Caltrans shall immediately cease activity in the area of discovery, make a reasonable effort to protect such discovery and wait for written approval from Reclamation's authorized official before resuming the activity. Protective and mitigative measures specified by Reclamation's authorized official shall be the responsibility of Caltrans.

8. HAZARDOUS MATERIALS. During the term of this Permit, Caltrans agrees as follows:

(a) Caltrans may not allow contamination or pollution of Federal lands, waters or facilities and shall take reasonable precautions to prevent such contamination or pollution by third parties. Substances causing contamination or pollution shall include but are not limited to hazardous materials, thermal pollution, refuse, garbage, sewage effluent, industrial waste, petroleum products, mine tailings, mineral salts, misused pesticides, pesticide containers or any other pollutants.

(b) Caltrans shall comply with all applicable Federal, State and local laws and regulations, and Reclamation policies and directives and standards, existing or hereafter enacted or promulgated, concerning any hazardous material that will be used, produced, transported, stored or disposed of on or in Federal lands, waters or facilities.

(c) "Hazardous material" means any substance, pollutant or contaminant listed as hazardous under the Comprehensive Environmental Response, Compensation and Liability Act of 1980, as amended (42 U.S.C. § 9601, et seq.), and the regulations promulgated pursuant to that Act.

(d) Upon discovery of any event which may or does result in contamination or pollution of Federal lands, waters or facilities, Caltrans shall initiate any necessary emergency measures to protect health, safety and the environment and shall report such discovery and full details of the actions taken to Reclamation. Reporting may be within a reasonable time period. A reasonable time period means within twenty-four (24) hours of the time of discovery if it is an emergency or by the first working day if it is a non-emergency. An emergency is any situation that requires immediate action to reduce or avoid endangering public health and safety or the environment.

(e) Violation of any of the provisions of this Article, as determined by Reclamation, may constitute grounds for termination of this Permit. Such violations require immediate corrective action by Caltrans and shall make Caltrans liable for the cost of full and complete remediation and/or restoration of any Federal resources or facilities that are adversely affected as a result of the violation.

(f) Caltrans will cause the provisions contained in paragraphs (a) through (d) of this Article to be included in any subcontracts or third-party contracts it may enter into pursuant to this Permit.

(g) Reclamation agrees to provide information necessary for Caltrans, using reasonable diligence, to comply with the provisions of this Article.

9. SUCCESSORS IN INTEREST OBLIGATED. This Permit shall be binding upon and inure to the benefit of the successors and assigns of Caltrans; provided, however, except as otherwise herein written, that no assignment of the privileges, benefits, obligations or liabilities of Caltrans herein, whether by operation of law or otherwise, shall be valid without the prior written consent of Reclamation.

10. NO WARRANTY. Reclamation makes no warranty, expressed or implied, as to the extent or validity of the issuance contained herein, or the condition at any time of the Permit premises, or any of the property of Reclamation thereon, or the suitability of the Permit premises for the purposes of Caltrans.

11. INDEMNIFICATION AND HOLD HARMLESS. Caltrans and/or its contractor(s) shall indemnify and hold harmless Reclamation, its employees, agents and assigns from any loss or damage and from any liability on account of personal injury, death, property damage or claims for personal injury, death or property damage of any nature caused by any person, firm or corporation arising out of Caltrans' activities under this Permit.

12. LIABILITY INSURANCE COVERAGE. Caltrans and/or its contractor(s), for the duration of the contractors' activities, shall maintain in force policies of liability insurance or proof of self-insurance providing limits of not less than $1,000,000 for each person/occurrence and $2,000,000 aggregate for bodily injury or death, and not less than $1,000,000 property damage. Said policies shall name Reclamation and DWR as additional insureds (with the ISO CG 2010 endorsement form or equivalent) and will provide that they will not be canceled or reduced in coverage without ten (10) days prior written notice. Prior to commencement of said construction, Caltrans will cause to be delivered to Reclamation and DWR a copy of the certificate of insurance reflecting all essential coverage. The endorsement will reference Contract No. 15-LC-20-0731, and the Caltrans contract number assigned during acquisitions, in the description portion of the endorsement form.

13. COVENANT AGAINST CONTINGENT FEES. Caltrans warrants that no person or agency has been employed or retained to solicit or secure this Permit upon an agreement or understanding for a commission, percentage, brokerage or contingent fee excepting bona fide employees or bona fide established commercial or selling agencies maintained by Caltrans for the purpose of securing businesses. For breach or violation of this warranty, Reclamation shall have the right to annul this Permit without liability, or at its discretion require Caltrans to pay, in addition to consideration for this Permit, the full amount of such commission, percentage or brokerage or contingent fee to Reclamation.

14. OFFICIALS NOT TO BENEFIT. No member of or delegate to Congress shall be admitted to any share or part of any contract or agreement made, entered into, or accepted by or on behalf of Reclamation, or to any benefit to arise thereupon.

15. SEVERABILITY. Each provision of this Permit shall be interpreted in such a manner as to be valid under applicable law, but if any provision of this Permit shall be deemed or determined by competent authority to be invalid or prohibited hereunder, such provision shall be ineffective and void only to the extent of such invalidity or prohibition, but shall not be deemed ineffective or invalid as to the remainder of such provision or any other remaining provisions, or of this Permit as a whole.

\
\
\
\
\
\
\

IN WITNESS WHEREOF, the parties hereto have caused this Permit to be executed the day and year first above written.

UNITED STATES, BUREAU OF RECLAMATION

By: _____
~~Deputy~~ Area Manager
South-Central California Area Office
Mid-Pacific Region

ACCEPTANCE:

State of California, Department of Transportation (Caltrans), and its authorized representative(s), by signature below, agrees to the terms and conditions above.

By: _____
Sharri Bender Ehlert, District 6 Director
State of California, Department of Transportation

NOTED:

State of California, Department of Water Resources (DWR), and its authorized representative(s), by signature below, acknowledges the terms and conditions above.

By: _____ 3/14/16
James Thomas, Chief, San Luis Field Division
State of California, Department of Water Resources

SCC-454

EXHIBIT A

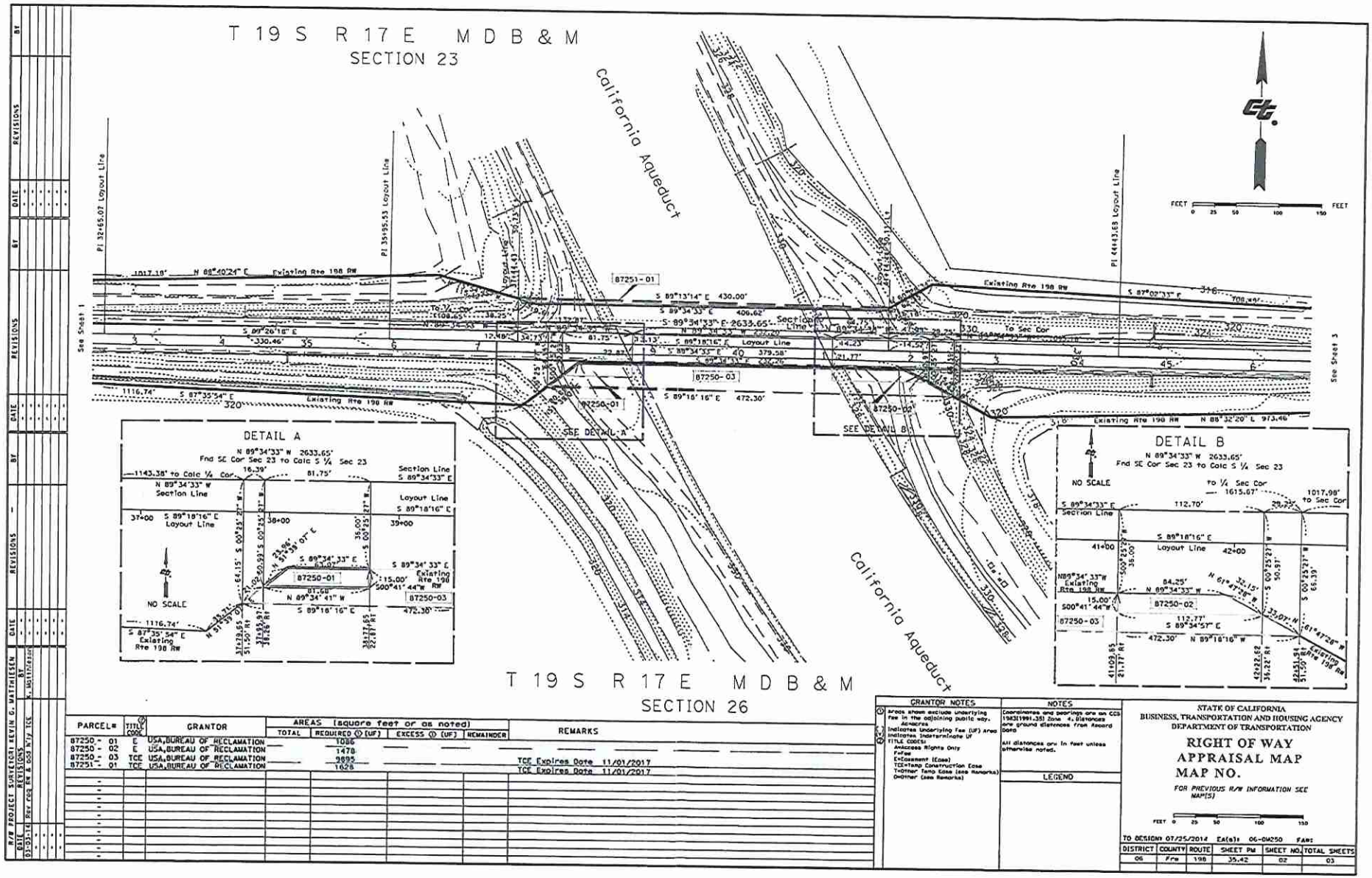

PARCEL#	TITLE CODE	GRANTOR	AREAS (square feet or as noted) TOTAL	REQUIRED (1) (UF)	EXCESS (1) (UF)	REMAINDER	REMARKS
87250 - 01	E	USA,BUREAU OF RECLAMATION		1086			
87250 - 02	E	USA,BUREAU OF RECLAMATION		1470			
87250 - 03	TCE	USA,BUREAU OF RECLAMATION		3895			TCE Expires Date 11/01/2017
87251 - 01	TCE	USA,BUREAU OF RECLAMATION		1626			TCE Expires Date 11/01/2017

GRANTOR NOTES

(1) Areas shown exclude underlying fee in the adjoining public way.

REMARKS

Indicates Underlying Fee (UF) Area
Indicates Indeterminate UF
TITLE CODES:
A=Access Rights Only
F=Fee
E=Easement (Ease)
TCE=Temp Construction Ease
T=Other Temp Ease (see Remarks)
O=Other (see Remarks)

NOTES

Coordinates and bearings are on CCS 1983(1991.35) Zone 4. Distances are ground distances from Record Data.

All distances are in feet unless otherwise noted.

LEGEND

STATE OF CALIFORNIA
BUSINESS, TRANSPORTATION AND HOUSING AGENCY
DEPARTMENT OF TRANSPORTATION

RIGHT OF WAY APPRAISAL MAP
MAP NO.

FOR PREVIOUS R/W INFORMATION SEE MAP(S)

FEET 0 25 50 100 150

TO DESIGN: 07/25/2014 Ea(s): 06-04250 FAN:

DISTRICT	COUNTY	ROUTE	SHEET PM	SHEET NO.	TOTAL SHEETS
06	Fre	198	35.42	02	03

R/W PROJECT SURVEYOR: KEVIN G. MATHIESEN

DATE	BY	REVISIONS
03/07/14		Rev Eng Rev & Cost W/P TCE

EXHIBIT B

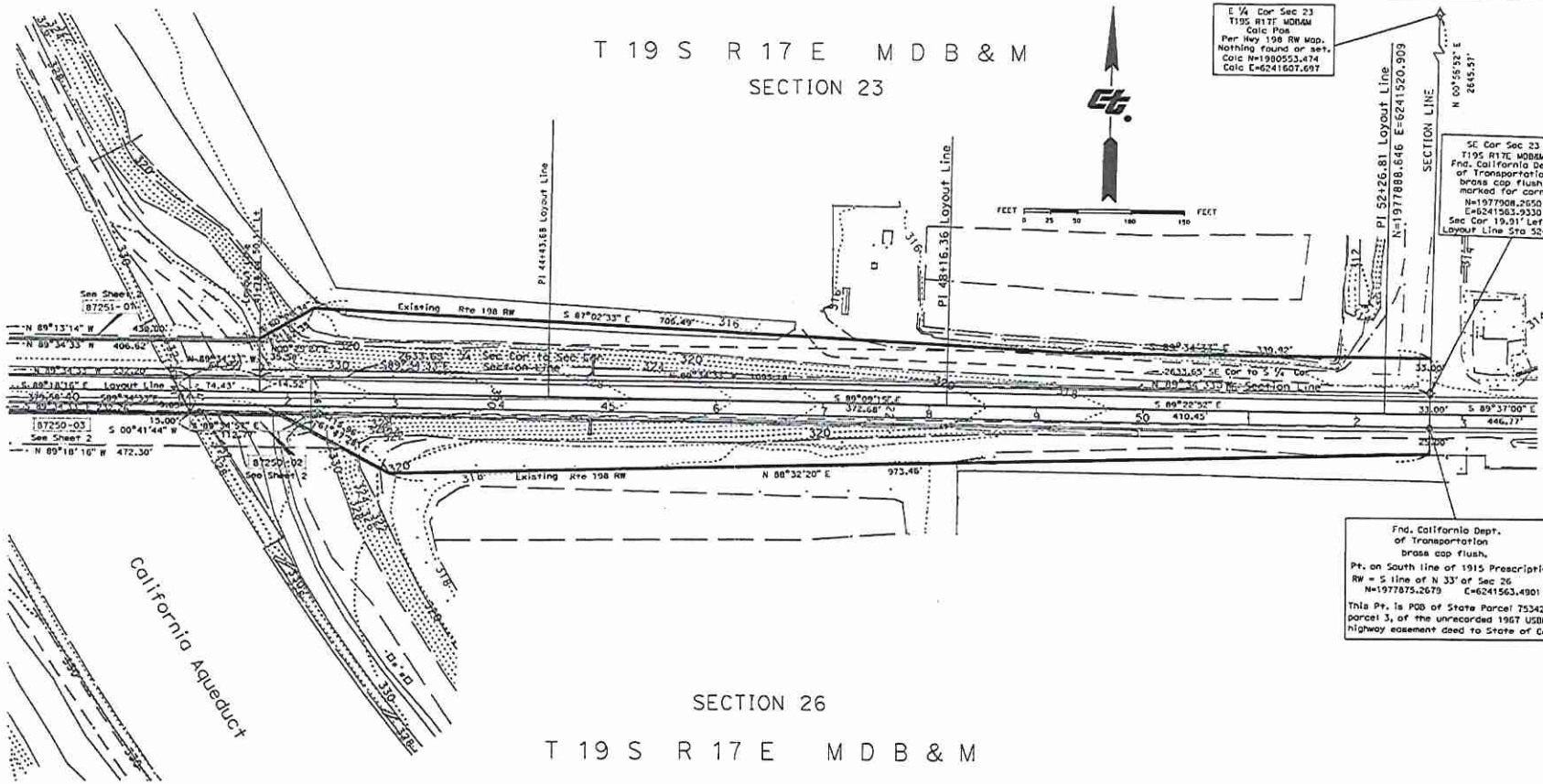

PARCEL#	TITLE CODE	GRANTOR	AREAS (square feet or as noted) TOTAL	REQUIRED ① (UF)	EXCESS ① (UF)	REMAINDER	REMARKS
87250-02	E	USA,BUREAU OF RECLAMATION		1478			
87250-03	TCE	USA,BUREAU OF RECLAMATION		9895			TCE Expires Date 11/01/2017
87251-01	TCE	USA,BUREAU OF RECLAMATION		1628			TCE Expires Date 11/01/2017

GRANTOR NOTES

① Areas shown exclude underlying fee in the adjoining public way. Acreage
Indicates Underlying Fee (UF) Area
Indicates Indeterminate UF
TITLE CODES:
Ap=Access Rights Only
F=Fee
E=Easement (Ease)
TCE=Temp Construction Ease
T=Other Temp Ease (see Remarks)
O=Other (see Remarks)

NOTES

Coordinates and bearings are on CCS 1983(1991.35) Zone 4. Distances are ground distances from Record Data
All distances are in feet unless otherwise noted.

LEGEND

Found Sec Corner
Per Record Data
Sec Corner Found As Described

¼ Sec Corner
Loc Per Corners Records
Nothing Fnd Or Set
Loc For Information Only

Found State Rd Corner
Per Record Data
Corner Found As Described

STATE OF CALIFORNIA
BUSINESS, TRANSPORTATION AND HOUSING AGENCY
DEPARTMENT OF TRANSPORTATION

RIGHT OF WAY APPRAISAL MAP
MAP NO.

FOR PREVIOUS R/W INFORMATION SEE MAP(S)

FEET 0 25 50 100 150

TO DESIGN: 07/25/2014 EA(s): 06-0W250 F.A.#:

DISTRICT	COUNTY	ROUTE	SHEET PM	SHEET NO.	TOTAL SHEETS
06	Fre	198	35.50	03	03

R/W PROJECT SURVEYORS: KEVIN G. WATHNEESEN

DATE	REVISIONS	BY
03-05-14	Rev Ess R/W & Ccd N/Y, TCE	K. Wathneesen

EXHIBIT C

Caltrans Parcel 87250 -1

For State Highway Easement purposes, that portion of the northeast quarter of Section 26, Township 19 South, Range 17 East, Mount Diablo Base and Meridian, being with in the Central Valley Project's San Luis Canal, and a portion of the California Aqueduct, said portion being described as follows:

1) Commencing at the north quarter corner of said Section 26, said quarter corner bears, North 89° 34' 33" West, 2633.65 feet, from the northeast corner of said Section 26; Thence,

2) South 89° 34' 33" East, 1159.77 feet, along the north line of said Section 26; Thence,

3) South 00° 25' 27" West, 50.99 feet to a point on the southerly right of way line of State Route 198 joint use right of way with the California Aqueduct right of way as shown in Parcels 5 and 8 of a unrecorded deed from United States Bureau of Reclamation signed on February 4, 1966, said point being the Point of Beginning for this description; Thence,

4) Leaving last said joint use right of way line, South 89° 34' 41" East, 81.68 feet; Thence,

5) North 00° 41' 44" East, 15.00 feet to said southerly right of way line of State Route 198 joint use right of way with the California Aqueduct right of way; Thence,

6) North 89° 34' 33" West, 63.07 feet, along said State Route 198 joint use right of way to angle point in said joint use right of way; Thence,

7) South 51° 39' 07" West, 23.96 feet, continuing along last said State Route 198 joint use right of way, to the Point of Beginning.

Required State Highway Easement area containing 1086 square feet more or less.

The bearings used in this description are on the California Coordinate System of 1983, epoch 1991.35, Zone 4. Distances are ground distances and area is ground area.

This real property description has been prepared by me, or under my direction, in conformance with the Professional Land Surveyors Act.

Signature: Karin Woodson Matthiesen
Professional Land Surveyor

Date: August 26, 2014

PROFESSIONAL LAND SURVEYOR
KARIN WOODSON MATTHIESEN
Exp. 12/31/14
No. 5843
STATE OF CALIFORNIA

EXHIBIT C

Caltrans Parcel 87251 -1

For temporary construction easement purposes, that portion of the southeast quarter of Section 23, Township 19 South, Range 17 East, Mount Diablo Base and Meridian, being with in the Central Valley Project's San Luis Canal, and a portion of the California Aqueduct, said portion being described as follows:

1) Commencing at the south quarter corner of said Section 23, said quarter corner bears, North 89° 34' 33" West, 2633.65 feet, from the southeast corner of Section 23; Thence,

2) South 89° 34' 33" East, 1108.65 feet, along the south line of said Section 23; Thence,

3) North 00° 25' 27" East, 38.25 feet to a point on the northerly right of way line of State Route 198 joint use right of way with the California Aqueduct right of way as shown in Parcels 5, 6, and 7 of a unrecorded deed from United States Bureau of Reclamation signed on February 4, 1966, said point being the Point of Beginning for this description; Thence,

4) Leaving last said joint use right of way line, South 89° 13' 14" East, 430.00 feet to said northerly right of way line of State Route 198 joint use right of way with the California Aqueduct right of way; Thence,

5) South 60° 28' 34" West, 5.18 feet along said State Route 198 joint use right of way to angle point in said joint use right of way; Thence,

6) North 89° 34' 33" West, 406.62 feet, continuing along last said State Route 198 joint use right of way, to angle point in said joint use right of way; Thence,

7) North 73° 54' 45" West, 19.61 feet, continuing along last said State Route 198 joint use right of way, to the Point of Beginning.

Required temporary construction easement area containing 1628 square feet more or less.

Said easement shall remain in effect until such time as the construction of the adjoining State highway facility is completed and public traffic is routed thereon and in any event shall cease and terminate not later than November 01, 2017.

The bearings used in this description are on the California Coordinate System of 1983, epoch 1991.35, Zone 4. Distances are ground distances and area is ground area.

This real property description has been prepared by me, or under my direction, in conformance with the Professional Land Surveyors Act.

Signature: Kevin Gordon Matthiesen
Professional Land Surveyor

Date: August 26, 2014

PROFESSIONAL LAND SURVEYOR
KEVIN GORDON MATTHIESEN
Exp. 12/31/14
No.5943
STATE OF CALIFORNIA

EXHIBIT D

Caltrans Parcel 87250 -2

For State Highway Easement purposes, that portion of the northeast quarter of Section 26, Township 19 South, Range 17 East, Mount Diablo Base and Meridian, being with in the Central Valley Project's San Luis Canal, and a portion of the California Aqueduct, said portion being described as follows:

1) Commencing at the north quarter corner of said Section 26, said quarter corner bears, North 89° 34' 33" West, 2633.65 feet, from the northeast corner of said Section 26; Thence,

2) South 89° 34' 33" East, 1586.42 feet, along the north line of said Section 26; Thence,

3) South 00° 25' 27" West, 50.97 feet to a point on the southerly right of way line of State Route 198 joint use right of way with the California Aqueduct right of way as shown in Parcels 5 and 8 of a unrecorded deed from United States Bureau of Reclamation signed on February 4, 1966, said point being the Point of Beginning for this description; Thence,

4) Leaving last said joint use right of way line, North 89° 34' 57" West, 112.77 feet; Thence,

5) North 00° 41' 44" East, 15.00 feet to said southerly right of way line of State Route 198 joint use right of way with the California Aqueduct right of way; Thence,

6) South 89° 34' 33" East, 84.25 feet, along said State Route 198 joint use right of way to angle point in said joint use right of way; Thence,

7) South 61° 47' 28" East, 32.15 feet, continuing along last said State Route 198 joint use right of way, to the Point of Beginning.

Required State Highway Easement area containing 1478 square feet more or less.

The bearings used in this description are on the California Coordinate System of 1983, epoch 1991.35, Zone 4. Distances are ground distances and area is ground area.

This real property description has been prepared by me, or under my direction, in conformance with the Professional Land Surveyors Act.

Signature: Kevin Gordon Matthiesen
Professional Land Surveyor

Date: August 26, 2014

CALIFORNIA LAND SURVEYOR
KEVIN GORDON MATTHIESEN
Exp. 12/31/14
No. 8943
STATE OF CALIFORNIA

EXHIBIT E

Caltrans Parcel 87250 -3

For temporary construction easement purposes, that portion of the northeast quarter of Section 26, Township 19 South, Range 17 East, Mount Diablo Base and Meridian, being with in the Central Valley Project's San Luis Canal, and a portion of the California Aqueduct, said portion being described as follows:

1) Commencing at the north quarter corner of said Section 26, said quarter corner bears, North 89° 34' 33" West, 2633.65 feet, from the northeast corner of said Section 26; Thence,

2) South 89° 34' 33" East, 1143.38 feet, along the north line of said Section 26; Thence,

3) South 00° 25' 27" West, 64.15 feet to a point on the southerly right of way line of State Route 198 joint use right of way with the California Aqueduct right of way as shown in Parcels 5 and 8 of a unrecorded deed from United States Bureau of Reclamation signed on February 4, 1966, said point being the Point of Beginning for this description; Thence,

4) Leaving last said joint use right of way line, South 89° 18' 16" East, 472.30 feet to said southerly right of way line of State Route 198 joint use right of way with the California Aqueduct right of way; Thence,

5) North 61° 47' 28" West, 33.07 feet, along said State Route 198 joint use right of way; Thence,

6) Leaving last said joint use right of way line, North 89° 34' 57" West, 112.77 feet; Thence,

7) North 00° 41' 44" East, 15.00 feet to said southerly right of way line of State Route 198 joint use right of way with the California Aqueduct right of way; Thence,

8) North 89° 34' 33" West, 232.26 feet, along said State Route 198 joint use right of way; Thence,

9) Leaving last said joint use right of way line, South 00° 41' 44" West, 15.00 feet; Thence,

Continued on next page.

EXHIBIT E

Continued

Caltrans Parcel 87250 -3

10) North 89° 34' 41" West, 81.68 feet to said southerly right of way line of State Route 198 joint use right of way with the California Aqueduct right of way; Thence,

11) South 51° 39' 07" West, 21.02 feet along said State Route 198 joint use right of way to the Point of Beginning.

Required temporary construction easement area containing 9895 square feet more or less.

Said easement shall remain in effect until such time as the construction of the adjoining State highway facility is completed and public traffic is routed thereon and in any event shall cease and terminate not later than November 01, 2017.

The bearings used in this description are on the California Coordinate System of 1983, epoch 1991.35, Zone 4. Distances are ground distances and area is ground area.

This real property description has been prepared by me, or under my direction, in conformance with the Professional Land Surveyors Act.

Signature: Kevin Gordon Matthiesen
Professional Land Surveyor

Date: August 26, 2014

PROFESSIONAL LAND SURVEYOR
KEVIN GORDON MATTHIESEN
Exp. 12/31/14
No. 8943
STATE OF CALIFORNIA

EXHIBIT F

DIST	COUNTY	ROUTE	POST MILES TO"AL PROJECT	SHEET No.	TOTAL SHEETS
06	Fre	198	35.3/35.6		

REGISTERED CIVIL ENGINEER — DATE 1-28-16

PLANS APPROVAL DATE

REGISTERED PROFESSIONAL ENGINEER — HILARIO TUAZON Jr. No. C83114 Exp. 03-31-17 CIVIL — STATE OF CALIFORNIA

The State of California or its officers or agents shall not be responsible for the accuracy or completeness of scanned copies of this plan sheet.

NOTES:

1. Temporary Railing (Type K), see Roadway Plans.
2. Remove and salvage existing Type 1 Barrier Railing, and place California ST-10 Bridge Rail Modified.
3. Place Joint Seal (MR=1").
4. Place Joint Seal (MR=2").
5. Paint "CALIFORNIA AQUEDUCT BRIDGE".
6. Paint "Bridge No. 42-0270".
7. Closure pour placed at the end of Stage 2 construction.
8. Match existing Cross-Slope.
9. Match existing Profile Grade +1".
10. 3 inch conduit, see "ELECTRICAL PLANS".

LEGEND:

- Indicates Bridge Removal (Portion)
- Indicates existing structure
- Indicates new construction
- Indicates water level

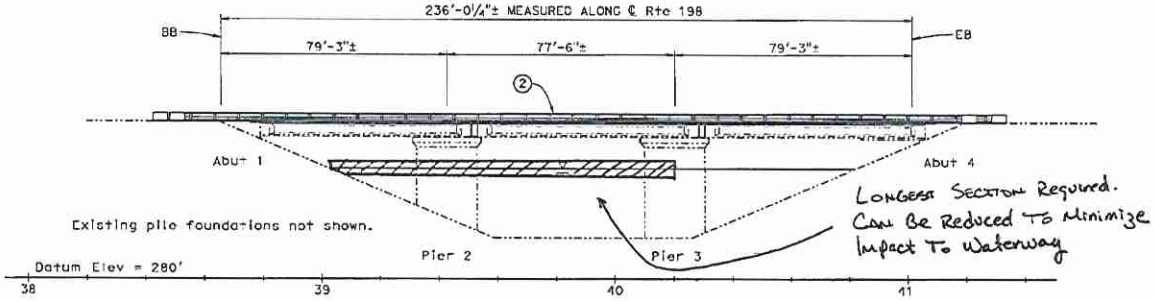

ELEVATION
1" = 20'

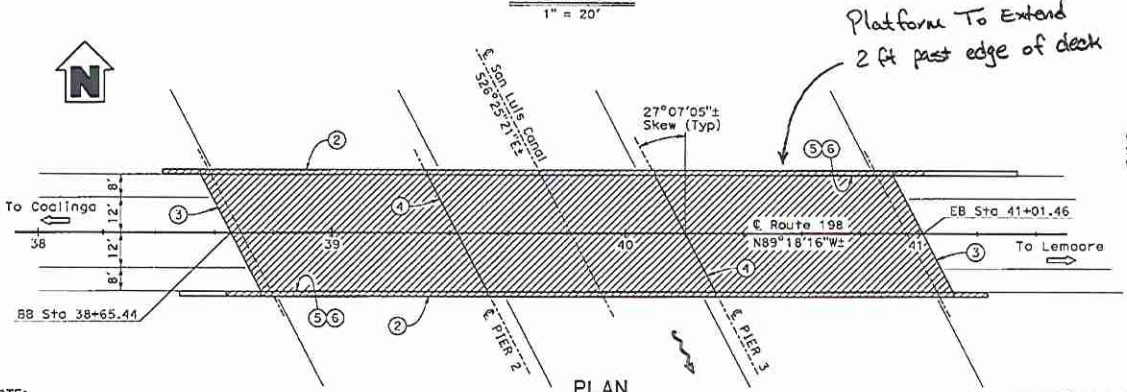

PLAN
1" = 20'

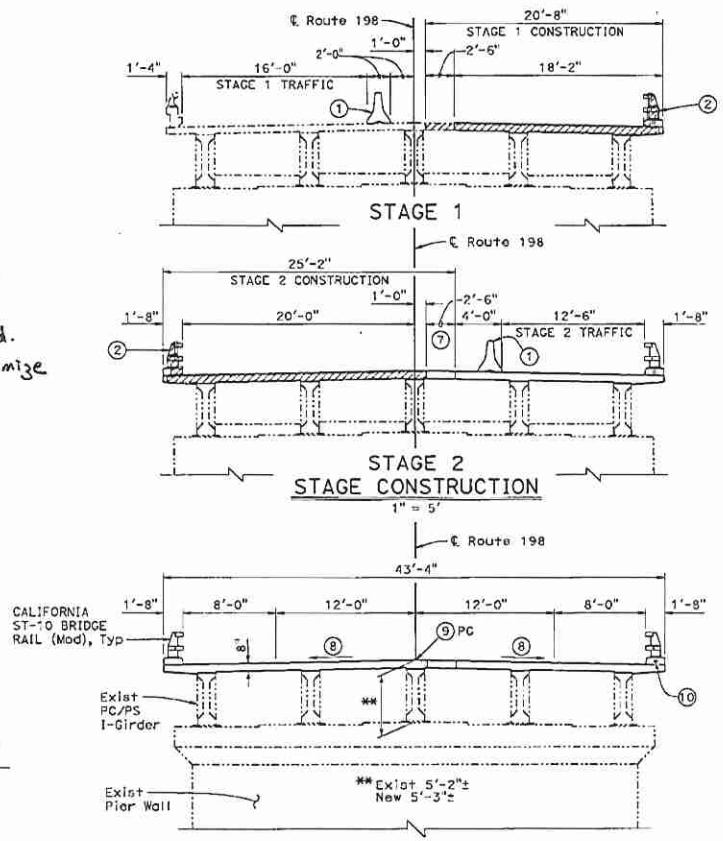

TYPICAL SECTION
1" = 5'

NOTE:
VERIFY ALL CONTROLLING FIELD DIMENSIONS BEFORE ORDERING OR FABRICATING ANY MATERIAL.

FOR GENERAL NOTES SEE "INDEX TO PLANS" SHEET.

GARY BLAKESLEY, DESIGN ENGINEER	DESIGN — BY H. TUAZON	CHECKED E. RUFINO	LOAD & RESISTANCE FACTOR DESIGN	SEE GENERAL NOTE.	
	DETAILS — BY P. SILVA	CHECKED E. RUFINO	LAYOUT — BY P. SILVA	CHECKED H. TUAZON	
	QUANTITIES — BY H. TUAZON	CHECKED E. RUFINO	SPECIFICATIONS — BY S. NELAPATLA	PLANS AND SPECS COORDINATION S. NELAPATLA	

STATE OF CALIFORNIA
DEPARTMENT OF TRANSPORTATION

DIVISION OF ENGINEERING SERVICES
STRUCTURE DESIGN
DESIGN BRANCH 6

BRIDGE NO. 42-0270
POST MILE 35.4

CALIFORNIA AQUEDUCT BRIDGE DECK REHABILITATION
GENERAL PLAN

ORIGINAL SCALE IN INCHES FOR REDUCED PLANS 0 1 2 3

UNIT: 3591
PROJECT NUMBER & PHASE: 0612000096 1
CONTRACT NO.: 06-0M2504

DISREGARD PRINTS BEARING EARLIER REVISION DATES

REVISION DATES 10-16-14 10-16-14 10-16-15 10-16-15

SHEET 1 OF 9

FILE => 42-0270-0-gp-01.dgn

STRUCTURES DESIGN GENERAL PLAN SHEET (DWG 1541) (REV.09-01-16)

EXHIBIT F

DIST	COUNTY	ROUTE	POST MILES TOTAL PROJECT	SHEET No.	TOTAL SHEETS
06	Fre	198	35.3/35.6		

REGISTERED CIVIL ENGINEER — DATE 1-28-16

PLANS APPROVAL DATE

REGISTERED PROFESSIONAL ENGINEER — HILARIO TUAZON Jr. — No. C83114 — Exp. 03-31-17 — CIVIL — STATE OF CALIFORNIA

The State of California or its officers or agents shall not be responsible for the accuracy or completeness of scanned copies of this plan sheet.

INDEX TO PLANS

SHEET NO.	TITLE
1.	GENERAL PLAN
2.	INDEX TO PLANS
3.	ABUTMENT DETAILS NO. 1
4.	ABUTMENT DETAILS NO. 2
5.	ABUTMENT DETAILS NO. 3
6.	PIER DETAILS
7.	TYPICAL SECTION No. 1
8.	TYPICAL SECTION No. 2
9.	GIRDER LAYOUT

QUANTITIES

SALVAGE METAL BRIDGE RAILING	520 LF
BRIDGE REMOVAL (PORTION)	LUMP SUM
STRUCTURE EXCAVATION (BRIDGE)	36 CY
STRUCTURE BACKFILL (BRIDGE)	22 CY
STRUCTURAL CONCRETE, BRIDGE	7 CY
STRUCTURAL CONCRETE, BRIDGE (POLYMER FIBER)	269 CY
JOINT SEAL (MR=1")	100 LF
JOINT SEAL (MR=2")	100 LF
BAR REINFORCING STEEL (BRIDGE)	67,653 LB
CALIFORNIA ST-10 BRIDGE RAIL (MODIFIED)	567 LF

GENERAL NOTES
LOAD AND RESISTANCE FACTOR DESIGN

DESIGN OF NEW STRUCTURE CONPONENTS; DECK
AASHTO LRFD Bridge Design Specifications, 2012, and the California Amendments dated January 2014

DEAD LOAD:

Does not include provisions for future wearing surface.

LIVE LOADING:

HL93 with "low boy" and Permit Design Vehicle.

SEISMIC:

No seismic analysis was performed.

REINFORCED CONCRETE:

f_y = 60,000 psi
f'_c = 4,000 psi

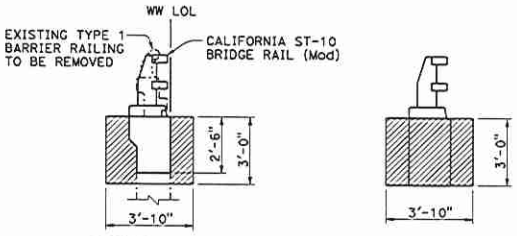

SECTION A-A — EXCAVATION — SECTION B-B

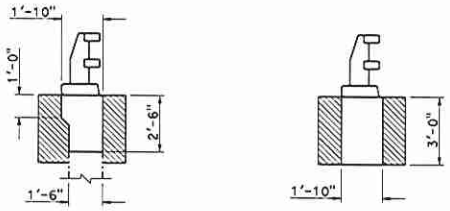

SECTION A-A — BACKFILL — SECTION B-B

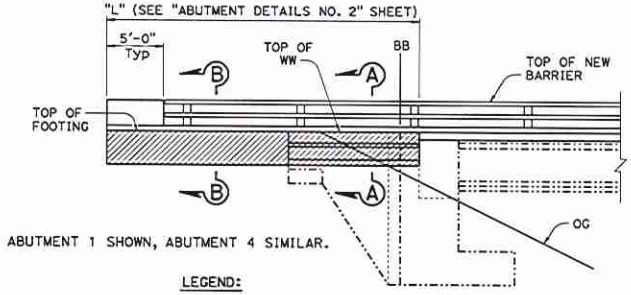

ABUTMENT 1 SHOWN, ABUTMENT 4 SIMILAR.

LEGEND:

- Indicates existing structure
- Indicates new construction
- Structure Excavation (Bridge)
- Structure Backfill (Bridge)

LIMITS OF EXCAVATION AND BACKFILL
NO SCALE

2010 STANDARD PLANS

A10A	ABBREVIATIONS (SHEET 1 OF 2)
A10B	ABBREVIATIONS (SHEET 2 OF 2)
A10C	LINES AND SYMBOLS (SHEET 1 OF 3)
A10D	LINES AND SYMBOLS (SHEET 2 OF 3)
A10E	LINES AND SYMBOLS (SHEET 3 OF 3)
B0-1	BRIDGE DETAILS
B0-3	BRIDGE DETAILS
B0-5	BRIDGE DETAILS
RSP B6-21	JOINT SEALS (MAXIMUM MOVEMENT RATING = 2")
RSP B11-68	CALIFORNIA ST-10 BRIDGE RAIL (SHEET 1 OF 3)
B11-69	CALIFORNIA ST-10 BRIDGE RAIL (SHEET 2 OF 3)
RSP B11-70	CALIFORNIA ST-10 BRIDGE RAIL (SHEET 3 OF 3)

STANDARD PLAN SHEET No.
DETAIL No.

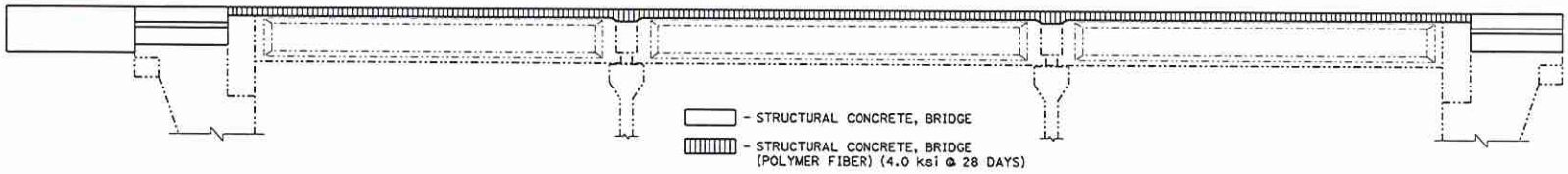

CONCRETE STRENGTH AND TYPE LIMITS

	BY	CHECKED
DESIGN	H. TUAZON	E. RUFINO
DETAILS	K. CHONKRIA	E. RUFINO
QUANTITIES	H. TUAZON	E. RUFINO

STATE OF CALIFORNIA — DEPARTMENT OF TRANSPORTATION

DIVISION OF ENGINEERING SERVICES — STRUCTURE DESIGN — DESIGN BRANCH 6

BRIDGE NO. 42-0270 — POST MILE 35.4

CALIFORNIA AQUEDUCT BRIDGE DECK REHABILITATION

INDEX TO PLANS

STRUCTURES DESIGN DETAIL SHEET (ENGLISH) (REV. 09-01-10)

ORIGINAL SCALE IN INCHES FOR REDUCED PLANS 0 1 2 3

UNIT: 3591
PROJECT NUMBER & PHASE: 0612000096 1 — CONTRACT NO.: 06-0M2504

DISREGARD PRINTS BEARING EARLIER REVISION DATES — REVISION DATES 10-28-14 10-28-14 10-28-14 12-1-15

SHEET 2 OF 9

FILE => 42-0270-a-ifp.dgn

EXHIBIT F

DIST	COUNTY	ROUTE	POST MILES TOTAL PROJECT	SHEET No.	TOTAL SHEETS
06	Fre	198	35.3/35.6		

REGISTERED CIVIL ENGINEER — DATE 1-28-16

PLANS APPROVAL DATE

The State of California or its officers or agents shall not be responsible for the accuracy or completeness of scanned copies of this plan sheet.

REGISTERED PROFESSIONAL ENGINEER — HILARIO TUAZON JR. No. C83114 Exp. 03-31-17 CIVIL — STATE OF CALIFORNIA

NOTES:

1. Match expansion joint gaps in bridge railing with that of deck joints.
2. Roughen existing-to-new concrete interfaces to 1/4" amplitude.

LEGEND:

- Denotes Bridge Removal (Portion)
- Denotes existing structure
- Denotes new construction

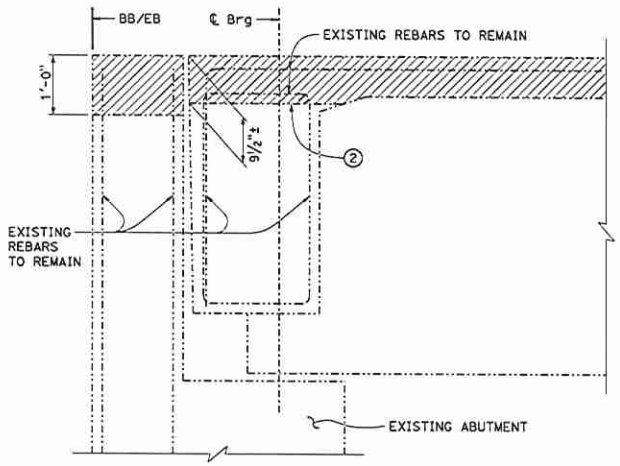

END DIAPHRAGM AND BACKWALL (REMOVAL)

1" = 1'-0"

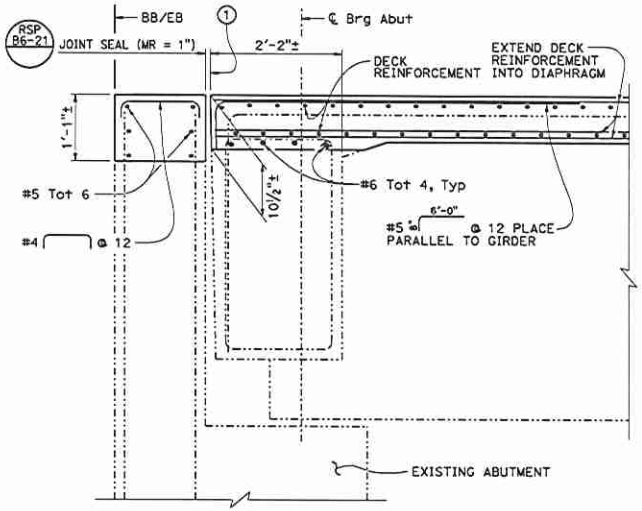

END DIAPHRAGM AND BACKWALL

1" = 1'-0"

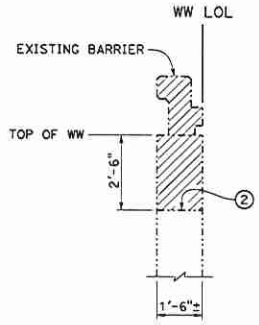

SECTION D-D

1/2" = 1'-0"

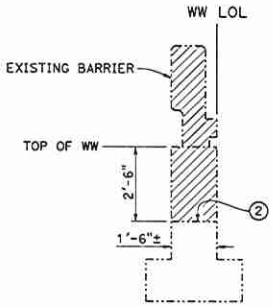

SECTION C-C

1/2" = 1'-0"

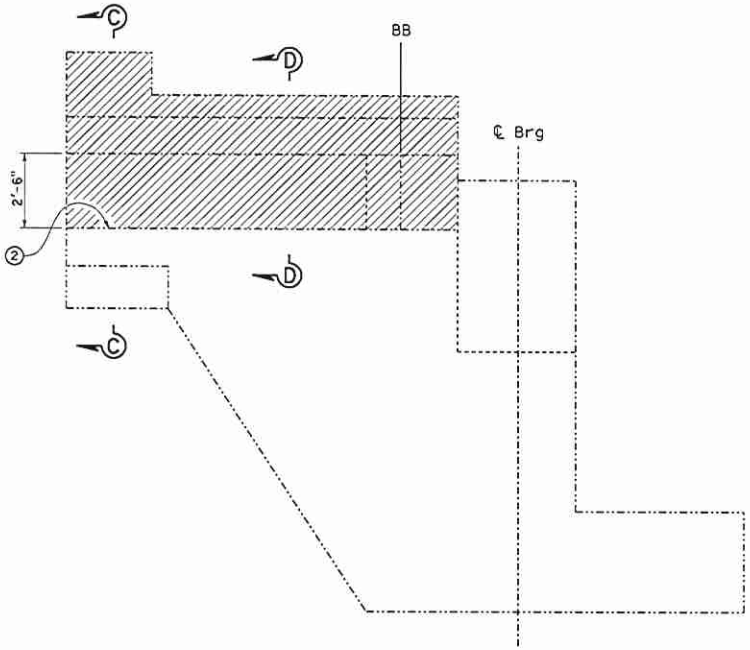

ABUTMENT ELEVATION - (REMOVAL)

1/2" = 1'-0"

ABUTMENT 1 SHOWN, ABUTMENT 4 SIMILAR.

DESIGN	BY H. TUAZON	CHECKED E. RUFINO	
DETAILS	BY K. CHONKRIA, P. SILVA	CHECKED E. RUFINO	
QUANTITIES	BY H. TUAZON	CHECKED E. RUFINO	

STATE OF CALIFORNIA
DEPARTMENT OF TRANSPORTATION

DIVISION OF ENGINEERING SERVICES
STRUCTURE DESIGN
DESIGN BRANCH 6

BRIDGE NO. 42-0270
POST MILE 35.4

CALIFORNIA AQUEDUCT BRIDGE DECK REHABILITATION
ABUTMENT DETAILS NO. 1

STRUCTURES DESIGN DETAIL SHEET (ENGLISH) (REV. 09-01-10)

ORIGINAL SCALE IN INCHES FOR REDUCED PLANS 0 1 2 3

UNIT: 3591
PROJECT NUMBER & PHASE: 0612000096 1
CONTRACT NO.: 06-0M2504

DISREGARD PRINTS BEARING EARLIER REVISION DATES → 15-01-14 15-01-14 17-01-14 17-10-15

SHEET 3 OF 9

FILE => 42-0270-F-001-001.dgn

EXHIBIT F

DIST	COUNTY	ROUTE	POST MILES TOTAL PROJECT	SHEET No.	TOTAL SHEETS
06	Fre	198	35.3/35.6		

REGISTERED CIVIL ENGINEER 1-28-16 DATE

PLANS APPROVAL DATE

The State of California or its officers or agents shall not be responsible for the accuracy or completeness of scanned copies of this plan sheet.

REGISTERED PROFESSIONAL ENGINEER HILARIO TUAZON JR. No. C83114 Exp. 03-31-17 CIVIL STATE OF CALIFORNIA

LEGEND

- Indicates Bridge Removal (Portion)
- Indicates existing structure
- Indicates new construction

NOTES:

1. For Sections E-E, F-F, G-G and H-H, see "ABUTMENT DETAILS NO. 3".
2. Match expansion joint gaps (1"±) in bridge railing with that of deck joints.

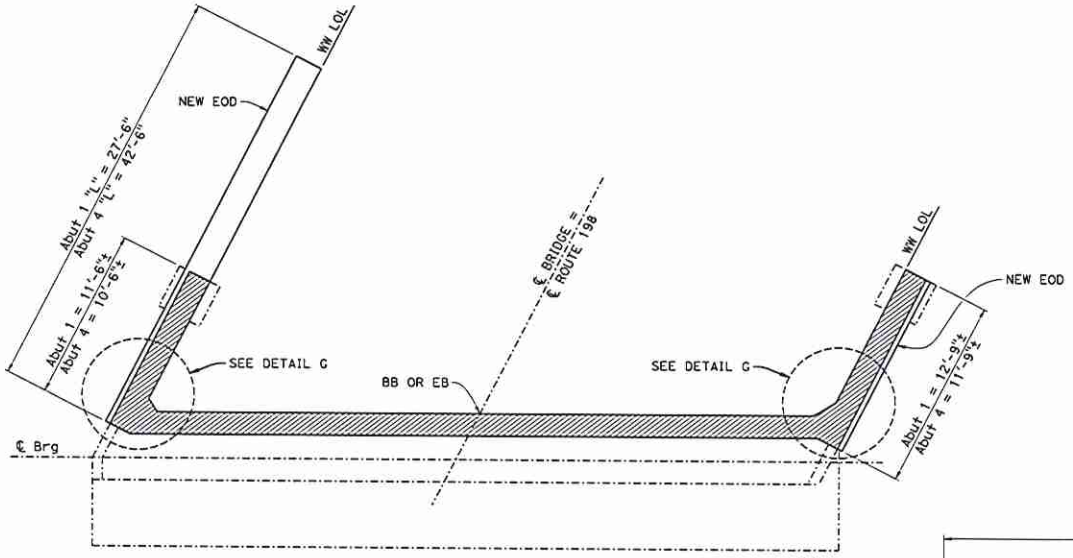

PLAN

1/4" = 1'-0"

ABUTMENT 1 SHOWN, ABUTMENT 4 SIMILAR.

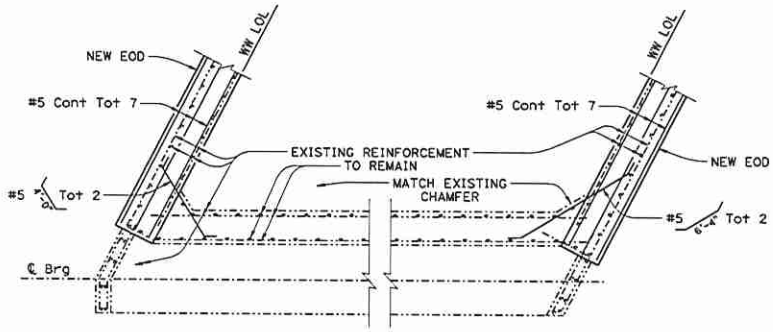

DETAIL G

1/4" = 1'-0"

ABUTMENT 1 SHOWN, ABUTMENT 4 SIMILAR.

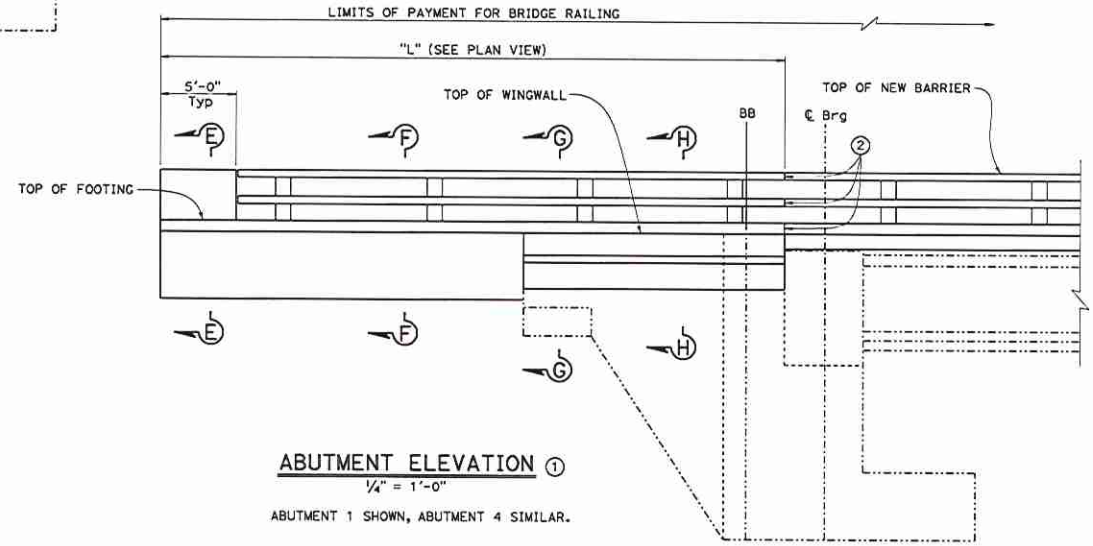

ABUTMENT ELEVATION 1

1/4" = 1'-0"

ABUTMENT 1 SHOWN, ABUTMENT 4 SIMILAR.

DESIGN	BY H. TUAZON	CHECKED E. RUFINO	
DETAILS	BY K. CHONKRIA	CHECKED E. RUFINO	
QUANTITIES	BY H. TUAZON	CHECKED E. RUFINO	

STATE OF CALIFORNIA
DEPARTMENT OF TRANSPORTATION

DIVISION OF ENGINEERING SERVICES
STRUCTURE DESIGN
DESIGN BRANCH 6

BRIDGE NO. 42-0270
POST MILE 35.4

CALIFORNIA AQUEDUCT BRIDGE DECK REHABILITATION
ABUTMENT DETAILS NO. 2

STRUCTURES DESIGN DETAIL SHEET (ENGLISH) (REV. 09-01-10)

ORIGINAL SCALE IN INCHES FOR REDUCED PLANS 0 1 2 3

UNIT: 3591
PROJECT NUMBER & PHASE: 0612000096 1
CONTRACT NO.: 06-0M2504

DISREGARD PRINTS BEARING EARLIER REVISION DATES 10-30-14 10-30-14 10-30-14 12-10-15

SHEET 4 OF 9

FILE => 42-0270-F-001-F02.dgn

EXHIBIT F

DIST	COUNTY	ROUTE	POST MILES TOTAL PROJECT	SHEET No.	TOTAL SHEETS
06	Fre	198	35.3/35.6		

REGISTERED CIVIL ENGINEER — DATE 1-28-16

PLANS APPROVAL DATE

REGISTERED PROFESSIONAL ENGINEER — HILARIO TUAZON JR. — No. C83114 — Exp. 03-31-17 — CIVIL — STATE OF CALIFORNIA

The State of California or its officers or agents shall not be responsible for the accuracy or completeness of scanned copies of this plan sheet.

LEGEND:

- Indicates existing structure
- Indicates new construction

NOTES:

1. Haunch must be on outside face of WW.
2. Roughen existing-to-new concrete interfaces to 1/4" amplitude.

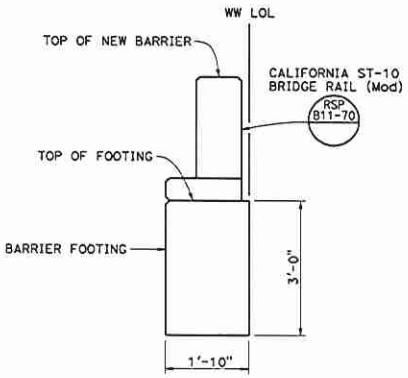

SECTION E-E
3/4" = 1'-0"

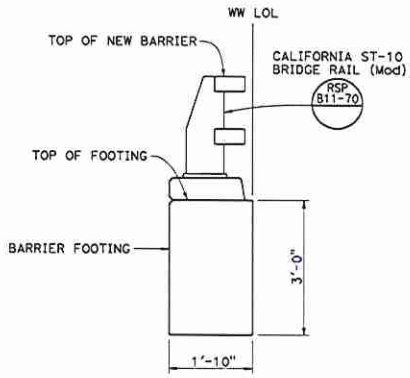

SECTION F-F
3/4" = 1'-0"

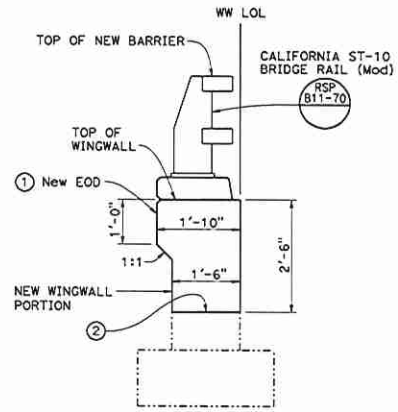

SECTION G-G
3/4" = 1'-0"

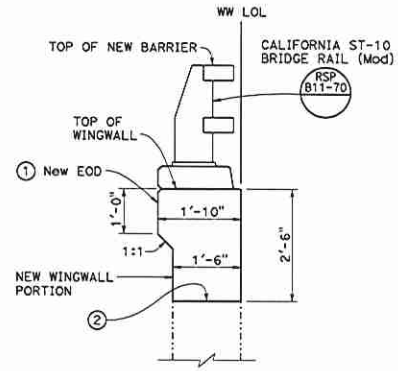

SECTION H-H
3/4" = 1'-0"

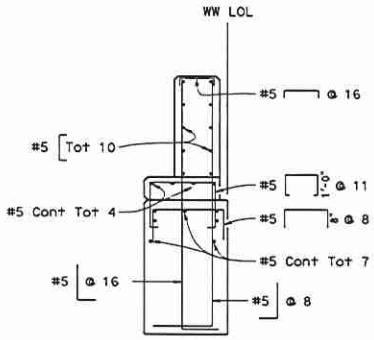

SECTION E-E
3/4" = 1'-0"

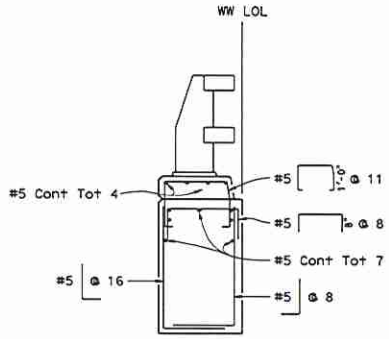

SECTION F-F
3/4" = 1'-0"

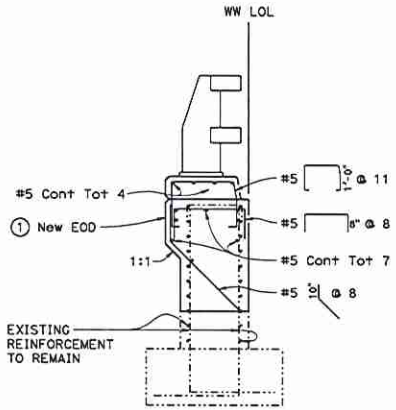

SECTION G-G
3/4" = 1'-0"

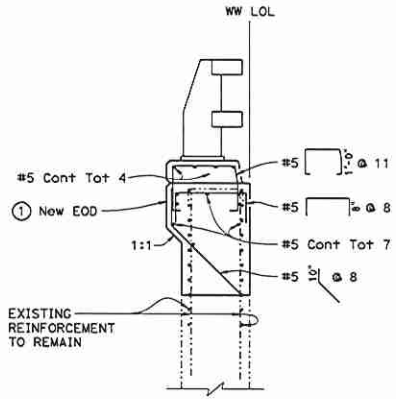

SECTION H-H
3/4" = 1'-0"

DESIGN	BY H. TUAZON	CHECKED E. RUFINO	
DETAILS	BY P. SILVA	CHECKED E. RUFINO	
QUANTITIES	BY H. TUAZON	CHECKED E. RUFINO	

STATE OF CALIFORNIA
DEPARTMENT OF TRANSPORTATION

DIVISION OF ENGINEERING SERVICES
STRUCTURE DESIGN
DESIGN BRANCH 6

BRIDGE NO. 42-0270
POST MILE 35.4

CALIFORNIA AQUEDUCT BRIDGE DECK REHABILITATION
ABUTMENT DETAILS NO. 3

STRUCTURES DESIGN DETAIL SHEET (ENGLISH) (REV. 09-01-10)

ORIGINAL SCALE IN INCHES FOR REDUCED PLANS 0 1 2 3

UNIT: 3591
PROJECT NUMBER & PHASE: 0612000096 1
CONTRACT NO.: 06-0M2504

DISREGARD PRINTS BEARING EARLIER REVISION DATES

REVISION DATES 12-18-15

SHEET 5 OF 9

FILE => 42-0270-F-a01d03.dgn

EXHIBIT F

DIST	COUNTY	ROUTE	POST MILES TOTAL PROJECT	SHEET No.	TOTAL SHEETS
06	Fre	198	35.3/35.6		

REGISTERED CIVIL ENGINEER 1-28-16 DATE

PLANS APPROVAL DATE

The State of California or its officers or agents shall not be responsible for the accuracy or completeness of scanned copies of this plan sheet.

REGISTERED PROFESSIONAL ENGINEER HILARIO TUAZON Jr. No. C83114 Exp. 03-31-17 CIVIL STATE OF CALIFORNIA

NOTES:

1. Match expansion joint gaps in bridge railing with that of deck joints.
2. Roughen existing-to-new concrete interfaces to 1/4" amplitude.

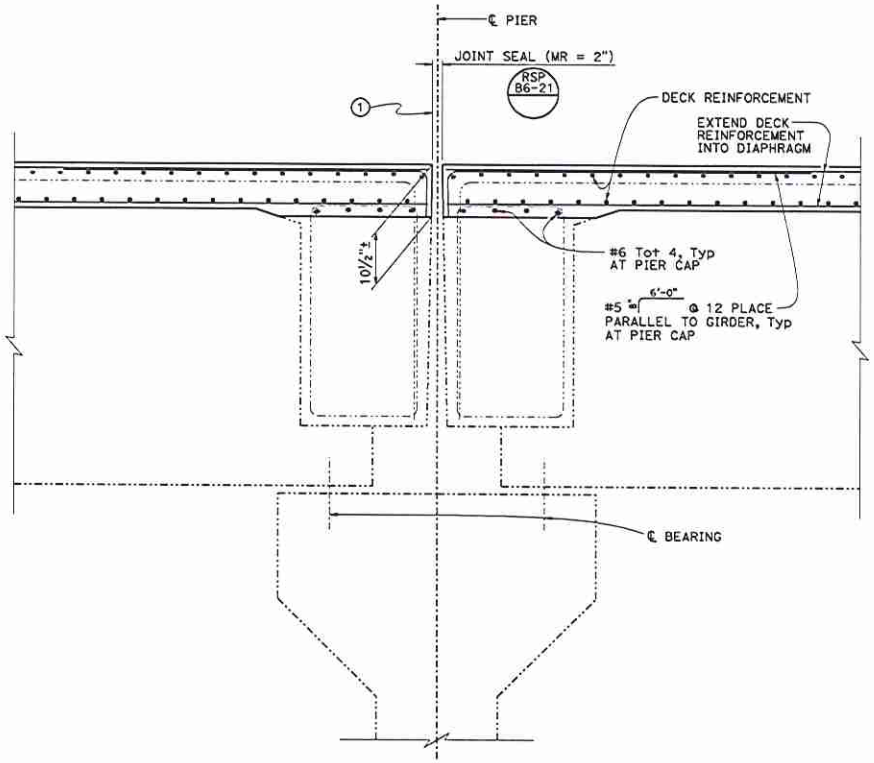

PIER ELEVATION

1" = 1'-0"

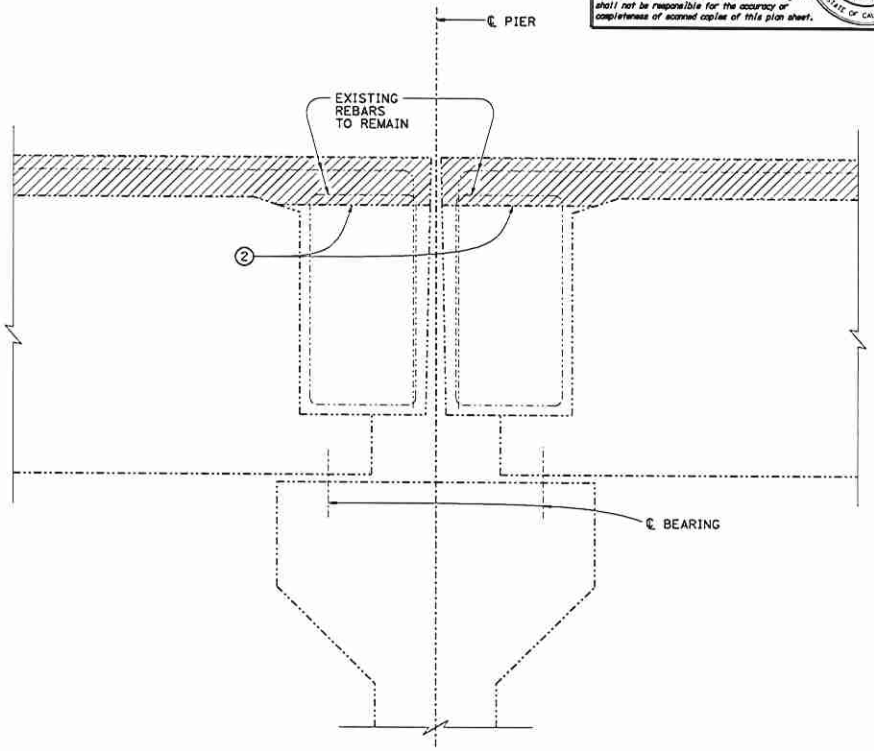

PIER ELEVATION (REMOVAL)

1" = 1'-0"

LEGEND:

- Denotes Bridge Removal (Portion)
- Denotes existing structure
- Denotes new construction

DESIGN	BY H. TUAZON	CHECKED E. RUFINO	
DETAILS	BY K. CHONKRIA	CHECKED E. RUFINO	
QUANTITIES	BY H. TUAZON	CHECKED E. RUFINO	

STRUCTURES DESIGN DETAIL SHEET (ENGLISH) (REV. 09-01-10)

ORIGINAL SCALE IN INCHES FOR REDUCED PLANS 0 1 2 3

STATE OF CALIFORNIA DEPARTMENT OF TRANSPORTATION

DIVISION OF ENGINEERING SERVICES STRUCTURE DESIGN DESIGN BRANCH 6

BRIDGE NO. 42-0270 POST MILE 35.4

CALIFORNIA AQUEDUCT BRIDGE DECK REHABILITATION

PIER DETAILS

UNIT: 3591
PROJECT NUMBER & PHASE: 0612000096 1 CONTRACT NO.: 06-0M2504

DISREGARD PRINTS BEARING EARLIER REVISION DATES

REVISION DATES 10-JAN-14 10-JAN-14 10-JAN-14 12-10-15

SHEET 6 OF 9

FILE => 42-0270-1-p01d001.dgn

EXHIBIT F

DIST	COUNTY	ROUTE	POST MILES TOTAL PROJECT	SHEET No.	TOTAL SHEETS
06	Fre	198	35.3/35.6		

REGISTERED CIVIL ENGINEER — DATE 1-28-16

PLANS APPROVAL DATE

The State of California or its officers or agents shall not be responsible for the accuracy or completeness of scanned copies of this plan sheet.

REGISTERED PROFESSIONAL ENGINEER — HILARIO TUAZON — No. C031114 — Exp. 02-31-17 — CIVIL — STATE OF CALIFORNIA

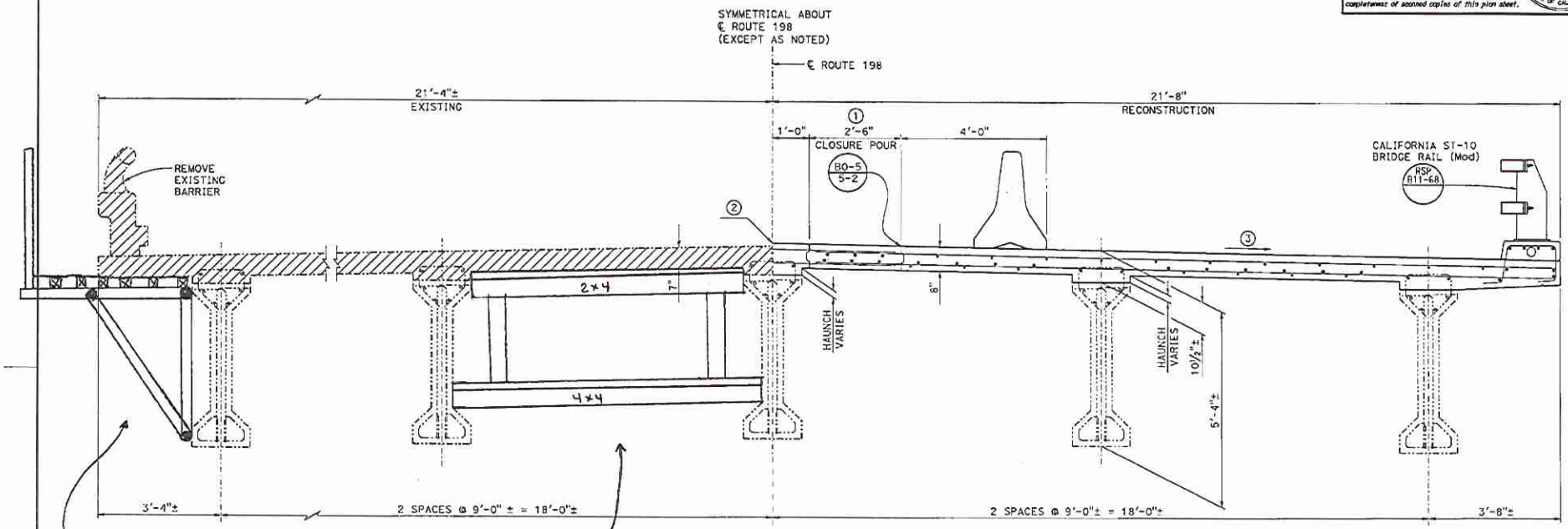

Typical Overhang Falsework Brackets. "Daytor Superior" With walkway and hand rail.

Typical Interior Bay Falsework.
5/8" plywood
2x4 joists
2x4 legs
4x4 ledger

TYPICAL SECTION

¾" = 1'-0"

NOTES:

1. Closure pour and the associated reinforcing steel configuration is only located on right side of bridge.
2. Match existing Profile Grade with 1 inch increase.
3. Match existing Cross-Slope.

LEGEND:

- Denotes Bridge Removal (Portion)
- Denotes existing structure
- Denotes new construction

NOTE:
VERIFY ALL CONTROLLING FIELD DIMENSIONS BEFORE ORDERING OR FABRICATING ANY MATERIAL.

	BY	CHECKED
DESIGN	H. TUAZON	E. RUFINO
DETAILS	K. CHONKRIA	E. RUFINO
QUANTITIES	H. TUAZON	E. RUFINO

STATE OF CALIFORNIA
DEPARTMENT OF TRANSPORTATION

DIVISION OF ENGINEERING SERVICES
STRUCTURE DESIGN
DESIGN BRANCH 6

BRIDGE NO. 42-0270
POST MILE 35.4

CALIFORNIA AQUEDUCT BRIDGE DECK REHABILITATION
TYPICAL SECTION NO. 1

STRUCTURES DESIGN DETAIL SHEET (ENGLISH) (REV. 09-01-10)

ORIGINAL SCALE IN INCHES FOR REDUCED PLANS 0 1 2 3

UNIT: 3591
PROJECT NUMBER & PHASE: 0612000096 1
CONTRACT NO.: 06-0W2504
FILE => 42-0270-k-tw01.dgn

DISHGARD PRINTS BEARING EARLIER REVISION DATES

REVISION DATES 10-26-14 10-28-14 10-28-14 12-18-14

SHEET 7 OF 9

EXHIBIT F

DIST	COUNTY	ROUTE	POST MILES TOTAL PROJECT	SHEET No.	TOTAL SHEETS
06	Fre	198	35.3/35.6		

REGISTERED CIVIL ENGINEER 1-28-16 DATE

PLANS APPROVAL DATE

REGISTERED PROFESSIONAL ENGINEER HILARIO TUAZON Jr. No. C83114 Exp. 03-31-17 CIVIL STATE OF CALIFORNIA

The State of California or its officers or agents shall not be responsible for the accuracy or completeness of scanned copies of this plan sheet.

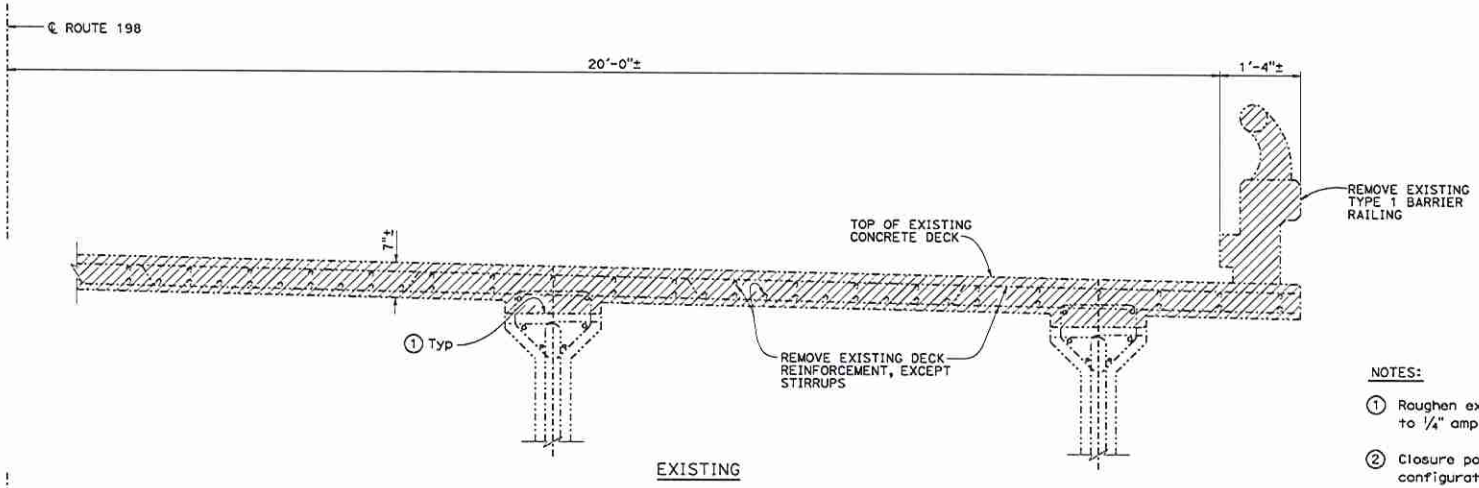

EXISTING

PART TYPICAL SECTION

1" = 1'-0"

NOTES:

① Roughen existing-to-new concrete interfaces to ¼" amplitude.

② Closure pour and the associated reinforcing steel configuration is only located on right side of bridge.

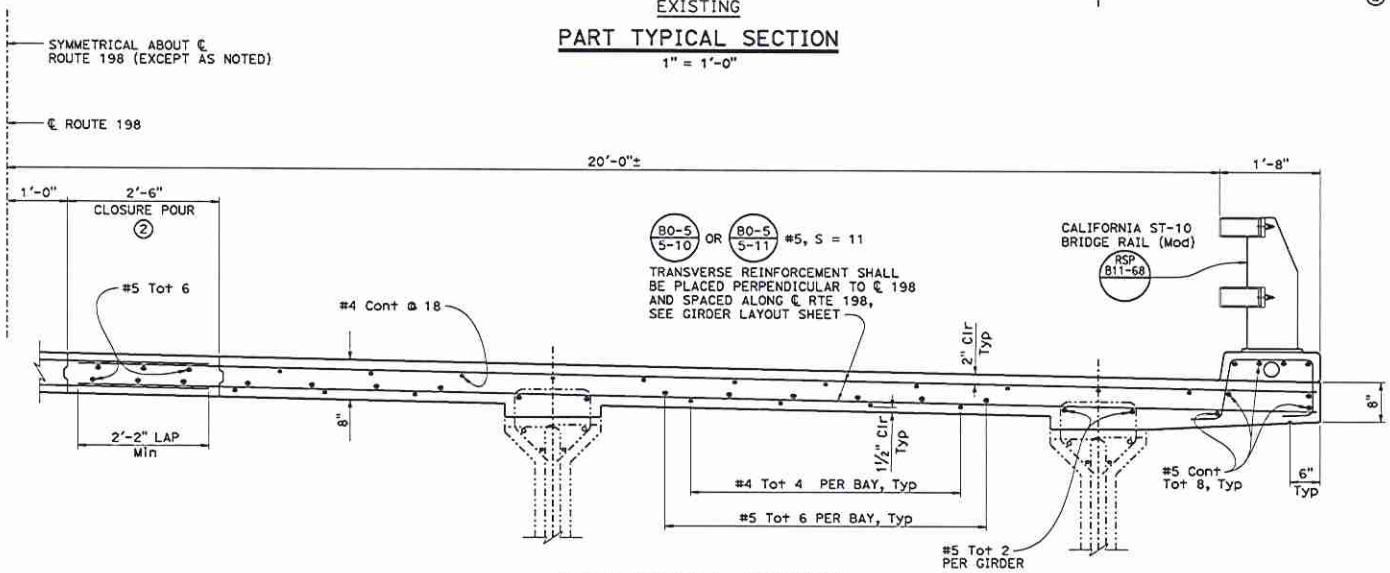

PART TYPICAL SECTION

1" = 1'-0"

LEGEND:

- Denotes Bridge Removal (Portion)
- Denotes existing structure
- Denotes new construction

NOTE:
VERIFY ALL CONTROLLING FIELD DIMENSIONS BEFORE ORDERING OR FABRICATING ANY MATERIAL.

	BY	CHECKED
DESIGN	H. TUAZON	E. RUFINO
DETAILS	K. CHONKRIA	E. RUFINO
QUANTITIES	H. TUAZON	E. RUFINO

STATE OF CALIFORNIA
DEPARTMENT OF TRANSPORTATION

DIVISION OF ENGINEERING SERVICES
STRUCTURE DESIGN
DESIGN BRANCH 6

BRIDGE NO. 42-0270
POST MILE 35.4

CALIFORNIA AQUEDUCT BRIDGE DECK REHABILITATION

TYPICAL SECTION NO. 2

STRUCTURES DESIGN DETAIL SHEET (ENGLISH) (REV. 09-01-10)

ORIGINAL SCALE IN INCHES FOR REDUCED PLANS 0 1 2 3

UNIT: 3591
PROJECT NUMBER & PHASE: 0612000096 1
CONTRACT NO.: 06-0W2504

DISREGARD PRINTS BEARING EARLIER REVISION DATES → 10-30-14 10-30-14 10-30-14 12-18-15

SHEET 8 OF 9

FILE => 42-0270-K-PS02.dgn

EXHIBIT F

DIST	COUNTY	ROUTE	POST MILES TOTAL PROJECT	SHEET No.	TOTAL SHEETS
06	Fre	198	35.3/35.6		

REGISTERED CIVIL ENGINEER — DATE 1-28-16

PLANS APPROVAL DATE

The State of California or its officers or agents shall not be responsible for the accuracy or completeness of scanned copies of this plan sheet.

REGISTERED PROFESSIONAL ENGINEER — HILARIO TUAZON JR. — No. C63114 — Exp. 03-31-17 — CIVIL — STATE OF CALIFORNIA

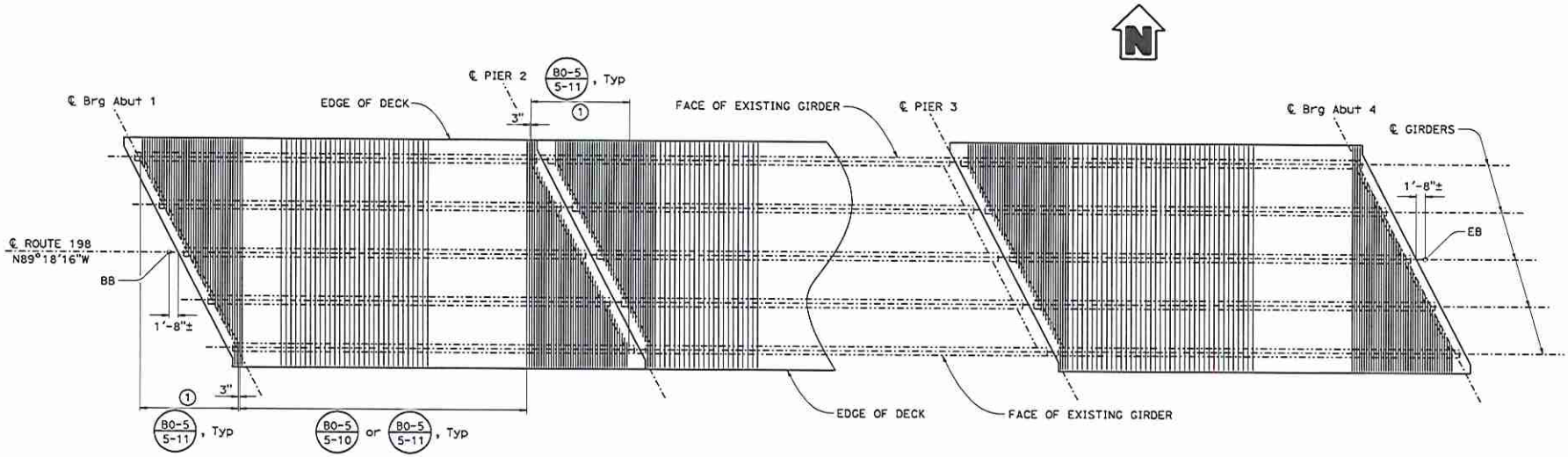

GIRDER LAYOUT

1" = 10'-0"

NOTE:

(1) #5, s=11", extend Top & Bottom Transverse Reinforcement 18" into end diaphragm.

LEGEND:

-·-·-·- Denotes existing structure

——— Denotes new construction

NOTE:
VERIFY ALL CONTROLLING FIELD DIMENSIONS
BEFORE ORDERING OR FABRICATING ANY MATERIAL.

DESIGN	BY H. TUAZON	CHECKED E. RUFINO	
DETAILS	BY K. CHONKRIA	CHECKED E. RUFINO	
QUANTITIES	BY H. TUAZON	CHECKED E. RUFINO	

STATE OF CALIFORNIA
DEPARTMENT OF TRANSPORTATION

DIVISION OF ENGINEERING SERVICES
STRUCTURE DESIGN
DESIGN BRANCH 6

BRIDGE NO. 42-0270
POST MILE 35.4

CALIFORNIA AQUEDUCT BRIDGE DECK REHABILITATION
GIRDER LAYOUT

STRUCTURES DESIGN DETAIL SHEET (ENGLISH) (REV. 09-01-10)

ORIGINAL SCALE IN INCHES FOR REDUCED PLANS 0 1 2 3

UNIT: 3591
PROJECT NUMBER & PHASE: 0612000096 1
CONTRACT NO.: 06-0M2504

DISREGARD PRINTS BEARING EARLIER REVISION DATES → 10-30-14 10-30-14 10-30-14

SHEET 9 OF 9

FILE => 42-0270-1-g_1001.dgn

Environmental Commitment Program

Title: Caltrans Bridge Deck Replacement over the San Luis Canal at approximate Mile Post 152.76
Tracking Number: CEC-15-033
Anticipated Start Date: Spring, 2016
Approximate Duration: 30 days
Natural Resource Specialist: Stacy Holt, (559) 487-5295, slholt@usbr.gov
Wildlife Biologist: Lisa Carlson, (559) 487-5194, lcarlson@usbr.gov
Archaeologist: Bruce, BranDee, (916-978-5039), bbruce@usbr.gov

[Caltrans] Point of Contact:
Maria Toles
Maria.Toles@dot.ca.gov
(559)263-5678

Resource	Summary of Environmental Commitments	Timeframe for Implementation	Proponent Verification of Compliance		Reclamation Verification of Compliance				
			Initials	Date	Commitment Implementation Date	Verification Interval	Final Verification Date	Initials	Date of Verification
Biological	If work must occur during the migratory bird breeding season (February 1 to August 31), a qualified biologist shall survey the Proposed Project Area for nesting cliff swallows and other migratory birds. If cliff swallows, or other migratory birds, are found nesting in the Project Area, no construction on the Project shall begin until the young have fledged or until a qualified biologist determines that nesting is no longer actively occurring. All survey documentation shall be submitted to Reclamation prior to the start of construction. No nesting bird surveys are required if work occurs outside of the bird breeding season.	During Construction							

Funding: The proponent is responsible for all direct costs to implement, monitor and evaluate the environmental commitments described in the table. The proponent is also responsible for the costs incurred by Reclamation staff to monitor and evaluate the environmental commitments.

State of California
California Natural Resources Agency
Department of Water Resources

CODE OF SAFE WORK PRACTICES 5.18

PROCEDURE FOR INFLATABLE BOAT USE

June 8, 2012

Table of Contents

References 2
State Water Project Policy 2
I. Scope 2
II. Purpose 2
III. Definitions and Descriptions 2
IV. Roles and Responsibilities 4
V. Secure and Safe Transport 5
VI. Pre-Use Inspection 5
VII. Vessel Launching/ Retrieval Procedures 6
VIII. Vessel Access Procedures 6
IX. Rescue and Emergency Services 6
X. Decontamination for Invasive Species 8
Appendix A - Vessel Launching and Water Operation Procedures 10
Appendix B - Vessel Retrieval and Trailer / Vehicle Loading Procedures 15
Appendix C - Acknowledgment Sheet 18
Appendix D - Pre-Planning Checklist 20
Appendix E - Job Site Evaluation Checklist 22
Appendix F - Pre-Work Safety Plan 24

References

California Department of Boating and Waterways
U.S. Department of Commerce, National Oceanic and Atmospheric Administration, National Marine Fisheries Service
29 U.S.C. § 654, 5(a) 1 – General Duty Clause

State Water Project Policy

All Inflatable Boat activity will be governed by a Code of Safe Work Practices for Inflatable Boats, which meets or exceeds the requirements set forth in State Water Project's (SWP) Code of Safe Work Practices 5.18 – Inflatable Boat Use.

I. Scope

Aqueduct inspection activities that require boat access to areas not feasibly accessible by conventional means, such as scaffolds, engineered work platforms, or access ports.

II. Purpose

To provide a Code of Safe Work Practices for use of inflatable boats when conducting inspection or work activities on aqueduct infrastructure throughout the State Water Project.

III. Definitions and Descriptions

A. Communication Plan – A Communication Plan will document methods to ensure a primary and secondary mode of communication is functional and in place for each Inflatable Boat Access Project. Verbal communicators should be limited to necessary operational dialogue. If verbal communications cannot be achieved, then alternate methods such as radios, cell phones, or hand signals can be utilized.

In remote or poor cellular phone reception areas, emergency plans should consider alternate methods such as satellite phones, OnStar vehicle phones, Personal Location Beacons, etc.

B. Direct Supervision - is defined as immediately available on-scene response within 2 to 3 minutes of notification and having direct communication by verbal or radio means.

C. Emergency Action Plan – The Emergency Action Plan is a documented pre-plan that will address contingencies and actions to be taken if an inflatable boat incident or site activity emergency occurs.

The Emergency Action Plan consists of:

1. Designated emergency response leader and alternate.
2. Identification of resources, capabilities, and response time of emergency medical services.
3. Maps and directions to closest hospitals.

4. Emergency contact numbers.
5. Communication Plan to contact Emergency Medical Services and Area Control Center.
6. Expected actions for emergency response to address safe, rapid retrieval of personnel, treatment of hyperthermia, and basic first aid. Each location along the aqueduct requires response by the appropriate EMT unit or route to appropriate hospital along with associated phone numbers.

D. Hazard Assessment – A hazard assessment shall be completed and communicated to all personnel who will participate in the Inflatable Boat Operations to include support personnel who have been identified within the work plan. It is imperative that all work is to STOP if work activities expand outside of the scope of the hazard assessment. If conditions change, the hazard assessment must be updated to ensure actual conditions are addressed.

A hazard assessment is a formal documented job-site analysis which focuses on the following:

1. Activities to be performed, site conditions, and remote work locations.
2. Anticipated and expected hazards.
3. Safety precautions and mitigations to eliminate or reduce the probability and severity of an incident.

E. Invasive Species - A species whose introduction does or is likely to cause economic or environmental harm or harm to human health. "Nonnative species" refers to any species, including its seeds, eggs, spores, or other biological material capable of propagating that species, that is not native to that ecosystem. Nuisance species refers to any native or nonnative species that cause negative economic or biological impacts.

F. Qualified - A person designated by their employer who by reason of training, experience, or instruction has demonstrated the ability to safely perform all assigned duties and, when required, is properly licensed in accordance with federal, state, or local laws and regulations.

G. Simultaneous Work Activities (Simultaneous Operations) – Two or more activities, unrelated to the inflatable boat operations, which will or may have the potential to have a direct impact on the safety to personnel or efficiency of scope and planned inflatable boat operations. This activity may be within in the proximity of the scheduled work or may be remotely located.

H. Work Clearance Authorization (WCA) - Process by which the inflatable boat operations work activity is formally approved and scheduled.

IV. Roles and Responsibilities

A. Person-In-Charge (PIC):

1. The PIC is the single point of contact and is responsible for the overall activities and safe work practices specific to the inflatable boat activities both shore-based and water-based operations.
2. The PIC is responsible for:

    a. Starting the Work Clearance Authorization process.
    b. Receiving and validating that all approvals and scheduled activities that support the inflatable boat operations are in place.
    c. Reviewing and approving all Standard Operation Procedures and Job Hazard Analysis documents prior to allowing shore-based and water-based inflatable boat operations.
    d. Conducting a review of the work area with respective personnel to ensure simultaneous work activities are not ongoing or will occur that may impact the safety and efficiency of the planned work.

3. The PIC is empowered to Stop Work of the Vessel Captain's activity; but the PIC cannot override the Vessel Captain's decision and force the work to continue unless the Vessel Captain agrees.
4. The PIC can also perform the role of the Vessel Captain if qualified to do so.
5. The PIC is responsible to ensure all personnel who are working within 3 feet of the liner are wearing a Personal Flotation Device (PFD).
6. If work within this zone is to occur, a proper emergency action plan is to be documented and reviewed with shore-based personnel who are assigned response duties.

B. Vessel Captain

1. Individual responsible for the safe operations of the vessel and of personnel during:

    a. Launching Operations
    b. On-water activities
    c. Retrieval Operations

2. The vessel captain is the single point of contact and is responsible for the activities and safe work practices of the inflatable rubber boat specific to water-based operations.
3. While reporting to the PIC, the Vessel Captain has the authority to Stop Work anytime he/she feels it is unsafe for on-water activities to continue.
4. The Vessel Captain can also perform the role of the PIC if qualified to do so.

C. Qualified Operator

1. A minimum of one qualified operator is to be identified in the Job Site Evaluation Checklist (Appendix E). This individual must be immediately available by radio or other approved means of communication. This is to be documented on the communications plan.

D. Support Services

1. Individual or individuals of an undefined trade or skill that is under the direct supervision of either the PIC or the Vessel Captain.

V. Secure and Safe Transport

A. The vessel is to be stowed and secured in accordance with manufacturer's recommendations.
B. Only qualified personnel are allowed to drive a vehicle pulling a trailer.
C. All cargo and contents must be firmly secured or removed prior to transport with the majority of the weight placed over and forward of the center axle.
D. Only rated vehicles with proper towing equipment (light hook-ups, trailer brakes, mirrors, etc.) may be used as transport equipment.
E. No riders are allowed during transport of equipment.
F. Driver is responsible to complete a safety check of the vehicle, trailer, and cargo prior to transport. Checks shall include:

1. Vehicle and trailer integrity.
2. Vehicle and trailer lights are functional.
3. Trailer tires are in good shape with no side wall cracks.
4. Cargo straps and anchorage points are not damaged and are secure.
5. Verifying there is no loose cargo.
6. Trailer hitch is down and locked to vehicle hitch.
7. Safety chains are secured.
8. Mirrors are adjusted.
9. If equipped, trailer brakes are functional and adjusted properly.

VI. Pre-Use Inspection

A. Pre-use inspection should be performed prior to transporting vessel to the work location to ensure vessel integrity and required equipment before leaving base and again daily prior to launching. Refer to Appendix D "Pre-Planning Checklist."
B. The PIC, in consultation with the Vessel Captain, is to develop a Job Hazards Analysis (JHA) specific to the vessel access and inspection process to be performed. Once the JHA is developed the PIC and Vessel Captain are to seek input from the remaining site team members addressing their concerns and modifying the JHA as necessary.
C. All deficiencies shall be corrected prior to launching vessel.

VII. Vessel Launching/ Retrieval Procedures

A. Personnel are to complete a JHA referencing Appendix F "Pre-Work Safety Plan." Refer to State Water Project's CSWP 5.12 Hazard Assessment and Hazard Mitigation Procedure.

B. Personnel are to follow the procedures in Appendix A "Vessel Launching and Water Operation Procedures" and Appendix B "Vessel Retrieval and Trailer/Vehicle Loading Procedures" contained herein.

C. Appendix D "Pre-Planning Checklist" and Appendix E "Job Site Evaluation Checklist" are to be filled out and modified as appropriate for each job/location.

VIII. Vessel Access Procedures

A. Personnel are to remain seated inside the vessel while the vessel is moving.

B. The following general safety precautions should be considered standard for Vessel Access Operations:

1. Personal Flotation Devices (PFD) – Allowable PFDs are U. S. Coast Guard approved Types I – V.
2. Ring Buoys – U. S. Coast Guard approved 30-inch ring buoys with at least 100 feet of 600 pound capacity line shall be readily available for emergency rescue operations.
3. All personnel must wear a PFD when working within 3 feet of the liner.
4. All personnel working over water and outside the protection of an engineered guard rail system shall wear a PFD.

C. During winter operations or potential cold water[1] exposure, considerations should be made for personnel who will be conducting on-water operations to wear cold-water immersion suits.

IX. Rescue and Emergency Services

A rescue plan must be outlined during the overall job planning and hazard analysis phase before work begins.

A. Rescue Plan

The Rescue Plan must do the following for **each location**:

1. Identify and designate critical positions for the rescue plan.
2. Identify immediate onsite rescue resources and clarify their capabilities and response time.
3. Identify offsite rescue resources and clarify their capabilities and response time.
4. Identify a Communications Plan between team members, onsite operations, and offsite emergency responders.

[1] Water temperature exposure of 10 °C (50 °F) often leads to death in one hour, and water temperatures hovering at freezing can lead to death in as little as 15 minutes.

5. Validation of the local emergency responders' capability of water rescue. If services are remote, additional precautions may be required.
6. Specify the primary and secondary rescue plan to include rescue systems and special rescue equipment necessary to perform the response.
7. Identify and designate a pre-determined meeting location for rescue team and offsite response personnel.
8. Identify and validate personnel trained in First Aid and CPR.
9. Validate a trauma kit is complete and immediately available for initial responders for patient[2] care.
10. Where applicable, systems should be validated in place and functional prior to on-water activity starts.

B. Response Purpose

Due to the potential hazards of hyperthermia as a result of immersion on cold water, complications due to drowning or near drowning emergencies and the geographic locations which delay offsite advanced medical care, efficiency of the rescue team is critical. The team must be able to make an immediate transition from inflatable boat operations duties to rescue/response duties.

C. Rescue Training

Personnel who work on either land base or on-water during inflatable boat operations must be trained in the immediate actions that will be taken if an emergency in the water occurs. Due to the slopes, loose footing (cement, dirt, moss, etc.) and currents found in the aqueduct, all personnel working near the slope (within 3 ft. of the leading edge) are required to wear a PFD. The designated shore base safety person must be familiar with the medical care for emergencies in addition to basic first aid.

1. Emergency Rescue Training

   a. Personnel performing inflatable boat operations shall be trained, prior to launching the vessel, in their expected duties that will be required during emergency operations.
   b. Special consideration on rescue techniques of water rescue and extrication of injured personnel from the aqueduct and up the slope shall be addressed in the Emergency Action Plan.
   c. Relevant project specific rescue skills shall be reviewed and practiced prior inflatable boat operations project start.

2. Medical Response Training

   a. All core inflatable boat operations team members shall be current in First Aid and CPR. At least one trained person shall be on-shore at all times during inflatable boat operations.

[2] Patient – For purposes of this document a patient is an individual who has a medical emergency and is in a safe location where emergency responders can safely provide medical care.

b. All core inflatable boat operations team members shall receive additional training in specialized medical skills to include the following:

i. Mass Trauma and extended shock management
ii. Hyperthermia
iii. Extended care and medical considerations due to drowning

X. Decontamination for Invasive Species

Aquatic, as well as many non-aquatic, invasive species are readily spread by flowing water. In addition, many aquatic invasive species are capable of survival out of water for extended periods of time. Invasive species of concern for the SWP are quagga and zebra mussels and the aquatic weed *Hydrilla*. To prevent the accidental introduction these unwanted organisms into the SWP, all watercraft and equipment that are to be placed in a waterbody must be cleaned to remove all organisms, including any mussel shells, plant fragments, seeds, or other materials. This recommendation applies to equipment originating from a location outside of the SWP and arriving on the project site, especially those waterbodies with known infestations of quagga and zebra mussels. If or when quagga or zebra mussels become established in the SWP, all equipment relocated within the project which comes in contact with water must be cleaned after leaving a mussel infested location.

To prevent cross contamination with other lands or water bodies, whenever possible, keep equipment and vehicles at the same project area for use only in that project area. If practical, the least infested (or least likely to be infested) sites should be visited first to reduce the risk of accidentally infecting a new area during restoration activities. Whenever possible, equipment should be moved from upstream areas to downstream areas, as opposed to the reverse, to prevent upstream spread.

Water run-off carrying sediment, plant material, algae, animals, and/or petroleum contaminants must be managed to aid in preventing spread of contaminated materials outside of the washdown location. Despite very careful efforts to capture and quarantine materials from cleaning operations, site-specific invasions are likely to occur; therefore, part of the cleaning process should involve monitoring the washdown areas for invasive species and using appropriate control methods early to prevent additional spread.

When done properly before entering a new body of water, this general set of procedures can effectively prevent the spread of invasive mussels and aquatic plants into new waters.

A. Drain

1. Drain every conceivable space or item that can hold water.
2. Follow factory guidelines for eliminating water from engines.
3. Always drain the bilges of the vessel by removing the drain plug. Bilge pumps are not capable of removing all water from the vessel hull.
4. Drain live-wells, bilge, ballast tanks, and transom wells.
5. Empty water out of kayaks, canoes, rafts, etc.
6. Any remaining water in compartments, such as bilges or ballast tanks, that cannot be completely drained must be chemically treated with a 5 percent bleach solution for 20 minutes or flushed with 120°-140° F water for 5 minutes.

B. Clean

1. Remove any visible plant or plant fragments, as well as mud or other debris. Plant material, mud, and other debris routinely contain other organisms or a quiescent lifestage (for example, seeds, eggs, spores) that may be an invasive species. Many aquatic plants can regenerate from stem fragments.
2. Check trailer, including axle and wheel areas, in and around the vessel itself: anchor, props and jet engines, ropes, bumpers, paddles.
3. Clean all parts and equipment that came in contact with water.

C. Dry

1. If leaving a known quagga/zebra mussel infested waterbody, all equipment must be quarantined and dried for a minimum of 7 days before launching into new waters.
2. A list of quagga/zebra mussel infested waterbodies is available at Department of Fish and Game Web site (http://www.dfg.ca.gov/invasives/quaggamussel/). In addition, the operating agency of these infested lakes is required by law to post quarantine signage at all entrance gates.

D. Personal Protective Equipment during Decontamination

Using cleaning and disinfectant chemicals, power washers, air compressors, and other types of cleaning equipment may present working hazards. A proper hazard assessment must be conducted prior to cleaning operations.

1. Personnel who use equipment during cleaning operations are responsible for properly assessing, selecting, and using Personal Protective Equipment (PPE) that is appropriate to the cleaning activity.
2. PPE items to protect hearing, skin, eyes, and respiration shall be assessed prior to cleaning operations and documented in a Job Hazards Analysis.
3. All personnel should undergo proper training of all equipment prior to performing any cleaning operation.

Appendix A - Vessel Launching and Water Operation Procedures

Sequence of Job Steps	Identify & List All Hazards & Potential Hazards	Recommended Mitigation of Hazards
1. Site Preparation / Validation	a. Poor communication	• Validate two-way radio communications with Field Division Area Control Center (ACC). • Ensure radios for inspection boat operations are charged and functional.
	b. Bridge clearance less than 3 feet	• Lower pool to 3 feet clearance for inspection.
	c. Overchute with less than 3 feet clearance and within 1000 feet downstream or check structure within 1000 feet downstream.	• Reduce flow to 0.0 fps velocity. • Lockout / Tag out appropriate check structure in Work Clearance Authorization (WCA).
	d. Fog	• Boat must be visible by shore-based personnel during inspection. • Place warning signs on roadway at 1500 feet and 700 feet prior to bridge. • Visibility must be greater than 2000 feet.
	e. Water temperature less than 55 degrees F	• Personnel to wear cold-weather suits while in boat.
	f. Water flow is excessive for boat operations	• WCA will be established and verified as part of job planning. • Validate flow by estimating floating debris speed as it passes a section of a panel (6 seconds per panel is approximately 2 feet per second flow).
	g. Inadequate number of support people	• A minimum of 4 people are required for boat operations: o One boat operator / captain / inspector o One crew man / inspector o One land-based safety / support o One site-specific Field Division land-based field support
	h. Excessive debris and growth in water	• Check with Field Division of current status of operations and potential conflicts with boat operations.
	i. Simultaneous Operations	• Check local area for potential hazards, such as but not limited to: o Crop Dusting (chemical exposure) o Harvesting / industry operations (congested work areas / personnel using the bridge) o Recreational (fishing)
	j. Third-Party Vehicle traffic	• Place warning signage on both sides of the bridge identifying men working. • All shore-based personnel shall wear high-visibility vests.

Sequence of Job Steps	Identify & List All Hazards & Potential Hazards	Recommended Mitigation of Hazards
	k. Environmental Exposures	• Inspect areas for bees, snakes, and wildlife. Make precautions to minimize exposure. • Ensure compliance with DWR's Heat Illness Injury Plan. • Remove abandoned fishing lines. • Ensure the use of sunscreen and sunglasses--reflective light from water will increase exposure even in low sunlight conditions. • Have all fisherman remove lines from water or relocate from working area.
	l. Emergency Operations	• At least one shore-based support team member shall keep a visual on boat operations at all times. • There shall be a life ring readily available in the boat and one on shore during boat operations. • Shore-based personnel shall have a life ring immediately available. • Personnel in the boat must be able to swim. • JHA shall include the steps to be taken if a man-overboard emergency occurs: o Personnel in water o Shore-based personnel o ACC Personnel o Boat Motor Failure
2. Remove vessel from trailer / vehicle	a. Hand or Body Pinch Points	• Watch hand placement. Identify pinch points prior to removing vessel and keep hands and body free from "High-Risk" areas.
	b. Damage vessel	• Communicate to all personnel involved the steps to be taken to unload vessel from trailer / vehicle and identify high-risk exposures where vessel may be damaged.
	c. Push / Pull / Strain / muscle-skeletal /soft tissue / lifting injuries	• Go slow, ease into work activity to warm body up. • Use buddy system to lift. Start slow and allow muscles to warm up. • Use mechanical advantage whenever possible.
	d. Uneven surfaces, soft soil / slopes resulting in falls	• Unload vessel away from aqueduct slope--personnel within 3 feet of aqueduct slope must have a PFD. • Focus on walking surface, ensure solid footing.
3. Load Equipment into vessel	a. Damage vessel	• Inspect equipment to be loaded for sharp edges or points and provide barriers or protective covers. • Place vessel on smooth surface to preclude punctures and tears to bottom when loading.
	b. Overload vessel	• Ensure weight of personnel and equipment will not exceed manufacturer's specifications as identified on the manufacturer's plate.

Sequence of Job Steps	Identify & List All Hazards & Potential Hazards	Recommended Mitigation of Hazards
	c. Push / Pull / Strain / muscle-skeletal / soft tissue / lifting injuries	• Go slow, ease into work activity to warm body up. • Use buddy system to lift. Start slow and allow muscles to warm up. • Do not overreach as you lift equipment over the buoyancy tubes into vessel floor.
4. Lower vessel into water and secure vessel	a. Hand or Body Pinch Points	• Watch hand and body placement. Identify pinch points prior to removing vessel and keep hands and body free from "High-Risk" areas. Keep out of between the vessel and stationary objects.
	b. Damage vessel	• Ensure the slope down to water does not have any sharp edges or debris in the path of travel. • Ensure proper attachments to vessel and lower vessel straight so there is minimal side load on attachment points. • When moored, minimize vessel buoyancy tubes contact with concrete side walls.
	c. Push / Pull / Strain / muscle-skeletal / soft tissue / lifting injuries	• Utilize mechanical advantage to lower vessel, minimize manual handling of vessel. • Go slow, ease into work activity to warm body up. • Use buddy system for manual operations. Start slow and allow muscles to warm up. • Do not overreach or overextend your body placement when handling vessel.
5. Embarkation of personnel onto boat	a. Slip or fall	• Exercise care when descending slope.
	b. Falls into water	• For embarkation, personnel shall utilize the static line during the descent until safely in the vessel. Once in the vessel and seated, they may remove the attachment from the restraint line. • PFD is required when within 3 feet of aqueduct slope. • Shore-based support team is to be ready for emergency actions.
	c. Drop equipment into aqueduct	• Minimize equipment transfer when vessel is in the water. All equipment should be loaded prior to launching vessel. Put water-sensitive equipment in dry bags. • If possible, tie off equipment to vessel.

Sequence of Job Steps	Identify & List All Hazards & Potential Hazards	Recommended Mitigation of Hazards
6. Boat Operations	a. Instability of boat on water	• Position personnel in vessel one at bow and one at back. Clear communications prior to moving so no unexpected movements will cause stability concerns. • Include boat inflation device to keep inflatable boat pressure at desired set point. • Personnel in boat shall not stand during boat operations.
	b. Debris in water that will damage prop / motor	• Ensure extra prop, repair tools, and trolling motor brushes in tool box on shore. • Carry a knife to cut debris (fishing line, moss, etc.) wrapped around prop. • Have oars on board in the event of motor failure, to row to the nearest retrieval point.
	c. Equipment failure	• Log battery and engine run times to validate mechanical integrity. • Have a spare battery on shore for back-up use. • Have spare parts for motor (brushes, prop, etc.).

Appendix B - Vessel Retrieval and Trailer / Vehicle Loading Procedures

Sequence of Job Steps	Identify & List All Hazards & Potential Hazards	Recommended Mitigation of Hazards
1. Secure vessel, debarkation	a. Push / Pull / Strain / muscle-skeletal /soft tissue / lifting injuries	• Be aware of overreaching or overextending your body.
	b. Falls into water	• PFD is required until safely outside of 3 feet of the liner. • Shore-based support team is to be ready for emergency actions during all retrieval operations.
	c. Slip or fall	• Visually inspect area prior to accessing looking for trip or slip hazards. • Keep eyes focused on path of travel.
2. Prep vessel for retrieval	a. Damage vessel	• Be sure vessel is placed on a smooth surface. • Be careful when removing equipment from vessel, lift over, and do not drag equipment.
	b. Push / Pull / Strain / muscle-skeletal / soft tissue / lifting injuries	• Go slow, ease into work activity to warm body up. • Use buddy system to lift. Start slow and allow muscles to warm up. • Do not overreach as you lift equipment over the buoyancy tubes.
3. Remove vessel from the water	a. Hand or Body Pinch Points	• Watch hand and body placement. Identify pinch points prior to removing vessel and keep hands and body free from "High-Risk" areas. Keep out of between the vessel and stationary objects.
	b. Damage vessel	• Ensure the slope down to water does not have any sharp edges or debris in the path of travel. • Ensure proper attachments to vessel and raise vessel straight so there is minimal side load on attachment points. • Place vessel on smooth surface or tarp to avoid puncturing boat from the bottom. • When moored, minimize vessel buoyancy tubes contact with adequate cement side walls.
	c. Push / Pull / Strain / muscle-skeletal / soft tissue / lifting injuries	• Utilize mechanical advantage to raise vessel, minimize manual handling of vessel. • Go slow, ease into work activity to warm body up. • Use buddy system for manual operations. Start slow and allow muscles to warm up. • Do not overreach or overextend your body placement when handling vessel.

Sequence of Job Steps	Identify & List All Hazards & Potential Hazards	Recommended Mitigation of Hazards
	d. Uneven surfaces, slopes with debris, slippery surfaces.	• Do not allow individuals between the vessel and the trailer when the vessel is being raised. • Clear the work area of obstacles / trip hazards. If obstacles or trip hazards cannot be removed, place a high-visibility cone or paint with high-visibility paint to increase visual awareness. • Personnel are to wear PFD when within 3 feet of liner.
4. Prepare vessel to load on trailer / vehicle	a. Push / Pull / Strain / muscle-skeletal / soft tissue / lifting injuries	• Go slow, ease into work activity to warm body up. • Use buddy system to lift. Start slow and allow muscles to warm up. • Do not overreach or overextend your body placement when handling vessel.
5. Inspect trailer, load, and hook up.	a. Loose load, trailer safety lights not working	• Visually inspect all attachment points of load to trailer and trailer to vehicle. • Validate all equipment is secured. • Check trailer lights.

Appendix C - Acknowledgment Sheet

Acknowledgment Sheet

Date: **Task Description:**

Location:

Project:

Contractor:

We, the undersigned, acknowledge that we have read and reviewed the attached Code of Safe Work Practices-Inflatable Boat Use and agree that we will comply with the steps and safety controls listed. We agree that safety is primary, and that we will work toward that end. We further agree to stop any At-Risk Behaviors and correct any unsafe conditions identified. We will actively participate in the identification of any needed additions or modifications to these procedures in order to maintain the highest level of safety.

Date	Print Name	Signature

Appendix D – Pre-Planning Checklist

Pre-Planning Checklist:

Yes	No	N/A	Completed by:_____			
☐			Request Work Clearance Authorization (WCA) Number_____			
☐			Notify Offices of Planned Inspection Dates (2 weeks prior)			
☐			☐Field Division	☐ ACC	☐Planner Schedulers	☐POC
☐			Bridges by Checks and Siphon require Lock out /Tag out			
☐			Request lower Pool (Check previous inspection notes)_____			
☐			Check for floating vegetation/weed mats			
☐			Check traffic count for high-volume roads/ signage needed			
☐			Check weather for planned work dates (1 week prior)			
☐			Tag and date equipment needed for inspection			
☐			Check tools / equipment are in good condition with current inspection log			
☐			Boat clean for invasive species			
☐	☐		First Aid Kit - confirm contents have been inspected for all needed supplies			
☐	☐	☐	Expended items removed_____			
☐	☐	☐	Replaced items_____			
☐			Request Cargo Van/ Pickup from DGS			
☐			Verify Maps to the nearest hospital			
☐			E-mail maps and confirm best route with Field Division			
☐			First Aid/ CPR /Swim - request employees with current training			
☐			Personal Protective Equipment - send field employees list of items they will need			
☐	☐		Other personnel on site_____			
☐	☐	☐	Strip Maps			
☐	☐		Thomas Guides			
☐	☐		Check 3-month planned work schedule			

Equipment Needed

☐Life Vest	☐ Radios	☐ Air Inflator	☐ Reflective Vests	☐ Wind Gauge
☐Life Vest Canisters	☐ Radio Batteries	☐ Trolling Motor/Oars	☐ Traffic Signs	☐ H_2O Thermometer
☐Life Rings	☐ Cameras	☐ Boat Batteries charged	☐ Warning Lights	☐ Repair Tools
☐ Ropes	☐ Camera Batteries	☐ Battery & Motor logs		☐ Pole Mirror
☐ Carabineers	☐ GPS	☐ Operating Manuals		☐ Retrieval Pole
☐Throw Bags	☐ Car Inverter	☐ Dry Storage Bags		☐ Exchange Cell phone numbers
☐Harnesses				

Appendix E – Job Site Evaluation Checklist

Job Site Evaluation Checklist:

Yes	No	N/A	Completed by:_____
☐			Bridge Name/Number/Site_____ Time in:_____ Out:_____
☐			Inspection Date(s)_____
☐			Review Job Hazards Analysis
☐			Boat Launching and Retrieval sites discussed
☐	☐		Clearance for boat adequate
			If No, Pool Lowered by_____
☐		☐	Fishing Lines removed
☐			Remove Self Baler Plug
☐			Loose gear in dry bags and tethered to boat
☐			Visual inspection of the vessel
☐			Inflatable boat repair kit
☐			Check the tightening of the motor clamps
☐			Measure Aqueduct flow rate _____ FPS
☐			Wind Velocity_____.MPH; Air Temperature_____°F
☐	☐		Outside temperature above 85 degrees
			If Yes, Water Provided
			If Yes cool Down Breaks
☐			Strip Maps tabbed to location
☐			Thomas Guides tabbed to location
☐			Maps to the hospital on top of clip board
☐			Discussed the best route to hospital
☐			"**First Aid Kit Here**" sign in window

Daily Personal Protective Equipment for each Job

Boat Captain	Passenger	Shore Attendant	Driver/ Attendant	Other Personnel
☐Swim	☐Swim	☐CPR Training	☐CPR Training	☐CPR Training
☐Water Shoes	☐Water Shoes	☐First Aid Training	☐First Aid Training	☐First Aid Training
☐Sunglasses	☐Sunglasses	☐Sunglasses	☐Sunglasses	☐Sunglasses
☐Sunscreen	☐Sunscreen	☐Sunscreen	☐Sunscreen	☐Sunscreen
☐Air Inflator	☐Note Pad	☐Reflective Vest	☐Reflective Vest	☐Reflective Vest
☐Camera	☐Pliers	☐First Aid Kit	☐Map to Hospital	☐
☐Knife	☐	☐	☐	☐

Personal Protective Equipment for each Job / Site

☐PDF	☐PDF	☐PDF	☐PDF	☐PDF
☐ Helmet / Gloves	☐ Helmet / Gloves	☐ Helmet / Gloves	☐ Helmet / Gloves	☐ Helmet / Gloves
☐	☐2-way Radio	☐2-way Radio	☐2-way Radio	☐
☐	☐Life Ring	☐Life Ring	☐Life ring	☐
☐	☐	☐	☐ ACC Radio	☐

Appendix F – Pre-Work Safety Plan

Pre-Work Safety Plan

Sequence of Basic Job steps	Potential Hazards & Consequences	Recommendations to Eliminate or Reduce Hazards
Call Area Control Center. Confirm Work site and Flows required.	Increased flows. Boat unable to be controlled.	Monitor flow before launching boat. Continue to monitor flows while the boat is in the water.
Observers and personnel watching operation	Slipping down aqueduct bank and drowning	All personnel within 3 feet of aqueduct edge shall wear PFD or life vest.
Boat Preparations, installing equipment	Bending, twisting positions	Have help in loading equipment on boat, wear gloves, coordinate work to avoid injuries.
Boom Truck Operations	Injuries to on-lookers getting in the work area of the machinery	Only qualified boom operators to be near the equipment. All other personnel to stay out of the fall radius of the boom. Use tag lines (2 minimum) to steady boat from trailer to water.
Boom Truck Operations	Equipment malfunction, tipping	Only qualified boom operators to be near the equipment. All other personnel to stay out of the fall radius of the boom. Use tag lines (2 minimum) to steady boat from trailer to water.
Boat Rigging	Slipping of load	Verify lifting slings are in good working order and secure. Ensure load is balanced before lifting over water.
Boat Line Tending	Rope burns	All tag line tenders wear proper gloves.
Boat Loading	Capsizing Drowning	Use tag lines (2 minimum) to steady boat in water. Use system of ladders and ropes to assist boat operators down the slope. All personnel near water to wear PFDs. One person on standby with life ring ready to throw.
Boat Pre-op Check	Unsafe emergency equipment	Ensure safety equipment on board, throw ring, and rope. Review man overboard procedures.
Boat Use In Aqueduct	Loss of power, capsizing, man overboard, drowning, and hypothermia.	Personnel in boat continue to wear PFDs. Personnel on each bank with life rings to follow boat operations. Emergency responders with CPR/ First Aid training ready and on site at all times. Maps available to hospital and phone numbers on hand of hospital, fire station, and police. Discuss emergency routes with local DWR personnel for accuracy and most direct route. First Aid kit and extra set of clothing kept on site.
Removing Boat from Water	Man Overboard Drowning Boat tipping	Lines tied off to boat and secured by personnel on shore prior to cutting off engine power. Ladder and ropes used to lower down embankment at site of boat landing. Bow line used to position boat for slings. Personnel in boat assist with positioning slings. Before lifting boat, all personnel exit boat and stand on shore away from boom truck fall line. Boat lifted slowly from water with minimum of 2 tag lines held by personnel on shore.
Man Overboard Procedures	Personnel in Water, Drowning, and Hypothermia	First priority is to get people out of the water. From the boat, throw life ring; shore attendant to throw life ring; Field Division support to call ACC and notify them of the situation. If required, REQUEST lowering/stopping the pool flow and calling in additional staff to help. It is IMPORTANT to stay on the line until all personnel are safely out of the water. Assess the personnel once out of the water and, if necessary, drive them to the hospital; or if OK, then dry off and change into dry clothes. Remove boat and equipment from aqueduct.
Boat Motor Failure	Fatigue from Rowing	Use oars to get to a ladder. Clip to ladder with bow line and preinstalled loops at 3 foot and 6 foot. Replace battery or use alternate boat motor.
Assessing whether to continue work after an event	Root cause not repaired. Repeat of people in the water. Physical Exhaustion.	Team to decide whether it is safe to continue and if the root cause corrected or resolved, boat personnel willing and able to physically continue, and still within the WCA timeframe.

Notes: Emergency map and directions to closest hospital. Photo copy personnel training records for completion of CPR/ First Aid and Boating courses.

Job Briefing - Hazardous Assessment Conducted by:

Personnel attending - Print and Sign Name

All near-misses/hazards found or created along with incidents must be reported. Send a copy of this form to the Safety Office.

ASBESTOS AND LEAD-CONTAINING PAINT SURVEY REPORT

California Aqueduct Bridge
Fresno County, California

PREPARED FOR:

CALIFORNIA DEPARTMENT OF TRANSPORTATION
ENVIRONMENTAL PLANNING 06/1410
855 M STREET, SUITE 200
FRESNO, CALIFORNIA 93721

PREPARED BY:

GEOCON CONSULTANTS, INC.
3160 GOLD VALLEY DRIVE, SUITE 800
RANCHO CORDOVA, CALIFORNIA 95742

GEOCON PROJECT NO. S9800-01-39
TASK ORDER NO. 39
E-FIS 06-1200-0096 (EA 06-0M2501)
CONTRACT NO. 06A1895

DECEMBER 2014

GEOCON
CONSULTANTS, INC.
GEOTECHNICAL ■ ENVIRONMENTAL ■ MATERIALS

Project No. S9800-01-39
December 8, 2014

Clemens Goewert, Task Order Manager
California Department of Transportation
Environmental Planning 06/1410
855 M St., Suite 200
Fresno, California 93721

Subject: ASBESTOS AND LEAD-CONTAINING PAINT SURVEY REPORT
CALIFORNIA AQUEDUCT BRIDGE (42-0270)
FRESNO COUNTY, CALIFORNIA
CONTRACT NO. 06A1895, E-FIS 06-1200-0096-1 (EA 06-0M2501)
TASK ORDER NO. 39

Dear Mr. Goewert:

In accordance with California Department of Transportation Contract No. 06A1895 and Task Order No. 39, we have performed an asbestos and lead-containing paint (LCP) survey of the California Aqueduct Bridge (42-0270) on Highway 198 in Fresno County, California. Our scope of services included surveying the bridge for suspect asbestos-containing materials and LCP, collecting bulk samples, and submitting the samples to a laboratory for analysis.

The accompanying report summarizes the services performed and laboratory analysis.

The contents of this report reflect the views of Geocon Consultants, Inc., who are responsible for the facts and accuracy of the data presented herein. The contents do not necessarily reflect the official views or policies of the State of California or the Federal Highway Administration. This report does not constitute a standard, specification, or regulation.

Please contact us if you have questions concerning the contents of this report or if we may be of further service.

Sincerely,

GEOCON CONSULTANTS, INC.

David A. Watts, CAC No. 98-2404
Senior Project Scientist

John E. Juhrend, PE, CEG
Principal/Senior Engineer

(3 + 2 CD) Addressee

TABLE OF CONTENTS

ASBESTOS AND LEAD-CONTAINING PAINT SURVEY REPORT PAGE

1.0 INTRODUCTION 1
- 1.1 Project Description 1
- 1.2 General Objectives 1

2.0 BACKGROUND 1
- 2.1 Asbestos 1
- 2.2 Lead Paint 2
- 2.3 Architectural Drawings and Previous Survey Activities 3

3.0 SCOPE OF SERVICES 3

4.0 INVESTIGATIVE RESULTS 4

5.0 RECOMMENDATIONS 5
- 5.1 Asbestos 5
- 5.2 Lead Paint 5

6.0 REPORT LIMITATIONS 5

FIGURES
1. Vicinity Map
2. Site Plan

PHOTOGRAPHS (1 through 3)

TABLE
1. Summary of Analytical Laboratory Test Results – Asbestos

APPENDIX
A. Analytical Laboratory Reports and Chain-of-custody Documentation

ASBESTOS AND LEAD-CONTAINING PAINT SURVEY REPORT

1.0 INTRODUCTION

This asbestos and LCP survey report was prepared by Geocon Consultants, Inc. under Caltrans Contract No. 06A1895, Task Order No. 39 (TO-39).

1.1 Project Description

The project consists of the California Aqueduct Bridge (42-0270) at Post Mile (PM) 35.40 on Highway 198 in Fresno County, California. We performed asbestos and LCP survey activities at the project location. The project location is depicted on the Vicinity Map, Figure 1, and Site Plan, Figure 2.

1.2 General Objectives

The purpose of the scope of services outlined in TO-39 was to determine the potential presence and quantity of asbestos-containing building materials and LCP at the project location prior to various improvements. The information obtained from this investigation will be used by Caltrans for waste profiling, determining California Occupational Safety and Health Administration (Cal/OSHA) applicability, and coordinating asbestos disturbance activities.

> *It was <u>not</u> Geocon's intent during this inspection to conduct an evaluation of lead-based paint hazards in accordance with HUD guidelines.*

2.0 BACKGROUND

2.1 Asbestos

The Code of Federal Regulations (CFR), 40 CFR 61, Subpart M, National Emissions Standards for Hazardous Air Pollutants (NESHAP) and Federal Occupational Safety and Health Administration (FED OSHA) classify asbestos-containing material (ACM) as any material or product that contains *greater than* 1% asbestos. Nonfriable ACM is classified by NESHAP as either Category I or Category II material defined as follows:

- **Category I** – asbestos-containing packings, gaskets, resilient floor coverings, and asphalt roofing products.
- **Category II** – all remaining types of nonfriable asbestos-containing material not included in Category I that when dry, cannot be crumbled, pulverized, or reduced to powder by hand pressure.

Regulated asbestos-containing material (RACM), a hazardous waste when friable, is classified as any manufactured material that contains *greater than* 1% asbestos by dry weight *and* is:

- Friable (can be crumbled, pulverized, or reduced to powder by hand pressure); or
- Category I material that has become friable; or
- Category I material that has been subjected to sanding, grinding, cutting, or abrading; or
- Category II nonfriable material that has a high probability of becoming crumbled, pulverized, or reduced to a powder during demolition or renovation activities.

Activities that disturb materials containing *any* amount of asbestos are subject to certain requirements of the Cal/OSHA asbestos standard contained in Title 8 of the California Code of Regulations (CCR) §1529. Typically, removal or disturbance of more than 100 square feet of material containing more than 0.1% asbestos must be performed by a registered asbestos abatement contractor, but associated waste labeling is not required if the material contains 1% or less asbestos. When the asbestos content of a material exceeds 1%, virtually all requirements of the standard become effective.

Materials containing more than 1% asbestos are also subject to NESHAP regulations (40 CFR Part 61, Subpart M). RACM (friable ACM and nonfriable ACM that will become friable during demolition operations) must be removed from structures prior to demolition. Certain nonfriable ACM and materials containing 1% or less asbestos may remain in structures during demolition; however, there are waste handling/disposal issues and Cal/OSHA work requirements that must be addressed. Contractors are responsible for segregating and characterizing waste streams prior to disposal.

With respect to potential worker exposure, notification, and registration requirements, Cal/OSHA defines asbestos-containing construction material (ACCM) as construction material that contains greater than 0.1% asbestos (Title 8, CCR 341.6).

2.2 Lead Paint

Construction activities (including demolition) that disturb materials or paints containing *any* amount of lead are subject to certain requirements of the Cal/OSHA lead standard contained in Title 8, CCR, §1532.1. Deteriorated paint is defined by Title 17, CCR, Division 1, Chapter 8, ⁎35022 as a surface coating that is cracking, chalking, flaking, chipping, peeling, non-intact, failed, or otherwise separated from a component. Demolition of a deteriorated LCP component would require waste characterization and appropriate disposal. Intact LCP on a component is currently accepted by most landfills and recycling facilities; however, contractors are responsible for segregating and characterizing waste streams prior to disposal.

For a solid waste containing lead, the waste is classified as California hazardous when: 1) the representative total lead content equals or exceeds the respective Total Threshold Limit Concentration

(TTLC) of 1,000 milligrams per kilogram (mg/kg); or 2) the representative soluble lead content equals or exceeds the respective Soluble Threshold Limit Concentration (STLC) of 5 milligrams per liter (mg/l) based on the standard Waste Extraction Test (WET). A waste has the potential for exceeding the lead STLC when the waste's total lead content is greater than or equal to ten times the respective STLC value since the WET uses a 1:10 dilution ratio. Hence, when total lead is detected at a concentration greater than or equal to 50 mg/kg, and assuming that 100 percent of the total lead is soluble, soluble lead analysis is required. Lead-containing waste is classified as "Resource, Conservation, and Recovery Act" (RCRA) hazardous, or Federal hazardous, when the representative soluble lead content equals or exceeds the Federal regulatory level of 5 mg/l based on the Toxicity Characteristic Leaching Procedure (TCLP).

The above regulatory criteria are based on chemical concentrations. Wastes may also be classified as hazardous based on other criteria such as ignitability; however, for the purposes of this investigation, toxicity (i.e., lead concentrations) is the primary factor considered for waste classification since waste generated during the construction activities would not likely warrant testing for ignitability or other criteria. Waste that is classified as either California hazardous or RCRA hazardous requires management as a hazardous waste.

Potential hazards exist to workers who remove or cut through LCP coatings during demolition. Dust containing hazardous concentrations of lead may be generated during scraping or cutting materials coated with lead-containing paint. Torching of these materials may produce lead oxide fumes. Therefore, air monitoring and/or respiratory protection may be required during the demolition of materials coated with LCP. Guidelines regarding regulatory provisions for construction work where workers may be exposed to lead are presented in the Title 8, CCR, §1532.1.

2.3 Architectural Drawings and Previous Survey Activities

Architectural plans and previous asbestos survey reports were not available for our review.

3.0 SCOPE OF SERVICES

Mr. David Watts, a California-Certified Asbestos Consultant (CAC), certification No. 98-2404 (expiration September 16, 2015), and Certified Lead Paint Inspector/Assessor and Project Monitor with the California Department of Public Health (DPH), certification numbers I-1734 and M-1734 (expiration December 4, 2014), performed the asbestos and LCP survey at the project location on October 27, 2014. We observed no suspect LCP on structural members of the bridge. Consequently, we collected no paint samples.

Suspect ACM were grouped into homogeneous areas with representative samples randomly collected from each. In addition, each potential ACM was evaluated for friability. A total of eight bulk asbestos samples representing three suspect components were collected.

Our procedures for inspection and sampling in accordance with TO-39 are discussed below:

- Collected bulk asbestos samples after first wetting friable materials with a light mist of water. The samples were then cut from the substrate and transferred to labeled containers. Note that when multiple samples were collected, the sampling locations were distributed throughout the homogeneous area (spaces where the material was observed).
- Relinquished bulk asbestos samples under standard chain-of-custody protocol to EMSL Analytical, Inc., a California-licensed and Caltrans-approved subcontractor, for asbestos analysis in accordance with United States Environmental Protection Agency (EPA) Test Method 600/R-93/116 using polarized light microscopy (PLM). EMSL Analytical, Inc. is a laboratory accredited by the National Institute of Standards and Technology National Voluntary Laboratory Accreditation Program (NIST-NVLAP) for bulk asbestos fiber analysis. The laboratory analyses were requested on a turnaround period of ten days.

Sample group identification numbers, material descriptions, approximate quantities, friability assessments, and photo references are summarized on Table 1. Approximate sample locations are presented on Figure 2. Materials represented by the samples collected are shown in the attached photographs.

4.0 INVESTIGATIVE RESULTS

Chrysotile asbestos at a concentration less than (<) 0.1% was detected in samples representing nonfriable concrete used in the bridge deck, barriers, and abutments. The asbestos content was determined using PLM point count analysis (1,000 points).

Chrysotile asbestos at a concentration of 40% was detected in samples representing approximately 6 square feet of nonfriable asbestos sheet packing used as shims on the bridge barrier rail systems.

No asbestos was detected in samples of the remaining suspect materials collected during our survey. A summary of the analytical laboratory test results for asbestos is presented on Table 1. Reproductions of the laboratory report and chain-of-custody documentation are presented in Appendix A.

5.0 RECOMMENDATIONS

Based on our findings, we recommend the following:

5.1 Asbestos

NESHAP regulations do not require that asbestos-containing sheet packing (a Category I nonfriable/nonhazardous material) or materials containing less than 0.1% asbestos (i.e., concrete) identified during our survey be removed prior to demolition/renovation or be treated as hazardous waste. The sheet packing and concrete may also be reused or stored. However, activities causing *disturbance* of the sheet packing and concrete (i.e., cutting, abrading, sanding, grinding, crushing, etc.) would require compliance with the Cal/OSHA asbestos standard (Title 8, CCR §1529).

We also recommend the notification of contractors (that will be conducting demolition, renovation, or related activities) of the presence of asbestos in their work areas (i.e., provide the contractor[s] with a copy of this report and a list of asbestos removed by contractor[s] during subsequent abatement activities). Personnel not trained for asbestos work should be instructed not to disturb asbestos. Written notification to the San Joaquin Valley Unified Air Pollution Control District is required ten working days prior to commencement of *any* demolition activity (whether asbestos is present or not).

5.2 Lead Paint

We recommend that all paints at the project location (graffiti, graffiti abatement, traffic striping, signage, etc.) be treated as lead-containing for purposes of determining the applicability of the Cal/OSHA lead standard during maintenance, renovation, and demolition activities. This recommendation is based on the fact that lead was a common ingredient of paints manufactured before 1978 and is still an ingredient of some paints. In accordance with Title 8, CCR, §1532.1(p), written notification to the nearest Cal/OSHA district office is required at least 24 hours prior to certain lead-related work. Compliance and training requirements regarding construction activities where workers may be exposed to lead are presented in Title 8, CCR, §1532.1, subsections (e) and (l), respectively. Contractors are responsible for segregating and characterizing waste streams prior to disposal.

6.0 REPORT LIMITATIONS

This asbestos and LCP survey was conducted in conformance with generally accepted standards of practice for identifying and evaluating asbestos-containing building materials and LCP in structures. The survey addressed only the structure identified in Section 1.1. Due to the nature of structure surveys, some asbestos-containing building materials or LCP at the project location may not have been identified. Spaces, such as cavities, crawlspaces, voids, and pipe chases, may have been concealed to our investigator. Previous building renovation work may have concealed or covered spaces or materials, or may have partially demolished materials and left debris in inaccessible areas.

Additionally, renovation activities may have partially replaced asbestos with indistinguishable non-asbestos. Asbestos and LCP may exist in areas not accessible or sampled in conjunction with this TO.

During renovation or demolition operations, suspect materials may be uncovered which are different from those accessible for sampling during this assessment. Personnel in charge of renovation/demolition should be alerted to note materials uncovered during such activities that differ substantially from those included in this or previous assessment reports. If additional suspect materials are found, they should be treated as hazardous until/unless sampling and analysis indicate otherwise.

This report has been prepared exclusively for Caltrans. The information contained herein is only valid as of the date of the report and will require an update to reflect additional information obtained.

This report is not a comprehensive site characterization and should not be construed as such. The findings as presented in this report are predicated on the results of the limited sampling and laboratory testing performed. In addition, the information obtained is not intended to address potential impacts related to sources other than those specified herein. Therefore, the report should be deemed conclusive with respect to only the information obtained. We make no warranty, express or implied, with respect to the content of this report or any subsequent reports, correspondence or consultation.

Geocon strived to perform the services summarized herein in accordance with the local standard of care in the geographic region at the time the services were rendered.

The contents of this report reflect the views of the author who is responsible for the facts and accuracy of the data presented herein. The contents do not necessarily reflect the official views or policies of the State of California or the Federal Highway Administration. This report does not constitute a standard, specification, or regulation.

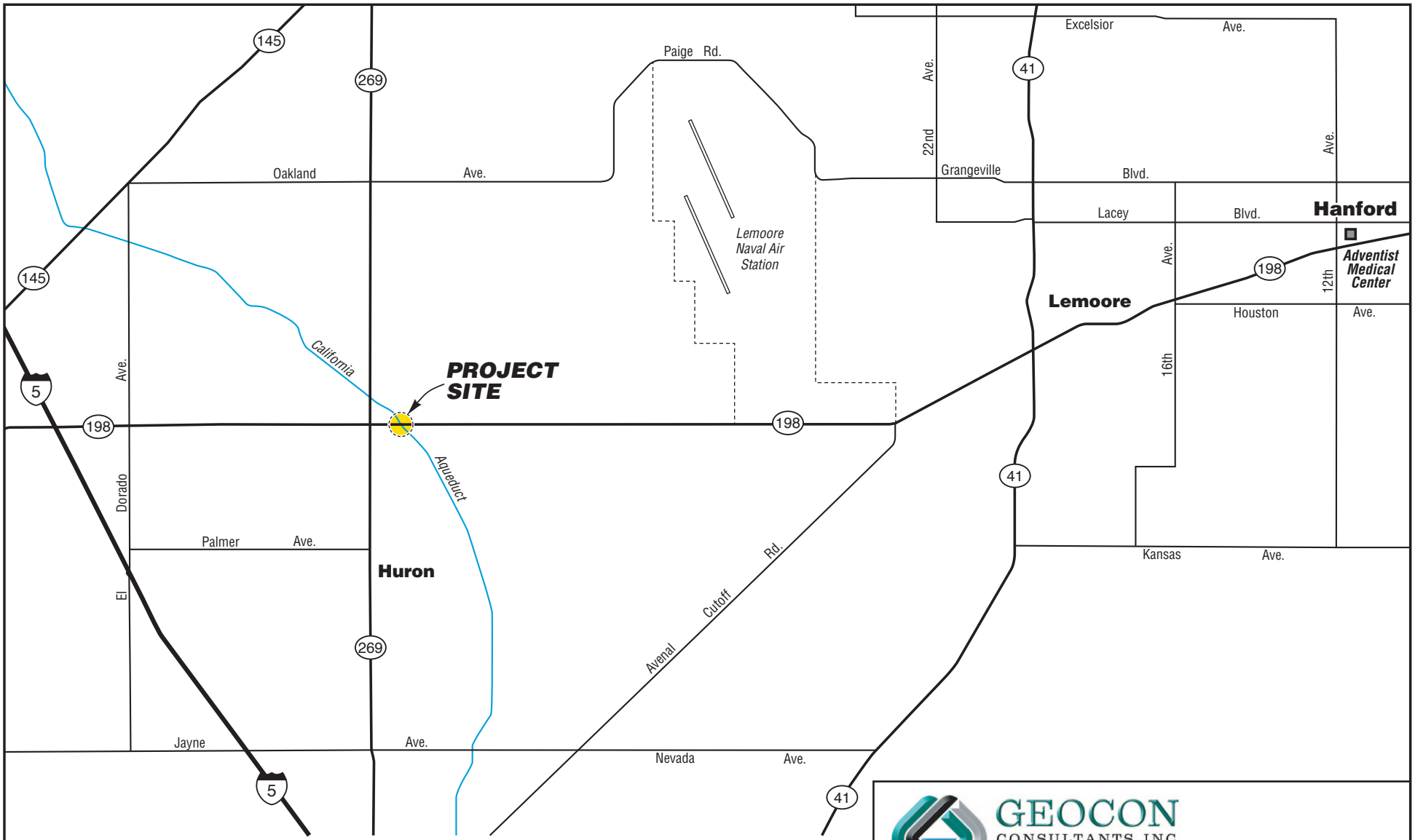

GEOCON
CONSULTANTS, INC.
3160 GOLD VALLEY DR – SUITE 800 – RANCHO CORDOVA, CA 95742
PHONE 916.852.9118 – FAX 916.852.9132

California Aqueduct Bridge

GEOCON Proj. No. S9800-01-39
Task Order No. 39
E-FIS 06-1200-0096
EA 06-0M2501
Caltrans Contract 06A1895

VICINITY MAP

December 2014

Figure 1

LEGEND:

- Approximate Asbestos Sample Location

N

0 50

Scale in Feet

GEOCON
CONSULTANTS, INC.
3160 GOLD VALLEY DR – SUITE 800 – RANCHO CORDOVA, CA 95742
PHONE 916.852.9118 – FAX 916.852.9132

California Aqueduct Bridge

GEOCON Proj. No. S9800-01-39
Task Order No. 39
E-FIS 06-1200-0096
EA 06-0M2501
Caltrans Contract 06A1895

SITE PLAN

December 2014

Figure 2

Photo 1 – California Aqueduct (Bridge 42-0270) at PM 35.40 on Highway 198 in Fresno County, California

Photo 2 – Bridge barrier system (shims are asbestos sheet packing)

Photo 3 – Bridge span and pier

GEOCON
CONSULTANTS, INC.
3160 GOLD VALLEY DR – SUITE 800 – RANCHO CORDOVA, CA 95742
PHONE 916.852.9118 – FAX 916.852.9132

PHOTOGRAPHS 1, 2, & 3		
California Aqueduct Fresno County, California		
S9800-01-39		December 2014

TABLE 1
SUMMARY OF ANALYTICAL LABORATORY TEST RESULTS - ASBESTOS
CALIFORNIA AQUEDUCT (42-0270)
CALTRANS CONTRACT 06A1895, TASK ORDER NO. 39, E-FIS 06-1200-0096-1 (EA 06-0M2501)
FRESNO COUNTY, CALIFORNIA

Polarized Light Microscopy (PLM) - EPA Test Method 600/R-93/116

Sample Group No.	Material Description	Approximate Quantity	Friable	Site Photos	Asbestos Content
1	Concrete	NA	NA	1 through 3	<0.1%*
2	Asphalt	NA	NA	1	ND
3	**Sheet packing (barrier rail shims)**	**6 square feet**	**No**	**2**	**40%**

Notes:

NA = Not applicable (asbestos not detected at or above 0.1%)
* Material analyzed using PLM Point Counting (1,000 points)
ND = Not detected

APPENDIX A

EMSL Analytical, Inc
2235 Polvorosa Ave , Suite 230, San Leandro, CA 94577
Phone/Fax: (510) 895-3675 / (510) 895-3680
http://www.EMSL.com sanleandrolab@emsl.com

EMSL Order:	091416197
CustomerID:	GECN21
CustomerPO:	06A1895
ProjectID:	06A1895

Attn: **Dave Watts**
Geocon Consultants, Inc.
6671 Brisa Street
Livermore, CA 94550

Phone:	(925) 371-5900
Fax:	(925) 371-5915
Received:	10/28/14 2:45 PM
Analysis Date:	11/20/2014
Collected:	10/28/2014

Project: **06A1895** **S9800-01-39**

Test Report: Asbestos Analysis of Bulk Material via EPA 600/R-93/116. Quantitation using the 1,000 Point Count Procedure

Sample	Description	Appearance	Non-Asbestos % Fibrous	Non-Asbestos % Non-Fibrous	Asbestos % Type
1A-Concrete *091416197-0001*		Gray Non-Fibrous Homogeneous		100.00% Non-fibrous (other)	**<0.1% Chrysotile**
1B-Concrete *091416197-0002*		Gray Non-Fibrous Homogeneous		100.00% Non-fibrous (other)	**<0.1% Chrysotile**
1C-Concrete *091416197-0003*		Gray Non-Fibrous Homogeneous		100.00% Non-fibrous (other)	**<0.1% Chrysotile**

Analyst(s)

Adam C. Fink (3)

Chris Dojlidko, Laboratory Manager
or other approved signatory

Some samples may contain asbestos fibers present in dimensions below PLM resolution limits.The limit of detection as stated in the method is 0.1%. EMSL Analytical Inc suggests that samples reported as <0.1% or none detected undergo additional analysis via TEM. The above test report relates only to the items tested. This report may not be reproduced, except in full, without written approval EMSL Analytical Inc. This test report must not be used by the client to claim product endorsement by NVLAP or any agency of the United States Government. EMSL Analytical Inc. bears no responsibility for sample collection activities, analytical method limitations, or the accuracy of results when requested to separate layered samples. EMSL Analytical Inc liability is limited to the cost of sample analysis.The test results contained within this report meet the requirements of NELAC unless otherwise noted. Samples received in good condition unless otherwise noted. Unless requested by the client, building materials manufactured with multiple layers (i.e. linoleum, wallboard, etc.) are reported as a single sample.

Samples analyzed by EMSL Analytical, Inc San Leandro, CA NVLAP Lab Code 101048-3, WA C884

Initial report from 11/20/2014 21:53:42

THIS IS THE LAST PAGE OF THE REPORT.

EMSL Analytical, Inc
2235 Polvorosa Ave , Suite 230, San Leandro, CA 94577
Phone/Fax: (510) 895-3675 / (510) 895-3680
http://www.EMSL.com sanleandrolab@emsl.com

EMSL Order:	091416197
CustomerID:	GECN21
CustomerPO:	06A1895
ProjectID:	06A1895

Attn: **Dave Watts**
Geocon Consultants, Inc.
6671 Brisa Street
Livermore, CA 94550

Phone:	(925) 371-5900
Fax:	(925) 371-5915
Received:	10/28/14 2:45 PM
Analysis Date:	11/11/2014
Collected:	10/28/2014

Project: **06A1895** **S9800-01-39**

Test Report: Asbestos Analysis of Bulk Materials via EPA 600/R-93/116 Method using Polarized Light Microscopy

			Non-Asbestos				Asbestos	
Sample	**Description**	**Appearance**	**%**	**Fibrous**	**%**	**Non-Fibrous**	**%**	**Type**
1A-Concrete *091416197-0001*		Gray Non-Fibrous Homogeneous			15% 60% 25%	Quartz Ca Carbonate Non-fibrous (other)	**<1%**	**Chrysotile**
1B-Concrete *091416197-0002*		Gray Non-Fibrous Homogeneous			15% 60% 25%	Quartz Ca Carbonate Non-fibrous (other)	**<1%**	**Chrysotile**
1C-Concrete *091416197-0003*		Gray Non-Fibrous Homogeneous			15% 60% 25%	Quartz Ca Carbonate Non-fibrous (other)	**<1%**	**Chrysotile**
1D-Concrete *091416197-0004*		Gray Non-Fibrous Homogeneous			20% 50% 30%	Quartz Ca Carbonate Non-fibrous (other)		**None Detected**
2A-Asphalt *091416197-0005*		Black Non-Fibrous Homogeneous			20% 50% 30%	Quartz Matrix Non-fibrous (other)		**None Detected**
2B-Asphalt *091416197-0006*		Black Non-Fibrous Homogeneous			20% 50% 30%	Quartz Matrix Non-fibrous (other)		**None Detected**
3A-Shims *091416197-0007*		Black Fibrous Homogeneous			50% 10%	Matrix Non-fibrous (other)	**40%**	**Chrysotile**

Analyst(s)
Matthew Batongbacal (8)

Derrick Tanner, Laboratory Manager
or other approved signatory

EMSL maintains liability limited to cost of analysis. This report relates only to the samples reported and may not be reproduced, except in full, without written approval by EMSL. EMSL bears no responsibility for sample collection activities or analytical method limitations. Interpretation and use of test results are the responsibility of the client. This report must not be used by the client to claim product certification, approval, or endorsement by NVLAP, NIST or any agency of the federal government. Non-friable organically bound materials present a problem matrix and therefore EMSL recommends gravimetric reduction prior to analysis. Samples received in good condition unless otherwise noted. Estimated accuracy, precision and uncertainty data available upon request. Unless requested by the client, building materials manufactured with multiple layers (i.e. linoleum, wallboard, etc.) are reported as a single sample. Reporting limit is 1%

Samples analyzed by EMSL Analytical, Inc San Leandro, CA NVLAP Lab Code 101048-3, WA C884

Initial report from 11/11/2014 12:49:22

EMSL Analytical, Inc
2235 Polvorosa Ave , Suite 230, San Leandro, CA 94577
Phone/Fax: (510) 895-3675 / (510) 895-3680
http://www.EMSL.com sanleandrolab@emsl.com

EMSL Order:	091416197
CustomerID:	GECN21
CustomerPO:	06A1895
ProjectID:	06A1895

Attn: **Dave Watts**
Geocon Consultants, Inc.
6671 Brisa Street
Livermore, CA 94550

Phone:	(925) 371-5900
Fax:	(925) 371-5915
Received:	10/28/14 2:45 PM
Analysis Date:	11/11/2014
Collected:	10/28/2014

Project: **06A1895** **S9800-01-39**

Test Report: Asbestos Analysis of Bulk Materials via EPA 600/R-93/116 Method using Polarized Light Microscopy

			Non-Asbestos			Asbestos	
Sample	**Description**	**Appearance**	**%**	**Fibrous**	**%**	**Non-Fibrous**	**% Type**
3B-Shims		Black			50%	Matrix	**40% Chrysotile**
091416197-0008		Fibrous Homogeneous			10%	Non-fibrous (other)	

Analyst(s)

Matthew Batongbacal (8)

Derrick Tanner, Laboratory Manager
or other approved signatory

EMSL maintains liability limited to cost of analysis. This report relates only to the samples reported and may not be reproduced, except in full, without written approval by EMSL. EMSL bears no responsibility for sample collection activities or analytical method limitations. Interpretation and use of test results are the responsibility of the client. This report must not be used by the client to claim product certification, approval, or endorsement by NVLAP, NIST or any agency of the federal government. Non-friable organically bound materials present a problem matrix and therefore EMSL recommends gravimetric reduction prior to analysis. Samples received in good condition unless otherwise noted. Estimated accuracy, precision and uncertainty data available upon request. Unless requested by the client, building materials manufactured with multiple layers (i.e. linoleum, wallboard, etc.) are reported as a single sample. Reporting limit is 1%

Samples analyzed by EMSL Analytical, Inc San Leandro, CA NVLAP Lab Code 101048-3, WA C884

Initial report from 11/11/2014 12:49:22

THIS IS THE LAST PAGE OF THE REPORT.

EMSL ANALYTICAL, INC.
LABORATORY • PRODUCTS • TRAINING

Asbestos Chain of Custody

EMSL Order Number *(Lab Use Only)*:

№ 0 9 1 4 1 6 1 9 7

CALTRANS – 06A1895

EMSL ANALYTICAL, INC.
2235 POLVOROSA DR., STE. 230
SAN LEANDRO, CA 94577
PHONE: (510) 895-3675
FAX: (510) 895-3680

Company: GEOCON
Street: 6671 BRISA ST
City: LIVERMORE **State/Province:** CA
Report To (Name): D. WATTS
Telephone #: 925-371-5900

EMSL-Bill to: ☒ Same ☐ Different
If Bill to is Different note instructions in Comments**
Third Party Billing requires written authorization from third party
Zip/Postal Code: 94550 **Country:** USA
Fax #: 925-371-5915
Email Address: WATTS@GEOCONINC.COM

Project Name/Number: 9800-01-39
Please Provide Results: ☐ Fax ☒ Email **Purchase Order:** **U.S. State Samples Taken:** CA

Turnaround Time (TAT) Options* – Please Check

☐ 3 Hour ☐ 6 Hour ☐ 24 Hour ☐ 48 Hour ☐ 72 Hour ☐ 96 Hour ☐ 1 Week ☒ 2 Week

**For TEM Air 3 hours/6 hours, please call ahead to schedule *There is a premium charge for 3 Hour TEM AHERA or EPA Level II TAT You will be asked to sign an authorization form for this service. Analysis completed in accordance with EMSL's Terms and Conditions located in the Analytical Price Guide.*

PCM - Air
☐ NIOSH 7400
☐ w/ OSHA 8hr. TWA

PLM - Bulk (reporting limit)
☒ PLM EPA 600/R-93/116 (<1%)
☐ PLM EPA NOB (<1%)
Point Count
☐ 400 (<0.25%) ☐ 1000 (<0 1%)
Point Count w/Gravimetric
☐ 400 (<0 25%) ☐ 1000 (<0 1%)
☐ NYS 198.1 (friable in NY)
☐ NYS 198.6 NOB (non-friable-NY)
☐ NIOSH 9002 (<1%)

TEM – Air ☐ **4-4.5hr TAT (AHERA only)**
☐ AHERA 40 CFR, Part 763
☐ NIOSH 7402
☐ EPA Level II
☐ ISO 10312

TEM - Bulk
☐ TEM EPA NOB
☐ NYS NOB 198 4 (non-friable-NY)
☐ Chatfield SOP
☐ TEM Mass Analysis-EPA 600 sec. 2 5

TEM – Water: EPA 100.2
Fibers >10µm ☐ Waste ☐ Drinking
All Fiber Sizes ☐ Waste ☐ Drinking

TEM- Dust
☐ Microvac - ASTM D 5755
☐ Wipe - ASTM D6480
☐ Carpet Sonication (EPA 600/J-93/167)

Soil/Rock/Vermiculite
☐ PLM CARB 435 - A (0.25% sensitivity)
☐ PLM CARB 435 - B (0.1% sensitivity)
☐ TEM CARB 435 - B (0.1% sensitivity)
☐ TEM CARB 435 - C (0.01% sensitivity)
☐ EPA Protocol (Semi-Quantitative)
☐ EPA Protocol (Quantitative)

Other:
☐

☐ **Check For Positive Stop – Clearly Identify Homogenous Group**

Samplers Name: D. WATTS **Samplers Signature:** [signature]

Sample #	Sample Description	Volume/Area (Air) HA # (Bulk)	Date/Time Sampled
1A-D	CONCRETE	NA	28 OCT 2014
2A/B	ASPHALT	"	"
3A/B	SHIMS	"	"

Client Sample # (s): - **Total # of Samples:** 8
Relinquished (Client): [signature] **Date:** 10/28/14 **Time:** 1045
Received (Lab): Z. A **Date:** 10/28/14 **Time:** ~~4:45pm~~ 2:45pm
Comments/Special Instructions:
RB 10-28-14 (W.I.)

Ataelgeed, Eltahir@DOT

From: Dawood, Sofian@DOT
Sent: Thursday, January 28, 2016 8:22 AM
To: Lomeli, Carlos@DOT
Cc: Ataelgeed, Eltahir@DOT
Subject: RE: Need confirmation re 06-0M2504 Source for Recycled Water for Construction

Perfect, thank you so much.

From: Lomeli, Carlos@DOT
Sent: Thursday, January 28, 2016 8:18 AM
To: Dawood, Sofian@DOT <sofian.dawood@dot.ca.gov>
Subject: Re: Need confirmation re 06-0M2504 Source for Recycled Water for Construction

The recycled water source is incorrect.
The source location:
06-Fre-168/Temperance Ave.

CARLOS LOMELÍ
Highway Superintendent
California Department of Transportation, District 6
Maintenance Division, Fresno Area
P.O. Box 12616
Fresno, CA 93778-2616
(559) 488-4180 office
(559) 240-0070 mobile
carlos.lomeli@dot.ca.gov

www.dot.ca.gov/dist6

Caltrans Maintenance Division
Safer, Smarter, Together

On Jan 6, 2016, at 11:45 AM, Dawood, Sofian@DOT <sofian.dawood@dot.ca.gov> wrote:

> Hi Carlos,
>
> We would like to include in our contract of EA 06-0M2504 an available water resource: "Fresno Caltrans Maintenance Station".
>
> We will include Chris Bowen (559) 488-4181, as the District 6 Irrigation Water Manager, Sean Wirth as the Local Supervisor Responsible for recycled Water System (559) 974-8551, and Carlos Lomeli (559) 488-4180 as the Maintenance Area Superintendent.
>
> This project will be in Fresno County 0.1 mile west to 0.1 east of California Aqueduct Bridge. Mainly it will be structure work that will included but not limited to demolition of the bridge deck, and forming a new deck.

The estimated Working days are about 185 days, 145 of which is estimated to be structure work. **The Total Estimated Water Use is about 400,000 Gallons.**

Please shoot me an email with an okay if you are good with the above; and if you have any questions or concerns, please do not hesitate to call me at (559) 307-4644 or e-mail me.

Thank you for your prompt response, and **HAPPY NEW YEAR** !

Brakemaster® 350

A Proven-Effective Crash Cushion

DESIGN

ENERGY ABSORPTION
SYSTEMS, INC.

A Quixote Company
Saving Lives By Design

Corporate Offices:
35 East Wacker Dr., 11th Floor
Chicago, IL 60601-2076
Telephone: (312) 467-6750
FAX: (312) 467-1356
http://www.energyabsorption.com/

Engineering and Manufacturing Facilities:
Rocklin, CA
Pell City, AL

Brakemaster® 350

General Information

Table of Contents

System Introduction/Overview 3

Brakemaster 350 System Design Criteria 4

Unidirectional Configuration 7

BidirectionalConfiguration 12

Transitions 22

Limitations and Warnings 29

Important Introductory Notes

Proper installation of the Brakemaster 350 System is essential to assure maximum performance. Take the time to review the installation instructions and product limitations thoroughly before performing the necessary work. Do not attempt to install any crash cushion without the proper plans and Installation Manual from the manufacturer.

If you need additional information, or have questions about the Brakemaster 350 System, please call Energy Absorption Systems' **Customer Service Department at (888) 32-ENERG.**

System Overview

The Brakemaster 350 System is specially designed to shield narrow hazards in low frequency impact areas (see Limitations and Warnings). For protection of narrow hazards in a greater number of applications and easier refurbishment, the QuadGuard System remains the most versatile impact attenuator available.

Counting The Number of Bays

One bay consists of one diaphragm, two fender panels, etc. Determine the number of bays by counting the fender panels on one side.

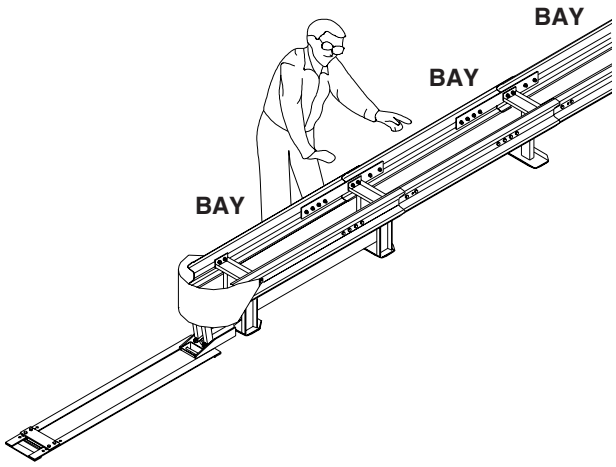

How to Determine Left/Right

To determine left from right when ordering parts, stand in front of the unit facing the hazard. Your left is the unit's left and your right is the unit's right.

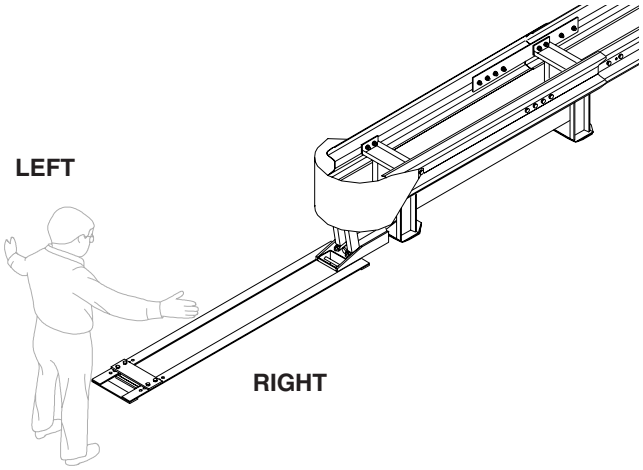

Brakemaster® 350

Design Criteria

Design, selection, and placement of crash cushions and end terminals shall conform to and utilize devices described in:

1) American Association of State Highway and Transportation Officials (AASHTO) 1996 "Roadside Design Guide."
2) U. S. Department of Transportation/Federal Highway Administration (FHWA) Report No. 5040.16 "Crash Cushions, Selection Criteria, and Designs."

The BRAKEMASTER 350 System has been fully tested and evaluated per the recommendations of the National Cooperative Highway Research Program (NCHRP) Report 350 and has been approved by FHWA.

The BRAKEMASTER 350 System is designed to attach to w-beam guardrail with a nominal width of 460 mm [18 inches] and a centerline height of 533 mm [21"]. To ensure proper performance, the first 1905 mm [6'-3"] guardrail section behind the BRAKEMASTER 350 System should not angle more than 3 degrees laterally from the system centerline.

Special Site Conditions

1) Are curbs, islands or elevated objects (delineators, signs) present at the site? What height and width are they? All curbs and elevated objects over 102 mm [4"] high should be removed. If possible, curbs under 102 mm [4"] high should be removed a minimum of 15 m [50 feet] in front of the BRAKEMASTER 350 System and as far back as the rear of the system.
2) Other factors that may affect your design: insufficient space for the BRAKEMASTER 350 System length, the existence of drain inlets, junction boxes or other appurtenances located near the hazard (can they be relocated?).
3) In addition to the hazard's width, factors such as the hazard's height and the material from which it is made need to be considered. Is it concrete or steel? The transition and final attachment design are dependent on these factors.
4) What is the general geometry of the site, including the roadway for 150 m [500'] in front, so traffic patterns can be visualized?
5) Is there a cross slope? If there is a cross slope of more than 8% (4.5 degrees), a leveling pad must be used.
6) Generally, the presence of expansion joints does not present a problem, but contact Energy Absorption Systems, Customer Service Department before proceeding with your design.
7) Is the unit in a two-way traffic situation, with traffic going in opposite directions on either side of the system? In these cases, the centerline of the BRAKEMASTER 350 System must be parallel to the centerline of the median behind the unit to within plus or minus 1 degree.
8) What type of transition is preferred? See transitions in the Applications section of this manual. Custom designs to meet your specific needs are available, please contact Energy Absorption Systems, Customer Service Department.
9) If there are any other unique features at the site that may affect positioning or performance of the BRAKEMASTER 350 System, please contact Energy Absorption Systems, Customer Service Department.
10) To ensure proper performance, the BRAKEMASTER 350 System should be installed on soils having a strength in the range of 10 to 60 blow counts per foot [300 mm] (per ASTM D1586). The standard anchor is an embedded concrete pile anchor. For other anchoring options, please contact Energy Absorption Systems Customer Service Department.
11) The location and orientation of the BRAKEMASTER 350 System must comply with the project plans or as otherwise specified by the project engineer.
12) The pad surface finish shall be standard firm soil, compacted subbase, oiled crushed rock, asphalt, or concrete. For questions regarding surface conditions, please contact Energy Absorption Systems Customer Service Department.

1	9202025-0000	ANCHOR ADAPTER,BTS TO FOUND. TUBE	1.00
2	9202026-0000	ANCHOR STRAP,BRS	1.00
3	9202028-0000	FOUNDATION TUBE,78,BRS	2.00
4	2701992-0000	BOLT,HX,5/8X10,G5,G	2.00
5	2704191-0000	NUT,HX,5/8,G,RAIL	6.00
6	9202033-0000	ANCHOR PLUG, FOUNDATION TUBE	1.00
7	2700501-0000	BOLT,HX,5/8X2,G2,G	4.00

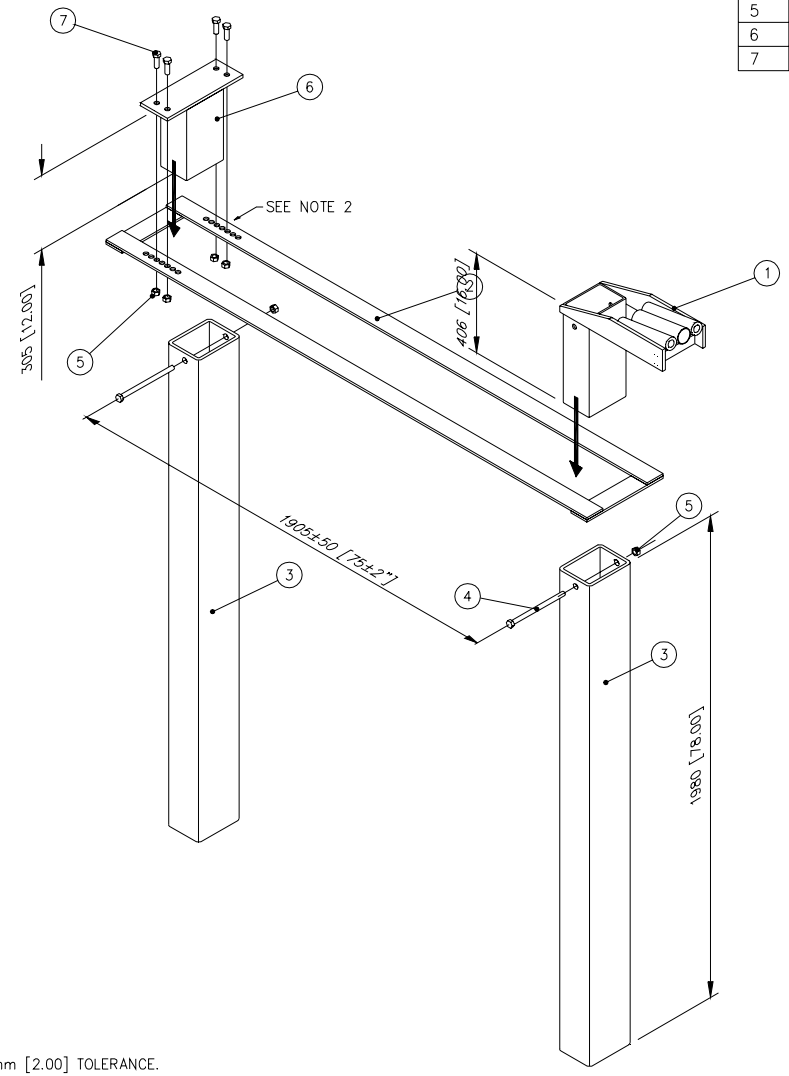

NOTES:
1. TIGHTEN NUTS 1/2 TURN BEYOND SNUG.
2. EXTRA HOLES IN ITEM 2 ARE FOR ±50mm [2.00] TOLERANCE.
3. UNITS OF MEASURE ARE IN MILLIMETERS [INCHES] UNLESS OTHERWISE NOTED.

ASSEMBLY NO. 9202024-0000

ENERGY ABSORPTION SYSTEMS, INC.
ENGINEERING AND RESEARCH DEPARTMENT

BRAKEMASTER®350 SYSTEM (BRS)
ANCHOR ASSY,FOUNDATION TUBE,
2m [6'-6"], BRS

Brakemaster® 350

PARTS LIST

ITEM	STOCK NO.	DESCRIPTION	REQ'D
1	9202021-0000	ANCHOR,EMBEDDED,W/DECAL	1
2	9202031-0000	SUPPORT,WOOD,1X4X48	2
3	2699141-0100	BOLT,HX,1/4X1 3/4,G2,P	4
4	2708271-0000	WASHER,FLAT,1/4X1 1/2,G	4
5	2704151-0100	NUT,HX,1/4,P	4

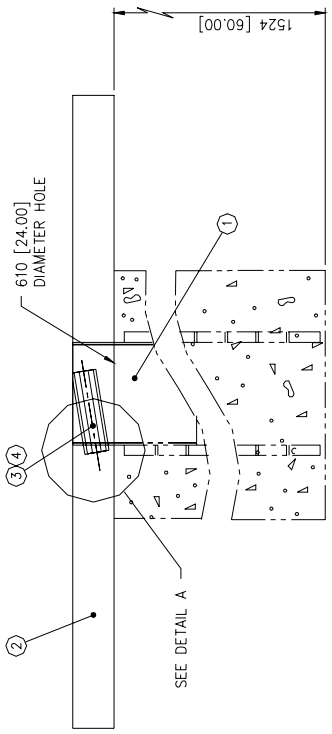

SIDE VIEW

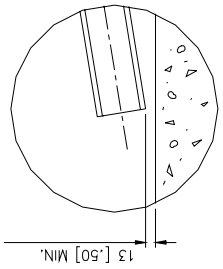

DETAIL A

CAUTION: Proper placement of this assembly is critical to the final assembly of the system. Read and follow the installation instructions.

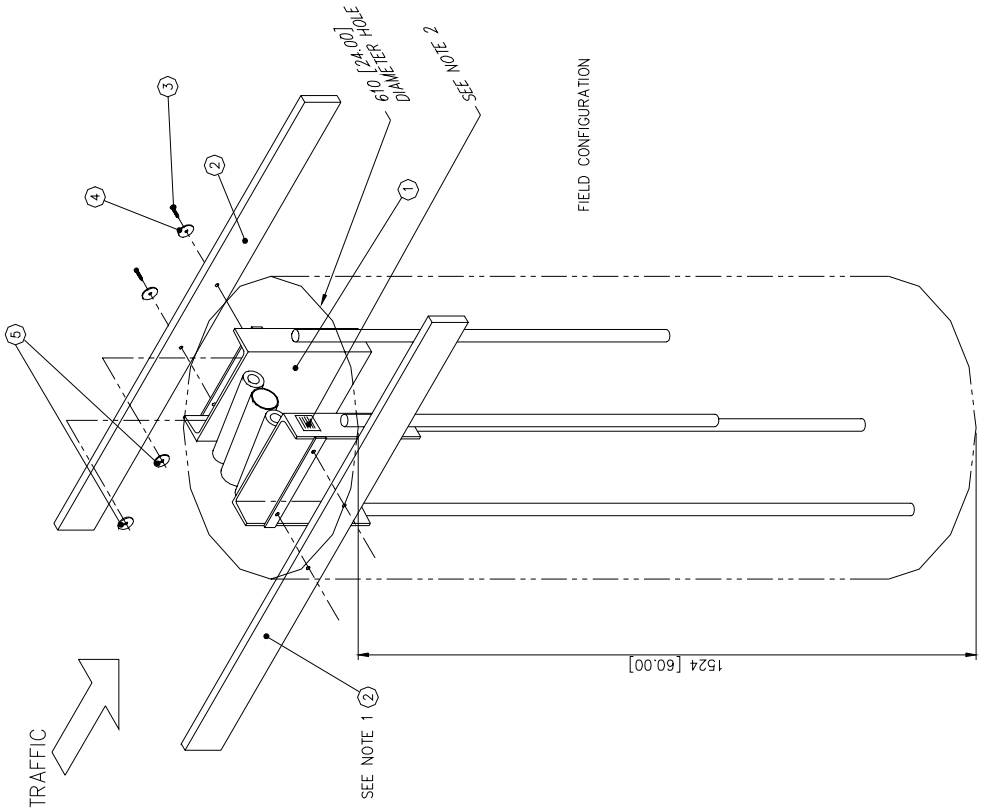

FIELD CONFIGURATION

ASSEMBLY NO. 9202010-0000

ENERGY ABSORPTION SYSTEMS, INC.
ENGINEERING AND RESEARCH DEPARTMENT

BRAKEMASTER SYSTEM®350 (BRS)
ANCHOR ASSY, EMBEDDED, BRS

NOTES:
1. ATTACH ITEMS 2 TO ITEM 1 AS SHOWN PRIOR TO INSTALLATION; REMOVE AFTER CONCRETE HAS SET.
2. NOTE DIRECTION OF ANCHOR: SEE DECAL.
3. UNITS OF MEASURE ARE IN MILLIMETERS [INCHES] UNLESS OTHERWISE NOTED.

PARTS LIST

ITEM	STOCK NO.	DESCRIPTION	REQ'D
1	9202024-0000	ANCHOR ASSY,FOUNDATION TUBE,6 1/2 FT.	1
2	9204010-0000	BREAKAWAY ASSY	1
3	9206010-0000	BRAKE/TENSION SUPPORT ASSY	1
4	9208010-0000	CABLE/BRAKE ASSY	1
5	9210011-0000	DIAPHRAGM,BRS	3
6	9212010-0000	PANEL/STRAP ASSY	6
7	9214010-0000	TRANSITION STRAP ASSY	2

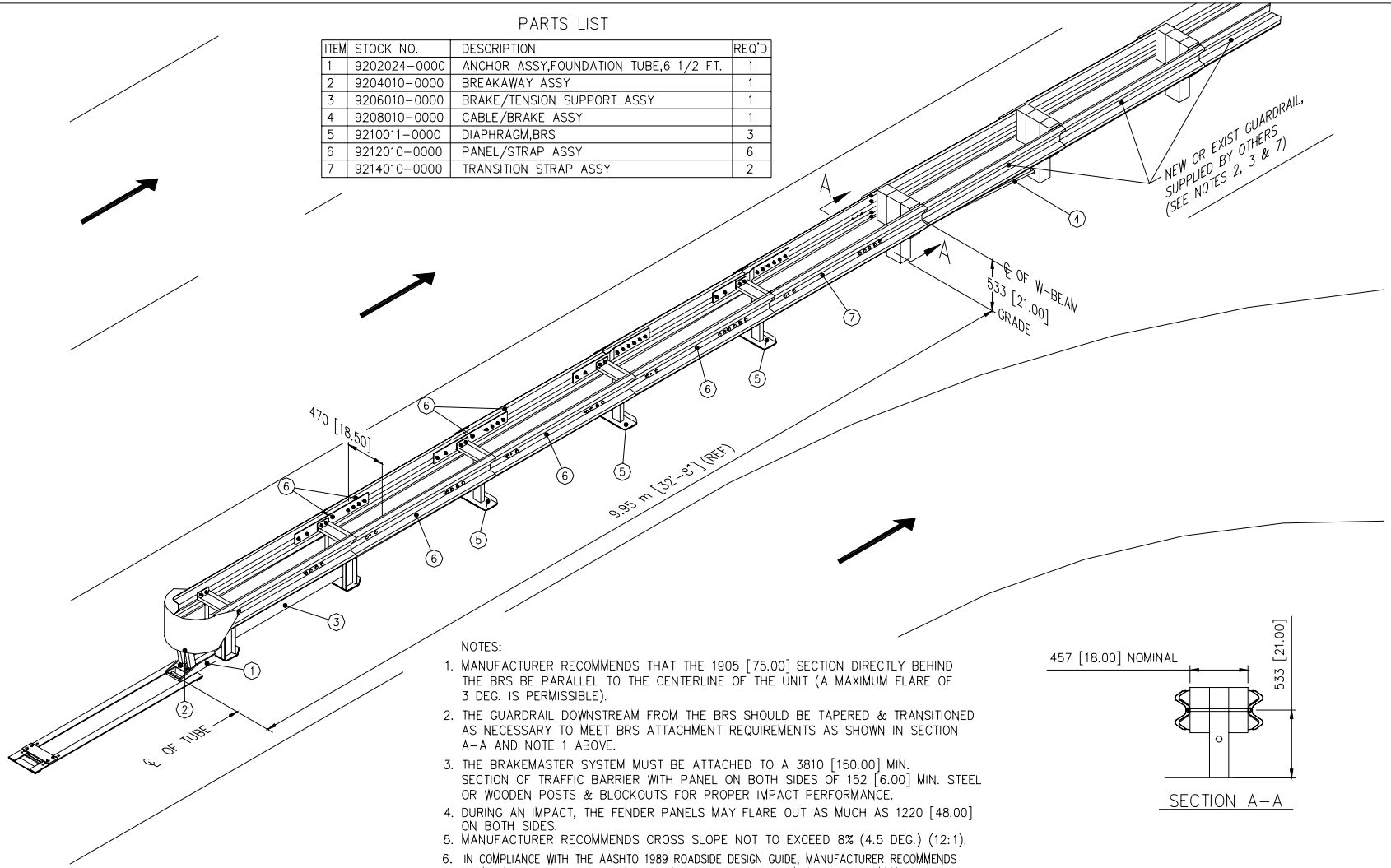

NOTES:

1. MANUFACTURER RECOMMENDS THAT THE 1905 [75.00] SECTION DIRECTLY BEHIND THE BRS BE PARALLEL TO THE CENTERLINE OF THE UNIT (A MAXIMUM FLARE OF 3 DEG. IS PERMISSIBLE).
2. THE GUARDRAIL DOWNSTREAM FROM THE BRS SHOULD BE TAPERED & TRANSITIONED AS NECESSARY TO MEET BRS ATTACHMENT REQUIREMENTS AS SHOWN IN SECTION A–A AND NOTE 1 ABOVE.
3. THE BRAKEMASTER SYSTEM MUST BE ATTACHED TO A 3810 [150.00] MIN. SECTION OF TRAFFIC BARRIER WITH PANEL ON BOTH SIDES OF 152 [6.00] MIN. STEEL OR WOODEN POSTS & BLOCKOUTS FOR PROPER IMPACT PERFORMANCE.
4. DURING AN IMPACT, THE FENDER PANELS MAY FLARE OUT AS MUCH AS 1220 [48.00] ON BOTH SIDES.
5. MANUFACTURER RECOMMENDS CROSS SLOPE NOT TO EXCEED 8% (4.5 DEG.) (12:1).
6. IN COMPLIANCE WITH THE AASHTO 1989 ROADSIDE DESIGN GUIDE, MANUFACTURER RECOMMENDS REMOVAL OF ALL CURBS AND ISLANDS FOR PROPER IMPACT PERFORMANCE.
7. DOWNSTREAM GUARDRAIL MUST BE ANCHORED TO WITHSTAND A TENSION OF 534 kN [120,000 LBS.] WHICH COULD DEVELOP DURING A SIDE ANGLE IMPACT.
8. CAUTION: DO NOT ATTACH THE BRAKEMASTER SYSTEM DIRECTLY TO A RIGID CONCRETE BARRIER. A GUARDRAIL TRANSITION SECTION IS REQUIRED. CONTACT ENERGY ABSORPTION SYSTEMS AT (312) 467-6750 FOR MORE INFORMATION.
9. UNITS OF MEASURE ARE MILLIMETERS [INCHES] UNLESS OTHERWISE NOTED.
10. SEE THE "BRAKEMASTER SYSTEM DESIGN MANUAL" CODED ENE 704-1091 FOR A DESCRIPTION OF ITS IMPACT PERFORMANCE CHARACTERISTICS AND DESIGN LIMITATIONS BEFORE PLACING A SYSTEM AT A GIVEN SITE. INFORMATION AND ADDITIONAL COPIES OF ABOVE MANUAL ARE AVAILABLE BY CALLING THE CUSTOMER SERVICE DEPARTMENT AT (312) 467-6750.

SECTION A–A

MODEL NO. 106106BRS5

ENERGY ABSORPTION SYSTEMS, INC.
ENGINEERING AND RESEARCH DEPARTMENT

BRAKEMASTER®350 SYSTEM (BRS)
GENERAL ASSEMBLY
(UNIDIRECTIONAL SYSTEM)

Brakemaster® 350

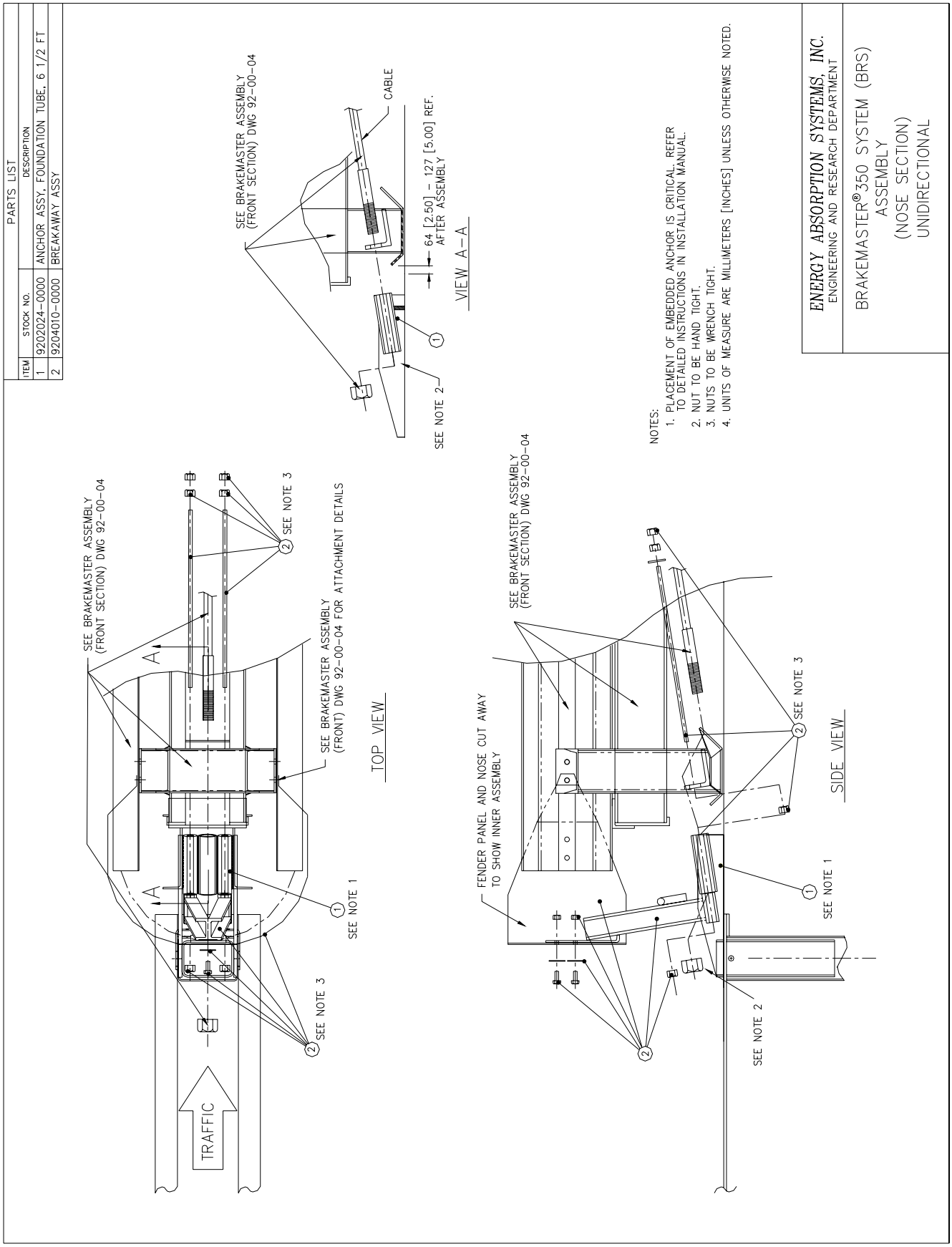

PARTS LIST		
ITEM	STOCK NO.	DESCRIPTION
1	9212010-0000	PANEL/STRAP ASSY
2	9206010-0000	BRAKE/TENSION SUPPORT ASSY
3	9208010-0000	CABLE/BRAKE ASSY

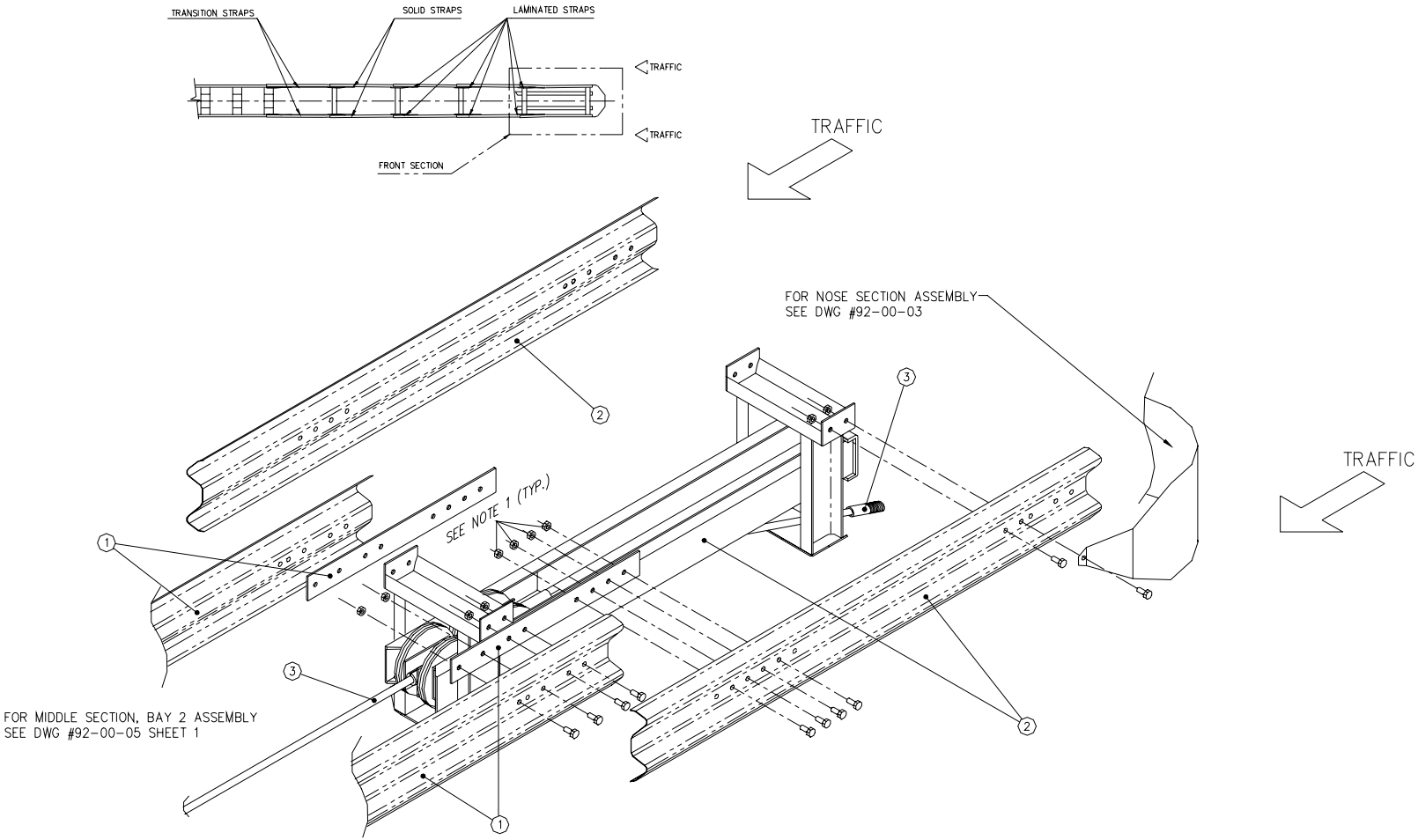

NOTE:
1. TORQUE NUTS TO 136±14 Nm [100±10 FT-LBS]

ENERGY ABSORPTION SYSTEMS, INC.
ENGINEERING AND RESEARCH DEPARTMENT

BRAKEMASTER®350 SYSTEM (BRS)
ASSEMBLY
(FRONT SECTION)
UNIDIRECTIONAL

Brakemaster® 350

PARTS LIST

ITEM	STOCK NO.	DESCRIPTION
1	9212010-0000	PANEL/STRAP ASSY
2	9210011-0000	DIAPHRAGM, BRS
3	9216021-0000	STRAP, LAMINATED

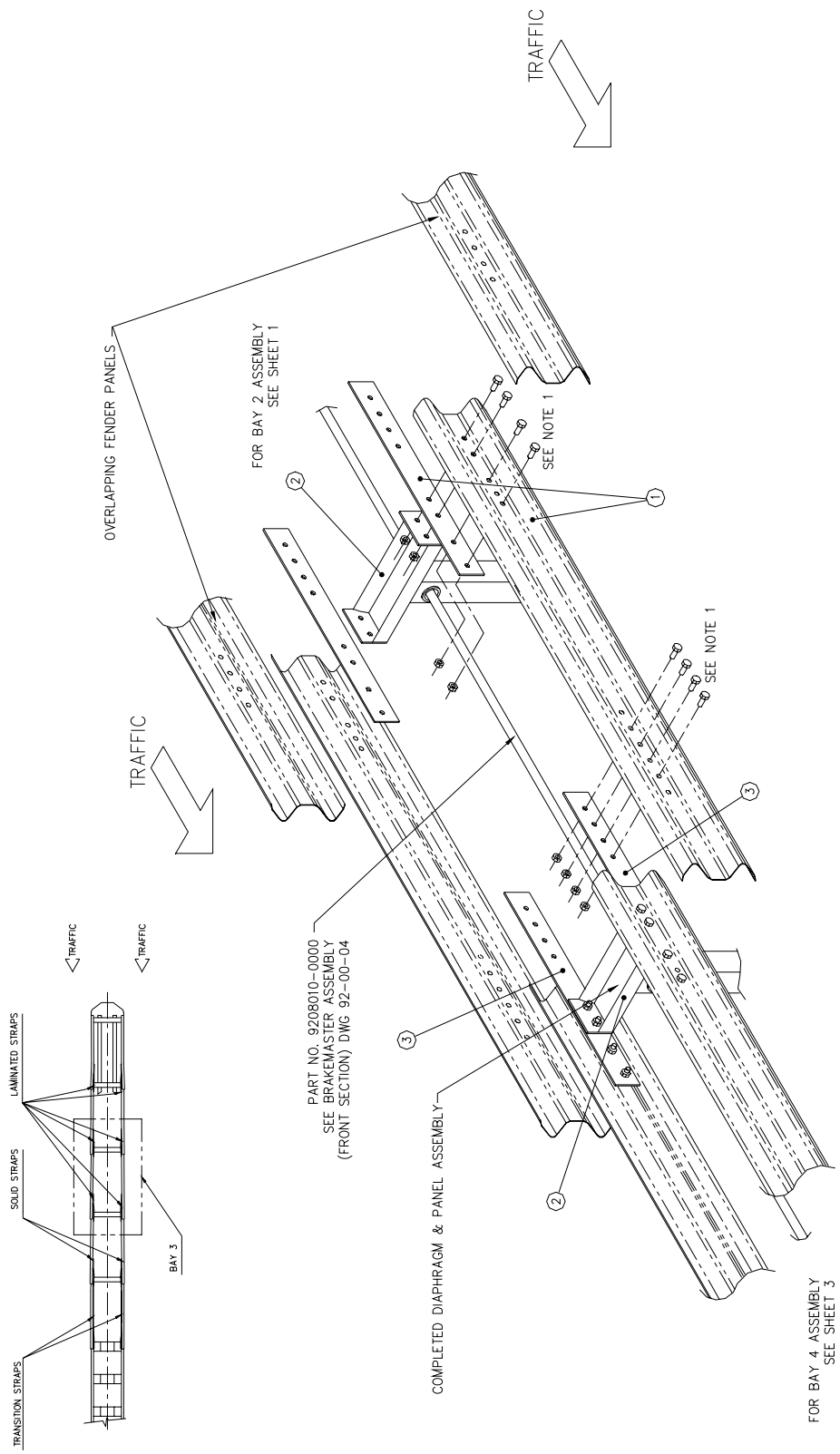

NOTE:
1. TORQUE NUTS TO 136±14 Nm [100±10 FT-LBS]

ENERGY ABSORPTION SYSTEMS, INC.
ENGINEERING AND RESEARCH DEPARTMENT

BRAKEMASTER®350 SYSTEM (BRS)
ASSEMBLY
(MIDDLE SECTION)
UNIDIRECTIONAL

PARTS LIST		
ITEM	STOCK NO.	DESCRIPTION
1	9214010-0000	TRANSITION STRAP ASSY
2	9210011-0000	DIAPHRAGM,BRS
3	————	END OF EXISTING OR NEW GUARDRAIL
4	————	STD GUARDRAIL MOUNTING HARDWARE
5	————	GUARDRAIL POST & BLOCKOUT

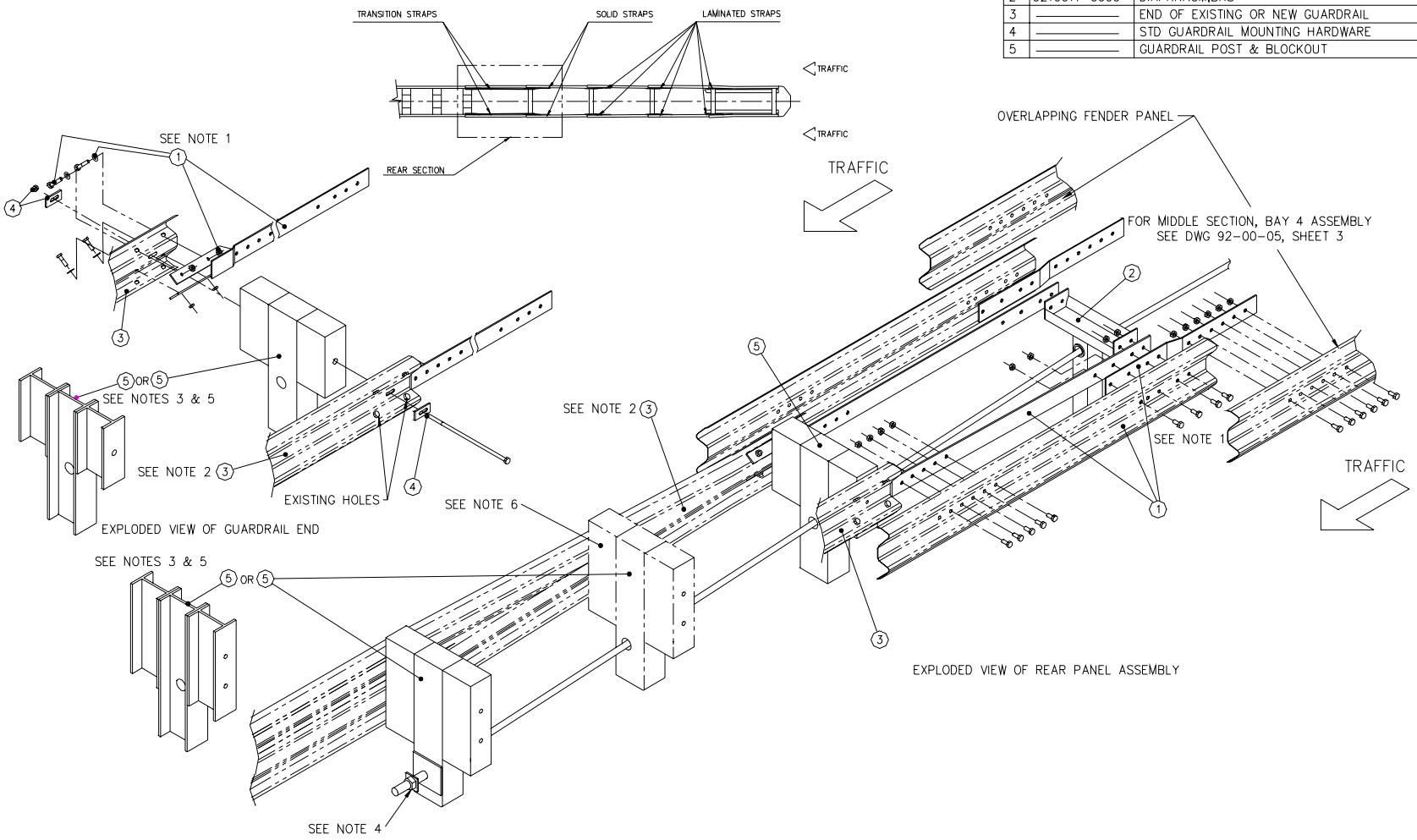

NOTES:

1. TORQUE NUTS TO 136 ±14 Nm [100±10 FT-LBS].
2. DISASSEMBLY OF EXISTING GUARDRAIL NOT NECESSARY.
3. SEE BRAKEMASTER INSTALLATION MANUAL FOR REQUIRED POST HOLE LOCATIONS.
4. NUT TO BE HAND TIGHT.
5. POSTS AND BLOCKOUTS MAY BE WOOD OR STEEL.
6. THIS POST MAY NOT BE REQUIRED. SEE ROADWAY AUTHORITY REQUIREMENTS.

ENERGY ABSORPTION SYSTEMS, INC.
ENGINEERING AND RESEARCH DEPARTMENT

BRAKEMASTER®350 SYSTEM (BRS)
ASSEMBLY
(REAR SECTION)
UNIDIRECTIONAL

Brakemaster® 350

PARTS LIST

ITEM	STOCK NO.	DESCRIPTION	REQ'D
1	9202024-0000	ANCHOR ASSY,FOUNDATION TUBE,6 1/2 FT.	1
2	9204010-0000	BREAKAWAY ASSY	1
3	9206010-0000	BRAKE/TENSION SUPPORT ASSY	1
4	9208010-0000	CABLE/BRAKE ASSY	1
5	9210011-0000	DIAPHRAGM,BRS	3
6	9212010-0000	PANEL/STRAP ASSY	6
7	9214010-0000	TRANSITION STRAP ASSY	2

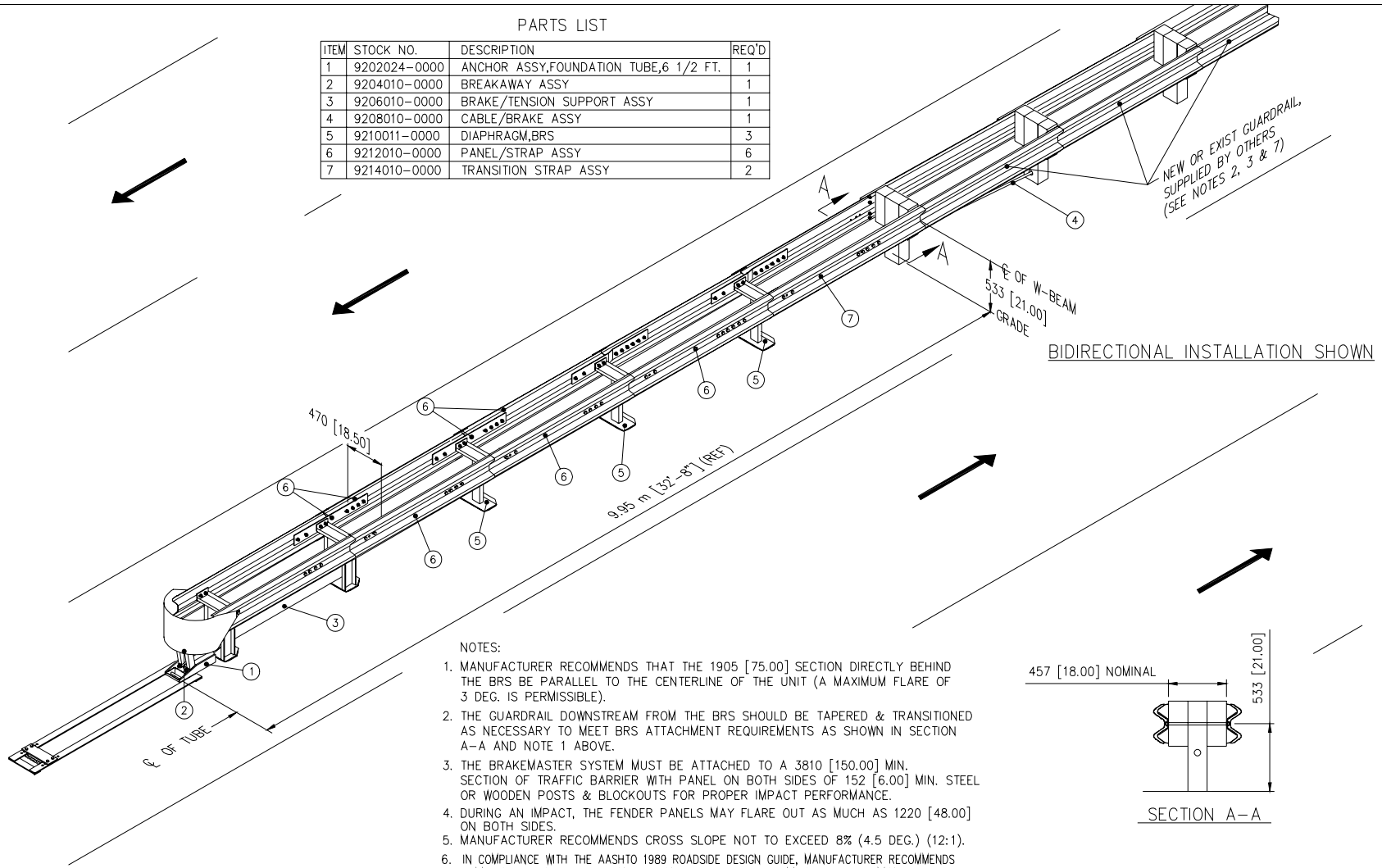

BIDIRECTIONAL INSTALLATION SHOWN

SECTION A–A

NOTES:

1. MANUFACTURER RECOMMENDS THAT THE 1905 [75.00] SECTION DIRECTLY BEHIND THE BRS BE PARALLEL TO THE CENTERLINE OF THE UNIT (A MAXIMUM FLARE OF 3 DEG. IS PERMISSIBLE).
2. THE GUARDRAIL DOWNSTREAM FROM THE BRS SHOULD BE TAPERED & TRANSITIONED AS NECESSARY TO MEET BRS ATTACHMENT REQUIREMENTS AS SHOWN IN SECTION A–A AND NOTE 1 ABOVE.
3. THE BRAKEMASTER SYSTEM MUST BE ATTACHED TO A 3810 [150.00] MIN. SECTION OF TRAFFIC BARRIER WITH PANEL ON BOTH SIDES OF 152 [6.00] MIN. STEEL OR WOODEN POSTS & BLOCKOUTS FOR PROPER IMPACT PERFORMANCE.
4. DURING AN IMPACT, THE FENDER PANELS MAY FLARE OUT AS MUCH AS 1220 [48.00] ON BOTH SIDES.
5. MANUFACTURER RECOMMENDS CROSS SLOPE NOT TO EXCEED 8% (4.5 DEG.) (12:1).
6. IN COMPLIANCE WITH THE AASHTO 1989 ROADSIDE DESIGN GUIDE, MANUFACTURER RECOMMENDS REMOVAL OF ALL CURBS AND ISLANDS FOR PROPER IMPACT PERFORMANCE.
7. DOWNSTREAM GUARDRAIL MUST BE ANCHORED TO WITHSTAND A TENSION OF 534 kN [120,000 LBS.] WHICH COULD DEVELOP DURING A SIDE ANGLE IMPACT.
8. CAUTION: DO NOT ATTACH THE BRAKEMASTER SYSTEM DIRECTLY TO A RIGID CONCRETE BARRIER. A GUARDRAIL TRANSITION SECTION IS REQUIRED. CONTACT ENERGY ABSORPTION SYSTEMS AT (312) 467-6750 FOR MORE INFORMATION.
9. UNITS OF MEASURE ARE MILLIMETERS [INCHES] UNLESS OTHERWISE NOTED.
10. SEE THE "BRAKEMASTER SYSTEM DESIGN MANUAL" CODED ENE 704-1091 FOR A DESCRIPTION OF ITS IMPACT PERFORMANCE CHARACTERISTICS AND DESIGN LIMITATIONS BEFORE PLACING A SYSTEM AT A GIVEN SITE. INFORMATION AND ADDITIONAL COPIES OF ABOVE MANUAL ARE AVAILABLE BY CALLING THE CUSTOMER SERVICE DEPARTMENT AT (312) 467-6750.

MODEL NO. 106106BRS5

ENERGY ABSORPTION SYSTEMS, INC.
ENGINEERING AND RESEARCH DEPARTMENT

BRAKEMASTER®350 SYSTEM (BRS)
GENERAL ASSEMBLY
(BIDIRECTIONAL SYSTEM)

PARTS LIST		
ITEM	STOCK NO.	DESCRIPTION
1	9202024-0000	ANCHOR ASSY, FOUNDATION TUBE,6 1/2 FT
2	9204010-0000	BREAKAWAY ASSY

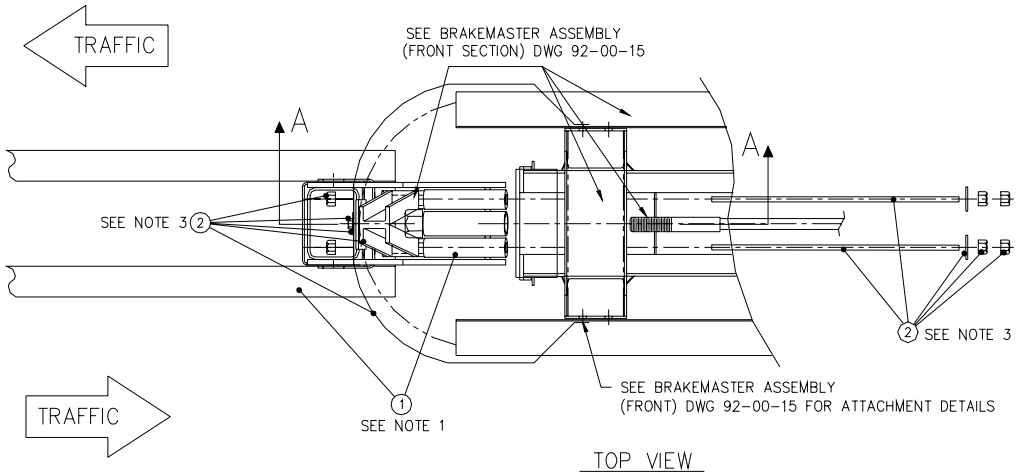

TOP VIEW

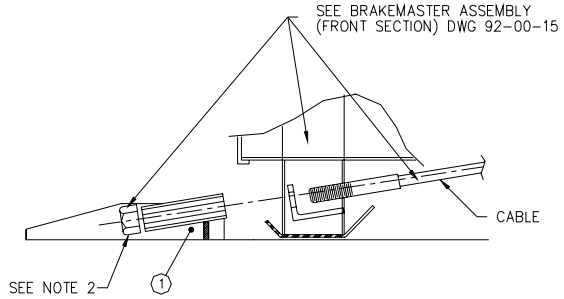

VIEW A-A

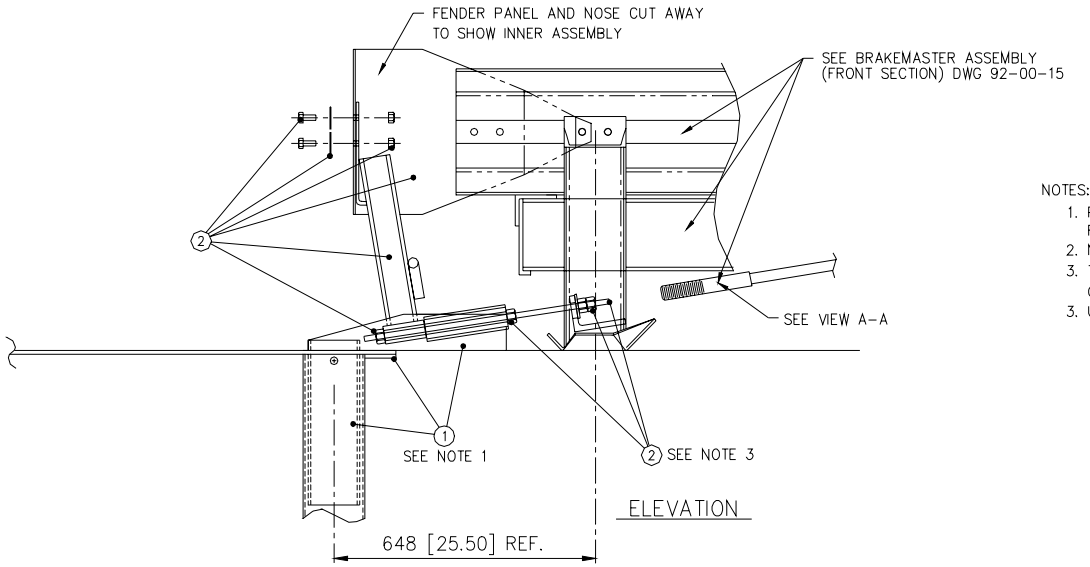

ELEVATION

NOTES:

1. PLACEMENT OF FOUNDATION TUBE ANCHOR IS CRITICAL. REFER TO DETAILED INSTRUCTIONS ON INSTALLATION DRAWING.
2. NUT TO BE HAND TIGHT.
3. TORQUE NUTS TO 136±14 Nm [100±10 FT-LBS] OR TIGHTEN NUT 1/4 TURN PAST SNUG.
3. UNITS OF MEASURE ARE MILLIMETERS [INCHES] UNLESS OTHERWISE NOTED.

ASSEMBLY NO. 9202010-0000

ENERGY ABSORPTION SYSTEMS, INC.
ENGINEERING AND RESEARCH DEPARTMENT

BRAKEMASTER® 350 SYSTEM (BRS)
ASSEMBLY
(NOSE SECTION)
BIDIRECTIONAL

Brakemaster® 350

PARTS LIST

ITEM	STOCK NO.	DESCRIPTION
1	9212010-0000	PANEL/STRAP ASSY
2	9206010-0000	BRAKE/TENSION SUPPORT ASSY
3	9208010-0000	CABLE/BRAKE ASSY

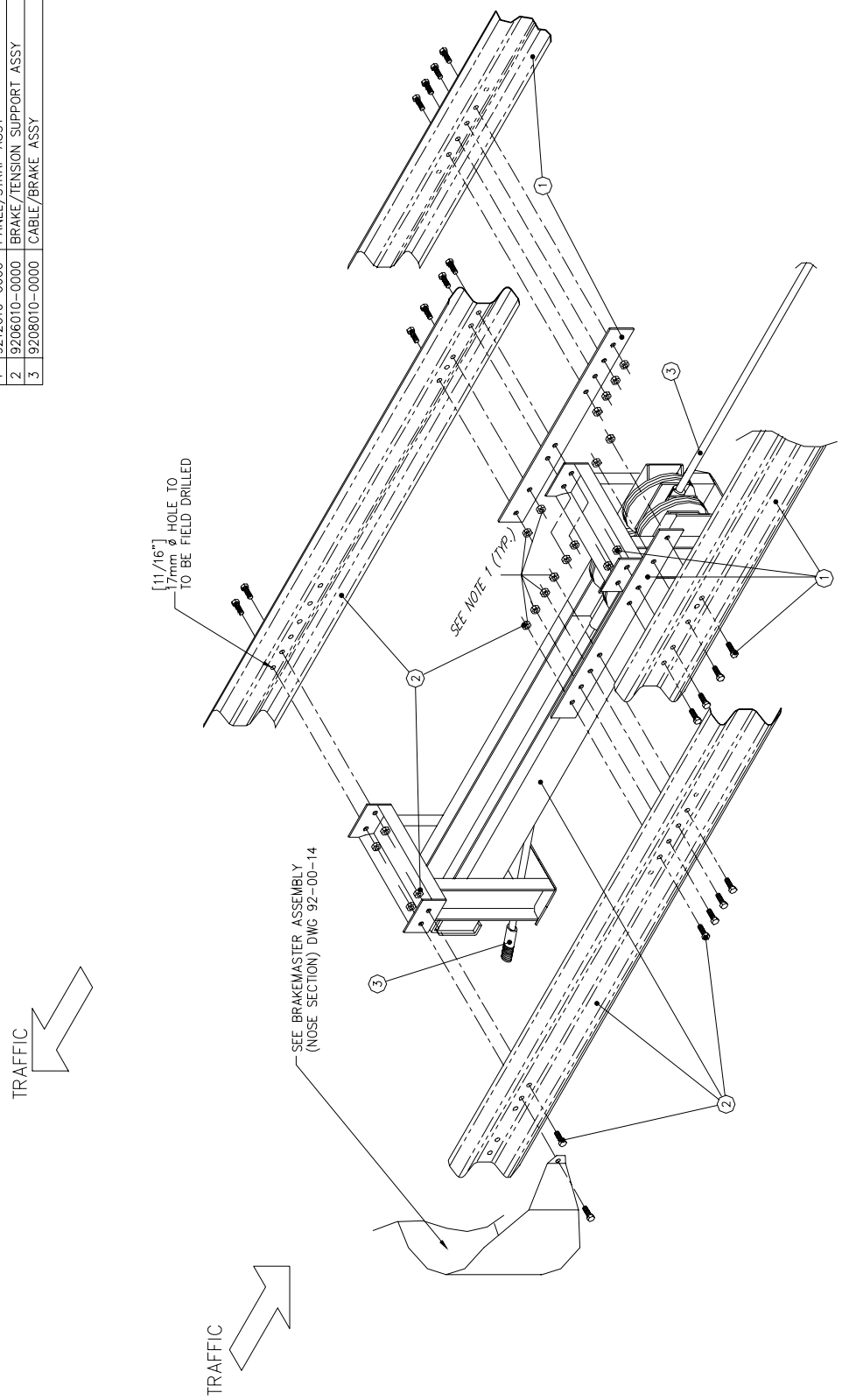

ENERGY ABSORPTION SYSTEMS, INC.
ENGINEERING AND RESEARCH DEPARTMENT

BRAKEMASTER®350 SYSTEM (BRS)
ASSEMBLY
(FRONT SECTION)
BIDIRECTIONAL

NOTE:
1. TORQUE NUTS TO 136±14 Nm [100±10 FT-LBS]

PARTS LIST			
ITEM	STOCK NO.	DESCRIPTION	REQ'D
1	9212010-0000	PANEL/STRAP ASSY	
2	9210011-0000	DIAPHRAGM,BRS	
3	9218011-0000	STRAP,SOLID W/DECAL	
4	9216021-0000	STRAP,LAMINATED	

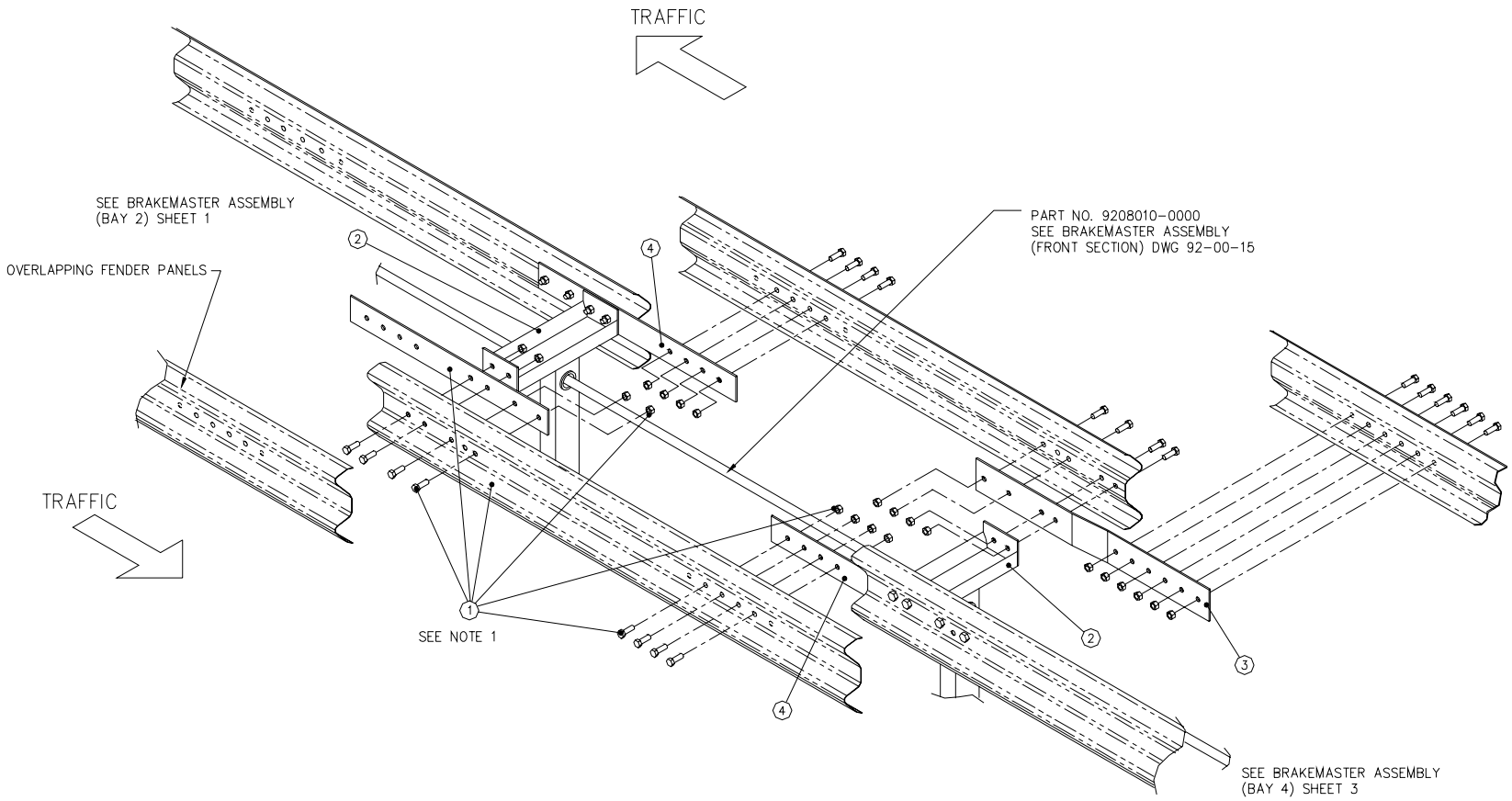

NOTE:
1. TORQUE NUTS TO 136±14 Nm [100±10 FT-LBS]

ENERGY ABSORPTION SYSTEMS, INC.
ENGINEERING AND RESEARCH DEPARTMENT

BRAKEMASTER®350 SYSTEM (BRS)
ASSEMBLY
(MIDDLE SECTION)
BIDIRECTIONAL

Brakemaster® 350

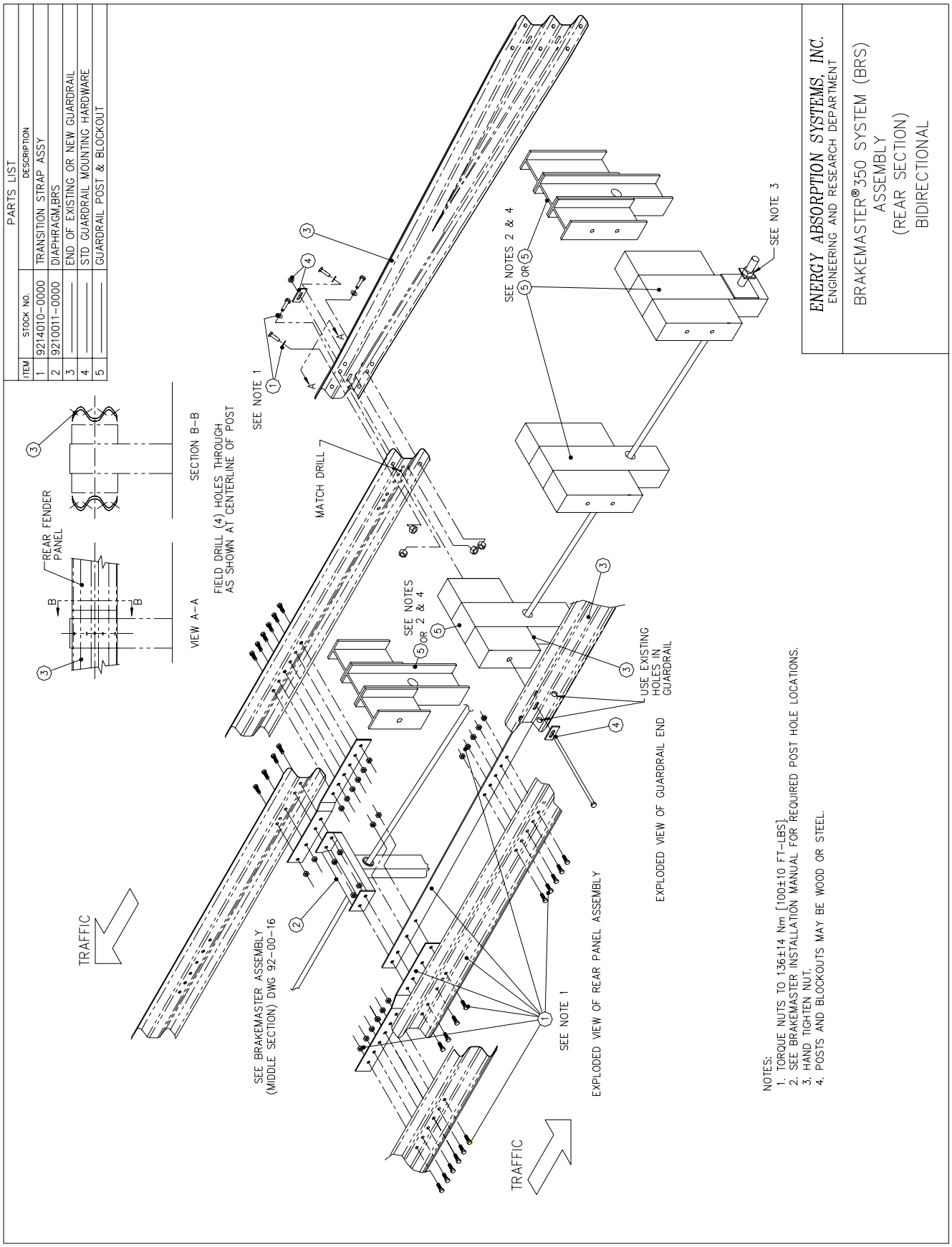

PARTS LIST			
ITEM	STOCK NO.	DESCRIPTION	REQ'D
1	9204021-0000	NOSE,BRS	1
2	9204031-0000	BREAKAWAY ARM	1
3	2699272-0500	ROD,THREADED,7/8X28,G5,G	2
4	2704441-0000	NUT,HX,7/8,G,GR DH	8
5	2708291-0000	WASHER,FLAT,5/8X1 3/4,G	2
6	2699081-0500	BOLT,HX,5/8X1 1/2,G5,G	2
7	2704191-0000	NUT,HX,5/8,G,RAIL	2
8	2708301-0000	WASHER,FLAT,7/8X2 1/4,G	2

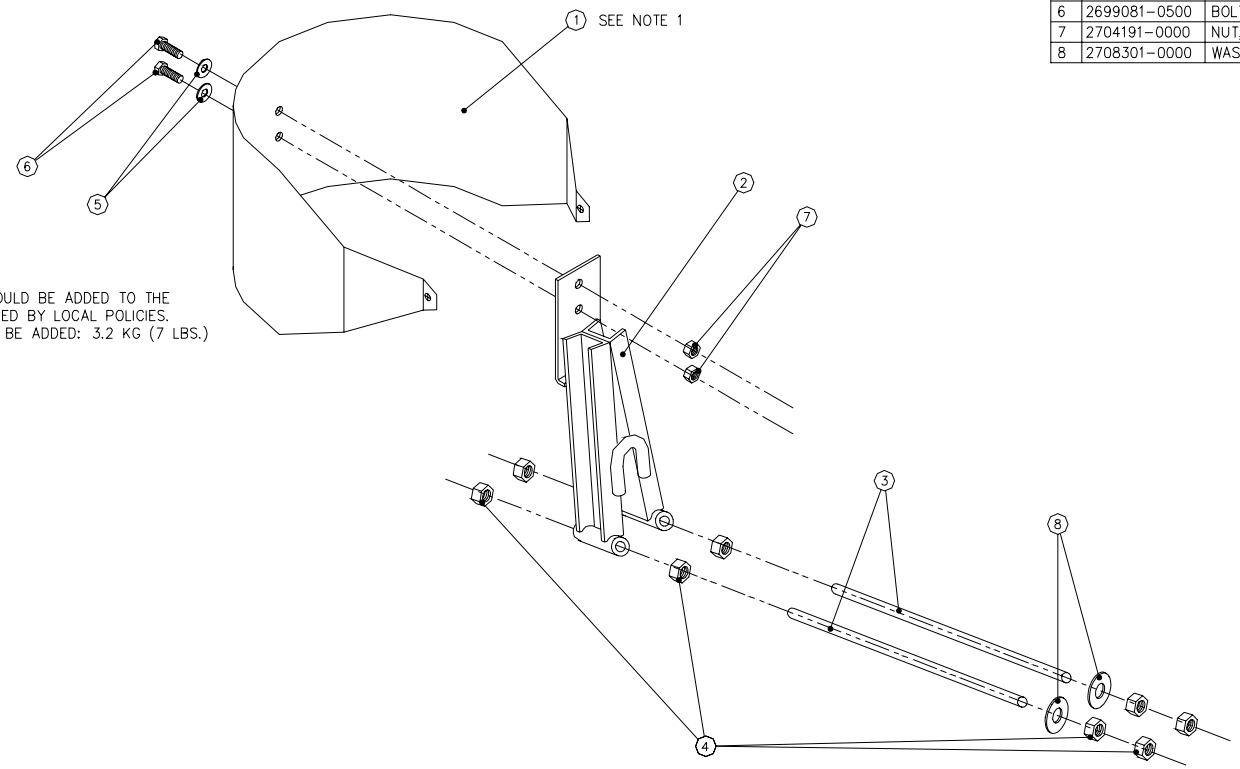

DELINEATION SHOULD BE ADDED TO THE NOSE AS REQUIRED BY LOCAL POLICIES. MAX. WEIGHT TO BE ADDED: 3.2 KG (7 LBS.)

NOTES:
1. FORM FROM FLAT IN FIELD.
2. SHIPPED DISASSEMBLED.

ASSEMBLY NO. 9204010-0000

ENERGY ABSORPTION SYSTEMS, INC.
ENGINEERING AND RESEARCH DEPARTMENT

BRAKEMASTER®350 SYSTEM (BRS)
BREAKAWAY ASSEMBLY

PARTS LIST			
ITEM	STOCK NO.	DESCRIPTION	REQ'D
1	9206021-0000	BRAKE/TENSION SUPPORT	1
2	9212021-0000	PANEL,FENDER,BRS	2
3	2699081-0500	BOLT,HX,5/8X1 1/2,G5,G	12
4	2704191-0000	NUT,HX,5/8,G,RAIL	12

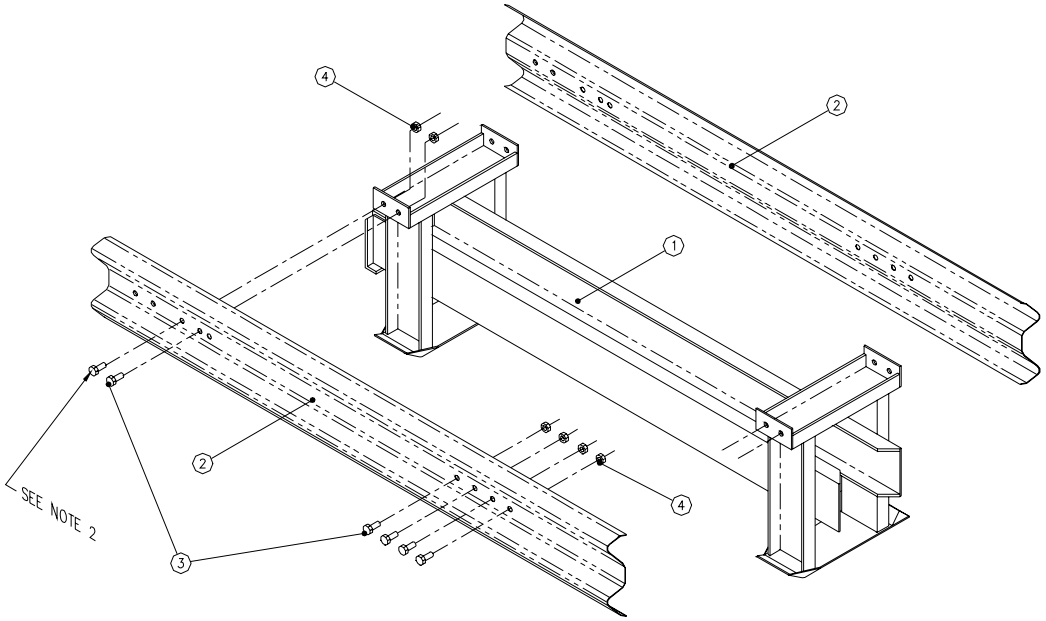

ASSEMBLY NO. 9206010-0000

ENERGY ABSORPTION SYSTEMS, INC.
ENGINEERING AND RESEARCH DEPARTMENT

BRAKEMASTER®350 SYSTEM (BRS)
BRAKE/TENSION SUPPORT ASSEMBLY

NOTES:
1. SHIPPED DISASSEMBLED.
2. THIS BOLT IS USED TO ATTACH THE BRAKEMASTER NOSE. SEE BRAKEMASTER ASSEMBLY (FRONT SECTION) DWG 92-00-04.

	PARTS LIST			
	ITEM	STOCK NO.	DESCRIPTION	REQ'D
920801B-0000 CABLE/BRAKE ASSY LESS MISC HARDWARE	1	9208021-0000	BRAKE ASSY	2
	2	9208032-0000	CABLE ASSY,2 STUD ENDS,BRS	1
*SEE NOTE 1 920801A-0000 MISC CABLE HRDWR	M1	2708491-0000	WASHER,BAR,1/4X3X3,G	3
	M2	2708671-0000	WASHER,BAR,3/4X8X8	1
	M3	9208101-0000	SPACER,BRS	3

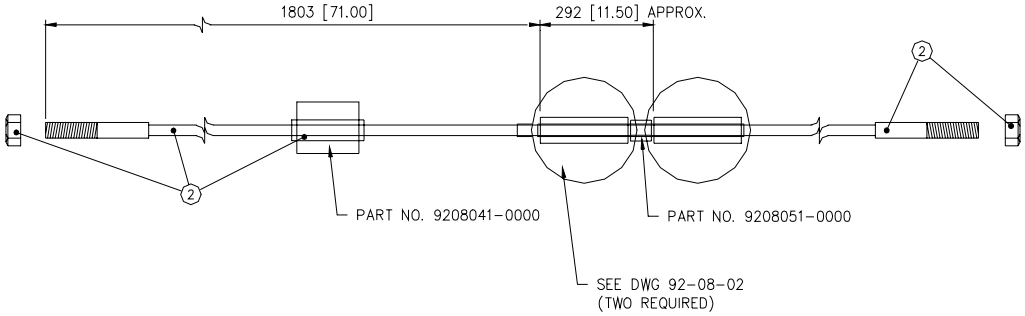

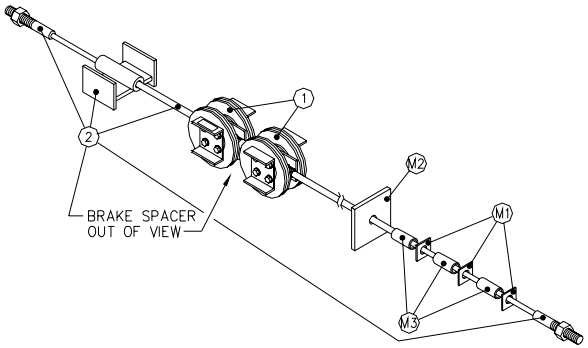

NOTES:
1. MISC CABLE HRDWR SHIPPED DISASSEMBLED.
2. UNITS OF MEASURE ARE MILLIMETERS [INCHES] UNLESS OTHERWISE NOTED.

ASSEMBLY NO. 9208010-0000

ENERGY ABSORPTION SYSTEMS, INC.
ENGINEERING AND RESEARCH DEPARTMENT

BRAKEMASTER®350 SYSTEM (BRS)
CABLE/BRAKE ASSEMBLY

Brakemaster® 350

PARTS LIST

ITEM	STOCK NO.	DESCRIPTION	REQ'D
1	9212021-0000	PANEL,FENDER,BRS	1
2	9216021-0000	STRAP,LAMINATED	1
3	2699081-0500	BOLT,HX,5/8X1 1/2,G5,G	8
4	2704191-0000	NUT,HX,5/8,G,RAIL	8

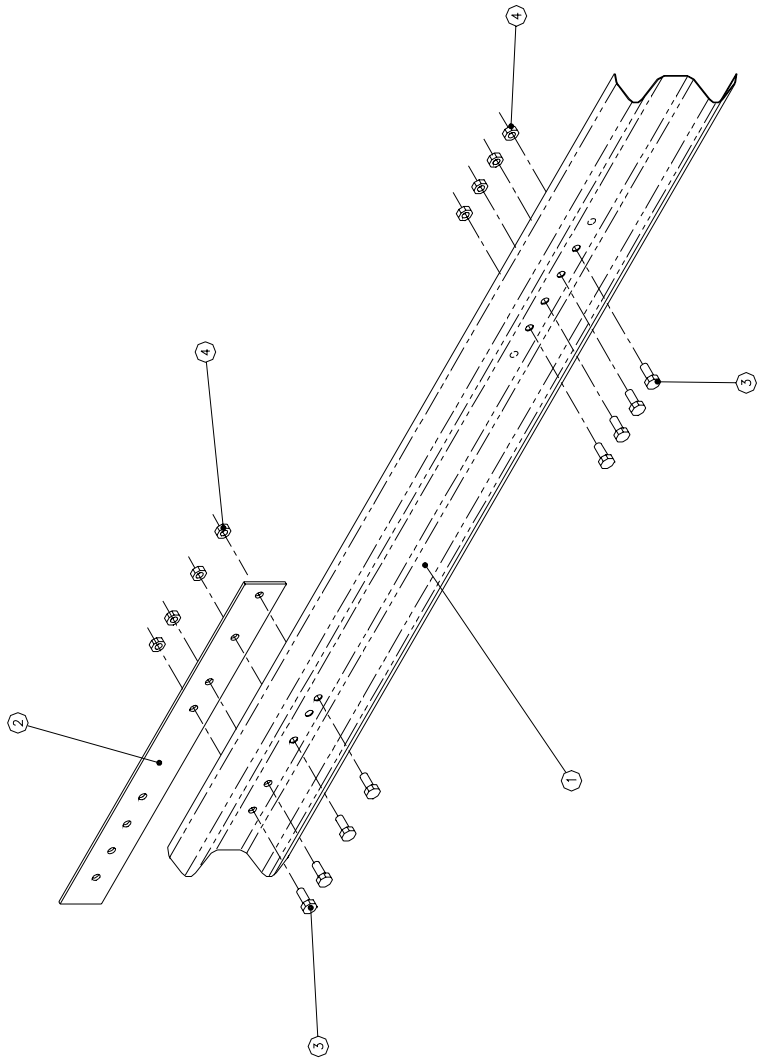

ASSEMBLY NO. 9212010-0000

ENERGY ABSORPTION SYSTEMS, INC.
ENGINEERING AND RESEARCH DEPARTMENT

BRAKEMASTER®350 SYSTEM (BRS)
PANEL/STRAP ASSEMBLY

NOTE:
1. SHIPPED DISASSEMBLED

PARTS LIST			
ITEM	STOCK NO.	DESCRIPTION	REQ'D
1	9214021-0000	STRAP,TRANSITION	1
2	9218011-0000	STRAP,SOLID	1
3	9212021-0000	PANEL,FENDER,BRS	1
4	2699081-0500	BOLT,HX,5/8X1 1/2,G5,G	15
5	2704191-0000	NUT,HX,5/8,G,RAIL	15
6	2708561-0000	WASHER,FLAT,5/8,TYPE A,WIDE,G	4

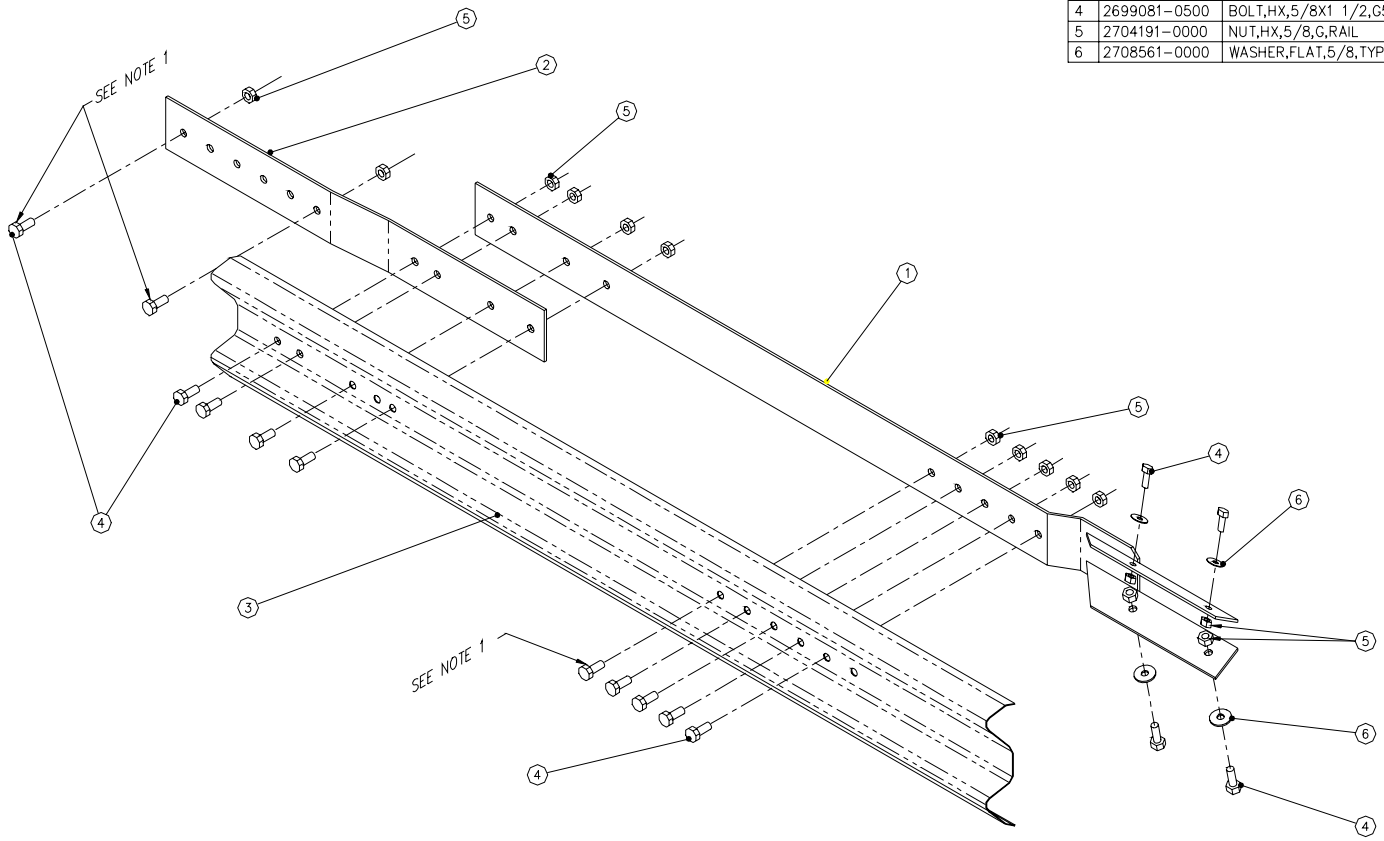

ASSEMBLY NO. 9214010-0000

ENERGY ABSORPTION SYSTEMS, INC.
ENGINEERING AND RESEARCH DEPARTMENT

BRAKEMASTER®350 SYSTEM (BRS)
TRANSITION STRAP ASSEMBLY

NOTES:

1. POSITION FASTENERS IN LANCED PANEL KNOCK-OUT.
2. SHIPPED DISASSEMBLED.

Brakemaster® 350

TYPICAL TRANSITION SECTIONS

Notes:

1. *Where necessary, the customer shall supply a transition from the rear of the System to the object being shielded.*
2. *Customer to make provision for direction of traffic, on structures attached to Brakemaster Systems e.g.: Panel panel overlap, Abutment taper, etc. (see 1989 AASHTO Roadside Design Guide.)*
3. *See pages 22 through 27 for details.*

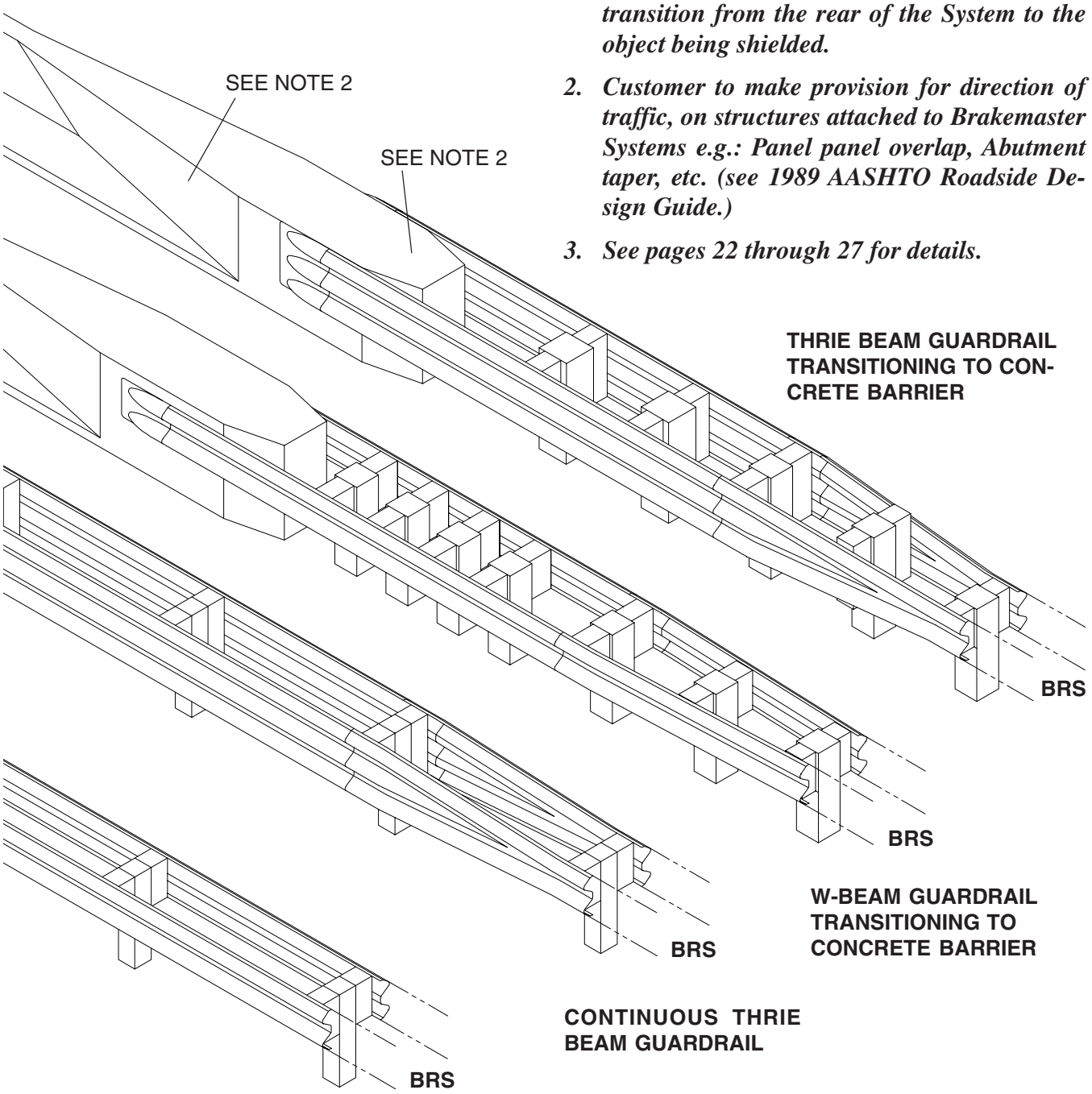

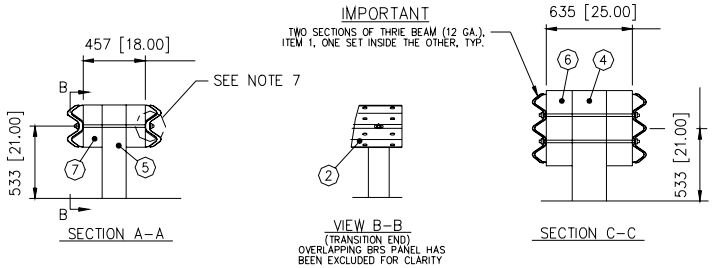

NOTES:

1. MANUFACTURER RECOMMENDS THAT THE 1905 [75.00] SECTION DIRECTLY BEHIND THE BRS BE PARALLEL TO THE CENTERLINE OF THE UNIT (A MAXIMUM FLARE OF 3 DEG. IS PERMISSIBLE).
2. THE GUARDRAIL DOWNSTREAM FROM THE BRS SHOULD BE TAPERED & TRANSITIONED AS NECESSARY TO MEET BRS ATTACHMENT REQUIREMENTS AS SHOWN IN SECTION A–A AND NOTE 1 ABOVE.
3. MANUFACTURER RECOMMENDS CROSS SLOPE NOT TO EXCEED 8% (4.5 DEG.).
4. MANUFACTURER RECOMMENDS REMOVAL OF CURBS AND ISLANDS UNDER THE BRS TO ENSURE PROPER IMPACT PERFORMANCE.
5. DOWNSTREAM GUARDRAIL MUST BE ANCHORED TO WITHSTAND A TENSION OF 534 kN [120,000 LBS.] WHICH COULD DEVELOPE DURING A REDIRECT IMPACT.
6. USE ONLY STANDARD HIGHWAY HARDWARE.
7. SEE BRS INSTALLATION MANUAL FOR PROPER ASSEMBLY. AFTER TIGHTENING NUTS, TRIM OFF EXCESS THREADED ROD.
8. NOTE PROPER OVERLAP OF PANELS FOR DIRECTION OF TRAFFIC.
9. TRIM TRANSITION BLOCKOUTS AS NECESSARY TO ACHIEVE 457 [18.00] REQUIRED WIDTH AT BRAKEMASTER INTERFACE, SECTION A–A.
10. UNITS OF MEASURE ARE MILLIMETERS [INCHES] UNLESS OTHERWISE NOTED.

KEY

1. GUARDRAIL SECTION
2. TRANSITION PANEL
3. END SHOE
4. POST–10"x10"x6',WOOD
5. POST–8"x8"x6',WOOD
6. BLOCKOUT–6"x8"x1'–10 1/2",WOOD
7. BLOCKOUT–6"x6"x1'–2",WOOD

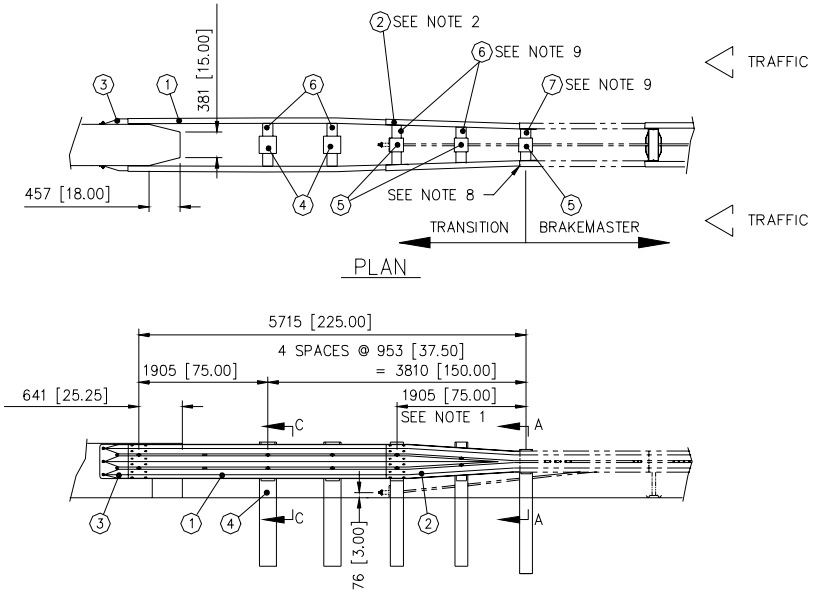

UNIDIRECTIONAL

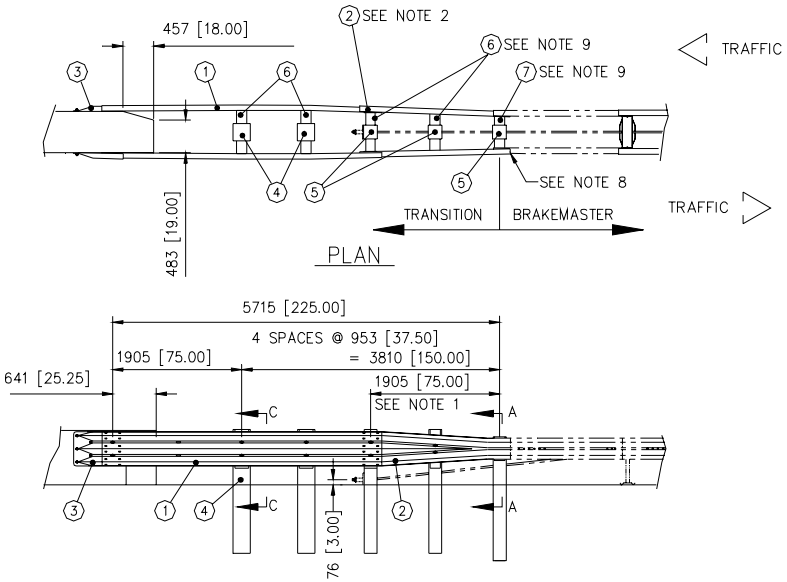

BIDIRECTIONAL

ENERGY ABSORPTION SYSTEMS, INC.
ENGINEERING AND RESEARCH DEPARTMENT

BRAKEMASTER®350 SYSTEM (BRS)
THRIE BEAM TRANSITION SECTION
ATTACHED TO CONCRETE BARRIER
FOR MEDIAN APPLICATIONS

Brakemaster® 350

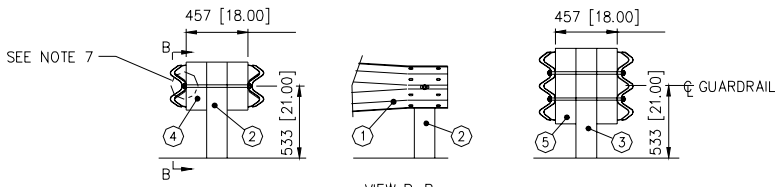

NOTES:

1. MANUFACTURER RECOMMENDS THAT THE 1905 [75.00] SECTION DIRECTLY BEHIND THE BRS BE PARALLEL TO THE CENTERLINE OF THE UNIT (A MAXIMUM FLARE OF 3 DEG. IS PERMISSIBLE).
2. THE GUARDRAIL DOWNSTREAM FROM THE BRS SHOULD BE TAPERED & TRANSITIONED AS NECESSARY TO MEET BRS ATTACHMENT REQUIREMENTS AS SHOWN IN SECTION A–A AND NOTE 1 ABOVE.
3. MANUFACTURER RECOMMENDS CROSS SLOPE NOT TO EXCEED 8% (4.5 DEG.).
4. MANUFACTURER RECOMMENDS REMOVAL OF CURBS AND ISLANDS UNDER THE BRS TO ENSURE PROPER IMPACT PERFORMANCE.
5. DOWNSTREAM GUARDRAIL MUST BE ANCHORED TO WITHSTAND A TENSION OF 534kN [120,000 LBS.] WHICH COULD DEVELOPE DURING A REDIRECT IMPACT.
6. USE ONLY STANDARD HIGHWAY HARDWARE.
7. SEE BRS INSTALLATION MANUAL FOR PROPER ASSEMBLY. AFTER TIGHTENING NUTS, TRIM OFF EXCESS THREADED ROD.
8. NOTE PROPER OVERLAP OF PANELS FOR DIRECTION OF TRAFFIC.
9. UNITS OF MEASURE ARE MILLIMETERS [INCHES] UNLESS OTHERWISE NOTED.

KEY

1. TRANSITION PANEL
2. POST–6"x6"x5'–8", WOOD
3. POST–6"x6"x6', WOOD
4. BLOCKOUT–6"x6"x1'–2", WOOD
5. BLOCKOUT–6"x6"x1'–10", WOOD

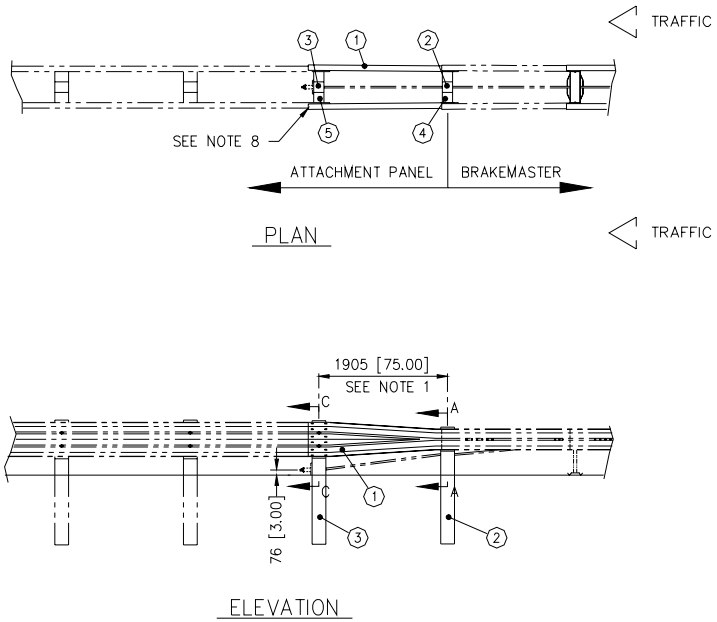

UNIDIRECTIONAL

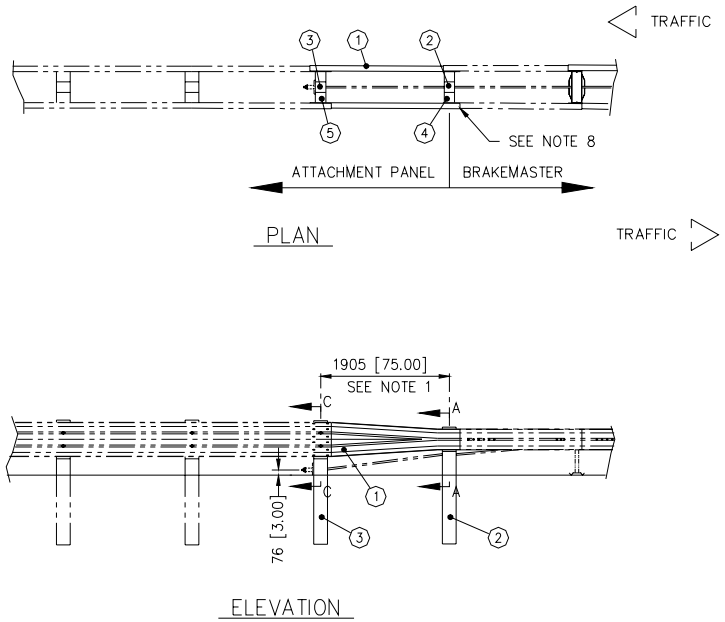

BIDIRECTIONAL

ENERGY ABSORPTION SYSTEMS, INC.
ENGINEERING AND RESEARCH DEPARTMENT

BRAKEMASTER®350 SYSTEM (BRS)
ATTACHED TO THRIE BEAM GUARD RAIL
FOR MEDIAN APPLICATIONS

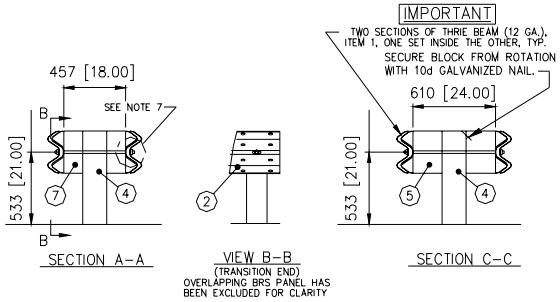

NOTES:

1. MANUFACTURER RECOMMENDS THAT THE 1905 [75.00] SECTION DIRECTLY BEHIND THE BRS BE PARALLEL TO THE CENTERLINE OF THE UNIT (A MAX. FLARE OF 3 DEG. IS PERMISSIBLE).
2. THE GUARDRAIL DOWNSTREAM FROM THE BRS SHOULD BE TAPERED & TRANSITIONED AS NECESSARY TO MEET BRS ATTACHMENT REQUIREMENTS AS SHOWN IN SECTION A–A AND NOTE 1 ABOVE.
3. MANUFACTURER RECOMMENDS CROSS SLOPE NOT TO EXCEED 8% (4.5 DEG.).
4. MANUFACTURER RECOMMENDS REMOVAL OF CURBS AND ISLANDS UNDER THE BRS TO ENSURE PROPER IMPACT PERFORMANCE.
5. DOWNSTREAM GUARDRAIL MUST BE ANCHORED TO WITHSTAND A TENSION OF 534 kN [120,000 LBS.] WHICH COULD DEVELOP DURING A REDIRECT IMPACT.
6. USE ONLY STANDARD HIGHWAY HARDWARE.
7. SEE BRS INSTALLATION MANUAL FOR PROPER ASSEMBLY. AFTER TIGHTENING NUTS, TRIM OFF EXCESS THREADED ROD.
8. NOTE PROPER OVERLAP OF PANELS FOR DIRECTION OF TRAFFIC.
9. TRIM TRANSITION BLOCKOUTS AS NECESSARY TO ACHIEVE 457 [18.00] REQUIRED WIDTH AT BRAKEMASTER INTERFACE, SECTION A–A.
10. THE STEEL SPACER TUBE (6" I.D. X 10" LONG, SCHEDULE 40 GALVANIZED PIPE) IS CONNECTED ONLY TO THE GUARDRAIL BEAM. SPACERS MADE OF SOLID WOOD & STEEL ARE NOT RECOMMENDED.
11. THIS GUARDRAIL TRANSITION IS APPROPRIATE FOR A CONNECTION TO A VERTICAL CONCRETE SHAPE & SHOULD NOT BE CONNECTED DIRECTLY TO A SAFETY SHAPE. CONCRETE SAFETY SHAPE BARRIERS SHOULD BE TRANSITIONED TO A VERTICAL SHAPE AT THE GUARDRAIL CONNECTION.
12. UNITS OF MEASURE ARE MILLIMETERS [INCHES] UNLESS OTHERWISE NOTED.

KEY

1. GUARDRAIL SECTION A
2. GUARDRAIL SECTION B
3. END SHOE
4. POST–6"x8"x6',WOOD
5. BLOCKOUT–6"x8"x1'–2",WOOD
6. SPACER TUBE

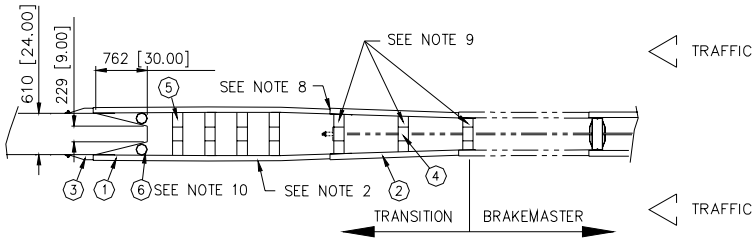

PLAN

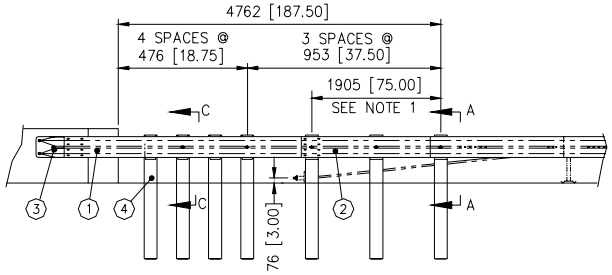

ELEVATION

UNIDIRECTIONAL

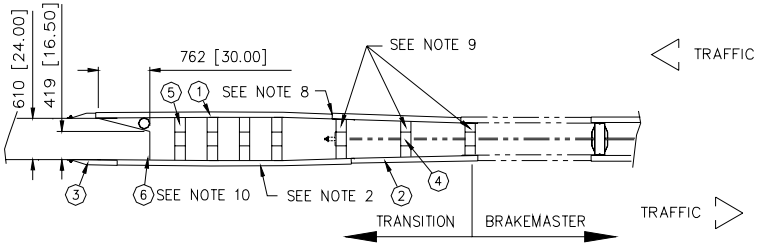

PLAN

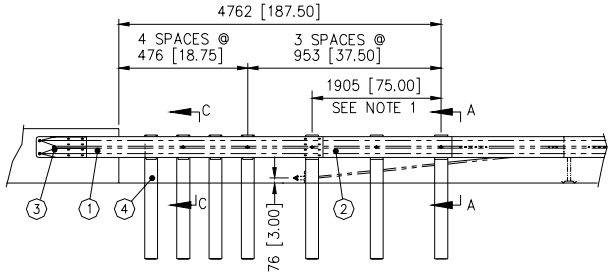

BIDIRECTIONAL

ELEVATION

ENERGY ABSORPTION SYSTEMS, INC.
ENGINEERING AND RESEARCH DEPARTMENT

BRAKEMASTER®350 SYSTEM (BRS)
W–BEAM TRANSITION SECTION
ATTACHED TO VERTICAL CONCRETE
FOR MEDIAN APPLICATION

Brakemaster® 350

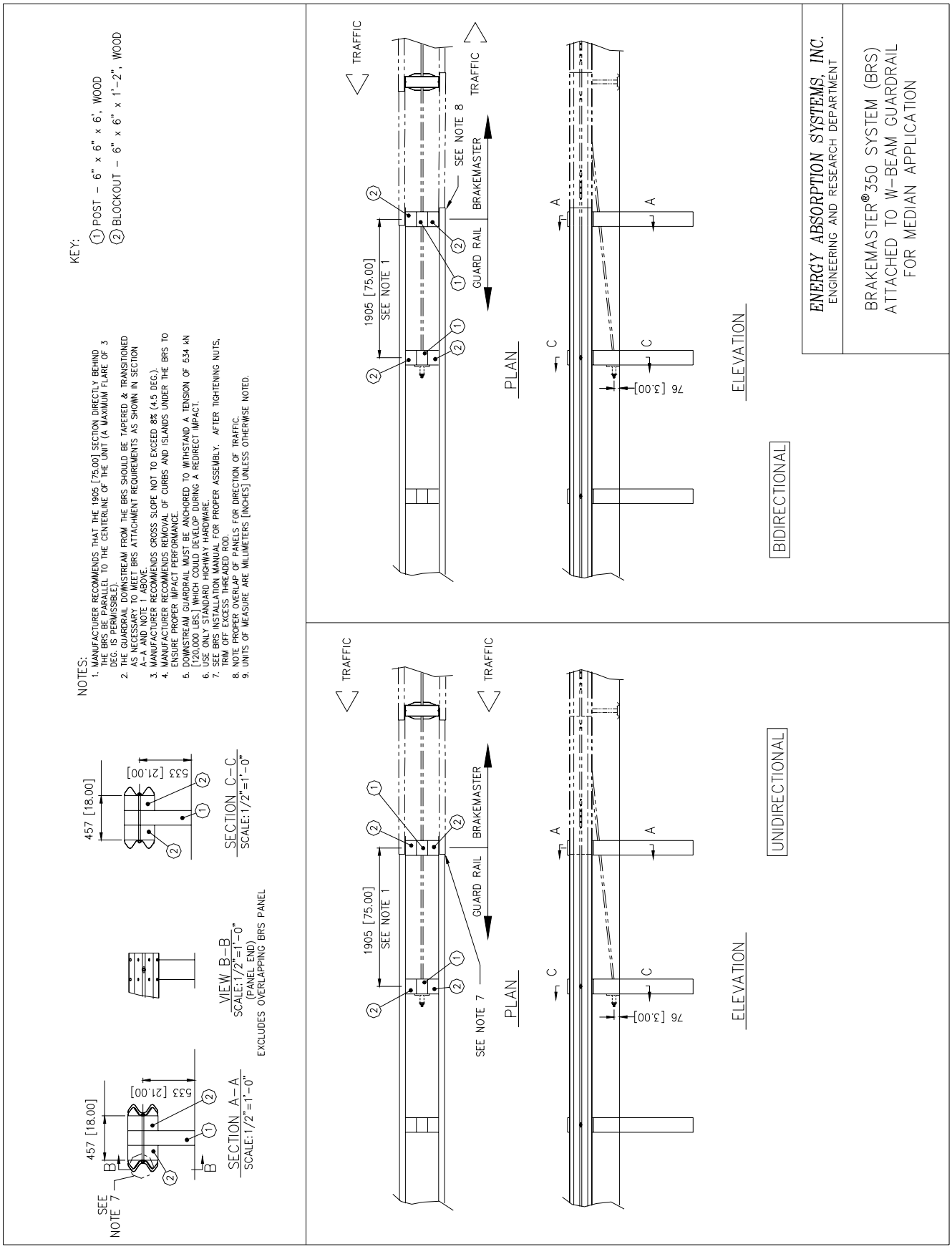

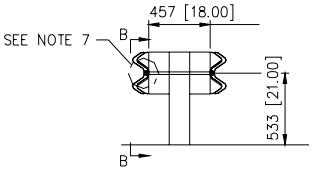

SECTION A–A
SCALE: 1/2"=1'–0"

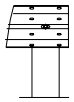

VIEW B–B
SCALE: 1/2"=1'–0"
(PANEL END)
OVERLAPPING BRS PANEL HAS BEEN EXCLUDED FOR CLARITY

NOTES:

1. MANUFACTURER RECOMMENDS THAT THE 1905 [75.00] SECTION DIRECTLY BEHIND THE BRS BE PARALLEL TO THE CENTERLINE OF THE UNIT (A MAX. FLARE OF 3 DEG. IS PERMISSIBLE).
2. THE GUARDRAIL DOWNSTREAM FROM THE BRS SHOULD BE TAPERED & TRANSITIONED AS NECESSARY TO MEET BRS ATTACHMENT REQUIREMENTS AS SHOWN IN SECTION A–A AND NOTE 1 ABOVE.
3. MANUFACTURER RECOMMENDS CROSS SLOPE NOT TO EXCEED 8% (4.5 DEG.).
4. MANUFACTURER RECOMMENDS REMOVAL OF CURBS AND ISLANDS UNDER THE BRS TO ENSURE PROPER IMPACT PERFORMANCE.
5. DOWNSTREAM GUARDRAIL MUST BE ANCHORED TO WITHSTAND A TENSION OF 534 kN [120,000 LBS] WHICH COULD DEVELOPE DURING A REDIRECT IMPACT.
6. USE ONLY STANDARD HIGHWAY HARDWARE.
7. SEE BRS INSTALLATION MANUAL FOR PROPER ASSEMBLY. AFTER TIGHTENING NUTS, TRIM OFF EXCESS THREADED ROD.
8. NOTE PROPER OVERLAP OF PANELS FOR DIRECTION OF TRAFFIC.
9. UNITS OF MEASURE ARE MILLIMETERS [INCHES] UNLESS OTHERWISE NOTED.

KEY

1. POST – 6" x 6" x 5'–8", WOOD
2. BLOCKOUT – 6" x 6" x 1'–2", WOOD
3. GUARDRAIL SECTION

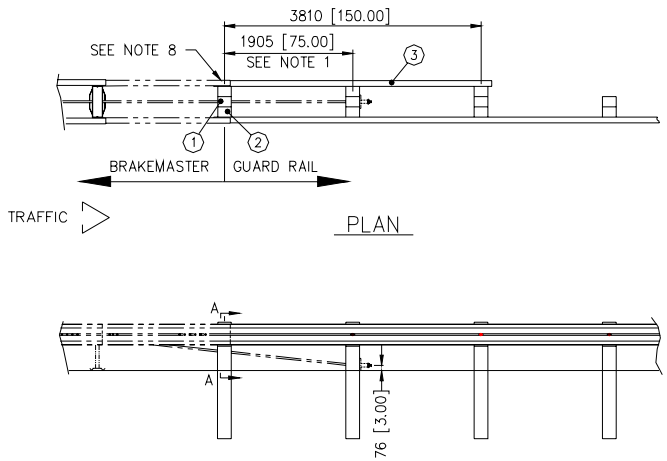

PLAN

ELEVATION
SCALE: 1/4"=1'–0"

LEFT SIDE OF ROAD

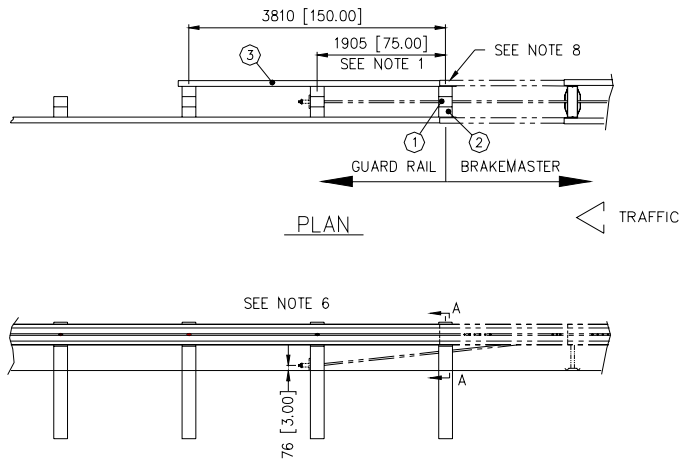

PLAN

ELEVATION
SCALE: 1/4"=1'–0"

RIGHT SIDE OF ROAD

ENERGY ABSORPTION SYSTEMS, INC.
ENGINEERING AND RESEARCH DEPARTMENT

BRAKEMASTER®350 SYSTEM (BRS)
ATTACHED TO W–BEAM GUARD RAIL
FOR ROADSIDE APPLICATION

Brakemaster® 350

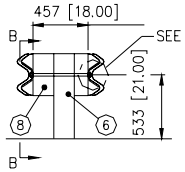

SECTION A–A
SCALE: 1/2"=1'–0"

IMPORTANT

TWO SECTIONS OF THRIE BEAM (12 GA.), ITEM 1, ONE SET INSIDE THE OTHER, TYP.

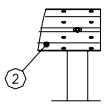

VIEW B–B
(TRANSITION END)
OVERLAPPING BRS PANEL HAS BEEN EXCLUDED FOR CLARITY
SCALE: 1/2"=1'–0"

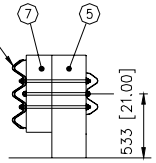

SECTION C–C
SCALE: 1/2"=1'–0"

IT IS IMPORTANT TO INSTALL THE HARDWARE IN THE FOLLOWING ORDER: 1) PLACE THREADED RODS THROUGH POSTS & BLOCKOUTS. 2) ATTACH WASHERS & NUTS THAT WILL BE UNDER PANELS (SEE (A) ON DETAIL D). 3) ATTACH PANELS. 4) ATTACH WASHERS & NUTS (SEE (B) ON DETAIL D).

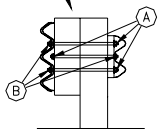

DETAIL D
SCALE: 1/2"=1'–0"

NOTES:

1. MANUFACTURER RECOMMENDS THAT THE 1905 [75.00] SECTION DIRECTLY BEHIND THE BRS BE PARALLEL TO THE CENTERLINE OF THE UNIT (A MAXIMUM FLARE OF 3 DEG. IS PERMISSIBLE).
2. THE GUARDRAIL DOWNSTREAM FROM THE BRS SHOULD BE TAPERED & TRANSITIONED AS NECESSARY TO MEET BRS ATTACHMENT REQUIREMENTS AS SHOWN IN SECTION A–A AND NOTE 1 ABOVE.
3. MANUFACTURER RECOMMENDS CROSS SLOPE NOT TO EXCEED 8% (4.5 DEG.).
4. MANUFACTURER RECOMMENDS REMOVAL OF CURBS AND ISLANDS UNDER THE BRS TO ENSURE PROPER IMPACT PERFORMANCE.
5. DOWNSTREAM GUARDRAIL MUST BE ANCHORED TO WITHSTAND A TENSION OF 534 kN [120,000 LBS.] WHICH COULD DEVELOPE DURING A REDIRECT IMPACT.
6. USE ONLY STANDARD HIGHWAY HARDWARE.
7. SEE BRS INSTALLATION MANUAL FOR PROPER ASSEMBLY. AFTER TIGHTENING NUTS, TRIM OFF EXCESS THREADED ROD.
8. NOTE PROPER OVERLAP OF PANELS FOR DIRECTION OF TRAFFIC.
9. TRIM TRANSITION BLOCKOUTS AS NECESSARY TO ACHIEVE 457 [18.00] REQUIRED WIDTH AT BRAKEMASTER INTERFACE, SECTION A–A.
10. UNITS OF MEASURE ARE MILLIMETERS [INCHES] UNLESS OTHERWISE NOTED.

KEY

1. GUARDRAIL SECTION A
2. GUARDRAIL SECTION B
3. TRANSITION PANEL
4. END SHOE
5. POST–10"x10"x6',WOOD
6. POST–8"x8"x6',WOOD
7. BLOCKOUT–6"x8"x1'–10 1/2",WOOD*
8. BLOCKOUT–6"x8"x1'–2",WOOD*
9. BLOCKOUT–2"x6"x1'–2",WOOD*

*STEEL POSTS AND BLOCKOUTS MAY BE SUBSTITUTED FOR WOOD.

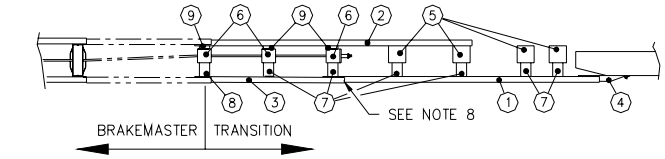

PLAN

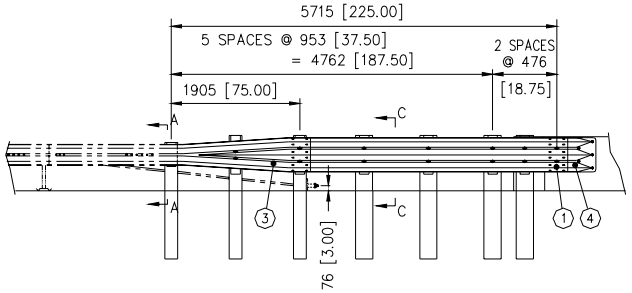

ELEVATION
SCALE: 1/4"=1'–0"

LEFT SIDE OF ROAD

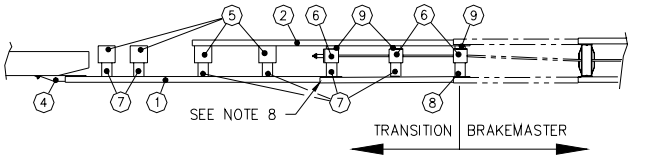

PLAN

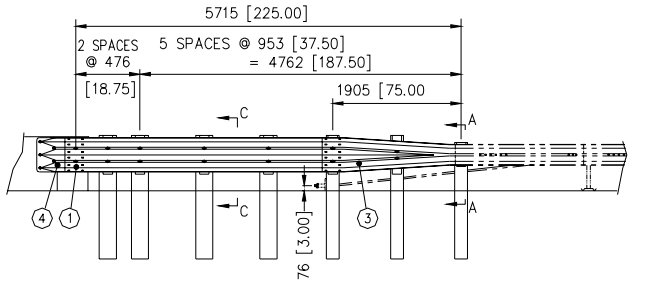

RIGHT SIDE OF ROAD

ELEVATION
SCALE: 1/4"=1'–0"

ENERGY ABSORPTION SYSTEMS, INC.
ENGINEERING AND RESEARCH DEPARTMENT

BRAKEMASTER®350 SYSTEM (BRS)
THRIE BEAM TRANSITION SECTION
ATTACHED TO CONCRETE BARRIER
FOR ROADSIDE APPLICATION

Limitations and Warnings

The BRAKEMASTER™ System has been tested and evaluated per the recommendations of the National Cooperative Highway Research Program (NCHRP) report 350.* The BRAKEMASTER™ System as currently designed, is capable of: decelerating and stopping light and heavy weight vehicles (820 to 2000 kg [1804 to 4400 lb]) when impacted head-on at 100 kph [62.1 m.p.h.]; and redirecting light and heavy weight vehicles (820 to 2000 kg [1804 to 4400 lb]) when impacted at 100 kph [62.1 m.p.h.] along the system's side for right way impacts of 20 degrees or less and wrong way impacts at an angle of 20 degrees or less. Tests are conducted on slopes less than 8 degrees and without curbs.

A smooth transition must be provided when attaching the BRAKEMASTER™ System to a rigid object. This transition may be purchased as an extra piece of hardware from Energy Absorption Systems or provided by the customer.

Refer to the BRAKEMASTER™ System Maintenance Manual for components needing replacement after partial impacts to ensure the energy absorbing capacity of the unit has not been adversely impaired.

Excessive curb height may create a ramping effect, which could create an unsafe vehicle trajectory.

Impacts that exceed the design capabilities described in this manual (vehicle weight, speed and impact angle) may not result in acceptable crash performance as described in NCHRP 350 relative to structural adequacy, occupant risk and vehicle trajectory factors.

* Copy may be obtained from:
Transportation Research Board
National Research Council
2101 Constitution Avenue, N.W.
Washington, D.C. 20418

Notes

Customer Service Department

USA
Phone 1-888-323-6374 **Fax 1-312-467-1356**

Asia Pacific
Phone +65 6276 3398 **Fax +65 6276 6218**

Europe
Phone +44-1473-221-105 **Fax +44-1473-221-106**

35 East Wacker Dr., 11th Floor
Chicago, IL 60601-2076
Engineering and Manufacturing Facilities:
Rocklin, California and Pell City, Alabama

ENERGY ABSORPTION
SYSTEMS, INC.

A Quixote Company
Saving Lives By Design

Rev. 7/22/05

http://www.energyabsorption.com/

Part No. 2735761-0000

© 2005 Energy Absorption Systems, Inc.

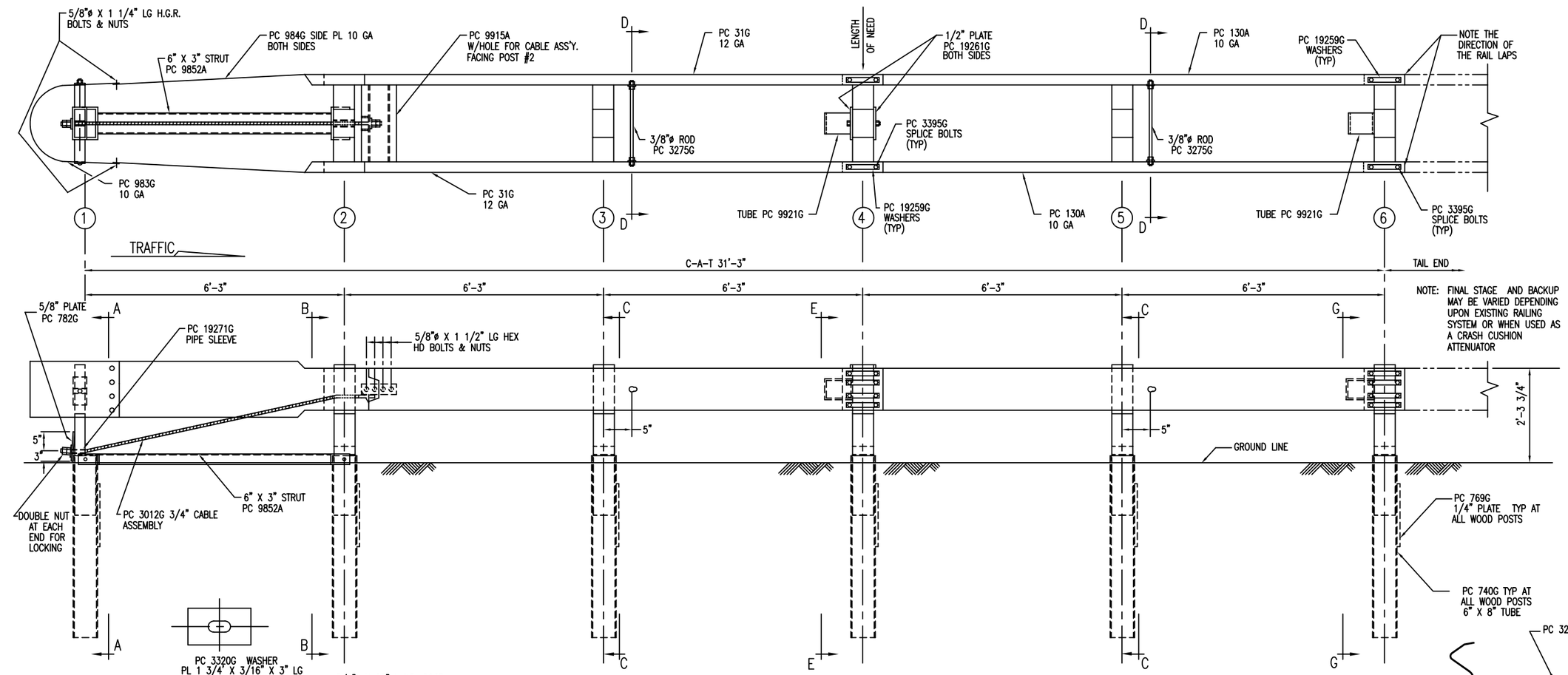

NOTE:
PC 3395G SPLICE BOLTS ARE USED TO ALLOW TELESCOPING ACTION.

C-A-T BILL OF MATERIAL

PRODUCT CODE	QTY	DESCRIPTION
31G	2	12/12'6/0 CAT (GUARDRAIL)
130A	2	10/12'6/5'10:6'8/SP CAT (GUARDRAIL)
705G	1	2" x 5 1/2" PIPE
740G	6	4'6 TUBE SLEEVE
769G	6	1/4 x 18 x 24 SOIL PLATE
782G	1	5/8" x 8" x 8" BEARING PLATE
983G	1	10/NOSE PLATE/CAT/ROLLED
984G	2	10/SIDE PLATE CAT
3012G	1	CABLE 3/4 x 8'0/DBL SWG
3074B	5	WD 3'6 POST #2, 3, 4, 5, 6 CAT
3075B	1	WD 3'6 POST #1 CAT
3100B	2	WD BLOCK 1'2 #1 CAT
3101B	10	WD BLOCK 1'2 #2-6 CAT
3255G	4	3/8" FLAT WASHER
3263G	4	3/8"ø x 2" LAG SCREW
3275G	2	3/8"ø x 24 1/2" RESTRAINT ROD
3300G	20	5/8" FLAT WASHER
3320G	4	3/16" x 1 3/4" x 3" RECT WASHER
3340G	85	5/8" G.R. NUT
3360G	16	5/8"ø x 1 1/4" G.R. BOLT
3380G	8	5/8"ø x 1 1/2" HEX BOLT
3395G	32	5/8"ø x 1 3/4" HEX BOLT CAT
3478G	13	5/8"ø x 7 1/2" HEX BOLT
3497G	6	5/8"ø x 9 1/2" HEX BOLT
3650G	2	5/8"ø x 25" G.R. BOLT
3900G	2	1" FLAT WASHER
3910G	4	1" HEX NUT
4252G	8	3/8" HEX NUT
4258G	4	3/8" LOCK WASHER
4640G	8	5/8"ø x 24" HEX BOLT
9852A	1	CHANNEL STRUT x 6'-6"
9915A	1	SPACER CHANNEL CAT
9916A	1	10/BENT PLATE SLEEVE
9921G	2	6" SLEEVE 6 x 8
19259G	32	3/16" x 2" x 10" PLATE WASHER
19261G	2	1/2 x 3 x 7 POST PLATE
19271G	1	1" x 2 1/2" PIPE SLEEVE CAT

REV.	CHK'D	BY	DATE	REMARKS
6		BT	8-9-00	CHANGED SYSTEM HEIGHT, WAS 2'-3"
5		LH	6-22-00	REPLACED PC 766 WITH PC 769, CHANGED TITLE BLOCK
4		BT	4-10-97	ROTATED BLOCK PC 9921 90° AT POST 4 & 6
3		BT	3-10-97	DELETED PC 3072, 3073, 4470, CHG QTY 3074 & 3478
2		BT	8-12-96	SECTIONS A-A & B-B, CORRECTED PIPE SLEEVE PC No
1		BT	5-1-96	REVISED PC No 31G & 130A

C-A-T

CRASH-CUSHION ATTENUATING TERMINAL PLAN, ELEVATION & SECTIONS FOR USE AS A LONGITUDINAL MEDIAN BARRIER TERMINAL OR CRASH CUSHION ATTENUATOR

TRINITY INDUSTRIES, INC.
HIGHWAY SAFETY PRODUCTS
2525 STEMMONS FREEWAY, DALLAS, TX 75207

DRAWN	BT
CHECKED	EN
SCALE	N.T.S.
DATE	7-15-94
ENG. FILE #	SS245-01E
SHT.No.	E1 OF 1
DRAWING NO.	SS-245
REV.	6

This drawing and the information shown thereon is the sole property of TRINITY INDUSTRIES, INC. Neither the drawing nor such information is to be used for any purpose other than that for which it was specifically furnished by TRINITY INDUSTRIES, INC., nor is any reproduction authorized without written permission.

Installation Instructions
for the

FLEAT-MT

Median Terminal

R O A D S Y S T E M S , I N C .

P. O. Box 2163
Big Spring, Texas 79721
Phone: (432) 263-2435 FAX: (432) 267-4039

Technical Support & Marketing Phone: (330) 346-0721
Technical Support & Marketing Fax: (330) 346-0722

This Installation Manual can be downloaded from RSI web site
www.roadsystems.com

Table of Contents

Page

LIST OF FIGURES ii

LIST OF TABLES iii

Installing the *FLEAT-MT* 3

Materials / Connection to Barrier 3
Design Options 3
Site Preparation 5
Tools Required 5
Installation Procedures..... 5
Installing CRT Posts 3, 5, 6 & 7 6
Installing Posts in Foundation Tubes (Posts 1, 2 &4) / Groundline Strut 9
Installing Guardrail 14
Installing Cable Anchor Bracket..... 15
Installing ***FLEAT-MT*** Impact Heads at Posts #1 and #4 18
Installing Cable Assemblies 18
Installing Deflector Box 19
Installing Tether Cable 19
Installing Post Breaker 19

FLEAT-MT Installation Checklist.....21

Repairing the *FLEAT-MT* 22

Equipment Needed for Repair Operation 22
General Repair Procedures 22
Procedures Immediately Following an Accident (Temporary)..... 23

Blank Page for NOTES 25

PUBLICATION ~ 020305

List of Figures

Figure		Page
1	Isometric View of the ***FLEAT-MT***	1
2	Plan & Elevation Views of the ***FLEAT-MT***	2
3	Section at Single Sided Rail - CRT Post #3	6
4	Section at Double Sided Rail CRT Posts	7
5	Proper Placement of Foundation Tubes (View at Post #2)	8
6	End View at Post Location 1	10
7	Component Details at Post Location 1	11
8	Section at Post #2	12
9	Optional 5'-0" or 4'-6" Foundation Tubes with Soil Plates	13
10	Installation of Cable Anchor Bracket Shoulder Bolts	16
11	Installation of Cable Anchor Bracket	16
12	Installation of Impact Head and Cable Assembly at Post #4	17
13	Installation of Post Breaker & Impact Head at Post #1	20
14	Wood Post Pulling Tool (Pipe Option)	24
15	Wood Post Pulling Tool (Lag Screw Option)	24

List of Tables

Table Page

1 ***FLEAT-MT*** Design Options / Wood Post Design 3

2 ***FLEAT-MT*** Bill of Materials 4

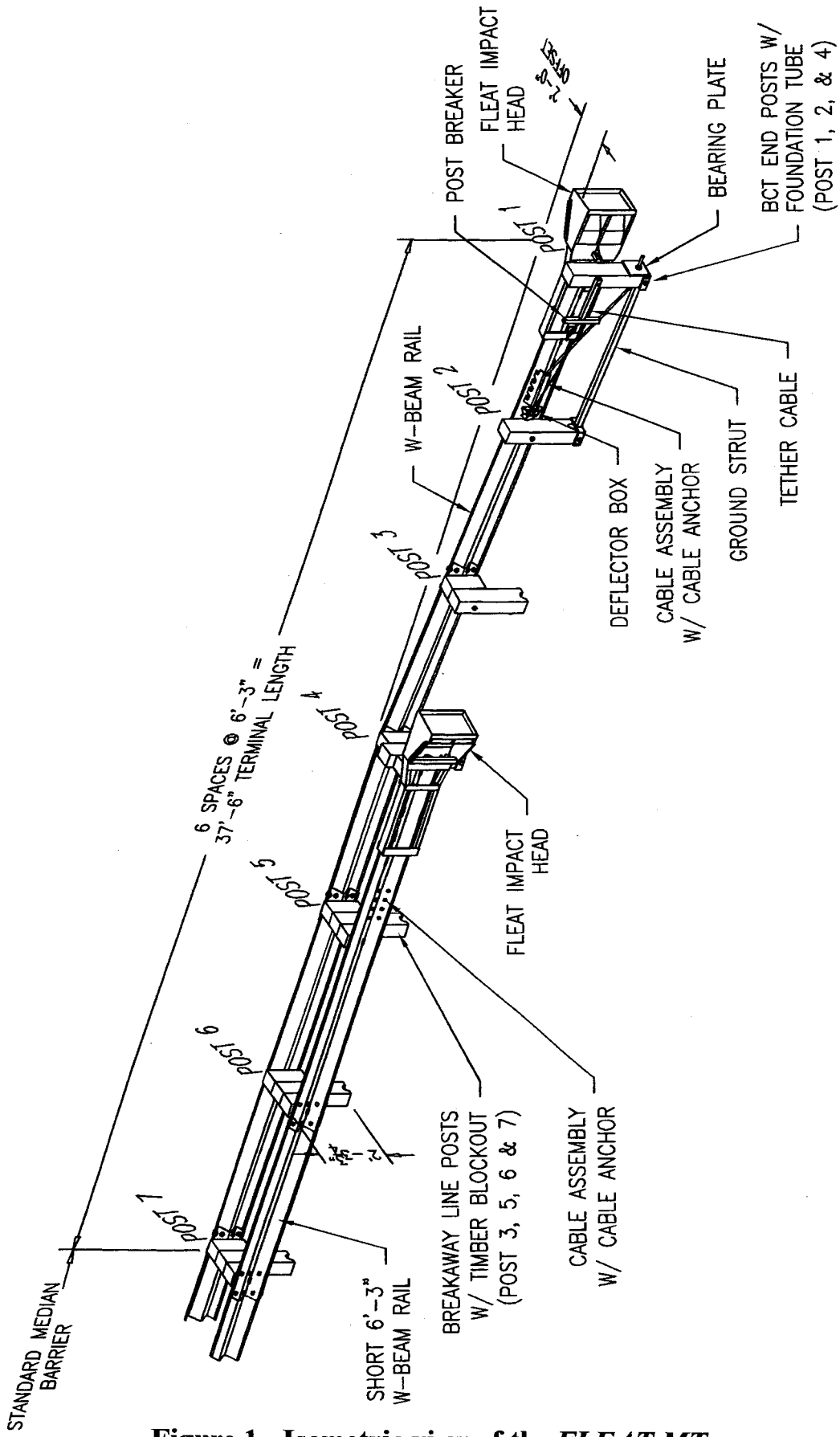

Figure 1. Isometric view of the *FLEAT-MT*.

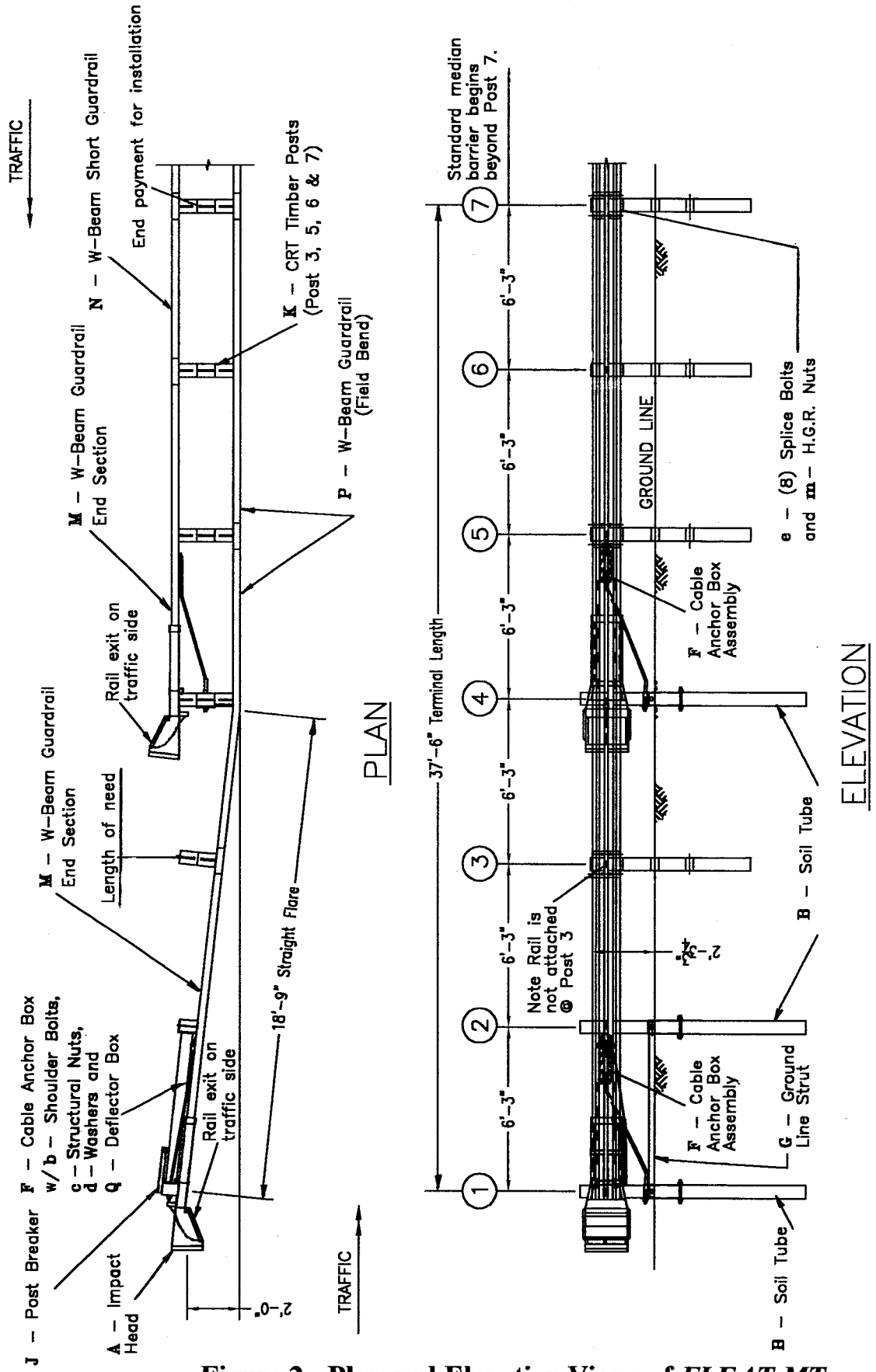

Note that wood or steel breakaway posts may be used. Wood posts are shown.

Figure 2. Plan and Elevation Views of *FLEAT-MT*.

Installing the *FLEAT-MT*

Materials / Connection to Barrier

The FLEAT-MT is available in a Wood Post or Steel Post option.
This manual provides installation instructions for the **Wood Post System**.

As packaged, the ***FLEAT-MT*** system includes all materials needed for a complete installation (except for the impact face object markers). The length of the ***FLEAT-MT*** system is 37'-6". When the ***FLEAT-MT*** system is attached to double faced W-beam, simply splice the terminal to the barrier. When the system is attached to double faced Thrie-beam, use "W to Thrie" transition panels then splice the terminal to the barrier. When the system is attached to a rigid barrier such as concrete safety shape, use an approved stiffness transition then splice the terminal to the transition.

Design Options

There are four foundation tube options for the Wood Post ***FLEAT-MT*** as shown in **Table 1** below.

Table 1. *FLEAT-MT* Design Options / Wood Post Design

FLEAT-MT **Foundation Tube Options (Posts 1, 2 & 4)**	Total Foundation Tubes Needed	Number of Standard BCT Posts Needed	Number of CRT Posts	Total Number of Posts
6'-0" split Foundation Tube	3	3	4	7
6'-0" solid Foundation Tube	3	3	4	7
5'-0" or 4'-6" Foundation Tubes with soil plate	3	3	4	7

Figure 8 shows a section with the 6'-0" foundation tubes.

Figure 9 shows a section with the 5'-0" or 4'-6" foundation tubes with soil plates.

Table 2. *FLEAT-MT* Bill of Materials

Item	Code #	Quantity	Description
A	F3000	2	FLEAT Impact Head
B	S730	3	* Foundation Soil Tubes, 6" x 8" x 6'-0" **(SEE NOTE BELOW)**
C	E750	2	Bearing Plate - 8″ x 8″ x 5/8″
D	C3820	1	3/8" Wire 20'- 0"
E	E770	2	BCT Cable Anchor Assembly
F	S760	2	Cable Anchor Bracket
G	E780	1	Ground Strut
H	P650	3	5-1/2″ x 7-1/2″ x 45″ Wood Posts (Locations 1, 2 & 4)
J	PBFMT	1	Post Breaker
K	P671	4	6" x 8" x 6'-0" Wood CRT Posts (Locations 3, 5, 6 & 7)
L	P675	9	6" x 8" x 14" Timber Blockouts
M	F1303	2	W-Beam Guardrail End Section, 12 Ga., 12-6"
N	G1201	1	W-Beam Guardrail, Short Section (6'-3" spacing) 12 Ga., 6'-3"
P	G1203	2	W-Beam Guardrail, (6'-3" spacing) 12 Ga., 12'-6"
Q	DBMT	1	Deflector Box
R	E740	2	Pipe Sleeve - 2″ Standard Pipe x 5-1/2″
Hardware	* The optional **6'-0" long split** foundation tubes may be substituted with either **solid 6'-0" long** foundation tubes without soil plates or standard **5'-0" long** or **4'-6" long** foundation tubes with soil plates.		
a	E350	6	3/8″ x 3″ Lag Screws (Post 1, 4 / Impact Heads & Post Breaker)
b	SB58A	16	1/2" Cable Anchor Bracket Shoulder Bolts
c	N055A	16	1/2" A325 Structural Nuts
d	W050A	32	1/2" Structural Washers
e	B580122	40	5/8″ x 1¼″ Splice Bolts (5 splices)
f	B580754	3	5/8″ x 7½″ Hex Bolts (Foundation Tubes)
g	B581004	3	5/8″ x 10″ Hex Bolts (Foundation Tubes)
h	B581002	1	5/8″ x 10″ H.G.R. Post Bolt (Post 2 Only / NO BOLT USED AT POST #1)
j	B581802	1	5/8″ x 18" H.G.R. Post Bolts (Post 3)
k	B582502	4	5/8″ x 25" H.G.R. Post Bolts (Posts 4 through 7)
m	N050	52	5/8″ H.G.R. Nuts
n	W050	9	5/8″ Flat Washers (2 each at Soil Tubes + Posts 2-4)
p	N100	4	1″ Anchor Cable Hex Nuts
q	W100	4	1″ Anchor Cable Washers
r		2	Cable Tie

Site Preparation

The ***FLEAT-MT*** is installed with a total length of 37'-6". The front 18'-9" of the system is single sided with a straight flare offset of 2'-0" toward the centerline of the system.

First, measure off the downstream 18'-9" of the system which is double sided and attaches directly to the median guardrail. Measure the front single-sided 18'-9" distance then measure the front 2'-0" offset distance from post #4. This 2'-0" offset becomes the location of post #1. All posts are spaced at 6'-3". Site grading may be necessary to prevent the foundation tubes from extending more than 4″ above the ground (see Section on Installation).

The ***FLEAT-MT*** is not intended for narrow medians. There must be a minimum distance of 6'-0" from the traffic face of the ***FLEAT-MT*** to the edge of the paved shoulder.

Tools Required

The tools required for installation of the ***FLEAT-MT*** system are those used to install standard highway guardrails (H.G.R.), including: 9/16", 7/8", 15/16", 1-1/4", and 1-1/2" sockets and wrenches, a drill with a 1/4″ bit, and other equipment such as augers, tampers, and post pounders commonly used in driving posts.

Installation Procedures

Begin installation at the downstream end of the ***FLEAT-MT*** (post location 7) to ensure that the terminal matches up with the median section of guardrail. The major steps in the installation of the ***FLEAT-MT*** are as follows:

- Install posts 4 to 7 in line with the downstream median barrier (post 4 in foundation tube),
- Install posts 1 to 3 - offset 2'-0" (posts 1 & 2 in foundation tube),
- Install groundline strut,
- Install 37'-6" of guardrail (18'-9" single faced and 18'-9" double faced)
- Install (2) cable anchor brackets and (1) deflector box,
- Install (2) ***FLEAT -MT*** impact heads,
- Install (2) cable assemblies,
- Install 3/8" tether cable
- Install post breaker

NOTE: The impact heads (attached to post #1 and post #4) must be placed over the rail prior to tightening the rail to post # 2 and post # 5 respectively.

Installing CRT Posts (posts 3, 5, 6 & 7)

Posts 3, 5, 6 & 7 are 6" x 8" x 6'-0" CRT posts (P671). When installed properly, the hole at the ground line of these CRT posts will be parallel to the roadway. **Figure 3** shows the section of a CRT post at post #3 which is a single sided rail. **Figure 4** shows the section of a CRT post at posts #5, 6 and 7, which are double-sided rail. The CRT post may be driven with an approved driving head. For stiff soils, drill a 6″ pilot hole and force the post to the appropriate depth by impact or vibratory means with an approved driving head. The post may also be installed by augering and backfilling if the contractor so prefers. The initial hole must be large enough to allow adequate room for proper compaction of the soil during backfill. *Care must be taken to carefully compact the backfill to prevent settlement or lateral displacement of the post.*

If rock is encountered during driving or excavation, refer to appropriate State specifications. Guidelines will vary from State to State.

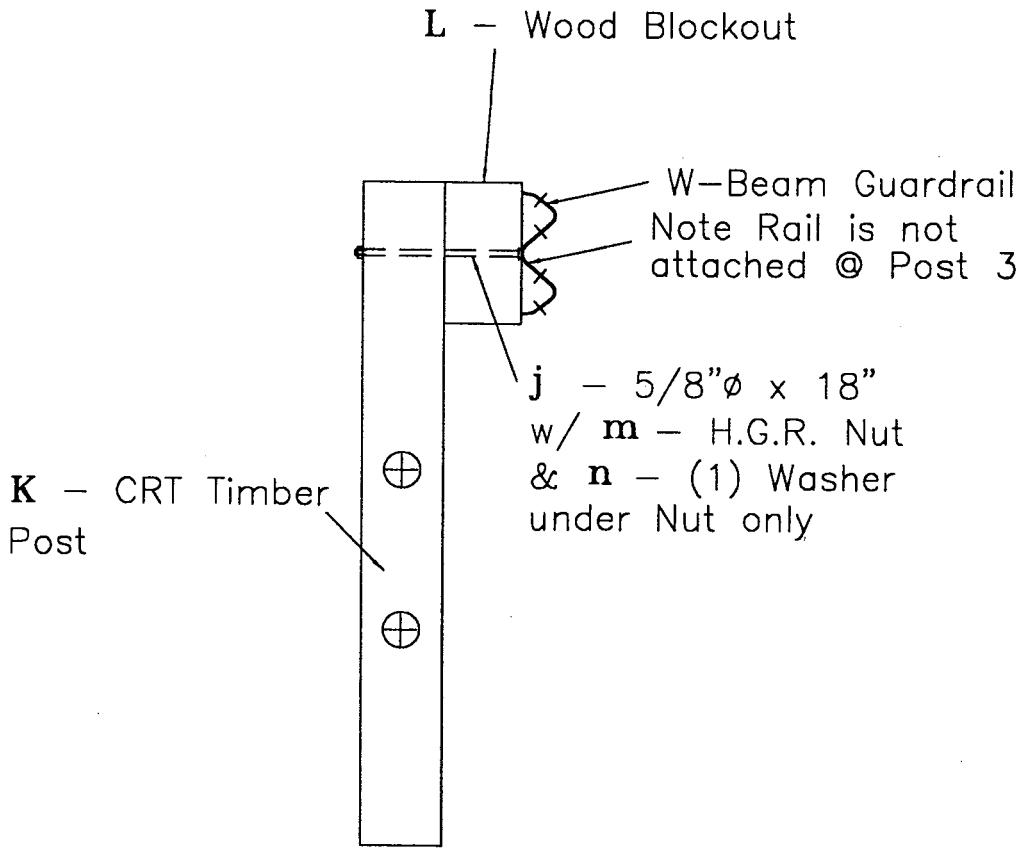

SECTION AT POST 3

Figure 3. Section at Single Sided Rail - CRT Post #3.

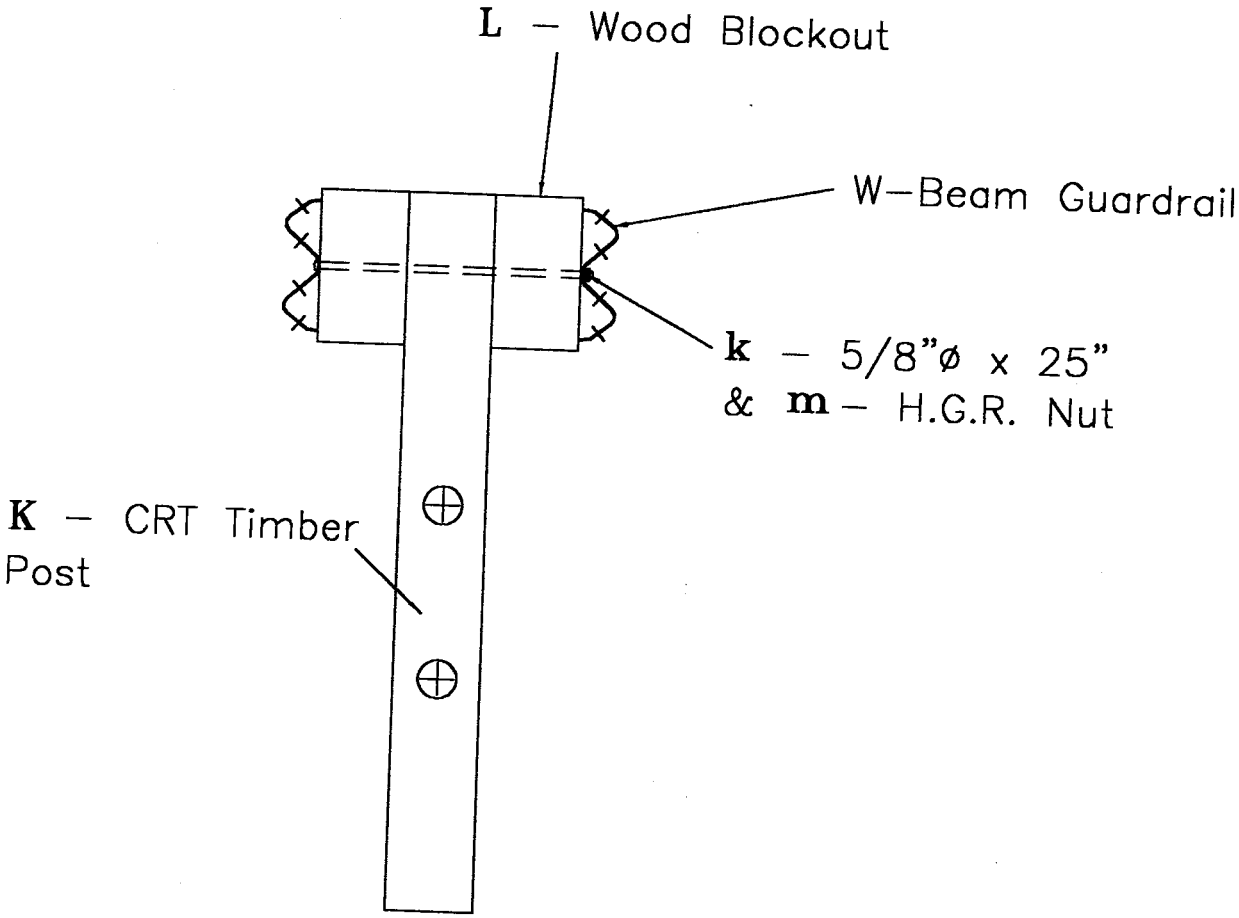

SECTION TYPICAL AT POSTS 5, 6 & 7

Figure 4. Section at Double Sided Rail CRT Posts.

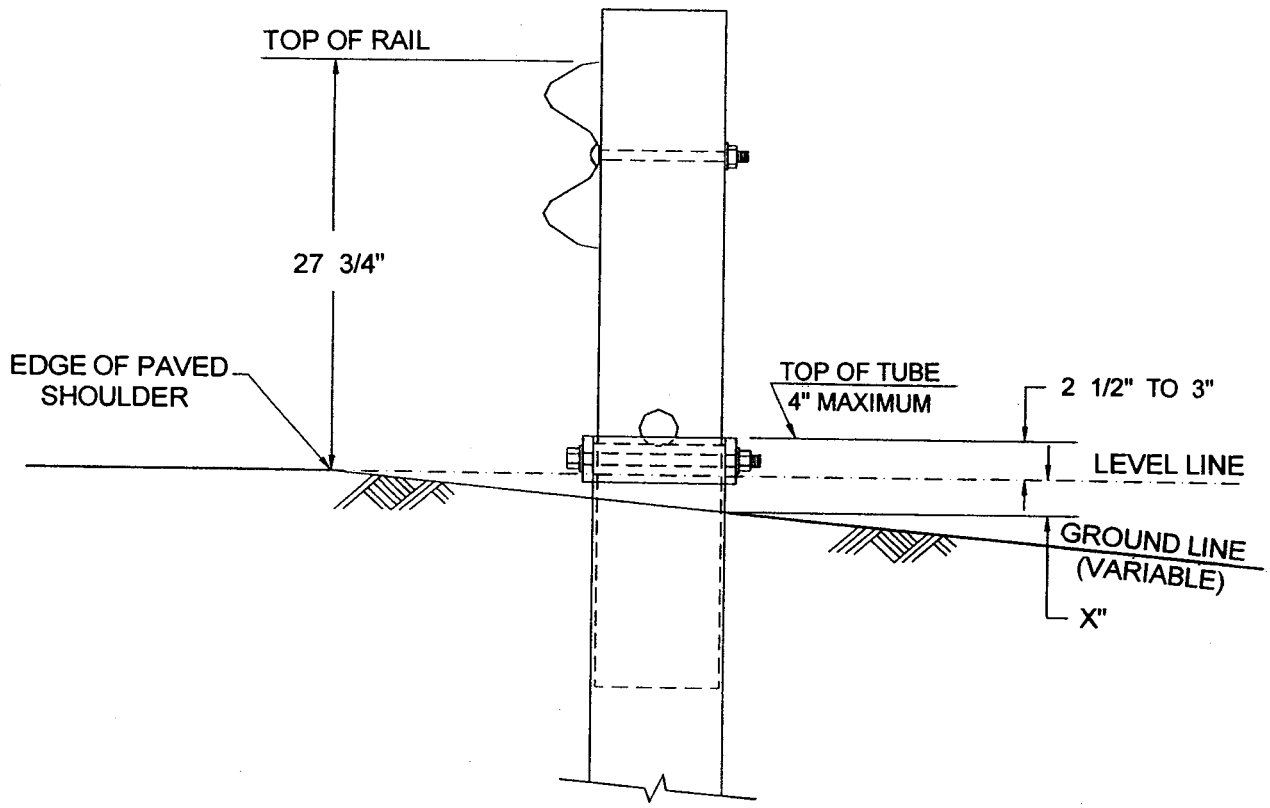

Figure 5. Proper Placement of Foundation Tubes (View at Post #2)

Figure 5 illustrates the proper placement of the foundation tubes. The top of the foundation tubes should not project more than 4″ above the ground line when measured along a 5' cord, according to AASHTO specifications. Site grading may be required if the top of the foundation tubes project more than 4″ above the ground line. The finished guardrail height should generally be 27-3/4″ above the edge of the shoulder.

Based on a level line from the edge of the paved shoulder, the top of the foundation tube should normally be 2-1/2″ to 3″ above the level line. The placement of the foundation tube should be an appropriate depth below the level line in order to maintain the 27-3/4" guardrail height from the edge of the shoulder.

If the slope drops off some distance (*X* ") from the edge of the shoulder to the tube location, as shown in **Figure 5**, the depth of the foundation tube should be reduced by *X* ″ in order to maintain the proper guardrail height. The top of the foundation tube will project (*X*″+ 2 1/2") to (*X*″+ 3") above the ground. In order not to exceed the AASHTO 4″ maximum projection above the ground, site grading will be necessary to assure that the "*X* ″ dimension would not be more than 1 1/2" to 1″ respectively.

Installing Posts in Foundation Tubes (Posts 1, 2 & 4) /Groundline Strut

Figures 6 & 7 show the component details at post location 1. **Figure 8** shows a section at post #2. Posts #1, 2 and 4 are all installed in foundation tubes. Because posts #1 and #4 will have a cable anchor, a pipe sleeve (E740) is required for these posts. See **Figure 12** for details at post #4.

Posts 1, 2 and 4 may be installed with either 6'-0" long split foundation tubes (S730) without soil plates, solid 6'-0" long foundation tubes (E731) without soil plates, standard 5'-0" long foundation tubes (S735) with soil plates (SP600) or 4'-6" long foundation tubes (E735) with soil plates (SP600). **Figure 9** shows the optional 5'-0" or 4'-6" foundation tubes with soil plates.

Do not drive the foundation tube with wood post inserted. If the soil is penetrable so that the foundation tube does not deform, the foundation tube may be driven with an approved driving head. For non-penetrable soil, drill a 6″ pilot hole and force the tube to the appropriate depth by impact or vibratory means with an approved driving head. The tube may also be installed by augering and backfilling if the contractor so prefers. The initial hole must be large enough to allow adequate room for proper compaction of the soil during backfill. *Care must be taken to carefully compact the backfill to prevent settlement or lateral displacement of the foundation tubes.* If rock is encountered, refer to appropriate State specifications. Guidelines will vary from State to State.

The top of the foundation tubes should not project more than 4″ above the ground line when measured along a 5' cord, according to AASHTO specifications. See **Figure 5**.

For the <u>6'-0" long split foundation tube</u> option, fasten one 5/8″ x 7-1/2″ hex head bolt (B580754) and H.G.R. nut (N050) through the bottom hole of the foundation tube. *Do not over tighten and deform the tube.* The bolt is intended to stop the post from sliding all the way into the tube during installation.

The installation procedure for the <u>solid 6'-0" long foundation tubes</u> without soil plates is the same as that for the split foundation tubes.

The installation for the <u>5'-0" long foundation tubes</u> with soil plates or the <u>standard 4'-6" long foundation tubes</u> with soil plates is shown in **Figure 9**. Fasten the soil plate to the foundation tube with two 5/8″ x 7-1/2″ hex head bolts (B580754) and H.G.R. nuts (N050) through the bottom holes of the foundation tubes. *Do not over tighten and deform the tubes.* These bolts attach the soil plate to the foundation tube and stop the post from sliding all the way into the tube during installation.

Insert the pipe sleeve (E740) into the 2 1/2" diameter hole near the base of two of the 5-1/2″ x 7-1/2″ x 45" wood posts (P650) and install these posts in the foundation tubes at post locations 1 and 4. Install the other wood post 5-1/2″ x 7-1/2″ x 45" in the foundation tube at post location 2, and fit the groundline strut (E780) between posts #1 and #2. A groundline strut is not used at post #4. Secure each post to the foundation tube with a 5/8″ x 10″ hex head bolt (B581004) and H.G.R. nut (N050) with a washer (W050) under both the bolt head and the nut. These bolts will serve to secure the posts and attach the groundline strut to the foundation tubes, as shown in **Figure 7**.

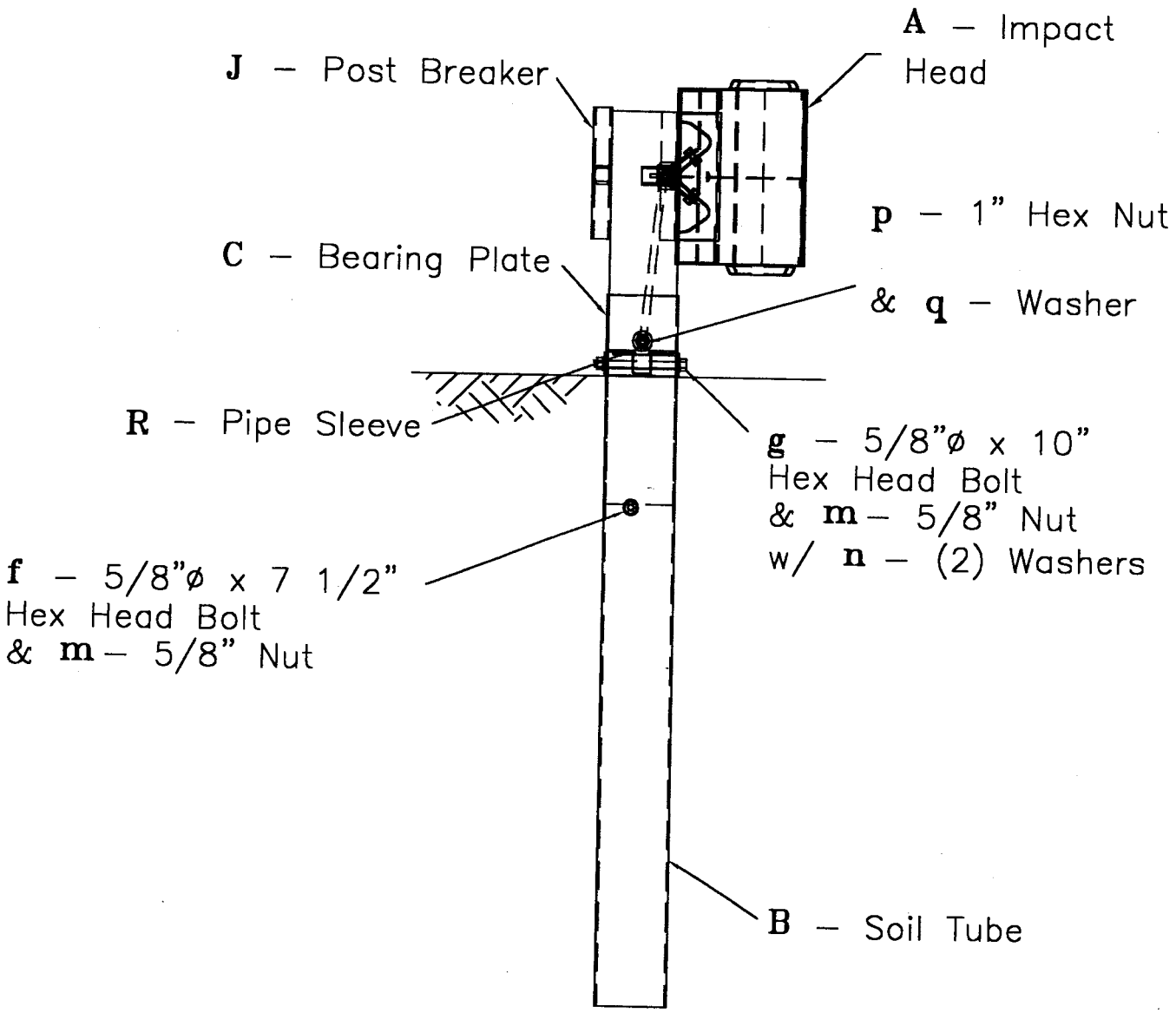

Figure 6. End View at Post Location 1.

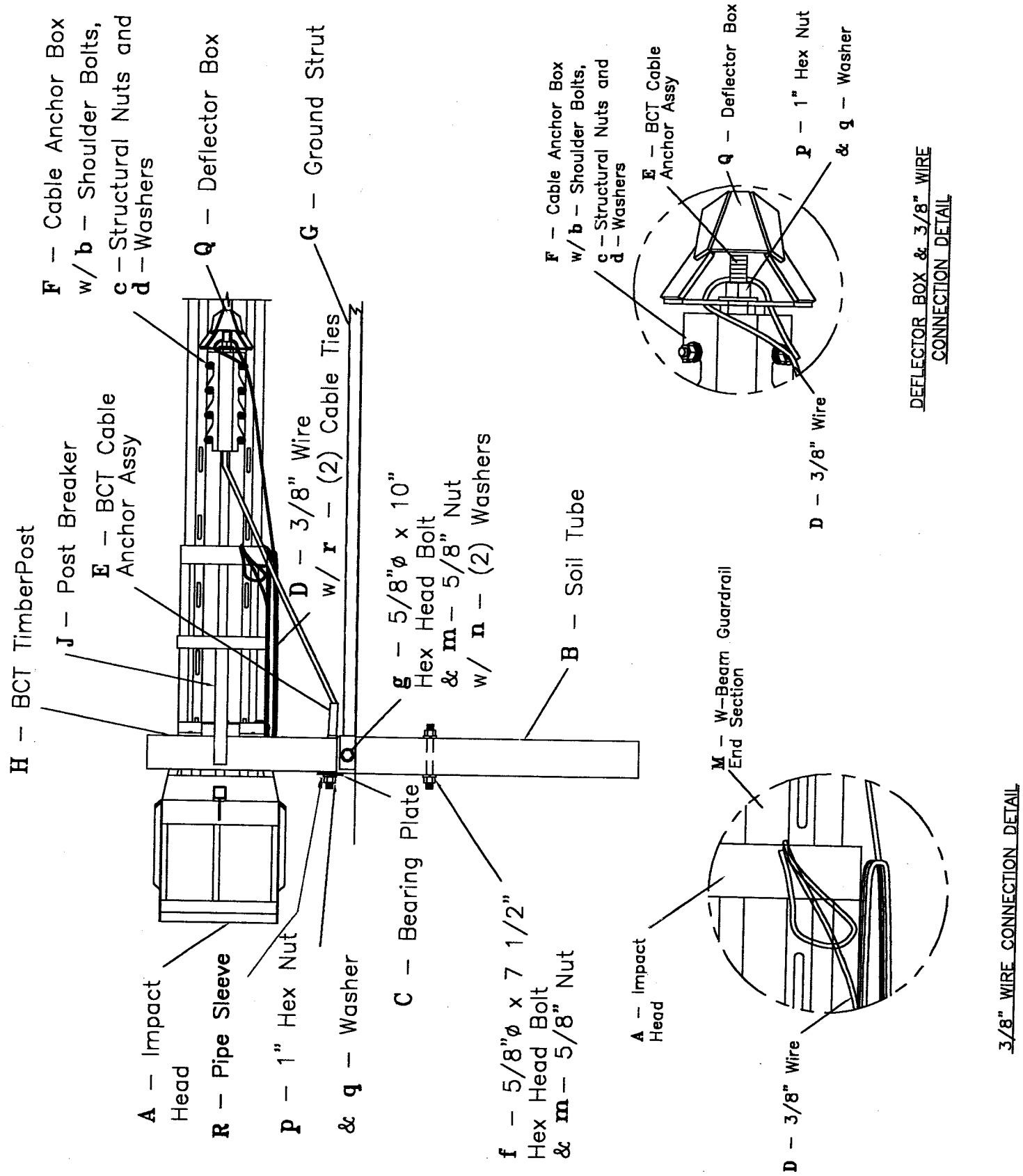

Figure 7. Component Details at Post Location 1.

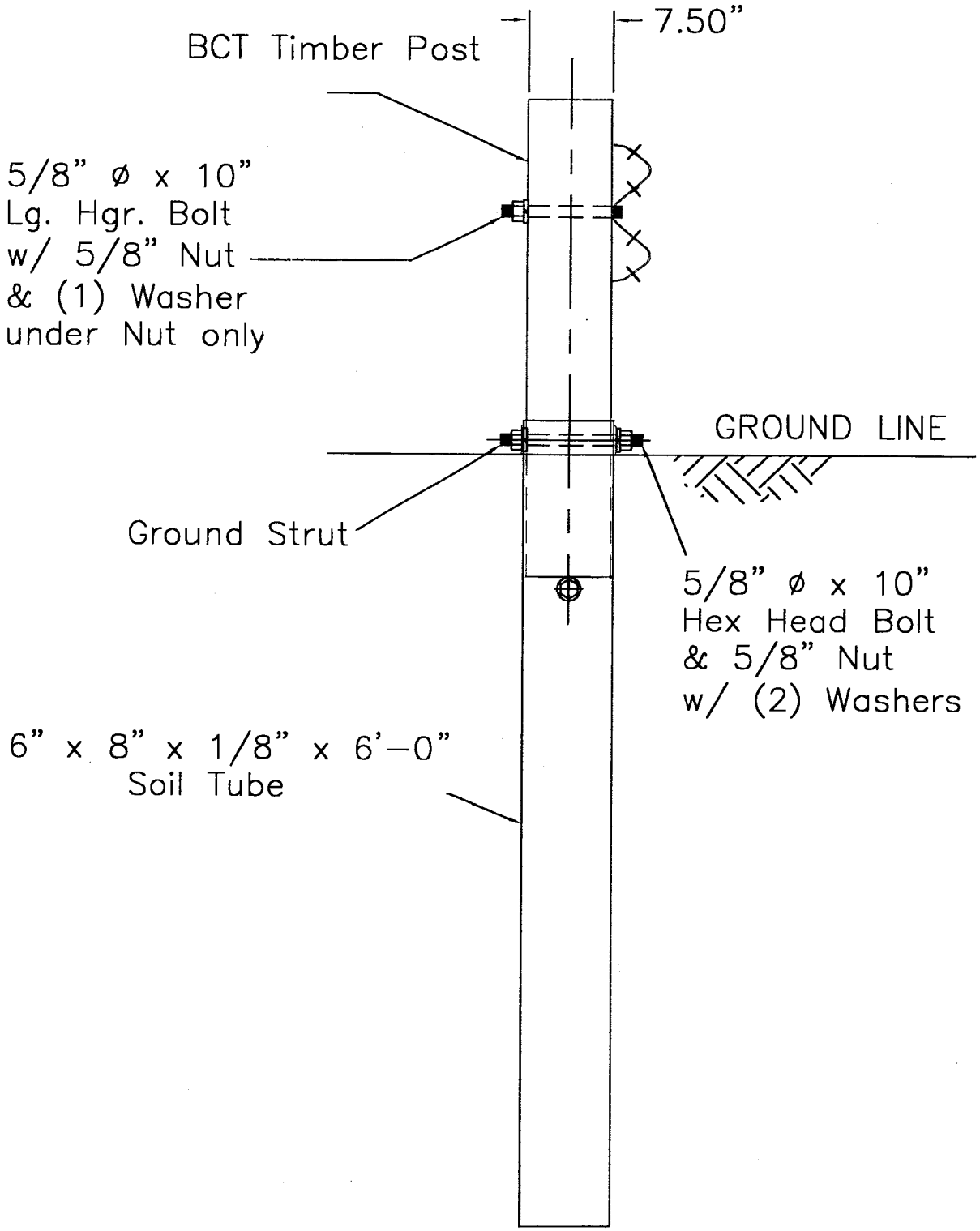

Note. The optional **6'-0" long split foundation tubes** may be substituted with either **solid 6'-0" long foundation tubes** without soil plates or standard **5'-0" or 4'-6" long foundation tubes** with soil plates.

Figure 8. Section at Post #2.

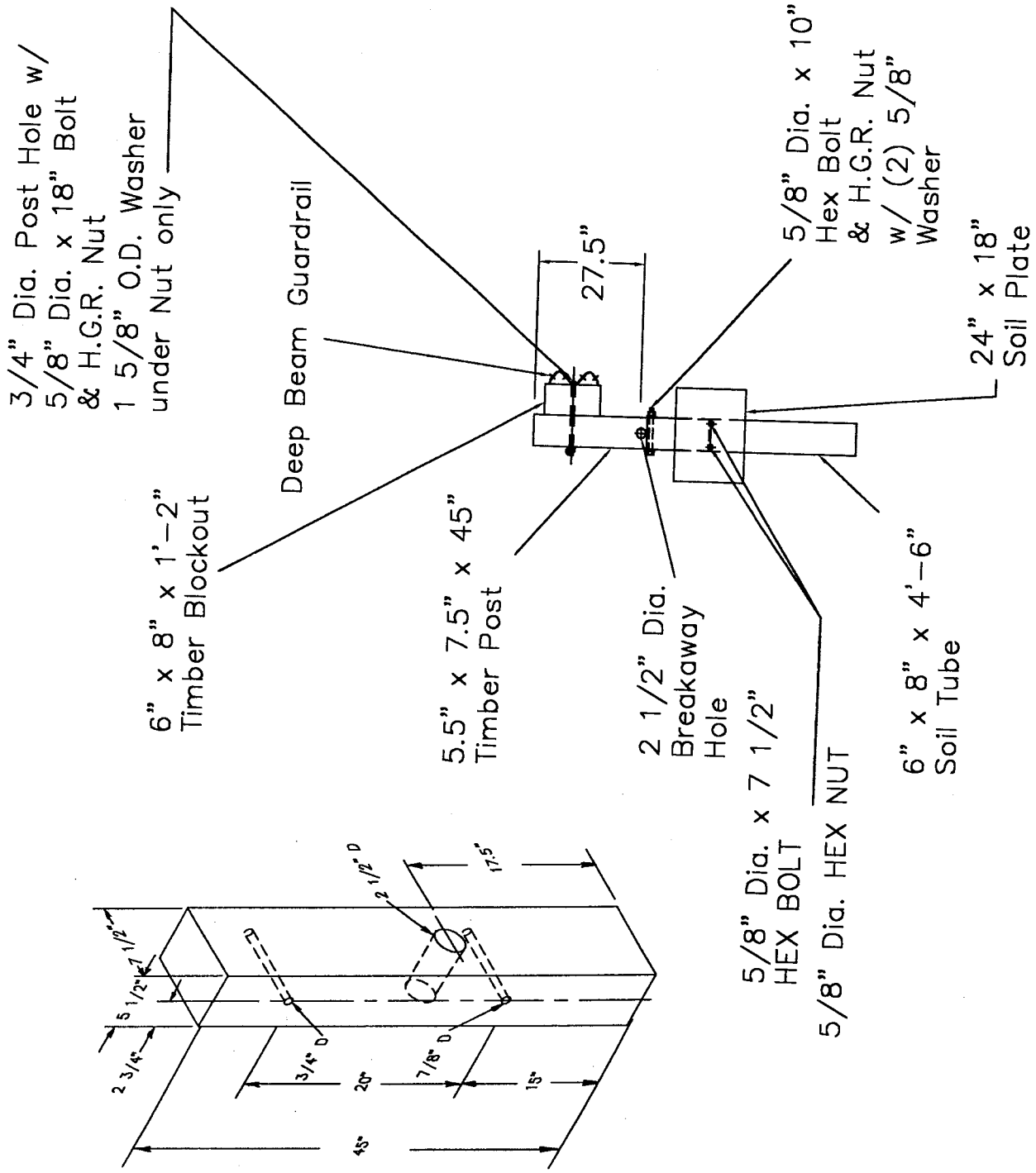

Figure 9. Optional 5'-0" or 4'-6" Foundation Tubes with Soil Plates.

Installing Guardrail

The required offset that begins at post #4 is achieved by manually pushing the rails back. Shop curving or bending is not required.

There are 5 total W-beam guardrail sections required for the ***FLEAT-MT*** as shown below.

- 2 end sections / 12'-6" long (with special slots and eight holes to attach the anchor bracket)
- 2 standard sections / 12'-6" long (one will be field bent to allow flare)
- 1 short section / 6'-3" long (used on the back side to span between posts 6 and 7)

Beginning at the downstream end at post #7 on the backside (reverse direction traffic side), attach a short 6'-3" long guardrail section (G1201) to span from post 7 to 6. Then attach a 12'-6" W-beam guardrail end section (F1303) to span from post 6 to 4. The double-faced rail will end here. An impact head (F3000) will be attached here at post #4 in a later step. Note that the impact head must be placed over the rail prior to tightening the rail to post # 5. Also **note that the rail is not bolted to post #4 at this backside only**.

Beginning at the downstream end at post #7 on the front side (approach traffic side), attach a standard 12'-6" W-beam guardrail section (G1203) to span from post 7 to 5. Next attach a second standard 12'-6" W-beam guardrail section (G1203) to span from post 5 to 3. This rail will be field bent at the midpoint (post #4) to begin a flare. **Note that the rail is not bolted to post #3**. Finally, attach the second 12'-6" W-beam guardrail end section (F1303) to span from post 3 to 1. Note that the impact head must be placed over the rail prior to tightening the rail to post # 2. All rail sections are to be spliced with 5/8″ x 1-1/4″ H.G.R. bolts (B580122) and 5/8″ H.G.R. nuts (N050).

For ease of installation, it is recommended to have the eight 1/2" cable anchor bracket shoulder bolts (SB58A) and the cable anchor bracket (S760) attached to both W-beam guardrail end sections prior to attaching the guardrail to the posts. See Section on "Installing Cable Anchor Bracket" for details.

The backside (reverse direction traffic side) rails are to be attached to posts and blockouts at post locations 5 through 7 with 5/8″ x 25" H.G.R. bolts (B582502) and nuts (N050). **At post location 4, the rail is not bolted to the post at this backside only**. The bolt only holds the blockout to the post.

The front side (approach traffic side) rails are to be attached to posts and blockouts at post locations 4 through 7 with 5/8″ x 25" H.G.R. bolts (B582502) and nuts (N050). No washers are used. At post #3, a 5/8″ x 18" H.G.R. bolt (B581802), nut (N050) and washer (W050) is used but **the rail is not bolted to post #3**. The bolt only holds the blockout to the post. There is no blockout used on posts 1 and 2. The rail is attached to post 2 only with a 5/8″ x 10″ H.G.R. bolt (B581002), nut (N050) and washer (W050). **Note that no bolt is used at post #1**. Refer to **Figure 3** and **Figure 8** for proper placement of 5/8″ flat washer (W050) on posts #2 and 3 under the nut (N050). Refer to **Figure 12** for placement of flat washer (W050) on post #4 under the bolt head.

NOTE: After the blockouts are attached, drive a galvanized steel 10d common nail through the block and into the post (toe nailed) to prevent rotation if the wood shrinks.

Installing Cable Anchor Bracket

There are 2 cable anchor brackets to be installed. The one in the front of the ***FLEAT-MT*** system near post #2 will have a deflector box (DBMT) and 3/8″ tether cable (C3820) attached to the end of the cable. See sections on attaching deflector box and tether cable for additional information.

For ease of installation, it is recommended to have the eight 1/2" cable anchor bracket shoulder bolts (SB58A) and the cable anchor bracket (S760) attached to both W-beam guardrail end sections prior to attaching the guardrail to the posts. If this procedure is not followed, post #2 and post #5 may interfere with attaching the bracket.

The eight 1/2" cable anchor bracket shoulder bolts (SB58A) are attached to the W-beam guardrail end sections with two 1/2" structural washers (W050A), one on each side of the guardrail, and a 1/2" structural nut (N055A). The shoulders of the bolts should be on the backside of the guardrail, away from traffic, as shown in **Figure 10**.

For ease of installation, attach the cable anchor bracket shoulder bolts to the rail "finger tight" only. Then align the slots on the cable anchor bracket (S760) with the shoulder bolts and tap the cable anchor bracket onto the shoulder portion of the bolts using a hammer. Tighten the bolts with a wrench when the bracket is in place. When installed properly, the welded plate on the cable anchor bracket should be toward post #2 for the front bracket and toward post #5 for the rear bracket, as shown in **Figure 11**.

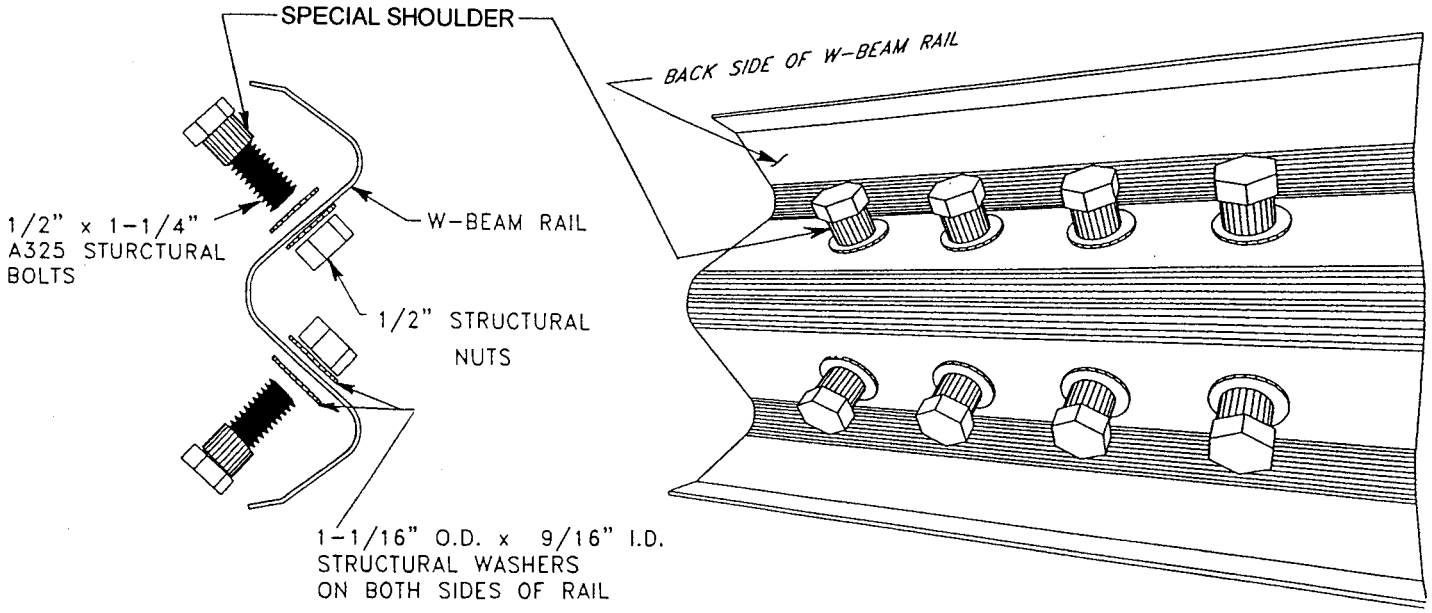

Figure 10. Installation of Cable Anchor Bracket Shoulder Bolts.

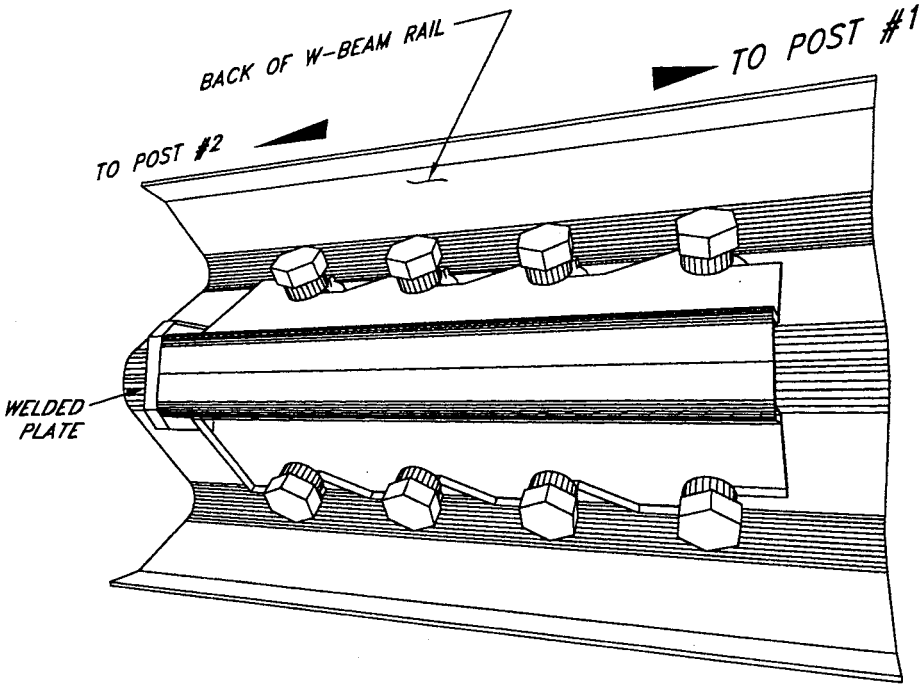

Figure11. Installation of Cable Anchor Bracket.

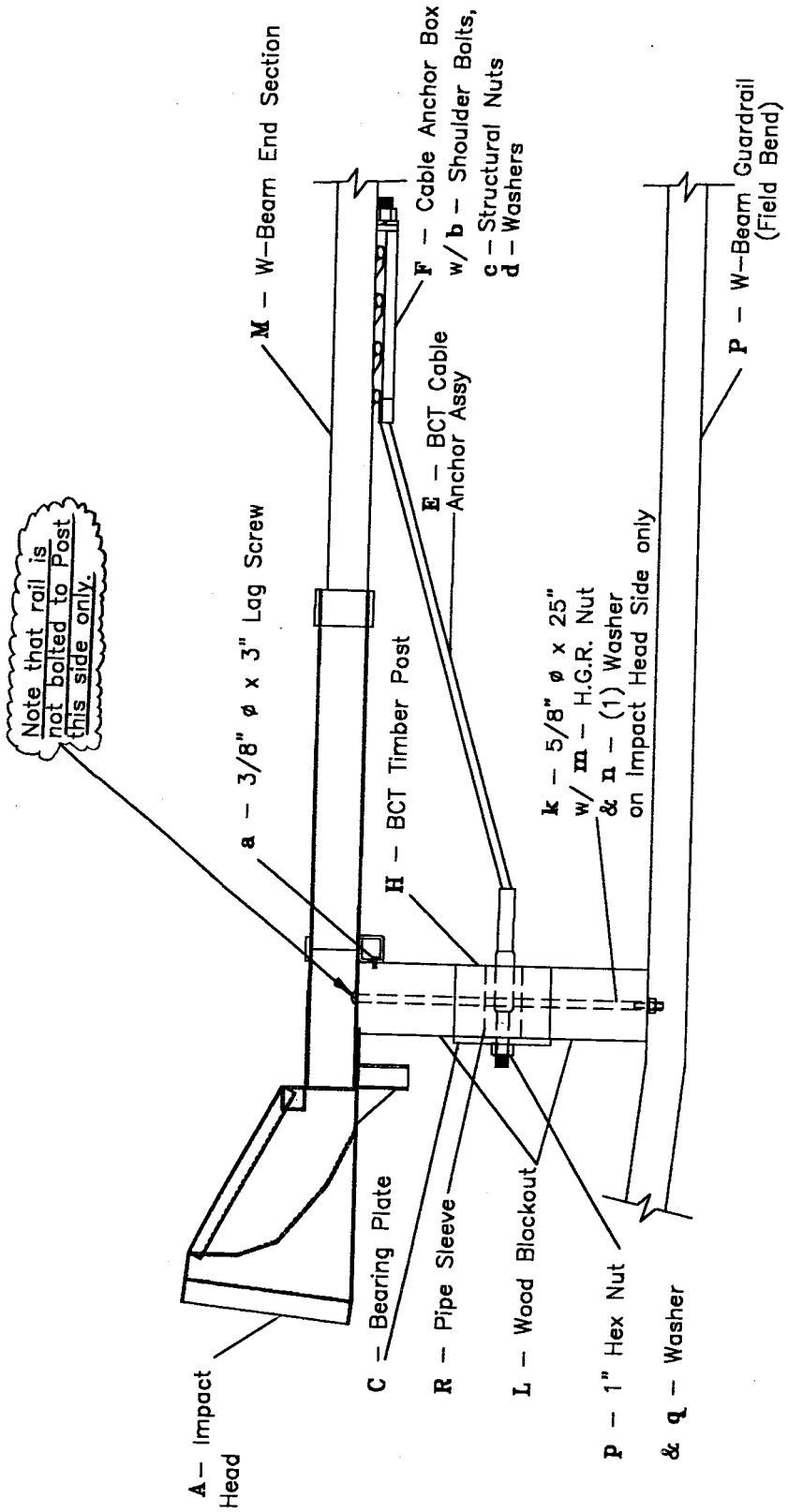

Figure 12.

Installation of Impact Head and Cable Assembly at Post #4.

Installing the FLEAT-MT Impact Heads at Posts #1 and #4

The eight cable anchor bracket shoulder bolts and the cable anchor bracket should be attached to each of the W-beam guardrail end sections prior to attaching the ***FLEAT-MT*** impact heads to post #1 and to post #4 with lag screws.

Prior to tightening the rail to post # 2 and post #5, place both impact heads (F3000) with the guide chute over the end of the W-beam guardrail. **The exit slot will be toward the traffic side**. The impact head should be positioned so that the protruding tube is on the inside of the guardrail, away from traffic as shown in **Figure 2, Figure 7** and **Figure 13**. Slide the impact heads forward until the post angle attachments on the impact head are aligned with the downstream side of the post. This is the side facing post #2 or post #5. Attach the impact head to the post with two 3/8″ x 3″ lag screws (E350), one each for the top and bottom post angle attachments. A 1/4″ pilot hole is required prior to turning in the screw to ease installation and to avoid breaking the lag screw.
Do not attempt to pound in the lag screw with a hammer.

Note. It is recommended that the face of both impact heads be delineated with an object marker that meets State specifications for better night visibility. However, the impact face object marker is not included as part of the shipped materials for the ***FLEAT-MT*** unless specifically requested in the contract plans.

Installing Cable Assemblies

There are 2 cable assemblies to be installed. The one in the front of the ***FLEAT-MT*** system anchors at the base of post #1. This anchor cable will have a deflector box (DBMT) and a 3/8″ tether cable (C3820) attached to the downstream end of the threaded portion of the cable against the cable anchor bracket (S760) near post #2. See **Figure 7** and the section of this installation manual (on the following page) on attaching the deflector box and tether cable for additional information.

Place the front cable assembly (E770) through the cable anchor bracket and through the pipe sleeve of post #1. Place the bearing plate (E750) at the base of post #1 with 5″ dimension up and 3″ dimension down. Place a nail over the bearing plate to prevent the plate from rotating. Secure the front end of the cable assembly with a 1″ hex nut (N100) and washer (W100). Do not attach the 1″ hex nut and washer at the downstream end until the deflector box and tether cable are in place. When tightening the cable, use a 2-lb hammer to tap the cable anchor bracket from the downstream end to ensure that it is securely interlocked with the bolts. Restrain the cable at the end being tightened to avoid twisting the cable.

Repeat the process for the second cable assembly and place the bearing plate (E750) at the base of post #4. See **Figure 12**. Note that there is not a deflector box used for this second cable anchor assembly.

Upon completion of the installation, the cables should be taut and the cable anchor brackets should be fully seated on the shoulder portion of the cable anchor bolts. *It is very important that the cable anchor bracket be fully seated on the shoulder portion of the cable anchor bolts.*

Installing Deflector Box

Note that only one deflector box is required. The deflector box (DBMT) will be attached in the process of attaching the 3/8″ tether cable. See below for a step-by-step procedure.

Installing Tether Cable

The 3/8″ tether cable (C3820) will arrive bundled into a "figure 8" with two free ends, each with swaged loops. You will need to cut the tie and stretch the cable out prior to installation. It is important to do the following steps in order.

(1) Pass one of the tether cable's swaged ends between the rear vertical strap of the impact head and the backside of the W-Beam.

(2) Pass the other end of the tether cable through the swaged-end and pull the cable through. This provides the attachment to the impact head as shown in **Figure 7**.

(3) Take the free end of the tether cable and place the loop over the threaded end of the cable anchor assembly that protrudes from the back of the cable anchor box.

(4) While holding the cable in place, place the hole in the deflector box over the threaded anchor, as shown in **Figure 7**. The deflector box will trap the looped tether cable end.

(5) Through the opening in the deflector box, slip a 1″ washer over the end of the threaded cable anchor and thread on the 1″ hex nut.

(6) Thread the nut so it is fully engaged with at least 1/2" of thread exposed behind the nut. It is recommended that the cable anchor be tightened utilizing the opposite end passing through post #1, as previously described in the section installing cable assemblies.

(7) Loop the excess tether cable neatly between the backside of post #1 and the back of the impact head. Attach this loop to the impact head rear vertical strap and the vertical strap adjacent to post #1 utilizing the two supplied cable ties. The appearance of this completed assembly should look like the detail in **Figure 7**. Care should be taken to minimize the excess cable exposed beneath the system.

Installing Post Breaker

Place the post breaker (PBFMT) on the non-traffic side of post 1. Position the post breaker until the post angle attachment is aligned with the downstream side of the post. The centerline of the post breaker should be at the same height as the centerline of the guardrail. Attach the post breaker to the post #1 with two 3/8″ x 3″ lag screws (E350) as shown in **Figure 7** and **Figure 13**. A 1/4″ pilot hole is required prior to turning in the screw to ease installation and to avoid breaking the lag screw.

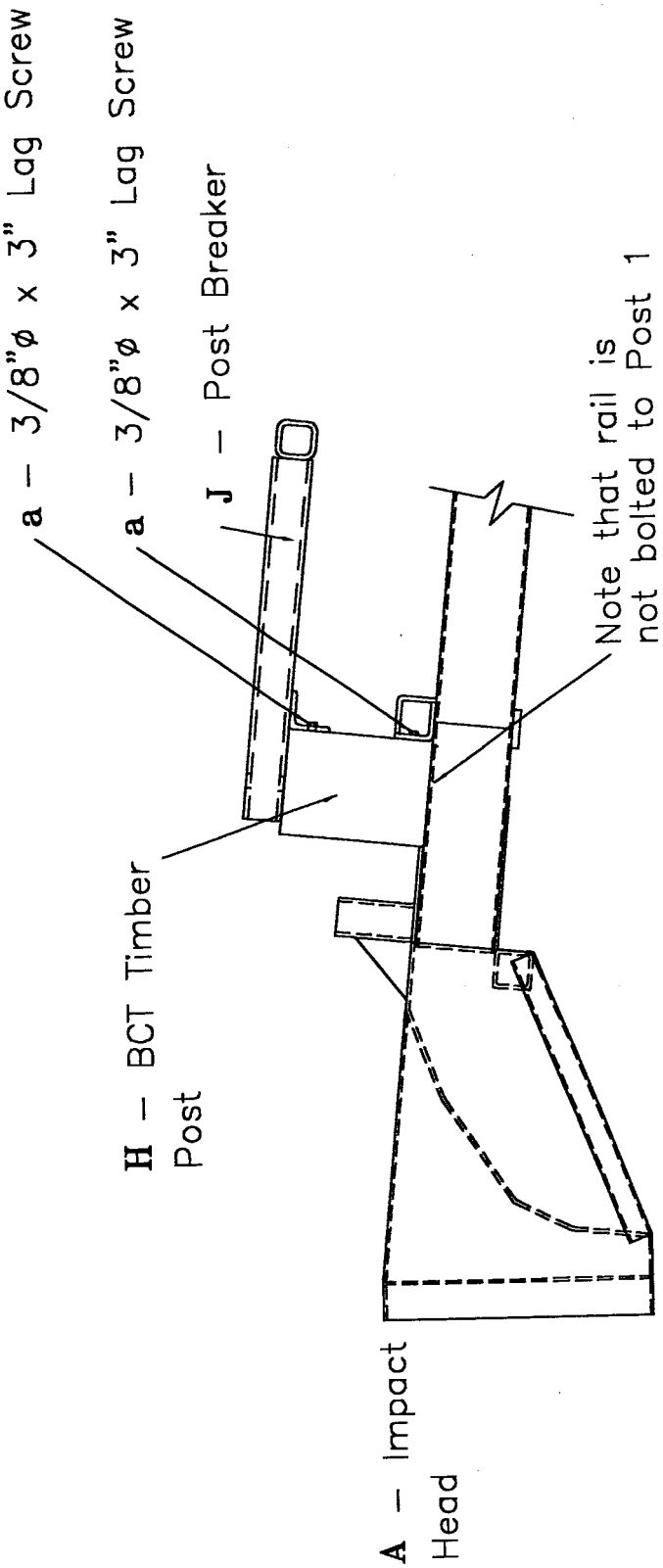

Figure13. Installation of Post Breaker & Impact Head at Post #1.

FLEAT-MT Installation Checklist

State: _____ Date: _____ Location: _____

Project #: _____ Inspection performed by: _____

- ☐ The rail height is in accordance with the plans (generally 27-3/4″ above the edge of the shoulder).
- ☐ The rail at post #1 is placed at a straight single-sided flare offset 2'-0" beginning at post #4.
- ☐ The rail is not attached to the post at post location #3 or post location #1.
- ☐ The rail is not attached to the post at the impact head side only at post location #4.
- ☐ The (3) foundation tubes do not protrude more than 4″ above the ground line (measured by the AASHTO 5' cord method). Site grading may be necessary to meet this requirement.
- ☐ The bolts at the top of the (3) foundation tubes are not over-tightened, deforming the walls of the tubes.
- ☐ The guide chute of the (2) impact heads are parallel to the top of the rail and the exit slot of the impact heads are facing traffic.
- ☐ The two lag screws holding the impact heads to post #1 and to post #4 are snug.
- ☐ The 8″ x 8″ bearing plate at post #1 and #4 are correctly positioned with the 5" dimension up & the 3" dimension down. The anchor cables are taut and correctly installed. A nail has been placed over the bearing plates to prevent rotation.
- ☐ The cable anchor bracket shoulder bolts are properly attached to the (2) W-beam guardrail end sections. The cable anchor brackets are fully seated on the shoulder portion of the bolts.
- ☐ The deflector box is in place and secured behind the anchor bracket near post #2.
- ☐ Posts #1, #2 and #4 are installed in foundation tubes and have the 2-1/2″ breakaway hole located parallel to the roadway with the bottom of the hole at the top of the tube.
- ☐ CRT posts at locations 3, 5, 6 and 7 have two 3-1/2″ breakaway holes (checked prior to installation) located parallel to the roadway with the center of the top hole located at the ground line.
- ☐ If the posts were augered, be sure the backfill material around the posts is compacted.
- ☐ The post breaker is attached at the non-traffic side of post #1 with two lag screws.
- ☐ The 3/8″ tether cable is correctly looped around the impact head at post #1, looped around the anchor cable near post #2, and tied under the impact head at post #1.
- ☐ No washers are used on the face of the rail except at the cable anchor bracket bolts.

Additional notes: _____

_____

Repairing the *FLEAT-MT*

Equipment Needed for Repair Operation

- Acetylene torch to cut off the damaged rail,
- S.A.E. wrench or socket sizes 9/16", 7/8", 15/16", 1-1/4", and 1-1/2",
- Vice grip or channel lock pliers,
- Sledge hammer,
- Post remover tool could be very useful (see **Figures 14 and 15**),
- Other normal guardrail tools.

General Repair Procedures

After an end-on impact occurs with the ***FLEAT-MT***, it will normally require replacement of the front 12′-6″ end section of rail and any other damaged rail section(s), any broken post(s) and potentially the impact head. For a traffic face impact, the damage will be to the downstream rail section(s) and associated posts. For a reverse direction impact, the damage will be to the rail section(s), associated posts and potentially either of the impact heads.

The general step-by-step procedure for repairing a damaged ***FLEAT-MT*** terminal is as follows:

(1) Check the impact heads and the post breaker (which was attached to post #1) for damage.

(2) Check the deflector box, cable anchor brackets, cable assemblies and tether cable for damage. The bearing plates, nuts, washers, cable anchor bracket, and the special cable anchor bracket shoulder bolts are rarely damaged.

(3) Check the number of broken posts and wood blockouts that need to be replaced, along with any damaged bolts. Inventory and pick up the reusable parts.

(4) Torch off the kinked rail near the outlet of the impact head(s). The impact head(s) should be able to be removed by hand at this point. If not, the impact head is probably not reusable.

(5) Disconnect and remove the damaged rail from the posts.

(6) Remove the broken posts from the foundation tubes. If needed, use one of the two post removal tools (see **Figures 14 and 15**) assembled from "off the shelf hardware" items. Pound the steel pipe or screw the lag screw into the top of the broken post stub and remove the remains of the broken post by pulling on the chain. Use a pry bar as a lever if necessary.

(7) Reinstall the system following the procedures listed in this manual.

Procedures Immediately Following an Accident (Temporary)

If no repair parts are readily available immediately following an accident, the following procedure should be used to provide temporary protection of the guardrail end. It should be noted that this repair is only for temporary purposes, and the anchor cable cannot be installed to provide tension in the rail for redirectional impacts.

(1) Remove damaged rail and impact head from the roadway or shoulder area.

(2) Using an acetylene torch, cut the kinked rail off at the outlet of the impact head and inspect the head for any damage.

(3) Remove the impact head by hand.

(4) On the approach traffic side, locate the first post downstream of any damaged rail and cut this rail off about 9″ in front of the post. If the post is at a splice, simply unbolt the damaged rail.

(5) On the approach non-traffic side, locate the third post downstream of the previously located post (18′-9″ downstream). Remove 12′-6″ of the backside rail. Cut off any excess rail to allow approximately 9″ of rail in front of what is now the fourth post. If the post is at a splice, simply unbolt the rail.

(6) Install an impact head on the exposed ends of each rail and attach it to the post with lag bolts.

(7) Warning signs should be used where appropriate.

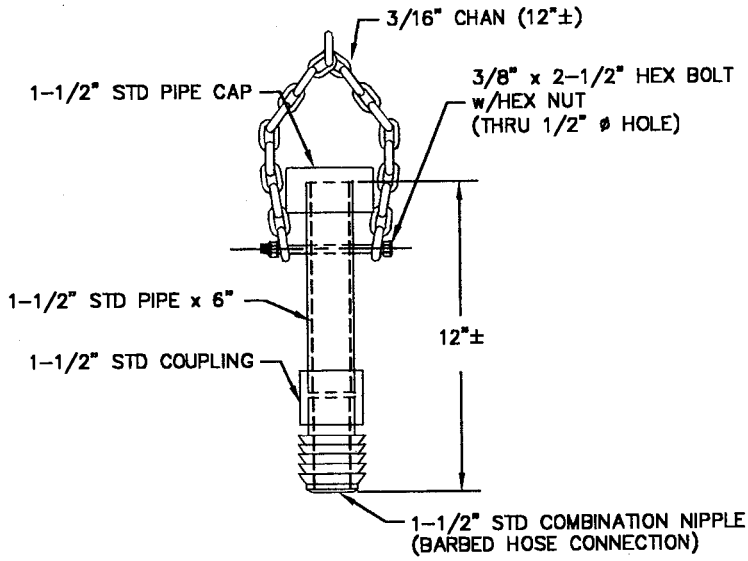

Figure 14. Wood Post Pulling Tool.
(Pipe Option)

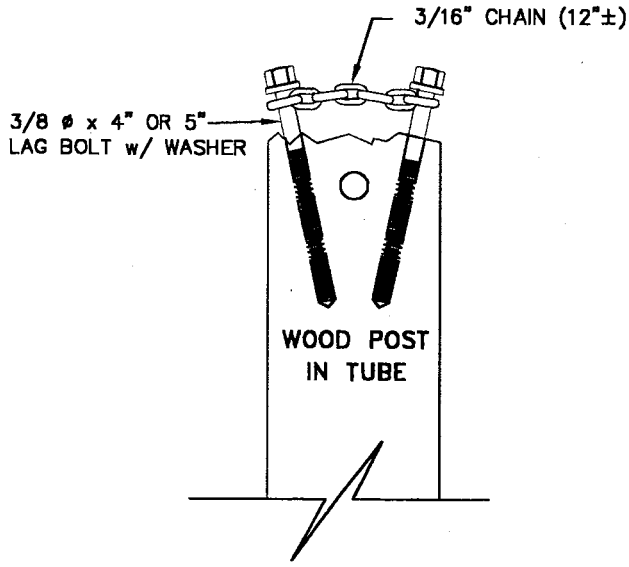

Figure 15. Wood Post Pulling Tool.
(Lag Screw Option)

NOTES

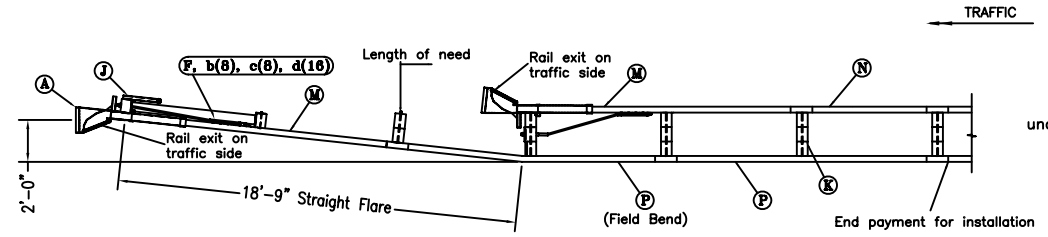

PLAN

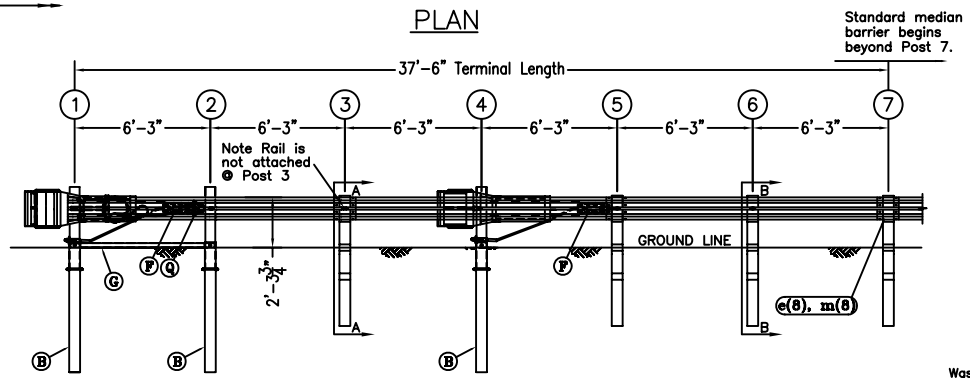

ELEVATION

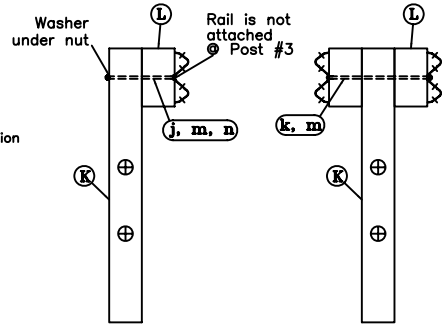

SECTION A–A (Post 3)

SECTION B–B (Posts 5–7)

ITEM	QTY	DESCRIPTION	PART #
A	2	FLEAT IMPACT HEAD	F3000
B	3	SOIL TUBE, 6" x 8" x 6'-0"	S730
C	2	BEARING PLATE	E750
D	1	3/8" GALV Cable 20'-0"	C3820
E	2	BCT CABLE ANCHOR ASSEMBLY	E770
F	2	CABLE ANCHOR BOX	S760
G	1	GROUND STRUT	E780
H	3	5.5" x 7.5" x 45" WOOD BCT POST	P650
J	1	POST BREAKER	PBMT
K	4	6" x 8 x 6'-0" WOOD CRT POST	P671
L	9	TIMBER BLOCKOUT OR RECYCLED EQUIV	P675
M	2	W-BEAM END SECTION, 12 GA. 12.5'	SF1303
N	1	W-BEAM SHORT SECTION, 12 GA. 6'-3"	G1201
P	2	W-BEAM GUARDRAIL, 12 GA. 12'-6"	G1203
Q	1	DEFLECTOR BOX	DBMT
R	2	PIPE SLEEVE	E740
		HARDWARE	
a	6	3/8" DIA. x 3" LAG SCREW	E350
b	16	CABLE ANCHOR BOX SHOULDER BOLT	SB58A
c	16	1/2" A325 STRUCTURAL NUT	N055A
d	32	1 1/16" OD x 9/16" ID A325 WASHER	W050A
e	40	5/8" DIA. X 1 1/4" SPLICE BOLT	B580122
f	3	5/8" DIA. x 7 1/2" HEX BOLT	B580754
g	3	5/8" DIA. x 10" HEX BOLT	B581004
h	1	5/8" DIA. x 10" H.G.R. BOLT (POST 2)	B581002
j	1	5/8" DIA. x 18" H.G.R. BOLT (POST 3)	B581802
k	4	5/8" DIA. x 25" H.G.R. BOLT (POSTS 4–7)	B582502
m	52	5/8" H.G.R. NUT	N050
n	6	5/8" H.G.R. WASHER	W050
p	4	1" ANCHOR CABLE HEX NUT	N100
q	4	1" ANCHOR CABLE WASHER	W100
r	1	Cable Tie	CT100ST

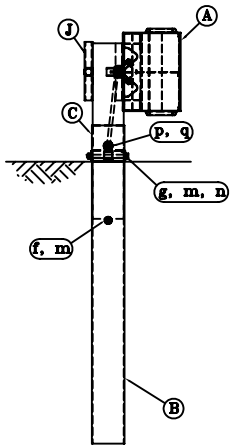

END VIEW OF POST 1

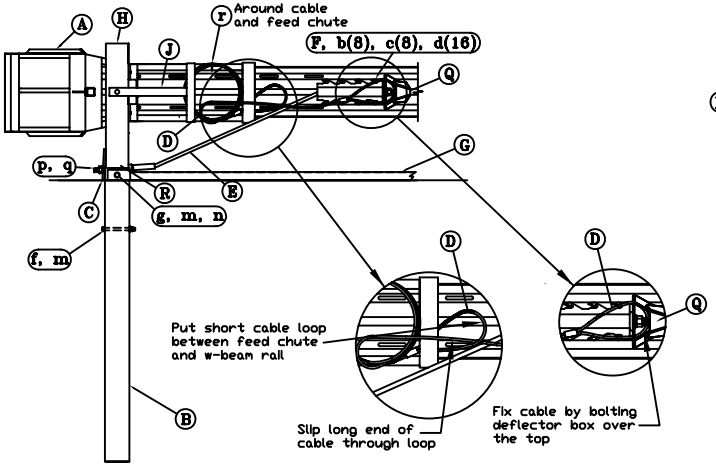

BACK VIEW OF POST 1

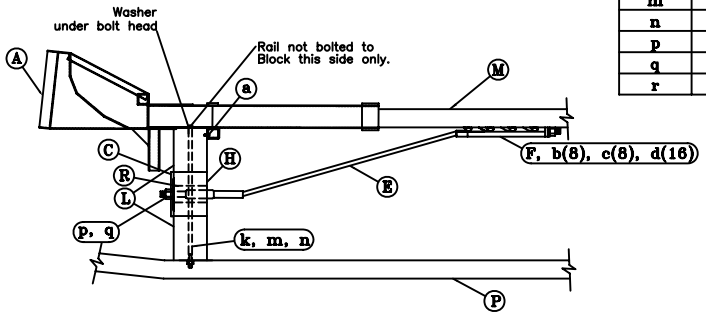

SECOND IMPACT HEAD CONNECTING DETAIL (Post 4)

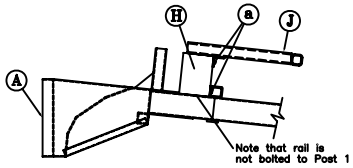

IMPACT HEAD CONNECTING DETAIL (Post 1)

GENERAL NOTES:

1. Breakaway posts are required with the FLEAT-MT.
2. All bolts, nuts, cable assemblies, cable anchors and plates shall be galvanized.
3. The soil tubes shall not protrude more than 4" above the ground (measured along a 5' cord). Site grading may be necessary to meet this requirement.
4. The soil tubes may be driven with an approved driving head. Soil tubes should not be driven with the post in the tube. If the tubes are placed in drilled holes, the backfill material must be satisfactorily compacted to prevent settlement.
5. When rock is encountered during excavation, a 12' Dia. post hole, 20" deep may be used if approved by the engineer. Granular material will be placed in the bottom of the hole approx. 2 1/2" deep to provide drainage. The soil tubes will be field cut to length, placed in the hole and backfilled with adequately compacted material excavated from the hole.
6. The breakaway cable assembly must be taut. A locking device (vice grips or channel lock pliers) should be used to prevent the cable from twisting when tightening nuts.

RSI
Road Systems, Inc.
Big Spring, TX
Phone: 432-263-2435
or Phone: 330-346-0721

Median FLEAT Terminal
Wood Posts

Sheet: S1

Date: 07/28/11

Drawing Name: MEDFLT-W

Scale: NONE

By: JRR

Rev: 0

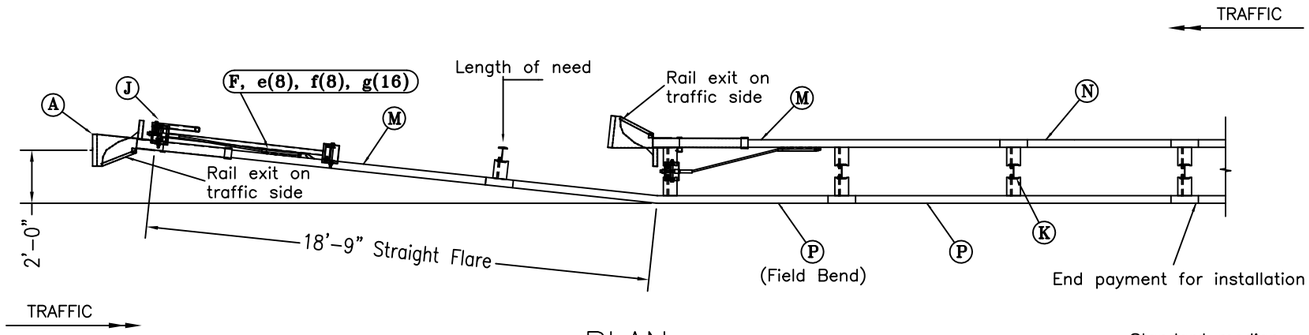

PLAN

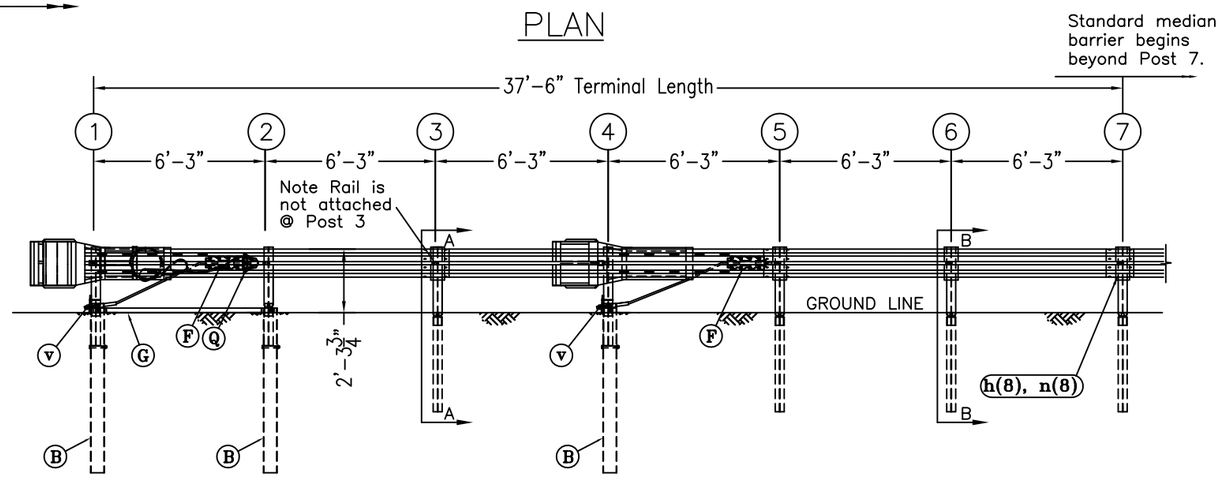

ELEVATION

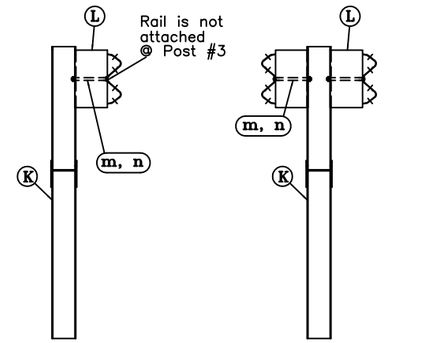

SECTION A–A
(Post 3)

SECTION B–B
(Typical @ Post 5, 6 & 7)

d**
The lag screw is to used with wood blocks, if composite blocks are utilized in the system an alternative connection will be required. This alternative connection will be composite block specific, please contact RSI for details.

ITEM	QTY	DESCRIPTION	PART#
A	2	FLEAT IMPACT HEAD	F3000
B	3	SOIL TUBE, 6" x 8" x 6'–0"	S730
C	2	BEARING PLATE	E750
D	1	3/8" GALV Cable 20'–0"	C3820
E	2	BCT CABLE ANCHOR ASSEMBLY	E770
F	2	CABLE ANCHOR BOX	S760
G	1	GROUND STRUT	E780
H	3	BREAKAWAY END POSTS 1, 2, & 4	PB620
J	1	POST BREAKER	PBMT
K	4	BREAKAWAY LINE POSTS 3, 5, 6 & 7	PB621
L	9	TIMBER BLOCKOUT OR RECYCLED EQUIV	P675
M	2	W–BEAM END SECTION, 12 GA. 12.5'	SF1303
N	1	W–BEAM SHORT SECTION, 12 GA. 6'–3"	G1201
P	2	W–BEAM GUARDRAIL, 12 GA. 12'–6"	G1203
Q	1	DEFLECTOR BOX	DBMT
		HARDWARE	
a	2	5/16" DIA. x 3" HEX BOLT	B5160304A
b	2	5/16" HEX NUT	N0516
c	4	5/16" WASHER	W0516
d**	2	3/8" DIA. x 3" LAG SCREW	E350
e	16	1/2" DIA. SHOULDER BOLT	SB58A
f	16	1/2" A325 NUT	N055A
g	32	1/2" WASHER	W050A
h	41	5/8" DIA. X 1 1/4" SPLICE BOLT	B580122
j	1	5/8" DIA. x 3" HEX BOLT	B580304
k	3	5/8" DIA. x 7 1/2" HEX BOLT	B580754
m	9	5/8" DIA. x 10" H.G.R. BOLT	B581002
n	54	5/8" H.G.R. NUT	N050
p	1	5/8" H.G.R. WASHER	W050
q	3	3/4" DIA. x 10" HEX BOLT	B341004
r	3	3/4" HEX NUT	N030
s	6	3/4" WASHER	W030
t	4	1" ANCHOR CABLE HEX NUT	N100
u	4	1" ANCHOR CABLE WASHER	W100
v	3	CABLE TIE	CT100 ST

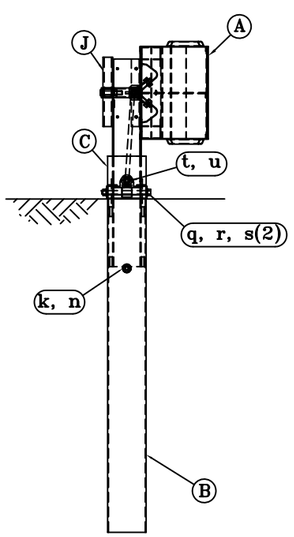

END VIEW OF POST 1

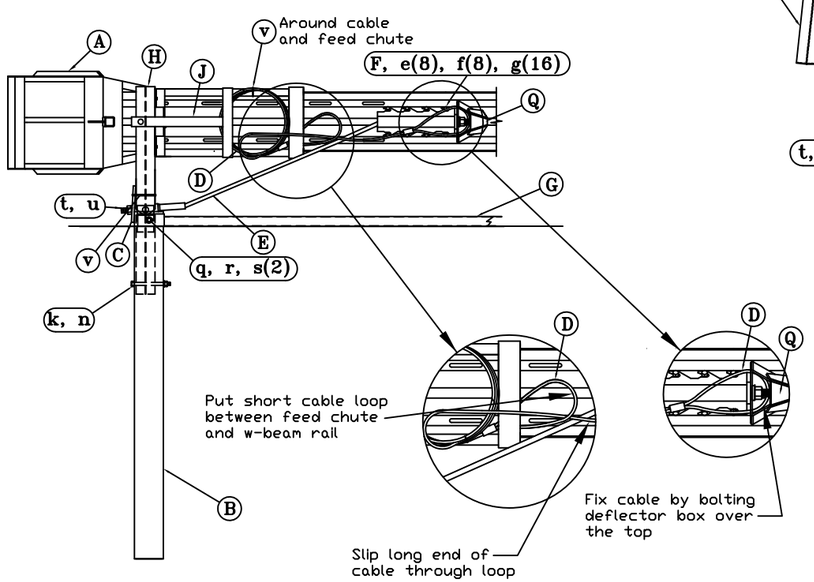

BACK VIEW OF POST 1

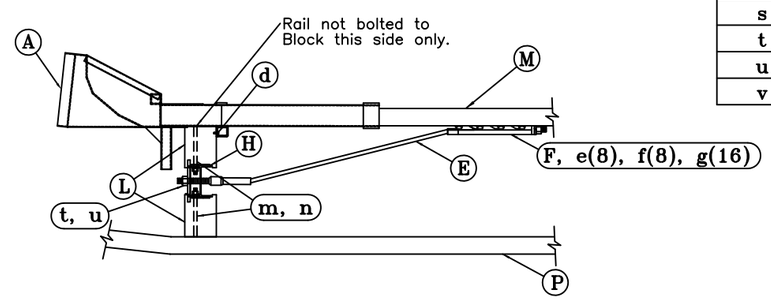

SECOND IMPACT HEAD CONNECTING DETAIL
(Post 4)

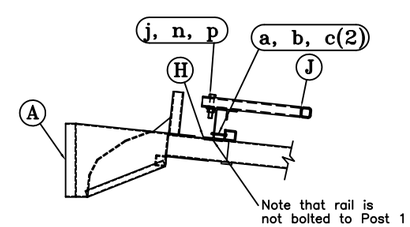

IMPACT HEAD CONNECTING DETAIL
(Post 1)

GENERAL NOTES:
1. Breakaway posts are required with the FLEAT–MT.
2. All bolts, nuts, cable assemblies, cable anchors and plates shall be galvanized.
3. The soil tubes shall not protrude more than 4" above the ground (measured along a 5' cord). Site grading may be necessary to meet this requirement.
4. The soil tubes may be driven with an approved driving head. Soil tubes should not be driven with the post in the tube. If the tubes are placed in drilled holes, the backfill material must be satisfactorily compacted to prevent settlement.
5. When rock is encountered during excavation, a 12' Dia. post hole, 20" deep may be used if approved by the engineer. Granular material will be placed in the bottom of the hole approx. 2 1/2" deep to provide drainage. The soil tubes will be field cut to length, placed in the hole and backfilled with adequately compacted material excavated from the hole.
6. The breakaway cable assembly must be taut. A locking device (vice grips or channel lock pliers) should be used to prevent the cable from twisting when tightening nuts.

RSI
Road Systems, Inc.
Big Spring, TX
Phone: 432–263–2435
or Phone: 330–346–0721

Median FLEAT Terminal
Steel Posts

Sheet: S1

Date: 09/21/12

Drawing Name: MEDFLT-S

Scale: NONE

By: JRR

Rev: 0