Dist	COUNTY	ROUTE	POST MILES TOTAL PROJECT	SHEET No.	TOTAL SHEETS
07	LA	5	2.4/4.0	101	1288

Timothy B Sobelman 12-19-11
REGISTERED CIVIL ENGINEER DATE

3-26-12
PLANS APPROVAL DATE

REGISTERED PROFESSIONAL ENGINEER TIMOTHY B. SOBELMAN No. 59249 Exp. 6-30-13 CIVIL STATE OF CALIFORNIA

THE STATE OF CALIFORNIA OR ITS OFFICERS OR AGENTS SHALL NOT BE RESPONSIBLE FOR THE ACCURACY OR COMPLETENESS OF SCANNED COPIES OF THIS PLAN SHEET.

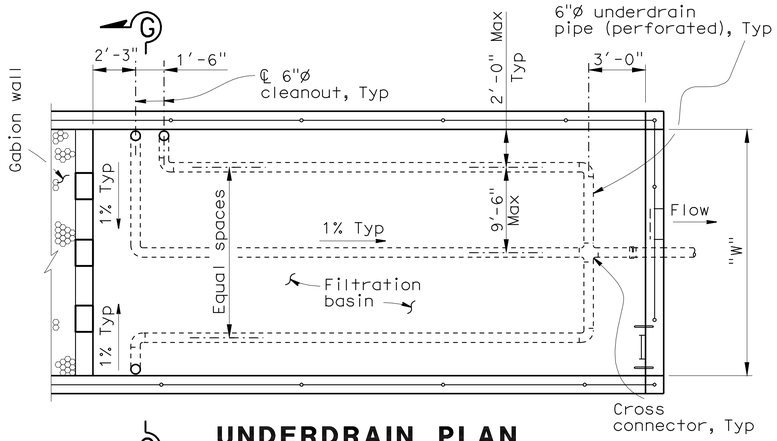

UNDERDRAIN PLAN (FILTRATION BASIN)

"W" = 15' - 21'

AVSF Type = (S or L 3500)

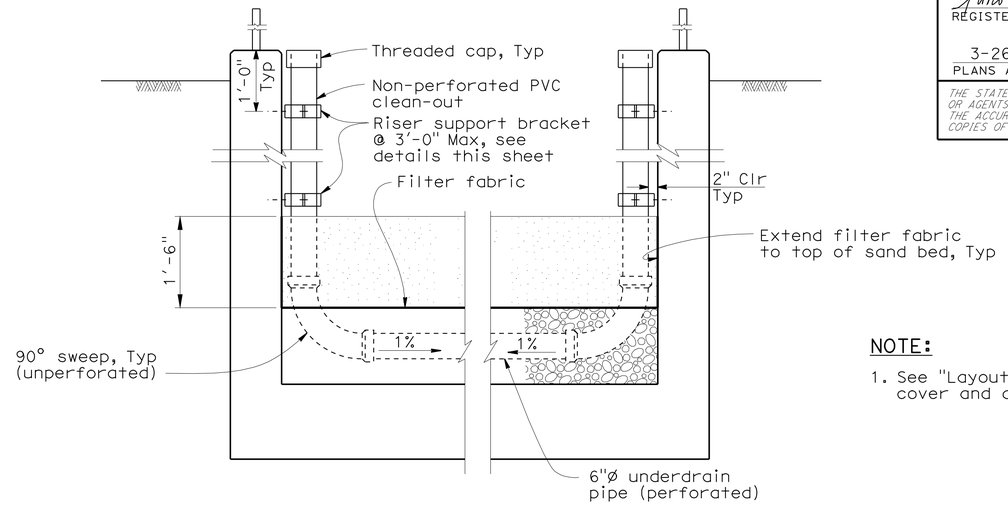

SECTION G - G

NOTE:

1. See "Layout No. 1" sheet for Typical cover and depth of sand bed.

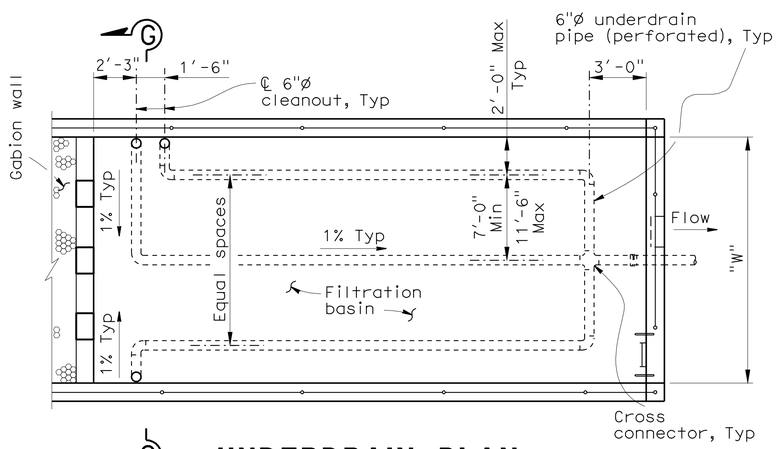

UNDERDRAIN PLAN (FILTRATION BASIN)

"W" = 18' - 24' - 27'

AVSF Type = (S or L 5000) L 10000)

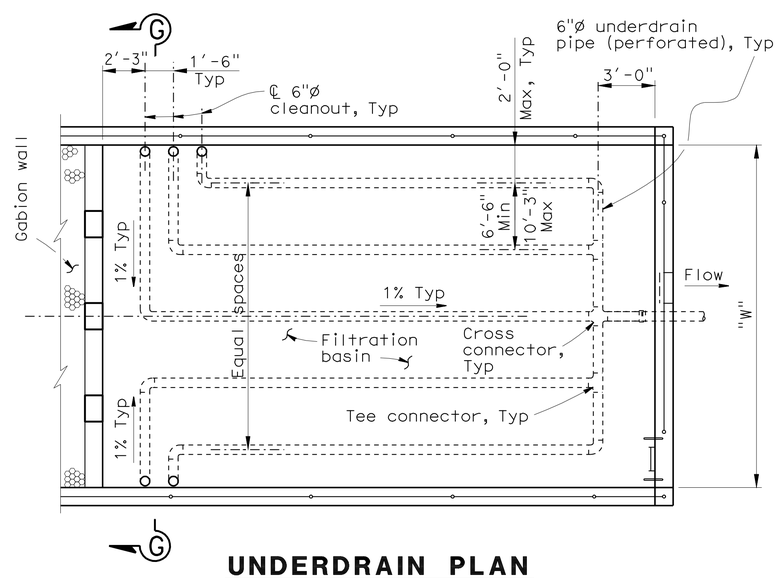

UNDERDRAIN PLAN (FILTRATION BASIN)

"W" = 30' - 36' - 45'

AVSF Type = (S 10000, S or L 15000)

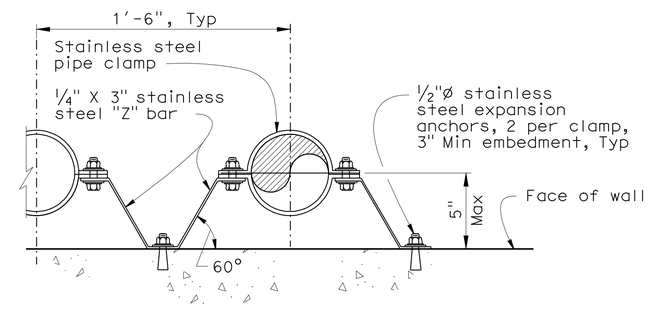

RISER SUPPORT BRACKET DETAIL

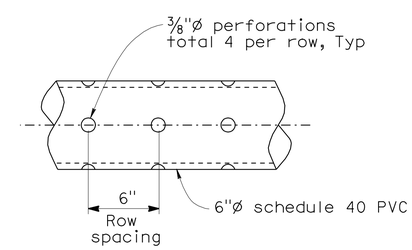

PERFORATED UNDERDRAIN PIPE

AUSTIN VAULT SAND FILTER DETAILS No. 4

NO SCALE

C-51

CALCULATED-DESIGNED BY	D. WANG	REVISED BY	M. MAI
CHECKED BY	L. HE	DATE REVISED	11-20-11
FUNCTIONAL SUPERVISOR	TIMOTHY B. SOBELMAN		

STATE OF CALIFORNIA - DEPARTMENT OF TRANSPORTATION
Caltrans OFFICE OF DESIGN A

LAST REVISION 00-00-00 | DATE PLOTTED => 28-MAR-2012 | TIME PLOTTED => 08:44

Dist	COUNTY	ROUTE	POST MILES TOTAL PROJECT	SHEET No.	TOTAL SHEETS
07	LA	5	2.4/4.0	102	1288

Timothy B Sobelman 12-19-11
REGISTERED CIVIL ENGINEER DATE

3-26-12
PLANS APPROVAL DATE

REGISTERED PROFESSIONAL ENGINEER TIMOTHY B. SOBELMAN No. 59249 Exp. 6-30-13 CIVIL STATE OF CALIFORNIA

THE STATE OF CALIFORNIA OR ITS OFFICERS OR AGENTS SHALL NOT BE RESPONSIBLE FOR THE ACCURACY OR COMPLETENESS OF SCANNED COPIES OF THIS PLAN SHEET.

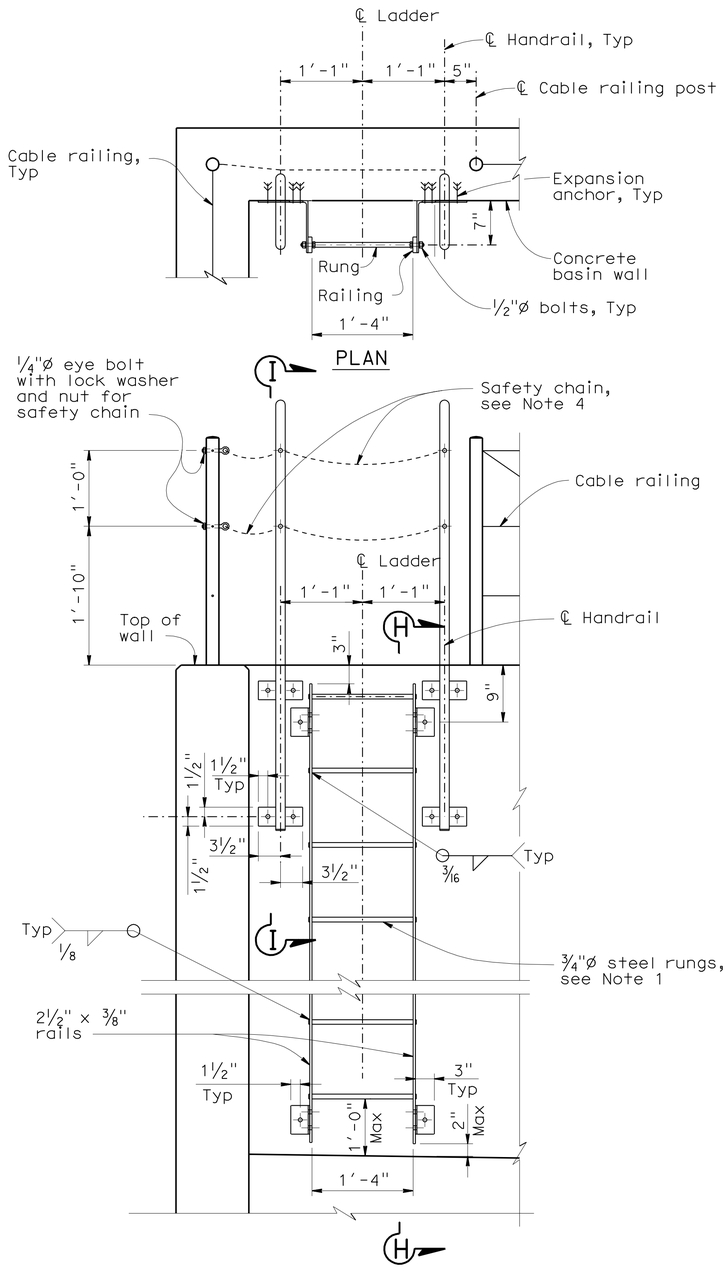

ELEVATION

LADDER

NOTE: Cable railing not shown for clarity.

NOTES:

1. The distance between rungs shall not exceed 1′-0" and shall be uniform throughout the length of wall.
2. Hardware shall be galvanized after fabrication.
3. Grind exposed corners to 3/16" radius.
4. Safety chain shall be ¼" galvanized steel coil chain, approximately 12 links per foot. Length shall be minimum which allows lock-up of safety railing. Minimum of two safety chains per safety railing. Material shall be grade 43 high test chain ASTM A413.

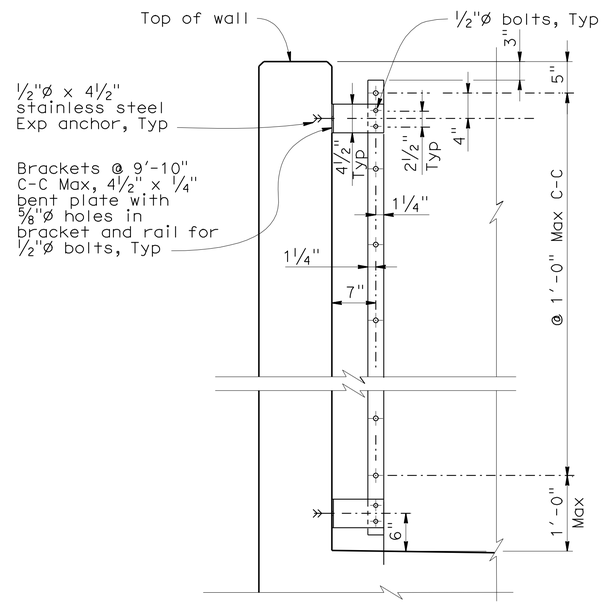

SECTION H - H

NOTE: Handrail and cable railing not shown for clarity.

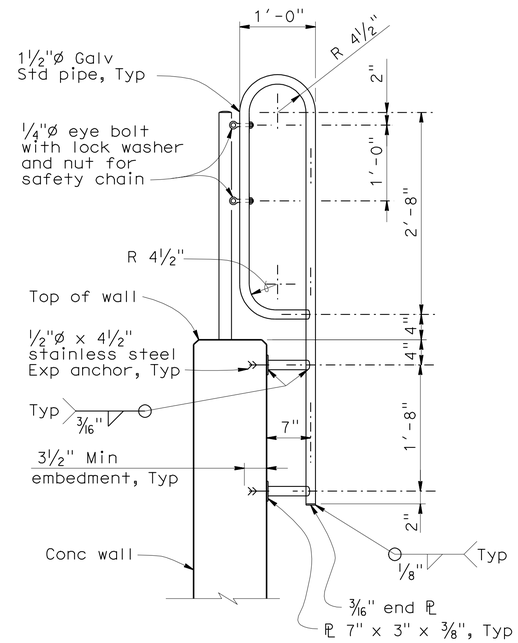

SECTION I - I

AUSTIN VAULT SAND FILTER MISCELLANEOUS DETAILS No. 1

NO SCALE

C-52

STATE OF CALIFORNIA - DEPARTMENT OF TRANSPORTATION
Caltrans® OFFICE OF DESIGN A

FUNCTIONAL SUPERVISOR: TIMOTHY B. SOBELMAN
CALCULATED-DESIGNED BY: D. WANG
CHECKED BY: L. HE
REVISED BY: M. MAI
DATE REVISED: 11-20-11

LAST REVISION 00-00-00 | DATE PLOTTED => 28-MAR-2012 | TIME PLOTTED => 08:45

Dist	COUNTY	ROUTE	POST MILES TOTAL PROJECT	SHEET No.	TOTAL SHEETS
07	LA	5	2.4/4.0	103	1288

REGISTERED CIVIL ENGINEER 12-19-11 DATE

3-26-12
PLANS APPROVAL DATE

REGISTERED PROFESSIONAL ENGINEER NGIM NANCY PE No. 58161 Exp. 6-30-2012 CIVIL STATE OF CALIFORNIA

THE STATE OF CALIFORNIA OR ITS OFFICERS OR AGENTS SHALL NOT BE RESPONSIBLE FOR THE ACCURACY OR COMPLETENESS OF SCANNED COPIES OF THIS PLAN SHEET.

NOTE:

1. FOR ACCURATE RIGHT OF WAY DATA, CONTACT RIGHT OF WAY ENGINEERING AT THE DISTRICT OFFICE.

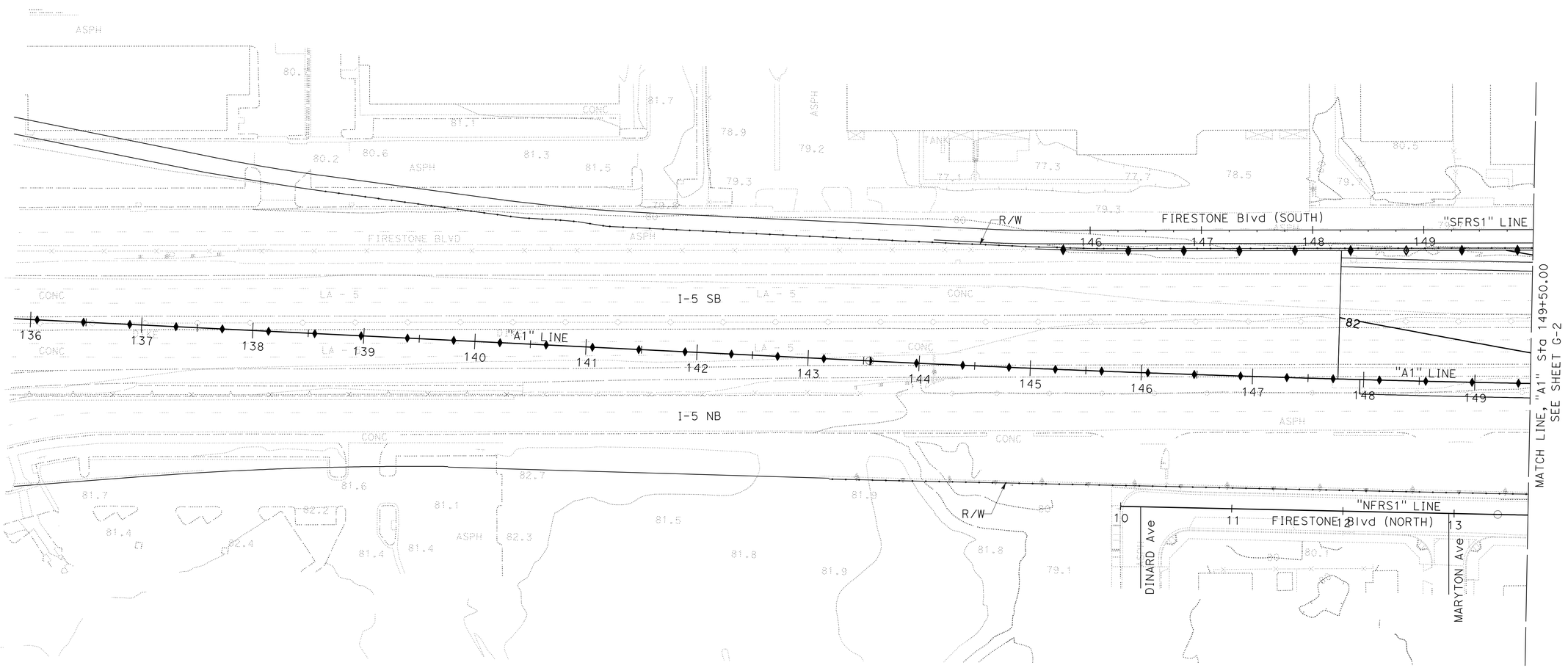

CONTOUR GRADING

SCALE: 1" = 50'

G-1

APPROVED FOR CONTOUR GRADING WORK ONLY

REVISED BY | DATE REVISED

JANE YU | NGIM NANCY PE

CALCULATED-DESIGNED BY | CHECKED BY

FUNCTIONAL SUPERVISOR | NGIM NANCY PE

STATE OF CALIFORNIA - DEPARTMENT OF TRANSPORTATION

Caltrans OFFICE OF DESIGN A

S:\projects\215931\Resubmit1\721593ha001.dgn

LAST REVISION 00-00-00 | DATE PLOTTED => 28-MAR-2012 | TIME PLOTTED => 08:45

BORDER LAST REVISED 7/2/2010 | USERNAME => s121614 | DGN FILE => 721593ha001.dgn | RELATIVE BORDER SCALE IS IN INCHES 0 1 2 3 | UNIT 1797 | PROJECT NUMBER & PHASE 07000018331

Dist	COUNTY	ROUTE	POST MILES TOTAL PROJECT	SHEET No.	TOTAL SHEETS
07	LA	5	2.4/4.0	104	1288

REGISTERED CIVIL ENGINEER 12-19-11 DATE

3-26-12
PLANS APPROVAL DATE

REGISTERED PROFESSIONAL ENGINEER NGIM NANCY PE No. 58161 Exp. 6-30-2012 CIVIL STATE OF CALIFORNIA

THE STATE OF CALIFORNIA OR ITS OFFICERS OR AGENTS SHALL NOT BE RESPONSIBLE FOR THE ACCURACY OR COMPLETENESS OF SCANNED COPIES OF THIS PLAN SHEET.

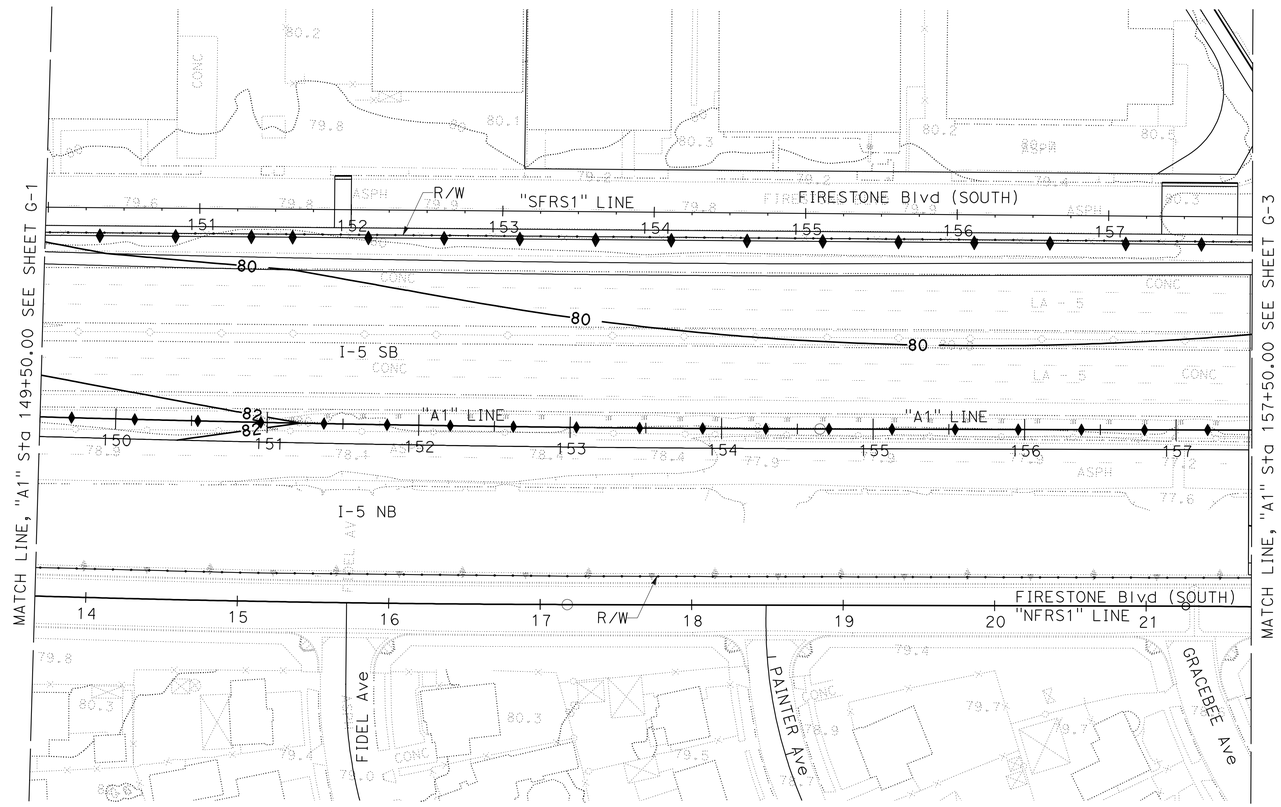

APPROVED FOR CONTOUR GRADING WORK ONLY

CONTOUR GRADING

SCALE: 1" = 50'

G-2

REVISED BY | DATE REVISED

JANE YU | NGIM NANCY PE

CALCULATED-DESIGNED BY | CHECKED BY

FUNCTIONAL SUPERVISOR: NGIM NANCY PE

STATE OF CALIFORNIA - DEPARTMENT OF TRANSPORTATION

Caltrans® OFFICE OF DESIGN A

S:\projects\215931\Resubmit1\721593ha002.dgn

LAST REVISION 00-00-00 | DATE PLOTTED => 28-MAR-2012 | TIME PLOTTED => 08:45

Dist	COUNTY	ROUTE	POST MILES TOTAL PROJECT	SHEET No.	TOTAL SHEETS
07	LA	5	2.4/4.0	105	1288

REGISTERED CIVIL ENGINEER 12-19-11 DATE

3-26-12
PLANS APPROVAL DATE

REGISTERED PROFESSIONAL ENGINEER NGIM NANCY PE No. 58161 Exp. 6-30-2012 CIVIL STATE OF CALIFORNIA

THE STATE OF CALIFORNIA OR ITS OFFICERS OR AGENTS SHALL NOT BE RESPONSIBLE FOR THE ACCURACY OR COMPLETENESS OF SCANNED COPIES OF THIS PLAN SHEET.

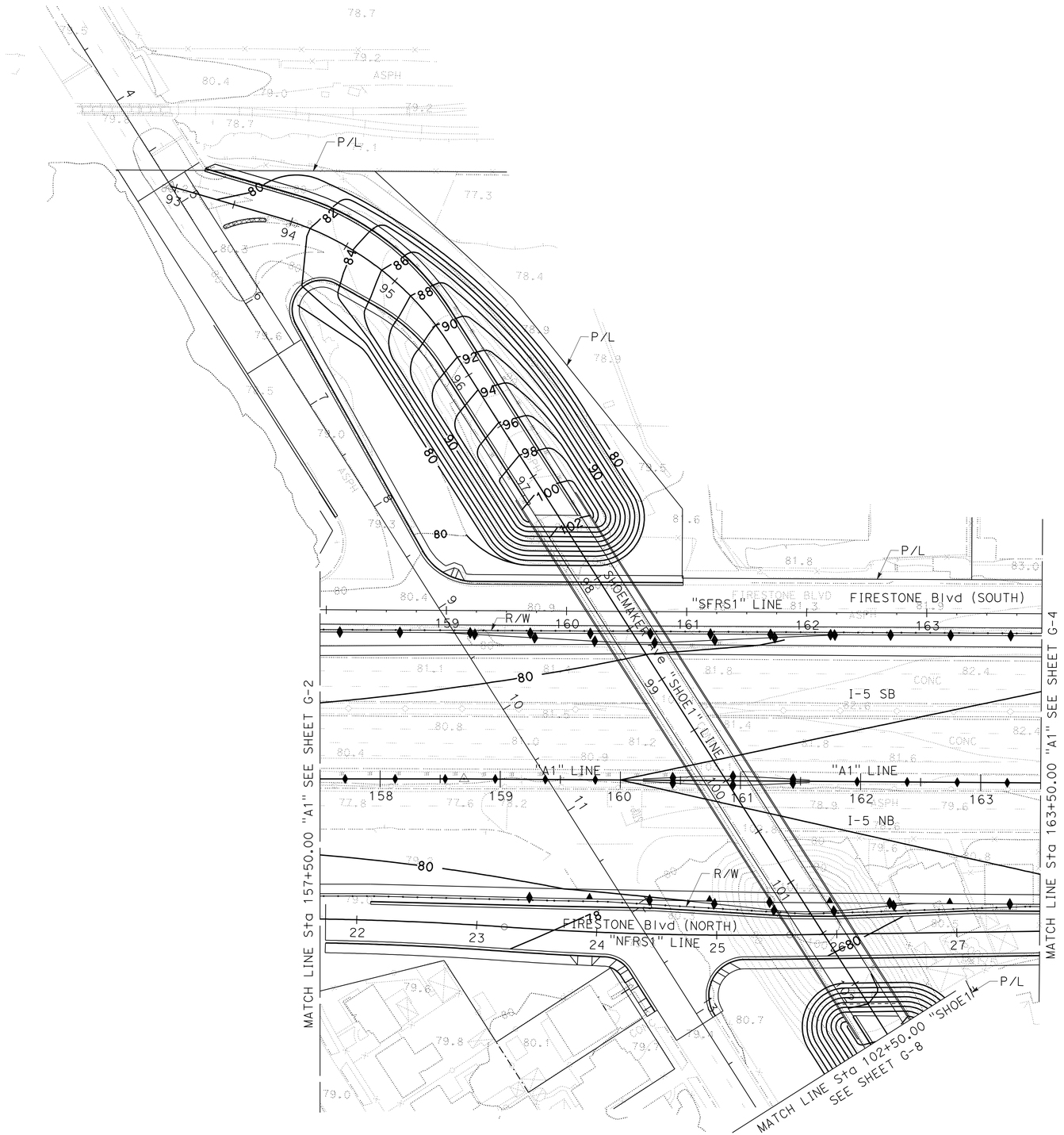

APPROVED FOR CONTOUR GRADING WORK ONLY

CONTOUR GRADING

SCALE: 1" = 50'

G-3

REVISED BY	DATE REVISED
JANE YU	NGIM NANCY PE
CALCULATED-DESIGNED BY	CHECKED BY
FUNCTIONAL SUPERVISOR	NGIM NANCY PE

STATE OF CALIFORNIA - DEPARTMENT OF TRANSPORTATION
Caltrans® OFFICE OF DESIGN A

S:\projects\215931\Resubmit1\721593ha003.dgn

LAST REVISION 00-00-00 | DATE PLOTTED => 28-MAR-2012 | TIME PLOTTED => 08:45

Dist	COUNTY	ROUTE	POST MILES TOTAL PROJECT	SHEET No.	TOTAL SHEETS
07	LA	5	2.4/4.0	106	1288

REGISTERED CIVIL ENGINEER 12-19-11 DATE

3-26-12
PLANS APPROVAL DATE

REGISTERED PROFESSIONAL ENGINEER NGIM NANCY PE No. 58161 Exp. 6-30-2012 CIVIL STATE OF CALIFORNIA

THE STATE OF CALIFORNIA OR ITS OFFICERS OR AGENTS SHALL NOT BE RESPONSIBLE FOR THE ACCURACY OR COMPLETENESS OF SCANNED COPIES OF THIS PLAN SHEET.

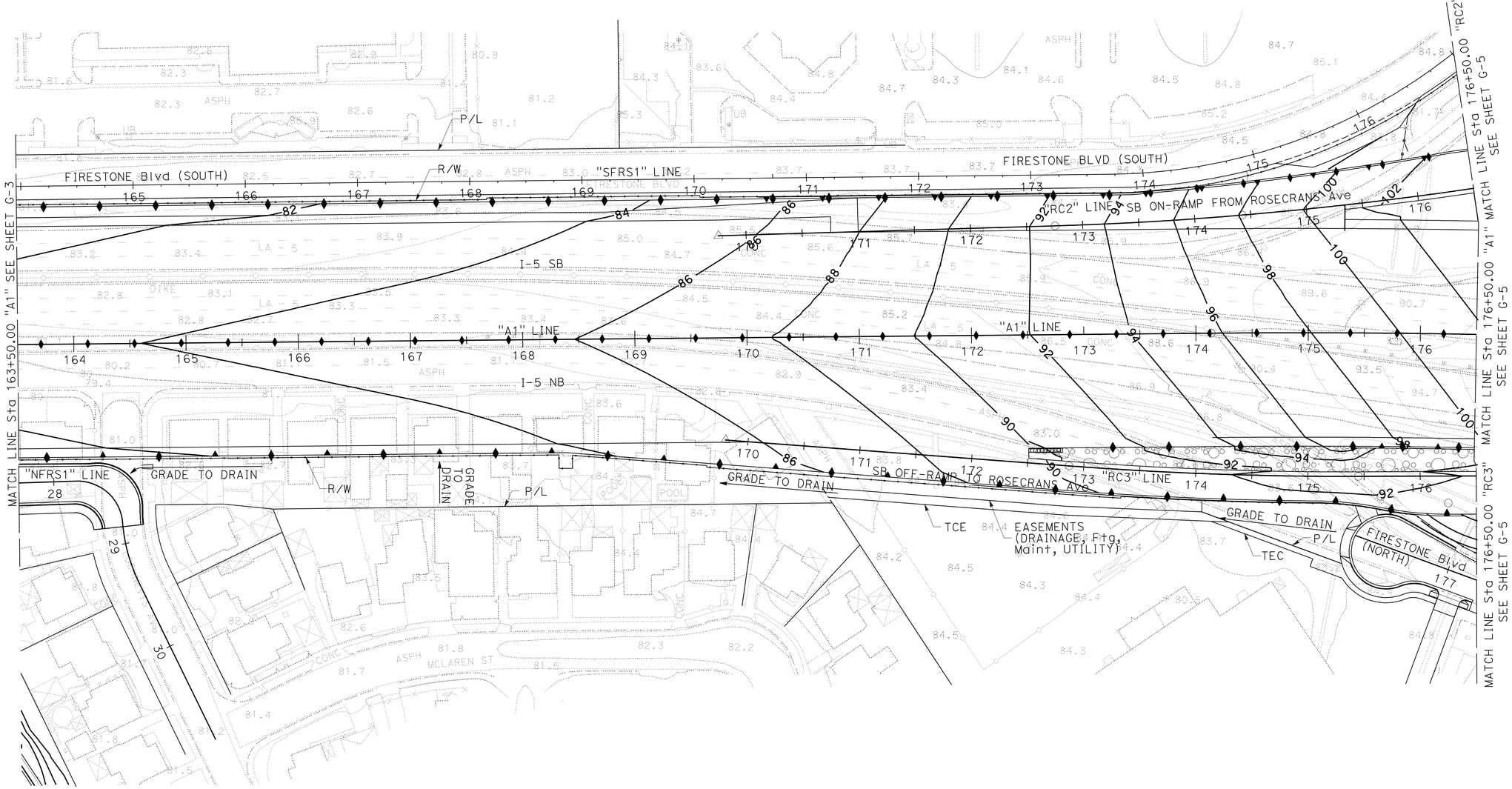

CONTOUR GRADING

SCALE: 1" = 50'

G-4

APPROVED FOR CONTOUR GRADING WORK ONLY

REVISED BY	DATE REVISED

CALCULATED-DESIGNED BY	CHECKED BY
JANE YU	NGIM NANCY PE

FUNCTIONAL SUPERVISOR: NGIM NANCY PE

STATE OF CALIFORNIA - DEPARTMENT OF TRANSPORTATION

Caltrans® OFFICE OF DESIGN A

S:\projects\215931\Resubmit1\721593ha004.dgn

LAST REVISION 00-00-00 | DATE PLOTTED => 28-MAR-2012 | TIME PLOTTED => 08:45

Dist	COUNTY	ROUTE	POST MILES TOTAL PROJECT	SHEET No.	TOTAL SHEETS
07	LA	5	2.4/4.0	107	1288

REGISTERED CIVIL ENGINEER 12-19-11 DATE

3-26-12
PLANS APPROVAL DATE

REGISTERED PROFESSIONAL ENGINEER
NGIM NANCY PE
No. 58161
Exp. 6-30-2012
CIVIL
STATE OF CALIFORNIA

THE STATE OF CALIFORNIA OR ITS OFFICERS OR AGENTS SHALL NOT BE RESPONSIBLE FOR THE ACCURACY OR COMPLETENESS OF SCANNED COPIES OF THIS PLAN SHEET.

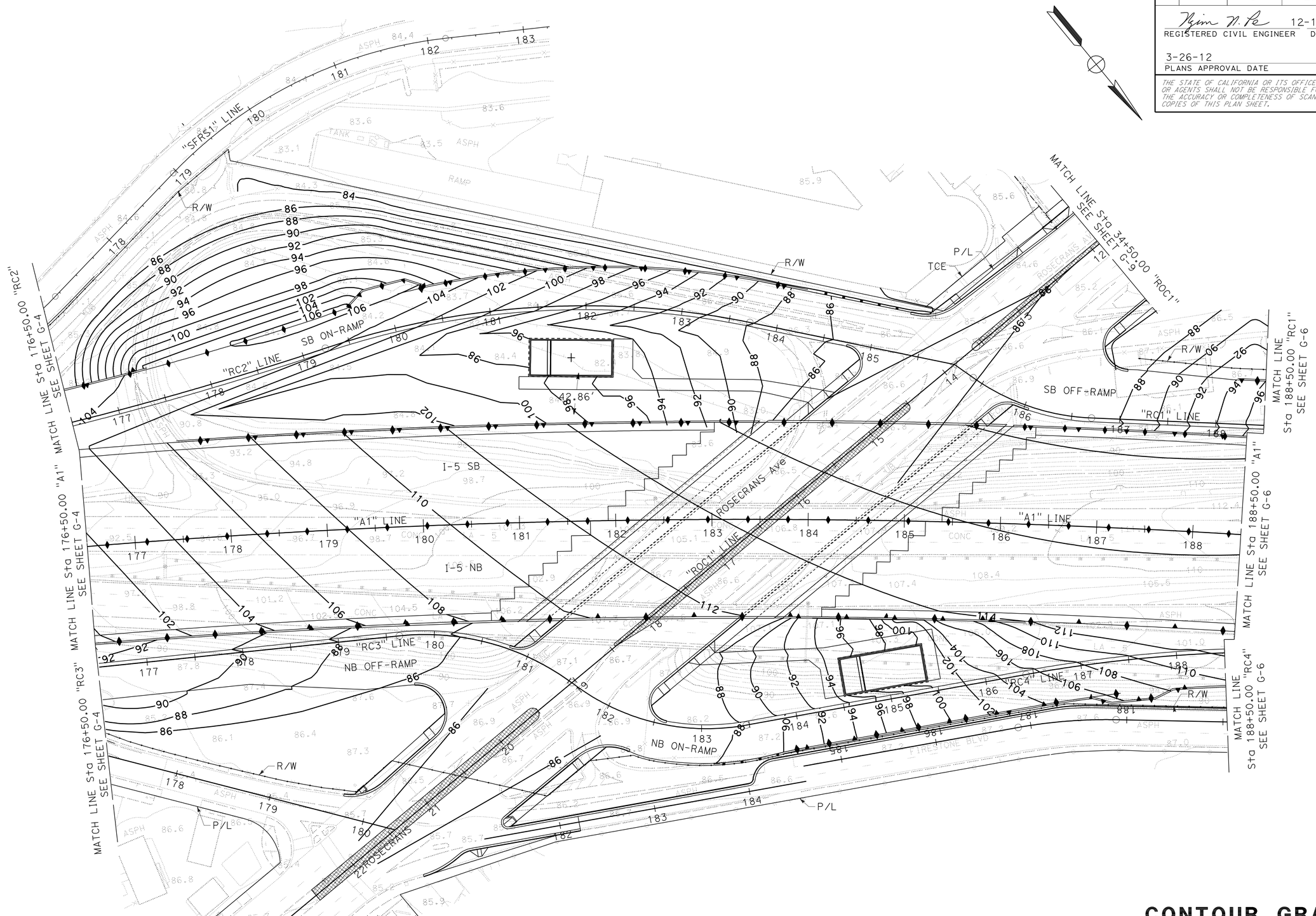

APPROVED FOR CONTOUR GRADING WORK ONLY

CONTOUR GRADING

SCALE: 1" = 50'

G-5

REVISED BY	DATE REVISED
S. TRIEU	10/10/11

CALCULATED-DESIGNED BY: JANE YU
CHECKED BY: NGIM NANCY PE
FUNCTIONAL SUPERVISOR: NGIM NANCY PE

STATE OF CALIFORNIA - DEPARTMENT OF TRANSPORTATION
Caltrans® OFFICE OF DESIGN A

S:\projects\215931\Resubmit\721593ha005.dgn

LAST REVISION 00-00-00 | DATE PLOTTED => 28-MAR-2012 | TIME PLOTTED => 08:45

BORDER LAST REVISED 7/2/2010 | USERNAME => s121614 | DGN FILE => 721593ha005.dgn | RELATIVE BORDER SCALE IS IN INCHES 0 1 2 3 | UNIT 1797 | PROJECT NUMBER & PHASE 07000018331

Dist	COUNTY	ROUTE	POST MILES TOTAL PROJECT	SHEET No.	TOTAL SHEETS
07	LA	5	2.4/4.0	108	1288

REGISTERED CIVIL ENGINEER 12-19-11 DATE

3-26-12
PLANS APPROVAL DATE

REGISTERED PROFESSIONAL ENGINEER NGIM NANCY PE No. 58161 Exp. 6-30-2012 CIVIL STATE OF CALIFORNIA

THE STATE OF CALIFORNIA OR ITS OFFICERS OR AGENTS SHALL NOT BE RESPONSIBLE FOR THE ACCURACY OR COMPLETENESS OF SCANNED COPIES OF THIS PLAN SHEET.

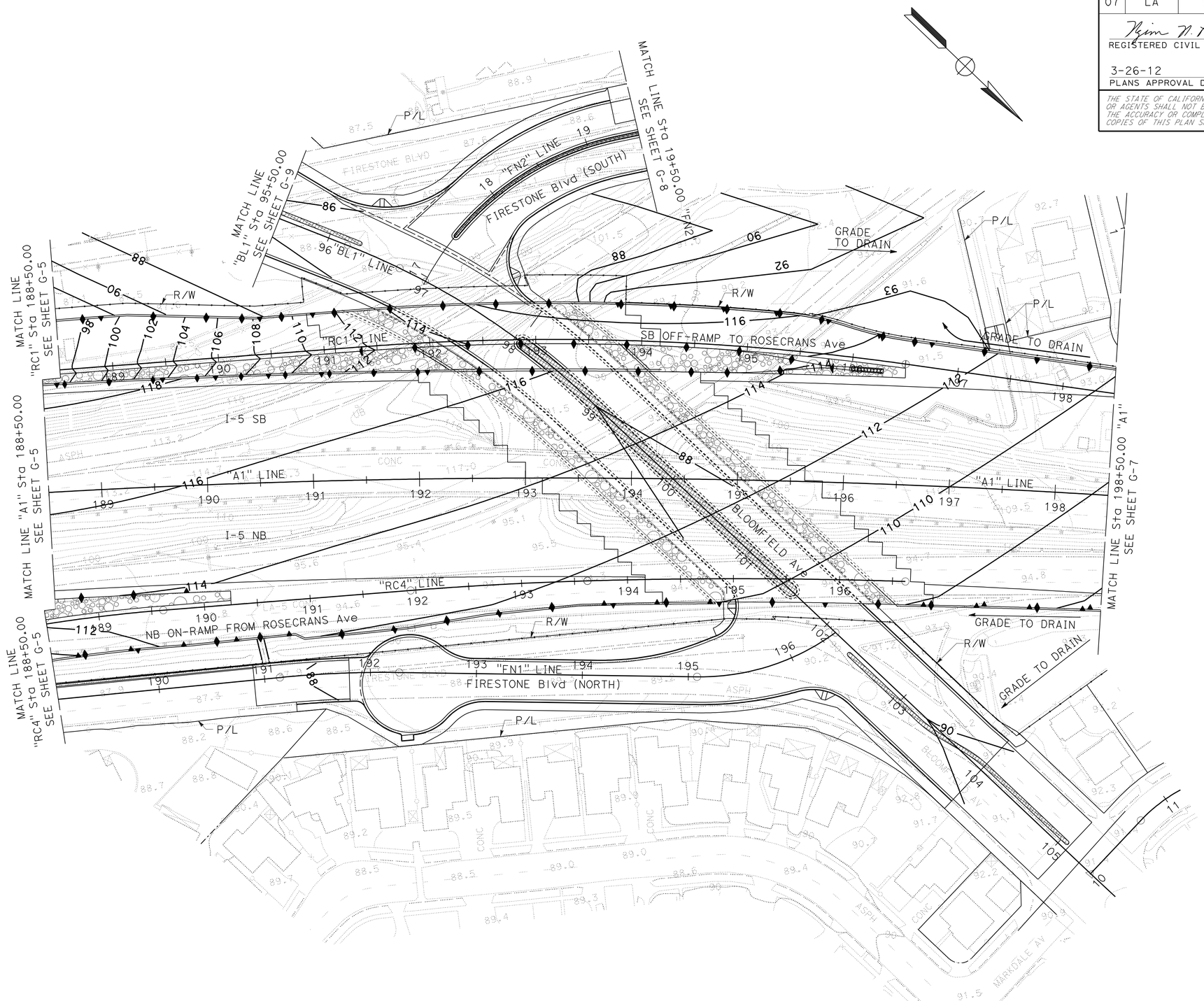

CONTOUR GRADING

SCALE: 1" = 50'

G-6

APPROVED FOR CONTOUR GRADING WORK ONLY

REVISED BY | DATE REVISED
JANE YU | NGIM NANCY PE
CALCULATED-DESIGNED BY | CHECKED BY
FUNCTIONAL SUPERVISOR
NGIM NANCY PE

STATE OF CALIFORNIA - DEPARTMENT OF TRANSPORTATION
Caltrans® OFFICE OF DESIGN A

S:\projects\215931\Resubmit\721593ha006.dgn

LAST REVISION 00-00-00 | DATE PLOTTED => 28-MAR-2012 | TIME PLOTTED => 08:45

BORDER LAST REVISED 7/2/2010 | USERNAME => s121614 | DGN FILE => 721593ha006.dgn | RELATIVE BORDER SCALE IS IN INCHES 0 1 2 3 | UNIT 1797 | PROJECT NUMBER & PHASE 07000018331

Dist	COUNTY	ROUTE	POST MILES TOTAL PROJECT	SHEET No.	TOTAL SHEETS
07	LA	5	2.4/4.0	109	1288

REGISTERED CIVIL ENGINEER 12-19-11 DATE

3-26-12
PLANS APPROVAL DATE

REGISTERED PROFESSIONAL ENGINEER NGIM NANCY PE No. 58161 Exp. 6-30-2012 CIVIL STATE OF CALIFORNIA

THE STATE OF CALIFORNIA OR ITS OFFICERS OR AGENTS SHALL NOT BE RESPONSIBLE FOR THE ACCURACY OR COMPLETENESS OF SCANNED COPIES OF THIS PLAN SHEET.

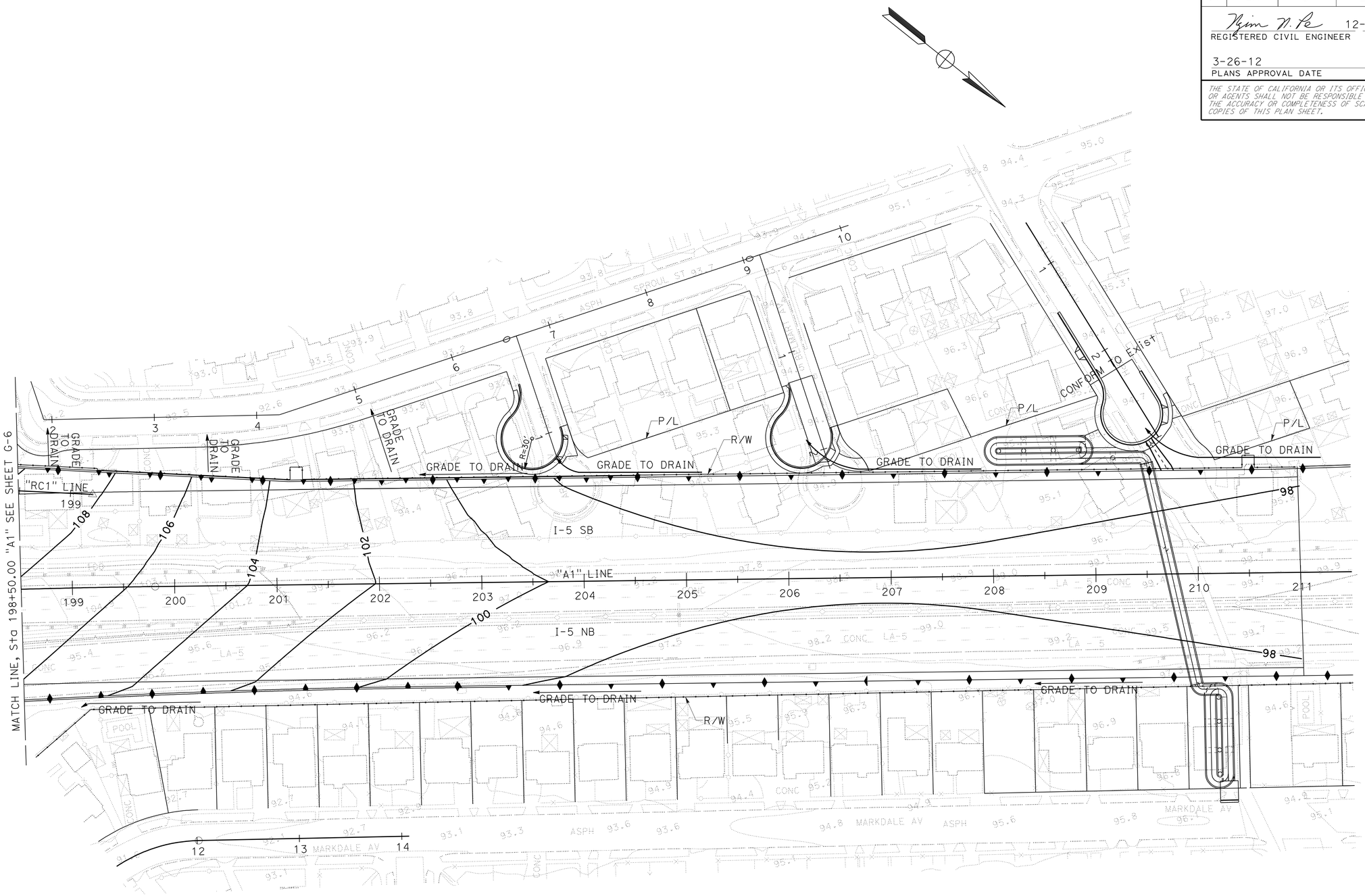

CONTOUR GRADING

APPROVED FOR CONTOUR GRADING WORK ONLY

SCALE: 1" = 50'

G-7

JANE YU — NGIM NANCY PE — REVISED BY — DATE REVISED

CALCULATED-DESIGNED BY — CHECKED BY

FUNCTIONAL SUPERVISOR — NGIM NANCY PE

STATE OF CALIFORNIA - DEPARTMENT OF TRANSPORTATION

Caltrans® OFFICE OF DESIGN A

S:\projects\215931\Resubmit1\721593ha007.dgn

LAST REVISION 00-00-00 | DATE PLOTTED => 26-MAR-2012 | TIME PLOTTED => 08:45

BORDER LAST REVISED 7/2/2010 | USERNAME => s121614 | DGN FILE => 721593ha007.dgn | RELATIVE BORDER SCALE IS IN INCHES 0 1 2 3 | UNIT 1797 | PROJECT NUMBER & PHASE 07000018331

Dist	COUNTY	ROUTE	POST MILES TOTAL PROJECT	SHEET No.	TOTAL SHEETS
07	LA	5	2.4/4.0	110	1288

REGISTERED CIVIL ENGINEER — DATE 12-19-11

3-26-12
PLANS APPROVAL DATE

REGISTERED PROFESSIONAL ENGINEER
NGIM NANCY PE
No. 58161
Exp. 6-30-2012
CIVIL
STATE OF CALIFORNIA

THE STATE OF CALIFORNIA OR ITS OFFICERS OR AGENTS SHALL NOT BE RESPONSIBLE FOR THE ACCURACY OR COMPLETENESS OF SCANNED COPIES OF THIS PLAN SHEET.

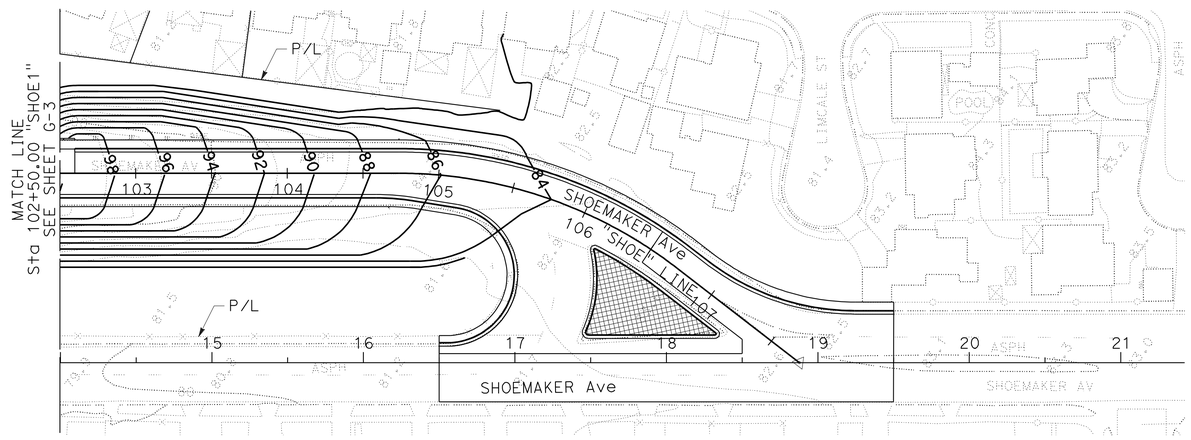

APPROVED FOR CONTOUR GRADING WORK ONLY

CONTOUR GRADING

SCALE: 1" = 50'

G-8

REVISED BY	DATE REVISED

CALCULATED-DESIGNED BY	CHECKED BY
JANE YU	NGIM NANCY PE

FUNCTIONAL SUPERVISOR: NGIM NANCY PE

STATE OF CALIFORNIA - DEPARTMENT OF TRANSPORTATION
Caltrans® OFFICE OF DESIGN A

S:\projects\215931\Resubmit1\721593ha008.dgn

LAST REVISION 00-00-00 | DATE PLOTTED => 28-MAR-2012 | TIME PLOTTED => 08:46

Dist	COUNTY	ROUTE	POST MILES TOTAL PROJECT	SHEET No.	TOTAL SHEETS
07	LA	5	2.4/4.0	111	1288

REGISTERED CIVIL ENGINEER 12-19-11 DATE

3-26-12
PLANS APPROVAL DATE

REGISTERED PROFESSIONAL ENGINEER
NGIM
NANCY PE
No. 58161
Exp. 6-30-2012
CIVIL
STATE OF CALIFORNIA

THE STATE OF CALIFORNIA OR ITS OFFICERS OR AGENTS SHALL NOT BE RESPONSIBLE FOR THE ACCURACY OR COMPLETENESS OF SCANNED COPIES OF THIS PLAN SHEET.

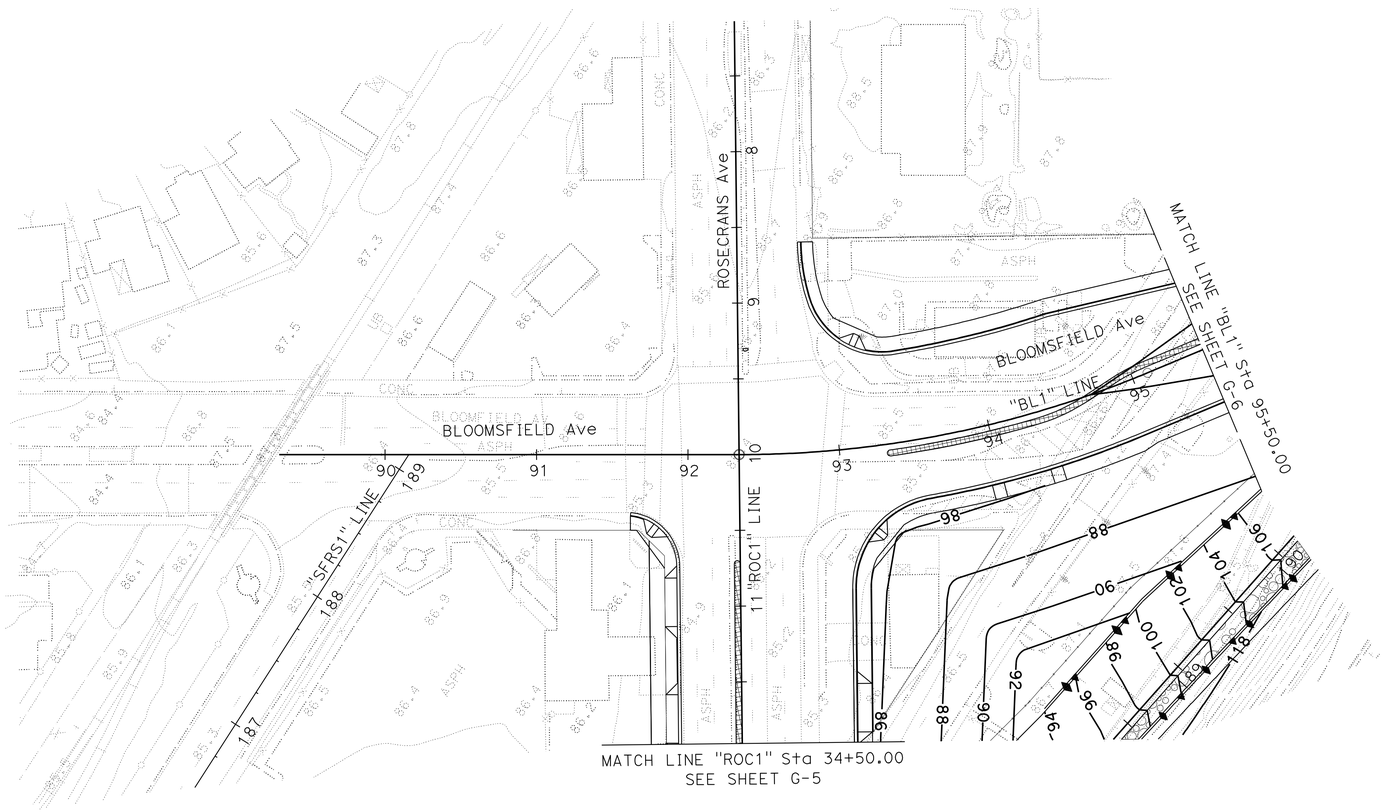

APPROVED FOR CONTOUR GRADING WORK ONLY

CONTOUR GRADING

SCALE: 1" = 50'

G-9

CALCULATED-DESIGNED BY	JANE YU
CHECKED BY	NGIM NANCY PE
REVISED BY	
DATE REVISED	
FUNCTIONAL SUPERVISOR	NGIM NANCY PE

STATE OF CALIFORNIA - DEPARTMENT OF TRANSPORTATION
Caltrans® OFFICE OF DESIGN A

S:\projects\215931\Resubmit1\721593ha009.dgn

LAST REVISION 00-00-00 | DATE PLOTTED => 28-MAR-2012 | TIME PLOTTED => 08:46

Dist	COUNTY	ROUTE	POST MILES TOTAL PROJECT	SHEET No.	TOTAL SHEETS
07	LA	5	2.4/4.0	112	1288

REGISTERED CIVIL ENGINEER 12-19-11 DATE

3-26-12
PLANS APPROVAL DATE

REGISTERED PROFESSIONAL ENGINEER
NGIM
NANCY PE
No. 58161
Exp. 6-30-2012
CIVIL
STATE OF CALIFORNIA

THE STATE OF CALIFORNIA OR ITS OFFICERS OR AGENTS SHALL NOT BE RESPONSIBLE FOR THE ACCURACY OR COMPLETENESS OF SCANNED COPIES OF THIS PLAN SHEET.

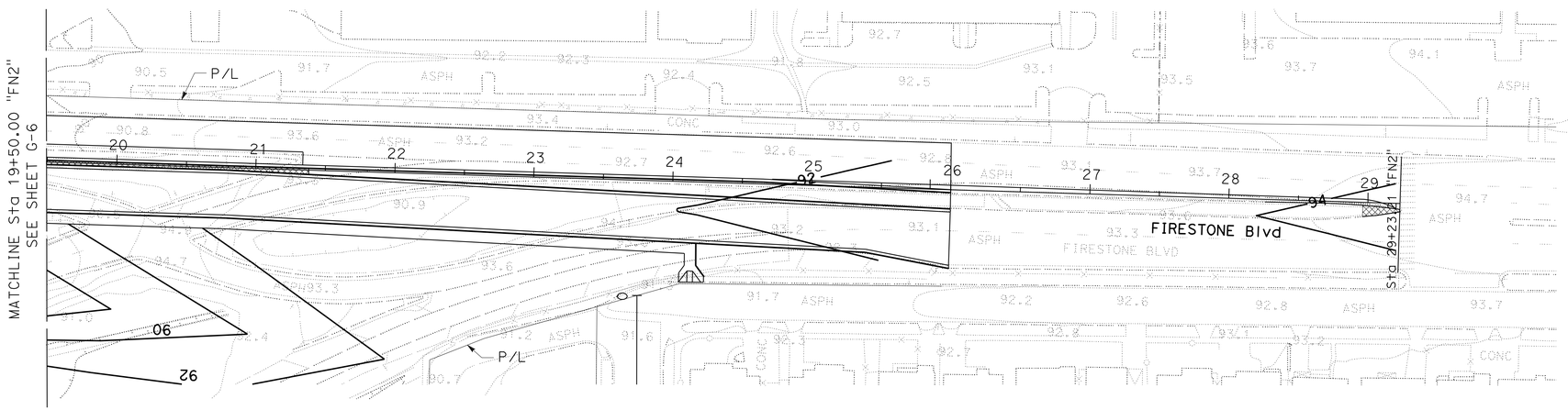

APPROVED FOR CONTOUR GRADING WORK ONLY

CONTOUR GRADING

SCALE: 1" = 50'

G-10

REVISED BY | DATE REVISED

JANE YU | NGIM NANCY PE

CALCULATED-DESIGNED BY | CHECKED BY

FUNCTIONAL SUPERVISOR: NGIM NANCY PE

STATE OF CALIFORNIA - DEPARTMENT OF TRANSPORTATION
Caltrans® OFFICE OF DESIGN A

S:\projects\215931\Resubmit1\721593ha010.dgn

LAST REVISION 00-00-00 | DATE PLOTTED => 28-MAR-2012 | TIME PLOTTED => 08:46

BORDER LAST REVISED 7/2/2010 | USERNAME => s121614 | DGN FILE => 721593ha010.dgn | RELATIVE BORDER SCALE IS IN INCHES 0 1 2 3 | UNIT 1797 | PROJECT NUMBER & PHASE 07000018331

Dist	COUNTY	ROUTE	POST MILES TOTAL PROJECT	SHEET No.	TOTAL SHEETS
07	LA	5	2.4/4.0	113	1288

REGISTERED CIVIL ENGINEER 12-19-11 DATE

3-26-12
PLANS APPROVAL DATE

REGISTERED PROFESSIONAL ENGINEER RALPH M. SASAKI No. 30849 Exp. 3/31/12 CIVIL STATE OF CALIFORNIA

THE STATE OF CALIFORNIA OR ITS OFFICERS OR AGENTS SHALL NOT BE RESPONSIBLE FOR THE ACCURACY OR COMPLETENESS OF SCANNED COPIES OF THIS PLAN SHEET.

NOTES:

1. FOR ACCURATE RIGHT OF WAY DATA, CONTACT RIGHT OF WAY ENGINEERING AT THE DISTRICT OFFICE.
2. FOR DRAINAGE SYSTEMS REMOVAL, SEE SHEETS D-12 TO D-17.
3. SYSTEM (19) IS SHOWN ON SHEETS DP-12 TO DP-14 FOR CLARITY.
4. SYSTEM (20) IS SHOWN ON WATER POLLUTION CONTROL PLAN D-15.

ABBREVIATIONS:

LACFCD - LOS ANGELES COUNTY FLOOD CONTROL DISTRICT
LACFCD - LOS ANGELES COUNTY FLOOD CONTROL DISTRICT
COCB - CURB OPENING CATCH BASIN
CGCB - CURBSIDE GRATING CATCH BASIN
AVSF - AUSTIN VAULT SAND FILTER
LD - LOCAL DEPRESSIONS

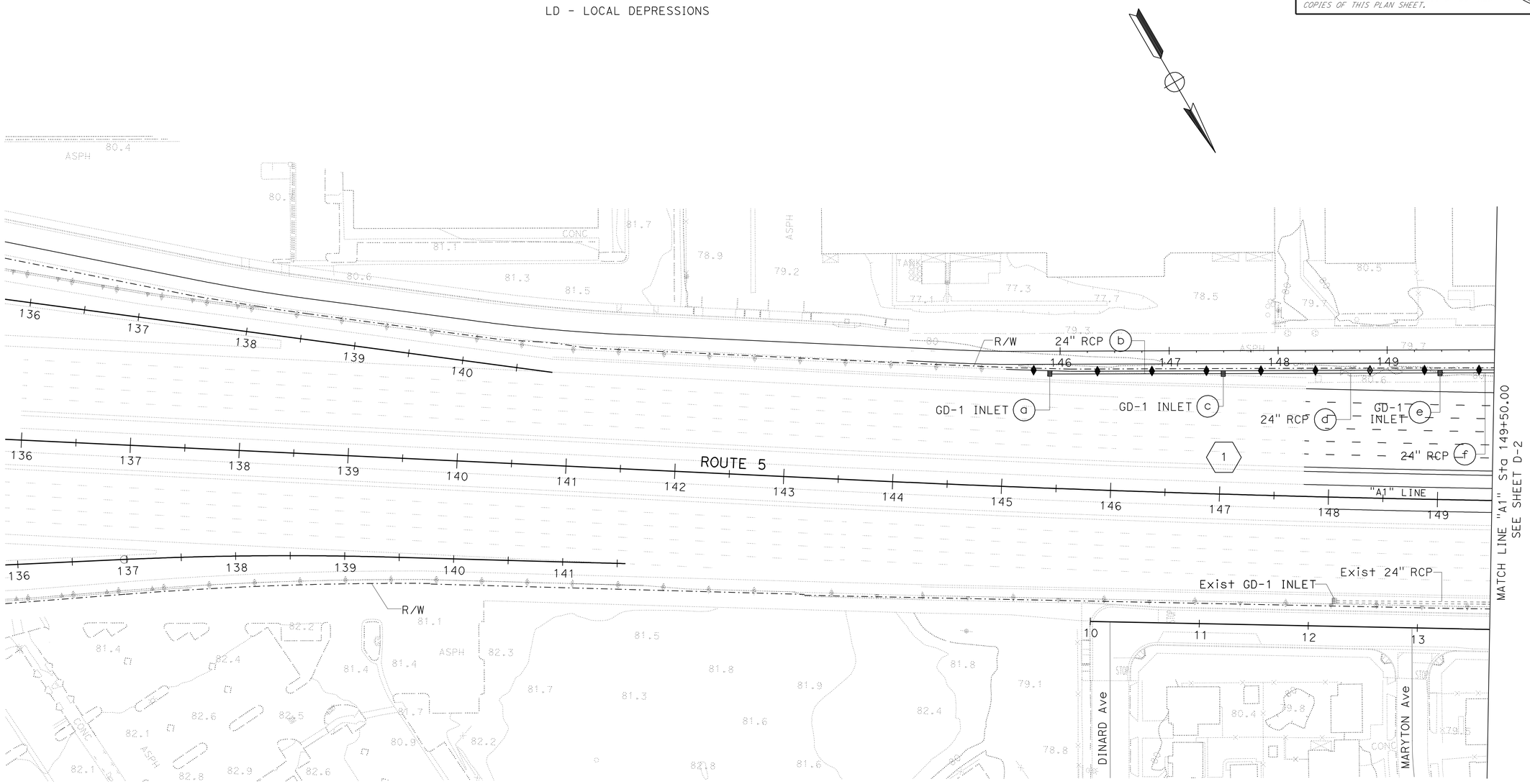

DRAINAGE PLAN

SCALE: 1" = 50'

APPROVED FOR DRAINAGE WORK ONLY

D-1

STATE OF CALIFORNIA - DEPARTMENT OF TRANSPORTATION
Caltrans HYDRAULICS

FUNCTIONAL SUPERVISOR: JAI P. THAKUR
CALCULATED-DESIGNED BY: MARTIN CORONADO
CHECKED BY: RALPH M. SASAKI
REVISED BY
DATE REVISED

LAST REVISION 00-00-00
DATE PLOTTED => 28-MAR-2012
TIME PLOTTED => 08:46

Dist	COUNTY	ROUTE	POST MILES TOTAL PROJECT	SHEET No.	TOTAL SHEETS
07	LA	5	2.4/4.0	114	1288

12-19-11
REGISTERED CIVIL ENGINEER DATE

3-26-12
PLANS APPROVAL DATE

REGISTERED PROFESSIONAL ENGINEER
RALPH M. SASAKI
No. 30849
Exp. 3/31/12
CIVIL
STATE OF CALIFORNIA

THE STATE OF CALIFORNIA OR ITS OFFICERS OR AGENTS SHALL NOT BE RESPONSIBLE FOR THE ACCURACY OR COMPLETENESS OF SCANNED COPIES OF THIS PLAN SHEET.

NOTE:

FOR ACCURATE RIGHT OF WAY DATA, CONTACT
RIGHT OF WAY ENGINEERING AT THE DISTRICT OFFICE.

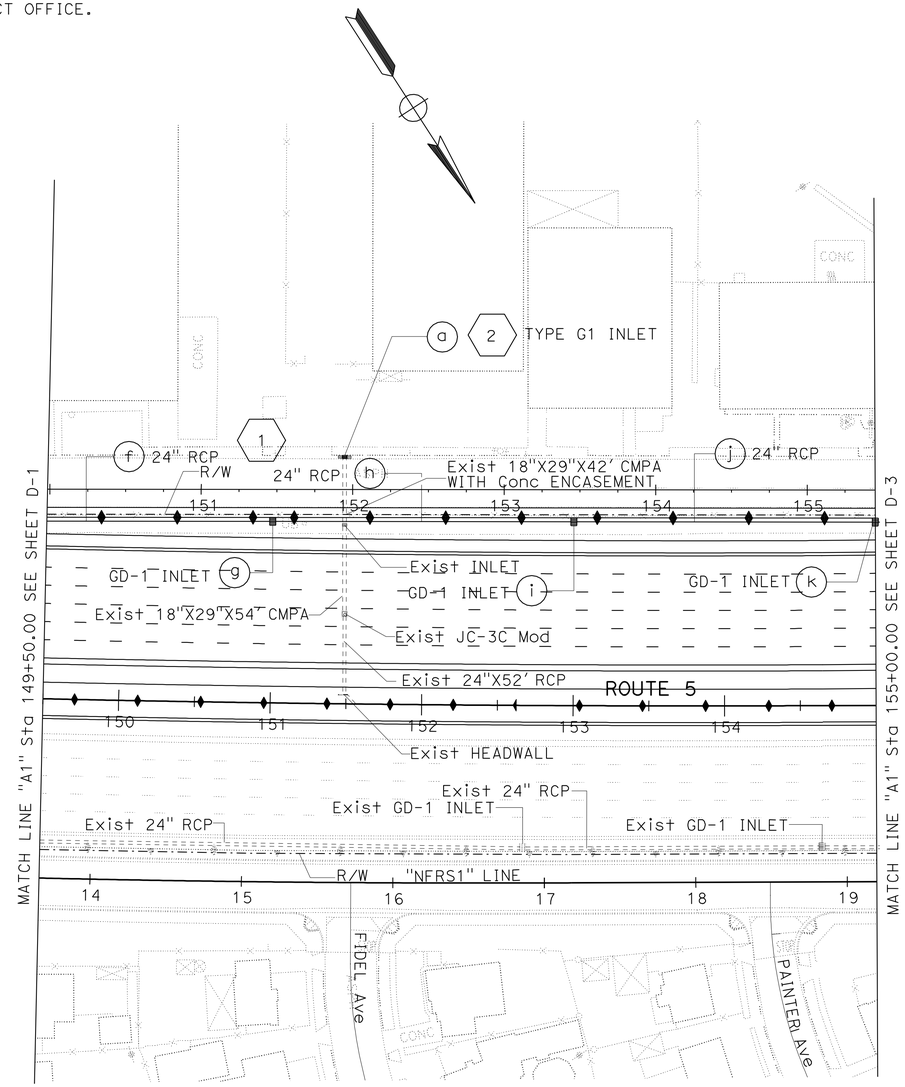

DRAINAGE PLAN

SCALE: 1" = 50'

D-2

APPROVED FOR DRAINAGE WORK ONLY

STATE OF CALIFORNIA - DEPARTMENT OF TRANSPORTATION
Caltrans
HYDRAULICS

FUNCTIONAL SUPERVISOR: JAI P. THAKUR
CALCULATED-DESIGNED BY: MARTIN CORONADO
CHECKED BY: RALPH M. SASAKI
REVISED BY
DATE REVISED

LAST REVISION 00-00-00
DATE PLOTTED => 28-MAR-2012
TIME PLOTTED => 08:46

Dist	COUNTY	ROUTE	POST MILES TOTAL PROJECT	SHEET No.	TOTAL SHEETS
07	LA	5	2.4/4.0	115	1288

12-19-11
REGISTERED CIVIL ENGINEER DATE

3-26-12
PLANS APPROVAL DATE

REGISTERED PROFESSIONAL ENGINEER RALPH M. SASAKI No. 30849 Exp. 3/31/12 CIVIL STATE OF CALIFORNIA

THE STATE OF CALIFORNIA OR ITS OFFICERS OR AGENTS SHALL NOT BE RESPONSIBLE FOR THE ACCURACY OR COMPLETENESS OF SCANNED COPIES OF THIS PLAN SHEET.

NOTE:

FOR ACCURATE RIGHT OF WAY DATA, CONTACT RIGHT OF WAY ENGINEERING AT THE DISTRICT OFFICE.

CURVE DATA

No. □	R	Δ	T	L
1	22.50′	69°47′07"	15.69′	27.40′
2	55.00′	57°24′10"	30.11′	55.10′
3	22.50′	39°42′45"	8.13′	15.60′
4	22.50′	33°24′09"	6.75′	13.12′
5	22.50′	31°47′12"	6.41′	12.48′
6	22.50′	33°37′09"	6.80′	13.20′
7	22.50′	20°8′14"	4.00′	7.91′
8	22.50′	18°24′13"	3.64′	7.23′

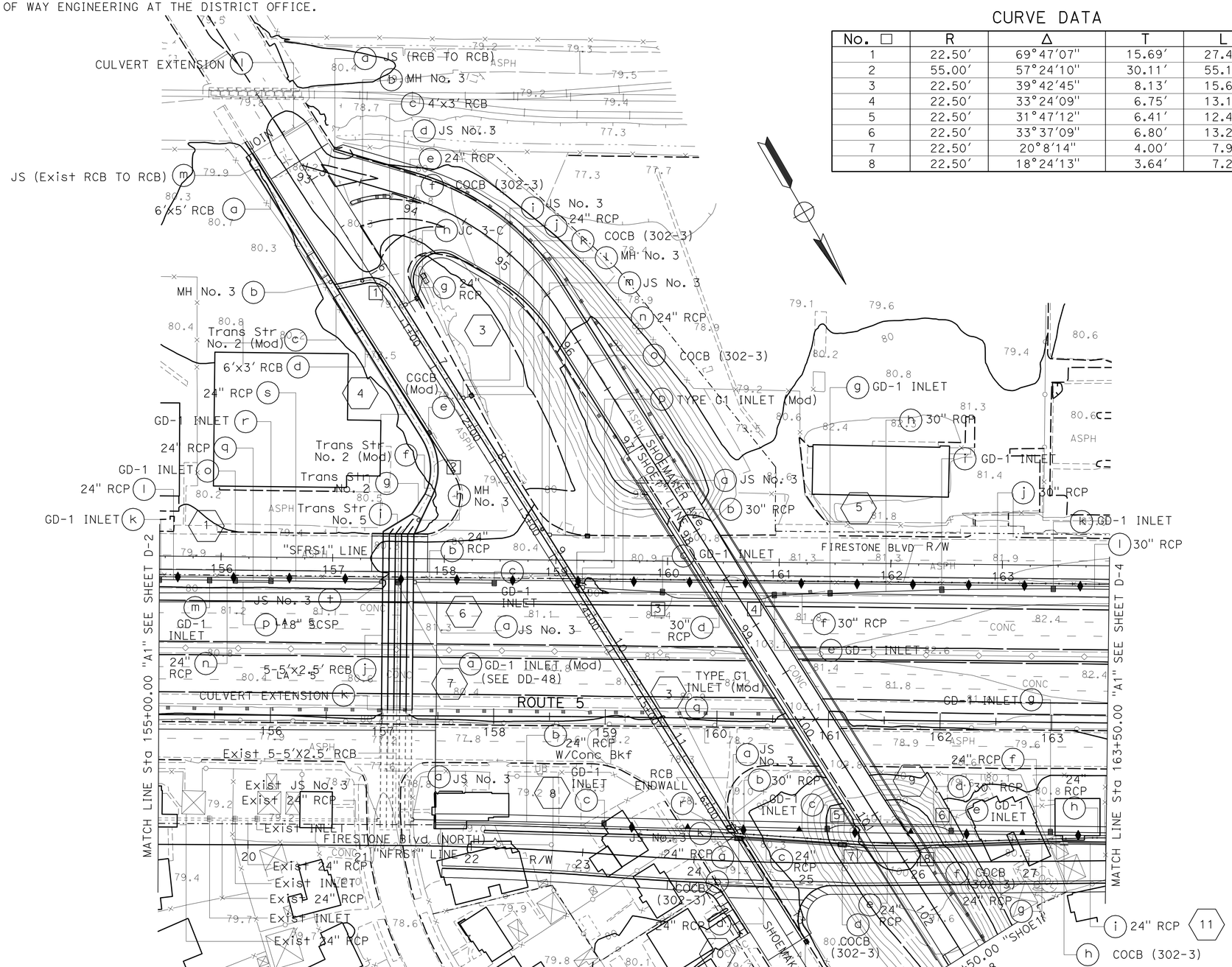

DRAINAGE PLAN

SCALE: 1" = 50′

D-3

APPROVED FOR DRAINAGE WORK ONLY

STATE OF CALIFORNIA - DEPARTMENT OF TRANSPORTATION
Caltrans HYDRAULICS
FUNCTIONAL SUPERVISOR: JAI P. THAKUR
CALCULATED-DESIGNED BY: MARTIN CORONADO
CHECKED BY: RALPH M. SASAKI
REVISED BY / DATE REVISED

LAST REVISION 00-00-00 | DATE PLOTTED => 28-MAR-2012 | TIME PLOTTED => 08:46

Dist	COUNTY	ROUTE	POST MILES TOTAL PROJECT	SHEET No.	TOTAL SHEETS
07	LA	5	2.4/4.0	116	1288

REGISTERED CIVIL ENGINEER 12-19-11 DATE

3-26-12
PLANS APPROVAL DATE

REGISTERED PROFESSIONAL ENGINEER RALPH M. SASAKI No. 30849 Exp. 3/31/12 CIVIL STATE OF CALIFORNIA

THE STATE OF CALIFORNIA OR ITS OFFICERS OR AGENTS SHALL NOT BE RESPONSIBLE FOR THE ACCURACY OR COMPLETENESS OF SCANNED COPIES OF THIS PLAN SHEET.

NOTE:

FOR ACCURATE RIGHT OF WAY DATA, CONTACT RIGHT OF WAY ENGINEERING AT THE DISTRICT OFFICE.

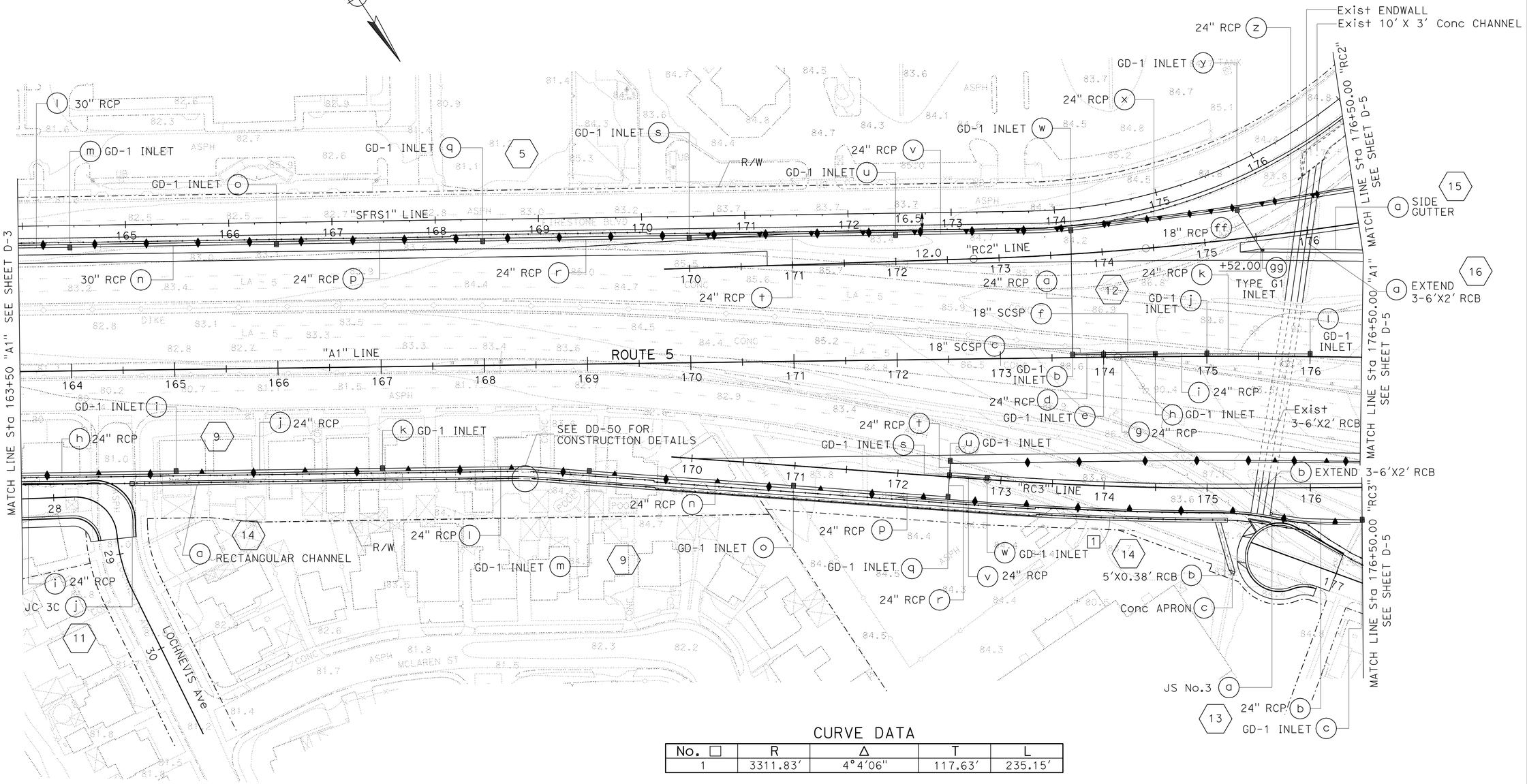

CURVE DATA

No. □	R	Δ	T	L
1	3311.83'	4°4'06"	117.63'	235.15'

DRAINAGE PLAN

SCALE: 1" = 50'

D-4

APPROVED FOR DRAINAGE WORK ONLY

STATE OF CALIFORNIA - DEPARTMENT OF TRANSPORTATION
Caltrans HYDRAULICS

FUNCTIONAL SUPERVISOR: JAI P. THAKUR
CALCULATED-DESIGNED BY: MARTIN CORONADO
CHECKED BY: RALPH M. SASAKI
REVISED BY
DATE REVISED

LAST REVISION 00-00-00
DATE PLOTTED => 28-MAR-2012
TIME PLOTTED => 08:46

Dist	COUNTY	ROUTE	POST MILES TOTAL PROJECT	SHEET No.	TOTAL SHEETS
07	LA	5	2.4/4.0	117	1288

REGISTERED CIVIL ENGINEER 12-19-11 DATE

3-26-12
PLANS APPROVAL DATE

REGISTERED PROFESSIONAL ENGINEER RALPH M. SASAKI No. 30849 Exp. 3/31/12 CIVIL STATE OF CALIFORNIA

THE STATE OF CALIFORNIA OR ITS OFFICERS OR AGENTS SHALL NOT BE RESPONSIBLE FOR THE ACCURACY OR COMPLETENESS OF SCANNED COPIES OF THIS PLAN SHEET.

NOTES:

1. FOR ACCURATE RIGHT OF WAY DATA, CONTACT RIGHT OF WAY ENGINEERING AT THE DISTRICT OFFICE.
2. SYSTEM 19 IS SHOWN ON SHEETS DP-12 TO DP-14 FOR CLARITY.
3. SYSTEM 20 IS SHOWN ON WATER POLLUTION CONTROL PLAN D-15.

CURVE DATA

No.	R	Δ	T	L
1	90.00′	10°0′00″	7.87′	15.71′
2	90.00′	15°35′49″	12.33′	24.50′

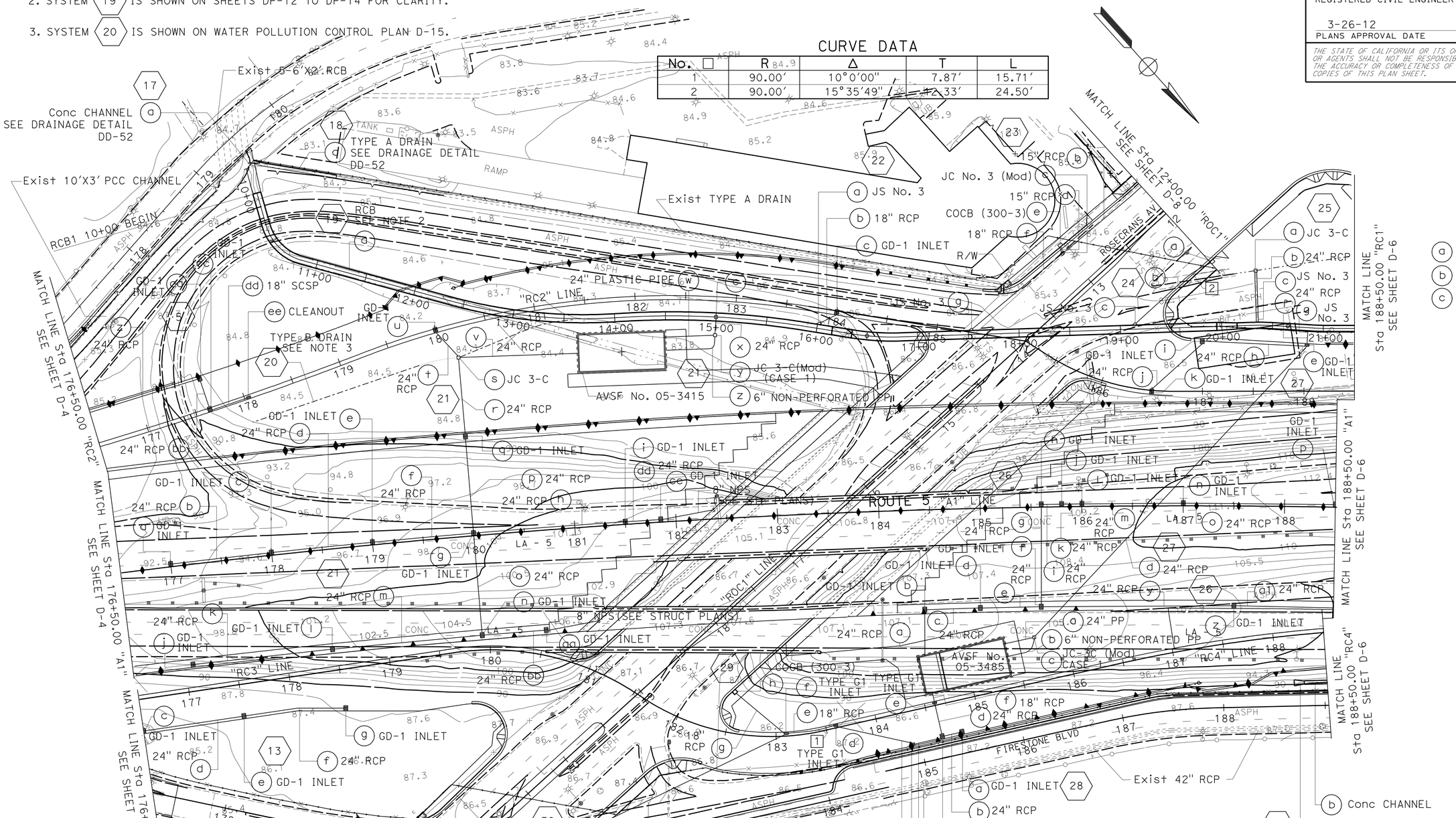

DRAINAGE PLAN

SCALE: 1" = 50′

D-5

APPROVED FOR DRAINAGE WORK ONLY

STATE OF CALIFORNIA - DEPARTMENT OF TRANSPORTATION
Caltrans® HYDRAULICS

FUNCTIONAL SUPERVISOR: JAI P. THAKUR
CALCULATED-DESIGNED BY: MAY P. FUNG
CHECKED BY: RALPH M. SASAKI
REVISED BY
DATE REVISED

LAST REVISION 00-00-00 | DATE PLOTTED => 28-MAR-2012 | TIME PLOTTED => 08:46

Dist	COUNTY	ROUTE	POST MILES TOTAL PROJECT	SHEET No.	TOTAL SHEETS
07	LA	5	2.4/4.0	118	1288

REGISTERED CIVIL ENGINEER 12-19-11 DATE

3-26-12
PLANS APPROVAL DATE

REGISTERED PROFESSIONAL ENGINEER RALPH M. SASAKI No. 30849 Exp. 3/31/12 CIVIL STATE OF CALIFORNIA

THE STATE OF CALIFORNIA OR ITS OFFICERS OR AGENTS SHALL NOT BE RESPONSIBLE FOR THE ACCURACY OR COMPLETENESS OF SCANNED COPIES OF THIS PLAN SHEET.

NOTE:

FOR ACCURATE RIGHT OF WAY DATA, CONTACT RIGHT OF WAY ENGINEERING AT THE DISTRICT OFFICE.

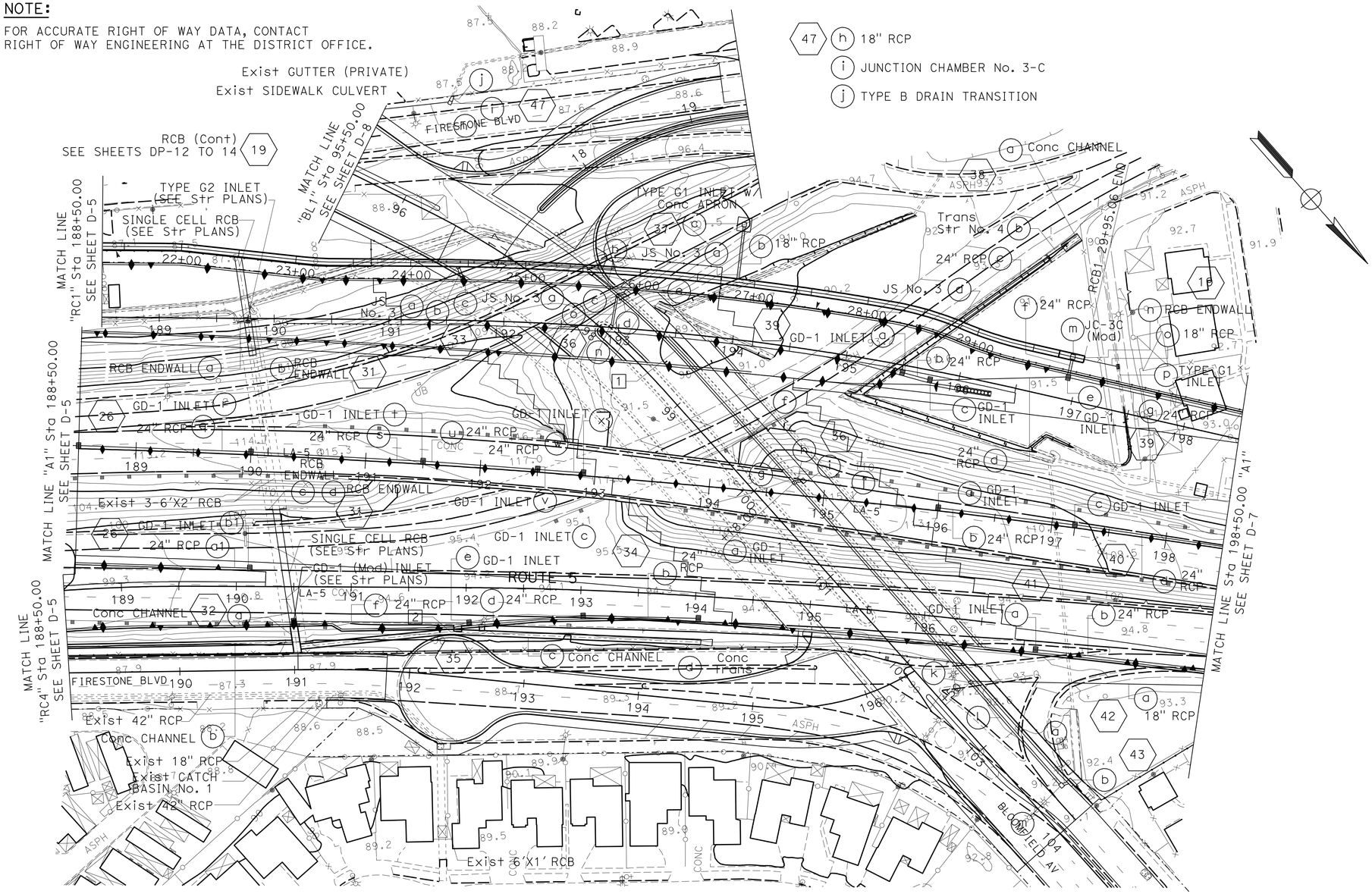

(47) (h) 18" RCP
(i) JUNCTION CHAMBER No. 3-C
(j) TYPE B DRAIN TRANSITION

(36) (a) JUNCTION STRUCTURE No. 3
(b) 24" RCP w/ Conc BACKFILL
(c) JUNCTION CHAMBER No. 3 Mod
(d) 18" RCP w/ Conc BACKFILL
(e) COCB (300-3)
(f) 24" RCP w/ Conc BACKFILL
(g) JUNCTION CHAMBER No. 3 Mod
(h) 18" RCP
(i) COCB (300-3)
(j) 24" RCP
(k) JUNCTION CHAMBER No. 3 Mod
(l) 24" RCP
(m) MANHOLE PIPE-TO-PIPE (321-1)
(n) TYPE G5 INLET
(o) 18" RCP

(43) (a) 24" RCP
(b) COCB (302-3)

(33) (a) JUNCTION STRUCTURE No. 3
(b) 24" RCP w/ Conc BACKFILL
(c) COCB (300-3)

CURVE DATA

No. □	R	Δ	T	L
1	731.00′	34°39′46″	62.889	125.469′
2	100.00′	8°8′23″	7.12	14.21′

DRAINAGE PLAN

SCALE: 1" = 50′

D-6

APPROVED FOR DRAINAGE WORK ONLY

STATE OF CALIFORNIA - DEPARTMENT OF TRANSPORTATION
Caltrans HYDRAULICS
FUNCTIONAL SUPERVISOR JAI P. THAKUR
CALCULATED-DESIGNED BY MAY P. FUNG
CHECKED BY RALPH M. SASAKI
REVISED BY
DATE REVISED

LAST REVISION 00-00-00
DATE PLOTTED => 28-MAR-2012
TIME PLOTTED => 08:47

Dist	COUNTY	ROUTE	POST MILES TOTAL PROJECT	SHEET No.	TOTAL SHEETS
07	LA	5	2.4/4.0	119	1288

REGISTERED CIVIL ENGINEER 12-19-11 DATE

3-26-12
PLANS APPROVAL DATE

REGISTERED PROFESSIONAL ENGINEER RALPH M. SASAKI No. 30849 Exp. 3/31/12 CIVIL STATE OF CALIFORNIA

THE STATE OF CALIFORNIA OR ITS OFFICERS OR AGENTS SHALL NOT BE RESPONSIBLE FOR THE ACCURACY OR COMPLETENESS OF SCANNED COPIES OF THIS PLAN SHEET.

NOTE:

FOR ACCURATE RIGHT OF WAY DATA, CONTACT RIGHT OF WAY ENGINEERING AT THE DISTRICT OFFICE.

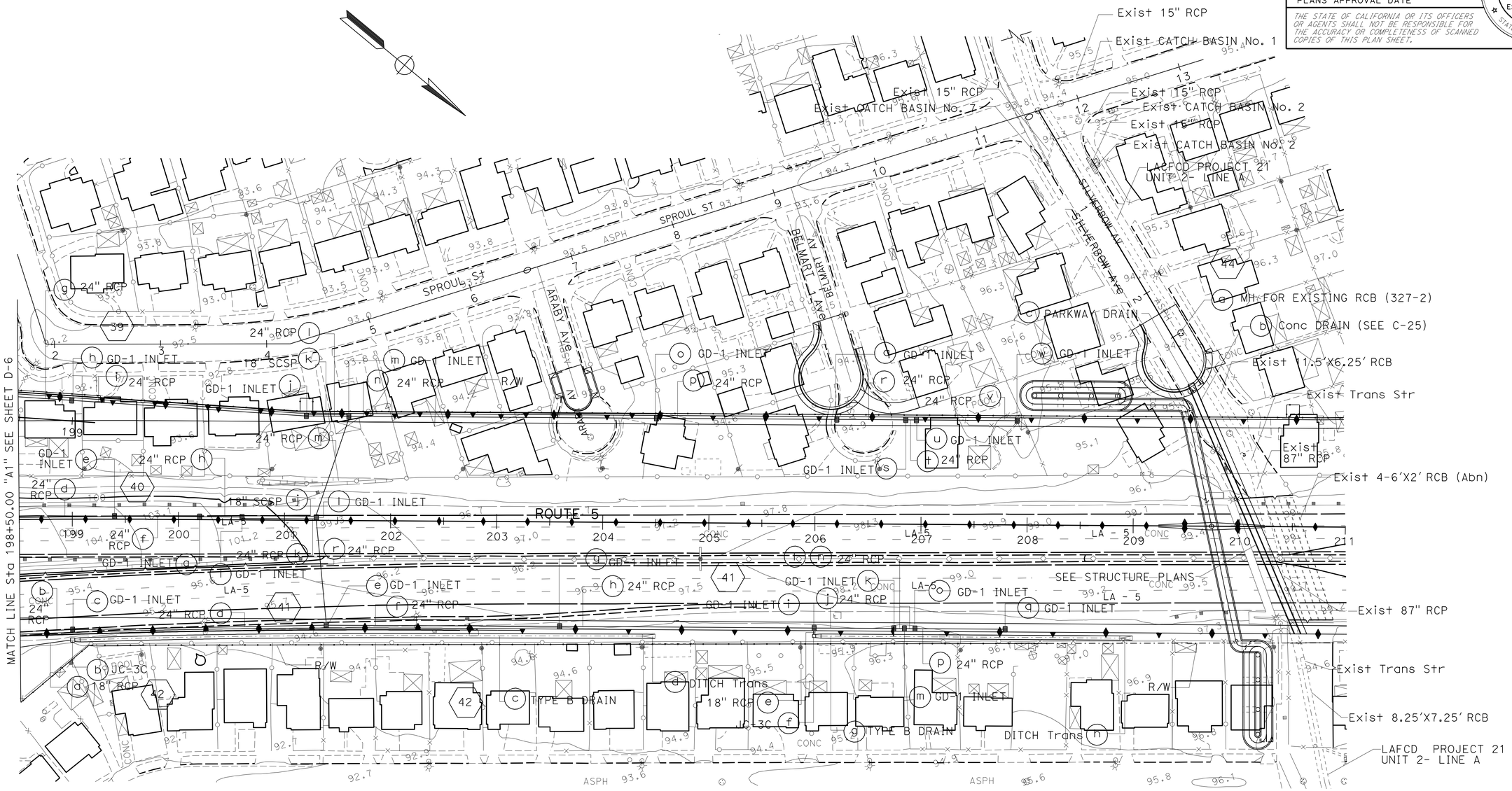

DRAINAGE PLAN

SCALE: 1" = 50'

D-7

APPROVED FOR DRAINAGE WORK ONLY

STATE OF CALIFORNIA - DEPARTMENT OF TRANSPORTATION
Caltrans® HYDRAULICS

FUNCTIONAL SUPERVISOR: JAI P. THAKUR
CALCULATED-DESIGNED BY: MAY P. FUNG
CHECKED BY: RALPH M. SASAKI
REVISED BY
DATE REVISED

LAST REVISION 00-00-00
DATE PLOTTED => 28-MAR-2012
TIME PLOTTED => 08:47

Dist	COUNTY	ROUTE	POST MILES TOTAL PROJECT	SHEET No.	TOTAL SHEETS
07	LA	5	2.4/4.0	120	1288

REGISTERED CIVIL ENGINEER 12-19-11 DATE

3-26-12
PLANS APPROVAL DATE

REGISTERED PROFESSIONAL ENGINEER
RALPH M. SASAKI
No. 30849
Exp. 3/31/12
CIVIL
STATE OF CALIFORNIA

THE STATE OF CALIFORNIA OR ITS OFFICERS OR AGENTS SHALL NOT BE RESPONSIBLE FOR THE ACCURACY OR COMPLETENESS OF SCANNED COPIES OF THIS PLAN SHEET.

NOTE:

FOR ACCURATE RIGHT OF WAY DATA, CONTACT
RIGHT OF WAY ENGINEERING AT THE DISTRICT OFFICE.

CURVE DATA

No. ☐	R	Δ	T	L
1	90.00′	16°52′28″	13.35′	26.51′
2	45.00′	63°30′05″	27.85′	49.87′

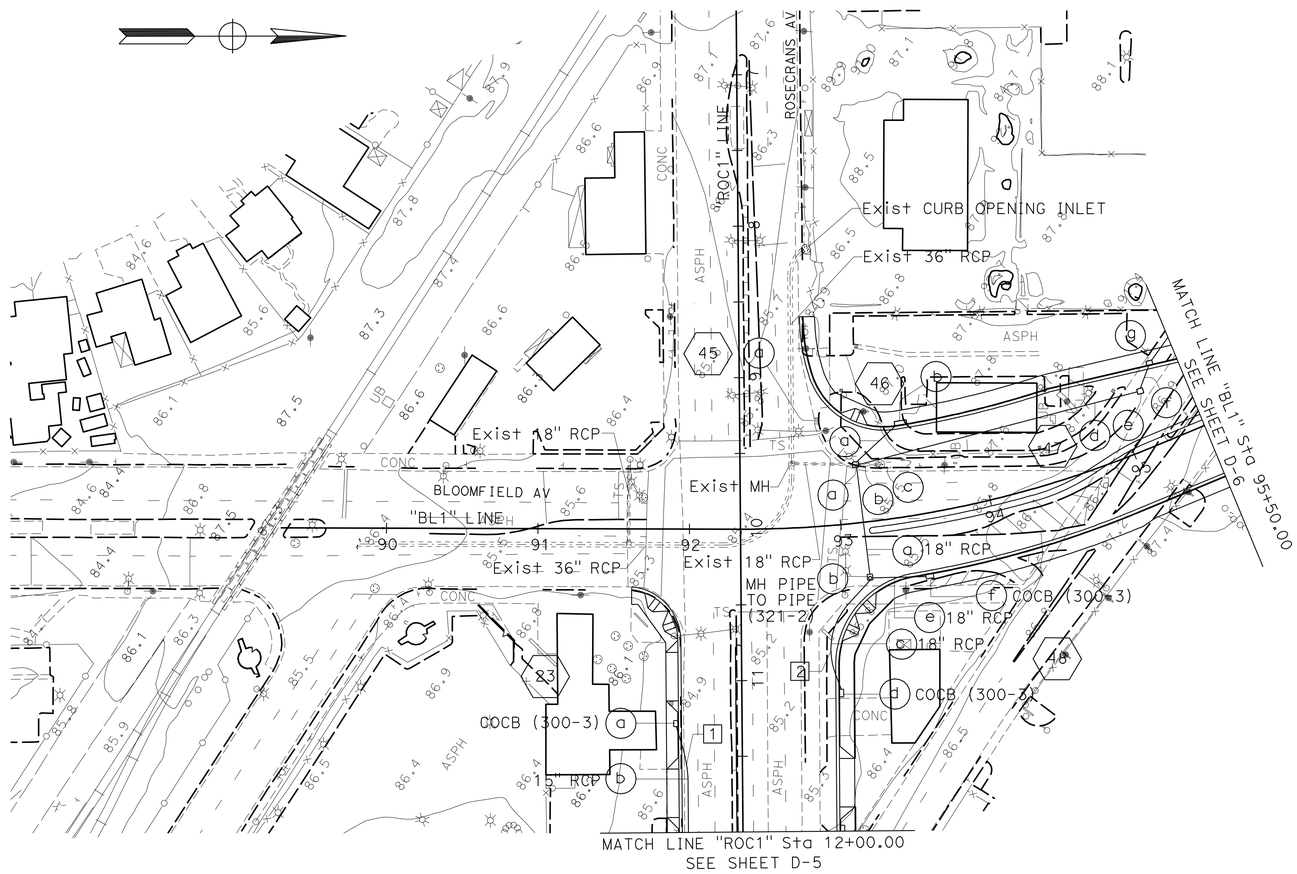

45 (a) CAP INLET

47
- (a) MH PIPE TO PIPE (321-2)
- (b) REMOVE 18" RCP
- (c) REMOVE CATCH BASIN
- (d) 18" RCP
- (e) MH PIPE TO PIPE (321-2)
- (f) 18" RCP
- (g) COCB (300-3)
- (h) 18" RCP
- (i) JUNCTION CHAMBER No. 3C
- (j) TYPE B DRAIN TRANS

46
- (a) 18" RCP
- (b) COCB (300-3)

DRAINAGE PLAN

SCALE: 1" = 50′

D-8

APPROVED FOR DRAINAGE WORK ONLY

STATE OF CALIFORNIA - DEPARTMENT OF TRANSPORTATION
Caltrans HYDRAULICS

FUNCTIONAL SUPERVISOR: JAI P. THAKUR
CALCULATED-DESIGNED BY: CEDRIC ESTRADA
CHECKED BY: RALPH M. SASAKI
REVISED BY
DATE REVISED

LAST REVISION 00-00-00
DATE PLOTTED => 28-MAR-2012
TIME PLOTTED => 08:47

Dist	COUNTY	ROUTE	POST MILES TOTAL PROJECT	SHEET No.	TOTAL SHEETS
07	LA	5	2.4/4.0	121	1288

REGISTERED CIVIL ENGINEER 12-19-11 DATE

3-26-12
PLANS APPROVAL DATE

REGISTERED PROFESSIONAL ENGINEER RALPH M. SASAKI No. 30849 Exp. 3/31/12 CIVIL STATE OF CALIFORNIA

THE STATE OF CALIFORNIA OR ITS OFFICERS OR AGENTS SHALL NOT BE RESPONSIBLE FOR THE ACCURACY OR COMPLETENESS OF SCANNED COPIES OF THIS PLAN SHEET.

NOTE:

FOR ACCURATE RIGHT OF WAY DATA, CONTACT
RIGHT OF WAY ENGINEERING AT THE DISTRICT OFFICE.

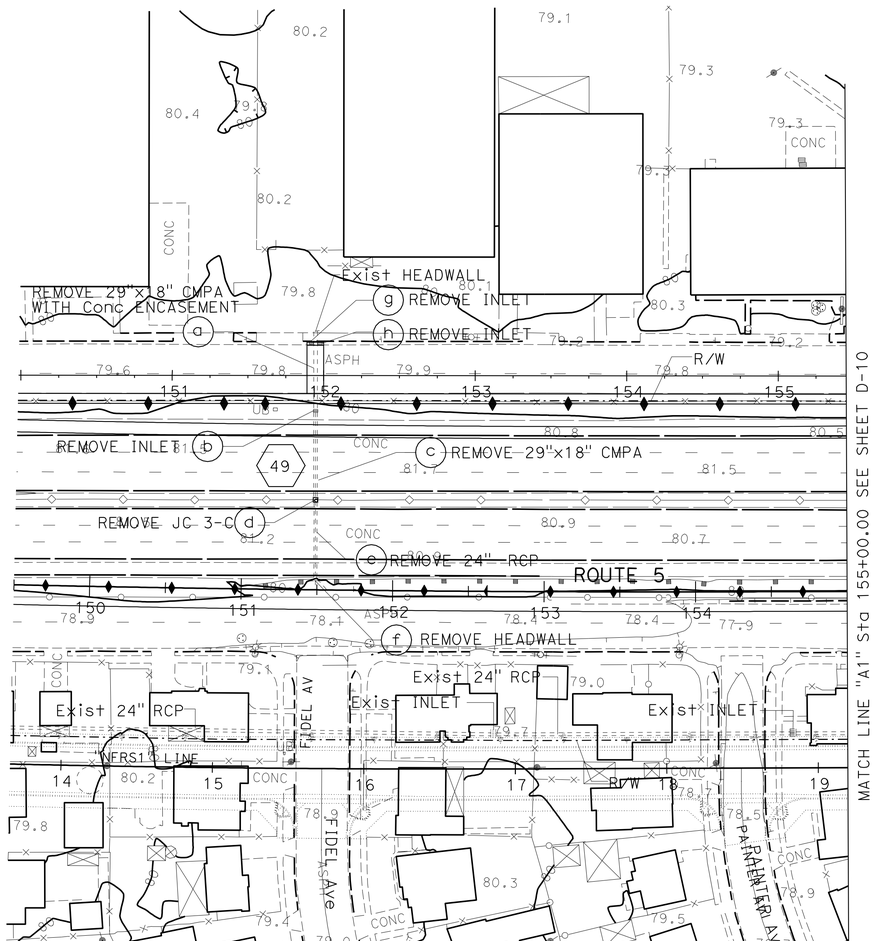

DRAINAGE PLAN (REMOVAL ONLY)

SCALE: 1" = 50'

D-9

APPROVED FOR DRAINAGE WORK ONLY

STATE OF CALIFORNIA - DEPARTMENT OF TRANSPORTATION
Caltrans HYDRAULICS

FUNCTIONAL SUPERVISOR: JAI P. THAKUR
CALCULATED-DESIGNED BY: MAY P. FUNG
CHECKED BY: RALPH M. SASAKI
REVISED BY
DATE REVISED

LAST REVISION 00-00-00
DATE PLOTTED => 28-MAR-2012
TIME PLOTTED => 08:47

Dist	COUNTY	ROUTE	POST MILES TOTAL PROJECT	SHEET No.	TOTAL SHEETS
07	LA	5	2.4/4.0	122	1288

REGISTERED CIVIL ENGINEER DATE 12-19-11

3-26-12
PLANS APPROVAL DATE

REGISTERED PROFESSIONAL ENGINEER RALPH M. SASAKI No. 30849 Exp. 3/31/12 CIVIL STATE OF CALIFORNIA

THE STATE OF CALIFORNIA OR ITS OFFICERS OR AGENTS SHALL NOT BE RESPONSIBLE FOR THE ACCURACY OR COMPLETENESS OF SCANNED COPIES OF THIS PLAN SHEET.

NOTE:

FOR ACCURATE RIGHT OF WAY DATA, CONTACT RIGHT OF WAY ENGINEERING AT THE DISTRICT OFFICE.

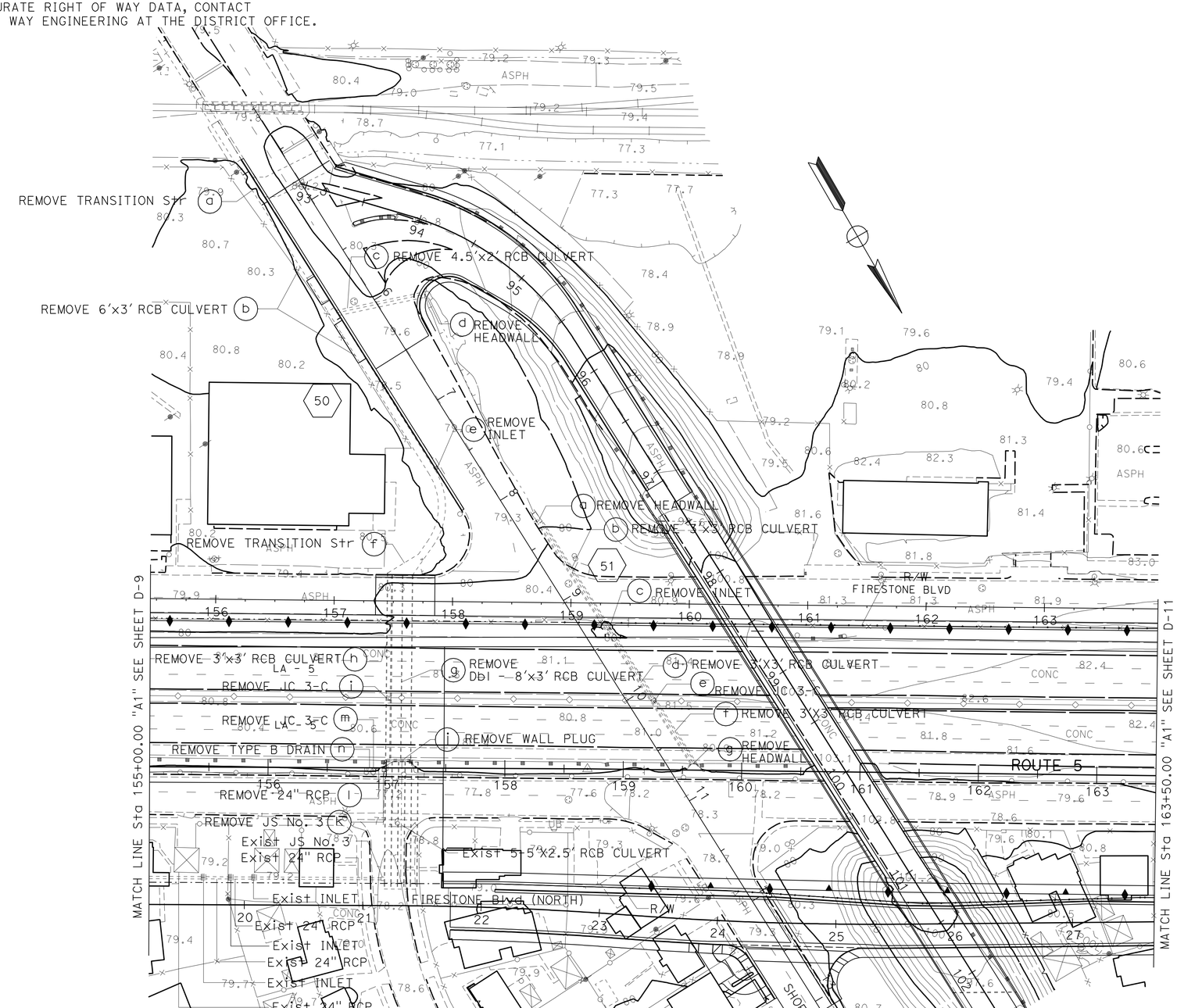

DRAINAGE PLAN (REMOVAL ONLY)

SCALE: 1" = 50'

D-10

APPROVED FOR DRAINAGE WORK ONLY

STATE OF CALIFORNIA - DEPARTMENT OF TRANSPORTATION

Caltrans® **HYDRAULICS**

FUNCTIONAL SUPERVISOR: JAI P. THAKUR

CALCULATED-DESIGNED BY: MAY P. FUNG

CHECKED BY: RALPH M. SASAKI

REVISED BY / DATE REVISED

LAST REVISION 00-00-00 | DATE PLOTTED => 28-MAR-2012 | TIME PLOTTED => 08:47

Dist	COUNTY	ROUTE	POST MILES TOTAL PROJECT	SHEET No.	TOTAL SHEETS
07	LA	5	2.4/4.0	123	1288

REGISTERED CIVIL ENGINEER 12-19-11 DATE

3-26-12
PLANS APPROVAL DATE

REGISTERED PROFESSIONAL ENGINEER RALPH M. SASAKI No. 30849 Exp. 3/31/12 CIVIL STATE OF CALIFORNIA

THE STATE OF CALIFORNIA OR ITS OFFICERS OR AGENTS SHALL NOT BE RESPONSIBLE FOR THE ACCURACY OR COMPLETENESS OF SCANNED COPIES OF THIS PLAN SHEET.

NOTE:

FOR ACCURATE RIGHT OF WAY DATA, CONTACT RIGHT OF WAY ENGINEERING AT THE DISTRICT OFFICE.

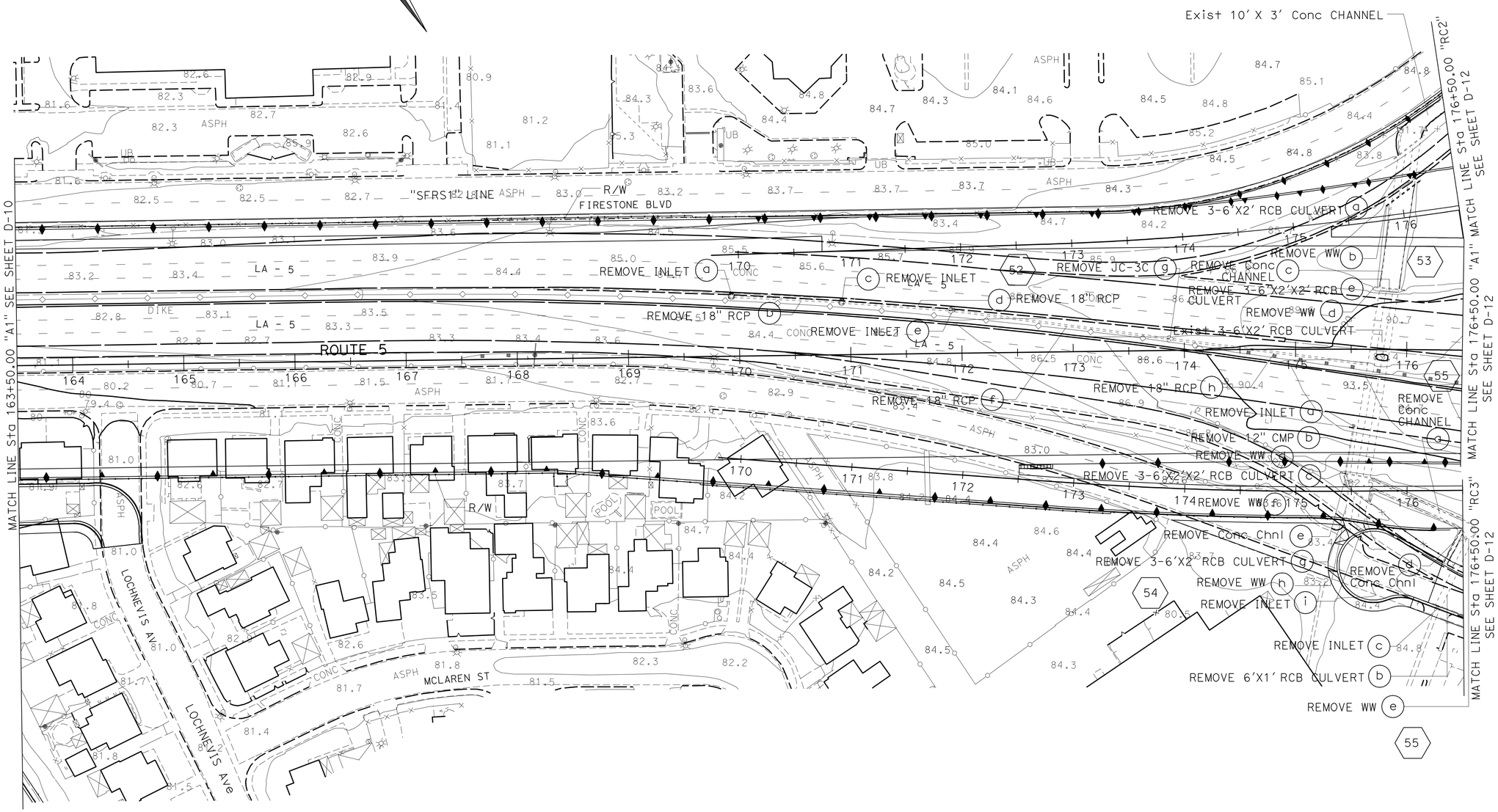

DRAINAGE PLAN (REMOVAL ONLY)

SCALE: 1" = 50'

APPROVED FOR DRAINAGE WORK ONLY

D-11

STATE OF CALIFORNIA - DEPARTMENT OF TRANSPORTATION
Caltrans HYDRAULICS

FUNCTIONAL SUPERVISOR: JAI P. THAKUR
CALCULATED-DESIGNED BY: MAY P. FUNG
CHECKED BY: RALPH M. SASAKI
REVISED BY / DATE REVISED

LAST REVISION 00-00-00
DATE PLOTTED => 28-MAR-2012
TIME PLOTTED => 08:47

Dist	COUNTY	ROUTE	POST MILES TOTAL PROJECT	SHEET No.	TOTAL SHEETS
07	LA	5	2.4/4.0	124	1288

REGISTERED CIVIL ENGINEER DATE 12-19-11

3-26-12
PLANS APPROVAL DATE

REGISTERED PROFESSIONAL ENGINEER
RALPH M. SASAKI
No. 30849
Exp. 3/31/12
CIVIL
STATE OF CALIFORNIA

THE STATE OF CALIFORNIA OR ITS OFFICERS OR AGENTS SHALL NOT BE RESPONSIBLE FOR THE ACCURACY OR COMPLETENESS OF SCANNED COPIES OF THIS PLAN SHEET.

NOTE:

FOR ACCURATE RIGHT OF WAY DATA, CONTACT
RIGHT OF WAY ENGINEERING AT THE DISTRICT OFFICE.

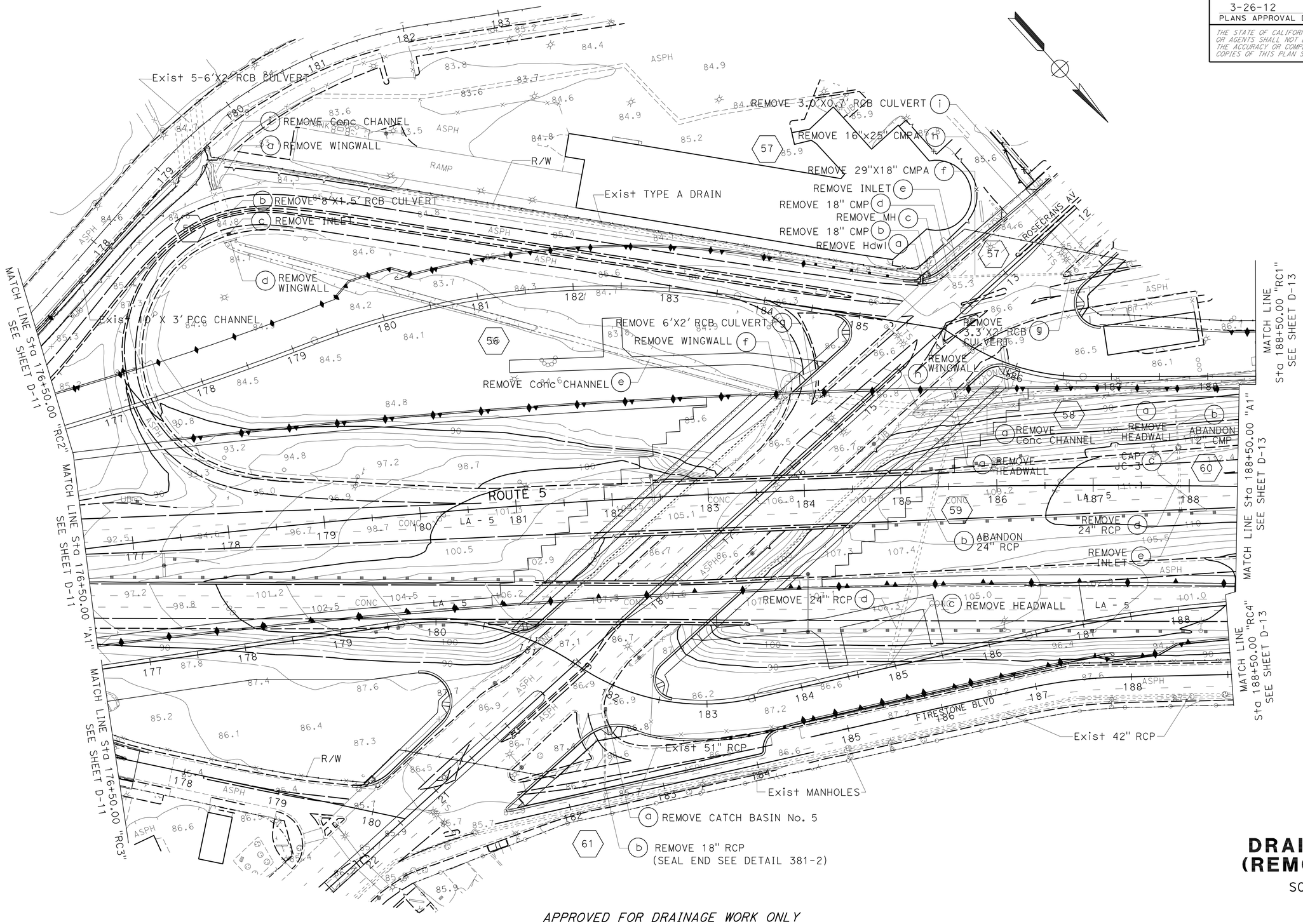

DRAINAGE PLAN (REMOVAL ONLY)

SCALE: 1" = 50'

D-12

APPROVED FOR DRAINAGE WORK ONLY

STATE OF CALIFORNIA - DEPARTMENT OF TRANSPORTATION
Caltrans
HYDRAULICS

FUNCTIONAL SUPERVISOR: JAI P. THAKUR
CALCULATED-DESIGNED BY: MAY P. FUNG
CHECKED BY: RALPH M. SASAKI
REVISED BY
DATE REVISED

LAST REVISION 00-00-00
DATE PLOTTED => 28-MAR-2012
TIME PLOTTED => 08:47

Dist	COUNTY	ROUTE	POST MILES TOTAL PROJECT	SHEET No.	TOTAL SHEETS
07	LA	5	2.4/4.0	125	1288

12-19-11
REGISTERED CIVIL ENGINEER DATE

3-26-12
PLANS APPROVAL DATE

REGISTERED PROFESSIONAL ENGINEER RALPH M. SASAKI No. 30849 Exp. 3/31/12 CIVIL STATE OF CALIFORNIA

THE STATE OF CALIFORNIA OR ITS OFFICERS OR AGENTS SHALL NOT BE RESPONSIBLE FOR THE ACCURACY OR COMPLETENESS OF SCANNED COPIES OF THIS PLAN SHEET.

NOTE:

FOR ACCURATE RIGHT OF WAY DATA, CONTACT RIGHT OF WAY ENGINEERING AT THE DISTRICT OFFICE.

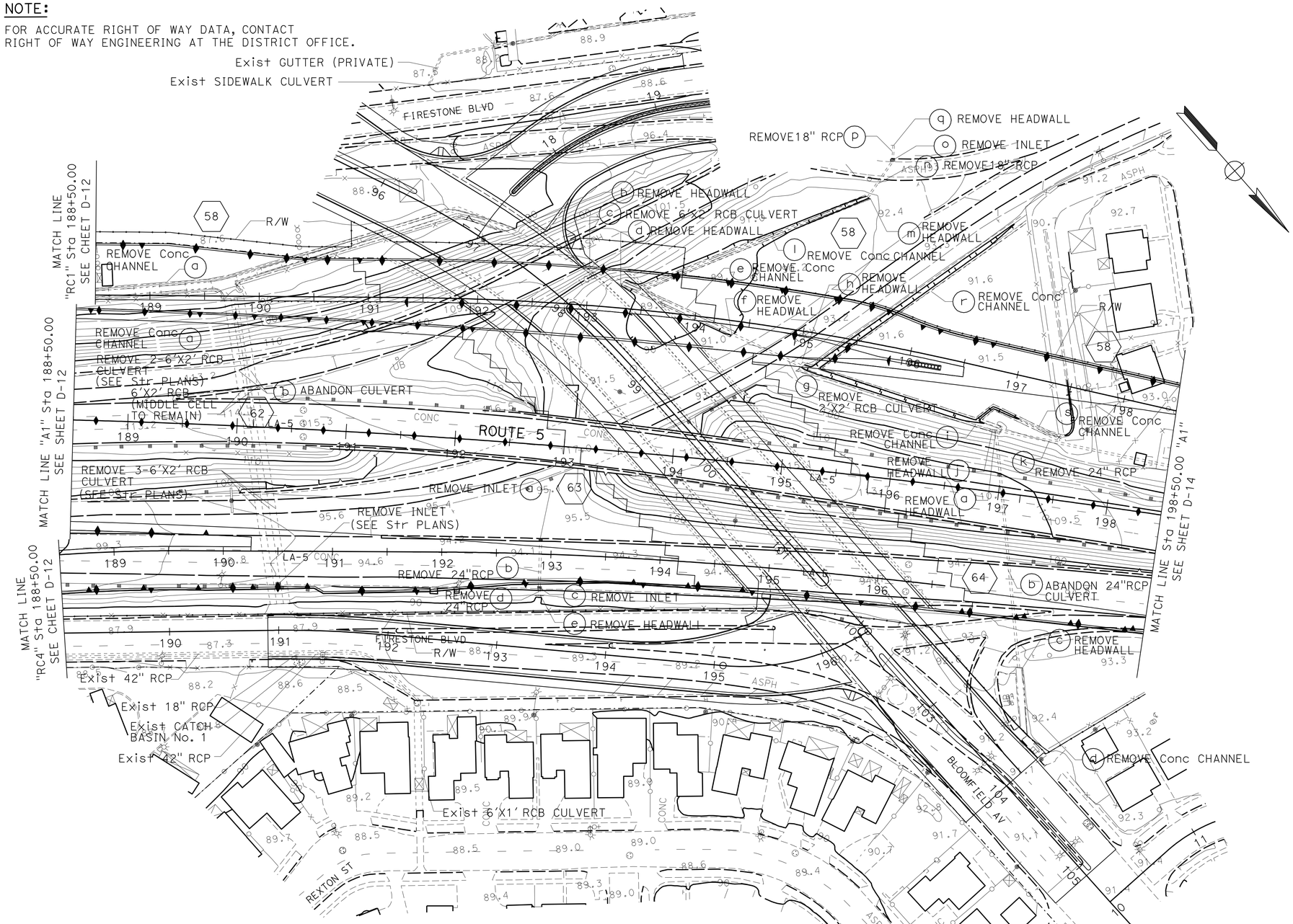

DRAINAGE PLAN (REMOVAL ONLY)

SCALE: 1" = 50'

APPROVED FOR DRAINAGE WORK ONLY

D-13

STATE OF CALIFORNIA - DEPARTMENT OF TRANSPORTATION
Caltrans® HYDRAULICS

FUNCTIONAL SUPERVISOR: JAI P. THAKUR
CALCULATED-DESIGNED BY: MAY P. FUNG
CHECKED BY: RALPH M. SASAKI
REVISED BY
DATE REVISED

LAST REVISION 00-00-00
DATE PLOTTED => 28-MAR-2012
TIME PLOTTED => 08:48

Dist	COUNTY	ROUTE	POST MILES TOTAL PROJECT	SHEET No.	TOTAL SHEETS
07	LA	5	2.4/4.0	126	1288

REGISTERED CIVIL ENGINEER DATE 12-19-11

3-26-12
PLANS APPROVAL DATE

REGISTERED PROFESSIONAL ENGINEER RALPH M. SASAKI No. 30849 Exp. 3/31/12 CIVIL STATE OF CALIFORNIA

THE STATE OF CALIFORNIA OR ITS OFFICERS OR AGENTS SHALL NOT BE RESPONSIBLE FOR THE ACCURACY OR COMPLETENESS OF SCANNED COPIES OF THIS PLAN SHEET.

NOTE:

FOR ACCURATE RIGHT OF WAY DATA, CONTACT RIGHT OF WAY ENGINEERING AT THE DISTRICT OFFICE.

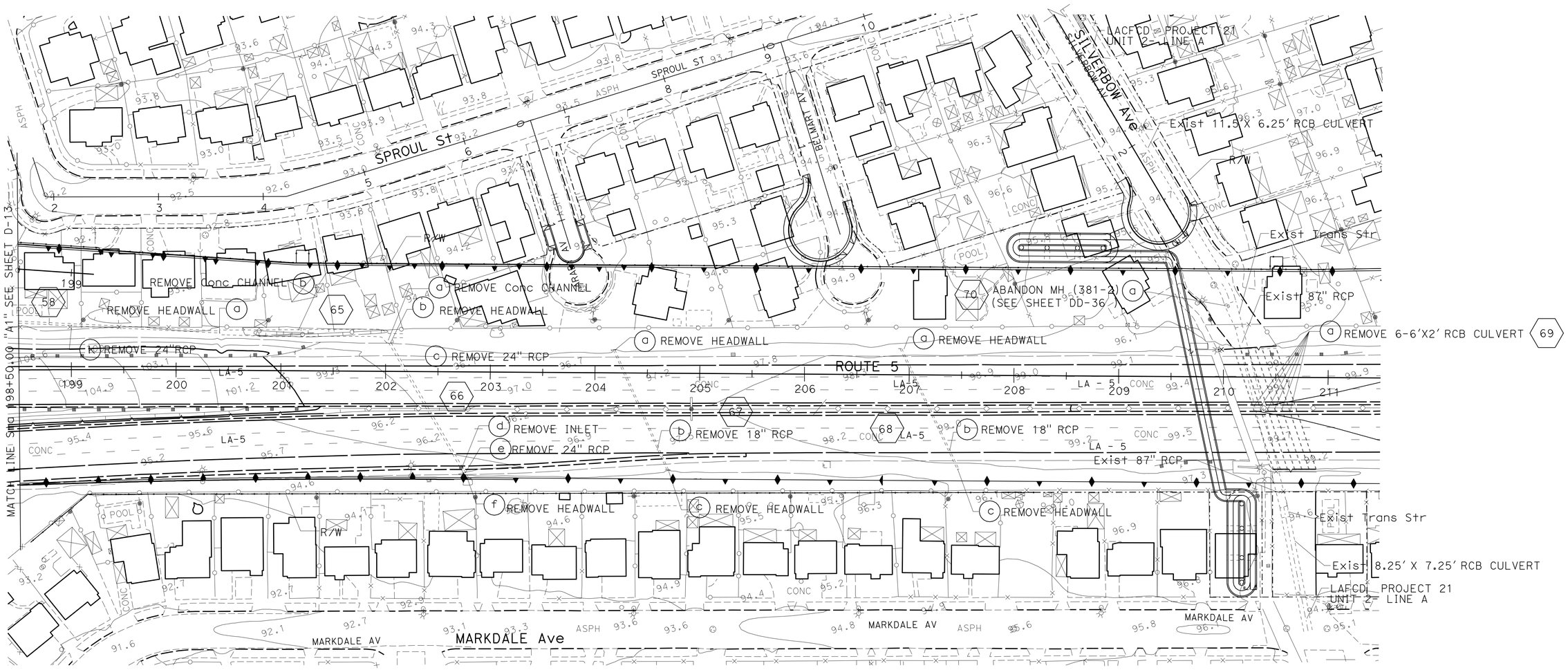

APPROVED FOR DRAINAGE WORK ONLY

DRAINAGE PLAN (REMOVAL ONLY)

SCALE: 1" = 50'

D-14

STATE OF CALIFORNIA - DEPARTMENT OF TRANSPORTATION

Caltrans® HYDRAULICS

FUNCTIONAL SUPERVISOR: JAI P. THAKUR

CALCULATED-DESIGNED BY: MAY P. FUNG

CHECKED BY: RALPH M. SASAKI

REVISED BY / DATE REVISED

LAST REVISION 00-00-00

DATE PLOTTED => 28-MAR-2012
TIME PLOTTED => 08:48

Dist	COUNTY	ROUTE	POST MILES TOTAL PROJECT	SHEET No.	TOTAL SHEETS
07	LA	5	2.4/4.0	127	1288

REGISTERED CIVIL ENGINEER 12-19-11 DATE

3-26-12
PLANS APPROVAL DATE

REGISTERED PROFESSIONAL ENGINEER RALPH M. SASAKI No. 30849 Exp. 3/31/12 CIVIL STATE OF CALIFORNIA

THE STATE OF CALIFORNIA OR ITS OFFICERS OR AGENTS SHALL NOT BE RESPONSIBLE FOR THE ACCURACY OR COMPLETENESS OF SCANNED COPIES OF THIS PLAN SHEET.

NOTES:

1. FOR ACCURATE RIGHT OF WAY DATA, CONTACT RIGHT OF WAY ENGINEERING AT THE DISTRICT OFFICE.
2. SYSTEM (19) ARE SHOWN ON SHEETS DP-12 TO DP-14 FOR CLARITY.

CURVE DATA

No.	R	Δ	T	L
1	150.00′	14°27′19"	19.02′	37.84′
2	150.00′	19°51′55"	26.27′	52.01′
3	830.00′	6°4′26"	44.03′	87.99′
4	5.00′	83°43′32"	4.48′	7.31′
5	10.00′	62°7′25"	6.02′	10.84′

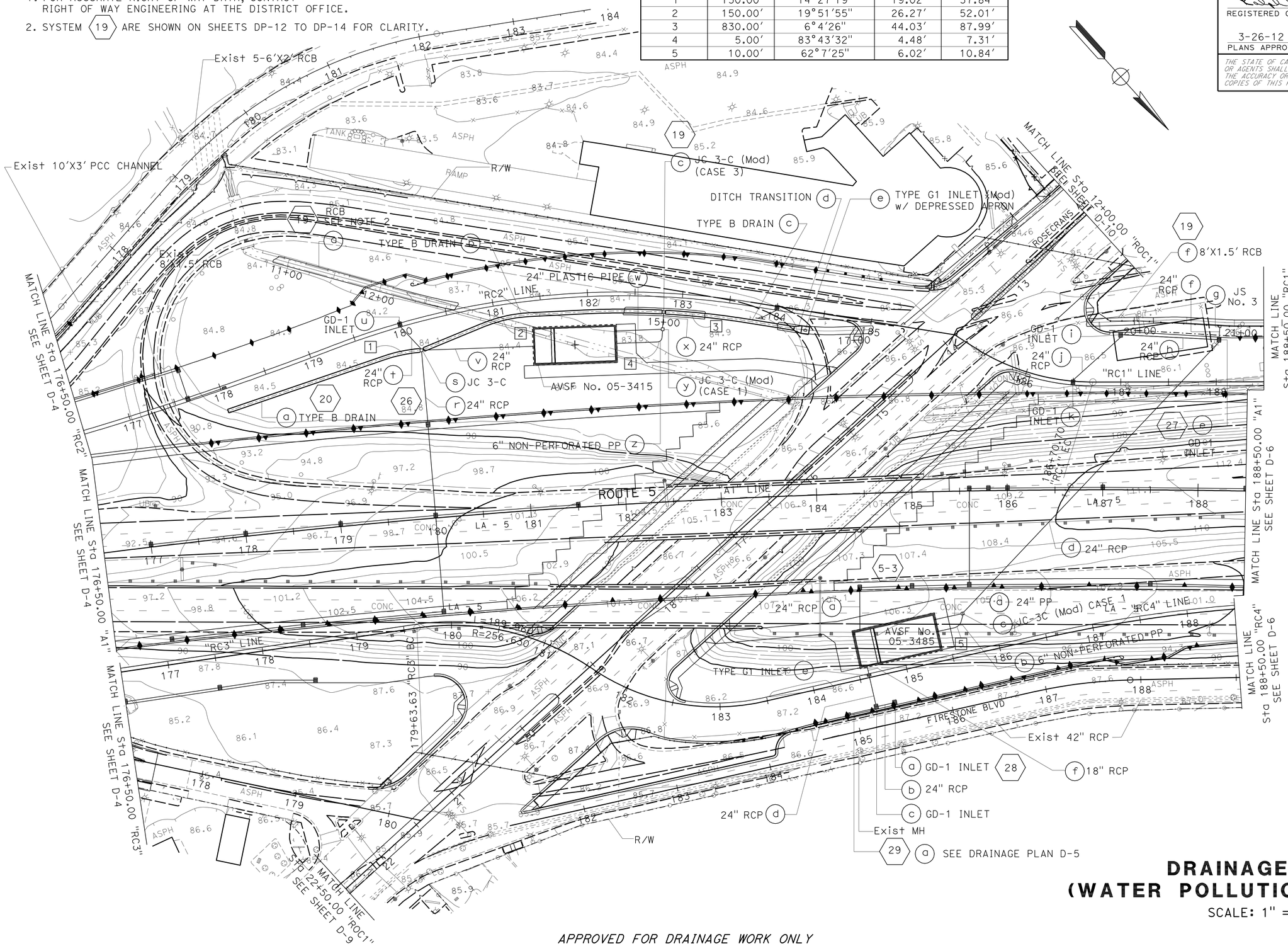

DRAINAGE PLAN (WATER POLLUTION CONTROL)

SCALE: 1" = 50′

APPROVED FOR DRAINAGE WORK ONLY

D-15

STATE OF CALIFORNIA - DEPARTMENT OF TRANSPORTATION
Caltrans® HYDRAULICS

FUNCTIONAL SUPERVISOR: JAI P. THAKUR
CALCULATED-DESIGNED BY: MAY P. FUNG
CHECKED BY: RALPH M. SASAKI
REVISED BY / DATE REVISED

LAST REVISION 00-00-00
DATE PLOTTED => 28-MAR-2012
TIME PLOTTED => 08:48

Dist	COUNTY	ROUTE	POST MILES TOTAL PROJECT	SHEET No.	TOTAL SHEETS
07	LA	5	2.4/4.0	128	1288

REGISTERED CIVIL ENGINEER 12-19-11 DATE

3-26-12
PLANS APPROVAL DATE

REGISTERED PROFESSIONAL ENGINEER RALPH M. SASAKI No. 30849 Exp. 3/31/12 CIVIL STATE OF CALIFORNIA

THE STATE OF CALIFORNIA OR ITS OFFICERS OR AGENTS SHALL NOT BE RESPONSIBLE FOR THE ACCURACY OR COMPLETENESS OF SCANNED COPIES OF THIS PLAN SHEET.

NOTE:

1. THE CONTRACTOR SHALL VERIFY LOCATIONS AND ELEVATIONS OF EXISTING DRAINAGE SYSTEMS BEFORE COMMENCEMENT OF WORK.

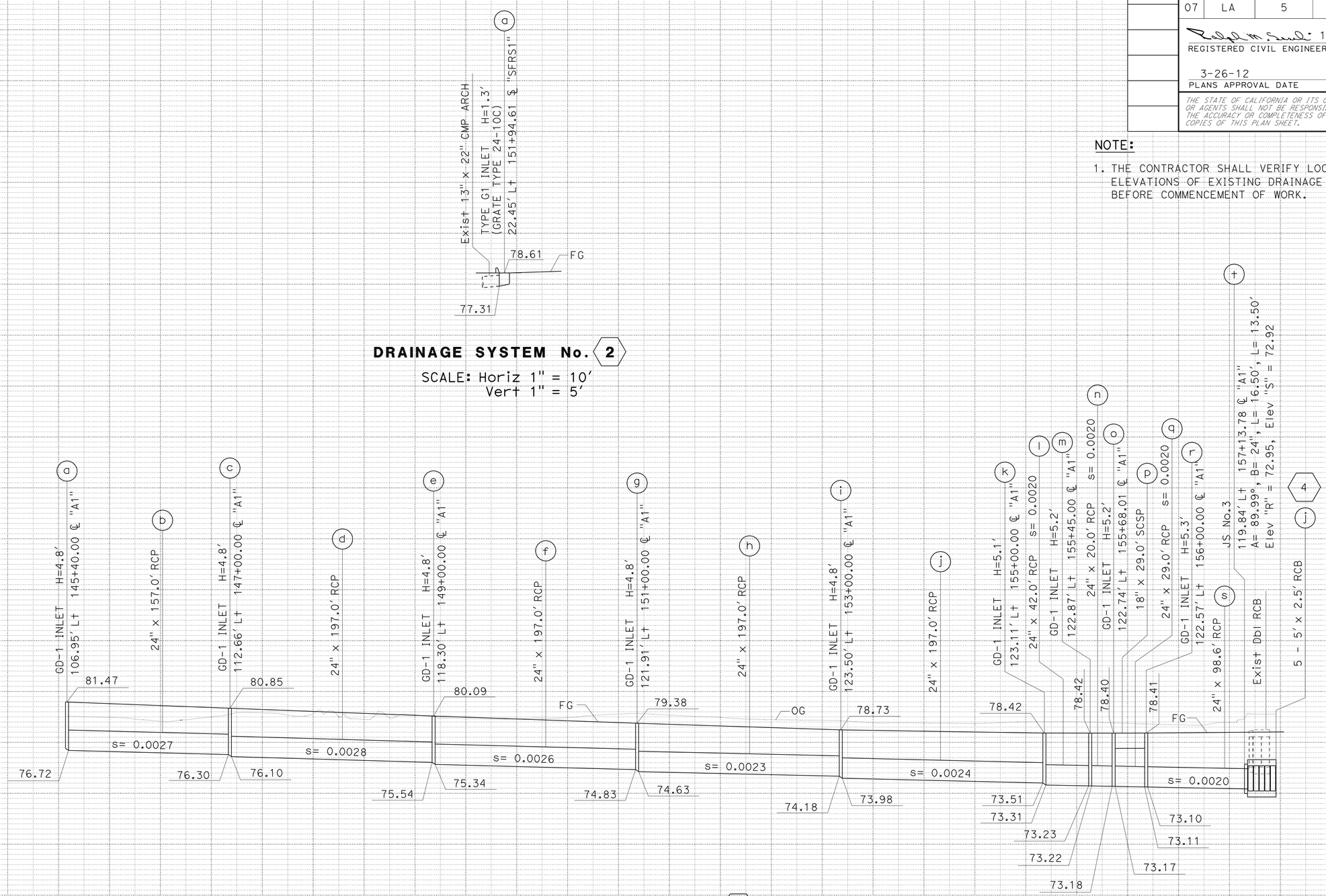

DRAINAGE SYSTEM No. 2

SCALE: Horiz 1" = 10'
Vert 1" = 5'

DRAINAGE SYSTEM No. 1

SCALE: Horiz 1" = 10'
Vert 1" = 5'

DRAINAGE PROFILES

SCALE AS SHOWN

DP-1

STATE OF CALIFORNIA - DEPARTMENT OF TRANSPORTATION
Caltrans® HYDRAULICS

FUNCTIONAL SUPERVISOR: JAI P. THAKUR
CALCULATED-DESIGNED BY: MARTIN CORONADO
CHECKED BY: RALPH M. SASAKI
REVISED BY
DATE REVISED

LAST REVISION 00-00-00
DATE PLOTTED => 26-MAR-2012
TIME PLOTTED => 08:48

Dist	COUNTY	ROUTE	POST MILES TOTAL PROJECT	SHEET No.	TOTAL SHEETS
07	LA	5	2.4/4.0	129	1288

REGISTERED CIVIL ENGINEER DATE 12-19-11

3-26-12
PLANS APPROVAL DATE

REGISTERED PROFESSIONAL ENGINEER RALPH M. SASAKI No. 30849 Exp. 3/31/12 CIVIL STATE OF CALIFORNIA

THE STATE OF CALIFORNIA OR ITS OFFICERS OR AGENTS SHALL NOT BE RESPONSIBLE FOR THE ACCURACY OR COMPLETENESS OF SCANNED COPIES OF THIS PLAN SHEET.

NOTE:

1. THE CONTRACTOR SHALL VERIFY LOCATIONS AND ELEVATIONS OF EXISTING DRAINAGE SYSTEMS BEFORE COMMENCEMENT OF WORK.

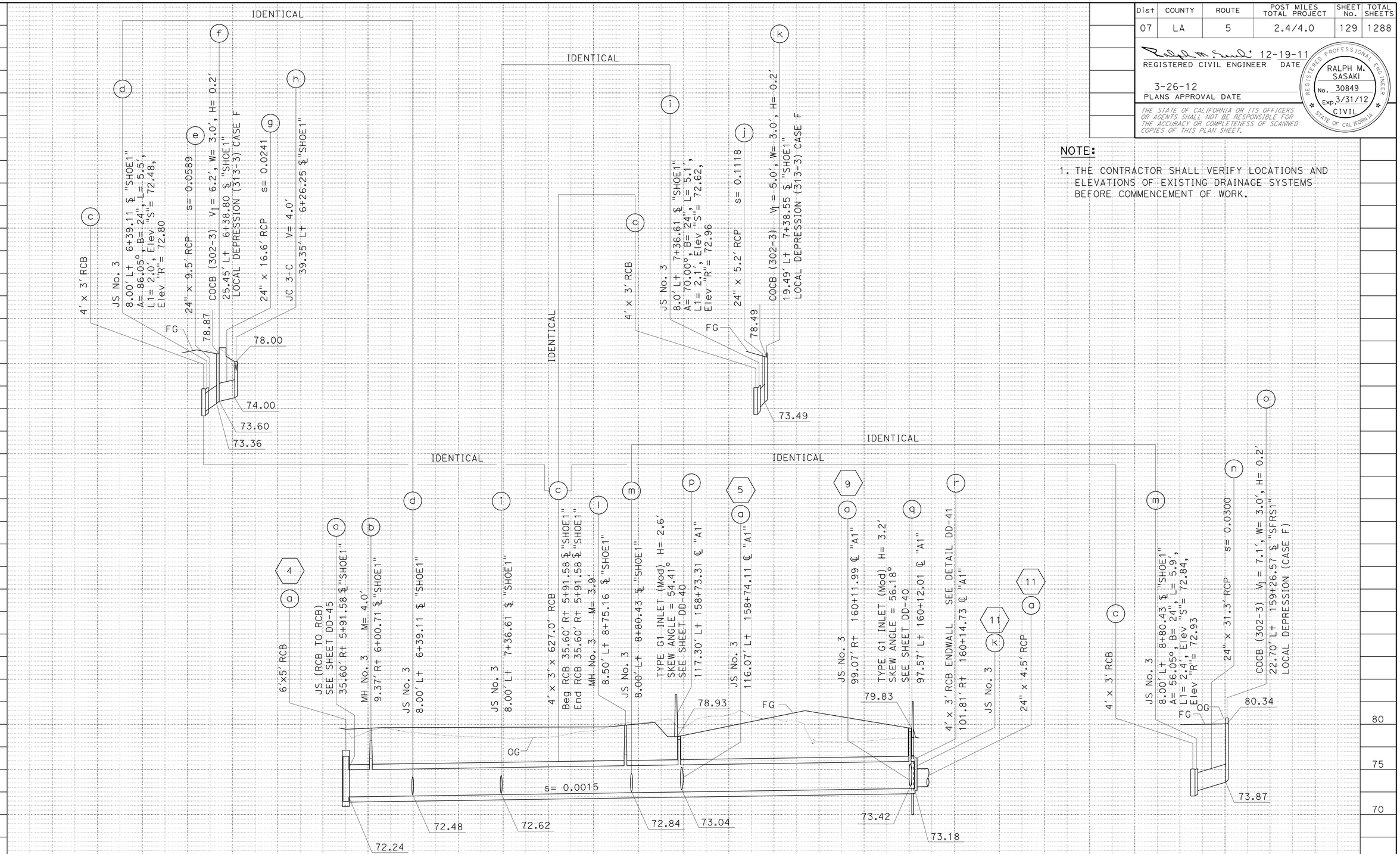

DRAINAGE SYSTEM No. 3

SCALE: Horiz 1" = 50'
Vert 1" = 5'

DRAINAGE PROFILES

SCALE AS SHOWN

DP-2

STATE OF CALIFORNIA - DEPARTMENT OF TRANSPORTATION
Caltrans HYDRAULICS

FUNCTIONAL SUPERVISOR: JAI P. THAKUR
CALCULATED-DESIGNED BY: MARTIN CORONADO
CHECKED BY: RALPH M. SASAKI
REVISED BY / DATE REVISED

LAST REVISION 00-00-00 | DATE PLOTTED => 28-MAR-2012 | TIME PLOTTED => 08:48

Dist	COUNTY	ROUTE	POST MILES TOTAL PROJECT	SHEET No.	TOTAL SHEETS
07	LA	5	2.4/4.0	130	1288

REGISTERED CIVIL ENGINEER 12-19-11 DATE

3-26-12
PLANS APPROVAL DATE

REGISTERED PROFESSIONAL ENGINEER RALPH M. SASAKI No. 30849 Exp. 3/31/12 CIVIL STATE OF CALIFORNIA

THE STATE OF CALIFORNIA OR ITS OFFICERS OR AGENTS SHALL NOT BE RESPONSIBLE FOR THE ACCURACY OR COMPLETENESS OF SCANNED COPIES OF THIS PLAN SHEET.

NOTE:

1. THE CONTRACTOR SHALL VERIFY LOCATIONS AND ELEVATIONS OF EXISTING DRAINAGE SYSTEMS BEFORE COMMENCEMENT OF WORK.

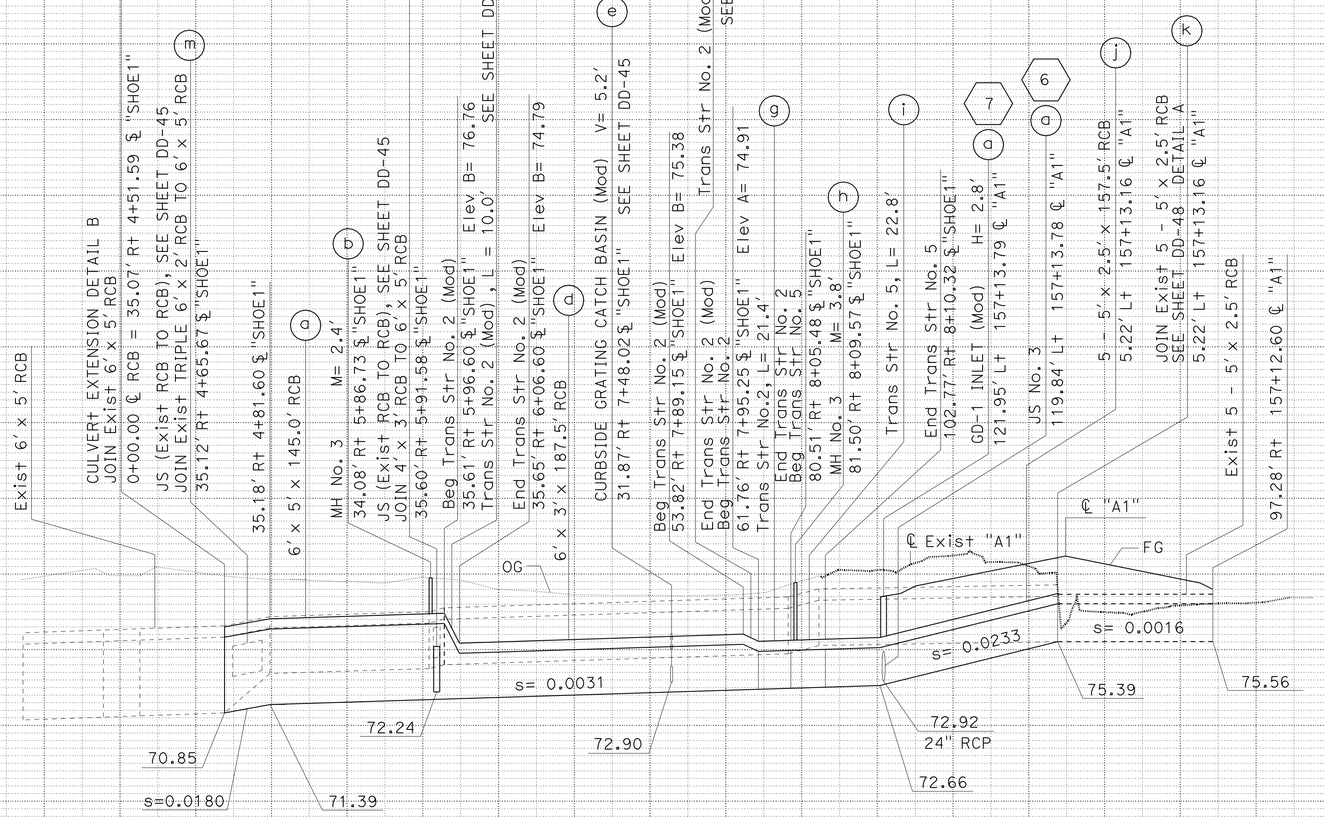

DRAINAGE SYSTEM No. 4

SCALE: Horiz 1" = 50'
Vert 1" = 5'

DRAINAGE PROFILES

SCALE AS SHOWN

DP-3

STATE OF CALIFORNIA - DEPARTMENT OF TRANSPORTATION
Caltrans HYDRAULICS

FUNCTIONAL SUPERVISOR: JAI P. THAKUR
CALCULATED-DESIGNED BY: MARTIN CORONADO
CHECKED BY: RALPH M. SASAKI
REVISED BY
DATE REVISED

LAST REVISION 00-00-00 | DATE PLOTTED => 28-MAR-2012 | TIME PLOTTED => 08:48

Dist	COUNTY	ROUTE	POST MILES TOTAL PROJECT	SHEET No.	TOTAL SHEETS
07	LA	5	2.4/4.0	131	1288

REGISTERED CIVIL ENGINEER DATE 12-19-11

3-26-12
PLANS APPROVAL DATE

REGISTERED PROFESSIONAL ENGINEER RALPH M. SASAKI No. 30849 Exp. 3/31/12 CIVIL STATE OF CALIFORNIA

THE STATE OF CALIFORNIA OR ITS OFFICERS OR AGENTS SHALL NOT BE RESPONSIBLE FOR THE ACCURACY OR COMPLETENESS OF SCANNED COPIES OF THIS PLAN SHEET.

STATE OF CALIFORNIA - DEPARTMENT OF TRANSPORTATION
Caltrans HYDRAULICS

FUNCTIONAL SUPERVISOR: JAI P. THAKUR
CALCULATED-DESIGNED BY: MARTIN CORONADO
CHECKED BY: RALPH M. SASAKI
REVISED BY / DATE REVISED

LAST REVISION 00-00-00
DATE PLOTTED => 28-MAR-2012
TIME PLOTTED => 08:48

Dist	COUNTY	ROUTE	POST MILES TOTAL PROJECT	SHEET No.	TOTAL SHEETS
07	LA	5	2.4/4.0	132	1288

REGISTERED CIVIL ENGINEER 12-19-11 DATE

3-26-12
PLANS APPROVAL DATE

REGISTERED PROFESSIONAL ENGINEER RALPH M. SASAKI No. 30849 Exp. 3/31/12 CIVIL STATE OF CALIFORNIA

THE STATE OF CALIFORNIA OR ITS OFFICERS OR AGENTS SHALL NOT BE RESPONSIBLE FOR THE ACCURACY OR COMPLETENESS OF SCANNED COPIES OF THIS PLAN SHEET.

NOTE:

1. THE CONTRACTOR SHALL VERIFY LOCATIONS AND ELEVATIONS OF EXISTING DRAINAGE SYSTEMS BEFORE COMMENCEMENT OF WORK.

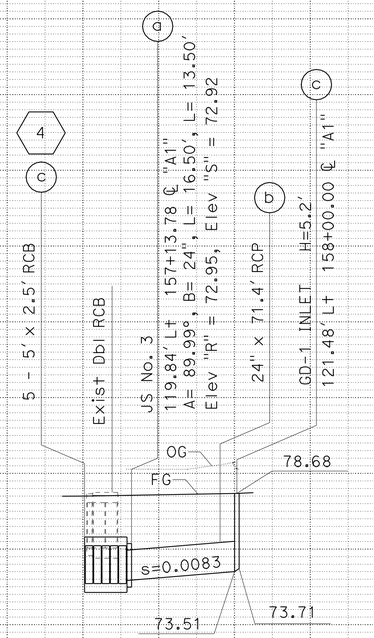

DRAINAGE SYSTEM No. 6

SCALE: Horiz 1" = 50'
Vert 1" = 5'

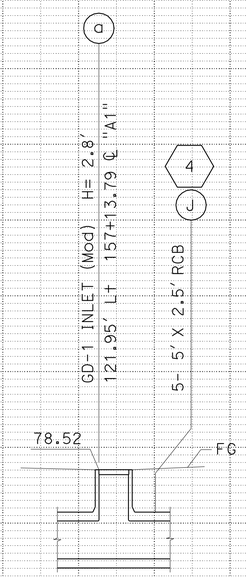

DRAINAGE SYSTEM No. 7

SCALE: Horiz 1" = 10'
Vert 1" = 5'

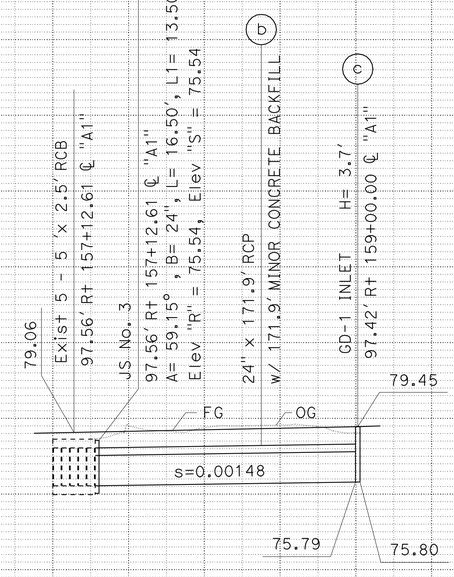

DRAINAGE SYSTEM No. 8

SCALE: Horiz 1" = 50'
Vert 1" = 5'

DRAINAGE PROFILES

SCALE AS SHOWN

DP-5

STATE OF CALIFORNIA - DEPARTMENT OF TRANSPORTATION
Caltrans® HYDRAULICS

FUNCTIONAL SUPERVISOR: JAI P. THAKUR
CALCULATED-DESIGNED BY: MARTIN CORONADO
CHECKED BY: RALPH M. SASAKI
REVISED BY
DATE REVISED

LAST REVISION 00-00-00
DATE PLOTTED => 28-MAR-2012
TIME PLOTTED => 08:49

Dist	COUNTY	ROUTE	POST MILES TOTAL PROJECT	SHEET No.	TOTAL SHEETS
07	LA	5	2.4/4.0	133	1288

REGISTERED CIVIL ENGINEER DATE 12-19-11

PLANS APPROVAL DATE 3-26-12

REGISTERED PROFESSIONAL ENGINEER RALPH M. SASAKI No. 30849 Exp. 3/31/12 CIVIL STATE OF CALIFORNIA

THE STATE OF CALIFORNIA OR ITS OFFICERS OR AGENTS SHALL NOT BE RESPONSIBLE FOR THE ACCURACY OR COMPLETENESS OF SCANNED COPIES OF THIS PLAN SHEET.

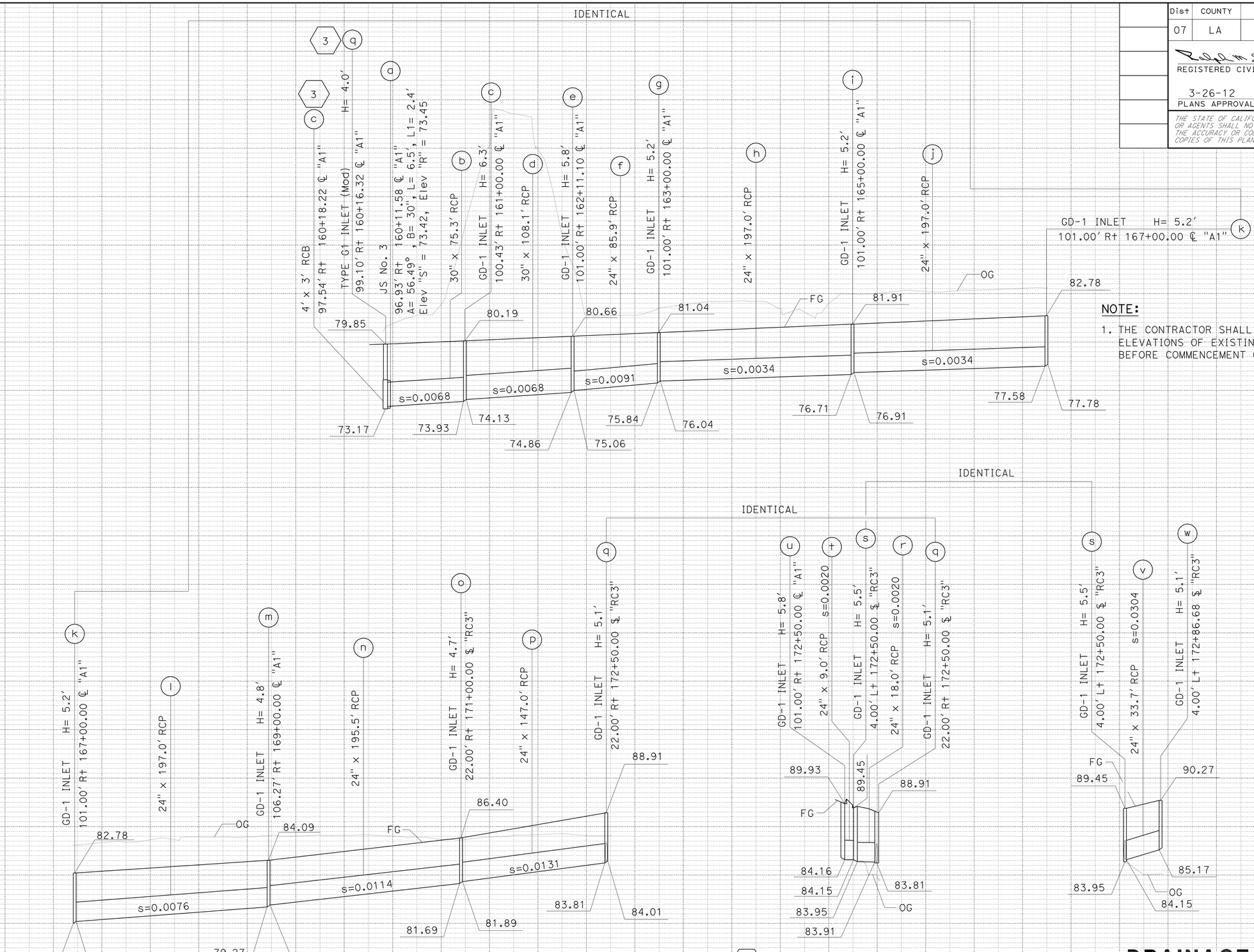

DRAINAGE SYSTEM No. 9

SCALE: Horiz 1" = 50'
Vert 1" = 5'

DRAINAGE PROFILES

SCALE AS SHOWN

DP-6

STATE OF CALIFORNIA - DEPARTMENT OF TRANSPORTATION
Caltrans HYDRAULICS

FUNCTIONAL SUPERVISOR: JAI P. THAKUR

CALCULATED-DESIGNED BY: MARTIN CORONADO
CHECKED BY: RALPH M. SASAKI

REVISED BY / DATE REVISED

LAST REVISION 00-00-00 | DATE PLOTTED => 28-MAR-2012 | TIME PLOTTED => 08:49

Dist	COUNTY	ROUTE	POST MILES TOTAL PROJECT	SHEET No.	TOTAL SHEETS
07	LA	5	2.4/4.0	134	1288

REGISTERED CIVIL ENGINEER DATE 12-19-11

3-26-12
PLANS APPROVAL DATE

REGISTERED PROFESSIONAL ENGINEER RALPH M. SASAKI No. 30849 Exp. 3/31/12 CIVIL STATE OF CALIFORNIA

THE STATE OF CALIFORNIA OR ITS OFFICERS OR AGENTS SHALL NOT BE RESPONSIBLE FOR THE ACCURACY OR COMPLETENESS OF SCANNED COPIES OF THIS PLAN SHEET.

NOTE:

1. THE CONTRACTOR SHALL VERIFY LOCATIONS AND ELEVATIONS OF EXISTING DRAINAGE SYSTEMS BEFORE COMMENCEMENT OF WORK.

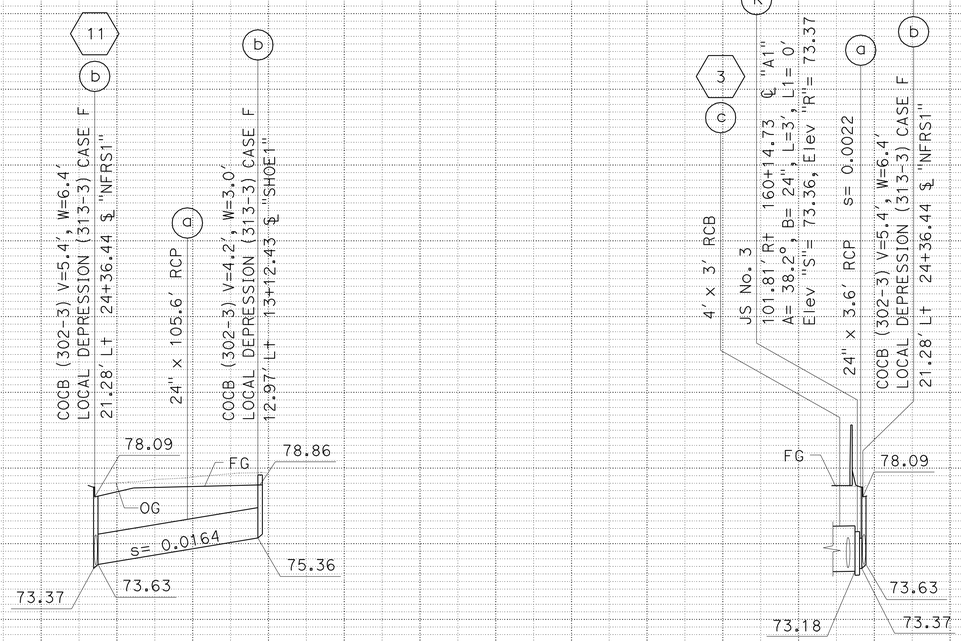

DRAINAGE SYSTEM No. 10

SCALE: Horiz 1" = 50'
Vert 1" = 5'

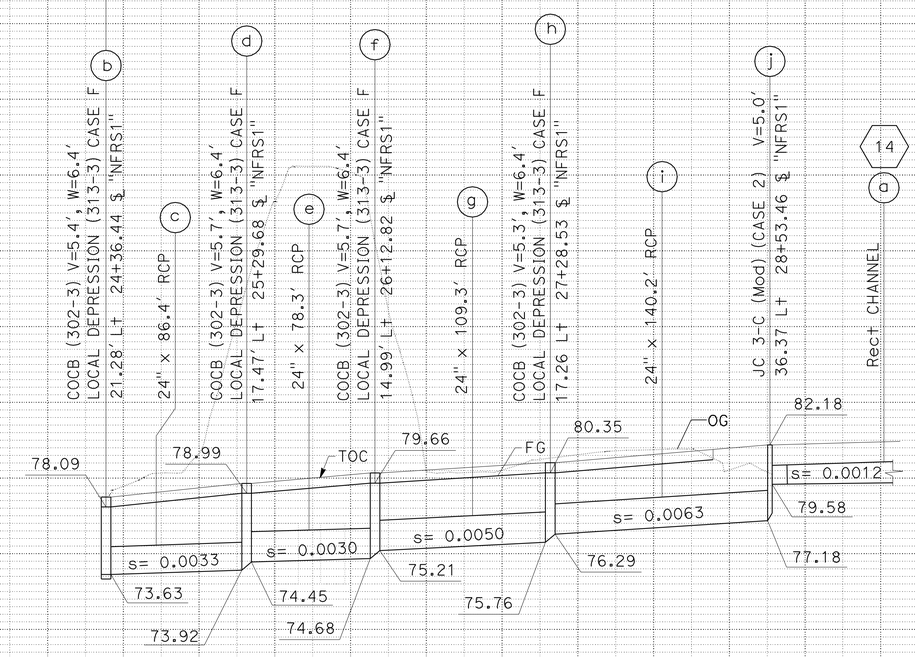

DRAINAGE SYSTEM No. 11

SCALE: Horiz 1" = 50'
Vert 1" = 5'

DRAINAGE PROFILES

SCALE AS SHOWN

DP-7

STATE OF CALIFORNIA - DEPARTMENT OF TRANSPORTATION
Caltrans® HYDRAULICS

FUNCTIONAL SUPERVISOR: JAI P. THAKUR
CALCULATED-DESIGNED BY: MARTIN CORONADO
CHECKED BY: RALPH M. SASAKI
REVISED BY
DATE REVISED

LAST REVISION 00-00-00
DATE PLOTTED => 26-MAR-2012
TIME PLOTTED => 08:49

Dist	COUNTY	ROUTE	POST MILES TOTAL PROJECT	SHEET No.	TOTAL SHEETS
07	LA	5	2.4/4.0	135	1288

REGISTERED CIVIL ENGINEER 12-19-11 DATE

3-26-12
PLANS APPROVAL DATE

REGISTERED PROFESSIONAL ENGINEER RALPH M. SASAKI No. 30849 Exp. 3/31/12 CIVIL STATE OF CALIFORNIA

THE STATE OF CALIFORNIA OR ITS OFFICERS OR AGENTS SHALL NOT BE RESPONSIBLE FOR THE ACCURACY OR COMPLETENESS OF SCANNED COPIES OF THIS PLAN SHEET.

NOTE:

1. THE CONTRACTOR SHALL VERIFY LOCATIONS AND ELEVATIONS OF EXISTING DRAINAGE SYSTEMS BEFORE COMMENCEMENT OF WORK.

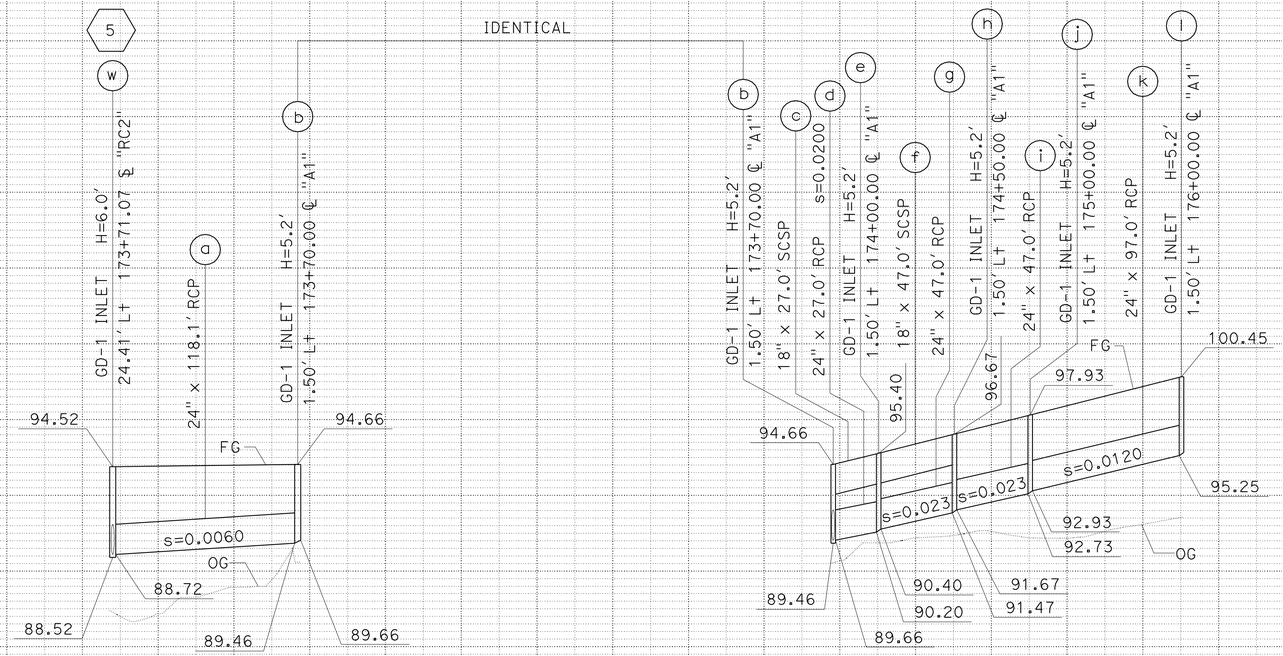

DRAINAGE SYSTEM No. 12

SCALE: Horiz 1" = 50′
Vert 1" = 5′

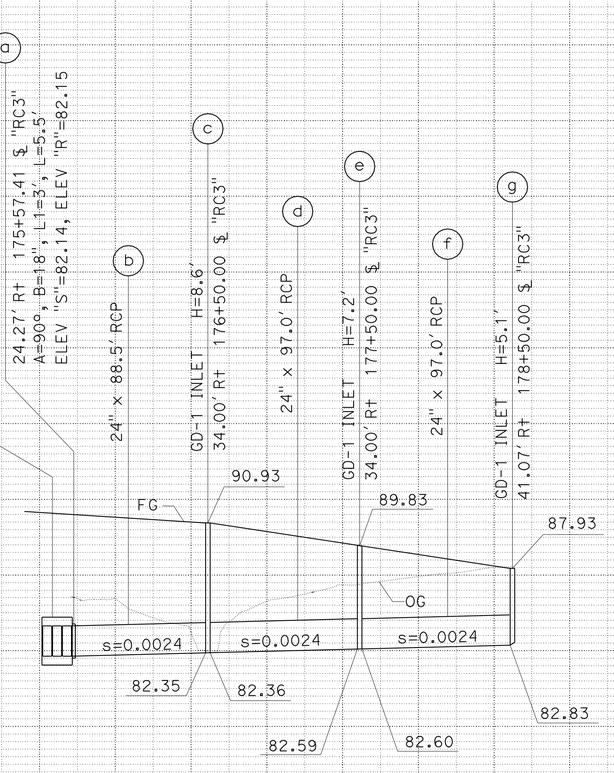

DRAINAGE SYSTEM No. 13

SCALE: Horiz 1" = 50′
Vert 1" = 5′

DRAINAGE PROFILES

SCALE AS SHOWN

DP-8

STATE OF CALIFORNIA - DEPARTMENT OF TRANSPORTATION
Caltrans® HYDRAULICS

FUNCTIONAL SUPERVISOR: JAI P. THAKUR
CALCULATED-DESIGNED BY: MARTIN CORONADO
CHECKED BY: RALPH M. SASAKI
REVISED BY
DATE REVISED

LAST REVISION 00-00-00 | DATE PLOTTED => 28-MAR-2012 | TIME PLOTTED => 08:49

Dist	COUNTY	ROUTE	POST MILES TOTAL PROJECT	SHEET No.	TOTAL SHEETS
07	LA	5	2.4/4.0	136	1288

REGISTERED CIVIL ENGINEER 12-19-11 DATE

3-26-12
PLANS APPROVAL DATE

REGISTERED PROFESSIONAL ENGINEER RALPH M. SASAKI No. 30849 Exp. 3/31/12 CIVIL STATE OF CALIFORNIA

THE STATE OF CALIFORNIA OR ITS OFFICERS OR AGENTS SHALL NOT BE RESPONSIBLE FOR THE ACCURACY OR COMPLETENESS OF SCANNED COPIES OF THIS PLAN SHEET.

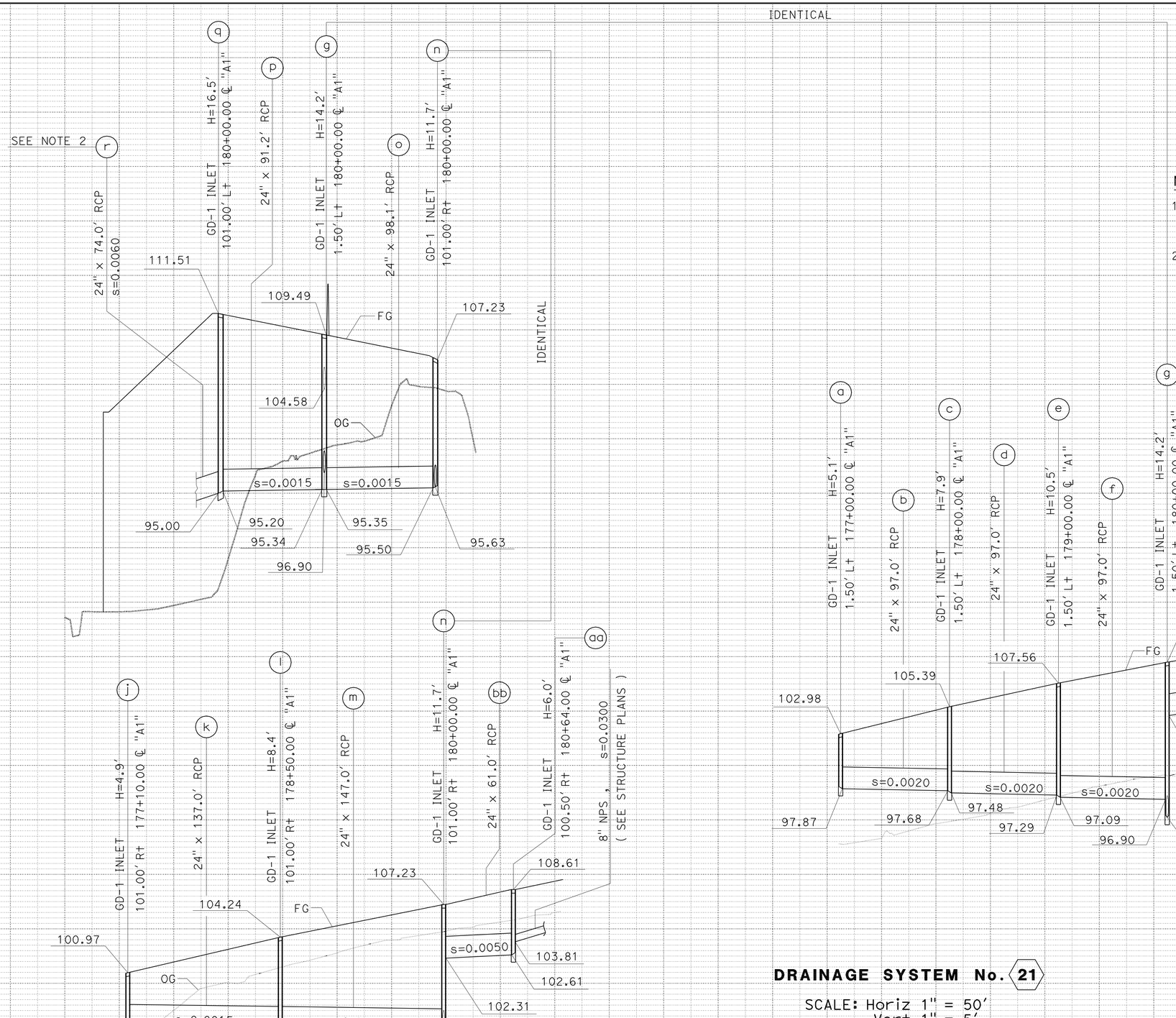

NOTES:

1. THE CONTRACTOR SHALL VERIFY LOCATIONS AND ELEVATIONS OF EXISTING DRAINAGE SYSTEMS BEFORE COMMENCEMENT OF WORK.
2. SEE SHEET DP-40 FOR CONTINUATION OF DRAINAGE SYSTEM 21.

DRAINAGE SYSTEM No. 21

SCALE: Horiz 1" = 50'
Vert 1" = 5'

DRAINAGE PROFILES

SCALE AS SHOWN

DP-9

STATE OF CALIFORNIA - DEPARTMENT OF TRANSPORTATION
Caltrans HYDRAULICS

FUNCTIONAL SUPERVISOR: JAI P. THAKUR
CALCULATED-DESIGNED BY: MARTIN CORONADO
CHECKED BY: RALPH M. SASAKI
REVISED BY / DATE REVISED

LAST REVISION 00-00-00
DATE PLOTTED => 28-MAR-2012
TIME PLOTTED => 08:49

Dist	COUNTY	ROUTE	POST MILES TOTAL PROJECT	SHEET No.	TOTAL SHEETS
07	LA	5	2.4/4.0	137	1288

REGISTERED CIVIL ENGINEER 12-19-11 DATE

3-26-12
PLANS APPROVAL DATE

REGISTERED PROFESSIONAL ENGINEER RALPH M. SASAKI No. 30849 Exp. 3/31/12 CIVIL STATE OF CALIFORNIA

THE STATE OF CALIFORNIA OR ITS OFFICERS OR AGENTS SHALL NOT BE RESPONSIBLE FOR THE ACCURACY OR COMPLETENESS OF SCANNED COPIES OF THIS PLAN SHEET.

NOTE:

1. THE CONTRACTOR SHALL VERIFY LOCATIONS AND ELEVATIONS OF EXISTING DRAINAGE SYSTEMS BEFORE COMMENCEMENT OF WORK.

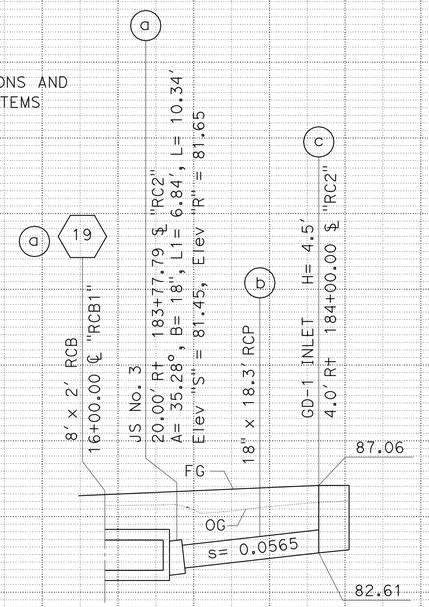

DRAINAGE SYSTEM No. 22

SCALE: Horiz 1" = 10'
Vert 1" = 5'

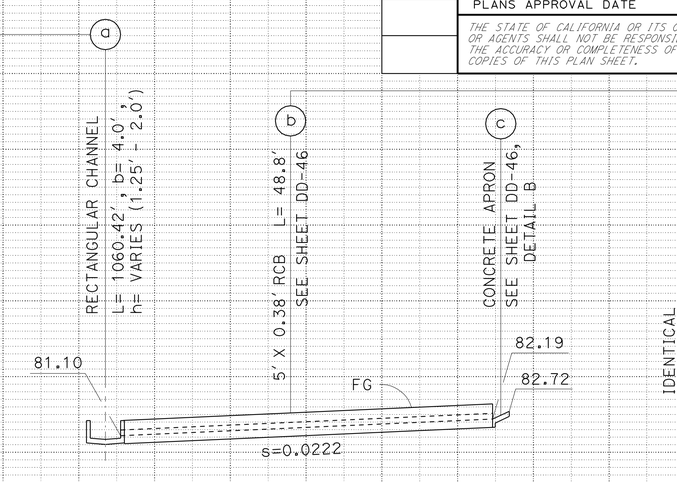

DRAINAGE SYSTEM No. 14

SCALE: Horiz 1" = 10'
Vert 1" = 5'

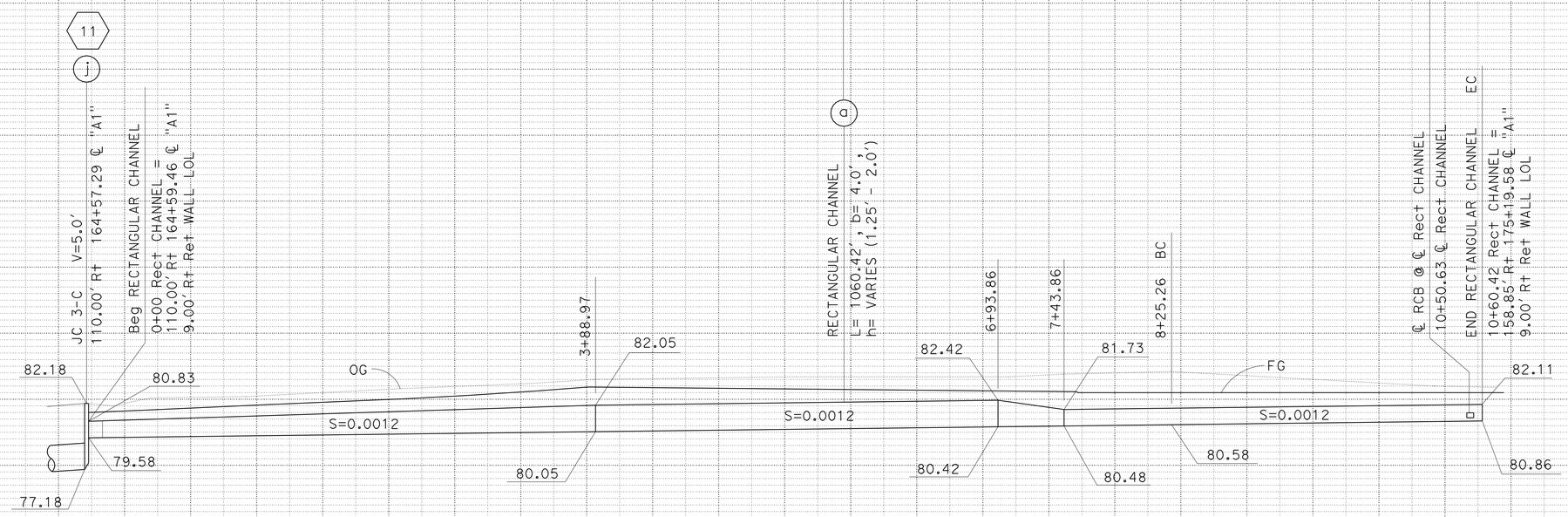

DRAINAGE SYSTEM No. 14

SCALE: Horiz 1" = 50'
Vert 1" = 5'

DRAINAGE PROFILES

SCALE AS SHOWN

DP-10

STATE OF CALIFORNIA - DEPARTMENT OF TRANSPORTATION
Caltrans® HYDRAULICS

FUNCTIONAL SUPERVISOR: JAI P. THAKUR
CALCULATED-DESIGNED BY: MARTIN CORONADO
CHECKED BY: RALPH M. SASAKI
REVISED BY / DATE REVISED

LAST REVISION 00-00-00 | DATE PLOTTED => 28-MAR-2012 | TIME PLOTTED => 08:49

Dist	COUNTY	ROUTE	POST MILES TOTAL PROJECT	SHEET No.	TOTAL SHEETS
07	LA	5	2.4/4.0	138	1288

REGISTERED CIVIL ENGINEER 12-19-11 DATE

3-26-12
PLANS APPROVAL DATE

REGISTERED PROFESSIONAL ENGINEER RALPH M. SASAKI No. 30849 Exp. 3/31/12 CIVIL STATE OF CALIFORNIA

THE STATE OF CALIFORNIA OR ITS OFFICERS OR AGENTS SHALL NOT BE RESPONSIBLE FOR THE ACCURACY OR COMPLETENESS OF SCANNED COPIES OF THIS PLAN SHEET.

NOTE:

1. THE CONTRACTOR SHALL VERIFY LOCATIONS AND ELEVATIONS OF EXISTING DRAINAGE SYSTEMS BEFORE COMMENCEMENT OF WORK.

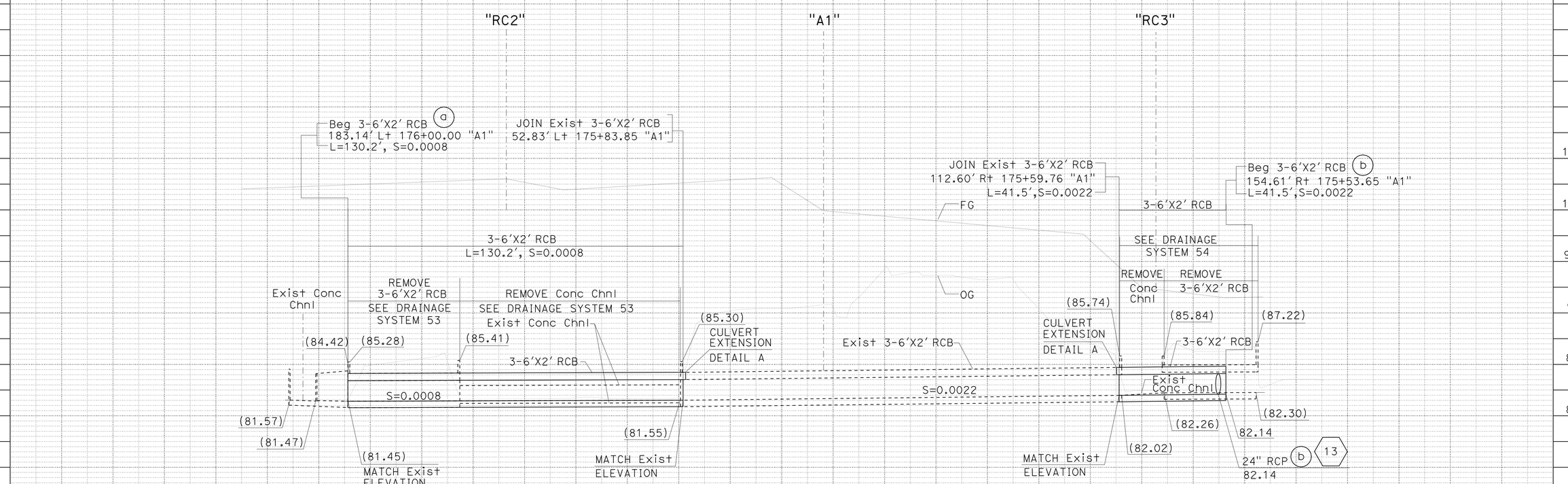

DRAINAGE SYSTEM No. 16
(RCB - CENTER CELL ℄)

SCALE: Horiz 1" = 20'
Vert 1" = 5'

DRAINAGE PROFILES

SCALE AS SHOWN

DP-11

STATE OF CALIFORNIA - DEPARTMENT OF TRANSPORTATION
Caltrans® HYDRAULICS

FUNCTIONAL SUPERVISOR: JAI P. THAKUR
CALCULATED-DESIGNED BY: MAY P. FUNG
CHECKED BY: RALPH M. SASAKI
REVISED BY
DATE REVISED

LAST REVISION 00-00-00 | DATE PLOTTED => 28-MAR-2012 | TIME PLOTTED => 08:49

Dist	COUNTY	ROUTE	POST MILES TOTAL PROJECT	SHEET No.	TOTAL SHEETS
07	LA	5	2.4/4.0	139	1288

REGISTERED CIVIL ENGINEER 12-19-11 DATE

3-26-12
PLANS APPROVAL DATE

REGISTERED PROFESSIONAL ENGINEER RALPH M. SASAKI No. 30849 Exp. 3/31/12 CIVIL STATE OF CALIFORNIA

THE STATE OF CALIFORNIA OR ITS OFFICERS OR AGENTS SHALL NOT BE RESPONSIBLE FOR THE ACCURACY OR COMPLETENESS OF SCANNED COPIES OF THIS PLAN SHEET.

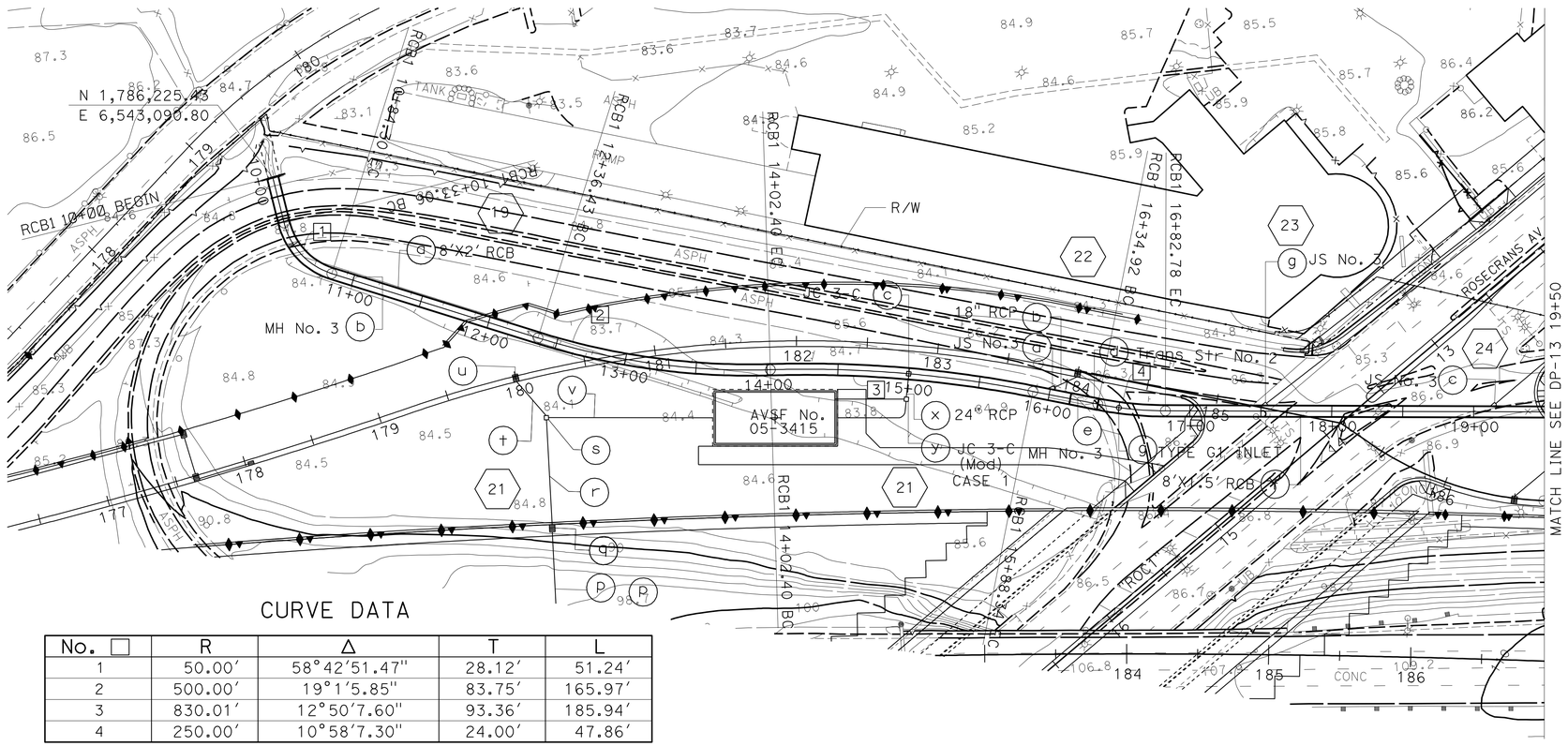

CURVE DATA

No.	R	Δ	T	L
1	50.00′	58°42′51.47"	28.12′	51.24′
2	500.00′	19°1′5.85"	83.75′	165.97′
3	830.01′	12°50′7.60"	93.36′	185.94′
4	250.00′	10°58′7.30"	24.00′	47.86′

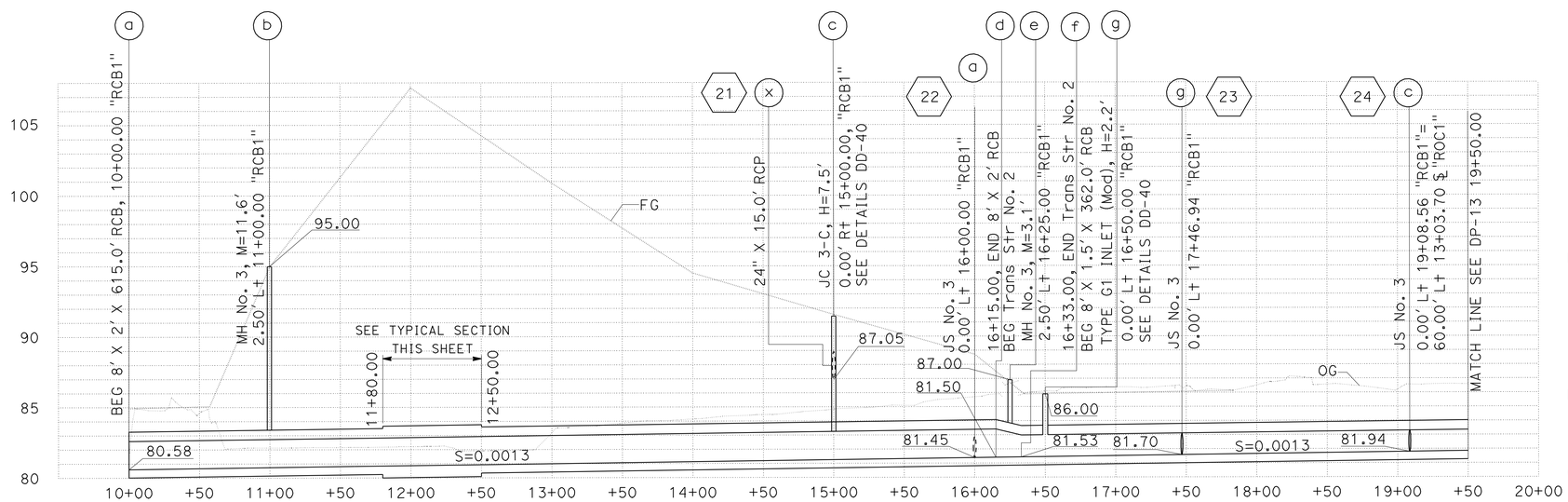

DRAINAGE SYSTEM No. 19

SCALE: Horiz 1" = 50′
Vert 1" = 5′

APPROVED FOR DRAINAGE WORK ONLY

NOTE:

1. THE CONTRACTOR SHALL VERIFY LOCATIONS AND ELEVATIONS OF EXISTING DRAINAGE SYSTEMS BEFORE COMMENCEMENT OF WORK.

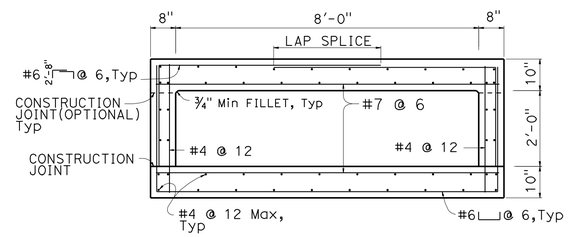

TYPICAL SECTION

NO SCALE

DESIGN NOTES
LOAD FACTOR DESIGN

DESIGN: Bridge Design Specifications - April 2000 (LFD) (1996 AASHTO with interims and revisions by Caltrans)

Load Factors: 1.5D + 1.5E + 2.5L
Where: D = Dead Load
E = Earth Load
L = Live Load
Maximum cover = 24′-6"

LIVE LOADING: HS20-44
No impact applied
No surcharge

EARTH LOAD: Earth pressures for two conditions:
140 lbs/cf vertical, 42 lbs/cf horizontal
140 lbs/cf vertical, 140 lbs/cf horizontal

REINFORCED CONCRETE:
f′c = 3600 psi
fy = 60,000 psi
Shear: Maximum allowable shear
$vc = 3.0 \sqrt{f'c}$, psi

CONSTRUCTION NOTES

EXPANSION JOINTS:
Invert: No expansion joints shall be permitted
Roof and Walls: Place ½" premolded joint filler at 30′-0"± centers

CONSTRUCTION JOINTS:
Temporary joints may be permitted if normal to ℄ RCB. Otherwise, the contractor shall submit a proposal for consideration.

DRAINAGE PROFILES

SCALE AS SHOWN

DP-12

REVISED BY | DATE REVISED
MAY P. FUNG | RALPH M. SASAKI
CALCULATED-DESIGNED BY | CHECKED BY
FUNCTIONAL SUPERVISOR: JAI P. THAKUR
STATE OF CALIFORNIA - DEPARTMENT OF TRANSPORTATION
Caltrans® HYDRAULICS

LAST REVISION 00-00-00 | DATE PLOTTED => 28-MAR-2012 | TIME PLOTTED => 08:49

Dist	COUNTY	ROUTE	POST MILES TOTAL PROJECT	SHEET No.	TOTAL SHEETS
07	LA	5	2.4/4.0	140	1288

REGISTERED CIVIL ENGINEER 12-19-11 DATE

3-26-12
PLANS APPROVAL DATE

REGISTERED PROFESSIONAL ENGINEER RALPH M. SASAKI No. 30849 Exp. 3/31/12 CIVIL STATE OF CALIFORNIA

THE STATE OF CALIFORNIA OR ITS OFFICERS OR AGENTS SHALL NOT BE RESPONSIBLE FOR THE ACCURACY OR COMPLETENESS OF SCANNED COPIES OF THIS PLAN SHEET.

CURVE DATA

No.	R	Δ	T	L
5	249.96′	5°13′45.81"	11.41′	22.81′
6	250.04′	3°25′59.25"	7.49′	14.98′
7	250.73′	5°42′40.03"	12.51′	24.99′
8	249.26′	5°42′36.92"	12.43′	24.84′
9	2426.60′	9°11′38.10"	195.11′	389.38′
10	279.85′	12°56′45.44"	31.75′	63.23′
11	323.65′	10°6′56.83"	28.65′	57.14′

NOTE:

1. THE CONTRACTOR SHALL VERIFY LOCATIONS AND ELEVATIONS OF EXISTING DRAINAGE SYSTEMS BEFORE COMMENCEMENT OF WORK.

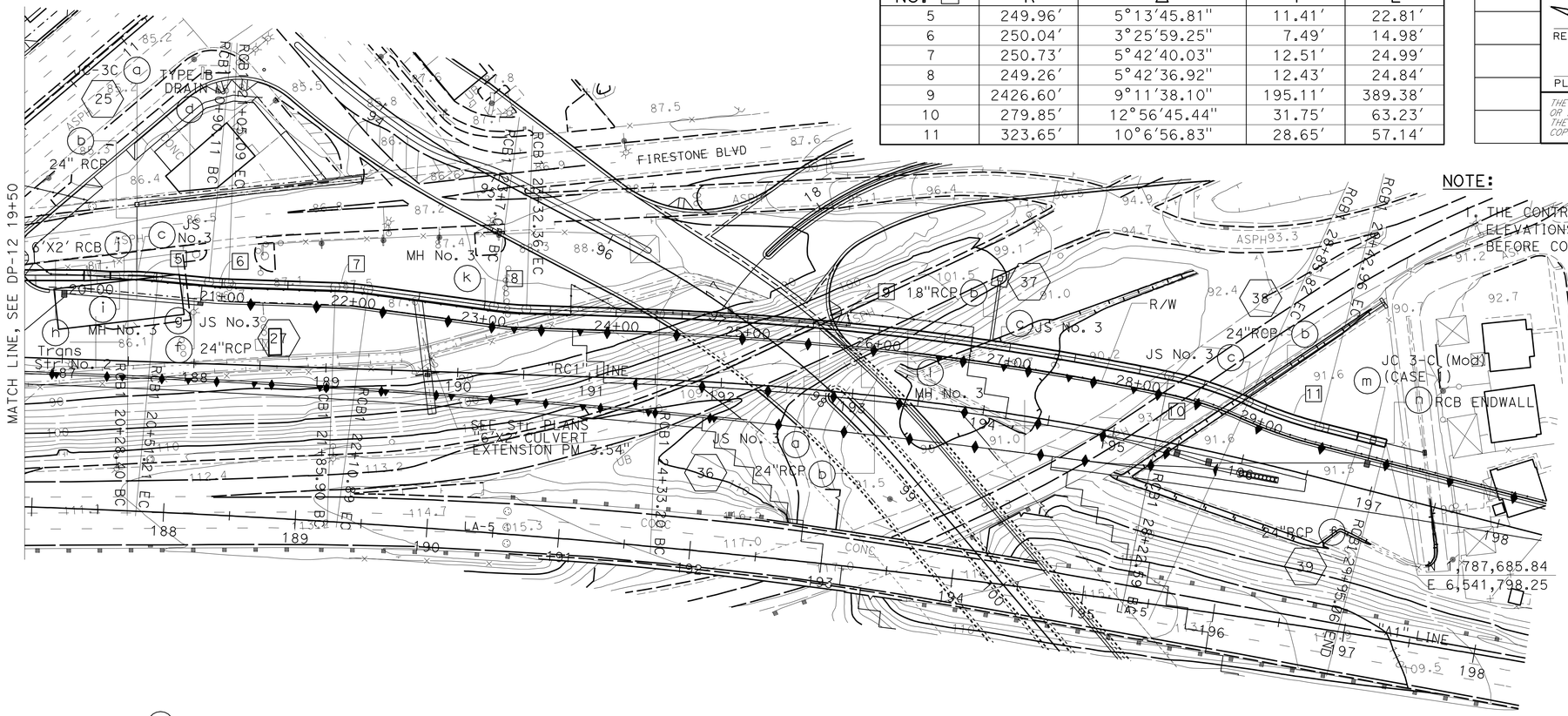

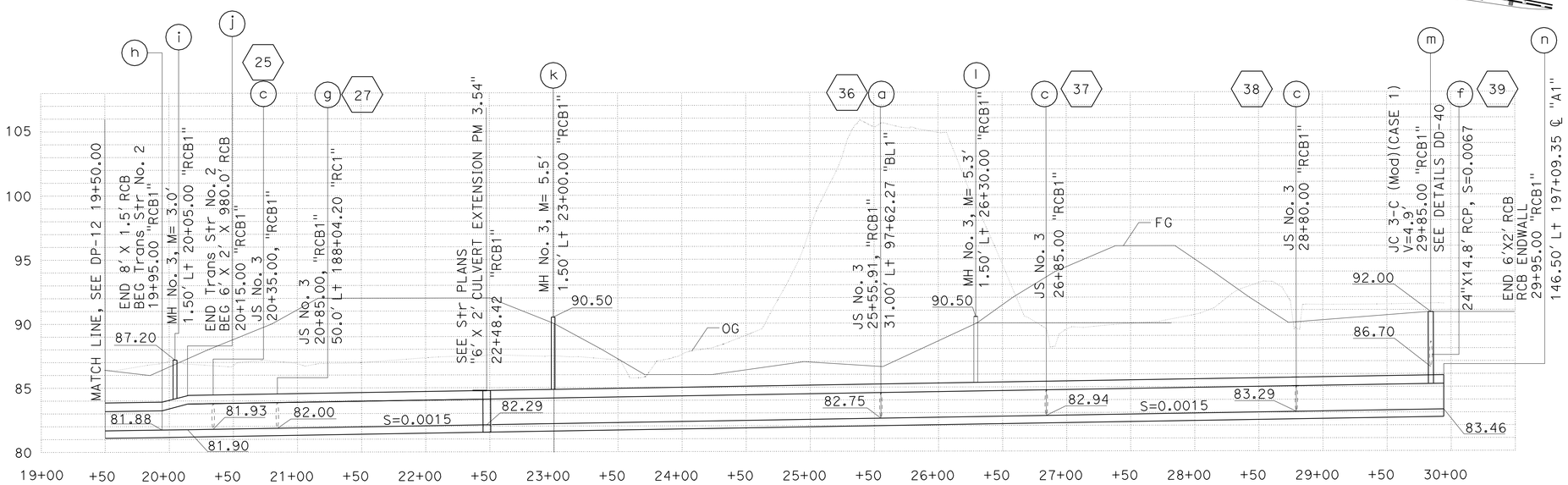

DRAINAGE SYSTEM No. 19 (Cont)

SCALE: Horiz 1" = 50′
Vert 1" = 5′

APPROVED FOR DRAINAGE WORK ONLY

DRAINAGE PROFILES

SCALE AS SHOWN

DP-13

STATE OF CALIFORNIA - DEPARTMENT OF TRANSPORTATION
Caltrans
HYDRAULICS

FUNCTIONAL SUPERVISOR: JAI P. THAKUR
CALCULATED-DESIGNED BY: MAY P. FUNG
CHECKED BY: RALPH M. SASAKI
REVISED BY / DATE REVISED

LAST REVISION 00-00-00
DATE PLOTTED => 28-MAR-2012
TIME PLOTTED => 08:50

Dist	COUNTY	ROUTE	POST MILES TOTAL PROJECT	SHEET No.	TOTAL SHEETS
07	LA	5	2.4/4.0	141	1288

REGISTERED CIVIL ENGINEER 12-19-11 DATE

3-26-12
PLANS APPROVAL DATE

REGISTERED PROFESSIONAL ENGINEER RALPH M. SASAKI No. 30849 Exp. 3/31/12 CIVIL STATE OF CALIFORNIA

THE STATE OF CALIFORNIA OR ITS OFFICERS OR AGENTS SHALL NOT BE RESPONSIBLE FOR THE ACCURACY OR COMPLETENESS OF SCANNED COPIES OF THIS PLAN SHEET.

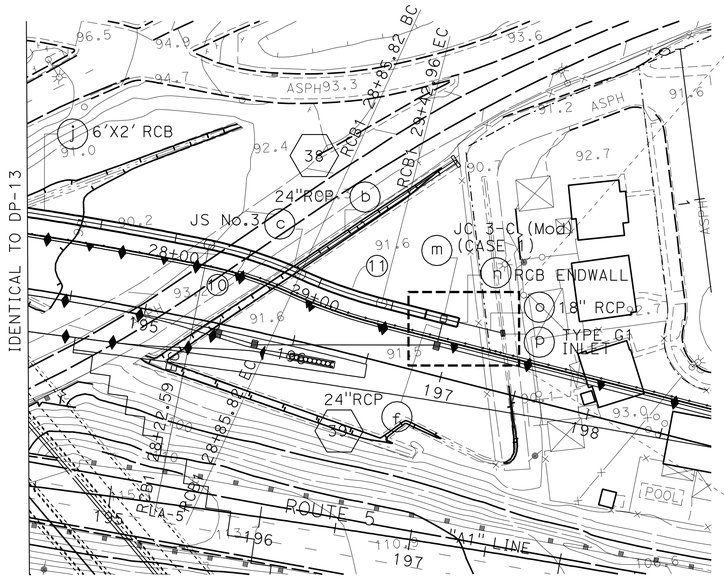

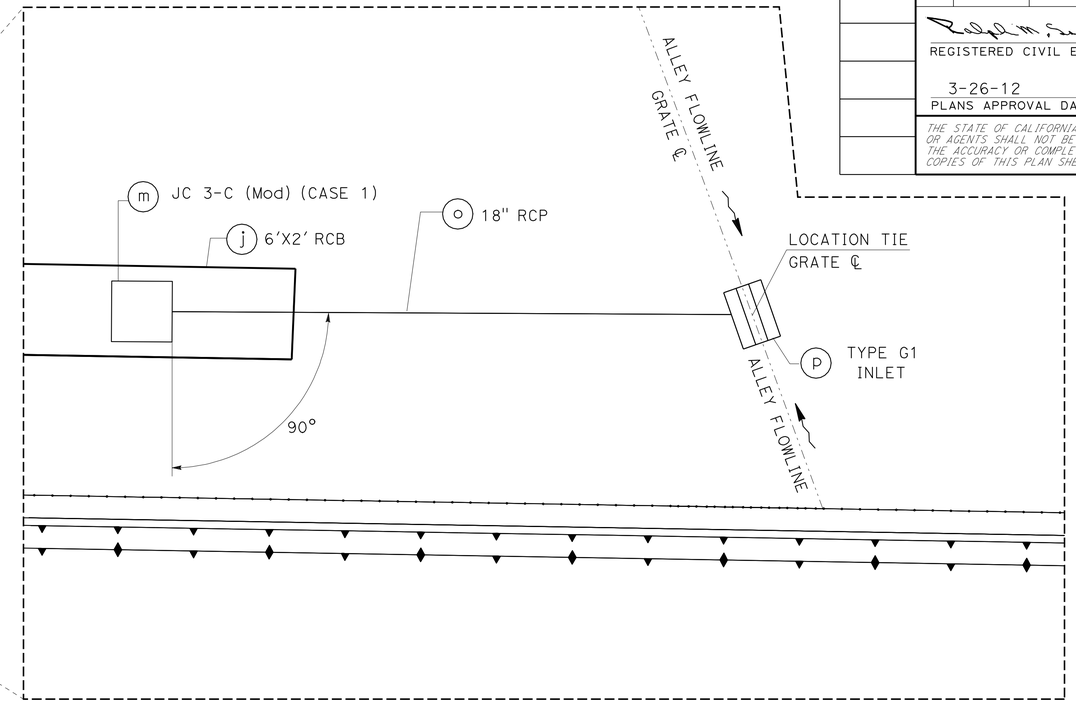

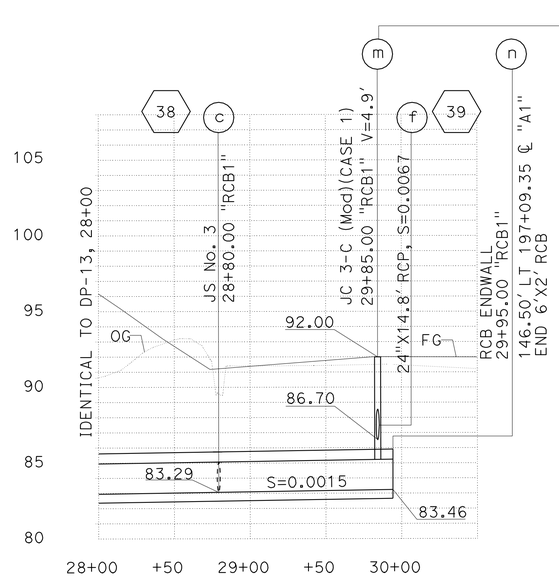

SCALE: Horiz 1" = 50'
Vert 1" = 5'

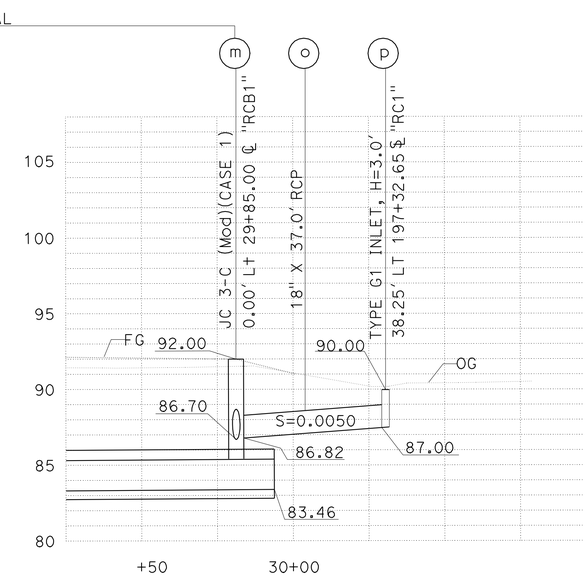

SCALE: Horiz 1" = 20'
Vert 1" = 5'

NOTE:

1. THE CONTRACTOR SHALL VERIFY LOCATIONS AND ELEVATIONS OF EXISTING DRAINAGE SYSTEMS BEFORE COMMENCEMENT OF WORK.

DRAINAGE SYSTEM No. 19 (Cont)

APPROVED FOR DRAINAGE WORK ONLY

DRAINAGE PROFILES

SCALE AS SHOWN

DP-14

STATE OF CALIFORNIA - DEPARTMENT OF TRANSPORTATION
Caltrans HYDRAULICS
FUNCTIONAL SUPERVISOR JAI P. THAKUR
CALCULATED-DESIGNED BY RALPH M. SASAKI
CHECKED BY MAY P. FUNG
REVISED BY
DATE REVISED

LAST REVISION 00-00-00 DATE PLOTTED => 28-MAR-2012 TIME PLOTTED => 08:50

Dist	COUNTY	ROUTE	POST MILES TOTAL PROJECT	SHEET No.	TOTAL SHEETS
07	LA	5	2.4/4.0	142	1288

REGISTERED CIVIL ENGINEER 12-19-11 DATE

3-26-12
PLANS APPROVAL DATE

REGISTERED PROFESSIONAL ENGINEER RALPH M. SASAKI No. 30849 Exp. 3/31/12 CIVIL STATE OF CALIFORNIA

THE STATE OF CALIFORNIA OR ITS OFFICERS OR AGENTS SHALL NOT BE RESPONSIBLE FOR THE ACCURACY OR COMPLETENESS OF SCANNED COPIES OF THIS PLAN SHEET.

NOTES:

1. THE CONTRACTOR SHALL VERIFY LOCATIONS AND ELEVATIONS OF EXISTING DRAINAGE SYSTEMS BEFORE COMMENCEMENT OF WORK.
2. SEE SHEET DP-39 FOR AVSF PROFILE AND OTHER DRAINAGE SYSTEMS CONNECTED TO AVSF No. 05-3485.

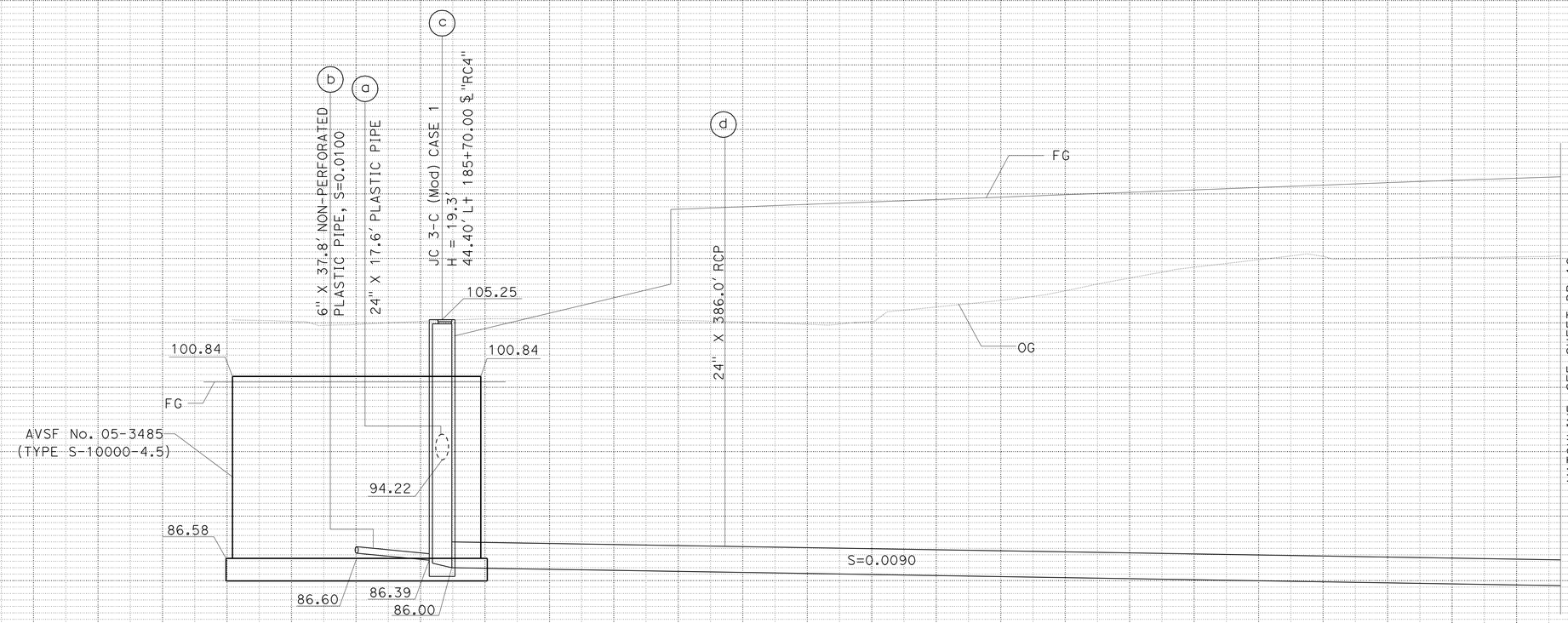

DRAINAGE SYSTEM No. 27

SCALE: Horiz 1" = 10'
Vert 1" = 5'

DRAINAGE PROFILES

SCALE AS SHOWN

DP-15

STATE OF CALIFORNIA - DEPARTMENT OF TRANSPORTATION
Caltrans® HYDRAULICS

FUNCTIONAL SUPERVISOR: JAI P. THAKUR
CALCULATED-DESIGNED BY: MAY P. FUNG
CHECKED BY: RALPH M. SASAKI
REVISED BY
DATE REVISED

LAST REVISION 00-00-00
DATE PLOTTED => 26-MAR-2012
TIME PLOTTED => 08:50

Dist	COUNTY	ROUTE	POST MILES TOTAL PROJECT	SHEET No.	TOTAL SHEETS
07	LA	5	2.4/4.0	143	1288

REGISTERED CIVIL ENGINEER 12-19-11 DATE

3-26-12
PLANS APPROVAL DATE

REGISTERED PROFESSIONAL ENGINEER RALPH M. SASAKI No. 30849 Exp. 3/31/12 CIVIL STATE OF CALIFORNIA

THE STATE OF CALIFORNIA OR ITS OFFICERS OR AGENTS SHALL NOT BE RESPONSIBLE FOR THE ACCURACY OR COMPLETENESS OF SCANNED COPIES OF THIS PLAN SHEET.

NOTE:

1. THE CONTRACTOR SHALL VERIFY LOCATIONS AND ELEVATIONS OF EXISTING DRAINAGE SYSTEMS BEFORE COMMENCEMENT OF WORK.

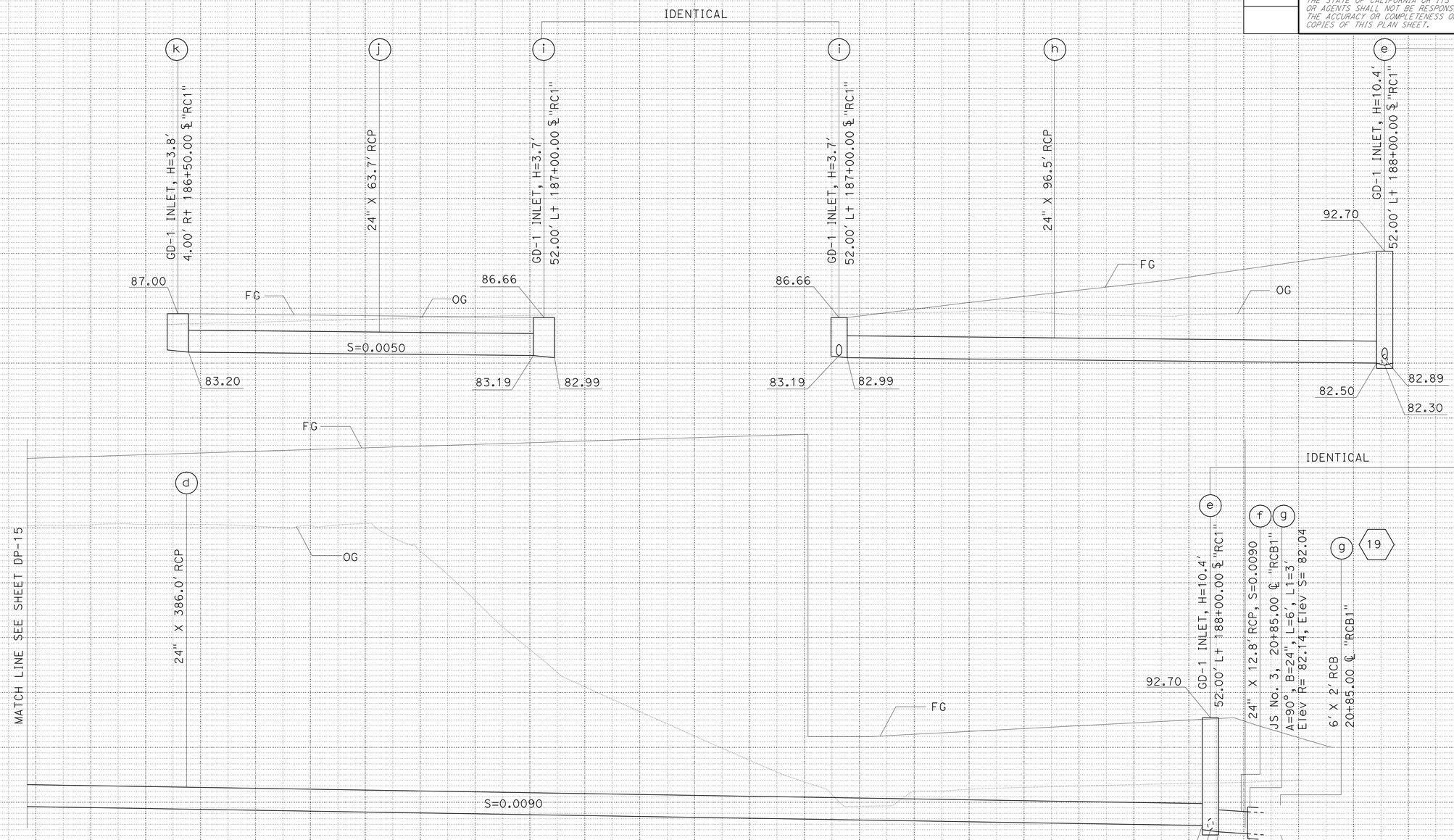

DRAINAGE SYSTEM No. 27 (con't)

SCALE: Horiz 1" = 10'
Vert 1" = 5'

DRAINAGE PROFILES

SCALE AS SHOWN

DP-16

REVISED BY | DATE REVISED

MAY P. FUNG | RALPH M. SASAKI

CALCULATED-DESIGNED BY | CHECKED BY

FUNCTIONAL SUPERVISOR: JAI P. THAKUR

STATE OF CALIFORNIA - DEPARTMENT OF TRANSPORTATION

Caltrans® HYDRAULICS

LAST REVISION 00-00-00 | DATE PLOTTED => 28-MAR-2012 | TIME PLOTTED => 08:50

Dist	COUNTY	ROUTE	POST MILES TOTAL PROJECT	SHEET No.	TOTAL SHEETS
07	LA	5	2.4/4.0	144	1288

REGISTERED CIVIL ENGINEER 12-19-11 DATE

3-26-12
PLANS APPROVAL DATE

REGISTERED PROFESSIONAL ENGINEER RALPH M. SASAKI No. 30849 Exp. 3/31/12 CIVIL STATE OF CALIFORNIA

THE STATE OF CALIFORNIA OR ITS OFFICERS OR AGENTS SHALL NOT BE RESPONSIBLE FOR THE ACCURACY OR COMPLETENESS OF SCANNED COPIES OF THIS PLAN SHEET.

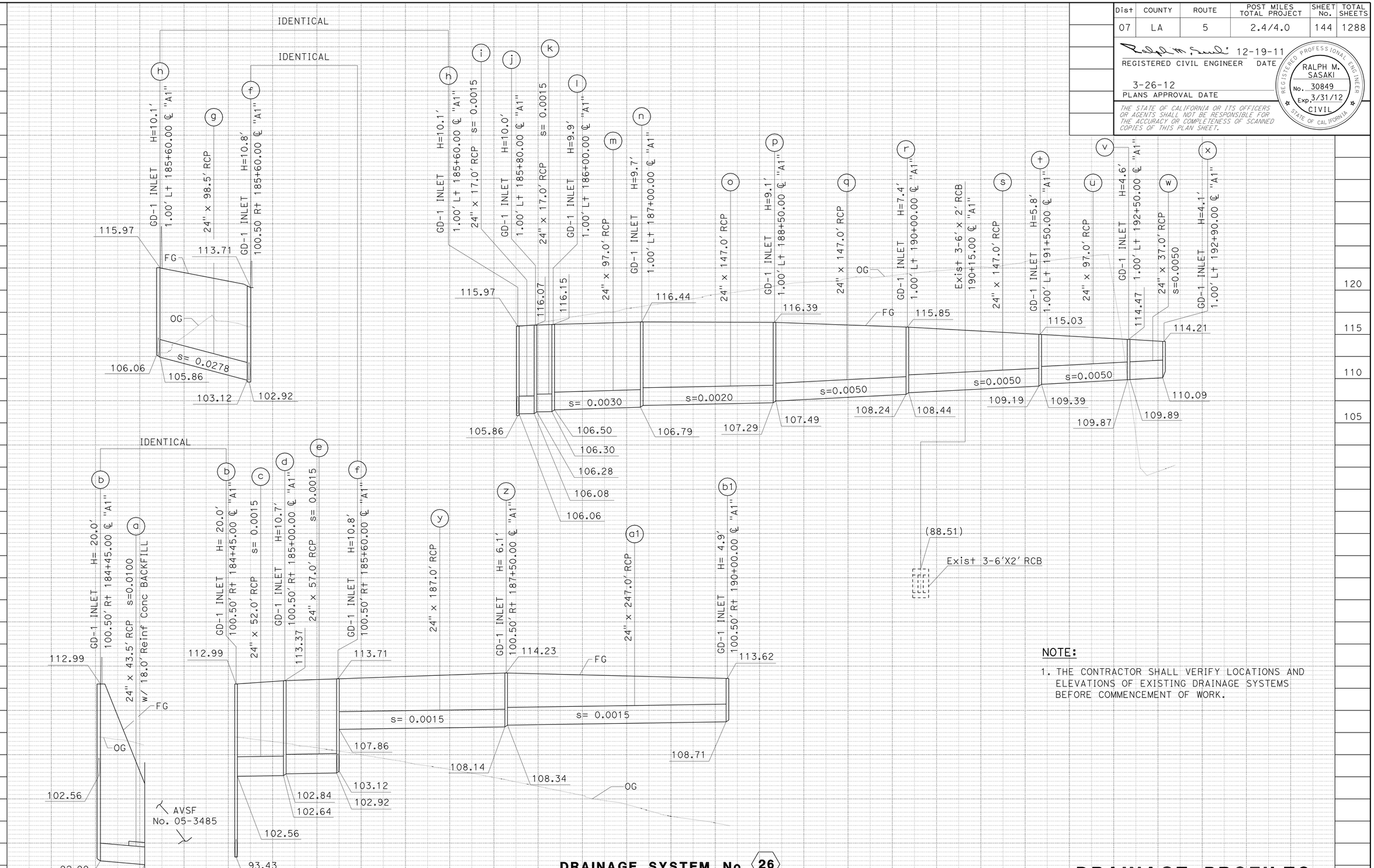

DRAINAGE SYSTEM No. 26

SCALE: Horiz 1" = 50'
Vert 1" = 5'

NOTE:

1. THE CONTRACTOR SHALL VERIFY LOCATIONS AND ELEVATIONS OF EXISTING DRAINAGE SYSTEMS BEFORE COMMENCEMENT OF WORK.

DRAINAGE PROFILES

SCALE AS SHOWN

DP-17

STATE OF CALIFORNIA - DEPARTMENT OF TRANSPORTATION
Caltrans
HYDRAULICS

FUNCTIONAL SUPERVISOR: JAI P. THAKUR
CALCULATED-DESIGNED BY: MARTIN CORONADO
CHECKED BY: RALPH M. SASAKI
REVISED BY
DATE REVISED

LAST REVISION 00-00-00 | DATE PLOTTED => 28-MAR-2012 | TIME PLOTTED => 08:50

Dist	COUNTY	ROUTE	POST MILES TOTAL PROJECT	SHEET No.	TOTAL SHEETS
07	LA	5	2.4/4.0	145	1288

12-19-11
REGISTERED CIVIL ENGINEER DATE

3-26-12
PLANS APPROVAL DATE

REGISTERED PROFESSIONAL ENGINEER
RALPH M. SASAKI
No. 30849
Exp. 3/31/12
CIVIL
STATE OF CALIFORNIA

THE STATE OF CALIFORNIA OR ITS OFFICERS OR AGENTS SHALL NOT BE RESPONSIBLE FOR THE ACCURACY OR COMPLETENESS OF SCANNED COPIES OF THIS PLAN SHEET.

NOTES:

1. THE CONTRACTOR SHALL VERIFY LOCATIONS AND ELEVATIONS OF EXISTING DRAINAGE SYSTEMS BEFORE COMMENCEMENT OF WORK.
2. SEE SHEET DP-39 FOR AVSF PROFILE AND OTHER DRAINAGE SYSTEMS CONNECTED TO AVSF No. 05-3485.

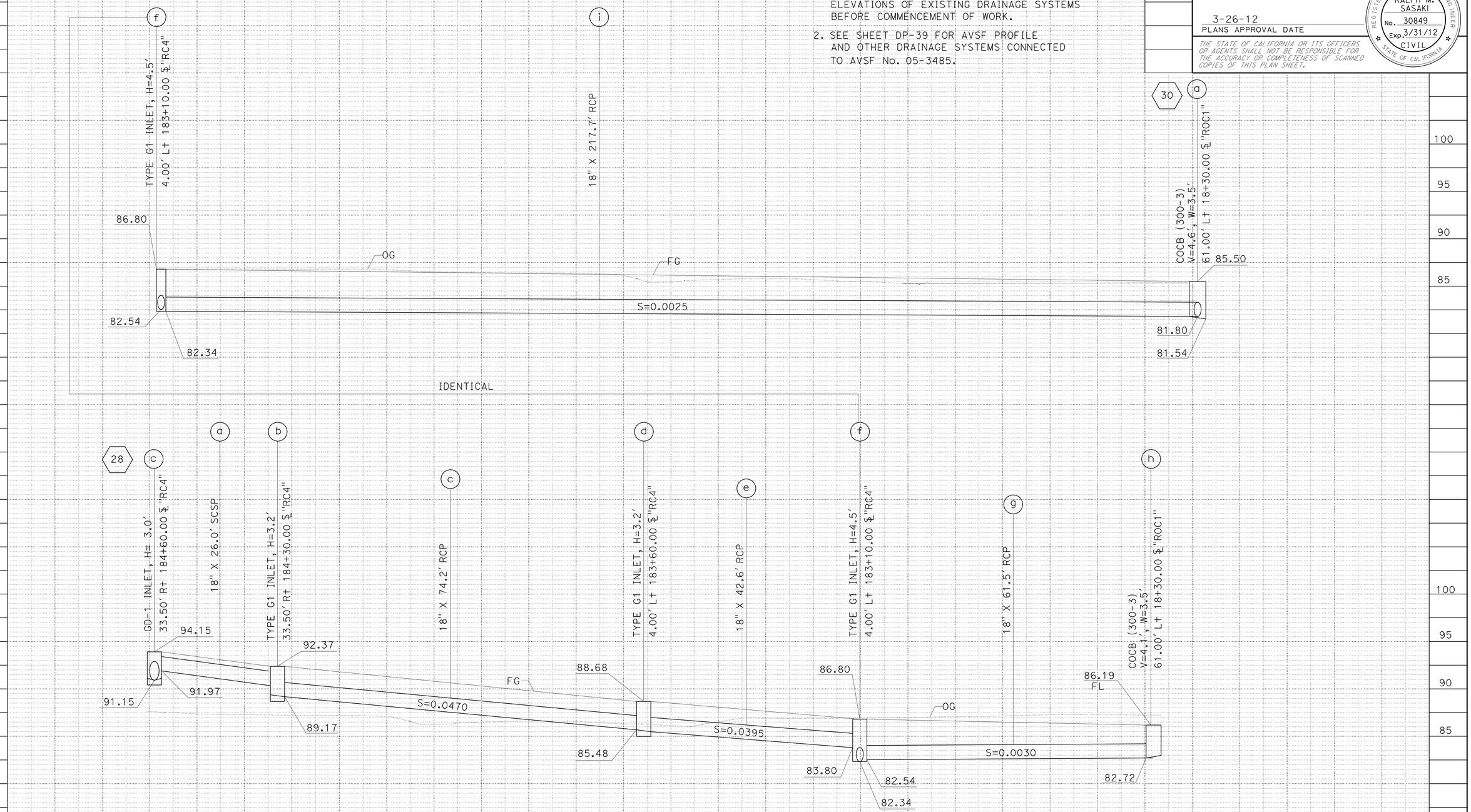

DRAINAGE SYSTEM No. 29

SCALE: Horiz 1" = 10'
Vert 1" = 5'

DRAINAGE PROFILES

SCALE AS SHOWN

DP-18

STATE OF CALIFORNIA - DEPARTMENT OF TRANSPORTATION
Caltrans
HYDRAULICS

FUNCTIONAL SUPERVISOR: JAI P. THAKUR
CALCULATED-DESIGNED BY: MAY P. FUNG
CHECKED BY: RALPH M. SASAKI
REVISED BY
DATE REVISED

LAST REVISION 00-00-00
DATE PLOTTED => 28-MAR-2012
TIME PLOTTED => 08:50

Dist	COUNTY	ROUTE	POST MILES TOTAL PROJECT	SHEET No.	TOTAL SHEETS
07	LA	5	2.4/4.0	146	1288

REGISTERED CIVIL ENGINEER 12-19-11 DATE

3-26-12
PLANS APPROVAL DATE

REGISTERED PROFESSIONAL ENGINEER RALPH M. SASAKI No. 30849 Exp. 3/31/12 CIVIL STATE OF CALIFORNIA

THE STATE OF CALIFORNIA OR ITS OFFICERS OR AGENTS SHALL NOT BE RESPONSIBLE FOR THE ACCURACY OR COMPLETENESS OF SCANNED COPIES OF THIS PLAN SHEET.

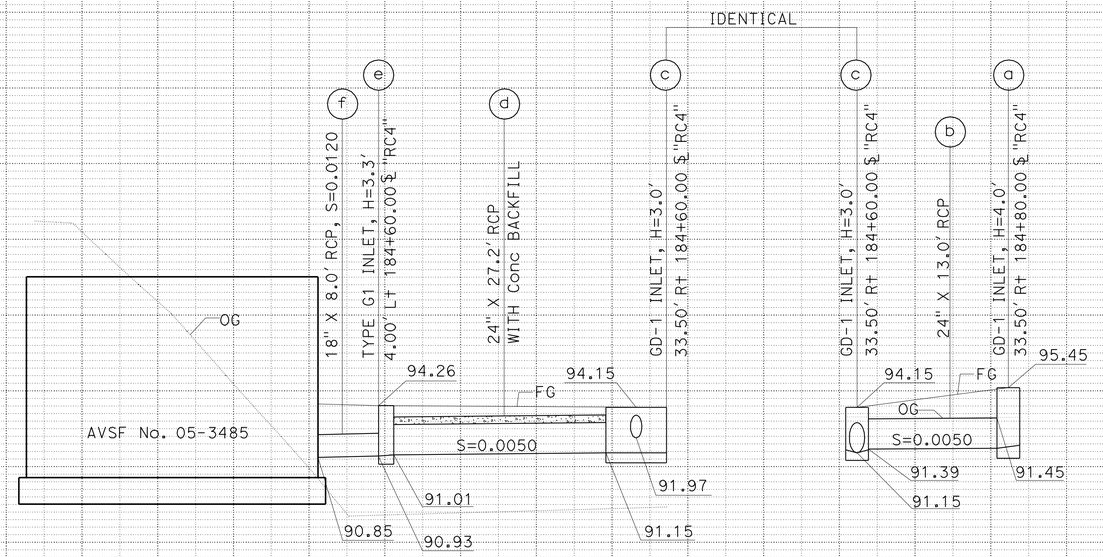

DRAINAGE SYSTEM No. 28

SCALE: Horiz 1" = 10'
Vert 1" = 5'

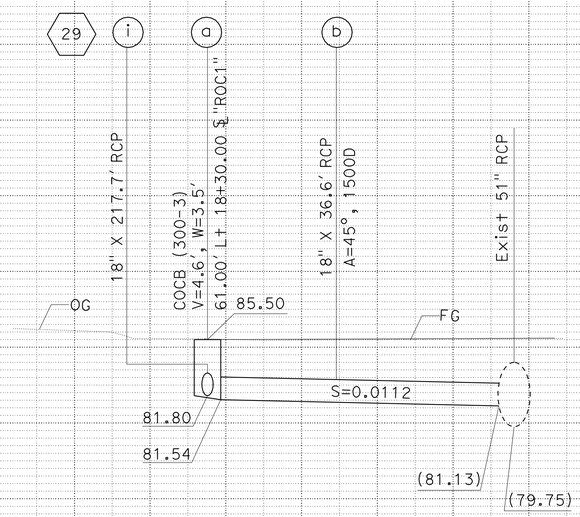

DRAINAGE SYSTEM No. 30

SCALE: Horiz 1" = 10'
Vert 1" = 5'

NOTE:

1. THE CONTRACTOR SHALL VERIFY LOCATIONS AND ELEVATIONS OF EXISTING DRAINAGE SYSTEMS BEFORE COMMENCEMENT OF WORK.

DRAINAGE PROFILES

SCALE AS SHOWN

DP-19

STATE OF CALIFORNIA - DEPARTMENT OF TRANSPORTATION
Caltrans® HYDRAULICS
FUNCTIONAL SUPERVISOR: JAI P. THAKUR
CALCULATED-DESIGNED BY: MAY P. FUNG
CHECKED BY: RALPH M. SASAKI
REVISED BY / DATE REVISED

LAST REVISION 00-00-00 DATE PLOTTED => 26-MAR-2012 TIME PLOTTED => 08:50

Dist	COUNTY	ROUTE	POST MILES TOTAL PROJECT	SHEET No.	TOTAL SHEETS
07	LA	5	2.4/4.0	147	1288

REGISTERED CIVIL ENGINEER 12-19-11 DATE

3-26-12
PLANS APPROVAL DATE

REGISTERED PROFESSIONAL ENGINEER RALPH M. SASAKI No. 30849 Exp. 3/31/12 CIVIL STATE OF CALIFORNIA

THE STATE OF CALIFORNIA OR ITS OFFICERS OR AGENTS SHALL NOT BE RESPONSIBLE FOR THE ACCURACY OR COMPLETENESS OF SCANNED COPIES OF THIS PLAN SHEET.

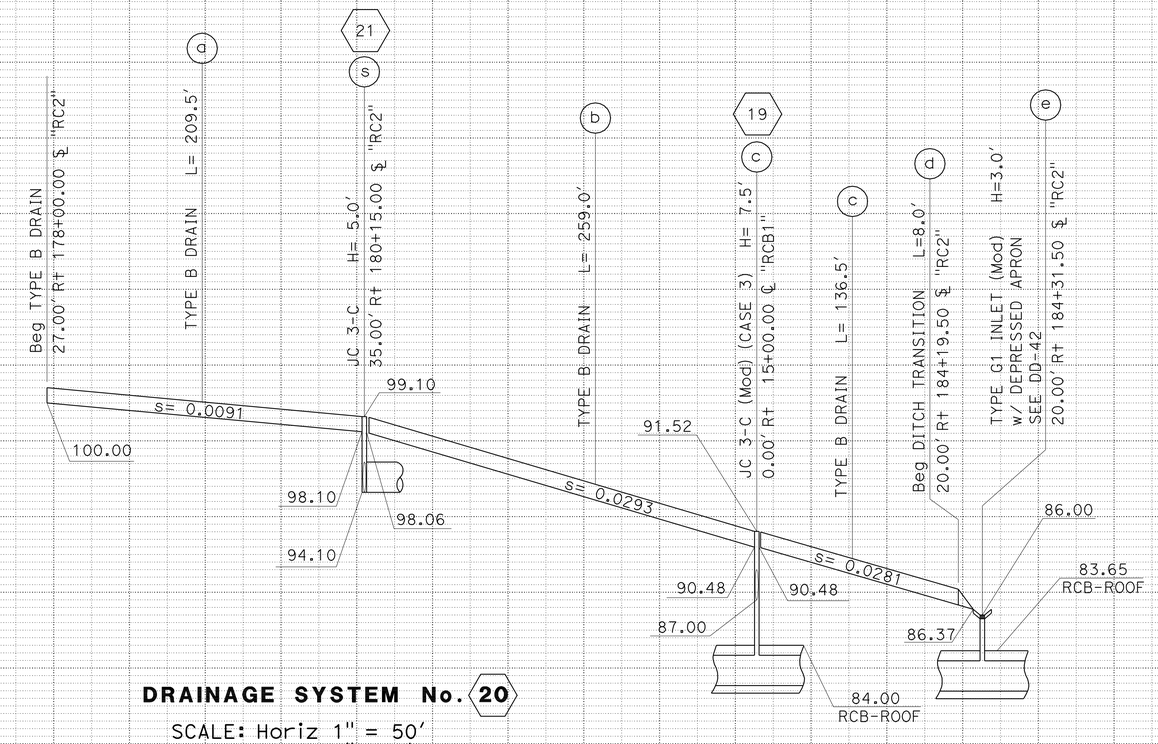

DRAINAGE SYSTEM No. 20

SCALE: Horiz 1" = 50'
Vert 1" = 5'

NOTE:

1. THE CONTRACTOR SHALL VERIFY LOCATIONS AND ELEVATIONS OF EXISTING DRAINAGE SYSTEMS BEFORE COMMENCEMENT OF WORK.

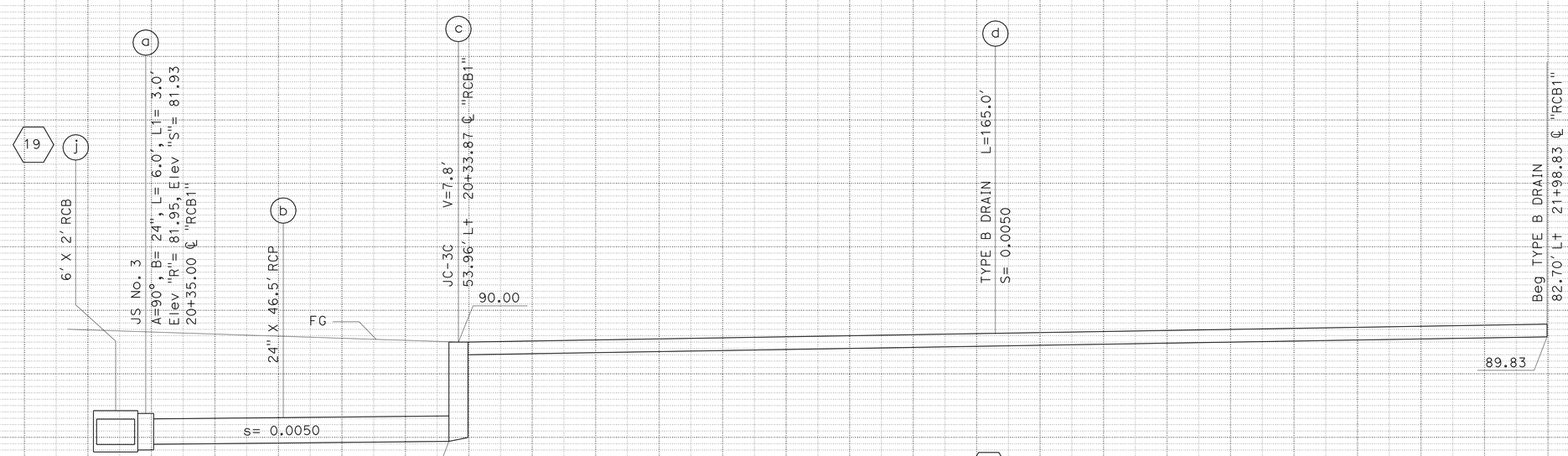

DRAINAGE SYSTEM No. 25

SCALE: Horiz 1" = 10'
Vert 1" = 5'

DRAINAGE PROFILES

SCALE AS SHOWN

DP-20

STATE OF CALIFORNIA - DEPARTMENT OF TRANSPORTATION
Caltrans® HYDRAULICS

FUNCTIONAL SUPERVISOR: JAI P. THAKUR
CALCULATED-DESIGNED BY: MARTIN CORONADO
CHECKED BY: RALPH M. SASAKI
REVISED BY
DATE REVISED

LAST REVISION 00-00-00
DATE PLOTTED => 26-MAR-2012
TIME PLOTTED => 08:50

Dist	COUNTY	ROUTE	POST MILES TOTAL PROJECT	SHEET No.	TOTAL SHEETS
07	LA	5	2.4/4.0	148	1288

REGISTERED CIVIL ENGINEER 12-19-11 DATE

3-26-12
PLANS APPROVAL DATE

REGISTERED PROFESSIONAL ENGINEER RALPH M. SASAKI No. 30849 Exp. 3/31/12 CIVIL STATE OF CALIFORNIA

THE STATE OF CALIFORNIA OR ITS OFFICERS OR AGENTS SHALL NOT BE RESPONSIBLE FOR THE ACCURACY OR COMPLETENESS OF SCANNED COPIES OF THIS PLAN SHEET.

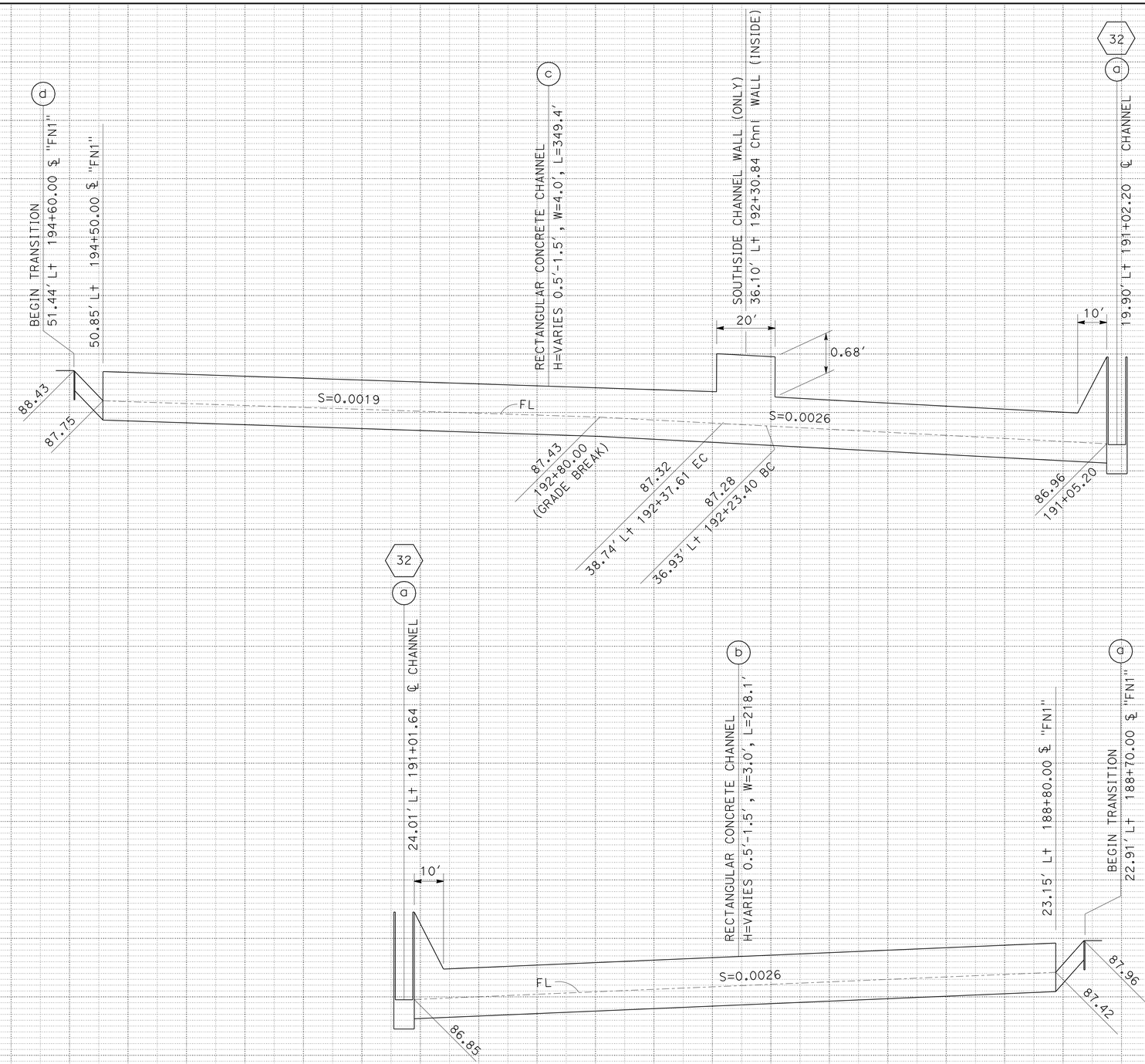

DRAINAGE SYSTEM No. 35

SCALE: Horiz 1" = 20'
Vert 1" = 1'

NOTE:

1. THE CONTRACTOR SHALL VERIFY LOCATIONS AND ELEVATIONS OF EXISTING DRAINAGE SYSTEMS BEFORE COMMENCEMENT OF WORK.

DRAINAGE PROFILES

SCALE AS SHOWN

DP-21

STATE OF CALIFORNIA - DEPARTMENT OF TRANSPORTATION
Caltrans HYDRAULICS
FUNCTIONAL SUPERVISOR: JAI P. THAKUR
CALCULATED-DESIGNED BY: MARTIN CORONADO
CHECKED BY: RALPH M. SASAKI
REVISED BY / DATE REVISED

LAST REVISION 00-00-00 | DATE PLOTTED => 28-MAR-2012 | TIME PLOTTED => 08:50

Dist	COUNTY	ROUTE	POST MILES TOTAL PROJECT	SHEET No.	TOTAL SHEETS
07	LA	5	2.4/4.0	149	1288

REGISTERED CIVIL ENGINEER 12-19-11 DATE

3-26-12
PLANS APPROVAL DATE

REGISTERED PROFESSIONAL ENGINEER RALPH M. SASAKI No. 30849 Exp. 3/31/12 CIVIL STATE OF CALIFORNIA

THE STATE OF CALIFORNIA OR ITS OFFICERS OR AGENTS SHALL NOT BE RESPONSIBLE FOR THE ACCURACY OR COMPLETENESS OF SCANNED COPIES OF THIS PLAN SHEET.

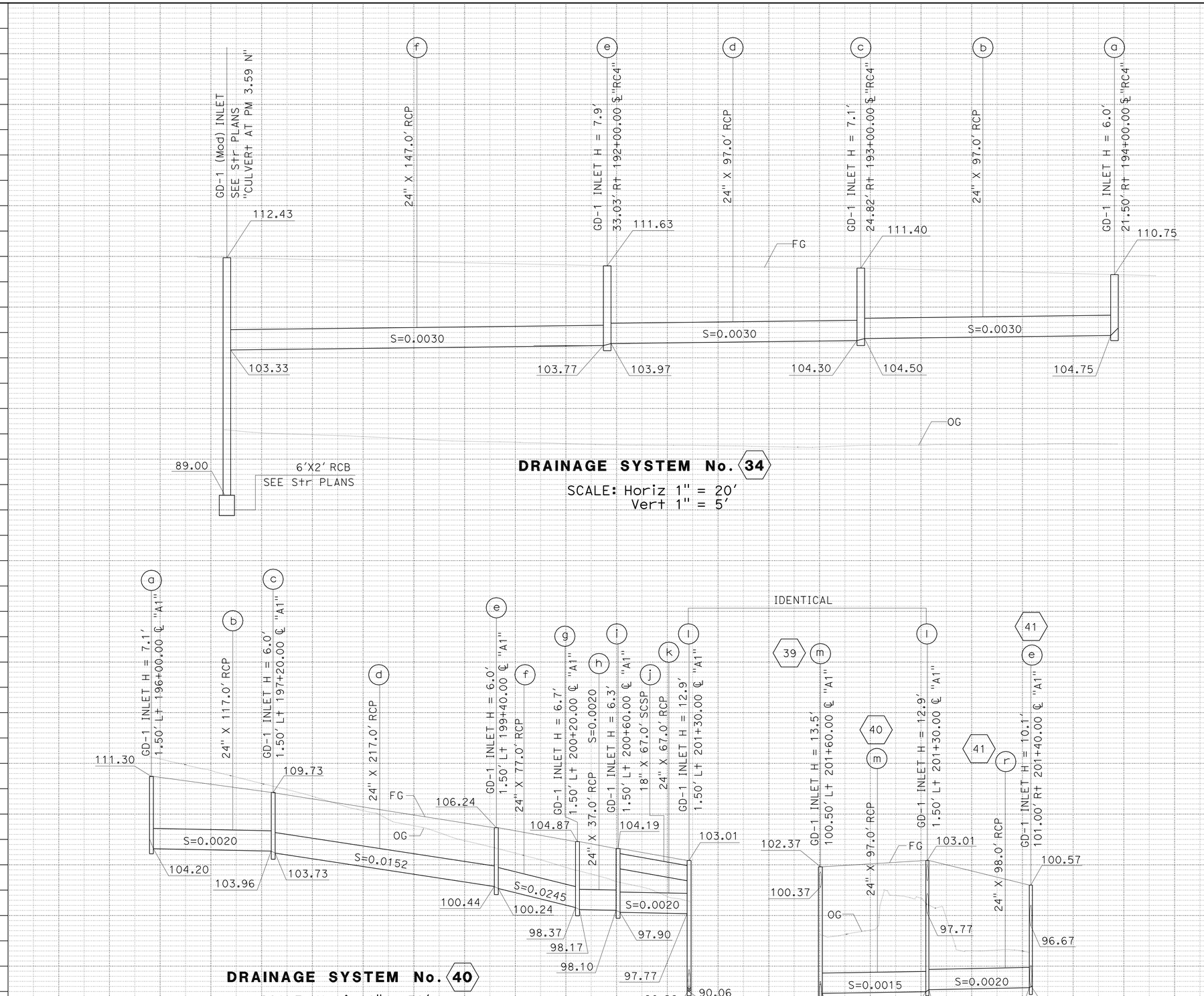

DRAINAGE SYSTEM No. 34

SCALE: Horiz 1" = 20'
Vert 1" = 5'

NOTE:

1. THE CONTRACTOR SHALL VERIFY LOCATIONS AND ELEVATIONS OF EXISTING DRAINAGE SYSTEMS BEFORE COMMENCEMENT OF WORK.

DRAINAGE SYSTEM No. 40

SCALE: Horiz 1" = 50'
Vert 1" = 5'

DRAINAGE PROFILES

SCALE AS SHOWN

DP-22

STATE OF CALIFORNIA - DEPARTMENT OF TRANSPORTATION
Caltrans® HYDRAULICS

FUNCTIONAL SUPERVISOR: JAI P. THAKUR
CALCULATED-DESIGNED BY: MAY P. FUNG
CHECKED BY: RALPH M. SASAKI
REVISED BY / DATE REVISED

LAST REVISION 00-00-00 | DATE PLOTTED => 26-MAR-2012 | TIME PLOTTED => 08:50

Dist	COUNTY	ROUTE	POST MILES TOTAL PROJECT	SHEET No.	TOTAL SHEETS
07	LA	5	2.4/4.0	150	1288

REGISTERED CIVIL ENGINEER 12-19-11 DATE

3-26-12
PLANS APPROVAL DATE

REGISTERED PROFESSIONAL ENGINEER RALPH M. SASAKI No. 30849 Exp. 3/31/12 CIVIL STATE OF CALIFORNIA

THE STATE OF CALIFORNIA OR ITS OFFICERS OR AGENTS SHALL NOT BE RESPONSIBLE FOR THE ACCURACY OR COMPLETENESS OF SCANNED COPIES OF THIS PLAN SHEET.

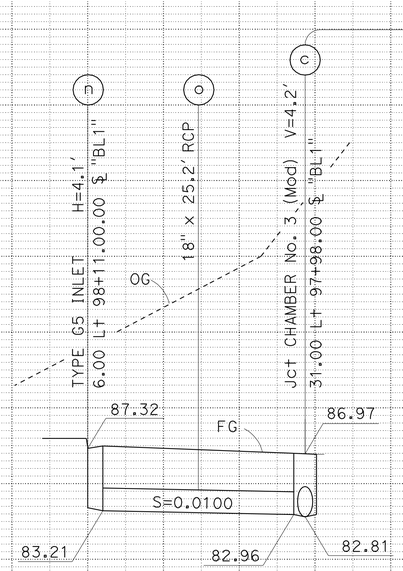

DRAINAGE SYSTEM No. 36
SCALE: Horiz 1" = 10'
Vert 1" = 5'

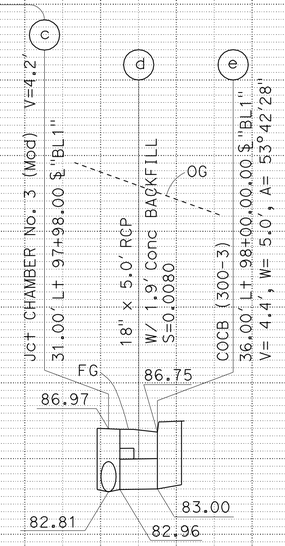

DRAINAGE SYSTEM No. 36
SCALE: Horiz 1" = 10'
Vert 1" = 5'

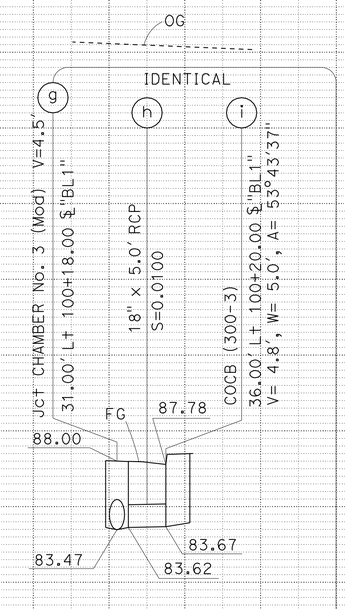

NOTE:

1. THE CONTRACTOR SHALL VERIFY LOCATIONS AND ELEVATIONS OF EXISTING DRAINAGE SYSTEMS BEFORE COMMENCEMENT OF WORK.

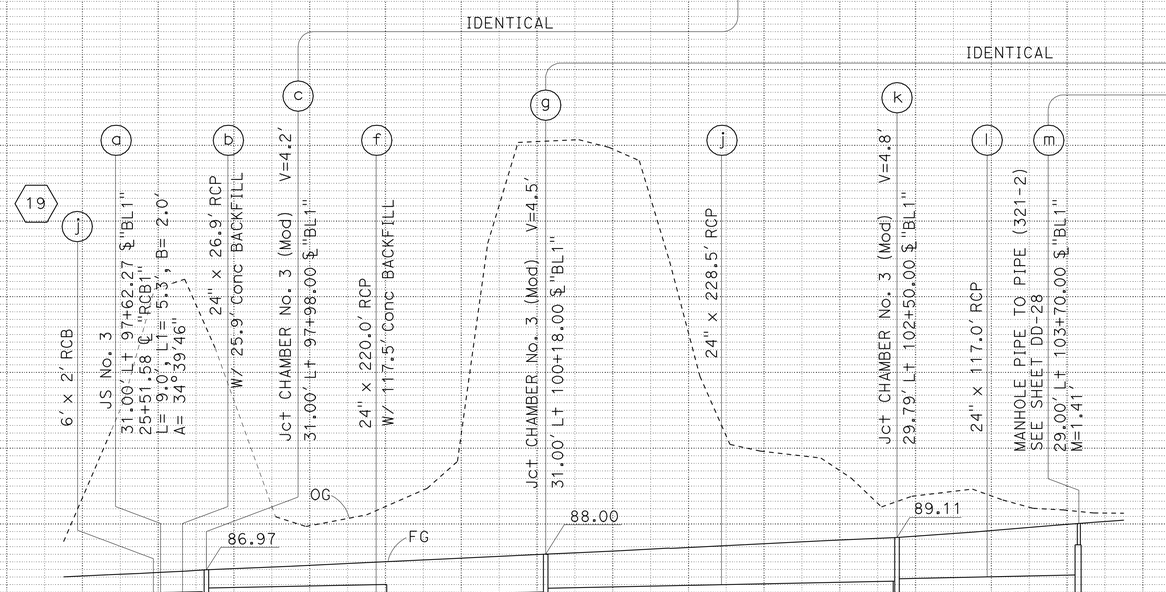

DRAINAGE SYSTEM No. 36
SCALE: Horiz 1" = 50'
Vert 1" = 5'

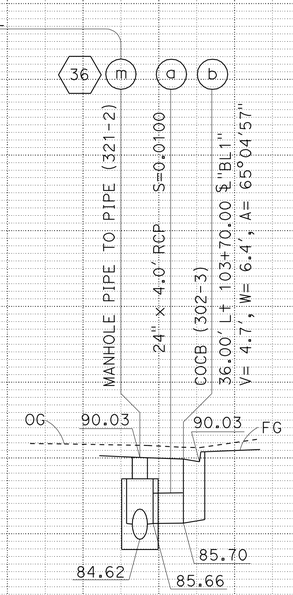

DRAINAGE SYSTEM No. 43
SCALE: Horiz 1" = 10'
Vert 1" = 5'

DRAINAGE PROFILES

SCALE AS SHOWN

DP-23

STATE OF CALIFORNIA - DEPARTMENT OF TRANSPORTATION
Caltrans
HYDRAULICS

FUNCTIONAL SUPERVISOR: JAI P. THAKUR
CALCULATED-DESIGNED BY: CEDRIC ESTRADA
CHECKED BY: RALPH M. SASAKI
REVISED BY / DATE REVISED

LAST REVISION 00-00-00
DATE PLOTTED => 28-MAR-2012
TIME PLOTTED => 08:51

Dist	COUNTY	ROUTE	POST MILES TOTAL PROJECT	SHEET No.	TOTAL SHEETS
07	LA	5	2.4/4.0	151	1288

REGISTERED CIVIL ENGINEER 12-19-11 DATE

3-26-12
PLANS APPROVAL DATE

REGISTERED PROFESSIONAL ENGINEER RALPH M. SASAKI No. 30849 Exp. 3/31/12 CIVIL STATE OF CALIFORNIA

THE STATE OF CALIFORNIA OR ITS OFFICERS OR AGENTS SHALL NOT BE RESPONSIBLE FOR THE ACCURACY OR COMPLETENESS OF SCANNED COPIES OF THIS PLAN SHEET.

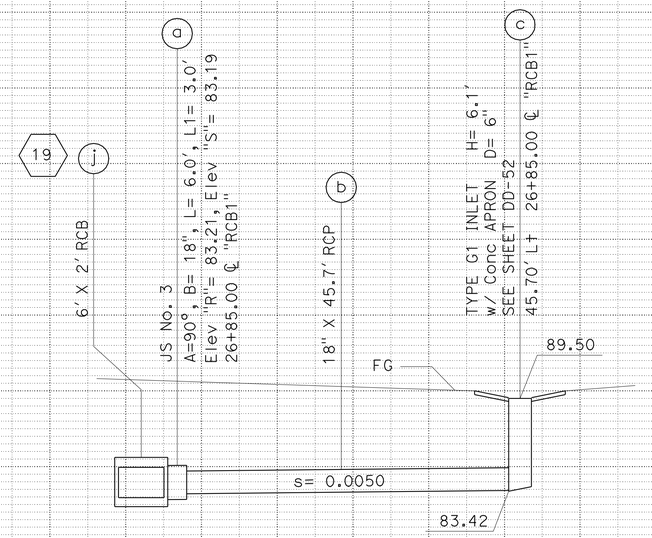

DRAINAGE SYSTEM No. 37

SCALE: Horiz 1" = 10'
Vert 1" = 5'

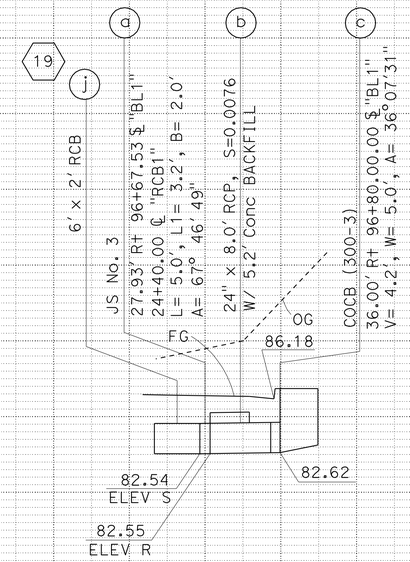

DRAINAGE SYSTEM No. 33

SCALE: Horiz 1" = 10'
Vert 1" = 5'

NOTE:

1. THE CONTRACTOR SHALL VERIFY LOCATIONS AND ELEVATIONS OF EXISTING DRAINAGE SYSTEMS BEFORE COMMENCEMENT OF WORK.

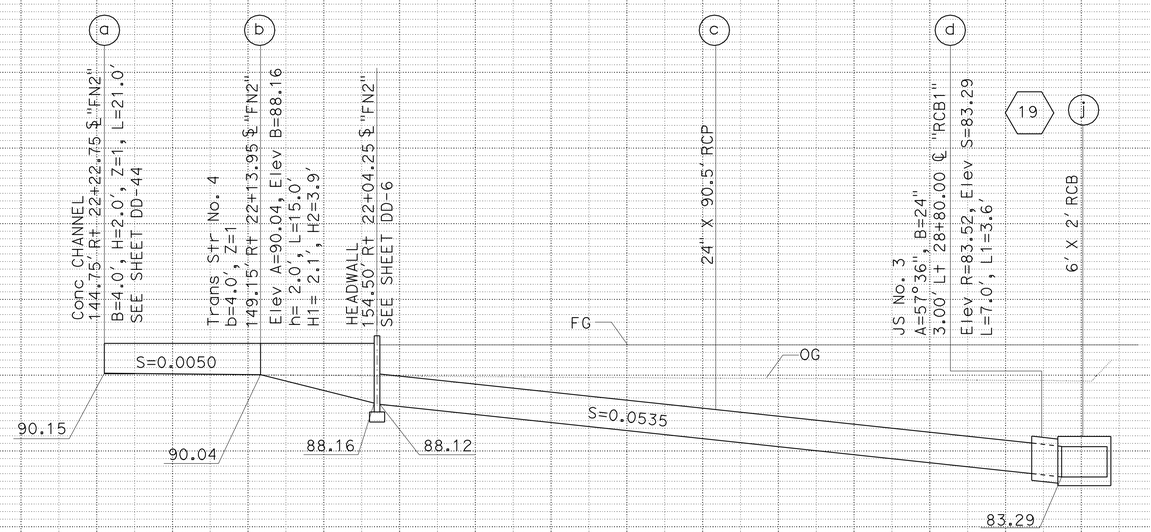

DRAINAGE SYSTEM No. 38

SCALE: Horiz 1" = 10'
Vert 1" = 5'

DRAINAGE PROFILES

SCALE AS SHOWN

DP-24

STATE OF CALIFORNIA - DEPARTMENT OF TRANSPORTATION
Caltrans® HYDRAULICS

FUNCTIONAL SUPERVISOR: JAI P. THAKUR
CALCULATED-DESIGNED BY: MAY P. FUNG
CHECKED BY: RALPH M. SASAKI
REVISED BY / DATE REVISED

LAST REVISION 00-00-00
DATE PLOTTED => 26-MAR-2012
TIME PLOTTED => 08:51

Dist	COUNTY	ROUTE	POST MILES TOTAL PROJECT	SHEET No.	TOTAL SHEETS
07	LA	5	2.4/4.0	152	1288

REGISTERED CIVIL ENGINEER 12-19-11 DATE

3-26-12
PLANS APPROVAL DATE

REGISTERED PROFESSIONAL ENGINEER RALPH M. SASAKI No. 30849 Exp. 3/31/12 CIVIL STATE OF CALIFORNIA

THE STATE OF CALIFORNIA OR ITS OFFICERS OR AGENTS SHALL NOT BE RESPONSIBLE FOR THE ACCURACY OR COMPLETENESS OF SCANNED COPIES OF THIS PLAN SHEET.

NOTE:

1. THE CONTRACTOR SHALL VERIFY LOCATIONS AND ELEVATIONS OF EXISTING DRAINAGE SYSTEMS BEFORE COMMENCEMENT OF WORK.

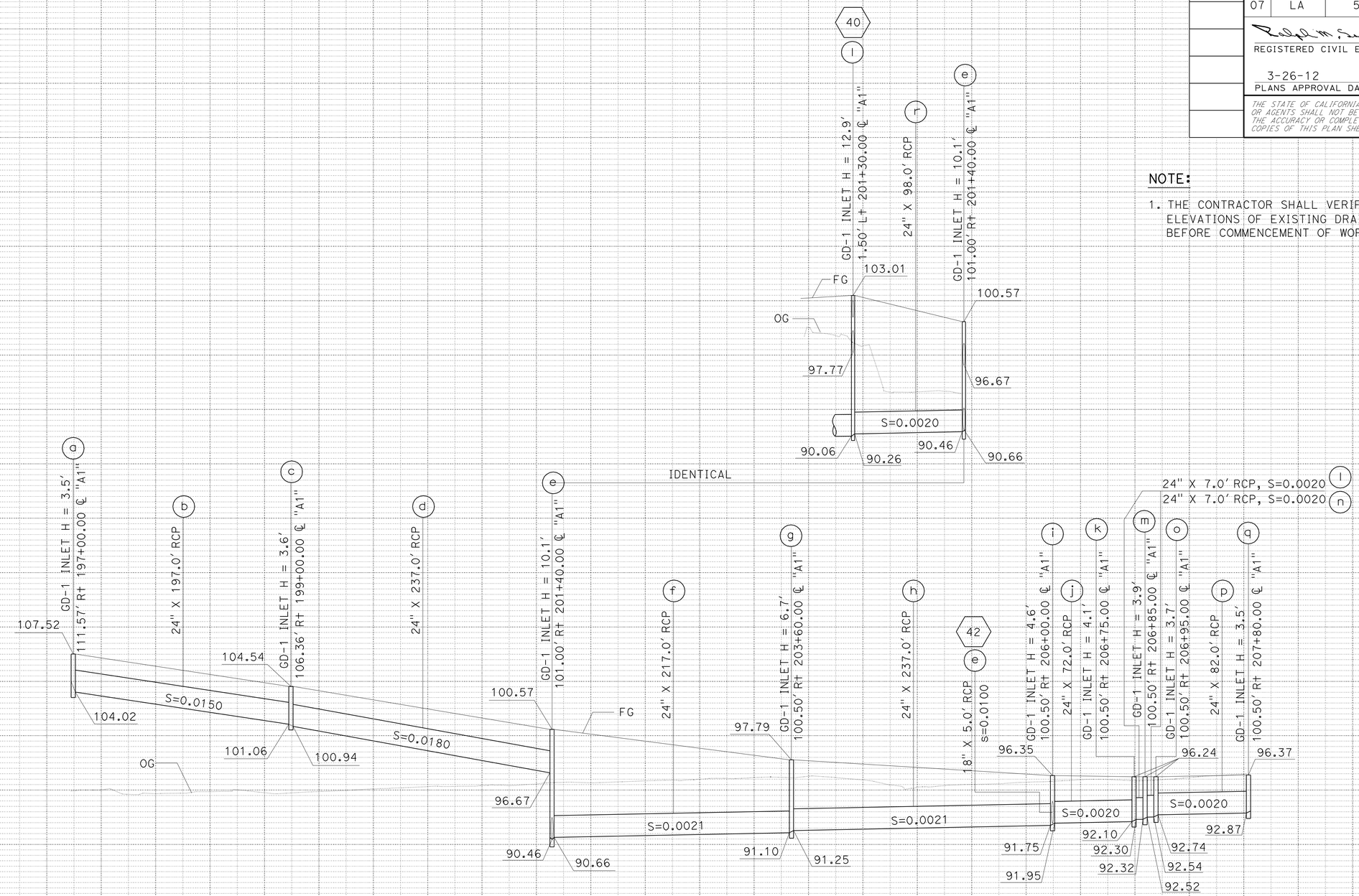

DRAINAGE SYSTEM No. 41

SCALE: Horiz 1" = 50′
Vert 1" = 5′

DRAINAGE PROFILES

SCALE AS SHOWN

DP-25

STATE OF CALIFORNIA - DEPARTMENT OF TRANSPORTATION
Caltrans® HYDRAULICS

FUNCTIONAL SUPERVISOR: JAI P. THAKUR
CALCULATED-DESIGNED BY: MAY P. FUNG
CHECKED BY: RALPH M. SASAKI
REVISED BY
DATE REVISED

LAST REVISION 00-00-00
DATE PLOTTED => 26-MAR-2012
TIME PLOTTED => 08:51

Dist	COUNTY	ROUTE	POST MILES TOTAL PROJECT	SHEET No.	TOTAL SHEETS
07	LA	5	2.4/4.0	153	1288

REGISTERED CIVIL ENGINEER 12-19-11 DATE

3-26-12
PLANS APPROVAL DATE

REGISTERED PROFESSIONAL ENGINEER RALPH M. SASAKI No. 30849 Exp. 3/31/12 CIVIL STATE OF CALIFORNIA

THE STATE OF CALIFORNIA OR ITS OFFICERS OR AGENTS SHALL NOT BE RESPONSIBLE FOR THE ACCURACY OR COMPLETENESS OF SCANNED COPIES OF THIS PLAN SHEET.

NOTE:

1. THE CONTRACTOR SHALL VERIFY LOCATIONS AND ELEVATIONS OF EXISTING DRAINAGE SYSTEMS BEFORE COMMENCEMENT OF WORK.

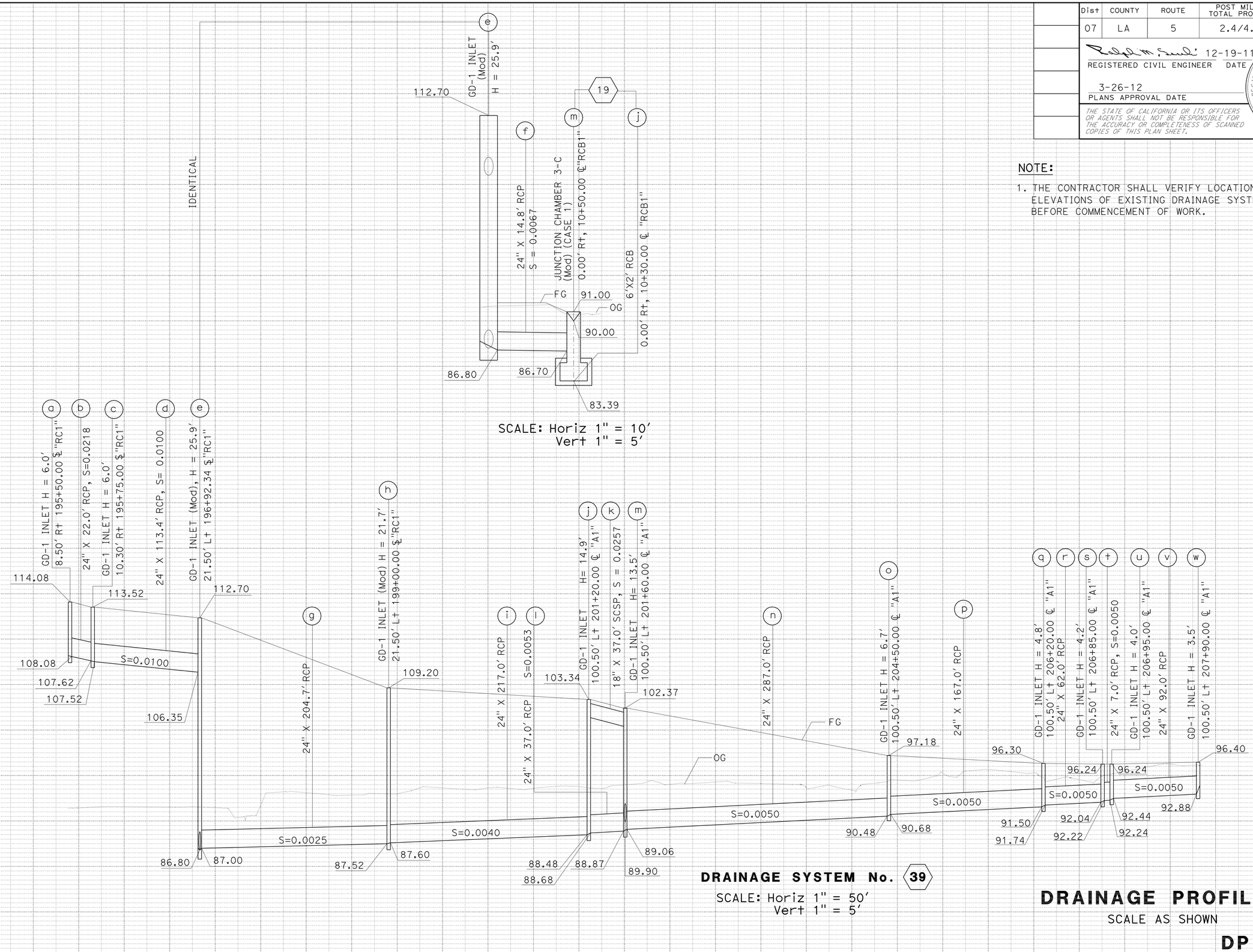

DRAINAGE PROFILES

SCALE AS SHOWN

DP-26

STATE OF CALIFORNIA - DEPARTMENT OF TRANSPORTATION
Caltrans HYDRAULICS

FUNCTIONAL SUPERVISOR: JAI P. THAKUR
CALCULATED-DESIGNED BY: MAY P. FUNG
CHECKED BY: RALPH M. SASAKI
REVISED BY
DATE REVISED

LAST REVISION 00-00-00
DATE PLOTTED => 28-MAR-2012
TIME PLOTTED => 08:51

Dist	COUNTY	ROUTE	POST MILES TOTAL PROJECT	SHEET No.	TOTAL SHEETS
07	LA	5	2.4/4.0	154	1288

REGISTERED CIVIL ENGINEER 12-19-11 DATE

3-26-12
PLANS APPROVAL DATE

REGISTERED PROFESSIONAL ENGINEER RALPH M. SASAKI No. 30849 Exp. 3/31/12 CIVIL STATE OF CALIFORNIA

THE STATE OF CALIFORNIA OR ITS OFFICERS OR AGENTS SHALL NOT BE RESPONSIBLE FOR THE ACCURACY OR COMPLETENESS OF SCANNED COPIES OF THIS PLAN SHEET.

NOTE:

1. THE CONTRACTOR SHALL VERIFY LOCATIONS AND ELEVATIONS OF EXISTING DRAINAGE SYSTEMS BEFORE COMMENCEMENT OF WORK.

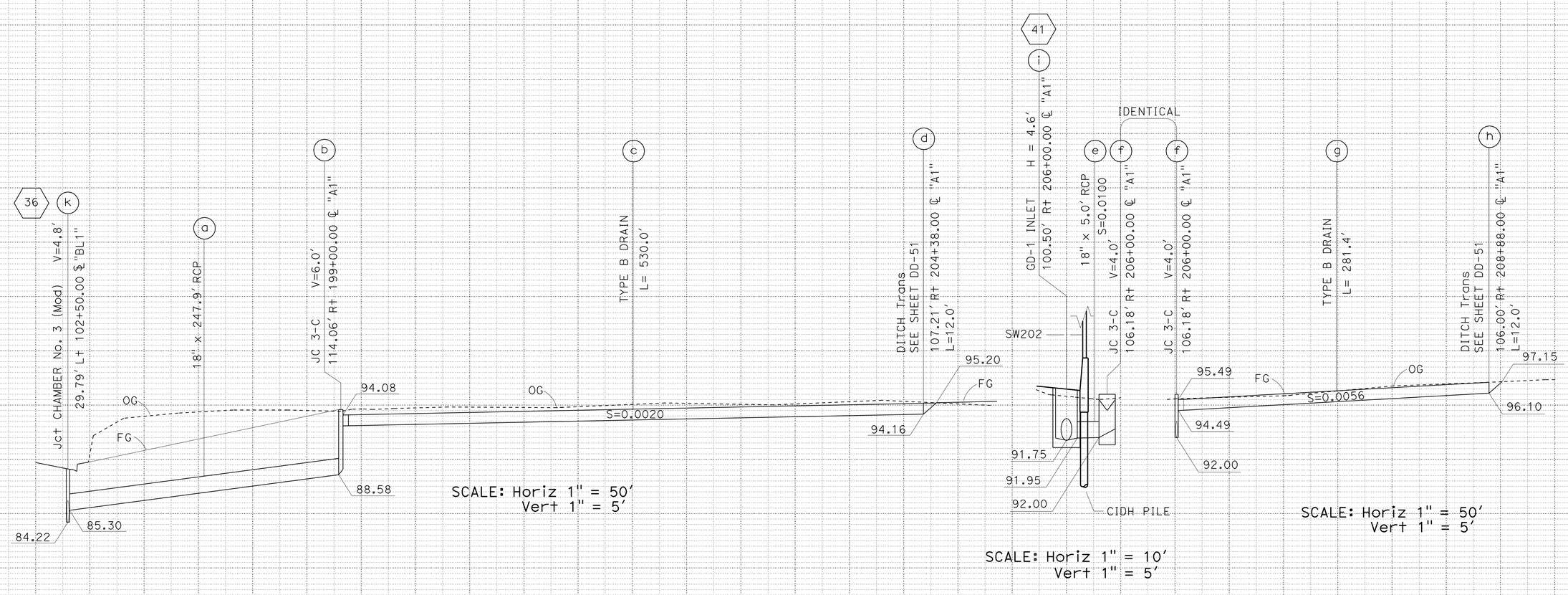

DRAINAGE SYSTEM No. 42

DRAINAGE PROFILES

SCALE AS SHOWN

DP-27

STATE OF CALIFORNIA - DEPARTMENT OF TRANSPORTATION
Caltrans® **HYDRAULICS**

FUNCTIONAL SUPERVISOR: JAI P. THAKUR
CALCULATED-DESIGNED BY: CEDRIC ESTRADA
CHECKED BY: RALPH M. SASAKI
REVISED BY
DATE REVISED

LAST REVISION 00-00-00
DATE PLOTTED => 28-MAR-2012
TIME PLOTTED => 08:51

Dist	COUNTY	ROUTE	POST MILES TOTAL PROJECT	SHEET No.	TOTAL SHEETS
07	LA	5	2.4/4.0	155	1288

REGISTERED CIVIL ENGINEER 12-19-11 DATE

3-26-12
PLANS APPROVAL DATE

REGISTERED PROFESSIONAL ENGINEER RALPH M. SASAKI No. 30849 Exp. 3/31/12 CIVIL STATE OF CALIFORNIA

THE STATE OF CALIFORNIA OR ITS OFFICERS OR AGENTS SHALL NOT BE RESPONSIBLE FOR THE ACCURACY OR COMPLETENESS OF SCANNED COPIES OF THIS PLAN SHEET.

NOTE:

1. THE CONTRACTOR SHALL VERIFY LOCATIONS AND ELEVATIONS OF EXISTING DRAINAGE SYSTEMS BEFORE COMMENCEMENT OF WORK.

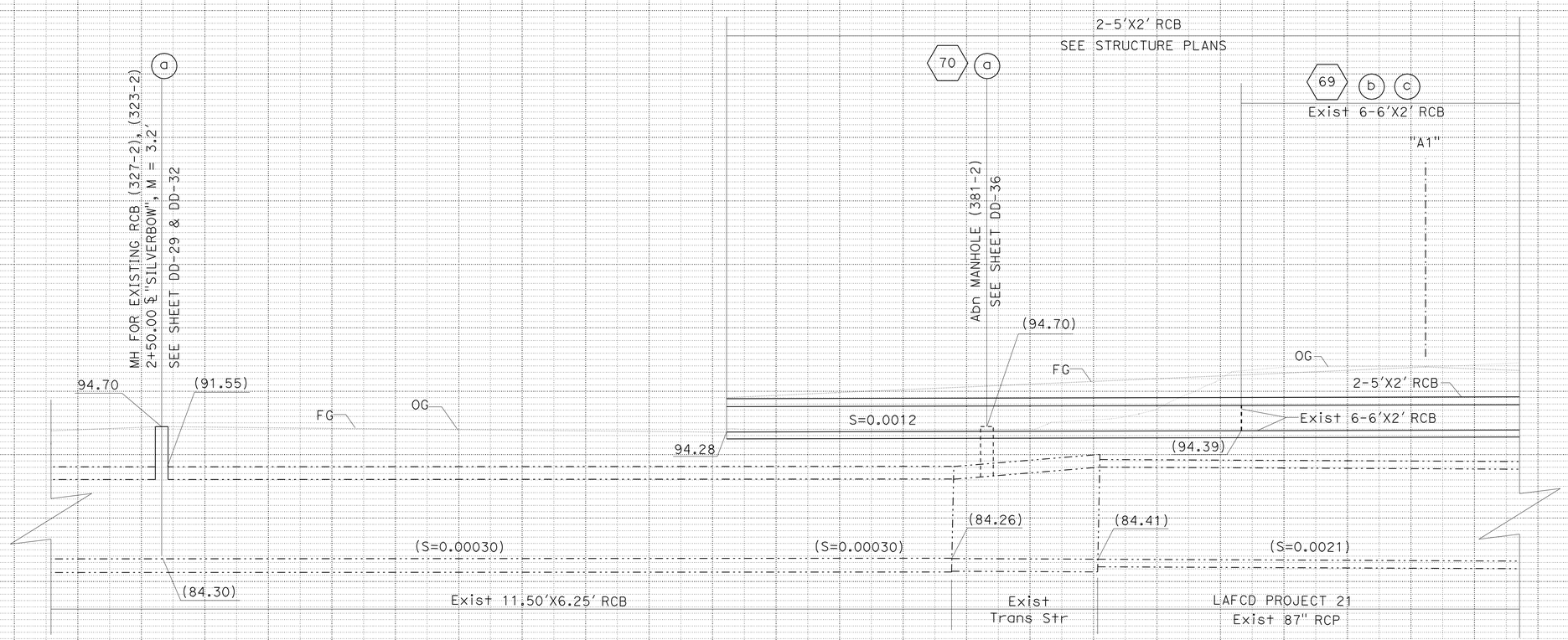

DRAINAGE SYSTEM No. 44

SCALE: Horiz 1" = 10'
Vert 1" = 5'

DRAINAGE PROFILES

SCALE AS SHOWN

DP-28

STATE OF CALIFORNIA - DEPARTMENT OF TRANSPORTATION
Caltrans® HYDRAULICS

FUNCTIONAL SUPERVISOR: JAI P. THAKUR
CALCULATED-DESIGNED BY: MAY P. FUNG
CHECKED BY: RALPH M. SASAKI
REVISED BY
DATE REVISED

LAST REVISION 00-00-00
DATE PLOTTED => 28-MAR-2012
TIME PLOTTED => 08:51

Dist	COUNTY	ROUTE	POST MILES TOTAL PROJECT	SHEET No.	TOTAL SHEETS
07	LA	5	2.4/4.0	156	1288

REGISTERED CIVIL ENGINEER 12-19-11 DATE

3-26-12
PLANS APPROVAL DATE

REGISTERED PROFESSIONAL ENGINEER RALPH M. SASAKI No. 30849 Exp. 3/31/12 CIVIL STATE OF CALIFORNIA

THE STATE OF CALIFORNIA OR ITS OFFICERS OR AGENTS SHALL NOT BE RESPONSIBLE FOR THE ACCURACY OR COMPLETENESS OF SCANNED COPIES OF THIS PLAN SHEET.

NOTE:

1. THE CONTRACTOR SHALL VERIFY LOCATIONS AND ELEVATIONS OF EXISTING DRAINAGE SYSTEMS BEFORE COMMENCEMENT OF WORK.

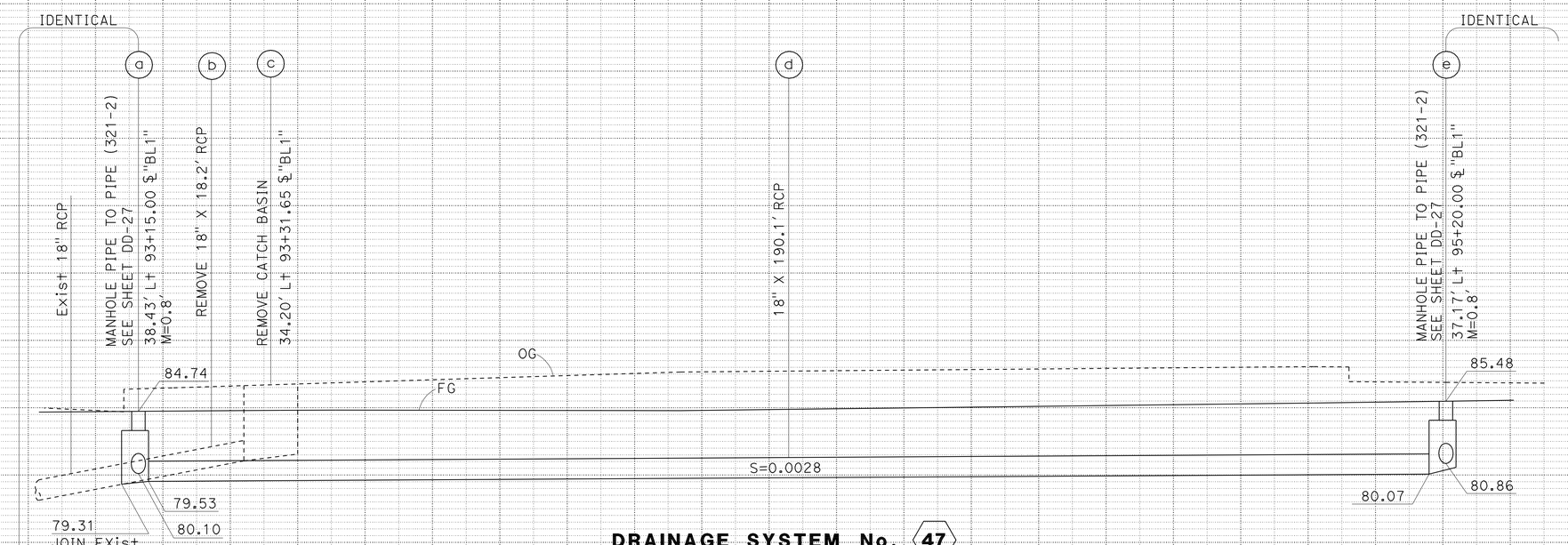

DRAINAGE SYSTEM No. 47
SCALE: Horiz 1" = 10'
Vert 1" = 5'

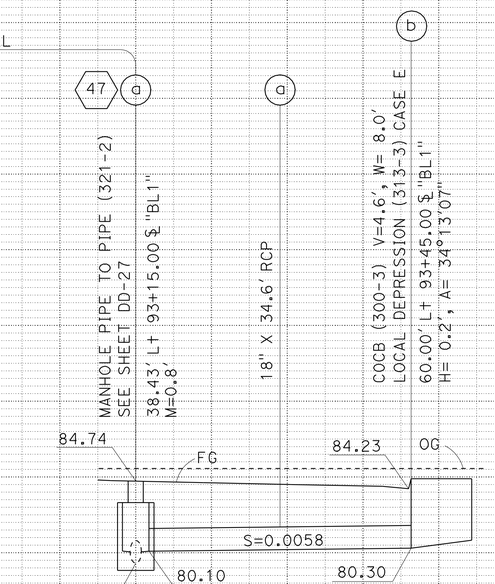

DRAINAGE SYSTEM No. 46
SCALE: Horiz 1" = 10'
Vert 1" = 5'

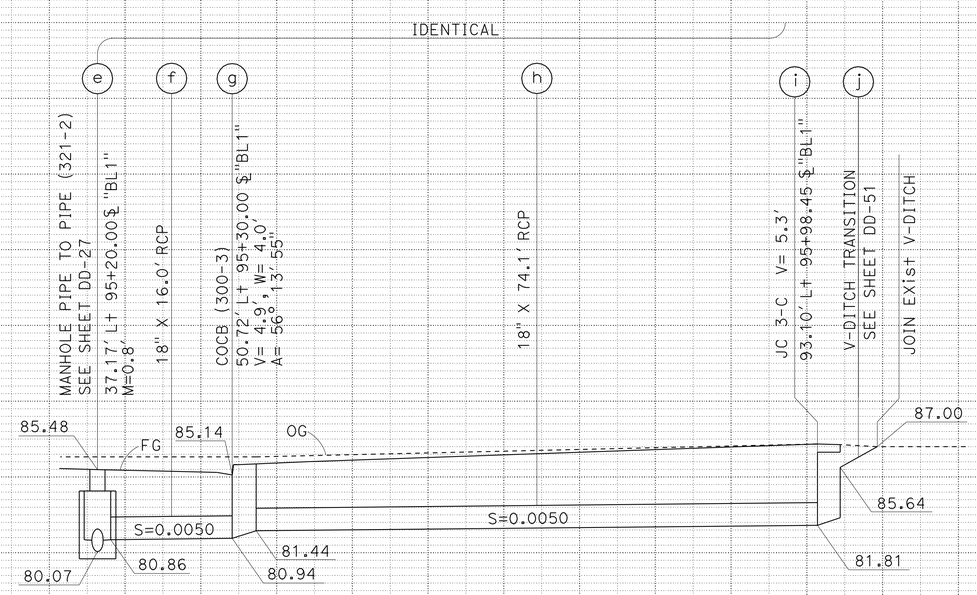

DRAINAGE SYSTEM No. 47
SCALE: Horiz 1" = 10'
Vert 1" = 5'

DRAINAGE PROFILES

SCALE AS SHOWN

DP-29

STATE OF CALIFORNIA - DEPARTMENT OF TRANSPORTATION
Caltrans® HYDRAULICS

FUNCTIONAL SUPERVISOR: JAI P. THAKUR
CALCULATED-DESIGNED BY: CEDRIC ESTRADA
CHECKED BY: RALPH M. SASAKI
REVISED BY / DATE REVISED

LAST REVISION 00-00-00
DATE PLOTTED => 26-MAR-2012
TIME PLOTTED => 08:51

Dist	COUNTY	ROUTE	POST MILES TOTAL PROJECT	SHEET No.	TOTAL SHEETS
07	LA	5	2.4/4.0	157	1288

REGISTERED CIVIL ENGINEER 12-19-11 DATE

3-26-12
PLANS APPROVAL DATE

REGISTERED PROFESSIONAL ENGINEER RALPH M. SASAKI No. 30849 Exp. 3/31/12 CIVIL STATE OF CALIFORNIA

THE STATE OF CALIFORNIA OR ITS OFFICERS OR AGENTS SHALL NOT BE RESPONSIBLE FOR THE ACCURACY OR COMPLETENESS OF SCANNED COPIES OF THIS PLAN SHEET.

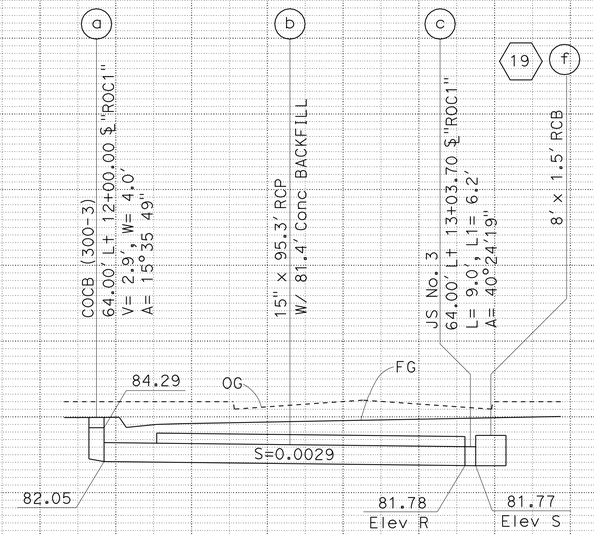

DRAINAGE SYSTEM No. 24

SCALE: Horiz 1" = 20'
Vert 1" = 5'

NOTE:

1. THE CONTRACTOR SHALL VERIFY LOCATIONS AND ELEVATIONS OF EXISTING DRAINAGE SYSTEMS BEFORE COMMENCEMENT OF WORK.

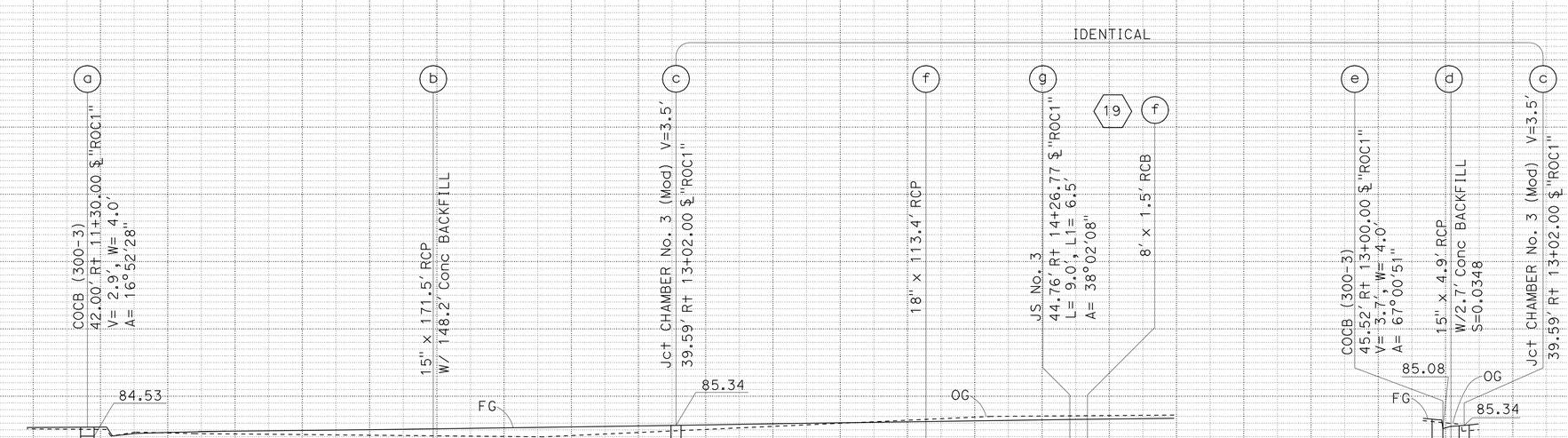

DRAINAGE SYSTEM No. 23

SCALE: Horiz 1" = 20'
Vert 1" = 5'

DRAINAGE PROFILES

SCALE AS SHOWN

DP-30

STATE OF CALIFORNIA - DEPARTMENT OF TRANSPORTATION
Caltrans® HYDRAULICS
FUNCTIONAL SUPERVISOR: JAI P. THAKUR
CALCULATED-DESIGNED BY: CEDRIC ESTRADA
CHECKED BY: RALPH M. SASAKI
REVISED BY / DATE REVISED

LAST REVISION 00-00-00 | DATE PLOTTED => 26-MAR-2012 | TIME PLOTTED => 08:51

Dist	COUNTY	ROUTE	POST MILES TOTAL PROJECT	SHEET No.	TOTAL SHEETS
07	LA	5	2.4/4.0	158	1288

REGISTERED CIVIL ENGINEER 12-19-11 DATE

3-26-12
PLANS APPROVAL DATE

REGISTERED PROFESSIONAL ENGINEER
RALPH M. SASAKI
No. 30849
Exp. 3/31/12
CIVIL
STATE OF CALIFORNIA

THE STATE OF CALIFORNIA OR ITS OFFICERS OR AGENTS SHALL NOT BE RESPONSIBLE FOR THE ACCURACY OR COMPLETENESS OF SCANNED COPIES OF THIS PLAN SHEET.

NOTE:

1. THE CONTRACTOR SHALL VERIFY LOCATIONS AND ELEVATIONS OF EXISTING DRAINAGE SYSTEMS BEFORE COMMENCEMENT OF WORK.

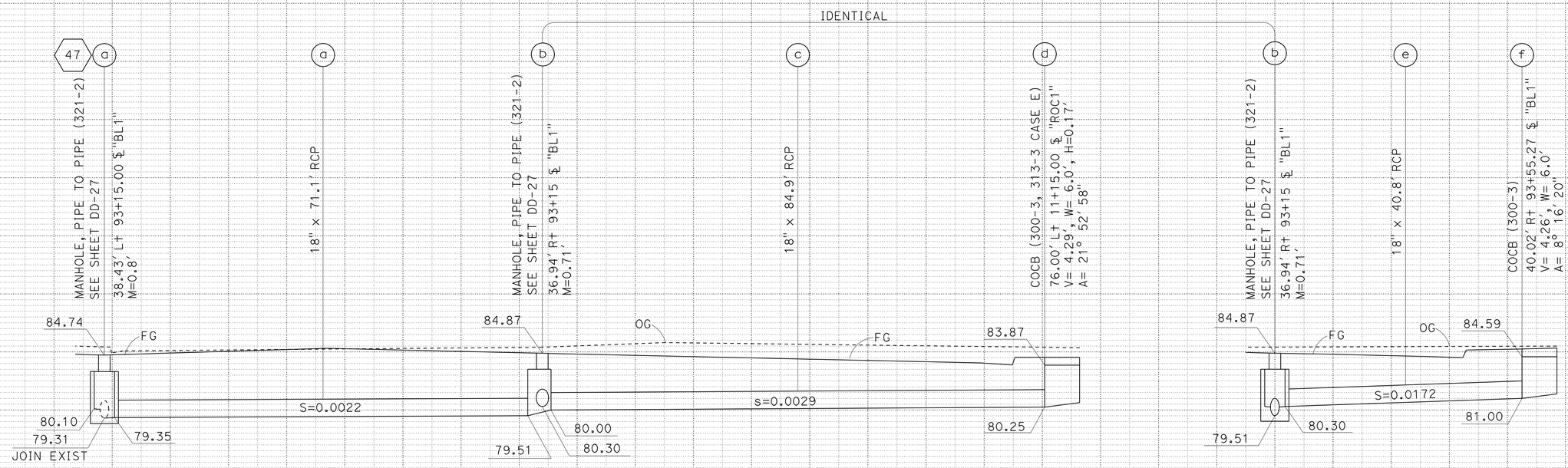

DRAINAGE SYSTEM No. 48

SCALE: Horiz 1" = 10'
Vert 1" = 5'

DRAINAGE PROFILES

SCALE AS SHOWN

DP-31

STATE OF CALIFORNIA - DEPARTMENT OF TRANSPORTATION
Caltrans
HYDRAULICS

FUNCTIONAL SUPERVISOR: JAI P. THAKUR
CALCULATED-DESIGNED BY: CEDRIC ESTRADA
CHECKED BY: RALPH M. SASAKI
REVISED BY
DATE REVISED

LAST REVISION 00-00-00
DATE PLOTTED => 28-MAR-2012
TIME PLOTTED => 08:51

Dist	COUNTY	ROUTE	POST MILES TOTAL PROJECT	SHEET No.	TOTAL SHEETS
07	LA	5	2.4/4.0	159	1288

REGISTERED CIVIL ENGINEER 12-19-11 DATE

3-26-12
PLANS APPROVAL DATE

REGISTERED PROFESSIONAL ENGINEER RALPH M. SASAKI No. 30849 Exp. 3/31/12 CIVIL STATE OF CALIFORNIA

THE STATE OF CALIFORNIA OR ITS OFFICERS OR AGENTS SHALL NOT BE RESPONSIBLE FOR THE ACCURACY OR COMPLETENESS OF SCANNED COPIES OF THIS PLAN SHEET.

NOTE:

1. THE CONTRACTOR SHALL VERIFY LOCATIONS AND ELEVATIONS OF EXISTING DRAINAGE SYSTEMS BEFORE COMMENCEMENT OF WORK.

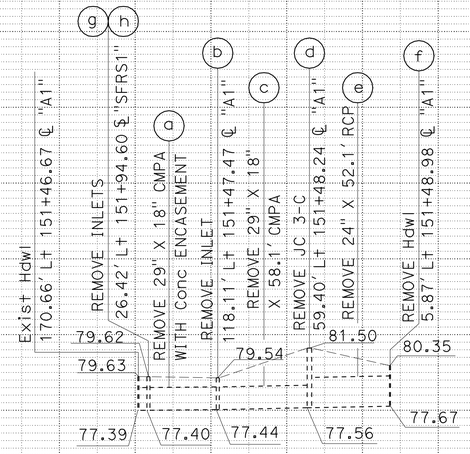

DRAINAGE SYSTEM No. 49

SCALE: Horiz 1"= 50'
Vert 1"= 5'

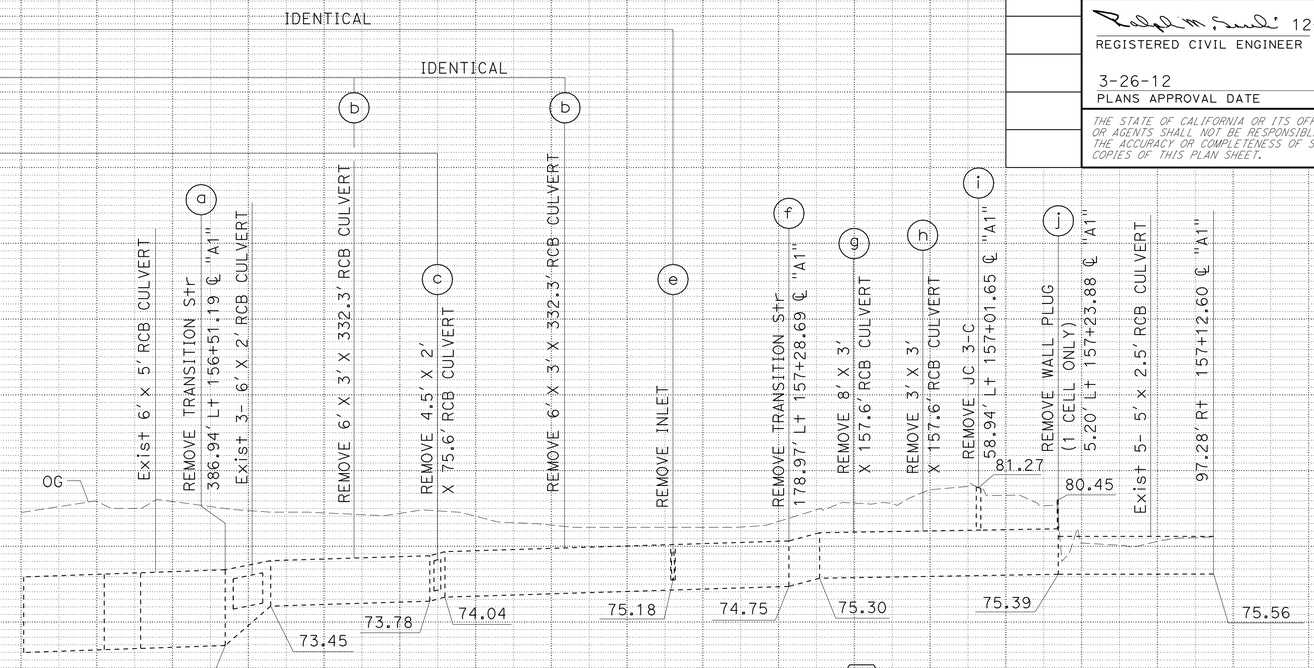

DRAINAGE SYSTEM No. 50

SCALE: Horiz 1"= 50'
Vert 1"= 5'

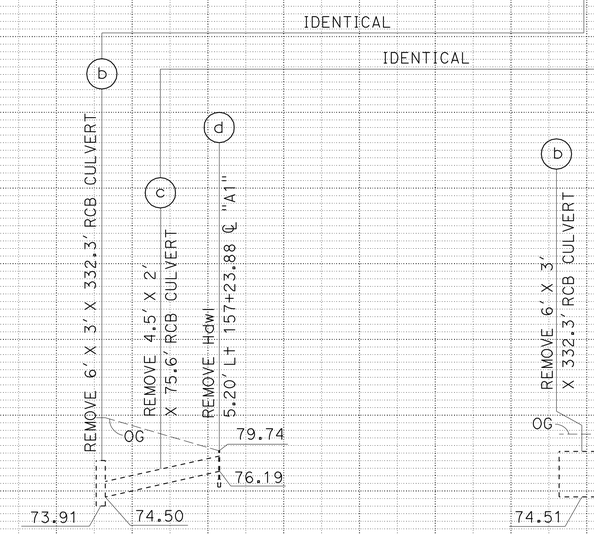

DRAINAGE SYSTEM No. 50

SCALE: Horiz 1"= 50'
Vert 1"= 5'

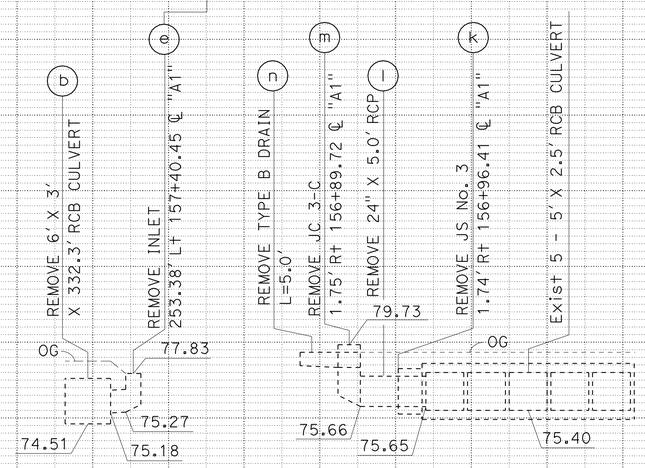

DRAINAGE SYSTEM No. 50

SCALE: Horiz 1"= 10'
Vert 1"= 5'

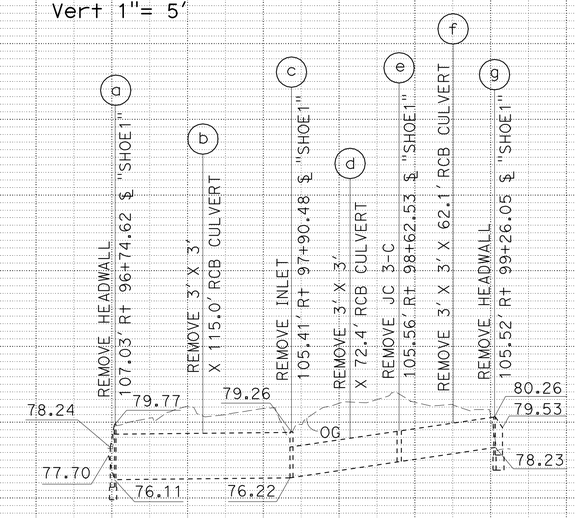

DRAINAGE SYSTEM No. 51

SCALE: Horiz 1"= 50'
Vert 1"= 5'

DRAINAGE PROFILES

SCALE AS SHOWN

DP-32

STATE OF CALIFORNIA - DEPARTMENT OF TRANSPORTATION
Caltrans® HYDRAULICS
FUNCTIONAL SUPERVISOR: JAI P. THAKUR
CALCULATED-DESIGNED BY: MAY P. FUNG
CHECKED BY: RALPH M. SASAKI
REVISED BY / DATE REVISED

LAST REVISION 00-00-00
DATE PLOTTED => 28-MAR-2012
TIME PLOTTED => 08:51

Dist	COUNTY	ROUTE	POST MILES TOTAL PROJECT	SHEET No.	TOTAL SHEETS
07	LA	5	2.4/4.0	160	1288

REGISTERED CIVIL ENGINEER 12-19-11 DATE

3-26-12
PLANS APPROVAL DATE

REGISTERED PROFESSIONAL ENGINEER RALPH M. SASAKI No. 30849 Exp. 3/31/12 CIVIL STATE OF CALIFORNIA

THE STATE OF CALIFORNIA OR ITS OFFICERS OR AGENTS SHALL NOT BE RESPONSIBLE FOR THE ACCURACY OR COMPLETENESS OF SCANNED COPIES OF THIS PLAN SHEET.

NOTES:

1. THE CONTRACTOR SHALL VERIFY LOCATIONS AND ELEVATIONS OF EXISTING DRAINAGE SYSTEMS BEFORE COMMENCEMENT OF WORK.
2. FOR THE SIZE OF THE CONCRETE CHANNEL SEE DD-56.

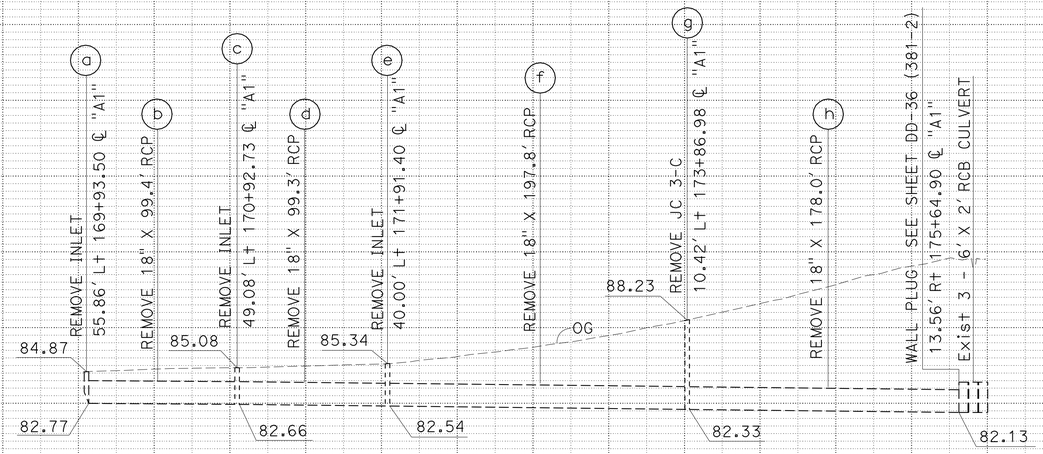

DRAINAGE SYSTEM No. 52

SCALE: Horiz 1" = 50'
Vert 1" = 5'

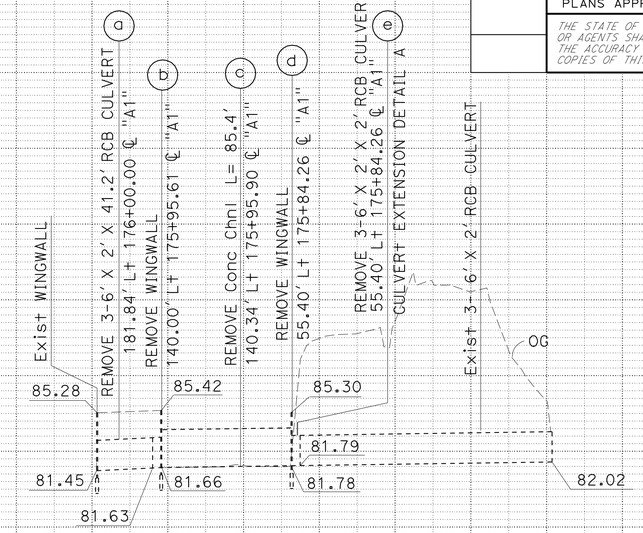

DRAINAGE SYSTEM No. 53

SCALE: Horiz 1" = 50'
Vert 1" = 5'

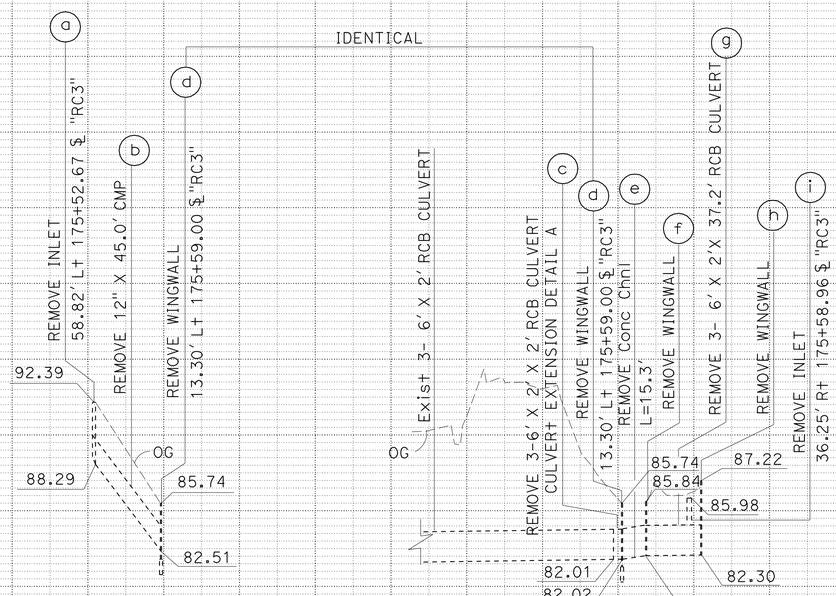

DRAINAGE SYSTEM No. 54

SCALE: Horiz 1" = 50'
Vert 1" = 5'

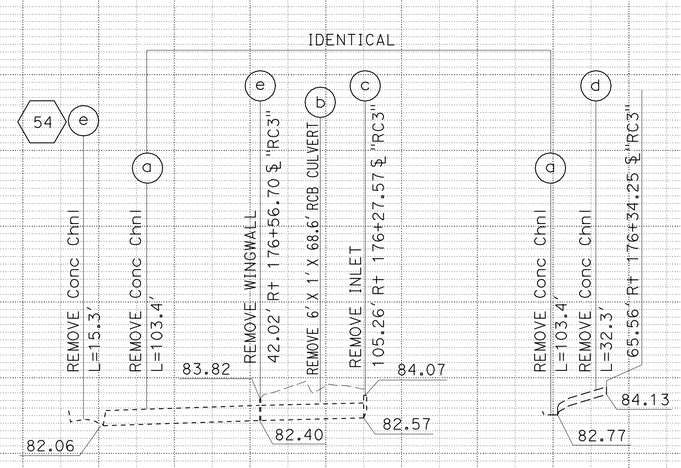

DRAINAGE SYSTEM No. 55

SCALE: Horiz 1" = 50'
Vert 1" = 5'

DRAINAGE PROFILES

SCALE AS SHOWN

DP-33

STATE OF CALIFORNIA - DEPARTMENT OF TRANSPORTATION
Caltrans HYDRAULICS

FUNCTIONAL SUPERVISOR: JAI P. THAKUR
CALCULATED-DESIGNED BY: RALPH M. SASAKI
CHECKED BY: MAY P. FUNG
REVISED BY / DATE REVISED

LAST REVISION 00-00-00 DATE PLOTTED => 26-MAR-2012 TIME PLOTTED => 08:52

Dist	COUNTY	ROUTE	POST MILES TOTAL PROJECT	SHEET No.	TOTAL SHEETS
07	LA	5	2.4/4.0	161	1288

REGISTERED CIVIL ENGINEER 12-19-11 DATE

3-26-12
PLANS APPROVAL DATE

REGISTERED PROFESSIONAL ENGINEER RALPH M. SASAKI No. 30849 Exp. 3/31/12 CIVIL STATE OF CALIFORNIA

THE STATE OF CALIFORNIA OR ITS OFFICERS OR AGENTS SHALL NOT BE RESPONSIBLE FOR THE ACCURACY OR COMPLETENESS OF SCANNED COPIES OF THIS PLAN SHEET.

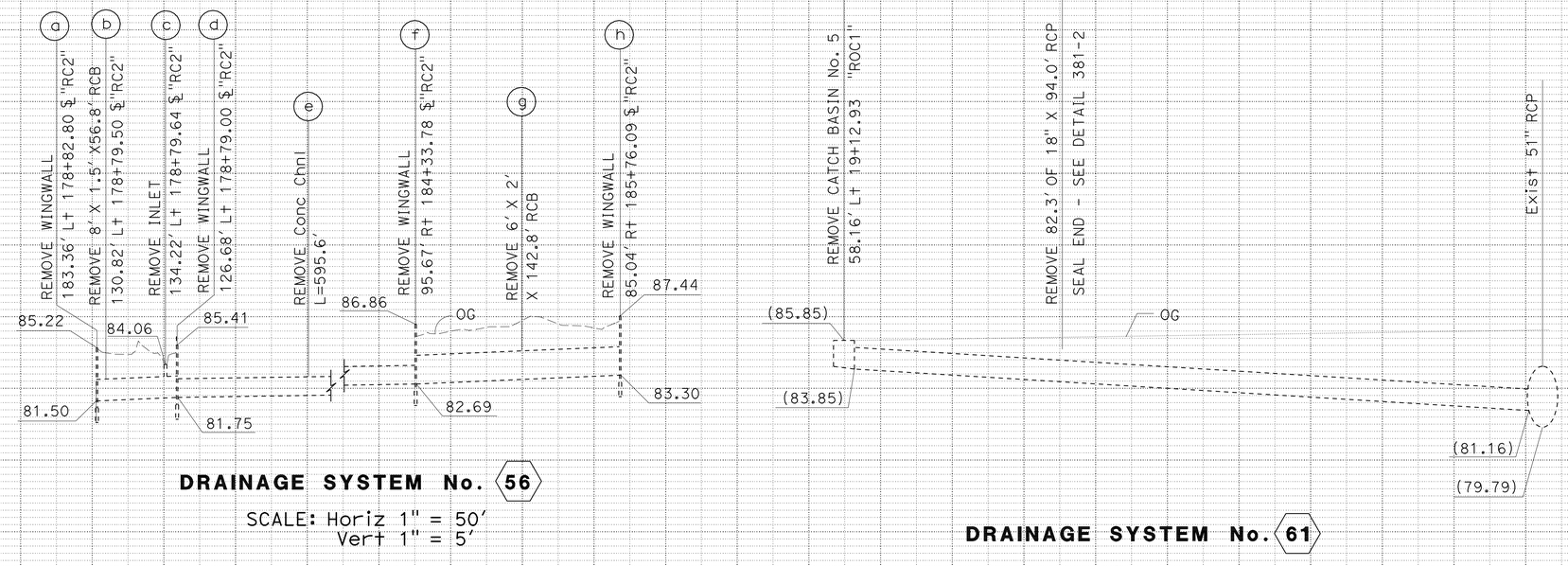

DRAINAGE SYSTEM No. 56

SCALE: Horiz 1" = 50'
Vert 1" = 5'

DRAINAGE SYSTEM No. 61

SCALE: Horiz 1" = 10'
Vert 1" = 5'

NOTES:

1. THE CONTRACTOR SHALL VERIFY LOCATIONS AND ELEVATIONS OF EXISTING DRAINAGE SYSTEMS BEFORE COMMENCEMENT OF WORK.
2. FOR THE SIZE OF THE CONCRETE CHANNEL SEE DD-56.

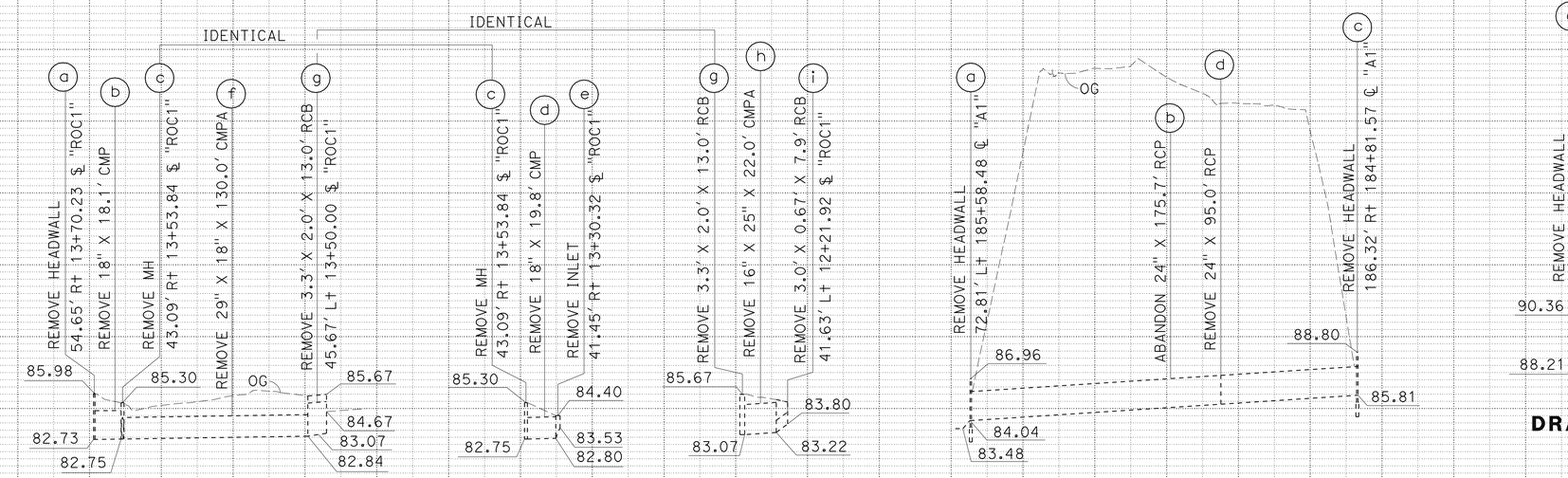

DRAINAGE SYSTEM No. 57

SCALE: Horiz 1" = 50'
Vert 1" = 5'

DRAINAGE SYSTEM No. 59

SCALE: Horiz 1" = 50'
Vert 1" = 5'

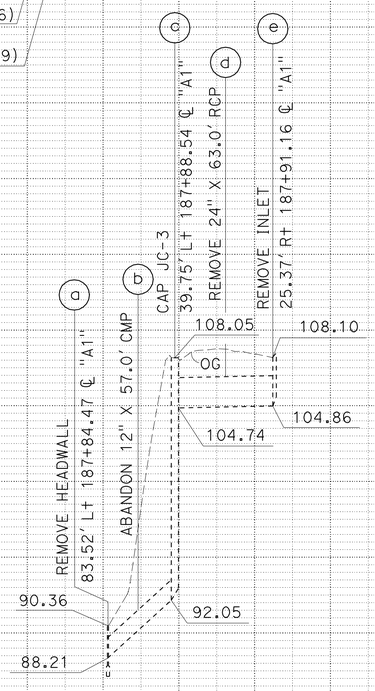

DRAINAGE SYSTEM No. 60

SCALE: Horiz 1" = 50'
Vert 1" = 5'

DRAINAGE PROFILES

SCALE AS SHOWN

DP-34

STATE OF CALIFORNIA - DEPARTMENT OF TRANSPORTATION
Caltrans HYDRAULICS

FUNCTIONAL SUPERVISOR: JAI P. THAKUR
CALCULATED-DESIGNED BY: MAY P. FUNG
CHECKED BY: RALPH M. SASAKI
REVISED BY / DATE REVISED

LAST REVISION 00-00-00 | DATE PLOTTED => 28-MAR-2012 | TIME PLOTTED => 08:52

Dist	COUNTY	ROUTE	POST MILES TOTAL PROJECT	SHEET No.	TOTAL SHEETS
07	LA	5	2.4/4.0	162	1288

REGISTERED CIVIL ENGINEER 12-19-11 DATE

3-26-12
PLANS APPROVAL DATE

REGISTERED PROFESSIONAL ENGINEER RALPH M. SASAKI No. 30849 Exp. 3/31/12 CIVIL STATE OF CALIFORNIA

THE STATE OF CALIFORNIA OR ITS OFFICERS OR AGENTS SHALL NOT BE RESPONSIBLE FOR THE ACCURACY OR COMPLETENESS OF SCANNED COPIES OF THIS PLAN SHEET.

NOTES:

1. THE CONTRACTOR SHALL VERIFY LOCATIONS AND ELEVATIONS OF EXISTING DRAINAGE SYSTEMS BEFORE COMMENCEMENT OF WORK.
2. FOR THE SIZE OF THE CONCRETE CHANNEL SEE DD-56.

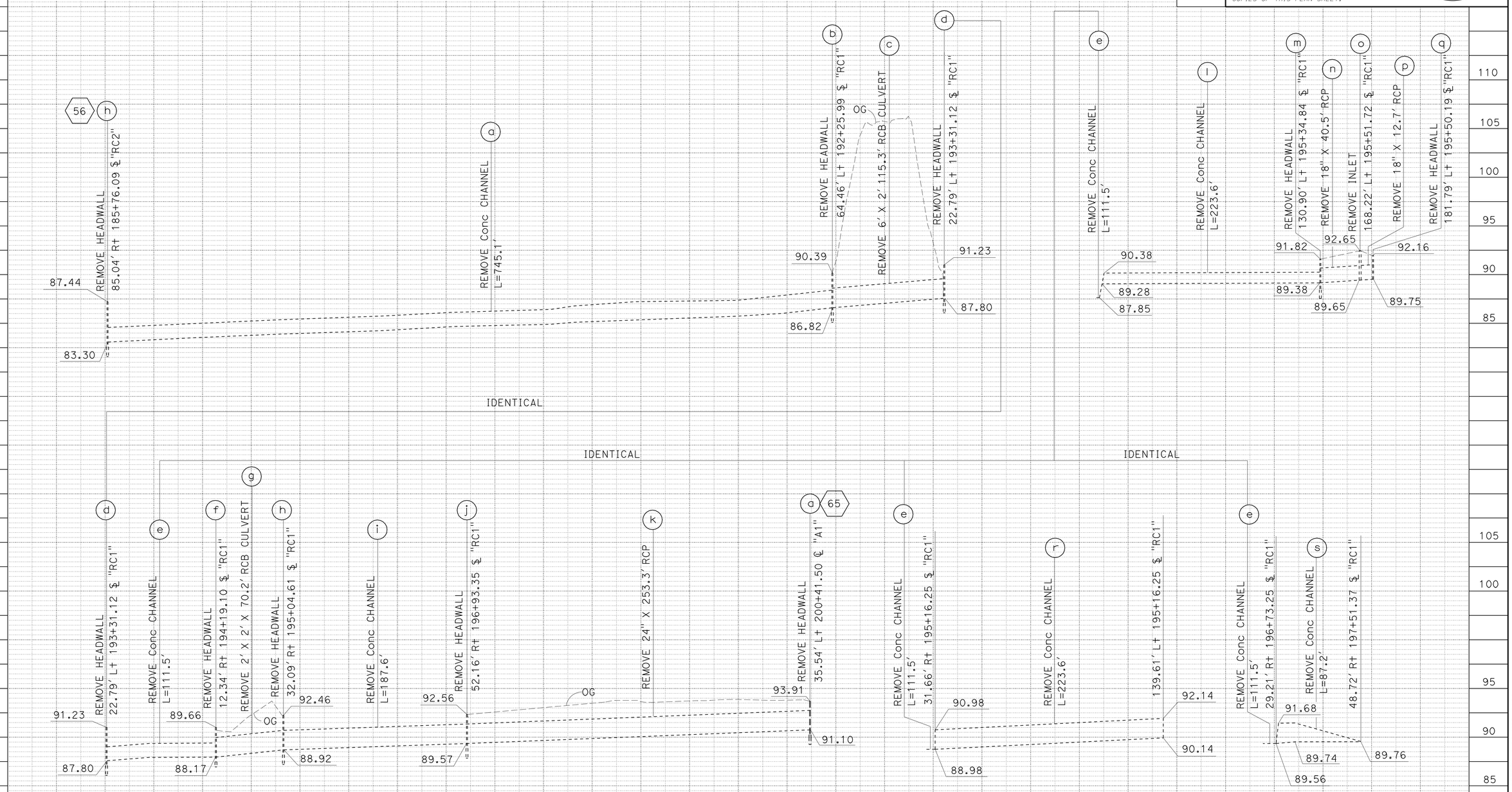

DRAINAGE SYSTEM No. 58

SCALE: Horiz 1" = 50'
Vert 1" = 5'

DRAINAGE PROFILES

SCALE AS SHOWN

DP-35

STATE OF CALIFORNIA - DEPARTMENT OF TRANSPORTATION
Caltrans® HYDRAULICS

FUNCTIONAL SUPERVISOR: JAI P. THAKUR
CALCULATED-DESIGNED BY: MAY P. FUNG
CHECKED BY: RALPH M. SASAKI
REVISED BY
DATE REVISED

LAST REVISION 00-00-00
DATE PLOTTED => 26-MAR-2012
TIME PLOTTED => 08:52

Dist	COUNTY	ROUTE	POST MILES TOTAL PROJECT	SHEET No.	TOTAL SHEETS
07	LA	5	2.4/4.0	163	1288

REGISTERED CIVIL ENGINEER 12-19-11 DATE

3-26-12
PLANS APPROVAL DATE

REGISTERED PROFESSIONAL ENGINEER RALPH M. SASAKI No. 30849 Exp. 3/31/12 CIVIL STATE OF CALIFORNIA

THE STATE OF CALIFORNIA OR ITS OFFICERS OR AGENTS SHALL NOT BE RESPONSIBLE FOR THE ACCURACY OR COMPLETENESS OF SCANNED COPIES OF THIS PLAN SHEET.

NOTES:

1. THE CONTRACTOR SHALL VERIFY LOCATIONS AND ELEVATIONS OF EXISTING DRAINAGE SYSTEMS BEFORE COMMENCEMENT OF WORK.
2. FOR THE SIZE OF THE CONCRETE CHANNEL SEE DD-56.

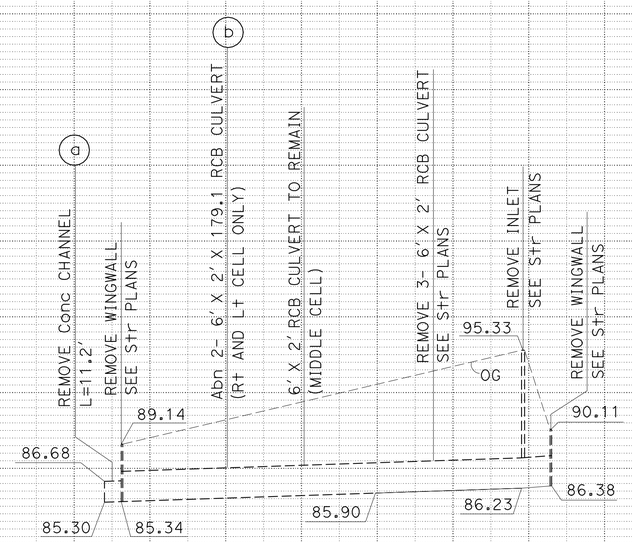

DRAINAGE SYSTEM No. 62

SCALE: Horiz 1" = 50'
Vert 1" = 5'

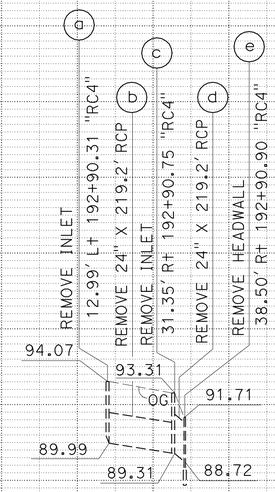

DRAINAGE SYSTEM No. 63

SCALE: Horiz 1" = 50'
Vert 1" = 5'

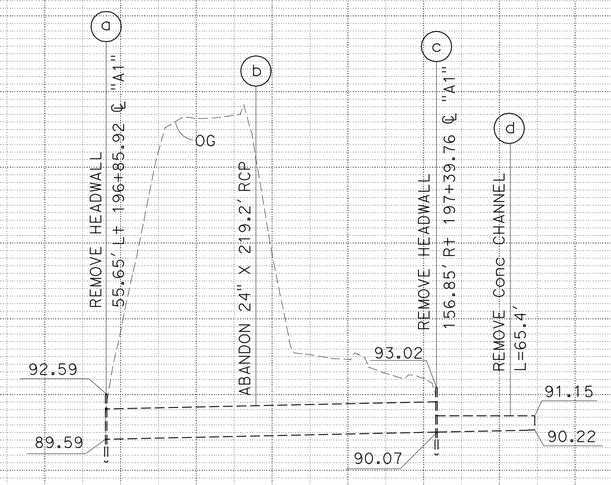

DRAINAGE SYSTEM No. 64

SCALE: Horiz 1" = 50'
Vert 1" = 5'

DRAINAGE PROFILES

SCALE AS SHOWN

DP-36

STATE OF CALIFORNIA - DEPARTMENT OF TRANSPORTATION
Caltrans® HYDRAULICS

FUNCTIONAL SUPERVISOR: JAI P. THAKUR
CALCULATED-DESIGNED BY: MAY P. FUNG
CHECKED BY: RALPH M. SASAKI
REVISED BY
DATE REVISED

LAST REVISION 00-00-00
DATE PLOTTED => 28-MAR-2012
TIME PLOTTED => 08:52

Dist	COUNTY	ROUTE	POST MILES TOTAL PROJECT	SHEET No.	TOTAL SHEETS
07	LA	5	2.4/4.0	164	1288

12-19-11
REGISTERED CIVIL ENGINEER DATE

3-26-12
PLANS APPROVAL DATE

REGISTERED PROFESSIONAL ENGINEER
RALPH M. SASAKI
No. 30849
Exp. 3/31/12
CIVIL
STATE OF CALIFORNIA

THE STATE OF CALIFORNIA OR ITS OFFICERS OR AGENTS SHALL NOT BE RESPONSIBLE FOR THE ACCURACY OR COMPLETENESS OF SCANNED COPIES OF THIS PLAN SHEET.

NOTES:

1. THE CONTRACTOR SHALL VERIFY LOCATIONS AND ELEVATIONS OF EXISTING DRAINAGE SYSTEMS BEFORE COMMENCEMENT OF WORK.
2. FOR THE SIZE OF THE CONCRETE CHANNEL SEE DD-56.

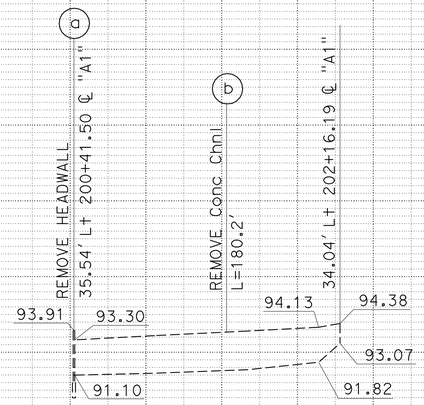

DRAINAGE SYSTEM No. 65

SCALE: Horiz 1"= 50'
Vert 1"= 5'

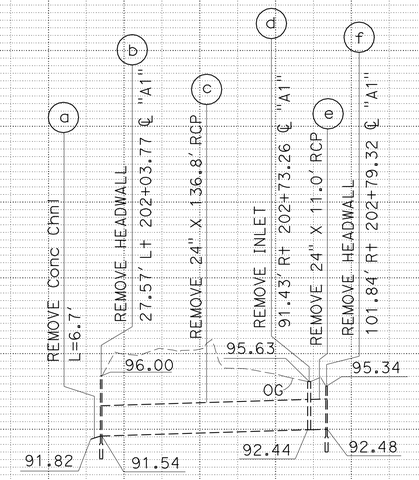

DRAINAGE SYSTEM No. 66

SCALE: Horiz 1"= 50'
Vert 1"= 5'

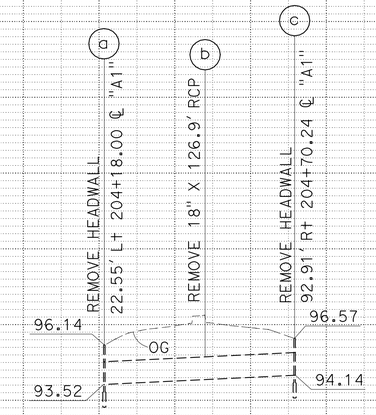

DRAINAGE SYSTEM No. 67

SCALE: Horiz 1"= 50'
Vert 1"= 5'

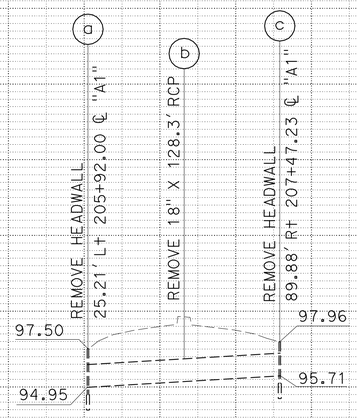

DRAINAGE SYSTEM No. 68

SCALE: Horiz 1"= 50'
Vert 1"= 5'

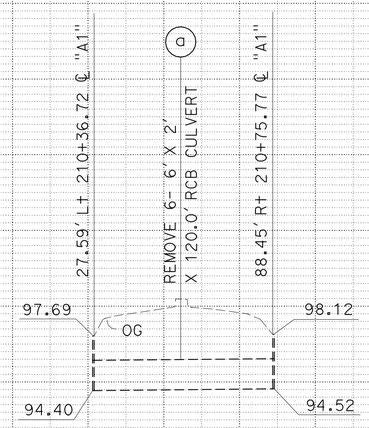

DRAINAGE SYSTEM No. 69

SCALE: Horiz 1"= 50'
Vert 1"= 5'

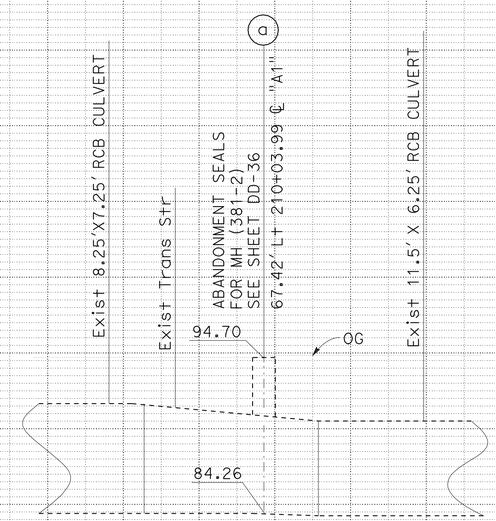

DRAINAGE SYSTEM No. 70

SCALE: Horiz 1"= 10'
Vert 1"= 5'

DRAINAGE PROFILES

SCALE AS SHOWN

DP-37

STATE OF CALIFORNIA - DEPARTMENT OF TRANSPORTATION
Caltrans® HYDRAULICS
FUNCTIONAL SUPERVISOR: JAI P. THAKUR
CALCULATED-DESIGNED BY: MAY P. FUNG
CHECKED BY: RALPH M. SASAKI
REVISED BY / DATE REVISED

LAST REVISION 00-00-00 | DATE PLOTTED => 26-MAR-2012 | TIME PLOTTED => 08:52

Dist	COUNTY	ROUTE	POST MILES TOTAL PROJECT	SHEET No.	TOTAL SHEETS
07	LA	5	2.4/4.0	165	1288

REGISTERED CIVIL ENGINEER 12-19-11 DATE

3-26-12
PLANS APPROVAL DATE

REGISTERED PROFESSIONAL ENGINEER RALPH M. SASAKI No. 30849 Exp. 3/31/12 CIVIL STATE OF CALIFORNIA

THE STATE OF CALIFORNIA OR ITS OFFICERS OR AGENTS SHALL NOT BE RESPONSIBLE FOR THE ACCURACY OR COMPLETENESS OF SCANNED COPIES OF THIS PLAN SHEET.

NOTE:

1. THE CONTRACTOR SHALL VERIFY LOCATIONS AND ELEVATIONS OF EXISTING DRAINAGE SYSTEMS BEFORE COMMENCEMENT OF WORK.

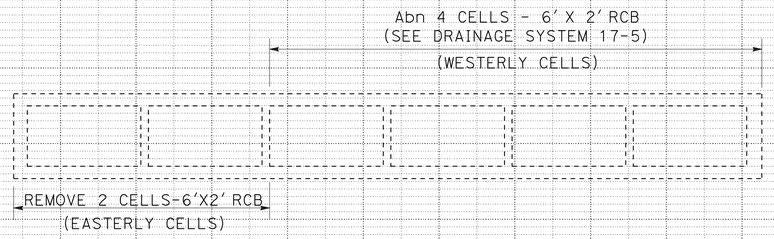

Exist 6-CELL 6'X2' RCB (NORTH END)
SILVERBOW Ave
NO SCALE

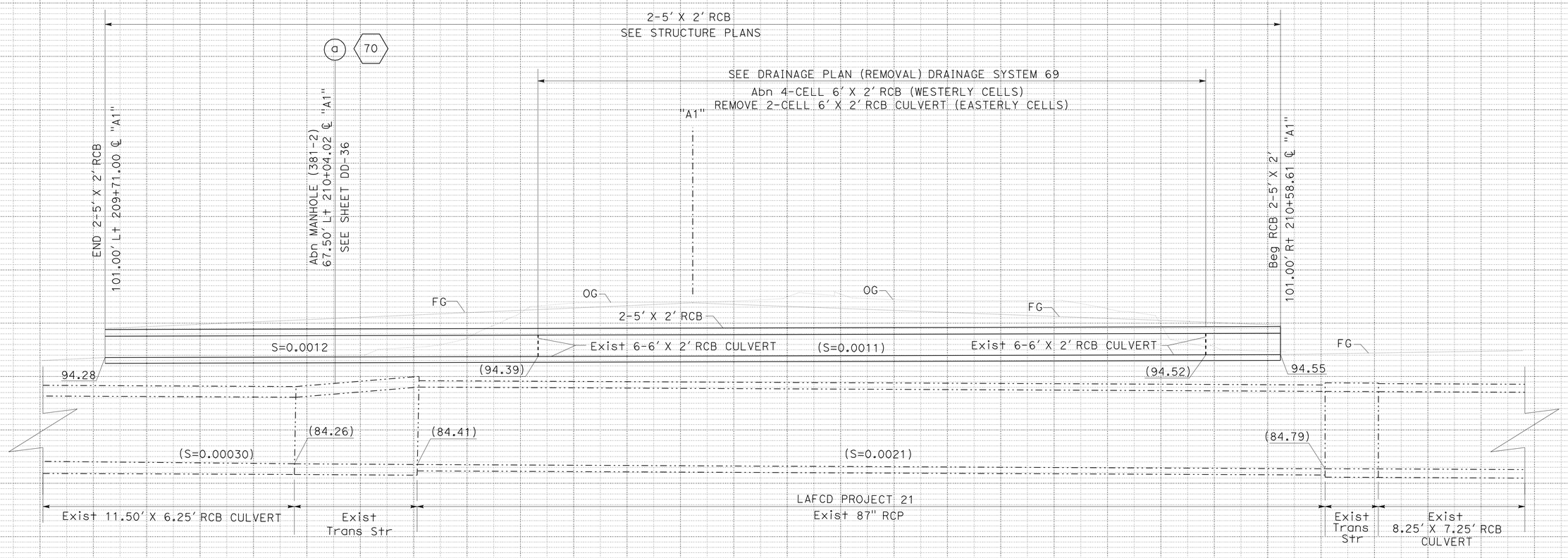

DOUBLE CELL - 5' x 2' RCB
SILVERBOW Ave
(SEE STRUCTURE PLANS)

DRAINAGE PROFILES

SCALE: Horiz 1" = 10'
Vert 1" = 5'

DP-38

STATE OF CALIFORNIA - DEPARTMENT OF TRANSPORTATION
Caltrans® HYDRAULICS

FUNCTIONAL SUPERVISOR: JAI P. THAKUR
CALCULATED-DESIGNED BY: MAY P. FUNG
CHECKED BY: RALPH M. SASAKI
REVISED BY
DATE REVISED

LAST REVISION 00-00-00
DATE PLOTTED => 28-MAR-2012
TIME PLOTTED => 08:52

Dist	COUNTY	ROUTE	POST MILES TOTAL PROJECT	SHEET No.	TOTAL SHEETS
07	LA	5	2.4/4.0	166	1288

REGISTERED CIVIL ENGINEER 12-19-11 DATE

3-26-12
PLANS APPROVAL DATE

REGISTERED PROFESSIONAL ENGINEER RALPH M. SASAKI No. 30849 Exp. 3/31/12 CIVIL STATE OF CALIFORNIA

THE STATE OF CALIFORNIA OR ITS OFFICERS OR AGENTS SHALL NOT BE RESPONSIBLE FOR THE ACCURACY OR COMPLETENESS OF SCANNED COPIES OF THIS PLAN SHEET.

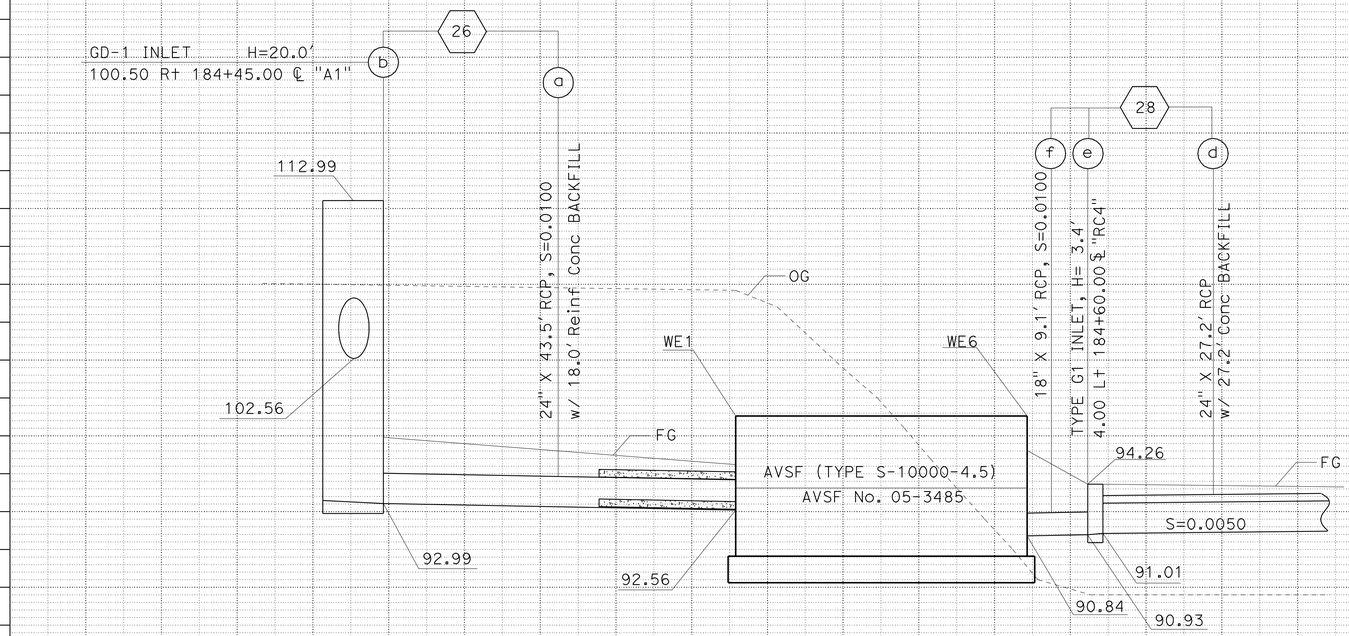

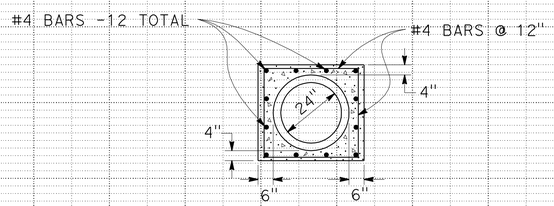

REINFORCED Conc BACKFILL
NO SCALE

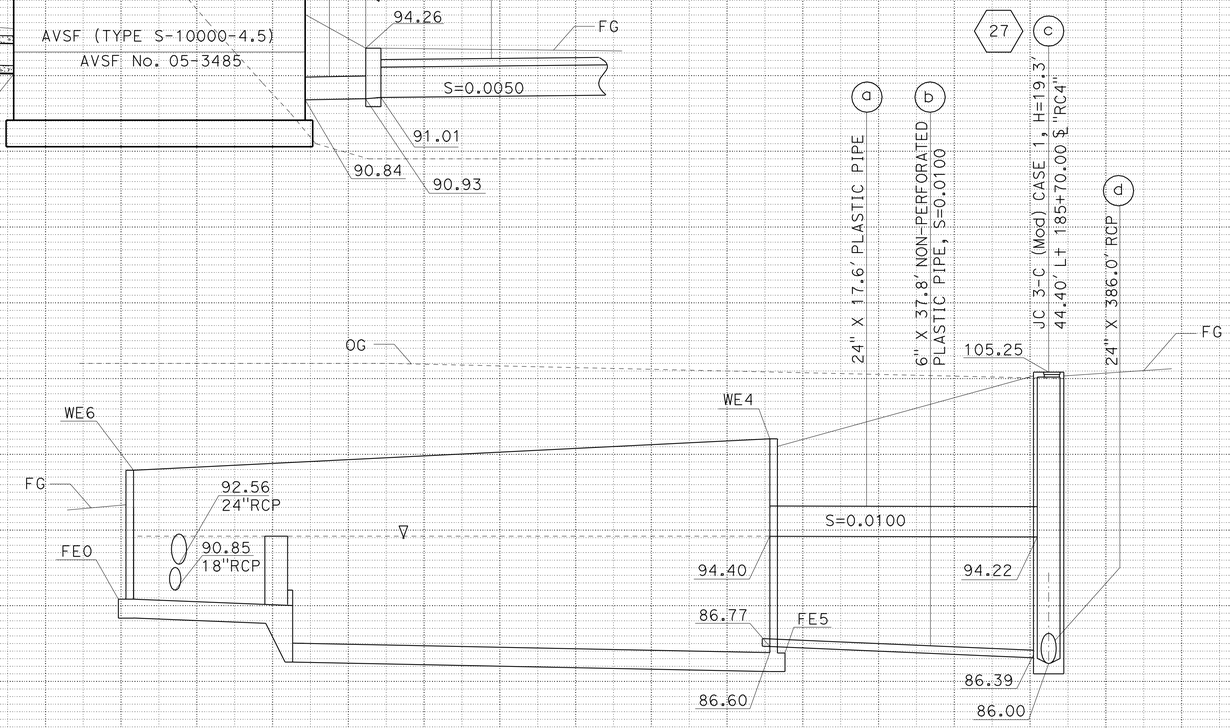

NOTES:

1. THE CONTRACTOR SHALL VERIFY LOCATIONS AND ELEVATIONS OF EXISTING DRAINAGE SYSTEMS BEFORE COMMENCEMENT OF WORK.
2. Sed = SEDIMENTATION
   Fil = FILTRATION

AVSF No. 05-3485

WALL DESIGN TABLE

Design Basin Wall	Design Wall Ht H	Top of Wall Elevation						Top of Footing Elevation					
		WE1	WE2	WE3	WE4	WE5	WE6	FE0	FE1	FE2	FE3	FE4	FE5
Sed	10	98.77	99.29	100.84	100.84	99.29	98.77	90.19	90.15	89.73	87.23	86.60	86.58
Fil	16												

AVSF No. 05-3485
SCALE: Horiz 1" = 10'
Vert 1" = 5'

DRAINAGE PROFILES (WATER POLLUTION CONTROL)

SCALE AS SHOWN

DP-39

STATE OF CALIFORNIA - DEPARTMENT OF TRANSPORTATION
Caltrans® HYDRAULICS

FUNCTIONAL SUPERVISOR: JAI P. THAKUR
CALCULATED-DESIGNED BY: RALPH M. SASAKI
CHECKED BY: MAY P. FUNG
REVISED BY / DATE REVISED

LAST REVISION 00-00-00 | DATE PLOTTED => 26-MAR-2012 | TIME PLOTTED => 08:52

Dist	COUNTY	ROUTE	POST MILES TOTAL PROJECT	SHEET No.	TOTAL SHEETS
07	LA	5	2.4/4.0	167	1288

REGISTERED CIVIL ENGINEER 12-19-11 DATE

3-26-12
PLANS APPROVAL DATE

REGISTERED PROFESSIONAL ENGINEER RALPH M. SASAKI No. 30849 Exp. 3/31/12 CIVIL STATE OF CALIFORNIA

THE STATE OF CALIFORNIA OR ITS OFFICERS OR AGENTS SHALL NOT BE RESPONSIBLE FOR THE ACCURACY OR COMPLETENESS OF SCANNED COPIES OF THIS PLAN SHEET.

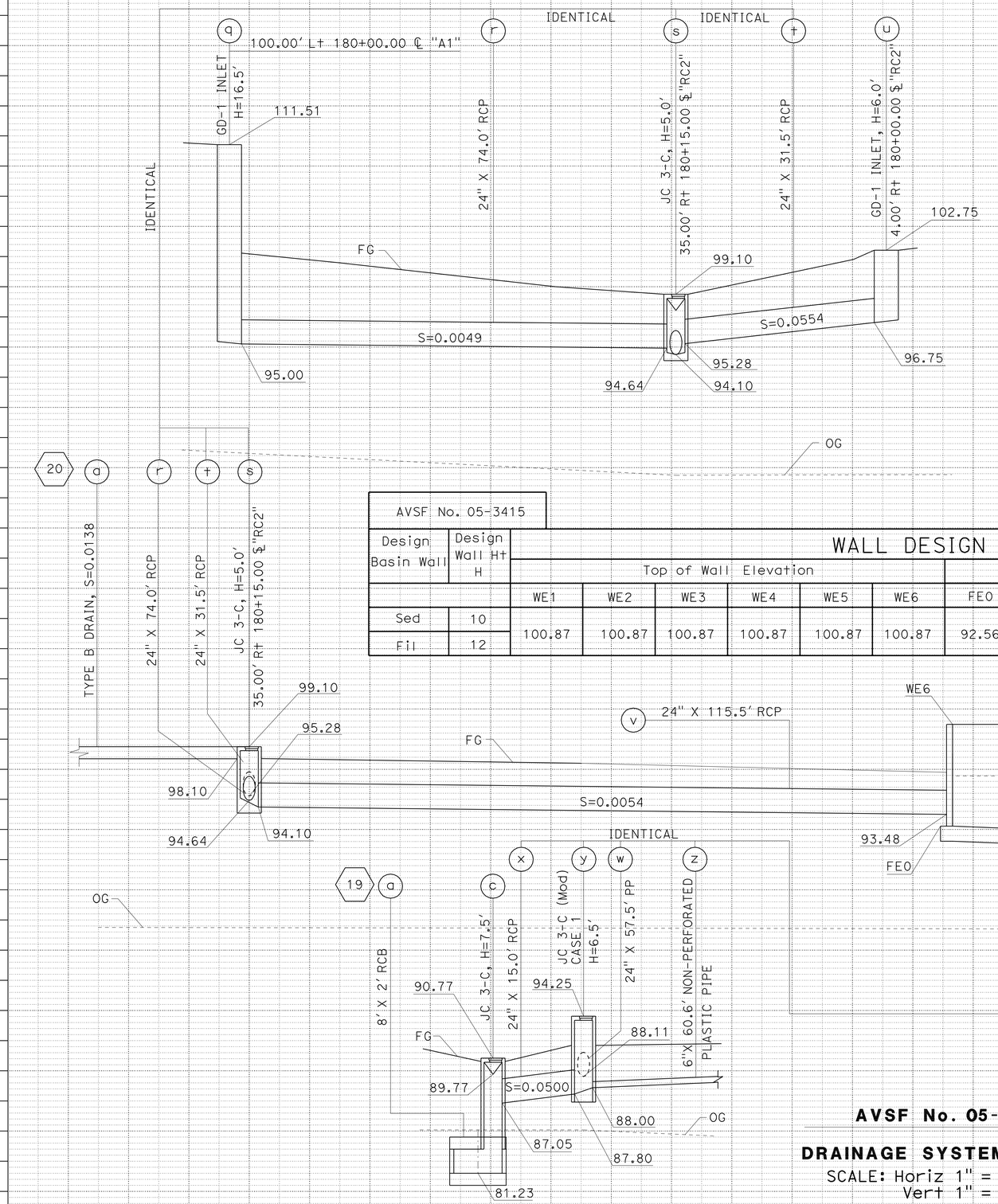

AVSF No. 05-3415												
Design Basin Wall	Design Wall Ht H	WALL DESIGN TABLE										
		Top of Wall Elevation						Top of Footing Elevation					
		WE1	WE2	WE3	WE4	WE5	WE6	FE0	FE1	FE2	FE3	FE4	FE5
Sed	10	100.87	100.87	100.87	100.87	100.87	100.87	92.56	92.52	92.10	89.60	88.97	88.95
Fil	12												

NOTES:

1. THE CONTRACTOR SHALL VERIFY LOCATIONS AND ELEVATIONS OF EXISTING DRAINAGE SYSTEMS BEFORE COMMENCEMENT OF WORK.
2. SEE SHEET DP-9 FOR BEGINNING OF DRAINAGE SYSTEM 4-3.

AVSF No. 05-3415

DRAINAGE SYSTEM No. 21

SCALE: Horiz 1" = 10'
Vert 1" = 5'

DRAINAGE PROFILES (WATER POLLUTION CONTROL)

SCALE AS SHOWN

DP-40

STATE OF CALIFORNIA - DEPARTMENT OF TRANSPORTATION
Caltrans HYDRAULICS

FUNCTIONAL SUPERVISOR: JAI P. THAKUR
CALCULATED-DESIGNED BY: MAY P. FUNG
CHECKED BY: RALPH M. SASAKI
REVISED BY
DATE REVISED

LAST REVISION 00-00-00
DATE PLOTTED => 28-MAR-2012
TIME PLOTTED => 08:52

Dist	COUNTY	ROUTE	POST MILES TOTAL PROJECT	SHEET No.	TOTAL SHEETS
07	LA	5	2.4/4.0	168	1288

REGISTERED CIVIL ENGINEER 12-19-11 DATE

3-26-12
PLANS APPROVAL DATE

REGISTERED PROFESSIONAL ENGINEER RALPH M. SASAKI No. 30849 Exp. 3/31/10 CIVIL STATE OF CALIFORNIA

THE STATE OF CALIFORNIA OR ITS OFFICERS OR AGENTS SHALL NOT BE RESPONSIBLE FOR THE ACCURACY OR COMPLETENESS OF SCANNED COPIES OF THIS PLAN SHEET.

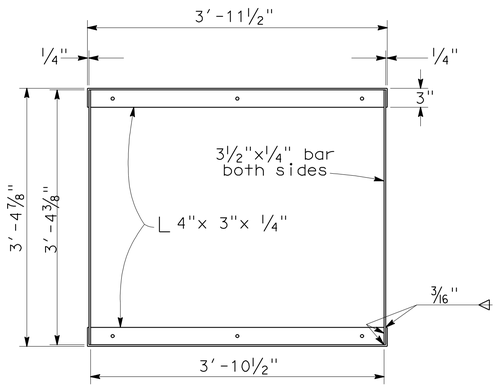

GRATE FRAME DETAIL

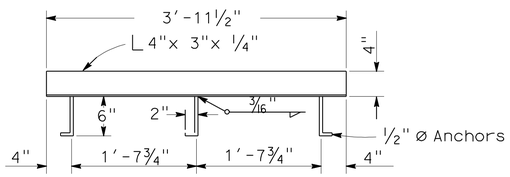

ANCHOR PLACEMENT DETAIL

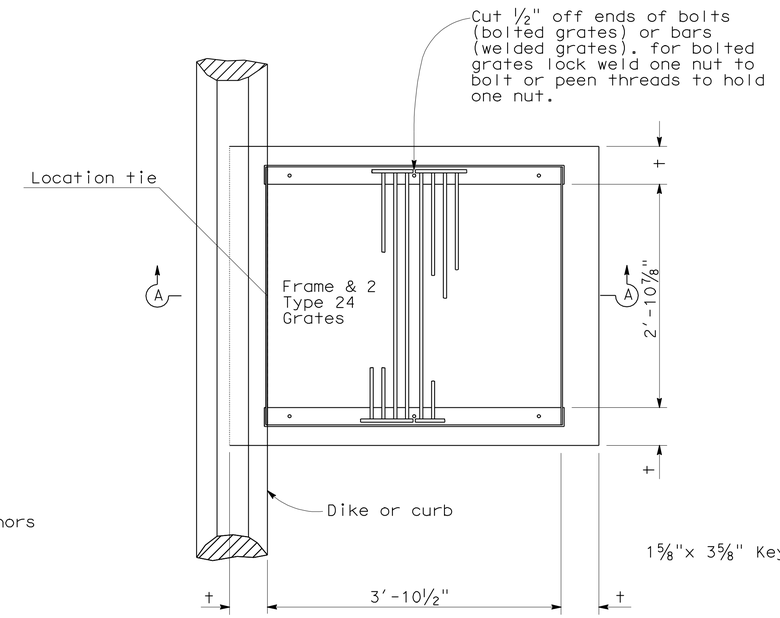

PLAN

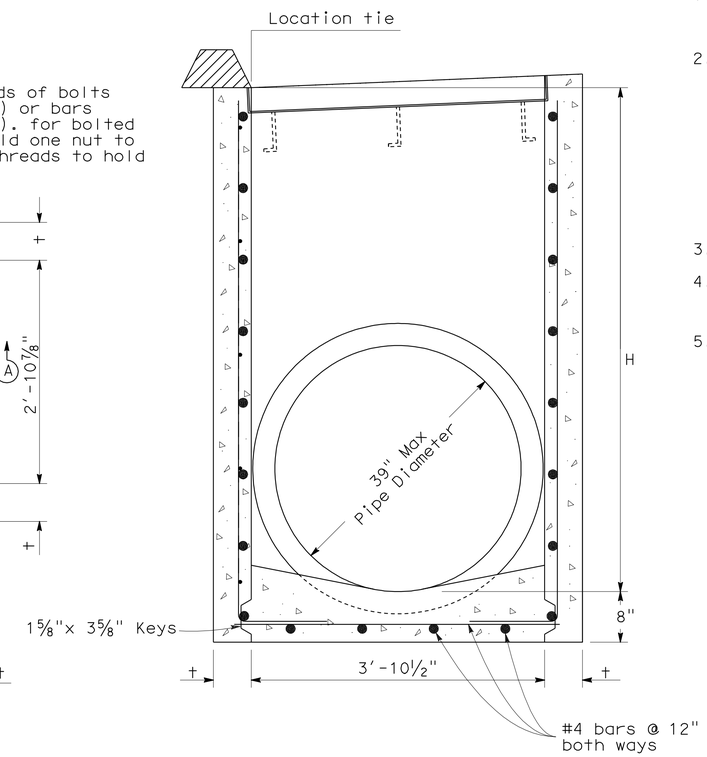

SECTION A-A

(For pipe diameters 39" or less)

NOTES:

1. 'H' is the difference in elevation between the outlet pipe flow line and the flow line of the grates.
2. Steps - None required when 'H' is 3'-6" or less. Install one step 16"± above floor when 'H' is more than 3'-6" and less than 5'-0". Where 'H' is more than 5'-0" steps shall be evenly spaced @ 12"± intervals from 16"± above floor to within 12"± of the top of the box. Place steps in wall without pipe openings. See Standard Plan D74C for step detail.
3. Pipe(s) can be placed in any wall.
4. Reinforcing steel in walls and invert shall be #4 bars @ 12"± centers placed 1½" clear to inside of box.
5. For grate, frame and anchor placement details see standard plans.

MISCELLANEOUS IRON & STEEL

Inlet Type	Grate Type	Weight
GD-1 & GD-2	24 - 12	580
	24 - 10C	379
	24 - 10S	433
	24 - 12X	453
	24 - 13	351

H	t
8'-0" or less	6"
8'1" to 20'- 0"	8"

GD-1
DRAINAGE INLET

DRAINAGE DETAILS

NO SCALE

DD-1

STATE OF CALIFORNIA - DEPARTMENT OF TRANSPORTATION
Caltrans® HYDRAULICS

FUNCTIONAL SUPERVISOR: JAI P. THAKUR
CALCULATED-DESIGNED BY: MAY P. FUNG
CHECKED BY: RALPH M. SASAKI
REVISED BY
DATE REVISED

LAST REVISION 00-00-00
DATE PLOTTED => 28-MAR-2012
TIME PLOTTED => 08:52

Dist	COUNTY	ROUTE	POST MILES TOTAL PROJECT	SHEET No.	TOTAL SHEETS
07	LA	5	2.4/4.0	169	1288

REGISTERED CIVIL ENGINEER 12-19-11 DATE

3-26-12
PLANS APPROVAL DATE

REGISTERED PROFESSIONAL ENGINEER RALPH M. SASAKI No. 30849 Exp. 3/31/10 CIVIL STATE OF CALIFORNIA

THE STATE OF CALIFORNIA OR ITS OFFICERS OR AGENTS SHALL NOT BE RESPONSIBLE FOR THE ACCURACY OR COMPLETENESS OF SCANNED COPIES OF THIS PLAN SHEET.

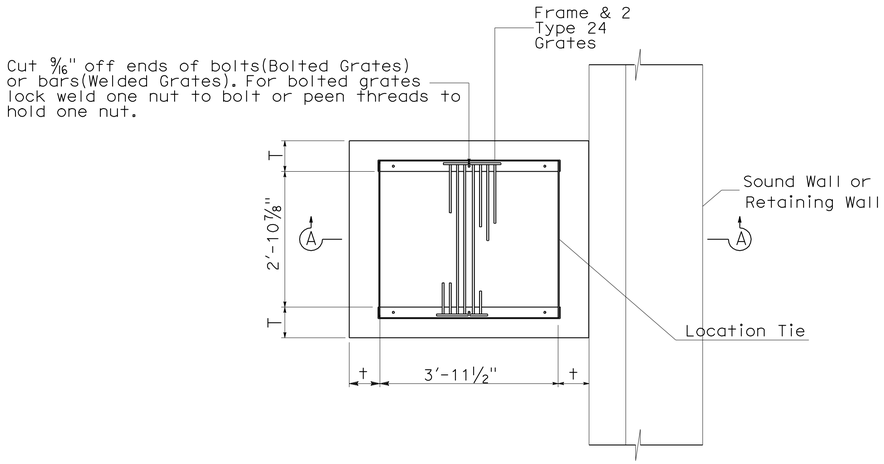

PLAN

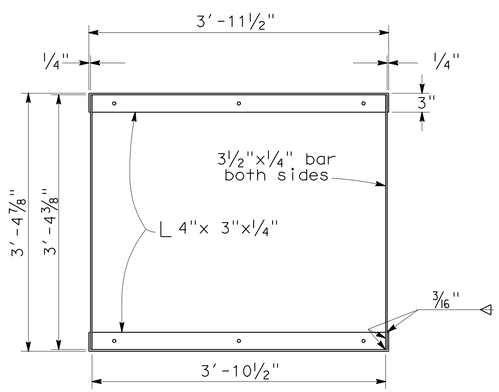

GRATE FRAME DETAIL

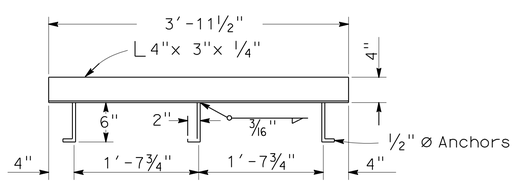

ANCHOR PLACEMENT DETAIL

For grate, frame and anchor placement details see Standard Plans D77A and D77B

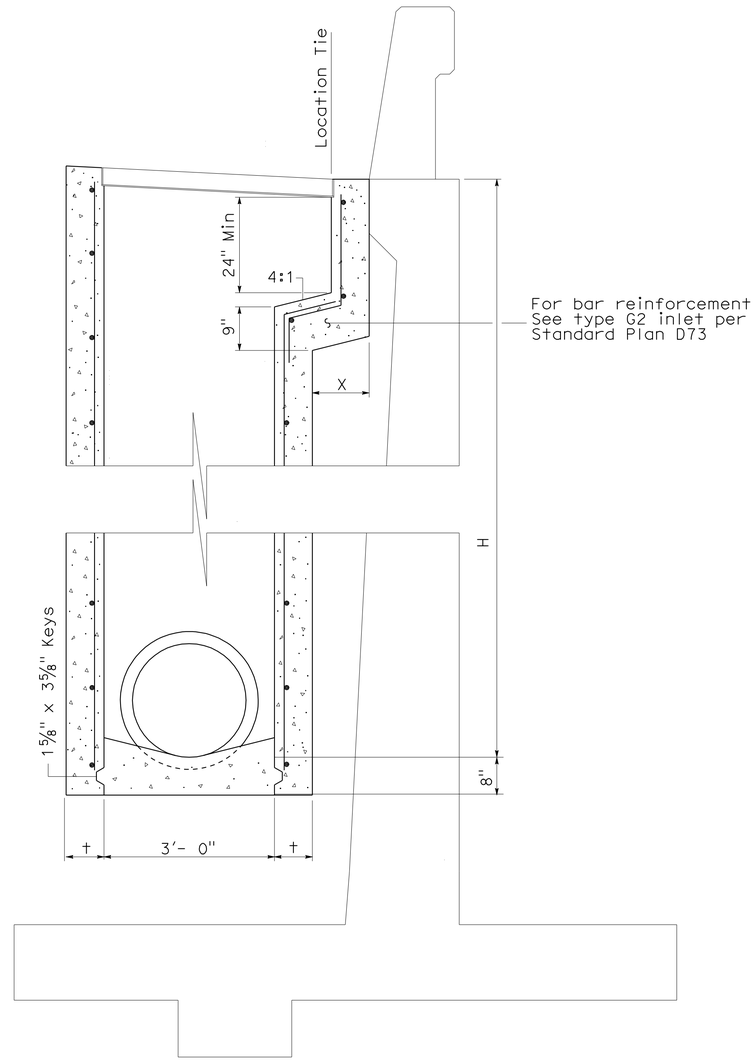

SECTION A-A

NOTES:

1. 'H' is the difference in elevation between the outlet pipe flow line and the flow line of the grates.
2. Steps - None required where "H" is less than 2'-6". Where "H" is 2'-6" or more, install steps with lowest rung 1'-0" above the floor and highest rung not more than 6" below top of inlet. The distance between steps shall not exceed 1'-0" and shall be uniform throughout the length of the wall. Place steps in the wall without an opening. Steps inserts may be substituted for the bar steps. Step inserts shall comply with State Industrial Safety requirements. See Standard Plan D74C for step details.
3. Pipe(s) can be placed in any wall.
4. Reinforcing steel not required in walls when H=6' or less.
5. H> 6' to 20', Reinforcing steel in walls shall be #4 bars @ 12"± centers both ways, placed 1 1/2" clear to inside of box.
6. H> 20', Reinforcing steel in walls shall be: #5 bars @ 12" C-C horizontal ; #4 bars @ 12" C-C vertical placed 2" clear to inside of box.
7. For isolation joint detail, see Standard Plans.

MISCELLANEOUS IRON & STEEL

Inlet Type	Grate Type	Weight
GD-1 (Mod)	24-12	580

H	t
8'-0" or less	6"
8'-1" to 20'- 0"	8"
> 20'- 0"	12"

H	X
22'-0" or less	12"
> 22'-0"	24"

GD-1 (Mod) INLET

DRAINAGE INLET NEXT TO RETAINING WALL OR SOUNDWALL

DRAINAGE DETAILS

NO SCALE

DD-2

STATE OF CALIFORNIA - DEPARTMENT OF TRANSPORTATION
Caltrans® HYDRAULICS

FUNCTIONAL SUPERVISOR: JAI P. THAKUR
CALCULATED-DESIGNED BY: MAY P. FUNG
CHECKED BY: RALPH M. SASAKI
REVISED BY
DATE REVISED

LAST REVISION 00-00-00
DATE PLOTTED => 28-MAR-2012
TIME PLOTTED => 08:53

Dist	COUNTY	ROUTE	POST MILES TOTAL PROJECT	SHEET No.	TOTAL SHEETS
07	LA	5	2.4/4.0	170	1288

REGISTERED CIVIL ENGINEER 12-19-11 DATE

3-26-12
PLANS APPROVAL DATE

REGISTERED PROFESSIONAL ENGINEER RALPH M. SASAKI No. 30849 Exp. 3/31/12 CIVIL STATE OF CALIFORNIA

THE STATE OF CALIFORNIA OR ITS OFFICERS OR AGENTS SHALL NOT BE RESPONSIBLE FOR THE ACCURACY OR COMPLETENESS OF SCANNED COPIES OF THIS PLAN SHEET.

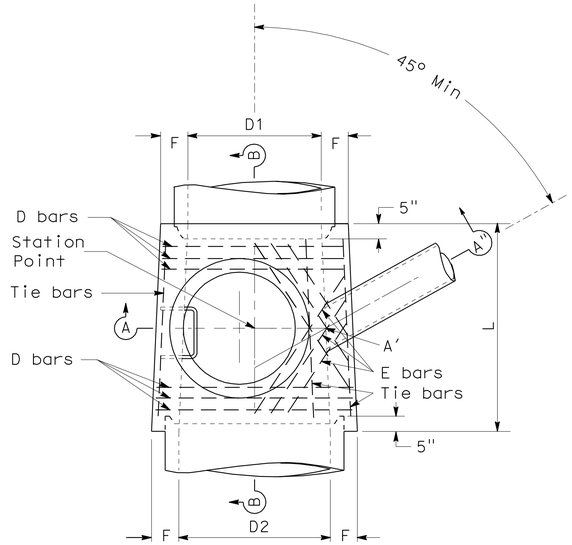

PLAN
(Shaft not shown)

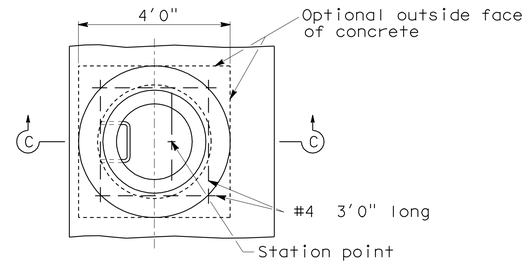

DETAIL N
(Shaft not shown)

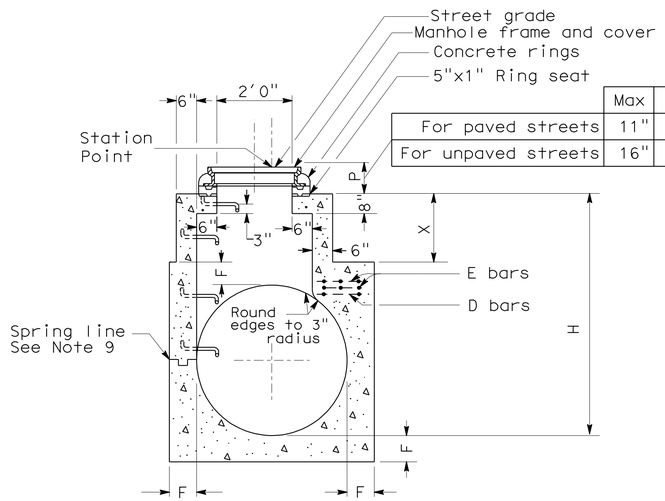

	Max	Min
For paved streets	11"	8½"
For unpaved streets	16"	15"

SECTION C-C
(See note 10)

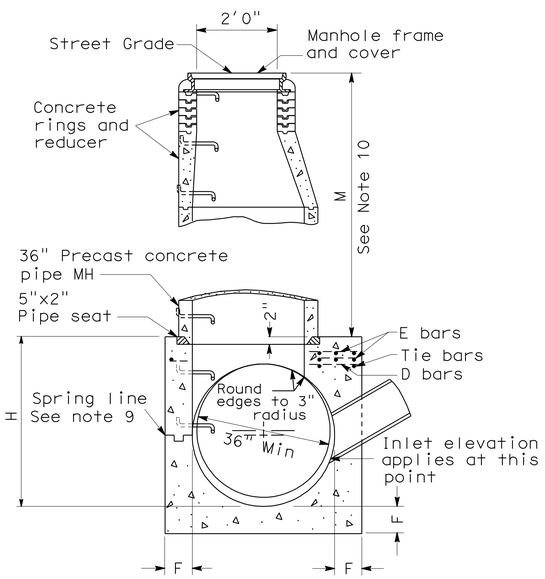

SECTION A-A'-A"

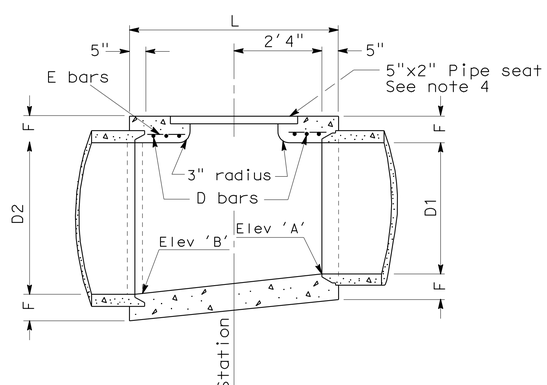

SECTION B-B

NOTES:

1. Values for Elev 'A', Elev 'B', 'H', 'L', 'M' or 'P' and 'X' are shown on the drainage plan.
2. Center of manhole shaft shall be located over centerline of storm drain when diameter 'D1' is 48" or less, in which case place E bar symmetrically around shaft at 45° with centerline.
3. Length 'L' shall be 5'-6" unless shown otherwise on drainage plan.
4. Thickness of 'F' shall vary when necessary to provide level pipe-seat, but shall not be less than tabular values for 'F' shown on this plan.
5. Reinforcing steel shall be 1½" clear from face of concrete unless shown otherwise. Sizes and lengths are shown in table below.
6. Unless otherwise shown, steps shall be placed 12" on centers. The lowest step shall be not more than 16" above the ledge at side of manhole floor.
7. Rings, reducer, and pipe for access shaft shall be seated in 1:2 cement mortar and neatly pointed or wiped inside the shaft.
8. Floor of manhole shall be steel-troweled to spring line.
9. Body of manhole shall be poured in one continuous operation, except that the contractor shall have the option of placing at the spring line a construction joint with a longitudinal keyway.
10. Section C-C: When depth of manhole from street grade to top of box is less than 2'-10½" for paved streets or 3'-6" for unpaved streets, construct monolithic shaft as per section. When diameter 'D' is 48" or less, center of shaft shall be located as per note 2.
11. Manhole frame and cover per Standard Plan B7-11 detail 'U45'.
12. Step detail per Standard Plans D74C and D75.
13. D bars shall be placed 3" C-C. E bars shall be spaced 4" C-C. Tie bars shall be #3 spaced 18" C-C or less.
14. When 'L' greater than 5'-6" is specified on drainage plan, continue D bars at 6" C-C.
15. Lengths shown in table are for longest bars. Where shorter bars are required, bend or cut to meet field requirements.

TABLE OF VALUES FOR F	
D2	F
36"	6½"
39"	7"
42"	7½"
45"	7¾"
48"	8"
51"	8½"
54"	9"
57"	9¼"
60"	9½"
63"	10"
66"	10¼"
69"	10¾"
72"	11"
78"	11¾"
84"	12½"
90"	13¼"
96"	14"

STEEL TABLE						
	D bars			E bars		
D2	No Req	Size	Length	No Req	Size	Length
36"	6	#4	3'-10"	4	#4	2'-9"
39"	6	"	4'-2"	4	"	2'-11"
42"	6	#5	4'-6"	4	"	3'-2"
45"	6	"	4'-10"	4	"	3'-5"
48"	6	"	5'-1"	4	"	3'-7"
51"	6	"	5'-5"	6	"	4'-9"
54"	6	"	5'-9"	6	"	5'-1"
57"	6	"	6'-1"	6	"	5'-6"
60"	6	"	6'-4"	6	"	5'-11"
63"	6	"	6'-8"	6	"	6'-3"
66"	6	"	7'-0"	8	"	6'-8"
69"	6	"	7'-4"	8	"	6'-8"
72"	6	"	7'-7"	8	"	6'-8"
78"	6	"	8'-3"	8	"	6'-8"
84"	6	"	8'-10"	10	"	6'-8"
90"	6	#6	9'-6"	10	"	6'-8"
	6	"	10'-1"	10	"	6'-8"

MANHOLE No. 2 (MH No. 2)

DRAINAGE DETAILS

NO SCALE

DD-3

STATE OF CALIFORNIA - DEPARTMENT OF TRANSPORTATION
Caltrans® HYDRAULICS

FUNCTIONAL SUPERVISOR: JAI P. THAKUR
CALCULATED-DESIGNED BY: MAY P. FUNG
CHECKED BY: RALPH M. SASAKI
REVISED BY
DATE REVISED

LAST REVISION 00-00-00
DATE PLOTTED => 28-MAR-2012
TIME PLOTTED => 08:53

Dist	COUNTY	ROUTE	POST MILES TOTAL PROJECT	SHEET No.	TOTAL SHEETS
07	LA	5	2.4/4.0	171	1288

REGISTERED CIVIL ENGINEER DATE 12-19-11

3-26-12
PLANS APPROVAL DATE

REGISTERED PROFESSIONAL ENGINEER RALPH M. SASAKI No. 30849 Exp. 3/31/12 CIVIL STATE OF CALIFORNIA

THE STATE OF CALIFORNIA OR ITS OFFICERS OR AGENTS SHALL NOT BE RESPONSIBLE FOR THE ACCURACY OR COMPLETENESS OF SCANNED COPIES OF THIS PLAN SHEET.

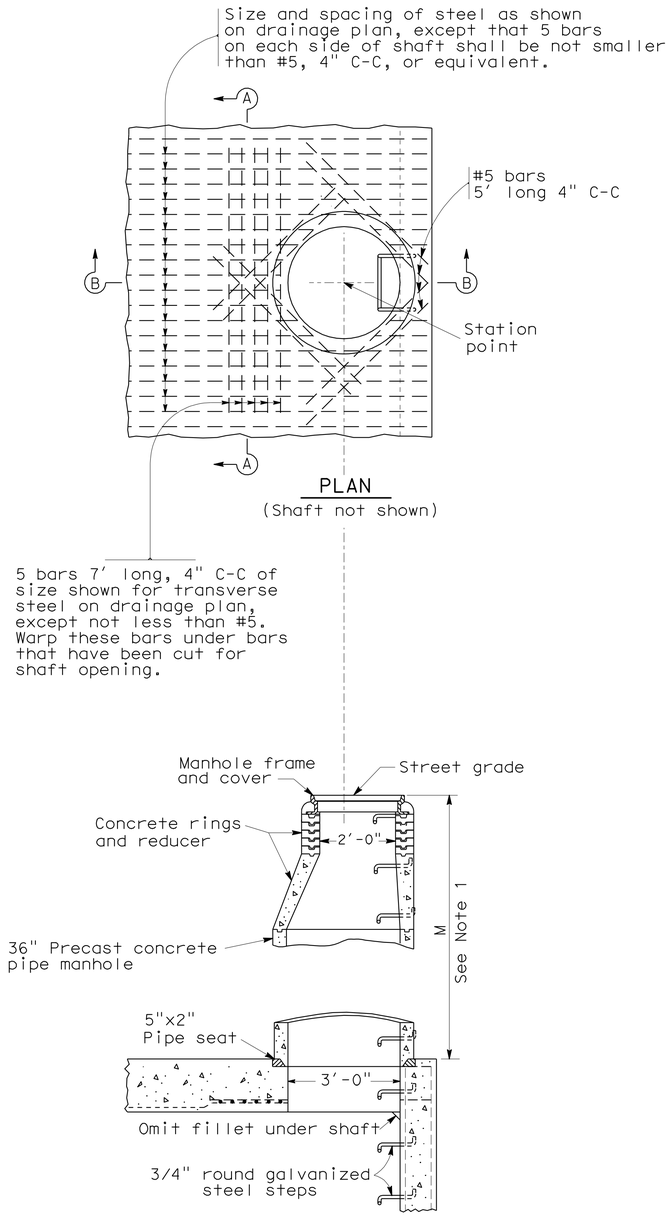

MANHOLE FOR BOX SECTION STORM DRAIN

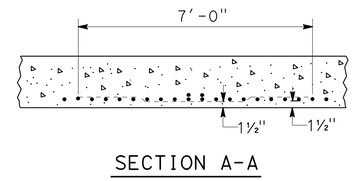

NOTES:

1. Depth 'M': When depth 'M' from street grade to top of pipe seat is less than 2'-10 1/2" in paved streets or 3'-6" in unpaved streets, construct 2 ft diameter shaft, using concrete rings; otherwise construct 3 ft shaft as shown on this plan.
2. Optional construction: Dimension from outside top of arch storm drain to top of pipe seat shown 8 inches on this plan, may be increased at option of contractor, except that in so doing 'M' shall not be reduced to less than 2'-10 1/2" for paved streets or 3'-6" for unpaved streets and that reducer shall be used.
3. Unless otherwise shown, steps shall be placed 12" on centers. The lowest step shall be not more than 16" above the ledge at side of manhole floor.
4. Rings, reducer, and pipe for access shaft shall be seated in 1:2 cement mortar and neatly pointed or wiped inside shaft.
5. Manhole frame and cover per Standard Plan B7-11 detail 'U45'.
6. Step detail per Standard Plans D74C and D75.

MANHOLE No. 3 (MH No. 3)

DRAINAGE DETAILS

NO SCALE

DD-4

STATE OF CALIFORNIA - DEPARTMENT OF TRANSPORTATION
Caltrans® HYDRAULICS

FUNCTIONAL SUPERVISOR: JAI P. THAKUR
CALCULATED-DESIGNED BY: MAY P. FUNG
CHECKED BY: RALPH M. SASAKI
REVISED BY
DATE REVISED

LAST REVISION 00-00-00 | DATE PLOTTED => 28-MAR-2012 | TIME PLOTTED => 08:53

Dist	COUNTY	ROUTE	POST MILES TOTAL PROJECT	SHEET No.	TOTAL SHEETS
07	LA	5	2.4/4.0	172	1288

12-19-11
REGISTERED CIVIL ENGINEER DATE

3-26-12
PLANS APPROVAL DATE

REGISTERED PROFESSIONAL ENGINEER
RALPH M. SASAKI
No. 30849
Exp. 3/31/12
CIVIL
STATE OF CALIFORNIA

THE STATE OF CALIFORNIA OR ITS OFFICERS OR AGENTS SHALL NOT BE RESPONSIBLE FOR THE ACCURACY OR COMPLETENESS OF SCANNED COPIES OF THIS PLAN SHEET.

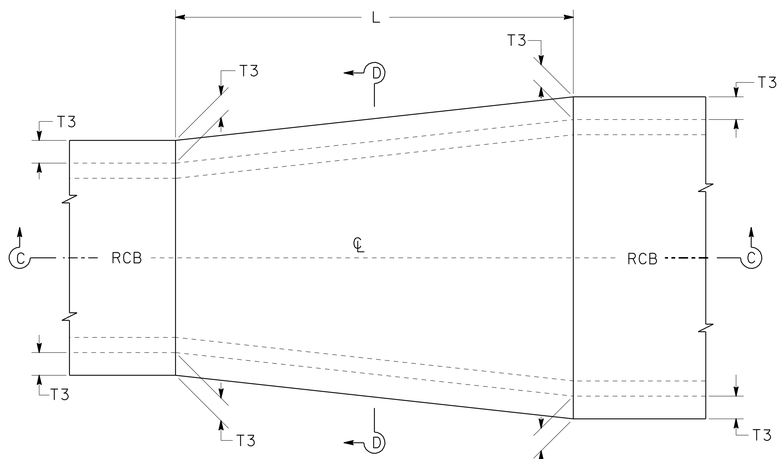

PLAN

NOTES:

1. The interior surface shall be smooth and vary uniformly between the two adjoining sections.
2. At pipe juncture, embedment 'P' shall be 5 inches for pipe sizes of 96 inches or less, and 8 inches for pipe sizes over 96 inches.
3. Keyed construction joints of the same dimensions as those of the box or arch section may be carried through the transition structure at the contractor's option. See Section B-B or D-D.
4. The transition structure shall be constructed in accordance with the general structural notes applying to box or arch culverts shown on the Standard Plans.
5. Dowels are required when joining to existing structures. #4 @ 12" to extend 2'- 0" into existing structures.

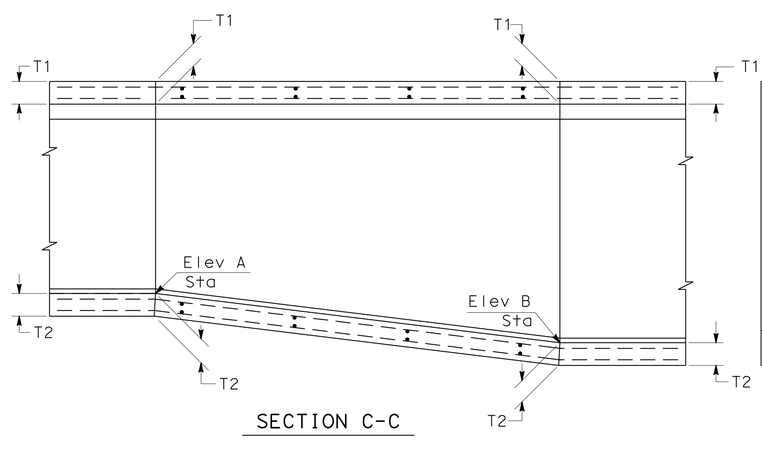

SECTION C-C

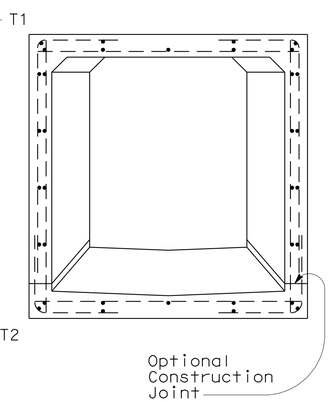

SECTION D-D

TRANSITION STRUCTURE No. 2

DRAINAGE DETAILS

NO SCALE

DD-5

STATE OF CALIFORNIA - DEPARTMENT OF TRANSPORTATION
Caltrans® HYDRAULICS

FUNCTIONAL SUPERVISOR: JAI P. THAKUR

CALCULATED-DESIGNED BY: MAY P. FUNG
CHECKED BY: RALPH M. SASAKI

REVISED BY | DATE REVISED

LAST REVISION 00-00-00 | DATE PLOTTED => 28-MAR-2012 | TIME PLOTTED => 08:53

Dist	COUNTY	ROUTE	POST MILES TOTAL PROJECT	SHEET No.	TOTAL SHEETS
07	LA	5	2.4/4.0	173	1288

REGISTERED CIVIL ENGINEER 12-19-11 DATE

3-26-12
PLANS APPROVAL DATE

REGISTERED PROFESSIONAL ENGINEER RALPH M. SASAKI No. 30849 Exp. 3/31/12 CIVIL STATE OF CALIFORNIA

THE STATE OF CALIFORNIA OR ITS OFFICERS OR AGENTS SHALL NOT BE RESPONSIBLE FOR THE ACCURACY OR COMPLETENESS OF SCANNED COPIES OF THIS PLAN SHEET.

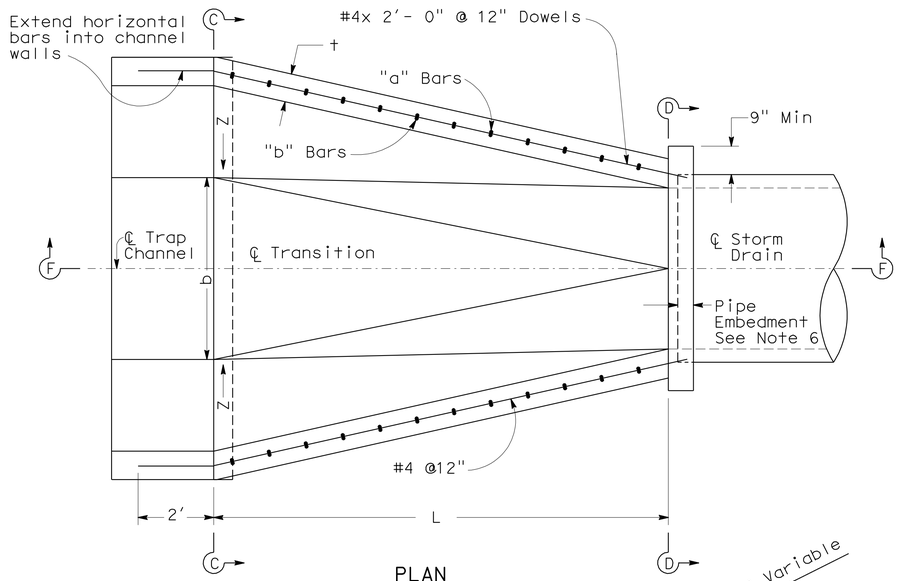

PLAN

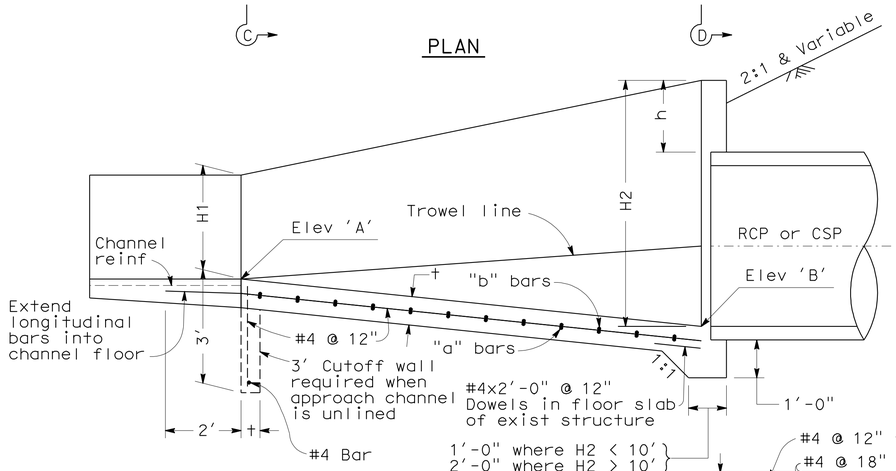

SECTION F-F

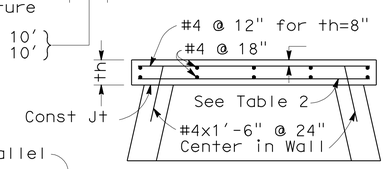

SECTION H-H

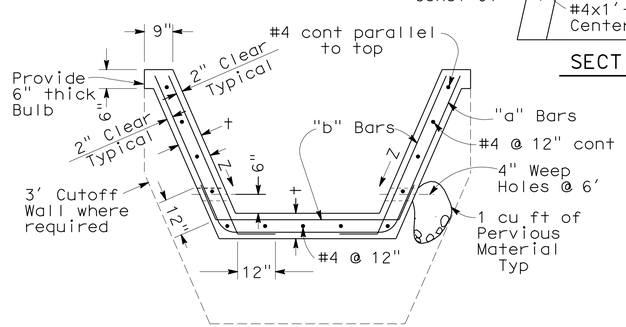

SECTION C-C

TABLE 1

* DESIGN "H"	t	REINFORCEMENT
0' - 4'	6"	#4 @ 12" both ways centered in slab
4' - 6'	6"	"a" bars #5 @ 24" "b" bars #5 @ 24"
6' - 8'	6"	"a" bars #5 @ 12" "b" bars #5 @ 12"
Greater than 8'	10"	"a" bars #6 @ 6" "b" bars #5 @ 12"

* Design "H" varies throughout length of transition. Use larger "H" on short transitions (L=15' or less). For longer transitions, vary reinforcement as indicated above.

NOTES:

1. Provide a construction joint between the transition and the storm drain.
2. Extend the longitudinal reinforcing steel of the transition 2' into the trapezoidal channel.
3. In lieu of placing the dowels between the transition and the rectangular storm drain, the longitudinal reinforcing steel of the transition structure may be extended 2' into the storm drain.
4. 'H', 'H2', 'h', 'L', 'b', Elev 'A' and Elev 'B', and 'Z' shall be shown on the plans.
5. This structural detail may be applied to transitions with curved bottoms and curved side walls.
6. Pipe embedment shall be 5" for 96" or less and 8" for over 96".

TABLE 2

2" Clr Typ

S or D	th	REINFORCEMENT h=6" to 4'	REINFORCEMENT h=5' to 8'
1'-6" to 5'-6"	6"	#4 @ 12"	#4 @ 12"
6' to 10'	6"	#4 @ 8"	#6 @ 9"
12'	8"	#5 @ 9"	#6 @ 6"

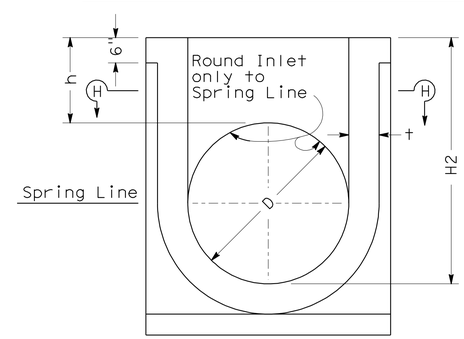

SECTION D-D

TRANSITION STRUCTURE No. 4

(TS No. 4)

DRAINAGE DETAILS

NO SCALE

DD-6

STATE OF CALIFORNIA - DEPARTMENT OF TRANSPORTATION
Caltrans® HYDRAULICS

FUNCTIONAL SUPERVISOR: JAI P. THAKUR
CALCULATED-DESIGNED BY: MAY P. FUNG
CHECKED BY: RALPH M. SASAKI
REVISED BY
DATE REVISED

LAST REVISION 00-00-00
DATE PLOTTED => 28-MAR-2012
TIME PLOTTED => 08:53

Dist	COUNTY	ROUTE	POST MILES TOTAL PROJECT	SHEET No.	TOTAL SHEETS
07	LA	5	2.4/4.0	174	1288

REGISTERED CIVIL ENGINEER 12-19-11 DATE

3-26-12
PLANS APPROVAL DATE

REGISTERED PROFESSIONAL ENGINEER RALPH M. SASAKI No. 30849 Exp. 3/31/12 CIVIL STATE OF CALIFORNIA

THE STATE OF CALIFORNIA OR ITS OFFICERS OR AGENTS SHALL NOT BE RESPONSIBLE FOR THE ACCURACY OR COMPLETENESS OF SCANNED COPIES OF THIS PLAN SHEET.

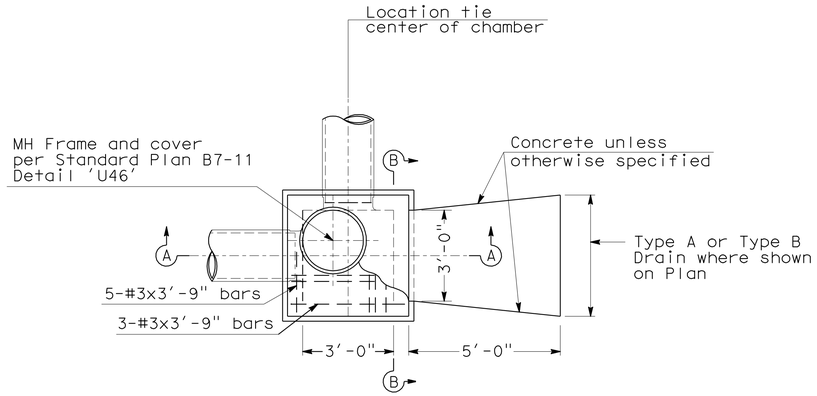

PLAN

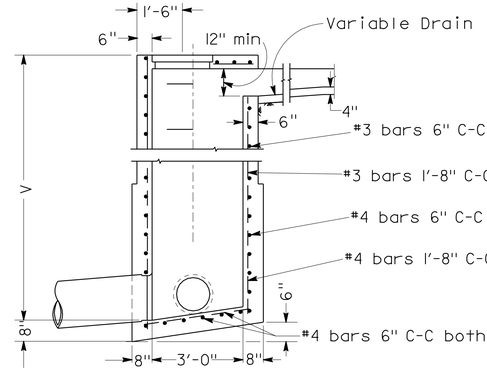

SECTION A-A

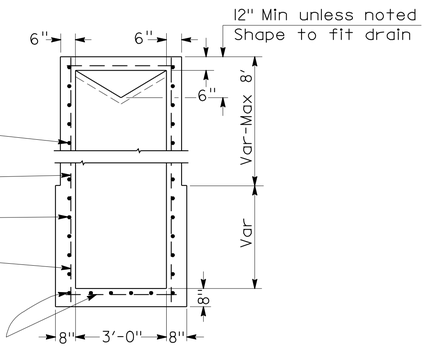

SECTION B-B

JUNCTION CHAMBER No. 3-C (JC 3-C)

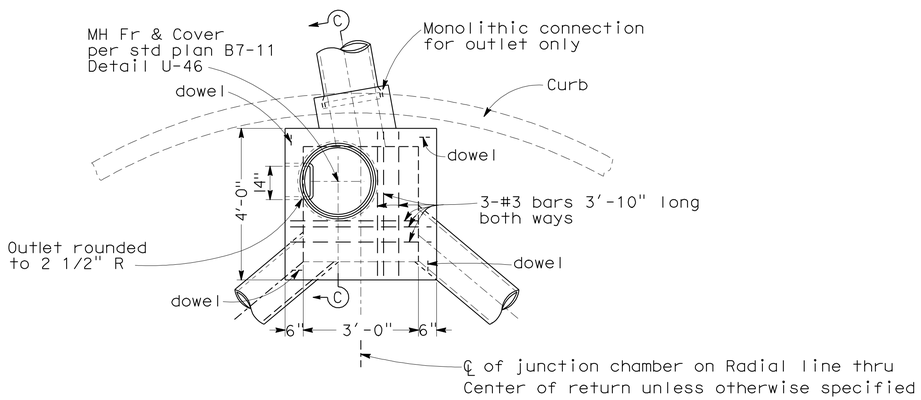

PLAN

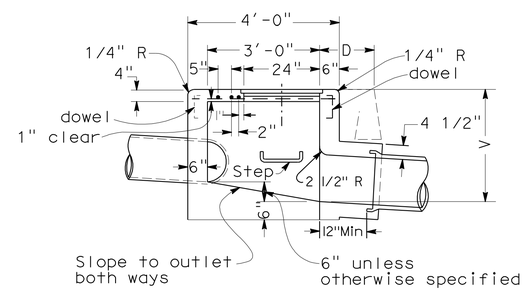

SECTION C-C

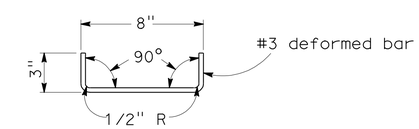

DETAIL OF DOWEL

One at each corner to be used when top is poured separate

JUNCTION CHAMBER No. 3 (JC 3)

NOTES:

1. CONNECTION pipes may be placed in any position around the walls provided they point in the proper direction and the position is otherwise consistent with the Drainage Plan.
2. DIMENSIONS: D=18" unless otherwise specified.
   V=3'-6" unless otherwise specified.
3. EXPOSED SURFACE of the Junction Chamber shall conform in slope, grade, color, finish and scoring to existing sidewalk adjacent to the Junction Chamber. Where no sidewalk exists, the top shall be finished to conform to standard sidewalk slope and finish, and scoring lines shall conform as nearly as possible to 20" squares.
4. FLOOR of chamber shall be given a steel-troweled finish and shall slope from all directions to outlet.
5. MANHOLE shall be placed in corner nearest outlet.
6. OUTLET pipe shall be connected to Junction Chamber with Monolithic Connection.
7. REINFORCING steel not required in walls when V=6' or less.
8. STEPS: None required where V=3'-6" or less.
   Install one step 16"± above floor when V is more than 3'-6" and less than 5'-0".
   Where V is more than 5'-0" steps shall be evenly spaced at 12"± intervals from 16"± above floor to within 12"± of the top of the box.

DRAINAGE DETAILS

NO SCALE

DD-7

STATE OF CALIFORNIA - DEPARTMENT OF TRANSPORTATION
Caltrans HYDRAULICS

FUNCTIONAL SUPERVISOR: JAI P. THAKUR
CALCULATED-DESIGNED BY: MAY P. FUNG
CHECKED BY: RALPH M. SASAKI
REVISED BY
DATE REVISED

LAST REVISION 00-00-00
DATE PLOTTED => 28-MAR-2012
TIME PLOTTED => 08:53

Dist	COUNTY	ROUTE	POST MILES TOTAL PROJECT	SHEET No.	TOTAL SHEETS
07	LA	5	2.4/4.0	175	1288

REGISTERED CIVIL ENGINEER 12-19-11 DATE

3-26-12
PLANS APPROVAL DATE

REGISTERED PROFESSIONAL ENGINEER RALPH M. SASAKI No. 30849 Exp. 3/31/12 CIVIL STATE OF CALIFORNIA

THE STATE OF CALIFORNIA OR ITS OFFICERS OR AGENTS SHALL NOT BE RESPONSIBLE FOR THE ACCURACY OR COMPLETENESS OF SCANNED COPIES OF THIS PLAN SHEET.

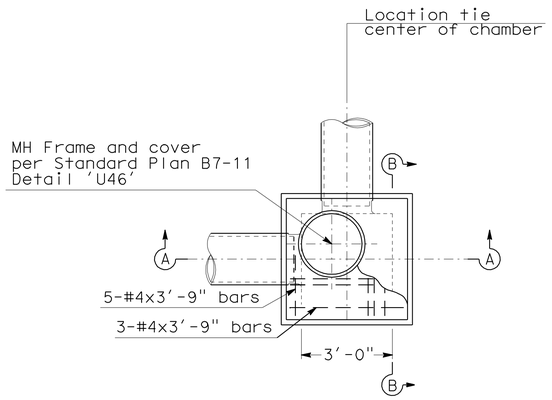

PLAN

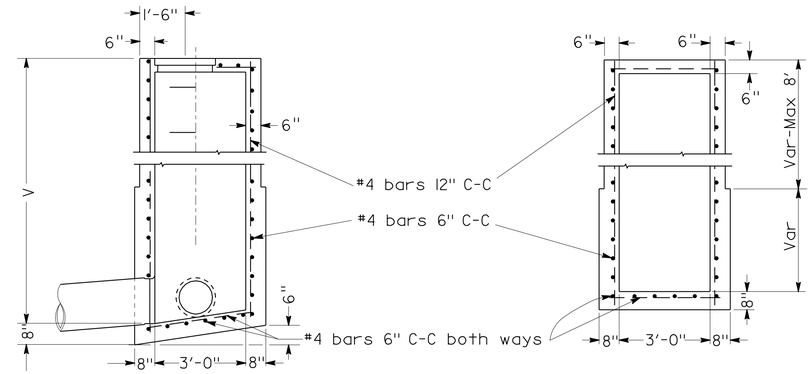

SECTION A-A

SECTION B-B

JUNCTION CHAMBER No. 3-C (Mod) (CASE 1)

(JC 3-C) (Mod) (CASE 1)

NOTES:

1. CONNECTION pipes may be placed in any position around the walls provided they point in the proper direction and the position is otherwise consistent with the Drainage Plan.
2. DIMENSIONS: D=18" unless otherwise specified.
   V=3'-6" unless otherwise specified.
3. EXPOSED SURFACE of the Junction Chamber shall conform in slope, grade, color, finish and scoring to existing sidewalk adjacent to the Junction Chamber. Where no sidewalk exists, the top shall be finished to conform to standard sidewalk slope and finish, and scoring lines shall conform as nearly as possible to 20" squares.
4. FLOOR of chamber shall be given a steel-troweled finish and shall slope from all directions to outlet.
5. MANHOLE shall be placed in corner nearest outlet.
6. OUTLET pipe shall be connected to Junction Chamber with Monolithic Connection.
7. REINFORCING steel is required in walls as shown.
8. Steps - None required where "V" is less than 2'-6". Where "V" is 2'-6" or more, install steps with lowest rung 1'-0" above the floor and highest rung not more than 6" below top of inlet. The distance between steps shall not exceed 1'-0" and shall be uniform throughout the length of the wall. Place steps in the wall without an opening. Steps inserts may be substituted for the bar steps. Step inserts shall comply with State Industrial Safety requirements. See Standard Plan D74C for step details.

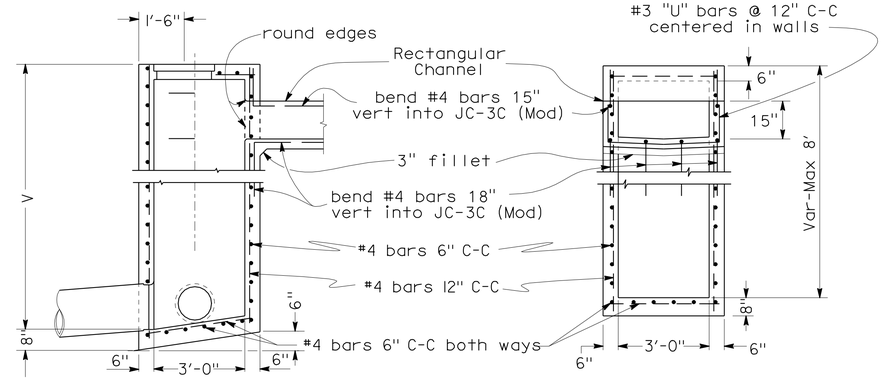

SECTION A-A

SECTION B-B

JUNCTION CHAMBER No. 3-C (Mod) (CASE 2)

(JC 3-C) (Mod) (CASE 2)

DRAINAGE DETAILS

NO SCALE

DD-8

REVISED BY	DATE REVISED

CALCULATED-DESIGNED BY: MAY P. FUNG
CHECKED BY: RALPH M. SASAKI
FUNCTIONAL SUPERVISOR: JAI P. THAKUR

STATE OF CALIFORNIA - DEPARTMENT OF TRANSPORTATION
Caltrans® HYDRAULICS

LAST REVISION 00-00-00 | DATE PLOTTED => 28-MAR-2012 | TIME PLOTTED => 08:53

Dist	COUNTY	ROUTE	POST MILES TOTAL PROJECT	SHEET No.	TOTAL SHEETS
07	LA	5	2.4/4.0	176	1288

REGISTERED CIVIL ENGINEER DATE 12-19-11

3-26-12
PLANS APPROVAL DATE

REGISTERED PROFESSIONAL ENGINEER RALPH M. SASAKI No. 30849 Exp. 3/31/12 CIVIL STATE OF CALIFORNIA

THE STATE OF CALIFORNIA OR ITS OFFICERS OR AGENTS SHALL NOT BE RESPONSIBLE FOR THE ACCURACY OR COMPLETENESS OF SCANNED COPIES OF THIS PLAN SHEET.

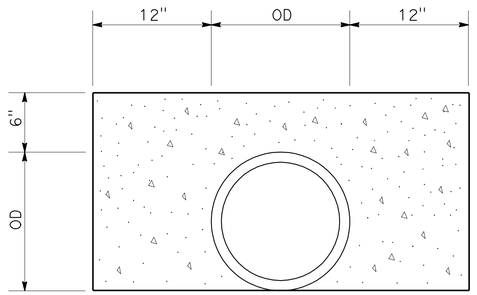

CONCRETE BACKFILL

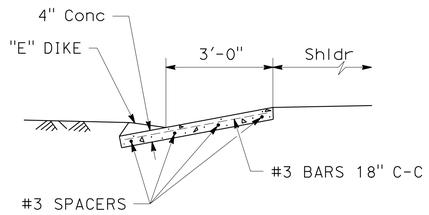

SIDE GUTTER

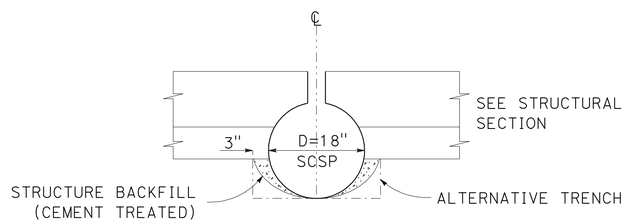

SCSP BACKFILL WITH PCC PAVEMENT

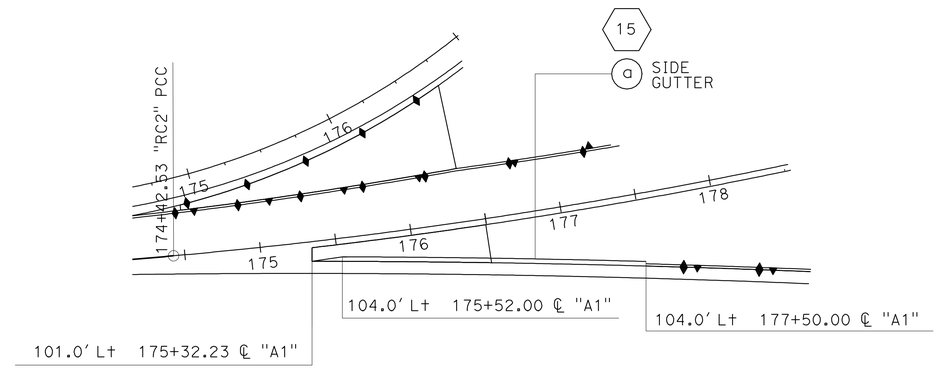

PLAN

DRAINAGE SYSTEM No. 15 a

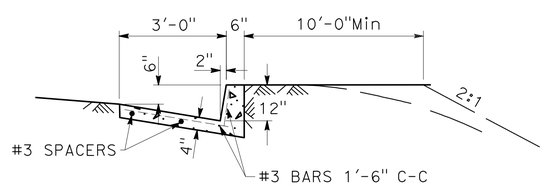

TYPE A DRAIN

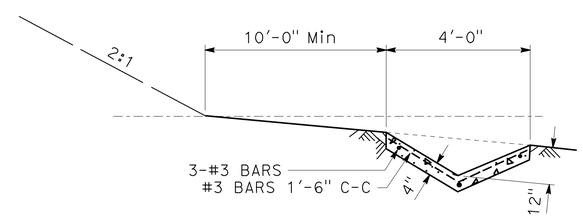

TYPE B DRAIN

DRAINAGE DETAILS

NO SCALE

DD-9

STATE OF CALIFORNIA - DEPARTMENT OF TRANSPORTATION
Caltrans HYDRAULICS

FUNCTIONAL SUPERVISOR: JAI P. THAKUR
CALCULATED-DESIGNED BY: MAY P. FUNG
CHECKED BY: RALPH M. SASAKI
REVISED BY
DATE REVISED

LAST REVISION 00-00-00
DATE PLOTTED => 28-MAR-2012
TIME PLOTTED => 08:53

Dist	COUNTY	ROUTE	POST MILES TOTAL PROJECT	SHEET No.	TOTAL SHEETS
07	LA	5	2.4/4.0	177	1288

REGISTERED CIVIL ENGINEER 12-19-11 DATE

3-26-12
PLANS APPROVAL DATE

REGISTERED PROFESSIONAL ENGINEER RALPH M. SASAKI No. 30849 Exp. 3/31/12 CIVIL STATE OF CALIFORNIA

THE STATE OF CALIFORNIA OR ITS OFFICERS OR AGENTS SHALL NOT BE RESPONSIBLE FOR THE ACCURACY OR COMPLETENESS OF SCANNED COPIES OF THIS PLAN SHEET.

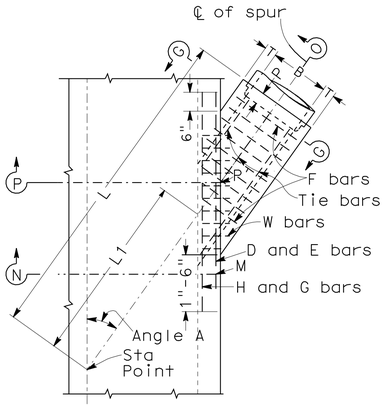

PLAN

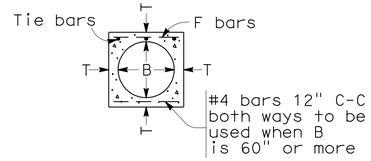

SECTION G-G

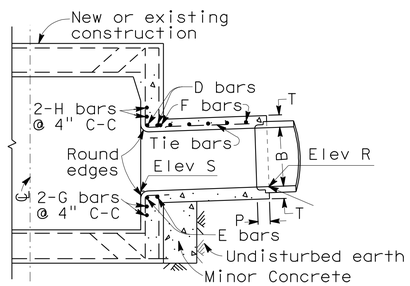

SECTION N-M-P'-O

Projected on P-P'-O

TABLE OF VALUES FOR T			
B	T	B	T
12"	4"	63"	10"
15"	4 1/4"	66"	10 1/4"
18"	4 1/2"	69"	10 3/4"
21"	5"	72"	11"
24"	5 1/4"	78"	11 3/4"
27"	5 1/2"	84"	12 1/2"
30"	6"	90"	13 1/4"
33"	6 1/4"	96"	14"
36"	6 1/2"	102"	15 1/2"
39"	7"	108"	16"
42"	7 1/2"	114"	16 1/2"
45"	7 3/4"	120"	17"
48"	8"	126"	17"
51"	8 1/2"	132"	17 1/2"
54"	9"	138"	17 1/2"
57"	9 1/4"	144"	18"
60"	9 1/2"		

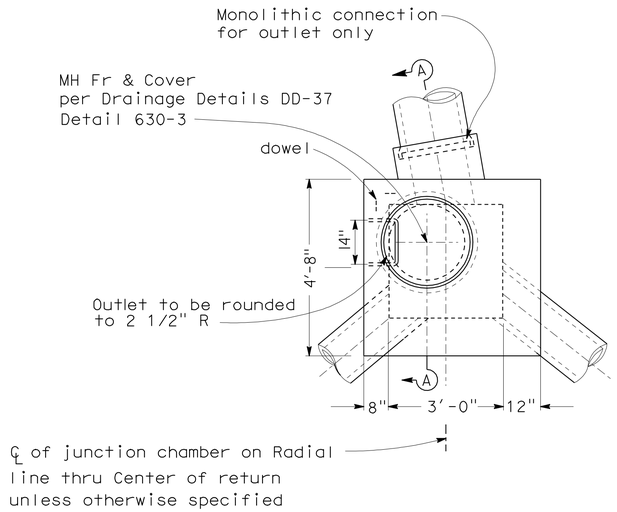

PLAN

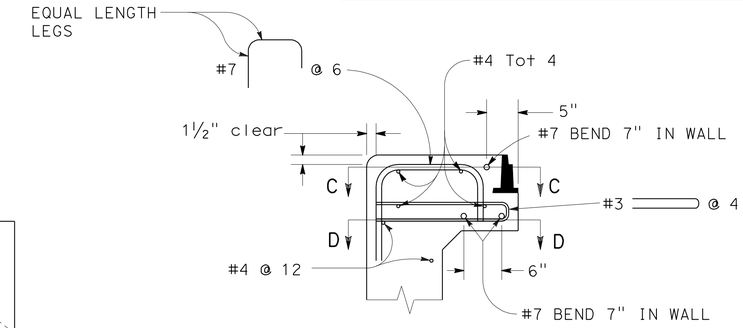

DETAIL "B"

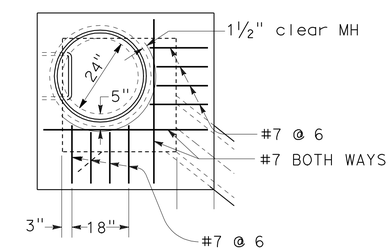

SECTION C-C

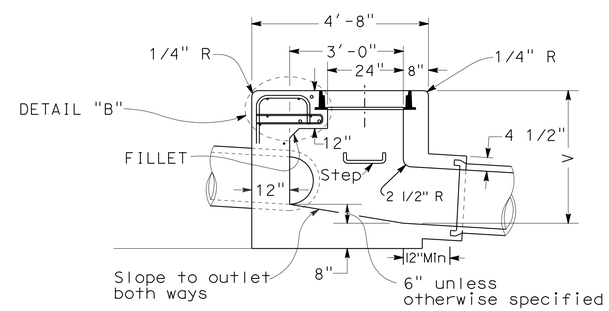

SECTION A-A

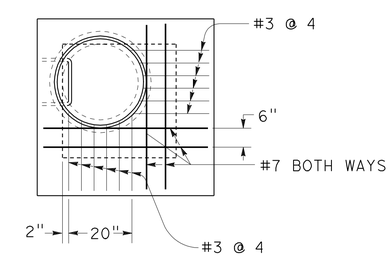

SECTION D-D

NOTES:

1. VALUES for 'A', 'B', 'L', 'L1', 'Elev R' and 'Elev S' are shown on Drainage Plan.
2. STATIONS specified in Drainage Plan apply at intersection of centerlines of main line and lateral.
3. EMBEDMENT 'P' shall be 5" for pipe diameters 12" to 96" and 8" for pipe diameters 102" to 144".
4. REINFORCING STEEL shall be 1½" clear from face of concrete unless otherwise shown. W BARS are of size and spacing specified for wall steel on Drainage Plan, and shall be cut in center of opening and bent into top and bottom of junction structure. OMIT H BARS when soffit of spur is 1' or less below soffit of main line, and omit G bars when invert of spur is 1' or less above floor of main line.
5. STEEL SCHEDULE:

Dia B	D,E,H,G Bars	F Bars
12" to 39"	#5	#4 @ 6" C-C
42" to 84"	#6	#5 @ 6" C-C
90" to 144"	#7	#6 @ 6" C-C
Tie bars - #4 @ 12" C-C		

6. JUNCTION STRUCTURE shall be poured monolithic with main line storm drain or manhole.
7. FLOOR of structure shall be steel-troweled.

JUNCTION STRUCTURE NO 3 (JS 3)

JUNCTION CHAMBER NO 3 Mod (JC 3 Mod)

FOR GENERAL NOTES, SEE SHEET DD-7

DRAINAGE DETAILS

NO SCALE

DD-10

STATE OF CALIFORNIA - DEPARTMENT OF TRANSPORTATION
Caltrans HYDRAULICS

FUNCTIONAL SUPERVISOR: JAI P. THAKUR
CALCULATED-DESIGNED BY: MAY P. FUNG
CHECKED BY: RALPH M. SASAKI
REVISED BY
DATE REVISED

LAST REVISION 00-00-00
DATE PLOTTED => 28-MAR-2012
TIME PLOTTED => 08:54

Dist	COUNTY	ROUTE	POST MILES TOTAL PROJECT	SHEET No.	TOTAL SHEETS
07	LA	5	2.4/4.0	178	1288

REGISTERED CIVIL ENGINEER 12-19-11 DATE

3-26-12
PLANS APPROVAL DATE

REGISTERED PROFESSIONAL ENGINEER RALPH M. SASAKI No. 30849 Exp. 3/31/12 CIVIL STATE OF CALIFORNIA

THE STATE OF CALIFORNIA OR ITS OFFICERS OR AGENTS SHALL NOT BE RESPONSIBLE FOR THE ACCURACY OR COMPLETENESS OF SCANNED COPIES OF THIS PLAN SHEET.

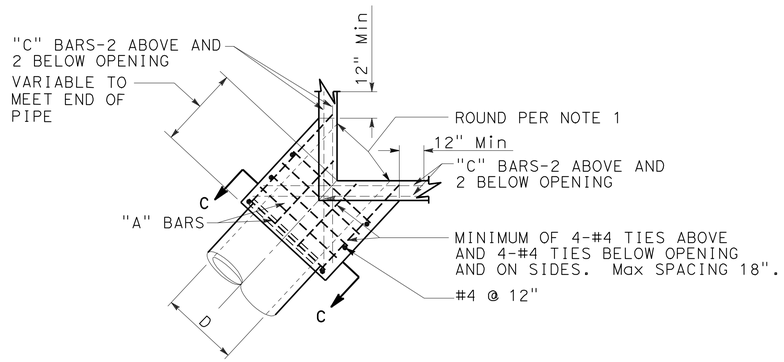

PLAN
CORNER CONNECTION

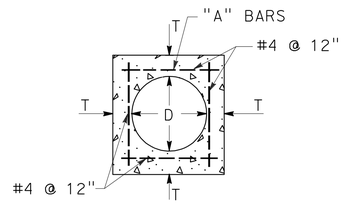

SECTION C-C

D	T	"A"	"B"-"C"
12"	4-½"	#4 @ 6"	#5
15"	4-½"		
18"	5"		
21"	5-½"		
24"	6"		
27"	6-½"		
30"	7"		
33"	7"		
36"	7-½"		
39"	8"		
42"	8"		
45"	8"	#5 @ 6"	#6
48"	8"		
51"	8"		
54"	8"		
57"	10"		
60"	10"		
63"	10"		
66"	11"		
69"	11"		
72"	11"		

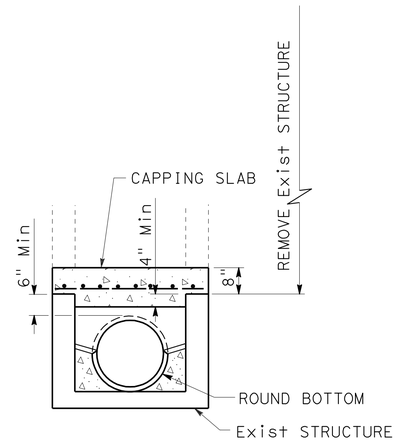

SECTION A-A

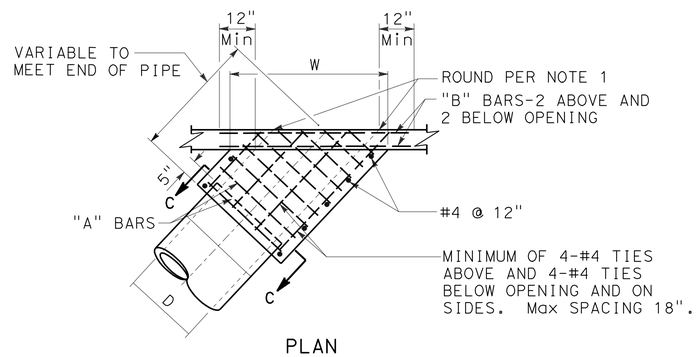

PLAN
SIDE CONNECTION

NOTES:

1. ROUND EDGE OF OUTLET TO 3" RADIUS.
2. REINFORCEMENT SHALL BE 1½" CLEAR FROM THE FACE OF CONCRETE.
3. IN CONNECTING TO AN EXISTING STRUCTURE BREAK OUT PORTIONS OF THE EXISTING STRUCTURE 6" OUTSIDE ITS INTERSECTION WITH THE NEW CONNECTION. BEND ENDS OF #4 BARS OVER CONNECTION OPENING AS REQUIRED.

MONOLITHIC CONNECTION
FOR PIPES 12" TO 72" INCLUSIVE

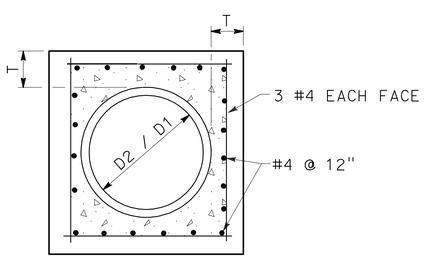

SECTION B-B

D	L	T
12"	1.0'	4"
18"	1.0'	5"
24"	1.0'	6"
36"	1.5'	8"
48"	1.5'	10"
54"	1.5'	10"
60"	1.75'	11"
66"	1.75'	11"
72"	2.0'	12"

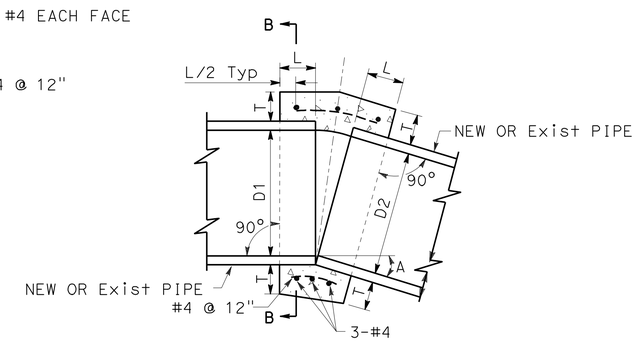

CONCRETE COLLAR

NOTES:

1. WHERE PIPES OF DIFFERENT DIAMETERS ARE JOINED WITH A CONCRETE COLLAR, 'L' AND 'T' SHALL BE THOSE OF THE LARGER PIPE. D=D1 OR D2, WHICHEVER IS GREATER.
2. FOR PIPE SIZE NOT LISTED USE NEXT SIZE LARGER.
3. OMIT REINFORCING ON PIPES 24" AND LESS IN DIAMETER AND ON ALL PIPES WHERE ANGLE A IS LESS THAN 10°.
4. JOIN PIPES AT INVERTS.
5. REINFORCEMENT SHALL BE PLACED 1½" CLEAR FROM OUTSIDE DIAMETER OF PIPE.

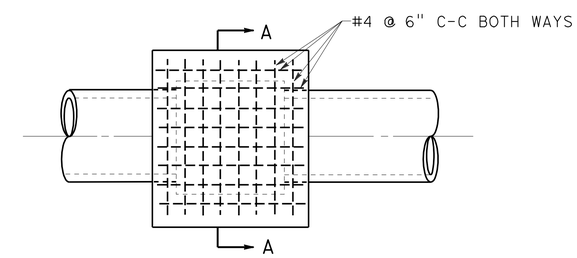

PLAN
CAP INLET DETAIL

DRAINAGE DETAILS

NO SCALE

DD-11

STATE OF CALIFORNIA - DEPARTMENT OF TRANSPORTATION
Caltrans® HYDRAULICS

FUNCTIONAL SUPERVISOR: JAI P. THAKUR
CALCULATED-DESIGNED BY: MAY P. FUNG
CHECKED BY: RALPH M. SASAKI
REVISED BY
DATE REVISED

LAST REVISION 00-00-00
DATE PLOTTED => 28-MAR-2012
TIME PLOTTED => 08:54

Dist	COUNTY	ROUTE	POST MILES TOTAL PROJECT	SHEET No.	TOTAL SHEETS
07	LA	5	2.4/4.0	179	1288

REGISTERED CIVIL ENGINEER 12-19-11 DATE

3-26-12
PLANS APPROVAL DATE

REGISTERED PROFESSIONAL ENGINEER
RALPH M. SASAKI
No. 30849
Exp. 3/31/12
CIVIL
STATE OF CALIFORNIA

THE STATE OF CALIFORNIA OR ITS OFFICERS OR AGENTS SHALL NOT BE RESPONSIBLE FOR THE ACCURACY OR COMPLETENESS OF SCANNED COPIES OF THIS PLAN SHEET.

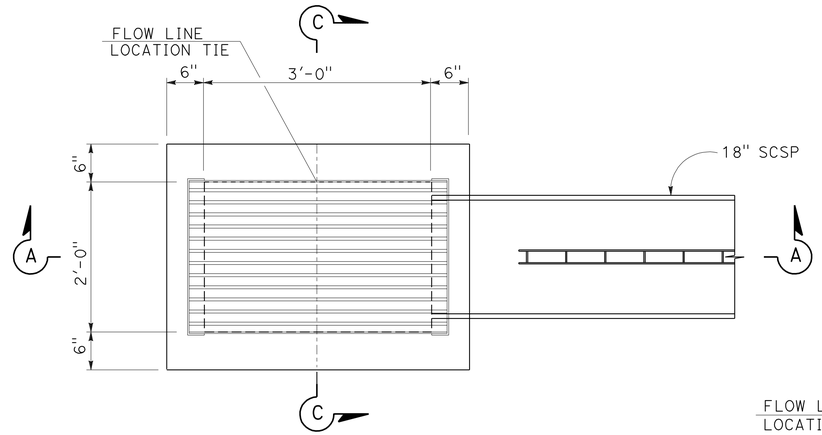

PLAN

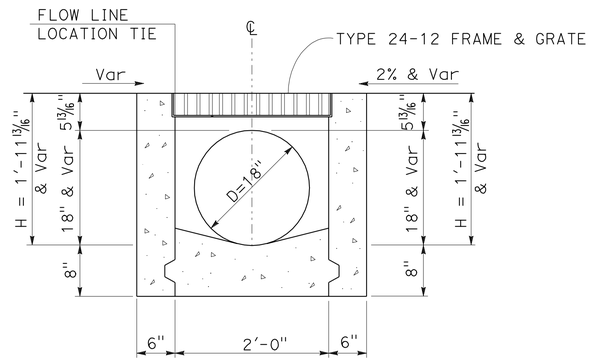

SECTION C-C

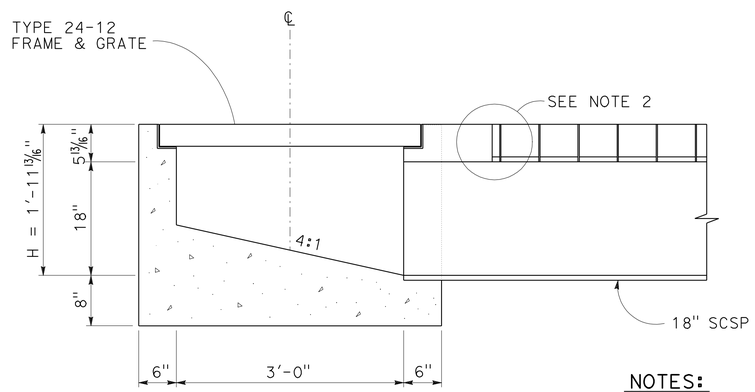

SECTION A-A

NOTES:

1. FOR INFORMATION AND DETAILS NOT SHOWN SEE STANDARD PLANS.
2. GRATE SLOT SHALL BE REMOVED TO A LIMIT NOT TO INTERFERE WITH THE CONSTRUCTION OF SCSP CLEANOUTS, BUT NOT TO EXCEED A MAXIMUM DISTANCE OF 6" FROM THE CLEANOUT WALLS OR AS DIRECTED BY THE ENGINEER.

SCSP BEGINNING / ENDING CLEANOUT

DRAINAGE DETAILS

NO SCALE

DD-12

STATE OF CALIFORNIA - DEPARTMENT OF TRANSPORTATION
Caltrans® HYDRAULICS

FUNCTIONAL SUPERVISOR: JAI P. THAKUR
CALCULATED-DESIGNED BY: MARTIN CORONADO
CHECKED BY: RALPH M. SASAKI
REVISED BY
DATE REVISED

LAST REVISION 00-00-00
DATE PLOTTED => 28-MAR-2012
TIME PLOTTED => 08:54

Dist	COUNTY	ROUTE	POST MILES TOTAL PROJECT	SHEET No.	TOTAL SHEETS
07	LA	5	2.4/4.0	180	1288

REGISTERED CIVIL ENGINEER 12-19-11 DATE

3-26-12
PLANS APPROVAL DATE

REGISTERED PROFESSIONAL ENGINEER RALPH M. SASAKI No. 30849 Exp. 3/31/12 CIVIL STATE OF CALIFORNIA

THE STATE OF CALIFORNIA OR ITS OFFICERS OR AGENTS SHALL NOT BE RESPONSIBLE FOR THE ACCURACY OR COMPLETENESS OF SCANNED COPIES OF THIS PLAN SHEET.

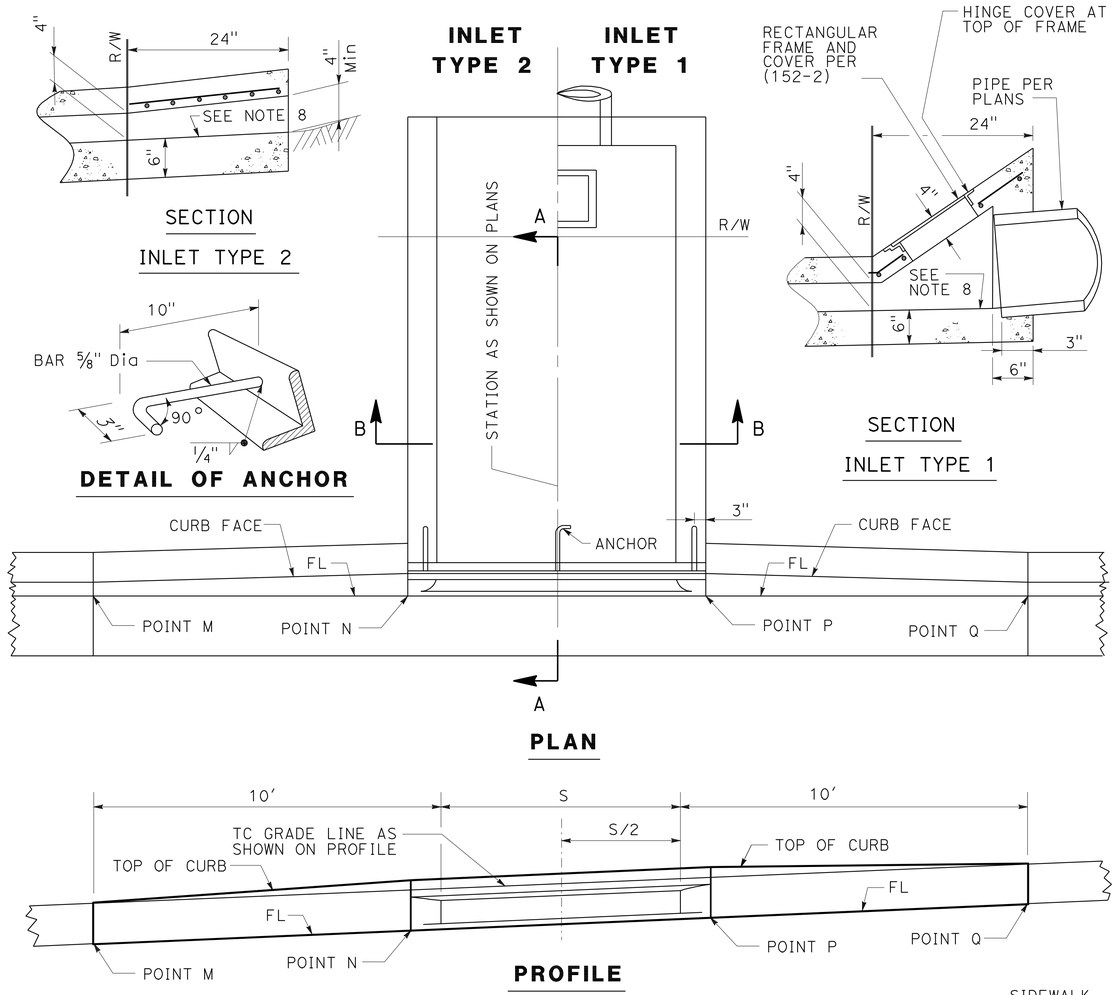

S, INCHES	J BAR SPACING
12"	7"
18"	7"
24"	7"
30"	7"
36"	7"
42"	6"
48"	5"
54"	6-1/2"
60"	5"
66"	4"
72"	3-1/2"

FOR S=30" AND LESS, USE 2 ANCHORS. OTHERWISE, USE 3 ANCHORS.

FOR S=48" AND LESS, B=3" USE 2-1/2"x2"x3/8" GALVANIZED STEEL ANGLE. OTHERWISE, B=4", USE 3-1/2"x3"x1/2" GALVANIZED STEEL ANGLE.

J BARS ARE #3.

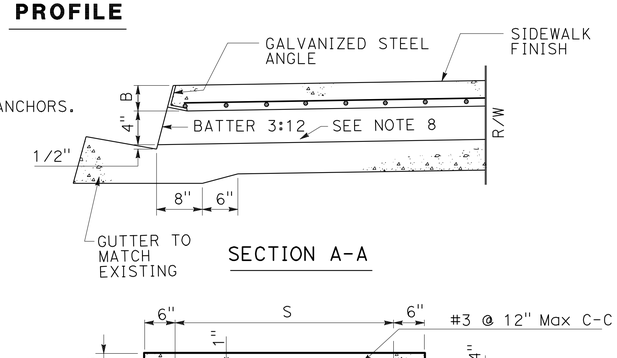

PARKWAY DRAIN (151-2)

NOTES:

1. FLOOR OF BOX SHALL BE TROWELED SMOOTH.
2. IF THE TOE OF SLOPE IS ALLOWED WITHIN THE R/W, INLET TYPE 1 BEGINS AT THE TOE RATHER THAN AT THE R/W LINE.
3. FOR OPEN DITCH (TYPE 2), THE 24" EXTENSION BEYOND THE R/W LINE IS NOT REQUIRED WHEN BACK OF WALK IS 24" OR MORE FROM THE R/W LINE; HOWEVER, THE PIPE SHALL EXTEND TO THE R/W LINE IN ANY EVENT.
4. TOP OF INLET STRUCTURE (TYPE 1 & 2) SHALL BE FLUSH WITH ADJACENT SURFACE WHERE PRACTICAL.
5. A HEADED STEEL STUD 5/8" x 6-3/8" WITH A 1" HEAD ATTACHED BY A FULL PENETRATION BUTT WELD MAY BE USED AS AN ALTERNATE ANCHOR.
6. NORMAL CURB FACE AT POINT M AND Q. CURB FACE IS B+5" AT POINT N AND P.
7. THE 3" LEG OF THE 5/8" Dia ANCHORS SHALL BE PARALLEL TO THE TOP OF SIDEWALK.
8. SLOPE=0.20%.

DRAINAGE DETAILS

NO SCALE

DD-13

STATE OF CALIFORNIA - DEPARTMENT OF TRANSPORTATION
Caltrans® HYDRAULICS

FUNCTIONAL SUPERVISOR: JAI P. THAKUR
CALCULATED-DESIGNED BY: MAY P. FUNG
CHECKED BY: RALPH M. SASAKI
REVISED BY
DATE REVISED

LAST REVISION 00-00-00
DATE PLOTTED => 28-MAR-2012
TIME PLOTTED => 08:54

Dist	COUNTY	ROUTE	POST MILES TOTAL PROJECT	SHEET No.	TOTAL SHEETS
07	LA	5	2.4/4.0	181	1288

REGISTERED CIVIL ENGINEER 12-19-11 DATE

3-26-12
PLANS APPROVAL DATE

REGISTERED PROFESSIONAL ENGINEER RALPH M. SASAKI No. 30849 Exp. 3/31/12 CIVIL STATE OF CALIFORNIA

THE STATE OF CALIFORNIA OR ITS OFFICERS OR AGENTS SHALL NOT BE RESPONSIBLE FOR THE ACCURACY OR COMPLETENESS OF SCANNED COPIES OF THIS PLAN SHEET.

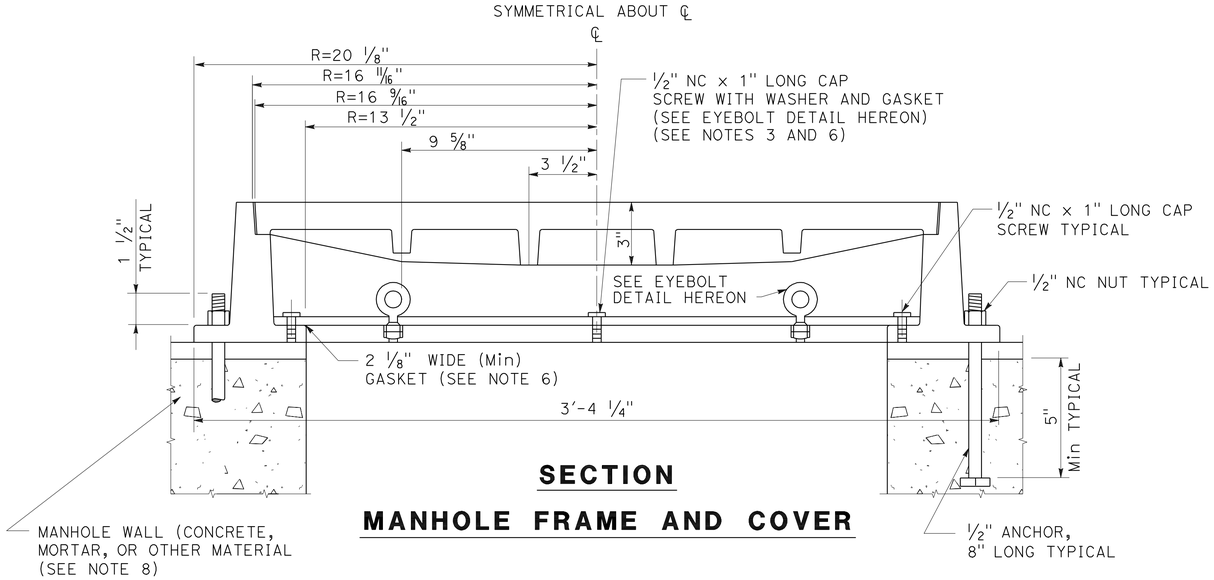

SECTION

MANHOLE FRAME AND COVER

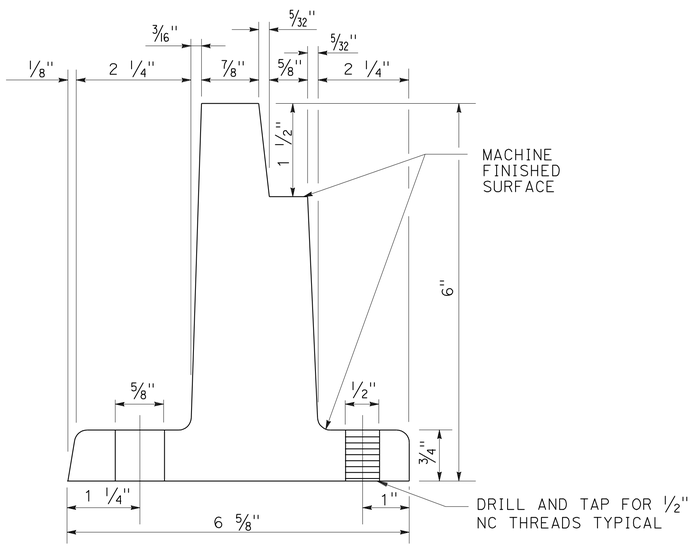

DETAIL OF FRAME

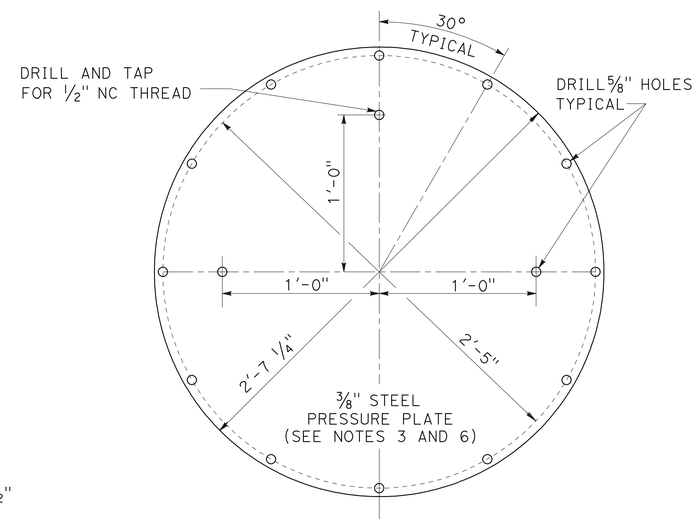

PRESSURE PLATE

NOTES:

1. EXCEPT AS OTHERWISE INDICATED, THE MANHOLE FRAME AND COVER SHALL CONFORM TO (632-3), 30" MANHOLE FRAME AND COVER.
2. THE PRESSURE PLATE SHALL BE STEEL CONFORMING TO ASTM A36, AND SHALL BE GALVANIZED AFTER FABRICATION, BUT BEFORE INSTALLATION OF SCREWS AND BOLTS.
3. CAP SCREWS AND EYEBOLTS, INCLUDING WASHERS AND NUTS ATTACHED THERETO, SHALL BE FABRICATED FROM ANY SERIES 300 STAINLESS STEEL.
4. ALL HOLES IN CAST IRON SHALL BE DRILLED AFTER CASTING, OR PLUGGED PRIOR TO CASTING. THEY SHALL NOT BE PUNCHED.
5. ALL IRON CASTING SHALL RECEIVE AN ASPHALTIC COATING AFTER FABRICATION.
6. GASKET MATERIAL SHALL BE 1/16" THICK NEOPRENE RUBBER. PRESSURE PLATE GASKET SHALL BE 2'-7 1/4" OD.
7. ALL NUTS AND BOLTS SHALL BE TIGHTENED TO A MINIMUM TORQUE OF 25 FOOT- POUNDS.
8. FRAME SHALL BE SET ON 1/2" THICK MINIMUM WET MORTAR BASE, PER SECTION 51-1.135 OF STANDARD SPECIFICATIONS.
9. MANHOLE FRAME AND COVER AND PRESSURE PLATE ASSEMBLY SHALL BE TESTED FOR ACCURATE FIT PRIOR TO DELIVERY TO JOB SITE AND MARKED IN SETS.
10. NC: NATIONAL COARSE SERIES.

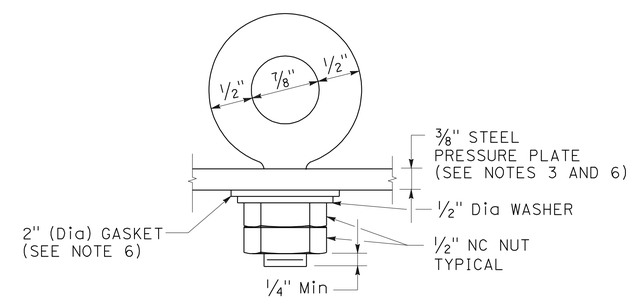

EYEBOLT DETAIL

(2 REQUIRED)

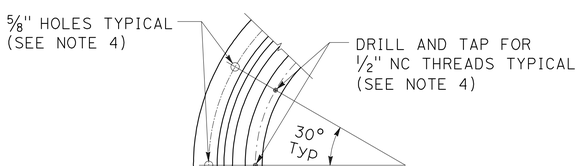

DETAIL OF BOLT HOLE SPACING IN FRAME

MANHOLE FRAME AND COVER PRESSURE TYPE (211-2)

DRAINAGE DETAILS

NO SCALE

DD-14

STATE OF CALIFORNIA - DEPARTMENT OF TRANSPORTATION
Caltrans® HYDRAULICS

FUNCTIONAL SUPERVISOR: JAI P. THAKUR
CALCULATED-DESIGNED BY: MAY P. FUNG
CHECKED BY: RALPH M. SASAKI
REVISED BY
DATE REVISED

LAST REVISION 00-00-00
DATE PLOTTED => 28-MAR-2012
TIME PLOTTED => 08:54

Dist	COUNTY	ROUTE	POST MILES TOTAL PROJECT	SHEET No.	TOTAL SHEETS
07	LA	5	2.4/4.0	182	1288

REGISTERED CIVIL ENGINEER 12-19-11 DATE

3-26-12
PLANS APPROVAL DATE

REGISTERED PROFESSIONAL ENGINEER RALPH M. SASAKI No. 30849 Exp. 3/31/12 CIVIL STATE OF CALIFORNIA

THE STATE OF CALIFORNIA OR ITS OFFICERS OR AGENTS SHALL NOT BE RESPONSIBLE FOR THE ACCURACY OR COMPLETENESS OF SCANNED COPIES OF THIS PLAN SHEET.

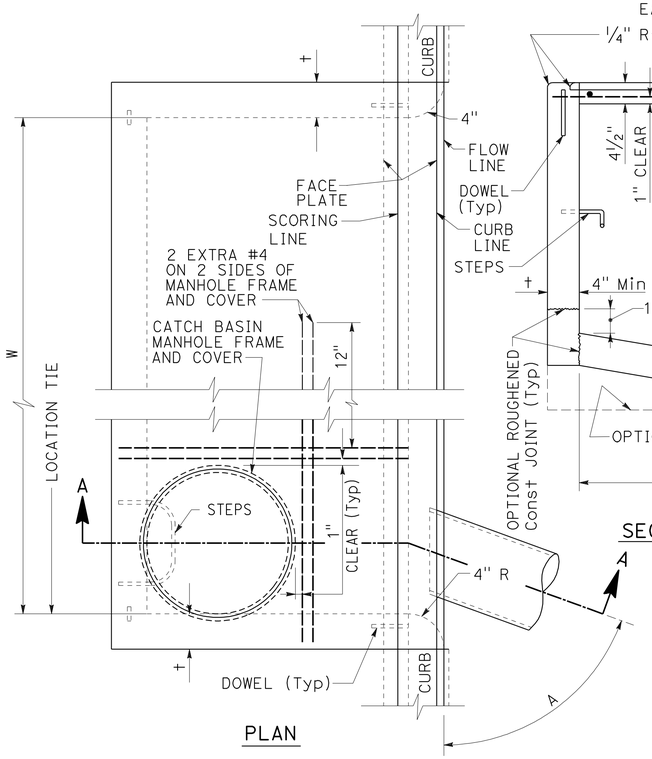

PLAN

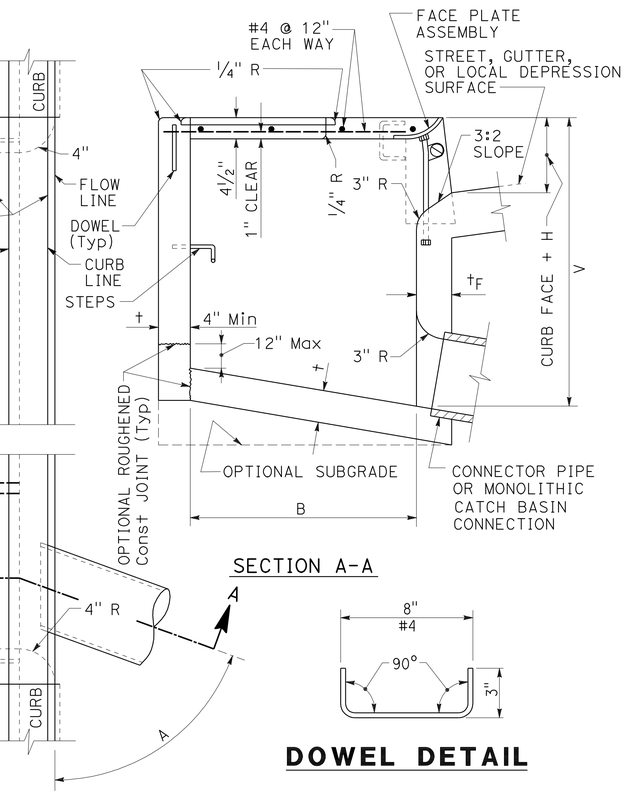

SECTION A-A

DOWEL DETAIL

NOTES:

1. WHERE THE BASIN IS TO BE CONSTRUCTED WITHIN THE LIMITS OF EXISTING OR PROPOSED SIDEWALK OR IS CONTIGUOUS TO SUCH SIDEWALK, THE TOP SLAB OF THE BASIN MAY BE POURED EITHER MONOLITHIC WITH THE SIDEWALK OR SEPARATELY, USING THE SAME CLASS OF CONCRETE AS IN THE BASIN. WHEN POURED MONOLITHICALLY, THE SIDEWALK SHALL BE PROVIDED WITH A WEAKENED PLANE OR A 1" DEEP SAW CUT CONTINUOUSLY AROUND THE EXTERNAL PERIMETER OF THE CATCH BASIN WALLS, INCLUDING ACROSS THE FULL WIDTH OF THE SIDEWALK. SURFACE OF ALL EXPOSED CONCRETE SHALL CONFORM IN SLOPE, GRADE, COLOR, FINISH, AND SCORING TO EXISTING OR PROPOSED CURB AND WALK ADJACENT TO THE BASIN.

2. ALL CURVED CONCRETE SURFACES SHALL BE FORMED BY CURVED FORMS, AND SHALL NOT BE SHAPED BY PLASTERING.

3. FLOOR OF BASIN SHALL BE GIVEN A STEEL TROWEL FINISH AND SHALL HAVE A LONGITUDINAL AND LATERAL SLOPE OF 1:12 MINIMUM AND 1:3 MAXIMUM, EXCEPT WHERE THE GUTTER GRADE EXCEEDS 8%, IN WHICH CASE THE LONGITUDINAL SLOPE OF THE FLOOR SHALL BE THE SAME AS THE GUTTER GRADE. SLOPE FLOOR FROM ALL DIRECTIONS TO THE OUTLET.

4. DIMENSIONS:

   B = 3′-2"

   V = THE DIFFERENCE IN ELEVATION BETWEEN THE TOP OF THE CURB AND THE INVERT OF THE CATCH BASIN AT THE OUTLET = 4.5′.

   V_U= THE DIFFERENCE IN ELEVATION BETWEEN THE TOP OF THE CURB AND THE INVERT AT THE UPSTREAM END OF THE BASIN, AND SHALL BE DETERMINED BY THE REQUIREMENTS OF NOTE 3, BUT SHALL NOT BE LESS THAN CURB FACE PLUS 12".

   V_I= THE DIFFERENCE IN ELEVATION BETWEEN THE TOP OF THE CURB AND THE INVERT OF THE INLET, NOTED ON THE PLANS.

   H = NOTED ON THE PLANS.

   W = NOTED ON THE PLANS.

   A = THE ANGLE, IN DEGREES, INTERCEPTED BY THE CENTERLINE OF THE CONNECTOR PIPE AND THE CATCH BASIN WALL TO WHICH THE CONNECTOR PIPE IS ATTACHED.

5. PLACE CONNECTOR PIPES AS INDICATED ON THE PLANS. UNLESS OTHERWISE SPECIFIED, THE CONNECTOR PIPE SHALL BE LOCATED AT THE DOWNSTREAM END OF THE BASIN. WHERE THE CONNECTOR PIPE IS SHOWN AT A CORNER, THE CENTERLINE OF THE PIPE SHALL INTERSECT THE INSIDE CORNER OF THE BASIN. THE PIPE MAY BE CUT AND TRIMMED AT A SKEW NECESSARY TO INSURE MINIMUM 3" PIPE EMBEDMENT, ALL AROUND, WITHIN THE CATCH BASIN WALL, AND 3" RADIUS OF ROUNDING OF STRUCTURE CONCRETE, ALL AROUND, ADJACENT TO PIPE ENDS. A MONOLITHIC CATCH BASIN CONNECTION SHALL BE USED TO JOIN THE CONNECTOR PIPE TO THE CATCH BASIN WHENEVER ANGLE "A" IS LESS THAN 70° OR GREATER THAN 110°, OR WHENEVER THE CONNECTOR PIPE IS LOCATED IN A CORNER. THE OPTIONAL USE OF A MONOLITHIC CATCH BASIN CONNECTION IN ANY CASE IS PERMITTED. MONOLITHIC CATCH BASIN CONNECTIONS MAY BE CONSTRUCTED TO AVOID CUTTING STANDARD LENGTHS OF PIPE.

6. STEPS SHALL BE LOCATED AS SHOWN. IF THE CONNECTOR PIPE INTERFERES WITH THE STEPS, THEY SHALL BE LOCATED AT THE CENTERLINE OF THE DOWNSTREAM END WALL. STEPS SHALL BE SPACED 12" APART. THE TOP STEP SHALL BE 7" BELOW THE TOP OF THE MANHOLE AND PROJECT 2 1/2". ALL OTHER STEPS SHALL PROJECT 5".

7. DOWELS ARE REQUIRED AT EACH CORNER AND AT 7′ ON CENTER (MAXIMUM) ALONG THE BACK WALL.

8. THE FOLLOWING DETAILS ARE INCORPORATED HEREIN:

   308 MONOLITHIC CATCH BASIN CONNECTION
   309 CATCH BASIN REINFORCEMENT
   310 CATCH BASIN FACE PLATE ASSEMBLY AND PROTECTION BAR
   312 CATCH BASIN MANHOLE FRAME AND COVER
   635 STEEL STEP
   636 POLYPROPYLENE PLASTIC STEP

STRUCTURAL DATA

WALL AND SLAB DIMENSIONS AND REINFORCEMENT REQUIREMENTS

MAX W	MAX V	t	t_F	REINFORCEMENT REQUIRED IN: FRONT WALL	REAR WALL	BOTTOM SLAB	END WALL
3.5′	8′	6"	6"	NO REINFORCEMENT	REINFORCEMENT REQUIRED		REQUIRED
3.5′	12′	8"	8"				
7′	6′	6"	6"				
7′	12′	8"	8"				
14′	4′	6"	6"				
↕	8′	6"	8"				
14′	12′	8"	10"				
21′ AND 28′	4′	6"	6"			REQUIRED	
	6′	6"	8"				
	8′	8"	8"				
	10′	8"	10"				
	12′	8"	10"				

FOR W > 28′, V > 12′ OR B > 4′ SEE PLANS

CURB OPENING CATCH BASIN (300-3)

DRAINAGE DETAILS

NO SCALE

DD-15

STATE OF CALIFORNIA - DEPARTMENT OF TRANSPORTATION
Caltrans HYDRAULICS

FUNCTIONAL SUPERVISOR: JAI P. THAKUR
CALCULATED-DESIGNED BY: MAY P. FUNG
CHECKED BY: RALPH M. SASAKI
REVISED BY
DATE REVISED

LAST REVISION 00-00-00 | DATE PLOTTED => 28-MAR-2012 | TIME PLOTTED => 08:54

Dist	COUNTY	ROUTE	POST MILES TOTAL PROJECT	SHEET No.	TOTAL SHEETS
07	LA	5	2.4/4.0	183	1288

REGISTERED CIVIL ENGINEER 12-19-11 DATE

3-26-12
PLANS APPROVAL DATE

REGISTERED PROFESSIONAL ENGINEER RALPH M. SASAKI No. 30849 Exp. 3/31/12 CIVIL STATE OF CALIFORNIA

THE STATE OF CALIFORNIA OR ITS OFFICERS OR AGENTS SHALL NOT BE RESPONSIBLE FOR THE ACCURACY OR COMPLETENESS OF SCANNED COPIES OF THIS PLAN SHEET.

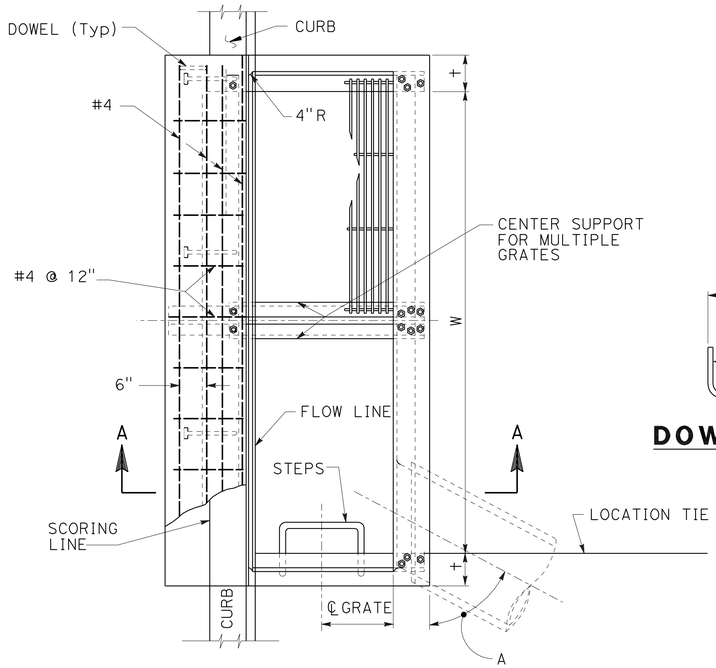

PLAN

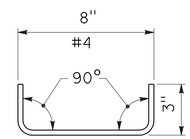

DOWEL DETAIL

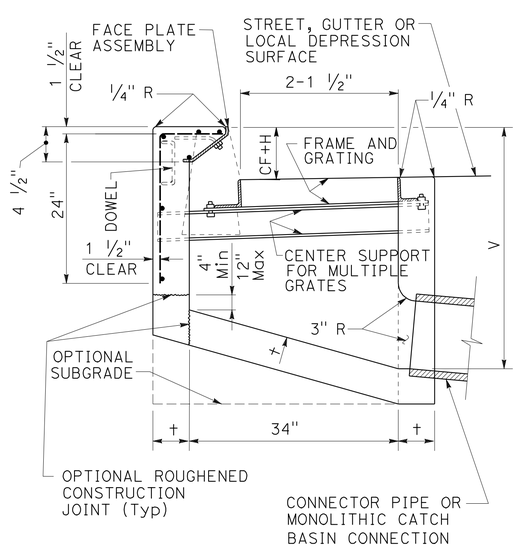

SECTION A-A

STRUCTURAL DATA

WALL AND SLAB DIMENSIONS AND REINFORCEMENT REQUIREMENTS

No. OF GRATES	MAXIMUM V	t	REINFORCEMENT FOR WALLS AND SLABS
1-2	4′	6"	NOT REQUIRED
1-2	8′	8"	
1-2	10′	10"	
1-2	12′	10"	REQUIRED
3-4	4′	6"	NOT REQUIRED
3-4	7′	8"	
3-4	8′	8"	REQUIRED
3-4	12′	10"	
5-6	4′	6"	NOT REQUIRED
5-6	6′	8"	
5-6	8′	8"	REQUIRED
5-6	12′	10"	
> 6	4′	6"	
> 6	8′	8"	
> 6	12′	10"	

NOTES:

1. WHERE THE BASIN IS TO BE CONSTRUCTED WITHIN THE LIMITS OF EXISTING OR PROPOSED SIDEWALK OR IS CONTIGUOUS TO SUCH SIDEWALK, THE TOP SLAB OF THE BASIN MAY BE POURED EITHER MONOLITHIC WITH THE SIDEWALK OR SEPARATELY, USING THE SAME CLASS OF CONCRETE AS IN THE BASIN. WHEN POURED MONOLITHICALLY, THE SIDEWALK SHALL BE PROVIDED WITH A WEAKENED PLANE OR A 1" DEEP SAW CUT CONTINUOUSLY AROUND THE EXTERNAL PERIMETER OF THE CATCH BASIN WALLS, INCLUDING ACROSS THE FULL WIDTH OF THE SIDEWALK. SURFACE OF ALL EXPOSED CONCRETE SHALL CONFORM IN SLOPE, GRADE, COLOR, FINISH, AND SCORING TO EXISTING OR PROPOSED CURB AND WALK ADJACENT TO THE BASIN.

2. ALL CURVED CONCRETE SURFACES SHALL BE FORMED BY CURVED FORMS, AND SHALL NOT BE SHAPED BY PLASTERING.

3. ONE GRATING IS REQUIRED UNLESS OTHERWISE SHOWN ON THE PROJECT PLAN.

4. FLOOR OF BASIN SHALL BE GIVEN A STEEL TROWEL FINISH AND SHALL HAVE A LONGITUDINAL AND LATERAL SLOPE OF 1:12 MINIMUM AND 1:3 MAXIMUM, EXCEPT WHERE THE GUTTER GRADE EXCEEDS 8%, IN WHICH CASE THE LONGITUDINAL SLOPE OF THE FLOOR SHALL BE THE SAME AS THE GUTTER GRADE. SLOPE FLOOR FROM ALL DIRECTIONS TO THE OUTLET.

5. DIMENSIONS:

   V = THE DIFFERENCE IN ELEVATION BETWEEN THE TOP OF THE CURB AND THE INVERT OF THE CATCH BASIN AT THE OUTLET = 4.5′.

   V_U = THE DIFFERENCE IN ELEVATION BETWEEN THE TOP OF THE CURB AND THE INVERT AT THE UPSTREAM END OF THE BASIN, AND SHALL BE DETERMINED BY THE REQUIREMENTS OF NOTE 4, BUT SHALL NOT BE LESS THAN CURB FACE PLUS 12".

   V_1 = THE DIFFERENCE IN ELEVATION BETWEEN THE TOP OF THE CURB AND THE INVERT OF THE INLET, NOTED ON THE PLANS.

   H = NOTED ON THE PROJECT PLANS.

   W = 2′-11⅜" FOR ONE GRATING; ADD 3′-5 ⅜" FOR EACH ADDITIONAL GRATING.

   A = THE ANGLE, IN DEGREES, INTERCEPTED BY THE CENTERLINE OF THE CONNECTOR PIPE AND THE CATCH BASIN WALL TO WHICH THE CONNECTOR PIPE IS ATTACHED.

6. PLACE CONNECTOR PIPES AS INDICATED ON THE PLANS. UNLESS OTHERWISE SPECIFIED, THE CONNECTOR PIPE SHALL BE LOCATED AT THE DOWNSTREAM END OF THE BASIN. WHERE THE CONNECTOR PIPE IS SHOWN AT A CORNER, THE CENTERLINE OF THE PIPE SHALL INTERSECT THE INSIDE CORNER OF THE BASIN. THE PIPE MAY BE CUT AND TRIMMED AT A SKEW NECESSARY TO INSURE MINIMUM 3" PIPE EMBEDMENT, ALL AROUND, WITHIN THE CATCH BASIN WALL, AND 3" RADIUS OF ROUNDING OF STRUCTURE CONCRETE, ALL AROUND, ADJACENT TO PIPE ENDS, A MONOLITHIC CATCH BASIN CONNECTION SHALL BE USED TO JOIN THE CONNECTOR PIPE TO THE CATCH BASIN WHENEVER ANGLE A" IS LESS THAN 70° OR GREATER THAN 110 °, OR WHENEVER THE CONNECTOR PIPE IS LOCATED IN A CORNER. THE OPTIONAL USE OF A MONOLITHIC CATCH BASIN CONNECTION IN ANY CASE IS PERMITTED. MONOLITHIC CATCH BASIN CONNECTIONS MAY BE CONSTRUCTED TO AVOID CUTTING STANDARD LENGTHS OF PIPE.

7. STEPS SHALL BE LOCATED AS SHOWN. IF THE CONNECTOR PIPE INTERFERES WITH THE STEPS, THEY SHALL BE LOCATED ON THE FRONT WALL AT THE CENTERLINE OF THE DOWNSTREAM GRATING. STEPS SHALL BE SPACED 12" PART. THE TOP STEP SHALL BE 7" BELOW THE TOP OF THE GRATING AND PROJECT 2 ½". ALL OTHER STEPS SHALL PROJECT 5".

8. DOWELS ARE REQUIRED AT EACH CORNER AND AT 7′ ON CENTER (MAXIMUM) ALONG THE BACKWALL.

9. THE FOLLOWING DETAILS ARE INCORPORATED HEREIN:

   308 MONOLITHIC CATCH BASIN CONNECTION
   309 CATCH BASIN REINFORCEMENT
   310 CATCH BASIN FACE PLATE ASSEMBLY AND PROTECTION BAR
   311 FRAME AND GRATING FOR CATCH BASINS
   635 STEEL STEP
   636 POLYPROPYLENE PLASTIC STEP

CURB OPENING CATCH BASIN WITH GRATING(S) (302-3)

DRAINAGE DETAILS

NO SCALE

DD-16

STATE OF CALIFORNIA - DEPARTMENT OF TRANSPORTATION
Caltrans® HYDRAULICS

FUNCTIONAL SUPERVISOR: JAI P. THAKUR
CALCULATED-DESIGNED BY: MAY P. FUNG
CHECKED BY: RALPH M. SASAKI
REVISED BY
DATE REVISED

LAST REVISION 00-00-00
DATE PLOTTED => 28-MAR-2012
TIME PLOTTED => 08:54

Dist	COUNTY	ROUTE	POST MILES TOTAL PROJECT	SHEET No.	TOTAL SHEETS
07	LA	5	2.4/4.0	184	1288

12-19-11
REGISTERED CIVIL ENGINEER DATE

3-26-12
PLANS APPROVAL DATE

REGISTERED PROFESSIONAL ENGINEER RALPH M. SASAKI No. 30849 Exp. 3/31/12 CIVIL STATE OF CALIFORNIA

THE STATE OF CALIFORNIA OR ITS OFFICERS OR AGENTS SHALL NOT BE RESPONSIBLE FOR THE ACCURACY OR COMPLETENESS OF SCANNED COPIES OF THIS PLAN SHEET.

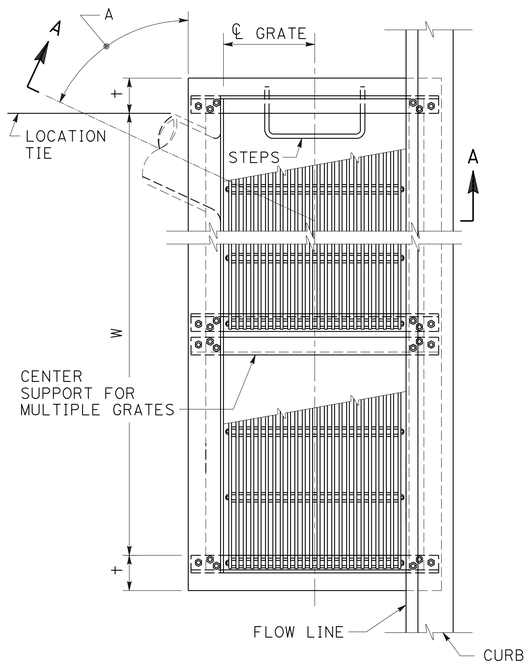

PLAN

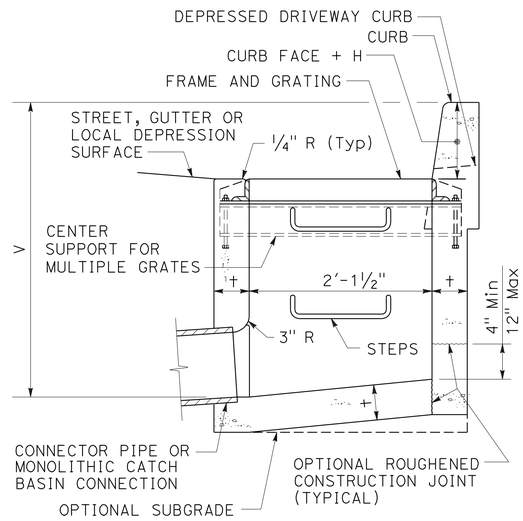

SECTION A-A

STRUCTURAL DATA

WALL AND SLAB DIMENSIONS AND REINFORCEMENT REQUIREMENTS

No. OF GRATES	Max V	†	REINFORCEMENT FOR WALLS AND SLABS
1-2	4′	6"	NOT REQUIRED
1-2	8′	8"	
1-2	10′	10"	
1-2	12′	10"	REQUIRED
3-4	4′	6"	NOT REQUIRED
3-4	7′	8"	
3-4	8′	8"	REQUIRED
3-4	12′	10"	
5-6	4′	6"	NOT REQUIRED
5-6	6′	8"	
5-6	8′	8"	REQUIRED
5-6	12′	8"	
> 6	4′	6"	
> 6	8′	8"	
> 6	12′	10"	

NOTES:

1. SURFACE OF ALL EXPOSED CONCRETE SHALL CONFORM IN SLOPE GRADE, COLOR, FINISH, AND SCORING TO THE EXISTING OR PROPOSED CURB ADJACENT TO THE BASIN.
2. ALL CURVED CONCRETE SURFACES SHALL BE FORMED BY CURVED FORMS, AND SHALL NOT BE SHAPED BY PLASTERING.
3. FLOOR OF BASIN SHALL BE GIVEN A STEEL TROWEL FINISH AND SHALL HAVE A LONGITUDINAL AND LATERAL SLOPE OF 1:12 MINIMUM AND 1:3 MAXIMUM, EXCEPT WHERE THE GUTTER GRADE EXCEEDS 8%, IN WHICH CASE THE LONGITUDINAL SLOPE OF THE FLOOR SHALL BE THE SAME AS THE GUTTER GRADE. SLOPE FLOOR FROM ALL DIRECTIONS TO THE OUTLET.
4. ONE GRATING IS REQUIRED UNLESS OTHERWISE SHOWN ON THE PLANS.
5. DIMENSIONS:

   V = THE DIFFERENCE IN ELEVATION BETWEEN THE TOP OF THE CURB AND THE INVERT OF THE CATCH BASIN AT THE OUTLET = 4.5′.

   V_I = THE DIFFERENCE IN ELEVATION BETWEEN THE TOP OF THE CURB AND THE INVERT AT THE UPSTREAM END OF THE BASIN, AND SHALL BE DETERMINED BY THE REQUIREMENTS OF NOTE 3, BUT SHALL NOT BE LESS THAN CURB FACE PLUS 12".

   V_U = THE DIFFERENCE IN ELEVATION BETWEEN THE TOP OF THE CURB AND THE INVERT AT THE INLET. NOTED ON THE PLANS.

   H = NOTED ON THE PLANS.

   W = 2′-11 3/8" FOR ONE GRATING; ADD 3′-5 3/8" FOR EACH ADDITIONAL GRATING.

   A = THE ANGLE, IN DEGREES, INTERCEPTED BY THE CENTERLINE OF THE CONNECTOR PIPE AND THE CATCH BASIN WALL TO WHICH THE CONNECTOR PIPE IS ATTACHED.
6. PLACE CONNECTOR PIPES AS INDICATED ON THE PLANS. UNLESS OTHERWISE SPECIFIED, THE CONNECTOR PIPE SHALL BE LOCATED AT THE DOWNSTREAM END OF THE BASIN. WHERE THE CONNECTOR PIPE IS SHOWN AT A CORNER, THE CENTERLINE OF THE PIPE SHALL INTERSECT THE INSIDE CORNER OF THE BASIN. THE PIPE MAY BE CUT AND TRIMMED AT A SKEW NECESSARY TO INSURE MINIMUM 3" PIPE EMBEDMENT, ALL AROUND, WITHIN THE CATCH BASIN WALL, AND 3" RADIUS OF ROUNDING OF STRUCTURE CONCRETE, ALL AROUND, ADJACENT TO PIPE ENDS. A MONOLITHIC CATCH BASIN CONNECTION SHALL BE USED TO JOIN THE CONNECTOR PIPE TO THE CATCH BASIN WHENEVER ANGLE A" IS LESS THAN 70° OR GREATER THAN 110°, GREATER THAN 110°, OR WHENEVER THE CONNECTOR PIPE IS LOCATED IN A CORNER THE OPTIONAL USE OF A MONOLITHIC CATCH BASIN CONNECTION IN ANY CASE IS PERMITTED MONOLITHIC CATCH BASIN CONNECTIONS MAY BE CONSTRUCTED TO AVOID CUTTING STANDARD LENGTHS OF PIPE.
7. STEPS SHALL BE LOCATED AS SHOWN. IF THE CONNECTOR PIPE INTERFERES WITH THE STEPS, THEY SHALL BE LOCATED AT THE CENTERLINE OF THE DOWNSTREAM GRATING. STEPS SHALL BE SPACED 12" APART. THE TOP STEP SHALL BE 7" BELOW THE TOP OF THE GRATING AND PROJECT 2 1/2". ALL OTHER STEPS SHALL PROJECT 5".
8. THE FOLLOWING SPPWC ARE INCORPORATED HEREIN:

   308 MONOLITHIC CATCH BASIN CONNECTION
   309 CATCH BASIN REINFORCEMENT
   311 FRAME AND GRATING FOR CATCH BASINS
   635 STEEL STEP
   636 POLYPROPYLENE PLASTIC STEP

CURBSIDE GRATING CATCH BASIN (303-3)

DRAINAGE DETAILS

NO SCALE

DD-17

STATE OF CALIFORNIA - DEPARTMENT OF TRANSPORTATION
Caltrans® HYDRAULICS

FUNCTIONAL SUPERVISOR: JAI P. THAKUR
CALCULATED-DESIGNED BY: MAY P. FUNG
CHECKED BY: RALPH M. SASAKI
REVISED BY / DATE REVISED

LAST REVISION 00-00-00 | DATE PLOTTED => 28-MAR-2012 | TIME PLOTTED => 08:55

Dist	COUNTY	ROUTE	POST MILES TOTAL PROJECT	SHEET No.	TOTAL SHEETS
07	LA	5	2.4/4.0	185	1288

12-19-11
REGISTERED CIVIL ENGINEER DATE

3-26-12
PLANS APPROVAL DATE

REGISTERED PROFESSIONAL ENGINEER RALPH M. SASAKI No. 30849 Exp. 3/31/12 CIVIL STATE OF CALIFORNIA

THE STATE OF CALIFORNIA OR ITS OFFICERS OR AGENTS SHALL NOT BE RESPONSIBLE FOR THE ACCURACY OR COMPLETENESS OF SCANNED COPIES OF THIS PLAN SHEET.

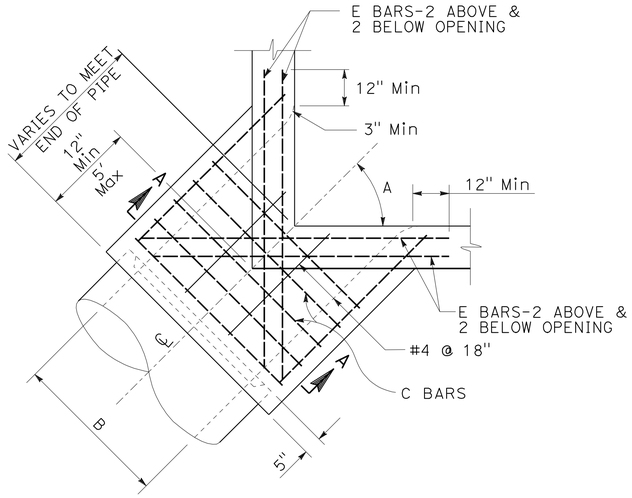

PLAN
CORNER CONNECTION

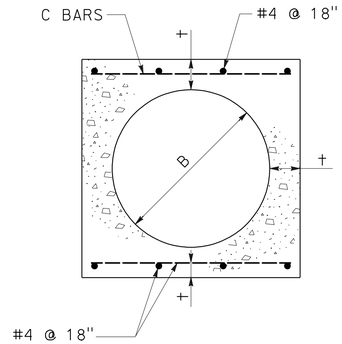

SECTION A-A

STRUCTURAL DATA

B	†	C BARS	D & E BARS	B	†	C BARS	D & E BARS
12"	4"	#4 @ 6"	#5	42"	7 1/2"	#5 @ 6"	#6
15"	4 1/4"			45"	7 3/4"		
18"	4 1/2"			48"	8"		
21"	5"			51"	8 1/2"		
24"	5 1/4"			54"	9"		
27"	5 1/2"			57"	9 1/4"		
30"	6"			60"	9 1/2"		
33"	6 1/4"			63"	10"		
36"	6 1/2"			66"	10 1/4"		
39"	7"			69"	10 3/4"		
				72"	11"		
FOR B GREATER THAN 72" SEE PLANS							

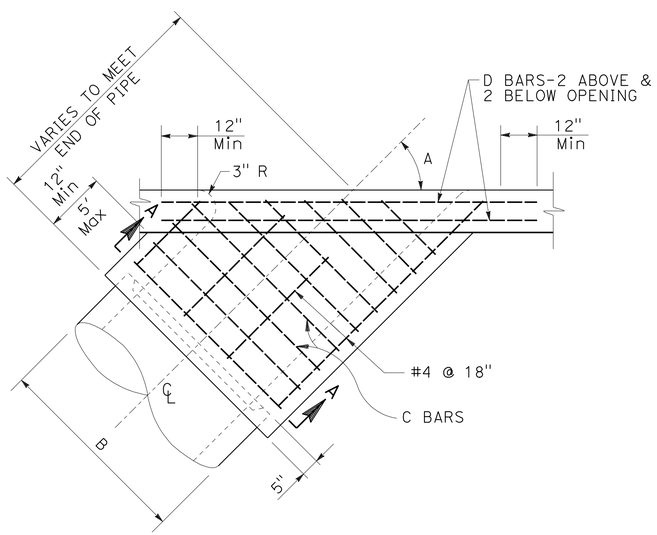

PLAN
SIDE CONNECTION

NOTES:

1. REINFORCING STEEL SHALL BE 1 1/2" CLEAR FROM FACE OF CONCRETE UNLESS OTHERWISE SHOWN.
2. REINFORCING STEEL FOR INSIDE FACE OF CATCH BASIN SHALL BE CUT AT CENTER OF OPENING AND BENT INTO WALLS OF MONOLITHIC CATCH BASIN CONNECTION. REINFORCING STEEL FOR OUTSIDE FACE OF CATCH BASIN SHALL BE CUT 2" CLEAR OF OPENING.
3. CONNECTION SHALL BE PLACED MONOLITHIC WITH CATCH BASIN. THE ROUNDED EDGE OF OUTLET SHALL BE CONSTRUCTED BY PLACING CONCRETE WITH THE SAME CLASS OF CONCRETE AS THE CATCH BASIN AGAINST A CURVED FORM WITH A RADIUS OF 3".
4. CONNECTIONS SHALL BE CONSTRUCTED WHEN:
   - (A) PIPES INLET OR OUTLET THROUGH CORNER OF CATCH BASIN
   - (B) ANGLE A FOR PIPES THROUGH 30" IN DIAMETER IS LESS THAN 70° OR GREATER THAN 110°.

MONOLITHIC CATCH BASIN CONNECTION (308-2)

DRAINAGE DETAILS

NO SCALE

DD-18

STATE OF CALIFORNIA - DEPARTMENT OF TRANSPORTATION
Caltrans® HYDRAULICS

FUNCTIONAL SUPERVISOR: JAI P. THAKUR
CALCULATED-DESIGNED BY: MAY P. FUNG
CHECKED BY: RALPH M. SASAKI
REVISED BY
DATE REVISED

LAST REVISION 00-00-00
DATE PLOTTED => 28-MAR-2012
TIME PLOTTED => 08:55

Dist	COUNTY	ROUTE	POST MILES TOTAL PROJECT	SHEET No.	TOTAL SHEETS
07	LA	5	2.4/4.0	186	1288

12-19-11
REGISTERED CIVIL ENGINEER DATE

3-26-12
PLANS APPROVAL DATE

REGISTERED PROFESSIONAL ENGINEER RALPH M. SASAKI No. 30849 Exp. 3/31/12 CIVIL STATE OF CALIFORNIA

THE STATE OF CALIFORNIA OR ITS OFFICERS OR AGENTS SHALL NOT BE RESPONSIBLE FOR THE ACCURACY OR COMPLETENESS OF SCANNED COPIES OF THIS PLAN SHEET.

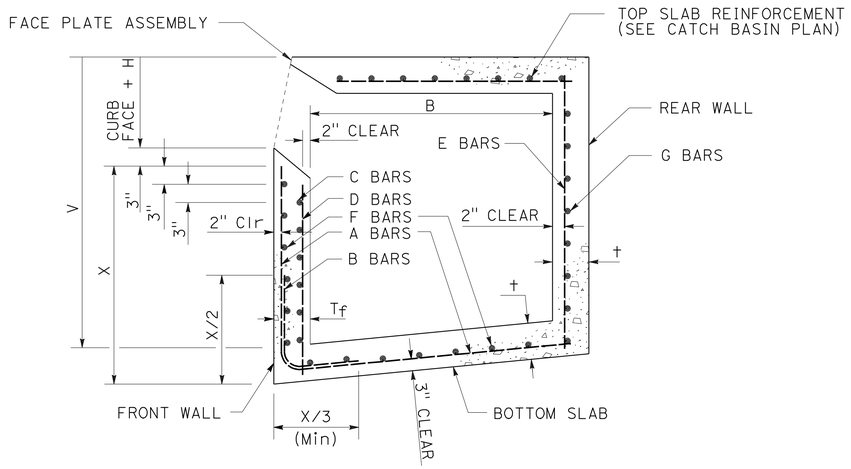

TYPICAL REINFORCEMENT DETAILS

MAX. W	MAX. V	t	tf	A & B BARS	C BARS	D BARS	E BARS	F BARS	G BARS
3.5′	8′	6"	6"	—	—	—	—	—	—
3.5′	12′	8"	8"	—	—	—	—	—	—
7′	6′	6"	6"	—	—	—	—	—	—
7′	12′	8"	8"	—	—	—	—	—	—
14′	4′	6"	6"	—	#4 @ 12"	#4 @ 18"	—	—	—
14′	8′	6"	8"	—	#4 @ 12"	#4 @ 18"	—	—	—
14′	12′	8"	10"	—	#4 @ 6"	#4 @ 18"	—	—	—
28′	4′	6"	6"	#4 @ 24"	—	—	—	#4 @ 18"	—
28′	5′	6"	8"	#4 @ 24"	—	—	—	#4 @ 18"	—
28′	6′	6"	8"	#4 @ 18"	—	—	—	#4 @ 18"	—
28′	7′	8"	8"	#4 @ 17"	—	—	—	#4 @ 18"	—
28′	8′	8"	8"	#4 @ 13"	—	—	—	#4 @ 18"	—
28′	9′	8"	10"	#4 @ 15"	—	—	—	#4 @ 18"	—
28′	10′	8"	10"	#4 @ 12"	—	—	—	#4 @ 18"	—
28′	11′	8"	10"	#5 @ 15"	—	—	#4 @ 10"	#4 @ 18"	#4 @ 18"
28′	12′	8"	10"	#4 @ 18"	—	—	#4 @ 10"	#4 @ 18"	#4 @ 18"
FOR W > 28′ OR B > 4′ SEE PLANS									

CURB OPENING CATCH BASIN REINFORCEMENT

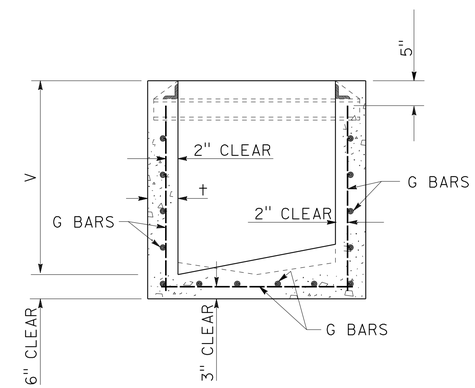

TYPICAL REINFORCEMENT DETAILS

V MAX	t	SIDE AND END WALL STEEL G BARS
4′	6"	#4 @ 10"
8′	8"	#4 @ 6"
12′	10"	#5 @ 6"
FOR V > 12′ SEE PLANS		

GRATING CATCH BASIN REINFORCEMENT

NOTE:

UNLESS OTHERWISE SPECIFIED, REINFORCEMENT FOR CURB OPENINGS AND GRATING CATCH BASINS SHALL TERMINATE 2" FROM FACE OF CONCRETE.

CATCH BASIN REINFORCEMENT (309-2)

DRAINAGE DETAILS

NO SCALE

DD-19

STATE OF CALIFORNIA - DEPARTMENT OF TRANSPORTATION
Caltrans HYDRAULICS
FUNCTIONAL SUPERVISOR: JAI P. THAKUR
CALCULATED-DESIGNED BY: MAY P. FUNG
CHECKED BY: RALPH M. SASAKI
REVISED BY
DATE REVISED

LAST REVISION 00-00-00
DATE PLOTTED => 28-MAR-2012
TIME PLOTTED => 08:55

Dist	COUNTY	ROUTE	POST MILES TOTAL PROJECT	SHEET No.	TOTAL SHEETS
07	LA	5	2.4/4.0	187	1288

REGISTERED CIVIL ENGINEER 12-19-11 DATE

3-26-12
PLANS APPROVAL DATE

REGISTERED PROFESSIONAL ENGINEER RALPH M. SASAKI No. 30849 Exp. 3/31/12 CIVIL STATE OF CALIFORNIA

THE STATE OF CALIFORNIA OR ITS OFFICERS OR AGENTS SHALL NOT BE RESPONSIBLE FOR THE ACCURACY OR COMPLETENESS OF SCANNED COPIES OF THIS PLAN SHEET.

SUPPORT BOLT AND FACE PLATE 4½" TOP SLAB

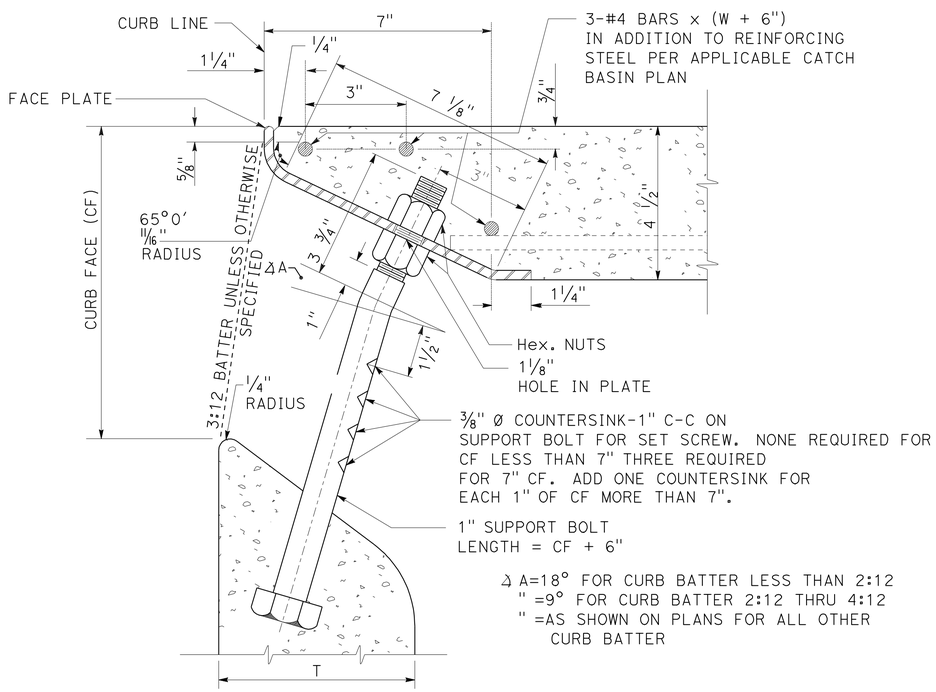

SECTION

SUPPORT BOLT AND FACE PLATE (6) " TOP SLAB

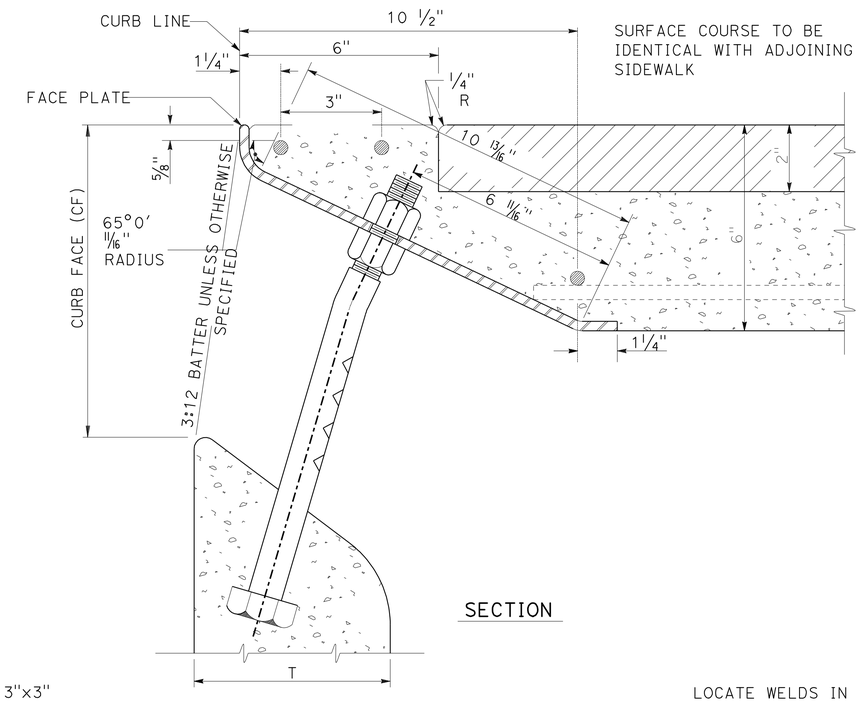

SECTION

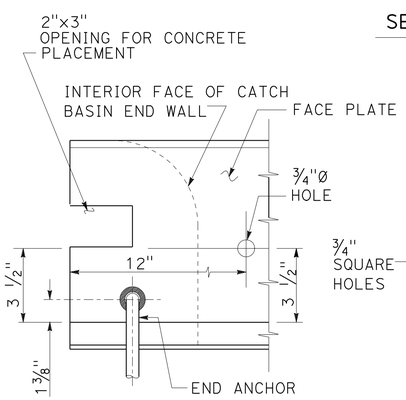

END DETAIL

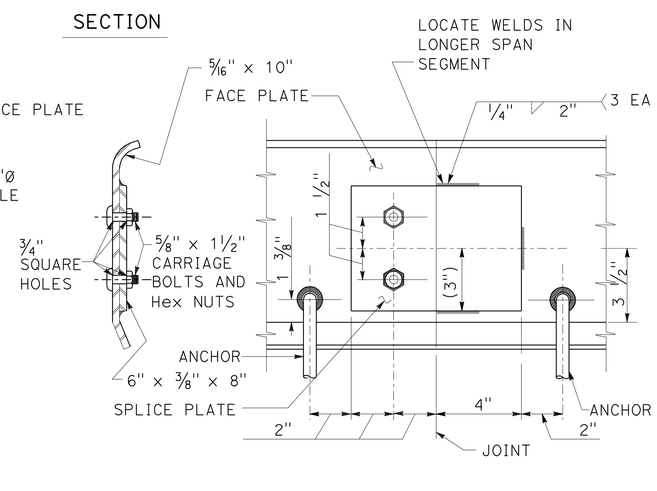

SPLICE DETAIL

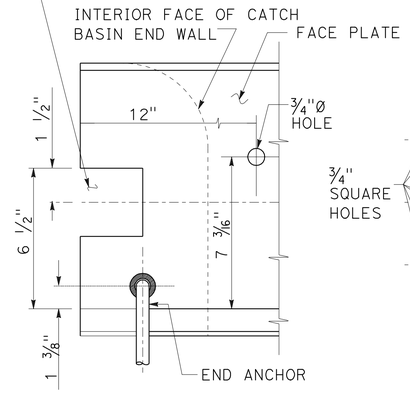

END DETAIL

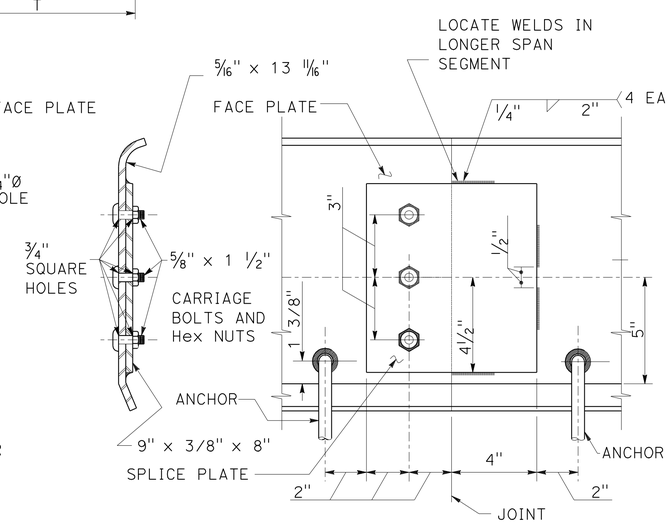

SPLICE DETAIL

CATCH BASIN FACE PLATE ASSEMBLY AND PROTECTION BAR (310-3)

(SHEET 1 OF 3)

DRAINAGE DETAILS

NO SCALE

DD-20

STATE OF CALIFORNIA - DEPARTMENT OF TRANSPORTATION
Caltrans® HYDRAULICS

FUNCTIONAL SUPERVISOR: JAI P. THAKUR
CALCULATED-DESIGNED BY: MAY P. FUNG
CHECKED BY: RALPH M. SASAKI
REVISED BY
DATE REVISED

LAST REVISION 00-00-00
DATE PLOTTED => 28-MAR-2012
TIME PLOTTED => 08:55

Dist	COUNTY	ROUTE	POST MILES TOTAL PROJECT	SHEET No.	TOTAL SHEETS
07	LA	5	2.4/4.0	188	1288

REGISTERED CIVIL ENGINEER 12-19-11 DATE

3-26-12
PLANS APPROVAL DATE

REGISTERED PROFESSIONAL ENGINEER RALPH M. SASAKI No. 30849 Exp. 3/31/12 CIVIL STATE OF CALIFORNIA

THE STATE OF CALIFORNIA OR ITS OFFICERS OR AGENTS SHALL NOT BE RESPONSIBLE FOR THE ACCURACY OR COMPLETENESS OF SCANNED COPIES OF THIS PLAN SHEET.

FACE PLATE ANCHORS

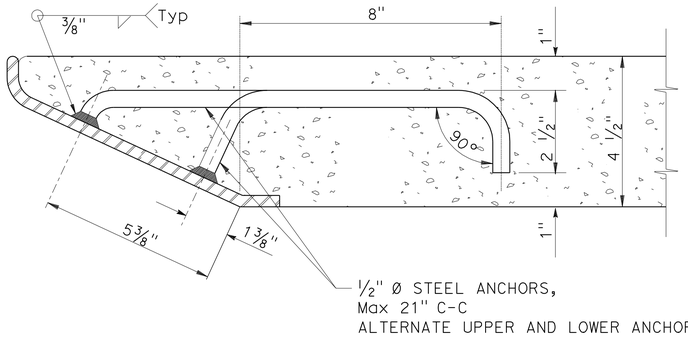

HOOK ANCHOR - 4 1/2 TOP SLAB

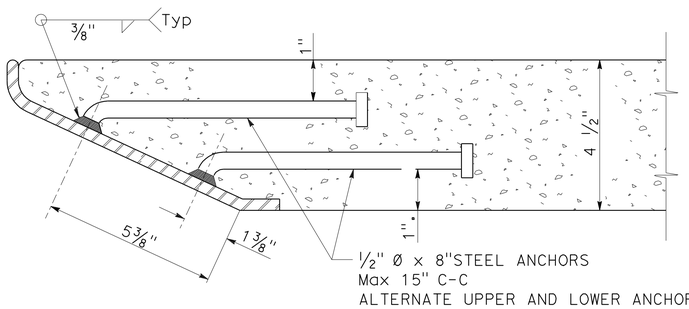

ROUND HEAD ANCHOR - 4 1/2 TOP SLAB

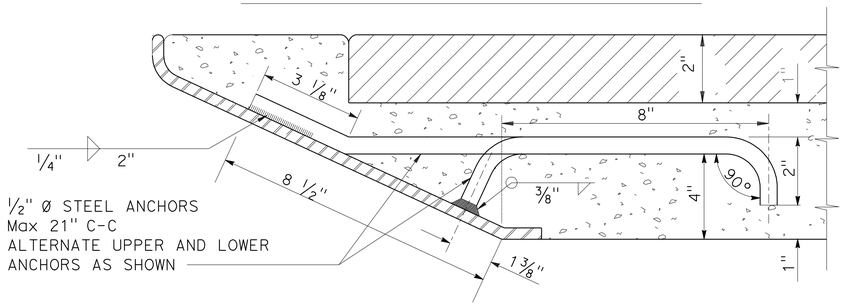

HOOK ANCHOR - 6" TOP SLAB

PROTECTION BAR AND SUPPOST BOLT(S) WITH ADJUSTABLE STIRRUP (S) - (TYPE A)

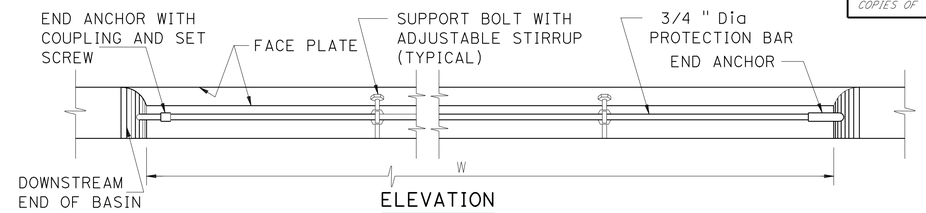

ELEVATION

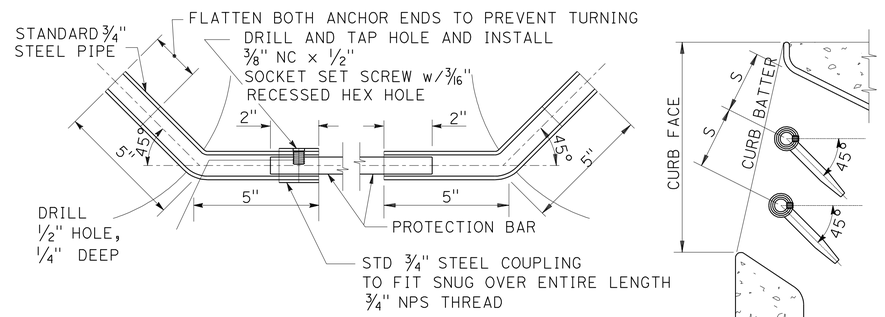

END ANCHOR DETAIL

DOUBLE PROTECTION BAR DETAIL

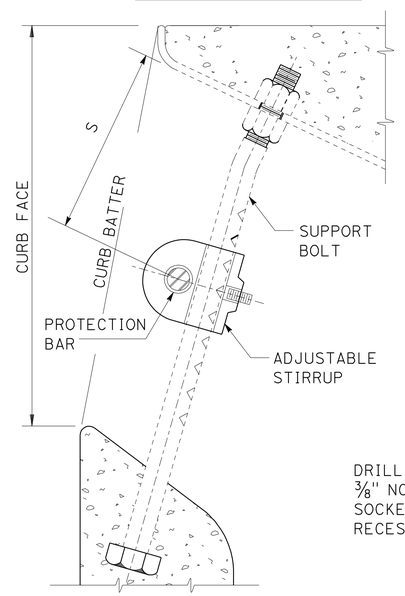

PROTECTION BAR & STIRRUP LOCATION

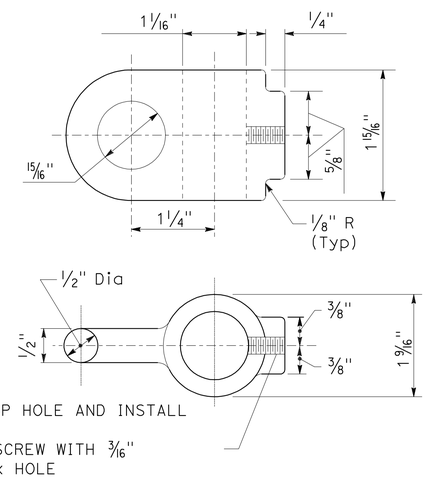

STIRRUP DETAIL

CATCH BASIN FACE PLATE ASSEMBLY AND PROTECTION BAR (310-3)

(SHEET 2 OF 3)

DRAINAGE DETAILS

NO SCALE

DD-21

STATE OF CALIFORNIA - DEPARTMENT OF TRANSPORTATION
Caltrans HYDRAULICS

FUNCTIONAL SUPERVISOR: JAI P. THAKUR
CALCULATED-DESIGNED BY: MAY P. FUNG
CHECKED BY: RALPH M. SASAKI
REVISED BY
DATE REVISED

LAST REVISION 00-00-00
DATE PLOTTED => 28-MAR-2012
TIME PLOTTED => 08:55

Dist	COUNTY	ROUTE	POST MILES TOTAL PROJECT	SHEET No.	TOTAL SHEETS
07	LA	5	2.4/4.0	189	1288

12-19-11
REGISTERED CIVIL ENGINEER DATE

3-26-12
PLANS APPROVAL DATE

REGISTERED PROFESSIONAL ENGINEER RALPH M. SASAKI No. 30849 Exp. 3/31/12 CIVIL STATE OF CALIFORNIA

THE STATE OF CALIFORNIA OR ITS OFFICERS OR AGENTS SHALL NOT BE RESPONSIBLE FOR THE ACCURACY OR COMPLETENESS OF SCANNED COPIES OF THIS PLAN SHEET.

PROTECTION BAR AND SUPPORT BOLT(S) WITH FIXED STIRRUP(S) - (TYPE B)

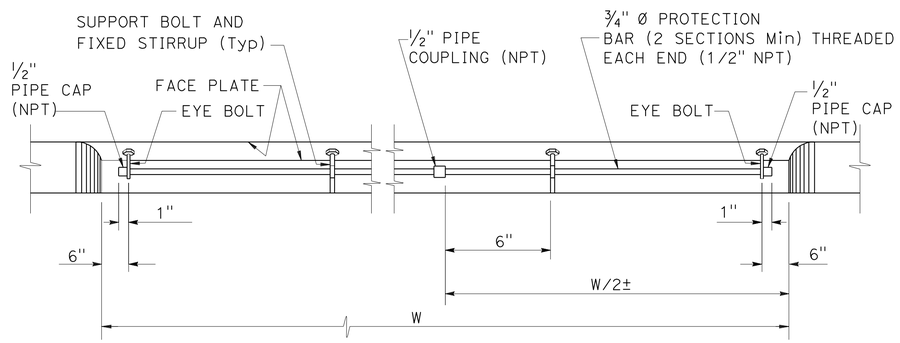

ELEVATION

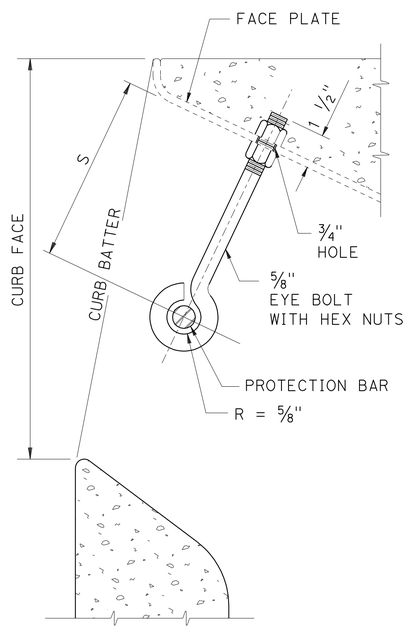

EYE BOLT DETAIL

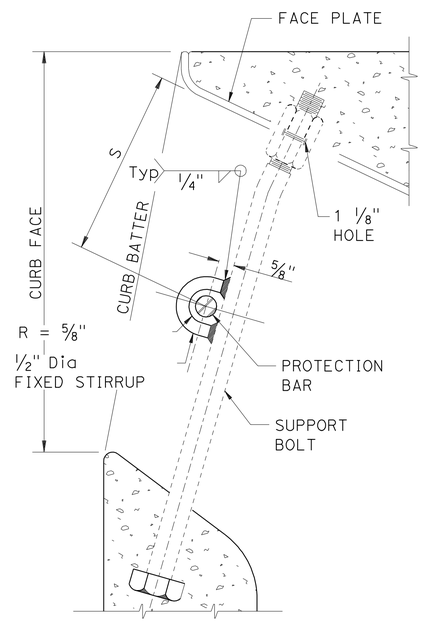

STIRRUP DETAIL

NOTES:

GENERAL

1. ALL PARTS SHALL BE STEEL, EXCEPT SET SCREWS, WHICH SHALL BE STAINLESS STEEL OR BRASS.
2. EXCLUDING SET SCREWS, ALL EXPOSED METAL PARTS SHALL BE GALVANIZED AFTER FABRICATION.
3. CURB FACE SHALL BE AS NOTED ON THE PLANS.
4. CURB BATTER SHALL BE 3:12 UNLESS OTHERWISE SPECIFIED.

FACE PLATE

5. FACE PLATE LENGTHS SHALL BE CATCH BASIN W PLUS 12" EXCEPT AS MODIFIED FOR "A" CURB OPENING CATCH BASIN AT DRIVEWAY".
6. WHEN THE LENGTH OF THE FACE PLATE IS BETWEEN 22′ AND 43′, TWO SECTIONS MAY BE USED. WHEN THE LENGTH EXCEEDS 43′, THREE SECTIONS MAY BE USED. SECTIONS SHALL BE SPLICED ACCORDING TO THE APPLICABLE SPLICE DETAIL. SPLICE SHALL BE PLACED 1′ FROM A SUPPORT BOLT.
7. WHERE CATCH BASINS ARE TO BE CONSTRUCTED ON CURVES, THE MAXIMUM CHORD LENGTH FOR THE FACE PLATE SHALL BE SUCH THAT THE MAXIMUM PERPENDICULAR DISTANCE TO THE TRUE CURVE SHALL NOT EXCEED 1". WHERE MORE THAN ONE CHORD IS REQUIRED, CHORD LENGTHS SHALL BE EQUAL. CHORD SECTIONS SHALL BE SPLICED ACCORDING TO THE APPLICABLE SPLICE DETAIL (MODIFIED TO FIT THE CHORD DEFLECTION) AND A SUPPORT BOLT SHALL BE PLACED 1′ FROM THE SPLICE.
8. ROUND HEAD ANCHORS FOR THE FACE PLATE SHALL BE NELSON H-4F SHEAR CONNECTOR, KSN WELDING SYSTEMS DIVISION SHEAR CONNECTOR OR EQUAL.

SUPPORT BOLT

9. SUPPORT BOLTS ARE REQUIRED WHEN THE LENGTH OF THE CATCH BASIN OPENING IS 7′ OR GREATER, AND SHALL BE EVENLY SPACED ACROSS THE OPENING. SPACING SHALL NOT BE LESS THAN 3′-6" ON CENTER NOR GREATER THAN 5′ ON CENTER.

STIRRUP

10. FOR TYPE A, MATERIAL SHALL BE CAST STEEL.

PROTECTION BAR

11. TYPE A SHALL BE USED UNLESS OTHERWISE SPECIFIED.
12. FOR TYPE A, THE BAR SHALL BE CUT TO FIT IN THE FIELD. WHEN W" IS OVER 21′, THE PROTECTION BAR SHALL CONSIST OF 2 OR MORE SECTIONS. A SPECIAL CONNECTOR BETWEEN THE PROTECTION BAR PIECES SHALL CONSIST OF A 5" LENGTH OF STANDARD 3/4" PIPE WITH STANDARD COUPLINGS FULLY THREADED ONTO EACH END DRILLED AND TAPPED FOR A SOCKET SET SCREW AS DETAILED FOR THE DOWNSTREAM END ANCHOR.
13. FOR TYPE B, THE BAR SHALL BE TWO PIECES. TWO EYE BOLTS AND A WELDED STIRRUP ON EACH SUPPORT BOLT ARE REQUIRED.
14. NUMBER OF PROTECTION BARS AND LOCATIONS ARE AS FOLLOWS:

CURB BATTER	MAXIMUM CURB FACE, INCHES													S DIMENSION
	6"	7"	8"	9"	10"	11"	12"	13"	14"	15"	16"	17"	18"	
0:12	0	0	3.5"	3.5"	4.5"	4.5"	4.5"	5.5"	3.5"	3.5"	4.5"	4.5"	4.5"	
1:12	0	0	3.5"	3.5"	4.5"	4.5"	4.5"	5.5"	3.5"	3.5"	4.5"	4.5"	5.5"	
2:12	0	0	3.5"	3.5"	4.5"	4.5"	5.5"	3.5"	3.5"	4.5"	4.5"	5.5"	5.5"	
3:12	0	0	3.5"	3.5"	4.5"	4.5"	5.5"	3.5"	4.5"	4.5"	5.5"	5.5"	4.5"	
4:12	0	3.5"	3.5"	4.5"	4.5"	5.5"	3.5"	3.5"	4.5"	4.5"	5.5"	4.5"	4.5"	
NUMBER OF PROTECTION BARS	0	1					2*					3*		

FOR OTHER CURB FACE OR BATTER SEE PLANS
* TYPE A PROTECTION BAR ONLY

DRAINAGE DETAILS

NO SCALE

CATCH BASIN FACE PLATE ASSEMBLY AND PROTECTION BAR (310-3)

(SHEET 3 OF 3)

DD-22

STATE OF CALIFORNIA - DEPARTMENT OF TRANSPORTATION
Caltrans® HYDRAULICS
FUNCTIONAL SUPERVISOR: JAI P. THAKUR
CALCULATED-DESIGNED BY: MAY P. FUNG
CHECKED BY: RALPH M. SASAKI
REVISED BY
DATE REVISED

LAST REVISION 00-00-00
DATE PLOTTED => 28-MAR-2012
TIME PLOTTED => 08:55

Dist	COUNTY	ROUTE	POST MILES TOTAL PROJECT	SHEET No.	TOTAL SHEETS
07	LA	5	2.4/4.0	190	1288

REGISTERED CIVIL ENGINEER 12-19-11 DATE

3-26-12
PLANS APPROVAL DATE

REGISTERED PROFESSIONAL ENGINEER RALPH M. SASAKI No. 30849 Exp. 3/31/12 CIVIL STATE OF CALIFORNIA

THE STATE OF CALIFORNIA OR ITS OFFICERS OR AGENTS SHALL NOT BE RESPONSIBLE FOR THE ACCURACY OR COMPLETENESS OF SCANNED COPIES OF THIS PLAN SHEET.

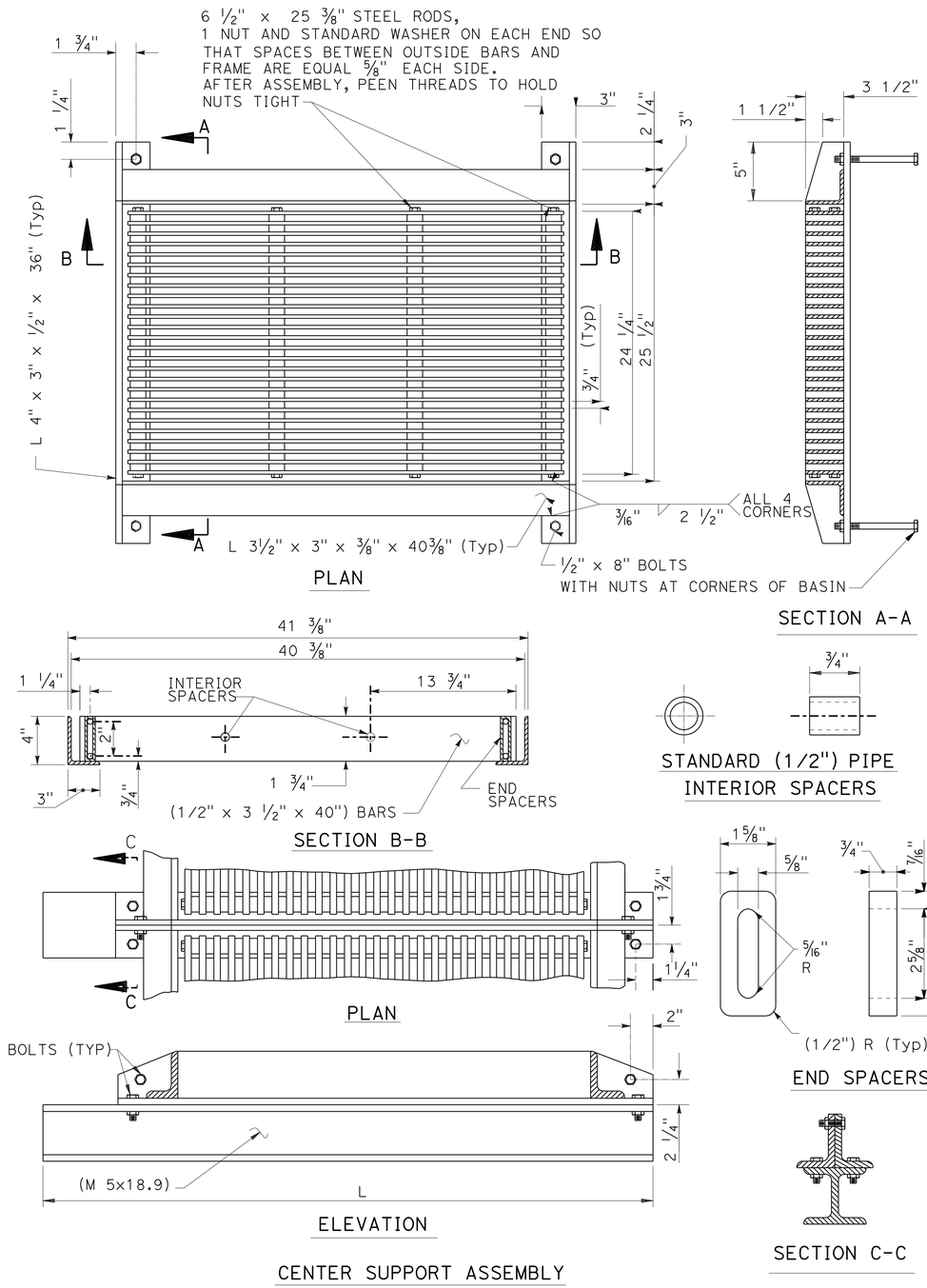

NOTES:

1. ALL PARTS SHALL BE STEEL, EXCEPT THAT END SPACERS MAY BE CAST IRON.
2. ALL PARTS SHALL BE GALVANIZED AFTER FABRICATION, EXCEPT THAT GRATINGS SHALL BE ASSEMBLED AFTER COMPONENT PARTS ARE GALVANIZED.
3. ALL DIMENSIONS ARE FINISHED DIMENSIONS AND INCLUDE GALVANIZING.
4. ALL BOLT HOLES SHALL BE 5/8" DIAMETER.
5. ALL THREADS SHALL BE NATIONAL COARSE SERIES (NC).
6. CENTER SUPPORT ASSEMBLY REQUIRED WHEN TWO OR MORE GRATINGS ARE SPECIFIED ON PLANS.

   L = 36" FOR CURBSIDE GRATING CATCH BASIN (303).

FRAME AND GRATE FOR CATCH BASINS (311-3)

DRAINAGE DETAILS

NO SCALE

DD-23

STATE OF CALIFORNIA - DEPARTMENT OF TRANSPORTATION
Caltrans® HYDRAULICS

FUNCTIONAL SUPERVISOR: JAI P. THAKUR
CALCULATED-DESIGNED BY: MAY P. FUNG
CHECKED BY: RALPH M. SASAKI
REVISED BY
DATE REVISED

LAST REVISION 00-00-00
DATE PLOTTED => 28-MAR-2012
TIME PLOTTED => 08:55

Dist	COUNTY	ROUTE	POST MILES TOTAL PROJECT	SHEET No.	TOTAL SHEETS
07	LA	5	2.4/4.0	191	1288

REGISTERED CIVIL ENGINEER 12-19-11 DATE

3-26-12
PLANS APPROVAL DATE

REGISTERED PROFESSIONAL ENGINEER RALPH M. SASAKI No. 30849 Exp. 3/31/12 CIVIL STATE OF CALIFORNIA

THE STATE OF CALIFORNIA OR ITS OFFICERS OR AGENTS SHALL NOT BE RESPONSIBLE FOR THE ACCURACY OR COMPLETENESS OF SCANNED COPIES OF THIS PLAN SHEET.

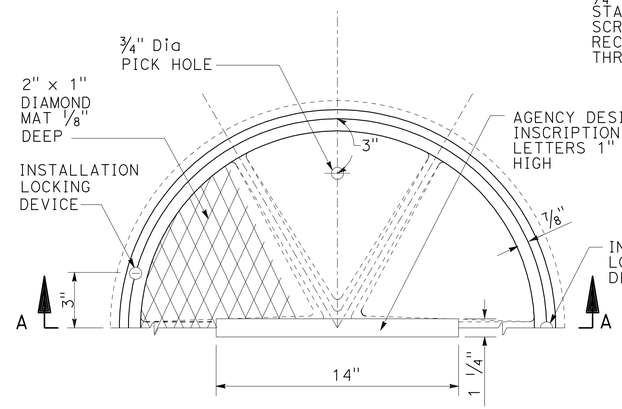

PLAN

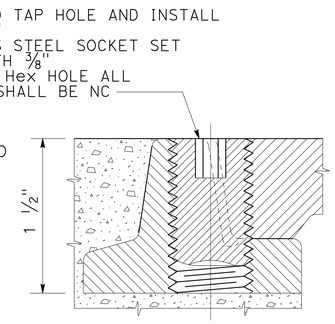

LOCKING DEVICE

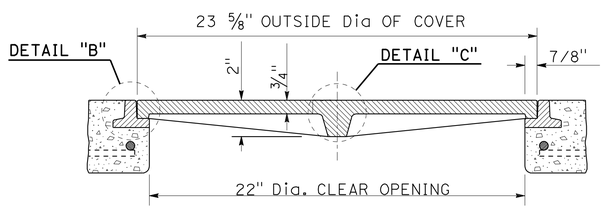

SECTION A-A

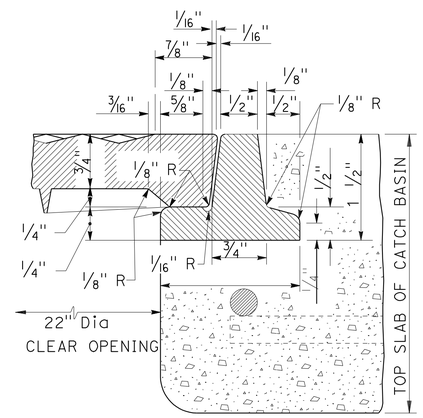

DETAIL "B"

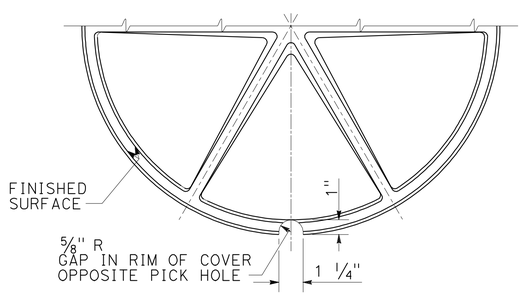

BOTTOM OF MANHOLE COVER

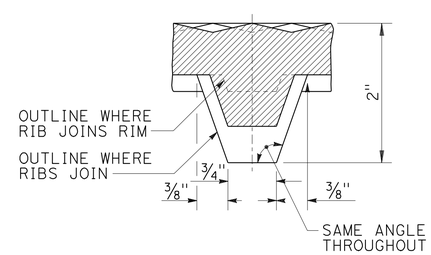

DETAIL "C"

NOTES

1. THE CAST IRON USED SHALL CONFORM TO ASTM A48M CLASS 35B.
2. THE FRAME AND COVER SHALL BE COATED WITH ASPHALTUM OR BITUMINOUS PAINT AFTER TESTING AND INSPECTION.
3. FOUNDRY IDENTIFYING MARK, HEAT AND DATE SHALL BE CAST ON THE BOTTOM OF THE COVER AND ON THE INSIDE OF THE FRAME.
4. IMPORTED COVERS AND FRAMES SHALL CONFORM TO THE REQUIREMENT PER STANDARD SPECIFICATIONS SECTION 6-1 AND THE SPECIAL PROVISIONS.
5. WEIGHT OF FRAME SHALL BE 30 POUNDS. WEIGHT OF COVER SHALL BE 85 POUNDS. ACTUAL WEIGHTS SHALL BE WITHIN
6. THE MANHOLE FRAME AND COVER SHALL BE INSPECTED BY THE ENGINEER PRIOR TO SHIPMENT TO THE JOB SITE.
7. THE PROOF-LOAD SHALL BE EQUIVALENT TO TEST METHOD B, IS 28,600 POUNDS .
8. INSCRIPTION SHALL BE AS SPECIFIED BY THE APPROPRIATE AGENCY.

CATCH BASIN MANHOLE FRAME AND COVER (312-3)

DRAINAGE DETAILS

NO SCALE

DD-24

STATE OF CALIFORNIA - DEPARTMENT OF TRANSPORTATION
Caltrans® HYDRAULICS

FUNCTIONAL SUPERVISOR: JAI P. THAKUR
CALCULATED-DESIGNED BY: MAY P. FUNG
CHECKED BY: RALPH M. SASAKI
REVISED BY
DATE REVISED

LAST REVISION 00-00-00 | DATE PLOTTED => 28-MAR-2012 | TIME PLOTTED => 08:55

Dist	COUNTY	ROUTE	POST MILES TOTAL PROJECT	SHEET No.	TOTAL SHEETS
07	LA	5	2.4/4.0	192	1288

REGISTERED CIVIL ENGINEER 12-19-11 DATE

3-26-12
PLANS APPROVAL DATE

REGISTERED PROFESSIONAL ENGINEER RALPH M. SASAKI No. 30849 Exp. 3/31/12 CIVIL STATE OF CALIFORNIA

THE STATE OF CALIFORNIA OR ITS OFFICERS OR AGENTS SHALL NOT BE RESPONSIBLE FOR THE ACCURACY OR COMPLETENESS OF SCANNED COPIES OF THIS PLAN SHEET.

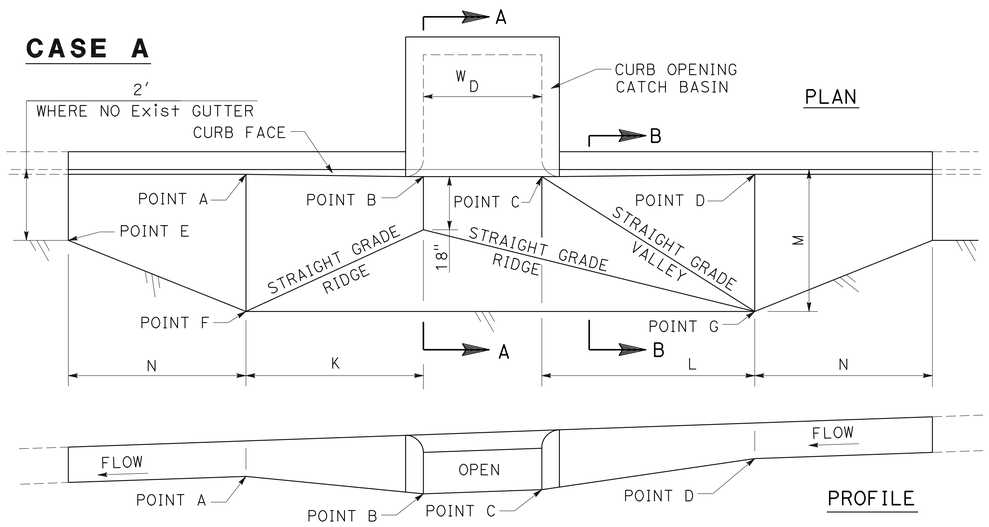

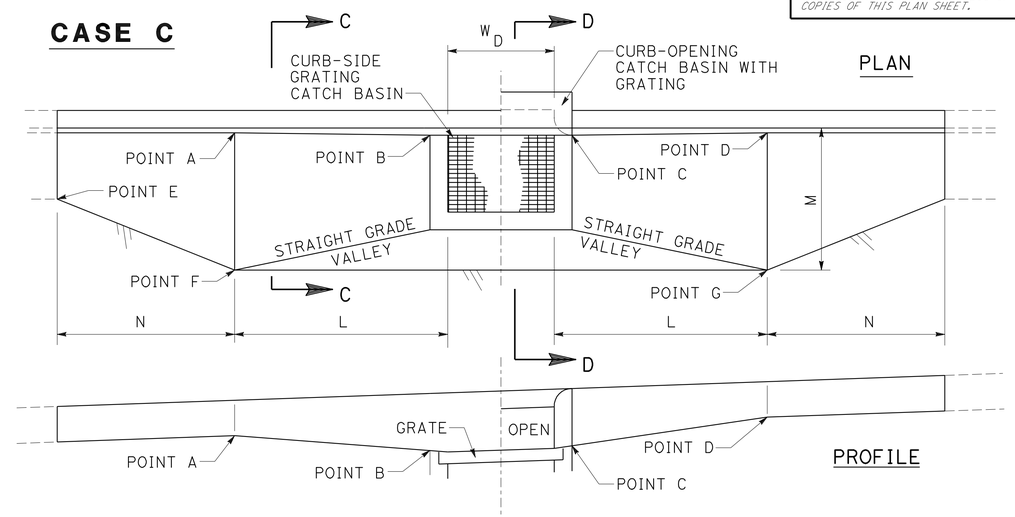

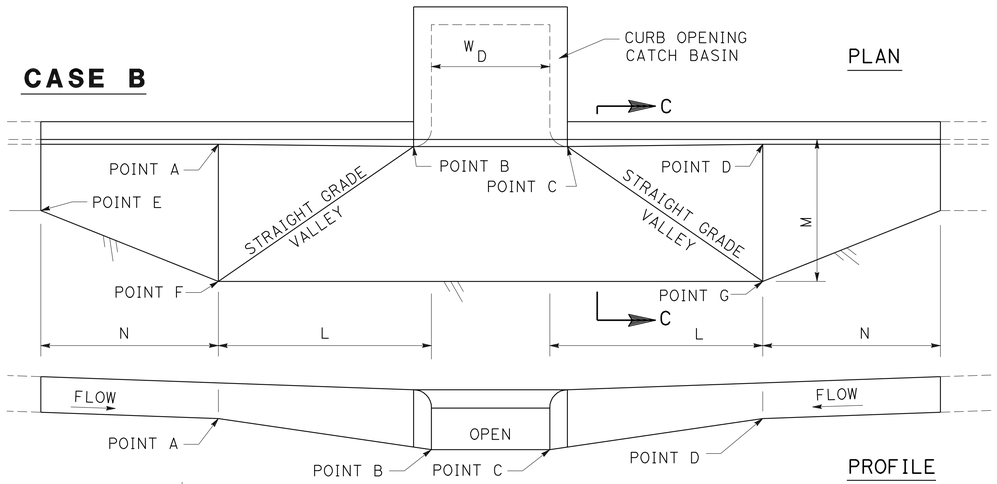

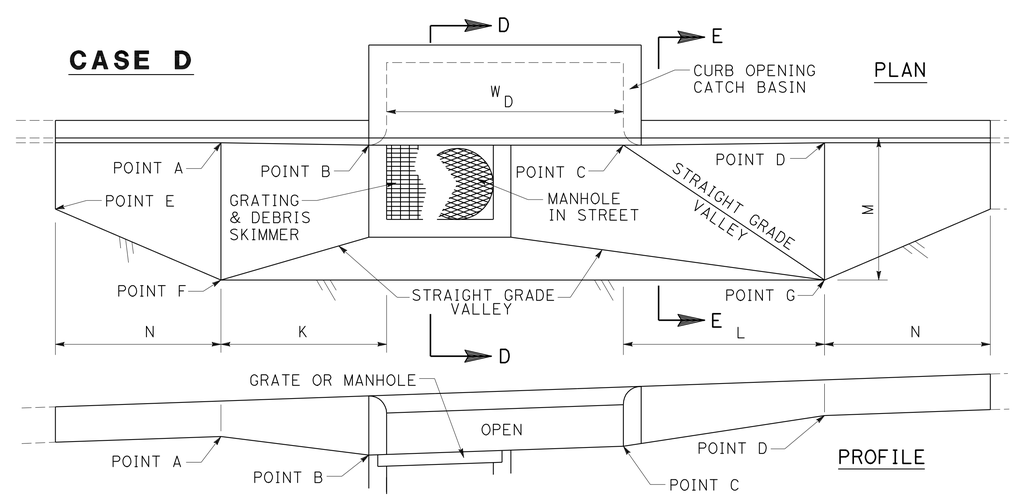

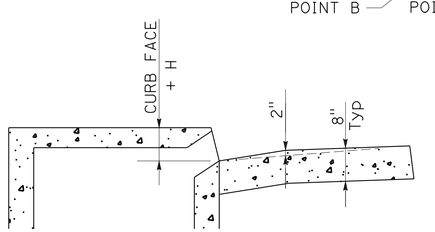

SECTION A-A

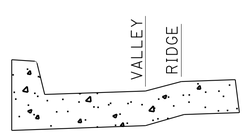

SECTION B-B

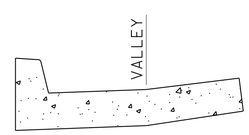

SECTION C-C

SECTION D-D

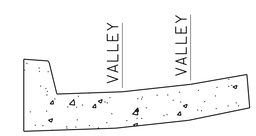

SECTION E-E

LOCAL DEPRESSIONS AT CATCH BASINS (313-3)

(SHEET 1 OF 2)

DRAINAGE DETAILS

NO SCALE

DD-25

STATE OF CALIFORNIA - DEPARTMENT OF TRANSPORTATION
Caltrans® HYDRAULICS

FUNCTIONAL SUPERVISOR: JAI P. THAKUR
CALCULATED-DESIGNED BY: MAY P. FUNG
CHECKED BY: RALPH M. SASAKI
REVISED BY
DATE REVISED

LAST REVISION 00-00-00 | DATE PLOTTED => 28-MAR-2012 | TIME PLOTTED => 08:55

Dist	COUNTY	ROUTE	POST MILES TOTAL PROJECT	SHEET No.	TOTAL SHEETS
07	LA	5	2.4/4.0	193	1288

REGISTERED CIVIL ENGINEER 12-19-11 DATE

3-26-12
PLANS APPROVAL DATE

REGISTERED PROFESSIONAL ENGINEER RALPH M. SASAKI No. 30849 Exp. 3/31/12 CIVIL STATE OF CALIFORNIA

THE STATE OF CALIFORNIA OR ITS OFFICERS OR AGENTS SHALL NOT BE RESPONSIBLE FOR THE ACCURACY OR COMPLETENESS OF SCANNED COPIES OF THIS PLAN SHEET.

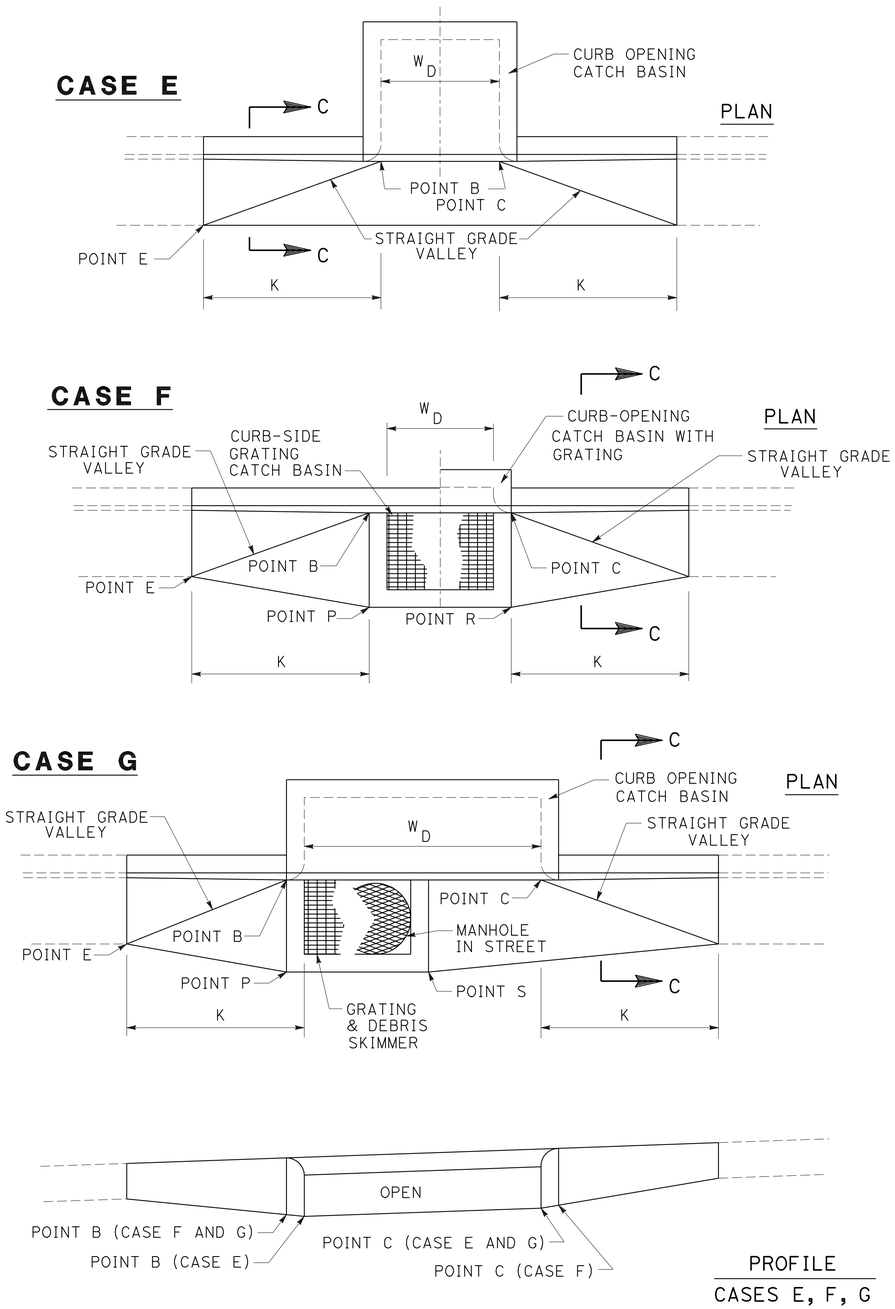

NOTES:

1. ALL EXPOSED EDGES SHALL BE ROUNDED TO A ½" RADIUS.

2. THE CURB FACE AT POINTS A AND D SHALL BE THE NORMAL CURB FACE OF THE ADJACENT CURB. AT POINTS B AND C, THE CURB FACE SHALL BE THE NORMAL CURB FACE OF THE ADJACENT CURB PLUS H. (SEE APPLICABLE CATCH BASIN STANDARD PLAN.)

3. IN EXISTING STREETS WHERE NO PAVEMENT RECONSTRUCTION IS SPECIFIED ON THE PLANS, THE ELEVATION OF THE OUTER EDGE OF THE LOCAL DEPRESSION SHALL MEET THE FINISHED STREET SURFACE.

4. IN NEW STREETS OR IN EXISTING STREETS WHERE PAVEMENT RECONSTRUCTION IS SPECIFIED ON THE PLANS:

   THE ELEVATIONS OF POINTS F AND G SHALL BE SET H1 HIGHER THAN THE GUTTER FLOW LINE ELEVATIONS AT POINTS A AND D, RESPECTIVELY.

   THE ELEVATIONS OF POINTS P AND R SHALL BE SET H2 HIGHER THAN THE GUTTER FLOW LINE ELEVATIONS AT POINTS B AND C, RESPECTIVELY.

   THE ELEVATION OF POINT S SHALL BE SET H2 HIGHER THAN THE ELEVATION AT THE NEAREST GUTTER FLOW LINE.

   WHERE THERE IS NO GUTTER ADJACENT TO THE LOCAL DEPRESSION, THE ELEVATION OF POINT E SHALL BE SET H3 HIGHER THAN THE ELEVATION AT THE NEAREST TOE OF CURB.

5. DIMENSIONS:

   H, H1, H2 AND H3 SHALL BE AS NOTED ON THE PLANS.

   G = 24"

   K = 5'-0"

   L = 6'-0"

   M = 4'-0"

   N = 5'-0"

   W_D = CATCH BASIN W FOR SINGLE CATCH BASIN OR DISTANCE BETWEEN EXTREME END WALLS FOR MULTIPLE CATCH BASINS.

LOCAL DEPRESSIONS AT CATCH BASINS (313-3)

(SHEET 2 OF 2)

DRAINAGE DETAILS

NO SCALE

DD-26

STATE OF CALIFORNIA - DEPARTMENT OF TRANSPORTATION
Caltrans® HYDRAULICS

FUNCTIONAL SUPERVISOR: JAI P. THAKUR
CALCULATED-DESIGNED BY: MAY P. FUNG
CHECKED BY: RALPH M. SASAKI
REVISED BY
DATE REVISED

LAST REVISION 00-00-00
DATE PLOTTED => 28-MAR-2012
TIME PLOTTED => 08:56

Dist	COUNTY	ROUTE	POST MILES TOTAL PROJECT	SHEET No.	TOTAL SHEETS
07	LA	5	2.4/4.0	194	1288

12-19-11
REGISTERED CIVIL ENGINEER DATE

3-26-12
PLANS APPROVAL DATE

REGISTERED PROFESSIONAL ENGINEER RALPH M. SASAKI No. 30849 Exp. 3/31/12 CIVIL STATE OF CALIFORNIA

THE STATE OF CALIFORNIA OR ITS OFFICERS OR AGENTS SHALL NOT BE RESPONSIBLE FOR THE ACCURACY OR COMPLETENESS OF SCANNED COPIES OF THIS PLAN SHEET.

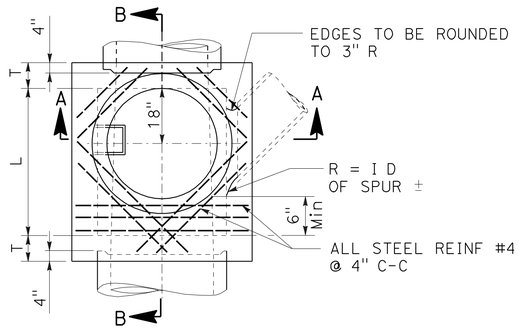

PLAN
(SHAFT NOT SHOWN)

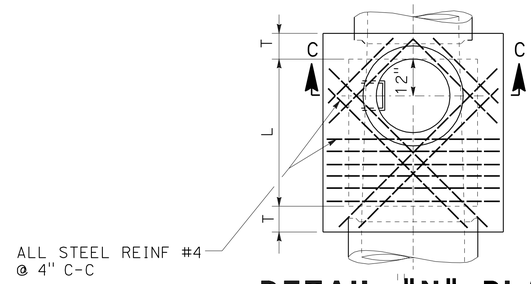

DETAIL "N" PLAN
(RINGS AND COVER NOT SHOWN)
SEE NOTE 1

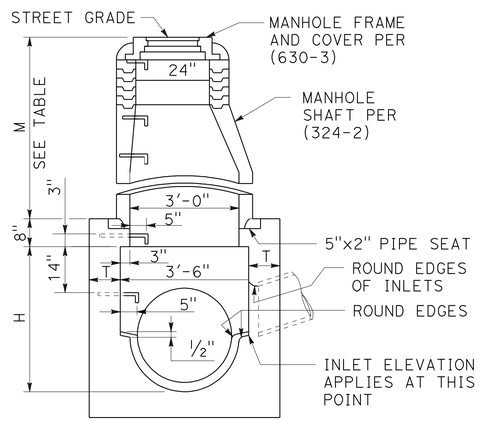

SECTION A-A

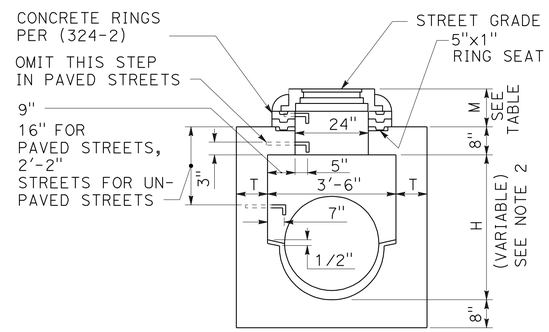

SECTION C-C

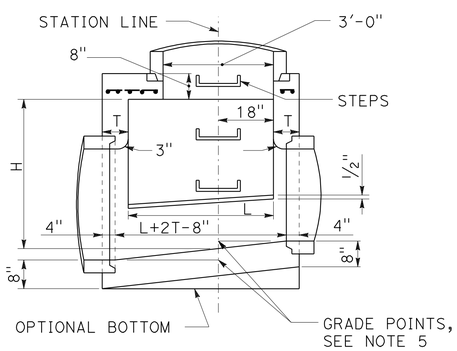

SECTION B-B

TABLE OF VALUES FOR M (SEE NOTE 1)				
SECTION	PAVED STREET		UNPAVED STREET	
	Max	Min	Max	Min
A-A		2'-10½"		3'-6"
C-C	11"	8½"	16"	15"

MANHOLE PIPE-TO-PIPE (321-2)
(ONE OR BOTH MAIN LINE IDS 33" OR SMALLER)
(SHEET 1 OF 2)

DRAINAGE DETAILS

NO SCALE

DD- 27

STATE OF CALIFORNIA - DEPARTMENT OF TRANSPORTATION
Caltrans® HYDRAULICS

FUNCTIONAL SUPERVISOR: JAI P. THAKUR
CALCULATED-DESIGNED BY: MAY P. FUNG
CHECKED BY: RALPH M. SASAKI
REVISED BY
DATE REVISED

LAST REVISION 00-00-00
DATE PLOTTED => 28-MAR-2012
TIME PLOTTED => 08:56

Dist	COUNTY	ROUTE	POST MILES TOTAL PROJECT	SHEET No.	TOTAL SHEETS
07	LA	5	2.4/4.0	195	1288

12-19-11
REGISTERED CIVIL ENGINEER DATE

3-26-12
PLANS APPROVAL DATE

REGISTERED PROFESSIONAL ENGINEER
RALPH M. SASAKI
No. 30849
Exp. 3/31/12
CIVIL
STATE OF CALIFORNIA

THE STATE OF CALIFORNIA OR ITS OFFICERS OR AGENTS SHALL NOT BE RESPONSIBLE FOR THE ACCURACY OR COMPLETENESS OF SCANNED COPIES OF THIS PLAN SHEET.

NOTES

1. WHEN DEPTH M FROM STREET GRADE TO THE TOP OF THE BOX IS LESS THAN 2′-10½" FOR PAVED STREETS OR 3′-6" FOR UNPAVED STREETS, CONSTRUCT SHAFT PER SECTION C-C AND DETAIL "N". DEPTH M MAY BE REDUCED TO AN ABSOLUTE LIMIT OF 6" WHEN LARGER VALUES OF M WOULD REDUCE H IN SECTION C-C TO 3′-6" OR LESS.

2. H (IN SECTION A-A AND B-B) SHALL NOT BE LESS THAN 4′-0", BUT MAY BE INCREASED PROVIDED THAT THE VALUE OF M SHALL NOT BE LESS THAN THE MINIMUM SPECIFIED AND THAT THE REDUCER SHALL BE USED. FOR H (IN SECTION C-C) SEE NOTE 1.

3. L SHALL BE 4′-0" UNLESS OTHERWISE SHOWN. L MAY BE INCREASED OR LOCATION OF MANHOLE SHIFTED TO MEET PIPE ENDS, BUT ANY CHANGE IN LOCATION OF THE SPUR MUST BE APPROVED BY THE ENGINEER.

4. T SHALL BE 8" FOR VALUES OF H UP TO AND INCLUDING 8′-0" AND 10" FOR VALUES OF H OVER 8′-0".

5. STATIONS OF MANHOLES SHOWN ON PLANS APPLY AT CENTERLINE OF SHAFT. ELEVATIONS ARE SHOWN AT CENTERLINE OF SHAFT AND REFER TO THE PROLONGED INVERT GRADE LINES. SEE NOTE 3.

6. REINFORCEMENT SHALL CONFORM TO ASTM A 615, GRADE 40, AND SHALL TERMINATE 1½" CLEAR OF CONCRETE SURFACES UNLESS OTHERWISE SHOWN.

7. FLOOR OF MANHOLE SHALL BE STEEL TROWELED TO SPRING LINE.

8. BODY OF MANHOLE SHALL BE POURED IN ONE CONTINUOUS OPERATION EXCEPT THAT A CONSTRUCTION JOINT WITH A LONGITUDINAL KEYWAY MAY BE PLACED AT SPRING LINE.

9. THICKNESS OF THE DECK SHALL VARY WHEN NECESSARY TO PROVIDE A LEVEL SEAT BUT SHALL NOT BE LESS THAN 8".

10. STEPS SHALL CONFORM TO (635-3) OR (636-2). UNLESS OTHERWISE SHOWN, STEPS SHALL BE UNIFORMLY SPACED 14" TO 15" C-C. THE LOWEST STEP SHALL NOT BE MORE THAN 24" ABOVE THE LEDGE AT THE SIDE OF THE MANHOLE.

11. THE FOLLOWING CRITERIA SHALL BE USED FOR THIS MANHOLE:

    A. MAIN LINE = 33" INSIDE DIAMETER OR LESS. (EXCEPTION - IF THE MAIN LINE RCP DOWNSTREAM OF THE MANHOLE IS 36" TO 42" INSIDE DIAMETER AND THE MAIN LINE RCP UPSTREAM IS 33" OR LESS.)

    B. SEE SECTION A - A. THE MAXIMUM SIZE LATERAL THAT MAY BE CONNECTED TO THIS MANHOLE IS SUCH THAT THE DISTANCE FROM THE OUTSIDE (TOP) OF THE LATERAL TO THE BOTTOM OF THE 8" THICK TOP OF THE MANHOLE CHAMBER, MEASURED VERTICALLY FROM THE END OF THE RCP, SHALL BE A MINIMUM OF 6"

    C. IF THE SIZE OF THE LATERAL IS SUCH THAT THE ABOVE-SPECIFIED MINIMUM DISTANCES CANNOT BE MAINTAINED, THEN ONE OF THE FOLLOWING ALTERNATE SOLUTIONS MUST BE USED.

        1. PROVIDE A SPECIAL STRUCTURE.

        2. PROVIDE TWO STANDARD STRUCTURES, CONSISTING OF THIS MANHOLE PLACED UPSTREAM OR DOWNSTREAM FROM THE APPLICABLE JUNCTION STRUCTURE OR TRANSITION STRUCTURE.

12. MANHOLE FRAME AND COVER SHALL CONFORM TO (630-3) UNLESS OTHERWISE SHOWN.

13. MANHOLE SHAFT SHALL CONFORM TO (324-2) UNLESS OTHERWISE SHOWN.

14. WHERE A PRESSURE MANHOLE SHAFT - WITH ECCENTRIC REDUCER IS SPECIFIED REFER TO (328-2).

15. WHERE A PRESSURE MANHOLE SHAFT - 36" WITHOUT REDUCER IS SPECIFIED REFER TO (329-2).

16. THE FOLLOWING DETAILS ARE INCORPORATED HEREIN:

324	MANHOLE SHAFT - WITH ECCENTRIC REDUCER
326	MANHOLE SHAFT - 36" WITHOUT REDUCER
328	PRESSURE MANHOLE SHAFT - WITH ECCENTRIC
329	PRESSURE MANHOLE SHAFT - 36" WITHOUT REDUCER
630	24" MANHOLE FRAME AND COVER
633	36" MANHOLE FRAME AND COVER
635	STEEL STEP
636	POLYPROPYLENE PLASTIC STEP

MANHOLE PIPE-TO-PIPE (321-2)
(ONE OR BOTH MAIN LINE IDS 33" OR SMALLER)
(SHEET 2 OF 2)

DRAINAGE DETAILS

NO SCALE

DD-28

STATE OF CALIFORNIA - DEPARTMENT OF TRANSPORTATION
Caltrans® HYDRAULICS

FUNCTIONAL SUPERVISOR: JAI P. THAKUR
CALCULATED-DESIGNED BY: MAY P. FUNG
CHECKED BY: RALPH M. SASAKI
REVISED BY
DATE REVISED

LAST REVISION 00-00-00
DATE PLOTTED => 28-MAR-2012
TIME PLOTTED => 08:56

Dist	COUNTY	ROUTE	POST MILES TOTAL PROJECT	SHEET No.	TOTAL SHEETS
07	LA	5	2.4/4.0	196	1288

REGISTERED CIVIL ENGINEER 12-19-11 DATE

3-26-12
PLANS APPROVAL DATE

REGISTERED PROFESSIONAL ENGINEER RALPH M. SASAKI No. 30849 Exp. 3/31/12 CIVIL STATE OF CALIFORNIA

THE STATE OF CALIFORNIA OR ITS OFFICERS OR AGENTS SHALL NOT BE RESPONSIBLE FOR THE ACCURACY OR COMPLETENESS OF SCANNED COPIES OF THIS PLAN SHEET.

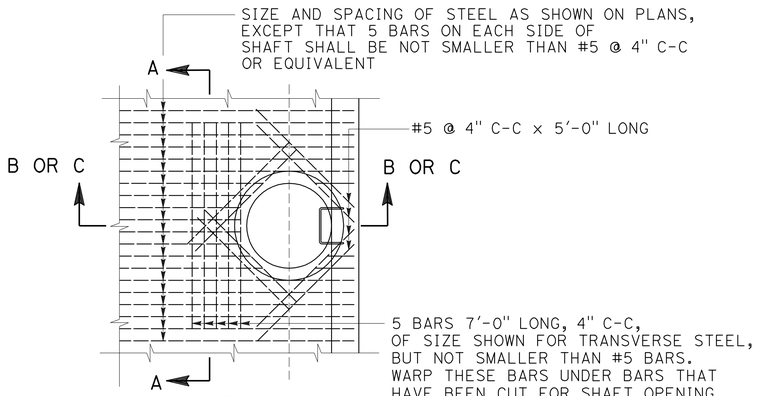

PLAN
(SHAFT NOT SHOWN)

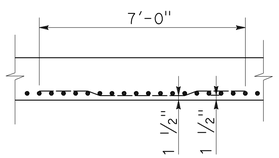

SECTION A-A

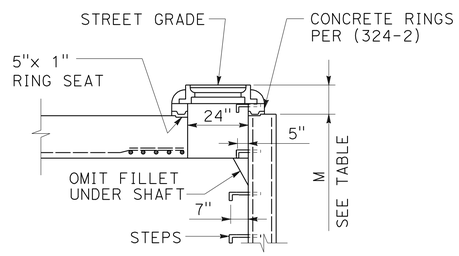

SECTION C-C
SEE NOTE 1

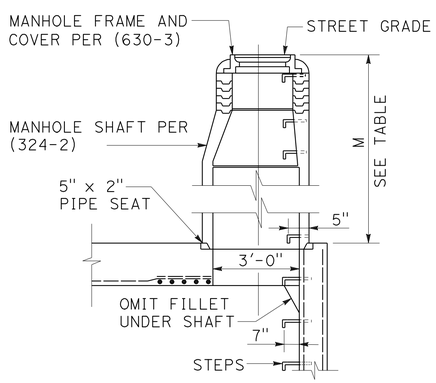

SECTION B-B

NOTES:

1. WHEN DEPTH M FROM STREET GRADE TO THE TOP OF THE BOX IS LESS THAN 2'-10½" FOR PAVED STREETS OR 3'-6" FOR UNPAVED STREETS, CONSTRUCT SHAFT PER SECTION C-C.
2. STATIONS OF MANHOLES SHOWN ON PLANS. APPLY AT CENTERLINE LINE OF SHAFT. ELEVATIONS ARE SHOWN AT CENTERLINE OF SHAFT.
3. REINFORCEMENT SHALL CONFORM TO ASTM A 615, GRADE 40, AND SHALL TERMINATE 1 ½" CLEAR OF CONCRETE SURFACES UNLESS OTHERWISE SHOWN.
4. STEPS SHALL CONFORM TO (635-3 OR (636-2). UNLESS OTHERWISE SHOWN, STEPS SHALL BE UNIFORMLY SPACED 14" TO 15" OC. THE LOWEST STEP SHALL NOT BE MORE THAN 24" ABOVE THE INVERT.
5. MANHOLE FRAME AND COVER SHALL CONFORM TO (630-3) UNLESS OTHERWISE SHOWN.
6. MANHOLE SHAFT SHALL CONFORM TO (324-2) UNLESS OTHERWISE SHOWN.
7. WHERE A MANHOLE SHAFT - 36" WITHOUT REDUCER IS SPECIFIED REFER TO (326-2).
8. WHERE A PRESSURE MANHOLE SHAFT - WITH ECCENTRIC REDUCER IS SPECIFIED REFER TO (328-2).
9. WHERE A PRESSURE MANHOLE SHAFT - 36" WITHOUT REDUCER IS SPECIFIED REFER TO (329-2).
10. THE FOLLOWING DETAILS ARE INCORPORATED HEREIN:

    324 MANHOLE SHAFT - WITH ECCENTRIC REDUCER
    326 MANHOLE SHAFT - 36" WITHOUT REDUCER
    328 PRESSURE MANHOLE SHAFT - WITH ECCENTRIC
    329 PRESSURE MANHOLE SHAFT - 36" WITHOUT REDUCER
    630 24" MANHOLE FRAME AND COVER
    633 36" MANHOLE FRAME AND COVER
    635 STEEL STEP
    636 POLYPROPYLENE PLASTIC STEP

TABLE OF VALUES FOR M (SEE NOTE 1)				
SECTION	PAVED STREET		UNPAVED STREET	
	Max	Min	Max	Min
B - B	-	2'-10 ½"	-	3'-6"
C - C	11"	8 ½"	16"	15"

MANHOLE - CONCRETE BOX STORM DRAIN (323-2)

DRAINAGE DETAILS

NO SCALE

DD-29

REVISED BY | DATE REVISED
MAY P. FUNG | RALPH M. SASAKI
CALCULATED-DESIGNED BY | CHECKED BY
FUNCTIONAL SUPERVISOR
JAI P. THAKUR

STATE OF CALIFORNIA - DEPARTMENT OF TRANSPORTATION
Caltrans® HYDRAULICS

LAST REVISION 00-00-00 | DATE PLOTTED => 28-MAR-2012 | TIME PLOTTED => 08:56

Dist	COUNTY	ROUTE	POST MILES TOTAL PROJECT	SHEET No.	TOTAL SHEETS
07	LA	5	2.4/4.0	197	1288

REGISTERED CIVIL ENGINEER 12-19-11 DATE

3-26-12
PLANS APPROVAL DATE

REGISTERED PROFESSIONAL ENGINEER RALPH M. SASAKI No. 30849 Exp. 3/31/12 CIVIL STATE OF CALIFORNIA

THE STATE OF CALIFORNIA OR ITS OFFICERS OR AGENTS SHALL NOT BE RESPONSIBLE FOR THE ACCURACY OR COMPLETENESS OF SCANNED COPIES OF THIS PLAN SHEET.

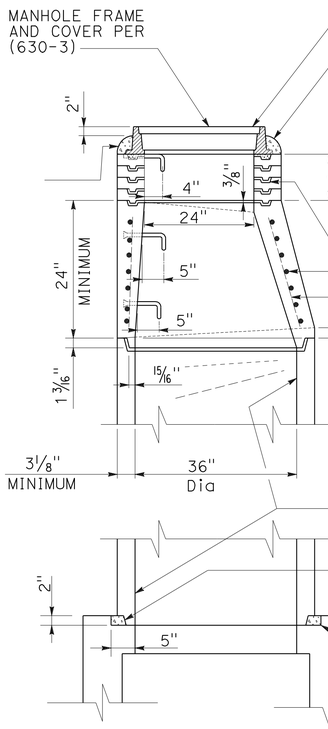

VERTICAL SECTION
OF REINFORCED CONCRETE
ECCENTRIC MANHOLE SHAFT

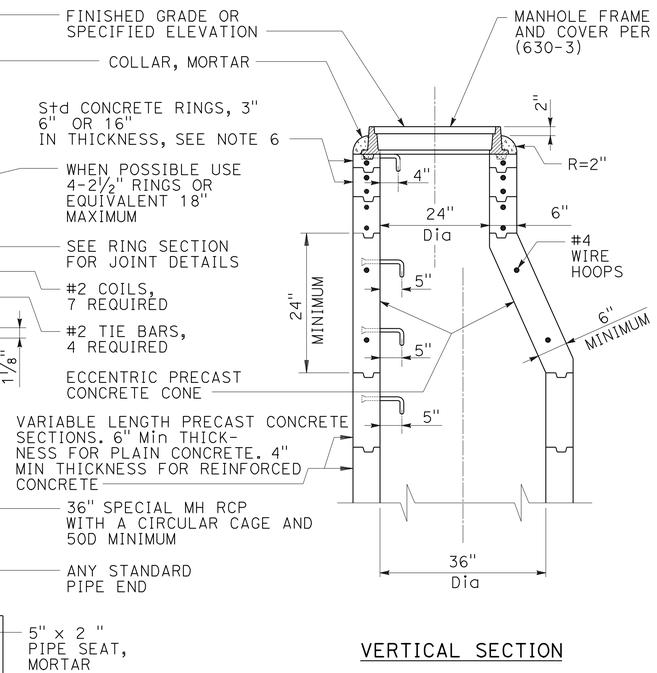

VERTICAL SECTION
OF PLAIN CONCRETE
ECCENTRIC MANHOLE SHAFT

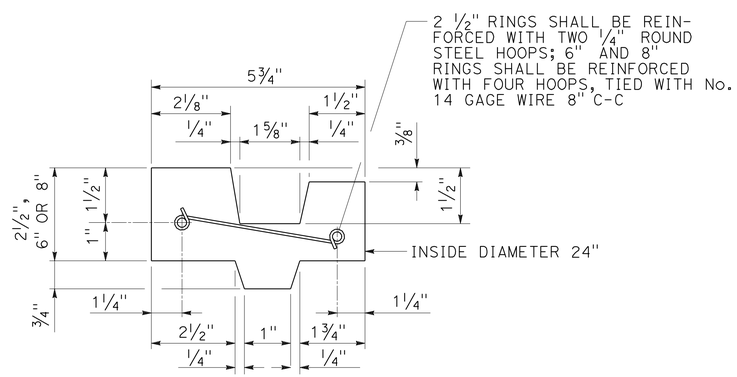

CROSS SECTION OF
REINFORCED CONCRETE RING

NOTES:

1. ALL CONCRETE SHALL BE PER SECTION 90 OF STANDARD SPECIFICATIONS
2. MANHOLE FRAME AND COVER SHALL CONFORM TO (630-3).
3. ALL JOINTS SHALL BE SEALED BY FILLING THE ANNULAR SPACES WITH MORTAR PER 51-1.135 OF STANDARD SPECIFICATIONS. THE INSIDE OF THE SHAFT AT EACH JOINT SHALL BE WIPED CLEAN OF EXCESS MORTAR.
4. STEPS SHALL CONFORM TO (635-3) OR (636-2). THE TOP STEP SHALL BE PLACED DIRECTLY BENEATH THE MANHOLE FRAME. UNLESS OTHERWISE SHOWN, STEPS SHALL BE UNIFORMLY SPACED 14" TO 15" C-C.
5. THE ECCENTRIC MANHOLE SHAFT REDUCER AND RINGS MAY BE PLAIN CONCRETE. FOR PLAIN CONCRETE SECTIONS THE MINIMUM THICKNESS SHALL BE 6".
6. THE PRECAST CONCRETE MANHOLE STRUCTURES WILL BE INSPECTED BY THE ENGINEER WHO WILL INDICATE ACCEPTANCE FOR SHIPMENT TO THE JOB BY MARKING THE STRUCTURES WITH THE AGENCY'S STAMP.
7. THE VERTICAL SIDES OF THE MANHOLE SHAFT AND THE ECCENTRIC REDUCER SHALL BE LOCATED ABOVE AND IN LINE WITH THE SIDE OF THE STORM DRAIN CONDUIT.
8. CONSTRUCT MANHOLE SAFETY LEDGE PER (330-2) IF DEPTH OF MANHOLE TO INVERT IS GREATER THAN 20' AND MANHOLE SHAFT IS GREATER THAN 10'. WHEN SAFETY LEDGE IS REQUIRED AND MANHOLE SHAFT IS LESS THAN 12' (326-2) MUST BE USED.
9. THE FOLLOWING DETAILS ARE INCORPORATED HEREIN:

   630 24" MANHOLE FRAME AND COVER
   635 STEEL STEP
   636 POLYPROPYLENE PLASTIC STEP

MANHOLE SHAFT WITH ECCENTRIC REDUCER (324-2)

DRAINAGE DETAILS

NO SCALE

DD-30

STATE OF CALIFORNIA - DEPARTMENT OF TRANSPORTATION
Caltrans® HYDRAULICS

FUNCTIONAL SUPERVISOR: JAI P. THAKUR
CALCULATED-DESIGNED BY: MAY P. FUNG
CHECKED BY: RALPH M. SASAKI
REVISED BY
DATE REVISED

LAST REVISION 00-00-00
DATE PLOTTED => 28-MAR-2012
TIME PLOTTED => 08:56

Dist	COUNTY	ROUTE	POST MILES TOTAL PROJECT	SHEET No.	TOTAL SHEETS
07	LA	5	2.4/4.0	198	1288

REGISTERED CIVIL ENGINEER 12-19-11 DATE

3-26-12
PLANS APPROVAL DATE

REGISTERED PROFESSIONAL ENGINEER RALPH M. SASAKI No. 30849 Exp. 3/31/12 CIVIL STATE OF CALIFORNIA

THE STATE OF CALIFORNIA OR ITS OFFICERS OR AGENTS SHALL NOT BE RESPONSIBLE FOR THE ACCURACY OR COMPLETENESS OF SCANNED COPIES OF THIS PLAN SHEET.

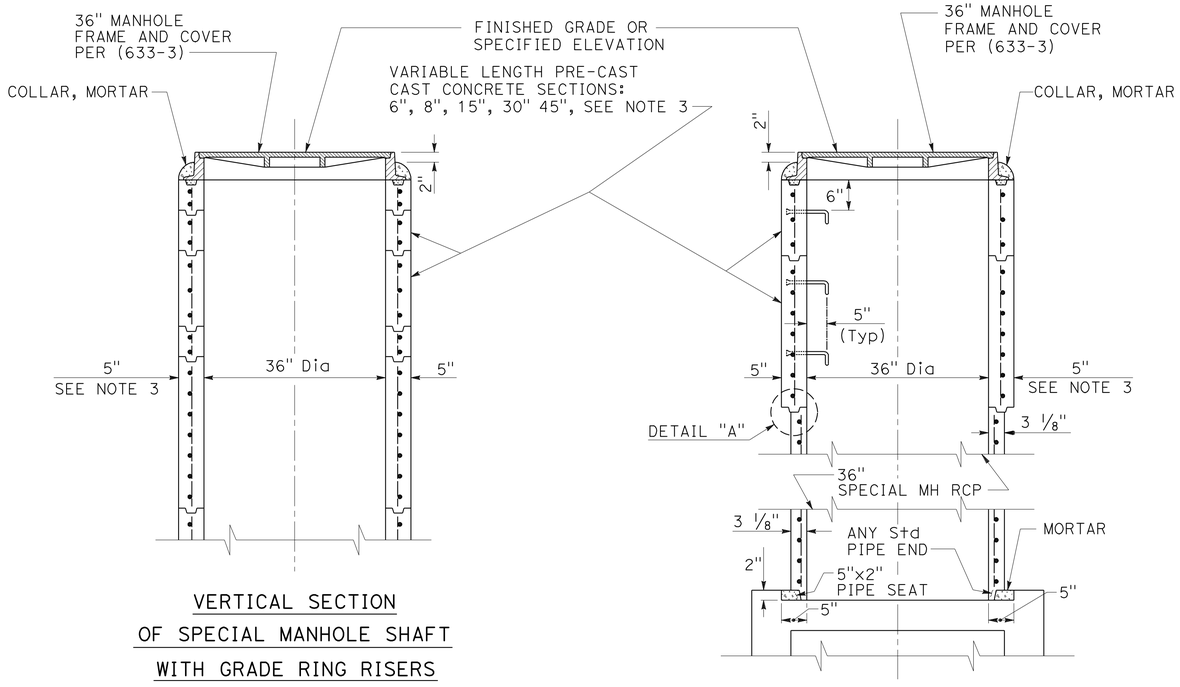

VERTICAL SECTION OF SPECIAL MANHOLE SHAFT WITH GRADE RING RISERS

VERTICAL SECTION OF SPECIAL MANHOLE SHAFT WITH REINFORCED CONCRETE PIPE

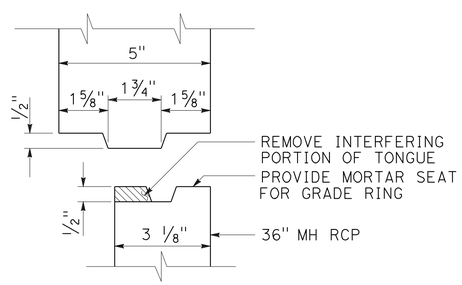

DETAIL "A"

NOTES:

1. UNLESS OTHERWISE INDICATED THIS STRUCTURE SHALL CONFORM TO ASTM C 478. ALL STEEL SHALL TERMINATE 1½" CLEAR OF CONCRETE SURFACES.
2. WHERE A 36" MANHOLE IS CONSTRUCTED WITH 36" MANHOLE RCP. THE RCP SECTION SHALL CONTAIN A CIRCULAR CAGE AND HAVE A LOAD CARRYING CAPACITY OF AT LEAST 1000D. SPECIAL MANHOLE SHAFT SHALL BE PER THIS STANDARD AND 36" MANHOLE FRAME AND COVER SHALL BE PER (633-3).
3. THE MANHOLE SHAFT AND RINGS MAY BE PLAIN CONCRETE. FOR PLAIN CONCRETE SECTIONS THE MINIMUM THICKNESS SHALL BE 6".
4. ALL JOINTS SHALL BE SEALED BY FILLING THE ANNULAR SPACES WITH MORTAR PER 51-1.135 OF STAND SPECIFICATIONS. THE INSIDE OF THE SHAFT AT EACH JOINT SHALL BE WIPED CLEAN OF EXCESS MORTAR.
5. STEPS SHALL CONFORM TO (635-3) OR (636-2). THE TOP STEP SHALL BE PLACED 6" BENEATH THE MANHOLE COVER FRAME. UNLESS OTHERWISE SHOWN, STEPS SHALL BE UNIFORMLY SPACED 14" TO 15" C-C.
6. THE PRECAST CONCRETE MANHOLE STRUCTURES WILL BE INSPECTED BY THE ENGINEER WHO WILL INDICATE ACCEPTANCE FOR SHIPMENT TO THE JOB BY MARKING THE STRUCTURES WITH THE AGENCY'S STAMP.
7. THE VERTICAL SIDES OF THE MANHOLE SHAFT SHALL BE LOCATED ABOVE AND IN LINE WITH THE SIDE OF THE STORM DRAIN CONDUIT.
8. CONSTRUCT MANHOLE SAFETY LEDGE PER (330-2) IF DEPTH OF MANHOLE TO INVERT IS GREATER THAN 20' AND MANHOLE SHAFT IS GREATER THAN 10'.
9. THE FOLLOWING DETAILS ARE INCORPORATED HEREIN:

   633-3 36" MANHOLE FRAME AND COVER
   635-3 STEEL STEP
   636-2 POLYPROPYLENE PLASTIC STEP

MANHOLE SHAFT (326-2)
36" WITHOUT REDUCER

DRAINAGE DETAILS

NO SCALE

DD-31

STATE OF CALIFORNIA - DEPARTMENT OF TRANSPORTATION
Caltrans® HYDRAULICS

FUNCTIONAL SUPERVISOR: JAI P. THAKUR
CALCULATED-DESIGNED BY: MAY P. FUNG
CHECKED BY: RALPH M. SASAKI
REVISED BY
DATE REVISED

LAST REVISION 00-00-00
DATE PLOTTED => 28-MAR-2012
TIME PLOTTED => 08:56

Dist	COUNTY	ROUTE	POST MILES TOTAL PROJECT	SHEET No.	TOTAL SHEETS
07	LA	5	2.4/4.0	199	1288

REGISTERED CIVIL ENGINEER 12-19-11 DATE

3-26-12
PLANS APPROVAL DATE

REGISTERED PROFESSIONAL ENGINEER RALPH M. SASAKI No. 30849 Exp. 3/31/12 CIVIL STATE OF CALIFORNIA

THE STATE OF CALIFORNIA OR ITS OFFICERS OR AGENTS SHALL NOT BE RESPONSIBLE FOR THE ACCURACY OR COMPLETENESS OF SCANNED COPIES OF THIS PLAN SHEET.

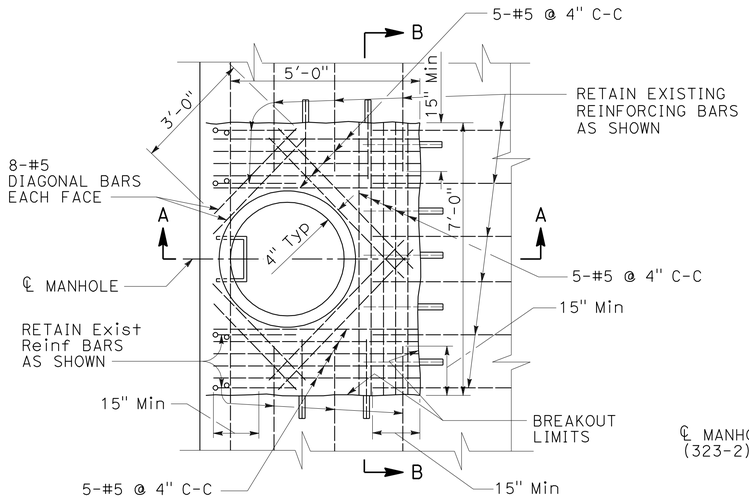

MANHOLE DETAIL

LEGEND:

- ○ EXISTING REINFORCING BARS
- ● ADDED REINFORCING BARS

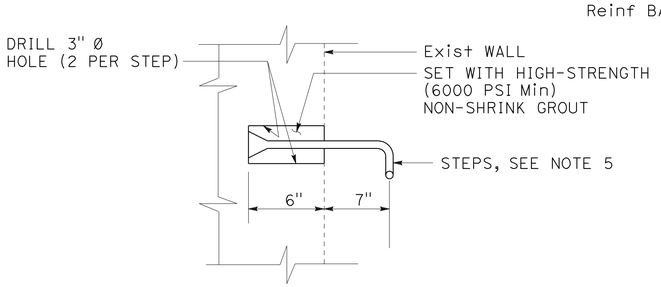

DETAIL "A"

PLACEMENT OF STEEL STEP IN EXISTING RCB

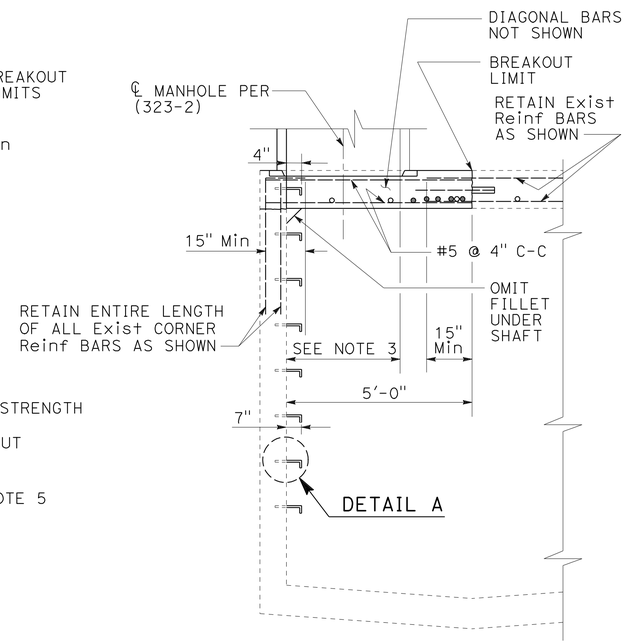

SECTION A-A

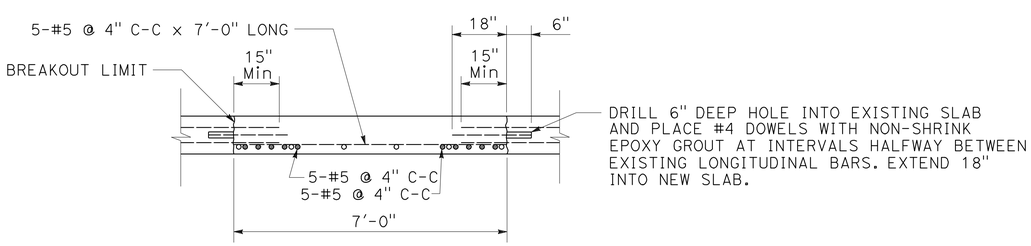

SECTION B-B

NOTES:

1. THIS STRUCTURE MAY BE USED WHEN THE DEPTH OF COVER IS NO GREATER THAN THE DESIGN COVER OF EXISTING RCB. IF THIS DEPTH IS EXCEEDED, OR PROPOSED MANHOLE SHAFT EXCEEDS 36" IN DIAMETER A DETAILED PLAN WITH CALCULATIONS PREPARED BY A CIVIL OR STRUCTURAL ENGINEER REGISTERED IN THE STATE OF CALIFORNIA SHOWING THE PROPOSED MANHOLE SHALL BE SUBMITTED TO THE ENGINEER FOR APPROVAL.

2. STRUCTURAL NOTES.
   - A. DIMENSIONS FROM FACE OF CONCRETE TO REINFORCING STEEL ARE TO CENTER OF BAR UNLESS OTHERWISE SHOWN.
   - B. CONCRETE DIMENSIONS SHALL BE MEASURED HORIZONTALLY OR VERTICALLY ON THE PROFILE, AND PARALLEL TO OR AT RIGHT ANGLES (OR RADIALLY) TO CENTER LINE OF CONDUIT ON THE PLAN EXCEPT AS OTHERWISE SHOWN.
   - C. ALL BAR BENDS AND HOOKS SHALL CONFORM TO THE AMERICAN CONCRETE INSTITUTE'S "BUILDING CODE REQUIREMENTS FOR REINFORCED CONCRETE. LATEST EDITION."
   - D. PLACING OF REINFORCEMENT SHALL CONFORM TO THE AMERICAN CONCRETE INSTITUTE'S "BUILDING CODE REQUIREMENTS FOR REINFORCED CONCRETE". LATEST EDITION.
   - E. TRANSVERSE REINFORCING STEEL SHALL TERMINATE 1 ½" FROM THE CONCRETE SURFACES UNLESS OTHERWISE SHOWN.
   - F. NO SPLICES IN TRANSVERSE STEEL REINFORCEMENT SHALL BE PERMITTED OTHER THAN SHOWN ON THE PLANS.
   - G. ALL STRUCTURAL CONCRETE SHALL BE PORTLAND CEMENT CONCRETE WITH A 28 DAY COMPRESSIVE STRENGTH OF 4000 PSI.
   - H. ALL REINFORCING STEEL SHALL CONFORM TO ASTM A ASTM A 615, GRADE 40

3. WHERE REINFORCEMENT IS REQUIRED TO EXTEND THROUGH THE NEW JOINT, CONCRETE SHALL BE REMOVED IN THE FOLLOWING SEQUENCE:
   - A. A SAW CUT SHALL BE MADE 1 ½" DEEP AT THE REMOVAL LIMITS. DO NOT CUT THE REINFORCING STEEL WHICH SHALL BE RETAINED AND EXTENDED INTO THE NEW CONSTRUCTION AS INDICATED ON THE PLANS.
   - B. USING HAND-HELD EQUIPMENT THE CONCRETE SHALL BE REMOVED FOR THE FULL DEPTH OF THE WALL OR SLAB AND FOR A MINIMUM DISTANCE FROM THE SAW CUT EQUAL TO THE LONGEST EXTENSION OF THE EXISTING BARS TO BE EXTENDED INTO THE NEW CONSTRUCTION. THIS EXTENSION SHALL BE 30 BAR DIAMETERS UNLESS OTHERWISE SHOWN.
   - C. EXISTING REINFORCEMENT SHALL BE CUT TO THE REQUIRED BAR EXTENSION.
   - D. THE REMAINING CONCRETE MAY BE REMOVED BY ANY SUITABLE METHOD, UPON APPROVAL OF THE ENGINEER, WHO SHALL BE THE SOLE JUDGE OF THE USE OF ANY CONCRETE REMOVAL EQUIPMENT. EXPLOSIVES, WRECKING BALL OR OTHER SIMILAR DEVICES WHICH ARE LIKELY TO DAMAGE THE CONCRETE TO BE LEFT IN PLACE SHALL NOT BE USED.
   - E. INTERNAL SUPPORT OF THE EXISTING RCB SHALL BE PROVIDED DURING THE REMOVAL AND RECONSTRUCTION OF THE TOP SLAB. A DETAILED PLAN WITH CALCULATIONS PREPARED BY A CIVIL OR STRUCTURAL ENGINEER REGISTERED IN THE STATE OF CALIFORNIA SHOWING THE TEMPORARY SUPPORT SYSTEM SHALL BE SUBMITTED AND APPROVED BY THE AGENCY PRIOR TO THE START OF REMOVAL WORK.

4. WHEN THE MANHOLE OPENING IS 24", THE BREAKOUT LIMIT DIMENSIONS MAY BE REDUCED FROM 5'-0" x 7'-0" TO 4'-0" x 6'-0".

5. STEPS SHALL CONFORM TO SPPWC 635. UNLESS OTHERWISE SHOWN, STEPS SHALL BE SPACED 14" TO 15" C-C. THE LOWEST STEP SHALL NOT BE MORE THAN 24" ABOVE THE INVERT.

6. THE FOLLOWING DETAILS ARE INCORPORATED HEREIN:

323-2	MANHOLE - CONCRETE BOX STORM DRAIN
630-3	24" MANHOLE FRAME AND COVER
635-3	STEEL STEP

MANHOLE FOR EXISITING RCB (327-2)

DRAINAGE DETAILS

NO SCALE

DD-32

STATE OF CALIFORNIA - DEPARTMENT OF TRANSPORTATION
Caltrans® HYDRAULICS

FUNCTIONAL SUPERVISOR: JAI P. THAKUR
CALCULATED-DESIGNED BY: MAY P. FUNG
CHECKED BY: RALPH M. SASAKI
REVISED BY
DATE REVISED

LAST REVISION 00-00-00
DATE PLOTTED => 28-MAR-2012
TIME PLOTTED => 08:56

Dist	COUNTY	ROUTE	POST MILES TOTAL PROJECT	SHEET No.	TOTAL SHEETS
07	LA	5	2.4/4.0	200	1288

REGISTERED CIVIL ENGINEER 12-19-11 DATE

3-26-12
PLANS APPROVAL DATE

REGISTERED PROFESSIONAL ENGINEER RALPH M. SASAKI No. 30849 Exp. 3/31/12 CIVIL STATE OF CALIFORNIA

THE STATE OF CALIFORNIA OR ITS OFFICERS OR AGENTS SHALL NOT BE RESPONSIBLE FOR THE ACCURACY OR COMPLETENESS OF SCANNED COPIES OF THIS PLAN SHEET.

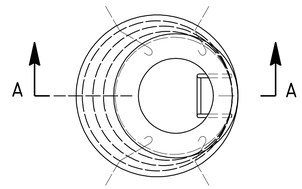

PLAN

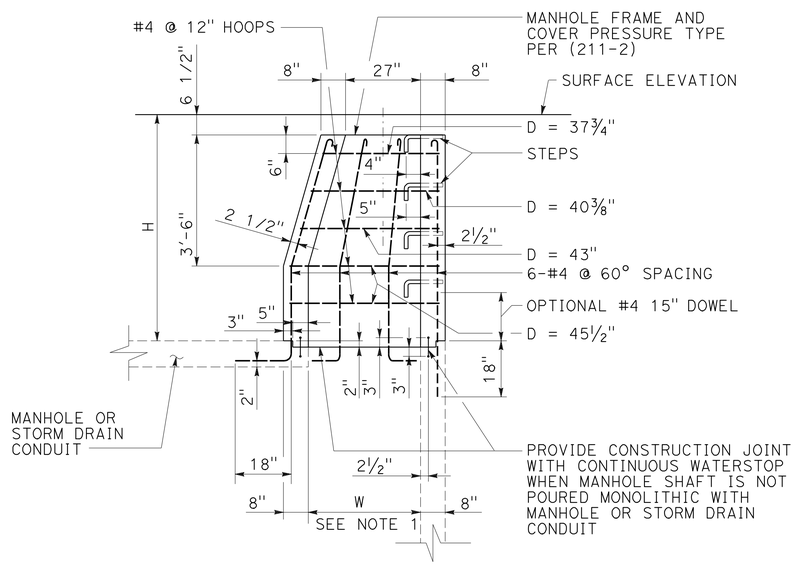

SECTION A-A

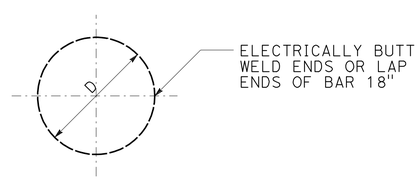

#4 HOOP BARS

NOTES:

1. IF H IS LESS THAN 18", W=27".
   IF H IS BETWEEN 18" AND 2'-6", W=2'-6".
   IF H IS 2'-6" OR MORE, W=3'-0".
   IF H IS MORE THAN 4'-1/2", BRING WALL VERTICALLY TO 4'-1/2" BELOW SURFACE AND TAPER FROM 3'-0" TO 27" AS SHOWN.
2. THIS STRUCTURE SHALL BE USED WITH MANHOLE FRAME AND COVER PRESSURE TYPE (211-2). IT MAY BE USED FOR HYDROSTATIC HEADS UP TO 25' ABOVE THE STEEL PLATE.
3. THE VERTICAL SIDE OF THE MANHOLE SHAFT AND THE ECCENTRIC REDUCER SHALL BE LOCATED ABOVE AND IN LINE WITH THE SIDE OF THE STORM DRAIN CONDUIT.
4. REINFORCEMENT SHALL CONFORM TO ASTM A 615, GRADE 40 AND SHALL TERMINATE 1½" CLEAR OF CONCRETE SURFACES UNLESS OTHERWISE SHOWN.
5. STEPS SHALL CONFORM TO (635-3) OR (636-2). THE TOP STEP SHALL BE PLACED DIRECTLY BENEATH THE MANHOLE FRAME. UNLESS OTHERWISE SHOWN, STEPS SHALL BE UNIFORMLY SPACED 14" TO 15" C-C.
6. SEE STANDARD SPECIFICATIONS (SECTION 51-1.14) FOR PHYSICAL REQUIREMENTS OF WATER STOP.
7. THE FOLLOWING DETAILS ARE INCORPORATED HEREIN:
   211-2 MANHOLE FRAME AND COVER PRESSURE TYPE
   635-3 STEEL STEP
   636-2 POLYPROPYLENE PLASTIC STEP.

PRESSURE MANHOLE SHAFT WITH ECCENTRIC REDUCER (328-2)

DRAINAGE DETAILS

NO SCALE

DD-33

STATE OF CALIFORNIA - DEPARTMENT OF TRANSPORTATION
Caltrans® HYDRAULICS

FUNCTIONAL SUPERVISOR: JAI P. THAKUR
CALCULATED-DESIGNED BY: MAY P. FUNG
CHECKED BY: RALPH M. SASAKI
REVISED BY
DATE REVISED

LAST REVISION 00-00-00 | DATE PLOTTED => 28-MAR-2012 | TIME PLOTTED => 08:57