Dist	COUNTY	ROUTE	POST MILES TOTAL PROJECT	SHEET No.	TOTAL SHEETS
07	LA	405	39.4/48.6	1	179

STATE OF CALIFORNIA

DEPARTMENT OF TRANSPORTATION

ACIM-405-3(005)E

PROJECT PLANS FOR CONSTRUCTION ON

STATE HIGHWAY

IN LOS ANGELES COUNTY
IN LOS ANGELES
FROM ROUTE 405/101 SEPARATION
TO ROUTE 405/5 SEPARATION

TO BE SUPPLEMENTED BY STANDARD PLANS DATED MAY 2006

INDEX OF PLANS

SHEET No.	DESCRIPTION
1	TITLE SHEET
2-11	TYPICAL CROSS SECTIONS
12-35	LAYOUTS
36-87	CONSTRUCTION DETAILS
88	DRAINAGE PLAN
89	DRAINAGE PROFILE
90-100	DRAINAGE DETAILS
101	DRAINAGE QUANTITIES
102-112	UTILITY PLANS
113	CONSTRUCTION AREA SIGNS
114	TRAFFIC HANDLING PLAN
115-122	TRAFFIC HANDLING DETAILS
123-124	PAVEMENT DELINEATION PLANS
125	PAVEMENT DELINEATION QUANTITIES
126-129	SUMMARY OF QUANTITIES
130-143	ELECTRICAL PLANS
144-178	NEW AND REVISED STANDARD PLANS
179	REVISED STRUCTURE APPROACH TYPE R(30D)

THE STANDARD PLANS LIST APPLICABLE TO THIS CONTRACT IS INCLUDED IN THE NOTICE TO BIDDERS AND SPECIAL PROVISIONS BOOK.

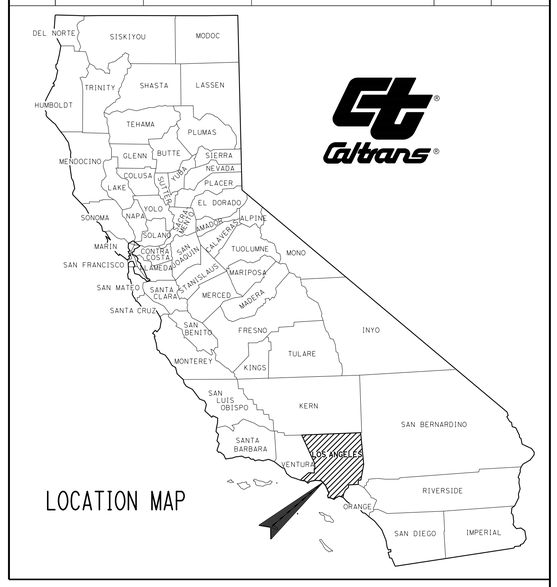

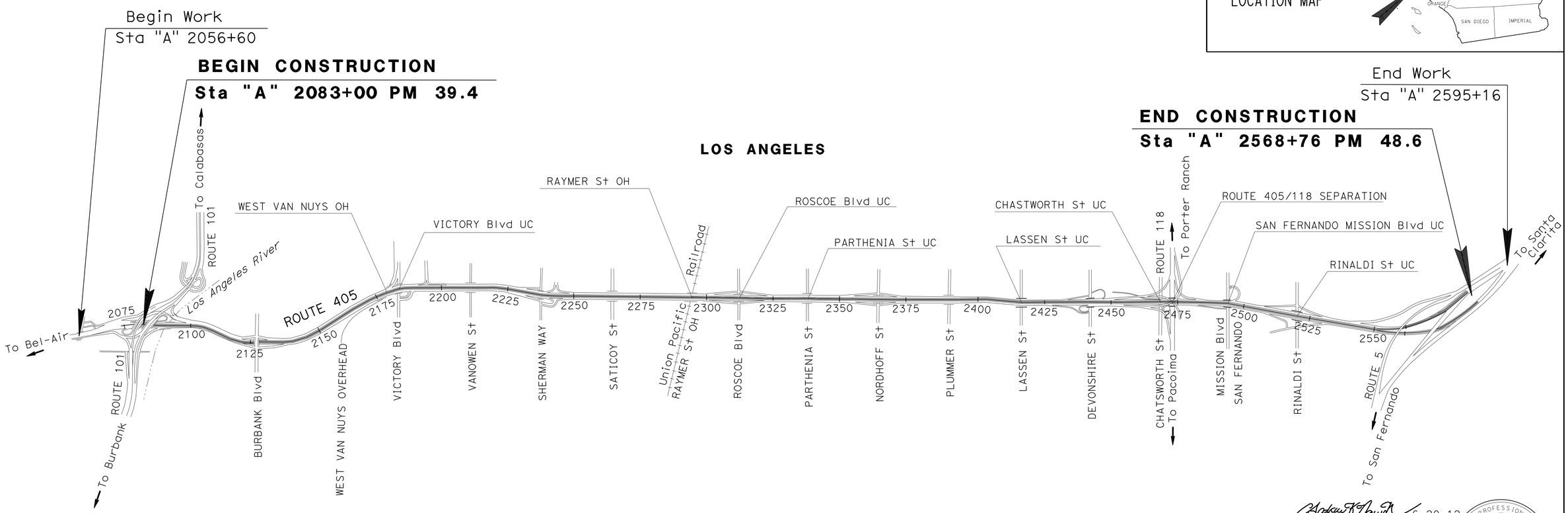

PROJECT MANAGER: DAVID MIRAANEY

DESIGN ENGINEER: PAUL CRISPI

6-20-12
DATE

PROJECT ENGINEER
REGISTERED CIVIL ENGINEER

REGISTERED PROFESSIONAL ENGINEER
ANDREW K. NGUYEN
No. C62828
Exp. 6-30-14
CIVIL
STATE OF CALIFORNIA

July 30, 2012
PLANS APPROVAL DATE

THE STATE OF CALIFORNIA OR ITS OFFICERS OR AGENTS SHALL NOT BE RESPONSIBLE FOR THE ACCURACY OR COMPLETENESS OF SCANNED COPIES OF THIS PLAN SHEET.

THE CONTRACTOR SHALL POSSESS THE CLASS (OR CLASSES) OF LICENSE AS SPECIFIED IN THE "NOTICE TO BIDDERS."

NO SCALE

CONTRACT No.	07-252004
PROJECT ID	0712000074

LAST REVISION 07-30-12

DATE PLOTTED => 14-FEB-2013
TIME PLOTTED => 13:24

Dist	COUNTY	ROUTE	POST MILES TOTAL PROJECT	SHEET No.	TOTAL SHEETS
07	LA	405	39.4/48.6	2	179

REGISTERED CIVIL ENGINEER 5-30-12 DATE

7-30-12
PLANS APPROVAL DATE

REGISTERED PROFESSIONAL ENGINEER PETER VAN DINH No. C62666 Exp. 6-30-14 CIVIL STATE OF CALIFORNIA

THE STATE OF CALIFORNIA OR ITS OFFICERS OR AGENTS SHALL NOT BE RESPONSIBLE FOR THE ACCURACY OR COMPLETENESS OF SCANNED COPIES OF THIS PLAN SHEET.

NOTES:

1. DIMENSIONS OF THE PAVEMENT STRUCTURES (STRUCTURAL SECTIONS) ARE SUBJECT TO TOLERANCES SPECIFIED IN THE STANDARD SPECIFICATIONS.
2. SUPERELEVATION AS SHOWN OR AS DIRECTED BY THE ENGINEER.
3. EXISTING UTILITY FACILITIES HAVE NOT BEEN PLOTTED ON THESE PLANS.
4. FOR ACCURATE RIGHT OF WAY AND ACCESS DATA, CONTACT RIGHT OF WAY ENGINEERING AT THE DISTRICT OFFICE.
5. EXISTING DRAINAGE INLETS HAVE NOT BEEN PLOTTED ON THESE PLANS.
6. DO NOT GRIND BRIDGES.
7. EXACT LOCATIONS FOR INDIVIDUAL SLAB REPLACEMENT (RSC) WILL BE DETERMINED BY THE ENGINEER.
8. MAINLINE EXISTING PROFILE.

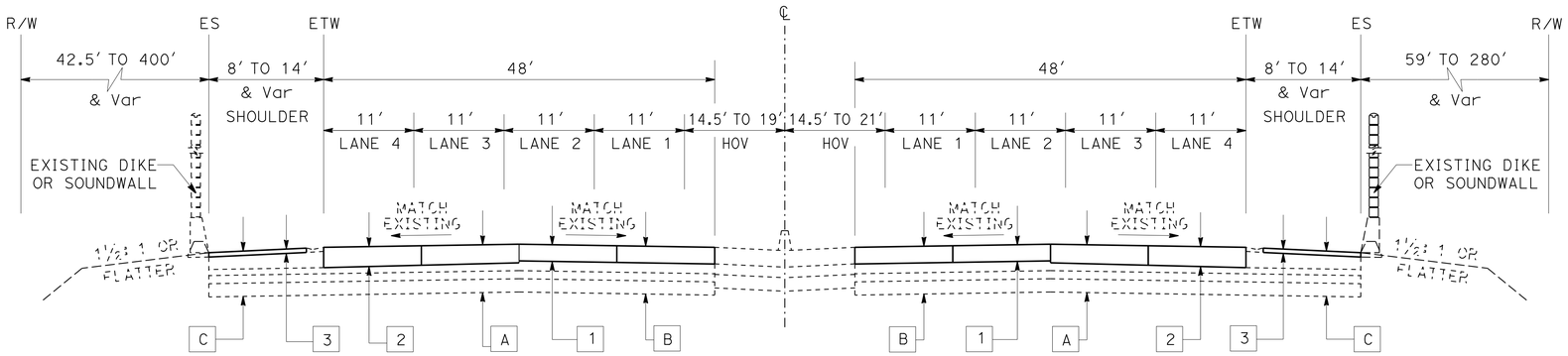

ROUTE 405

SOUTHBOUND

Sta 2362+00 TO Sta 2484+65
Sta 2494+00 TO Sta 2497+60

NORTHBOUND

Sta 2362+00 TO Sta 2475+00
Sta 2481+75 TO Sta 2490+75

PROPOSED STRUCTURAL SECTIONS

1 — 0.67' INDIVIDUAL SLAB REPLACEMENT (RSC) AT VARIOUS LOCATIONS

2 — 0.75' INDIVIDUAL SLAB REPLACEMENT (RSC) AT VARIOUS LOCATIONS

3 — 0.20' HOT MIX ASPHALT, SUPERPAVE (GAP GRADED)
0.20' COLD PLANE AC PAVEMENT

EXISTING STRUCTURAL SECTIONS

A — 0.75' PORTLAND CEMENT CONCRETE
0.33' CEMENT TREATED BASE
0.25' AGGREGATE BASE
0.67' AGGREGATE SUBBASE

B — 0.67' PORTLAND CEMENT CONCRETE
0.33' CEMENT TREATED BASE
0.33' AGGREGATE BASE
0.67' AGGREGATE SUBBASE

C — 0.35' ASPHALT CONCRETE (TYPE B)
0.60' AGGREGATE BASE
1.16' & Var AGGREGATE SUBBASE

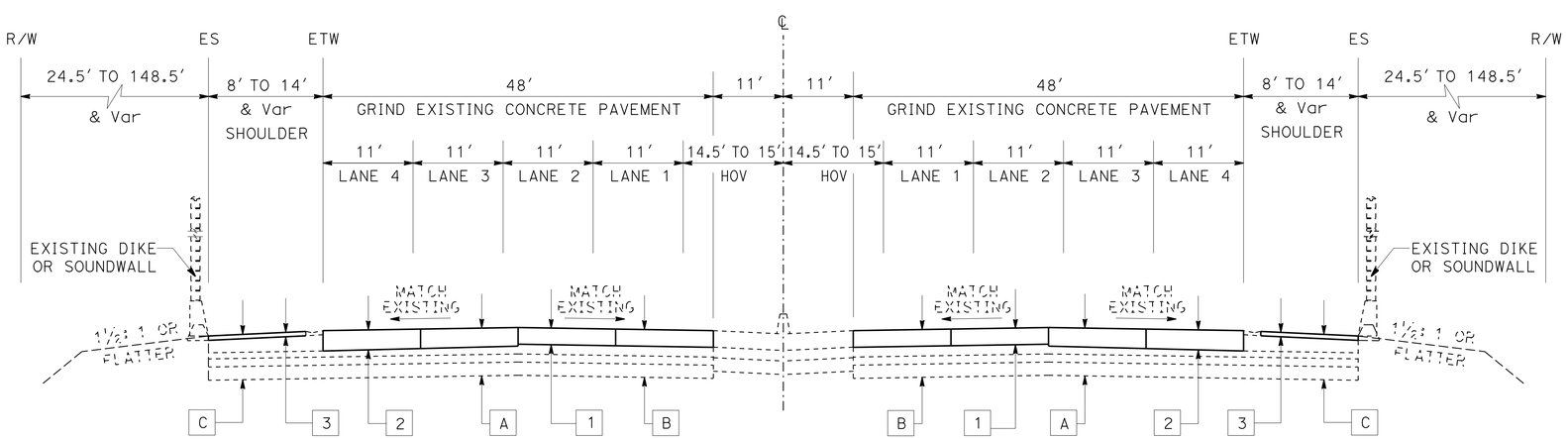

SOUTHBOUND NORTHBOUND

ROUTE 405

Sta 2092+00 TO Sta 2362+00

TYPICAL CROSS SECTIONS

NO SCALE

X-1

STATE OF CALIFORNIA - DEPARTMENT OF TRANSPORTATION
Caltrans MAINTENANCE ENGINEERING

FUNCTIONAL SUPERVISOR: PAUL CRISPI
CALCULATED-DESIGNED BY: PETER DINH
CHECKED BY: PAUL CRISPI
REVISED BY
DATE REVISED

LAST REVISION 07-30-12
DATE PLOTTED => 14-FEB-2013
TIME PLOTTED => 13:24

Dist	COUNTY	ROUTE	POST MILES TOTAL PROJECT	SHEET No.	TOTAL SHEETS
07	LA	405	39.4/48.6	3	179

REGISTERED CIVIL ENGINEER 5-30-12 DATE

7-30-12
PLANS APPROVAL DATE

REGISTERED PROFESSIONAL ENGINEER PETER VAN DINH No. C62666 Exp. 6-30-14 CIVIL STATE OF CALIFORNIA

THE STATE OF CALIFORNIA OR ITS OFFICERS OR AGENTS SHALL NOT BE RESPONSIBLE FOR THE ACCURACY OR COMPLETENESS OF SCANNED COPIES OF THIS PLAN SHEET.

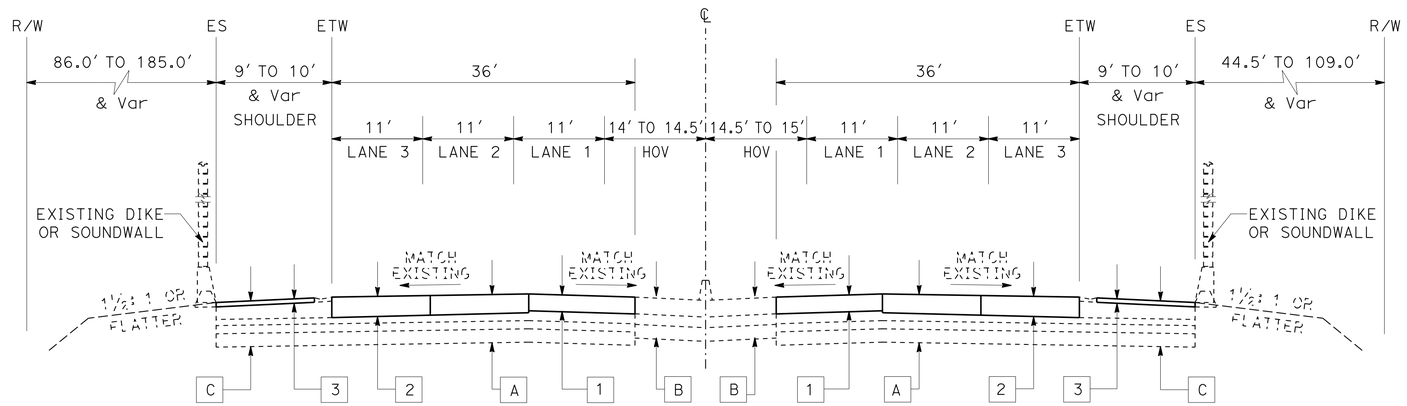

ROUTE 405

SOUTHBOUND

Sta 2497+60 TO Sta 2535+00

NORTHBOUND

Sta 2490+75 TO Sta 2535+00

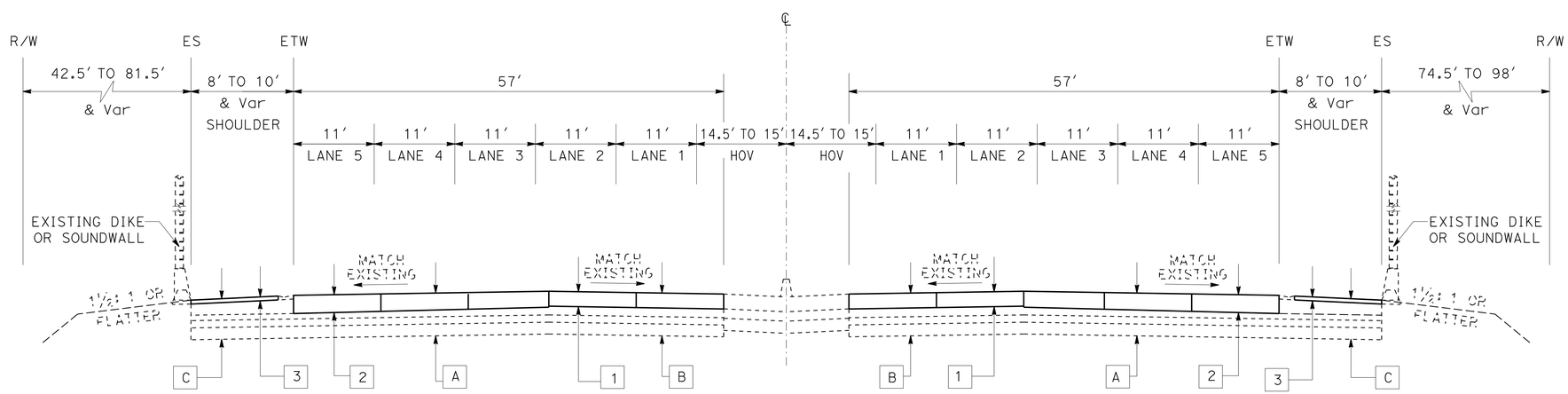

ROUTE 405

SOUTHBOUND

Sta 2484+65 TO Sta 2494+00

NORTHBOUND

Sta 2475+00 TO Sta 2481+75

TYPICAL CROSS SECTIONS

NO SCALE

X-2

STATE OF CALIFORNIA - DEPARTMENT OF TRANSPORTATION
Caltrans MAINTENANCE ENGINEERING

FUNCTIONAL SUPERVISOR: PAUL CRISPI
CALCULATED-DESIGNED BY: PETER DINH
CHECKED BY: PAUL CRISPI
REVISED BY
DATE REVISED

LAST REVISION 07-30-12
DATE PLOTTED => 14-FEB-2013
TIME PLOTTED => 13:24

Dist	COUNTY	ROUTE	POST MILES TOTAL PROJECT	SHEET No.	TOTAL SHEETS
07	LA	405	39.4/48.6	4	179

REGISTERED CIVIL ENGINEER 5-30-12 DATE

7-30-12
PLANS APPROVAL DATE

REGISTERED PROFESSIONAL ENGINEER PETER VAN DINH No. C62666 Exp. 6-30-14 CIVIL STATE OF CALIFORNIA

THE STATE OF CALIFORNIA OR ITS OFFICERS OR AGENTS SHALL NOT BE RESPONSIBLE FOR THE ACCURACY OR COMPLETENESS OF SCANNED COPIES OF THIS PLAN SHEET.

NOTE:

EXISTING AC PAVEMENT INCLUDES PAVEMENT REINFORCING FABRIC.

ABBREVIATION:

PPCP - PRECAST PRESTRESSED CONCRETE PAVEMENT

ROUTE 405

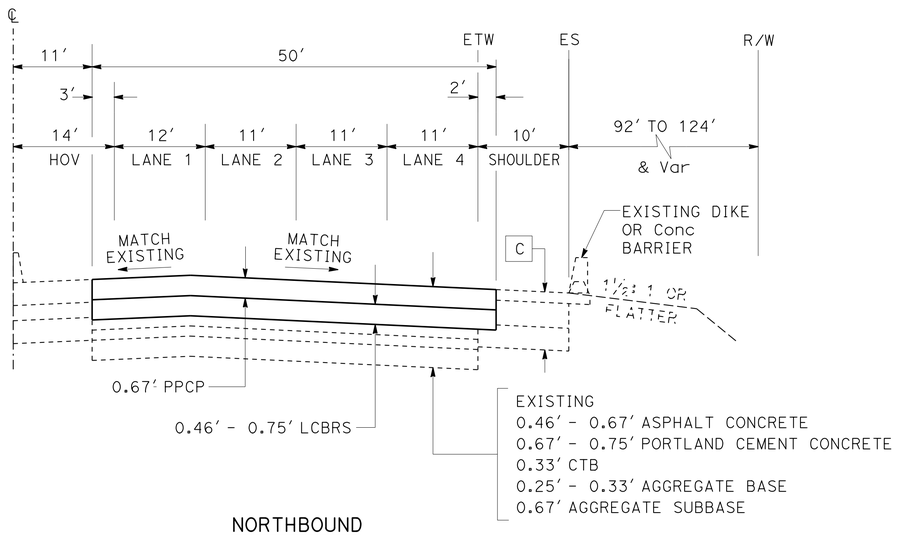

NORTHBOUND
Sta 2289+46.20 TO Sta 2292+48.51

ROUTE 405

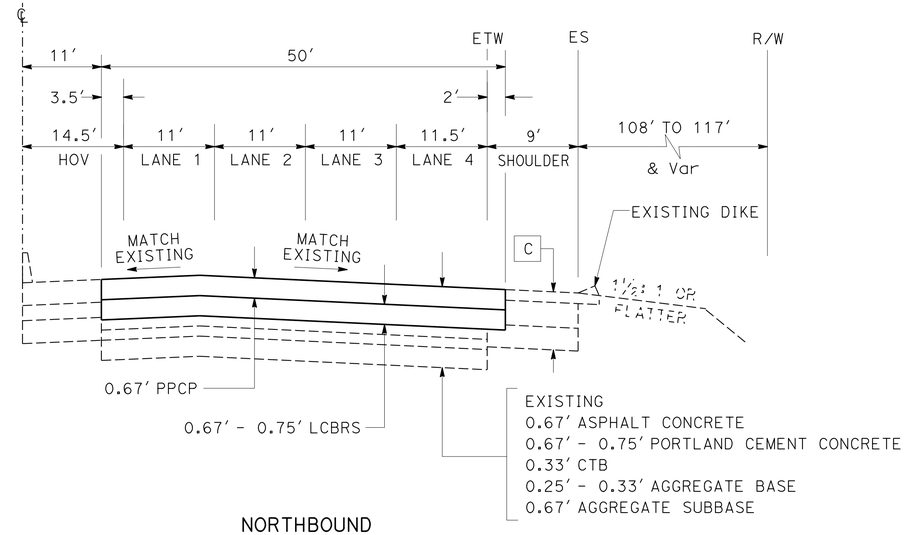

NORTHBOUND
Sta 2294+48.50 TO Sta 2297+48.51

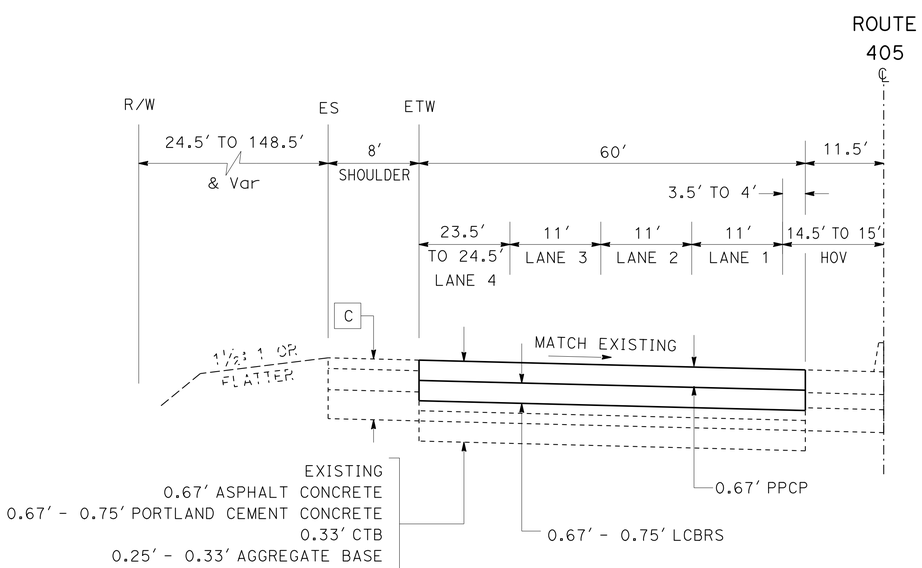

SOUTHBOUND
Sta 2176+08.04 TO Sta 2179+09.89

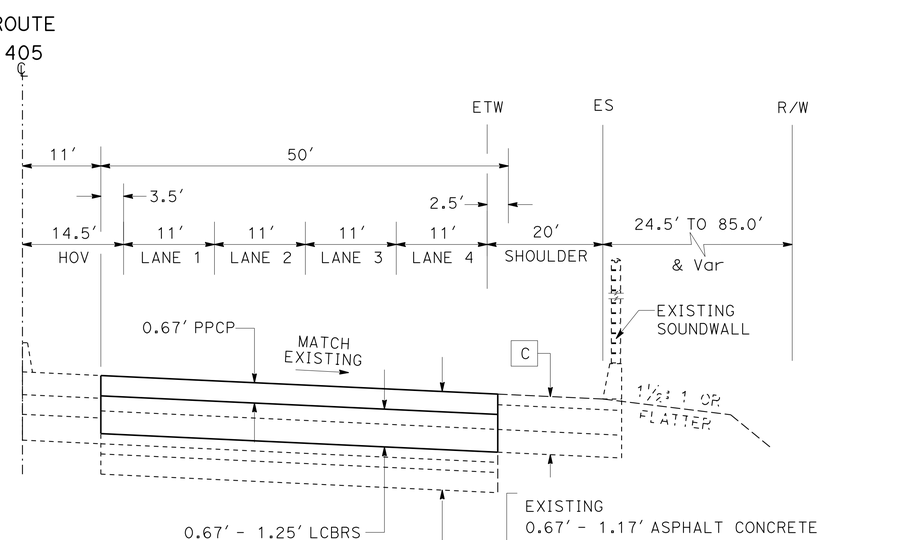

NORTHBOUND
Sta 2174+93.48 TO Sta 2178+49.44

TYPICAL CROSS SECTIONS

NO SCALE

X-3

REVISED BY | DATE REVISED
PETER DINH | PAUL CRISPI
CALCULATED-DESIGNED BY | CHECKED BY
FUNCTIONAL SUPERVISOR
PAUL CRISPI

STATE OF CALIFORNIA - DEPARTMENT OF TRANSPORTATION
Caltrans MAINTENANCE ENGINEERING

LAST REVISION 07-30-12 | DATE PLOTTED => 14-FEB-2013 | TIME PLOTTED => 13:24

Dist	COUNTY	ROUTE	POST MILES TOTAL PROJECT	SHEET No.	TOTAL SHEETS
07	LA	405	39.4/48.6	5	179

REGISTERED CIVIL ENGINEER 5-30-12 DATE

7-30-12
PLANS APPROVAL DATE

REGISTERED PROFESSIONAL ENGINEER PETER VAN DINH No. C62666 Exp. 6-30-14 CIVIL STATE OF CALIFORNIA

THE STATE OF CALIFORNIA OR ITS OFFICERS OR AGENTS SHALL NOT BE RESPONSIBLE FOR THE ACCURACY OR COMPLETENESS OF SCANNED COPIES OF THIS PLAN SHEET.

NOTE:

EXISTING AC PAVEMENT INCLUDES PAVEMENT REINFORCING FABRIC.

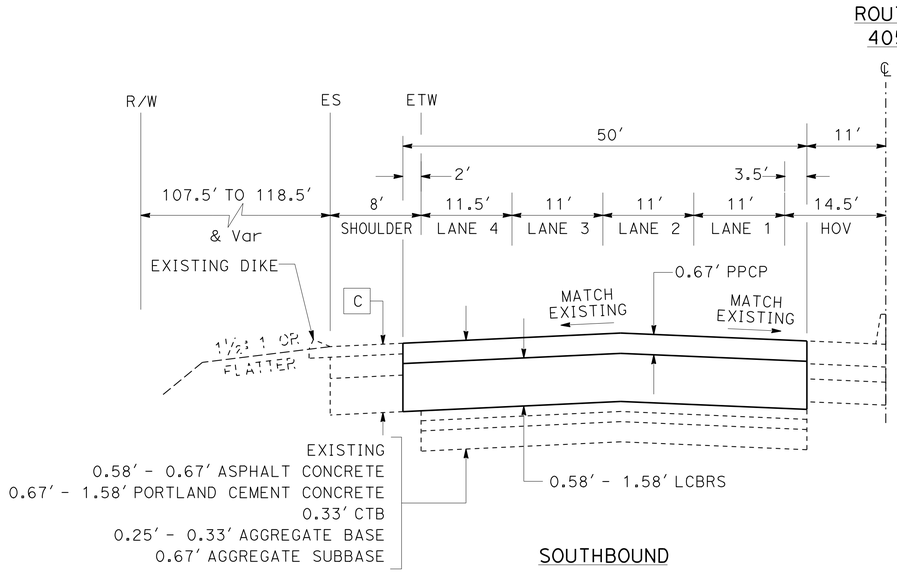

SOUTHBOUND
Sta 2312+27.77 TO Sta 2315+21.77

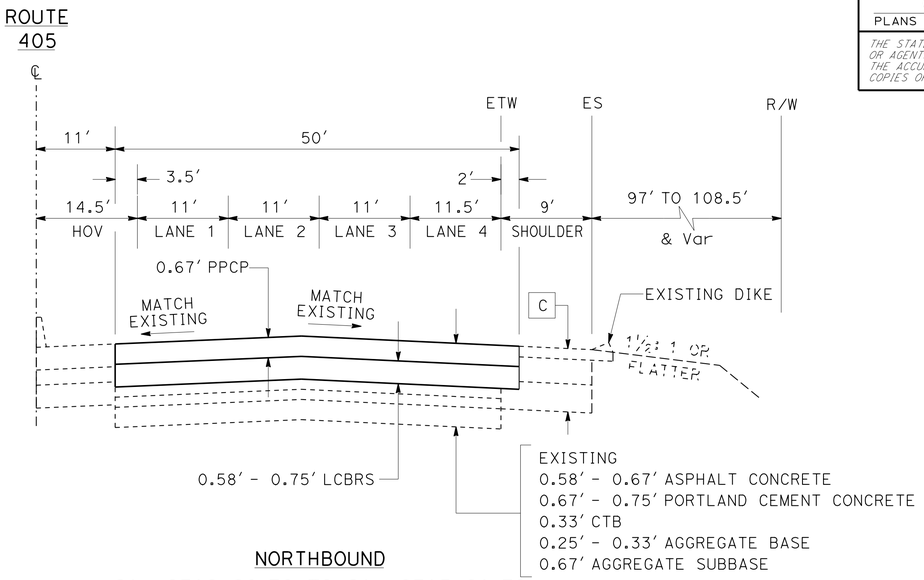

NORTHBOUND
Sta 2312+28.78 TO Sta 2315+21.79

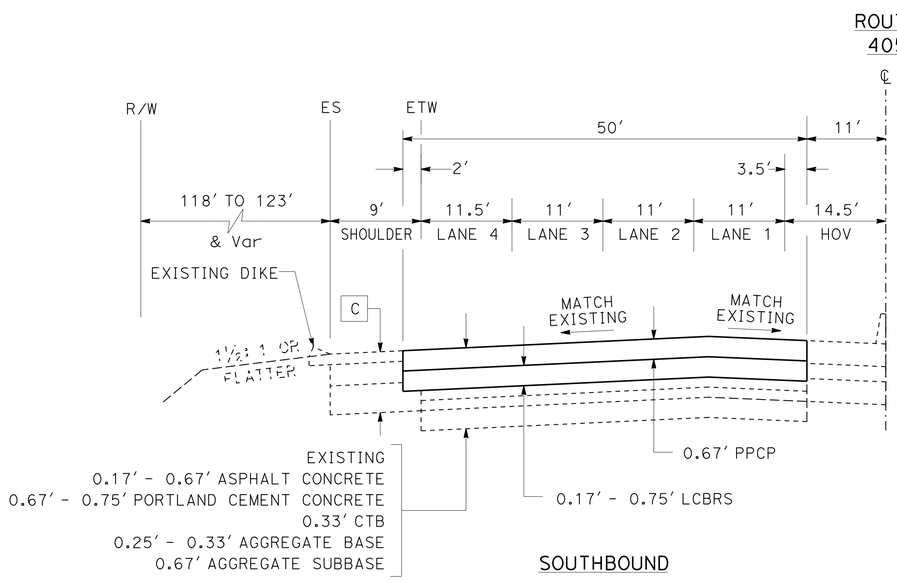

SOUTHBOUND
Sta 2307+30.09 TO Sta 2310+10.10

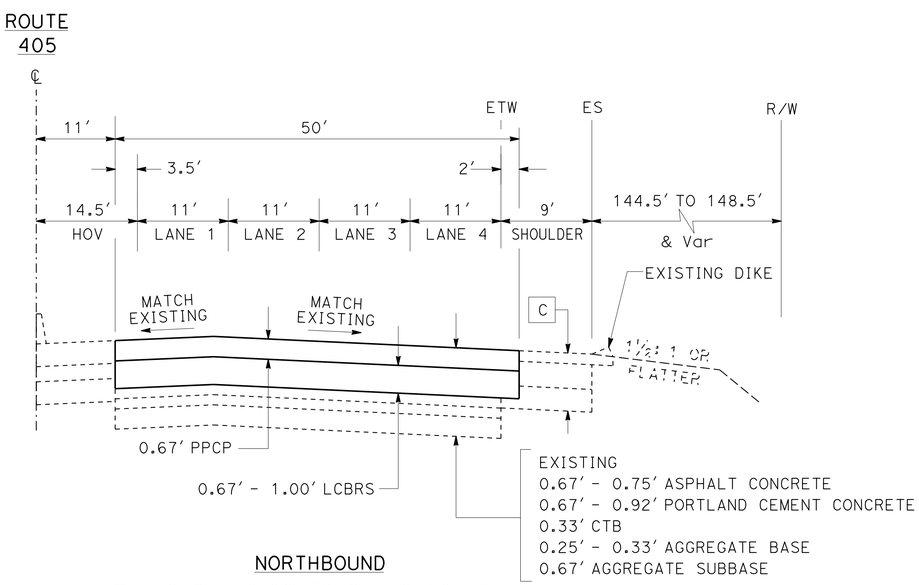

NORTHBOUND
Sta 2307+30.08 TO Sta 2310+10.13

TYPICAL CROSS SECTIONS
NO SCALE

X-4

STATE OF CALIFORNIA - DEPARTMENT OF TRANSPORTATION
Caltrans MAINTENANCE ENGINEERING

FUNCTIONAL SUPERVISOR: PAUL CRISPI
CALCULATED-DESIGNED BY: PETER DINH
CHECKED BY: PAUL CRISPI
REVISED BY
DATE REVISED

LAST REVISION 07-30-12
DATE PLOTTED => 14-FEB-2013
TIME PLOTTED => 13:24

Dist	COUNTY	ROUTE	POST MILES TOTAL PROJECT	SHEET No.	TOTAL SHEETS
07	LA	405	39.4/48.6	6	179

REGISTERED CIVIL ENGINEER 5-30-12 DATE

7-30-12
PLANS APPROVAL DATE

REGISTERED PROFESSIONAL ENGINEER PETER VAN DINH No. C62666 Exp. 6-30-14 CIVIL STATE OF CALIFORNIA

THE STATE OF CALIFORNIA OR ITS OFFICERS OR AGENTS SHALL NOT BE RESPONSIBLE FOR THE ACCURACY OR COMPLETENESS OF SCANNED COPIES OF THIS PLAN SHEET.

NOTE:

EXISTING AC PAVEMENT INCLUDES PAVEMENT REINFORCING FABRIC.

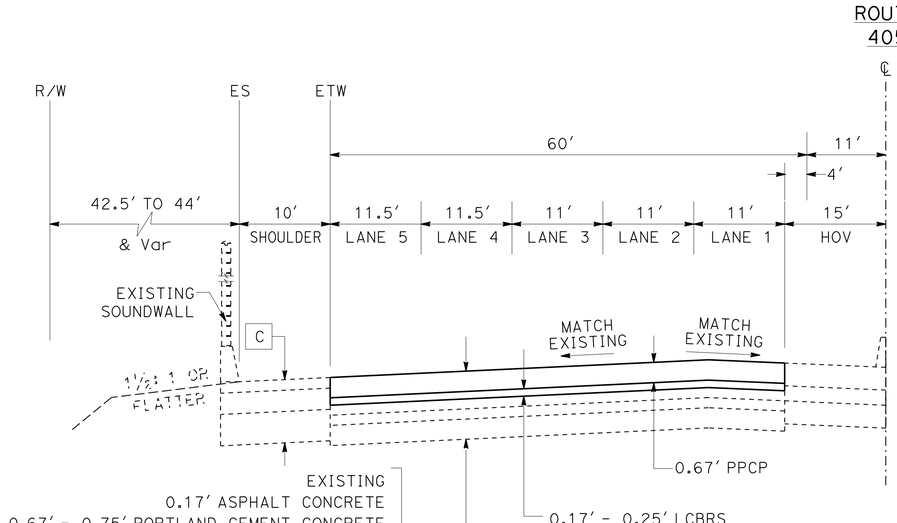

SOUTHBOUND

Sta 2412+10.62 TO Sta 2414+83.10

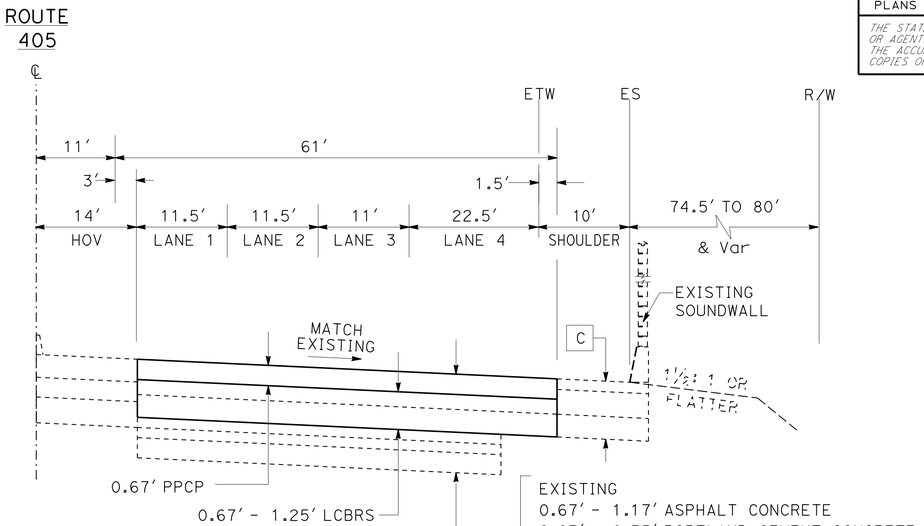

NORTHBOUND

Sta 2182+90.63 TO Sta 2183+42.22

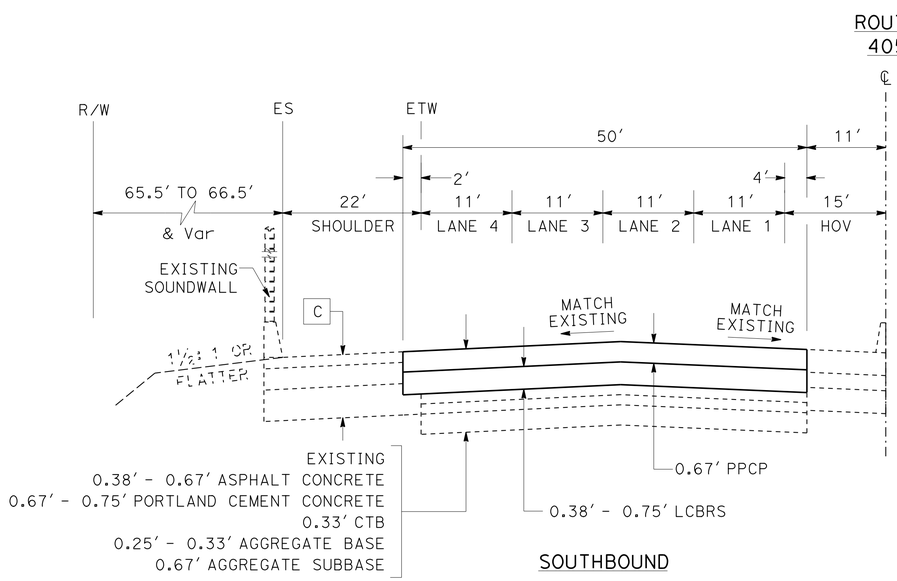

SOUTHBOUND

Sta 2332+84.92 TO Sta 2335+48.92

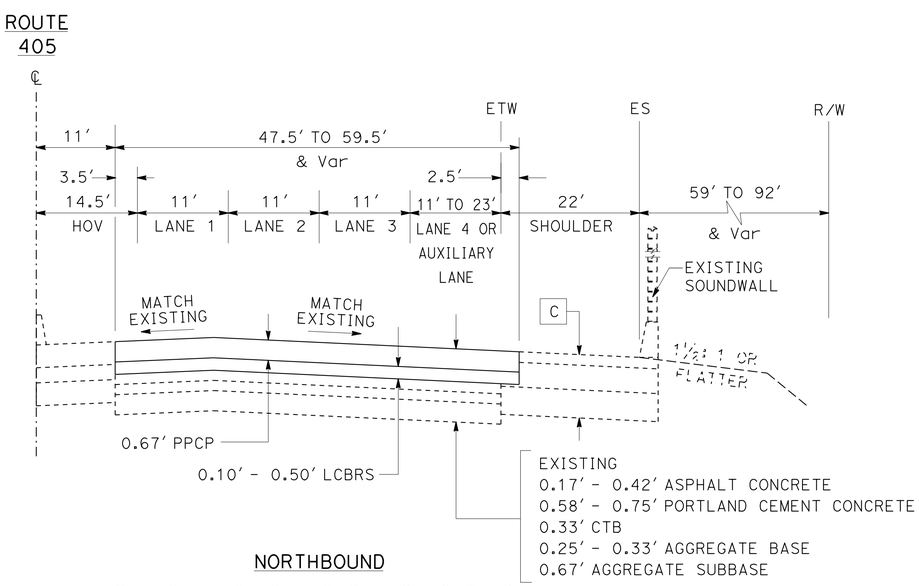

NORTHBOUND

Sta 2373+01.95 TO Sta 2378+05.94

TYPICAL CROSS SECTIONS

NO SCALE

X-5

STATE OF CALIFORNIA - DEPARTMENT OF TRANSPORTATION
Caltrans MAINTENANCE ENGINEERING

FUNCTIONAL SUPERVISOR: PAUL CRISPI
CALCULATED-DESIGNED BY: PETER DINH
CHECKED BY: PAUL CRISPI
REVISED BY
DATE REVISED

LAST REVISION 07-30-12
DATE PLOTTED => 14-FEB-2013
TIME PLOTTED => 13:24

Dist	COUNTY	ROUTE	POST MILES TOTAL PROJECT	SHEET No.	TOTAL SHEETS
07	LA	405	39.4/48.6	7	179

REGISTERED CIVIL ENGINEER 5-30-12 DATE

7-30-12
PLANS APPROVAL DATE

REGISTERED PROFESSIONAL ENGINEER PETER VAN DINH No. C62666 Exp. 6-30-14 CIVIL STATE OF CALIFORNIA

THE STATE OF CALIFORNIA OR ITS OFFICERS OR AGENTS SHALL NOT BE RESPONSIBLE FOR THE ACCURACY OR COMPLETENESS OF SCANNED COPIES OF THIS PLAN SHEET.

NOTE:

EXISTING AC PAVEMENT INCLUDES PAVEMENT REINFORCING FABRIC.

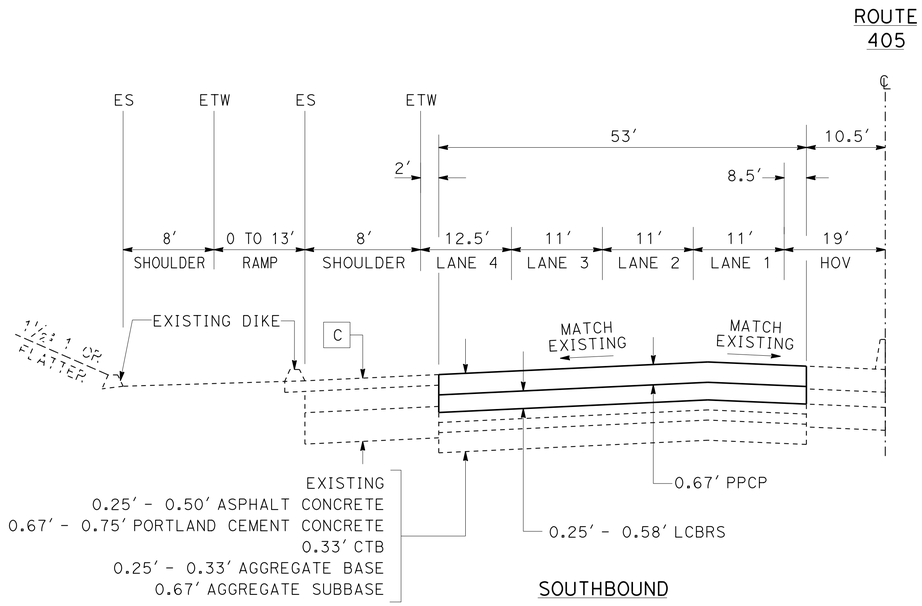

SOUTHBOUND

Sta 2469+73.06 TO Sta 2471+93.36

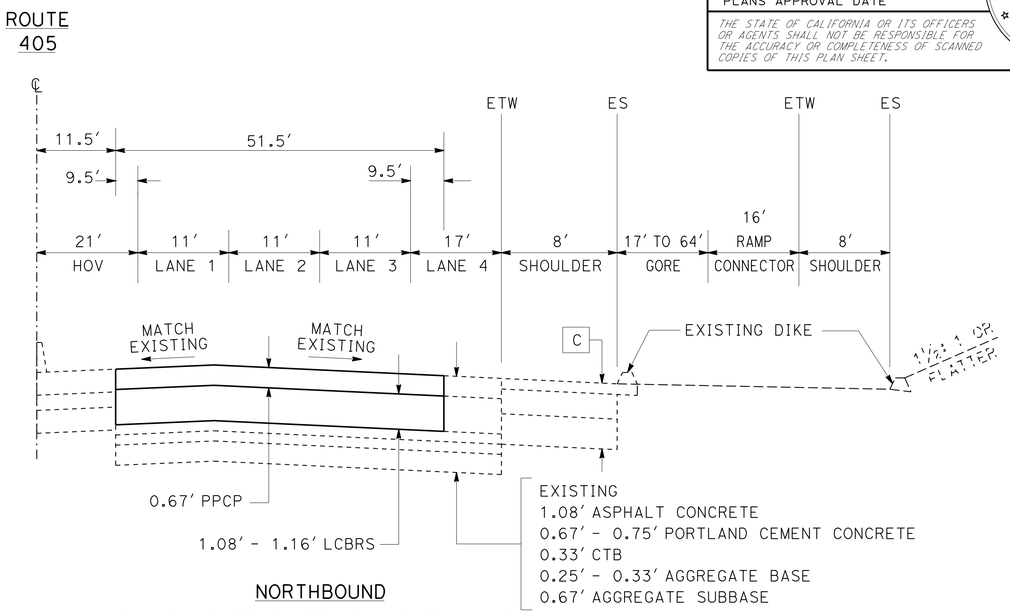

NORTHBOUND

Sta 2469+75.52 TO Sta 2471+91.20

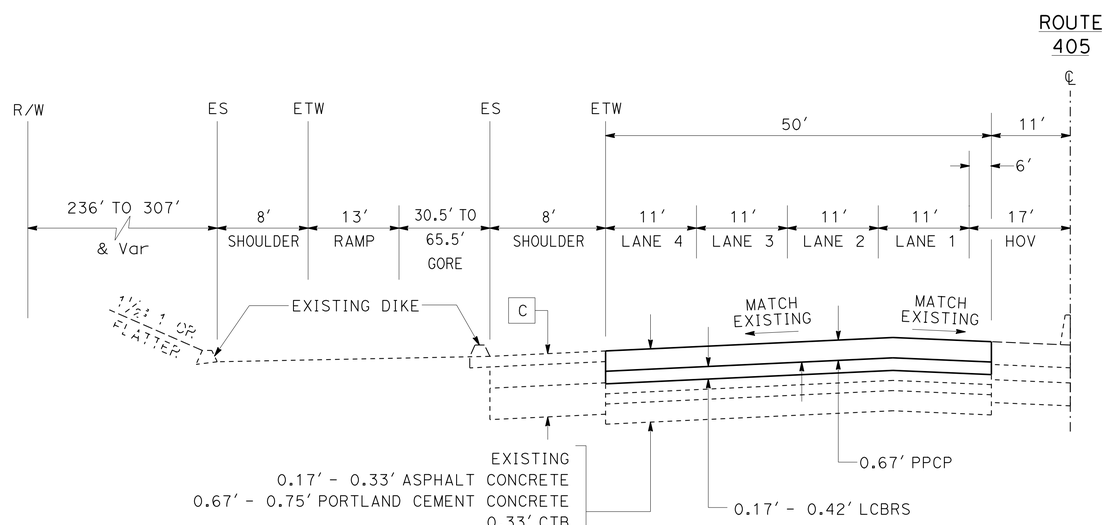

SOUTHBOUND

Sta 2464+88.51 TO Sta 2467+60.52

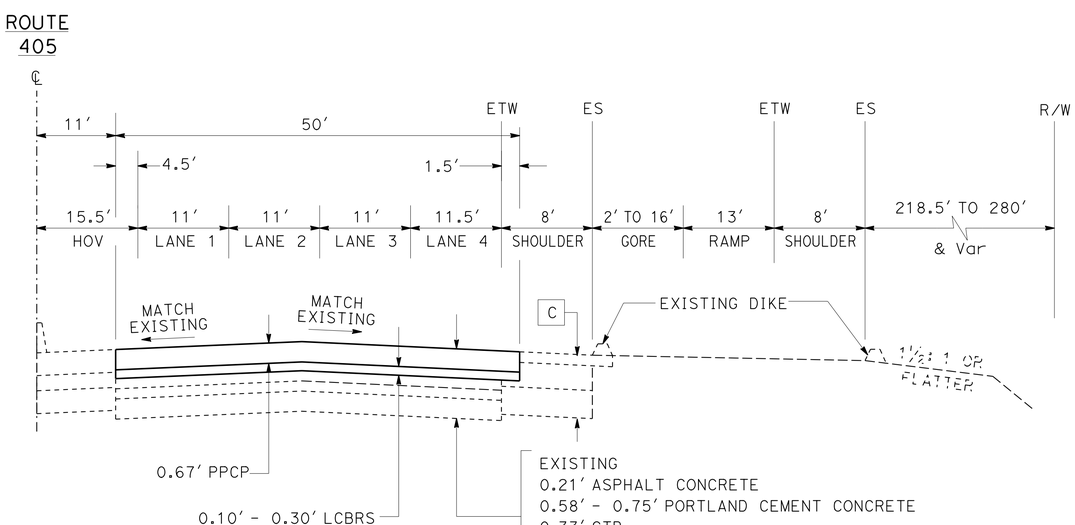

NORTHBOUND

Sta 2464+88.51 TO Sta 2467+60.51

TYPICAL CROSS SECTIONS

NO SCALE

X-6

REVISED BY | DATE REVISED
PETER DINH | PAUL CRISPI
CALCULATED-DESIGNED BY | CHECKED BY
FUNCTIONAL SUPERVISOR
PAUL CRISPI

STATE OF CALIFORNIA - DEPARTMENT OF TRANSPORTATION
Caltrans MAINTENANCE ENGINEERING

LAST REVISION 07-30-12 | DATE PLOTTED => 14-FEB-2013 TIME PLOTTED => 13:24

Dist	COUNTY	ROUTE	POST MILES TOTAL PROJECT	SHEET No.	TOTAL SHEETS
07	LA	405	39.4/48.6	8	179

REGISTERED CIVIL ENGINEER 5-30-12 DATE

7-30-12
PLANS APPROVAL DATE

REGISTERED PROFESSIONAL ENGINEER PETER VAN DINH No. C62666 Exp. 6-30-14 CIVIL STATE OF CALIFORNIA

THE STATE OF CALIFORNIA OR ITS OFFICERS OR AGENTS SHALL NOT BE RESPONSIBLE FOR THE ACCURACY OR COMPLETENESS OF SCANNED COPIES OF THIS PLAN SHEET.

NOTE:

EXISTING AC PAVEMENT INCLUDES PAVEMENT REINFORCING FABRIC.

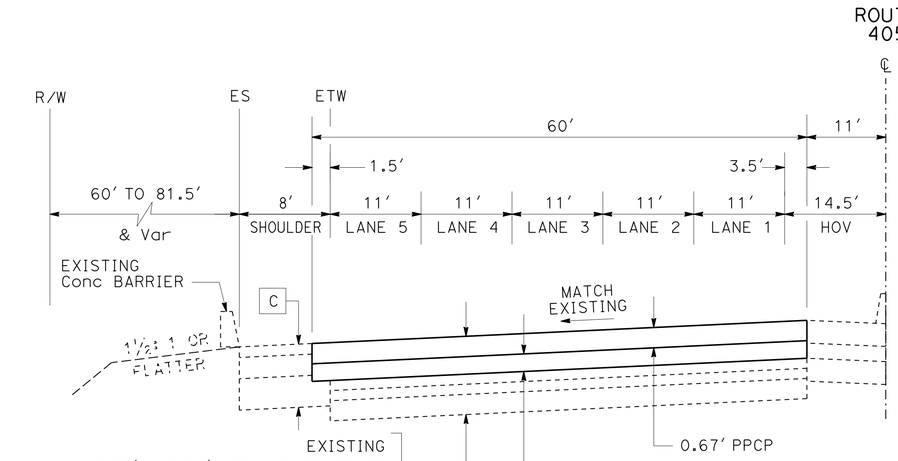

SOUTHBOUND

Sta 2490+25.90 TO Sta 2494+01.22

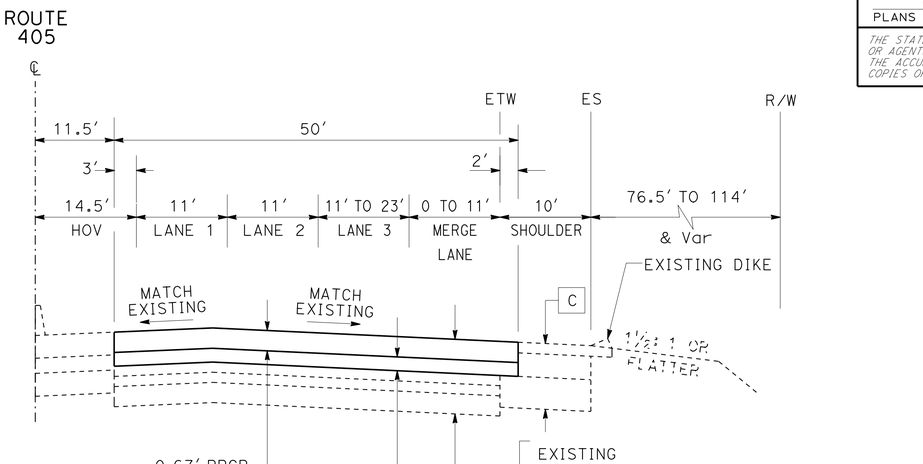

NORTHBOUND

Sta 2490+43.85 TO Sta 2494+02.64

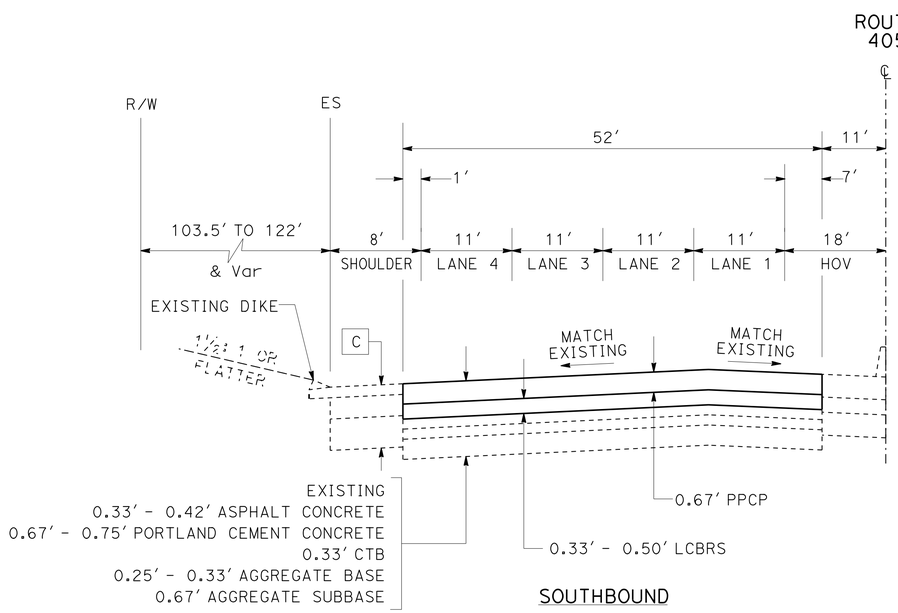

SOUTHBOUND

Sta 2475+26.09 TO Sta 2479+32.08

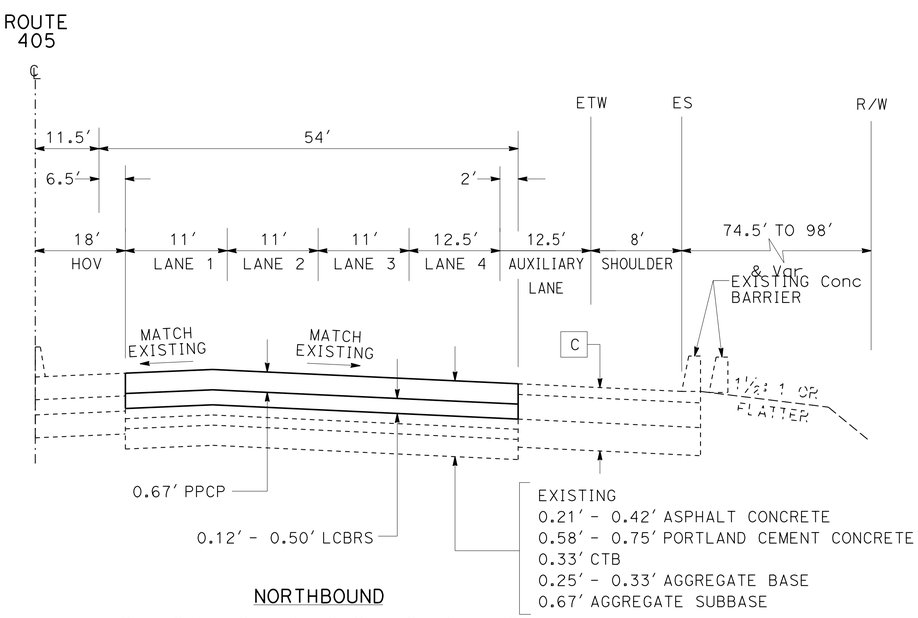

NORTHBOUND

Sta 2475+27.30 TO Sta 2478+5.30

TYPICAL CROSS SECTIONS

NO SCALE

X-7

STATE OF CALIFORNIA - DEPARTMENT OF TRANSPORTATION
Caltrans MAINTENANCE ENGINEERING

FUNCTIONAL SUPERVISOR: PAUL CRISPI
CALCULATED-DESIGNED BY: PETER DINH
CHECKED BY: PAUL CRISPI
REVISED BY
DATE REVISED

LAST REVISION 07-30-12
DATE PLOTTED => 14-FEB-2013
TIME PLOTTED => 13:24

Dist	COUNTY	ROUTE	POST MILES TOTAL PROJECT	SHEET No.	TOTAL SHEETS
07	LA	405	39.4/48.6	9	179

REGISTERED CIVIL ENGINEER 5-30-12 DATE

7-30-12
PLANS APPROVAL DATE

REGISTERED PROFESSIONAL ENGINEER PETER VAN DINH No. C62666 Exp. 6-30-14 CIVIL STATE OF CALIFORNIA

THE STATE OF CALIFORNIA OR ITS OFFICERS OR AGENTS SHALL NOT BE RESPONSIBLE FOR THE ACCURACY OR COMPLETENESS OF SCANNED COPIES OF THIS PLAN SHEET.

NOTE:

EXISTING AC PAVEMENT INCLUDES PAVEMENT REINFORCING FABRIC

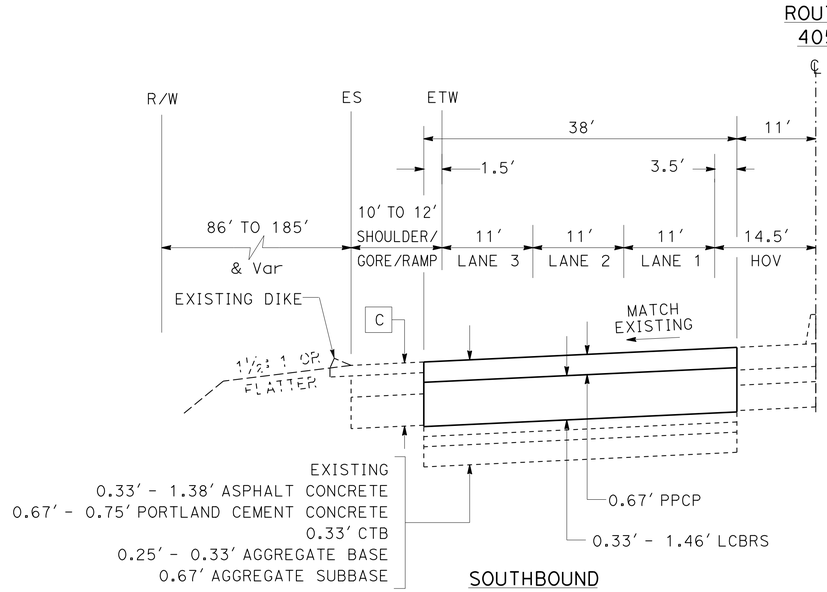

SOUTHBOUND

Sta 2509+89.86 TO Sta 2521+10.73

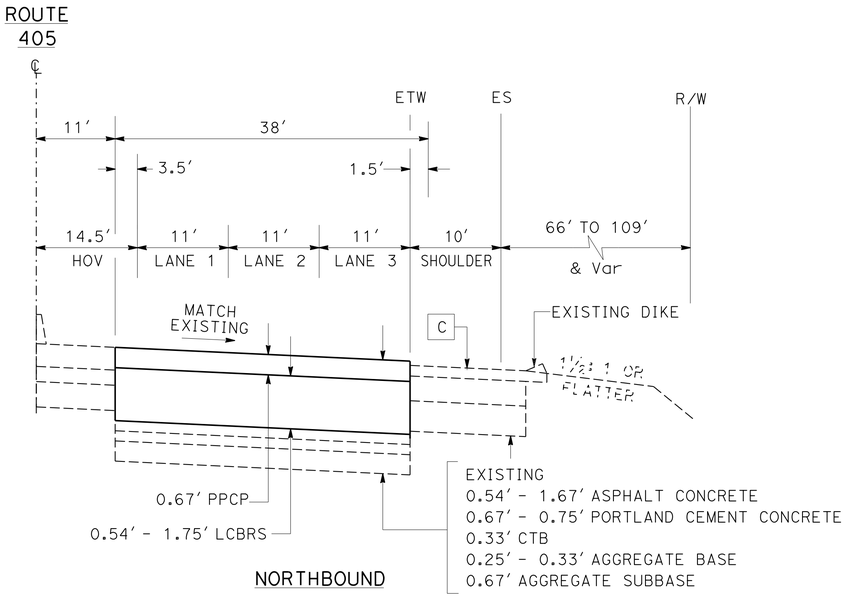

NORTHBOUND

Sta 2509+89.67 TO Sta 2521+56.24

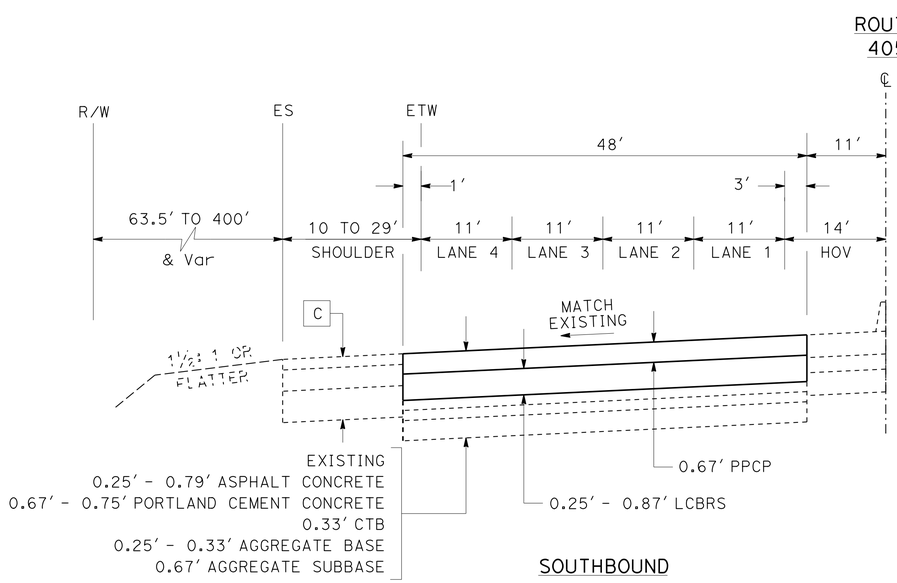

SOUTHBOUND

Sta 2496+13.62 TO Sta 2500+22.58

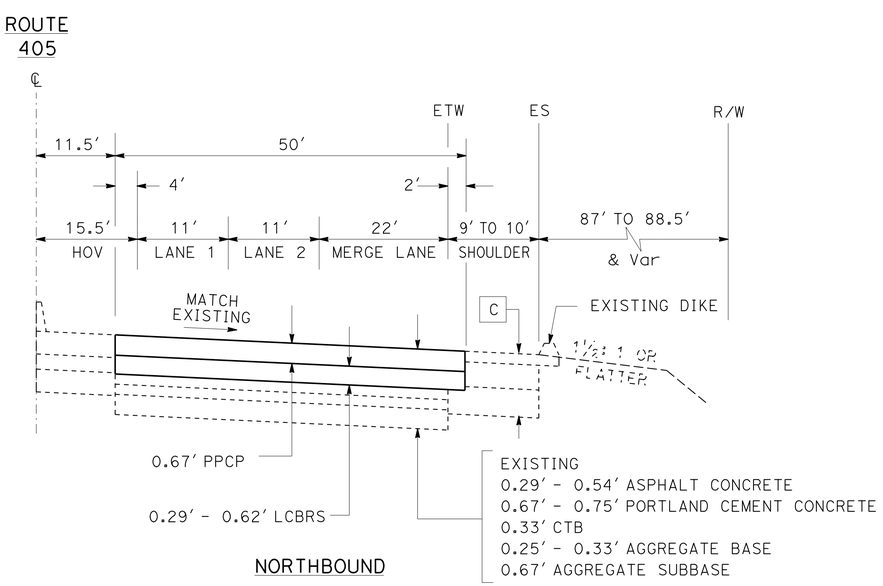

NORTHBOUND

Sta 2496+01.22 TO Sta 2500+23.36

TYPICAL CROSS SECTIONS

NO SCALE

X-8

STATE OF CALIFORNIA - DEPARTMENT OF TRANSPORTATION
Caltrans MAINTENANCE ENGINEERING

FUNCTIONAL SUPERVISOR: PAUL CRISPI

CALCULATED-DESIGNED BY: PETER DINH
CHECKED BY: PAUL CRISPI
REVISED BY
DATE REVISED

LAST REVISION 07-30-12
DATE PLOTTED => 14-FEB-2013
TIME PLOTTED => 13:24

Dist	COUNTY	ROUTE	POST MILES TOTAL PROJECT	SHEET No.	TOTAL SHEETS
07	LA	405	39.4/48.6	10	179

REGISTERED CIVIL ENGINEER 5-30-12 DATE

7-30-12
PLANS APPROVAL DATE

REGISTERED PROFESSIONAL ENGINEER PETER VAN DINH No. C62666 Exp. 6-30-14 CIVIL STATE OF CALIFORNIA

THE STATE OF CALIFORNIA OR ITS OFFICERS OR AGENTS SHALL NOT BE RESPONSIBLE FOR THE ACCURACY OR COMPLETENESS OF SCANNED COPIES OF THIS PLAN SHEET.

NOTE:

EXISTING AC PAVEMENT INCLUDES PAVEMENT REINFORCING FABRIC.

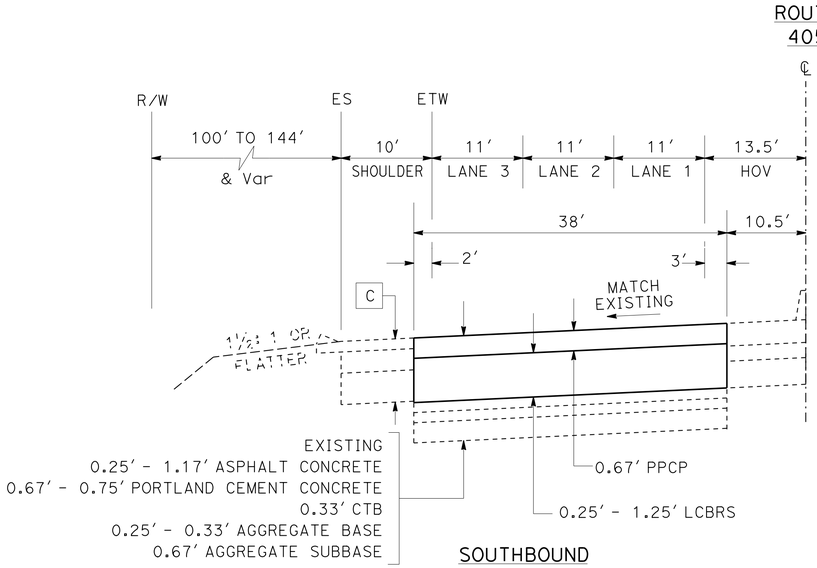

SOUTHBOUND

Sta 2523+17.38 TO Sta 2530+37.76

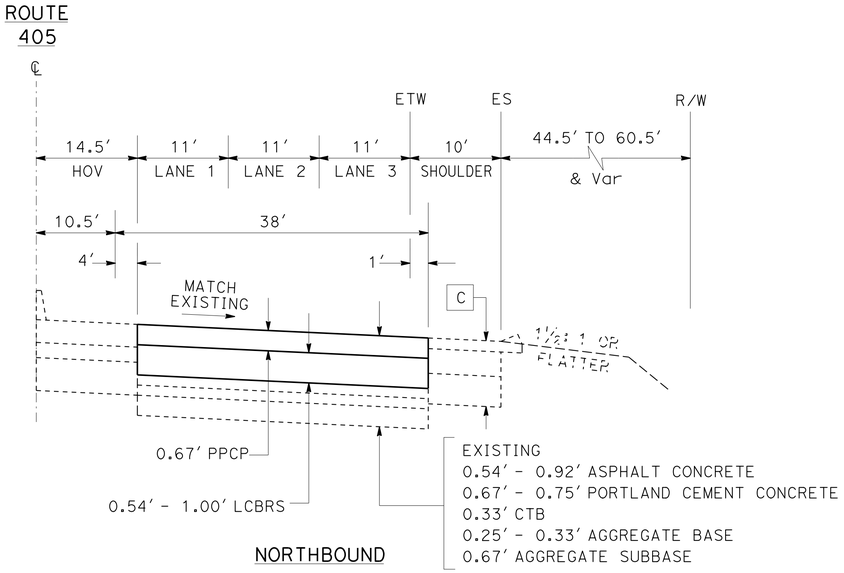

NORTHBOUND

Sta 2523+23.17 TO Sta 2530+32.77

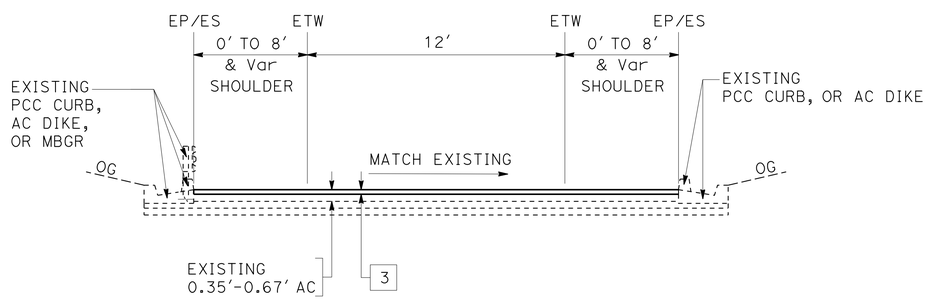

RAMPS

SB ON-RAMP FROM VICTORY Blvd
NB ON-RAMP FROM EB DEVONSHIRE St
NB ON-RAMP FROM WB DEVONSHIRE St
SB ON-RAMP FROM EB DEVONSHIRE St
SB ON-RAMP FROM WB DEVONSHIRE St
NB OFF-RAMP TO SAN FERNANDO MISSION Blvd

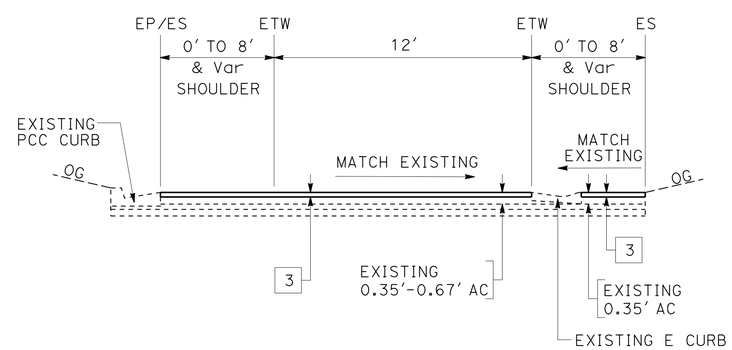

RAMP

NB ON-RAMP FROM EB DEVONSHIRE St

TYPICAL CROSS SECTIONS

NO SCALE

X-9

STATE OF CALIFORNIA - DEPARTMENT OF TRANSPORTATION
Caltrans MAINTENANCE ENGINEERING

FUNCTIONAL SUPERVISOR: PAUL CRISPI
CALCULATED-DESIGNED BY: PETER DINH
CHECKED BY: PAUL CRISPI
REVISED BY
DATE REVISED

LAST REVISION 07-30-12
DATE PLOTTED => 14-FEB-2013
TIME PLOTTED => 13:24

Dist	COUNTY	ROUTE	POST MILES TOTAL PROJECT	SHEET No.	TOTAL SHEETS
07	LA	405	39.4/48.6	11	179

REGISTERED CIVIL ENGINEER 5-30-12 DATE

7-30-12
PLANS APPROVAL DATE

REGISTERED PROFESSIONAL ENGINEER PETER VAN DINH No. C62666 Exp. 6-30-14 CIVIL STATE OF CALIFORNIA

THE STATE OF CALIFORNIA OR ITS OFFICERS OR AGENTS SHALL NOT BE RESPONSIBLE FOR THE ACCURACY OR COMPLETENESS OF SCANNED COPIES OF THIS PLAN SHEET.

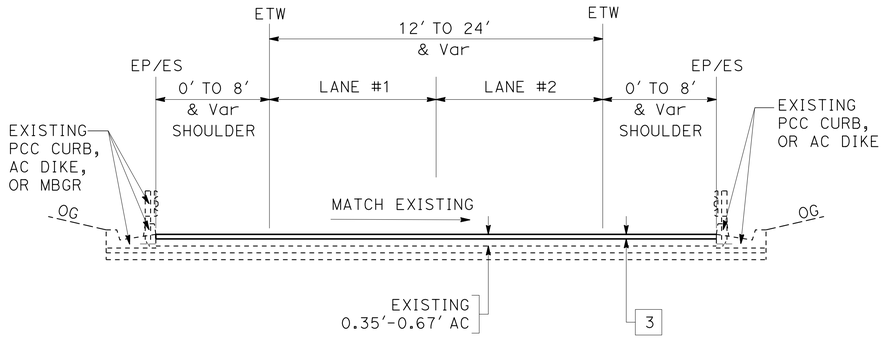

RAMPS

NB ON-RAMP FROM BURBANK Blvd
SB ON-RAMP FROM BURBANK Blvd
NB OFF-RAMP TO VICTORY Blvd
NB OFF-RAMP TO WB SHERMAN WAY
NB ON-RAMP FROM WB SHERMAN WAY
SB ON-RAMP FROM EB SHERMAN WAY
NB ON-RAMP FROM ROSCOE Blvd
SB ON-RAMP FROM ROSCOE Blvd
NB ON-RAMP FROM NORDHOFF St
SB OFF-RAMP TO NORDHOFF St
SB ON-RAMP FROM NORDHOFF St
NB OFF-RAMP TO DEVONSHIRE St
SB OFF-RAMP TO DEVONSHIRE St
SB ON-RAMP FROM SAN FERNANDO MISSION Blvd
NB OFF-RAMP TO RINALDI St/SEPULVEDA Blvd
SB OFF-RAMP TO RINALDI St
SB ON-RAMP FROM RINALDI St

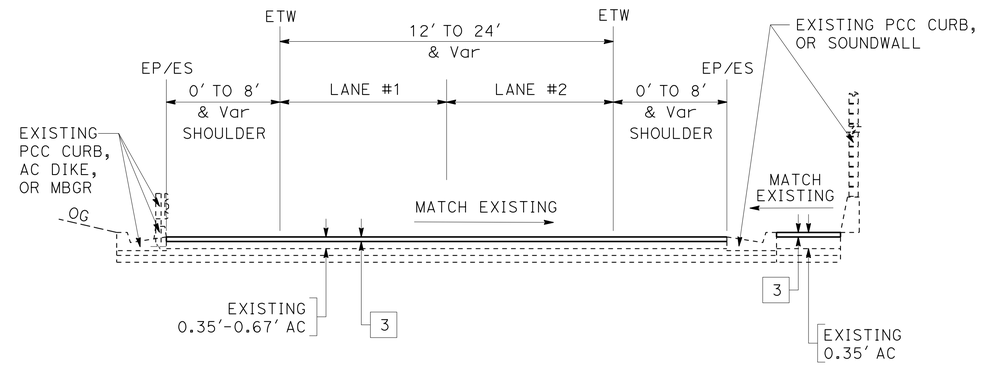

RAMPS

NB ON-RAMP FROM VICTORY Blvd
NB OFF-RAMP TO VICTORY Blvd/HASKELL Ave
SB ON-RAMP FROM VICTORY Blvd/HASKELL Ave
NB OFF-RAMP TO EB SHERMAN WAY
SB OFF-RAMP TO SHERMAN WAY/HASKELL Ave
SB ON-RAMP FROM SHERMAN WAY/HASKEL Ave

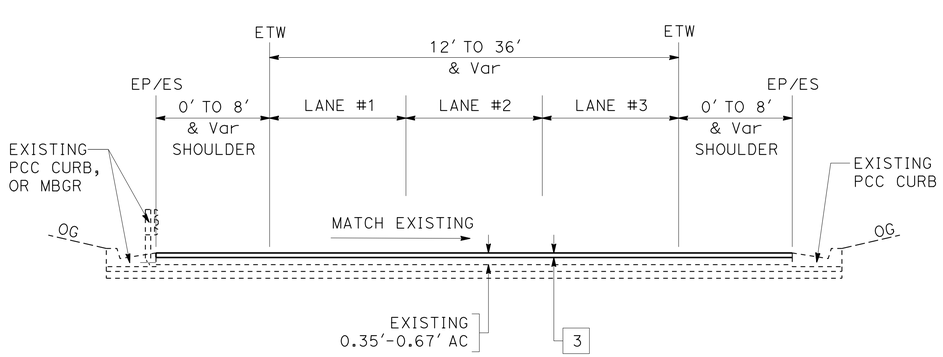

RAMPS

NB OFF-RAMP TO BURBANK Blvd
SB OFF-RAMP TO BURBANK Blvd
SB OFF-RAMP TO ROSCOE Blvd

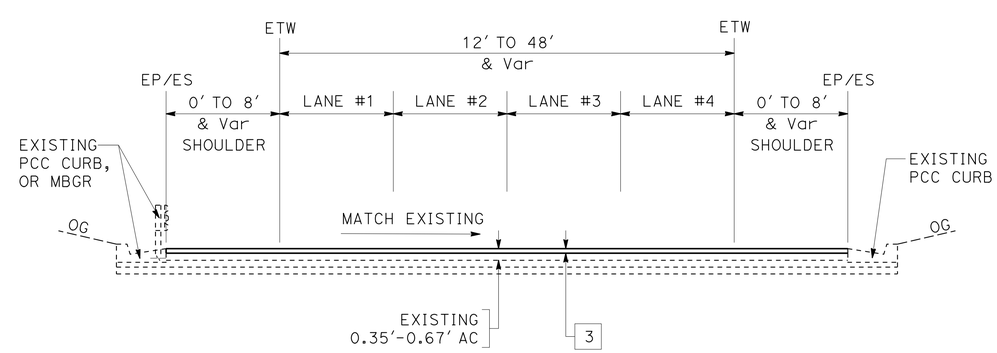

RAMPS

NB OFF-RAMP TO ROSCOE Blvd
NB OFF-RAMP TO NORDHOFF St

TYPICAL CROSS SECTIONS

NO SCALE

X-10

STATE OF CALIFORNIA - DEPARTMENT OF TRANSPORTATION
Caltrans MAINTENANCE ENGINEERING

FUNCTIONAL SUPERVISOR: PAUL CRISPI
CALCULATED-DESIGNED BY: PETER DINH
CHECKED BY: PAUL CRISPI
REVISED BY
DATE REVISED

LAST REVISION 07-30-12
DATE PLOTTED => 14-FEB-2013
TIME PLOTTED => 13:24

Dist	COUNTY	ROUTE	POST MILES TOTAL PROJECT	SHEET No.	TOTAL SHEETS
07	LA	405	39.4/48.6	12	179

REGISTERED CIVIL ENGINEER 5-30-12 DATE

7-30-12
PLANS APPROVAL DATE

REGISTERED PROFESSIONAL ENGINEER ANDREW K. NGUYEN No. C62828 Exp. 6-30-14 CIVIL STATE OF CALIFORNIA

THE STATE OF CALIFORNIA OR ITS OFFICERS OR AGENTS SHALL NOT BE RESPONSIBLE FOR THE ACCURACY OR COMPLETENESS OF SCANNED COPIES OF THIS PLAN SHEET.

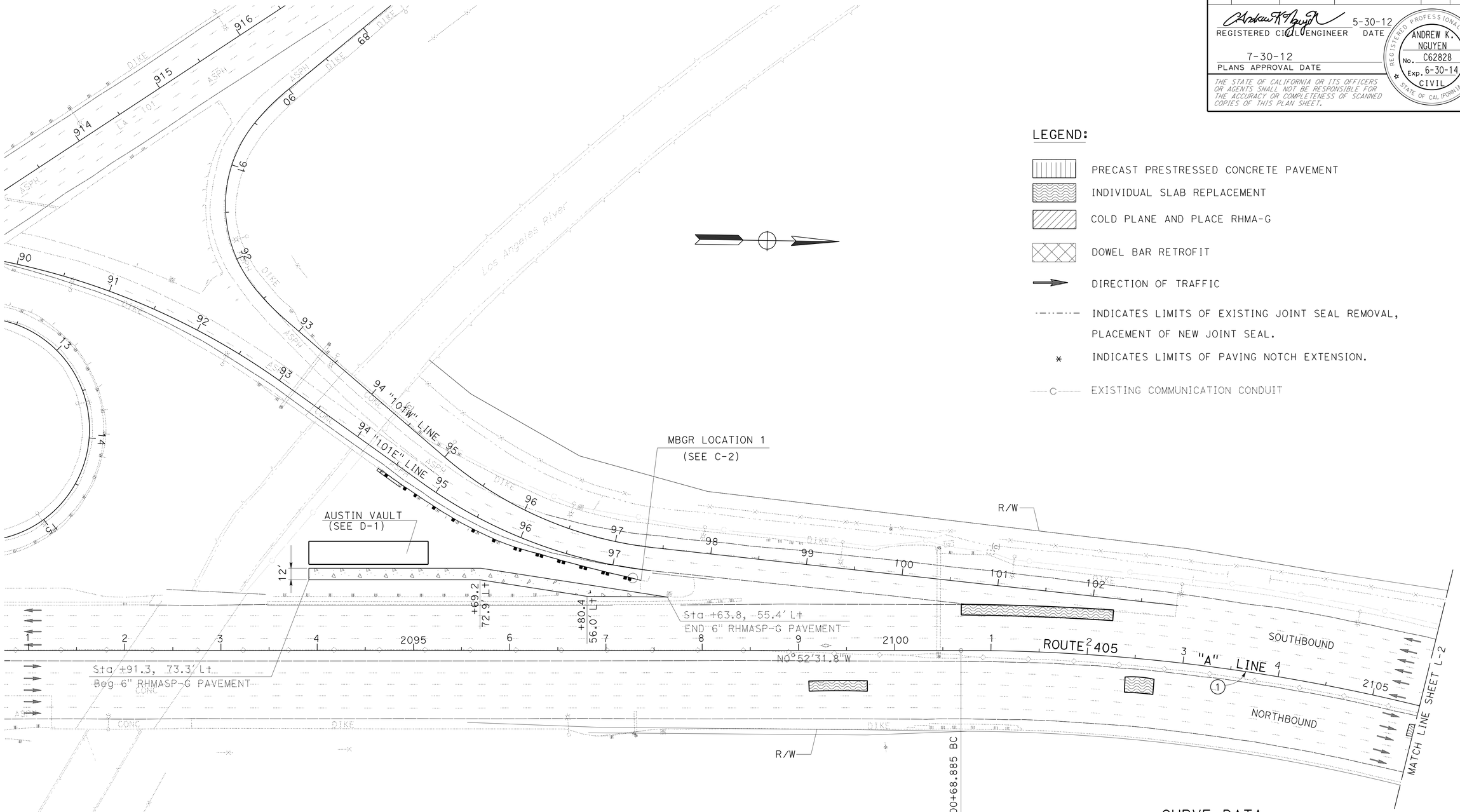

LEGEND:

- PRECAST PRESTRESSED CONCRETE PAVEMENT
- INDIVIDUAL SLAB REPLACEMENT
- COLD PLANE AND PLACE RHMA-G
- DOWEL BAR RETROFIT
- DIRECTION OF TRAFFIC
- INDICATES LIMITS OF EXISTING JOINT SEAL REMOVAL, PLACEMENT OF NEW JOINT SEAL.
- * INDICATES LIMITS OF PAVING NOTCH EXTENSION.
- C EXISTING COMMUNICATION CONDUIT

NOTES:

1. FOR ACCURATE RIGHT OF WAY DATA, CONTACT RIGHT OF WAY ENGINEERING AT THE DISTRICT OFFICE.
2. THE CONTRACTOR SHALL VERIFY ALL CONTROLLING FIELD DIMENSIONS BEFORE ORDERING OR FABRICATING ANY MATERIAL
3. FOR STRUCTURE APPROACH TYPE R(30D) DETAILS, SEE "STRUCTURE APPROACH TYPE R" SHEET

ABBREVIATIONS:

PPCP = PRECAST PRESTRESSED CONCRETE PAVEMENT
LCBRS = LEAN CONCRETE BASE RAPID SETTING
RHMASP-G = RUBBERIZED HOT MIX ASPHALT, SUPERPAVE (GAP GRADED)

CURVE DATA

No.	R	Δ	T	L
1	2000.06'	27°43'00"	493.42'	967.52'

LAYOUT

SCALE: 1" = 50'

L-1

STATE OF CALIFORNIA - DEPARTMENT OF TRANSPORTATION
Caltrans MAINTENANCE ENGINEERING

FUNCTIONAL SUPERVISOR: PAUL CRISPI
CALCULATED-DESIGNED BY: ANDREW NGUYEN
CHECKED BY: PAUL CRISPI
REVISED BY
DATE REVISED

LAST REVISION 07-30-12
DATE PLOTTED => 14-FEB-2013
TIME PLOTTED => 13:24

Dist	COUNTY	ROUTE	POST MILES TOTAL PROJECT	SHEET No.	TOTAL SHEETS
07	LA	405	39.4/48.6	13	179

REGISTERED CIVIL ENGINEER 5-30-12 DATE

7-30-12
PLANS APPROVAL DATE

REGISTERED PROFESSIONAL ENGINEER ANDREW K. NGUYEN No. C62828 Exp. 6-30-14 CIVIL STATE OF CALIFORNIA

THE STATE OF CALIFORNIA OR ITS OFFICERS OR AGENTS SHALL NOT BE RESPONSIBLE FOR THE ACCURACY OR COMPLETENESS OF SCANNED COPIES OF THIS PLAN SHEET.

NOTE:

FOR ACCURATE RIGHT OF WAY DATA, CONTACT RIGHT OF WAY ENGINEERING AT THE DISTRICT OFFICE.

CURVE DATA

No.	R	Δ	T	L
1	2000.06′	27°43′00"	493.42′	967.52′
2	1999.91′	27°43′26"	493.52′	967.70′

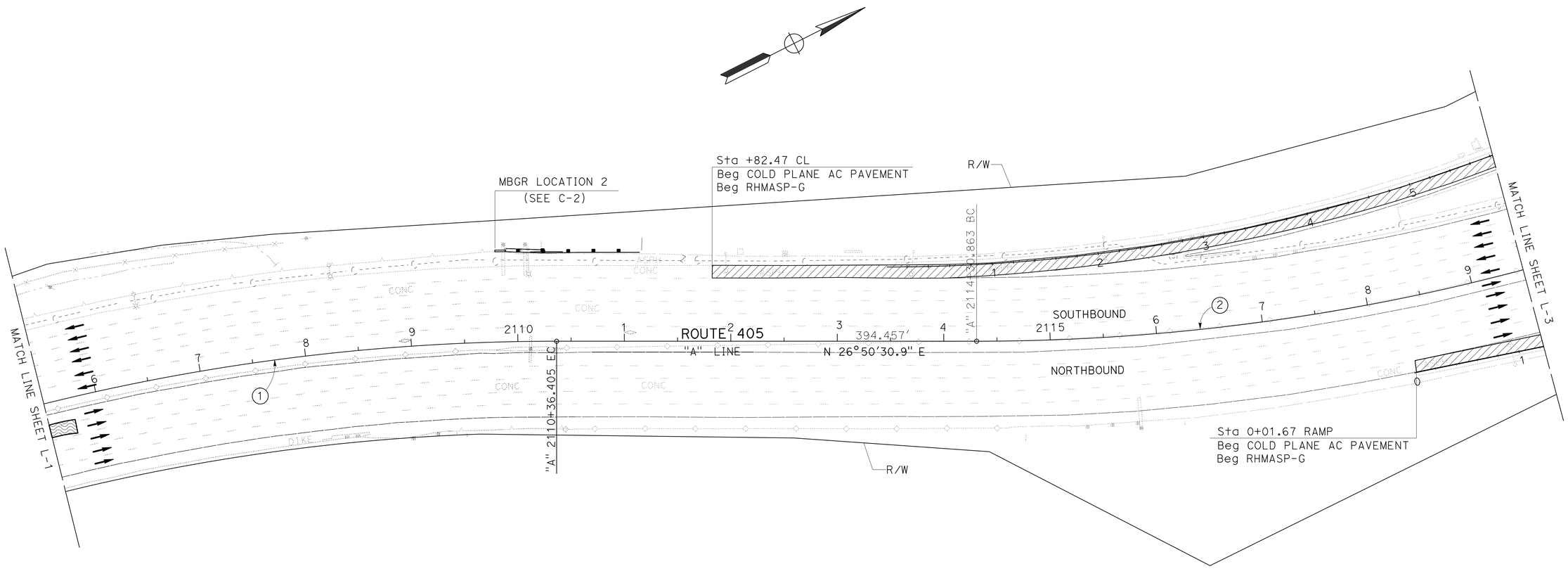

LAYOUT
SCALE: 1" = 50′

L-2

STATE OF CALIFORNIA - DEPARTMENT OF TRANSPORTATION
Caltrans MAINTENANCE ENGINEERING

FUNCTIONAL SUPERVISOR: PAUL CRISPI

CALCULATED-DESIGNED BY: ANDREW NGUYEN
CHECKED BY: PAUL CRISPI

REVISED BY
DATE REVISED

LAST REVISION 07-30-12 | DATE PLOTTED => 14-FEB-2013 | TIME PLOTTED => 13:24

Dist	COUNTY	ROUTE	POST MILES TOTAL PROJECT	SHEET No.	TOTAL SHEETS
07	LA	405	39.4/48.6	14	179

REGISTERED CIVIL ENGINEER 5-30-12 DATE

7-30-12
PLANS APPROVAL DATE

REGISTERED PROFESSIONAL ENGINEER ANDREW K. NGUYEN No. C62828 Exp. 6-30-14 CIVIL STATE OF CALIFORNIA

THE STATE OF CALIFORNIA OR ITS OFFICERS OR AGENTS SHALL NOT BE RESPONSIBLE FOR THE ACCURACY OR COMPLETENESS OF SCANNED COPIES OF THIS PLAN SHEET.

NOTE:

FOR ACCURATE RIGHT OF WAY DATA, CONTACT RIGHT OF WAY ENGINEERING AT THE DISTRICT OFFICE.

CURVE DATA

No.	R	Δ	T	L
2	1999.91′	27°43′26″	493.52′	967.70′

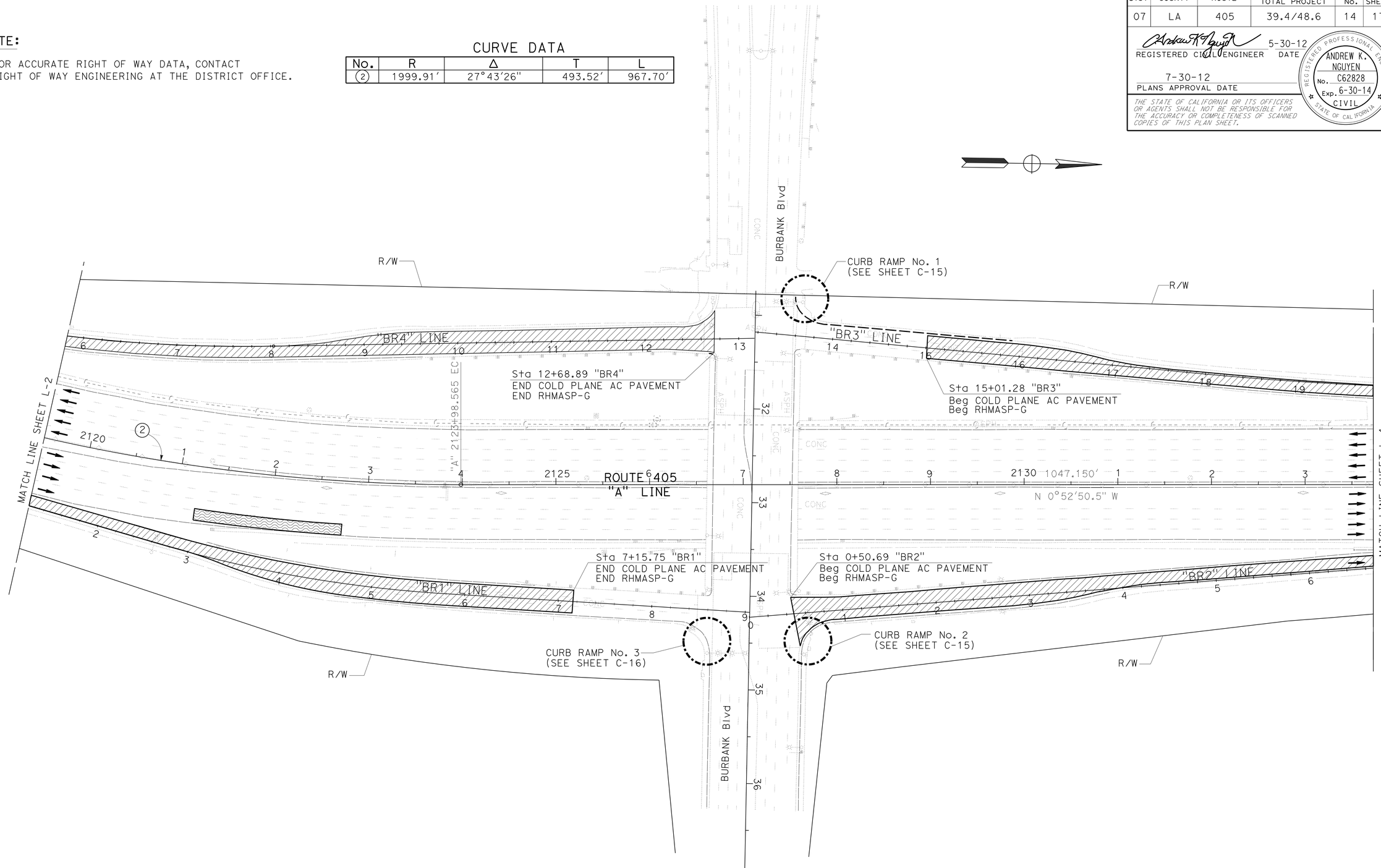

LAYOUT
SCALE: 1" = 50′

L-3

STATE OF CALIFORNIA - DEPARTMENT OF TRANSPORTATION
Caltrans MAINTENANCE ENGINEERING

FUNCTIONAL SUPERVISOR: PAUL CRISPI
CALCULATED-DESIGNED BY: ANDREW NGUYEN
CHECKED BY: PAUL CRISPI
REVISED BY
DATE REVISED

LAST REVISION 07-30-12
DATE PLOTTED => 14-FEB-2013
TIME PLOTTED => 13:24

Dist	COUNTY	ROUTE	POST MILES TOTAL PROJECT	SHEET No.	TOTAL SHEETS
07	LA	405	39.4/48.6	15	179

REGISTERED CIVIL ENGINEER 5-30-12 DATE

7-30-12
PLANS APPROVAL DATE

REGISTERED PROFESSIONAL ENGINEER ANDREW K. NGUYEN No. C62828 Exp. 6-30-14 CIVIL STATE OF CALIFORNIA

THE STATE OF CALIFORNIA OR ITS OFFICERS OR AGENTS SHALL NOT BE RESPONSIBLE FOR THE ACCURACY OR COMPLETENESS OF SCANNED COPIES OF THIS PLAN SHEET.

NOTE:

FOR ACCURATE RIGHT OF WAY DATA, CONTACT RIGHT OF WAY ENGINEERING AT THE DISTRICT OFFICE.

CURVE DATA

No.	R	Δ	T	L
3	3400.01′	30°19′43"	921.49′	1799.74′

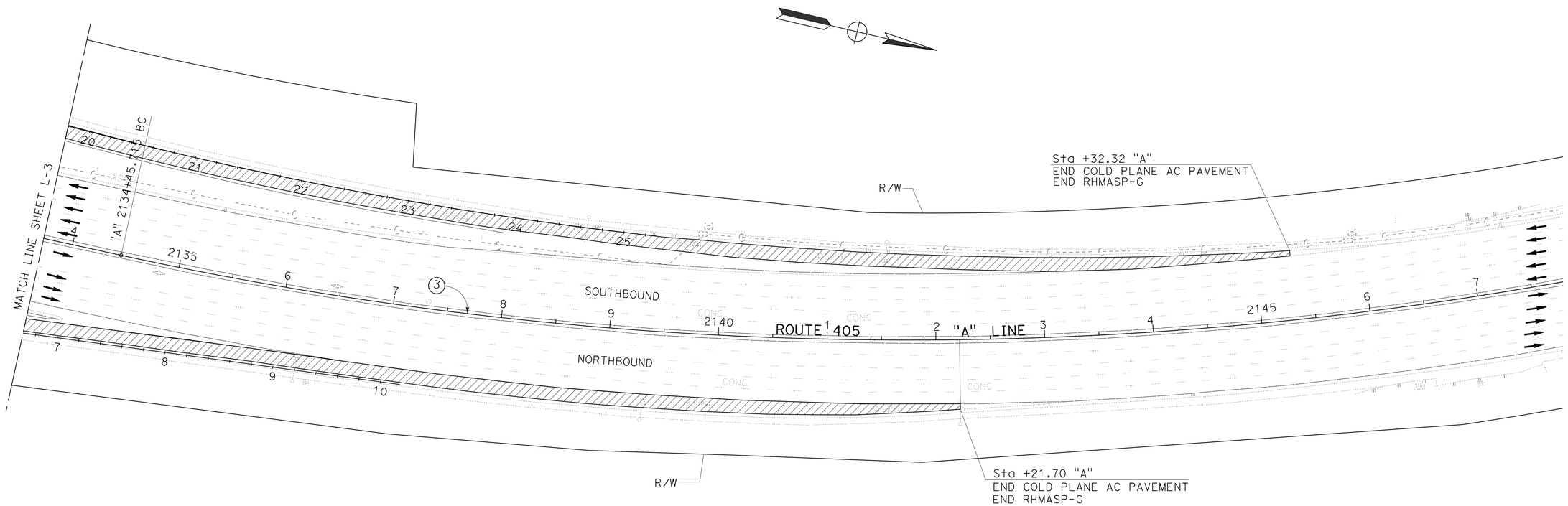

LAYOUT
SCALE: 1" = 50′

L-4

REVISED BY	DATE REVISED

CALCULATED-DESIGNED BY	CHECKED BY
ANDREW NGUYEN	PAUL CRISPI

FUNCTIONAL SUPERVISOR: PAUL CRISPI

STATE OF CALIFORNIA - DEPARTMENT OF TRANSPORTATION
Caltrans MAINTENANCE ENGINEERING

LAST REVISION 07-30-12 | DATE PLOTTED => 14-FEB-2013 | TIME PLOTTED => 13:24

Dist	COUNTY	ROUTE	POST MILES TOTAL PROJECT	SHEET No.	TOTAL SHEETS
07	LA	405	39.4/48.6	16	179

REGISTERED CIVIL ENGINEER 5-30-12 DATE

7-30-12
PLANS APPROVAL DATE

REGISTERED PROFESSIONAL ENGINEER ANDREW K. NGUYEN No. C62828 Exp. 6-30-14 CIVIL STATE OF CALIFORNIA

THE STATE OF CALIFORNIA OR ITS OFFICERS OR AGENTS SHALL NOT BE RESPONSIBLE FOR THE ACCURACY OR COMPLETENESS OF SCANNED COPIES OF THIS PLAN SHEET.

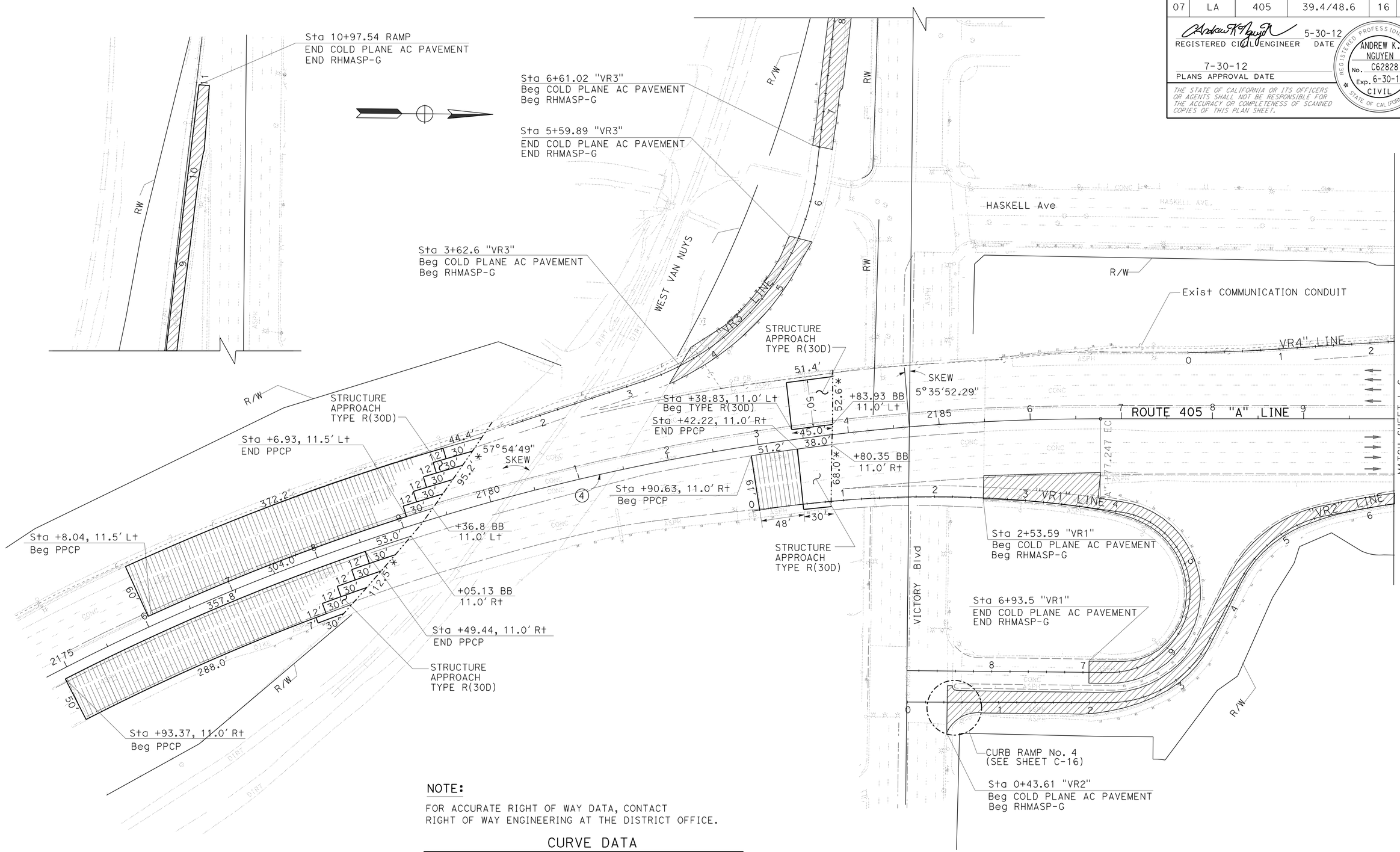

NOTE:

FOR ACCURATE RIGHT OF WAY DATA, CONTACT RIGHT OF WAY ENGINEERING AT THE DISTRICT OFFICE.

CURVE DATA

No.	R	Δ	T	L
4	2500.14'	30°42'28"	686.49'	1339.95'

LAYOUT

SCALE: 1" = 50'

L-5

STATE OF CALIFORNIA - DEPARTMENT OF TRANSPORTATION
Caltrans MAINTENANCE ENGINEERING

FUNCTIONAL SUPERVISOR: PAUL CRISPI
CALCULATED-DESIGNED BY: ANDREW NGUYEN
CHECKED BY: PAUL CRISPI
REVISED BY
DATE REVISED

LAST REVISION 07-30-12
DATE PLOTTED => 14-FEB-2013
TIME PLOTTED => 13:24

Dist	COUNTY	ROUTE	POST MILES TOTAL PROJECT	SHEET No.	TOTAL SHEETS
07	LA	405	39.4/48.6	17	179

REGISTERED CIVIL ENGINEER 5-30-12 DATE

7-30-12
PLANS APPROVAL DATE

REGISTERED PROFESSIONAL ENGINEER ANDREW K. NGUYEN No. C62828 Exp. 6-30-14 CIVIL STATE OF CALIFORNIA

THE STATE OF CALIFORNIA OR ITS OFFICERS OR AGENTS SHALL NOT BE RESPONSIBLE FOR THE ACCURACY OR COMPLETENESS OF SCANNED COPIES OF THIS PLAN SHEET.

NOTE:

FOR ACCURATE RIGHT OF WAY DATA, CONTACT RIGHT OF WAY ENGINEERING AT THE DISTRICT OFFICE.

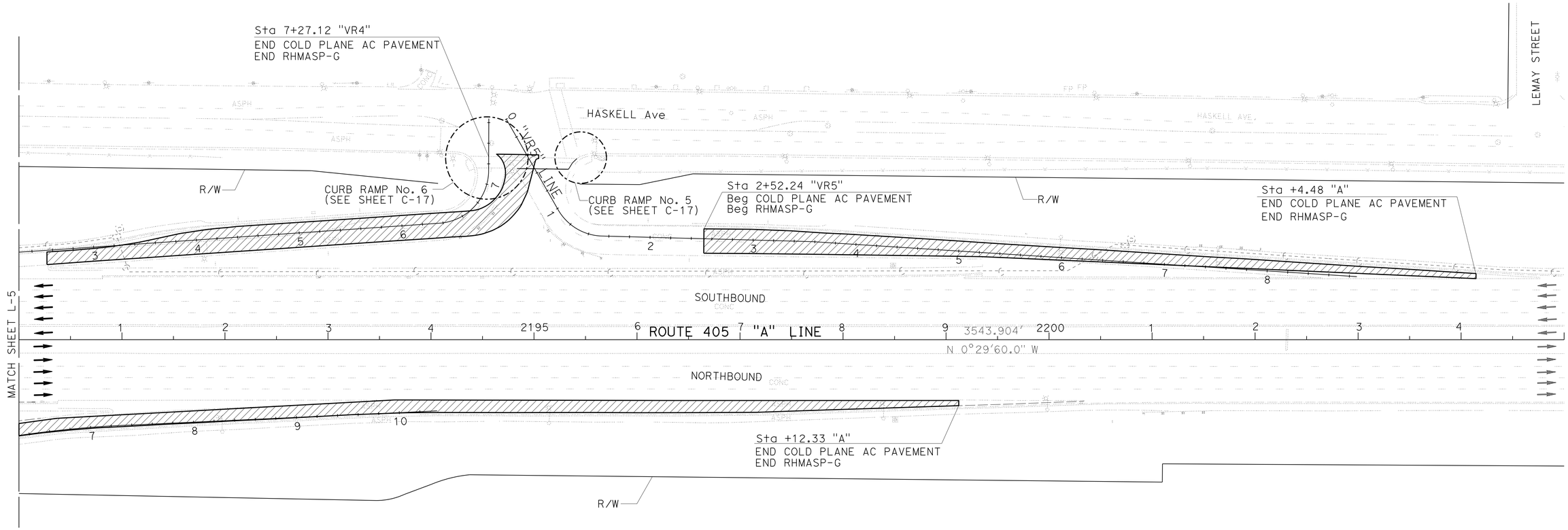

LAYOUT
SCALE: 1" = 50'

L-6

STATE OF CALIFORNIA - DEPARTMENT OF TRANSPORTATION
Caltrans MAINTENANCE ENGINEERING

FUNCTIONAL SUPERVISOR: PAUL CRISPI
CALCULATED-DESIGNED BY: ANDREW NGUYEN
CHECKED BY: PAUL CRISPI
REVISED BY
DATE REVISED

LAST REVISION 07-30-12
DATE PLOTTED => 14-FEB-2013
TIME PLOTTED => 13:25

Dist	COUNTY	ROUTE	POST MILES TOTAL PROJECT	SHEET No.	TOTAL SHEETS
07	LA	405	39.4/48.6	18	179

REGISTERED CIVIL ENGINEER 5-30-12 DATE

7-30-12
PLANS APPROVAL DATE

REGISTERED PROFESSIONAL ENGINEER ANDREW K. NGUYEN No. C62828 Exp. 6-30-14 CIVIL STATE OF CALIFORNIA

THE STATE OF CALIFORNIA OR ITS OFFICERS OR AGENTS SHALL NOT BE RESPONSIBLE FOR THE ACCURACY OR COMPLETENESS OF SCANNED COPIES OF THIS PLAN SHEET.

NOTE:

FOR ACCURATE RIGHT OF WAY DATA, CONTACT RIGHT OF WAY ENGINEERING AT THE DISTRICT OFFICE.

CURVE DATA

No.	R	Δ	T	L
(5)	5000.16′	9°29′01"	414.76′	827.63′

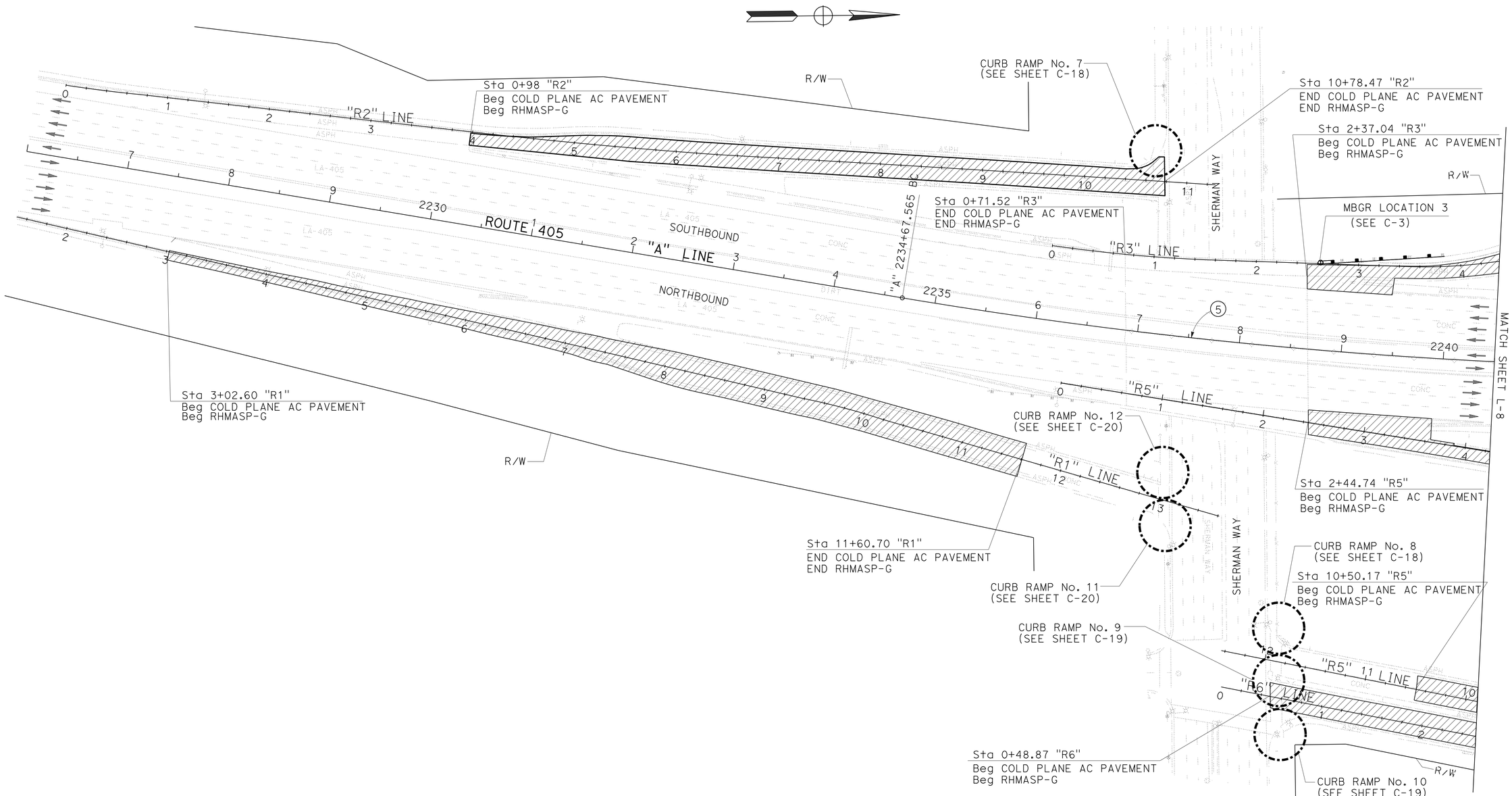

LAYOUT
SCALE: 1" = 50′

L-7

STATE OF CALIFORNIA - DEPARTMENT OF TRANSPORTATION
Caltrans MAINTENANCE ENGINEERING

FUNCTIONAL SUPERVISOR: PAUL CRISPI
CALCULATED-DESIGNED BY: ANDREW NGUYEN
CHECKED BY: PAUL CRISPI
REVISED BY
DATE REVISED

LAST REVISION 07-30-12
DATE PLOTTED => 14-FEB-2013
TIME PLOTTED => 13:25

Dist	COUNTY	ROUTE	POST MILES TOTAL PROJECT	SHEET No.	TOTAL SHEETS
07	LA	405	39.4/48.6	19	179

REGISTERED CIVIL ENGINEER 5-30-12 DATE

7-30-12
PLANS APPROVAL DATE

REGISTERED PROFESSIONAL ENGINEER ANDREW K. NGUYEN No. C62828 Exp. 6-30-14 CIVIL STATE OF CALIFORNIA

THE STATE OF CALIFORNIA OR ITS OFFICERS OR AGENTS SHALL NOT BE RESPONSIBLE FOR THE ACCURACY OR COMPLETENESS OF SCANNED COPIES OF THIS PLAN SHEET.

NOTE:

FOR ACCURATE RIGHT OF WAY DATA, CONTACT RIGHT OF WAY ENGINEERING AT THE DISTRICT OFFICE.

CURVE DATA

No.	R	Δ	T	L
(5)	5000.16′	9°29′01"	414.76′	827.63′

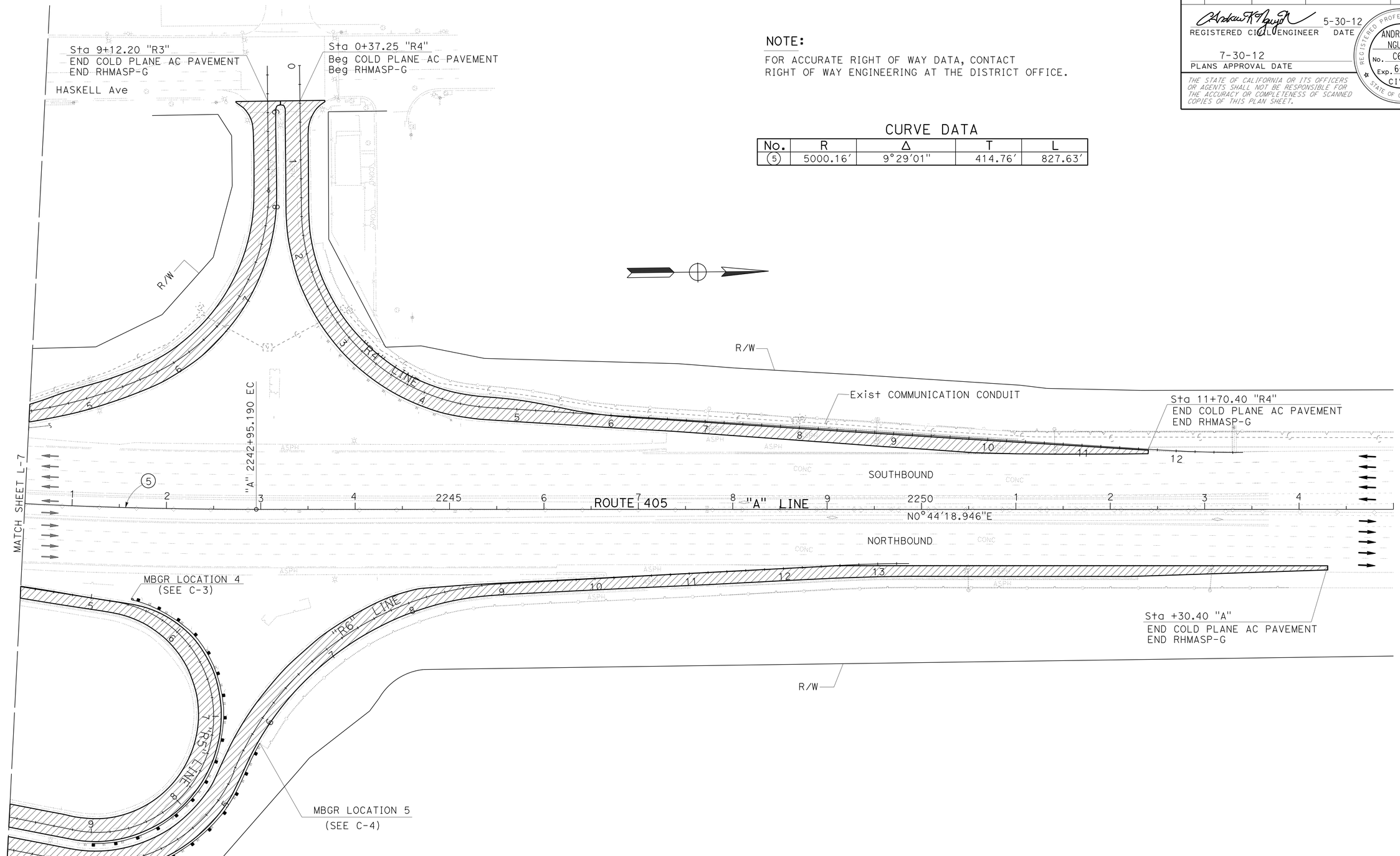

LAYOUT
SCALE: 1" = 50′

L-8

STATE OF CALIFORNIA - DEPARTMENT OF TRANSPORTATION
Caltrans MAINTENANCE ENGINEERING

FUNCTIONAL SUPERVISOR: PAUL CRISPI
CALCULATED-DESIGNED BY: ANDREW NGUYEN
CHECKED BY: PAUL CRISPI
REVISED BY
DATE REVISED

LAST REVISION 07-30-12
DATE PLOTTED => 14-FEB-2013
TIME PLOTTED => 13:25

Dist	COUNTY	ROUTE	POST MILES TOTAL PROJECT	SHEET No.	TOTAL SHEETS
07	LA	405	39.4/48.6	20	179

REGISTERED CIVIL ENGINEER 5-30-12 DATE

7-30-12
PLANS APPROVAL DATE

REGISTERED PROFESSIONAL ENGINEER
ANDREW K. NGUYEN
No. C62828
Exp. 6-30-14
CIVIL
STATE OF CALIFORNIA

THE STATE OF CALIFORNIA OR ITS OFFICERS OR AGENTS SHALL NOT BE RESPONSIBLE FOR THE ACCURACY OR COMPLETENESS OF SCANNED COPIES OF THIS PLAN SHEET.

NOTE:

FOR ACCURATE RIGHT OF WAY DATA, CONTACT RIGHT OF WAY ENGINEERING AT THE DISTRICT OFFICE.

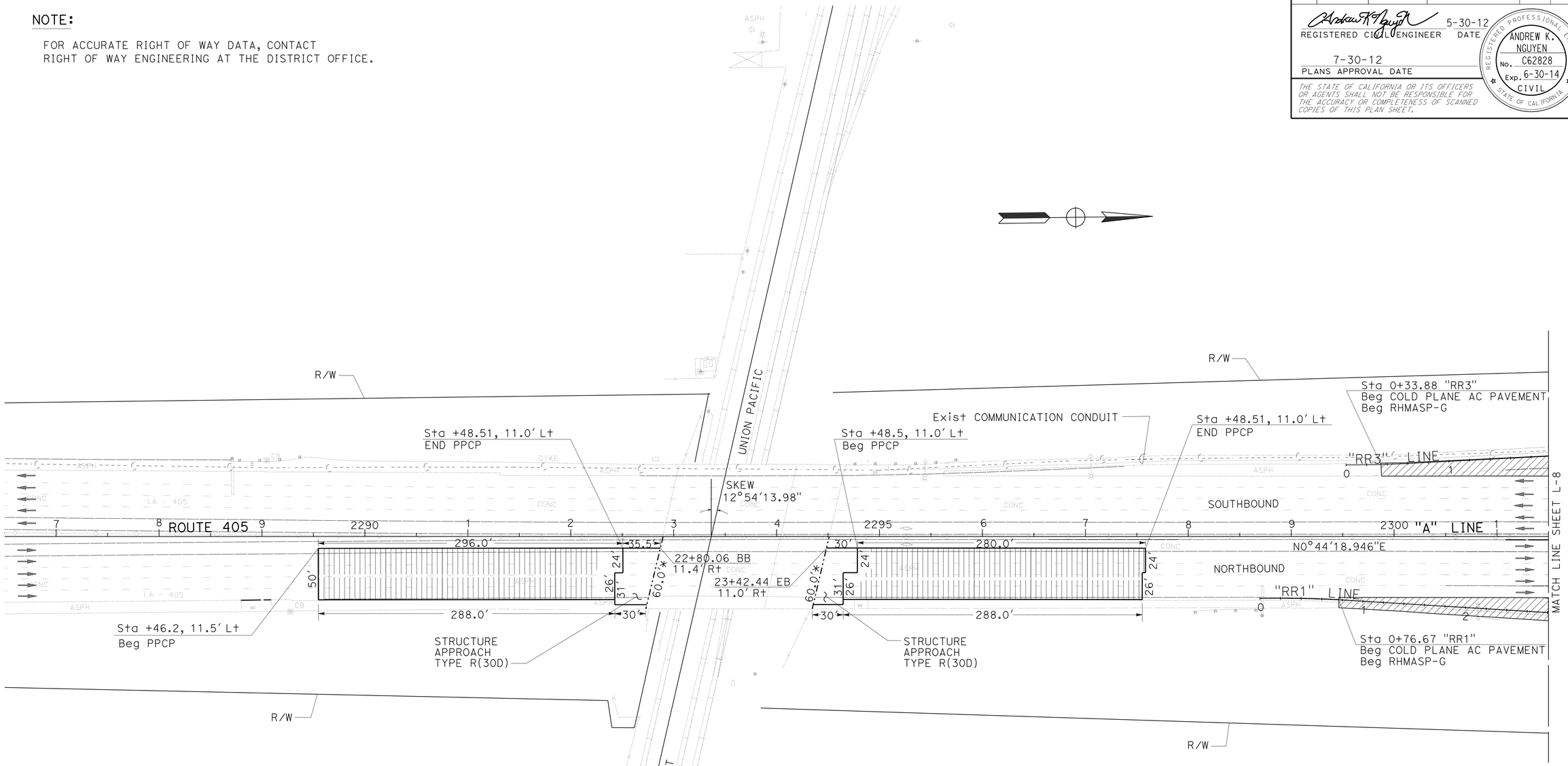

LAYOUT

SCALE: 1" = 50"

L-9

REVISED BY	DATE REVISED

CALCULATED-DESIGNED BY	CHECKED BY
ANDREW NGUYEN	PAUL CRISPI

FUNCTIONAL SUPERVISOR: PAUL CRISPI

STATE OF CALIFORNIA - DEPARTMENT OF TRANSPORTATION
Caltrans MAINTENANCE ENGINEERING

LAST REVISION 07-30-12 | DATE PLOTTED => 14-FEB-2013 | TIME PLOTTED => 13:25

Dist	COUNTY	ROUTE	POST MILES TOTAL PROJECT	SHEET No.	TOTAL SHEETS
07	LA	405	39.4/48.6	21	179

REGISTERED CIVIL ENGINEER 5-30-12 DATE

7-30-12
PLANS APPROVAL DATE

REGISTERED PROFESSIONAL ENGINEER ANDREW K. NGUYEN No. C62828 Exp. 6-30-14 CIVIL STATE OF CALIFORNIA

THE STATE OF CALIFORNIA OR ITS OFFICERS OR AGENTS SHALL NOT BE RESPONSIBLE FOR THE ACCURACY OR COMPLETENESS OF SCANNED COPIES OF THIS PLAN SHEET.

NOTE:

FOR ACCURATE RIGHT OF WAY DATA, CONTACT RIGHT OF WAY ENGINEERING AT THE DISTRICT OFFICE.

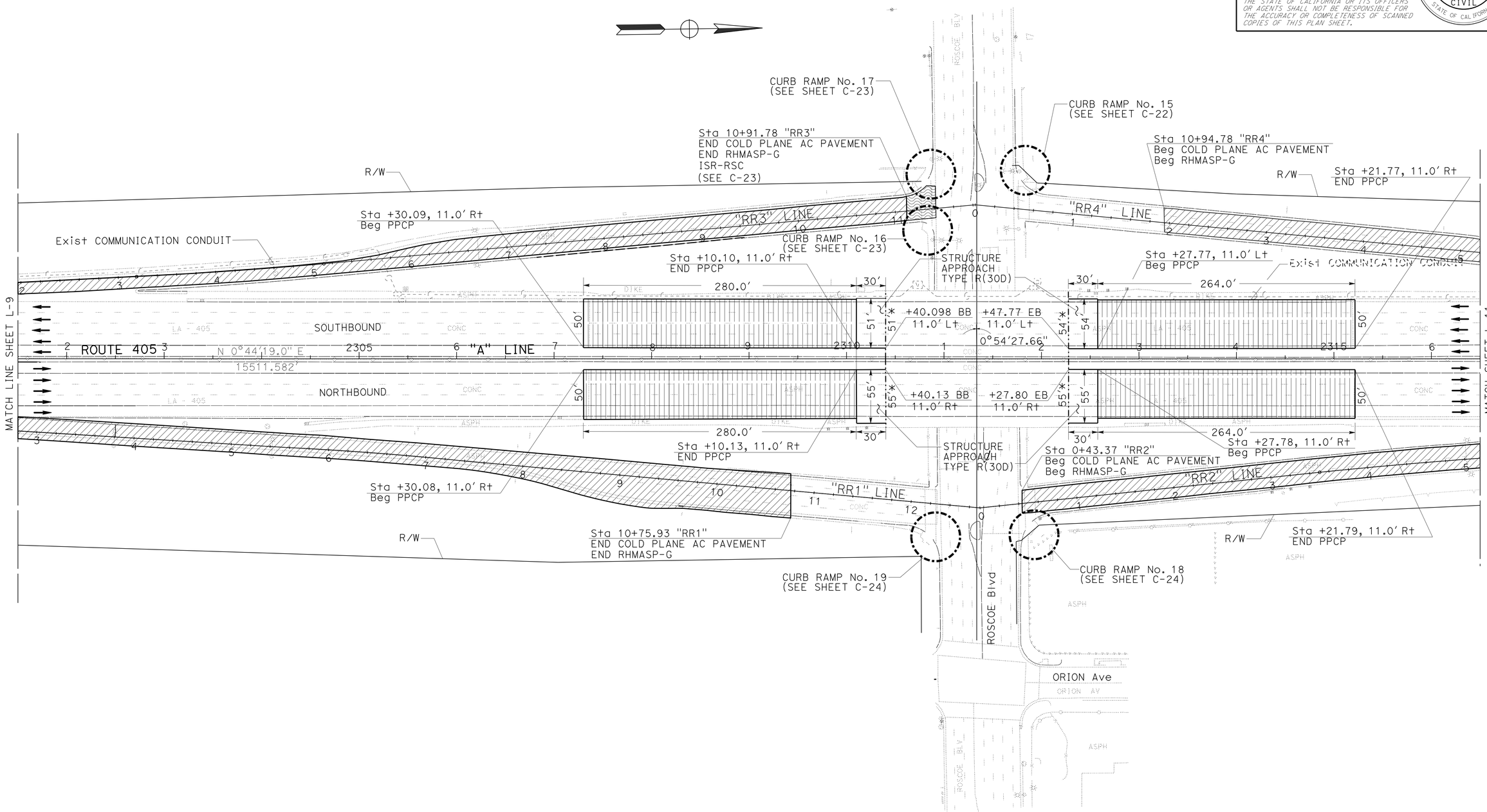

LAYOUT
SCALE: 1" = 50'

L-10

STATE OF CALIFORNIA - DEPARTMENT OF TRANSPORTATION
Caltrans MAINTENANCE ENGINEERING

FUNCTIONAL SUPERVISOR: PAUL CRISPI
CALCULATED-DESIGNED BY: ANDREW NGUYEN
CHECKED BY: PAUL CRISPI
REVISED BY
DATE REVISED

LAST REVISION 07-30-12
DATE PLOTTED => 14-FEB-2013
TIME PLOTTED => 13:25

Dist	COUNTY	ROUTE	POST MILES TOTAL PROJECT	SHEET No.	TOTAL SHEETS
07	LA	405	39.4/48.6	22	179

REGISTERED CIVIL ENGINEER 5-30-12 DATE

7-30-12
PLANS APPROVAL DATE

REGISTERED PROFESSIONAL ENGINEER
ANDREW K. NGUYEN
No. C62828
Exp. 6-30-14
CIVIL
STATE OF CALIFORNIA

THE STATE OF CALIFORNIA OR ITS OFFICERS OR AGENTS SHALL NOT BE RESPONSIBLE FOR THE ACCURACY OR COMPLETENESS OF SCANNED COPIES OF THIS PLAN SHEET.

NOTE:

FOR ACCURATE RIGHT OF WAY DATA, CONTACT
RIGHT OF WAY ENGINEERING AT THE DISTRICT OFFICE.

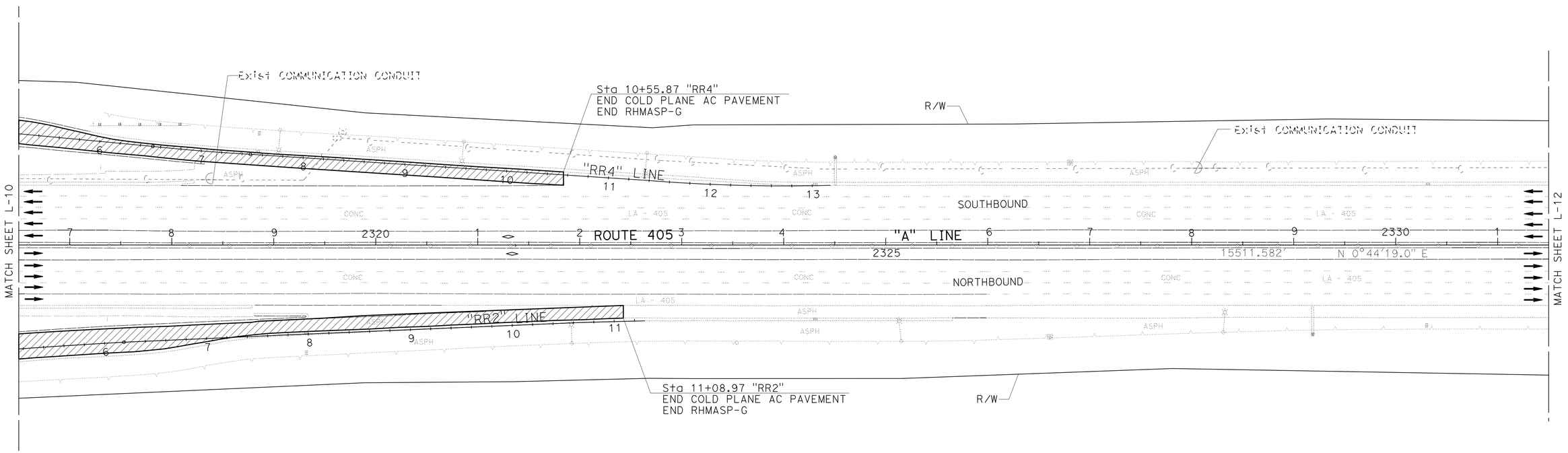

LAYOUT
SCALE: 1" = 50"

L-11

STATE OF CALIFORNIA - DEPARTMENT OF TRANSPORTATION
Caltrans MAINTENANCE ENGINEERING

FUNCTIONAL SUPERVISOR: PAUL CRISPI
CALCULATED-DESIGNED BY: ANDREW NGUYEN
CHECKED BY: PAUL CRISPI
REVISED BY
DATE REVISED

LAST REVISION 07-30-12
DATE PLOTTED => 14-FEB-2013
TIME PLOTTED => 13:25

Dist	COUNTY	ROUTE	POST MILES TOTAL PROJECT	SHEET No.	TOTAL SHEETS
07	LA	405	39.4/48.6	23	179

REGISTERED CIVIL ENGINEER 5-30-12 DATE

7-30-12
PLANS APPROVAL DATE

REGISTERED PROFESSIONAL ENGINEER
ANDREW K. NGUYEN
No. C62828
Exp. 6-30-14
CIVIL
STATE OF CALIFORNIA

THE STATE OF CALIFORNIA OR ITS OFFICERS OR AGENTS SHALL NOT BE RESPONSIBLE FOR THE ACCURACY OR COMPLETENESS OF SCANNED COPIES OF THIS PLAN SHEET.

NOTE:

FOR ACCURATE RIGHT OF WAY DATA, CONTACT
RIGHT OF WAY ENGINEERING AT THE DISTRICT OFFICE.

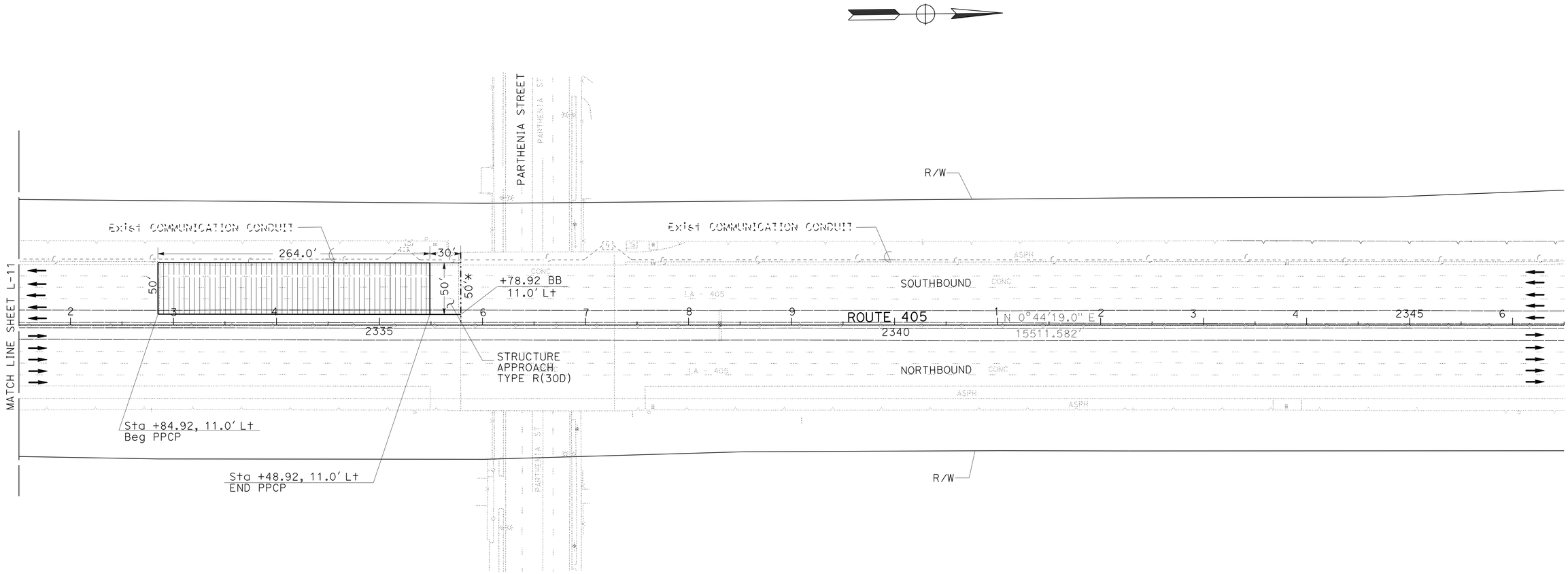

LAYOUT
SCALE: 1" = 50"

L-12

ANDREW NGUYEN — CALCULATED-DESIGNED BY
PAUL CRISPI — CHECKED BY
REVISED BY — DATE REVISED
PAUL CRISPI — FUNCTIONAL SUPERVISOR

STATE OF CALIFORNIA - DEPARTMENT OF TRANSPORTATION
Caltrans MAINTENANCE ENGINEERING

LAST REVISION 07-30-12 | DATE PLOTTED => 14-FEB-2013 | TIME PLOTTED => 13:25

Dist	COUNTY	ROUTE	POST MILES TOTAL PROJECT	SHEET No.	TOTAL SHEETS
07	LA	405	39.4/48.6	24	179

REGISTERED CIVIL ENGINEER 5-30-12 DATE

7-30-12
PLANS APPROVAL DATE

REGISTERED PROFESSIONAL ENGINEER ANDREW K. NGUYEN No. C62828 Exp. 6-30-14 CIVIL STATE OF CALIFORNIA

THE STATE OF CALIFORNIA OR ITS OFFICERS OR AGENTS SHALL NOT BE RESPONSIBLE FOR THE ACCURACY OR COMPLETENESS OF SCANNED COPIES OF THIS PLAN SHEET.

NOTE:

FOR ACCURATE RIGHT OF WAY DATA, CONTACT RIGHT OF WAY ENGINEERING AT THE DISTRICT OFFICE.

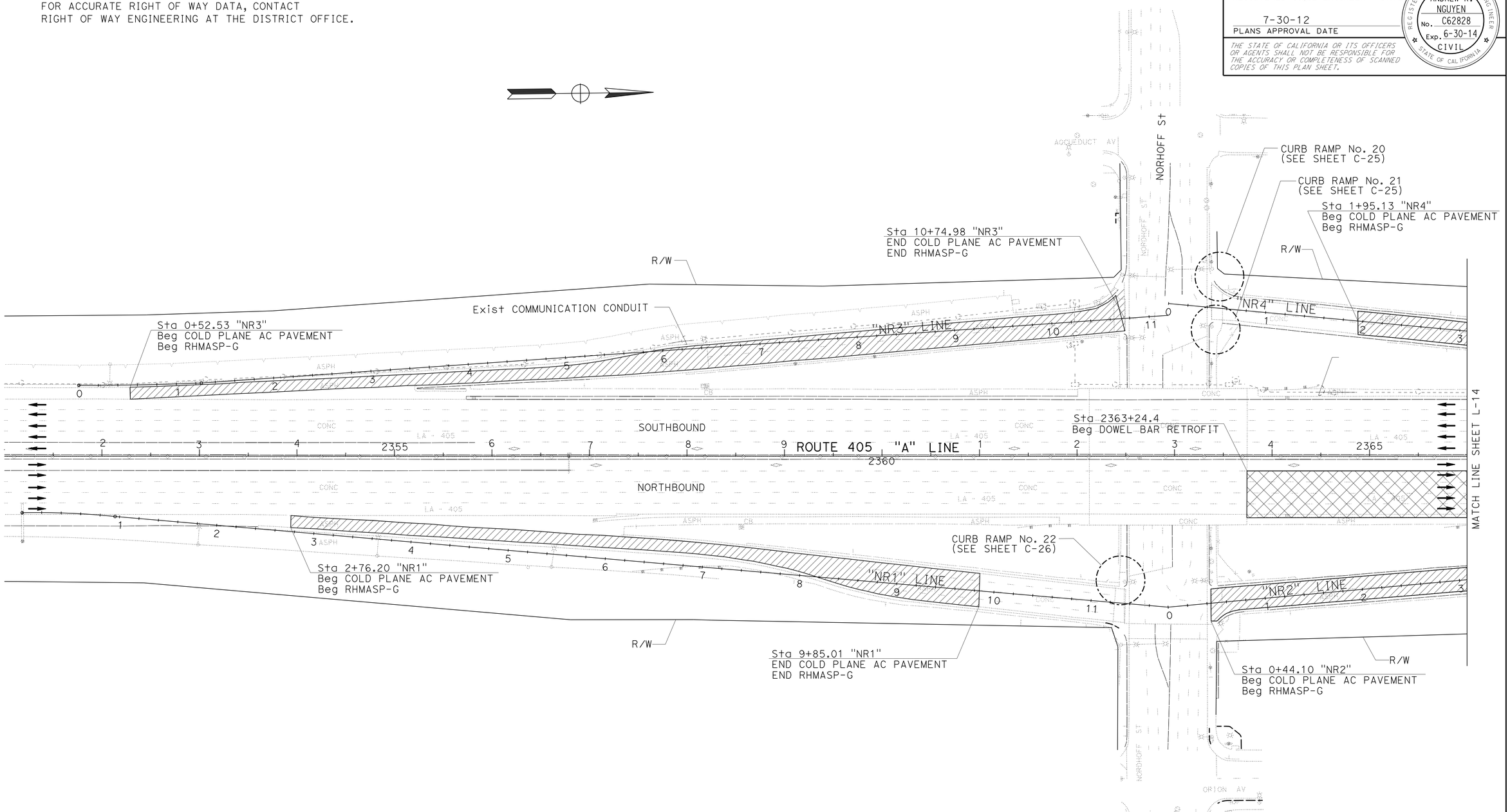

LAYOUT
SCALE: 1" = 50"

L-13

STATE OF CALIFORNIA - DEPARTMENT OF TRANSPORTATION
Caltrans MAINTENANCE ENGINEERING

FUNCTIONAL SUPERVISOR: PAUL CRISPI

CALCULATED-DESIGNED BY: ANDREW NGUYEN
CHECKED BY: PAUL CRISPI

REVISED BY / DATE REVISED

LAST REVISION 07-30-12 | DATE PLOTTED => 14-FEB-2013 | TIME PLOTTED => 13:25

Dist	COUNTY	ROUTE	POST MILES TOTAL PROJECT	SHEET No.	TOTAL SHEETS
07	LA	405	39.4/48.6	25	179

REGISTERED CIVIL ENGINEER 5-30-12 DATE

7-30-12
PLANS APPROVAL DATE

REGISTERED PROFESSIONAL ENGINEER ANDREW K. NGUYEN No. C62828 Exp. 6-30-14 CIVIL STATE OF CALIFORNIA

THE STATE OF CALIFORNIA OR ITS OFFICERS OR AGENTS SHALL NOT BE RESPONSIBLE FOR THE ACCURACY OR COMPLETENESS OF SCANNED COPIES OF THIS PLAN SHEET.

NOTE:

FOR ACCURATE RIGHT OF WAY DATA, CONTACT RIGHT OF WAY ENGINEERING AT THE DISTRICT OFFICE.

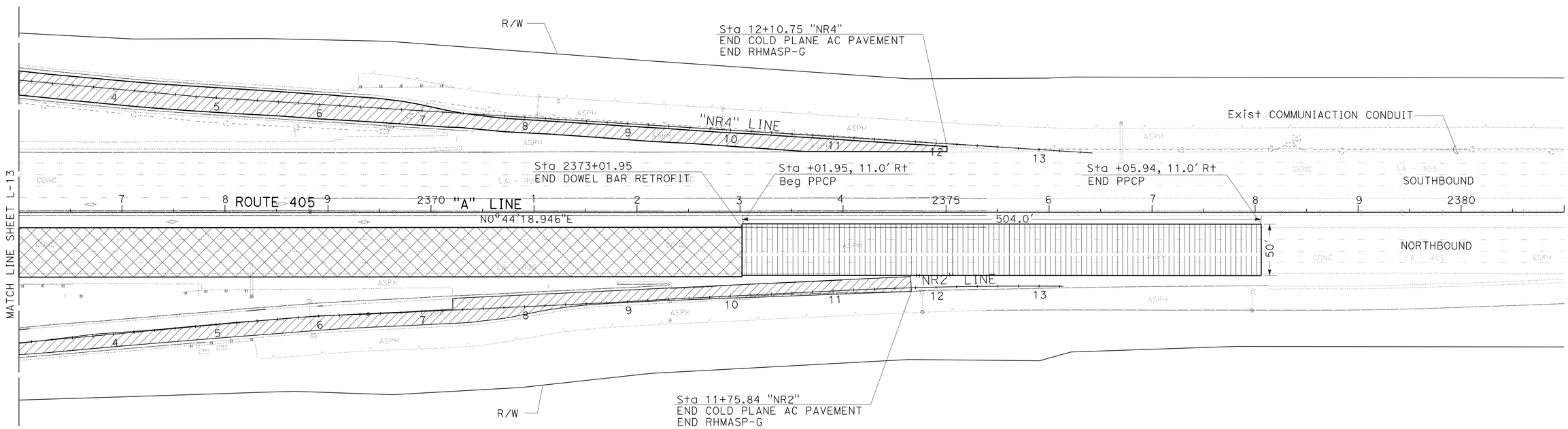

LAYOUT
SCALE: 1" = 50"

L-14

REVISED BY | DATE REVISED
ANDREW NGUYEN | PAUL CRISPI
CALCULATED-DESIGNED BY | CHECKED BY
FUNCTIONAL SUPERVISOR | PAUL CRISPI
STATE OF CALIFORNIA - DEPARTMENT OF TRANSPORTATION
Caltrans MAINTENANCE ENGINEERING

LAST REVISION 07-30-12 | DATE PLOTTED => 14-FEB-2013 | TIME PLOTTED => 13:25

Dist	COUNTY	ROUTE	POST MILES TOTAL PROJECT	SHEET No.	TOTAL SHEETS
07	LA	405	39.4/48.6	26	179

REGISTERED CIVIL ENGINEER 5-30-12 DATE

7-30-12
PLANS APPROVAL DATE

REGISTERED PROFESSIONAL ENGINEER ANDREW K. NGUYEN No. C62828 Exp. 6-30-14 CIVIL STATE OF CALIFORNIA

THE STATE OF CALIFORNIA OR ITS OFFICERS OR AGENTS SHALL NOT BE RESPONSIBLE FOR THE ACCURACY OR COMPLETENESS OF SCANNED COPIES OF THIS PLAN SHEET.

NOTE:

FOR ACCURATE RIGHT OF WAY DATA, CONTACT RIGHT OF WAY ENGINEERING AT THE DISTRICT OFFICE.

CURVE DATA

No.	R	Δ	T	L
6	2800.22′	10°16′18"	251.68′	502.01′

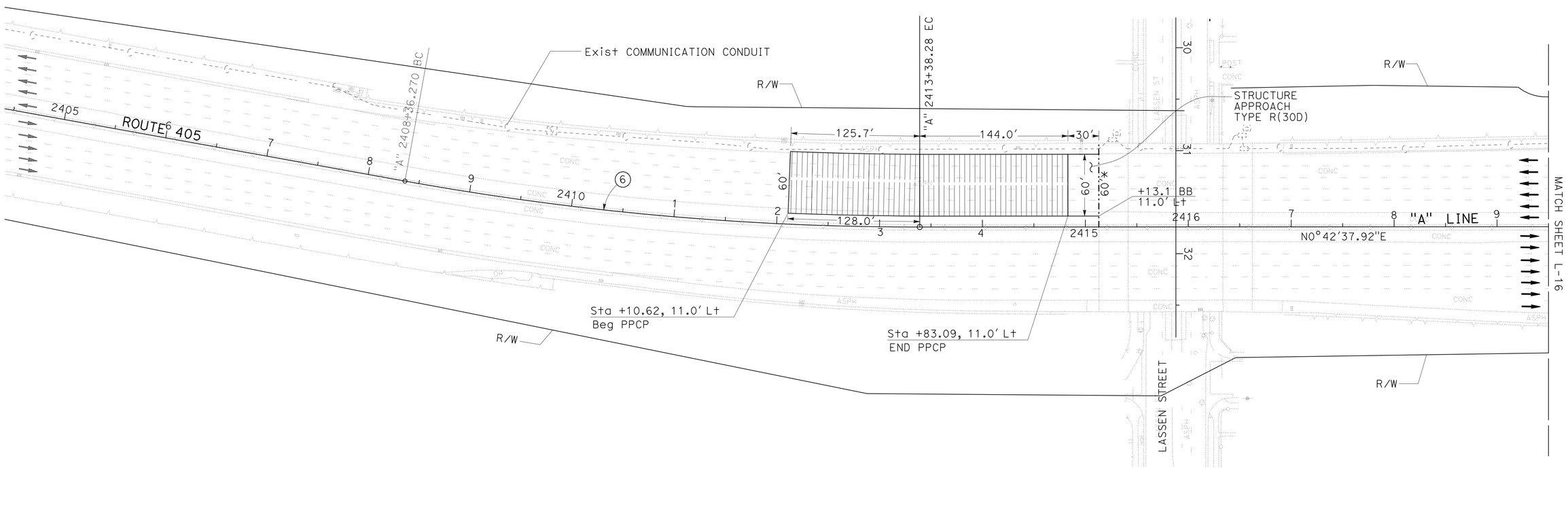

LAYOUT
SCALE: 1" = 50"

L-15

STATE OF CALIFORNIA - DEPARTMENT OF TRANSPORTATION
Caltrans MAINTENANCE ENGINEERING

FUNCTIONAL SUPERVISOR: PAUL CRISPI

CALCULATED-DESIGNED BY: ANDREW NGUYEN
CHECKED BY: PAUL CRISPI

REVISED BY
DATE REVISED

LAST REVISION 07-30-12
DATE PLOTTED => 14-FEB-2013
TIME PLOTTED => 13:25

Dist	COUNTY	ROUTE	POST MILES TOTAL PROJECT	SHEET No.	TOTAL SHEETS
07	LA	405	39.4/48.6	27	179

REGISTERED CIVIL ENGINEER 5-30-12 DATE

7-30-12
PLANS APPROVAL DATE

REGISTERED PROFESSIONAL ENGINEER ANDREW K. NGUYEN No. C62828 Exp. 6-30-14 CIVIL STATE OF CALIFORNIA

THE STATE OF CALIFORNIA OR ITS OFFICERS OR AGENTS SHALL NOT BE RESPONSIBLE FOR THE ACCURACY OR COMPLETENESS OF SCANNED COPIES OF THIS PLAN SHEET.

NOTE:

FOR ACCURATE RIGHT OF WAY DATA, CONTACT RIGHT OF WAY ENGINEERING AT THE DISTRICT OFFICE.

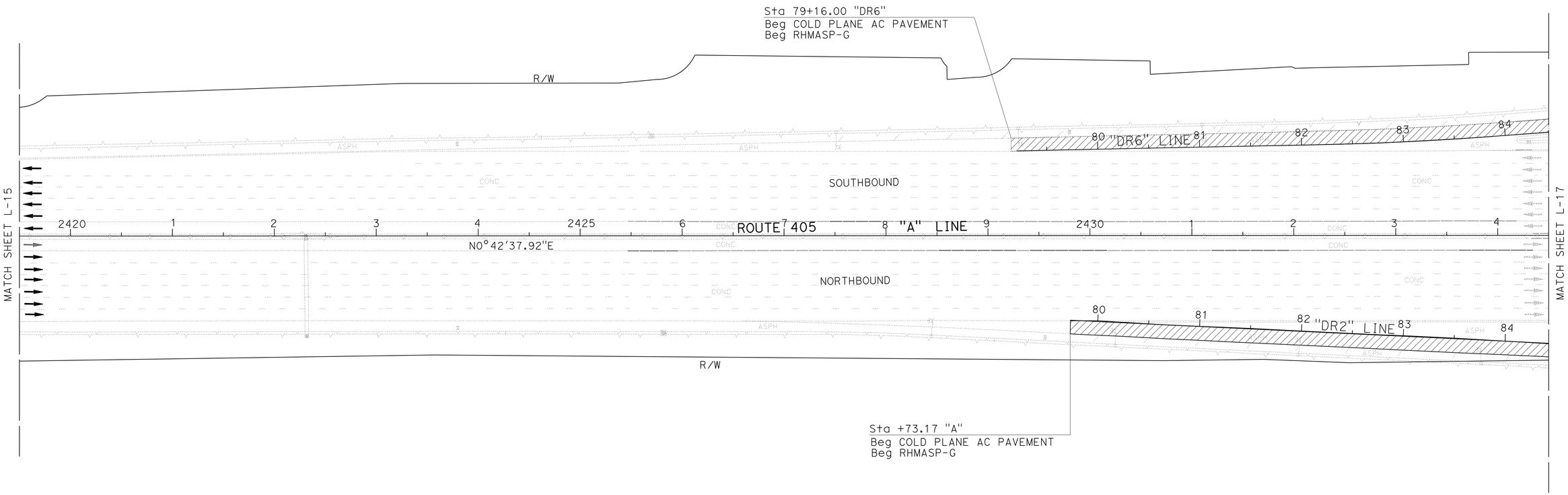

LAYOUT
SCALE: 1" = 50"

L-16

STATE OF CALIFORNIA - DEPARTMENT OF TRANSPORTATION
Caltrans MAINTENANCE ENGINEERING

FUNCTIONAL SUPERVISOR: PAUL CRISPI

CALCULATED-DESIGNED BY: ANDREW NGUYEN
CHECKED BY: PAUL CRISPI

REVISED BY
DATE REVISED

LAST REVISION 07-30-12
DATE PLOTTED => 14-FEB-2013
TIME PLOTTED => 13:25

Dist	COUNTY	ROUTE	POST MILES TOTAL PROJECT	SHEET No.	TOTAL SHEETS
07	LA	405	39.4/48.6	28	179

REGISTERED CIVIL ENGINEER 5-30-12 DATE

7-30-12
PLANS APPROVAL DATE

REGISTERED PROFESSIONAL ENGINEER ANDREW K. NGUYEN No. C62828 Exp. 6-30-14 CIVIL STATE OF CALIFORNIA

THE STATE OF CALIFORNIA OR ITS OFFICERS OR AGENTS SHALL NOT BE RESPONSIBLE FOR THE ACCURACY OR COMPLETENESS OF SCANNED COPIES OF THIS PLAN SHEET.

NOTE:

FOR ACCURATE RIGHT OF WAY DATA, CONTACT RIGHT OF WAY ENGINEERING AT THE DISTRICT OFFICE.

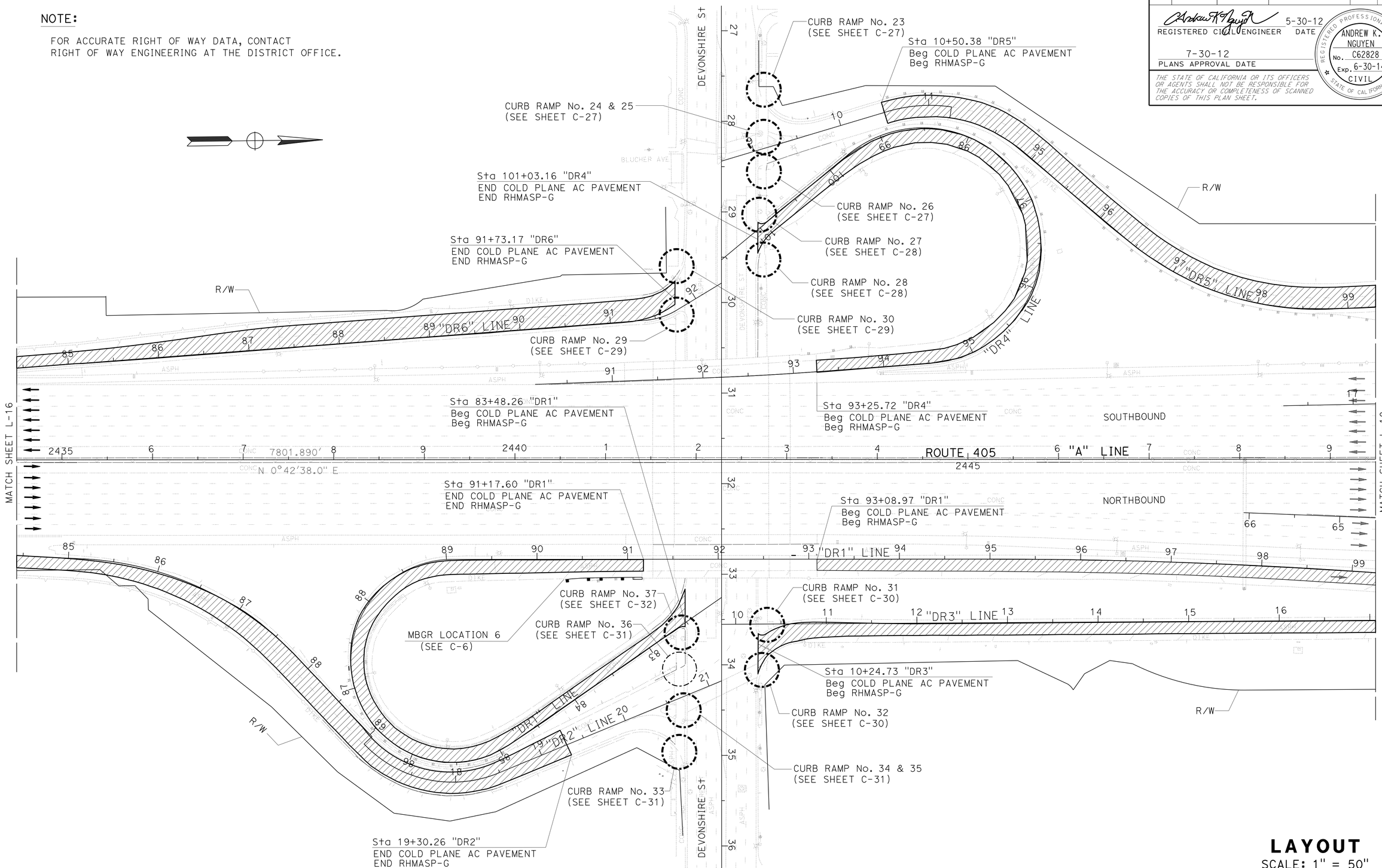

LAYOUT
SCALE: 1" = 50"

L-17

STATE OF CALIFORNIA - DEPARTMENT OF TRANSPORTATION
Caltrans MAINTENANCE ENGINEERING

FUNCTIONAL SUPERVISOR: PAUL CRISPI
CALCULATED-DESIGNED BY: ANDREW NGUYEN
CHECKED BY: PAUL CRISPI
REVISED BY
DATE REVISED

LAST REVISION 07-30-12
DATE PLOTTED => 14-FEB-2013
TIME PLOTTED => 13:25

Dist	COUNTY	ROUTE	POST MILES TOTAL PROJECT	SHEET No.	TOTAL SHEETS
07	LA	405	39.4/48.6	29	179

REGISTERED CIVIL ENGINEER 5-30-12 DATE

7-30-12
PLANS APPROVAL DATE

REGISTERED PROFESSIONAL ENGINEER
ANDREW K. NGUYEN
No. C62828
Exp. 6-30-14
CIVIL
STATE OF CALIFORNIA

THE STATE OF CALIFORNIA OR ITS OFFICERS OR AGENTS SHALL NOT BE RESPONSIBLE FOR THE ACCURACY OR COMPLETENESS OF SCANNED COPIES OF THIS PLAN SHEET.

NOTE:

FOR ACCURATE RIGHT OF WAY DATA, CONTACT RIGHT OF WAY ENGINEERING AT THE DISTRICT OFFICE.

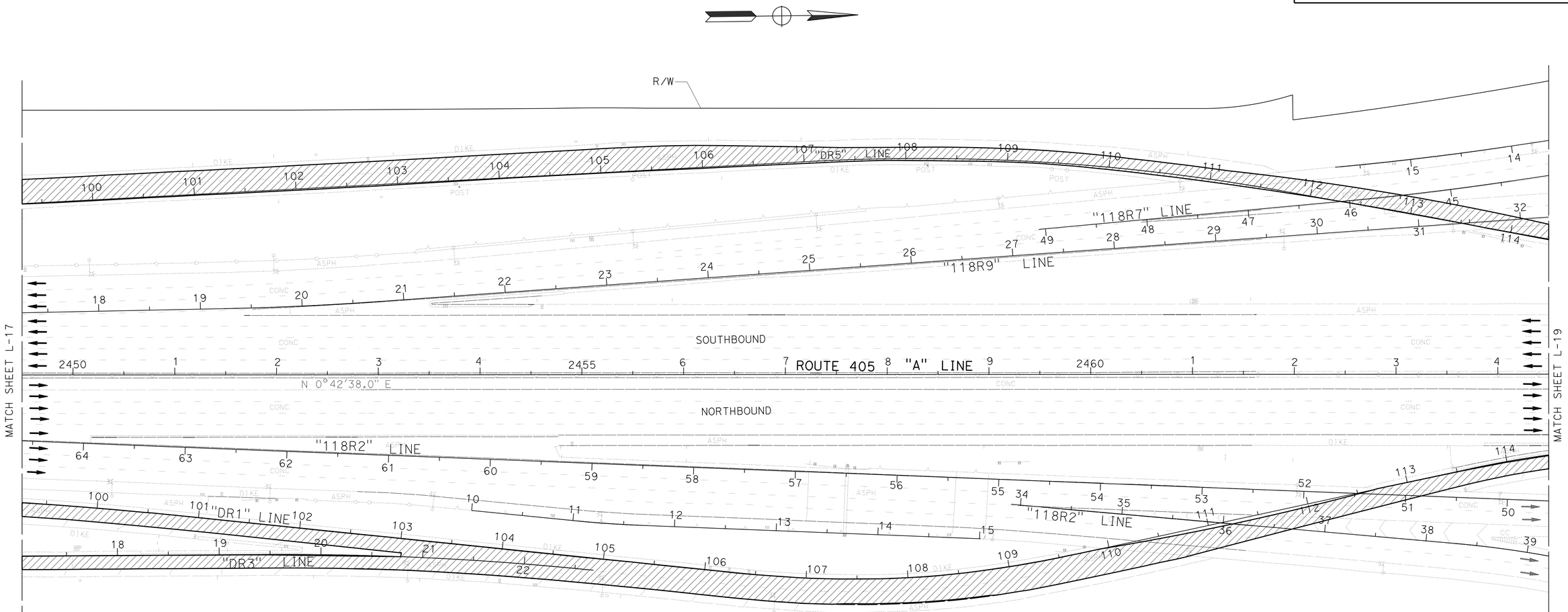

LAYOUT
SCALE: 1" = 50"

L-18

REVISED BY | DATE REVISED
ANDREW NGUYEN | PAUL CRISPI
CALCULATED-DESIGNED BY | CHECKED BY
FUNCTIONAL SUPERVISOR | PAUL CRISPI

STATE OF CALIFORNIA - DEPARTMENT OF TRANSPORTATION
Caltrans MAINTENANCE ENGINEERING

LAST REVISION 07-30-12 | DATE PLOTTED => 14-FEB-2013 | TIME PLOTTED => 13:25

Dist	COUNTY	ROUTE	POST MILES TOTAL PROJECT	SHEET No.	TOTAL SHEETS
07	LA	405	39.4/48.6	30	179

REGISTERED CIVIL ENGINEER 5-30-12 DATE

7-30-12
PLANS APPROVAL DATE

REGISTERED PROFESSIONAL ENGINEER ANDREW K. NGUYEN No. C62828 Exp. 6-30-14 CIVIL STATE OF CALIFORNIA

THE STATE OF CALIFORNIA OR ITS OFFICERS OR AGENTS SHALL NOT BE RESPONSIBLE FOR THE ACCURACY OR COMPLETENESS OF SCANNED COPIES OF THIS PLAN SHEET.

NOTE:

FOR ACCURATE RIGHT OF WAY DATA, CONTACT RIGHT OF WAY ENGINEERING AT THE DISTRICT OFFICE.

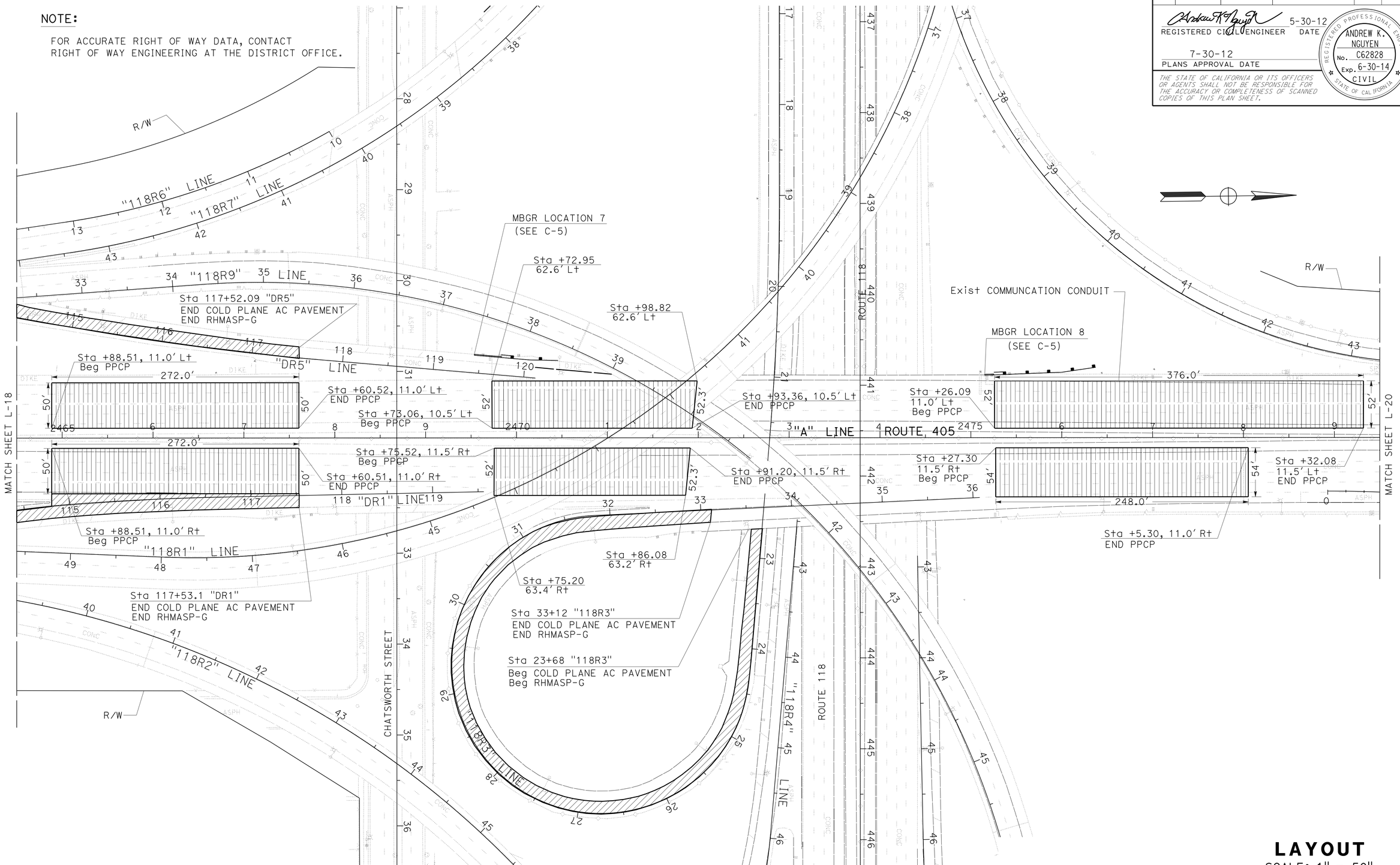

LAYOUT
SCALE: 1" = 50"

L-19

REVISED BY	DATE REVISED

CALCULATED-DESIGNED BY	CHECKED BY
ANDREW NGUYEN	PAUL CRISPI

FUNCTIONAL SUPERVISOR: PAUL CRISPI

STATE OF CALIFORNIA - DEPARTMENT OF TRANSPORTATION
Caltrans MAINTENANCE ENGINEERING

LAST REVISION 07-30-12 | DATE PLOTTED => 14-FEB-2013 | TIME PLOTTED => 13:25

Dist	COUNTY	ROUTE	POST MILES TOTAL PROJECT	SHEET No.	TOTAL SHEETS
07	LA	405	39.4/48.6	31	179

REGISTERED CIVIL ENGINEER 5-30-12 DATE

7-30-12
PLANS APPROVAL DATE

REGISTERED PROFESSIONAL ENGINEER
ANDREW K. NGUYEN
No. C62828
Exp. 6-30-14
CIVIL
STATE OF CALIFORNIA

THE STATE OF CALIFORNIA OR ITS OFFICERS OR AGENTS SHALL NOT BE RESPONSIBLE FOR THE ACCURACY OR COMPLETENESS OF SCANNED COPIES OF THIS PLAN SHEET.

NOTE:

FOR ACCURATE RIGHT OF WAY DATA, CONTACT RIGHT OF WAY ENGINEERING AT THE DISTRICT OFFICE.

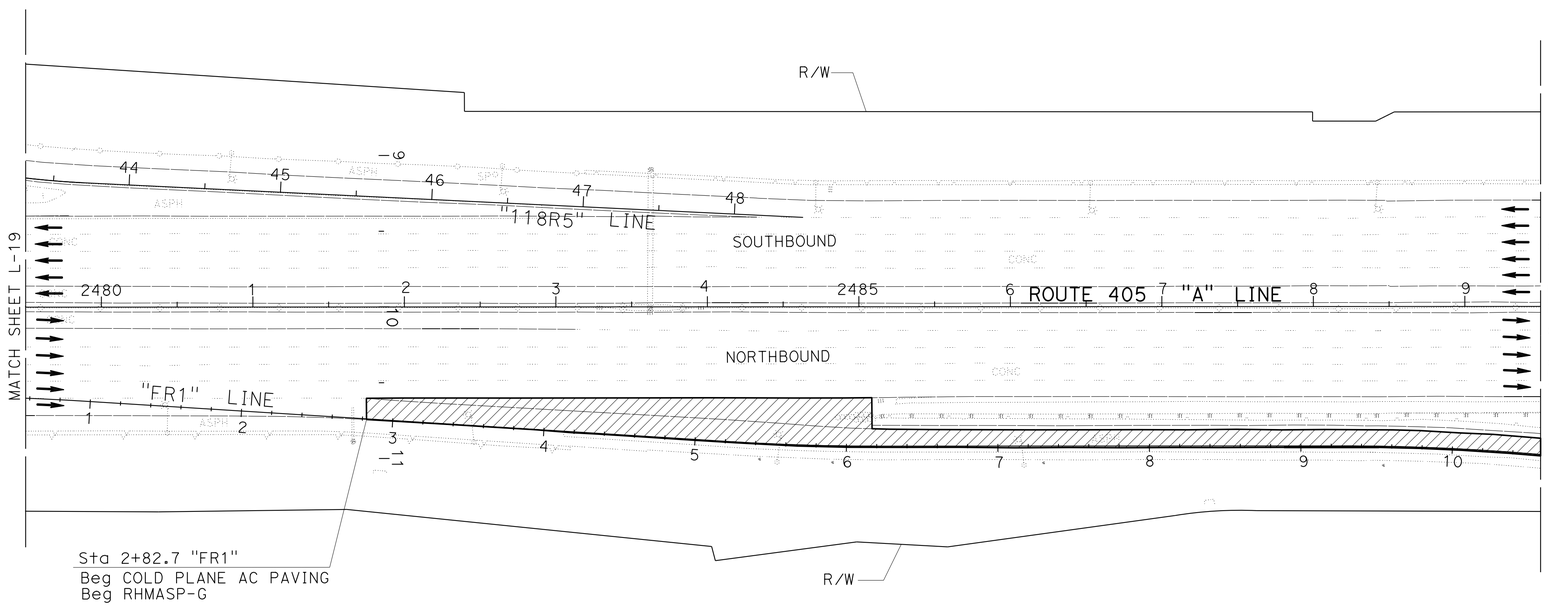

LAYOUT
SCALE: 1" = 50"

L-20

STATE OF CALIFORNIA - DEPARTMENT OF TRANSPORTATION
Caltrans MAINTENANCE ENGINEERING

FUNCTIONAL SUPERVISOR: PAUL CRISPI

CALCULATED-DESIGNED BY: ANDREW NGUYEN
CHECKED BY: PAUL CRISPI

REVISED BY
DATE REVISED

LAST REVISION 07-30-12
DATE PLOTTED => 14-FEB-2013
TIME PLOTTED => 13:25

Dist	COUNTY	ROUTE	POST MILES TOTAL PROJECT	SHEET No.	TOTAL SHEETS
07	LA	405	39.4/48.6	32	179

REGISTERED CIVIL ENGINEER 5-30-12 DATE

7-30-12
PLANS APPROVAL DATE

REGISTERED PROFESSIONAL ENGINEER ANDREW K. NGUYEN No. C62828 Exp. 6-30-14 CIVIL STATE OF CALIFORNIA

THE STATE OF CALIFORNIA OR ITS OFFICERS OR AGENTS SHALL NOT BE RESPONSIBLE FOR THE ACCURACY OR COMPLETENESS OF SCANNED COPIES OF THIS PLAN SHEET.

NOTE:

FOR ACCURATE RIGHT OF WAY DATA, CONTACT RIGHT OF WAY ENGINEERING AT THE DISTRICT OFFICE.

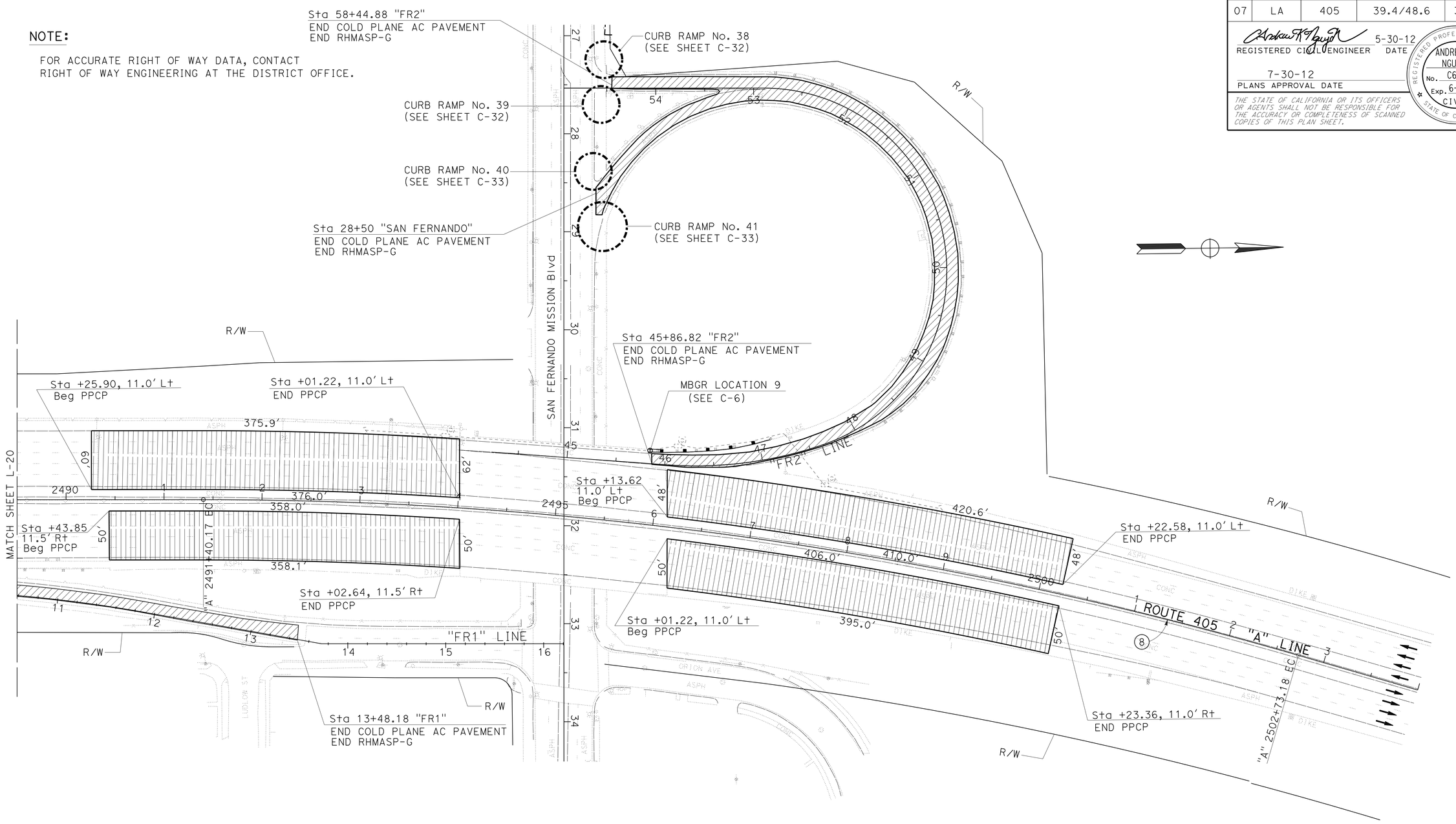

CURVE DATA

No.	R	Δ	T	L
8	3999.65'	16°13'50"	570.32'	1133.00'

LAYOUT

SCALE: 1" = 50"

L-21

STATE OF CALIFORNIA - DEPARTMENT OF TRANSPORTATION
Caltrans MAINTENANCE ENGINEERING

FUNCTIONAL SUPERVISOR: PAUL CRISPI
CALCULATED-DESIGNED BY: ANDREW NGUYEN
CHECKED BY: PAUL CRISPI
REVISED BY
DATE REVISED

LAST REVISION 07-30-12
DATE PLOTTED => 14-FEB-2013
TIME PLOTTED => 13:25

Dist	COUNTY	ROUTE	POST MILES TOTAL PROJECT	SHEET No.	TOTAL SHEETS
07	LA	405	39.4/48.6	33	179

REGISTERED CIVIL ENGINEER 5-30-12 DATE

7-30-12
PLANS APPROVAL DATE

REGISTERED PROFESSIONAL ENGINEER ANDREW K. NGUYEN No. C62828 Exp. 6-30-14 CIVIL STATE OF CALIFORNIA

THE STATE OF CALIFORNIA OR ITS OFFICERS OR AGENTS SHALL NOT BE RESPONSIBLE FOR THE ACCURACY OR COMPLETENESS OF SCANNED COPIES OF THIS PLAN SHEET.

NOTE:

FOR ACCURATE RIGHT OF WAY DATA, CONTACT RIGHT OF WAY ENGINEERING AT THE DISTRICT OFFICE.

CURVE DATA

No.	R	Δ	T	L
9	20000.50′	6°0′40″	1050.15′	2098.37′

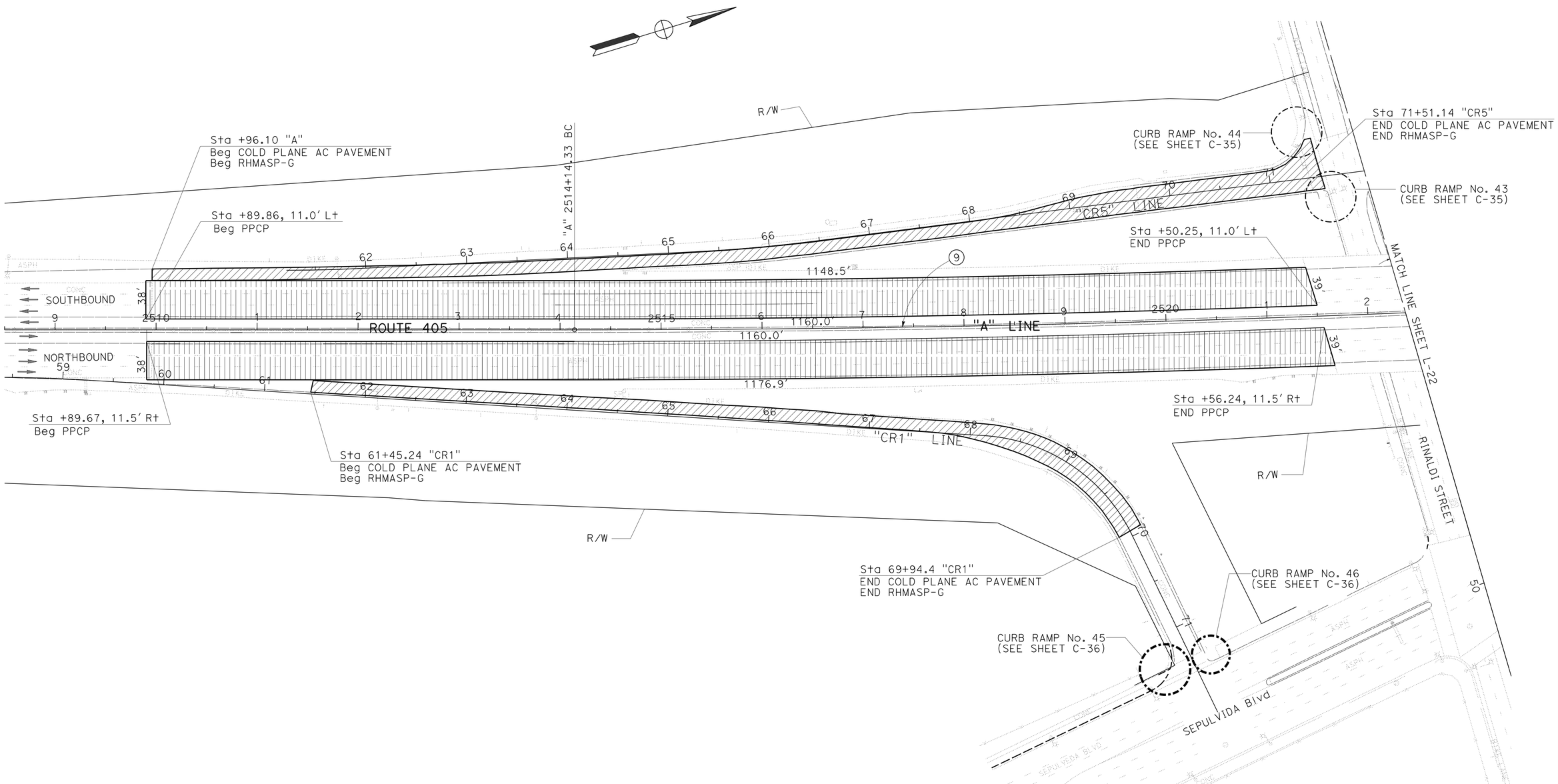

LAYOUT
SCALE: 1" = 50"

L-22

STATE OF CALIFORNIA - DEPARTMENT OF TRANSPORTATION
Caltrans MAINTENANCE ENGINEERING

FUNCTIONAL SUPERVISOR: PAUL CRISPI
CALCULATED-DESIGNED BY: ANDREW NGUYEN
CHECKED BY: PAUL CRISPI
REVISED BY
DATE REVISED

LAST REVISION 07-30-12
DATE PLOTTED => 14-FEB-2013
TIME PLOTTED => 13:25

Dist	COUNTY	ROUTE	POST MILES TOTAL PROJECT	SHEET No.	TOTAL SHEETS
07	LA	405	39.4/48.6	34	179

REGISTERED CIVIL ENGINEER 5-30-12 DATE

7-30-12
PLANS APPROVAL DATE

REGISTERED PROFESSIONAL ENGINEER ANDREW K. NGUYEN No. C62828 Exp. 6-30-14 CIVIL STATE OF CALIFORNIA

THE STATE OF CALIFORNIA OR ITS OFFICERS OR AGENTS SHALL NOT BE RESPONSIBLE FOR THE ACCURACY OR COMPLETENESS OF SCANNED COPIES OF THIS PLAN SHEET.

NOTE:
FOR ACCURATE RIGHT OF WAY DATA, CONTACT RIGHT OF WAY ENGINEERING AT THE DISTRICT OFFICE.

CURVE DATA

No.	R	Δ	T	L
10	20000.50′	6°0′40"	1050.15′	2098.37′

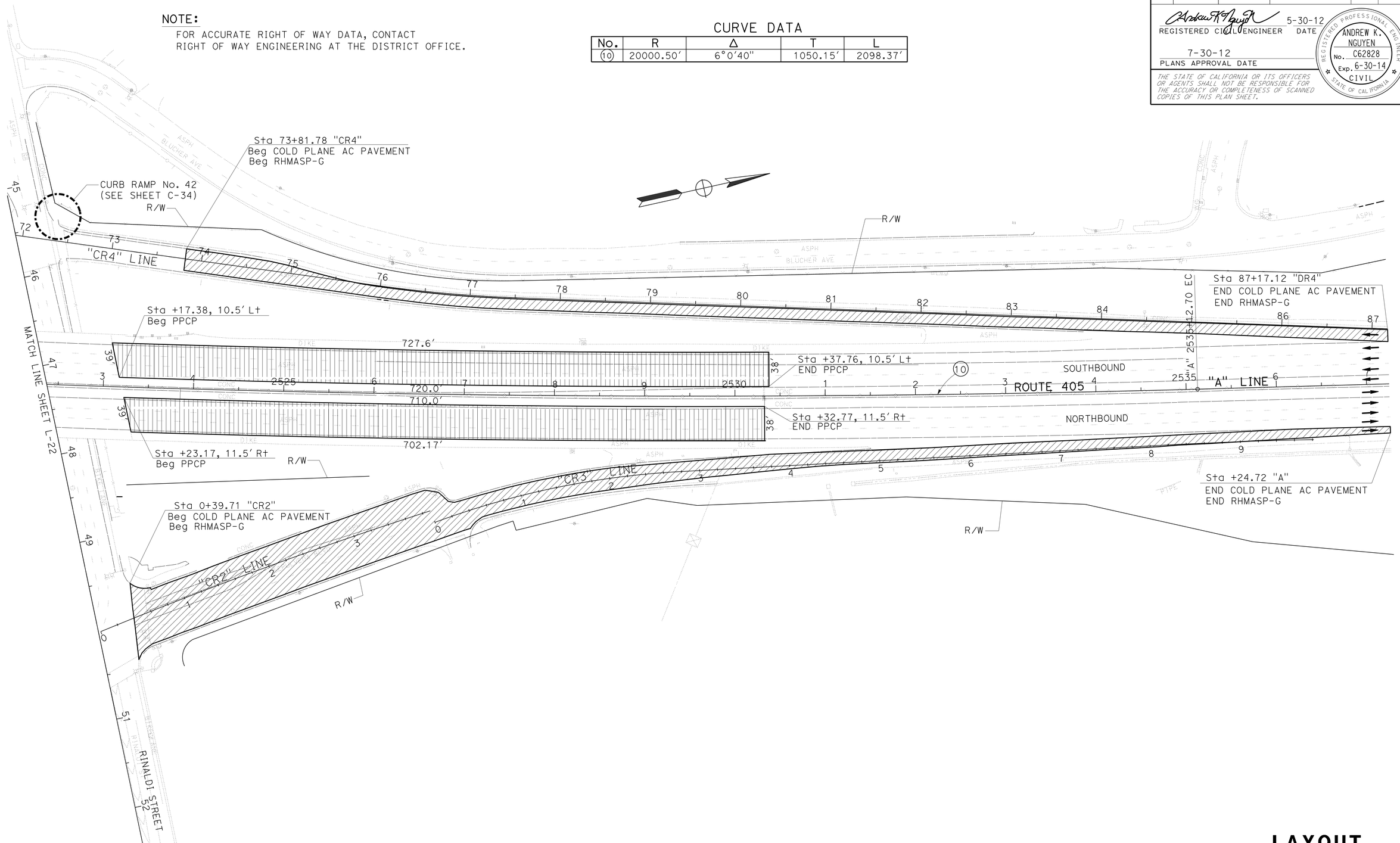

LAYOUT
SCALE: 1" = 50"

L-23

REVISED BY	DATE REVISED

CALCULATED-DESIGNED BY	CHECKED BY
ANDREW NGUYEN	PAUL CRISPI

FUNCTIONAL SUPERVISOR: PAUL CRISPI

STATE OF CALIFORNIA - DEPARTMENT OF TRANSPORTATION
Caltrans MAINTENANCE ENGINEERING

LAST REVISION 07-30-12 | DATE PLOTTED => 14-FEB-2013 | TIME PLOTTED => 13:25

Dist	COUNTY	ROUTE	POST MILES TOTAL PROJECT	SHEET No.	TOTAL SHEETS
07	LA	405	39.4/48.6	35	179

REGISTERED CIVIL ENGINEER 5-30-12 DATE

7-30-12
PLANS APPROVAL DATE

REGISTERED PROFESSIONAL ENGINEER
ANDREW K. NGUYEN
No. C62828
Exp. 6-30-14
CIVIL
STATE OF CALIFORNIA

THE STATE OF CALIFORNIA OR ITS OFFICERS OR AGENTS SHALL NOT BE RESPONSIBLE FOR THE ACCURACY OR COMPLETENESS OF SCANNED COPIES OF THIS PLAN SHEET.

NOTE:

FOR ACCURATE RIGHT OF WAY DATA, CONTACT RIGHT OF WAY ENGINEERING AT THE DISTRICT OFFICE.

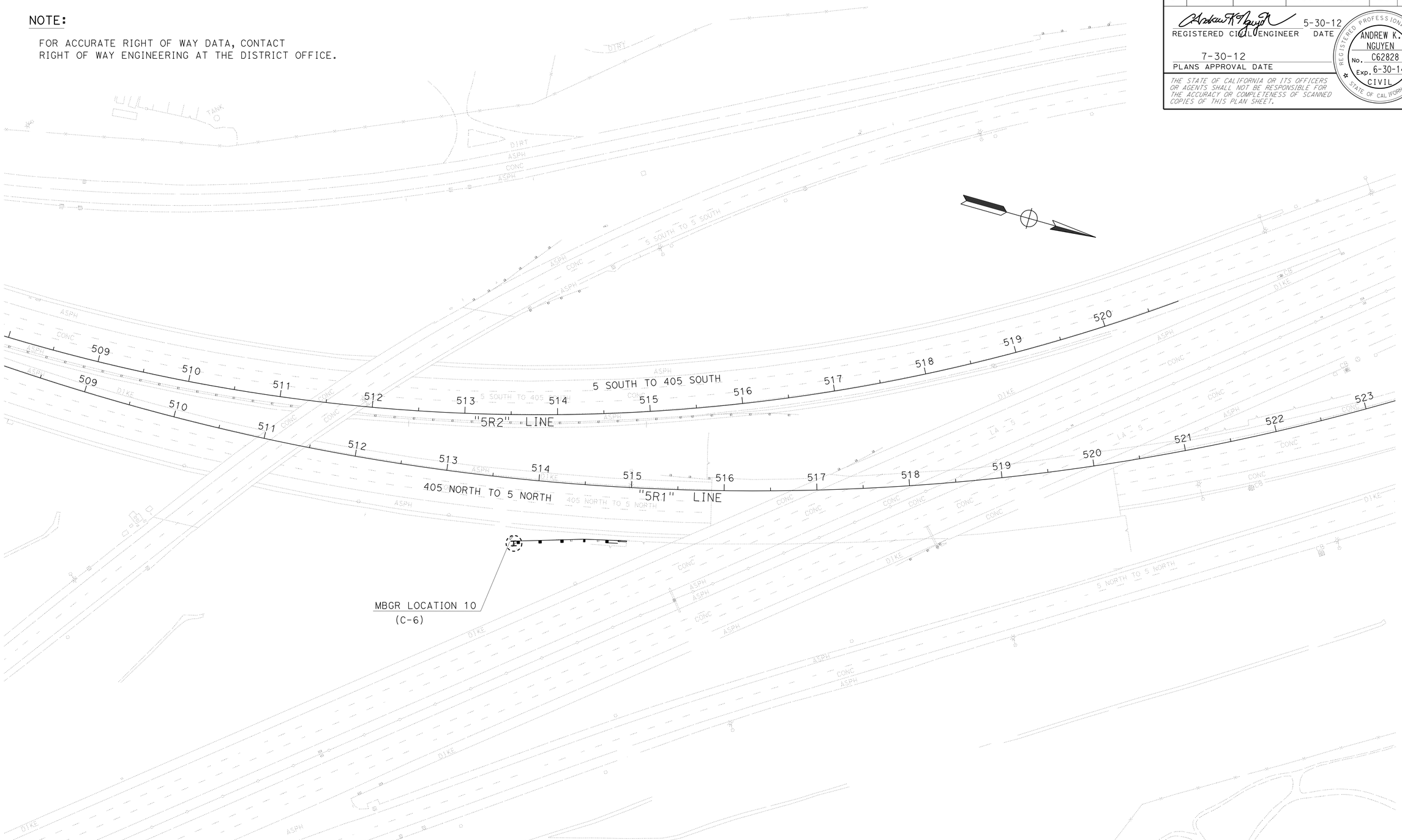

LAYOUT
SCALE: 1" = 50"

L-24

REVISED BY | DATE REVISED
ANDREW NGUYEN | PAUL CRISPI
CALCULATED-DESIGNED BY | CHECKED BY
FUNCTIONAL SUPERVISOR | PAUL CRISPI

STATE OF CALIFORNIA - DEPARTMENT OF TRANSPORTATION
Caltrans MAINTENANCE ENGINEERING

LAST REVISION 07-30-12 | DATE PLOTTED => 14-FEB-2013 | TIME PLOTTED => 13:25

Dist	COUNTY	ROUTE	POST MILES TOTAL PROJECT	SHEET No.	TOTAL SHEETS
07	LA	405	39.4/48.6	36	179

REGISTERED CIVIL ENGINEER 6-22-12 DATE

7-30-12
PLANS APPROVAL DATE

REGISTERED PROFESSIONAL ENGINEER ESTHER M. KIM No. 48363 Exp. 6/30/14 CIVIL STATE OF CALIFORNIA

THE STATE OF CALIFORNIA OR ITS OFFICERS OR AGENTS SHALL NOT BE RESPONSIBLE FOR THE ACCURACY OR COMPLETENESS OF SCANNED COPIES OF THIS PLAN SHEET.

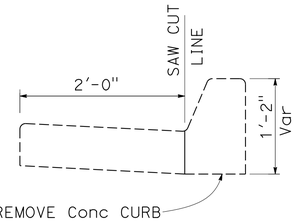

Exist Conc CURB (TYPE A2)

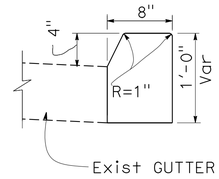

Conc CURB (4")

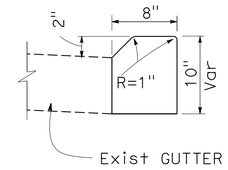

Conc CURB (2")

DETAIL A

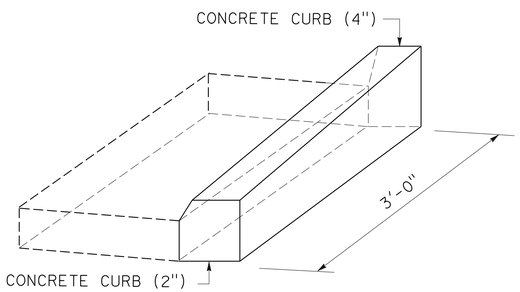

(A) TRANSITION CURB
CURB (2") TO/FROM CURB (4")

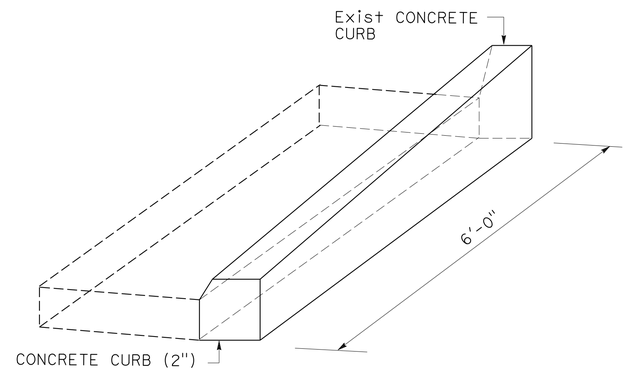

(B) TRANSITION CURB
CURB (2") TO/FROM CURB (6")

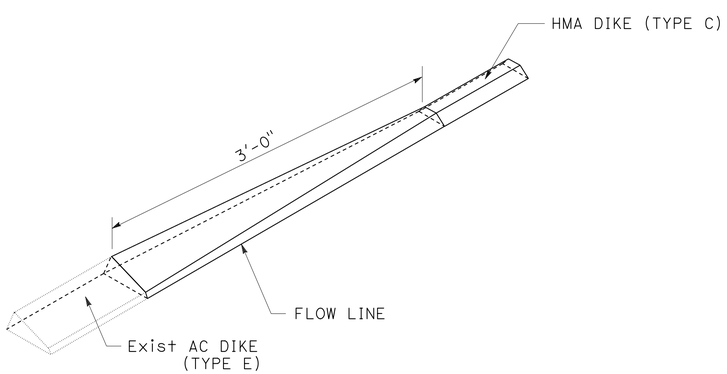

DETAIL B - HMA DIKE TRANSITION
Exist AC DIKE (TYPE E) TO HMA DIKE (TYPE C)

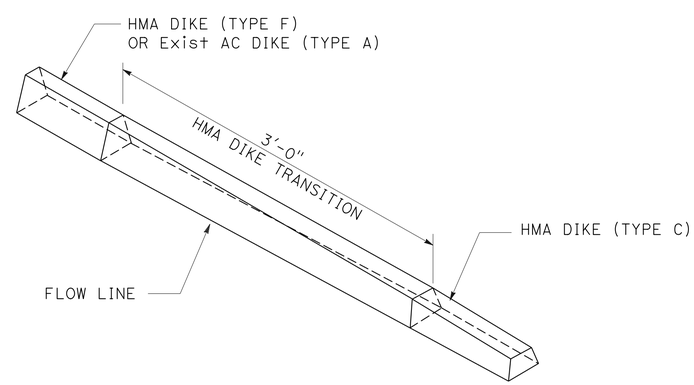

DETAIL C - HMA DIKE TRANSITION
Exist AC DIKE (TYPE A) TO HMA DIKE (TYPE F) OR (TYPE C)
HMA DIKE (TYPE C) TO HMA DIKE (TYPE F)

LEGEND:

- SHEET No. OR Std PLAN No.
- DETAIL No.
- DIRECTION OF TRAVEL
- (1) VEGETATION CONTROL (MINOR Conc)
- (2) IMPORTED BORROW

ABBREVIATIONS:

MTR	TRANSITION RAILING (TYPE WB)
SPTR	TRANSITION RAILING (TYPE SP)
CAB	CONCRETE ANCHOR BLOCK
TS	TERMINAL SYSTEM
EAA	END ANCHOR ASSEMBLY
Alte	ALTERNATIVE
TRS	STANDARD RAILING SECTION HEIGHT TRANSITION (SEE RSP A77J4 NOTE 10)

CONSTRUCTION DETAILS
NO SCALE

C-1

REVISED BY | DATE REVISED
RICHARD KHAW | ESTHER M. KIM
CALCULATED-DESIGNED BY | CHECKED BY
FUNCTIONAL SUPERVISOR: MOHAMMED CHOWDHURY

STATE OF CALIFORNIA - DEPARTMENT OF TRANSPORTATION
Caltrans TRAFFIC DESIGN

F:\CALTRANSD7\Projects\FY12-13\Andrew-252001\forprojectdir2-6-13c1\725200ga001.dgn

LAST REVISION 07-30-12 | DATE PLOTTED => 14-FEB-2013 | TIME PLOTTED => 13:25

Dist	COUNTY	ROUTE	POST MILES TOTAL PROJECT	SHEET No.	TOTAL SHEETS
07	LA	405	39.4/48.6	37	179

REGISTERED CIVIL ENGINEER 6/22/12 DATE

7-30-12
PLANS APPROVAL DATE

REGISTERED PROFESSIONAL ENGINEER ESTHER M. KIM No. 48363 Exp. 6/30/14 CIVIL STATE OF CALIFORNIA

THE STATE OF CALIFORNIA OR ITS OFFICERS OR AGENTS SHALL NOT BE RESPONSIBLE FOR THE ACCURACY OR COMPLETENESS OF SCANNED COPIES OF THIS PLAN SHEET.

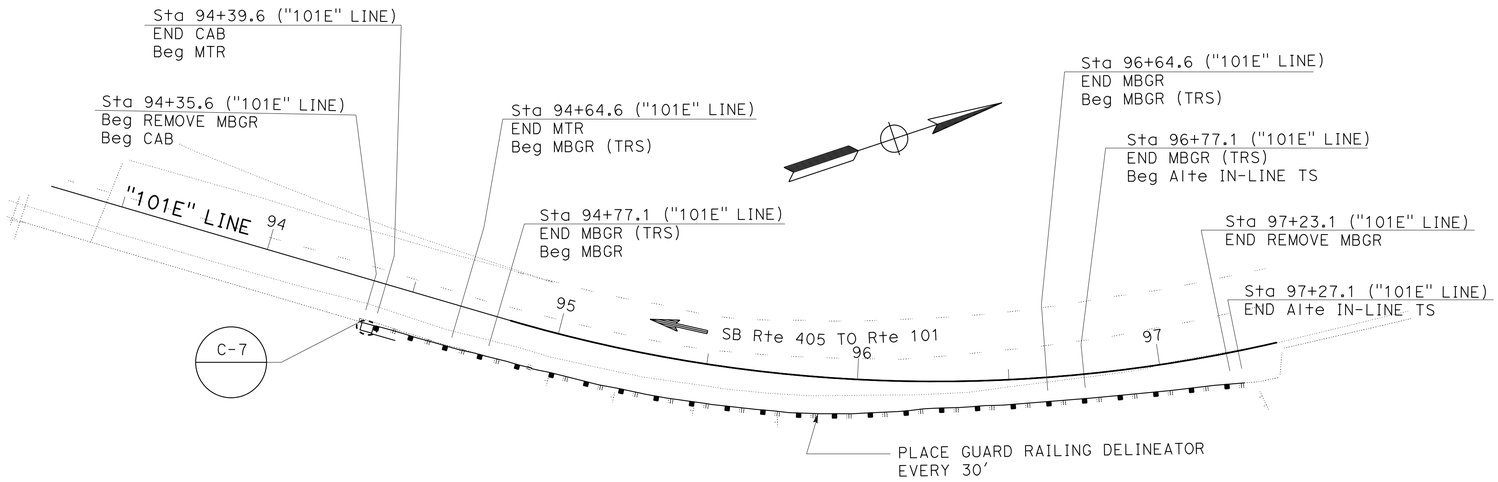

LOCATION 1

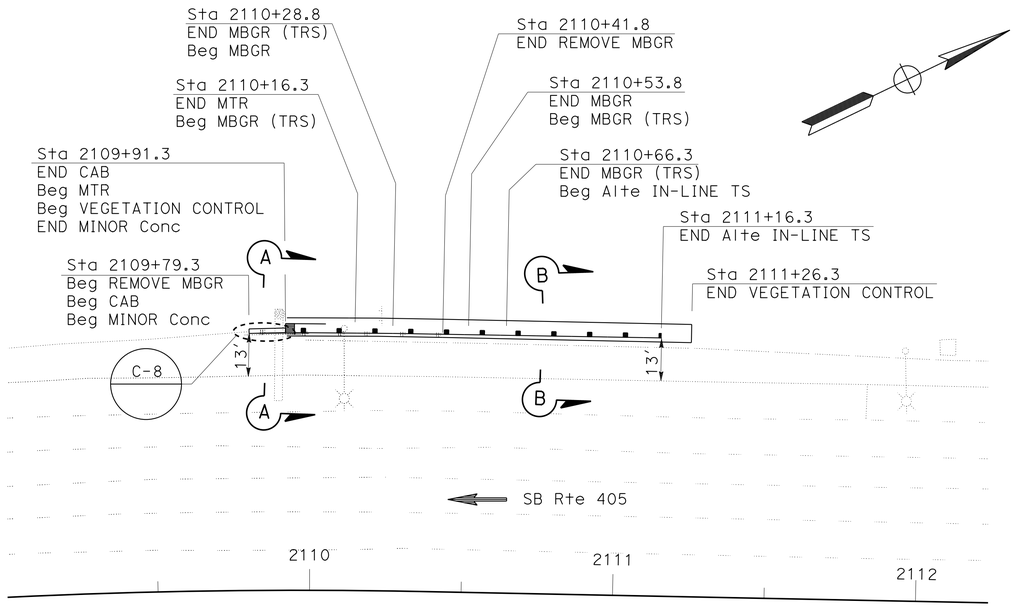

LOCATION 2

NOTES:

1. PLACE GUARD RAILING DELINEATOR AT THE BEGIN AND END OF MBGR AT EACH LOCATION.
2. R/W NOT SHOWN ON THESE PLANS.
3. HMA DIKE TRANSITION AND CONCRETE CURB TRANSITION, SEE SHEET C-1.

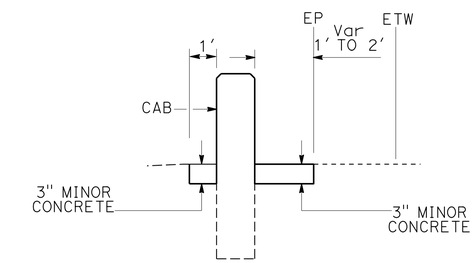

SECTION A-A

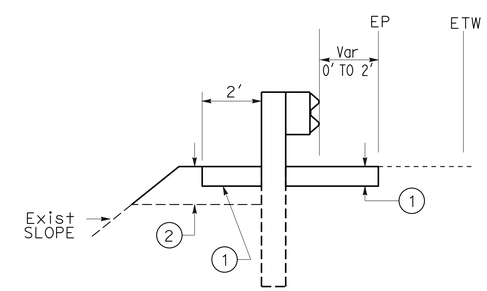

SECTION B-B

CONSTRUCTION DETAILS

NO SCALE

C-2

STATE OF CALIFORNIA - DEPARTMENT OF TRANSPORTATION
Caltrans
TRAFFIC DESIGN

FUNCTIONAL SUPERVISOR: MOHAMMED CHOWDHURY
CALCULATED-DESIGNED BY: RICHARD KHAW
CHECKED BY: ESTHER M. KIM
REVISED BY
DATE REVISED

LAST REVISION 07-30-12
DATE PLOTTED => 14-FEB-2013
TIME PLOTTED => 13:25

Dist	COUNTY	ROUTE	POST MILES TOTAL PROJECT	SHEET No.	TOTAL SHEETS
07	LA	405	39.4/48.6	38	179

REGISTERED CIVIL ENGINEER 6-22-12 DATE

7-30-12
PLANS APPROVAL DATE

REGISTERED PROFESSIONAL ENGINEER ESTHER M. KIM No. 48363 Exp. 6/30/14 CIVIL STATE OF CALIFORNIA

THE STATE OF CALIFORNIA OR ITS OFFICERS OR AGENTS SHALL NOT BE RESPONSIBLE FOR THE ACCURACY OR COMPLETENESS OF SCANNED COPIES OF THIS PLAN SHEET.

NOTE:

1. FOR NOTES, SEE SHEET C-2

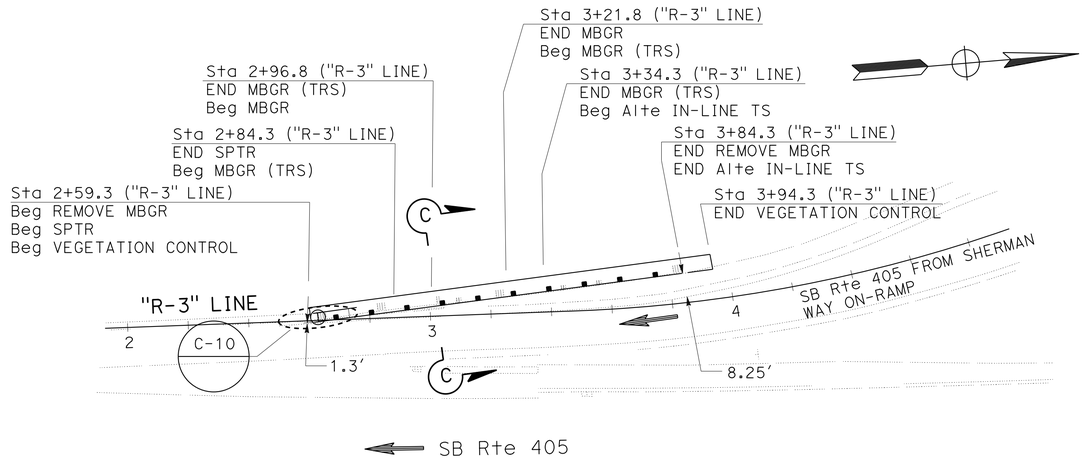

LOCATION 3

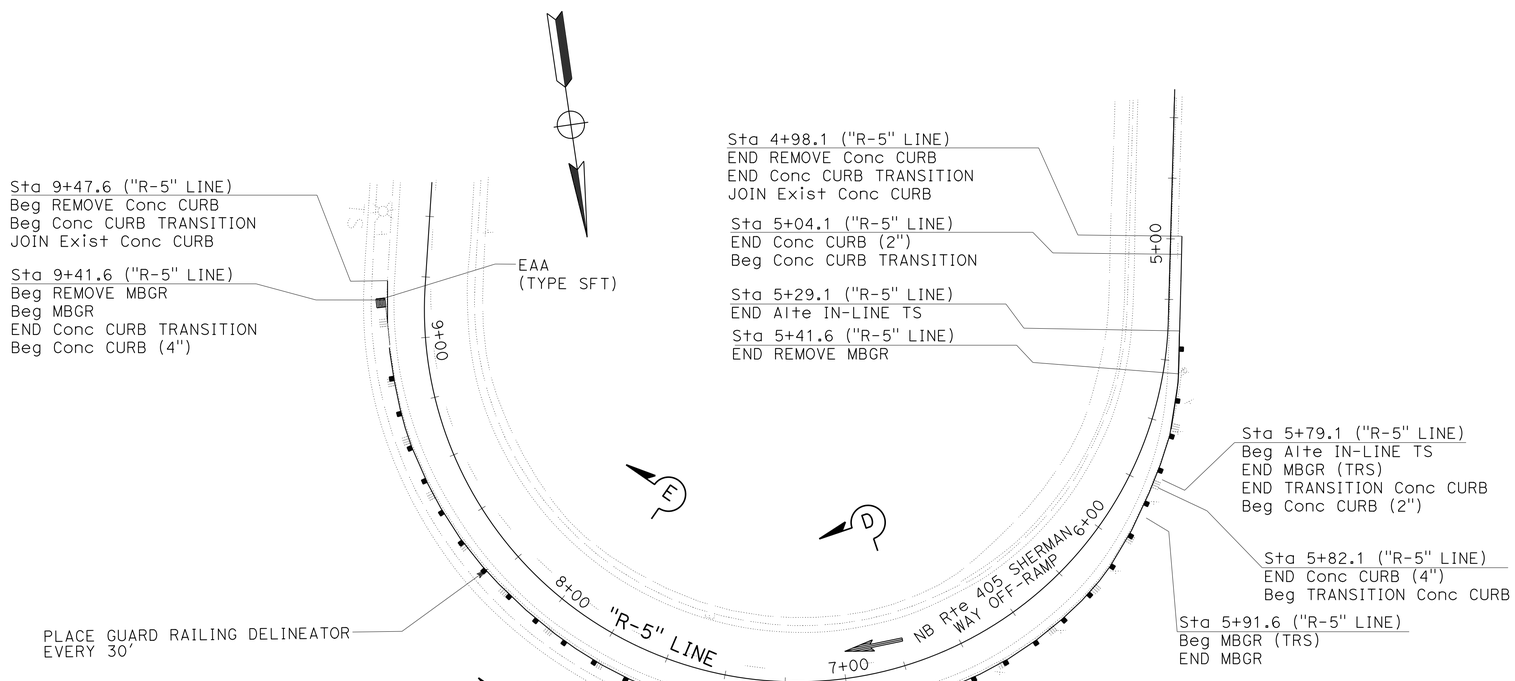

LOCATION 4

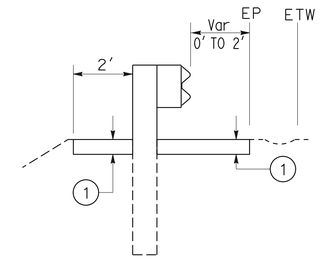

SECTION C-C

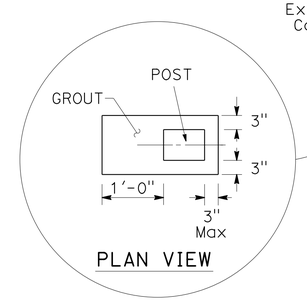

PLAN VIEW

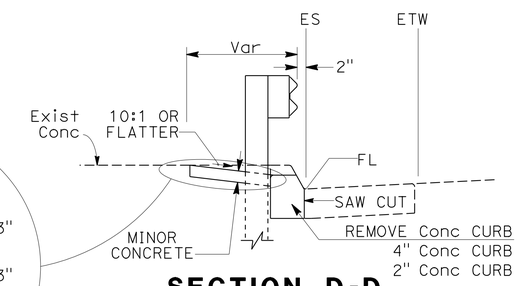

SECTION D-D

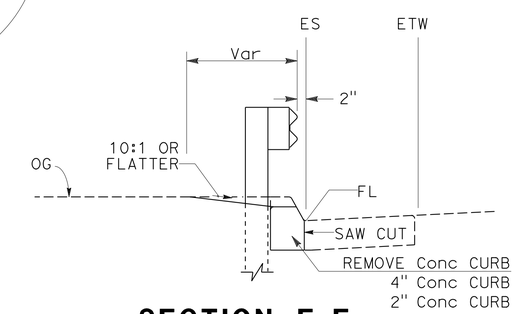

SECTION E-E

CONSTRUCTION DETAILS

NO SCALE

C-3

STATE OF CALIFORNIA - DEPARTMENT OF TRANSPORTATION
Caltrans
TRAFFIC DESIGN

FUNCTIONAL SUPERVISOR: MOHAMMED CHOWDHURY
CALCULATED-DESIGNED BY: RICHARD KHAW
CHECKED BY: ESTHER M. KIM
REVISED BY
DATE REVISED

LAST REVISION 07-30-12
DATE PLOTTED => 14-FEB-2013
TIME PLOTTED => 13:25

Dist	COUNTY	ROUTE	POST MILES TOTAL PROJECT	SHEET No.	TOTAL SHEETS
07	LA	405	39.4/48.6	39	179

REGISTERED CIVIL ENGINEER 6-22-12 DATE

7-30-12
PLANS APPROVAL DATE

REGISTERED PROFESSIONAL ENGINEER ESTHER M. KIM No. 48363 Exp. 6/30/14 CIVIL STATE OF CALIFORNIA

THE STATE OF CALIFORNIA OR ITS OFFICERS OR AGENTS SHALL NOT BE RESPONSIBLE FOR THE ACCURACY OR COMPLETENESS OF SCANNED COPIES OF THIS PLAN SHEET.

NOTE:

1. FOR NOTES, SEE SHEET C-2

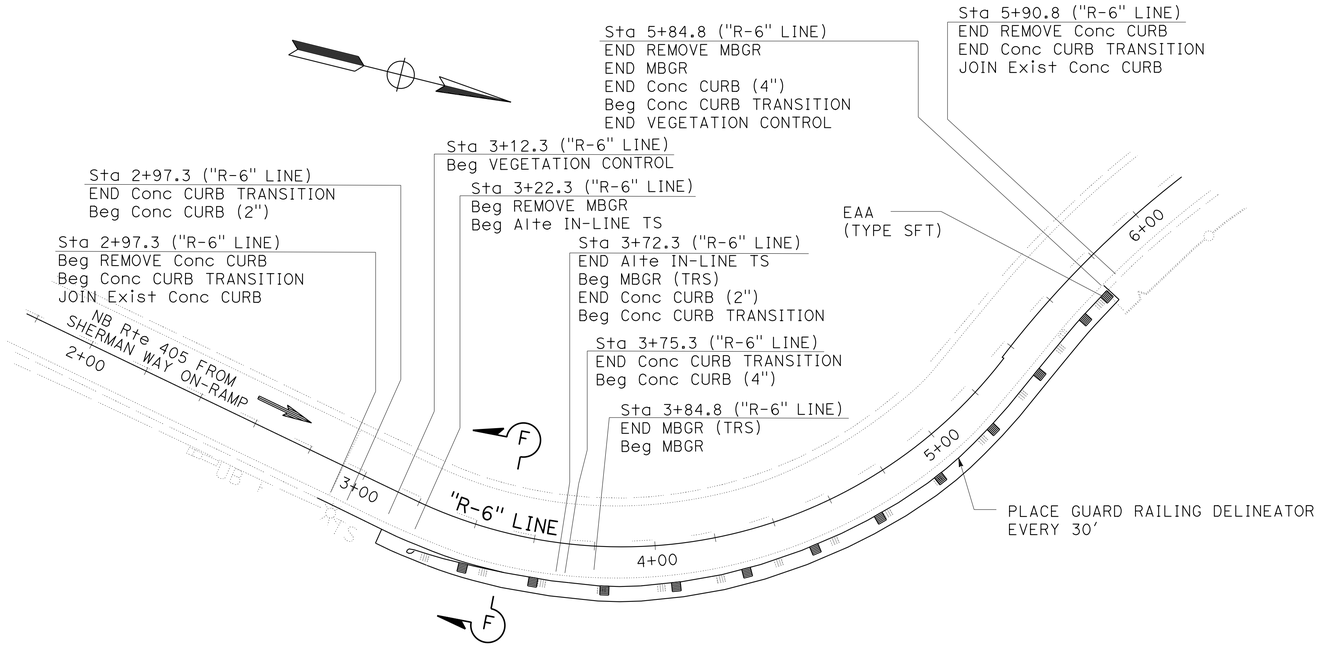

LOCATION 5

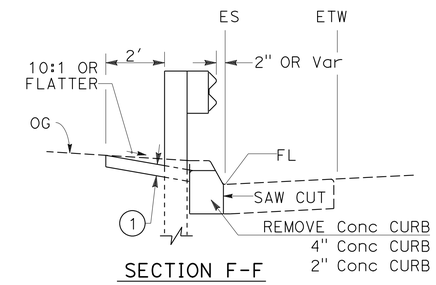

SECTION F-F

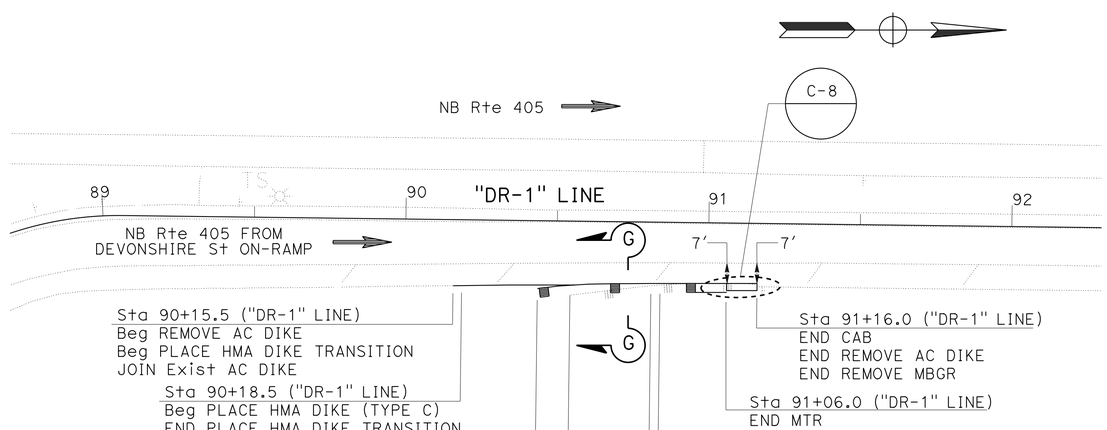

LOCATION 6

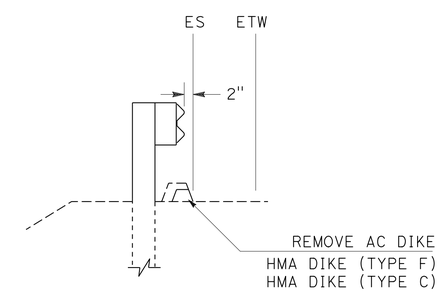

SECTION G-G

CONSTRUCTION DETAILS

NO SCALE

C-4

STATE OF CALIFORNIA - DEPARTMENT OF TRANSPORTATION
Caltrans® TRAFFIC DESIGN

FUNCTIONAL SUPERVISOR: MOHAMMED CHOWDHURY
CALCULATED-DESIGNED BY: RICHARD KHAW
CHECKED BY: ESTHER M. KIM
REVISED BY
DATE REVISED

LAST REVISION 07-30-12
DATE PLOTTED => 14-FEB-2013
TIME PLOTTED => 13:25

Dist	COUNTY	ROUTE	POST MILES TOTAL PROJECT	SHEET No.	TOTAL SHEETS
07	LA	405	39.4/48.6	40	179

REGISTERED CIVIL ENGINEER 6-22-12 DATE

7-30-12
PLANS APPROVAL DATE

REGISTERED PROFESSIONAL ENGINEER ESTHER M. KIM No. 48363 Exp. 6/30/14 CIVIL STATE OF CALIFORNIA

THE STATE OF CALIFORNIA OR ITS OFFICERS OR AGENTS SHALL NOT BE RESPONSIBLE FOR THE ACCURACY OR COMPLETENESS OF SCANNED COPIES OF THIS PLAN SHEET.

NOTE:

1. FOR NOTES, SEE SHEET C-2.

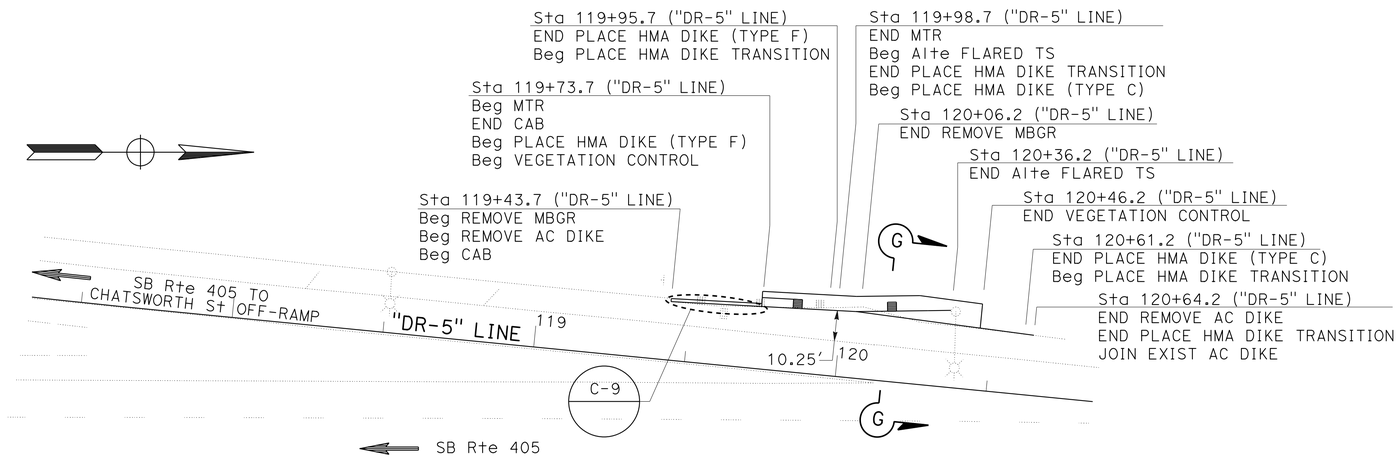

LOCATION 7

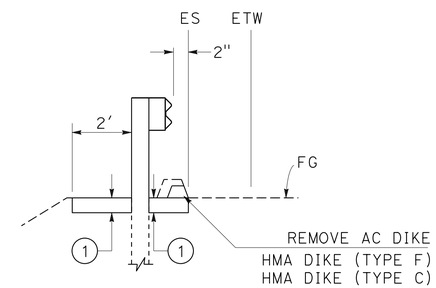

SECTION G-G

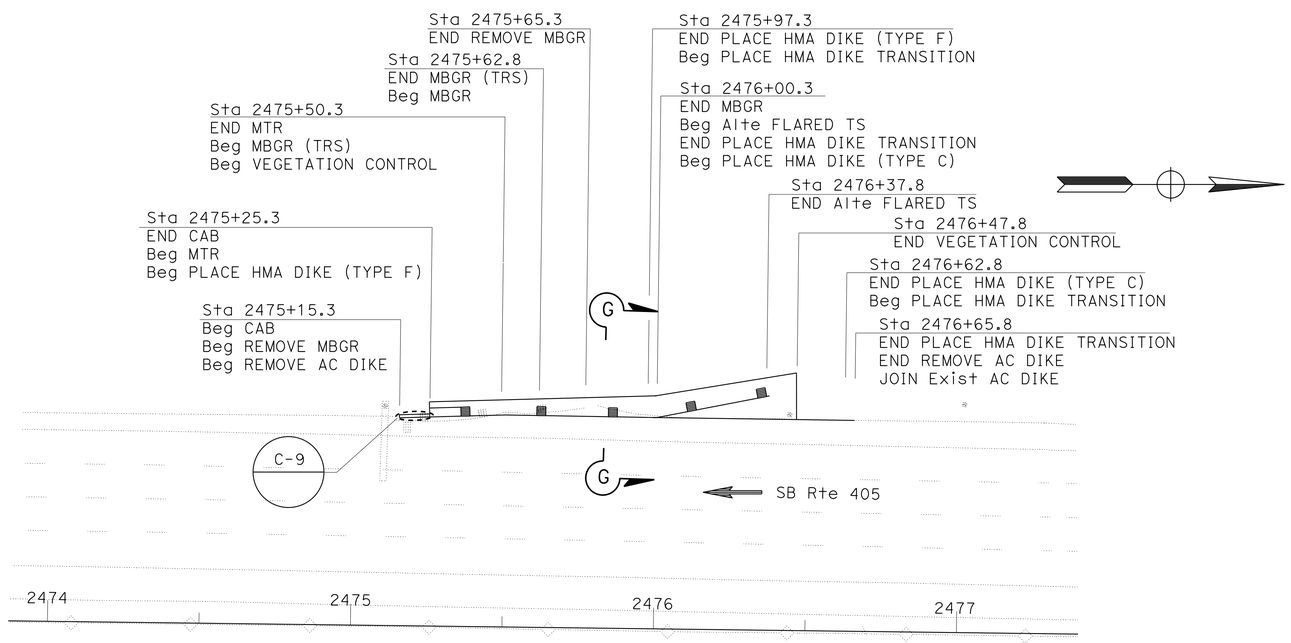

LOCATION 8

CONSTRUCTION DETAILS

NO SCALE

C-5

STATE OF CALIFORNIA - DEPARTMENT OF TRANSPORTATION
Caltrans® TRAFFIC DESIGN

FUNCTIONAL SUPERVISOR: MOHAMMED CHOWDHURY
CALCULATED-DESIGNED BY: RICHARD KHAW
CHECKED BY: ESTHER M. KIM
REVISED BY
DATE REVISED

LAST REVISION 07-30-12
DATE PLOTTED => 14-FEB-2013
TIME PLOTTED => 13:25

Dist	COUNTY	ROUTE	POST MILES TOTAL PROJECT	SHEET No.	TOTAL SHEETS
07	LA	405	39.4/48.6	41	179

REGISTERED CIVIL ENGINEER 6-22-12 DATE

7-30-12
PLANS APPROVAL DATE

REGISTERED PROFESSIONAL ENGINEER ESTHER M. KIM No. 48363 Exp. 6/30/14 CIVIL STATE OF CALIFORNIA

THE STATE OF CALIFORNIA OR ITS OFFICERS OR AGENTS SHALL NOT BE RESPONSIBLE FOR THE ACCURACY OR COMPLETENESS OF SCANNED COPIES OF THIS PLAN SHEET.

NOTE:

1. FOR NOTES, SEE SHEET C-2.

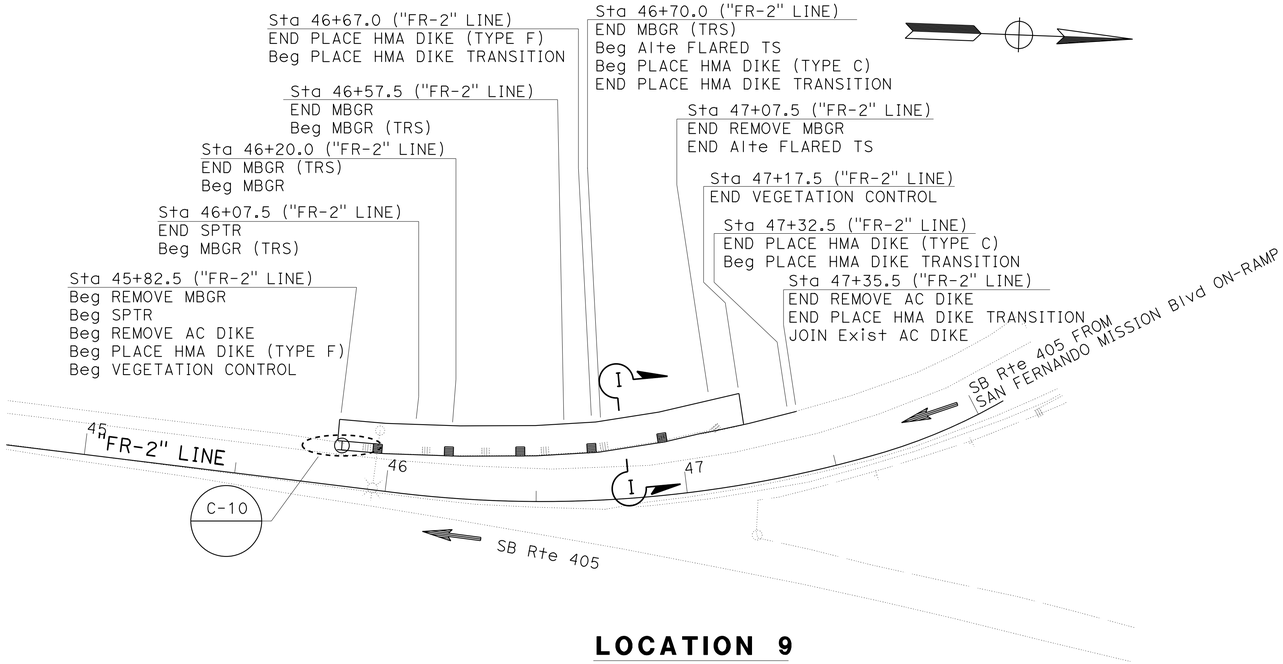

LOCATION 9

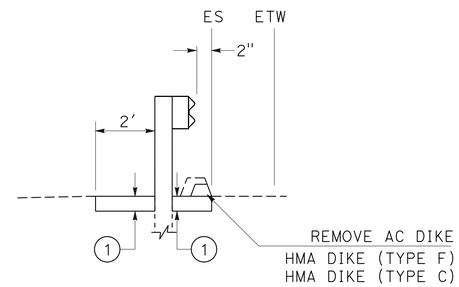

SECTION I-I

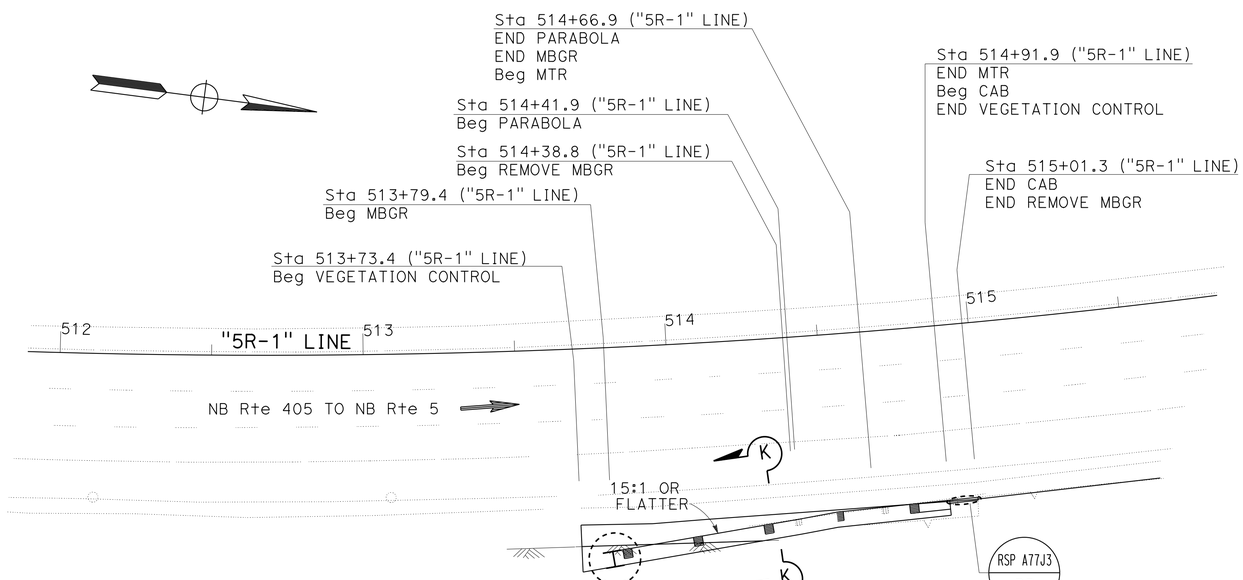

LOCATION 10

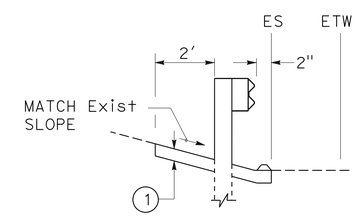

SECTION K-K

CONSTRUCTION DETAILS

NO SCALE

C-6

STATE OF CALIFORNIA - DEPARTMENT OF TRANSPORTATION
Caltrans
TRAFFIC DESIGN

FUNCTIONAL SUPERVISOR: MOHAMMED CHOWDHURY
CALCULATED-DESIGNED BY: RICHARD KHAW
CHECKED BY: ESTHER M. KIM
REVISED BY
DATE REVISED

LAST REVISION 07-30-12
DATE PLOTTED => 14-FEB-2013
TIME PLOTTED => 13:25

Dist	COUNTY	ROUTE	POST MILES TOTAL PROJECT	SHEET No.	TOTAL SHEETS
07	LA	405	39.4/48.6	42	179

REGISTERED CIVIL ENGINEER 6-22-12 DATE

7-30-12
PLANS APPROVAL DATE

REGISTERED PROFESSIONAL ENGINEER ESTHER M. KIM No. 48363 Exp. 6/30/14 CIVIL STATE OF CALIFORNIA

THE STATE OF CALIFORNIA OR ITS OFFICERS OR AGENTS SHALL NOT BE RESPONSIBLE FOR THE ACCURACY OR COMPLETENESS OF SCANNED COPIES OF THIS PLAN SHEET.

NOTE:

THE CONTRACTOR SHALL VERIFY ALL CONTROLLING FIELD DIMENSIONS BEFORE ORDERING OR FABRICATING ANY MATERIAL.

LEGEND:

- EXISTING STRUCTURE
- NEW CONSTRUCTION
- ○ EXISTING REINFORCEMENT

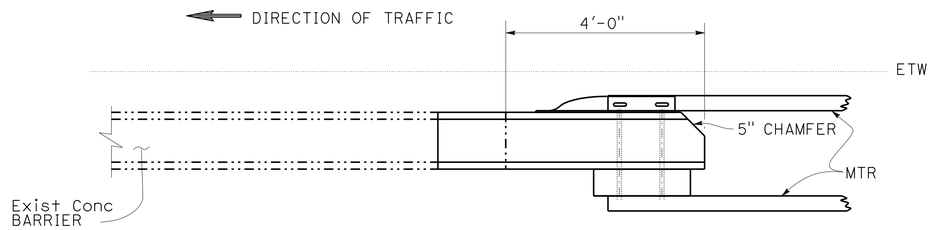

PLAN

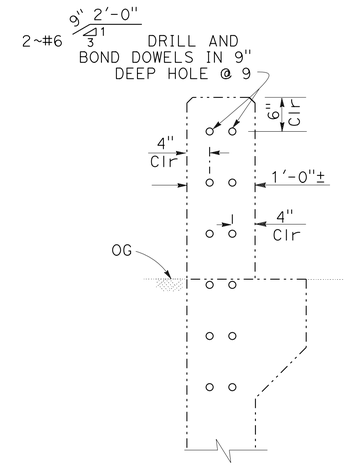

SECTION A-A

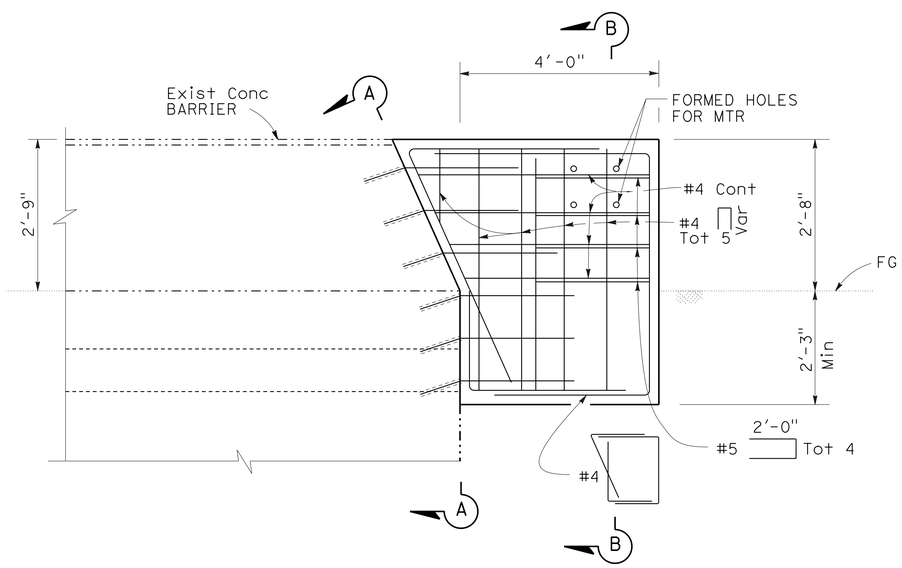

ELEVATION

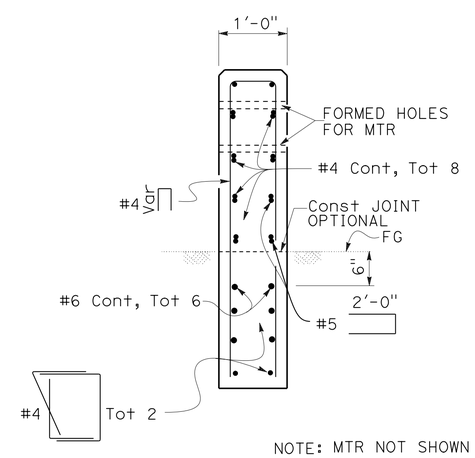

SECTION B-B

LOCATION 1

CONSTRUCTION DETAILS
CONCRETE ANCHOR BLOCK
NO SCALE

C-7

STATE OF CALIFORNIA - DEPARTMENT OF TRANSPORTATION
Caltrans® **TRAFFIC DESIGN**

FUNCTIONAL SUPERVISOR: MOHAMMED CHOWDHURY
CALCULATED-DESIGNED BY: RICHARD KHAW
CHECKED BY: ESTHER M. KIM
REVISED BY / DATE REVISED

LAST REVISION 07-30-12
DATE PLOTTED => 14-FEB-2013
TIME PLOTTED => 13:25

Dist	COUNTY	ROUTE	POST MILES TOTAL PROJECT	SHEET No.	TOTAL SHEETS
07	LA	405	39.4/48.6	43	179

REGISTERED CIVIL ENGINEER 6-22-12 DATE

7-30-12
PLANS APPROVAL DATE

REGISTERED PROFESSIONAL ENGINEER ESTHER M. KIM No. 48363 Exp. 6/30/14 CIVIL STATE OF CALIFORNIA

THE STATE OF CALIFORNIA OR ITS OFFICERS OR AGENTS SHALL NOT BE RESPONSIBLE FOR THE ACCURACY OR COMPLETENESS OF SCANNED COPIES OF THIS PLAN SHEET.

NOTES:

1. THE CONTRACTOR SHALL VERIFY ALL CONTROLLING FIELD DIMENSIONS BEFORE ORDERING OR FABRICATING ANY MATERIAL.
2. VEGETATION CONTROL NOT SHOWN.

TABLE

LOCATION No.	SHEET No.	L1	L2	L3
2	C-2	12'-0"	2'-10"	0'-8"
6	C-4	10'-0"	3'-0"	1'-4"

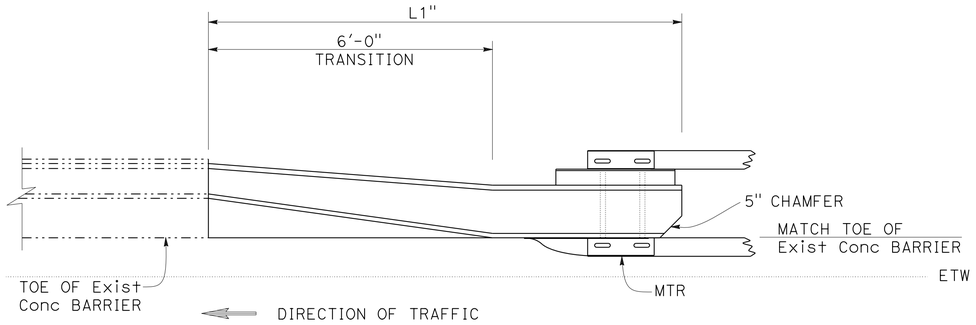

PLAN

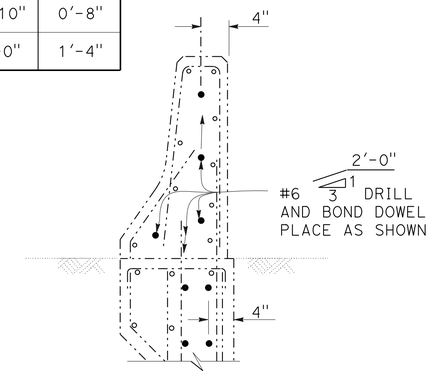

SECTION A-A

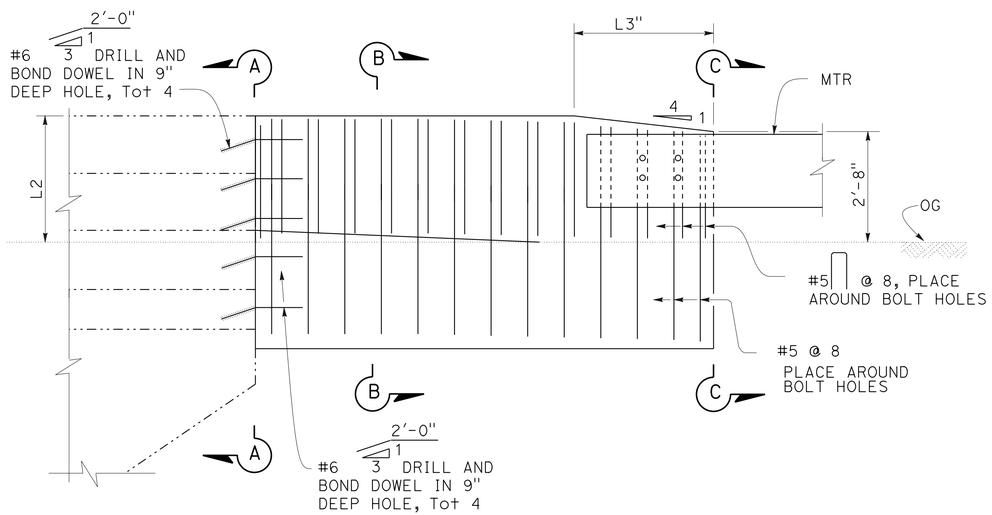

ELEVATION

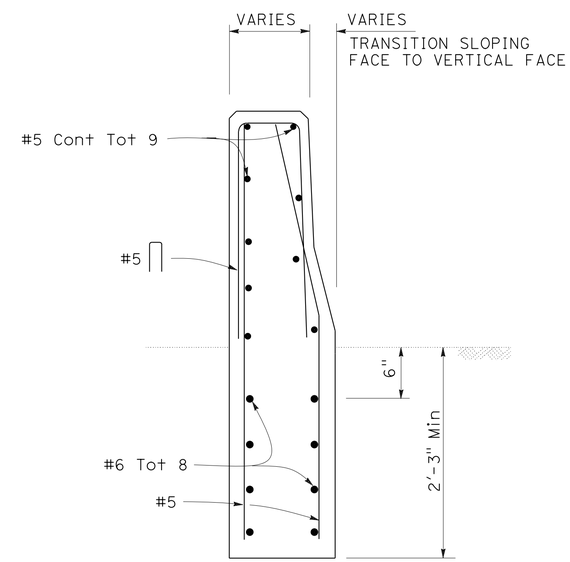

SECTION B-B

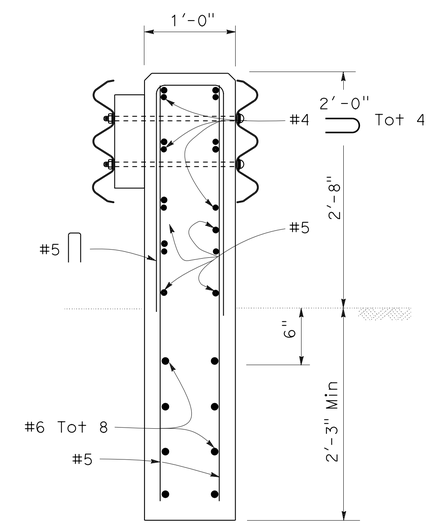

SECTION C-C

LOCATIONS 2 & 6

CONSTRUCTION DETAILS
CONCRETE ANCHOR BLOCK
NO SCALE

C-8

STATE OF CALIFORNIA - DEPARTMENT OF TRANSPORTATION
Caltrans® TRAFFIC DESIGN

FUNCTIONAL SUPERVISOR: MOHAMMED CHOWDHURY
CALCULATED-DESIGNED BY: RICHARD KHAW
CHECKED BY: ESTHER M. KIM
REVISED BY
DATE REVISED

LAST REVISION 07-30-12
DATE PLOTTED => 14-FEB-2013
TIME PLOTTED => 13:25

Dist	COUNTY	ROUTE	POST MILES TOTAL PROJECT	SHEET No.	TOTAL SHEETS
07	LA	405	39.4/48.6	44	179

REGISTERED CIVIL ENGINEER 6-22-12 DATE

7-30-12
PLANS APPROVAL DATE

REGISTERED PROFESSIONAL ENGINEER ESTHER M. KIM No. 48363 Exp. 6/30/14 CIVIL STATE OF CALIFORNIA

THE STATE OF CALIFORNIA OR ITS OFFICERS OR AGENTS SHALL NOT BE RESPONSIBLE FOR THE ACCURACY OR COMPLETENESS OF SCANNED COPIES OF THIS PLAN SHEET.

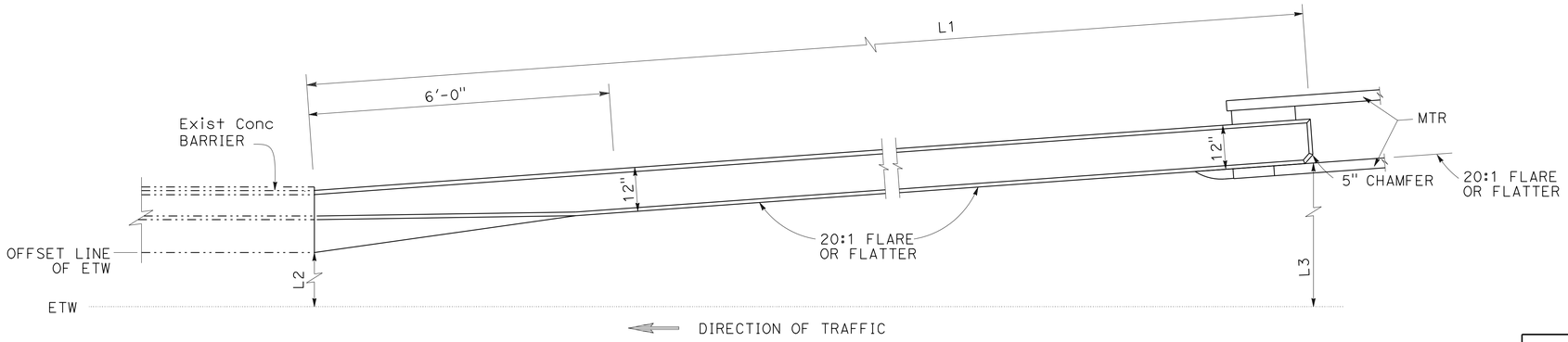

PLAN

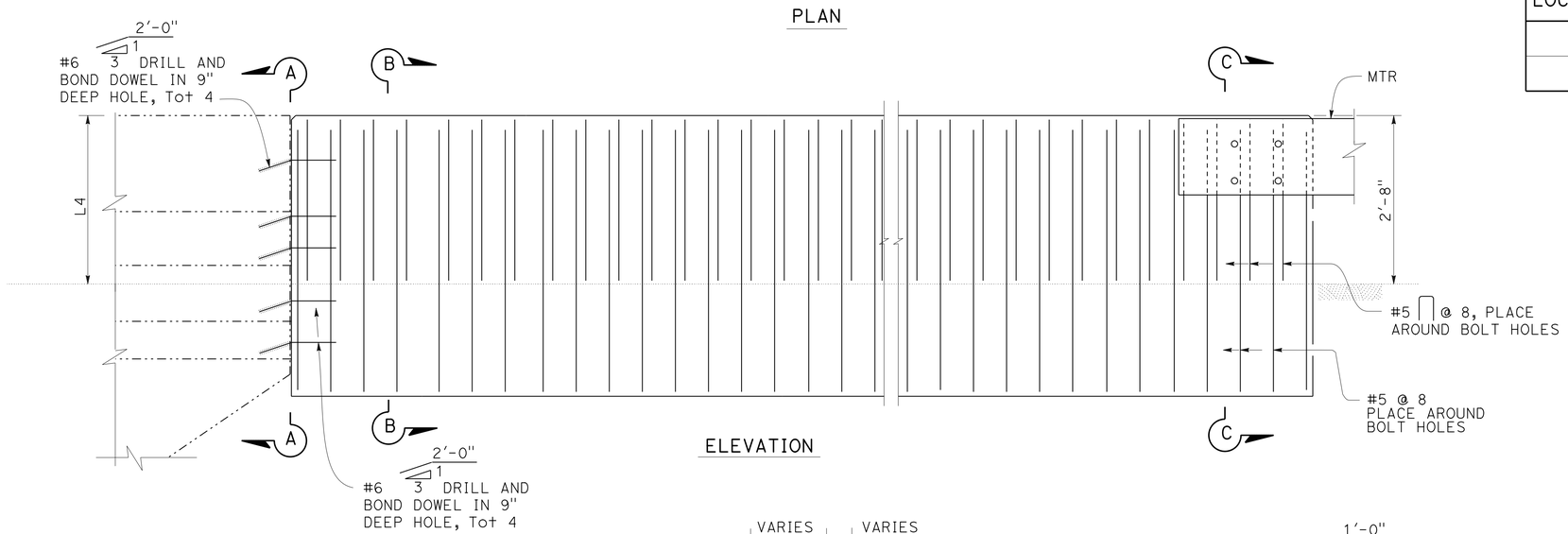

ELEVATION

TABLE

LOCATION No.	SHEET No.	L1	L2	L3	L4
7	C-5	30'-0"	7'-6"	9'-0"	2'-7"
8	C-5	10'-0"	6'-0"	6'-6"	2'-5½"

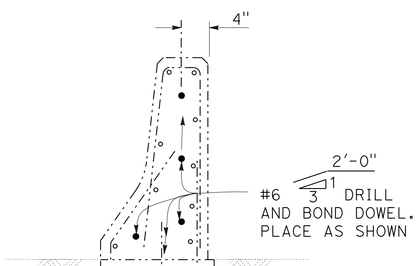

SECTION A-A

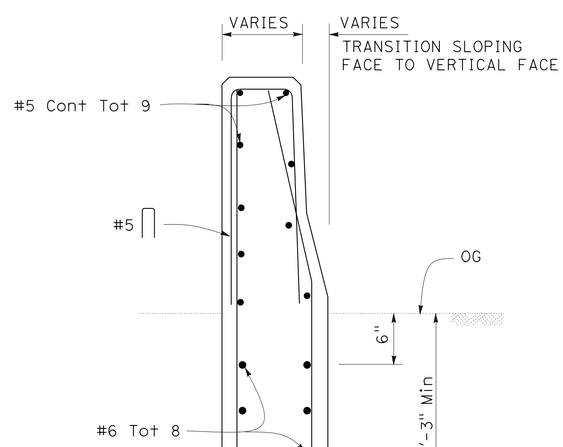

SECTION B-B

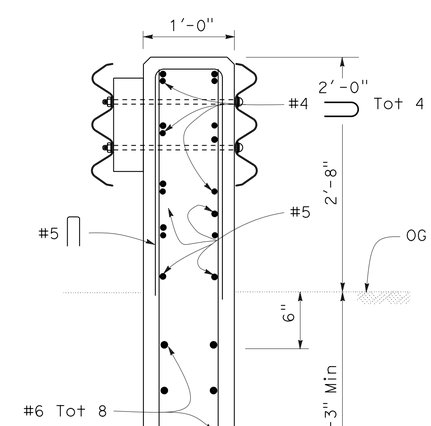

SECTION C-C

LOCATIONS 7 & 8

CONSTRUCTION DETAILS
CONCRETE ANCHOR BLOCK
NO SCALE

C-9

REVISED BY | DATE REVISED
RICHARD KHAW | ESTHER M. KIM
CALCULATED-DESIGNED BY | CHECKED BY
FUNCTIONAL SUPERVISOR: MOHAMMED CHOWDHURY

STATE OF CALIFORNIA - DEPARTMENT OF TRANSPORTATION
Caltrans® TRAFFIC DESIGN

F:\CALTRANSD7\ProjectsFY12-13\Andrew-252001\forprojectdir2-6-13c1\725200ga009.dgn

LAST REVISION 07-30-12 | DATE PLOTTED => 14-FEB-2013 | TIME PLOTTED => 13:25

Dist	COUNTY	ROUTE	POST MILES TOTAL PROJECT	SHEET No.	TOTAL SHEETS
07	LA	405	39.4/48.6	45	179

REGISTERED CIVIL ENGINEER 6-22-12 DATE

7-30-12
PLANS APPROVAL DATE

REGISTERED PROFESSIONAL ENGINEER ESTHER M. KIM No. 48363 Exp. 6/30/14 CIVIL STATE OF CALIFORNIA

THE STATE OF CALIFORNIA OR ITS OFFICERS OR AGENTS SHALL NOT BE RESPONSIBLE FOR THE ACCURACY OR COMPLETENESS OF SCANNED COPIES OF THIS PLAN SHEET.

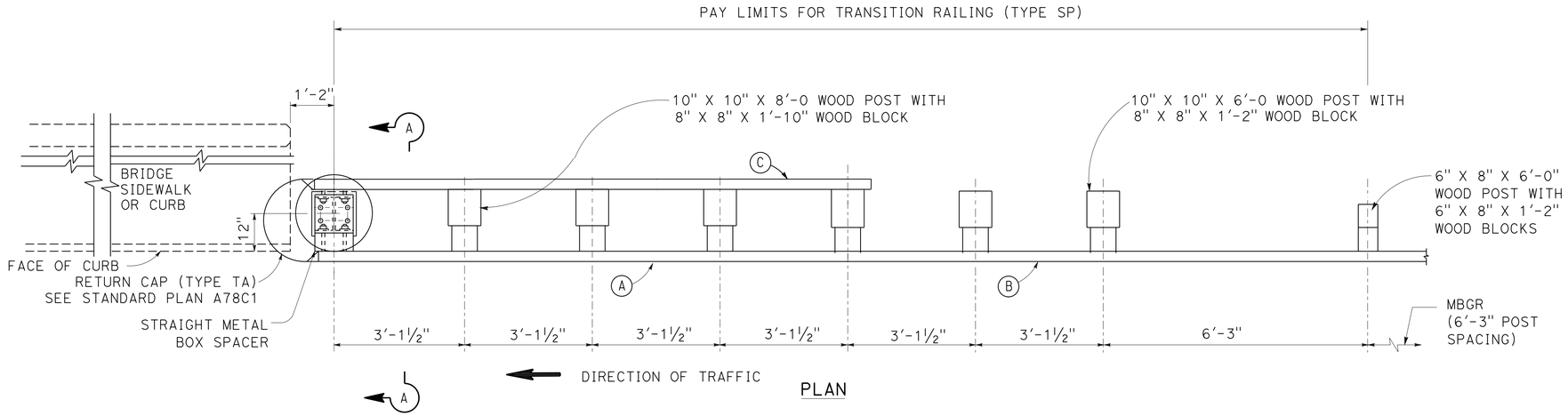

PLAN

NOTES:

1. FOR NOTES, SEE SHEET C-2.
2. ANCHOR POST ASSEMBLY SHALL BE GALVANIZED AFTER FABRICATION.

LEGEND:

(A) NESTED THRIE BEAM ELEMENTS (ONE 12 GAGE ELEMENT NESTED OVER ONE 10 GAGE ELEMENT).

(B) ONE 10 GAGE THRIE BEAM ELEMENT.

(C) ONE 12 GAGE THRIE BEAM ELEMENT.
10 GAGE = 0.135" THICK
12 GAGE = 0.108" THICK

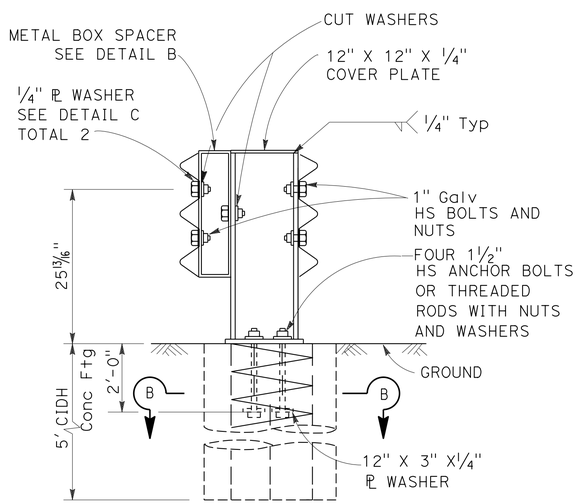

SECTION A-A

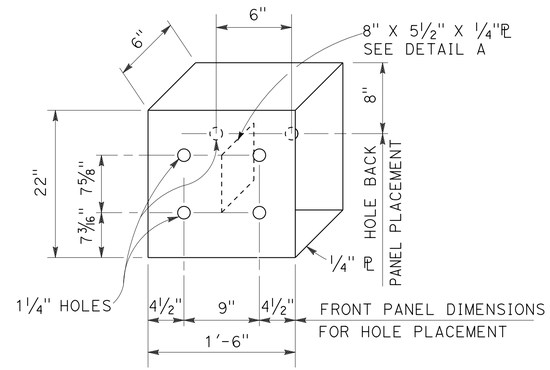

DETAIL B

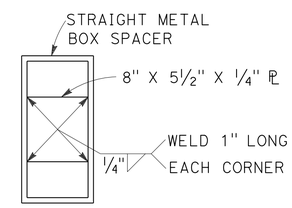

DETAIL A

STRAIGHT METAL BOX SPACER

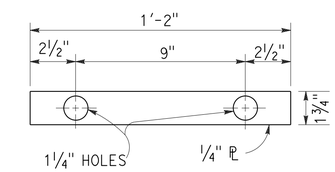

DETAIL C

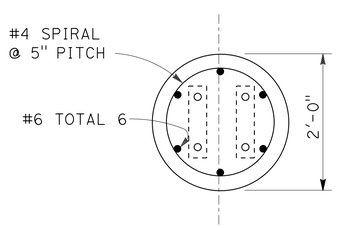

SECTION B-B

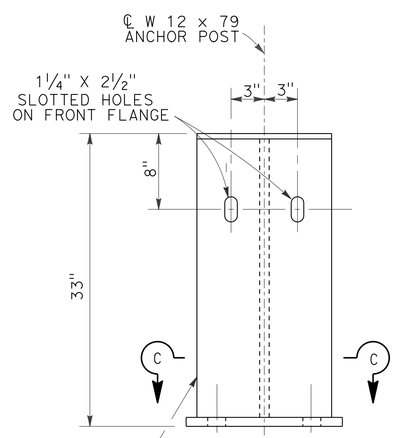

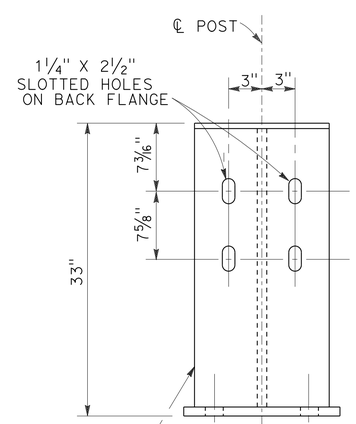

ANCHOR POST ASSEMBLY

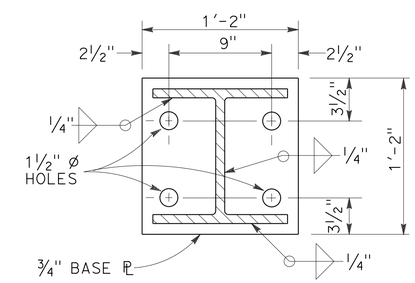

SECTION C-C

LOCATIONS 3 & 9

CONSTRUCTION DETAILS
TRANSITION RAILING (TYPE SP)
NO SCALE

C-10

STATE OF CALIFORNIA - DEPARTMENT OF TRANSPORTATION
Caltrans TRAFFIC DESIGN

FUNCTIONAL SUPERVISOR: MOHAMMED CHOWDHURY
CALCULATED-DESIGNED BY: RICHARD KHAW
CHECKED BY: ESTHER M. KIM
REVISED BY
DATE REVISED

LAST REVISION DATE PLOTTED => 14-FEB-2013
07-30-12 TIME PLOTTED => 13:25

Dist	COUNTY	ROUTE	POST MILES TOTAL PROJECT	SHEET No.	TOTAL SHEETS
07	LA	405	39.4/48.6	46	179

REGISTERED CIVIL ENGINEER 5-30-12 DATE

7-30-12
PLANS APPROVAL DATE

REGISTERED PROFESSIONAL ENGINEER PETER VAN DINH No. C62666 Exp. 6-30-14 CIVIL STATE OF CALIFORNIA

THE STATE OF CALIFORNIA OR ITS OFFICERS OR AGENTS SHALL NOT BE RESPONSIBLE FOR THE ACCURACY OR COMPLETENESS OF SCANNED COPIES OF THIS PLAN SHEET.

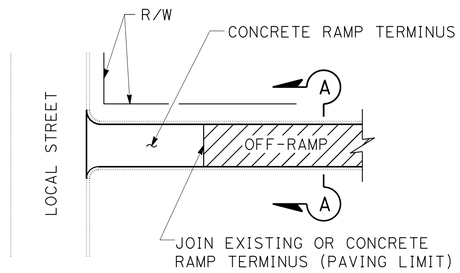

OFF-RAMP

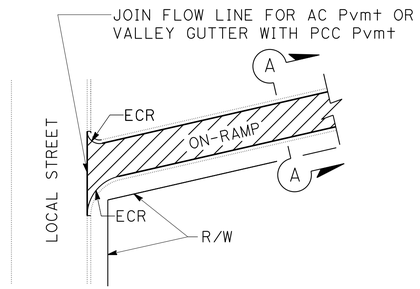

ON-RAMP

LEGEND:

0.20′ COLD PLANE AC PAVEMENT
0.20′ RHMA, SUPERPAVE (GAP GRADED)

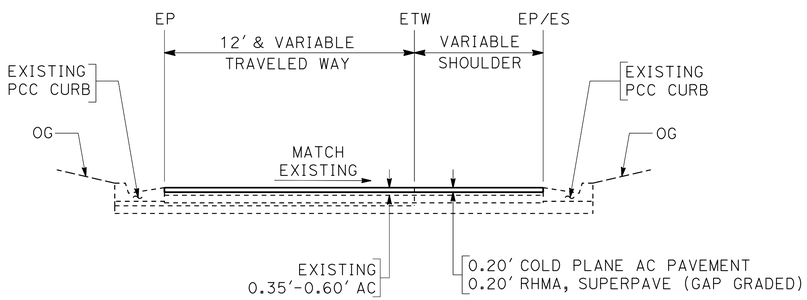

SECTION A-A

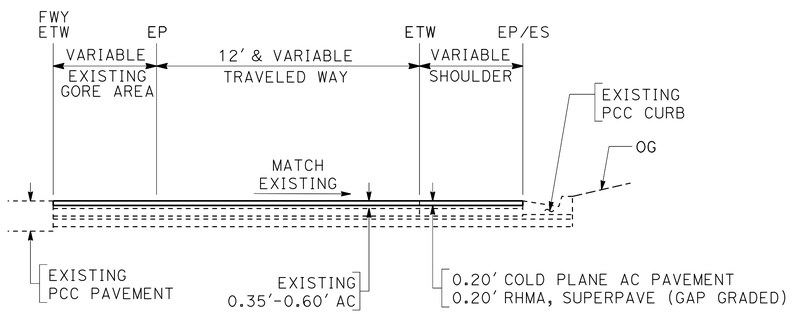

SECTION B-B

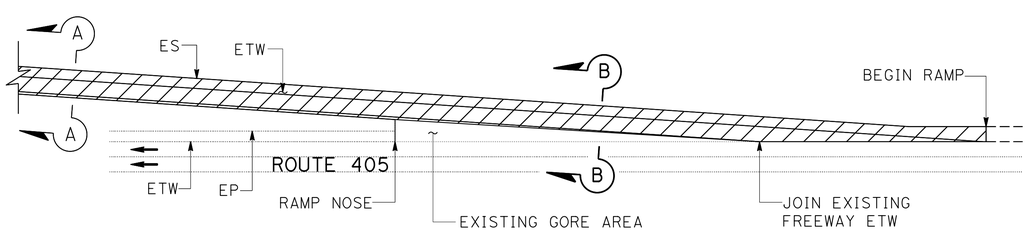

OFF-RAMP

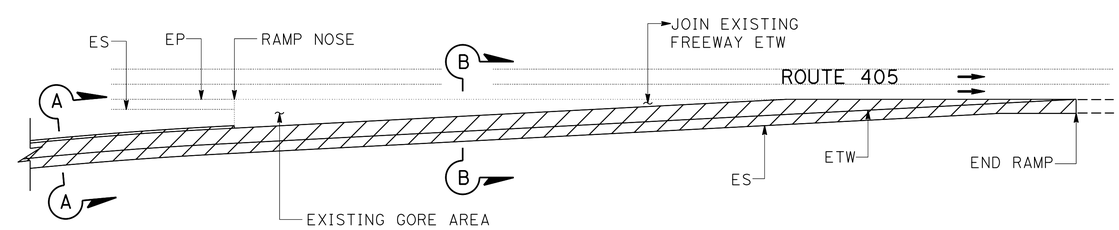

ON-RAMP

TYPICAL RAMP PAVING DETAILS

CONSTRUCTION DETAILS

NO SCALE

C-11

STATE OF CALIFORNIA - DEPARTMENT OF TRANSPORTATION
Caltrans MAINTENANCE ENGINEERING

FUNCTIONAL SUPERVISOR: PAUL CRISPI
CALCULATED-DESIGNED BY: PETER DINH
CHECKED BY: PAUL CRISPI
REVISED BY
DATE REVISED

LAST REVISION 07-30-12
DATE PLOTTED => 14-FEB-2013
TIME PLOTTED => 13:25

Dist	COUNTY	ROUTE	POST MILES TOTAL PROJECT	SHEET No.	TOTAL SHEETS
07	LA	405	39.4/48.6	47	179

REGISTERED CIVIL ENGINEER 5-30-12 DATE

7-30-12
PLANS APPROVAL DATE

REGISTERED PROFESSIONAL ENGINEER PETER VAN DINH No. C62666 Exp. 6-30-14 CIVIL STATE OF CALIFORNIA

THE STATE OF CALIFORNIA OR ITS OFFICERS OR AGENTS SHALL NOT BE RESPONSIBLE FOR THE ACCURACY OR COMPLETENESS OF SCANNED COPIES OF THIS PLAN SHEET.

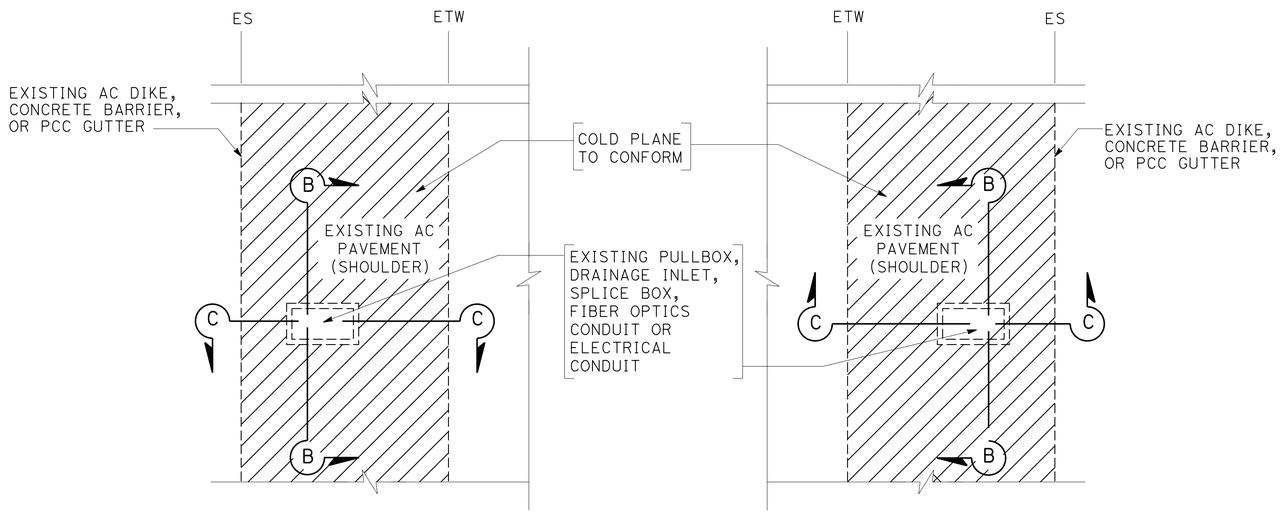

FIBER OPTIC PULLBOX, DRAINAGE INLET OR SPLICEBOX (VARIOUS LOCATIONS)

LEGEND:

0.20' COLD PLANE AC PAVEMENT
0.20' RMHMA, SUPERPAVE (GAP GRADED)

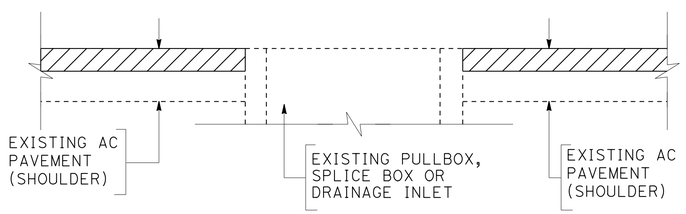

SECTION B-B

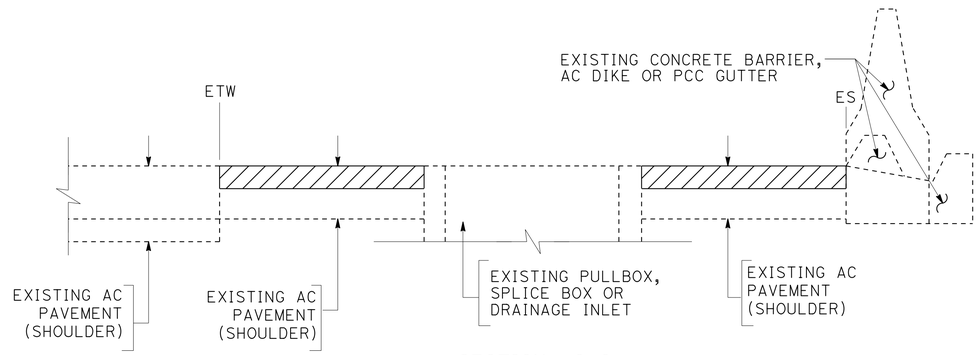

SECTION C-C

TYPICAL FIBER OPTIC PULLBOX, SPLICE BOX OR DRAINAGE INLET

CONSTRUCTION DETAILS

NO SCALE

C-12

STATE OF CALIFORNIA - DEPARTMENT OF TRANSPORTATION
Caltrans MAINTENANCE ENGINEERING

FUNCTIONAL SUPERVISOR: PAUL CRISPI
CALCULATED-DESIGNED BY: PETER DINH
CHECKED BY: PAUL CRISPI
REVISED BY
DATE REVISED

LAST REVISION 07-30-12
DATE PLOTTED => 14-FEB-2013
TIME PLOTTED => 13:25

Dist	COUNTY	ROUTE	POST MILES TOTAL PROJECT	SHEET No.	TOTAL SHEETS
07	LA	405	39.4/48.6	48	179

REGISTERED CIVIL ENGINEER 5-30-12 DATE

7-30-12
PLANS APPROVAL DATE

REGISTERED PROFESSIONAL ENGINEER PETER VAN DINH No. C62666 Exp. 6-30-14 CIVIL STATE OF CALIFORNIA

THE STATE OF CALIFORNIA OR ITS OFFICERS OR AGENTS SHALL NOT BE RESPONSIBLE FOR THE ACCURACY OR COMPLETENESS OF SCANNED COPIES OF THIS PLAN SHEET.

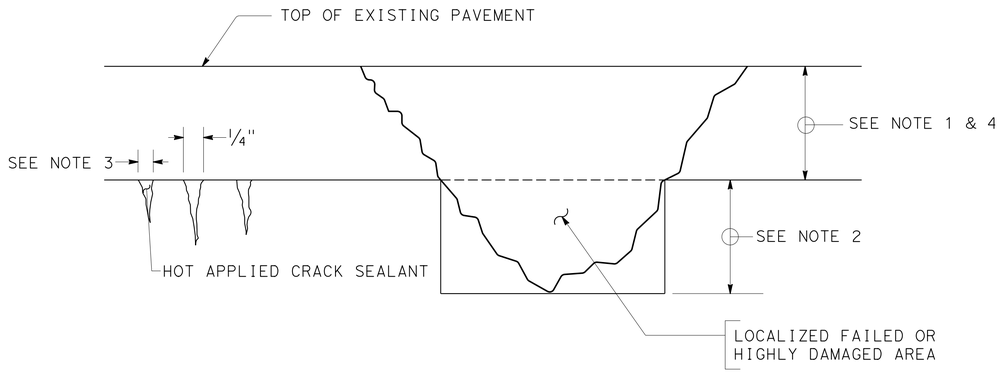

CRACKS TREATMENT AND REPAIR FAILED AREAS

NOTES:

1. COLD PLANE THE PLANNED THICKNESS OF EXISTING AC PAVEMENT.
2. REMOVE LOCALIZED FAILED AREAS AND PLACE WITH MINIMUM 0.20' RHMA, SUPERPAVE (GAP GRADED).
3. SEAL CRACKS GREATER THAN 1/4" WITH HOT APPLIED CRACK SEALANT.
4. REPLACE AC SURFACING WITH THE PLANNED THICKNESS OF RHMA, SUPERPAVE (GAP GRADED).

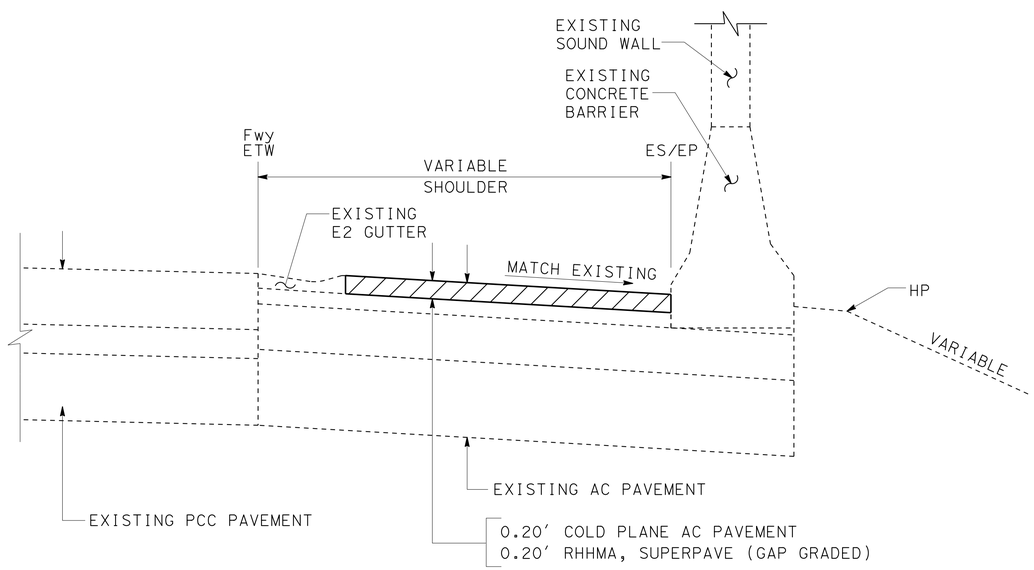

TYPICAL AT CONCRETE BARRIER OR SOUND WALL

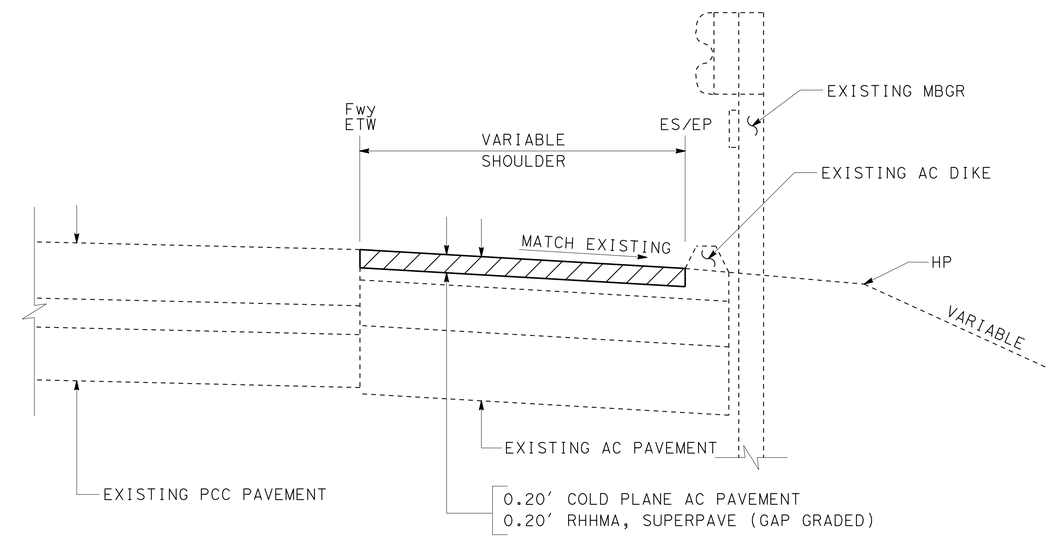

TYPICAL AT METAL BEAM GUARD RAILING

CONSTRUCTION DETAILS

NO SCALE

C-13

REVISED BY	DATE REVISED
PETER DINH	PAUL CRISPI
CALCULATED-DESIGNED BY	CHECKED BY
FUNCTIONAL SUPERVISOR	PAUL CRISPI

STATE OF CALIFORNIA - DEPARTMENT OF TRANSPORTATION
Caltrans MAINTENANCE ENGINEERING

LAST REVISION 07-30-12 | DATE PLOTTED => 14-FEB-2013 | TIME PLOTTED => 13:25

Dist	COUNTY	ROUTE	POST MILES TOTAL PROJECT	SHEET No.	TOTAL SHEETS
07	LA	405	39.4/48.6	49	179

REGISTERED CIVIL ENGINEER 5-30-12 DATE

7-30-12
PLANS APPROVAL DATE

REGISTERED PROFESSIONAL ENGINEER PETER VAN DINH No. C62666 Exp. 6-30-14 CIVIL STATE OF CALIFORNIA

THE STATE OF CALIFORNIA OR ITS OFFICERS OR AGENTS SHALL NOT BE RESPONSIBLE FOR THE ACCURACY OR COMPLETENESS OF SCANNED COPIES OF THIS PLAN SHEET.

LEGEND:

GRIND EXISTING CONCRETE Pvmt

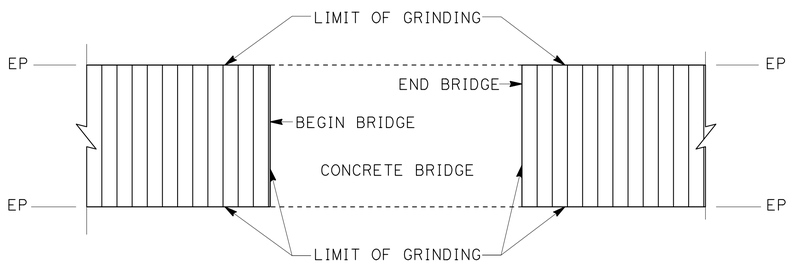

TYPICAL GRINDING AT CONCRETE BRIDGES

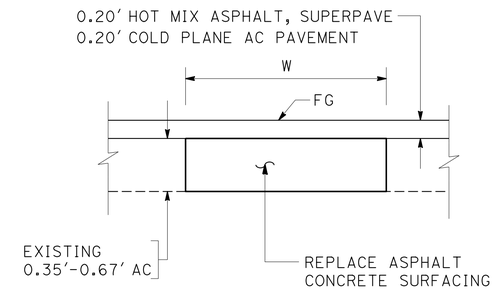

SECTION A-A

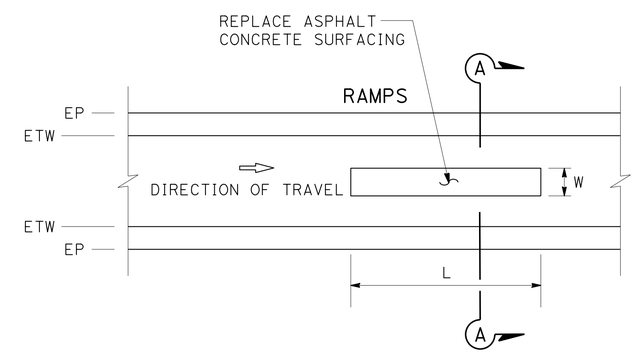

PLAN

TYPICAL REPLACE ASPHALT CONCRETE SURFACING DETAIL

CONSTRUCTION DETAILS
NO SCALE

C-14

REVISED BY | DATE REVISED
PETER DINH | PAUL CRISPI
CALCULATED-DESIGNED BY | CHECKED BY
FUNCTIONAL SUPERVISOR
PAUL CRISPI

STATE OF CALIFORNIA - DEPARTMENT OF TRANSPORTATION
Caltrans MAINTENANCE ENGINEERING

LAST REVISION 07-30-12 | DATE PLOTTED => 14-FEB-2013 | TIME PLOTTED => 13:25

Dist	COUNTY	ROUTE	POST MILES TOTAL PROJECT	SHEET No.	TOTAL SHEETS
07	LA	405	39.4/48.6	50	179

REGISTERED CIVIL ENGINEER 5-30-12 DATE

7-30-12
PLANS APPROVAL DATE

REGISTERED PROFESSIONAL ENGINEER PETER VAN DINH No. C62666 Exp. 6-30-14 CIVIL STATE OF CALIFORNIA

THE STATE OF CALIFORNIA OR ITS OFFICERS OR AGENTS SHALL NOT BE RESPONSIBLE FOR THE ACCURACY OR COMPLETENESS OF SCANNED COPIES OF THIS PLAN SHEET.

NOTES:

1. ALL NOTES FROM A88A APPLIES.
2. MAXIMUM SLOPES AT THE ENTRANCE ALONG THE FLOWLINE SHALL NOT EXCEED 2 PERCENT (LONGITUDINALLY).
3. CURB RAMPS SHALL HAVE A DETECTABLE WARNING SURFACE THAT EXTENDS THE FULL WIDTH AND 3'-0" DEPTH OF THE RAMP.
4. TRAFFIC SIGNAL AND LIGHTING CONDUIT LOCATIONS ARE APPROXIMATE. CONTRACTOR SHALL VERIFY EXISTING CONDUITS BEFORE COMMENCEMENT OF WORK.

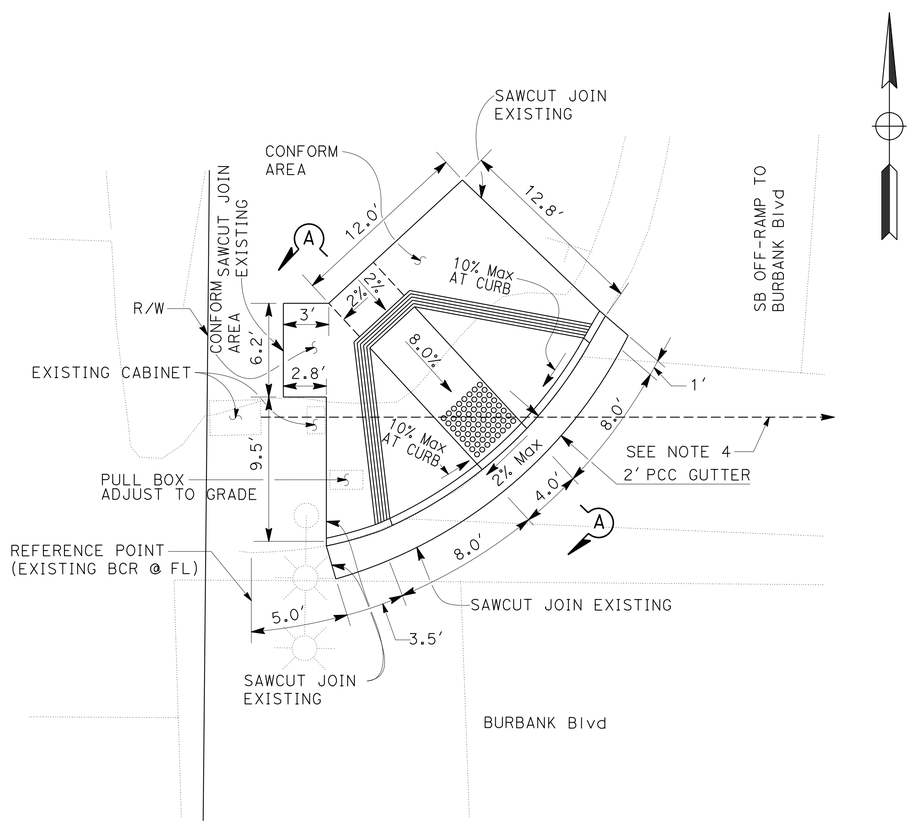

PLAN

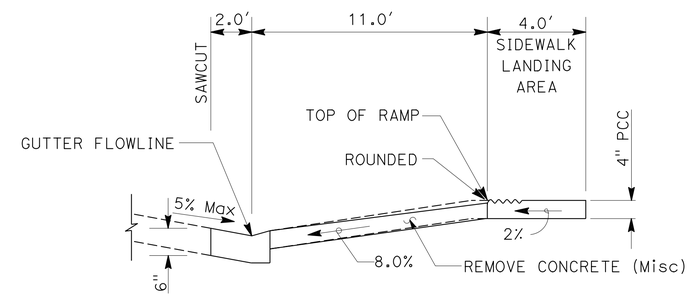

SECTION A-A

CURB RAMP No. 1

(CASE A)

CONSTRUCTION DETAILS

NO SCALE

C-15

STATE OF CALIFORNIA - DEPARTMENT OF TRANSPORTATION
Caltrans MAINTENANCE ENGINEERING

FUNCTIONAL SUPERVISOR: PAUL CRISPI
CALCULATED-DESIGNED BY: PETER DINH
CHECKED BY: PAUL CRISPI
REVISED BY
DATE REVISED

LAST REVISION 07-30-12
DATE PLOTTED => 14-FEB-2013
TIME PLOTTED => 13:25

Dist	COUNTY	ROUTE	POST MILES TOTAL PROJECT	SHEET No.	TOTAL SHEETS
07	LA	405	39.4/48.6	51	179

REGISTERED CIVIL ENGINEER 5-30-12 DATE

7-30-12
PLANS APPROVAL DATE

REGISTERED PROFESSIONAL ENGINEER PETER VAN DINH No. C62666 Exp. 6-30-14 CIVIL STATE OF CALIFORNIA

THE STATE OF CALIFORNIA OR ITS OFFICERS OR AGENTS SHALL NOT BE RESPONSIBLE FOR THE ACCURACY OR COMPLETENESS OF SCANNED COPIES OF THIS PLAN SHEET.

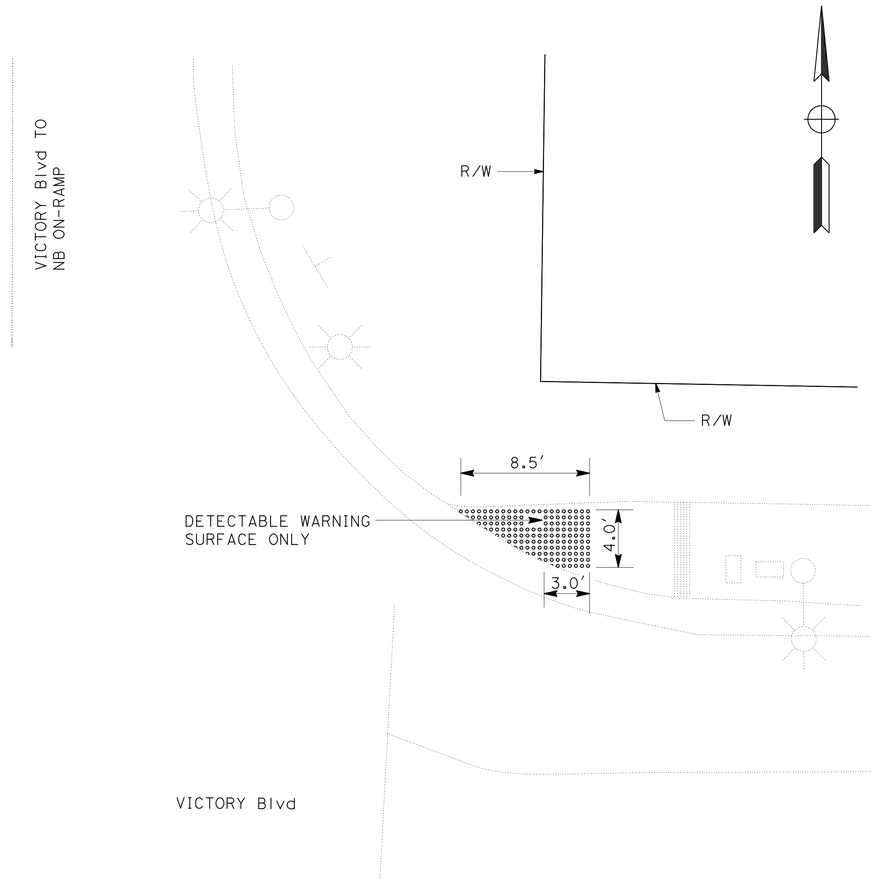

PLAN

CURB RAMP No. 4
(DETECTABLE WARNING SURFACE)

CONSTRUCTION DETAILS
NO SCALE

C-16

PETER DINH	REVISED BY
PAUL CRISPI	DATE REVISED
CALCULATED-DESIGNED BY	
CHECKED BY	
FUNCTIONAL SUPERVISOR	
PAUL CRISPI	

STATE OF CALIFORNIA - DEPARTMENT OF TRANSPORTATION
Caltrans MAINTENANCE ENGINEERING

LAST REVISION 07-30-12 | DATE PLOTTED => 14-FEB-2013 | TIME PLOTTED => 13:26

Dist	COUNTY	ROUTE	POST MILES TOTAL PROJECT	SHEET No.	TOTAL SHEETS
07	LA	405	39.4/48.6	52	179

REGISTERED CIVIL ENGINEER DATE 5-30-12

7-30-12
PLANS APPROVAL DATE

REGISTERED PROFESSIONAL ENGINEER PETER VAN DINH No. C62666 Exp. 6-30-14 CIVIL STATE OF CALIFORNIA

THE STATE OF CALIFORNIA OR ITS OFFICERS OR AGENTS SHALL NOT BE RESPONSIBLE FOR THE ACCURACY OR COMPLETENESS OF SCANNED COPIES OF THIS PLAN SHEET.

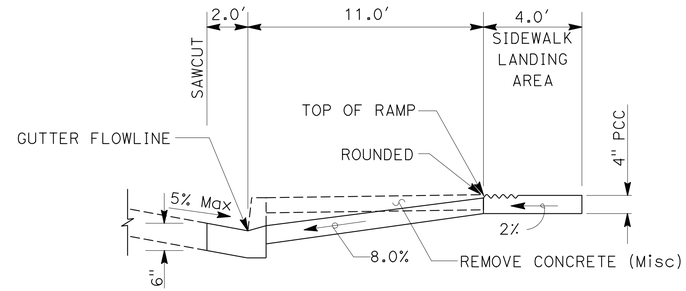

SECTION A-A

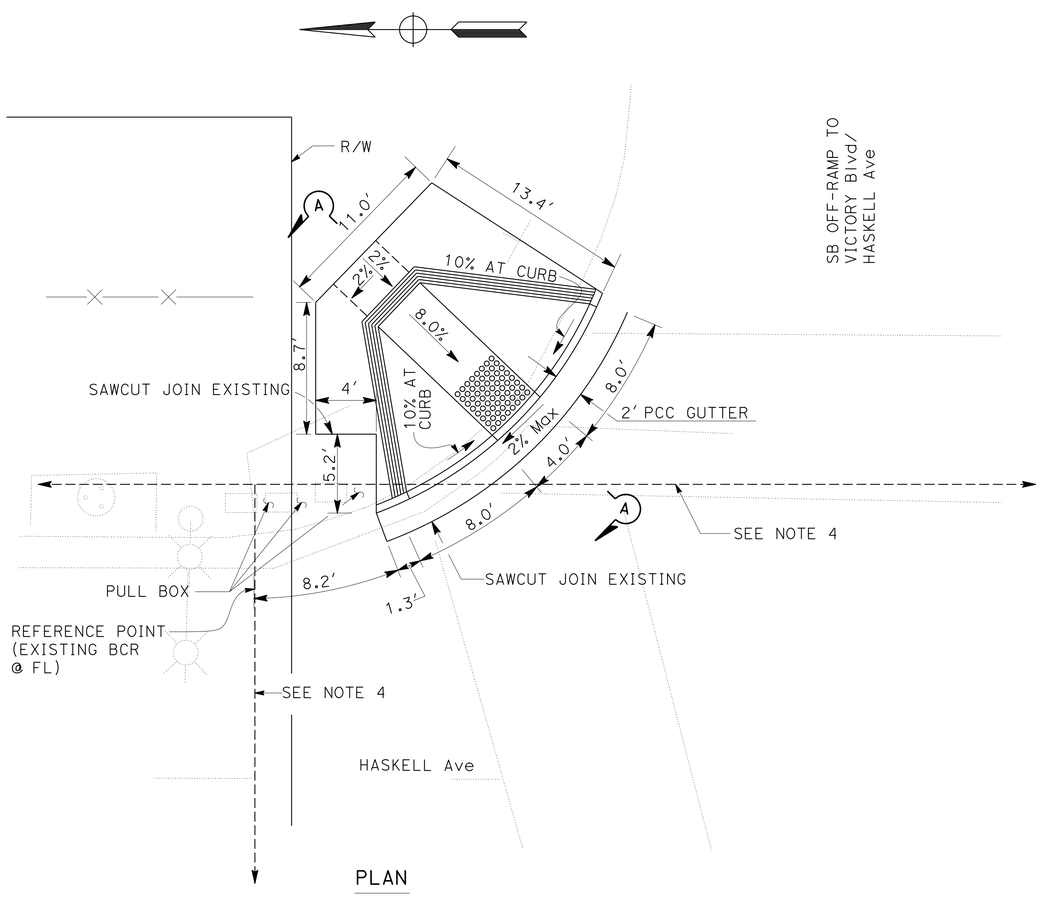

PLAN

CURB RAMP No. 5

(CASE A)

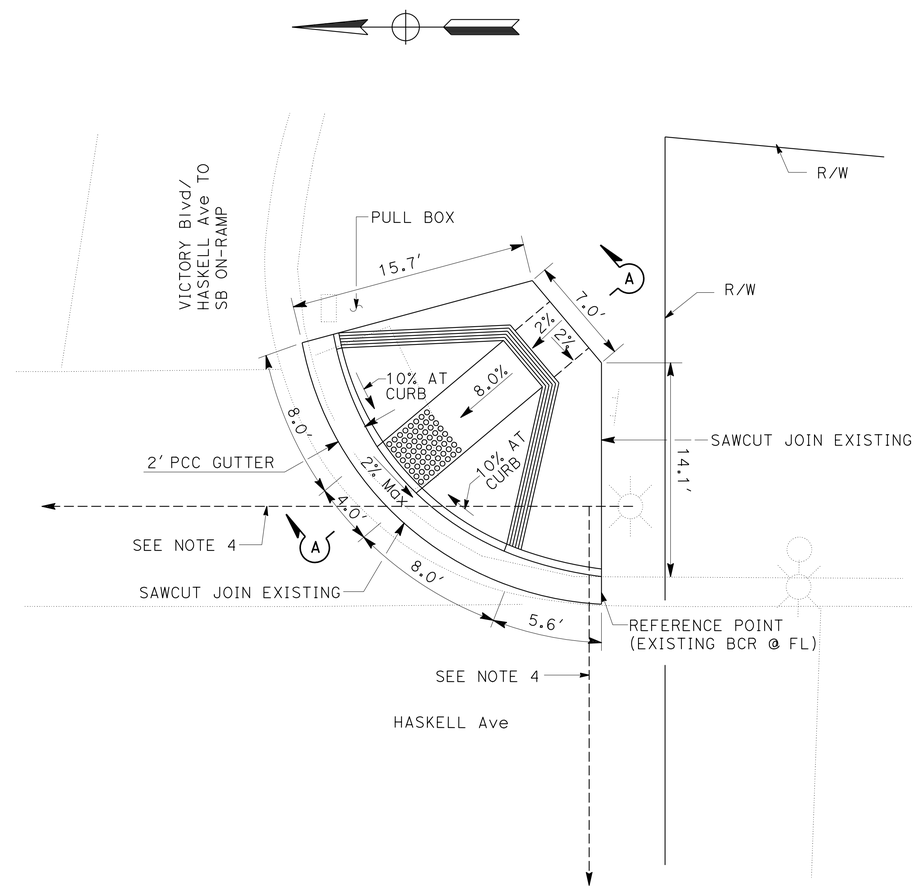

PLAN

CURB RAMP No. 6

(CASE A)

CONSTRUCTION DETAILS

NO SCALE

C-17

STATE OF CALIFORNIA - DEPARTMENT OF TRANSPORTATION
Caltrans MAINTENANCE ENGINEERING

FUNCTIONAL SUPERVISOR: PAUL CRISPI
CALCULATED-DESIGNED BY: PETER DINH
CHECKED BY: PAUL CRISPI
REVISED BY
DATE REVISED

LAST REVISION 07-30-12
DATE PLOTTED => 14-FEB-2013
TIME PLOTTED => 13:26

Dist	COUNTY	ROUTE	POST MILES TOTAL PROJECT	SHEET No.	TOTAL SHEETS
07	LA	405	39.4/48.6	53	179

REGISTERED CIVIL ENGINEER 5-30-12 DATE

7-30-12
PLANS APPROVAL DATE

REGISTERED PROFESSIONAL ENGINEER PETER VAN DINH No. C62666 Exp. 6-30-14 CIVIL STATE OF CALIFORNIA

THE STATE OF CALIFORNIA OR ITS OFFICERS OR AGENTS SHALL NOT BE RESPONSIBLE FOR THE ACCURACY OR COMPLETENESS OF SCANNED COPIES OF THIS PLAN SHEET.

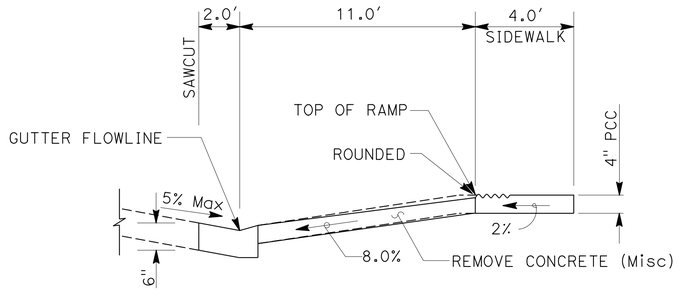

SECTION B-B

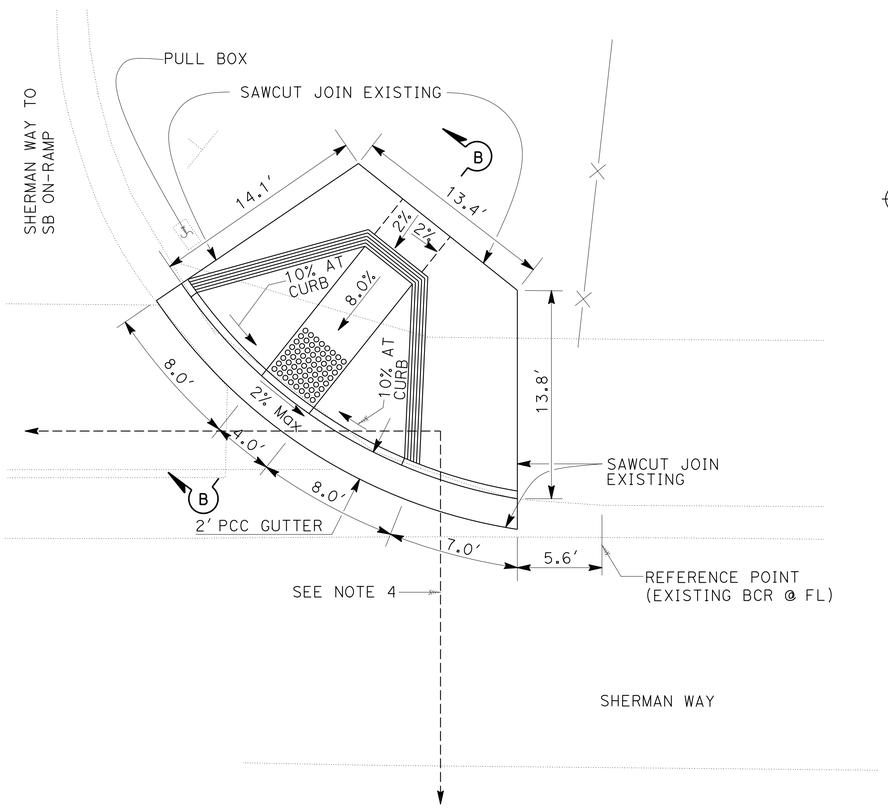

PLAN

CURB RAMP No. 7
(CASE A)

PLAN

CURB RAMP No. 8
(DETECTABLE WARNING SURFACE)

CONSTRUCTION DETAILS
NO SCALE

C-18

STATE OF CALIFORNIA - DEPARTMENT OF TRANSPORTATION
Caltrans MAINTENANCE ENGINEERING

FUNCTIONAL SUPERVISOR: PAUL CRISPI
CALCULATED-DESIGNED BY: PETER DINH
CHECKED BY: PAUL CRISPI
REVISED BY
DATE REVISED

LAST REVISION 07-30-12
DATE PLOTTED => 14-FEB-2013
TIME PLOTTED => 13:26

Dist	COUNTY	ROUTE	POST MILES TOTAL PROJECT	SHEET No.	TOTAL SHEETS
07	LA	405	39.4/48.6	54	179

REGISTERED CIVIL ENGINEER 5-30-12 DATE

7-30-12
PLANS APPROVAL DATE

REGISTERED PROFESSIONAL ENGINEER PETER VAN DINH No. C62666 Exp. 6-30-14 CIVIL STATE OF CALIFORNIA

THE STATE OF CALIFORNIA OR ITS OFFICERS OR AGENTS SHALL NOT BE RESPONSIBLE FOR THE ACCURACY OR COMPLETENESS OF SCANNED COPIES OF THIS PLAN SHEET.

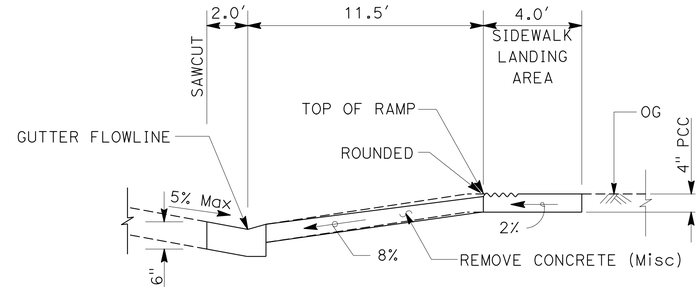

SECTION A-A

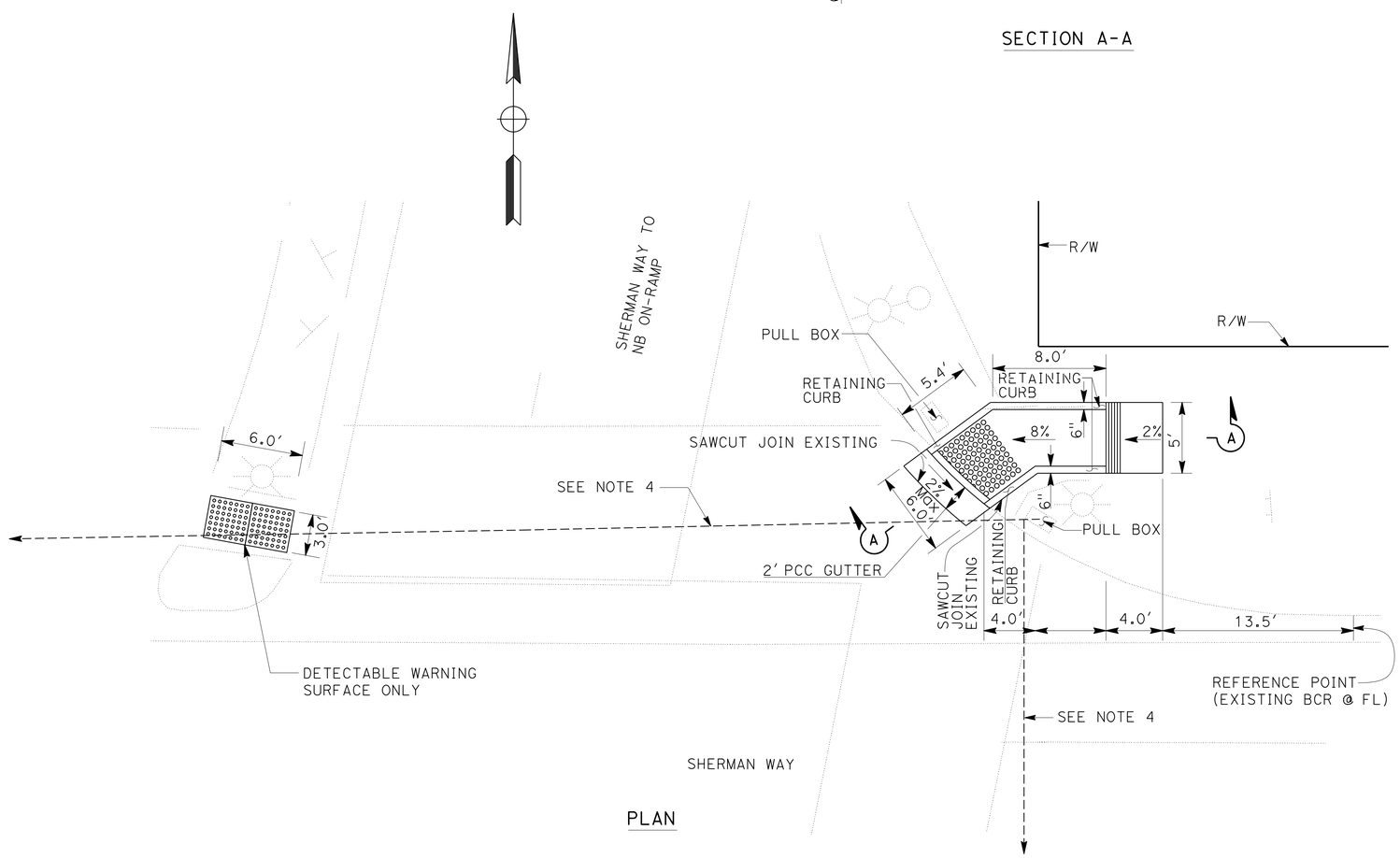

PLAN

CURB RAMP No. 9
(DETECTABLE WARNING SURFACE)

CURB RAMP No. 10
(CASE F Mod)

CONSTRUCTION DETAILS
NO SCALE

C-19

REVISED BY	DATE REVISED

CALCULATED-DESIGNED BY	PETER DINH
CHECKED BY	PAUL CRISPI
FUNCTIONAL SUPERVISOR	PAUL CRISPI

STATE OF CALIFORNIA - DEPARTMENT OF TRANSPORTATION
Caltrans MAINTENANCE ENGINEERING

LAST REVISION 07-30-12 | DATE PLOTTED => 14-FEB-2013 | TIME PLOTTED => 13:26

Dist	COUNTY	ROUTE	POST MILES TOTAL PROJECT	SHEET No.	TOTAL SHEETS
07	LA	405	39.4/48.6	55	179

REGISTERED CIVIL ENGINEER 5-30-12 DATE

7-30-12
PLANS APPROVAL DATE

REGISTERED PROFESSIONAL ENGINEER PETER VAN DINH No. C62666 Exp. 6-30-14 CIVIL STATE OF CALIFORNIA

THE STATE OF CALIFORNIA OR ITS OFFICERS OR AGENTS SHALL NOT BE RESPONSIBLE FOR THE ACCURACY OR COMPLETENESS OF SCANNED COPIES OF THIS PLAN SHEET.

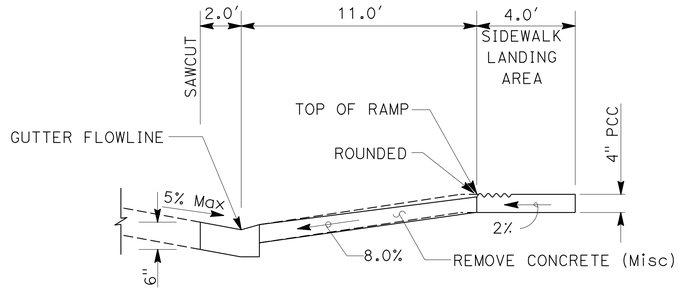

SECTION A-A

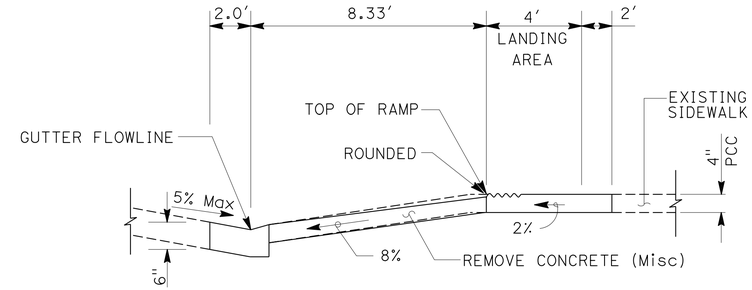

SECTION B-B

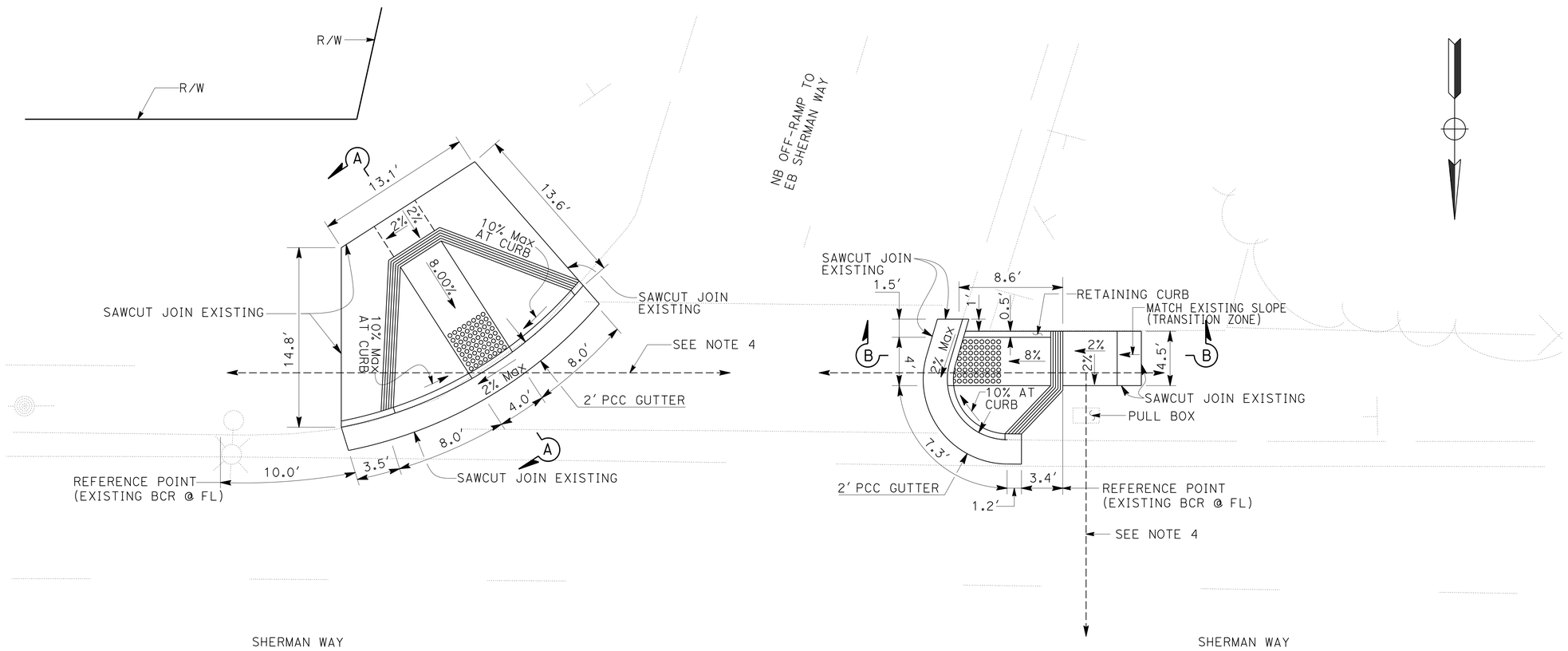

PLAN

CURB RAMP No. 11
(CASE A)

CURB RAMP No. 12
(CASE G)

CONSTRUCTION DETAILS
NO SCALE

C-20

REVISED BY	DATE REVISED

CALCULATED-DESIGNED BY	CHECKED BY
PETER DINH	PAUL CRISPI

FUNCTIONAL SUPERVISOR: PAUL CRISPI

STATE OF CALIFORNIA - DEPARTMENT OF TRANSPORTATION
Caltrans MAINTENANCE ENGINEERING

LAST REVISION 07-30-12 | DATE PLOTTED => 14-FEB-2013 | TIME PLOTTED => 13:26

Dist	COUNTY	ROUTE	POST MILES TOTAL PROJECT	SHEET No.	TOTAL SHEETS
07	LA	405	39.4/48.6	56	179

REGISTERED CIVIL ENGINEER 5-30-12 DATE

7-30-12
PLANS APPROVAL DATE

REGISTERED PROFESSIONAL ENGINEER PETER VAN DINH No. C62666 Exp. 6-30-14 CIVIL STATE OF CALIFORNIA

THE STATE OF CALIFORNIA OR ITS OFFICERS OR AGENTS SHALL NOT BE RESPONSIBLE FOR THE ACCURACY OR COMPLETENESS OF SCANNED COPIES OF THIS PLAN SHEET.

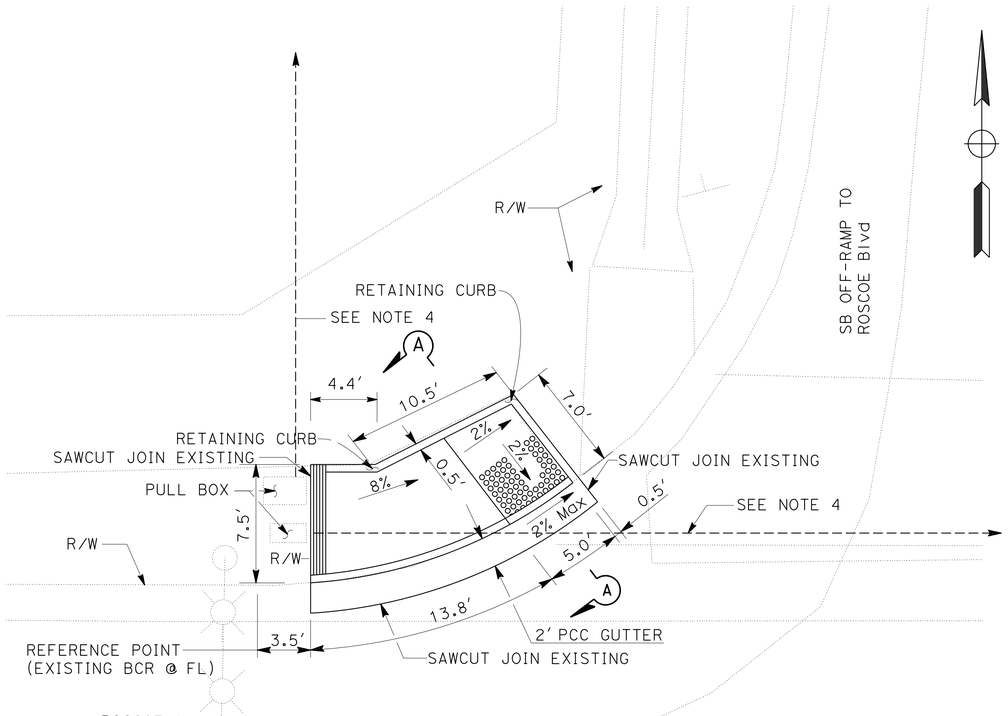

PLAN

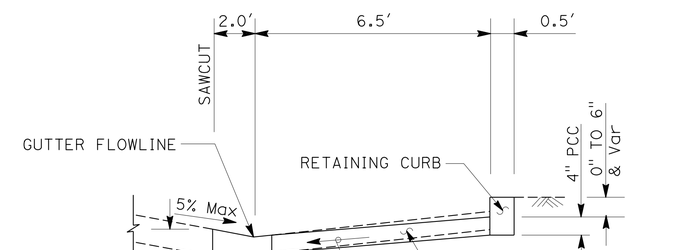

SECTION A-A

CURB RAMP No. 15
(CASE C Mod)

CONSTRUCTION DETAILS
NO SCALE

C-21

STATE OF CALIFORNIA - DEPARTMENT OF TRANSPORTATION
Caltrans MAINTENANCE ENGINEERING

FUNCTIONAL SUPERVISOR: PAUL CRISPI

CALCULATED-DESIGNED BY: PETER DINH
CHECKED BY: PAUL CRISPI
REVISED BY
DATE REVISED

LAST REVISION 07-30-12
DATE PLOTTED => 14-FEB-2013
TIME PLOTTED => 13:26

Dist	COUNTY	ROUTE	POST MILES TOTAL PROJECT	SHEET No.	TOTAL SHEETS
07	LA	405	39.4/48.6	57	179

REGISTERED CIVIL ENGINEER 5-30-12 DATE

7-30-12
PLANS APPROVAL DATE

REGISTERED PROFESSIONAL ENGINEER PETER VAN DINH No. C62666 Exp. 6-30-14 CIVIL STATE OF CALIFORNIA

THE STATE OF CALIFORNIA OR ITS OFFICERS OR AGENTS SHALL NOT BE RESPONSIBLE FOR THE ACCURACY OR COMPLETENESS OF SCANNED COPIES OF THIS PLAN SHEET.

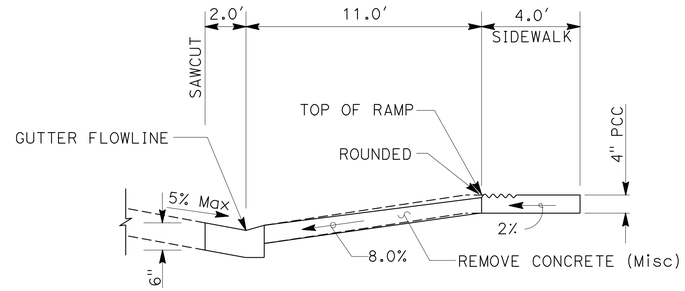

SECTION A-A

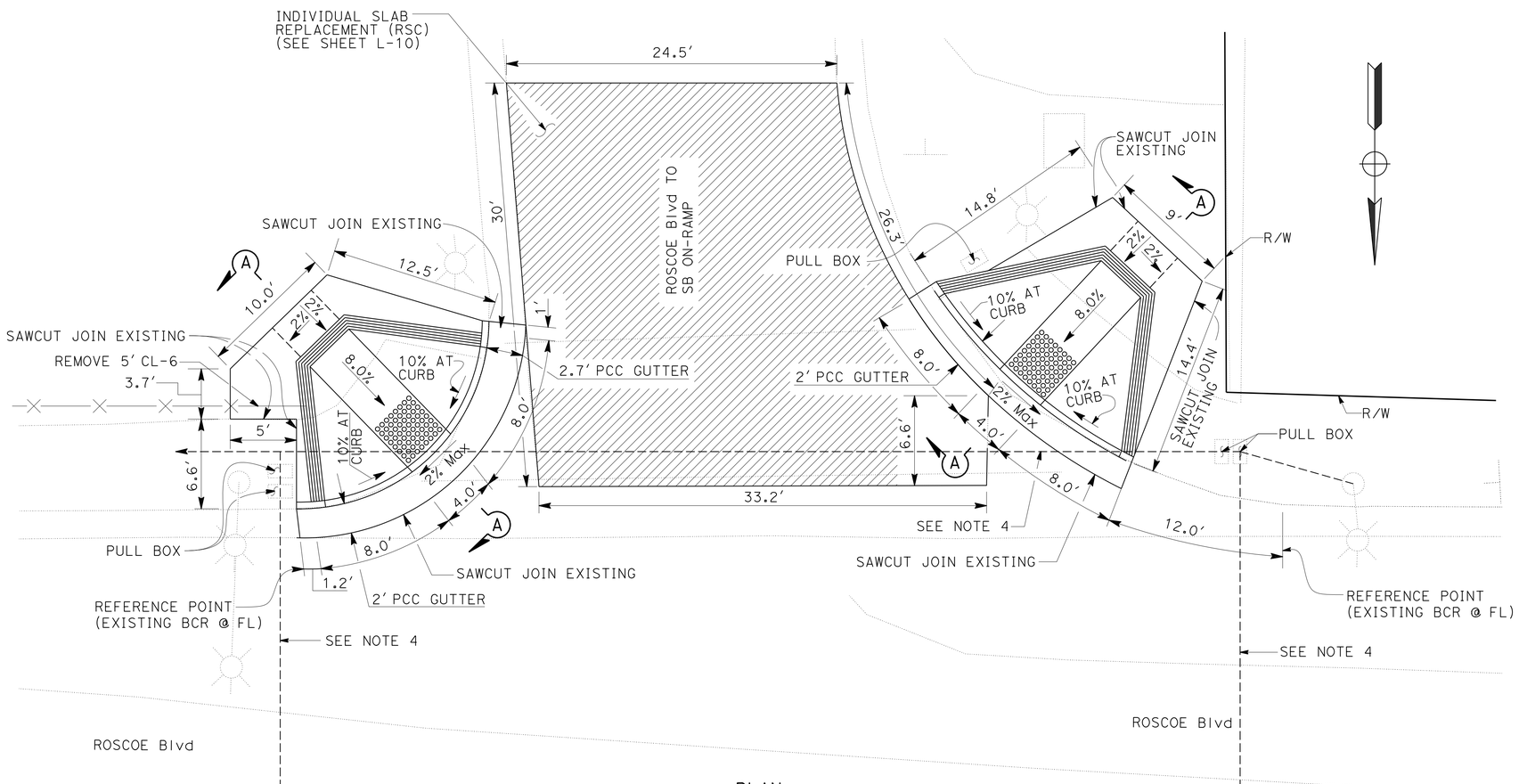

PLAN

CURB RAMP No. 16
(CASE A)

CURB RAMP No. 17
(CASE A)

CONSTRUCTION DETAILS
NO SCALE

C-22

STATE OF CALIFORNIA - DEPARTMENT OF TRANSPORTATION
Caltrans MAINTENANCE ENGINEERING

FUNCTIONAL SUPERVISOR: PAUL CRISPI
CALCULATED-DESIGNED BY: PETER DINH
CHECKED BY: PAUL CRISPI
REVISED BY
DATE REVISED

LAST REVISION 07-30-12
DATE PLOTTED => 14-FEB-2013
TIME PLOTTED => 13:26

Dist	COUNTY	ROUTE	POST MILES TOTAL PROJECT	SHEET No.	TOTAL SHEETS
07	LA	405	39.4/48.6	58	179

REGISTERED CIVIL ENGINEER 5-30-12 DATE

7-30-12
PLANS APPROVAL DATE

REGISTERED PROFESSIONAL ENGINEER PETER VAN DINH No. C62666 Exp. 6-30-14 CIVIL STATE OF CALIFORNIA

THE STATE OF CALIFORNIA OR ITS OFFICERS OR AGENTS SHALL NOT BE RESPONSIBLE FOR THE ACCURACY OR COMPLETENESS OF SCANNED COPIES OF THIS PLAN SHEET.

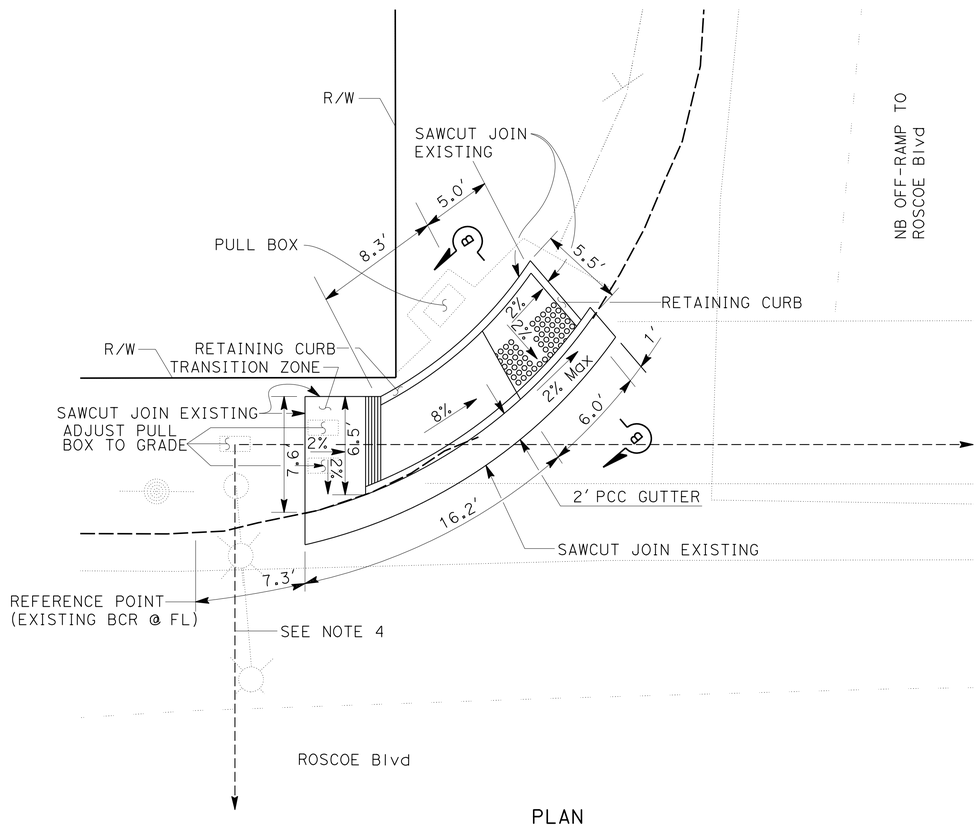

PLAN

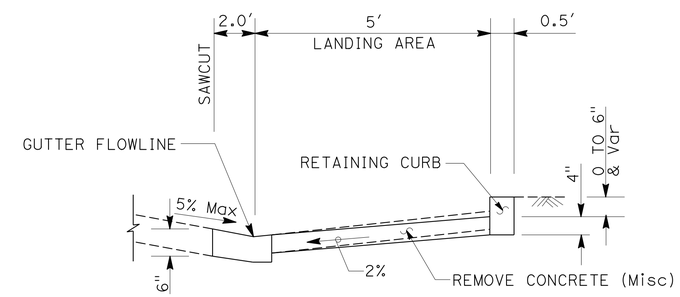

SECTION B-B

CURB RAMP No. 19

(CASE C Mod)

CONSTRUCTION DETAILS

NO SCALE

C-23

STATE OF CALIFORNIA - DEPARTMENT OF TRANSPORTATION
Caltrans MAINTENANCE ENGINEERING

FUNCTIONAL SUPERVISOR: PAUL CRISPI
CALCULATED-DESIGNED BY: PETER DINH
CHECKED BY: PAUL CRISPI
REVISED BY
DATE REVISED

LAST REVISION 07-30-12
DATE PLOTTED => 14-FEB-2013
TIME PLOTTED => 13:26

Dist	COUNTY	ROUTE	POST MILES TOTAL PROJECT	SHEET No.	TOTAL SHEETS
07	LA	405	39.4/48.6	59	179

REGISTERED CIVIL ENGINEER 5-30-12 DATE

7-30-12
PLANS APPROVAL DATE

REGISTERED PROFESSIONAL ENGINEER PETER VAN DINH No. C62666 Exp. 6-30-14 CIVIL STATE OF CALIFORNIA

THE STATE OF CALIFORNIA OR ITS OFFICERS OR AGENTS SHALL NOT BE RESPONSIBLE FOR THE ACCURACY OR COMPLETENESS OF SCANNED COPIES OF THIS PLAN SHEET.

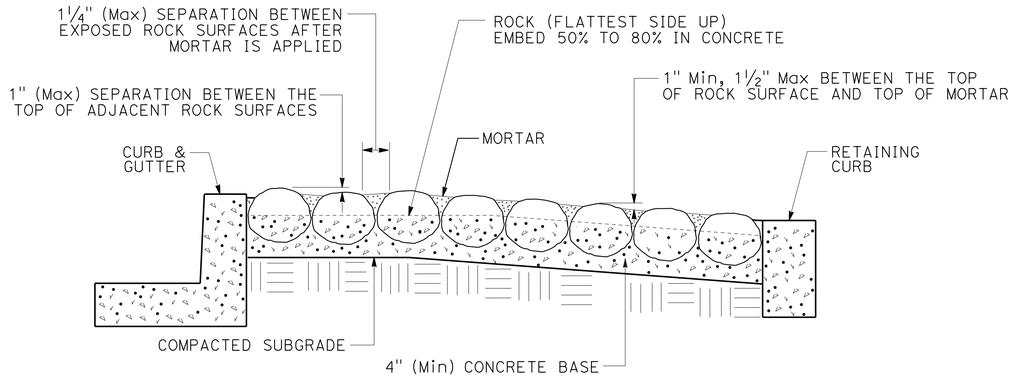

DETAIL 1
ROCK BLANKET

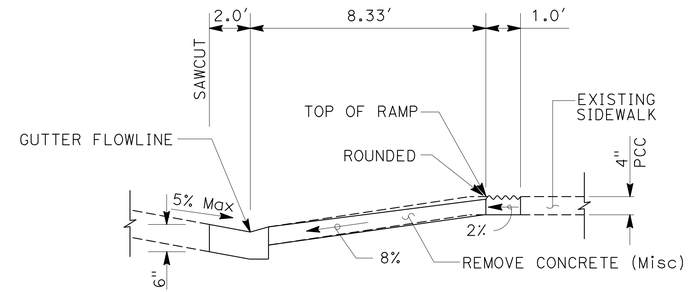

SECTION A-A

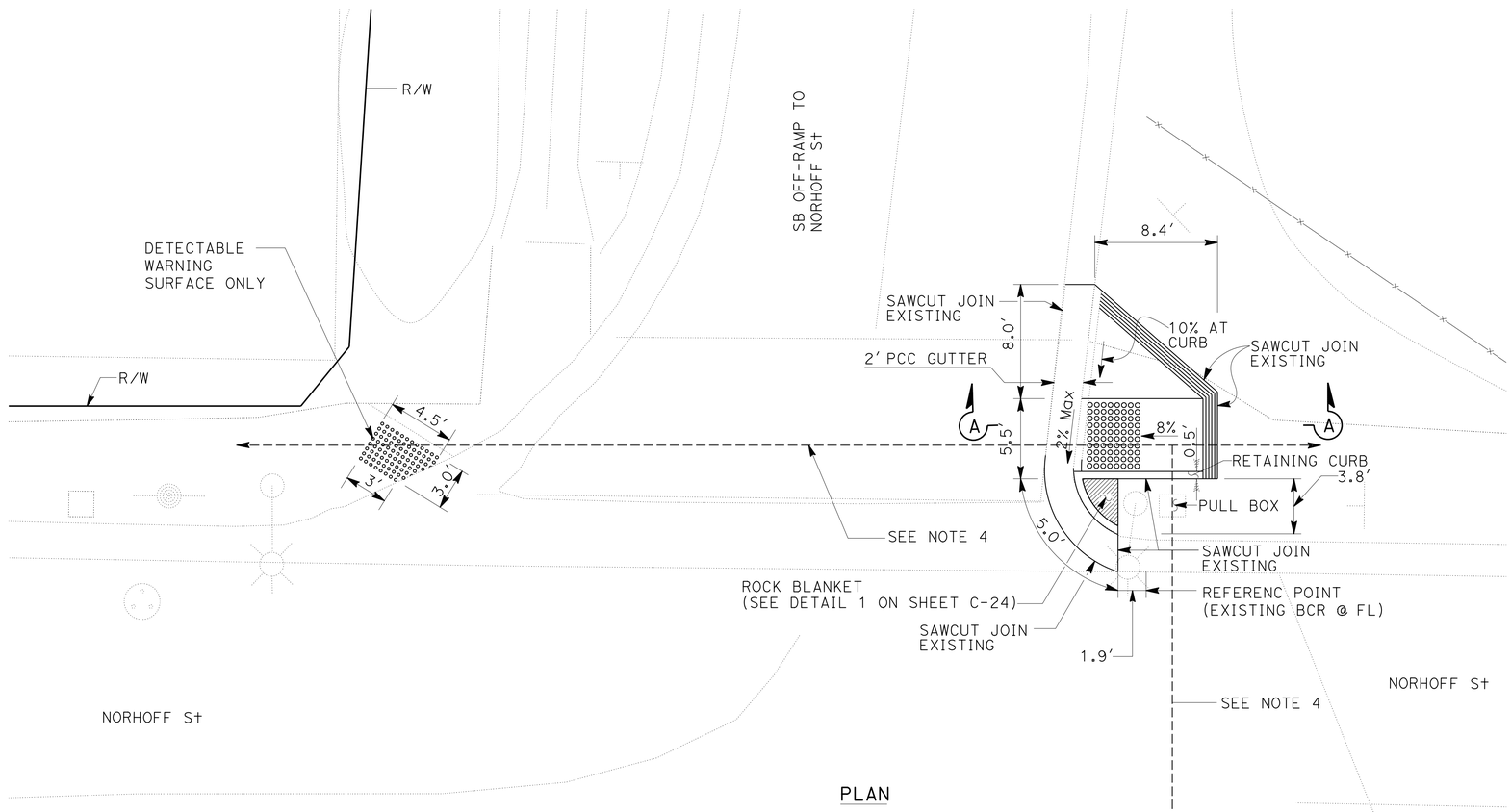

PLAN

CURB RAMP No. 20
(DETECTABLE WARNING SURFACE)

CURB RAMP No. 21
(CASE G Mod)

CONSTRUCTION DETAILS
NO SCALE

C-24

STATE OF CALIFORNIA - DEPARTMENT OF TRANSPORTATION
Caltrans MAINTENANCE ENGINEERING

FUNCTIONAL SUPERVISOR: PAUL CRISPI
CALCULATED-DESIGNED BY: PETER DINH
CHECKED BY: PAUL CRISPI
REVISED BY
DATE REVISED

LAST REVISION 07-30-12 | DATE PLOTTED => 14-FEB-2013 | TIME PLOTTED => 13:26

Dist	COUNTY	ROUTE	POST MILES TOTAL PROJECT	SHEET No.	TOTAL SHEETS
07	LA	405	39.4/48.6	60	179

REGISTERED CIVIL ENGINEER 5-30-12 DATE

7-30-12
PLANS APPROVAL DATE

REGISTERED PROFESSIONAL ENGINEER PETER VAN DINH No. C62666 Exp. 6-30-14 CIVIL STATE OF CALIFORNIA

THE STATE OF CALIFORNIA OR ITS OFFICERS OR AGENTS SHALL NOT BE RESPONSIBLE FOR THE ACCURACY OR COMPLETENESS OF SCANNED COPIES OF THIS PLAN SHEET.

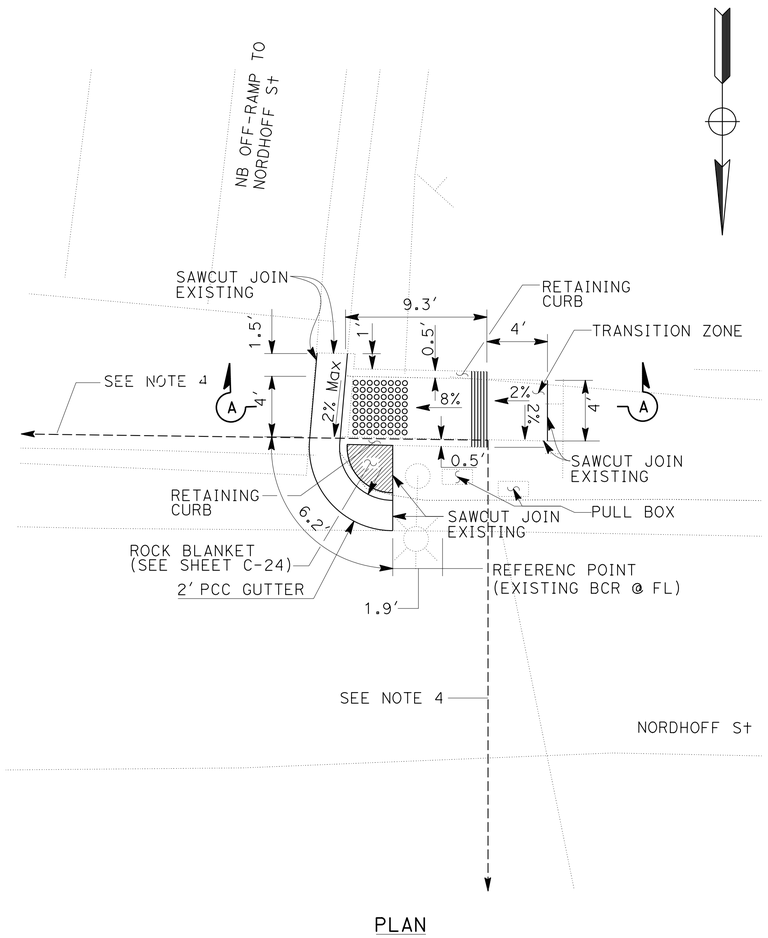

PLAN

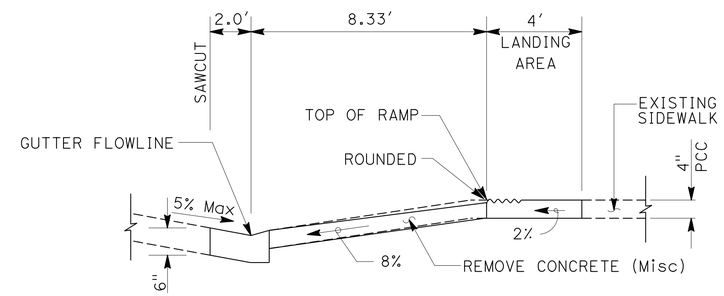

SECTION A-A

CURB RAMP No. 22

(CASE F Mod)

CONSTRUCTION DETAILS

NO SCALE

C-25

REVISED BY	DATE REVISED
PETER DINH	PAUL CRISPI

CALCULATED-DESIGNED BY	CHECKED BY

FUNCTIONAL SUPERVISOR: PAUL CRISPI

STATE OF CALIFORNIA - DEPARTMENT OF TRANSPORTATION
Caltrans MAINTENANCE ENGINEERING

LAST REVISION 07-30-12 | DATE PLOTTED => 14-FEB-2013 | TIME PLOTTED => 13:26

Dist	COUNTY	ROUTE	POST MILES TOTAL PROJECT	SHEET No.	TOTAL SHEETS
07	LA	405	39.4/48.6	61	179

REGISTERED CIVIL ENGINEER 5-30-12 DATE

7-30-12
PLANS APPROVAL DATE

REGISTERED PROFESSIONAL ENGINEER PETER VAN DINH No. C62666 Exp. 6-30-14 CIVIL STATE OF CALIFORNIA

THE STATE OF CALIFORNIA OR ITS OFFICERS OR AGENTS SHALL NOT BE RESPONSIBLE FOR THE ACCURACY OR COMPLETENESS OF SCANNED COPIES OF THIS PLAN SHEET.

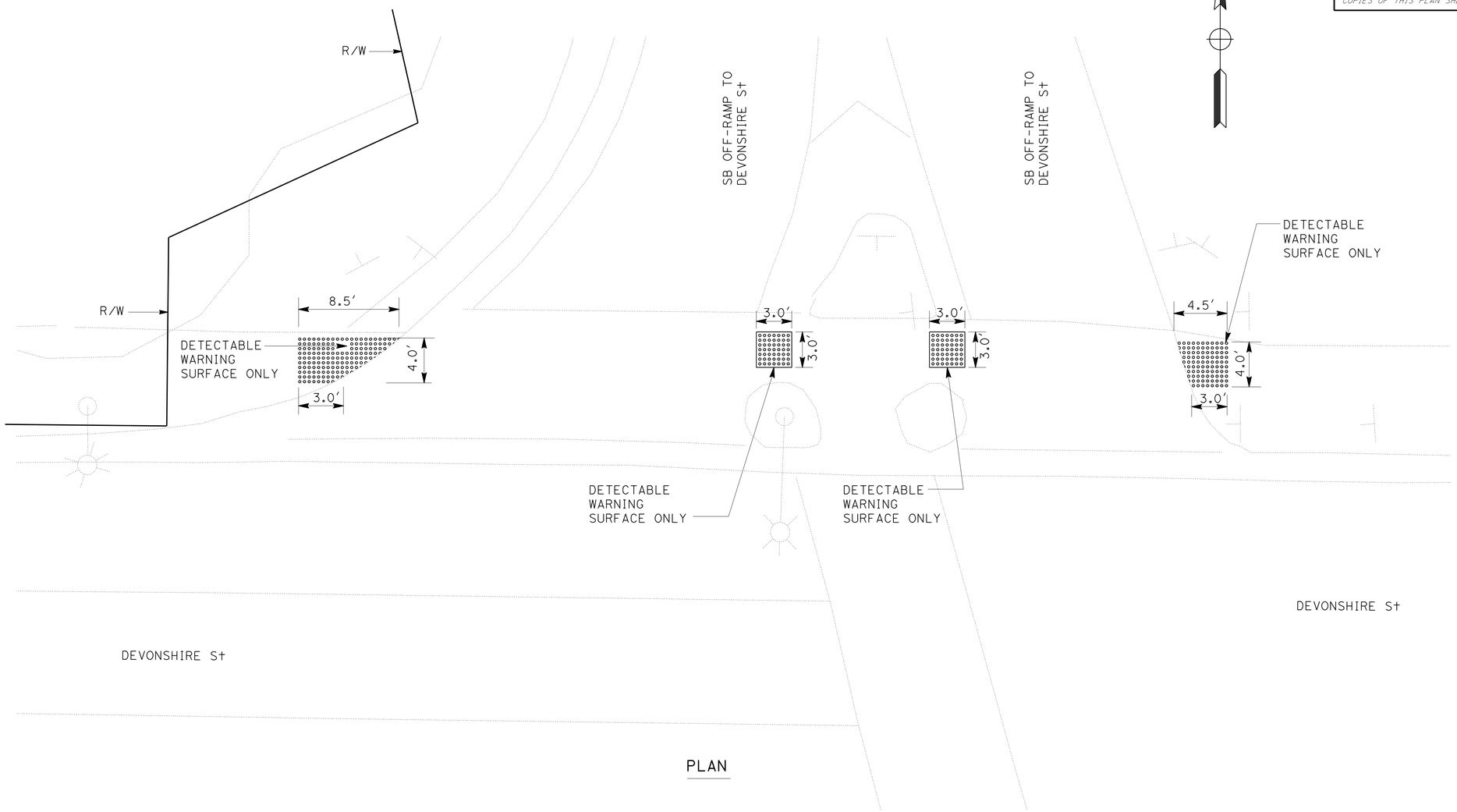

PLAN

CURB RAMP No. 23
(DETECTABLE WARNING SURFACE)

CURB RAMP No. 24
(DETECTABLE WARNING SURFACE)

CURB RAMP No. 25
(DETECTABLE WARNING SURFACE)

CURB RAMP No. 26
(DETECTABLE WARNING SURFACE)

CONSTRUCTION DETAILS
NO SCALE

C-26

REVISED BY	DATE REVISED

CALCULATED-DESIGNED BY	CHECKED BY
PETER DINH	PAUL CRISPI

FUNCTIONAL SUPERVISOR: PAUL CRISPI

STATE OF CALIFORNIA - DEPARTMENT OF TRANSPORTATION
Caltrans MAINTENANCE ENGINEERING

LAST REVISION 07-30-12 | DATE PLOTTED => 14-FEB-2013 | TIME PLOTTED => 13:26

Dist	COUNTY	ROUTE	POST MILES TOTAL PROJECT	SHEET No.	TOTAL SHEETS
07	LA	405	39.4/48.6	62	179

REGISTERED CIVIL ENGINEER DATE 5-30-12

7-30-12
PLANS APPROVAL DATE

REGISTERED PROFESSIONAL ENGINEER PETER VAN DINH No. C62666 Exp. 6-30-14 CIVIL STATE OF CALIFORNIA

THE STATE OF CALIFORNIA OR ITS OFFICERS OR AGENTS SHALL NOT BE RESPONSIBLE FOR THE ACCURACY OR COMPLETENESS OF SCANNED COPIES OF THIS PLAN SHEET.

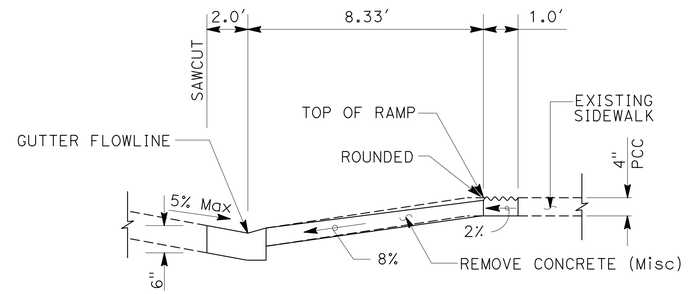

SECTION A-A

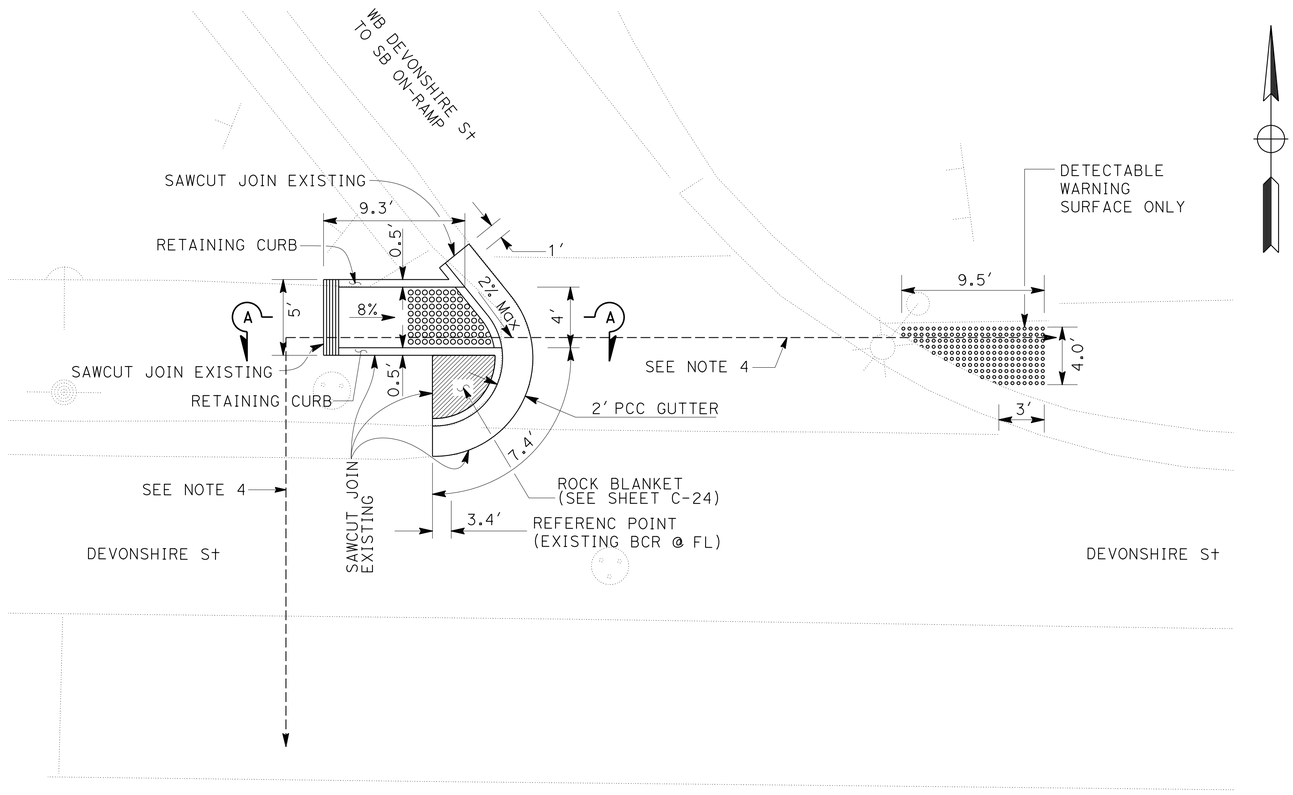

PLAN

CURB RAMP No. 27
(CASE F Mod)

CURB RAMP No. 28
(DETECTABLE WARNING SURFACE)

CONSTRUCTION DETAILS
NO SCALE

C-27

STATE OF CALIFORNIA - DEPARTMENT OF TRANSPORTATION
Caltrans MAINTENANCE ENGINEERING

FUNCTIONAL SUPERVISOR: PAUL CRISPI
CALCULATED-DESIGNED BY: PETER DINH
CHECKED BY: PAUL CRISPI
REVISED BY
DATE REVISED

LAST REVISION 07-30-12 | DATE PLOTTED => 14-FEB-2013 | TIME PLOTTED => 13:26

Dist	COUNTY	ROUTE	POST MILES TOTAL PROJECT	SHEET No.	TOTAL SHEETS
07	LA	405	39.4/48.6	63	179

REGISTERED CIVIL ENGINEER 5-30-12 DATE

7-30-12
PLANS APPROVAL DATE

REGISTERED PROFESSIONAL ENGINEER PETER VAN DINH No. C62666 Exp. 6-30-14 CIVIL STATE OF CALIFORNIA

THE STATE OF CALIFORNIA OR ITS OFFICERS OR AGENTS SHALL NOT BE RESPONSIBLE FOR THE ACCURACY OR COMPLETENESS OF SCANNED COPIES OF THIS PLAN SHEET.

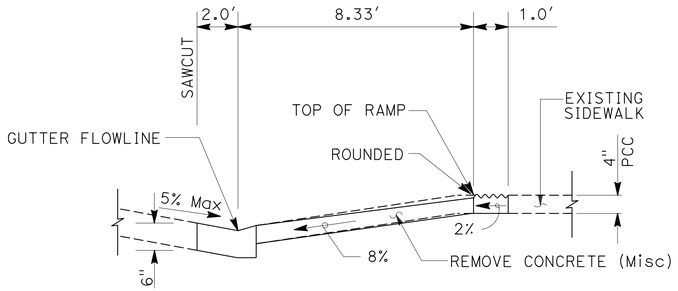

SECTION A-A

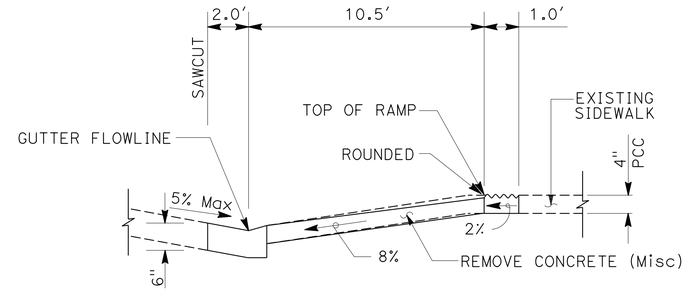

SECTION B-B

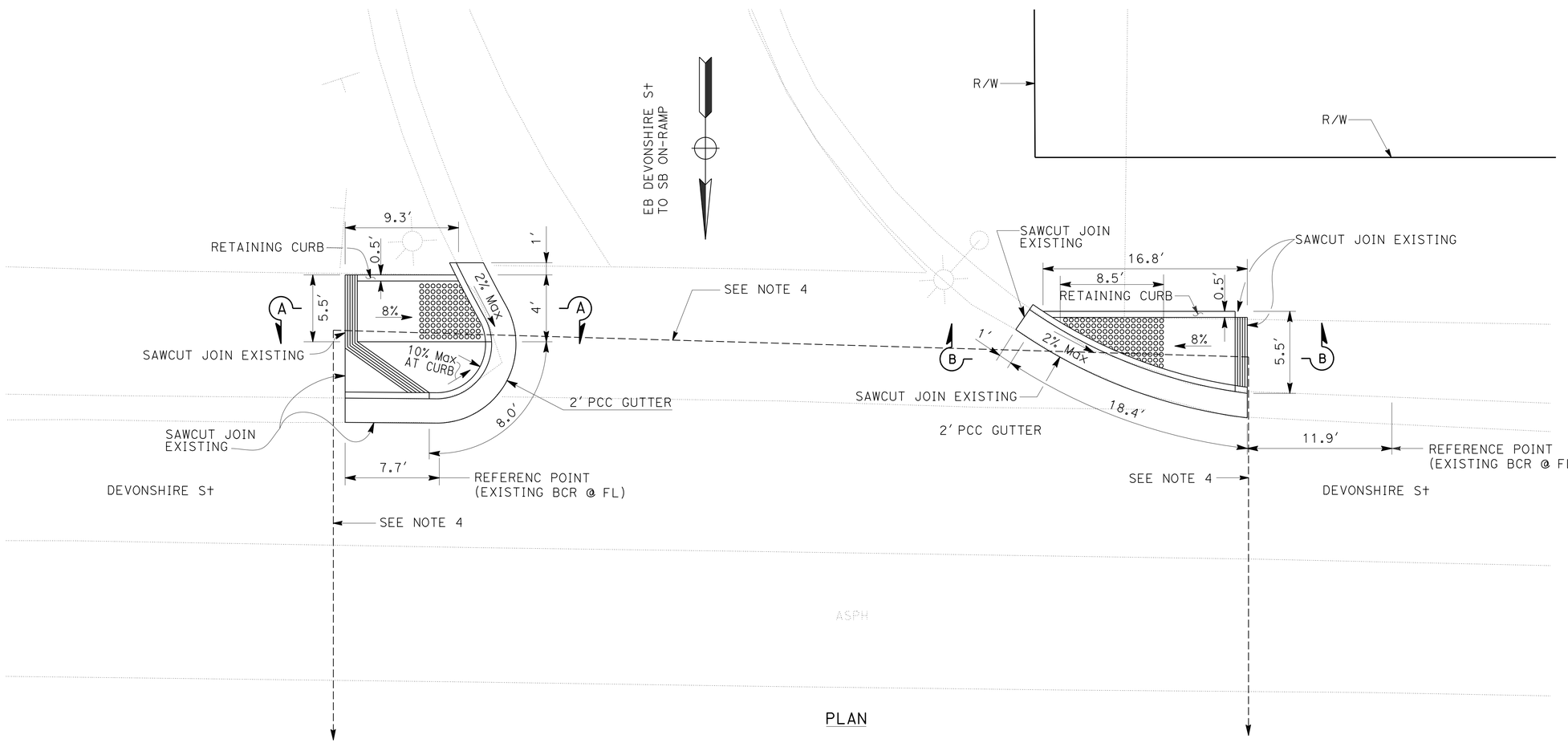

PLAN

CURB RAMP No. 29
(CASE G)

CURB RAMP No. 30
(CASE CM)

CONSTRUCTION DETAILS
NO SCALE

C-28

REVISED BY | DATE REVISED

PETER DINH | PAUL CRISPI

CALCULATED-DESIGNED BY | CHECKED BY

FUNCTIONAL SUPERVISOR: PAUL CRISPI

STATE OF CALIFORNIA - DEPARTMENT OF TRANSPORTATION
Caltrans MAINTENANCE ENGINEERING

LAST REVISION 07-30-12 | DATE PLOTTED => 14-FEB-2013 | TIME PLOTTED => 13:26

Dist	COUNTY	ROUTE	POST MILES TOTAL PROJECT	SHEET No.	TOTAL SHEETS
07	LA	405	39.4/48.6	64	179

REGISTERED CIVIL ENGINEER DATE 5-30-12

7-30-12
PLANS APPROVAL DATE

REGISTERED PROFESSIONAL ENGINEER PETER VAN DINH No. C62666 Exp. 6-30-14 CIVIL STATE OF CALIFORNIA

THE STATE OF CALIFORNIA OR ITS OFFICERS OR AGENTS SHALL NOT BE RESPONSIBLE FOR THE ACCURACY OR COMPLETENESS OF SCANNED COPIES OF THIS PLAN SHEET.

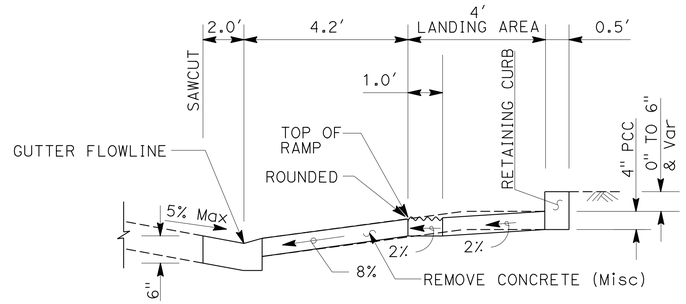

SECTION A-A

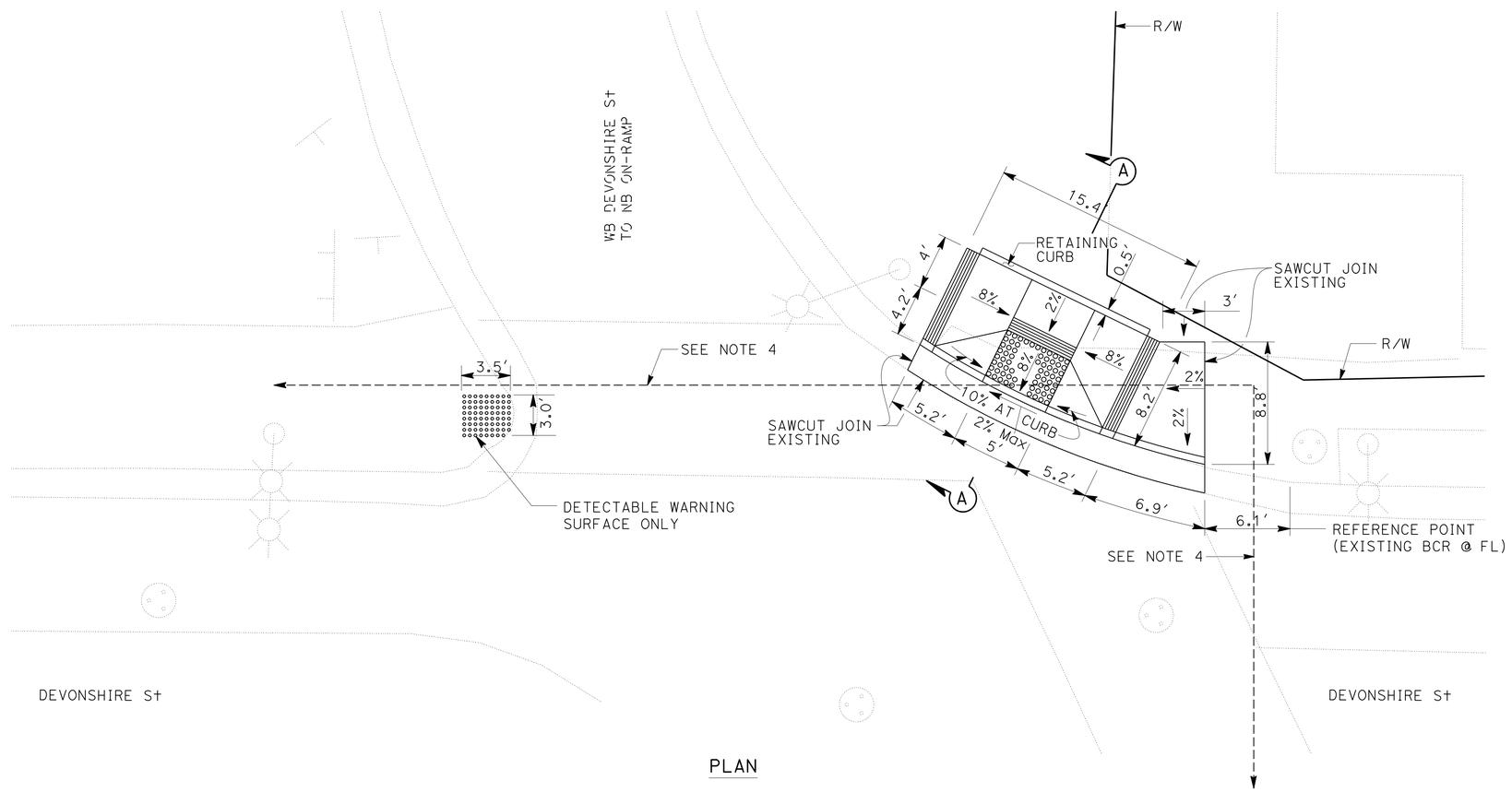

PLAN

CURB RAMP No. 31
(DETECTABLE WARNING SURFACE)

CURB RAMP No. 32
(CASE B)

CONSTRUCTION DETAILS
NO SCALE

C-29

STATE OF CALIFORNIA - DEPARTMENT OF TRANSPORTATION
Caltrans MAINTENANCE ENGINEERING

FUNCTIONAL SUPERVISOR: PAUL CRISPI
CALCULATED-DESIGNED BY: PETER DINH
CHECKED BY: PAUL CRISPI
REVISED BY
DATE REVISED

LAST REVISION 07-30-12
DATE PLOTTED => 14-FEB-2013
TIME PLOTTED => 13:26

Dist	COUNTY	ROUTE	POST MILES TOTAL PROJECT	SHEET No.	TOTAL SHEETS
07	LA	405	39.4/48.6	65	179

REGISTERED CIVIL ENGINEER 5-30-12 DATE

7-30-12
PLANS APPROVAL DATE

REGISTERED PROFESSIONAL ENGINEER PETER VAN DINH No. C62666 Exp. 6-30-14 CIVIL STATE OF CALIFORNIA

THE STATE OF CALIFORNIA OR ITS OFFICERS OR AGENTS SHALL NOT BE RESPONSIBLE FOR THE ACCURACY OR COMPLETENESS OF SCANNED COPIES OF THIS PLAN SHEET.

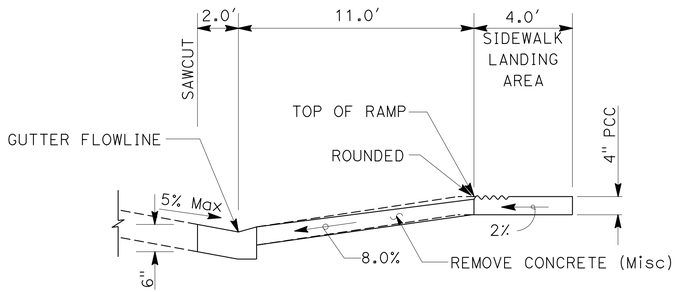

SECTION A-A

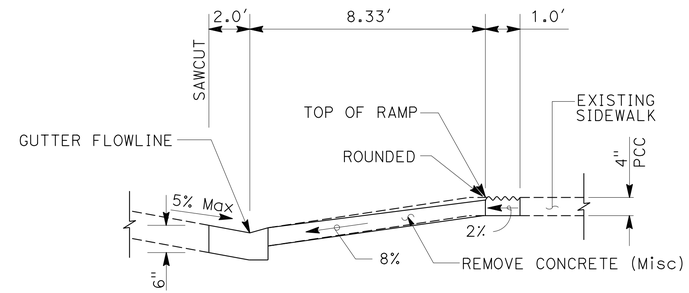

SECTION B-B

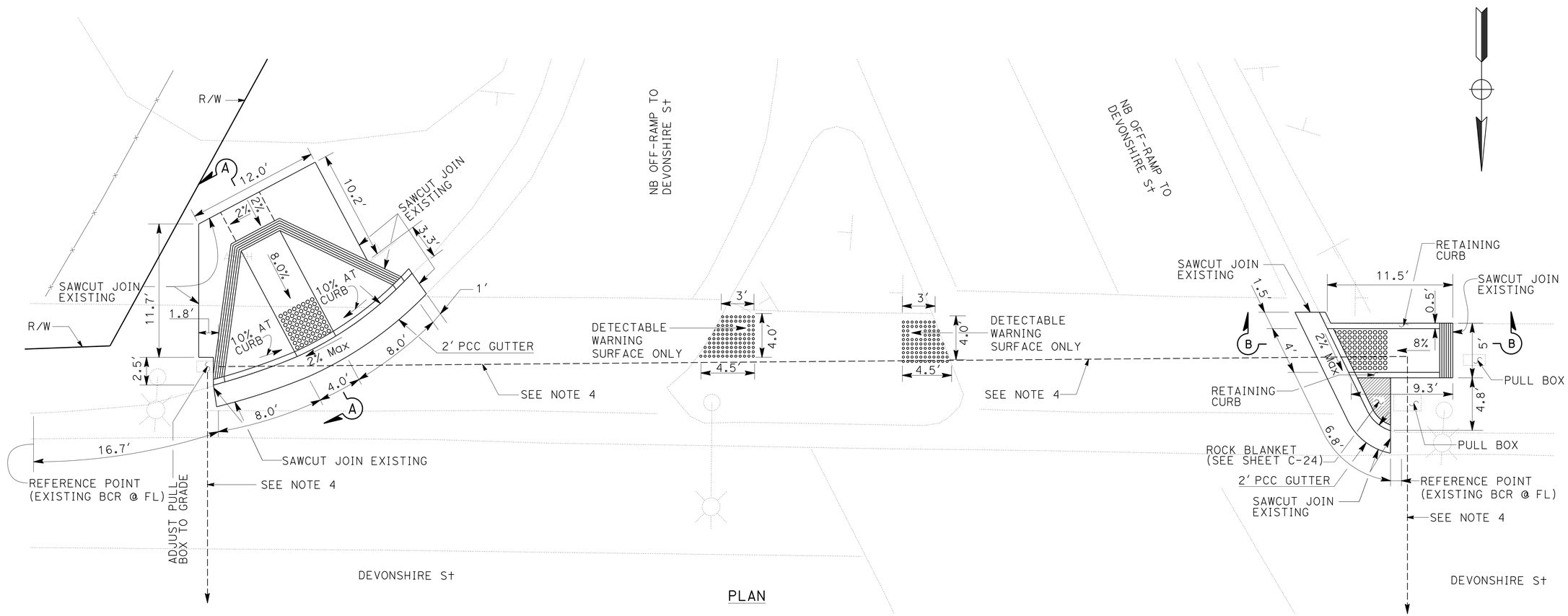

PLAN

CURB RAMP No. 33
(CASE A)

CURB RAMP No. 34
(DETECTABLE WARNINGSURFACE)

CURB RAMP No. 35
(DETECTABLE WARNING SURFACE)

CURB RAMP No. 36
(CASE F Mod)

CONSTRUCTION DETAILS
NO SCALE

C-30

REVISED BY	DATE REVISED

CALCULATED-DESIGNED BY	CHECKED BY
PETER DINH	PAUL CRISPI

FUNCTIONAL SUPERVISOR: PAUL CRISPI

STATE OF CALIFORNIA - DEPARTMENT OF TRANSPORTATION
Caltrans MAINTENANCE ENGINEERING

LAST REVISION 07-30-12 | DATE PLOTTED => 14-FEB-2013 TIME PLOTTED => 13:26

Dist	COUNTY	ROUTE	POST MILES TOTAL PROJECT	SHEET No.	TOTAL SHEETS
07	LA	405	39.4/48.6	66	179

REGISTERED CIVIL ENGINEER 5-30-12 DATE

7-30-12
PLANS APPROVAL DATE

REGISTERED PROFESSIONAL ENGINEER PETER VAN DINH No. C62666 Exp. 6-30-14 CIVIL STATE OF CALIFORNIA

THE STATE OF CALIFORNIA OR ITS OFFICERS OR AGENTS SHALL NOT BE RESPONSIBLE FOR THE ACCURACY OR COMPLETENESS OF SCANNED COPIES OF THIS PLAN SHEET.

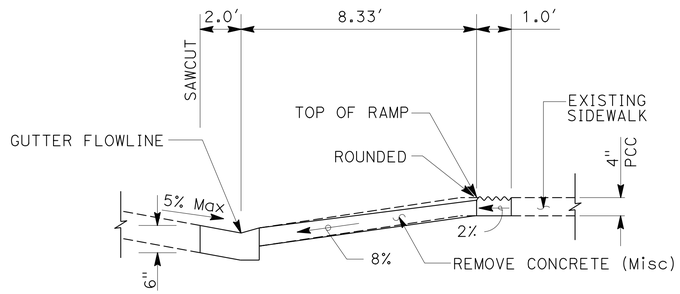

SECTION A-A

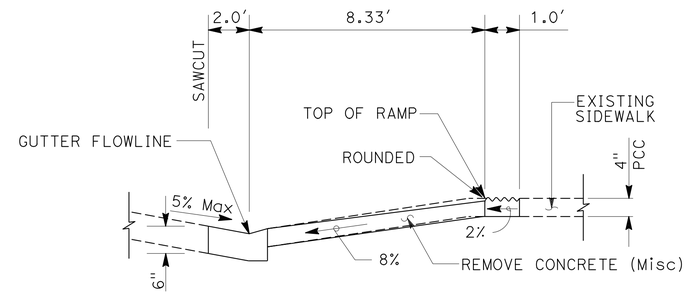

SECTION A-A

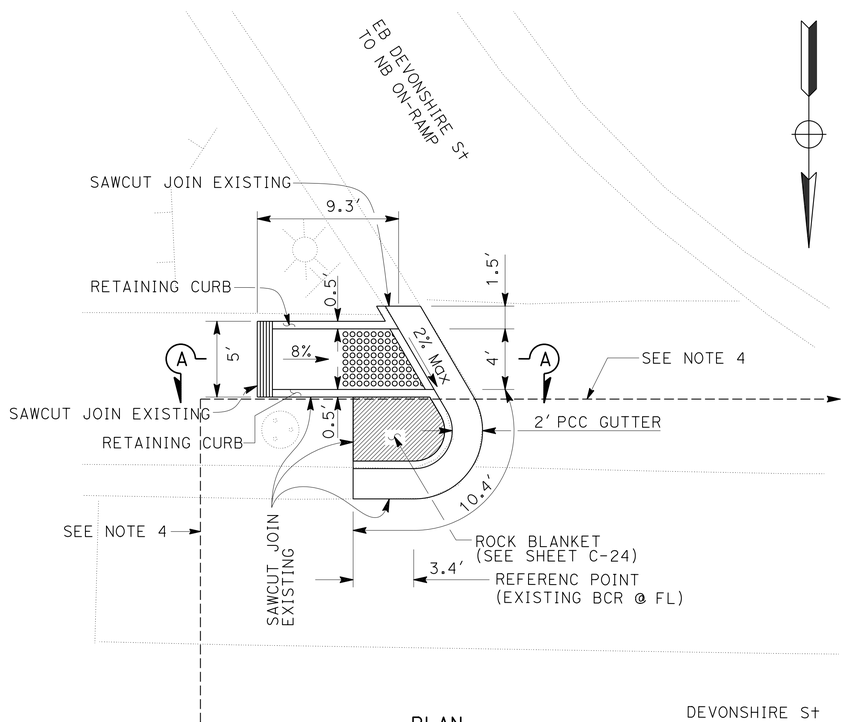

PLAN

CURB RAMP No. 37
(CASE F Mod)

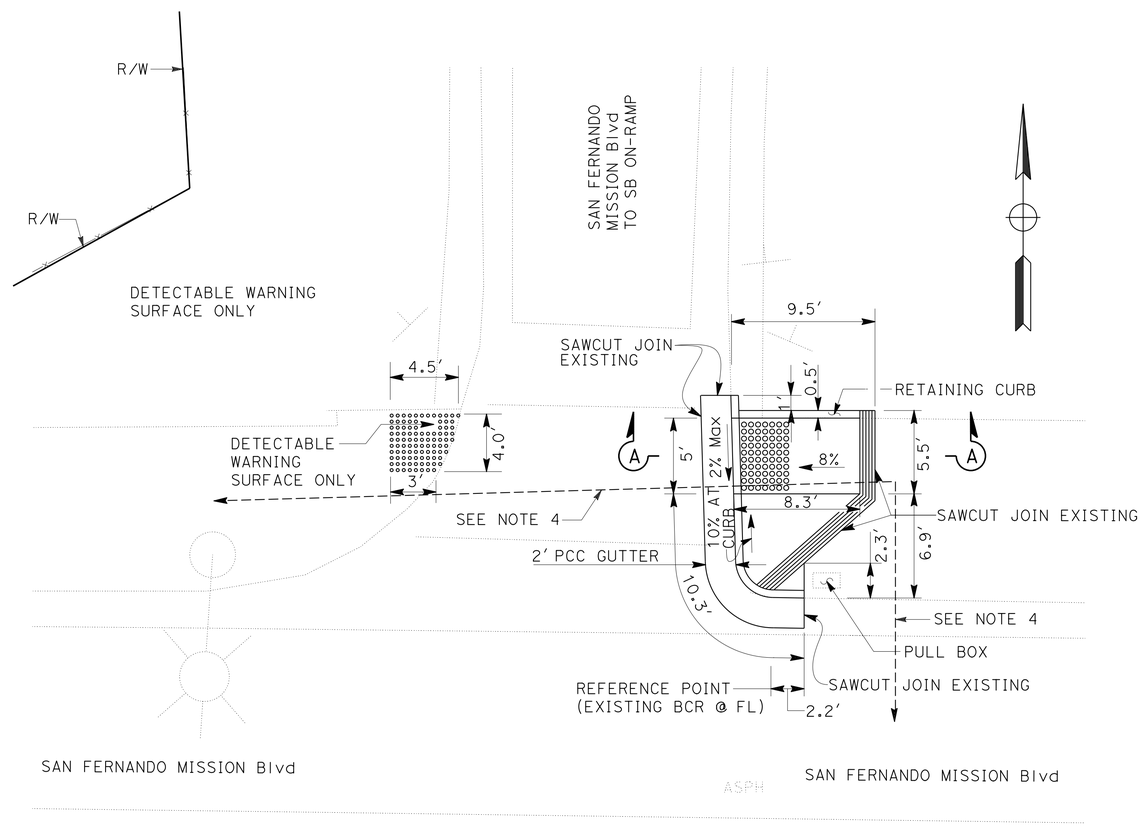

PLAN

CURB RAMP No. 38
(DETECTABLE WARNING SURFACE)

CURB RAMP No. 39
(CASE G)

CONSTRUCTION DETAILS

NO SCALE

C-31

STATE OF CALIFORNIA - DEPARTMENT OF TRANSPORTATION
Caltrans MAINTENANCE ENGINEERING

FUNCTIONAL SUPERVISOR: PAUL CRISPI
CALCULATED-DESIGNED BY: PETER DINH
CHECKED BY: PAUL CRISPI
REVISED BY
DATE REVISED

LAST REVISION 07-30-12
DATE PLOTTED => 14-FEB-2013
TIME PLOTTED => 13:26

Dist	COUNTY	ROUTE	POST MILES TOTAL PROJECT	SHEET No.	TOTAL SHEETS
07	LA	405	39.4/48.6	67	179

REGISTERED CIVIL ENGINEER 5-30-12 DATE

7-30-12
PLANS APPROVAL DATE

REGISTERED PROFESSIONAL ENGINEER PETER VAN DINH No. C62666 Exp. 6-30-14 CIVIL STATE OF CALIFORNIA

THE STATE OF CALIFORNIA OR ITS OFFICERS OR AGENTS SHALL NOT BE RESPONSIBLE FOR THE ACCURACY OR COMPLETENESS OF SCANNED COPIES OF THIS PLAN SHEET.

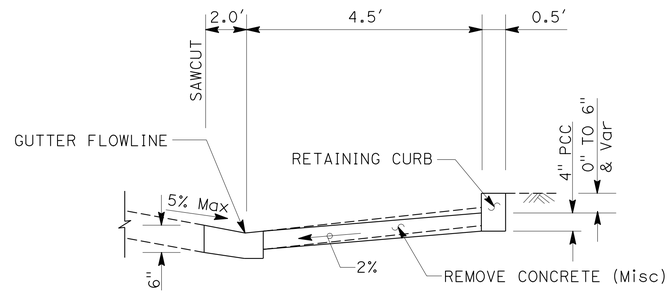

SECTION A-A

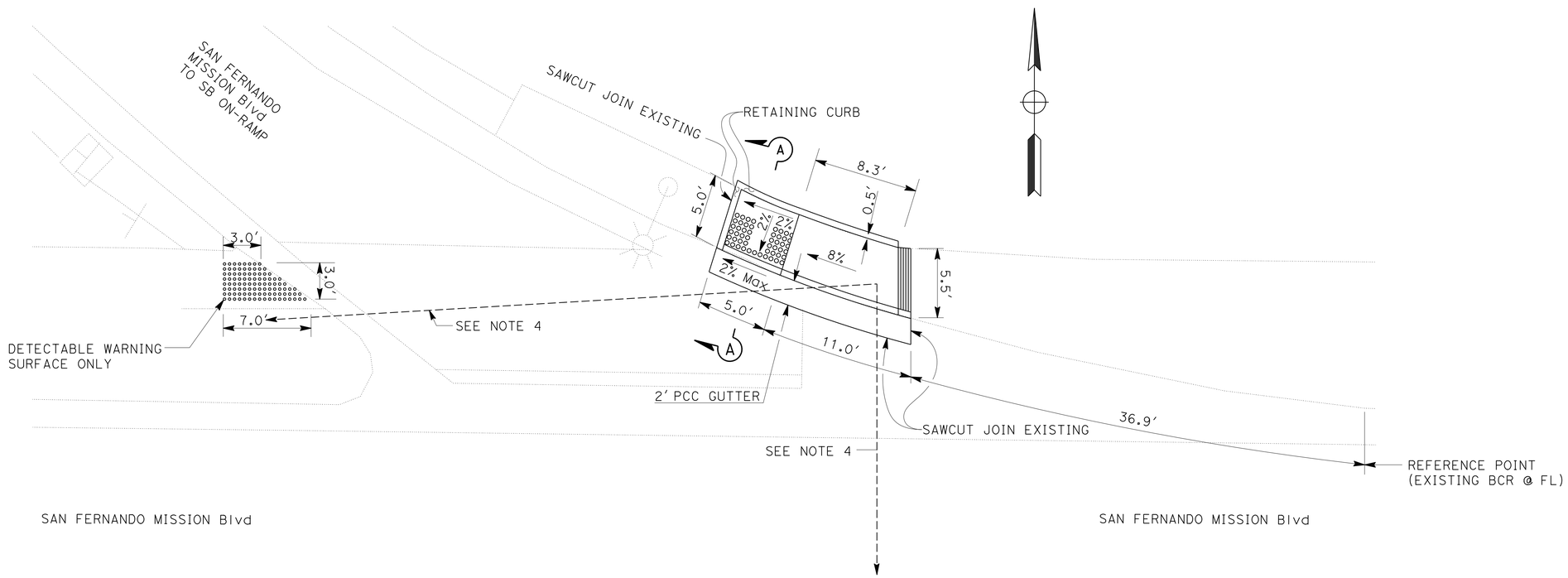

PLAN

CURB RAMP No. 40
(DETECTABLE WARNING SURFACE)

CURB RAMP No. 41
(CASE C)

CONSTRUCTION DETAILS
NO SCALE

C-32

REVISED BY	DATE REVISED

CALCULATED-DESIGNED BY	PETER DINH
CHECKED BY	PAUL CRISPI
FUNCTIONAL SUPERVISOR	PAUL CRISPI

STATE OF CALIFORNIA - DEPARTMENT OF TRANSPORTATION
Caltrans MAINTENANCE ENGINEERING

LAST REVISION 07-30-12 | DATE PLOTTED => 14-FEB-2013 | TIME PLOTTED => 13:26

Dist	COUNTY	ROUTE	POST MILES TOTAL PROJECT	SHEET No.	TOTAL SHEETS
07	LA	405	39.4/48.6	68	179

REGISTERED CIVIL ENGINEER DATE 5-30-12

7-30-12
PLANS APPROVAL DATE

REGISTERED PROFESSIONAL ENGINEER PETER VAN DINH No. C62666 Exp. 6-30-14 CIVIL STATE OF CALIFORNIA

THE STATE OF CALIFORNIA OR ITS OFFICERS OR AGENTS SHALL NOT BE RESPONSIBLE FOR THE ACCURACY OR COMPLETENESS OF SCANNED COPIES OF THIS PLAN SHEET.

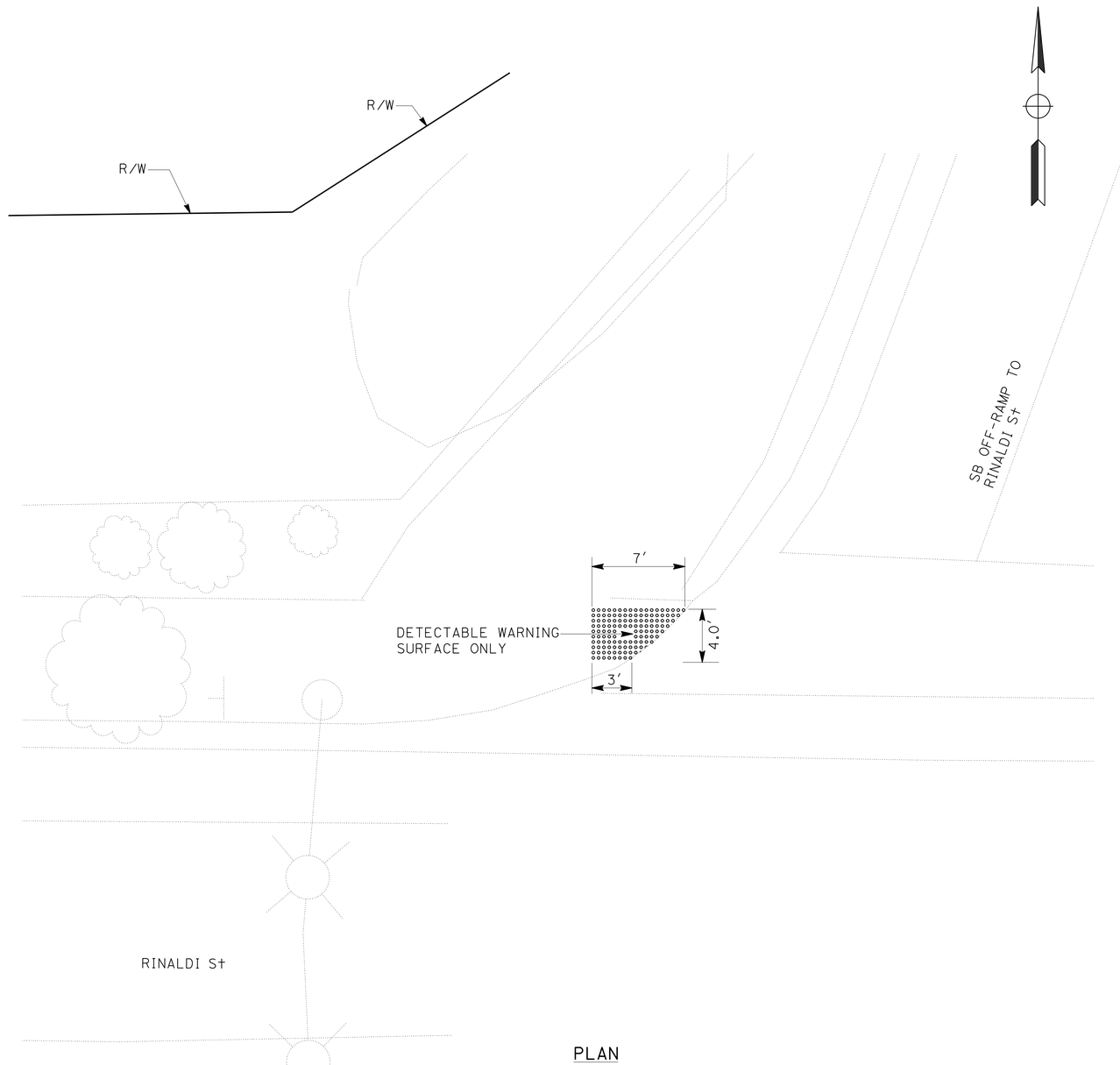

PLAN

CURB RAMP No. 42

(DETECTABLE WARNING SURFACE)

CONSTRUCTION DETAILS

NO SCALE

C-33

REVISED BY	DATE REVISED
PETER DINH	PAUL CRISPI
CALCULATED-DESIGNED BY	CHECKED BY
FUNCTIONAL SUPERVISOR	PAUL CRISPI

STATE OF CALIFORNIA - DEPARTMENT OF TRANSPORTATION
Caltrans MAINTENANCE ENGINEERING

LAST REVISION 07-30-12 | DATE PLOTTED => 14-FEB-2013 | TIME PLOTTED => 13:26

Dist	COUNTY	ROUTE	POST MILES TOTAL PROJECT	SHEET No.	TOTAL SHEETS
07	LA	405	39.4/48.6	69	179

REGISTERED CIVIL ENGINEER 5-30-12 DATE

7-30-12
PLANS APPROVAL DATE

REGISTERED PROFESSIONAL ENGINEER PETER VAN DINH No. C62666 Exp. 6-30-14 CIVIL STATE OF CALIFORNIA

THE STATE OF CALIFORNIA OR ITS OFFICERS OR AGENTS SHALL NOT BE RESPONSIBLE FOR THE ACCURACY OR COMPLETENESS OF SCANNED COPIES OF THIS PLAN SHEET.

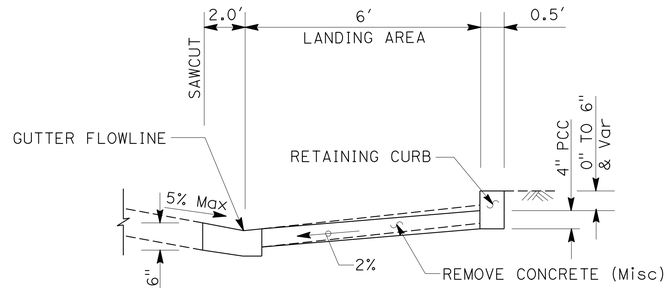

SECTION A-A

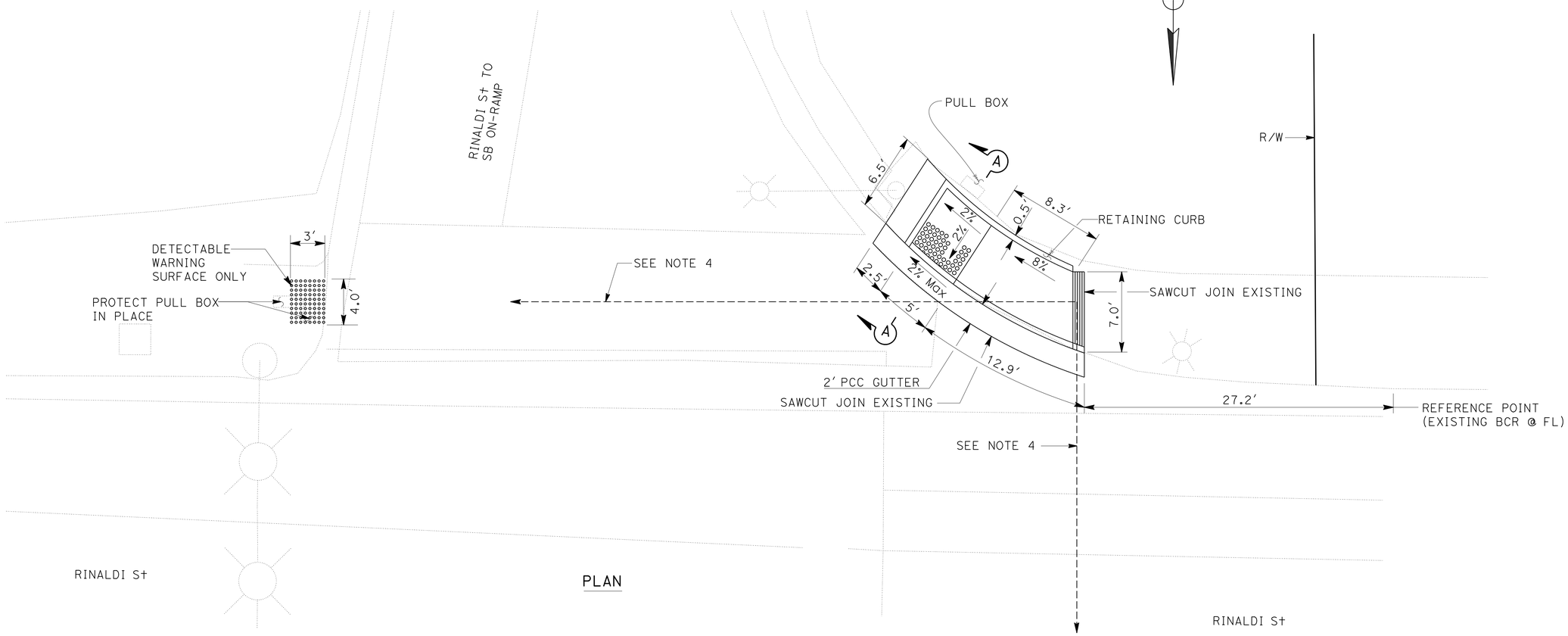

PLAN

CURB RAMP No. 43
(DETECTABLE WARNING SURFACE)

CURB RAMP No. 44
(CASE C Mod)

CONSTRUCTION DETAILS
NO SCALE

C-34

STATE OF CALIFORNIA - DEPARTMENT OF TRANSPORTATION
Caltrans MAINTENANCE ENGINEERING

FUNCTIONAL SUPERVISOR: PAUL CRISPI
CALCULATED-DESIGNED BY: PETER DINH
CHECKED BY: PAUL CRISPI
REVISED BY
DATE REVISED

LAST REVISION 07-30-12 | DATE PLOTTED => 14-FEB-2013 | TIME PLOTTED => 13:26

Dist	COUNTY	ROUTE	POST MILES TOTAL PROJECT	SHEET No.	TOTAL SHEETS
07	LA	405	39.4/48.6	70	179

REGISTERED CIVIL ENGINEER 5-30-12 DATE

7-30-12
PLANS APPROVAL DATE

REGISTERED PROFESSIONAL ENGINEER PETER VAN DINH No. C62666 Exp. 6-30-14 CIVIL STATE OF CALIFORNIA

THE STATE OF CALIFORNIA OR ITS OFFICERS OR AGENTS SHALL NOT BE RESPONSIBLE FOR THE ACCURACY OR COMPLETENESS OF SCANNED COPIES OF THIS PLAN SHEET.

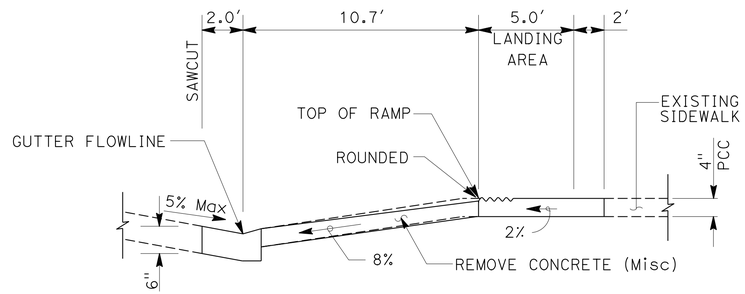

SECTION A-A

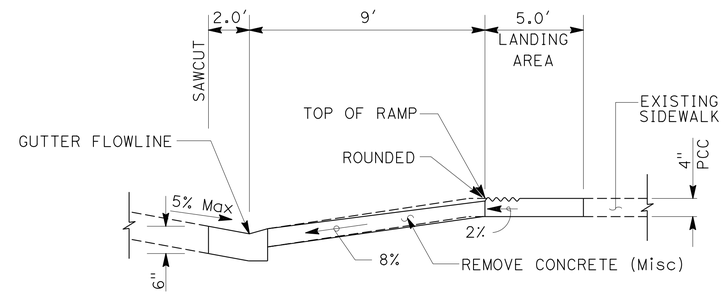

SECTION B-B

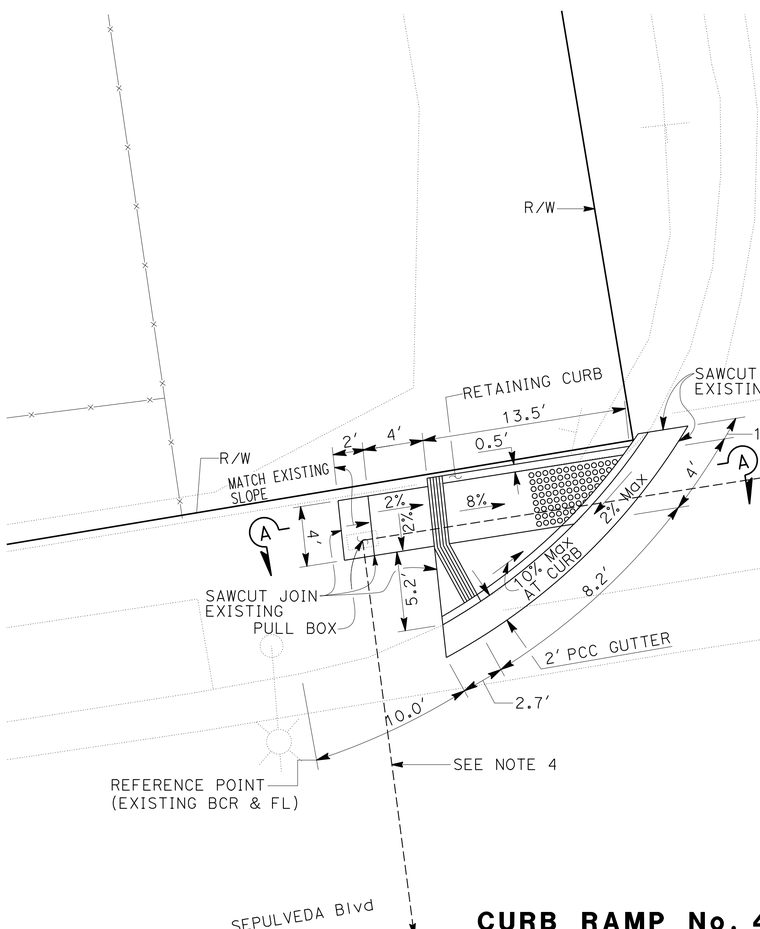

CURB RAMP No. 45
(CASE G Mod)

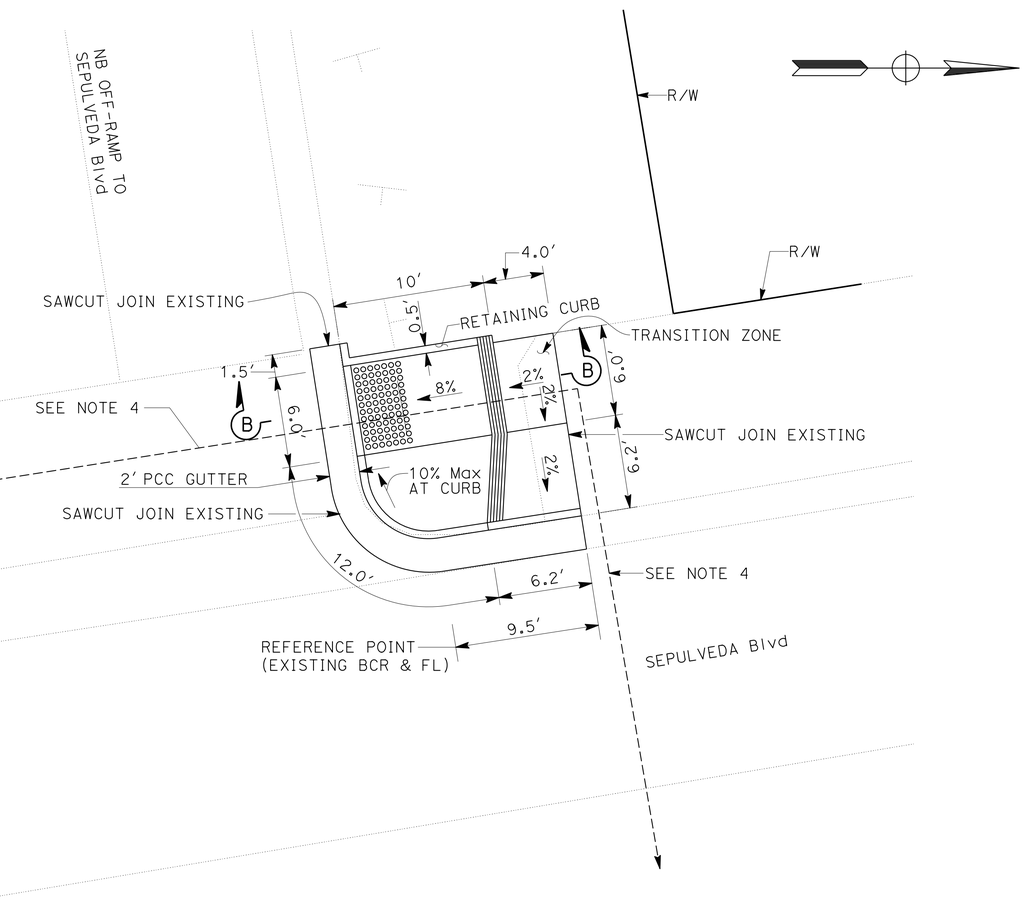

CURB RAMP No. 46
(CASE G Mod)

CONSTRUCTION DETAILS

NO SCALE

C-35

REVISED BY	DATE REVISED

CALCULATED-DESIGNED BY	CHECKED BY
PETER DINH	PAUL CRISPI

FUNCTIONAL SUPERVISOR: PAUL CRISPI

STATE OF CALIFORNIA - DEPARTMENT OF TRANSPORTATION
Caltrans MAINTENANCE ENGINEERING

LAST REVISION 07-30-12 | DATE PLOTTED => 14-FEB-2013 | TIME PLOTTED => 13:26

Dist	COUNTY	ROUTE	POST MILES TOTAL PROJECT	SHEET No.	TOTAL SHEETS
07	LA	405	39.4/48.6	71	179

M. Parvini 5-30-12
REGISTERED CIVIL ENGINEER DATE

7-30-12
PLANS APPROVAL DATE

REGISTERED PROFESSIONAL ENGINEER
MEHDI PARVINI
No. C63186
Exp. 6-30-14
CIVIL
STATE OF CALIFORNIA

THE STATE OF CALIFORNIA OR ITS OFFICERS OR AGENTS SHALL NOT BE RESPONSIBLE FOR THE ACCURACY OR COMPLETENESS OF SCANNED COPIES OF THIS PLAN SHEET.

LEGEND:

PLACE PPCP (SEE GENERAL SLAB LAYOUTS STANDARD PLAN)

EXPANSION JOINT

ABBREVIATION:

(s) Exist JOINT SPACING

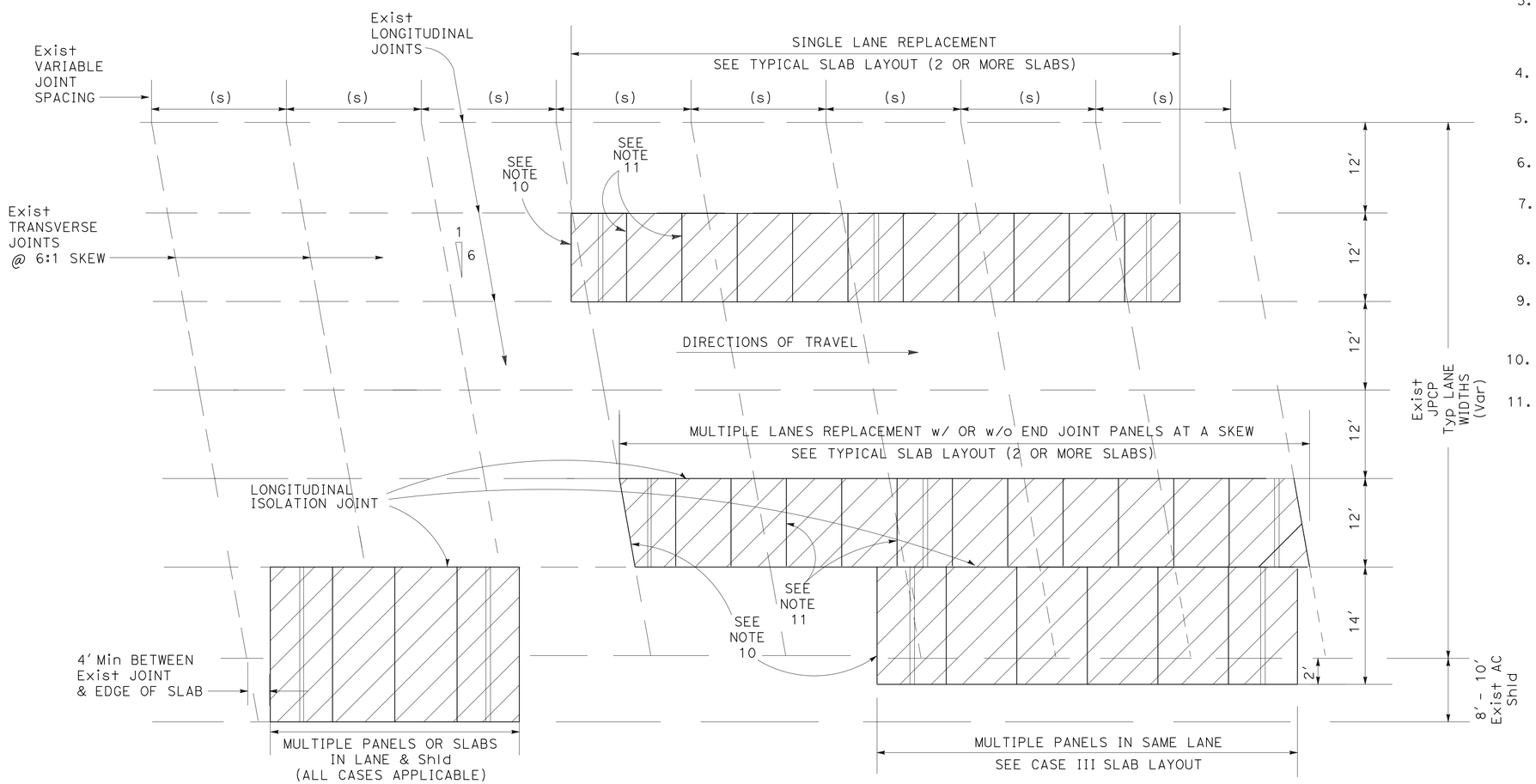

TYPICAL VARIABLE LAYOUTS

NOTES:

1. SKEW PANELS HAVE A MINIMUM LENGTH OF 4' FROM THE EXPANSION JOINT.
2. Exist JOINT SPACING (S) VARIES BASED ON YEAR OF DESIGN AND ARE TYPICALLY AT A SKEW OF 6:1. NEW PANEL JOINTS ARE NOT NECESSARILY REQUIRED TO MATCH w/ THE Exist JOINTS.
3. FOR DETAILS OF BASE PANELS, CENTRAL STRESSING PANELS, TYPE C1 JOINT PANELS, TYPE C2 JOINT PANELS AND TYPE C3 JOINT PANELS, SEE THE INDIVIDUAL Std PLANS FOR EACH OF THESE PANELS.
4. MAXIMUM SLAB LENGTH VARIES w/ TEMPERATURE, SEE Sht C-38.
5. CASE IA & IB SINGLE SLAB LAYOUTS ARE PRESTRESSED w/o POST-TENSIONING.
6. SKEW JOINT PANELS ARE OPTIONAL & ARE USED TO MATCH Exist.
7. Min Std PANEL LENGTH (L) = 8'. Min PANEL WIDTH (W) = DIMENSION AS NEEDED. Max PANEL WIDTH (W) = 60'.
8. IF POSSIBLE, LINE UP THE TRANSVERSE JOINTS WHEN MULTIPLE LANES OF PANELS ARE USED.
9. FOR LONGITUDINAL ISOLATION JOINTS, SEE "ISOLATION JOINT DETAIL" ON MISCELLANEOUS PANEL DETAILS Std PLAN.
10. FOR PPCP NEXT TO Exist PCC Pvmt, SEE "DOWEL BAR RETROFIT Std PLAN.
11. FOR TRANSVERSE JOINTS OF PPCP PANELS, SEE "KEY & KEYWAY DETAIL" ON CONSTRUCTION DETAILS PLAN.

CONSTRUCTION DETAILS
GENERAL LAYOUTS
PRECAST PRESTRESSED CONCRETE PAVEMENT (PPCP)

NO SCALE

C-36

REVISED BY	DATE REVISED
MP	12/12/11

CALCULATED-DESIGNED BY: MEHDI PARVNINI
CHECKED BY: BILL FARNBACH
FUNCTIONAL SUPERVISOR: BILL FARNBACH

STATE OF CALIFORNIA - DEPARTMENT OF TRANSPORTATION
Caltrans
DESIGN

LAST REVISION 07-30-12 | DATE PLOTTED => 14-FEB-2013 | TIME PLOTTED => 13:26

Dist	COUNTY	ROUTE	POST MILES TOTAL PROJECT	SHEET No.	TOTAL SHEETS
07	LA	405	39.4/48.6	72	179

M. Parvini 5-30-12
REGISTERED CIVIL ENGINEER DATE

7-30-12
PLANS APPROVAL DATE

REGISTERED PROFESSIONAL ENGINEER MEHDI PARVINI No. C63186 Exp. 6-30-14 CIVIL STATE OF CALIFORNIA

THE STATE OF CALIFORNIA OR ITS OFFICERS OR AGENTS SHALL NOT BE RESPONSIBLE FOR THE ACCURACY OR COMPLETENESS OF SCANNED COPIES OF THIS PLAN SHEET.

NOTES:

1. SEE Misc PANEL DETAILS FOR CENTRAL STRESSING BLOCKOUT DETAIL.
2. L IS THE LENGTH DIMENSION ALONG THE DIRECTION OF TRAVEL.
3. CASE 1A SINGLE SLAB IS A SINGLE PRECAST CONCRETE PANEL w/ NO POST-TENSIONING. USED FOR INDIVIDUAL SLAB REPLACEMENT. FOR DETAILS, SEE INDIVIDUAL SLAB REPLACEMENT LAYOUT Std PLAN.
4. WHEN CENTRAL STRESSING PANELS ARE INCLUDED IN A SLAB, ONLY TWO LONG BLOCKOUTS PLACED APPROXIMATELY AT THIRD POINTS OF JOINT PANELS ARE NEEDED.

LEGEND:

- SMALL BLOCKOUTS FOR END ANCHORS
- LARGE BLOCKOUTS FOR POST-TENSIONING JACKS
- TYPICAL DIRECTION OF POST-TENSIONING PULL & LOCATION OF TENSION LOCK.
- POST-TENSIONING DUCT

TYPICAL BLOCKOUTS FOR END ANCHORS AND POST-TENSIONING JACKS SEE NOTE 4

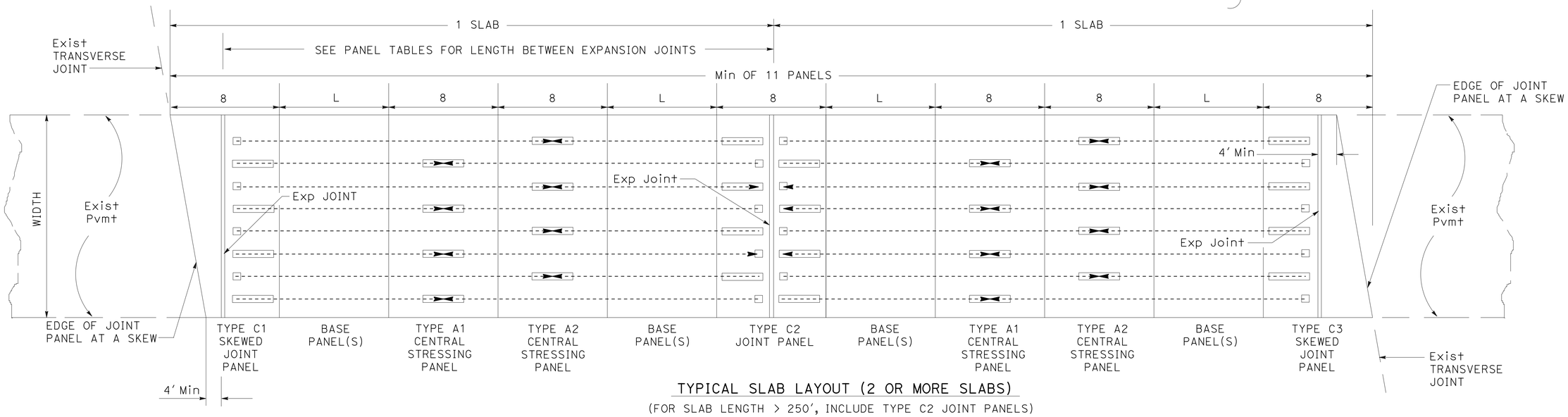

TYPICAL SLAB LAYOUT (2 OR MORE SLABS)

(FOR SLAB LENGTH > 250', INCLUDE TYPE C2 JOINT PANELS)

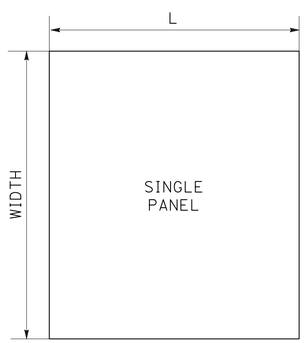

CASE I SINGLE SLAB LAYOUT (L < 15')

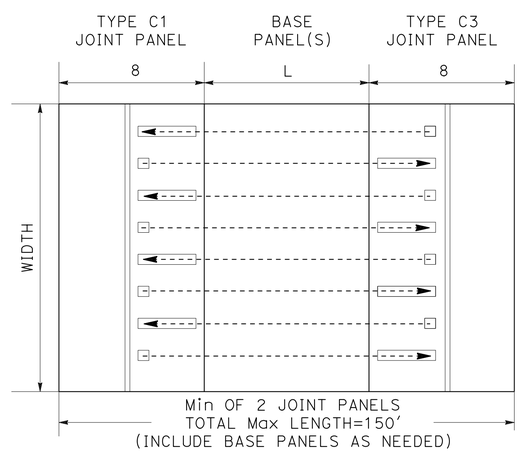

CASE II SLAB LAYOUT

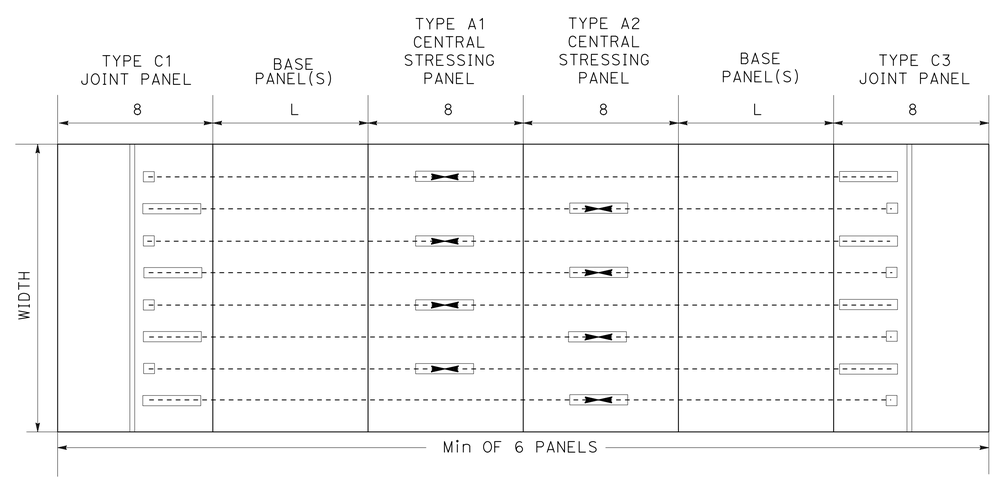

CASE III SLAB LAYOUT

(FOR SLAB LENGTH > 150' & < 250')

CONSTRUCTION DETAILS
GENERAL SLAB LAYOUTS
PRECAST PRESTRESSED CONCRETE PAVEMENT (PPCP)

NO SCALE

C-37

STATE OF CALIFORNIA - DEPARTMENT OF TRANSPORTATION
Caltrans DESIGN

FUNCTIONAL SUPERVISOR: BILL FARNBACH
CALCULATED-DESIGNED BY: MEHDI PARVINI
CHECKED BY: BILL FARNBACH
REVISED BY: MP
DATE REVISED: 12/12/11

LAST REVISION DATE PLOTTED => 14-FEB-2013
07-30-12 TIME PLOTTED => 13:26

Dist	COUNTY	ROUTE	POST MILES TOTAL PROJECT	SHEET No.	TOTAL SHEETS
07	LA	405	39.4/48.6	73	179

M. Parvini 5-30-12
REGISTERED CIVIL ENGINEER DATE

7-30-12
PLANS APPROVAL DATE

REGISTERED PROFESSIONAL ENGINEER
MEHDI PARVINI
No. C63186
Exp. 6-30-14
CIVIL
STATE OF CALIFORNIA

THE STATE OF CALIFORNIA OR ITS OFFICERS OR AGENTS SHALL NOT BE RESPONSIBLE FOR THE ACCURACY OR COMPLETENESS OF SCANNED COPIES OF THIS PLAN SHEET.

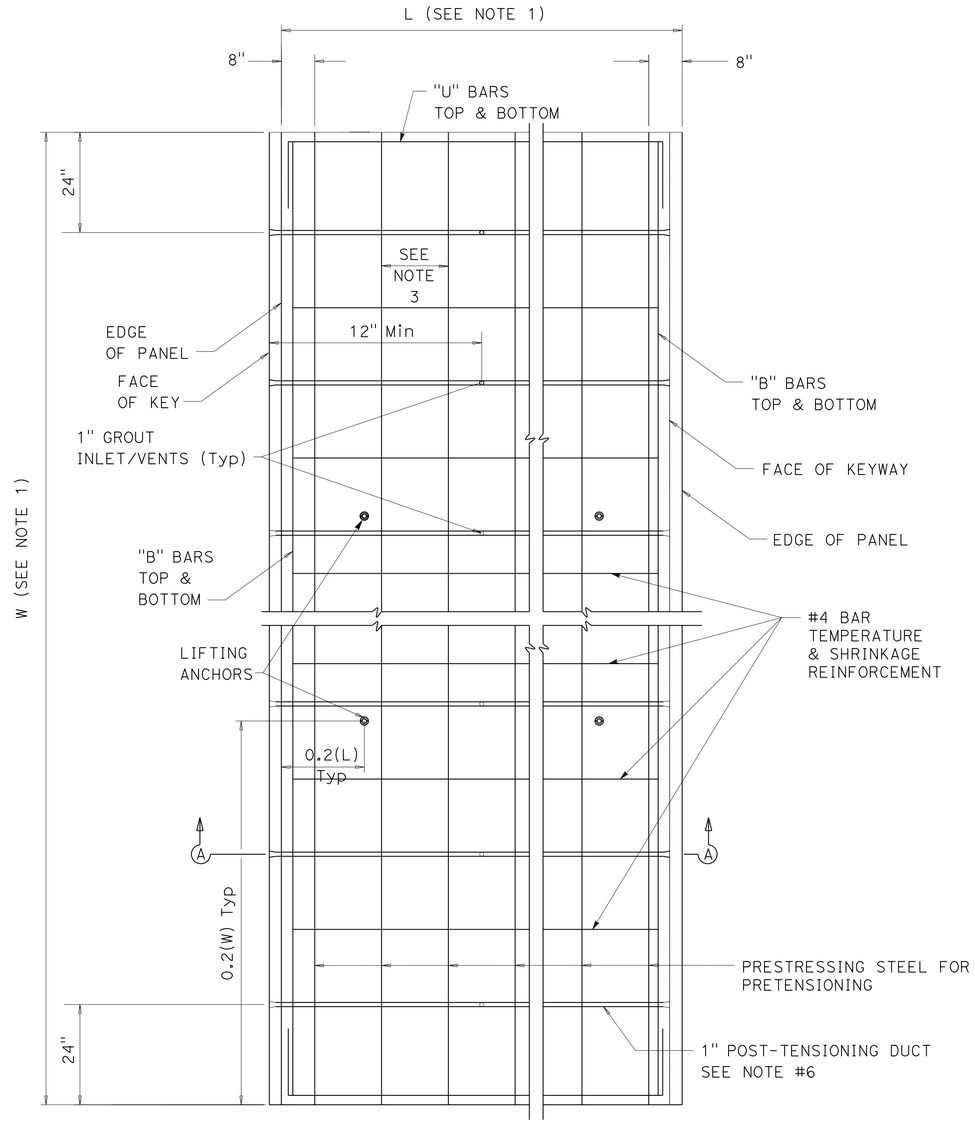

PLAN

NOTES:

1. SEE TABLES A AND B FOR LENGTH (L) OR WIDTH (W) FOR BASE PANELS.
2. THE SPACING BETWEEN PRETENSIONING STRANDS SHALL NOT BE MORE THAN 16" C-C.
3. SEE Misc PANEL DETAILS FOR KEY & KEYWAY DETAIL.
4. FOR "U" BAR LENGTH, SEE TABLE A FOR BASE PANELS.
5. VERIFY REINFORCEMENT DIMENSIONS & QUANTITIES BEFORE FABRICATION.
6. 1" POST-TENSIONING DUCTS ARE SPACED UNIFORMLY AT MAXIMUM 36" C-C ALONG THE 'W' DIMENSION BETWEEN THE FIRST & LAST P-T DUCT.

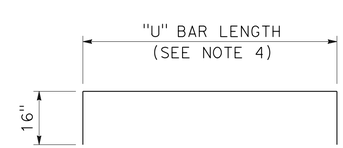

PLAN

"U" BARS
SIZE #4

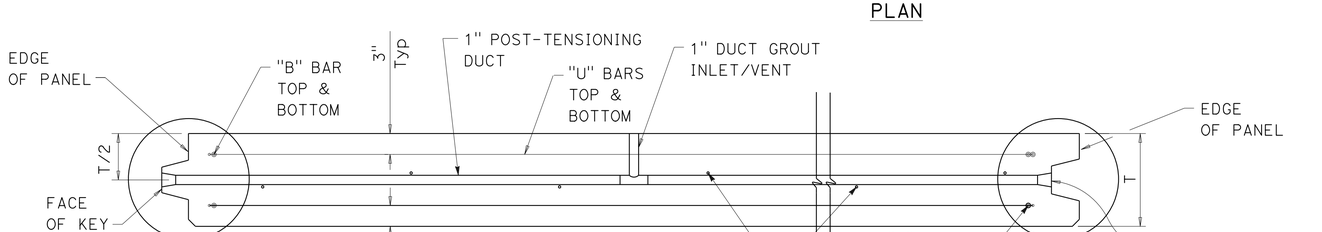

SECTION A-A

BASE PANEL

CONSTRUCTION DETAILS
BASE PANEL LAYOUT
PRECAST PRESTRESSED CONCRETE PAVEMENT (PPCP)

NO SCALE

C-38

STATE OF CALIFORNIA - DEPARTMENT OF TRANSPORTATION
Caltrans® DESIGN

FUNCTIONAL SUPERVISOR: BILL FARNBACH
CALCULATED-DESIGNED BY: MEHDI PARVNINI
CHECKED BY: BILL FARNBACH
REVISED BY
DATE REVISED

LAST REVISION 07-30-12
DATE PLOTTED => 14-FEB-2013
TIME PLOTTED => 13:26

Dist	COUNTY	ROUTE	POST MILES TOTAL PROJECT	SHEET No.	TOTAL SHEETS
07	LA	405	39.4/48.6	74	179

M. Parvini 5-30-12
REGISTERED CIVIL ENGINEER DATE

7-30-12
PLANS APPROVAL DATE

REGISTERED PROFESSIONAL ENGINEER MEHDI PARVINI No. C63186 Exp. 6-30-14 CIVIL STATE OF CALIFORNIA

THE STATE OF CALIFORNIA OR ITS OFFICERS OR AGENTS SHALL NOT BE RESPONSIBLE FOR THE ACCURACY OR COMPLETENESS OF SCANNED COPIES OF THIS PLAN SHEET.

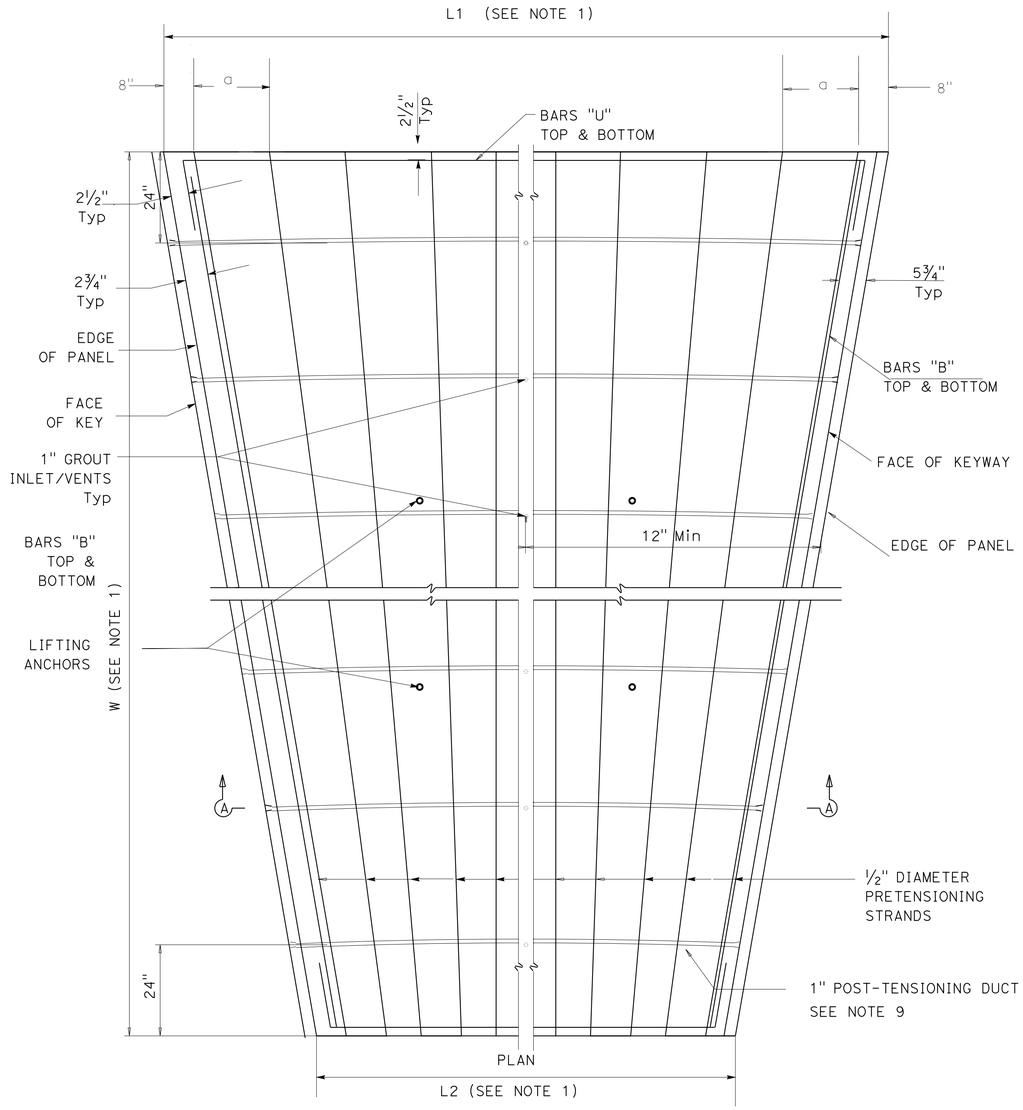

NOTES:

1. SEE TABLES A AND B FOR LENGTH (L) OR WIDTH (W) FOR BASE PANELS.
2. THE SPACING BETWEEN PRETENSIONING STRANDS SHALL NOT BE MORE THAN 16" C-C.
3. SEE MISCELLANEOUS PANEL DETAILS FOR KEY & KEYWAY DETAIL.
4. FOR BAR "U" LENGTH, SEE TABLE A FOR BASE PANELS.
5. SEE MISCELLANEOUS PANEL DETAILS FOR GROUT INLET/VENT.
6. VERIFY REINFORCEMENT DIMENSIONS AND QUANTITIES BEFORE FABRICATION.
7. FOR TIGHT CONES WITH RADIUS LESS THAN 2000', THE DUCT MUST BE PERPENDICULAR TO THE DEGE OF PANEL AND SHOULD HAVE A ANGLE TO MATCH THE RADIUS OF CONE
8. FOR TIGHT CONES WITH RADIUS LESS THAN 2000', BUILD THE CONE TO MATCH THE ROAD.
9. 1" POST-TENSIONING DUCTS ARE SPACED UNIFORMLY AT MAXIMUM 36" C-C ALONG THE 'W' DIMENSION BETWEEN THE FIRST & LAST P-T DUCT.

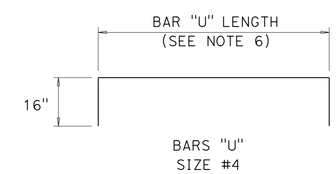

PLAN

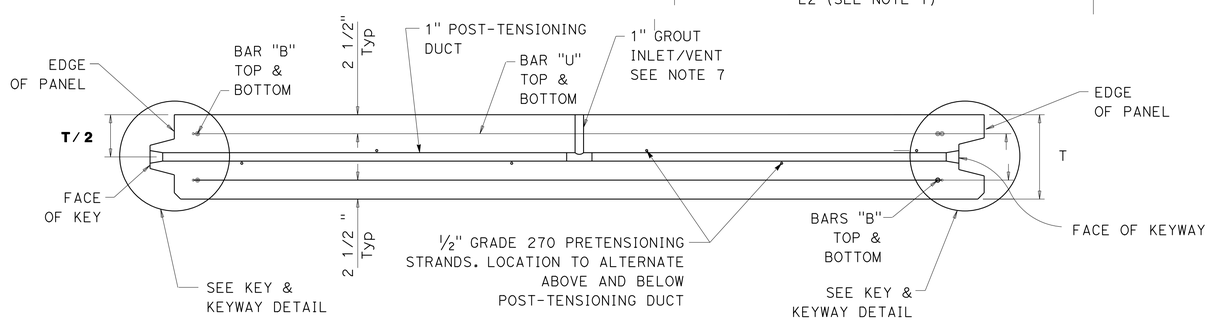

SECTION A-A

BASE PANEL

PRECAST PRESTRESSED CONCRETE PAVEMENT (PPCP)

NO SCALE

C-39

STATE OF CALIFORNIA - DEPARTMENT OF TRANSPORTATION
Caltrans DESIGN

FUNCTIONAL SUPERVISOR	CALCULATED-DESIGNED BY	CHECKED BY	REVISED BY	DATE REVISED
BILL FARNBACH	MEHDI PARVNINI	BILL FARNBACH	MP	12/12/11

LAST REVISION 07-30-12 | DATE PLOTTED => 14-FEB-2013 | TIME PLOTTED => 13:26

Dist	COUNTY	ROUTE	POST MILES TOTAL PROJECT	SHEET No.	TOTAL SHEETS
07	LA	405	39.4/48.6	75	179

M. Parvini 5-30-12
REGISTERED CIVIL ENGINEER DATE

7-30-12
PLANS APPROVAL DATE

REGISTERED PROFESSIONAL ENGINEER MEHDI PARVINI No. C63186 Exp. 6-30-14 CIVIL STATE OF CALIFORNIA

THE STATE OF CALIFORNIA OR ITS OFFICERS OR AGENTS SHALL NOT BE RESPONSIBLE FOR THE ACCURACY OR COMPLETENESS OF SCANNED COPIES OF THIS PLAN SHEET.

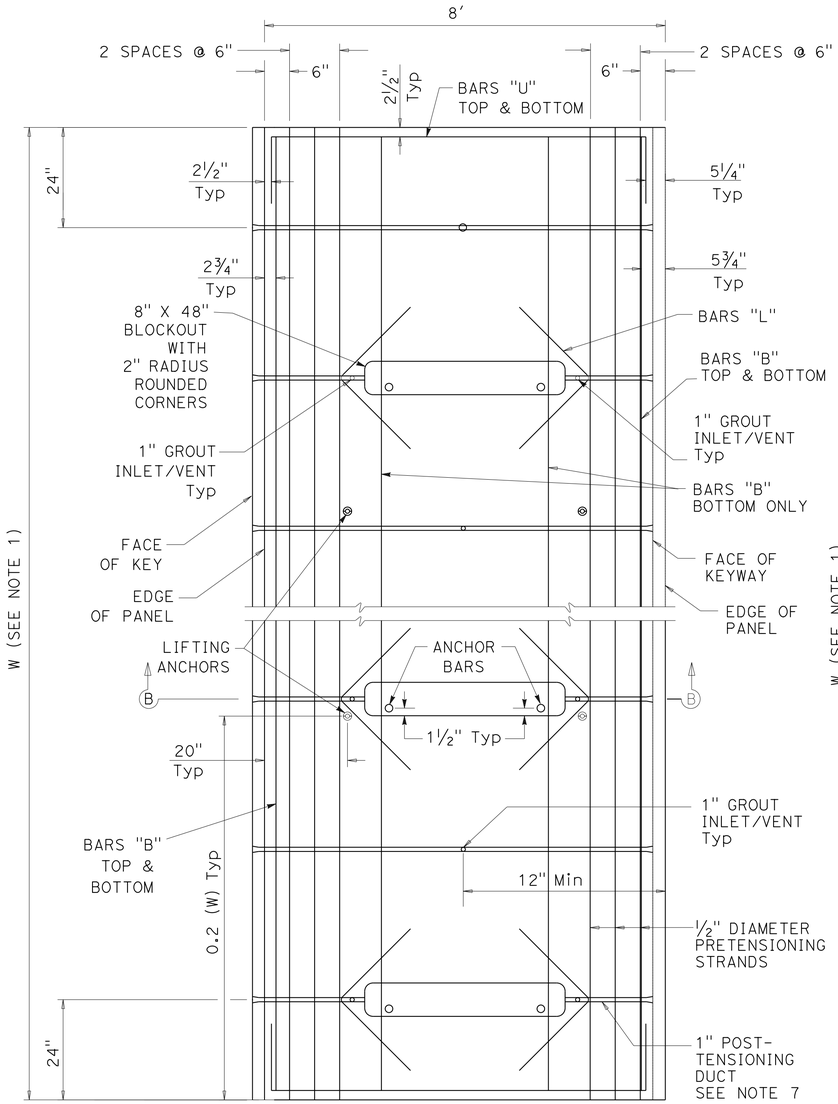

PLAN
TYPE A1

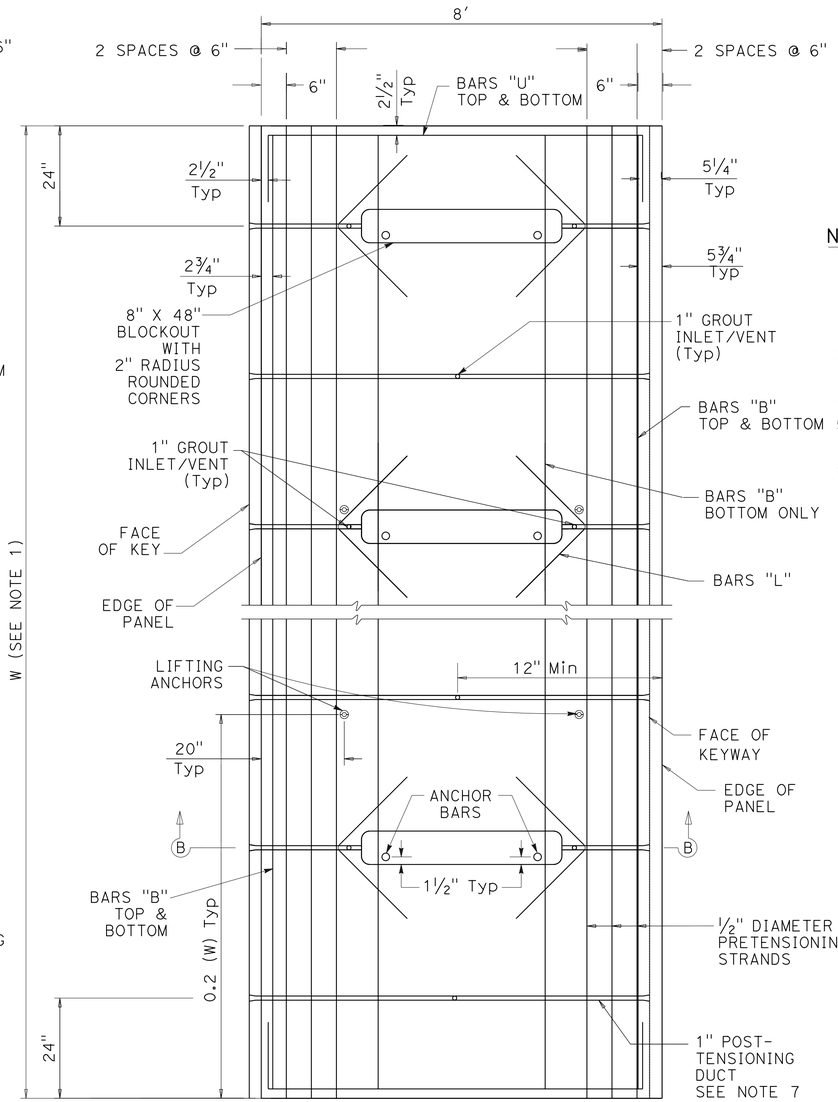

PLAN
TYPE A2

NOTES:

1. SEE TABLE B FOR BASE PANELS FOR NUMBER OF P-T DUCTS & LENGTH OF PRETENSIONING STRANDS. NUMBER OF BARS ASSOCIATED WITH EACH TYPE OF BLOCK-OUT IS CALCULATED BASED ON THE NUMBER OF THAT TYPE.
2. THE SPACING BETWEEN PRETENSIONING STRANDS IS 6" C-C.
3. SEE MISCELLANEOUS PANEL DETAILS FOR KEY & KEYWAY DETAIL.
4. SEE MISCELLANEOUS PANEL DETAILS FOR GROUT INLET/VENT.
5. SEE CENTRAL STRESSING BLOCKOUT DETAIL AND ANCHOR BAR DETAIL IN MISCELLANEOUS PANEL DETAILS.
6. VERIFY REINFORCEMENT DIMENSIONS AND QUANTITIES BEFORE FABRICATION.
7. 1" POST-TENSIONING DUCTS ARE SPACED UNIFORMLY AT Max 36" C-C ALONG THE 'W' DIMENSION BETWEEN THE FIRST & LAST P-T DUCT.

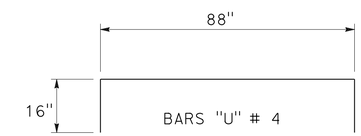

PLAN

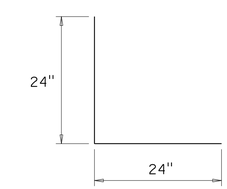

BARS "L"

PLAN

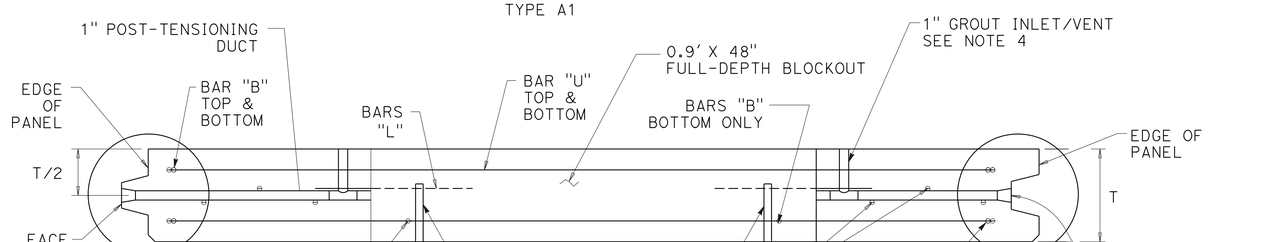

SECTION B-B

CENTRAL STRESSING PANELS (TYPE A1 & A2)

CONSTRUCTION DETAILS
PRECAST PRESTRESSED CONCRETE PAVEMENT
NO SCALE

C-40

STATE OF CALIFORNIA - DEPARTMENT OF TRANSPORTATION
Caltrans DESIGN
FUNCTIONAL SUPERVISOR: BILL FARNBACH
CALCULATED-DESIGNED BY: MEHDI PARVNINI
CHECKED BY: BILL FARNBACH
REVISED BY
DATE REVISED

LAST REVISION 07-30-12
DATE PLOTTED => 14-FEB-2013
TIME PLOTTED => 13:26

Dist	COUNTY	ROUTE	POST MILES TOTAL PROJECT	SHEET No.	TOTAL SHEETS
07	LA	405	39.4/48.6	76	179

M. Parvini 5-30-12
REGISTERED CIVIL ENGINEER DATE

7-30-12
PLANS APPROVAL DATE

REGISTERED PROFESSIONAL ENGINEER MEHDI PARVINI No. C63186 Exp. 6-30-14 CIVIL STATE OF CALIFORNIA

THE STATE OF CALIFORNIA OR ITS OFFICERS OR AGENTS SHALL NOT BE RESPONSIBLE FOR THE ACCURACY OR COMPLETENESS OF SCANNED COPIES OF THIS PLAN SHEET.

NOTES:

1. SEE TABLE B FOR BASE PANELS FOR NUMBER OF P-T DUCTS & LENGTH OF PRETENSIONING STRANDS. NUMBER OF BARS ASSOCIATED WITH EACH TYPE OF BLOCK-OUT IS CALCULATED BASED ON THE NUMBER OF THAT TYPE.
2. SEE MISCELLANEOUS PANEL DETAILS FOR KEY & KEYWAY DETAIL.
3. SEE MISCELLANEOUS PANEL DETAILS FOR GROUT INLET/VENT.
4. THE SECTION OF DOWEL EXTENDING INTO THE EXPANSION SLEEVE MUST BE GREASED PRIOR TO BEING INSERTED INTO THE EXPANSION SLEEVE PRIOR TO CASTING.
5. VERIFY REINFORCEMENT DIMENSIONS AND QUANTITIES BEFORE FABRICATION.
6. 1" POST-TENSIONING DUCTS ARE SPACED UNIFORMLY AT Max 36" C-C ALONG THE 'W' DIMENSION BETWEEN THE FIRST & LAST P-T DUCT.

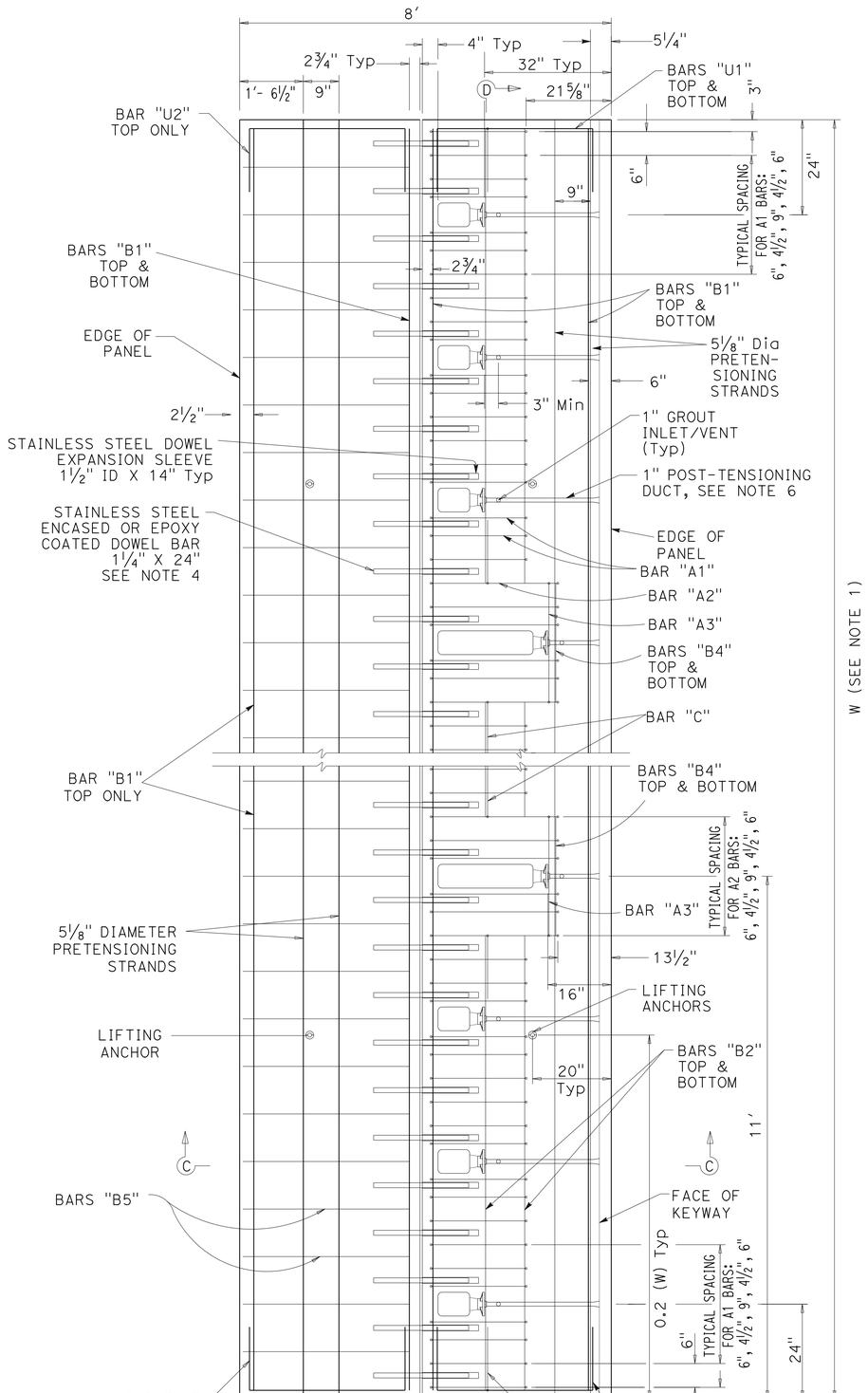

PLAN

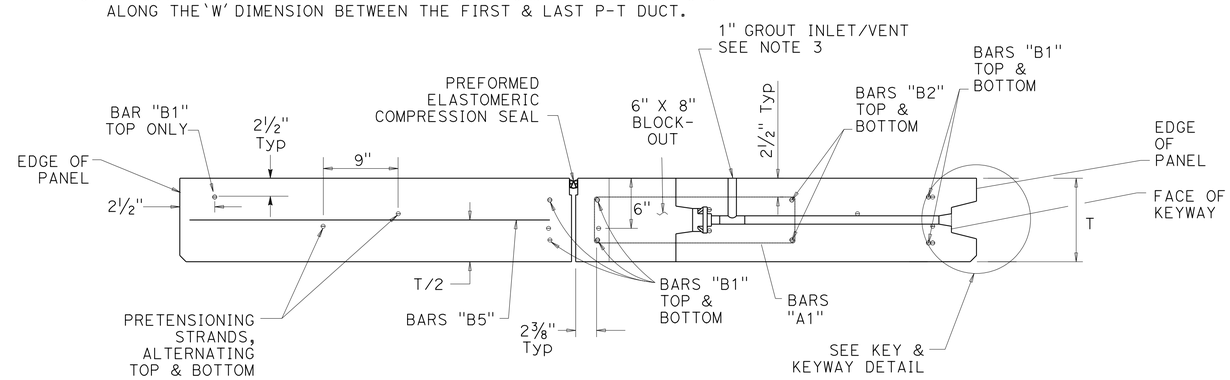

SECTION C-C

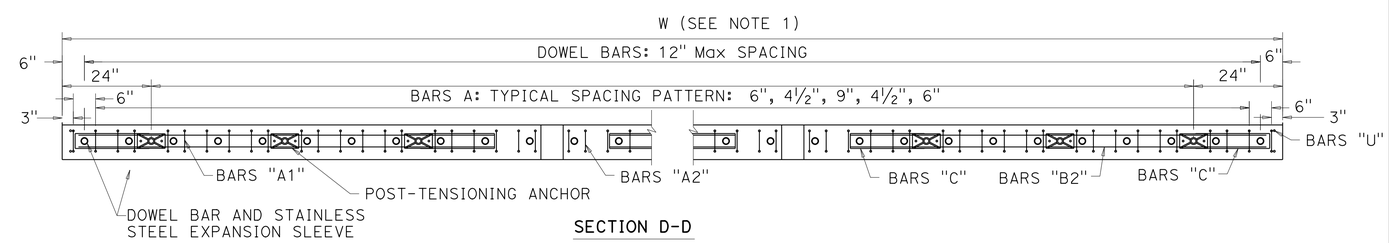

SECTION D-D

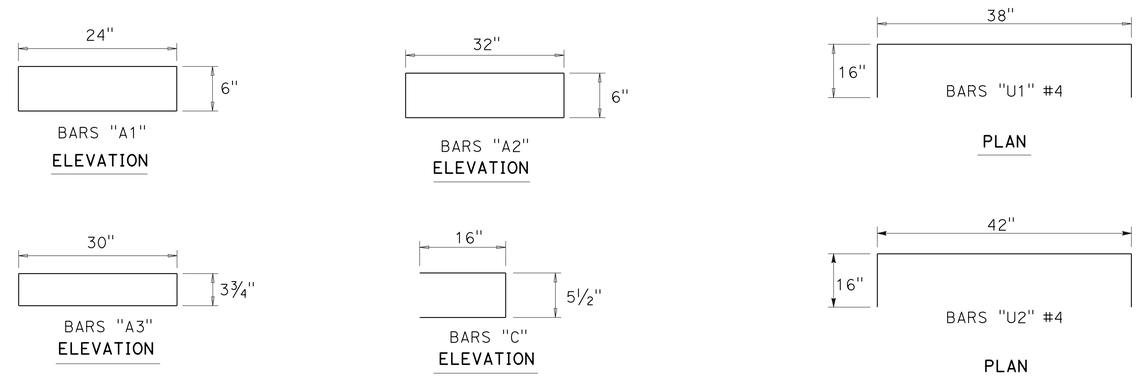

JOINT PANEL TYPE C1

CONSTRUCTION DETAILS
PRECAST PRESTRESSED CONCRETE PAVEMENT
NO SCALE

C-41

REVISED BY	DATE REVISED
MP	12/12/11

CALCULATED-DESIGNED BY: MEHDI PARVINI
CHECKED BY: BILL FARNBACH
FUNCTIONAL SUPERVISOR: BILL FARNBACH

STATE OF CALIFORNIA - DEPARTMENT OF TRANSPORTATION
Caltrans DESIGN

LAST REVISION DATE PLOTTED => 14-FEB-2013
07-30-12 TIME PLOTTED => 13:26

Dist	COUNTY	ROUTE	POST MILES TOTAL PROJECT	SHEET No.	TOTAL SHEETS
07	LA	405	39.4/48.6	77	179

M. Parvini 5-30-12
REGISTERED CIVIL ENGINEER DATE

7-30-12
PLANS APPROVAL DATE

REGISTERED PROFESSIONAL ENGINEER MEHDI PARVINI No. C63186 Exp. 6-30-14 CIVIL STATE OF CALIFORNIA

THE STATE OF CALIFORNIA OR ITS OFFICERS OR AGENTS SHALL NOT BE RESPONSIBLE FOR THE ACCURACY OR COMPLETENESS OF SCANNED COPIES OF THIS PLAN SHEET.

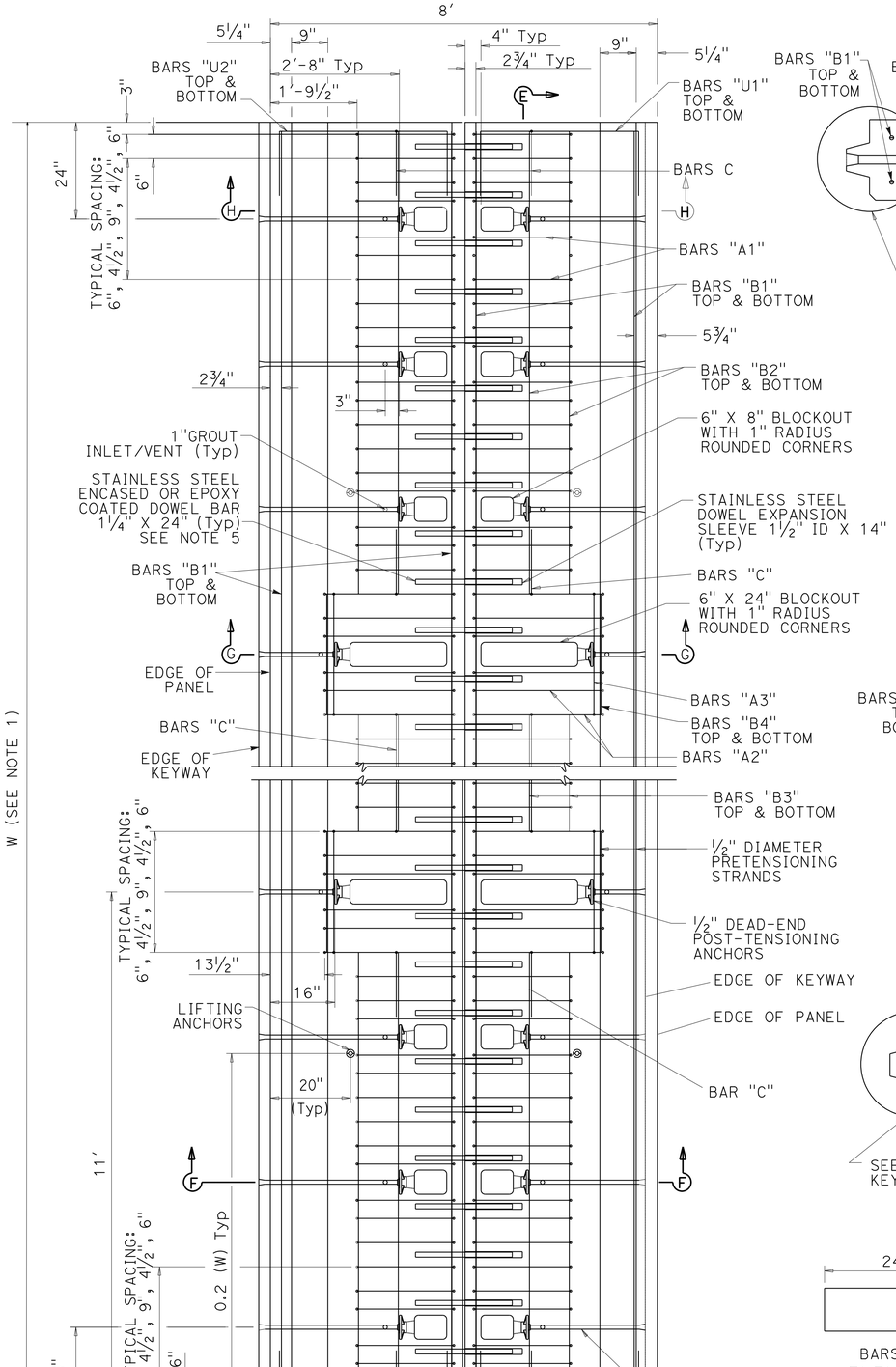

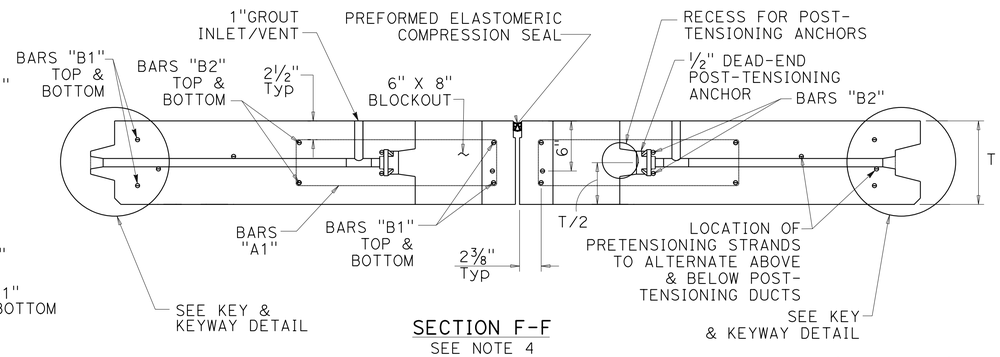

SECTION F-F
SEE NOTE 4

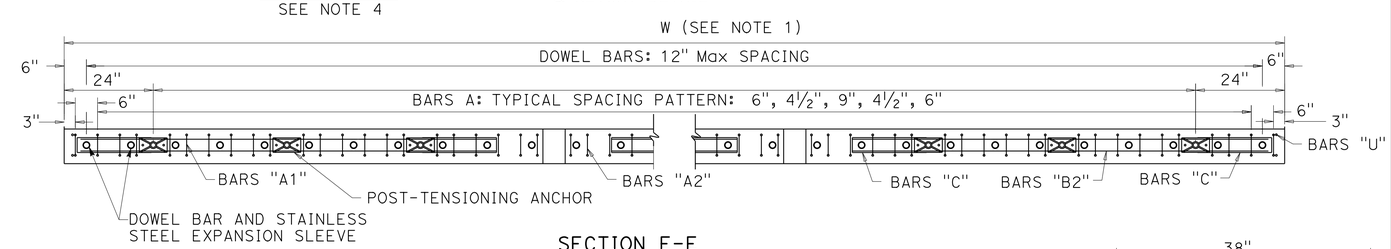

SECTION E-E

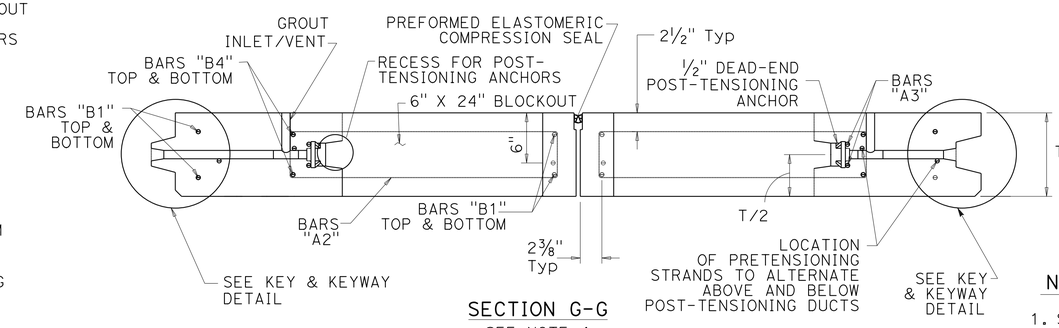

SECTION G-G
SEE NOTE 4

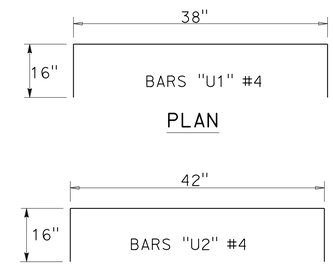

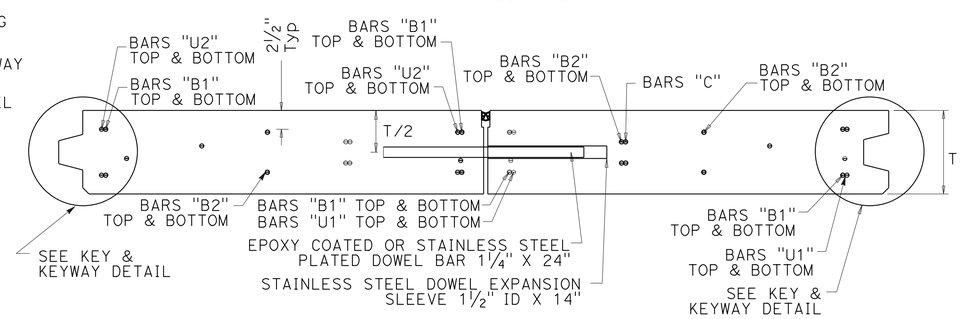

SECTION H-H

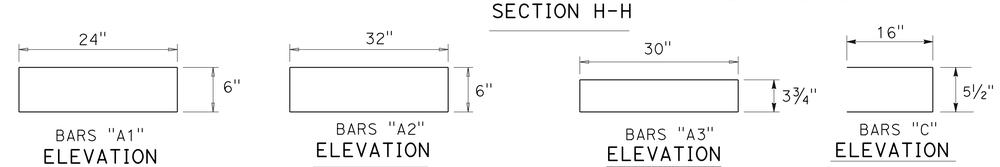

NOTES:

1. SEE TABLE B FOR BASE PANELS FOR NUMBER OF P-T DUCTS & LENGTH OF PRETENSIONING STRANDS. NUMBER OF BARS ASSOCIATED WITH EACH TYPE OF BLOCK-OUT IS CALCULATED BASED ON THE NUMBER OF THAT TYPE.
2. SEE MISCELLANEOUS PANEL DETAILS FOR KEY & KEYWAY DETAIL.
3. SEE MISCELLANEOUS PANEL DETAILS FOR GROUT INLET/VENT.
4. SEE MISCELLANEOUS PANEL DETAILS FOR EXPANSION JOINT/ANCHOR DETAIL.
5. THE SECTION OF DOWEL EXTENDING INTO THE EXPANSION SLEEVE SHALL BE GREASED PRIOR TO BEING INSERTED INTO THE EXPANSION SLEEVE PRIOR TO CASTING.
6. ALL REINFORCEMENT DIMENSIONS SHALL BE VERIFIED BY THE MANUFACTURER BEFORE PANEL FABRICATION.
7. 1" POST-TENSIONING DUCTS ARE SPACED UNIFORMLY AT MAXIMUM 36" C-C ALONG THE 'W' DIMENSION BETWEEN THE FIRST & LAST P-T DUCT.

JOINT PANEL TYPE C2

CONSTRUCTION DETAILS
PRECAST PRESTRESSED CONCRETE PAVEMENT

NO SCALE

C-42

REVISED BY	DATE REVISED
MP	12/12/11

CALCULATED-DESIGNED BY: MEHDI PARVNINI
CHECKED BY: BILL FARNBACH
FUNCTIONAL SUPERVISOR: BILL FARNBACH

STATE OF CALIFORNIA - DEPARTMENT OF TRANSPORTATION
Caltrans DESIGN

LAST REVISION 07-30-12 | DATE PLOTTED => 14-FEB-2013 | TIME PLOTTED => 13:26

Dist	COUNTY	ROUTE	POST MILES TOTAL PROJECT	SHEET No.	TOTAL SHEETS
07	LA	405	39.4/48.6	78	179

M. Parvini 5-30-12
REGISTERED CIVIL ENGINEER DATE

7-30-12
PLANS APPROVAL DATE

REGISTERED PROFESSIONAL ENGINEER MEHDI PARVINI No. C63186 Exp. 6-30-14 CIVIL STATE OF CALIFORNIA

THE STATE OF CALIFORNIA OR ITS OFFICERS OR AGENTS SHALL NOT BE RESPONSIBLE FOR THE ACCURACY OR COMPLETENESS OF SCANNED COPIES OF THIS PLAN SHEET.

NOTES:

1. SEE TABLE B FOR BASE PANELS FOR NUMBER OF P-T DUCTS & LENGTH OF PRETENSIONING STRANDS. NUMBER OF BARS ASSOCIATED WITH EACH TYPE OF BLOCK-OUT IS CALCULATED BASED ON THE NUMBER OF THAT TYPE.
2. SEE MISCELLANEOUS PANEL DETAILS FOR KEY & KEYWAY DETAIL.
3. SEE MISCELLANEOUS PANEL DETAILS FOR GROUT INLET/VENT.
4. THE SECTION OF DOWEL EXTENDING INTO THE EXPANSION SLEEVE SHALL BE GREASED PRIOR TO BEING INSERTED INTO THE EXPANSION SLEEVE PRIOR TO CASTING.
5. ALL REINFORCEMENT DIMENSIONS SHALL BE VERIFIED BY THE MANUFACTURER BEFORE PANEL FABRICATION.
6. 1" POST-TENSIONING DUCTS ARE SPACED UNIFORMLY AT MAXIMUM 36" C-C ALONG THE 'W' DIMENSION BETWEEN THE FIRST & LAST P-T DUCT.

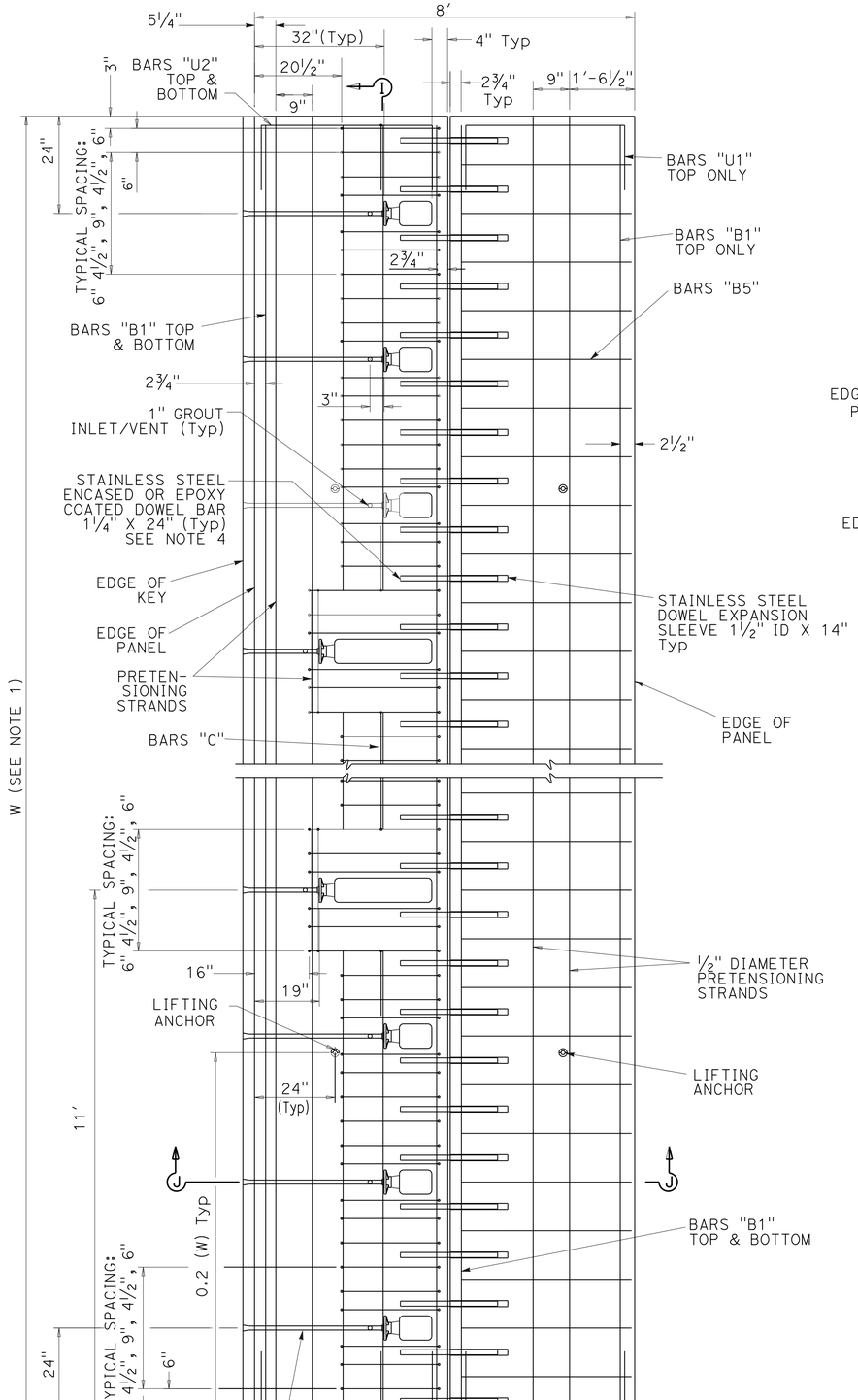

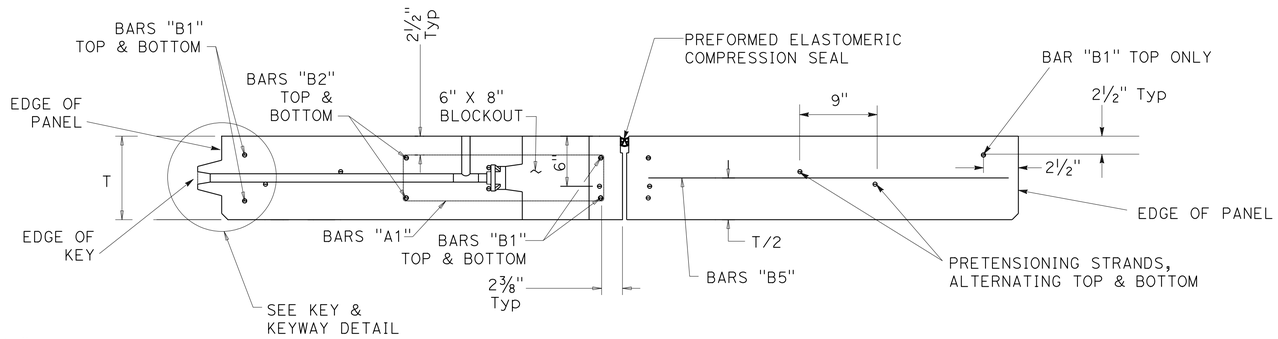

SECTION J-J

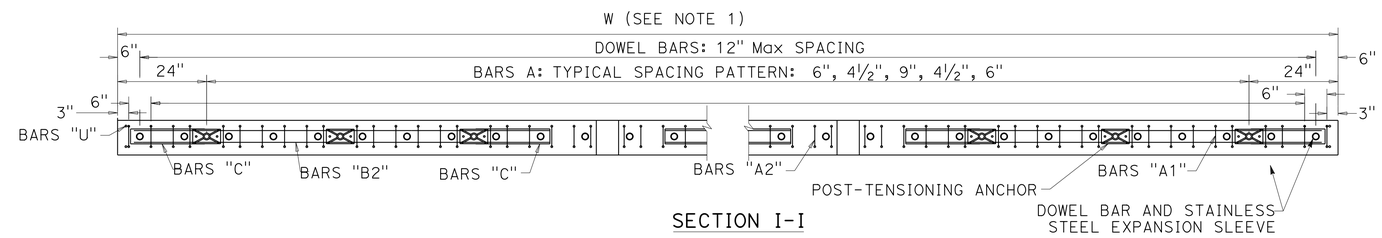

SECTION I-I

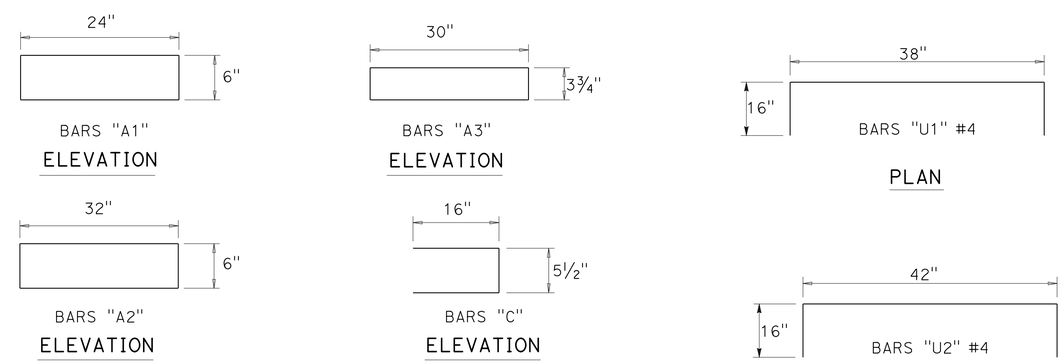

JOINT PANEL TYPE C3

CONSTRUCTION DETAILS
PRECAST PRESTRESSED CONCRETE PAVEMENT
NO SCALE

C-43

STATE OF CALIFORNIA - DEPARTMENT OF TRANSPORTATION
Caltrans DESIGN

CALCULATED-DESIGNED BY	MEHDI PARVNINI	REVISED BY	MP
CHECKED BY	BILL FARNBACH	DATE REVISED	12/12/11
FUNCTIONAL SUPERVISOR	BILL FARNBACH		

LAST REVISION 07-30-12 | DATE PLOTTED => 14-FEB-2013 | TIME PLOTTED => 13:26

Dist	COUNTY	ROUTE	POST MILES TOTAL PROJECT	SHEET No.	TOTAL SHEETS
07	LA	405	39.4/48.6	79	179

M. Parvini 5-30-12
REGISTERED CIVIL ENGINEER DATE

7-30-12
PLANS APPROVAL DATE

REGISTERED PROFESSIONAL ENGINEER MEHDI PARVINI No. C63186 Exp. 6-30-14 CIVIL STATE OF CALIFORNIA

THE STATE OF CALIFORNIA OR ITS OFFICERS OR AGENTS SHALL NOT BE RESPONSIBLE FOR THE ACCURACY OR COMPLETENESS OF SCANNED COPIES OF THIS PLAN SHEET.

NOTES:

1. SEE TABLE B FOR BASE PANELS FOR NUMBER OF P-T DUCTS & LENGTH OF PRETENSIONING STRANDS. NUMBER OF BARS ASSOCIATED WITH EACH TYPE OF BLOCK-OUT IS CALCULATED BASED ON THE NUMBER OF THAT TYPE.
2. SEE MISCELLANEOUS PANEL DETAILS FOR KEY & KEYWAY DETAIL.
3. SEE MISCELLANEOUS PANEL DETAILS FOR GROUT INLET/VENT.
4. SEE MISCELLANEOUS PANEL DETAILS FOR EXPANSION JOINT/ANCHOR DETAIL.
5. THE SECTION OF DOWEL EXTENDING INTO THE EXPANSION SLEEVE SHALL BE GREASED PRIOR TO BEING INSERTED INTO THE EXPANSION SLEEVE PRIOR TO CASTING.
6. 1" POST-TENSIONING DUCTS ARE SPACED UNIFORMLY AT MAXIMUM 36" C-C ALONG THE 'W' DIMENSION BETWEEN THE FIRST & LAST P-T DUCT.

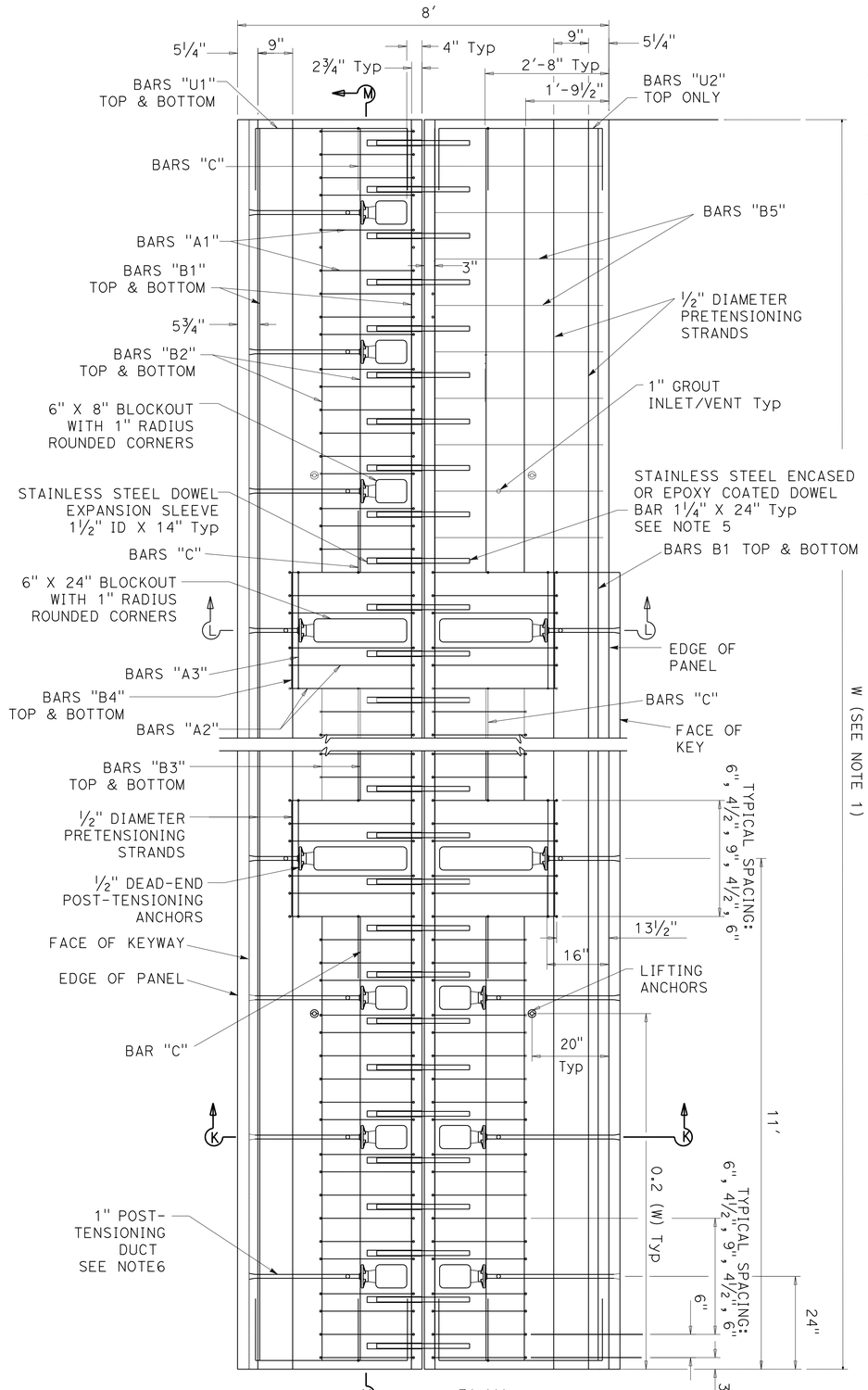

JOINT PANEL (MODIFIED) TYPICAL

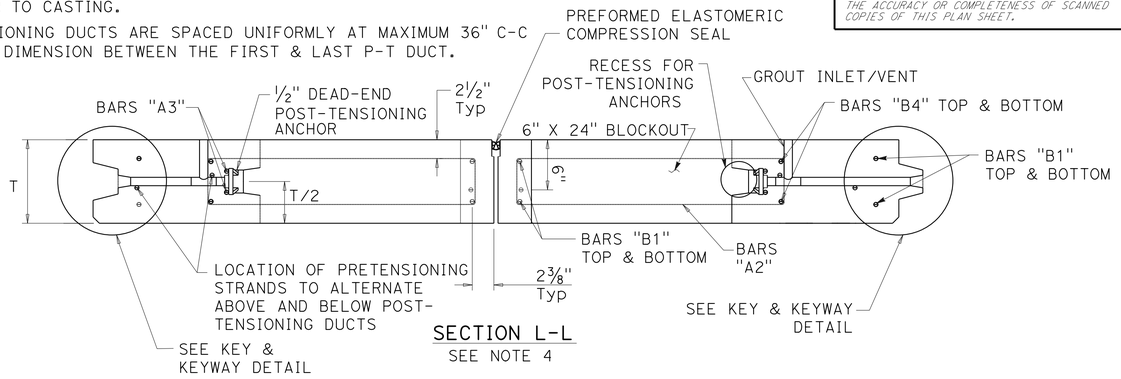

SECTION L-L
SEE NOTE 4

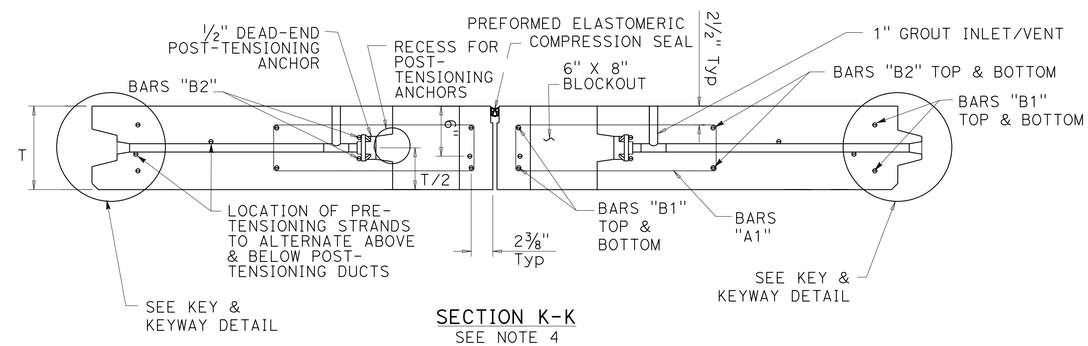

SECTION K-K
SEE NOTE 4

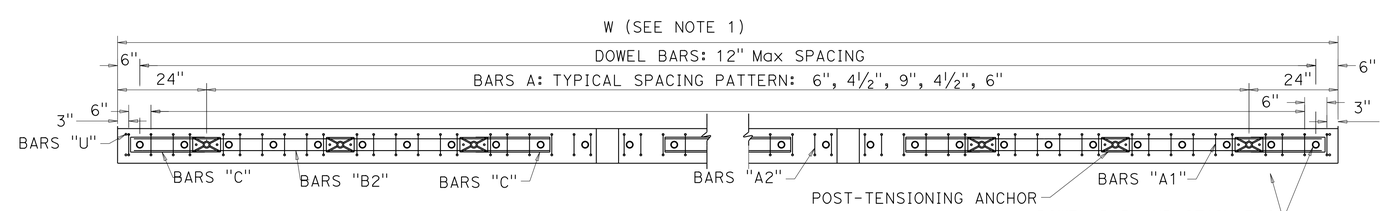

SECTION M-M

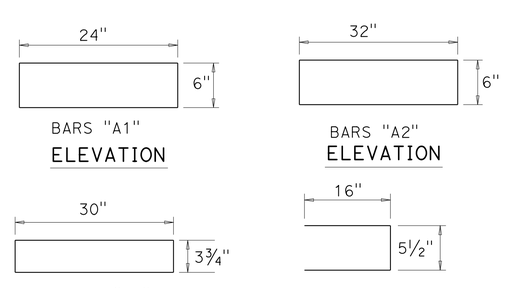

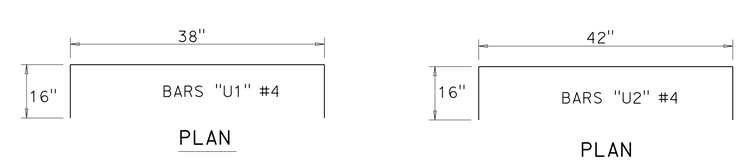

CONSTRUCTION DETAILS
PRECAST PRESTRESSED CONCRETE PAVEMENT
NO SCALE

C-44

REVISED BY	MP
DATE REVISED	12/12/11
CALCULATED-DESIGNED BY	MEHDI PARVNINI
CHECKED BY	BILL FARNBACH
FUNCTIONAL SUPERVISOR	BILL FARNBACH

STATE OF CALIFORNIA - DEPARTMENT OF TRANSPORTATION
Caltrans® DESIGN

LAST REVISION DATE PLOTTED => 14-FEB-2013
07-30-12 TIME PLOTTED => 13:27

Dist	COUNTY	ROUTE	POST MILES TOTAL PROJECT	SHEET No.	TOTAL SHEETS
07	LA	405	39.4/48.6	80	179

M. Parvini 5-30-12
REGISTERED CIVIL ENGINEER DATE

7-30-12
PLANS APPROVAL DATE

REGISTERED PROFESSIONAL ENGINEER
MEHDI PARVINI
No. C63186
Exp. 6-30-14
CIVIL
STATE OF CALIFORNIA

THE STATE OF CALIFORNIA OR ITS OFFICERS OR AGENTS SHALL NOT BE RESPONSIBLE FOR THE ACCURACY OR COMPLETENESS OF SCANNED COPIES OF THIS PLAN SHEET.

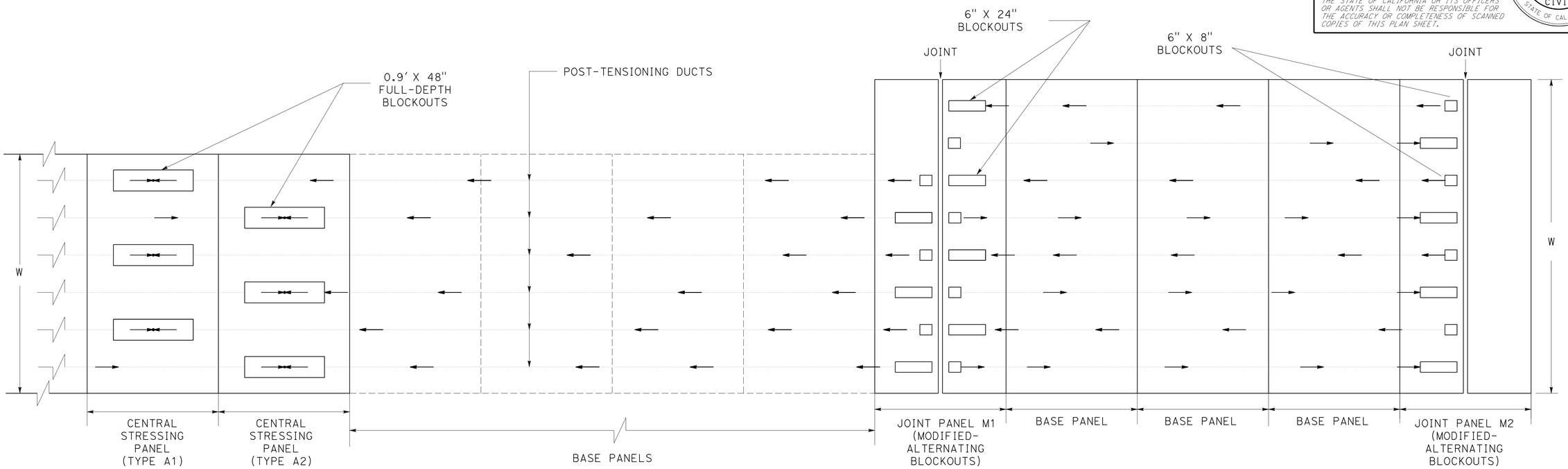

TYPICAL LAYOUT OF PANELS WITH VARIABLE WIDTHS (W) & ALTERNATING BLOCKOUTS

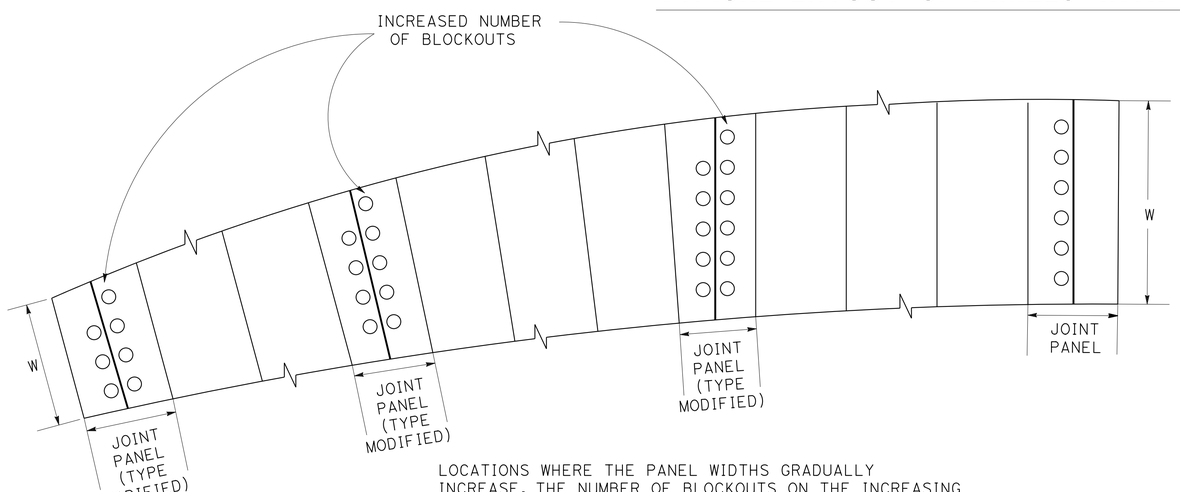

LOCATIONS WHERE THE PANEL WIDTHS GRADUALLY INCREASE, THE NUMBER OF BLOCKOUTS ON THE INCREASING SIDE OF THE JOINT PANEL SHALL HAVE THE SAME NUMBER OF BLOCKOUTS AS THE NEXT LONGER JOINT PANEL.

NUMBER OF BLOCKOUTS

SYMBOLS:

← DIRECTION OF PULL FOR POST-TENSIONING

○ REPRESENTATION OF BLOCKOUTS (SMALL: 6"X8" OR LARGE: 6"X24")

CONSTRUCTION DETAILS

PRECAST PRESTRESSED CONCRETE PAVEMENT JOINT PANELS M1 & M2 LAYOUT

NO SCALE

C-45

MEHDI PARVINI	MP
BILL FARNBACH	12/12/11
CALCULATED-DESIGNED BY	REVISED BY
CHECKED BY	DATE REVISED
FUNCTIONAL SUPERVISOR	
BILL FARNBACH	

STATE OF CALIFORNIA - DEPARTMENT OF TRANSPORTATION
Caltrans
DESIGN

LAST REVISION 07-30-12 | DATE PLOTTED => 14-FEB-2013 | TIME PLOTTED => 13:27

Dist	COUNTY	ROUTE	POST MILES TOTAL PROJECT	SHEET No.	TOTAL SHEETS
07	LA	405	39.4/48.6	81	179

M. Parvini 5-30-12
REGISTERED CIVIL ENGINEER DATE

7-30-12
PLANS APPROVAL DATE

REGISTERED PROFESSIONAL ENGINEER MEHDI PARVINI No. C63186 Exp. 6-30-14 CIVIL STATE OF CALIFORNIA

THE STATE OF CALIFORNIA OR ITS OFFICERS OR AGENTS SHALL NOT BE RESPONSIBLE FOR THE ACCURACY OR COMPLETENESS OF SCANNED COPIES OF THIS PLAN SHEET.

NOTES:

1. SEE MISCELLANEOUS PANEL DETAILS FOR KEY & KEYWAY DETAIL.
2. SEE MISCELLANEOUS PANELS DETAILS FOR GROUT INLET/VENT.
3. SEE MISCELLANEOUS PANEL DETAILS FOR EXPANSION JOINT/ANCHOR DETAIL.
4. THE SECTION OF DOWEL EXTENDING INTO THE EXPANSION SLEEVE SHALL BE GREASED PRIOR TO BEING INSERTED INTO THE EXPANSION SLEEVE PRIOR TO CASTING.
5. 1" POST-TENSIONING DUCTS ARE SPACED UNIFORMLY AT MAXIMUM 36" C-C ALONG THE 'W' DIMENSION BETWEEN THE FIRST & LAST P-T DUCT.

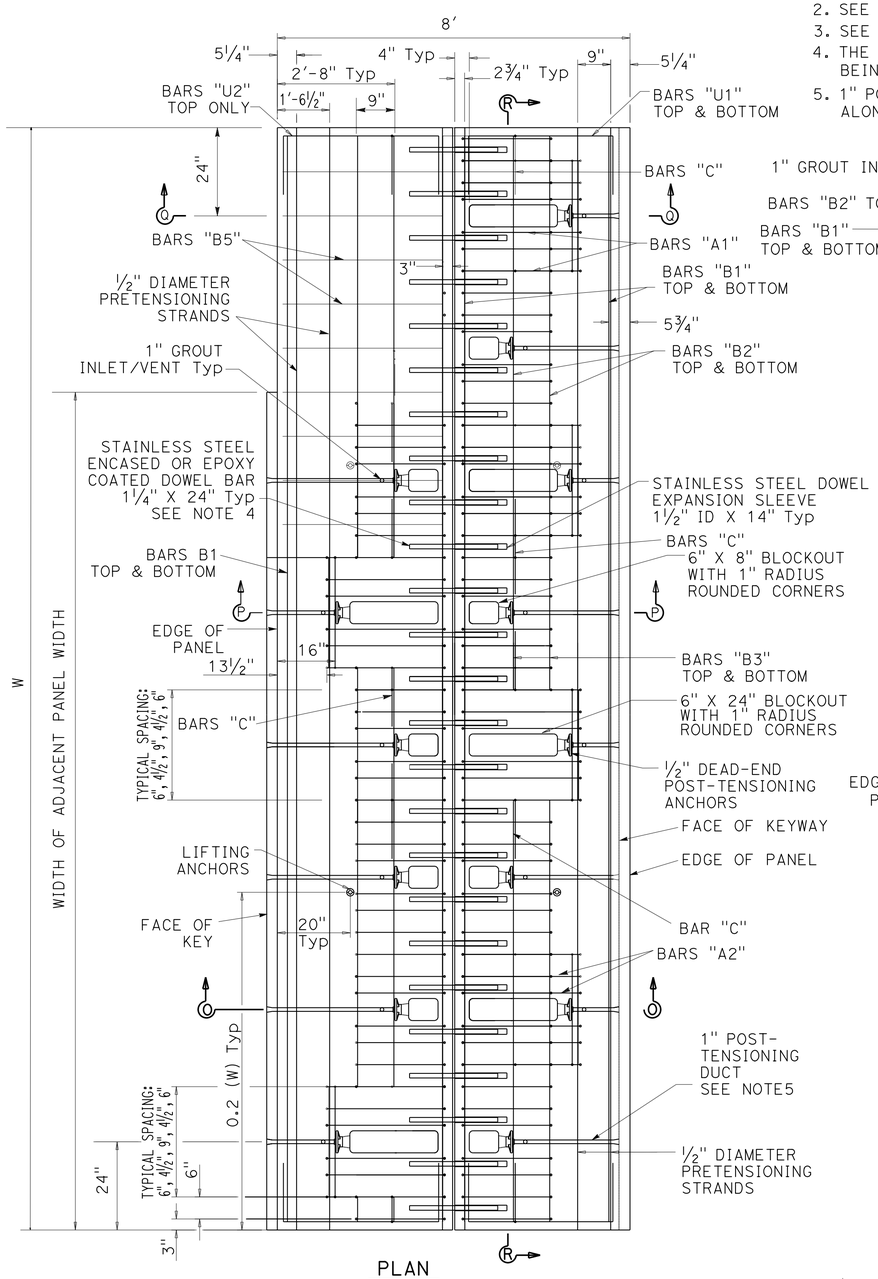

PLAN
JOINT PANEL M1

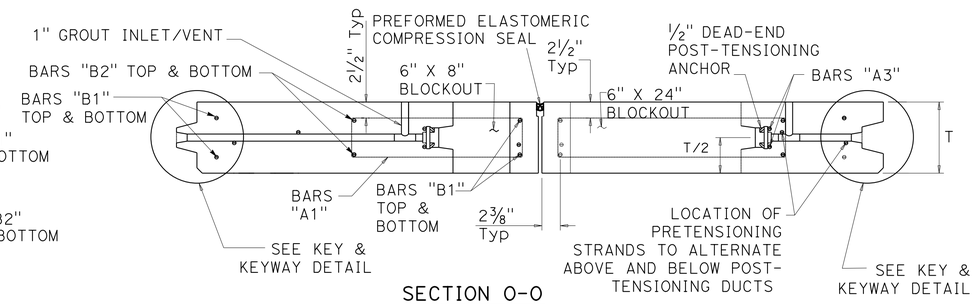

SECTION O-O
SEE NOTE 3

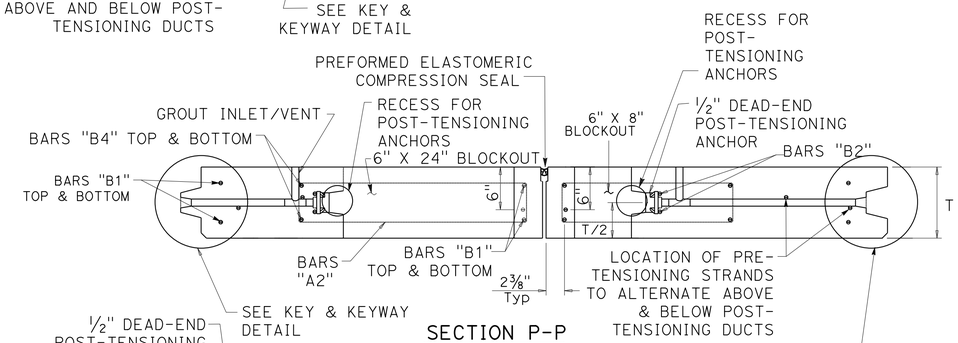

SECTION P-P
SEE NOTE 3

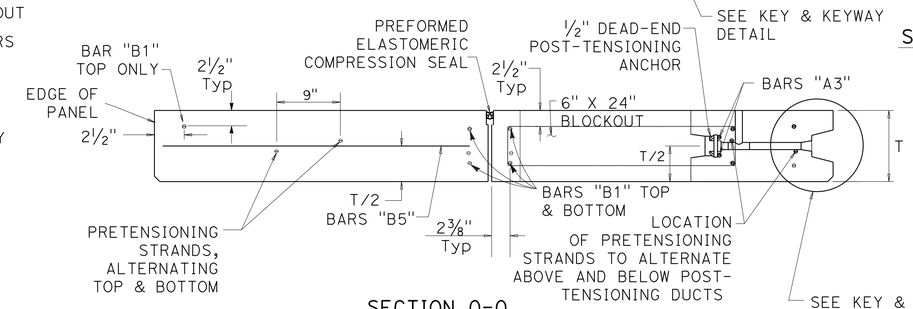

SECTION Q-Q

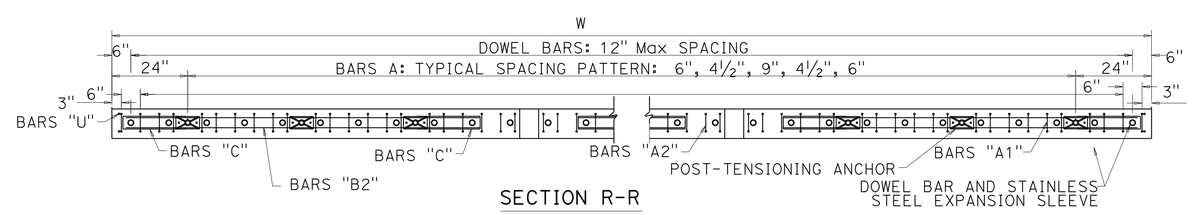

SECTION R-R

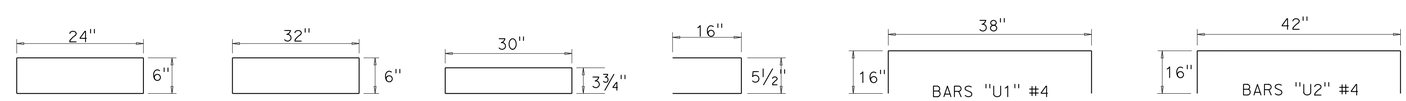

BARS "A1" ELEVATION
BARS "A2" ELEVATION
BARS "A3" ELEVATION
BARS "C" ELEVATION
BARS "U1" #4 PLAN
BARS "U2" #4 PLAN

JOINT PANELS M1 (MODIFIED-ALTERNATING BLOCKOUTS)

CONSTRUCTION DETAILS
PRECAST PRESTRESSED CONCRETE PAVEMENT
NO SCALE

C-46

STATE OF CALIFORNIA - DEPARTMENT OF TRANSPORTATION
Caltrans DESIGN

CALCULATED-DESIGNED BY	MEHDI PARVNINI	REVISED BY	MP
CHECKED BY	BILL FARNBACH	DATE REVISED	12/12/11
FUNCTIONAL SUPERVISOR	BILL FARNBACH		

LAST REVISION DATE PLOTTED => 14-FEB-2013
07-30-12 TIME PLOTTED => 13:27

Dist	COUNTY	ROUTE	POST MILES TOTAL PROJECT	SHEET No.	TOTAL SHEETS
07	LA	405	39.4/48.6	82	179

M. Parvini 5-30-12
REGISTERED CIVIL ENGINEER DATE

7-30-12
PLANS APPROVAL DATE

REGISTERED PROFESSIONAL ENGINEER MEHDI PARVINI No. C63186 Exp. 6-30-14 CIVIL STATE OF CALIFORNIA

THE STATE OF CALIFORNIA OR ITS OFFICERS OR AGENTS SHALL NOT BE RESPONSIBLE FOR THE ACCURACY OR COMPLETENESS OF SCANNED COPIES OF THIS PLAN SHEET.

NOTES:

1. SEE MISCELLEANEOUS PANEL DETAILS FOR KEY & KEYWAY DETAIL.
2. SEE MISCELLANEOUS PANEL DETAILS FOR GROUT INLET/VENT.
3. SEE MISCELLANEOUS PANEL DETAILS FOR EXPANSION JOINT/ANCHOR DETAIL.
4. THE SECTION OF DOWEL EXTENDING INTO THE EXPANSION SLEEVE SHALL BE GREASED PRIOR TO BEING INSERTED INTO THE EXPANSION SLEEVE PRIOR TO CASTING.
5. 1" POST-TENSIONING DUCTS ARE SPACED UNIFORMLY AT MAXIMUM 36" C-C ALONG THE `W' DIMENSION BETWEEN THE FIRST & LAST P-T DUCT.

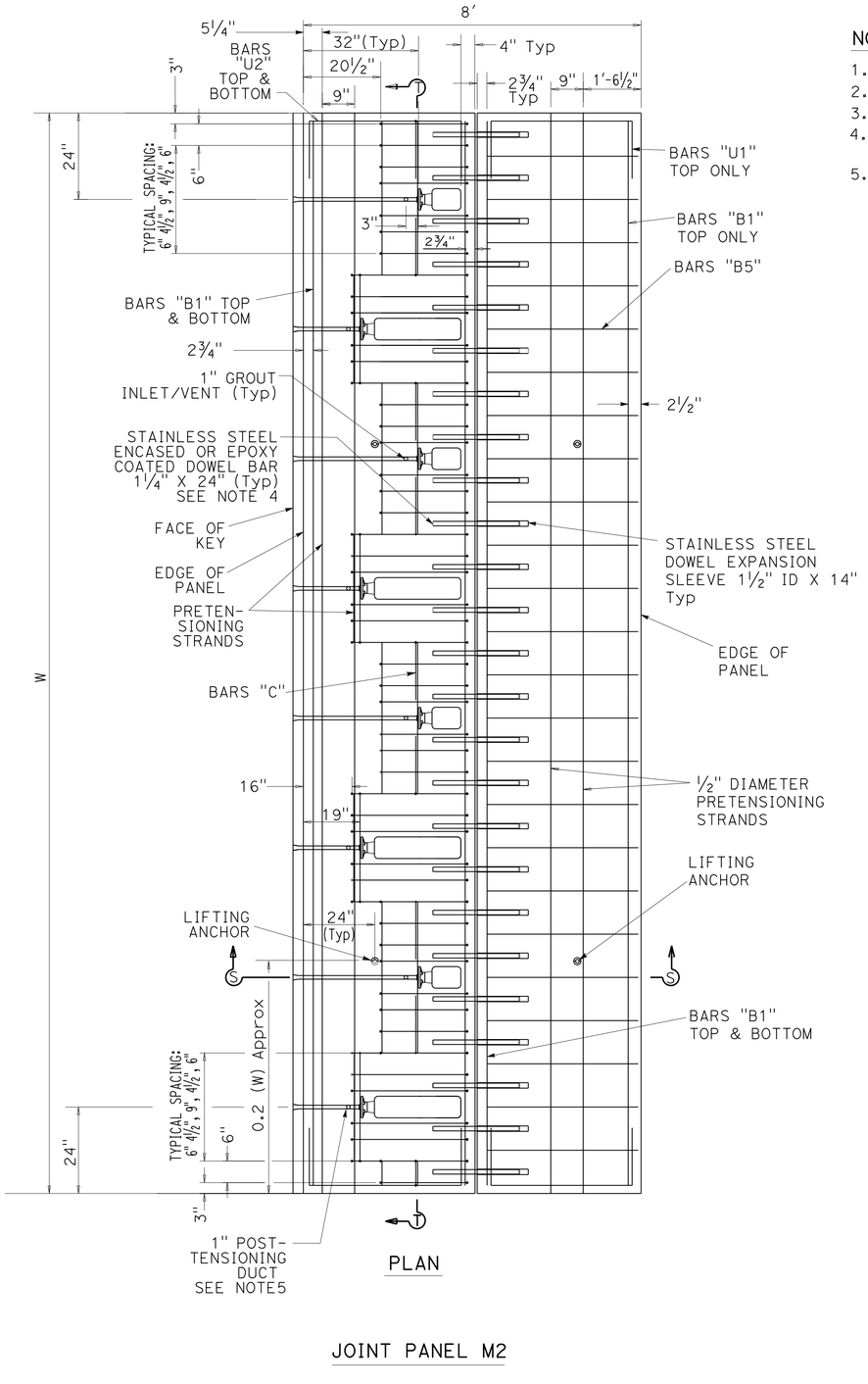

JOINT PANEL M2

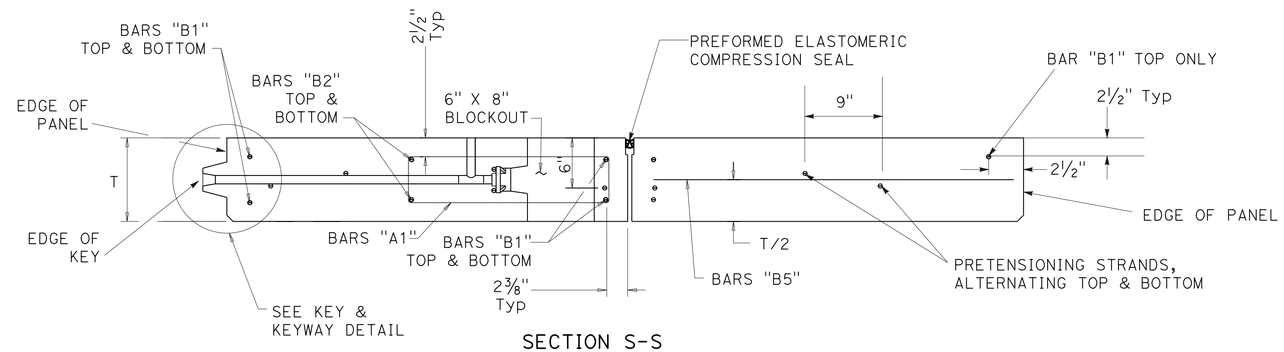

SECTION S-S

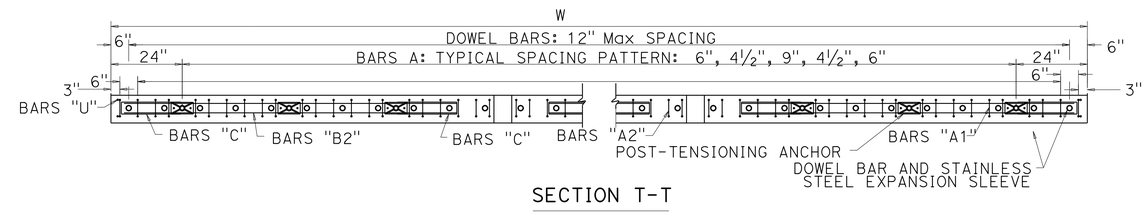

SECTION T-T

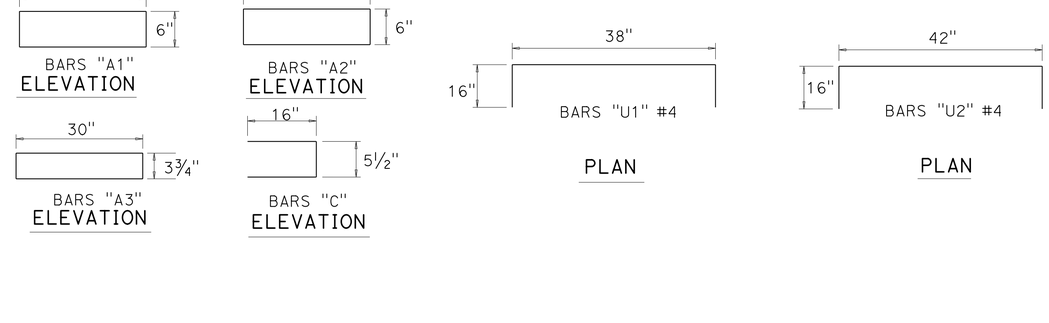

JOINT PANEL M2 (MODIFIED-ALTERNATING BLOCKOUTS)

CONSTRUCTION DETAILS
PRECAST PRESTRESSED CONCRETE PAVEMENT

NO SCALE

C-47

REVISED BY	DATE REVISED
MP	12/12/11

CALCULATED-DESIGNED BY: MEHDI PARVINI
CHECKED BY: BILL FARNBACH
FUNCTIONAL SUPERVISOR: BILL FARNBACH

STATE OF CALIFORNIA - DEPARTMENT OF TRANSPORTATION
Caltrans
DESIGN

LAST REVISION 07-30-12 | DATE PLOTTED => 14-FEB-2013 | TIME PLOTTED => 13:27

Dist	COUNTY	ROUTE	POST MILES TOTAL PROJECT	SHEET No.	TOTAL SHEETS
07	LA	405	39.4/48.6	83	179

M. Parvini 5-30-12
REGISTERED CIVIL ENGINEER DATE

7-30-12
PLANS APPROVAL DATE

REGISTERED PROFESSIONAL ENGINEER MEHDI PARVINI No. C63186 Exp. 6-30-14 CIVIL STATE OF CALIFORNIA

THE STATE OF CALIFORNIA OR ITS OFFICERS OR AGENTS SHALL NOT BE RESPONSIBLE FOR THE ACCURACY OR COMPLETENESS OF SCANNED COPIES OF THIS PLAN SHEET.

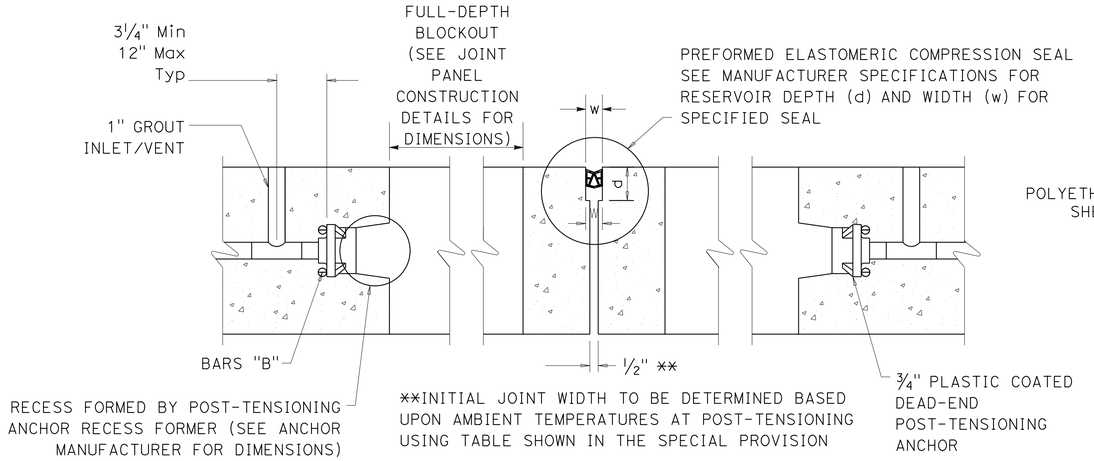

EXPANSION JOINT/ANCHOR DETAIL

FOR TYPE C2 JOINT PANELS AND ALL MODIFIED JOINT PANELS

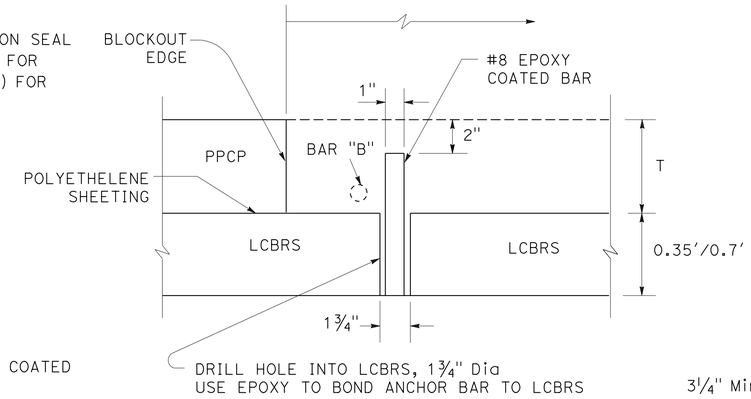

ANCHOR BAR DETAIL AT FULL-DEPTH BLOCKOUTS FOR CENTRAL STRESSING PANELS

ABBREVIATIONS:

LCBRS = LEAN CONCRETE BASE RAPID SETTING
PPCP = PRECAST PRESTRESSED CONCRETE PAVEMENT
P-T = POST TENSIONING

NOTE:

X = 1'' MINIMUM

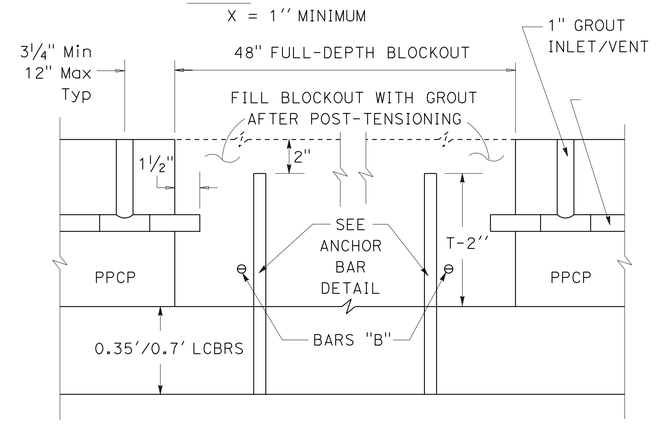

CENTRAL STRESSING BLOCKOUT DETAIL

FOR TYPE A1 AND TYPE A2 CENTRAL STRESSING PANELS

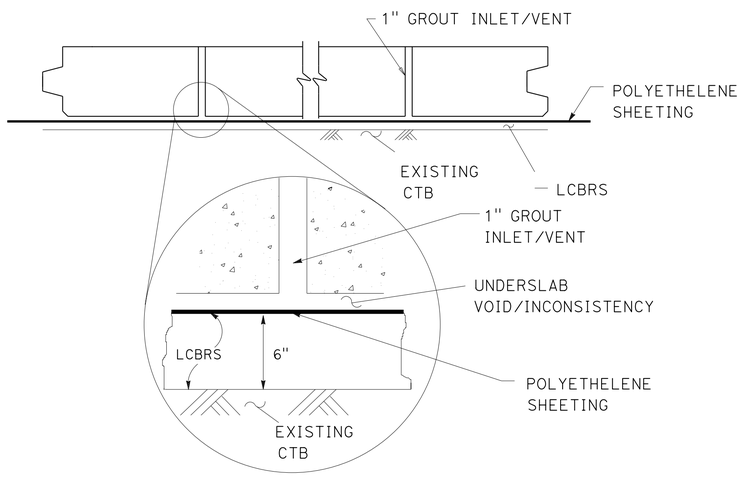

UNDERSLAB GROUT INLET/VENT AND POLYETHELENE SHEETING

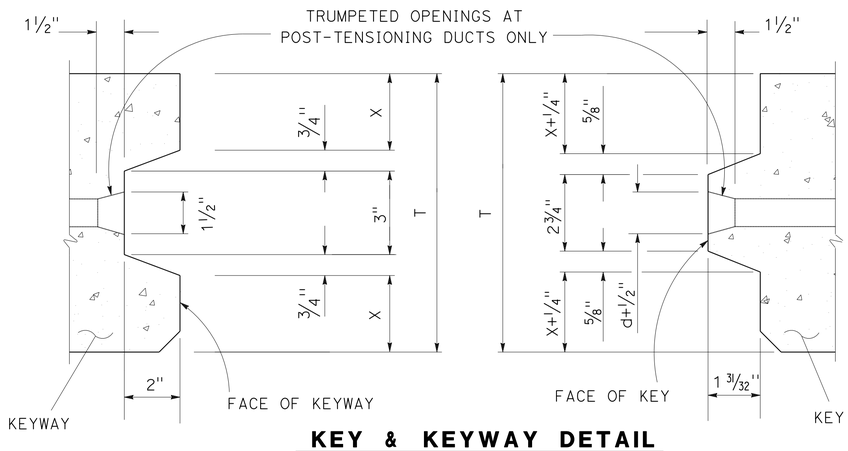

KEY & KEYWAY DETAIL

d = DIAMETER OF THE POST-TENSIONING DUCT = 1"

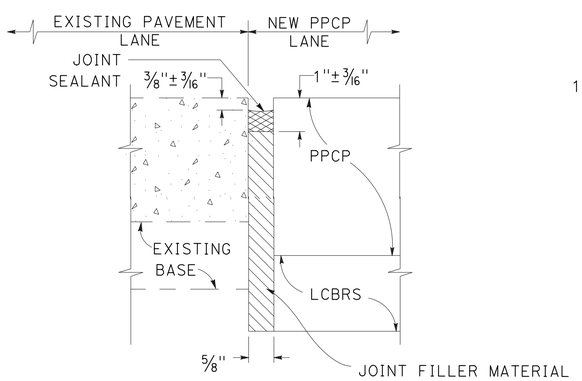

ISOLATION JOINT DETAIL

FOR LONGITUDINAL JOINTS ADJACENT TO EXISTING PAVEMENT, JPCP, RSC, AND PPCP

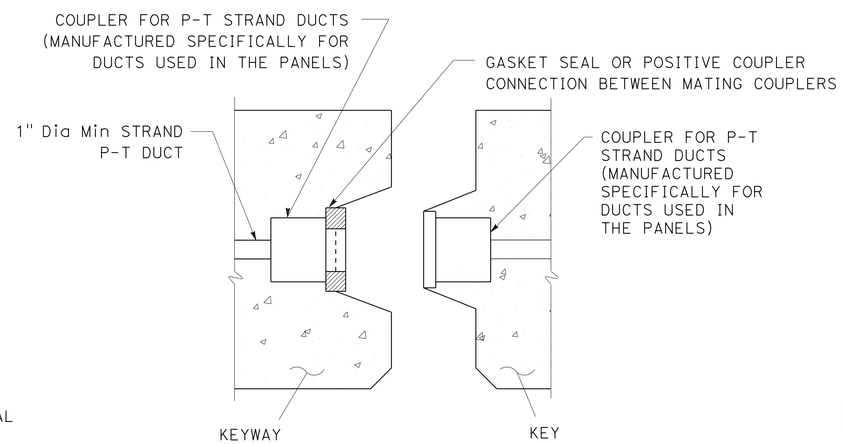

COUPLER ALTERNATIVE FOR STRAND POST-TENSIONING DUCT SEAL

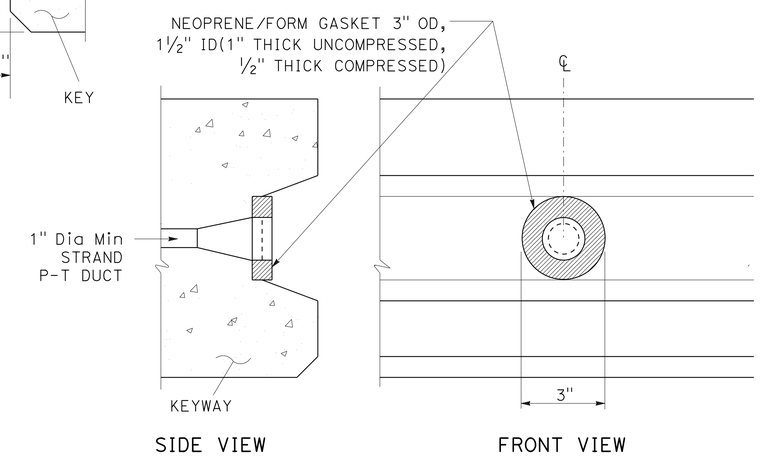

STRAND POST-TENSIONING DUCT SEAL DETAIL

CONSTRUCTION DETAILS
PRECAST PRESTRESSED CONCRETE PAVEMENT MISCELLANEOUS PANEL DETAILS

NO SCALE

C-48

REVISED BY	DATE REVISED	CALCULATED-DESIGNED BY	CHECKED BY	FUNCTIONAL SUPERVISOR
MP	12/12/11	MEHDI PARVINI	BILL FARNBACH	BILL FARNBACH

STATE OF CALIFORNIA - DEPARTMENT OF TRANSPORTATION
Caltrans® DESIGN

LAST REVISION 07-30-12 | DATE PLOTTED => 14-FEB-2013 | TIME PLOTTED => 13:27

Dist	COUNTY	ROUTE	POST MILES TOTAL PROJECT	SHEET No.	TOTAL SHEETS
07	LA	405	39.4/48.6	84	179

M. Parvini 5-30-12
REGISTERED CIVIL ENGINEER DATE

7-30-12
PLANS APPROVAL DATE

REGISTERED PROFESSIONAL ENGINEER MEHDI PARVINI No. C63186 Exp. 6-30-14 CIVIL STATE OF CALIFORNIA

THE STATE OF CALIFORNIA OR ITS OFFICERS OR AGENTS SHALL NOT BE RESPONSIBLE FOR THE ACCURACY OR COMPLETENESS OF SCANNED COPIES OF THIS PLAN SHEET.

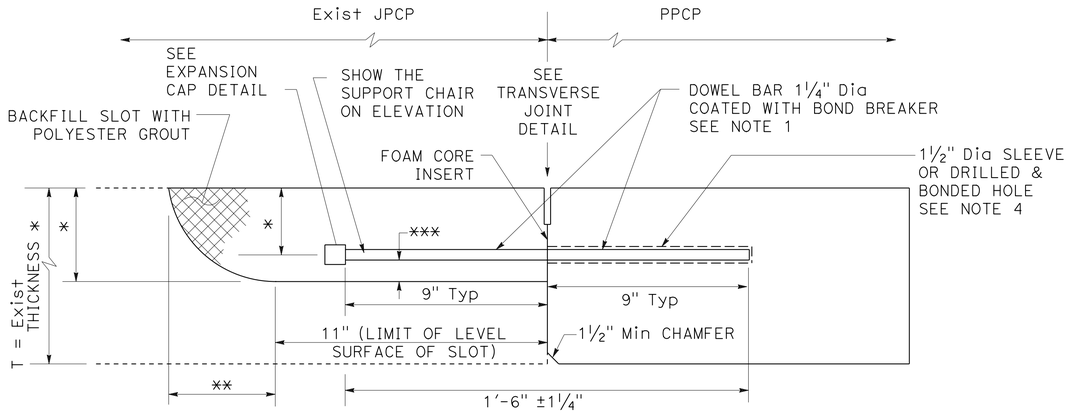

ELEVATION

T = EXISTING THICKNESS OF JPCP OR NEW PPCP
* T/2 ±¼"
** T/2 +1½"
*** Min Clr ½" BETWEEN BAR AND BOTTOM OF SLOT

ABBREVIATIONS:

LCBRS = LEAN CONCRETE BASE RAPID SETTING
P-T = POST-TENSIONING
RSC = RAPID STRENGTH CONCRETE
PPCP = PRECAST PRESTRESSED CONCRETE PAVEMENT

NOTES:

1. 1½" DIAMETER DOWEL BARS 1'-6" ±¼" LENGTH SHALL TO BE USED WHEN THE EXISTING PAVEMENT THICKNESS, D, IS EQUAL TO OR GREATER THAN 0.70'. FOR A PAVEMENT THICKNESS, D, LESS THAN 0.70', USE 1¼" DIAMETER DOWEL BAR 1'-6" ±¼" IN LENGTH.
2. SEAL EXISTING TRANSVERSE JOINT AT BOTTOM AND SIDES OF THE DOWEL BAR SLOT WITH CAULKING FILLER PRIOR TO PLACING DOWEL BAR AND FOAM CORE INSERT.
3. SEE STANDARD PLAN P7 FOR FOAM CORE INSERT DETAIL.
4. CAST SLEEVES EVERY 1' C-C DURING PANEL FABRICATION OR DRILL AND BOND HOLE EVERY 1' C-C. SLEEVES OR DRILLED HOLES ARE ⅛" LARGER THAN THE DOWEL DIAMETER.

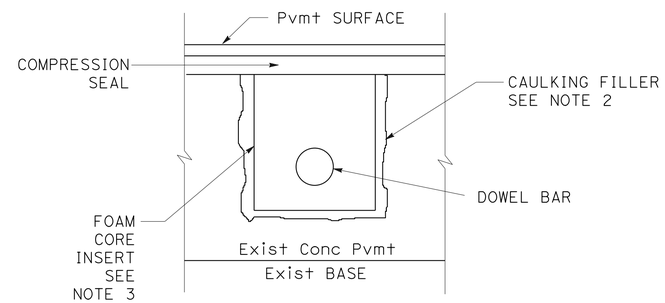

SECTION N-N

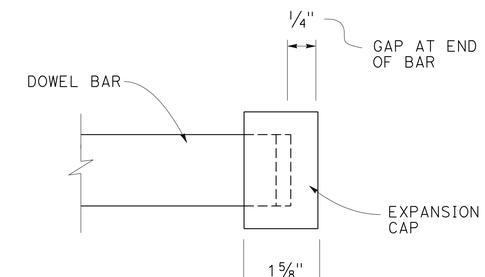

EXPANSION CAP DETAIL

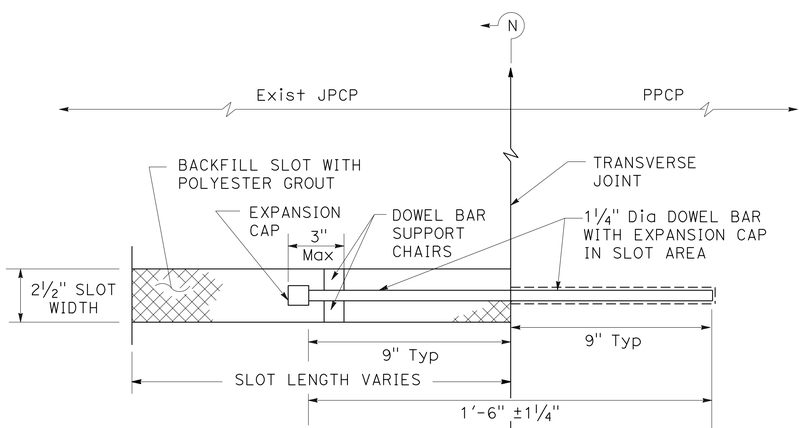

PLAN

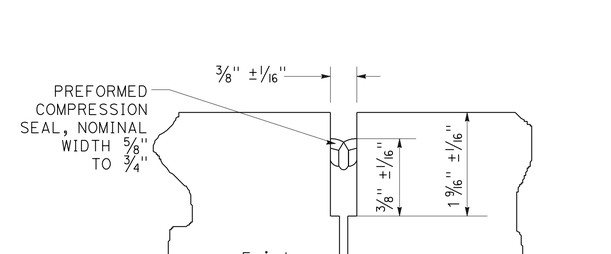

TRANSVERSE JOINT DETAIL (COMPRESSION SEAL)

DOWEL SLOT & DOWEL BAR PLACEMENT AT THE TRANSVERSE CONTACT JOINT WITH PCC, JPCP, OR RSC

CONSTRUCTION DETAILS
PRECAST PRESTRESSED CONCRETE PAVEMENT DOWEL BAR RETROFIT

NO SCALE

C-49

REVISED BY	DATE REVISED
MP	12/12/11

MEHDI PARVNINI — BILL FARNBACH — CALCULATED-DESIGNED BY — CHECKED BY — FUNCTIONAL SUPERVISOR

STATE OF CALIFORNIA - DEPARTMENT OF TRANSPORTATION — DESIGN — Caltrans

LAST REVISION 07-30-12 — DATE PLOTTED => 14-FEB-2013 — TIME PLOTTED => 13:27

Dist	COUNTY	ROUTE	POST MILES TOTAL PROJECT	SHEET No.	TOTAL SHEETS
07	LA	405	39.4/48.6	85	179

M. Parvini 5-30-12
REGISTERED CIVIL ENGINEER DATE

7-30-12
PLANS APPROVAL DATE

REGISTERED PROFESSIONAL ENGINEER
MEHDI PARVINI
No. C63186
Exp. 6-30-14
CIVIL
STATE OF CALIFORNIA

THE STATE OF CALIFORNIA OR ITS OFFICERS OR AGENTS SHALL NOT BE RESPONSIBLE FOR THE ACCURACY OR COMPLETENESS OF SCANNED COPIES OF THIS PLAN SHEET.

NOTE:

ALL REINFORCEMENT DIMENSIONS SHALL BE VERIFIED BY THE MANUFACTURER BEFORE PANEL FABRICATION.

ABBREVIATION:

P-T POST-TENSIONING

TABLE A

L	COUNT OF PRETENSIONING STRANDS (7-WIRE 1/2") (1) PLACED TRANSVERSELY	LENGTH OF EACH P-T DUCT (2)	COUNT OF BAR "U"	LENGTH OF EACH BAR "U"	COUNT OF LIFTING ANCHORS
FT	EA	FT	EA	FT-IN	EA
7	6	7	4	9'-0"	4
8	6	8	4	10'-0"	4
9	8	9	4	11'-0"	4
10	8	10	4	12'-0"	4

(1) SEE TABLE B FOR LENGTH OF EACH PRETENSIONING STRAND.

(2) SEE TABLE B FOR COUNT OF P-T DUCTS.

TABLE B

W	COUNT OF P-T DUCTS PLACED LONGITUDINALLY (1)	COUNT OF BAR "B"	LENGTH OF EACH BAR "B"	LENGTH OF EACH PRETENSIONING STRAND (2) (7-WIRE 1/2")
FT	EA		FT-IN	FT
12	4	4	11'-7"	12
12.5	4	4	12'-1"	12.5
13	4	4	12'-7"	13
13.5	5	4	13'-1"	13.5
14	5	4	13'-7"	14
14.5	5	4	14'-1"	14.5
15	5	4	14'-7"	15
15.5	5	4	15'-1"	15.5
16	5	4	15'-7"	16
16.5	6	4	16'-1"	16.5

(1) SEE TABLE A FOR LENGTH OF EACH P-T DUCT.

(2) SEE TABLE A FOR COUNT OF PRETENSIONING STRANDS.

FOR BASE PANELS

CONSTRUCTION DETAILS

PRECAST PRESTRESSED CONCRETE PAVEMENT REINFORCEMENT DIMENSIONS AND QUANTITIES

C-50

REVISED BY	DATE REVISED
MP	12/12/11

MEHDI PARVNINI — BILL FARNBACH
CALCULATED-DESIGNED BY — CHECKED BY
FUNCTIONAL SUPERVISOR — BILL FARNBACH

STATE OF CALIFORNIA - DEPARTMENT OF TRANSPORTATION
Caltrans DESIGN

LAST REVISION 07-30-12 | DATE PLOTTED => 14-FEB-2013 TIME PLOTTED => 13:27

Dist	COUNTY	ROUTE	POST MILES TOTAL PROJECT	SHEET No.	TOTAL SHEETS
07	LA	405	39.4/48.6	86	179

M. Parvini 5-30-12
REGISTERED CIVIL ENGINEER DATE

7-30-12
PLANS APPROVAL DATE

REGISTERED PROFESSIONAL ENGINEER
MEHDI PARVINI
No. C63186
Exp. 6-30-14
CIVIL
STATE OF CALIFORNIA

THE STATE OF CALIFORNIA OR ITS OFFICERS OR AGENTS SHALL NOT BE RESPONSIBLE FOR THE ACCURACY OR COMPLETENESS OF SCANNED COPIES OF THIS PLAN SHEET.

NOTES:

1. FOR TABLE A, REINFORCEMENT IS PLACED OR MEASURED IN THE LONGITUDINAL DIRECTION, UNLESS INDICATED OTHERWISE.
2. FOR TABLE B, REINFORCEMENT IS PLACED OR MEASURED IN THE TRANSVERSE DIRECTION, UNLESS INDICATED OTHERWISE.
3. ALL REINFORCEMENT DIMENSIONS SHALL BE VERIFIED BY THE MANUFACTURER BEFORE PANEL FABRICATION.

ABBREVIATION:

P-T POST-TENSIONING

TABLE B

W	COUNT OF P-T DUCTS PLACED (1) LONGITUDINALLY	COUNT OF BAR "B"	LENGTH OF EACH BAR "B"	LENGTH OF EACH PRETENSIONING STRAND (7-WIRE 1/2")(2)
FT	EA		FT-IN	FT
17	6 6	4	16'-7"	17
17.5	6 6	4	17'-1"	17.5
18	6 6	4	17'-7"	18
18.5	6 6	4	18'-1"	18.5
19	6 6	4	18'-7"	19
19.5	7 7	4	19'-1"	19.5
20	7 7	4	19'-7"	20
20.5	7 7	4	20'-1"	20.5
21	7 7	4	20'-7"	21
21.5	7 7	4	21'-1"	21.5
22	7 7	4	21'-7"	22
22.5	8 8	4	22'-1"	22.5
23	8 8	4	22'-7"	23
23.5	8 8	4	23'-1"	23.5
24	8 8	4	23'-7"	24
24.5	8 8	4	24'-1"	24.5
25	8 8	4	24'-7"	25
25.5	9 9	4	25'-1"	25.5
26	9 9	4	25'-7"	26
26.5	9 9	4	26'-1"	26.5

(1) SEE TABLE A FOR LENGTH OF EACH P-T DUCT.
(2) SEE TABLE A FOR COUNT OF PRETENSIONING STRANDS.

TABLE B

W	COUNT OF P-T DUCTS PLACED (1) LONGITUDINALLY	COUNT OF BAR "B"	LENGTH OF EACH BAR "B"	LENGTH OF EACH PRETENSIONING STRAND (2) (7-WIRE 1/2")
FT	EA		FT-IN	FT
27	9	4	26'-7"	27
27.5	9	4	27'-1"	27.5
28	9	4	27'-7"	28
28.5	10	4	28'-1"	28.5
29	10	4	28'-7"	29
29.5	10	4	29'-1"	29.5
30	10	4	29'-7"	30
30.5	10	4	30'-1"	30.5
31	10	4	30'-7"	31
31.5	11	4	31'-1"	31.5
32	11	4	31'-7"	32
32.5	11	4	32'-1"	32.5
33	11	4	32'-7"	33
33.5	11	4	33'-1"	33.5
34	11	4	33'-7"	34
34.5	12	4	34'-1"	34.5
35	12	4	34'-7"	35
35.5	12	4	35'-1"	35.5
36	12	4	35'-7"	36
36.5	12	4	36'-1"	36.5

(1) SEE TABLE A FOR LENGTH OF EACH P-T DUCT.
(2) SEE TABLE A FOR COUNT OF PRETENSIONING STRANDS.

FOR BASE PANELS

CONSTRUCTION DETAILS
PRECAST PRESTRESSED CONCRETE PAVEMENT REINFORCEMENT DIMENSIONS AND QUANTITIES

C-51

REVISED BY	DATE REVISED
MP	12/12/11

MEHDI PARVNINI — BILL FARNBACH
CALCULATED-DESIGNED BY — CHECKED BY
FUNCTIONAL SUPERVISOR — BILL FARNBACH

STATE OF CALIFORNIA - DEPARTMENT OF TRANSPORTATION
Caltrans
DESIGN

LAST REVISION 07-30-12 | DATE PLOTTED => 14-FEB-2013 | TIME PLOTTED => 13:27

Dist	COUNTY	ROUTE	POST MILES TOTAL PROJECT	SHEET No.	TOTAL SHEETS
07	LA	405	39.4/48.6	87	179

M. Parvini 5-30-12
REGISTERED CIVIL ENGINEER DATE

7-30-12
PLANS APPROVAL DATE

REGISTERED PROFESSIONAL ENGINEER MEHDI PARVINI No. C63186 Exp. 6-30-14 CIVIL STATE OF CALIFORNIA

THE STATE OF CALIFORNIA OR ITS OFFICERS OR AGENTS SHALL NOT BE RESPONSIBLE FOR THE ACCURACY OR COMPLETENESS OF SCANNED COPIES OF THIS PLAN SHEET.

NOTE:

ALL REINFORCEMENT DIMENSIONS SHALL BE VERIFIED BY THE MANUFACTURER BEFORE PANEL FABRICATION.

ABBREVIATION:

P-T POST-TENSIONING

TABLE B

W	COUNT OF P-T DUCTS PLACED LONGITUDINALLY (1)	COUNT OF BAR "B"	LENGTH OF EACH BAR "B"	LENGTH OF EACH PRETENSIONING STRAND (7-WIRE 1/2") (2)
FT	EA		FT-IN	FT
37	12	4	36'-7"	37
37.5	13	4	37'-1"	37.5
38	13	4	37'-7"	38
38.5	13	4	38'-1"	38.5
39	13	4	38'-7"	39
39.5	13	4	39'-1"	39.5
40	13	4	39'-7"	40
40.5	14	4	40'-1"	40.5
41	14	4	40'-7"	41
41.5	14	4	41'-1"	41.5
42	14	4	41'-7"	42
42.5	14	4	42'-1"	42.5
43	14	4	42'-7"	43
43.5	15	4	43'-1"	43.5
44	15	4	43'-7"	44
44.5	15	4	44'-1"	44.5
45	15	4	44'-7"	45
45.5	15	4	45'-1"	45.5
46	15	4	45'-7"	46
46.5	16	4	46'-1"	46.5

(1) SEE TABLE A FOR LENGTH OF EACH P-T DUCT.
(2) SEE TABLE A FOR COUNT OF PRETENSIONING STRANDS.

TABLE B

W	COUNT OF (1) P-T DUCTS PLACED LONGITUDINALLY	COUNT OF BAR "B"	LENGTH OF EACH BAR "B"	LENGTH OF EACH PRETENSIONING STRAND (2) (7-WIRE 1/2")
FT	EA		FT-IN	FT
47	16	4	46'-7"	47
47.5	16	4	47'-1"	47.5
48	16	4	47'-7"	48
48.5	16	4	48'-1"	48.5
49	16	4	48'-7"	49
49.5	17	4	49'-1"	49.5
50	17	4	49'-7"	50

(1) SEE TABLE A FOR LENGTH OF EACH P-T DUCT.
(2) SEE TABLE A FOR COUNT OF PRETENSIONING STRANDS.

FOR BASE PANELS

CONSTRUCTION DETAILS

REINFORCEMENT DIMENSIONS AND QUANTITIES PRECAST PRESTRESSED CONCRETE PAVEMENT

C-52

STATE OF CALIFORNIA - DEPARTMENT OF TRANSPORTATION
Caltrans
DESIGN
FUNCTIONAL SUPERVISOR: BILL FARNBACH
CALCULATED-DESIGNED BY: MEHDI PARVNINI
CHECKED BY: BILL FARNBACH
REVISED BY: MP
DATE REVISED: 12/12/11

LAST REVISION 07-30-12
DATE PLOTTED => 14-FEB-2013
TIME PLOTTED => 13:27

Dist	COUNTY	LOCATION CODE	POST MILES TOTAL PROJECT	SHEET No.	TOTAL SHEETS
07	LA	405	39.4/48.6	88	179

REGISTERED CIVIL ENGINEER 2-09-12 DATE

7-30-12
PLANS APPROVAL DATE

REGISTERED PROFESSIONAL ENGINEER
BALDEV K. BHALLA
No. 34350
Exp. 09/30/13
CIVIL
STATE OF CALIFORNIA

THE STATE OF CALIFORNIA OR ITS OFFICERS OR AGENTS SHALL NOT BE RESPONSIBLE FOR THE ACCURACY OR COMPLETENESS OF SCANNED COPIES OF THIS PLAN SHEET.

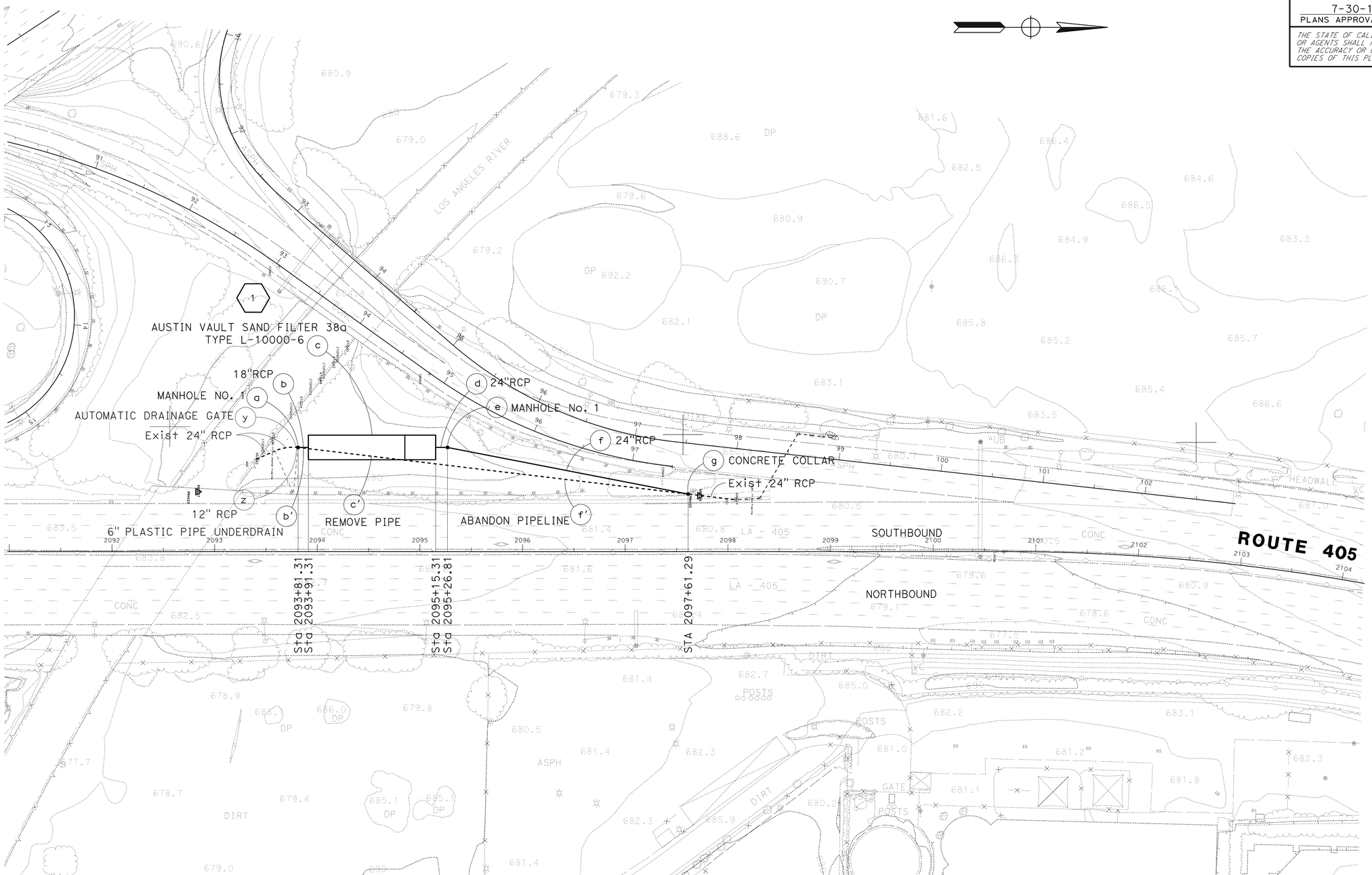

DRAINAGE PLAN

SCALE 1" = 50"

D-1

REVISED BY	DATE REVISED
NESTOR VALENTON	CHRIS NGUYEN

CALCULATED-DESIGNED BY / CHECKED BY

FUNCTIONAL SUPERVISOR: DAVE BHALLA

STATE OF CALIFORNIA - DEPARTMENT OF TRANSPORTATION

Caltrans

HYDRAULICS

LAST REVISION 07-30-12 | DATE PLOTTED => 14-FEB-2013 | TIME PLOTTED => 13:27

Dist	COUNTY	ROUTE	POST MILES TOTAL PROJECT	SHEET No.	TOTAL SHEETS
07	LA	405	39.4/48.6	89	179

REGISTERED ~~CIVIL~~ ENGINEER 2-09-12 DATE

7-30-12
PLANS APPROVAL DATE

REGISTERED PROFESSIONAL ENGINEER BALDEV K. BHALLA No. 34350 Exp. 09/30/13 CIVIL STATE OF CALIFORNIA

THE STATE OF CALIFORNIA OR ITS OFFICERS OR AGENTS SHALL NOT BE RESPONSIBLE FOR THE ACCURACY OR COMPLETENESS OF SCANNED COPIES OF THIS PLAN SHEET.

ABBREVIATION:

AVSF = AUSTIN VAULT SAND FILTER

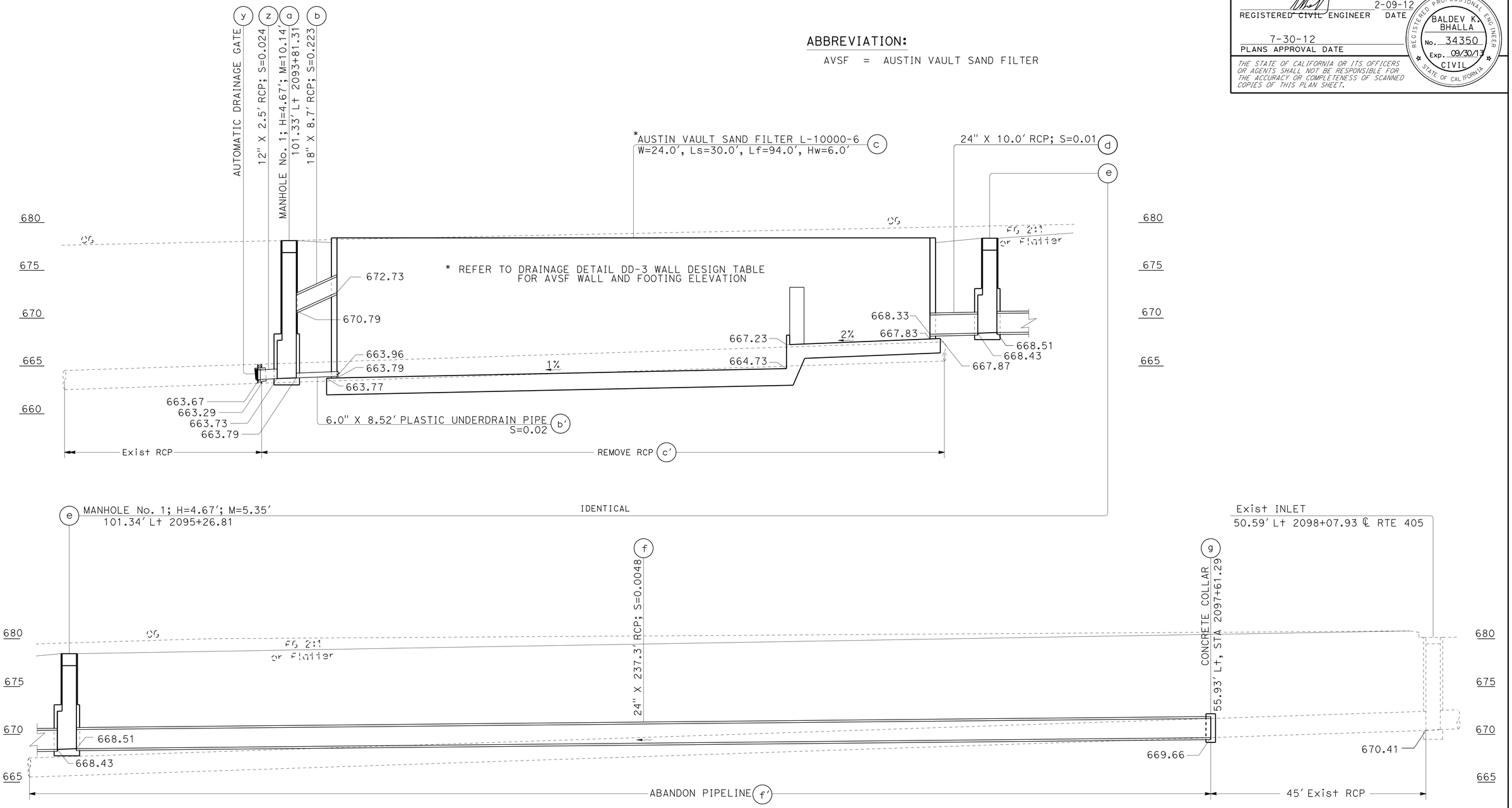

DRAINAGE SYSTEM No. 1

SCALE Horiz 1:10
Vert 1:5

DRAINAGE PROFILE

SCALE: AS SHOWN

DP-1

NESTOR VALENTON
CHRIS NGUYEN
CALCULATED-DESIGNED BY
CHECKED BY
FUNCTIONAL SUPERVISOR
DAVE BHALLA

STATE OF CALIFORNIA - DEPARTMENT OF TRANSPORTATION
Caltrans
HYDRAULICS

LAST REVISION 07-31-12
DATE PLOTTED => 14-FEB-2013
TIME PLOTTED => 13:27

Dist	COUNTY	LOCATION CODE	POST MILES TOTAL PROJECT	SHEET No.	TOTAL SHEETS
07	LA	405	39.4/48.6	90	179

Timothy B. Sobelman 6-1-12
REGISTERED CIVIL ENGINEER DATE

7-30-12
PLANS APPROVAL DATE

REGISTERED PROFESSIONAL ENGINEER TIMOTHY B. SOBELMAN No. 59249 Exp. 6-30-13 CIVIL STATE OF CALIFORNIA

THE STATE OF CALIFORNIA OR ITS OFFICERS OR AGENTS SHALL NOT BE RESPONSIBLE FOR THE ACCURACY OR COMPLETENESS OF SCANNED COPIES OF THIS PLAN SHEET.

GENERAL NOTES

Designation:
Partial Austin Vault Sand Filters (AVSFs) are open air reinforced concrete vaults utilizing both sedimentation and sand filtration basins. Type designation is based on length configuration, water quality volume to be drained in a 24 hour period, and average depth of water.

Standard configurations are noted for the following design water quality volumes (WQV): 5,000, 10,000, and 15,000 cubic feet. Length configurations are either short (S) or long (L). The average water depth can be either 3 ft, 4.5 ft, or 6 ft as designed in Design Water Quality Volumes (WQV) table.

Special Reinforcement Coverage:
AVSF Standard Details are not to be used in a corrosive environment or where there is a severe abrasive flow condition or in freeze-thaw locations.

Special Design:
Required for the following conditions: ground water conditions above bottom of AVSF, surcharge loads exceeding HS20 truck load, design bearing pressures or sizes greater than those on this plan, inlet velocities which exceed 8.0 ft/sec at gabion wall, and settlement due to liquefaction.

DESIGN WATER QUALITY VOLUMES (WQV)

AVSF Type*	WQV (ft^3)	W(ft)	Ls(ft)	Lf(ft)	Hw(ft)
S-3500-3	3,500	21	14	38	3
L-3500-3	3,500	15	18	53	3
S-3500-4.5	4,380	21	14	38	4.5
L-3500-4.5	4,380	15	18	53	4.5
S-3500-6	5,260	21	14	38	6
L-3500-6	5,260	15	18	53	6
S-5000-3	5,000	27	15	42	3
L-5000-3	5,000	18	21	63	3
S-5000-4.5	6,250	27	15	42	4.5
L-5000-4.5	6,250	18	21	63	4.5
S-5000-6	7,500	27	15	42	6
L-5000-6	7,500	18	21	63	6
S-10000-3	10,000	36	21	63	3
L-10000-3	10,000	24	30	94	3
S-10000-4.5	12,500	36	21	63	4.5
L-10000-4.5	12,500	24	30	94	4.5
S-10000-6	15,000	36	21	63	6
L-10000-6	15,000	24	30	94	6
S-15000-3	15,000	45	25	76	3
L-15000-3	15,000	30	37	115	3
S-15000-4.5	18,750	45	25	76	4.5
L-15000-4.5	18,750	30	37	115	4.5
S-15000-6	22,500	45	25	76	6
L-15000-6	22,500	30	37	115	6

* AVSF Type = Length configuration (S or L) - water quality volume (CF) - design water depth (Hw elevation)

DESIGN NOTES

Specifications:
Design:
Bridge Design Specification April 2000 (LFD)
(1996 AASHTO) with interims and revisions by Caltrans

Wall & Footing (LFD): 1.5 D + 1.5 E + 1.5 W + 1.5 SC
Where D = Dead Load
E = Earth Load
W = Water Load
SC = Surcharge

Capacity reduction factor is included.

Earth Load: 125 lb/ft^3 vertical,
Water Load: 62.4 lb/ft^3 horizontal/vertical,

Earth pressure for 2:1 unlimited slope determined from Rankine's formula with ø = 33°42′ (Case II).

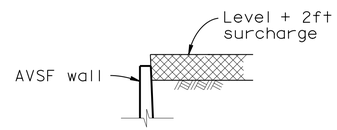

CASE I

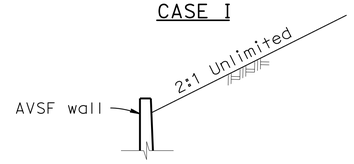

CASE II

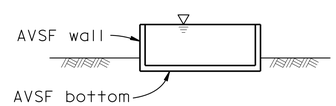

CASE III

DETAIL OF DESIGN LOADING CASES

CASE I Level + 2ft surcharge, AVSF empty
CASE II 2:1 Unlimited slope, AVSF empty
CASE III AVSF full of water, no soil pressure

Unit Stresses:
f′c = 4,000 psi
fy = 60,000 psi

INDEX TO PLAN

SHEET No.	TITLE
1	GENERAL NOTES
2	LAYOUT No. 1
3	LAYOUT No. 2
4	WALL DETAILS
5	DETAILS No. 1
6	DETAILS No. 2
7	DETAILS No. 3
8	DETAILS No. 4
9	MISCELLANEOUS DETAILS No. 1

CONSTRUCTION NOTES

Expansion joints:
Inverts and sidewalls - Place ½" expansion joint filler and waterstop where indicated. see "Details No. 2" sheet for specific wall & invert details.

Construction Joints:
Shall be placed where indicated on plans.

Backfill:
See Standard Specifications, except the difference in backfill shall not exceed 8′-0" between side walls and inlet and outlet walls.

Earthwork:
Limits of payment for excavation and backfill.

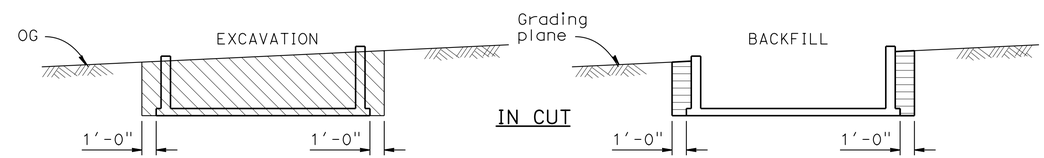

IN CUT

LEGEND:
Structure excavation (AVSF)
Original ground, OG

NOTES:
1. Slope or shore excavation sides as necessary.
2. Dimensions shown are minimum.
3. 95% compaction 1′-0" below floor slabs.

STANDARD PLANS DATED JULY 2006

B0-3	BRIDGE DETAILS
B3-9	RETAINING WALL DETAILS No. 2
B6-21	JOINT SEALS (MAXIMUM MOVEMENT RATING = 2")
B11-47	CABLE RAILING
D100A	GABION BASKET DETAILS No. 1
D100B	GABION BASKET DETAILS No. 2

STANDARD PLAN SHEET No.
DETAIL No.

AUSTIN VAULT SAND FILTER
GENERAL NOTES

DRAINAGE DETAILS
NO SCALE

DD-1

STATE OF CALIFORNIA - DEPARTMENT OF TRANSPORTATION
Caltrans
HYDRAULICS
FUNCTIONAL SUPERVISOR: TIMOTHY B. SOBELMAN
CALCULATED-DESIGNED BY: D. WANG
CHECKED BY: L. HE
REVISED BY
DATE REVISED

LAST REVISION 07-30-12
DATE PLOTTED => 14-FEB-2013
TIME PLOTTED => 13:27

Dist	COUNTY	LOCATION CODE	POST MILES TOTAL PROJECT	SHEET No.	TOTAL SHEETS
07	LA	405	39.4/48.6	91	179

Timothy B. Sobelman 6-1-12
REGISTERED CIVIL ENGINEER DATE

7-30-12
PLANS APPROVAL DATE

REGISTERED PROFESSIONAL ENGINEER TIMOTHY B. SOBELMAN No. 59249 Exp. 6-30-13 CIVIL STATE OF CALIFORNIA

THE STATE OF CALIFORNIA OR ITS OFFICERS OR AGENTS SHALL NOT BE RESPONSIBLE FOR THE ACCURACY OR COMPLETENESS OF SCANNED COPIES OF THIS PLAN SHEET.

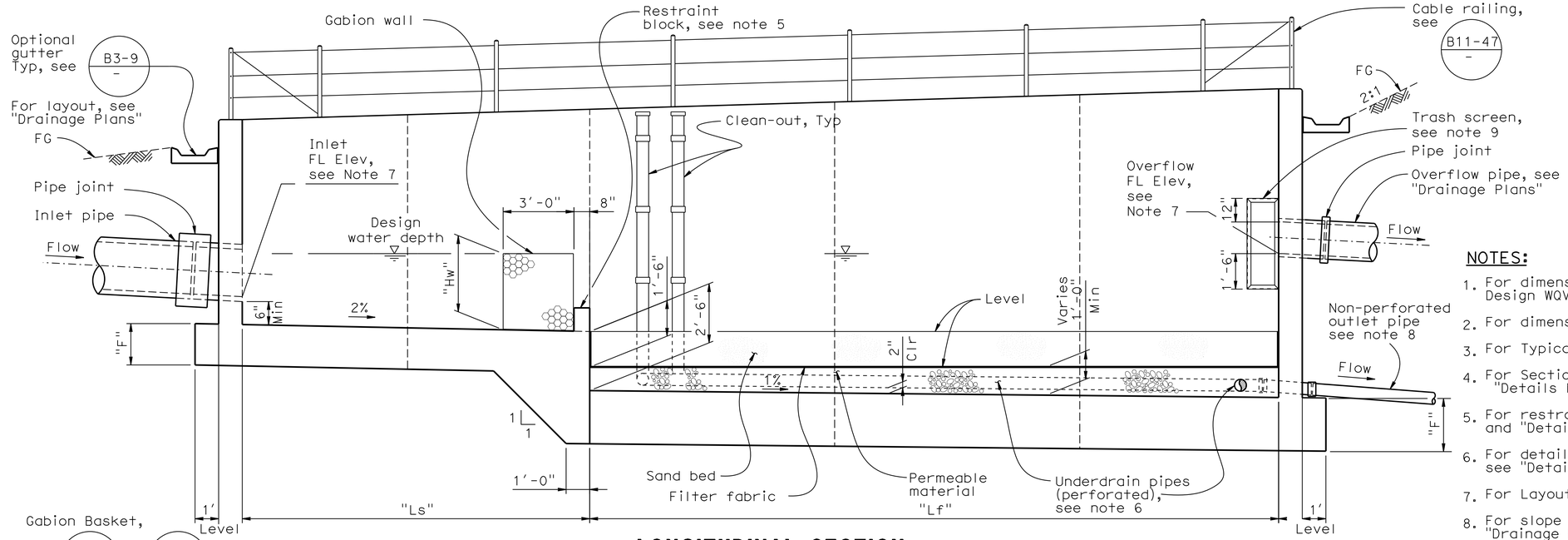

LONGITUDINAL SECTION

No Scale

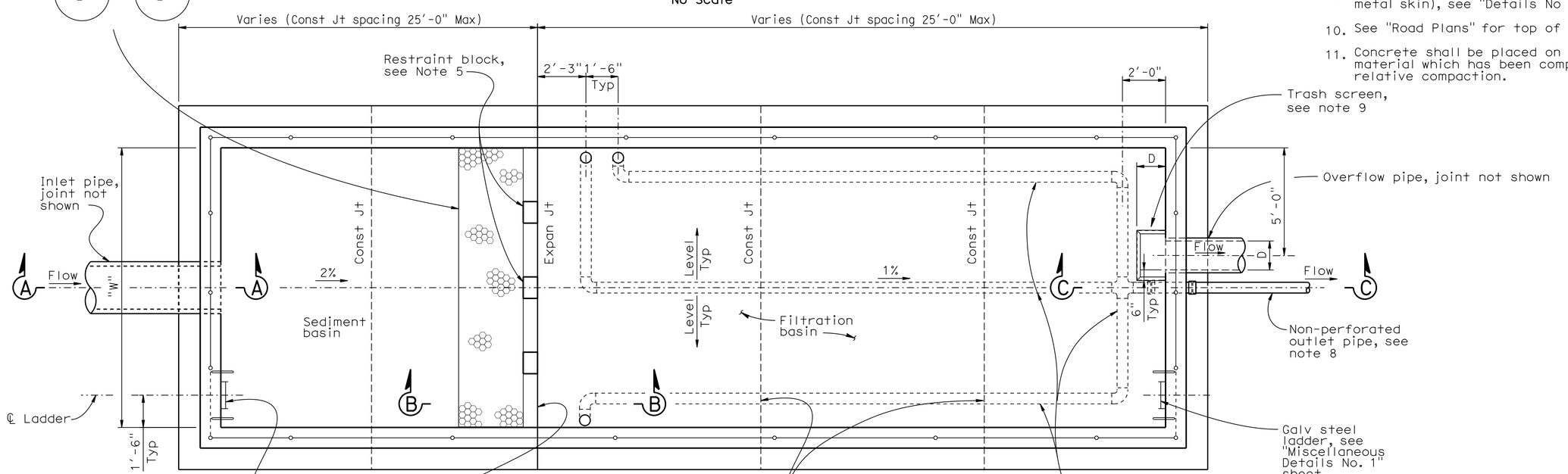

PLAN

No Scale

Note: Gutter not shown for clarity.

NOTES:

1. For dimensions "W", "Ls", "Lf" and "Hw", see Design WQV table on "General Notes" sheet.
2. For dimensions "C" and "F", see "Wall Details" sheet.
3. For Typical Section, see "Wall Details" sheet.
4. For Section A - A, B - B and C - C, see "Details No. 1" sheet.
5. For restraint block details, see "Details No. 1" and "Details No. 2" sheets.
6. For details of underdrain (sand filter), see "Details No. 4" sheet.
7. For Layout and FL elevation, see "Drainage Plans".
8. For slope of non-perforated outlet pipe, see "Drainage Plans".
9. For trash screen details (frame and perforated metal skin), see "Details No 3" sheet.
10. See "Road Plans" for top of wall elevations.
11. Concrete shall be placed on base or native material which has been compacted to 95% relative compaction.

AUSTIN VAULT SAND FILTER
LAYOUT No. 1

DRAINAGE DETAILS

NO SCALE

DD-2

STATE OF CALIFORNIA - DEPARTMENT OF TRANSPORTATION
Caltrans
HYDRAULICS

FUNCTIONAL SUPERVISOR: TIMOTHY B. SOBELMAN
CALCULATED-DESIGNED BY: D. WANG
CHECKED BY: L. HE
REVISED BY
DATE REVISED

LAST REVISION 07-30-12
DATE PLOTTED => 14-FEB-2013
TIME PLOTTED => 13:27

Dist	COUNTY	LOCATION CODE	POST MILES TOTAL PROJECT	SHEET No.	TOTAL SHEETS
07	LA	405	39.4/48.6	92	179

Timothy B. Sobelman 6-1-12
REGISTERED CIVIL ENGINEER DATE

7-30-12
PLANS APPROVAL DATE

REGISTERED PROFESSIONAL ENGINEER TIMOTHY B. SOBELMAN No. 59249 Exp. 6-30-13 CIVIL STATE OF CALIFORNIA

THE STATE OF CALIFORNIA OR ITS OFFICERS OR AGENTS SHALL NOT BE RESPONSIBLE FOR THE ACCURACY OR COMPLETENESS OF SCANNED COPIES OF THIS PLAN SHEET.

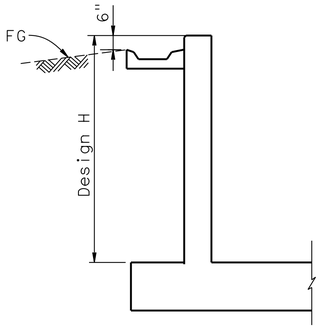

TYPICAL WALL SECTION
(INLET, OUTLET, AND SIDEWALL)
No scale

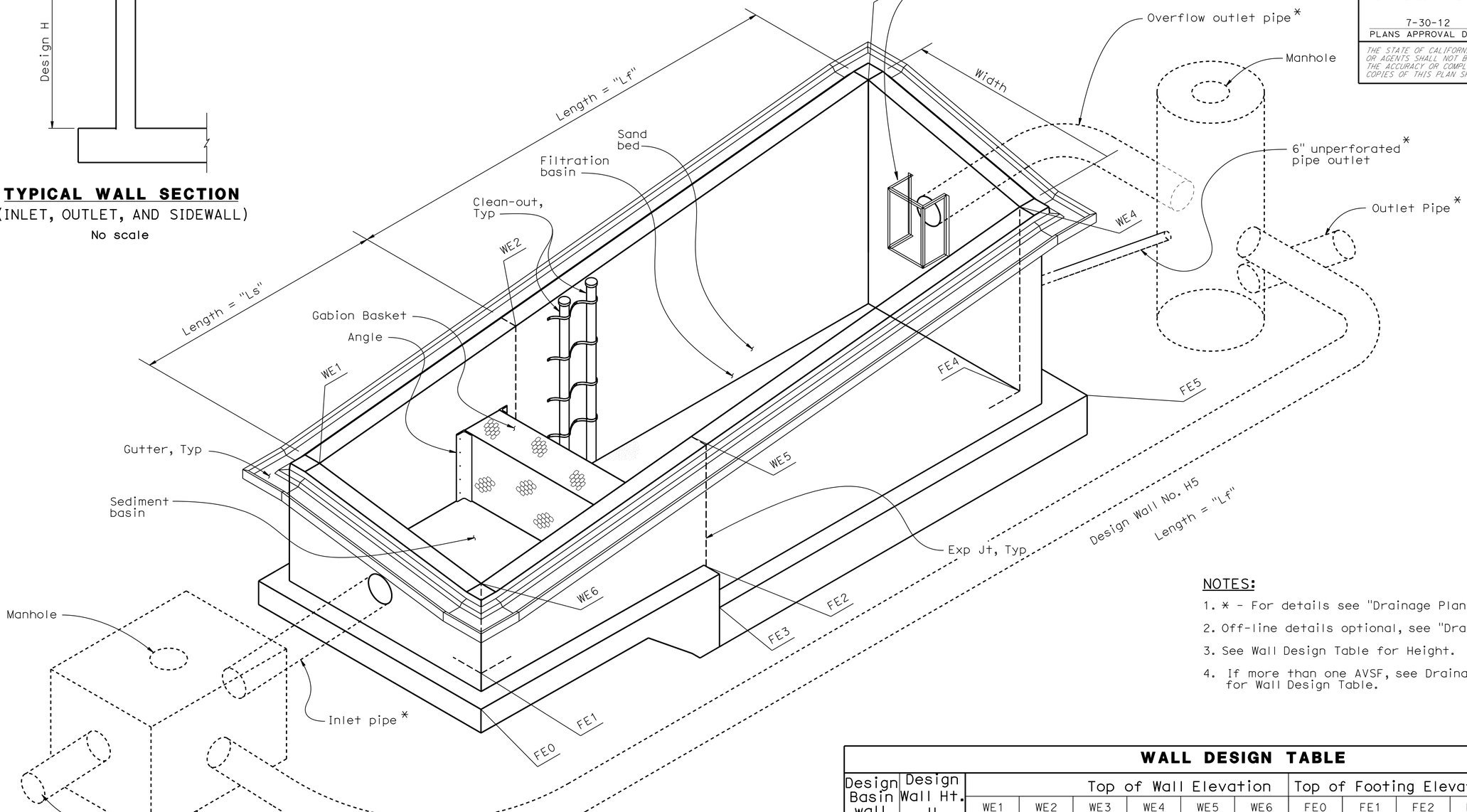

ISOMETRIC VIEW - AUSTIN VAULT SAND FILTER DRAINAGE SYSTEM
No Scale
NOTE: Steel ladders and cable railings not shown for clarity.

NOTES:
1. * - For details see "Drainage Plans".
2. Off-line details optional, see "Drainage Plans".
3. See Wall Design Table for Height.
4. If more than one AVSF, see Drainage/Layout Plans for Wall Design Table.

WALL DESIGN TABLE

Design Basin wall	Design Wall Ht. H	Top of Wall Elevation						Top of Footing Elevation					
		WE1	WE2	WE3	WE4	WE5	WE6	FE0	FE1	FE2	FE3	FE4	FE5
Sed	11.20	678.40	678.40	678.40	678.40	678.40	678.40	667.87	667.83	667.23	664.73	663.79	663.77
Fil	14.60												

AUSTIN VAULT SAND FILTER LAYOUT No. 2
DRAINAGE DETAILS
NO SCALE

DD-3

REVISED BY	DATE REVISED

CALCULATED-DESIGNED BY	CHECKED BY
D. WANG	L. HE

FUNCTIONAL SUPERVISOR: TIMOTHY B. SOBELMAN

STATE OF CALIFORNIA - DEPARTMENT OF TRANSPORTATION
Caltrans®
HYDRAULICS

LAST REVISION 07-31-12
DATE PLOTTED => 14-FEB-2013
TIME PLOTTED => 13:27

Dist	COUNTY	LOCATION CODE	POST MILES TOTAL PROJECT	SHEET No.	TOTAL SHEETS
07	LA	405	39.4/48.6	93	179

Timothy B. Sobelman 6-1-12
REGISTERED CIVIL ENGINEER DATE

7-30-12
PLANS APPROVAL DATE

REGISTERED PROFESSIONAL ENGINEER
TIMOTHY B. SOBELMAN
No. 59249
Exp. 6-30-13
CIVIL
STATE OF CALIFORNIA

THE STATE OF CALIFORNIA OR ITS OFFICERS OR AGENTS SHALL NOT BE RESPONSIBLE FOR THE ACCURACY OR COMPLETENESS OF SCANNED COPIES OF THIS PLAN SHEET.

NOTES:

1. For width dimension "W", see "General Notes" sheet.
2. For footing details not shown, see "Footing Details" sheet.
3. The contractor shall have the option of matching the Sedimentation Basin wall thickness with the Filtration Basin wall thickness. This shall be at no
4. additional cost to the State.

   Reinforcement notation "EWT&B" is acronym for "Each Way Top & Bottom".
5. Width "W" is the inside width between walls, see "Layout No. 1" sheet and the Design WQV table on "General Notes" sheet.
6. For additional corner reinforcement not indicated see "Typical Corner Detail" on "Details No. 1" sheet.

TABLE OF REINFORCING STEEL DIMENSIONS AND DATA FOR WALL

Design H	6′	8′	10′	12′	14′	16′
T	12"	12"	12"	12"	14"	14"
F	1′-3"	1′-3"	1′-3"	1′-6"	1′-9"	1′-9"
⌋ ⓐ bars # @ "	6 @ 12	6 @ 12	6 @ 8	7 @ 8	8 @ 8	9 @ 6
L ⓑ bars # @ "	6 @ 12	6 @ 12	6 @ 8	7 @ 8	8 @ 8	8 @ 6
ⓒ bars # @ "	6 @ 12	6 @ 12	6 @ 8	6 @ 8	7 @ 8	7 @ 6
— ⓓ bars # @ "	6 @ 12	6 @ 12	6 @ 8	6 @ 8	7 @ 8	7 @ 6

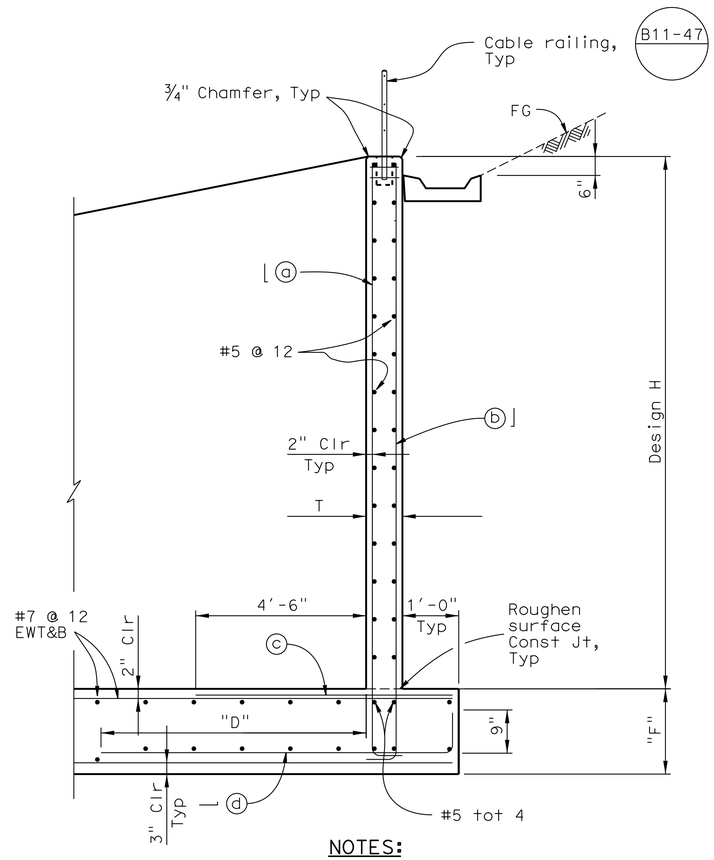

NOTES:

"D" = 8′-0" when "W" ≤ 30′-0"

"D" = 12′-0" when "W" > 30′-0"

TYPICAL SECTION
No Scale

AUSTIN VAULT SAND FILTER WALL DETAILS

DRAINAGE DETAILS
NO SCALE
DD-4

STATE OF CALIFORNIA - DEPARTMENT OF TRANSPORTATION
Caltrans
HYDRAULICS

FUNCTIONAL SUPERVISOR: TIMOTHY B. SOBELMAN
CALCULATED-DESIGNED BY: D. WANG
CHECKED BY: L. HE
REVISED BY
DATE REVISED

LAST REVISION 00-00-00
DATE PLOTTED => 14-FEB-2013
TIME PLOTTED => 13:27

Dist	COUNTY	LOCATION CODE	POST MILES TOTAL PROJECT	SHEET No.	TOTAL SHEETS
07	LA	405	39.4/48.6	94	179

Timothy B. Sobelman 6-1-12
REGISTERED CIVIL ENGINEER DATE

7-30-12
PLANS APPROVAL DATE

REGISTERED PROFESSIONAL ENGINEER TIMOTHY B. SOBELMAN No. 59249 Exp. 6-30-13 CIVIL STATE OF CALIFORNIA

THE STATE OF CALIFORNIA OR ITS OFFICERS OR AGENTS SHALL NOT BE RESPONSIBLE FOR THE ACCURACY OR COMPLETENESS OF SCANNED COPIES OF THIS PLAN SHEET.

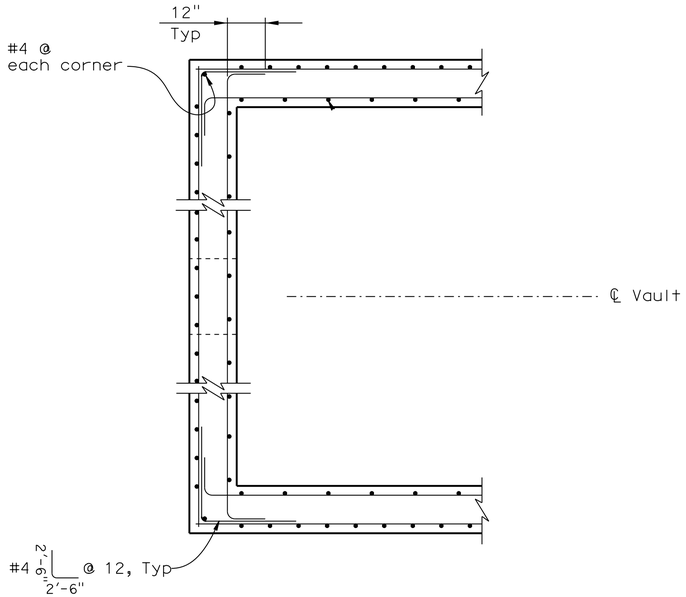

TYPICAL CORNER DETAIL

No Scale

NOTE: Inlet wall shown, outlet wall similar.

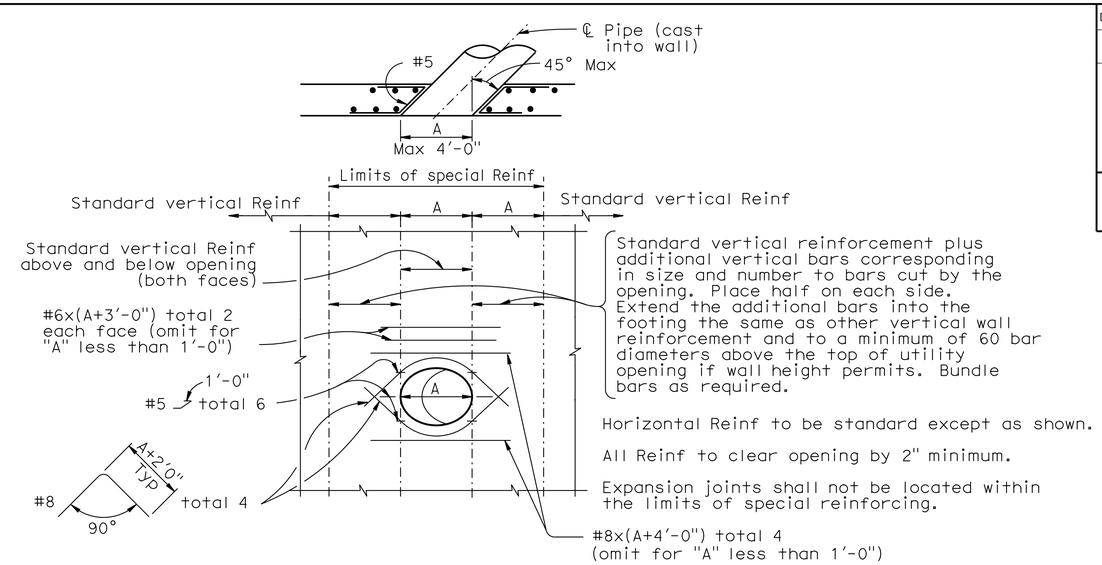

WALL OPENING DETAIL

NOTE: The rebar lengths shown are maximum and shall be adjusted due to the limitations of space.

No Scale

To be used at inlet, outlet and overflow pipe locations

NOTES:

1. For section locations, see "Layout No. 1 " sheet.
2. For wall and footing reinforcement details, see Typical Section on "Wall Details" sheet.

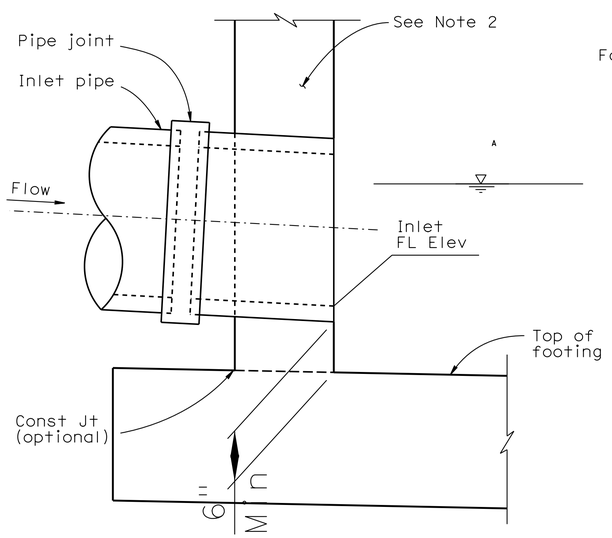

SECTION A - A

No Scale

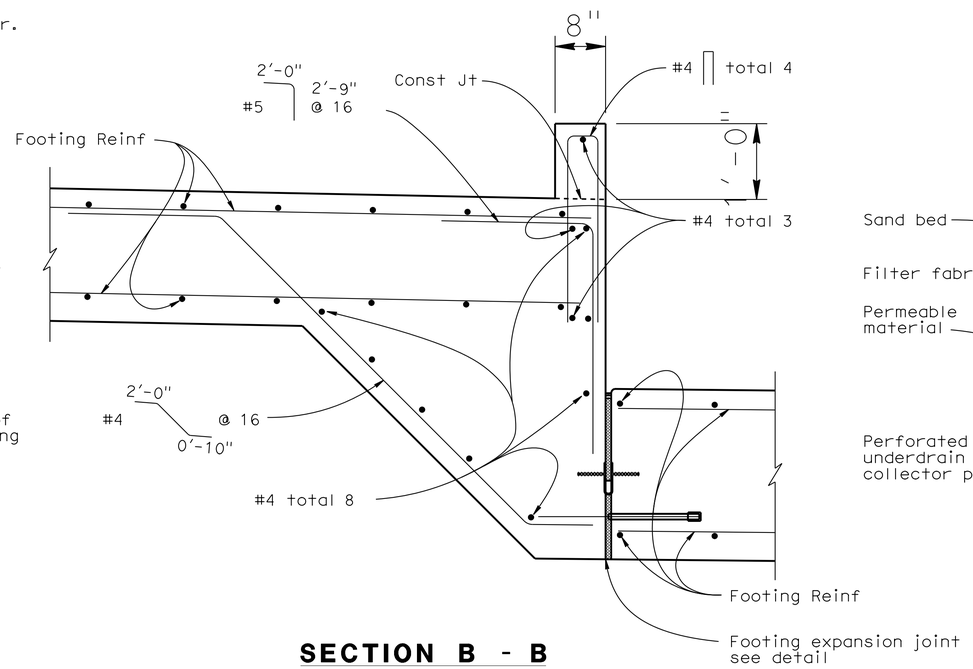

SECTION B - B

No Scale

(Gabion wall and other details not shown for clarity)

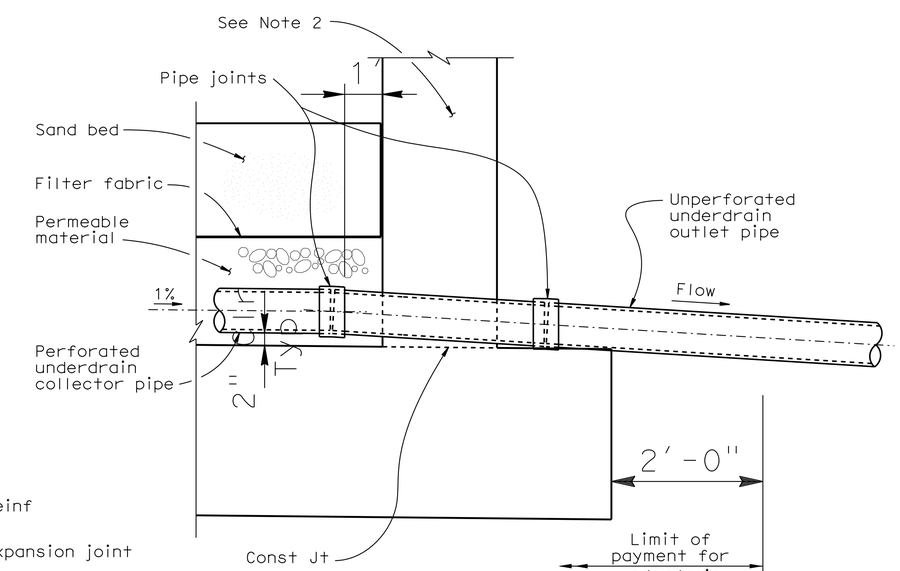

SECTION C - C

No Scale

AUSTIN VAULT SAND FILTER

DETAILS No. 1

DRAINAGE DETAILS

NO SCALE

DD-5

CALCULATED-DESIGNED BY D. WANG
CHECKED BY L. HE
REVISED BY
DATE REVISED
FUNCTIONAL SUPERVISOR TIMOTHY B. SOBELMAN
STATE OF CALIFORNIA - DEPARTMENT OF TRANSPORTATION
Caltrans
HYDRAULICS

LAST REVISION 07-30-12
DATE PLOTTED => 14-FEB-2013
TIME PLOTTED => 13:27

Dist	COUNTY	LOCATION CODE	POST MILES TOTAL PROJECT	SHEET No.	TOTAL SHEETS
07	LA	405	39.4/48.6	95	179

Timothy B Sobelman 6-1-12
REGISTERED CIVIL ENGINEER DATE

7-30-12
PLANS APPROVAL DATE

REGISTERED PROFESSIONAL ENGINEER TIMOTHY B. SOBELMAN No. 59249 Exp. 6-30-13 CIVIL STATE OF CALIFORNIA

THE STATE OF CALIFORNIA OR ITS OFFICERS OR AGENTS SHALL NOT BE RESPONSIBLE FOR THE ACCURACY OR COMPLETENESS OF SCANNED COPIES OF THIS PLAN SHEET.

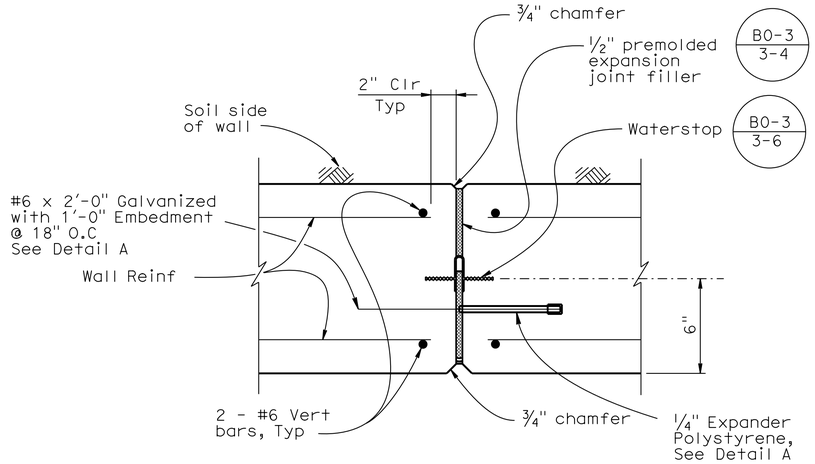

WALL EXPANSION JOINT DETAIL - PLAN SECTION

No Scale

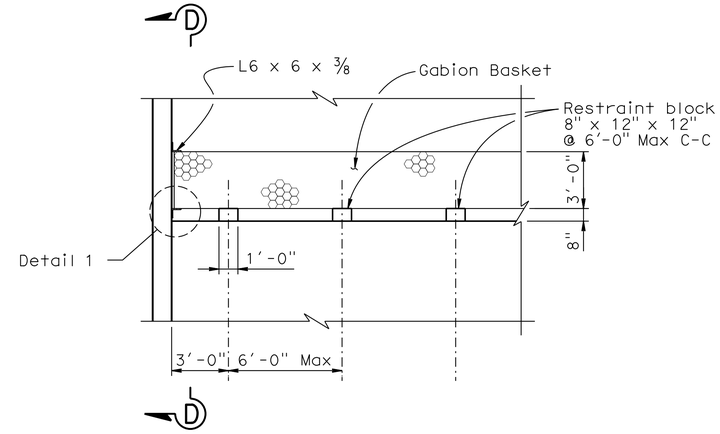

RESTRAINT BLOCK DETAIL

No Scale

Notes:

1. Stagger splices unless noted otherwise.

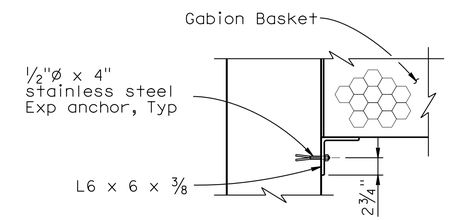

DETAIL 1

No Scale

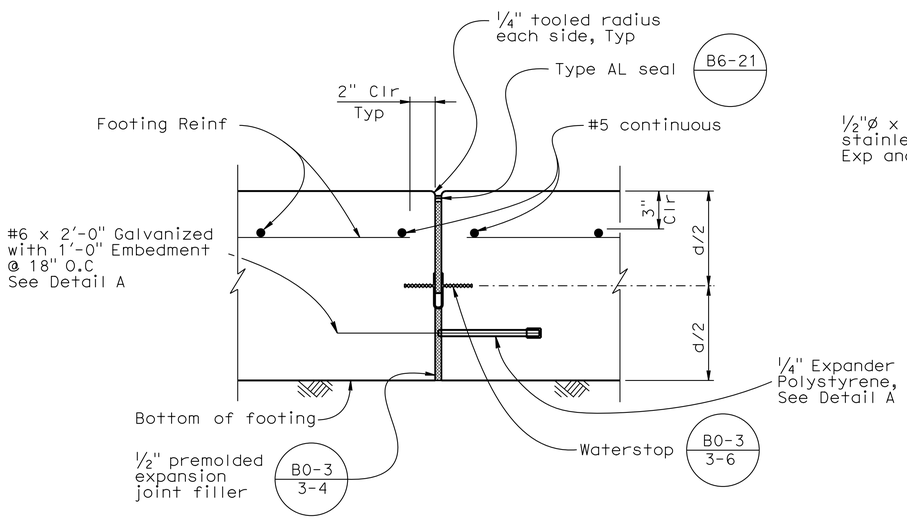

FOOTING EXPANSION JOINT DETAIL

No Scale

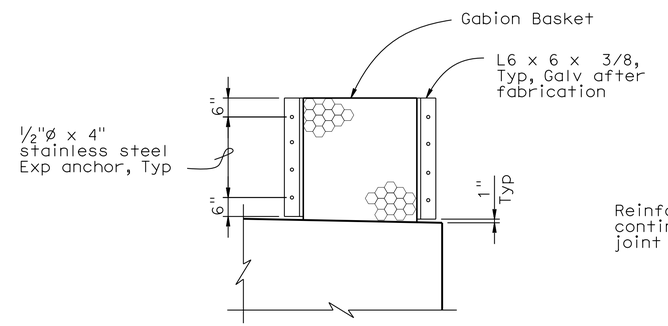

SECTION D - D

No Scale

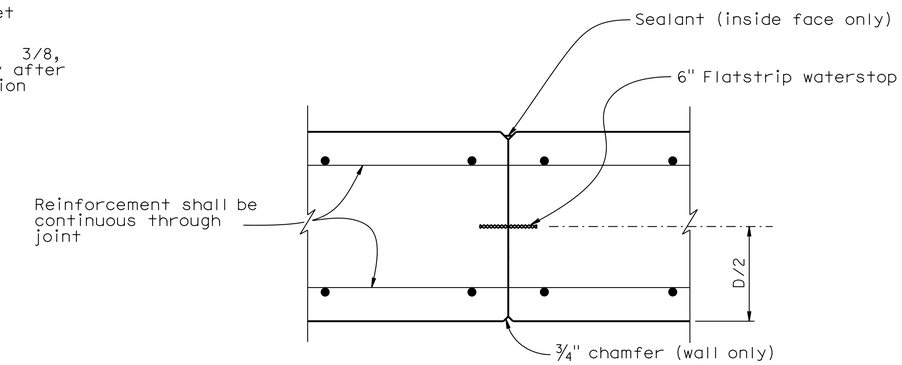

WALL CONSTRUCTION JOINT DETAIL

No Scale

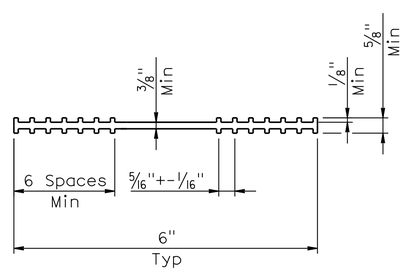

6" FLATSTRIP WATER STOP DETAIL

No Scale

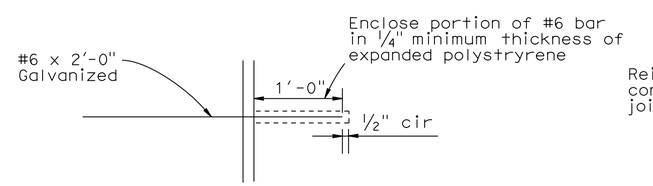

DETAIL A

No Scale

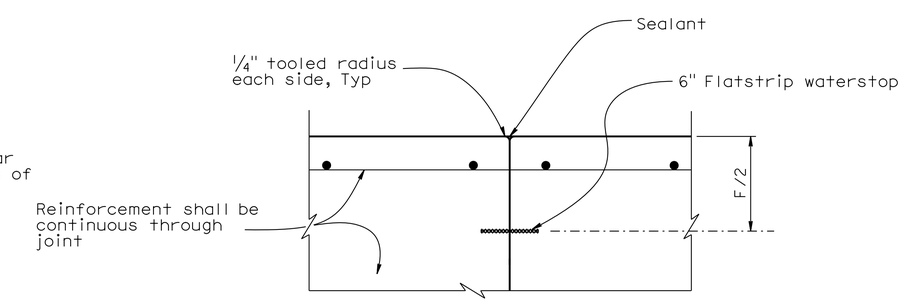

FOOTING CONSTRUCTION JOINT DETAIL

No Scale

AUSTIN VAULT SAND FILTER DETAILS No. 2

DRAINAGE DETAILS

NO SCALE

DD-6

STATE OF CALIFORNIA - DEPARTMENT OF TRANSPORTATION
Caltrans® HYDRAULICS
FUNCTIONAL SUPERVISOR: TIMOTHY B. SOBELMAN
CALCULATED-DESIGNED BY: D. WANG
CHECKED BY: L. HE
REVISED BY
DATE REVISED

LAST REVISION 07-30-12
DATE PLOTTED => 14-FEB-2013
TIME PLOTTED => 13:27

Dist	COUNTY	LOCATION CODE	POST MILES TOTAL PROJECT	SHEET No.	TOTAL SHEETS
07	LA	405	39.4/48.6	96	179

Timothy B Sobelman 6-1-12
REGISTERED CIVIL ENGINEER DATE

7-30-12
PLANS APPROVAL DATE

REGISTERED PROFESSIONAL ENGINEER TIMOTHY B. SOBELMAN No. 59249 Exp. 6-30-13 CIVIL STATE OF CALIFORNIA

THE STATE OF CALIFORNIA OR ITS OFFICERS OR AGENTS SHALL NOT BE RESPONSIBLE FOR THE ACCURACY OR COMPLETENESS OF SCANNED COPIES OF THIS PLAN SHEET.

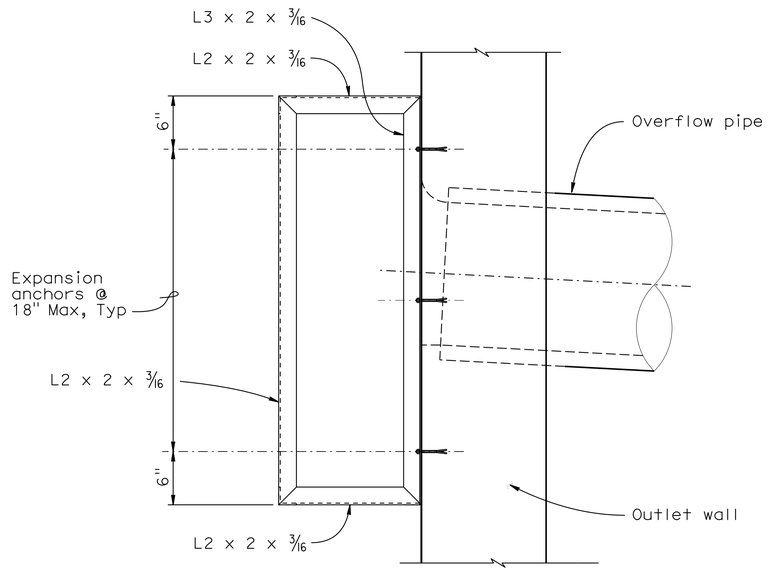

TRASH SCREEN - SIDE ELEVATION
No scale

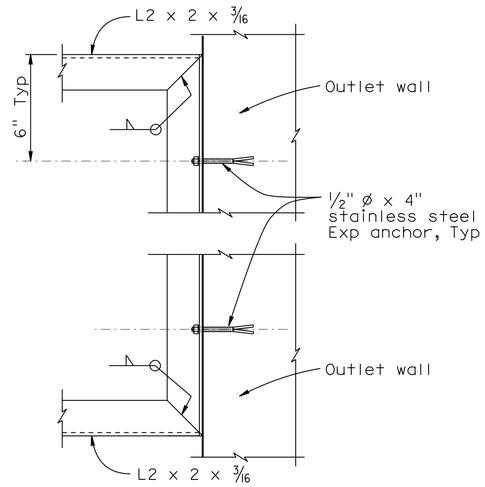

SECTION F - F
No Scale

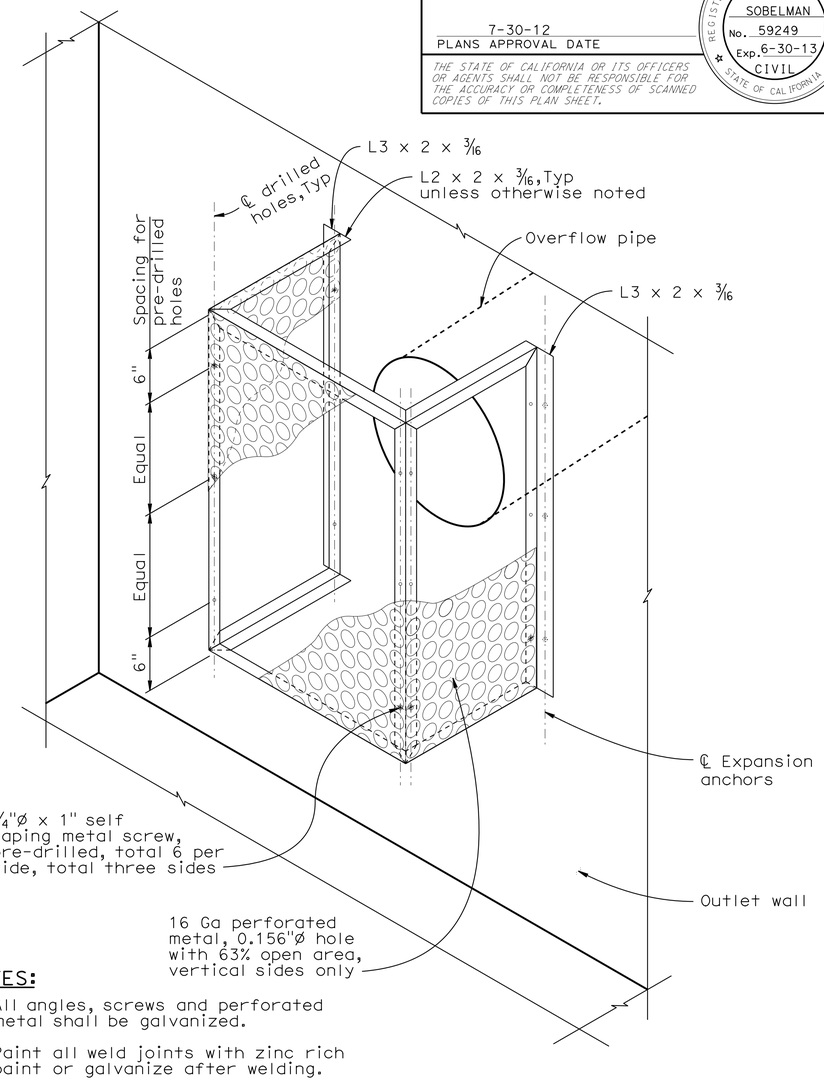

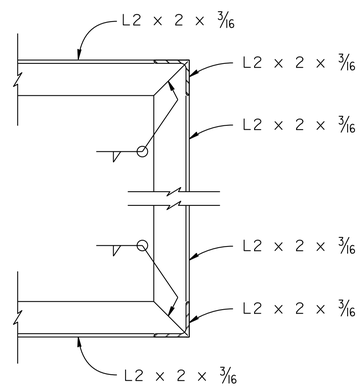

SECTION E - E
No Scale

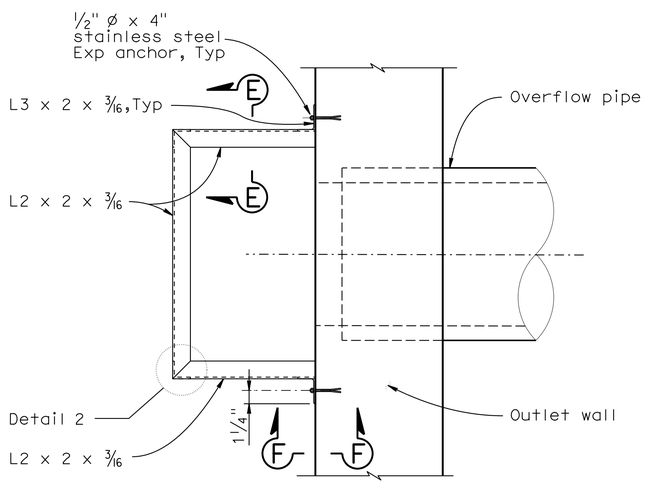

TRASH SCREEN - PLAN
No Scale

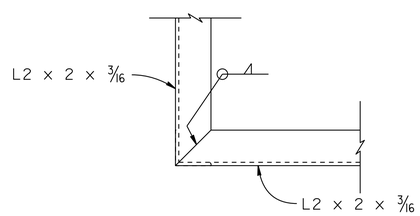

DETAIL 2
No Scale

NOTES:

1. All angles, screws and perforated metal shall be galvanized.
2. Paint all weld joints with zinc rich paint or galvanize after welding.

ISOMETRIC VIEW - TRASH SCREEN
No scale

NOTE: Metal hole ø exaggerated for emphasis.

AUSTIN VAULT SAND FILTER
DETAILS No. 3

DRAINAGE DETAILS
NO SCALE

DD-7

STATE OF CALIFORNIA - DEPARTMENT OF TRANSPORTATION
Caltrans
HYDRAULICS

FUNCTIONAL SUPERVISOR: TIMOTHY B. SOBELMAN
CALCULATED-DESIGNED BY: D. WANG
CHECKED BY: L. HE
REVISED BY
DATE REVISED

LAST REVISION 07-30-12
DATE PLOTTED => 14-FEB-2013
TIME PLOTTED => 13:27

Dist	COUNTY	LOCATION CODE	POST MILES TOTAL PROJECT	SHEET No.	TOTAL SHEETS
07	LA	405	39.4/48.6	97	179

Timothy B. Sobelman 6-1-12
REGISTERED CIVIL ENGINEER DATE

7-30-12
PLANS APPROVAL DATE

REGISTERED PROFESSIONAL ENGINEER TIMOTHY B. SOBELMAN No. 59249 Exp. 6-30-13 CIVIL STATE OF CALIFORNIA

THE STATE OF CALIFORNIA OR ITS OFFICERS OR AGENTS SHALL NOT BE RESPONSIBLE FOR THE ACCURACY OR COMPLETENESS OF SCANNED COPIES OF THIS PLAN SHEET.

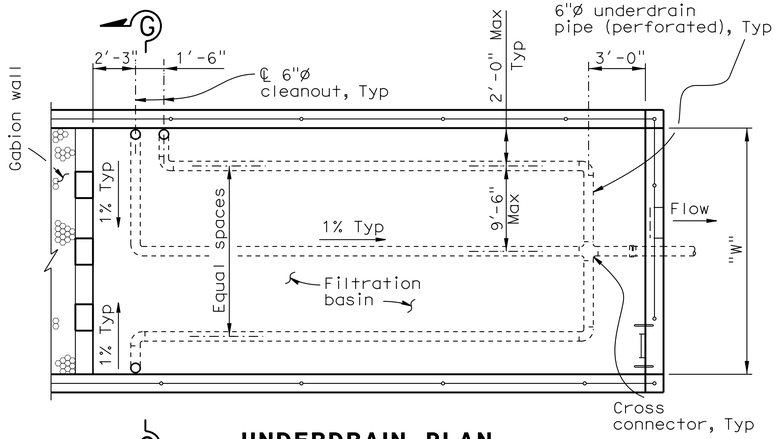

UNDERDRAIN PLAN (FILTRATION BASIN)

"W" = 15' - 21'
No Scale
AVSF Type = (S or L 3500)

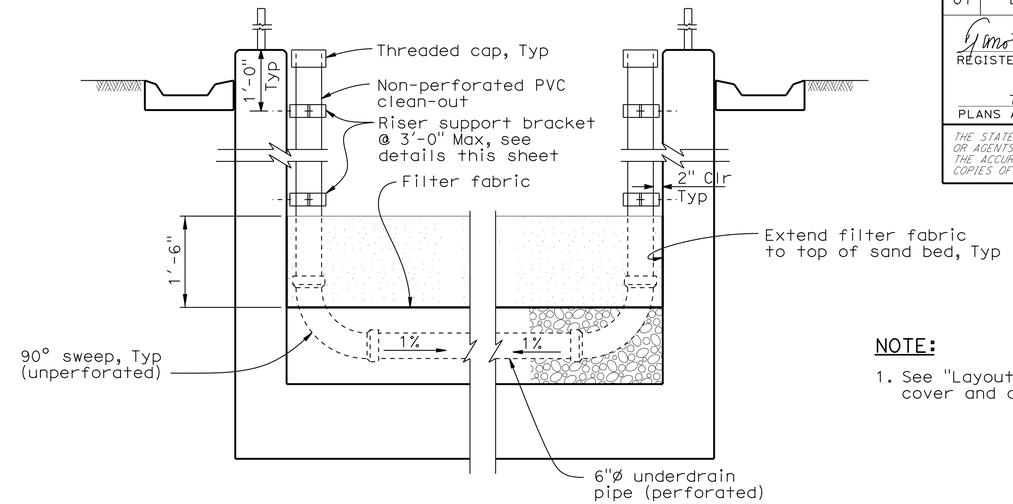

SECTION G - G

No Scale

NOTE:

1. See "Layout No. 1" sheet for Typical cover and depth of sand bed.

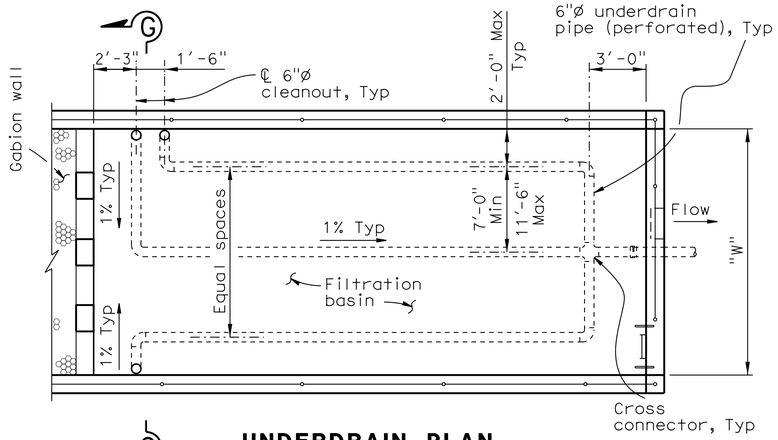

UNDERDRAIN PLAN (FILTRATION BASIN)

"W" = 18' - 24' - 27'
No Scale
AVSF Type = (S or L 5000) L 10000)

No Scale

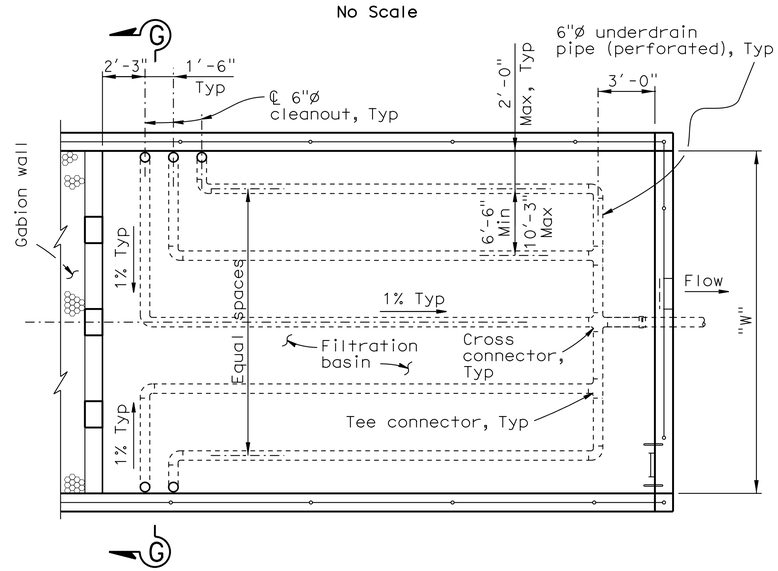

UNDERDRAIN PLAN (FILTRATION BASIN)

"W" = 30' - 36' - 45'
No Scale
AVSF Type = (S 10000, S or L 15000)

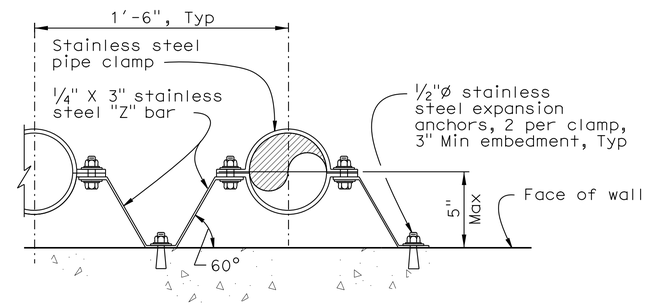

RISER SUPPORT BRACKET DETAIL

No Scale

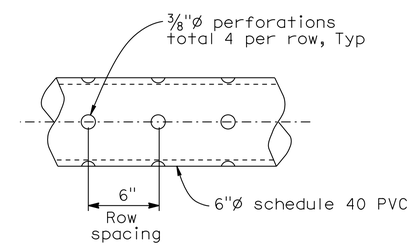

PERFORATED UNDERDRAIN PIPE

No Scale

AUSTIN VAULT SAND FILTER DETAILS No. 4

DRAINAGE DETAILS

NO SCALE

DD-8

STATE OF CALIFORNIA - DEPARTMENT OF TRANSPORTATION
Caltrans
HYDRAULICS

FUNCTIONAL SUPERVISOR: TIMOTHY B. SOBELMAN
CALCULATED-DESIGNED BY: D. WANG
CHECKED BY: L. HE
REVISED BY
DATE REVISED

LAST REVISION 07-30-12
DATE PLOTTED => 14-FEB-2013
TIME PLOTTED => 13:27

Dist	COUNTY	LOCATION CODE	POST MILES TOTAL PROJECT	SHEET No.	TOTAL SHEETS
07	LA	405	39.4/48.6	98	179

Timothy B Sobelman 6-1-12
REGISTERED CIVIL ENGINEER DATE

7-30-12
PLANS APPROVAL DATE

REGISTERED PROFESSIONAL ENGINEER TIMOTHY B. SOBELMAN No. 59249 Exp. 6-30-13 CIVIL STATE OF CALIFORNIA

THE STATE OF CALIFORNIA OR ITS OFFICERS OR AGENTS SHALL NOT BE RESPONSIBLE FOR THE ACCURACY OR COMPLETENESS OF SCANNED COPIES OF THIS PLAN SHEET.

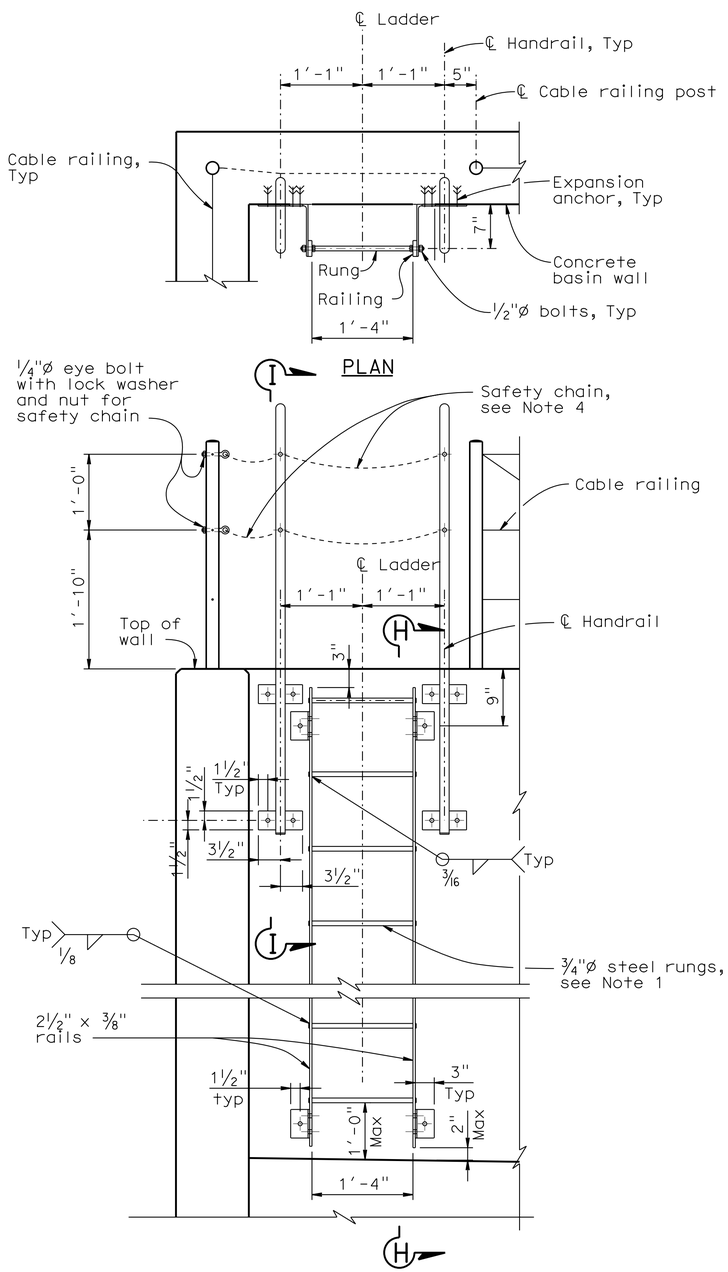

ELEVATION

LADDER

No Scale

NOTE: Cable railing not shown for clarity.

NOTES:

1. The distance between rungs shall not exceed 1′-0" and shall be uniform throughout the length of wall.
2. Hardware shall be galvanized after fabrication.
3. Grind exposed corners to 3/16" radius.
4. Safety chain shall be ¼" galvanized steel coil chain, approximately 12 links per foot. Length shall be minimum which allows lock-up of safety railing. Minimum of two safety chains per safety railing. Material shall be grade 43 high test chain ASTM A413.

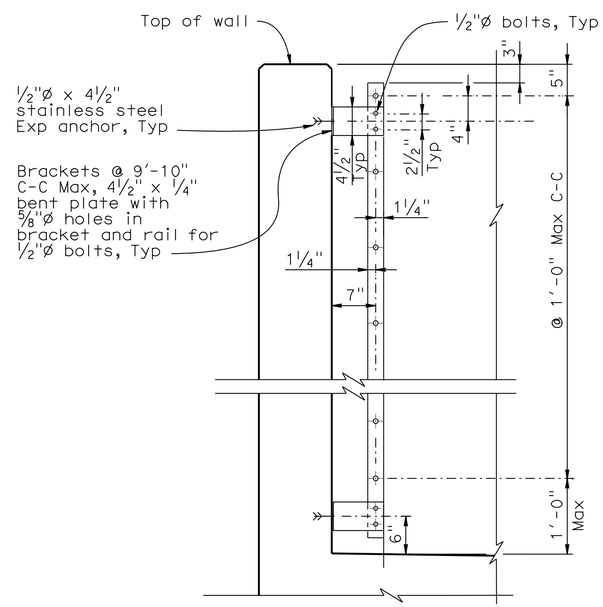

SECTION H - H

No Scale

NOTE: Handrail and cable railing not shown for clarity.

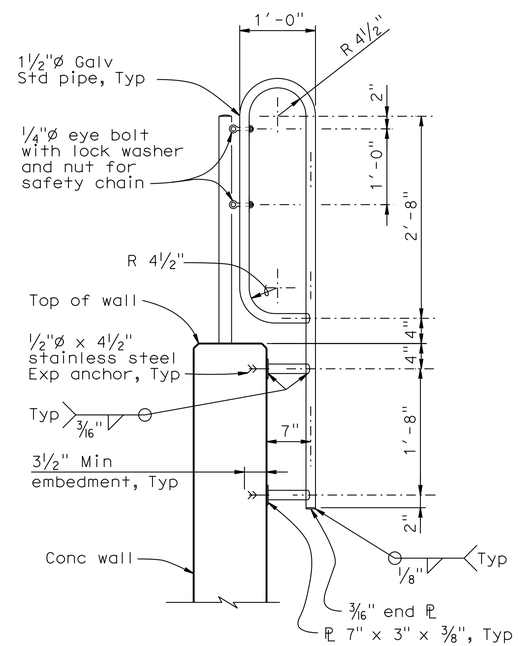

SECTION I - I

No Scale

AUSTIN VAULT SAND FILTER
MISCELLANEOUS DETAILS No. 1

DRAINAGE DETAILS

NO SCALE

DD-9

STATE OF CALIFORNIA - DEPARTMENT OF TRANSPORTATION
Caltrans
HYDRAULICS

FUNCTIONAL SUPERVISOR: TIMOTHY B. SOBELMAN
CALCULATED-DESIGNED BY: D. WANG
CHECKED BY: L. HE
REVISED BY
DATE REVISED

LAST REVISION 07-30-12
DATE PLOTTED => 14-FEB-2013
TIME PLOTTED => 13:27

Dist	COUNTY	LOCATION CODE	POST MILES TOTAL PROJECT	SHEET No.	TOTAL SHEETS
07	LA	405	39.4/48.6	99	179

REGISTERED CIVIL ENGINEER 2-09-12 DATE

7-30-12
PLANS APPROVAL DATE

REGISTERED PROFESSIONAL ENGINEER BALDEV K. BHALLA No. 34350 Exp. 09/30/13 CIVIL STATE OF CALIFORNIA

THE STATE OF CALIFORNIA OR ITS OFFICERS OR AGENTS SHALL NOT BE RESPONSIBLE FOR THE ACCURACY OR COMPLETENESS OF SCANNED COPIES OF THIS PLAN SHEET.

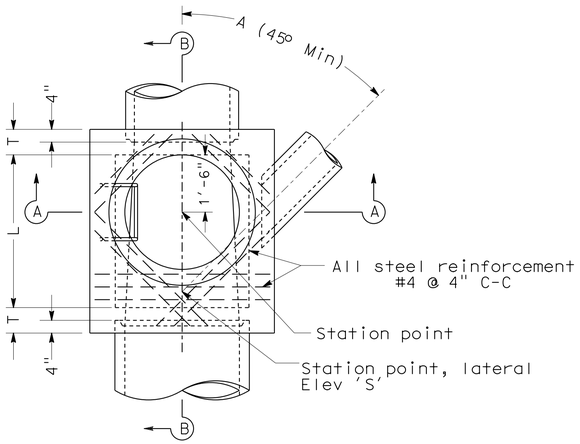

PLAN
(SHAFT NOT SHOWN)

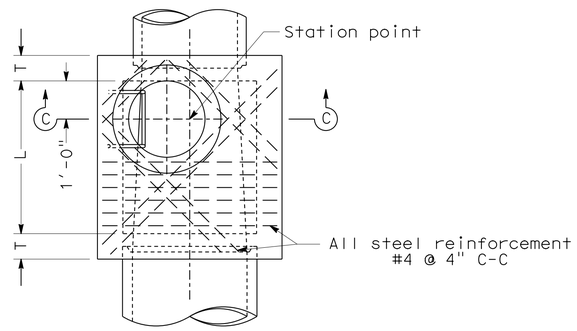

PLAN
DETAIL N
(Shaft not shown)

NOTES

1. Height 'H' (in Sec A-A and Sec B-B) shall be not less than 4'-8", but may be increased provided that the value of 'M' shall be not less than the minimum specified and that the reducer shall be used. For 'H' (in Sec C-C) see Note 4.
2. Length 'L' shall be 4' unless otherwise shown on drainage plan.
3. Shaft shall be constructed as per Sec C-C and Detail N when depth 'M' from street grade to top of box is less than 2'-10 1/2" for paved streets or 3'-6" for unpaved streets.
4. Depth 'P' may be reduced to an absolute limit of 6" when larger values of 'P' would reduce 'H' (in Sec C-C) to 3'-6" or less.
5. 'T' shall be 8" for values of 'H' up to and including 8'. 'T' shall be 10" for values of 'H' over 8'.
6. Lowest step shall be not more than 16" above the ledge at the side of manhole floor.
7. Body of manhole shall be poured in one continuous operation, except that the Contractor shall have the option of placing at the spring line a construction joint with a longitudinal keyway.
8. Reinforcing steel shall be 1 1/2" clear from face of concrete.
9. Floor of manhole shall be steel-troweled to spring line.
10. Rings, reducer, and pipe for access shaft shall be seated in 1:2 cement mortar and neatly pointed or wiped inside shaft.
11. Manhole frame and cover per Standard Plan B7-11 detail 'U45'.
12. Step detail per Standard Plans D74C and D75.

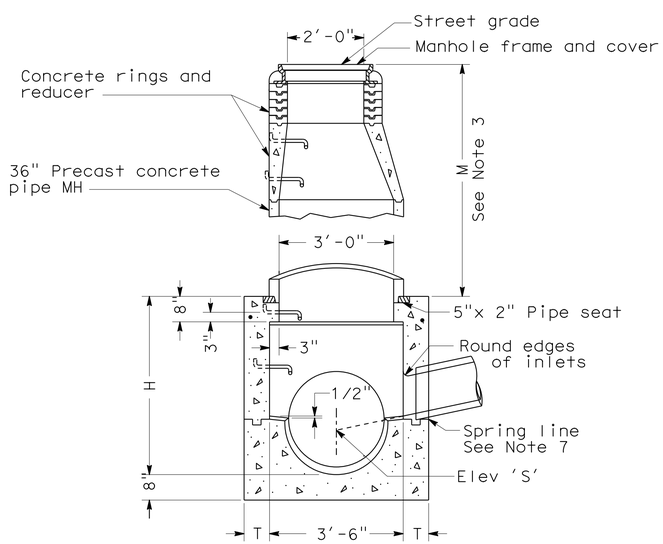

SECTION A-A

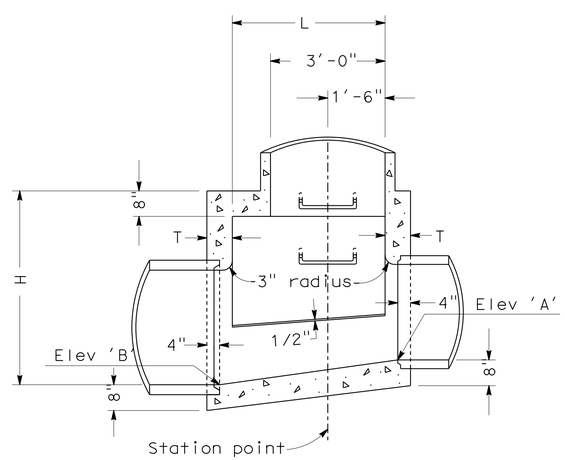

SECTION B-B

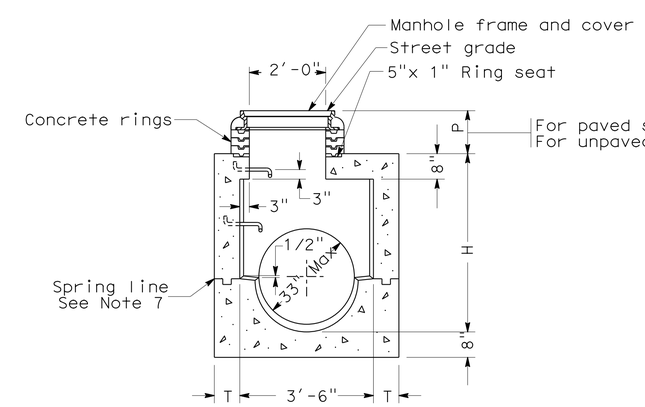

	Max	Min
For paved streets	11"	8 1/2"
For unpaved streets	16"	15"

SECTION C-C

MANHOLE NO 1 (MH NO 1)

DRAINAGE DETAILS
NO SCALE

DD-10

STATE OF CALIFORNIA - DEPARTMENT OF TRANSPORTATION
Caltrans® HYDRAULICS

FUNCTIONAL SUPERVISOR: DAVE BHALLA
CALCULATED-DESIGNED BY: NESTOR VALENTON
CHECKED BY: CHRIS NGUYEN
REVISED BY
DATE REVISED

LAST REVISION 07-30-12
DATE PLOTTED => 14-FEB-2013
TIME PLOTTED => 13:27

Dist	COUNTY	LOCATION CODE	POST MILES TOTAL PROJECT	SHEET No.	TOTAL SHEETS
07	LA	405	39.4/48.6	100	179

REGISTERED CIVIL ENGINEER 2-09-12 DATE

7-30-12
PLANS APPROVAL DATE

REGISTERED PROFESSIONAL ENGINEER BALDEV K. BHALLA No. 34350 Exp. 09/30/13 CIVIL STATE OF CALIFORNIA

THE STATE OF CALIFORNIA OR ITS OFFICERS OR AGENTS SHALL NOT BE RESPONSIBLE FOR THE ACCURACY OR COMPLETENESS OF SCANNED COPIES OF THIS PLAN SHEET.

AUTOMATIC DRAINAGE GATE NOTES:

1. THE AUTOMATIC DRAINAGE GATE SHALL BE MOUNTED ON A CONCRETE COLLAR THAT IS POURED IN THE PIPE CONNECTING ENDS. THE PIPE CONNECTING ENDS SHALL BE SHOWN OR SPECIFIED ON THE PLANS.
2. MOUNTING BOLTS SHALL BE EMBEDED 5" INTO THE COLLAR.
3. AUTOMATIC DRAINAGE GATE SHALL BE FLAT BACK UNLESS OTHERWISE SHOWN.

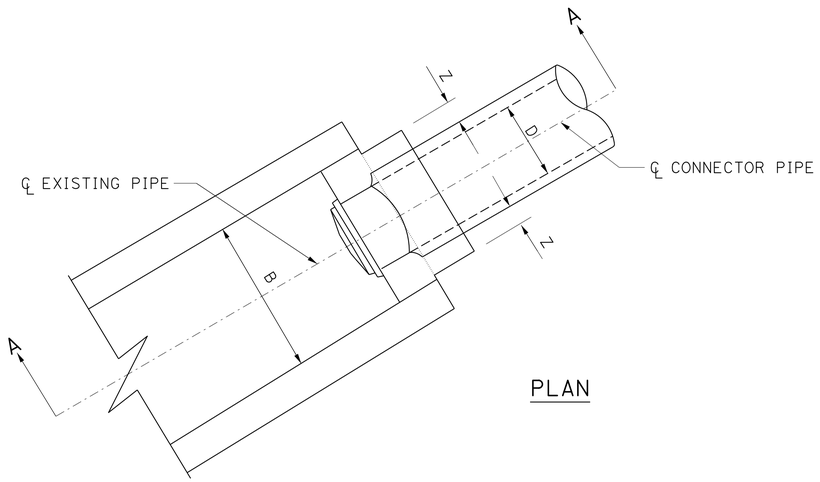

PLAN

D (IN)	B (IN)	Z (IN)
12	24	5
15	27	5
18	33	5
21	39	5
24	42	5
30	51	6
36	60	6
42	72	7
48	81	7
54	87	7
60	96	8
66	108	12
72	114	8
78	126	9
84	138	9
90	144	9

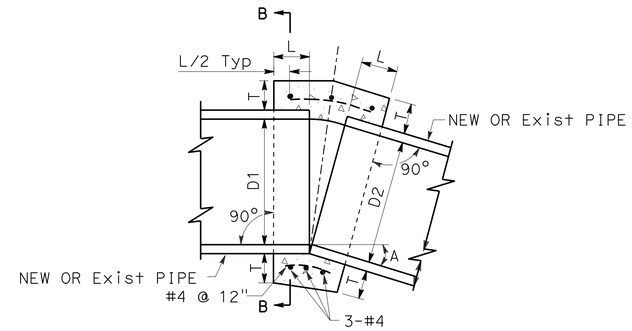

CONCRETE COLLAR

D	L	T
12"	1.0'	4"
18"	1.0'	5"
24"	1.0'	6"
36"	1.5'	8"
48"	1.5'	10"
54"	1.5'	10"
60"	1.75'	11"
66"	1.75'	11"
72"	2.0'	12"

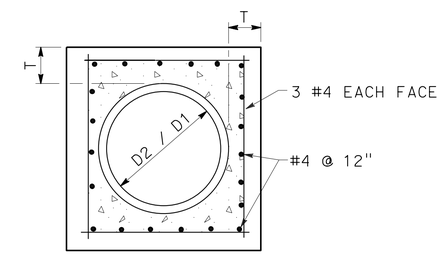

SECTION B-B

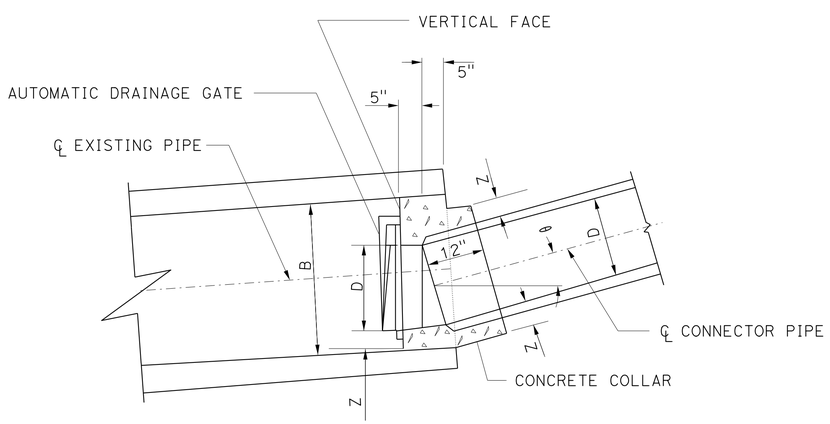

SECTION A-A

CONCRETE COLLAR NOTES:

1. WHERE PIPES OF DIFFERENT DIAMETERS ARE JOINED WITH A CONCRETE COLLAR, 'L' AND 'T' SHALL BE THOSE OF THE LARGER PIPE. D=D1 OR D2, WHICHEVER IS GREATER.
2. FOR PIPE SIZE NOT LISTED USE NEXT SIZE LARGER.
3. OMIT REINFORCING ON PIPES 24" AND LESS IN DIAMETER AND ON ALL PIPES WHERE ANGLE A IS LESS THAN 10°.
4. JOIN PIPES AT INVERTS.
5. REINFORCEMENT SHALL BE PLACED 1½" CLEAR FROM OUTSIDE DIAMETER OF PIPE.

AUTOMATIC DRAINAGE GATE

DRAINAGE DETAILS

NO SCALE

DD-11

REVISED BY | DATE REVISED
NESTOR VALENTON | CHRIS NGUYEN
CALCULATED-DESIGNED BY | CHECKED BY
FUNCTIONAL SUPERVISOR
DAVE BHALLA

STATE OF CALIFORNIA - DEPARTMENT OF TRANSPORTATION
Caltrans
HYDRAULICS

LAST REVISION 07-30-12 | DATE PLOTTED => 14-FEB-2013 | TIME PLOTTED => 13:27